01-16-2026 LETTING ITEM 050

F.A.P. RTE.	SECTION	COUNTY	TOTAL SHEETS	SHEET NO.
46	(50-2HB)BRR	LASALLE	48*	1
		ILLINOIS	CONTRACT NO. 66R21	

*48 + 3 = 51 TOTAL SHEETS

STATE OF ILLINOIS
DEPARTMENT OF TRANSPORTATION

INDEX OF SHEETS

PROPOSED HIGHWAY PLANS

FAP ROUTE 46 (IL 251)
SECTION (50-2HB)BRR
PROJECT
BRIDGE REPAIR
LASALLE COUNTY

C-93-068-25

PROJECT LOCATION STR. NO. 050-0077 & 050-0078 CARRYING IL 251 NB/SB OVER I-80 EB/WB

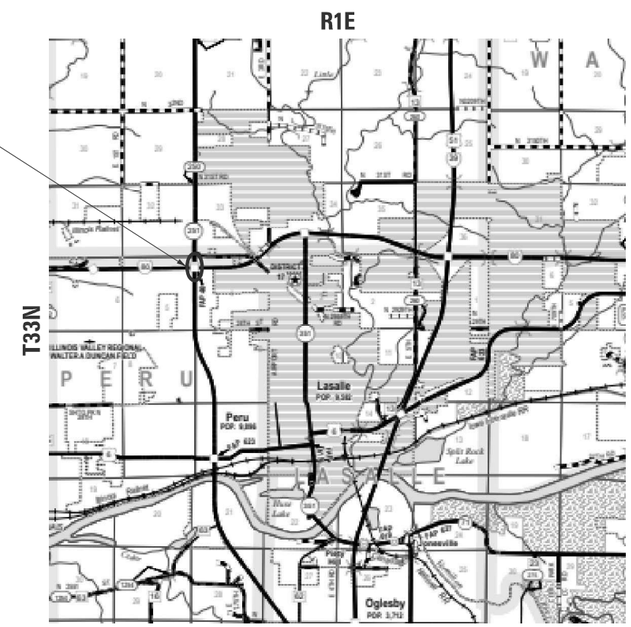

GROSS LENGTH = 287.92 FT. = 0.055 MILE
NET LENGTH = 287.92 FT. = 0.055 MILE

D-93-042-25

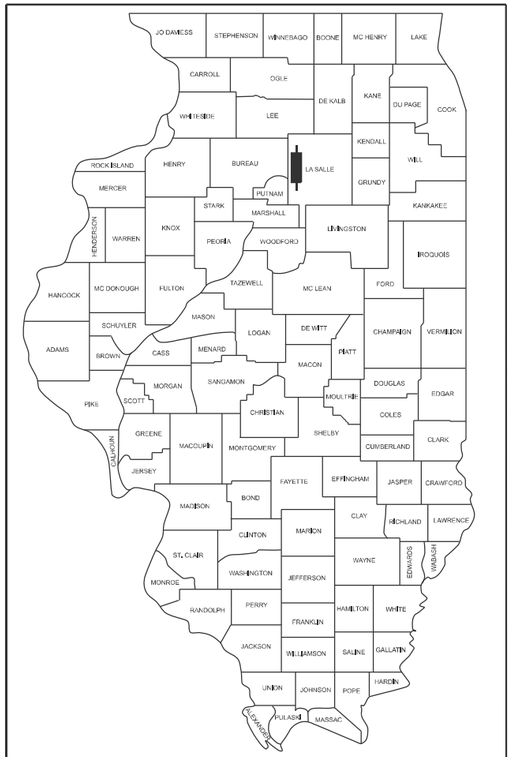

LOCATION OF SECTION INDICATED THUS: -

FUNCTIONAL CLASSIFICATION
OTHER PRINCIPAL ARTERIAL
F.A.P. 46 (IL ROUTE 251)
2023 ADT= 13100
P.V. 90.84% S.U. 2.29% M.U. 6.87%

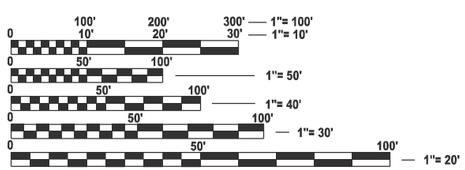

FULL SIZE PLANS HAVE BEEN PREPARED USING STANDARD ENGINEERING SCALES. REDUCED SIZED PLANS WILL NOT CONFORM TO STANDARD SCALES. IN MAKING MEASUREMENTS ON REDUCED PLANS, THE ABOVE SCALES MAY BE USED.

J.U.L.I.E.
JOINT UTILITY LOCATION INFORMATION FOR EXCAVATION
1-800-892-0123
OR 811

STATE OF ILLINOIS
DEPARTMENT OF TRANSPORTATION

SUBMITTED October 16, 20 25
Trisha Thompson
REGIONAL ENGINEER

December 5, 20 25
ENGINEER OF DESIGN AND ENVIRONMENT

December 5, 20 25
DIRECTOR OF HIGHWAYS PROJECT IMPLEMENTATION

MICHAEL J. ROSBORG
062-058028
LICENSED PROFESSIONAL ENGINEER OF ILLINOIS

10/14/2025
Expires 11/30/2027

MILLENNIA PROFESSIONAL SERVICES
www.millennia.pro
Professional Design Firm No. 184.0040.70.0010

PRINTED BY THE AUTHORITY OF THE STATE OF ILLINOIS

PROJECT ENGINEER: JUNIOR SENAT, P.E.
UNIT CHIEF: RON WOODSHANK
DISTRICT 3 NO. (815) 434-6131

CONTRACT NO. 66R21

REV. 11/10/25

HIGHWAY STANDARDS

000001-09	STANDARD SYMBOLS, ABBREVIATIONS AND PATTERNS
001006	DECIMAL OF AN INCH AND OF A FOOT
482011-03	HMA SHLD. STRIPS/SHLDS. WITH RESURFACING OR WIDENING AND RESURFACING PROJECTS
515001-04	NAME PLATE FOR BRIDGES
701400-12	APPROACH TO LANE CLOSURE, FREEWAY/EXPRESSWAY
701406-13	LANE CLOSURE, FREEWAY/EXPRESSWAY, DAY OPERATIONS ONLY
701411-09	LANE CLOSURE, MULTILANE, AT ENTRANCE OR EXIT RAMP, FOR SPEEDS ≥ 45 MPH
701426-09	LANE CLOSURE, MULTILANE, INTERMITTENT OR MOVING OPER., FOR SPEEDS ≥ 45 MPH
701428-01	TRAFFIC CONTROL SETUP AND REMOVAL FREEWAY/EXPRESSWAY
701601-09	URBAN LANE CLOSURE, MULTILANE, 1W OR 2W WITH NONTRAVERSABLE MEDIAN
701901-11	TRAFFIC CONTROL DEVICES
704001-08	TEMPORARY CONCRETE BARRIER
781001-04	TYPICAL APPLICATIONS RAISED REFLECTIVE PAVEMENT MARKERS
782006-01	GUARDRAIL AND BARRIER WALL REFLECTOR MOUNTING DETAILS

DISTRICT 3 STANDARDS

701-6	WIDTH RESTRICTION SIGNING DETAILS
720-12	TEMPORARY INFORMATION SIGNING - WITH WINTER SHUT DOWN
780-5	ADVANCE AND INTERSECTION LANE DIVIDER LINES
780-8	PAVEMENT MARKING
780-10	TYPICAL PLACEMENT OF ARROWS IN TURN LANES
782-6	LINEAR DELINEATOR PANELS FOR TEMPORARY CONCRETE BARRIER

HMA MIXTURE REQUIREMENT TABLE

IL ROUTE 251 NORTHBOUND			
LOCATIONS:	APPROACH PAVEMENT	BRIDGE DECK	SHOULDERS
MIXTURE USE(S):	POLY HMA SURFACE	POLY HMA SURFACE	HMA SURFACE
BINDER GRADE (PG):	SBS PG 70-28	SBS PG 70-28	PG 64-22
DESIGN AIR VOIDS:	4.0% @ N70	4.0% @ N70	4.0% @ N70
MIXTURE COMPOSITION: (MIXTURE GRADATION)	IL - 9.5FG	IL - 9.5FG	IL - 9.5FG
FRICTION AGGREGATE:	MIXTURE "D"	MIXTURE "D"	MIXTURE "D"
MIXTURE WEIGHT:	112.0 LB/SY/IN	112.0 LB/SY/IN	112.0 LB/SY/IN
QUALITY MANAGEMENT PROGRAM:	QC/QA	QC/QA	QC/QA
SUBLOT SIZE:	N/A	N/A	N/A
DENSITY TEST METHOD:	CORES / NUCLEAR	CORES / NUCLEAR	CORES / NUCLEAR

IL ROUTE 251 SOUTHBOUND					
LOCATIONS:	APPROACH PAVEMENT		BRIDGE DECK		SHOULDERS
MIXTURE USE(S):	POLY HMA BINDER	POLY HMA SURFACE	POLY HMA BINDER	POLY HMA SURFACE	HMA SURFACE
BINDER GRADE (PG):	SBS PG 70-28	SBS PG 70-28	SBS PG 70-28	SBS PG 70-28	PG 64-22
DESIGN AIR VOIDS:	4.0% @ N50	4.0% @ N70	4.0% @ N50	4.0% @ N70	4.0% @ N70
MIXTURE COMPOSITION: (MIXTURE GRADATION)	IL - 4.75	IL - 9.5	IL - 4.75	IL - 9.5	IL - 9.5
FRICTION AGGREGATE:	N/A	MIXTURE "D"	N/A	MIXTURE "D"	MIXTURE "D"
MIXTURE WEIGHT:	112.0 LB/SY/IN	112.0 LB/SY/IN	112.0 LB/SY/IN	112.0 LB/SY/IN	112.0 LB/SY/IN
QUALITY MANAGEMENT PROGRAM:	QC/QA	QC/QA	QC/QA	QC/QA	QC/QA
SUBLOT SIZE:	N/A	N/A	N/A	N/A	N/A
DENSITY TEST METHOD:	CORES / NUCLEAR	CORES / NUCLEAR	CORES / NUCLEAR	CORES / NUCLEAR	CORES / NUCLEAR

GENERAL NOTES

THE ENGINEER WILL BE THE SOLE JUDGE CONCERNING CURING TIME FOR THE VARIOUS HMA LIFTS.

THE FINISHED EARTHWORK SHALL HAVE A VEGETATION SUSTAINING SOIL COVERING THE TOP FOUR INCHES (100 MILLIMETERS) IN AREAS TO BE SEEDED OR SODDED. THE VEGETATION SUSTAINING SOIL REQUIRED WILL NOT BE PAID FOR SEPARATELY BUT WILL BE INCLUDED IN THE COST OF THE CONTRACT.

ON EXISTING PAVEMENT WHICH MAY BE SUPERELEVATED, THE NEW HMA PAVEMENT SHALL BE BUILT WITH THE SAME SUPERELEVATION UNLESS NEW SUPERELEVATION RATES ARE GIVEN ON THE PLANS.

ALL ELEVATIONS REFERRING TO U.S.G.S. MEAN SEA LEVEL DATUM.

THE FOLLOWING RATES OF APPLICATION HAVE BEEN USED IN CALCULATING PLAN QUANTITIES:

GRANULAR MATERIALS	2.05	TONS / CU YD
FULL LANE SEALANT	0.30	LB / SQ FT
HMA RESURFACING	112	LBS / SQ YD / IN
SHORT TERM PAVEMENT MARKINGS	10	FT / 100 FT OF APPLICATION

THE CONTRACTOR'S ATTENTION IS DIRECTED TO THE PRESENCE OF DEPARTMENT-OWNED UNDERGROUND ELECTRICAL CABLE WITHIN THE LIMITS OF THE PROPOSED IMPROVEMENT. THE CONTRACTOR SHALL REQUEST THE ILLINOIS DEPARTMENT OF TRANSPORTATION IN OTTAWA (815-434-8417) TO LOCATE THE UNDERGROUND FACILITIES, PROVIDING A MINIMUM OF 72 HOURS NOTICE. THE DEPARTMENT IS NOT A MEMBER OF THE JOINT UTILITY LOCATING INFORMATION FOR EXCAVATORS (JULIE) SYSTEM.

ALL DAMAGE TO DEPARTMENT OWNED UNDERGROUND FACILITIES, CAUSED BY THE CONTRACTOR SHALL BE REPAIRED TO THE SATISFACTION OF THE ENGINEER AND AT NO EXPENSE TO THE DEPARTMENT. THIS SHALL INCLUDE ALL TEMPORARY REPAIRS REQUIRED TO KEEP THE FACILITY OPERATIONAL WHILE MATERIAL IS BEING OBTAINED TO MAKE PERMANENT REPAIRS. SPLICING OF ELECTRIC CABLE WILL NOT BE ALLOWED. ELECTRIC CABLE SHALL BE REPLACED FROM POLE TO POLE OR CONTROLLER.

ANY/ALL EXCAVATED EARTHEN MATERIAL SHOULD REMIAN ON SITE.

COMMITMENTS

THE ENGINEER SHALL RECORD THE ACTUAL DECK SLAB REPAIR LOCATIONS, PATCH SIZE AND QUANTITIES ON THE DECK SLAB REPAIR "AS-BUILT" PLAN DETAILS. WHEN RECORDED, THE ENGINEER SHALL FORWARD A COPY OF THE DECK SLAB REPAIR "AS-BUILT" PLAN DETAILS TO THE BRIDGE OFFICE IN A TIMELY MANNER. CONTACT PERSON IS JEFF BURKE, PHONE (217) 558-0282. IN ADDITION, THE ENGINEER SHALL FORWARD A COPY OF THE DECK SLAB REPAIR "AS-BUILT" PLAN DETAILS TO THE DISTRICT'S BRIDGE ENGINEER, CONTACT PERSON IS, LUIS CALDERON, PHONE (815) 434-8444.

STATE OF ILLINOIS
DEPARTMENT OF TRANSPORTATION
DISTRICT 3
AS-BUILT INFORMATION

SUPERVISING CONSTRUCTION FIELD ENGINEER

RESIDENT ENGINEER / TECHNICIAN

START & END DATES OF CONSTRUCTION:

INSPECTORS:

MODEL: Default
FILE NAME: P:\2024\ME24020_PTB 205-023 D3 PH II_K&TM\E24020.11 PTB 205-023 WO 11_IL 251\01-CADD\CAD_Sheets\D366R21-Title.dgn

MILLENNIA PROFESSIONAL SERVICES
www.millennia.pro

USER NAME = mamidon	DESIGNED - MJR	REVISED -	
	DRAWN - MLA	REVISED -	
	CHECKED - ERO	REVISED -	
PLOT DATE = 10/13/2025	DATE - 10/13/2025	REVISED -	

STATE OF ILLINOIS
DEPARTMENT OF TRANSPORTATION

HIGHWAY STANDARDS, GENERAL NOTES, AND COMMITMENTS

SCALE: 1" = 50' | SHEET 1 OF 1 SHEETS | STA. TO STA.

F.A.P. RTE.	SECTION	COUNTY	TOTAL SHEETS	SHEET NO.
46	(50-2HB)BRR	LASALLE	48	2
		CONTRACT NO. 66R21		
		ILLINOIS FED. AID PROJECT		

REV. 11/10/25

CODE NO.	ITEM	UNIT	TOTAL QUANTITY	CONSTRUCTION CODE CONTRACT MAINTENANCE 100% STATE BRIDGE 0047 S.N. 050-0077	BRIDGE 0047 S.N. 050-0078
40600290	BITUMINOUS MATERIALS (TACK COAT)	POUND	312		312
40600295	POLYMERIZED BITUMINOUS MATERIALS (TACK COAT)	POUND	326	189	137
40603200	POLYMERIZED HOT-MIX ASPHALT BINDER COURSE, IL-4.75, N50	TON	12	12	
40604112	POLYMERIZED HOT-MIX ASPHALT SURFACE COURSE, IL-9.5FG, MIX "D", N70	TON	82		82
40604162	POLYMERIZED HOT-MIX ASPHALT SURFACE COURSE, IL-9.5, MIX "D", N70	TON	82	82	
42001300	PROTECTIVE COAT	SQ YD	80.8	40.4	40.4
48203003	HOT-MIX ASPHALT SHOULDERS, 1 1/2"	SQ YD	65		65
48203006	HOT-MIX ASPHALT SHOULDERS, 2 1/4"	SQ YD	66	66	
50102400	CONCRETE REMOVAL	CU YD	31.4	15.7	15.7
50157300	PROTECTIVE SHIELD	SQ YD	776	388	388
50300255	CONCRETE SUPERSTRUCTURE	CU YD	31.6	15.8	15.8
50500405	FURNISHING AND ERECTING STRUCTURAL STEEL	POUND	4080	2040	2040
50800205	REINFORCEMENT BARS, EPOXY COATED	POUND	4500	2250	2250
50800515	BAR SPLICERS	EACH	80	40	40

* SPECIAL PROVISION

** SPECIALTY ITEM

	CODE NO.	ITEM	UNIT	TOTAL QUANTITY	CONSTRUCTION CODE CONTRACT MAINTENANCE 100% STATE BRIDGE 0047 S.N. 050-0077	BRIDGE 0047 S.N. 050-0078
	52000110	PREFORMED JOINT STRIP SEAL	FOOT	284	142	142
	52100020	ELASTOMERIC BEARING ASSEMBLY, TYPE II	EACH	44	22	22
	52100520	ANCHOR BOLTS, 1"	EACH	176	88	88
*	53004556	HOT-MIX ASPHALT SURFACE REMOVAL (DECK)	SQ YD	602	301	301
*	53016000	DECK SLAB REPAIR (PARTIAL)	SQ YD	20	10	10
*	53016001	DECK SLAB REPAIR (FULL DEPTH, TYPE I)	SQ YD	2	1	1
*	53016002	DECK SLAB REPAIR (FULL DEPTH, TYPE II)	SQ YD	10	5	5
*	53212754	STRUCTURAL REPAIR OF CONCRETE (DEPTH EQUAL TO OR LESS THAN 5 INCHES)	SQ FT	763	328	435
*	58100210	FULL LANE SEALANT WATERPROOFING SYSTEM	SQ YD	693	693	0
	58700300	CONCRETE SEALER	SQ FT	2824	1412	1412
	59000200	EPOXY CRACK INJECTION	FOOT	114	71	43
	67100100	MOBILIZATION	L SUM	1	0.5	0.5
	70100420	TRAFFIC CONTROL AND PROTECTION, STANDARD 701411	EACH	2	1	1
	70100700	TRAFFIC CONTROL AND PROTECTION, STANDARD 701406	L SUM	1	0.5	0.5
**	70107007	PAVEMENT MARKING BLACKOUT TAPE, 7"	FOOT	1953	975	978

* SPECIAL PROVISION

** SPECIALTY ITEM

	CODE NO.	ITEM	UNIT	TOTAL QUANTITY	CONSTRUCTION CODE CONTRACT MAINTENANCE 100% STATE BRIDGE 0047 S.N. 050-0077	BRIDGE 0047 S.N. 050-0078
*,	70107025	CHANGEABLE MESSAGE SIGN	CAL DA	60	30	30
	70300150	SHORT TERM PAVEMENT MARKING REMOVAL	SQ FT	1568	767	801
	70307120	TEMPORARY PAVEMENT MARKING - LINE 4" - TYPE IV TAPE	FOOT	4696	2297	2399
	70400100	TEMPORARY CONCRETE BARRIER	FOOT	1000	500	500
	70400200	RELOCATE TEMPORARY CONCRETE BARRIER	FOOT	950	475	475
	70600251	IMPACT ATTENUATORS, TEMPORARY (NON- REDIRECTIVE, NARROW), TEST LEVEL 3	EACH	2	1	1
	70600352	IMPACT ATTENUATORS, RELOCATE (NON- REDIRECTIVE,NARROW), TEST LEVEL 3	EACH	2	1	1
**	78004600	PREFORMED PLASTIC PAVEMENT MARKING, TYPE D - STANDARD - LETTERS AND SYMBOLS	SQ FT	96	48	48
**	78004640	PREFORMED PLASTIC PAVEMENT MARKING, TYPE D - STANDARD - LINE 8"	FOOT	661	322	339
**	78004645	PREFORMED PLASTIC PAVEMENT MARKING, TYPE D - STANDARD - LINE 9"	FOOT	610	306	304
**	78004720	PREFORMED PLASTIC PAVEMENT MARKING, TYPE D - STANDARD - LINE 24"	FOOT	81	43	38
*, **	78009004	MODIFIED URETHANE PAVEMENT MARKING - LINE 4"	FOOT	10177	5107	5070
**	78011000	GROOVING FOR RECESSED PAVEMENT MARKING, LETTERS AND SYMBOLS	SQ FT	96	48	48
**	78011025	GROOVING FOR RECESSED PAVEMENT MARKING 5"	FOOT	5089	2554	2535

* SPECIAL PROVISION

** SPECIALTY ITEM

	CODE NO.	ITEM	UNIT	TOTAL QUANTITY	CONSTRUCTION CODE CONTRACT MAINTENANCE 100% STATE BRIDGE 0047 S.N. 050-0077	BRIDGE 0047 S.N. 050-0078
**	78011045	GROOVING FOR RECESSED PAVEMENT MARKING 9"	FOOT	661	322	339
**	78011050	GROOVING FOR RECESSED PAVEMENT MARKING 10"	FOOT	610	306	304
**	78011125	GROOVING FOR RECESSED PAVEMENT MARKING 25"	FOOT	81	43	38
*	78300200	RAISED REFLECTIVE PAVEMENT MARKER REMOVAL	EACH	8	4	4
*	78300202	PAVEMENT MARKING REMOVAL - WATER BLASTING	SQ FT	2540	1273	1267
*	X0325748	ACRYLIC COATING	SQ YD	184.9	96.2	88.7
*	X0325749	FIBER WRAP	SQ FT	1087	573	514
*	X5091742	REMOVE AND RE-ERECT EXISTING BRIDGE RAIL	FOOT	298	149	149
*	X7010228	TRAFFIC CONTROL AND PROTECTION, STANDARD 701601 (SPECIAL)	L SUM	1	0.5	0.5
*	X7200061	TEMPORARY INFORMATION SIGNING	SQ FT	60	30	30
*	X7200201	WIDTH RESTRICTION SIGNING	L SUM	1	0.5	0.5
*	X8110170	REPAIR EXISTING CONDUIT ATTACHED TO STRUCTURE	L SUM	1	1	
*	Z0001800	APPROACH SLAB REPAIR (PARTIAL DEPTH)	SQ YD	25	13	12
*	Z0001899	JACK AND REMOVE EXISTING BEARINGS	EACH	88	44	44

* SPECIAL PROVISION

** SPECIALTY ITEM

	CODE NO.	ITEM	UNIT	TOTAL QUANTITY	CONSTRUCTION CODE CONTRACT MAINTENANCE 100% STATE BRIDGE 0047 S.N. 050-0077	BRIDGE 0047 S.N. 050-0078
*	Z0004542	HOT-MIX ASPHALT REMOVAL (SPECIAL)	SQ YD	1386	693	693
*	Z0005900	BRIDGE CURB OR HUBGUARD REPAIR	FOOT	245	138	107
*	Z0043800	PRECAST PRESTRESSED CONCRETE I-BEAM REPAIR	SQ FT	363	187	176

* SPECIAL PROVISION

** SPECIALTY ITEM

MODEL: Default
FILE NAME: P:\2024ME24020_PTB 205-023 D3 PH II_K&T\ME24020.11 PTB 205-023 WO 11_IL 251101-CADD\CAD_Sheets\D366R21-Title.dgn

MILLENNIA PROFESSIONAL SERVICES
www.millennia.pro

USER NAME = mamidon	DESIGNED - MJR	REVISED -
	DRAWN - MLA	REVISED -
	CHECKED - ERO	REVISED -
PLOT DATE = 10/13/2025	DATE - 10/13/2025	REVISED -

STATE OF ILLINOIS
DEPARTMENT OF TRANSPORTATION

SUMMARY OF QUANTITIES

SCALE: 1" = 50' | SHEET 5 OF 5 SHEETS | STA. TO STA.

F.A.P. RTE.	SECTION	COUNTY	TOTAL SHEETS	SHEET NO.
46	(50-2HB)BRR	LASALLE	48	7

CONTRACT NO. 66R21

ILLINOIS | FED. AID PROJECT

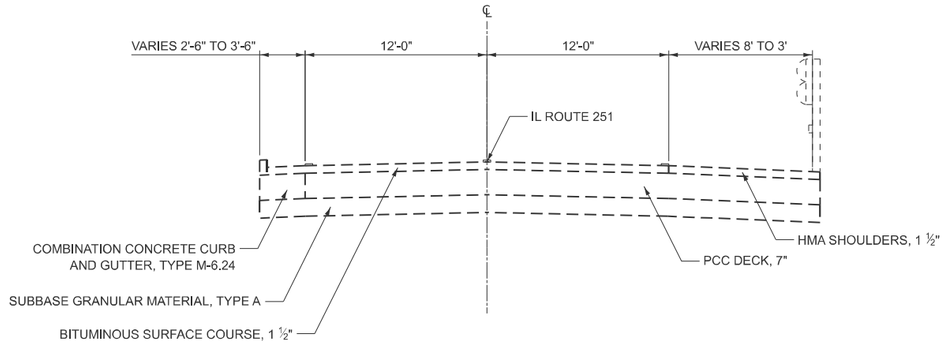

EXISTING TYPICAL SECTION

STA. 46+82.74 TO STA. 47+22.74
STA. 49+30.67 TO STA. 49+70.67

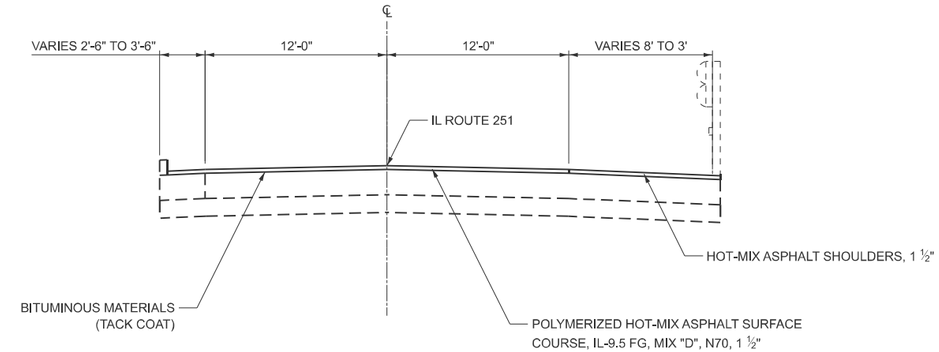

PROPOSED TYPICAL SECTION

STA. 46+82.74 TO STA. 47+22.74
STA. 49+30.67 TO STA. 49+70.67

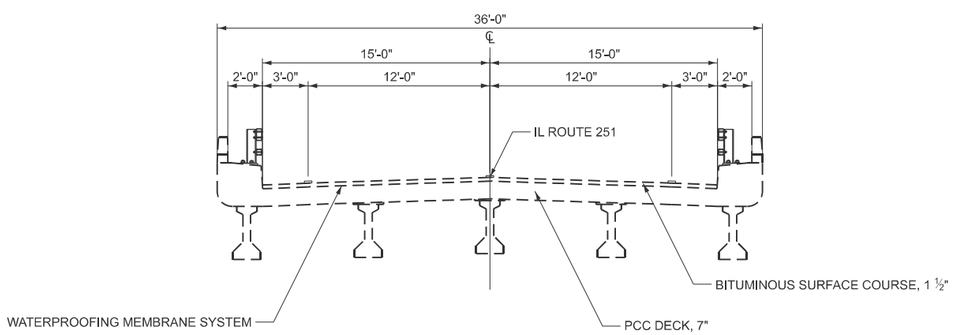

EXISTING TYPICAL SECTION

STA. 47+22.87 TO STA. 49+30.54

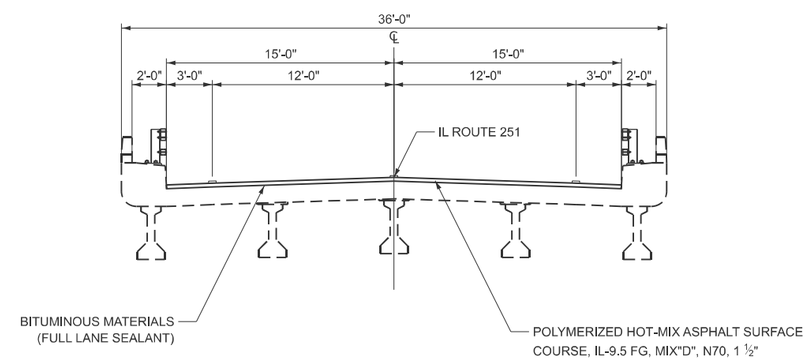

PROPOSED TYPICAL SECTION

STA. 47+22.87 TO STA. 49+30.54

MODEL: Default
FILE NAME: P:\2024ME24020_PTB 205-023 D3 PH II_K&T\ME24020.11 PTB 205-023 WO 11 IL 251\01-CADD\CAD_Sheets\D366R21-Title.dgn

MILLENNIA PROFESSIONAL SERVICES
www.millennia.pro

USER NAME = mamldon	DESIGNED - MJR	REVISED -	
	DRAWN - MLA	REVISED -	
	CHECKED - ERO	REVISED -	
PLOT DATE = 10/13/2025	DATE - 10/13/2025	REVISED -	

STATE OF ILLINOIS
DEPARTMENT OF TRANSPORTATION

IL ROUTE 251 N.B. (S.N. 050-0078)
TYPICAL SECTIONS

SCALE: 1" = 50' | SHEET 1 OF 2 SHEETS | STA. TO STA.

F.A.P. RTE.	SECTION	COUNTY	TOTAL SHEETS	SHEET NO.
46	(50-2HB)BRR	LASALLE	48	8
		CONTRACT NO. 66R21		
	ILLINOIS	FED. AID PROJECT		

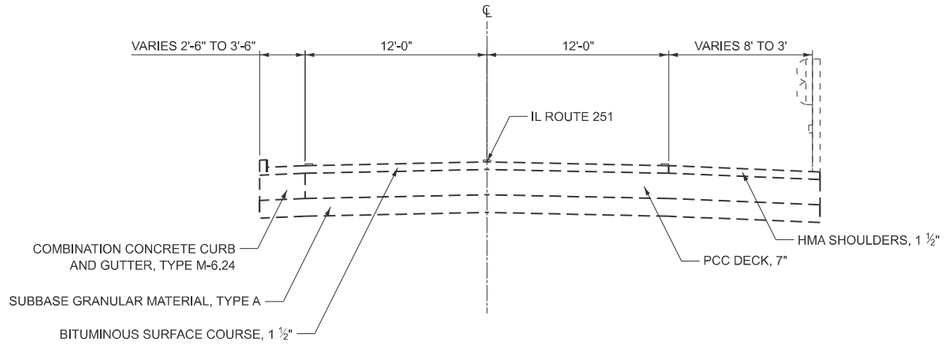

EXISTING TYPICAL SECTION

STA. 46+83.38 TO STA. 47+23.38
STA. 49+31.30 TO STA. 49+71.30

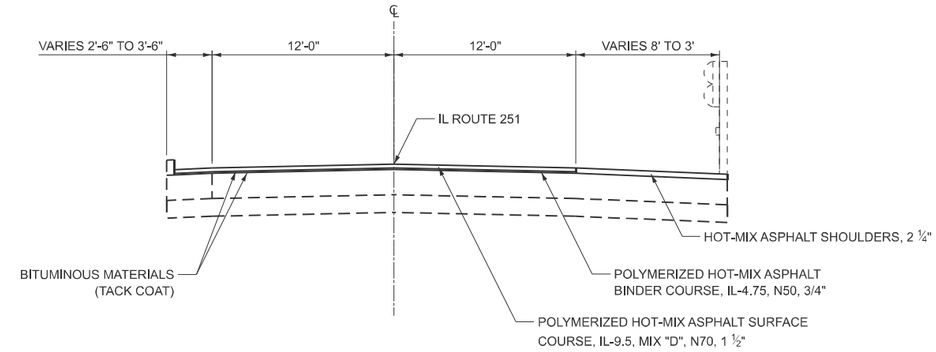

PROPOSED TYPICAL SECTION

STA. 46+83.38 TO STA. 47+23.38
STA. 49+31.30 TO STA. 49+71.30

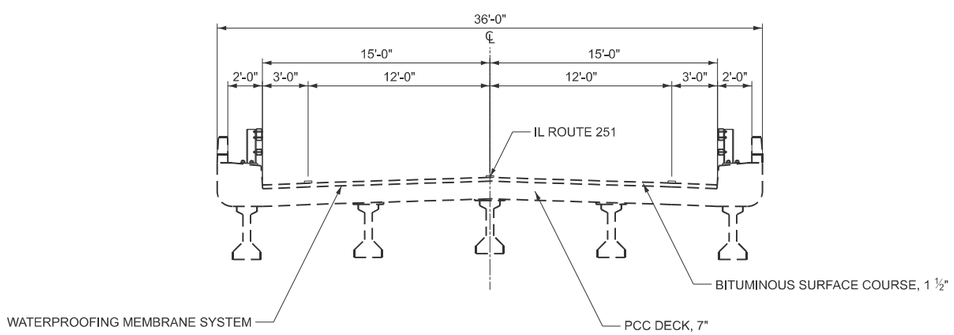

EXISTING TYPICAL SECTION

STA. 47+23.50 TO STA. 49+31.18

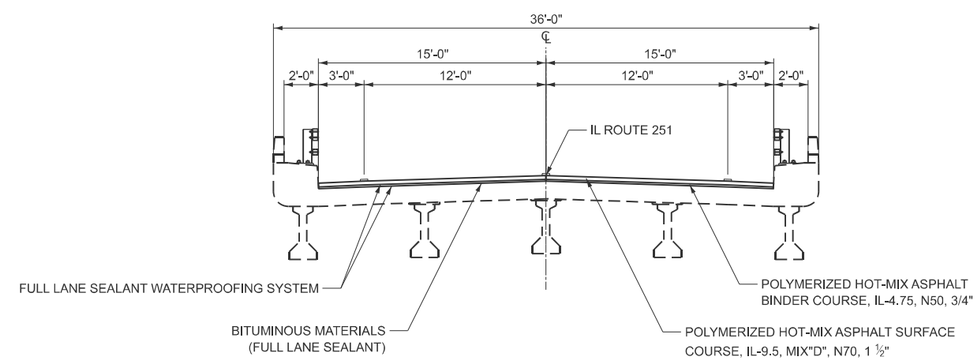

PROPOSED TYPICAL SECTION

STA. 47+23.50 TO STA. 49+31.18

MODEL: Default
FILE NAME: P:\2024ME24020_PTB 205-023 D3 PH II_K&T\ME24020.11 PTB 205-023 WO 11_IL 251\01-CADD\CAD_Sheets\D366R21-Title.dgn

MILLENNIA PROFESSIONAL SERVICES
www.millennia.pro

USER NAME = mamldon	DESIGNED - MJR	REVISED -	STATE OF ILLINOIS DEPARTMENT OF TRANSPORTATION
	DRAWN - MLA	REVISED -	
	CHECKED - ERO	REVISED -	
PLOT DATE = 10/13/2025	DATE - 10/13/2025	REVISED -	

IL ROUTE 251 S.B. (S.N. 050-0077)
TYPICAL SECTIONS

SCALE: 1" = 50' | SHEET 2 OF 2 SHEETS | STA. TO STA.

F.A.P. RTE.	SECTION	COUNTY	TOTAL SHEETS	SHEET NO.
46	(50-2HB)BRR	LASALLE	48	9
		CONTRACT NO. 66R21		
	ILLINOIS	FED. AID PROJECT		

PAVING SCHEDULE													
STATION	TO	STATION	OFFSET	BITUMINOUS MATERIALS (FULL LANE SEALANT)	BITUMINOUS MATERIALS (TACK COAT)	PLOYMERIZED HOT-MIX ASPHALT BINDER COURSE, IL-4.75, N50	POLYMERIZED HOT-MIX ASPHALT SURFACE COURSE, IL-9.5FG, MIX "D", N70	POLYMERIZED HOT-MIX ASPHALT SURFACE COURSE, IL-9.5, MIX "D", N70	HOT-MIX ASPHALT SHOULDERS, 1 1/2"	HOT-MIX ASPHALT SHOULDERS, 2 1/4"	FULL LANE SEALANT WATERPROOFING SYSTEM	HOT-MIX ASPHALT SURFACE REMOVAL (DECK)	HOT-MIX ASPHALT REMOVAL (SPECIAL)
				LB	LB	TON	TON	TON	SQ YD	SQ YD	SQ YD	SQ YD	SQ YD
46+82.74	TO	47+22.74	LT		72		11		40			158	
46+83.38	TO	47+23.38	RT		91	6		11		25		143	
47+22.87	TO	49+30.54	LT	312			60						693
47+23.50	TO	49+31.18	RT					60			693		693
49+30.67	TO	49+70.67	LT		65		11		25			143	
49+31.30	TO	49+71.30	RT		98	6		11		41		158	
			TOTAL	**312**	**326**	**12**	**82**	**82**	**65**	**66**	**693**	**602**	**1386**

TEMPORARY CONCRETE BARRIER SCHEDULE							
STATION	TO	STATION	OFFSET	TEMPORARY CONCRETE BARRIER	RELOCATE TEMPORARY CONCRETE BARRIER	IMPACT ATTENUATORS, TEMPORARY(NON-REDIRECTIVE, NARROW), TEST LEVEL 3	IMPACT ATTENUATORS, RELOCATE(NON-REDIRECTIVE, NARROW), TEST LEVEL 3
				FOOT	FOOT	EACH	EACH
44+78.25	TO	49+71.30	RT	500		1	
44+96.49	TO	49+71.30	RT		475		1
46+82.71	TO	51+75.80	LT	500		1	
46+82.76	TO	51+57.56	LT		475		1
47+22.87	TO	49+30.54	LT				
47+23.51	TO	49+31.18	RT				
			TOTAL	**1000**	**950**	**2**	**2**

MODEL: Default
FILE NAME: P:\2024\ME24020_PTB 205-023 D3 PH II_K&TME24020.11 PTB 205-023 WO 11_IL 251\01-CADD\CAD_Sheets\D366R21-Title.dgn

MILLENNIA PROFESSIONAL SERVICES
www.millennia.pro

USER NAME = mamidon	DESIGNED - MJR	REVISED -	
	DRAWN - MLA	REVISED -	
	CHECKED - ERO	REVISED -	
PLOT DATE = 10/13/2025	DATE - 10/13/2025	REVISED -	

STATE OF ILLINOIS
DEPARTMENT OF TRANSPORTATION

SCHEDULE OF QUANTITIES

SCALE: 1" = 50' | SHEET 1 OF 2 SHEETS | STA. TO STA.

F.A.P. RTE.	SECTION	COUNTY	TOTAL SHEETS	SHEET NO.
46	(50-2HB)BRR	LASALLE	48	10
		CONTRACT NO. 66R21		
		ILLINOIS	FED. AID PROJECT	

PAVEMENT MARKING SCHEDULE

STATION	TO	STATION	OFFSET	PAVEMENT MARKING BLACKOUT TAPE, 7"	SHORT TERM PAVEMENT MARKING REMOVAL	TEMPORARY PAVEMENT MARKING - LINE 4" - TYPE IV TAPE	PREFORMED PLASTIC PAVEMENT MARKING, TYPE D - STANDARD - LETTERS AND SYMBOLS	PREFORMED PLASTIC PAVEMENT MARKING, TYPE D - STANDARD - LINE 8"	PREFORMED PLASTIC PAVEMENT MARKING, TYPE D - STANDARD - LINE 9"	PREFORMED PLASTIC PAVEMENT MARKING, TYPE D - STANDARD - LINE 24"	MODIFIED URETHANE PAVEMENT MARKING - LINE 4"	GROOVING FOR RECESSED PAVEMENT MARKING, LETTERS AND SYMBOLS"	GROOVING FOR RECESSED PAVEMENT MARKING 5"	GROOVING FOR RECESSED PAVEMENT MARKING 9"	GROOVING FOR RECESSED PAVEMENT MARKING 10"	GROOVING FOR RECESSED PAVEMENT MARKING 25"	RAISED REFLECTIVE PAVEMENT MARKER REMOVAL	PAVEMENT MARKING REMOVAL - WATER BLASTING
				FOOT	SQ FT	FOOT	SQ FT	FOOT	FOOT	FOOT	FOOT	SQ FT	FOOT	FOOT	FOOT	FOOT	EACH	SQ FT
42+54.68	TO	45+29.92	RT	69														
45+18.41	TO	49+71.45	RT	453														
46+82.59	TO	51+35.63	LT	453														
45+18.25	TO	49+71.16	RT	453														
46+82.88	TO	51+35.79	LT	453														
51+32.99	TO	54+20.57	LT	72														
41+58.47	TO	41+47.92	LT		24	70												
43+20.24	TO	49+71.34	RT		218	652												
45+18.41	TO	49+71.45	RT		151	453												
46+82.59	TO	51+35.63	RT		151	453												
46+82.70	TO	53+65.81	RT		228	684												
42+33.48	TO	49+71.27	LT		247	739												
45+18.25	TO	49+71.16	LT		151	453												
46+82.77	TO	54+20.57	LT		247	739												
46+82.88	TO	51+35.79	LT		151	453												
41+64.77	TO	42+54.86	LT/RT					35						35				24
41+88.95	TO	41+88.95	LT/RT					16						16				11
42+08.95	TO	44+58.95	LT				48	250				48		250				214
44+58.95	TO	46+08.95	LT					38						38				25
50+44.42	TO	52+19.42	RT					44						44				30
52+19.42	TO	54+79.42	RT				48	260				48		260				221
54+51.50	TO	54+89.42	LT/RT					18						18				12
42+09.95	TO	54+24.08	LT						304						304			175
42+54.86	TO	54+78.42	RT						306						306			177
42+08.95			LT							24						24		48
42+27.83			LT							14						14		28
54+41.63	TO	54+48.37	RT							19						19		37
54+79.42			RT							24						24		48
41+88.95	TO	54+85.60	LT								2594		1297					337
42+24.67	TO	54+54.08	LT/RT								4952		2476					810
41+73.95	TO	54+89.42	RT								2631		1316					343
46+82.73	TO	49+70.67	LT														4	
46+83.38	TO	49+71.30	RT														4	
			TOTAL	**1953**	**1568**	**4696**	**96**	**661**	**610**	**81**	**10177**	**96**	**5089**	**661**	**610**	**81**	**8**	**2540**

NOTE: DISTRICT 3 CALLS FOR DOUBLE APPLICATION OF URETHANE PAVEMENT MARKING

IL ROUTE 251 N.B. (S.N. 050-0078) LEGEND

HOT-MIX ASPHALT SURFACE REMOVAL (SPECIAL)
POLYMERIZED HOT-MIX ASPHALT SURFACE COURSE, IL-9.5FG, MIX "D", N70, 1 1/2"

HOT-MIX ASPHALT SURFACE REMOVAL (DECK)
POLYMERIZED HOT-MIX ASPHALT SURFACE COURSE, IL-9.5FG, MIX "D", N70, 1 1/2"

HOT-MIX ASPHALT SURFACE REMOVAL (DECK)
HOT-MIX ASPHALT SHOULDERS, 1 1/2"

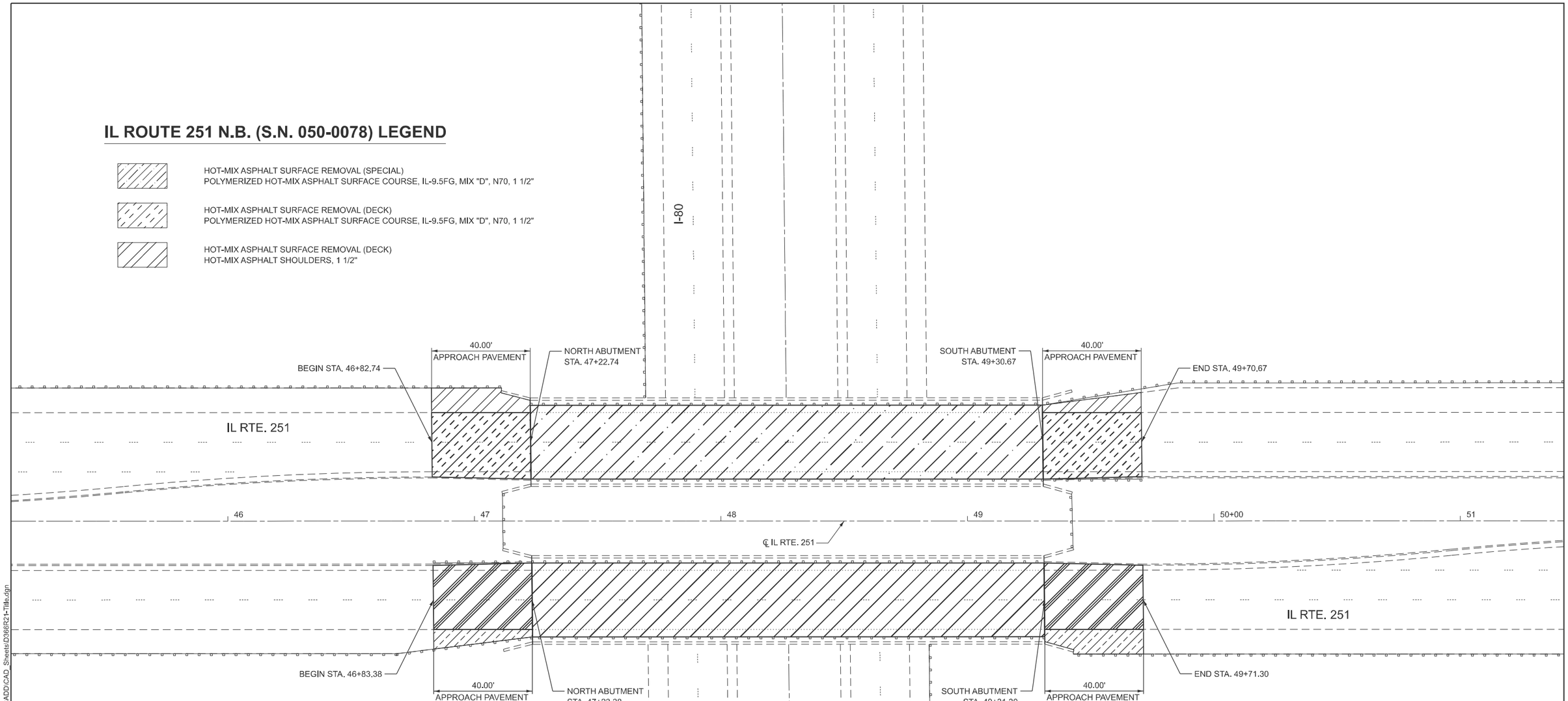

IL ROUTE 251 S.B. (S.N. 050-0077) LEGEND

HOT-MIX ASPHALT SURFACE REMOVAL (SPECIAL)
POLYMERIZED HOT-MIX ASPHALT BINDER COURSE, IL-4.75, N50, 3/4"
POLYMERIZED HOT-MIX ASPHALT SURFACE COURSE, IL-9.5, MIX "D", N70, 1 1/2"

HOT-MIX ASPHALT SURFACE REMOVAL (DECK)
POLYMERIZED HOT-MIX ASPHALT BINDER COURSE, IL-4.75, N50, 3/4"
POLYMERIZED HOT-MIX ASPHALT SURFACE COURSE, IL-9.5, MIX "D", N70, 1 1/2"

HOT-MIX ASPHALT SURFACE REMOVAL (DECK)
HOT-MIX ASPHALT SHOULDERS, 2 1/4"

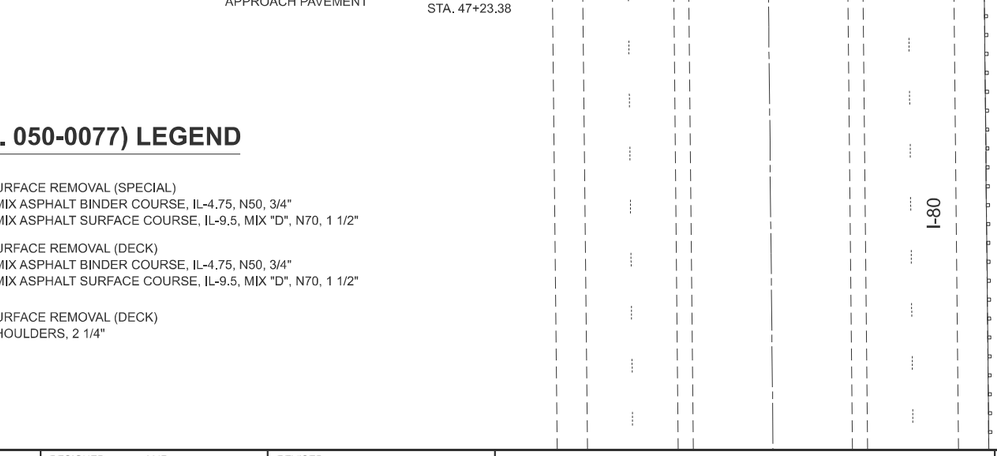

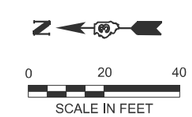

MODEL: Default
FILE NAME: P:\2024\ME24020_PTB 205-023 D3 PH II_K&TIME24020.11 PTB 205-023 WO 11 IL 251\01-CADD\CAD_Sheets\D366R21-Title.dgn

MILLENNIA PROFESSIONAL SERVICES
www.millennia.pro

USER NAME = mamidon	DESIGNED - MJR	REVISED -	
	DRAWN - MLA	REVISED -	
	CHECKED - ERO	REVISED -	
PLOT DATE = 10/13/2025	DATE - 10/13/2025	REVISED -	

STATE OF ILLINOIS
DEPARTMENT OF TRANSPORTATION

F.A.P. ROUTE 46 (IL ROUTE 251)
ROADWAY PLANS

SCALE: 1" = 20' | SHEET 1 OF 1 SHEETS | STA. 46+82.74 TO STA. 49+71.30

F.A.P. RTE.	SECTION	COUNTY	TOTAL SHEETS	SHEET NO.
46	(50-2HB)BRR	LASALLE	48	12
		CONTRACT NO. 66R21		
		ILLINOIS	FED. AID PROJECT	

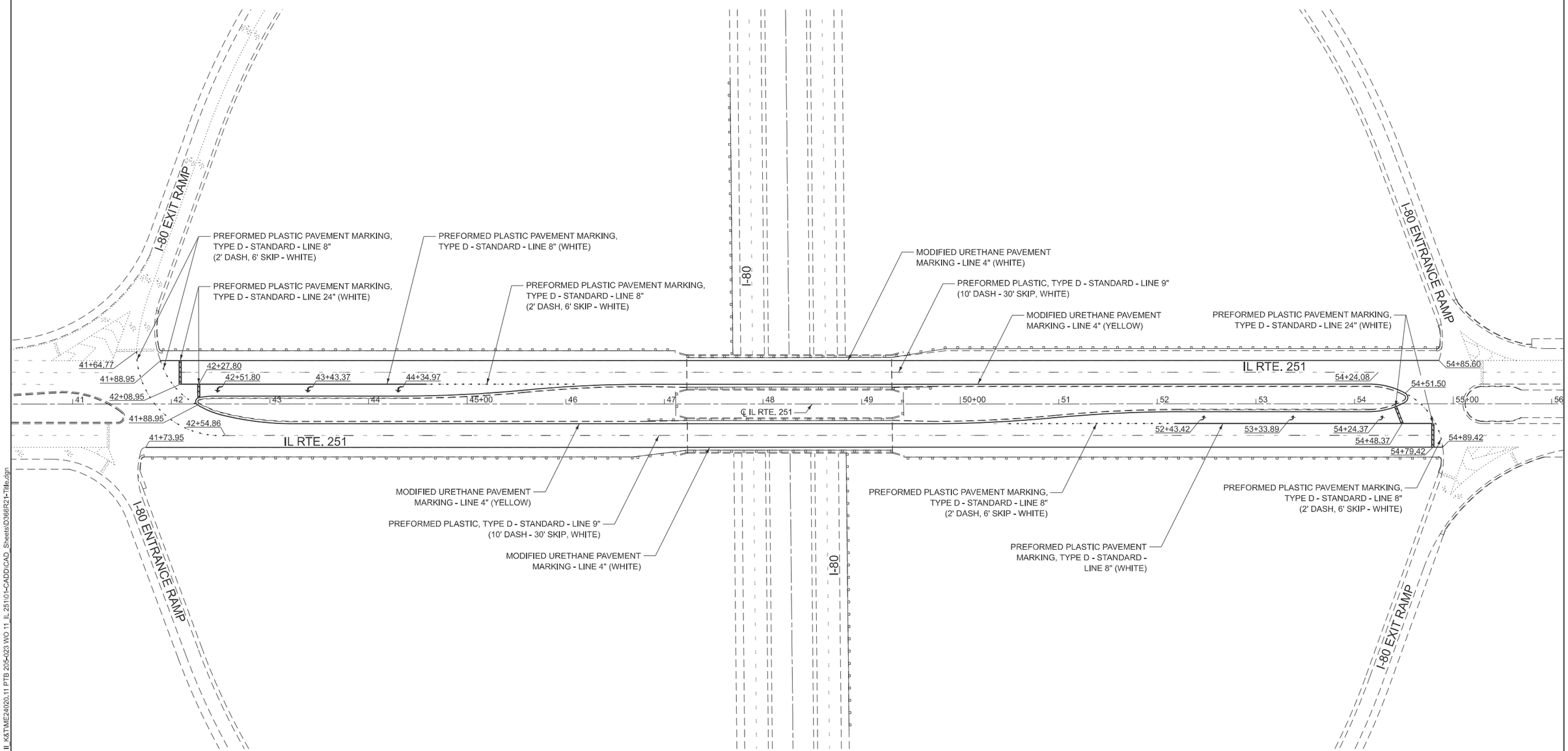

MODEL: Default
FILE NAME: P:\2024\ME24020_PTB 205-023 D3 PH II_K&TME24020.11 PTB 205-023 WO 11_IL 251\01-CADD\CAD_Sheets\D366R21-Title.dgn

MILLENNIA PROFESSIONAL SERVICES
www.millennia.pro

USER NAME = mamldon	DESIGNED - MJR	REVISED -	
	DRAWN - MLA	REVISED -	
	CHECKED - ERO	REVISED -	
PLOT DATE = 10/13/2025	DATE - 10/13/2025	REVISED -	

STATE OF ILLINOIS
DEPARTMENT OF TRANSPORTATION

F.A.P. ROUTE 45 (IL ROUTE 251)
PAVEMENT MARKING PLAN

SCALE: 1" = 50" | SHEET 1 OF 1 SHEETS | STA. 41+64.77 TO STA. 54+89.42

F.A.P. RTE.	SECTION	COUNTY	TOTAL SHEETS	SHEET NO.
46	(50-2HB)BRR	LASALLE	48	13
		CONTRACT NO. 66R21		
	ILLINOIS	FED. AID PROJECT		

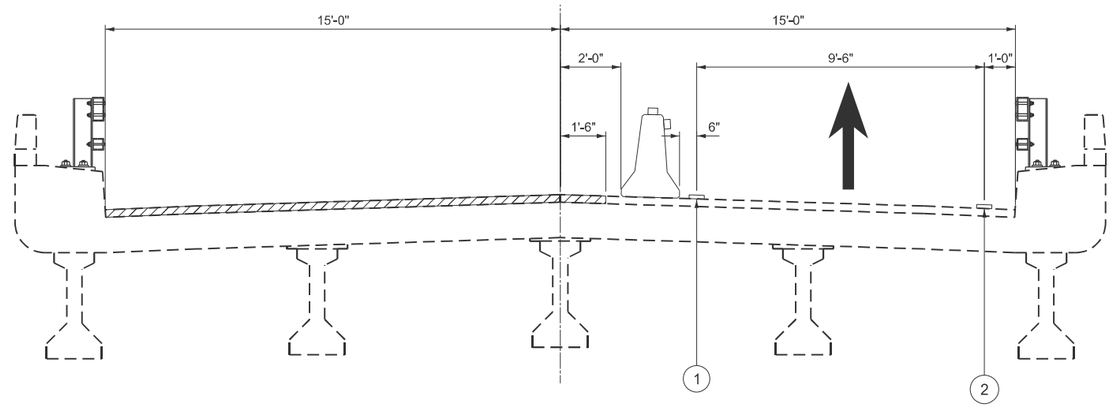

STAGE I REMOVAL
TYPICAL SECTION

(S.N. 050-0077 & S.N. 050-0078,
IN DIRECTION OF TRAFFIC)

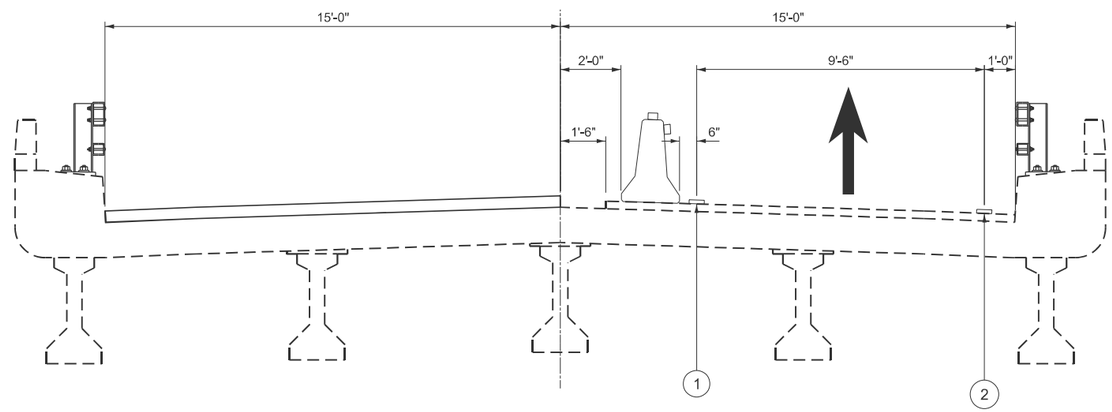

STAGE I CONSTRUCTION
TYPICAL SECTION

(S.N. 050-0077 & S.N. 050-0078,
IN DIRECTION OF TRAFFIC)

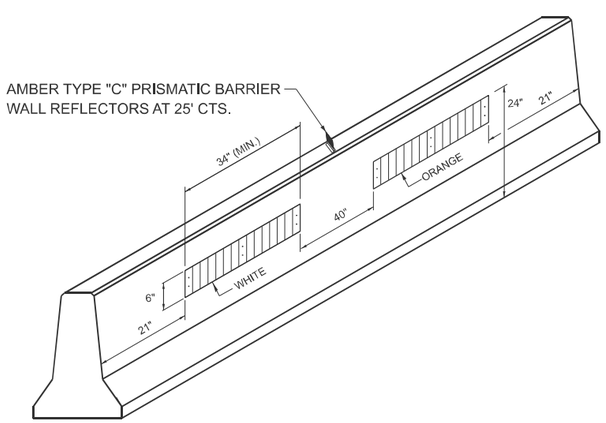

LINEAR DELINEATOR PANELS
FOR TEMPORARY CONCRETE BARRIER

LEGEND

- BITUMINOUS SURFACE & WATER PROOFING MEMBRANE SYSTEM REMOVAL
- PROPOSED HMA SURFACE & FULL LANE SEALANT (SEE TYPICAL SECTIONS)
- TEMPORARY CONCRETE BARRIER
- (1) TEMPORARY PAVEMENT MARKING - LINE 4" (YELLOW)
- (2) TEMPORARY PAVEMENT MARKING - LINE 4" (WHITE)

MODEL: Default
FILE NAME: P:\2024\ME24020_PTB 205-023 D3 PH II_K&TIME24020.11 PTB 205-023 WO 11_IL 25\101-CADD\CAD_Sheets\D366R21-Title.dgn

MILLENNIA PROFESSIONAL SERVICES
www.millennia.pro

USER NAME = mamidon	DESIGNED - MJR	REVISED -	
	DRAWN - MLA	REVISED -	
	CHECKED - ERO	REVISED -	
PLOT DATE = 10/13/2025	DATE - 10/13/2025	REVISED -	

STATE OF ILLINOIS
DEPARTMENT OF TRANSPORTATION

TRAFFIC STAGING TYPICAL SECTIONS

SCALE: 1" = 50' | SHEET 1 OF 2 SHEETS | STA. TO STA.

F.A.P. RTE.	SECTION	COUNTY	TOTAL SHEETS	SHEET NO.
46	(50-2HB)BRR	LASALLE	48	14
		CONTRACT NO. 66R21		
	ILLINOIS	FED. AID PROJECT		

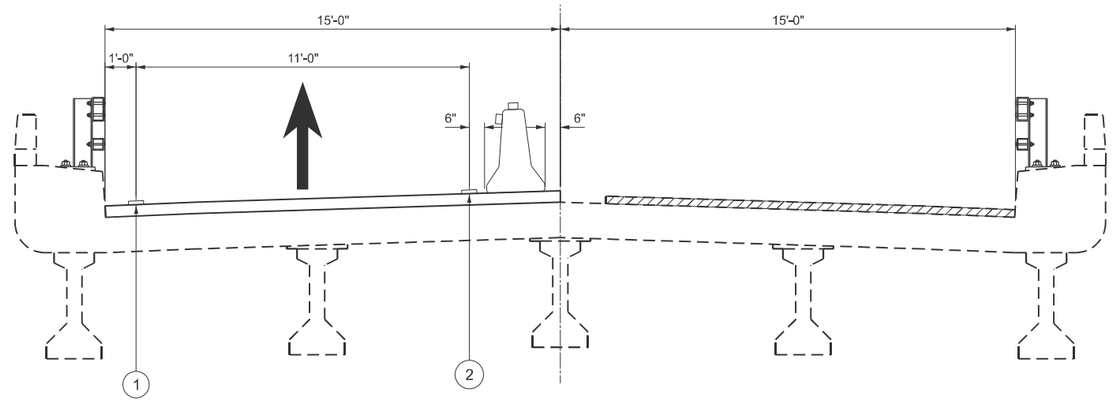

STAGE II REMOVAL TYPICAL SECTION

(S.N. 050-0077 & S.N. 050-0078, IN DIRECTION OF TRAFFIC)

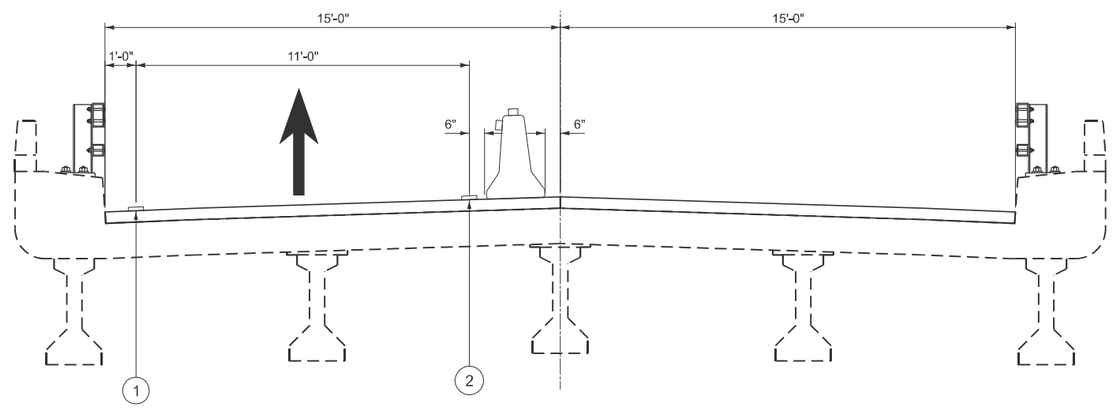

STAGE II CONSTRUCTION TYPICAL SECTION

(S.N. 050-0077 & S.N. 050-0078, IN DIRECTION OF TRAFFIC)

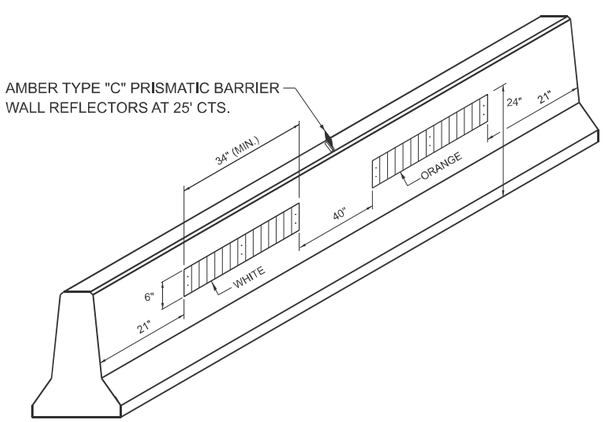

LINEAR DELINEATOR PANELS FOR TEMPORARY CONCRETE BARRIER

LEGEND

- BITUMINOUS SURFACE & WATER PROOFING MEMBRANE SYSTEM REMOVAL
- PROPOSED HMA SURFACE & FULL LANE SEALANT (SEE TYPICAL SECTIONS)
- TEMPORARY CONCRETE BARRIER
- (1) TEMPORARY PAVEMENT MARKING - LINE 4" (YELLOW)
- (2) TEMPORARY PAVEMENT MARKING - LINE 4" (WHITE)

MODEL: Default
FILE NAME: P:\2024\ME24020_PTB 205-023 D3 PH II_K&TIME24020.11 PTB 205-023 WO 11_IL 251101-CADD\CAD_Sheets\D366R21-Title.dgn

MILLENNIA PROFESSIONAL SERVICES
www.millennia.pro

USER NAME = mamldon	DESIGNED - MJR	REVISED -	
	DRAWN - MLA	REVISED -	
	CHECKED - ERO	REVISED -	
PLOT DATE = 10/13/2025	DATE - 10/13/2025	REVISED -	

STATE OF ILLINOIS
DEPARTMENT OF TRANSPORTATION

TRAFFIC STAGING TYPICAL SECTIONS

SCALE: 1" = 50' | SHEET 2 OF 2 SHEETS | STA. TO STA.

F.A.P. RTE.	SECTION	COUNTY	TOTAL SHEETS	SHEET NO.
46	(50-2HB)BRR	LASALLE	48	15
		CONTRACT NO. 66R21		
	ILLINOIS	FED. AID PROJECT		

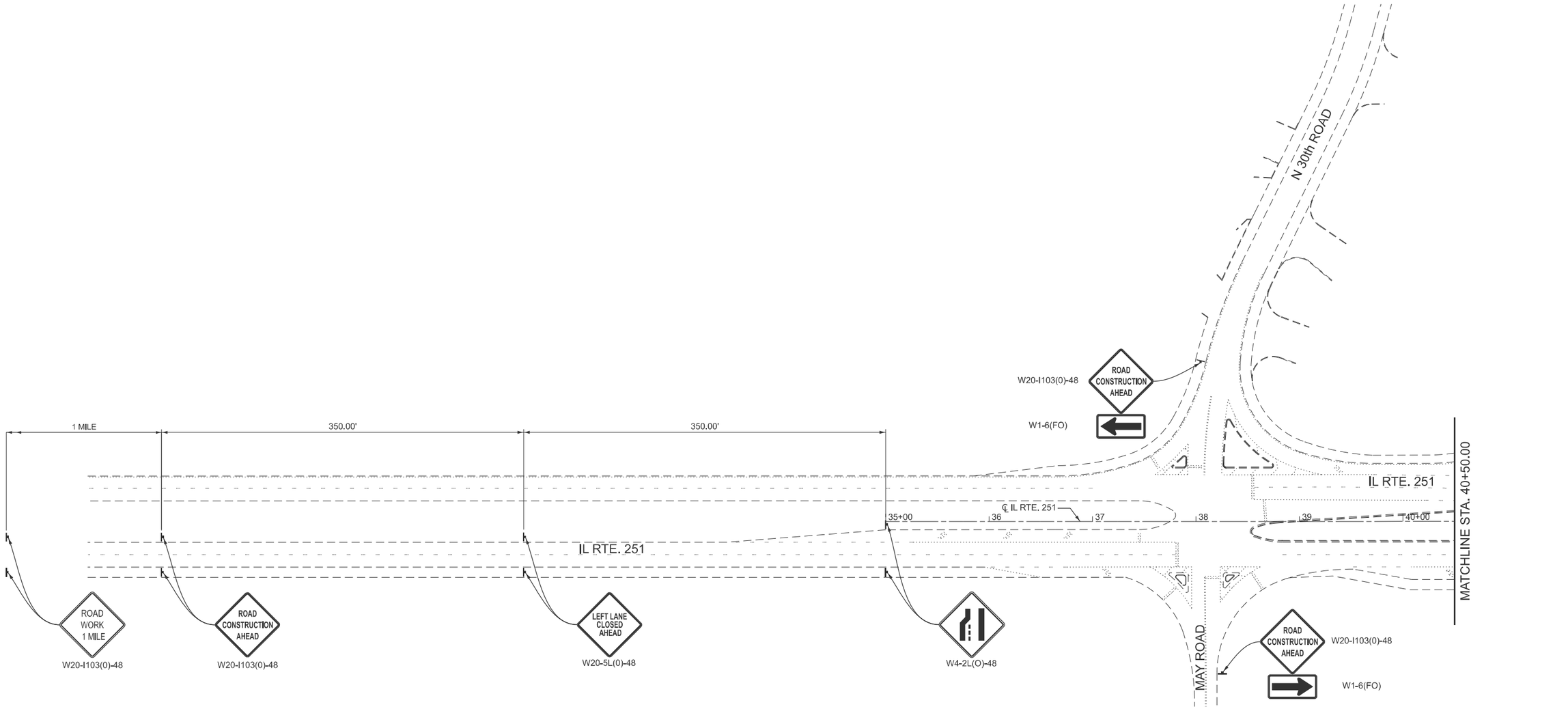

SYMBOLS

- WORK AREA
- ARROW BOARD
- SIGN
- DRUM
- DIRECTIONAL INDICATOR BARRICADE WITH STEADY BURN MONODIRECTIONAL LIGHT
- TEMPORARY CONCRETE BARRIER
- IMPACT ATTENUATOR

N

0 50 100

SCALE IN FEET

MODEL: Default
FILE NAME: P:\2024\ME24020_PTB 205-023 D3 PH II_K&T\ME24020.11 PTB 205-023 WO 11_IL 251\01-CADD\CAD_Sheets\D366R21-Tlfix.dgn

MILLENNIA PROFESSIONAL SERVICES
www.millennia.pro

USER NAME = mamidon	DESIGNED - MJR	REVISED -	
	DRAWN - MLA	REVISED -	
	CHECKED - ERO	REVISED -	
PLOT DATE = 10/13/2025	DATE - 10/13/2025	REVISED -	

STATE OF ILLINOIS
DEPARTMENT OF TRANSPORTATION

F.A.P. ROUTE 46 (IL ROUTE 251) - STAGE I
TRAFFIC CONTROL & PROTECTION STANDARD 701601 SPECIAL

SCALE: 1" = 50' | SHEET 1 OF 6 SHEETS | STA. 35+00.00 TO STA. 40+50.00

F.A.P. RTE.	SECTION	COUNTY	TOTAL SHEETS	SHEET NO.
46	(50-2HB)BRR	LASALLE	48	16
		CONTRACT NO. 66R21		
	ILLINOIS	FED. AID PROJECT		

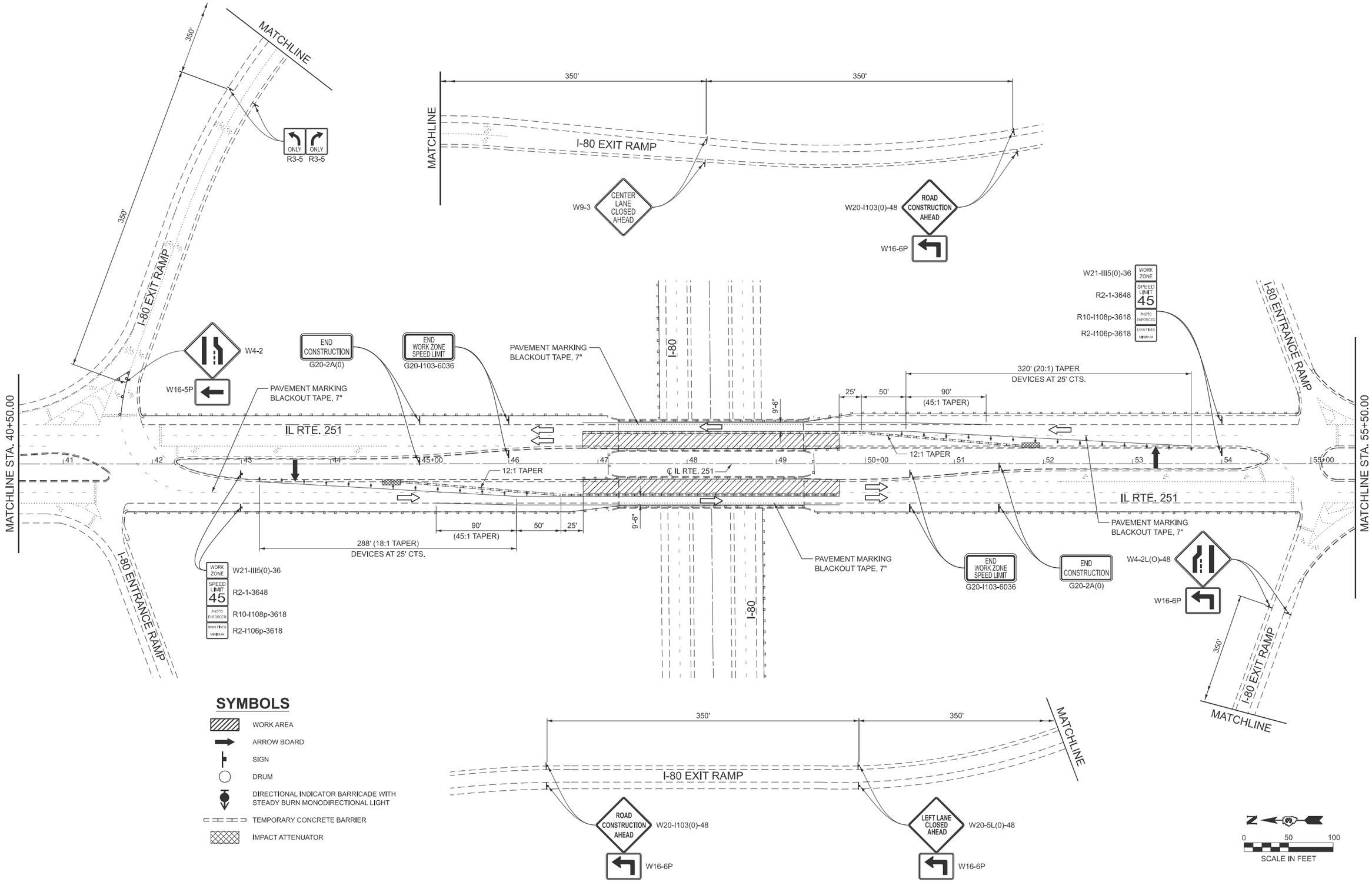

MODEL: Default
FILE NAME: P:\2024\ME24020_PTB 205-023 D3 PH II_K&TIME24020.11 PTB 205-023 WO 11 IL 25\101-CADD\CAD_Sheets\D366R21-Title.dgn

MILLENNIA PROFESSIONAL SERVICES
www.millennia.pro

USER NAME = mamldon	DESIGNED - MJR	REVISED -	
	DRAWN - MLA	REVISED -	
	CHECKED - ERO	REVISED -	
PLOT DATE = 10/13/2025	DATE - 10/13/2025	REVISED -	

STATE OF ILLINOIS
DEPARTMENT OF TRANSPORTATION

F.A.P. ROUTE 46 (IL ROUTE 251) - STAGE I
TRAFFIC CONTROL & PROTECTION STANDARD 701601 SPECIAL

SCALE: 1" = 50' | SHEET 2 OF 6 SHEETS | STA. 40+50.00 TO STA. 55+50.00

F.A.P. RTE.	SECTION	COUNTY	TOTAL SHEETS	SHEET NO.
46	(50-2HB)BRR	LASALLE	48	17
		CONTRACT NO. 66R21		
		ILLINOIS	FED. AID PROJECT	

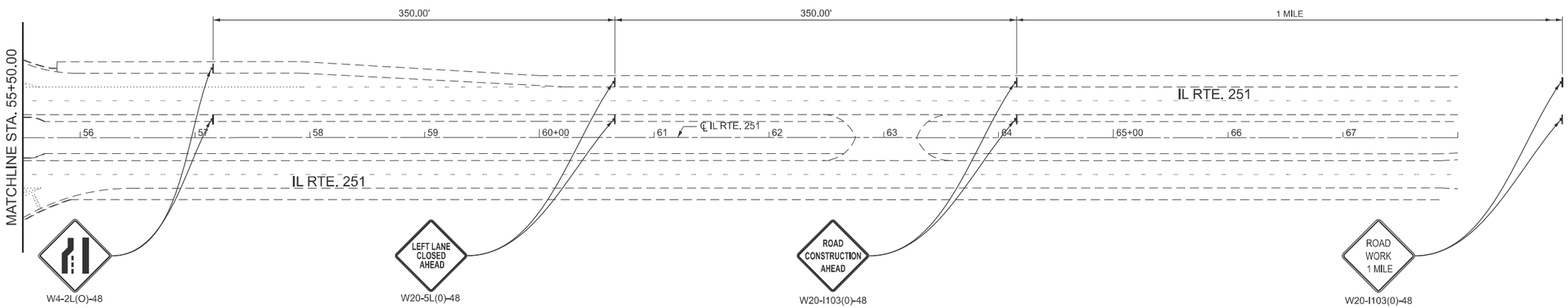

SYMBOLS

- WORK AREA
- ARROW BOARD
- SIGN
- DRUM
- DIRECTIONAL INDICATOR BARRICADE WITH STEADY BURN MONODIRECTIONAL LIGHT
- TEMPORARY CONCRETE BARRIER
- IMPACT ATTENUATOR

0 50 100
SCALE IN FEET

MODEL: Default
FILE NAME: P:\2024\ME24020_PTB 205-023 D3 PH II_K&TME24020.11 PTB 205-023 WO 11_IL 251\01-CADD\CAD_Sheets\D366R21-Title.dgn

MILLENNIA PROFESSIONAL SERVICES
www.millennia.pro

USER NAME = mamidon	DESIGNED - MJR	REVISED -	
	DRAWN - MLA	REVISED -	
	CHECKED - ERO	REVISED -	
PLOT DATE = 10/13/2025	DATE - 10/13/2025	REVISED -	

STATE OF ILLINOIS
DEPARTMENT OF TRANSPORTATION

F.A.P. ROUTE 46 (IL ROUTE 251) - STAGE I
TRAFFIC CONTROL & PROTECTION STANDARD 701601 SPECIAL

SCALE: 1" = 50' | SHEET 3 OF 6 SHEETS | STA. 55+50.00 TO STA. 68+00.00

F.A.P. RTE.	SECTION	COUNTY	TOTAL SHEETS	SHEET NO.
46	(50-2HB)BRR	LASALLE	48	18
		CONTRACT NO. 66R21		
	ILLINOIS	FED. AID PROJECT		

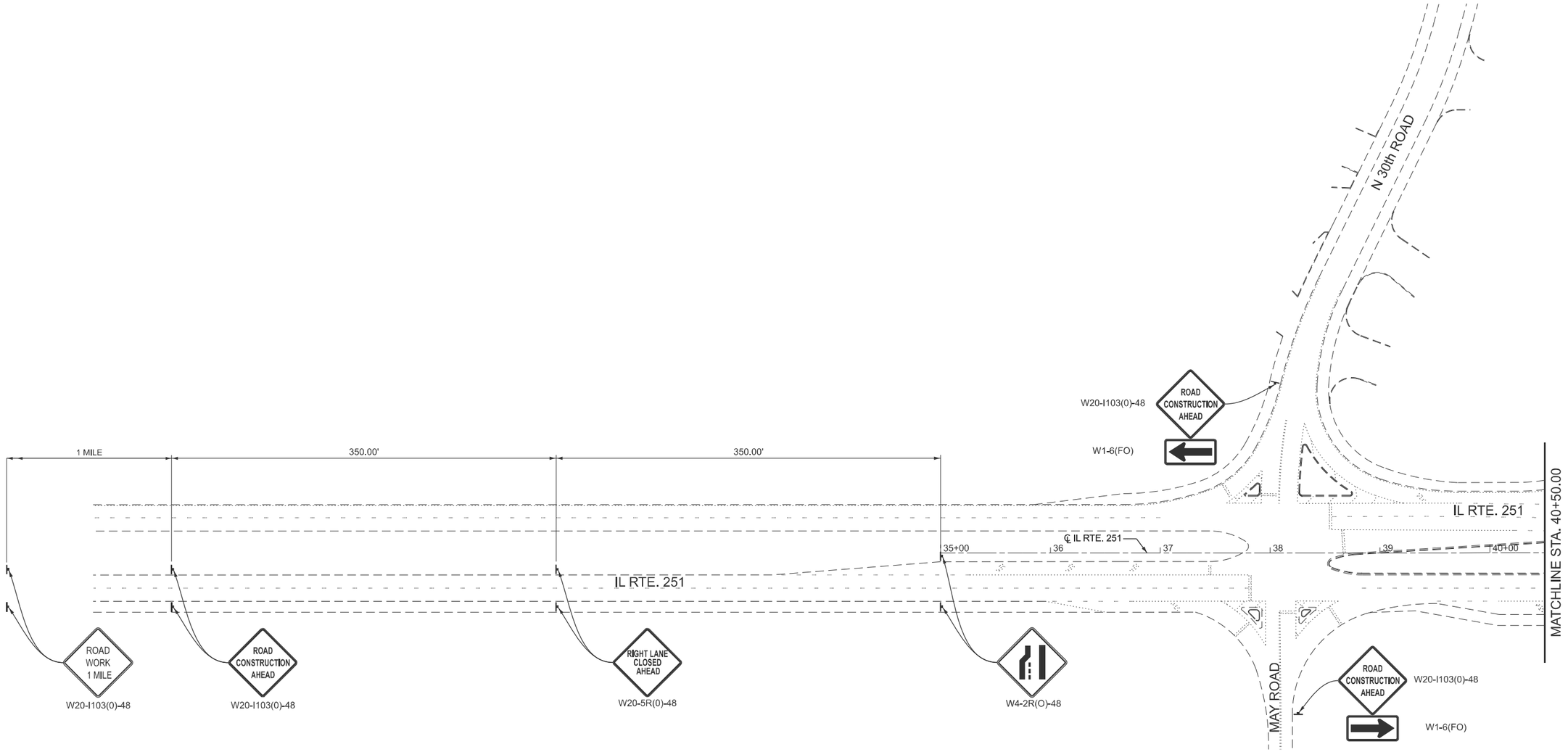

SYMBOLS

- WORK AREA
- ARROW BOARD
- SIGN
- DRUM
- DIRECTIONAL INDICATOR BARRICADE WITH STEADY BURN MONODIRECTIONAL LIGHT
- TEMPORARY CONCRETE BARRIER
- IMPACT ATTENUATOR

N

0 50 100

SCALE IN FEET

MODEL: Default
FILE NAME: P:\2024\ME24020_PTB 205-023 D3 PH II_K&T\ME24020.11 PTB 205-023 WO 11_IL 251\01-CADD\CAD_Sheets\D366R21-Tlflx.dgn

MILLENNIA PROFESSIONAL SERVICES
www.millennia.pro

USER NAME = mamidon	DESIGNED - MJR	REVISED -	
	DRAWN - MLA	REVISED -	
	CHECKED - ERO	REVISED -	
PLOT DATE = 10/13/2025	DATE - 10/13/2025	REVISED -	

STATE OF ILLINOIS
DEPARTMENT OF TRANSPORTATION

F.A.P. ROUTE 46 (IL ROUTE 251) - STAGE II
TRAFFIC CONTROL & PROTECTION STANDARD 701601 SPECIAL

SCALE: 1" = 50' | SHEET 4 OF 6 SHEETS | STA. 35+00.00 TO STA. 40+50.00

F.A.P. RTE.	SECTION	COUNTY	TOTAL SHEETS	SHEET NO.
46	(50-2HB)BRR	LASALLE	48	19
		CONTRACT NO. 66R21		
	ILLINOIS	FED. AID PROJECT		

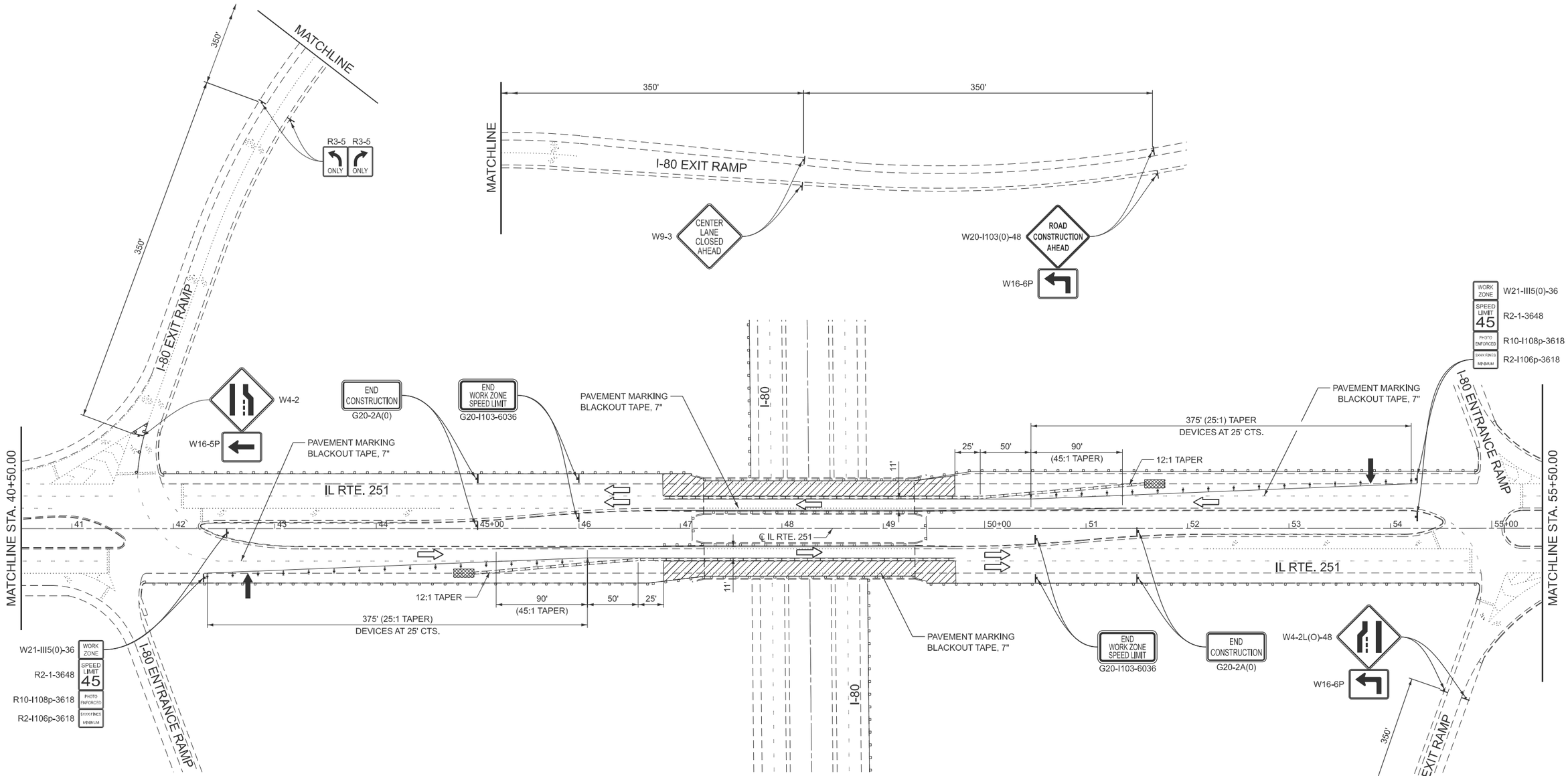

SYMBOLS

- WORK AREA
- ARROW BOARD
- SIGN
- DRUM
- DIRECTIONAL INDICATOR BARRICADE WITH STEADY BURN MONODIRECTIONAL LIGHT
- TEMPORARY CONCRETE BARRIER
- IMPACT ATTENUATOR

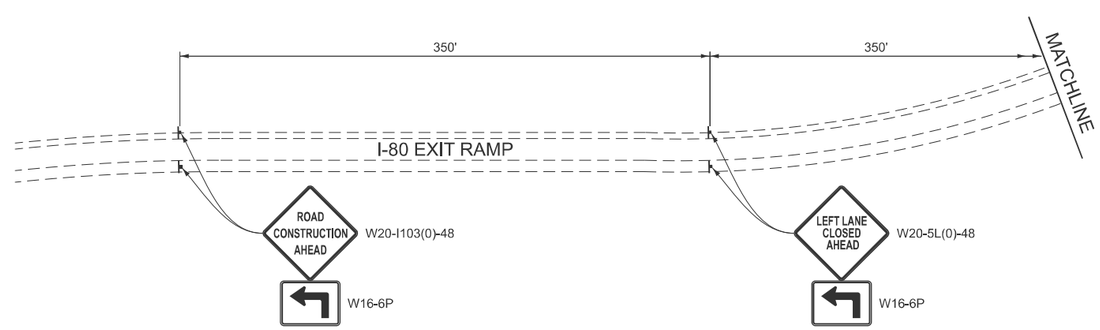

0 50 100
SCALE IN FEET

MODEL: Default
FILE NAME: P:\2024\ME240020_PTB 205-023 D3 PH II K&TIME24020.11 PTB 205-023 WO 11 IL 251\01-CADD\CAD Sheets\D366R21-Title.dgn

MILLENNIA PROFESSIONAL SERVICES
www.millennia.pro

USER NAME = mamldon	DESIGNED - MJR	REVISED -	
	DRAWN - MLA	REVISED -	
	CHECKED - ERO	REVISED -	
PLOT DATE = 10/13/2025	DATE - 10/13/2025	REVISED -	

STATE OF ILLINOIS
DEPARTMENT OF TRANSPORTATION

F.A.P. ROUTE 46 (IL ROUTE 251) - STAGE II
TRAFFIC CONTROL & PROTECTION STANDARD 701601 SPECIAL

SCALE: 1" = 50' | SHEET 5 OF 6 SHEETS | STA. 40+50.00 TO STA. 55+50.00

F.A.P. RTE.	SECTION	COUNTY	TOTAL SHEETS	SHEET NO.
46	(50-2HB)BRR	LASALLE	48	20
		CONTRACT NO. 66R21		
		ILLINOIS FED. AID PROJECT		

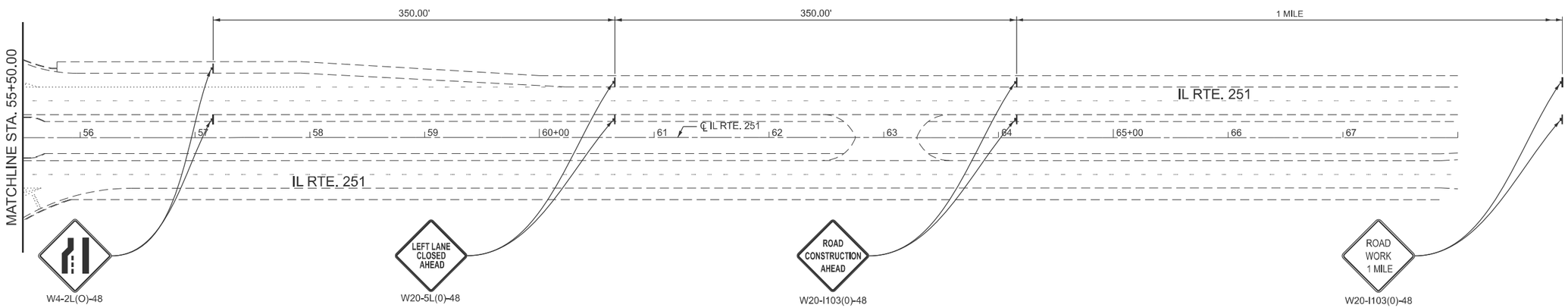

SYMBOLS

- WORK AREA
- ARROW BOARD
- SIGN
- DRUM
- DIRECTIONAL INDICATOR BARRICADE WITH STEADY BURN MONODIRECTIONAL LIGHT
- TEMPORARY CONCRETE BARRIER
- IMPACT ATTENUATOR

0 50 100
SCALE IN FEET

MODEL: Default
FILE NAME: P:\2024\ME24020_PTB 205-023 D3 PH II_K&TME24020.11 PTB 205-023 WO 11_IL 251\01-CADD\CAD_Sheets\D366R21-Title.dgn

MILLENNIA PROFESSIONAL SERVICES
www.millennia.pro

USER NAME = mamidon	DESIGNED - MJR	REVISED -	
	DRAWN - MLA	REVISED -	
	CHECKED - ERO	REVISED -	
PLOT DATE = 10/13/2025	DATE - 10/13/2025	REVISED -	

STATE OF ILLINOIS
DEPARTMENT OF TRANSPORTATION

F.A.P. ROUTE 46 (IL ROUTE 251) - STAGE II
TRAFFIC CONTROL & PROTECTION STANDARD 701601 SPECIAL

SCALE: 1" = 50' | SHEET 6 OF 6 SHEETS | STA. 55+50.00 TO STA. 68+00.00

F.A.P. RTE.	SECTION	COUNTY	TOTAL SHEETS	SHEET NO.
46	(50-2HB)BRR	LASALLE	48	21
		CONTRACT NO. 66R21		
	ILLINOIS	FED. AID PROJECT		

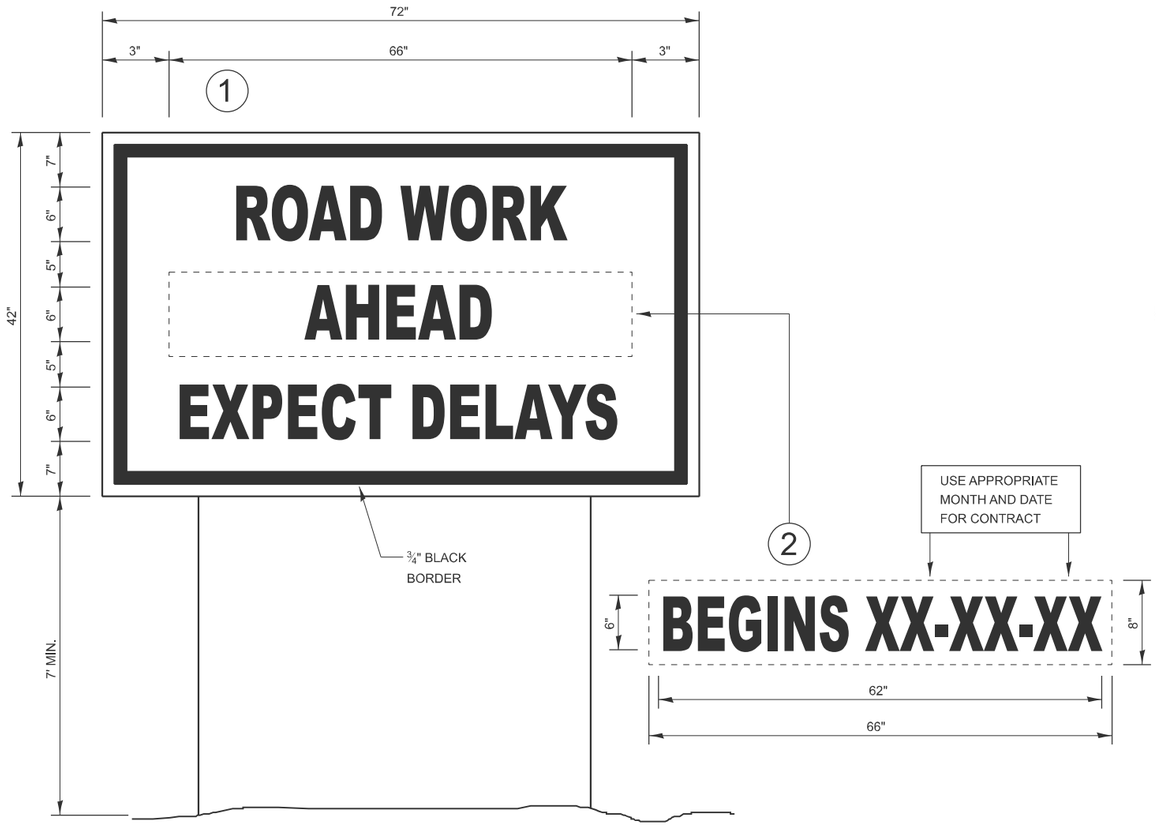

TEMPORARY INFORMATION SIGNING

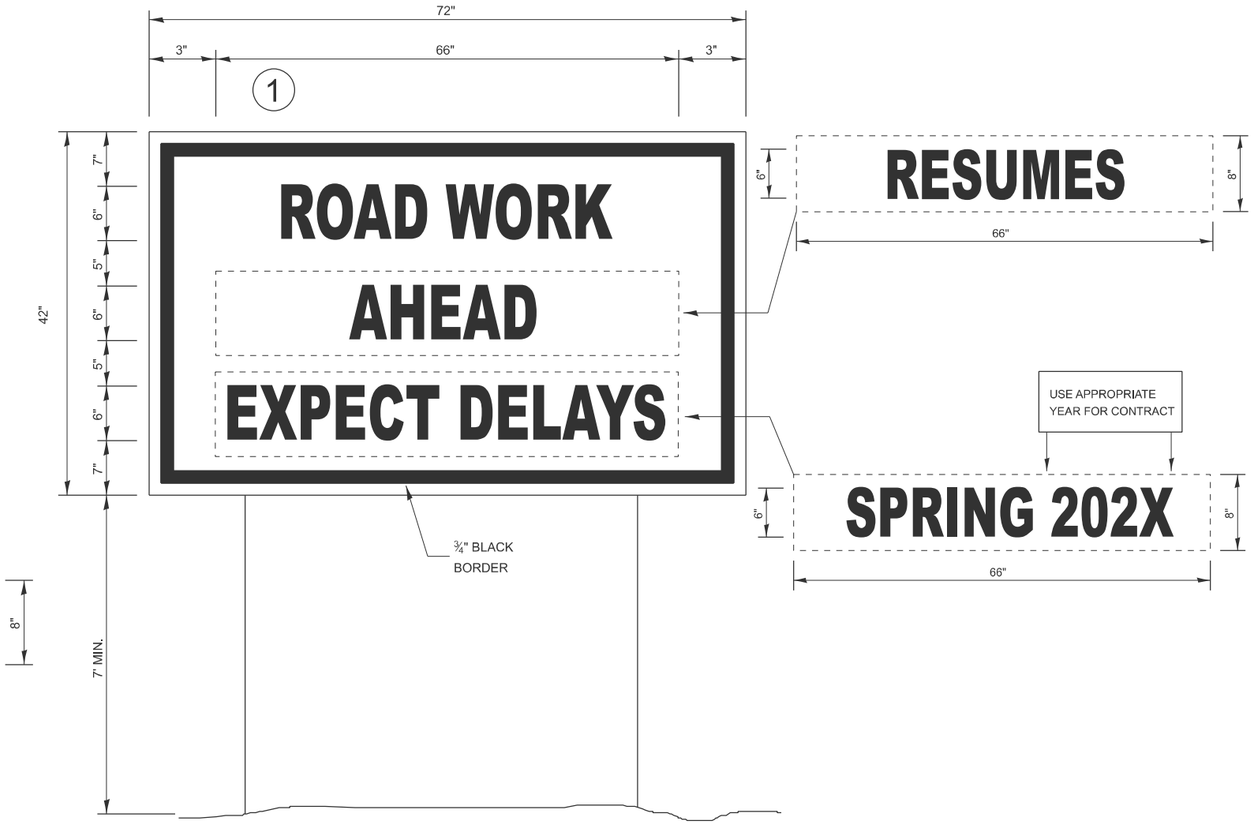

WINTER SHUT DOWN SIGNING

NOTES:

1. USE 6" D BLACK LETTERING ON FLUORESCENT ORANGE BACKGROUND.
2. ERECT SIGNS AT LOCATIONS IN ADVANCE OF THE "ROAD CONSTRUCTION AHEAD" SIGNS AS DIRECTED BY THE ENGINEER.
3. ERECT SIGN①WITH INSTALLED PANEL②A MINIMUM OF ONE WEEK PRIOR TO THE START OF THE LANE CLOSURE.
4. REMOVE PANEL②ON THAT DATE.
5. SEE SPECIAL PROVISION "TEMPORARY INFORMATION SIGNING" FOR ADDITIONAL INFORMATION.
6. WILL BE PAID FOR PER SQ FT AS "TEMPORARY INFORMATION SIGNING". EACH SIGN = 21 SQ FT AND THE DATE PANEL②WILL NOT BE MEASURED SEPARATELY FOR PAYMENT.
7. TEMPORARY INFORMATION SIGNING TO BE USED ON IL 251 ONLY.

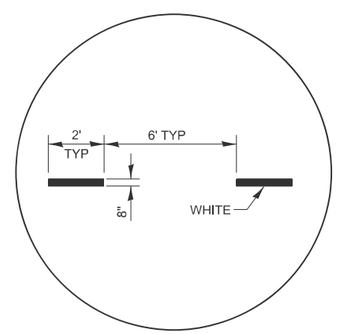

ADVANCE AND INTERSECTION LANE DIVIDER LINES

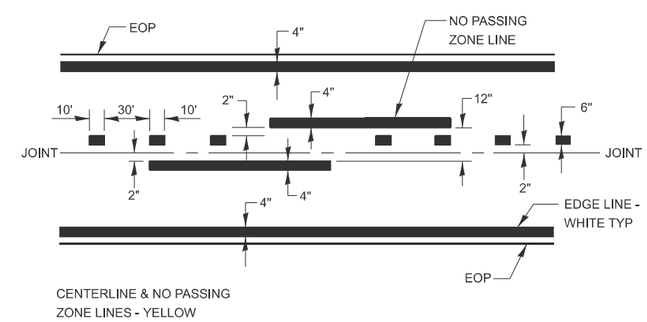

PAVEMENT MARKING

MODEL: Default
FILE NAME: P:\2024ME24020_PTB 205-023 D3 PH II_K&TME24020.11 PTB 205-023 WO 11_IL 251\01-CADD\CAD_Sheets\D366R21-Title.dgn

MILLENNIA PROFESSIONAL SERVICES
www.millennia.pro

USER NAME = mamidon	DESIGNED - MJR	REVISED -	
	DRAWN - MLA	REVISED -	
	CHECKED - ERO	REVISED -	
PLOT DATE = 10/13/2025	DATE - 10/13/2025	REVISED -	

STATE OF ILLINOIS
DEPARTMENT OF TRANSPORTATION

MISCELLANEOUS DETAILS

SCALE: 1" = 50' | SHEET 1 OF 2 SHEETS | STA. TO STA.

F.A.P. RTE.	SECTION	COUNTY	TOTAL SHEETS	SHEET NO.
46	(50-2HB)BRR	LASALLE	48	22
		CONTRACT NO. 66R21		
	ILLINOIS	FED. AID PROJECT		

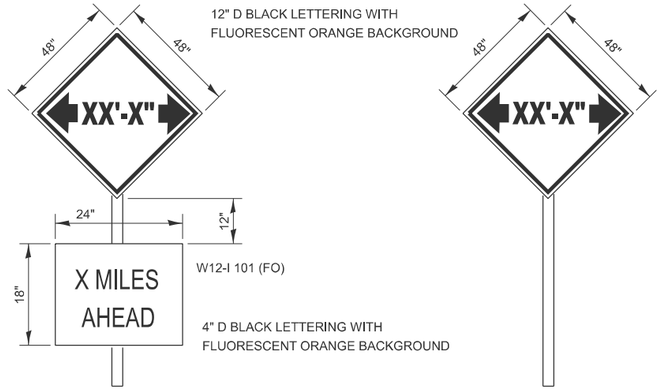

TO BE POST MOUNTED AS SHOWN ELSEWHERE IN THE PLANS.

COST OF SUPPLYING, INSTALLING, MAINTAINING AND REMOVING WIDTH RESTRICTION SIGNS SHALL BE INCLUDED IN THE COST OF THE TRAFFIC CONTROL AND PROTECTION PAY ITEMS.

WIDTH RESTRICTION SIGNING DETAILS

MAX WIDTH		MILES AHEAD	SIGN LOCATION
STAGE I	STAGE II		
9'-6"	11'-0"	500'	On EB I-80 Exit Ramp, 500' west of the Intersection off ramp for IL 251
9'-6"	11'-0"	500'	On WB I-80 Exit Ramp, 500' east of the Intersection off ramp for IL 251
9'-6"	11'-0"	2.0	On EB I-80, 500' west of the EXIT 75 off ramp for IL 251
9'-6"	11'-0"	2.0	On WB I-80, 500' east of the EXIT 75 off ramp for IL 251
9'-6"	11'-0"	500'	On NB IL 251, 500' south of the Intersection of IL 251 & I-80
9'-6"	11'-0"	500'	On SB IL 251, 500' north of the Intersection of IL 251 & I-80

NOTE: ADD DIRECTIONAL ARROWS, W16-5P, TO THE WIDTH RESTIRCTION SIGNS ON EXIT RAMPS.

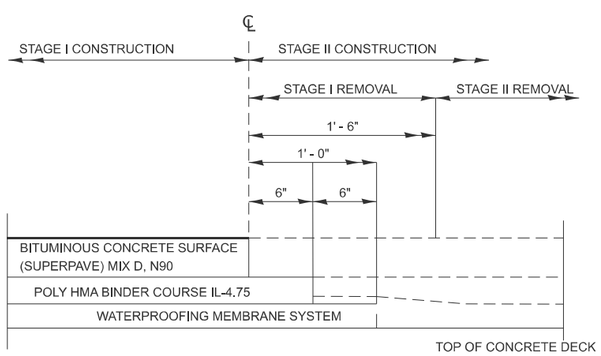

STAGE CONSTRUCTION LAPPING DETAIL

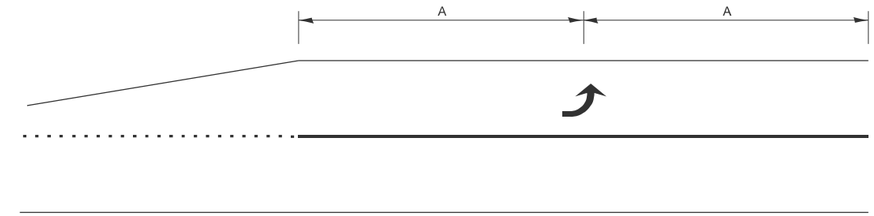

99' AND UNDER

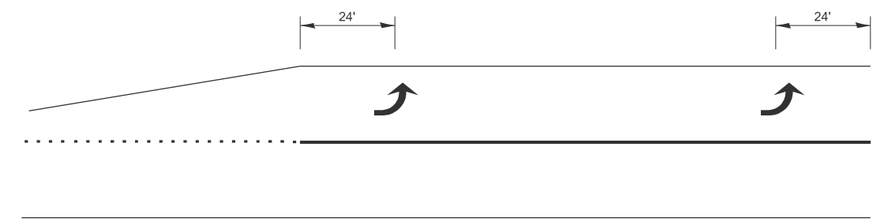

100' TO 149'

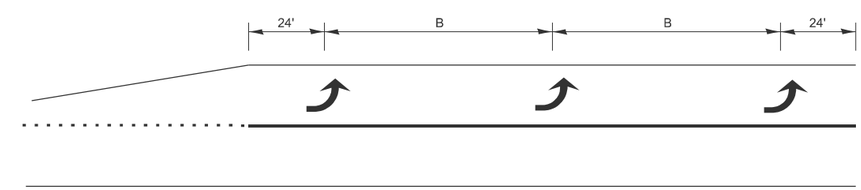

150' AND LONGER

TYPICAL PLACEMENT OF ARROWS IN TURN LANES

MODEL: Default
FILE NAME: P:\2024\ME24020_PTB 205-023 D3 PH II_K&TME24020.11 PTB 205-023 WO 11_IL 251\01-CADD\CAD_Sheets\D366R21-Tills.dgn

MILLENNIA PROFESSIONAL SERVICES
www.millennia.pro

USER NAME = mamidon	DESIGNED - MJR	REVISED -	
	DRAWN - MLA	REVISED -	
	CHECKED - ERO	REVISED -	
PLOT DATE = 10/13/2025	DATE - 10/13/2025	REVISED -	

STATE OF ILLINOIS
DEPARTMENT OF TRANSPORTATION

MISCELLANEOUS DETAILS

SCALE: 1" = 50' | SHEET 2 OF 2 SHEETS | STA. | TO STA.

F.A.P. RTE.	SECTION	COUNTY	TOTAL SHEETS	SHEET NO.
46	(50-2HB)BRR	LASALLE	48	23

CONTRACT NO. 66R21

ILLINOIS | FED. AID PROJECT

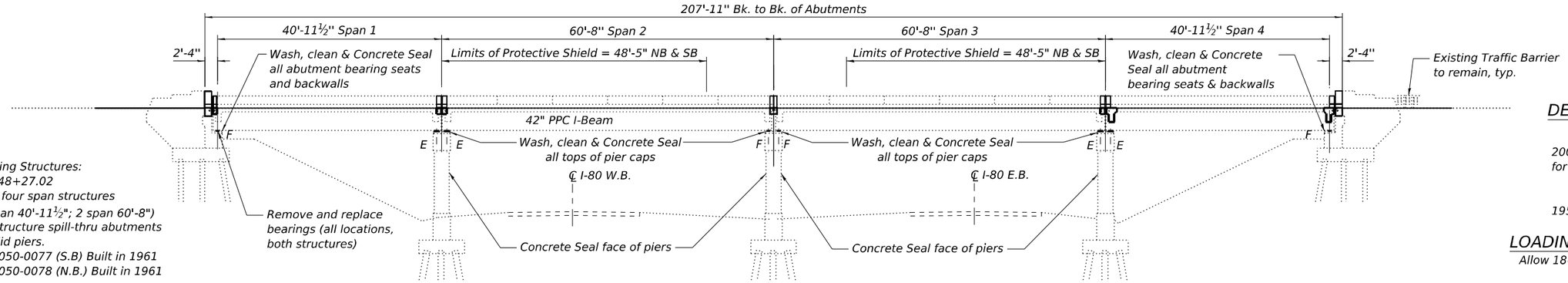

Existing Structures:
Sta. 48+27.02
Dual four span structures
(2 span 40'-11½"; 2 span 60'-8")
Substructure spill-thru abutments
& solid piers.
S.N. 050-0077 (S.B) Built in 1961
S.N. 050-0078 (N.B.) Built in 1961

ELEVATION

DESIGN SPECIFICATIONS

NEW CONSTRUCTION
2002 AASHTO Standard Specifications for Highway Bridges, 17th Edition

EXISTING
1957 Design Specifications & Interim

LOADING H20-S16-44 (EXISTING)

Allow 18#/sq. ft. for future wearing surface.

DESIGN STRESSES

FIELD UNITS

EXISTING CONSTRUCTION

(Cast in place)
f'c = 3,500 psi
fc = 1,400 psi
fs = 20,000 psi (Reinforcement)

PRECAST UNITS

f'c = 5,000 psi
f'ci = 4,000 psi
f's = 248,000 psi (7/16" ∅ strands)
fsi = 173,600 psi (7/16" ∅ strands)

NEW CONSTRUCTION

f'c = 4,000 psi
fy = 60,000 psi (Reinf.)
fy = 36,000 psi (Str. Steel, M270 Gr 36) (preform joint)
fy = 50,000 psi (Str. Steel, M270 Gr 50) (bearings)

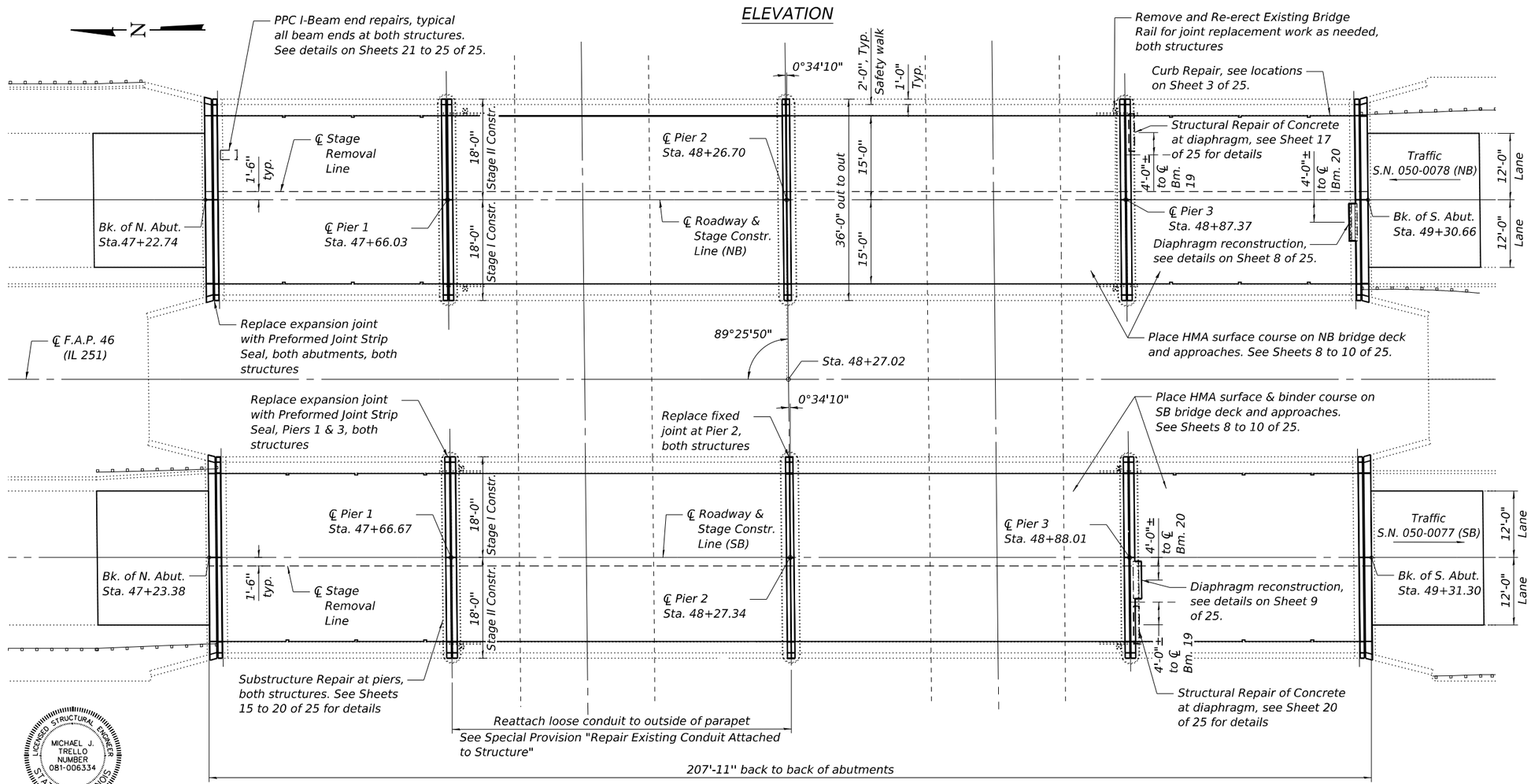

PLAN

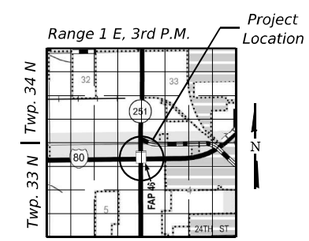

LOCATION SKETCH

LICENSED STRUCTURAL ENGINEER
MICHAEL J. TRELLO
NUMBER 081-006334
STATE OF ILLINOIS

Date: December 10, 2025
Expires: November 30, 2026

BRIDGE REPAIRS
F.A.P. 46 (IL 251)
OVER F.A.I. RTE 80
SECTION (50-2HB)BRR
LASALLE COUNTY
STATION 48+27.02
S.N. 050-0077 (S.B.) & 050-0078 (N.B.)

MODEL: Sheet
FILE NAME: I:\2022\22069.11 IDOT D3 - PTB 205-023 - WO11 - LaSalle County 66R21\CADData\CADsheets\0500077_0078-66R21-001-GPE.dgn
12/10/2025 1:34:28 PM

KUHN & TRELLO
CONSULTING ENGINEERS
A Limited Liability Company
109 N. 7th Street, 3rd Floor
Springfield, IL 62701
Phone: 217-679-0044
Professional Design Firm No. 184-006526

USER NAME =	DESIGNED - PDA	REVISED -	
	CHECKED - PRR	REVISED -	
PLOT SCALE =	DRAWN - MMY	REVISED -	
PLOT DATE =	CHECKED - MJT	REVISED -	

STATE OF ILLINOIS
DEPARTMENT OF TRANSPORTATION

GENERAL PLAN & ELEVATION
STRUCTURE NO. 050-0077 (SB) & 050-0078 (NB)
SHEET 1 OF 25 SHEETS

F.A.P. RTE.	SECTION	COUNTY	TOTAL SHEETS	SHEET NO.
46	(50-2HB)BRR	LASALLE	48	24
		CONTRACT NO. 66R21		
		ILLINOIS	FED. AID PROJECT	

SCOPE OF WORK

1. Removal work:
   Partial depth removal of piers, deck ends and approaches at abutments, including parapets. Full depth removal at diaphragm reconstruction locations.
   Remove existing bridge rail for joint replacement as needed, each structure.

2. Construction work:
   Cast deck ends, parapets, approaches and diaphragms at locations indicated.
   Place Preformed Joint Strip Seal at joints at abutments and piers 1 & 3, both structures.
   Replace fixed joint at pier 2, both structures.
   Repair concrete beam ends.
   Repair concrete diaphragm at location indicated.
   Repair substructure.

3. Additional Construction work:
   Wash, clean & Concrete Seal all tops and faces of pier caps, abutments bearing seats and backwalls.

GENERAL NOTES

Plan dimensions and details relative to existing structures have been taken from existing plans and are subject to nominal construction variations. The Contractor shall field verify existing dimensions and details affecting new construction and make necessary approved adjustments prior to construction or ordering of materials. Such variations shall not be cause for additional compensation for a change in scope of work; however, the Contractor will be paid for the quantity actually furnished at the unit price bid for the work.

All structural steel for expansion joints shall be AASHTO M 270 Grade 36, unless otherwise noted.

All new structural steel and bearing assemblies shall be hot-dip galvanized. See Special Provisions for "Hot Dip Galvanizing for Structural Steel".

Reinforcement bars designated (E) shall be epoxy coated.

Protective Coat shall be applied to all new concrete.

Existing reinforcement bars extending into the removal area shall be cleaned, straightened, and incorporated into the new construction. Any reinforcement bars that are damaged during concrete removal shall be replaced with an approved bar splicer or anchorage system. Cost included with Concrete Removal.

Joint openings shall be adjusted according to Article 520.04 of the Standard Specifications when the deck is poured at an ambient temperature other than 50°F.

The Contractor shall use extreme care during concrete removal so as not to damage the PPC I-Beam.

The existing concrete surface shall be cleaned and prepared in accordance with the Special Provisions.

See Special Provisions for "FRP Strengthening for PPC I-Beam Repairs".

See Special Provisions for "Precast Prestressed Concrete I-Beam Repair".

Acrylic coating shall be placed over Fiber Wrap repairs. Two coats shall be applied. Quantity includes two coats.

INDEX OF SHEETS

TOTAL BILL OF MATERIAL

	ITEM	UNIT	TOTAL
	Concrete Removal	Cu. Yd.	31.4
	Protective Shield	Sq. Yd.	776
	Concrete Superstructure	Cu. Yd.	31.6
	Protective Coat	Sq. Yd.	80.8
	Reinforcement Bars, Epoxy Coated	Pound	4500
	Bar Splicers	Each	80
	Preformed Joint Strip Seal	Foot	284
	Furnishing and Erecting Structural Steel	Pounds	4,080
	Elastomeric Bearing Assembly, Type II	Each	44
	Anchor Bolts, 1¼"	Each	176
	Concrete Sealer	Sq. Ft.	2824
	Polymerized Hot-Mix Asphalt Surface Course, IL-9.5FG, Mix "D", N70	Ton	82
	Polymerized Hot-Mix Asphalt Surface Course, IL-9.5, Mix "D", N70	Ton	82
	Hot-Mix Asphalt Surface Removal (Deck)	Sq. Yd.	602
*	Hot-Mix Asphalt Surface Removal (Special)	Sq. Yd.	1386
	Polymerized Hot-Mix Asphalt Binder Course, IL-4.75, N50	Ton	12
	Full Lane Sealant Waterproofing System	Sq. Yd.	693
*	Remove and Reerect Rail Existing Bridge Rail	Foot	298
*	Structural Repair of Concrete (Depth Equal to or Less Than 5 Inches)	Sq. Ft.	763
*	Bridge Curb or Hubguard Repair	Foot	245
*	Epoxy Crack Injection	Foot	114
*	Acrylic Coating	Sq. Yd.	184.9
*	Fiber Wrap	Sq. Ft.	1087
*	Approach Slab Repair (Partial Depth)	Sq. Yd.	25
*	Jack & Remove Existing Bearings	Each	88
*	Deck Slab Repair (Full Depth, Type I)	Sq. Yd.	2
*	Deck Slab Repair (Full Depth, Type II)	Sq. Yd.	10
*	Deck Slab Repair (Partial)	Sq. Yd.	20
*	Precast Prestressed Concrete I-Beam Repair	Sq. Ft.	363
*	Repair Existing Conduit Attached to Structure	L. Sum	1

* Special Provisions

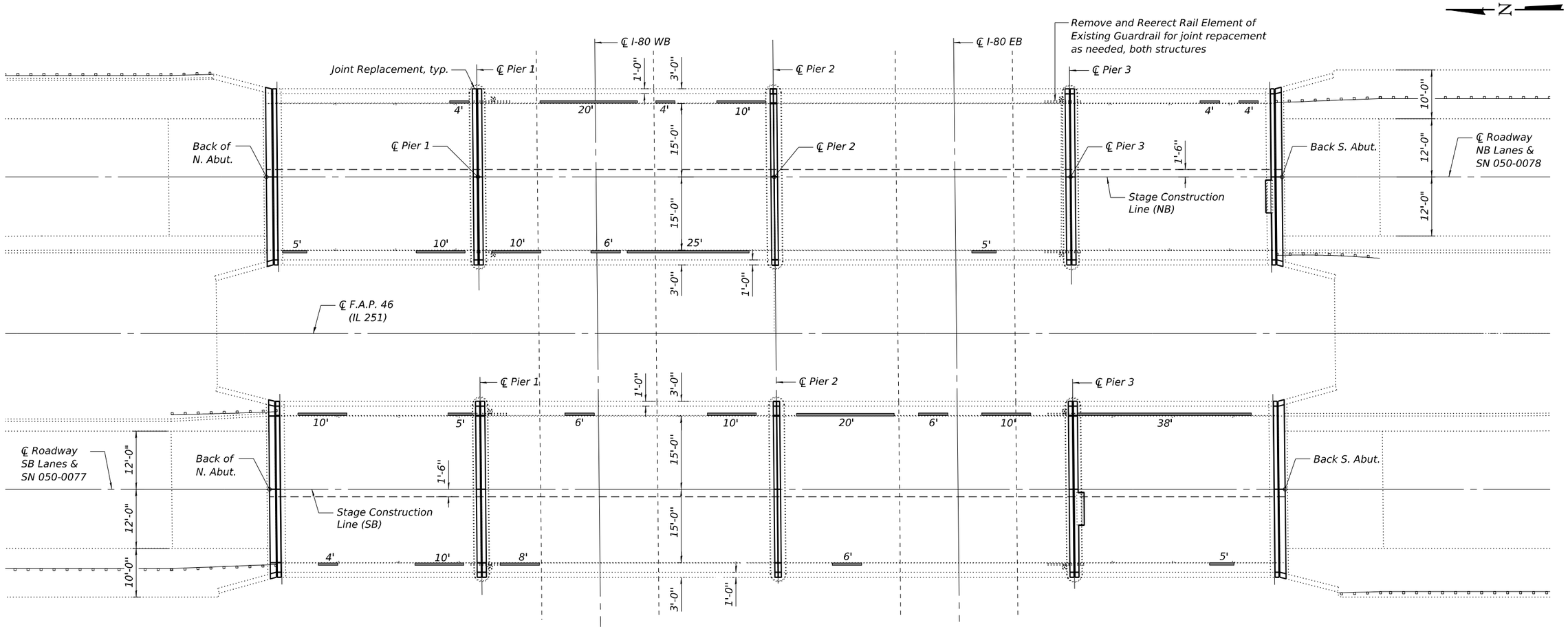

PLAN

NOTES:

The Contractor must use extreme care during concrete removal so as not to damage the PPC I-Beam.

Quantities and limits of repairs shown are estimated only. The actual areas to be repaired shall be determined by the Engineer at the time of construction.

Concrete shall be Class BS. For additional requirements of Deck Slab Repair, see Special Provisions.

For joint replacement details, see sheets 6 thru 10 of 25.

Apply Protective Coat to all new surface areas of Concrete Superstructure.

LEGEND

Bridge Curb Repair

BILL OF MATERIAL

Item	Unit	Total
Approach Slab Repair (Partial Depth)	Sq. Yd.	25
Deck Slab Repair (Partial Depth)	Sq. Yd.	20
Deck Slab Repair (Full Depth, Type I)	Sq. Yd.	2
Deck Slab Repair (Full Depth, Type II)	Sq. Yd.	10
Protective Coat	Sq. Yd.	80.8
Remove and Reerect Rail Element of Existing Guardrail	Foot	298
Bridge Curb or Hubguard Repair	Foot	245

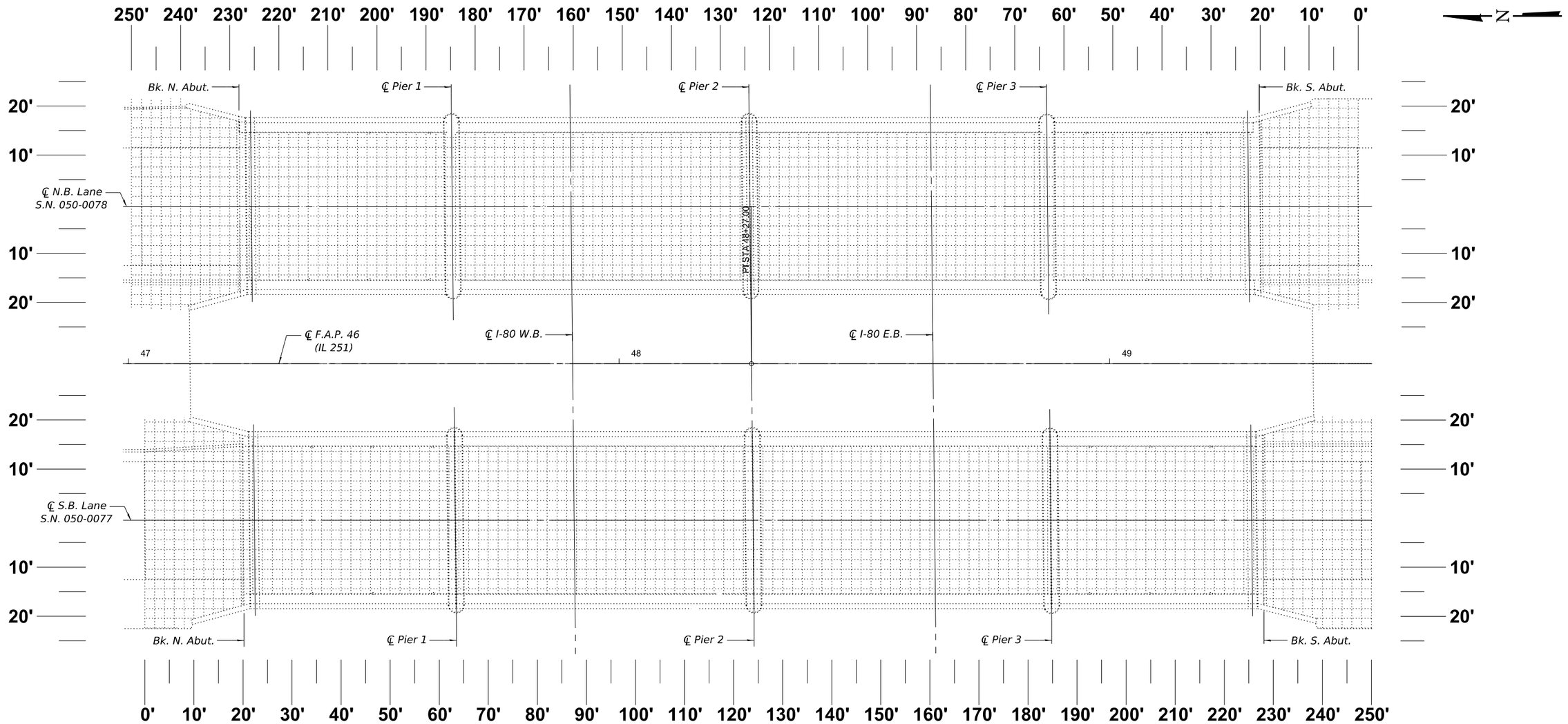

"AS-BUILT" PLAN
DECK PATCHING

LEGEND

- Approach Slab Repair (Partial Depth)
- Deck Slab Repair (Partial Depth)
- Deck Slab Repair (Full Depth, Type I)
- Deck Slab Repair (Full Depth, Type II)
- 2' x 2' Gridlines

NOTE:

When all deck slab repairs have been completed, the Engineer shall record the actual deck slab repair locations and repair areas on this "As-Built" plan sheet. When all deck repairs have been shown on this detail, the "As-Built" deck slab repairs shall be submitted to the Bridge Office for their record. "See Commitments".

MODEL: Sheet
FILE NAME: I:\2022\22069.11 IDOT D3 - PTB 205-023 - WO11 - LaSalle County 66R21\CADData\CADsheets\0500077_0078-66R21-004-Deck-Asbuilt.dgn

KUHN & TRELLO
CONSULTING ENGINEERS
A Limited Liability Company
109 N. 7th Street, 3rd Floor
Springfield, IL 62701
Phone: 217-679-0044
Professional Design Firm No. 184.006316

USER NAME =	DESIGNED - PDA	REVISED -	
	CHECKED - PRR	REVISED -	
PLOT SCALE =	DRAWN - MMY	REVISED -	
PLOT DATE =	CHECKED - MJT	REVISED -	

STATE OF ILLINOIS
DEPARTMENT OF TRANSPORTATION

"AS-BUILT" DECK/APPROACH SLAB REPAIR DETAILS
STRUCTURE NO. 050-0077 (SB) & 050-0078 (NB)

SHEET 4 OF 25 SHEETS

F.A.P. RTE.	SECTION	COUNTY	TOTAL SHEETS	SHEET NO.
46	(50-2HB)BRR	LASALLE	48	27
		CONTRACT NO. 66R21		
		ILLINOIS	FED. AID PROJECT	

10/1/2025 12:08:34 PM

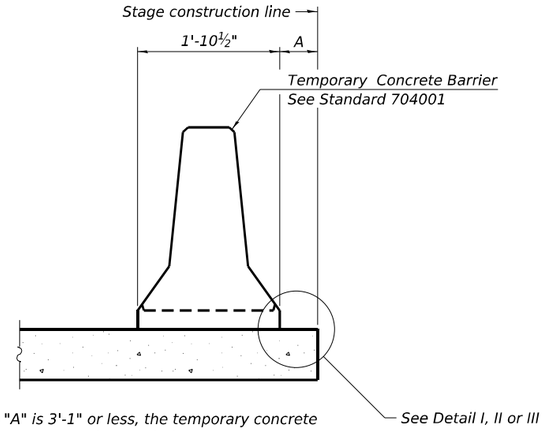

When "A" is 3'-1" or less, the temporary concrete barrier shall be restrained to the new slab according to Detail I, II or III. No restraint is required when "A" is greater than 3'-1".

NEW SLAB OR NEW DECK BEAM

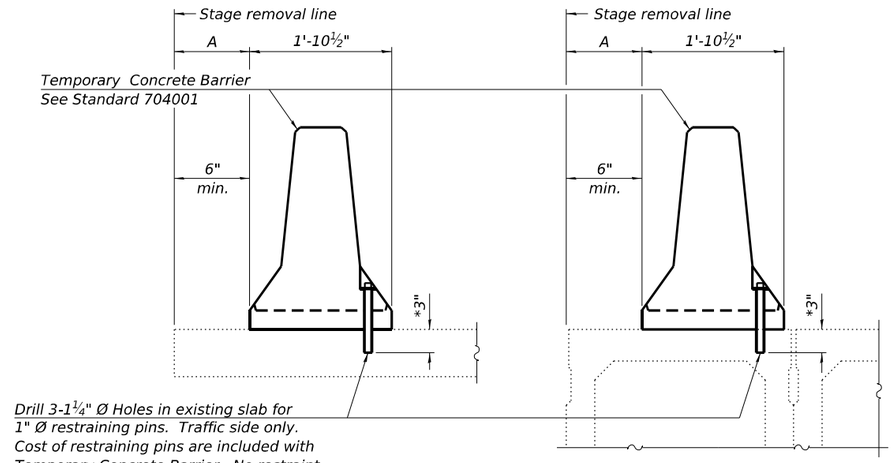

EXISTING SLAB

* When hot-mix asphalt wearing surface is present, embedment shall be 3" plus the wearing surface depth.

EXISTING DECK BEAM

SECTIONS THRU SLAB OR DECK BEAM

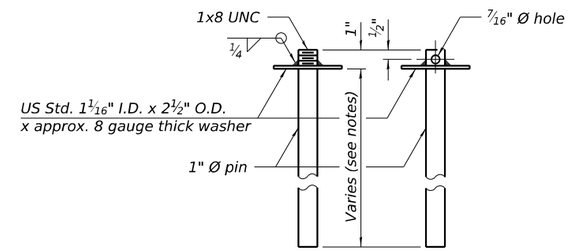

RESTRAINING PIN

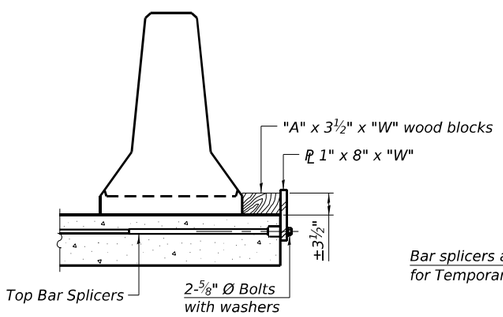

DETAIL I

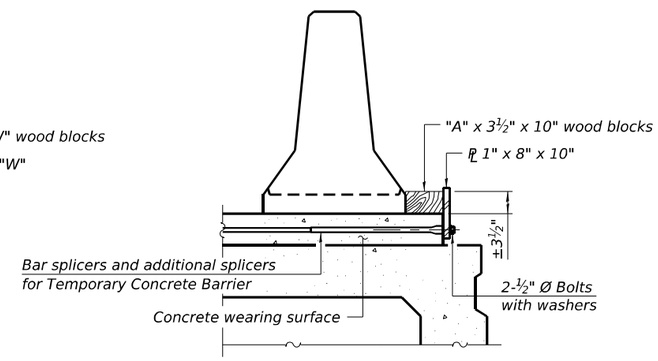

DETAIL II

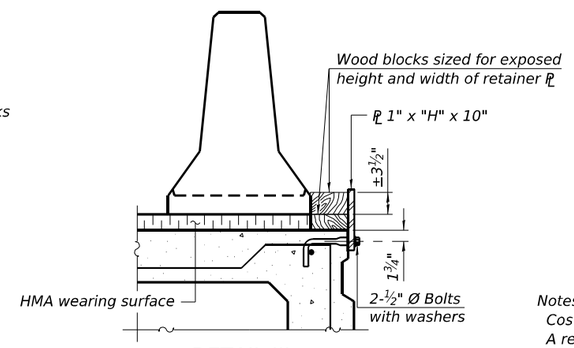

DETAIL III

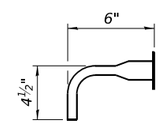

BAR SPLICER FOR #4 BAR - DETAIL III

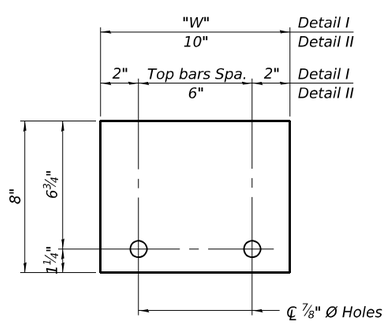

STEEL RETAINER PL 1" x 8" x "W"

(Detail I and II)

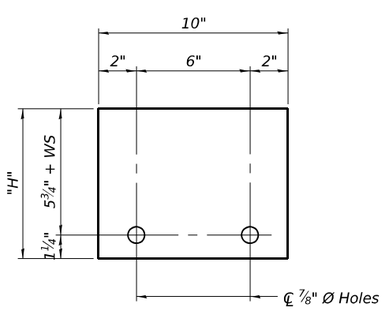

STEEL RETAINER PL 1" x "H" x 10"

(Detail III)

Notes:

Cost of retainer assembly is included with Temporary Concrete Barrier.

A retainer assembly shall be located at the approximate ℄ of each temporary concrete barrier.

The retainer plate shall not be removed until the concrete on the adjacent stage is ready to be poured. For Detail III applications the retainer plate shall not be removed until just prior to placing the adjacent beam.

When the 'A' dimension is less than 1½", the wood block shall be omitted and the barrier shall be placed in direct contact with the steel retainer plate. For deck beam applications the minimum required 'A' distance is 6" to accommodate the shear key clamping device.

Detail I - Installation for a new bridge deck or bridge slab.

Detail II - Installation for a new deck beam with an initial concrete wearing surface. Additional bar splicers shall be provided at 6'-0" centers and paired with the bar splicers of the concrete wearing surface reinforcement to accommodate the installation of the retainer assemblies. The cost of the additional bar splicers is included with the concrete wearing surface.

Detail III - Installation for a new deck beam with no initial wearing surface or with an initial hot-mix asphalt (HMA) wearing surface present. The deck beam directly beneath the temporary concrete barrier shall be fabricated with bar splicer inserts in the side of the beam, as detailed, to accommodate the installation of the retainer assemblies. A pair of bar splicers, 6" apart, shall be placed at 6'-0" centers along the length of the beam. The cost of the bar splicers is included with the deck beam.

RAILING CRITERIA

NCHRP 350 Test Level	3
Railing Weight (plf)	440

R-27

5-15-2023

* Existing reinforcement bars extending into the removal area shall be cleaned, straightened, and incorporated into the new construction. Any reinforcement bars that are damaged during concrete removal shall be replaced with an approved bar splicer or anchorage system. Cost included with Concrete Removal.

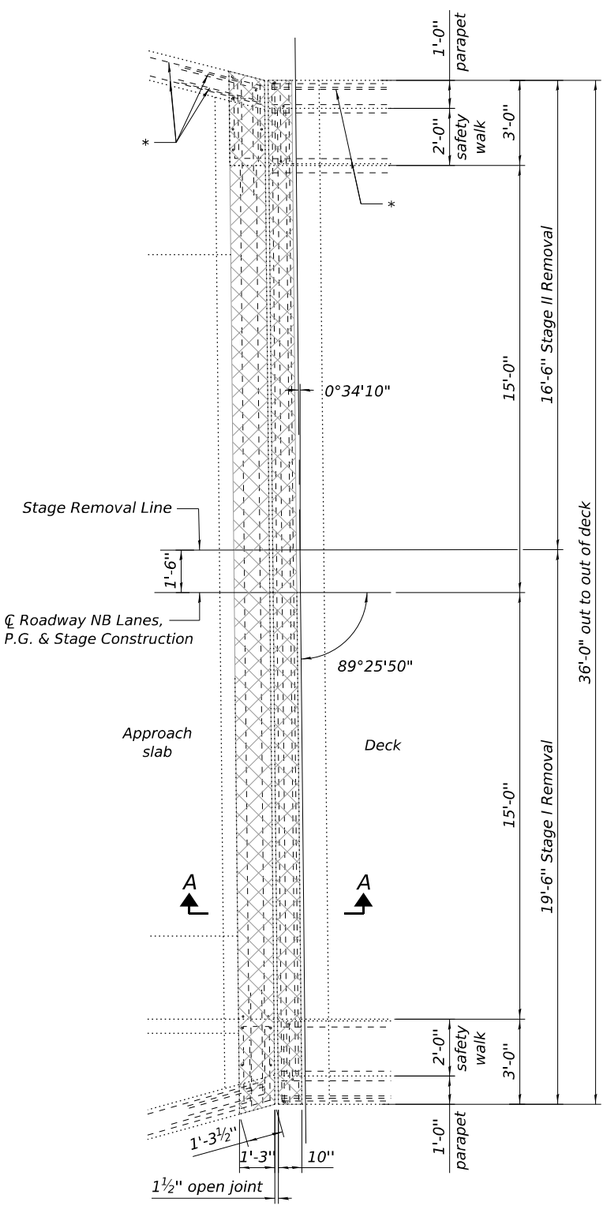

CONCRETE REMOVAL PLAN

(N. Abut. NB Lanes shown. All other abutments similar by rotation or opposite hand)

LEGEND

Concrete Removal

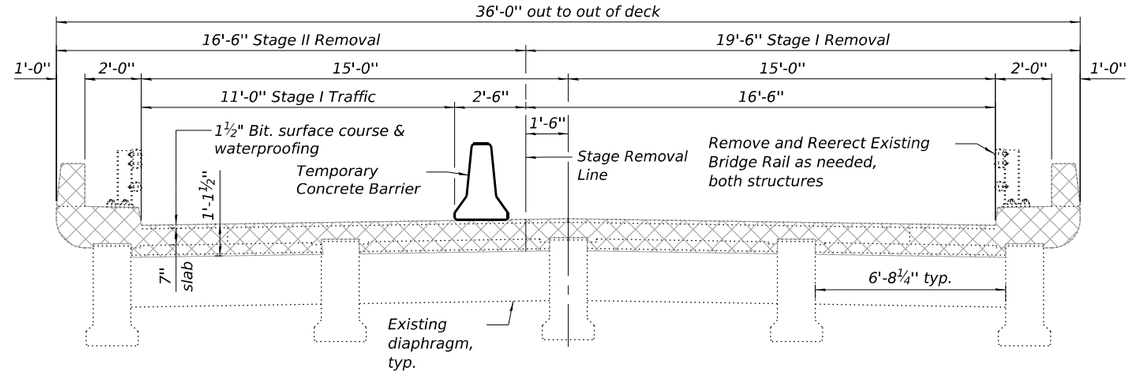

CROSS SECTION AT ABUTMENT JOINT REPLACEMENT LOCATIONS

(NB Lanes Span 1 shown looking south)

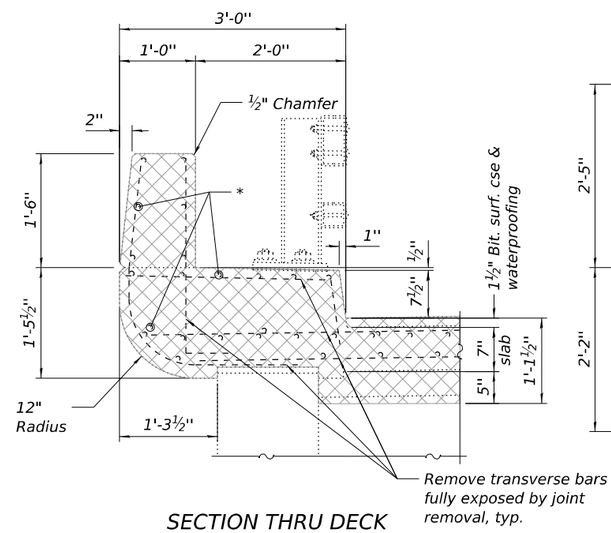

SECTION THRU DECK

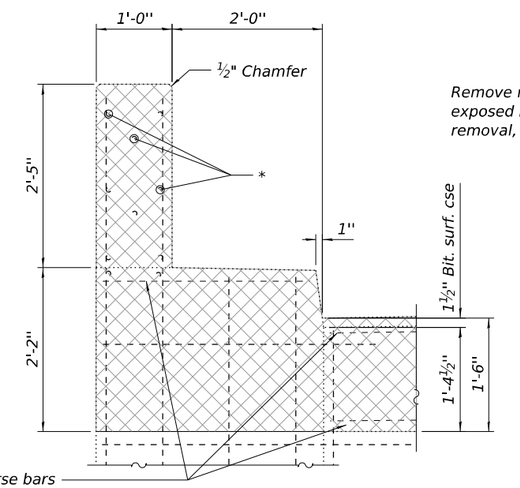

SECTION THRU APPROACH

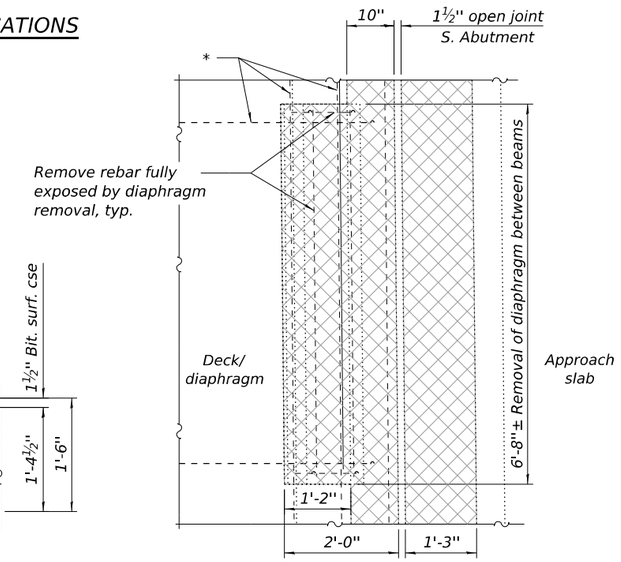

DIAPHRAGM RECONSTRUCTION PLAN

(NB lanes between Beams 20 & 21 at South abutment)

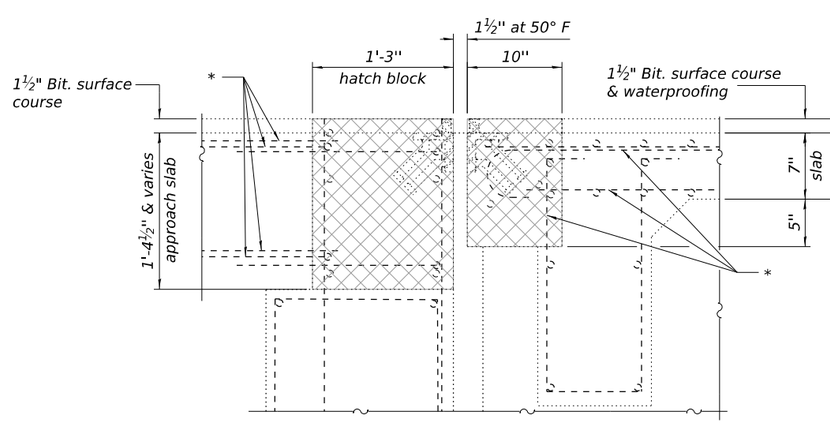

SECTION A-A

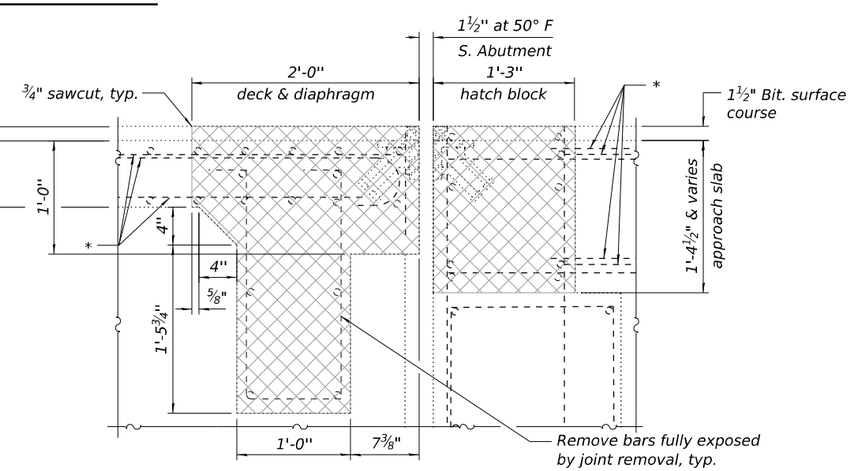

SECTION AT DIAPHRAGM REMOVAL LOCATION

(NB lanes between Beams 20 & 21 at South abutment)

MODEL: Sheet
FILE NAME: I:\2022\22069.11 IDOT D3 - PTB 205-023 - WO11 - LaSalle County 66R21\CADData\CADsheets\050077_0078-66R21-006-JlRemAbut-det.dgn

KUHN & TRELLO CONSULTING ENGINEERS, A Limited Liability Company, 109 N. 7th Street, 3rd Floor, Springfield, IL 62701, Phone: 217-679-0044, Professional Design Firm No. 184.006156	USER NAME =	DESIGNED - PDA	REVISED -	STATE OF ILLINOIS DEPARTMENT OF TRANSPORTATION	JOINT REMOVAL DETAILS AT ABUTMENTS STRUCTURE NO. 050-0077 (SB) & 050-0078 (NB)
		CHECKED - PRR	REVISED -		
	PLOT SCALE =	DRAWN - MMY	REVISED -		
	PLOT DATE =	CHECKED - MJT	REVISED -		SHEET 6 OF 25 SHEETS

F.A.P. RTE.	SECTION	COUNTY	TOTAL SHEETS	SHEET NO.
46	(50-2HB)BRR	LASALLE	48	29
		CONTRACT NO. 66R21		
		ILLINOIS	FED. AID PROJECT	

12/8/2025 4:10:44 PM

* Existing reinforcement bars extending into the removal area shall be cleaned, straightened, and incorporated into the new construction. Any reinforcement bars that are damaged during concrete removal shall be replaced with an approved bar splicer or anchorage system. Cost included with Concrete Removal.

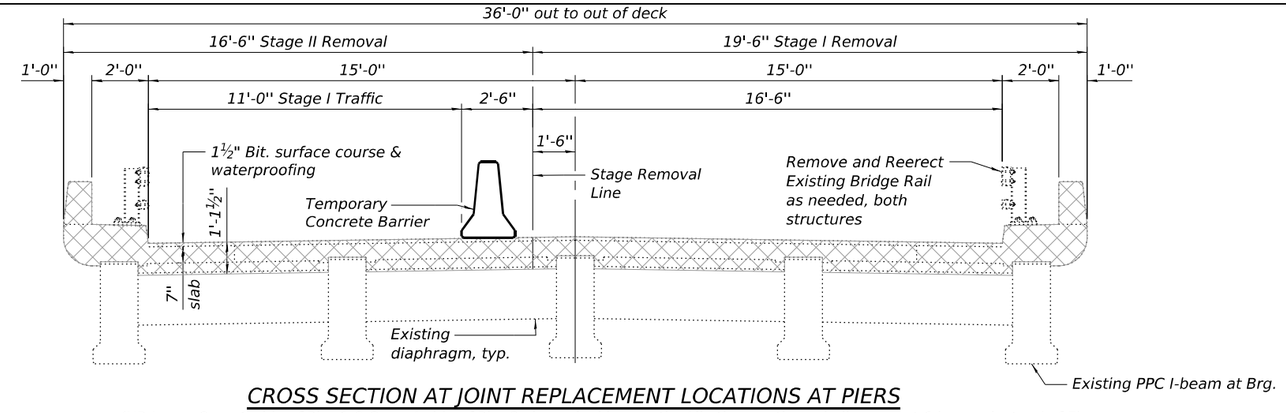

CROSS SECTION AT JOINT REPLACEMENT LOCATIONS AT PIERS

(NB Lanes Span 1 side of Pier 1 & Span 4 side of Pier 3 shown looking south. All other sections similar except 6 beams instead of 5)

LEGEND

Concrete Removal

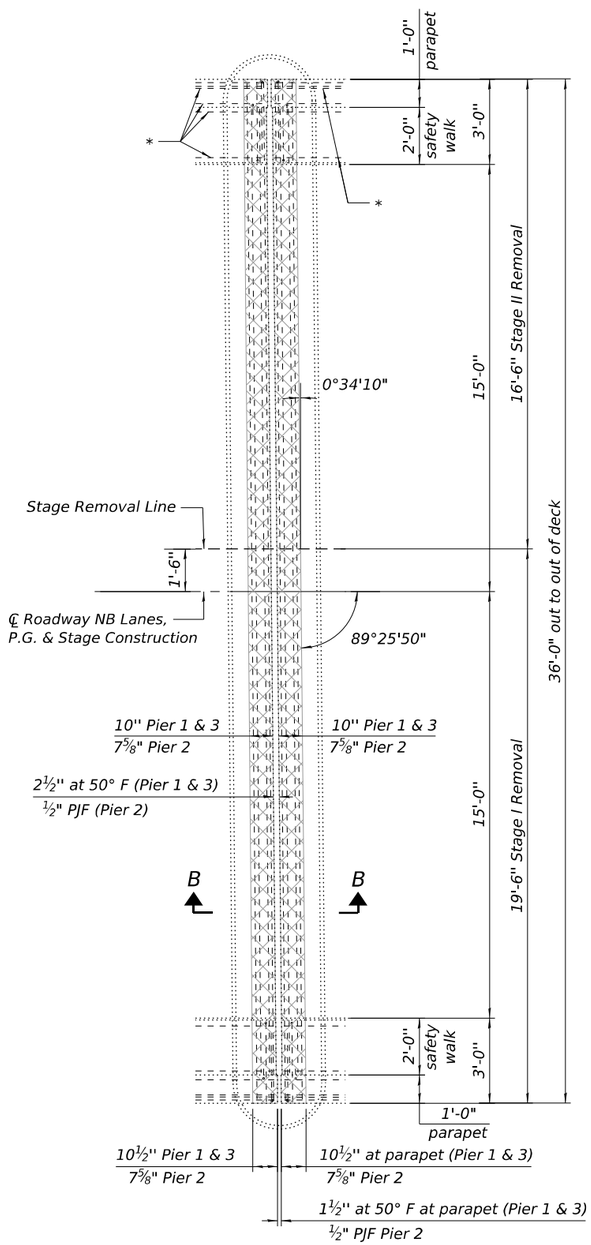

CONCRETE REMOVAL PLAN

(Pier 1 NB lanes shown. Pier 3 NB similar.
Piers 1 & 3 SB lanes similar by opposite hand.
Fixed Pier 2 both structures similar, see Section this sheet)

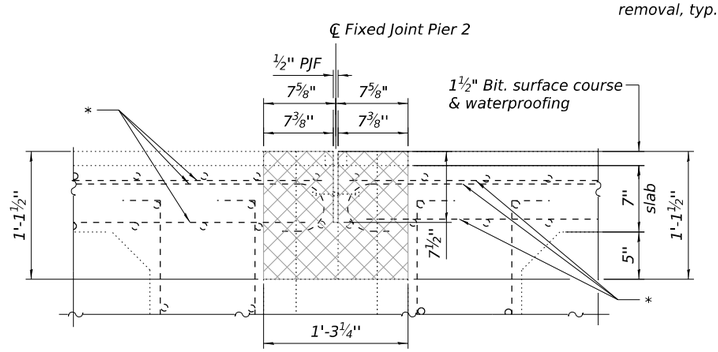

SECTION THRU JOINT AT PIER 2

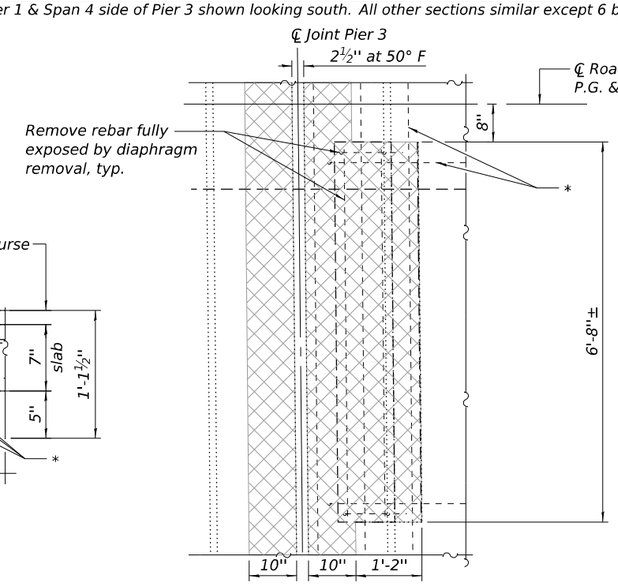

DIAPHRAGM REMOVAL PLAN

(Pier 3 SB, Span 4 side between Beams 19 & 20)

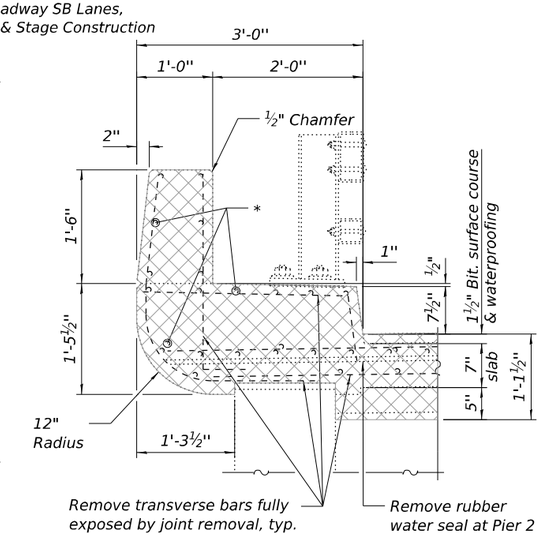

SECTION THRU DECK

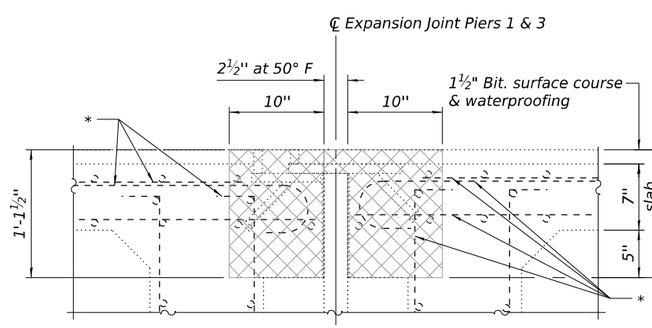

SECTION B-B THRU JOINT AT PIERS 1 & 3

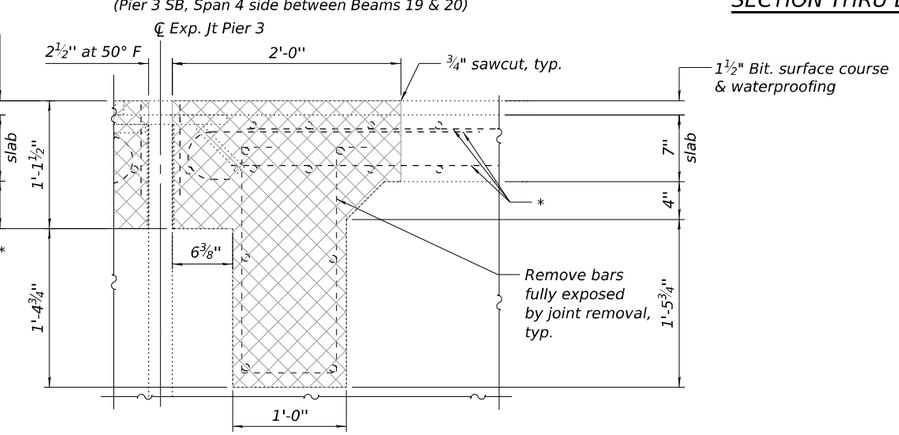

SECTION AT DIAPHRAGM REMOVAL LOCATION

(Pier 3 SB Shown)

MODEL: Sheet
FILE NAME: I:\2022\22069.11 IDOT D3 - PTB 205-023 - WO11 - LaSalle County 66R21\CADData\CADsheets\0500077_0078-66R21-007-JtRemPiers-det.dgn
12/10/2025 2:16:40 PM

KUHN & TRELLO
CONSULTING ENGINEERS
A Limited Liability Company
109 N. 7th Street, 3rd Floor
Springfield, IL 62701
Phone: 217-679-0644
Professional Design Firm No. 184 006316

USER NAME =	DESIGNED - PDA	REVISED -	
	CHECKED - PRR	REVISED -	
PLOT SCALE =	DRAWN - MMY	REVISED -	
PLOT DATE =	CHECKED - MJT	REVISED -	

STATE OF ILLINOIS
DEPARTMENT OF TRANSPORTATION

JOINT REMOVAL DETAILS AT PIERS
STRUCTURE NO. 050-0077 (SB) & 050-0078 (NB)

SHEET 7 OF 25 SHEETS

F.A.P. RTE.	SECTION	COUNTY	TOTAL SHEETS	SHEET NO.
46	(50-2HB)BRR	LASALLE	48	30
		CONTRACT NO. 66R21		
		ILLINOIS	FED. AID PROJECT	

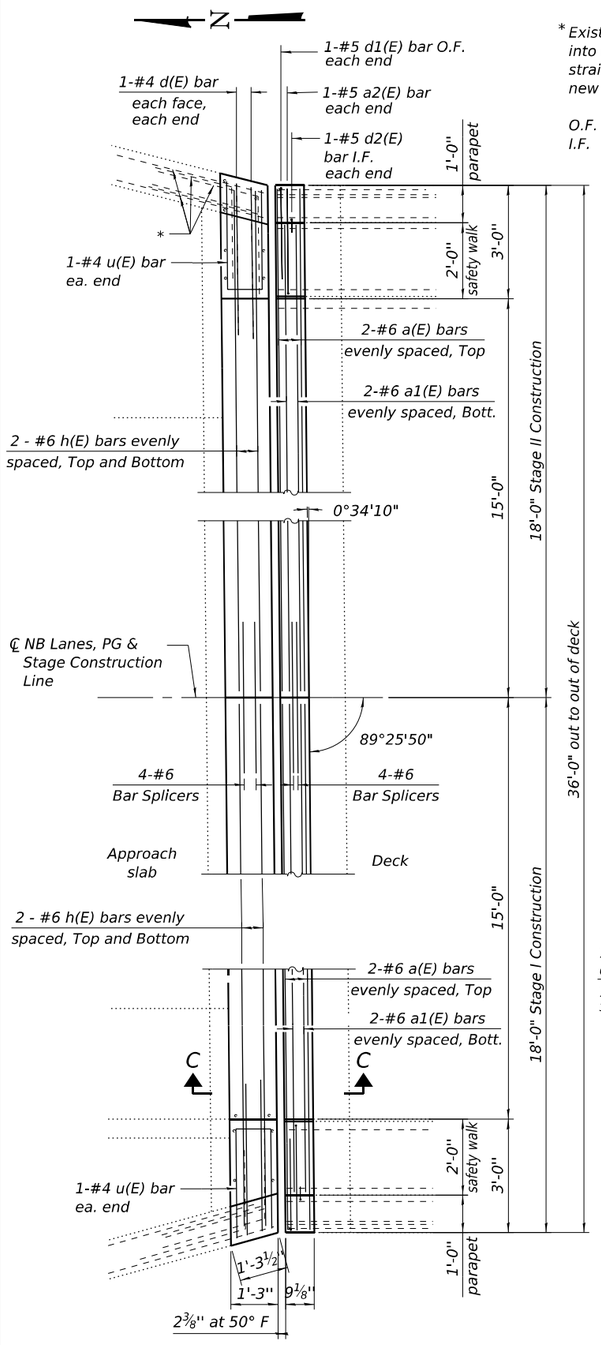

PROPOSED PLAN

(N. Abut. NB Lanes shown. All other abutments similar by rotation or opposite hand)

* Existing reinforcement bars extending into the removal area shall be cleaned, straightened, and incorporated into the new construction.

O.F. Outside Face
I.F. Inside Face

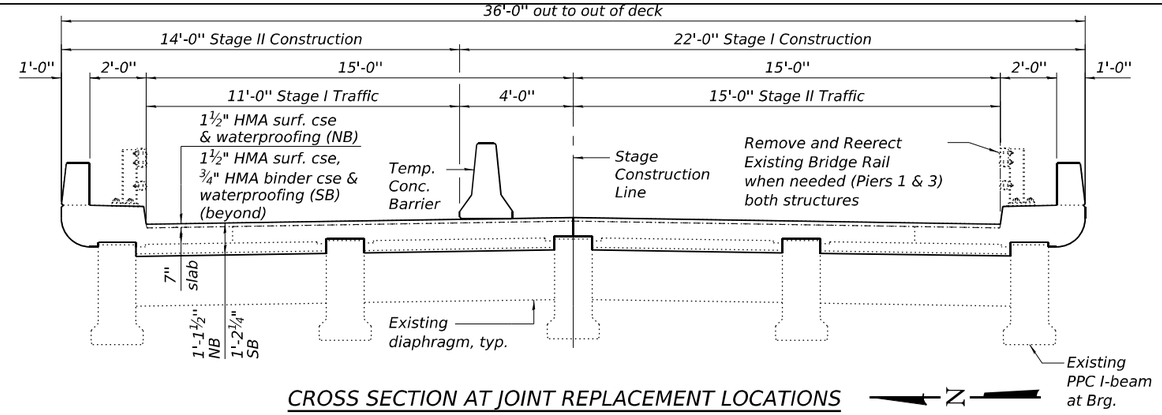

CROSS SECTION AT JOINT REPLACEMENT LOCATIONS

(NB Lanes Span 1 shown looking south)

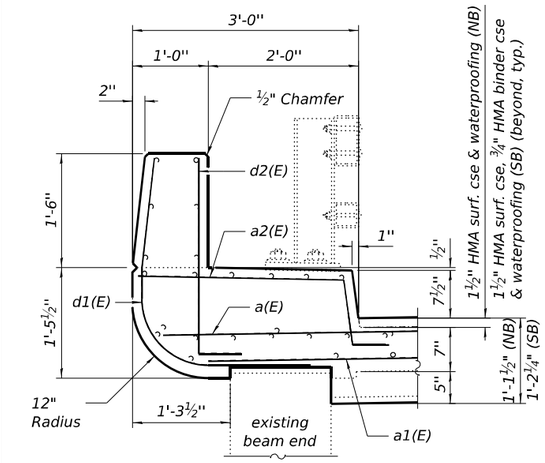

SECTION THRU DECK

(With Safety Walk)

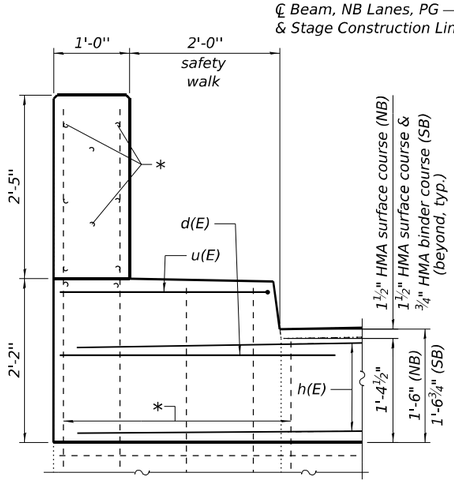

SECTION THRU ABUTMENT

(With Safety Walk)

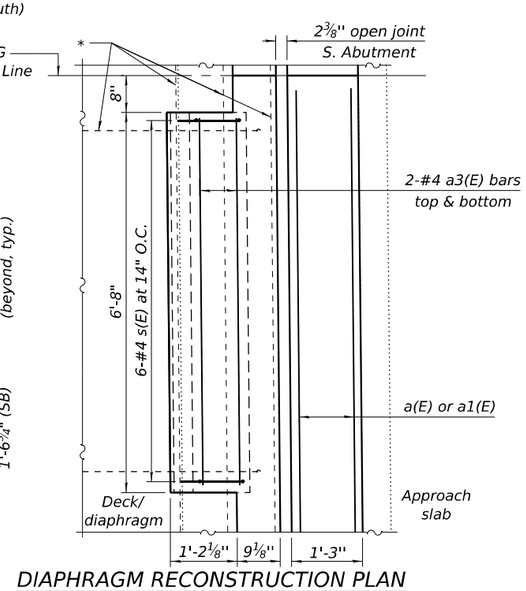

DIAPHRAGM RECONSTRUCTION PLAN

(S. Abut. NB Lanes Span 4 between Beams 20 & 21 shown)

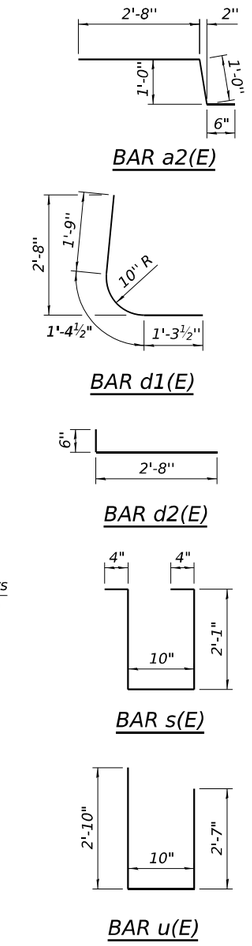

FOUR ABUTMENTS BILL OF MATERIAL

Bar	No.	Size	Length	Shape
a(E)	16	#6	17'-8"	
a1(E)	16	#6	16'-8"	
a2(E)	8	#5	4'-2"	
a3(E)	4	#4	6'-4"	
d(E)	16	#4	4'-0"	
d1(E)	8	#5	4'-5"	
d2(E)	8	#5	3'-2"	
h(E)	32	#6	17'-8"	
s(E)	6	#4	5'-8"	
u(E)	8	#4	6'-3"	
Concrete Removal			Cu. Yd.	16.6
Concrete Superstructure			Cu. Yd.	16.1
Reinforcement Bars, Epoxy Coated			Pound	1890
Bar Splicers			Each	32

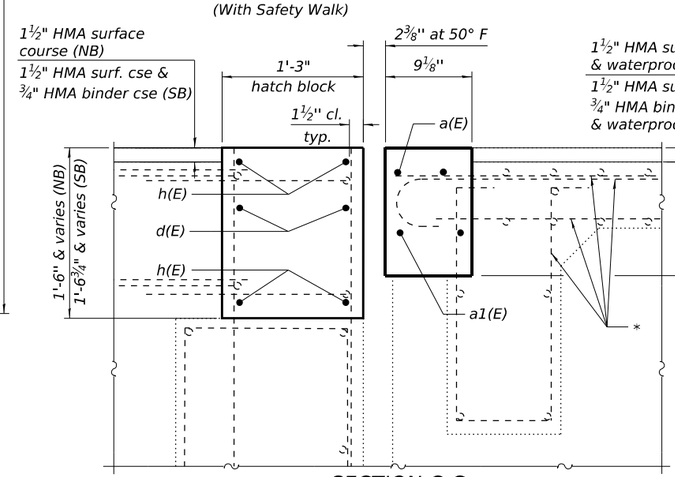

SECTION C-C

(N. Abut. NB Lanes shown)

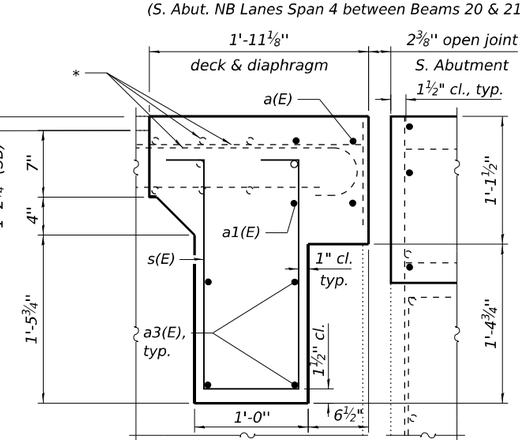

SECTION AT DIAPHRAGM RECONSTRUCTION LOCATION

(S. Abut. NB Lanes shown)

KUHN & TRELLO
CONSULTING ENGINEERS
A Limited Liability Company
109 N. 7th Street, 3rd Floor
Springfield, IL 62701
Phone: 217-679-0044
Professional Design Firm No. 184.006516

USER NAME =	DESIGNED - PDA	REVISED -	
	CHECKED - PRR	REVISED -	
PLOT SCALE =	DRAWN - MMY	REVISED -	
PLOT DATE =	CHECKED - MJT	REVISED -	

STATE OF ILLINOIS
DEPARTMENT OF TRANSPORTATION

JOINT REPLACEMENT DETAILS AT ABUTMENTS
STRUCTURE NO. 050-0077 (SB) & 050-0078 (NB)

SHEET 8 OF 25 SHEETS

F.A.P. RTE.	SECTION	COUNTY	TOTAL SHEETS	SHEET NO.
46	(50-2HB)BRR	LASALLE	48	31
		CONTRACT NO. 66R21		
		ILLINOIS	FED. AID PROJECT	

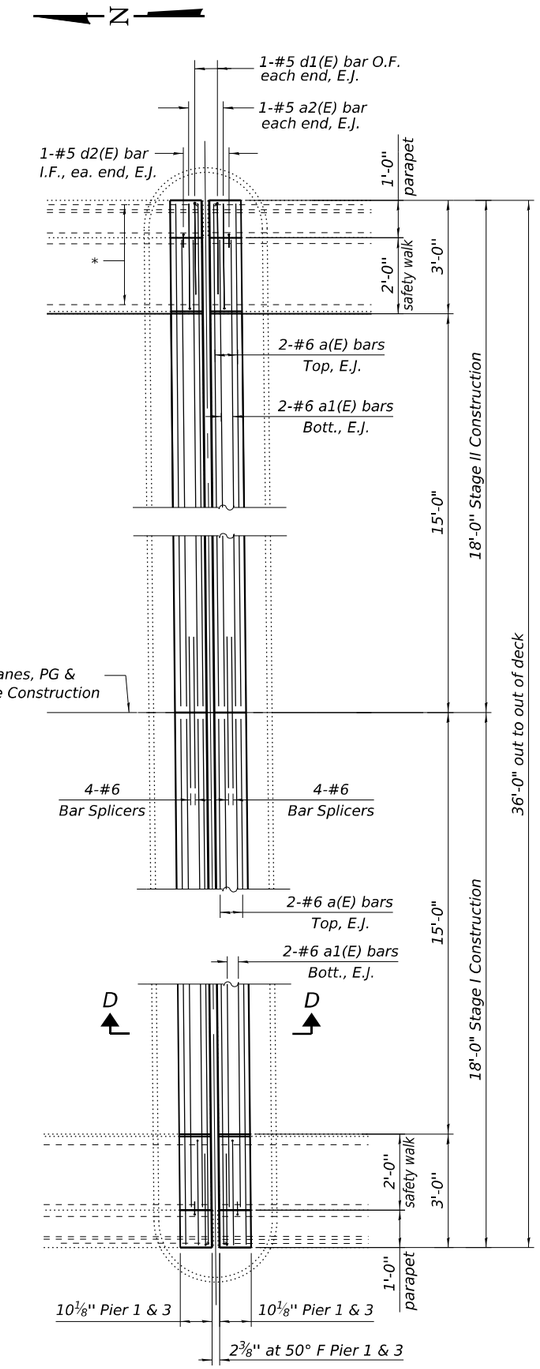

PROPOSED PLAN

(Pier 1, NB lanes shown. Pier 3 similar by rotation. Piers 1 & 3, SB lanes, similar by opposite hand.)

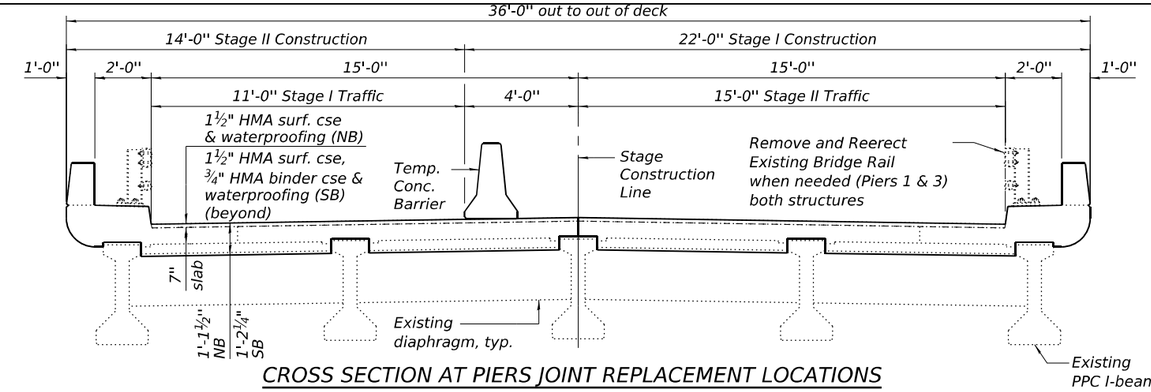

CROSS SECTION AT PIERS JOINT REPLACEMENT LOCATIONS

(NB Lanes Span 1 side of Pier 1 & Span 4 side of Pier 3 shown looking south. All other sections similar except 6 beams instead of 5)

NOTES:

For fixed Pier 2 joint replacement details, see sheet 10 of 25.

* Existing reinforcement bars extending into the removal area shall be cleaned, straightened, and incorporated into the new construction.

O.F. Outside Face
I.F. Inside Face
E.J. Each side of joint

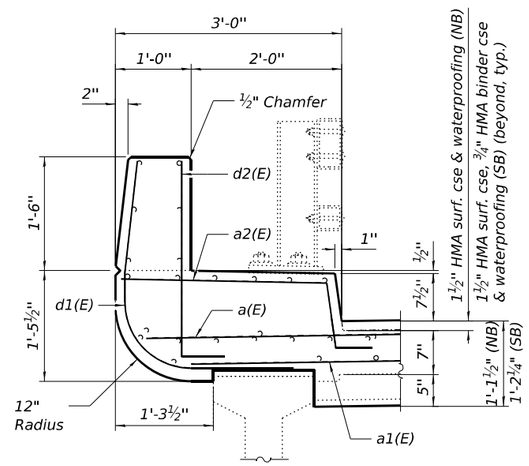

SECTION THRU DECK AT PIER JOINT REPLACEMENT LOCATIONS

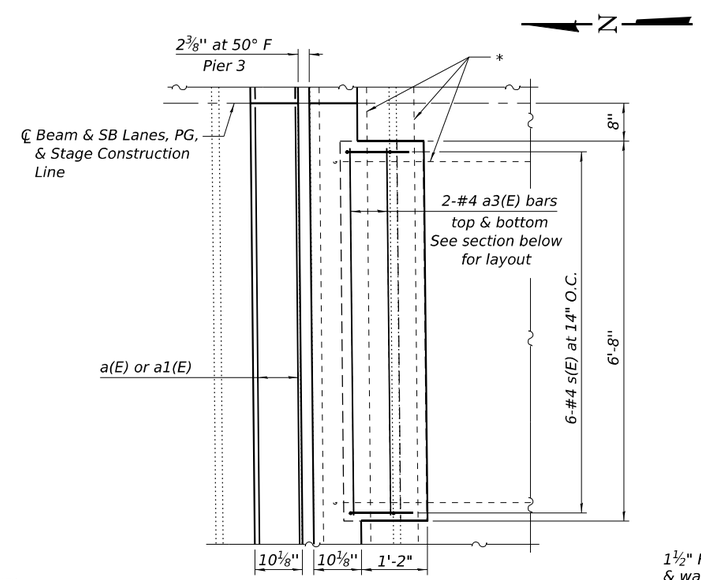

DIAPHRAGM RECONSTRUCTION PLAN

(S. Abut. NB Lanes between Span 4 Beams 19 & 20 shown)

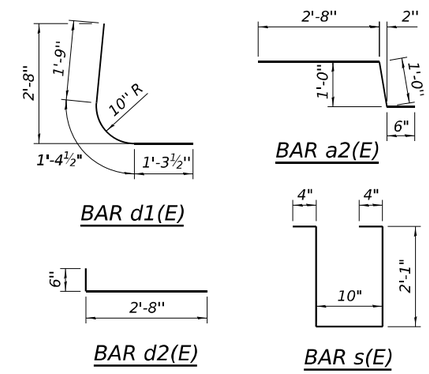

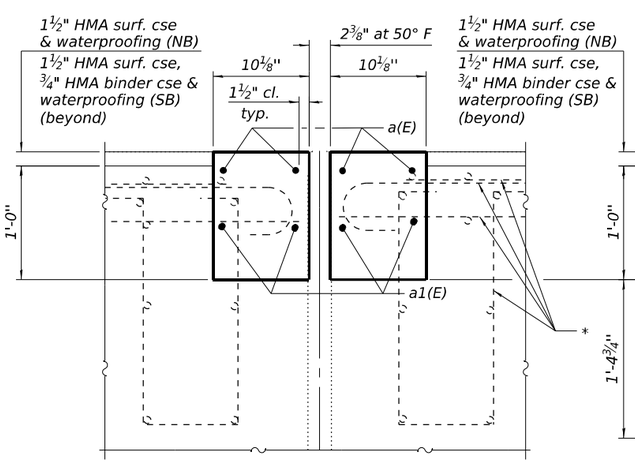

SECTION D-D - PIERS 1 & 3

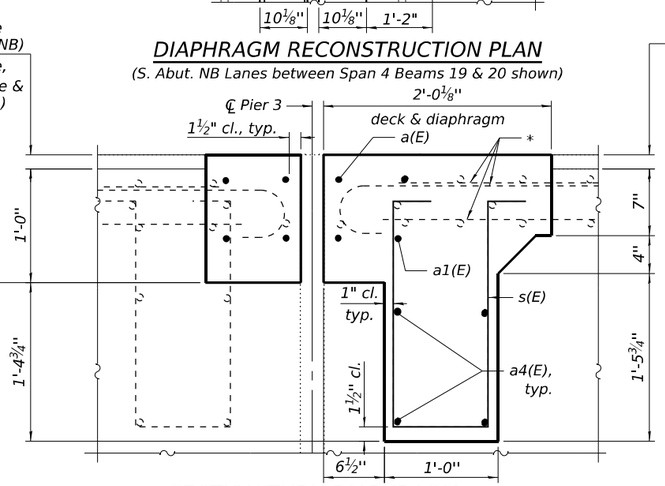

SECTION THRU DIAPHRAGM RECONSTRUCTION LOCATION

SIX PIERS BILL OF MATERIAL

Bar	No.	Size	Length	Shape
a(E)	48	#6	17'-8"	
a1(E)	48	#6	16'-8"	
a2(E)	24	#5	4'-2"	
a3(E)	4	#4	6'-4"	
d1(E)	24	#5	4'-5"	
d2(E)	24	#5	3'-2"	
s(E)	6	#4	5'-8"	
Concrete Removal			Cu. Yd.	14.7
Concrete Superstructure			Cu. Yd.	15.5
Reinforcement Bars, Epoxy Coated			Pound	2810
Bar Splicers			Each	48

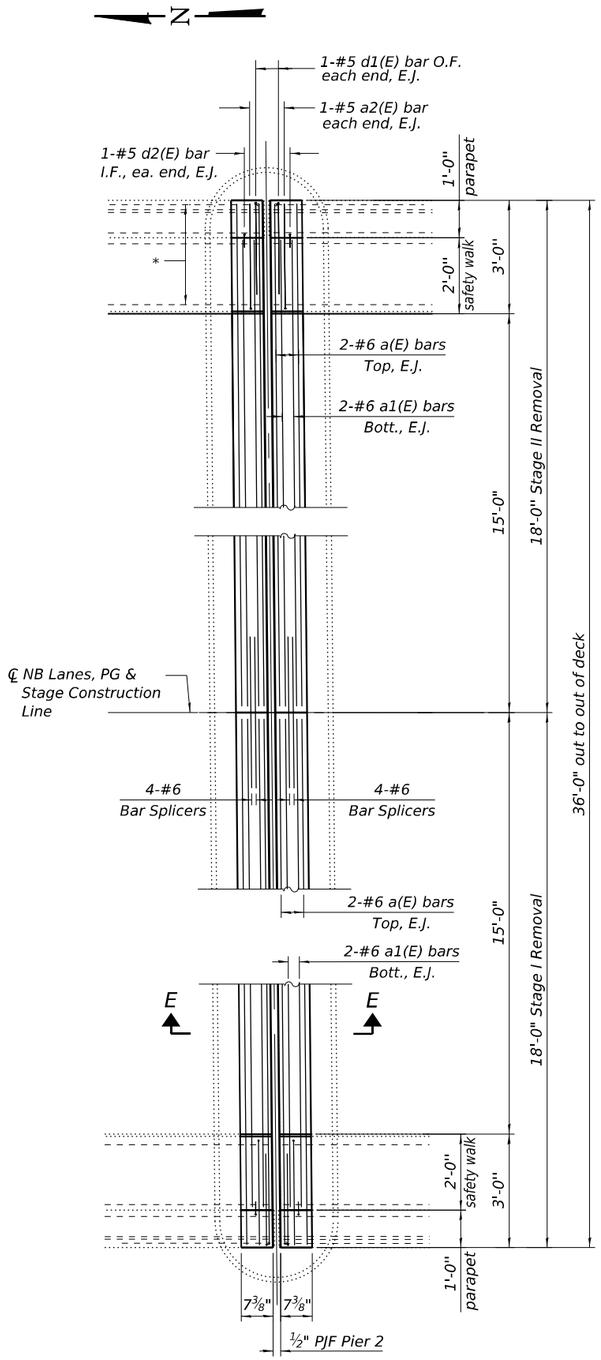

PROPOSED PLAN

(Pier 2 NB lanes shown,
Pier 2 SB similar by rotation)

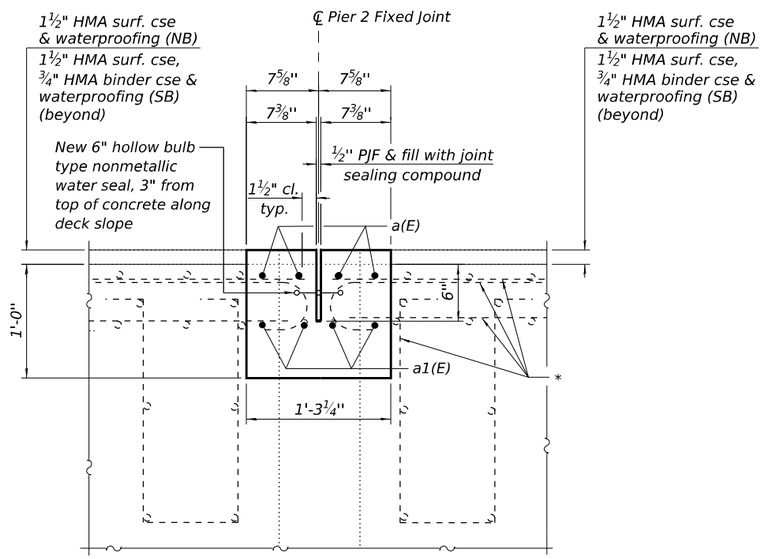

SECTION E-E

NOTES:

For rebar details, bill of material, section thru deck and cross section at pier joint replacement locations, see sheet 9 of 25.

* Existing reinforcement bars extending into the removal area shall be cleaned, straightened, and incorporated into the new construction.

O.F. Outside Face
I.F. Inside Face
E.J. Each side of joint

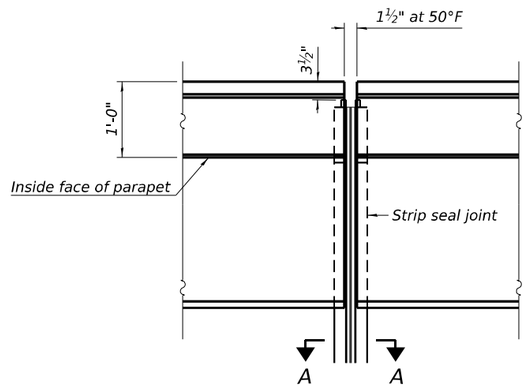

PLAN AT PARAPET

(Pier 1 & 3 shown, Abutments Similar)
(None at Fixed Pier 2)

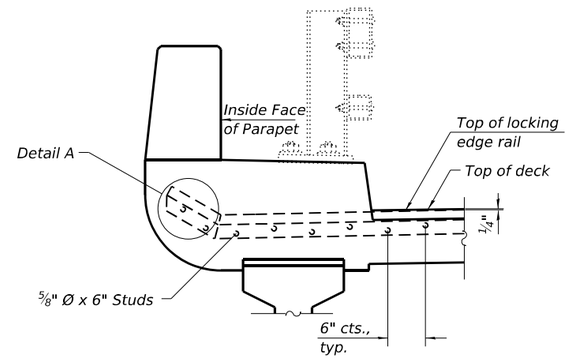

SECTION AT PARAPET (With Safety Walk)

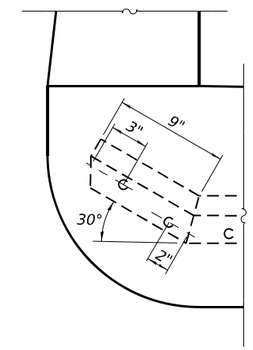

DETAIL A

Notes:

The strip seal shall be made continuous and shall have a minimum thickness of ¼". The configuration of the strip seal shall match the configuration of the locking edge rails. Open or "webbed" strip seal gland configurations are not permitted. The gland shall be sized for a maximum rated movement of 4 inches.

The locking edge rails depicted are configured for typical applications and are conceptual only. The actual configuration of the locking edge rails and matching strip seal may vary from manufacturer to manufacturer provided they fit the application and meet the minimum anchorage shown. Flanged edge rails, however, will not be allowed. Locking edge rails may exceed the 4½" maximum depth provided the anchorage system is revised according to the manufacturer's recommendation.

The manufacturer's recommended installation methods shall be followed.

All steel components shall be galvanized after fabrication according to Article 520.03 of the Standard Specifications.

The Maximum space between locking edge rail segments shall be 3/16" and sealed with a suitable sealant; however, any rail joint within 10' measured perpendicular to the face of the curb or parapet shall be welded as shown in the locking edge rail splice detail.

Cost of embedded plates, and anchorage studs included with Preformed Joint Strip Seal.

The concrete opening below the strip seal will vary based on the locking edge rail chosen by the Contractor. Deck and parapet lengths shown elsewhere in the plans are dimensioned to the concrete opening, not the joint opening, and are based on the rolled locking edge rail. If the Contractor elects to use a different locking edge rail, dimensional adjustments may be required. One exception to this would be the strip seal joint at the end of the precast bridge approach slab. For these cases the pavement connector length shall be adjusted, not the length of the bridge approach slab.

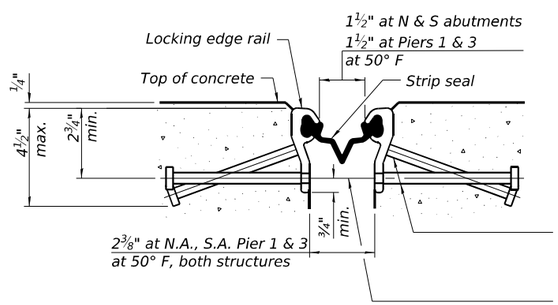

SHOWING ROLLED RAIL JOINT

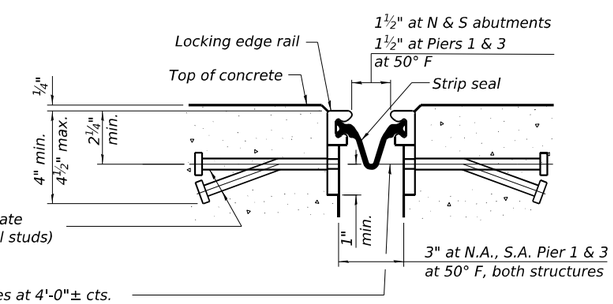

SHOWING WELDED RAIL JOINT

* ⅝" Ø x 6" studs @ 6" cts. (alternate angled/bent studs with horizontal studs)

⅜" Ø threaded rods in 7/16" Ø holes at 4'-0"± cts. for holding the proper joint opening based on the temperature during the deck pour. Place to miss studs. All rods shall be burned, or sawed off flush with the plates after concrete is set.

SECTION A-A

* Granular or solid flux filled headed studs conforming to Article 1006.32 of the Std. Specs., automatically end welded.

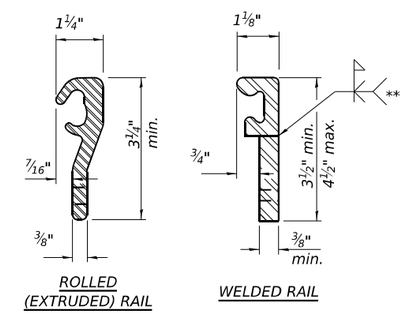

ROLLED (EXTRUDED) RAIL

WELDED RAIL

LOCKING EDGE RAILS

** Back gouge not required if complete joint penetration is verified by mock-up.

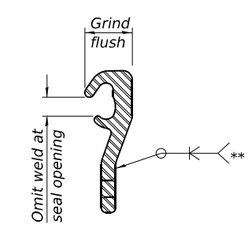

LOCKING EDGE RAIL SPLICE

The inside of the locking edge rail groove shall be free of weld residue. Rolled rail shown, welded rail similar.

BILL OF MATERIAL

Item	Unit	Total
Preformed Joint Strip Seal	Foot	284

MODEL: Sheet
FILE NAME: I:\2022\2069.11 IDOT D3 - PTB 205-023 - WO11 - LaSalle County 66R21\CADData\CADsheets\0500077_0078-66R21-011-PrefJoint-Strip-Seal.dgn

KUHN & TRELLO
CONSULTING ENGINEERS
A Limited Liability Company
109 N. 7th Street, 3rd Floor
Springfield, IL 62701
Phone: 217-679-0044
Professional Design Firm No. 184-006536

USER NAME =	DESIGNED - PDA	REVISED -	
	CHECKED - PRR	REVISED -	
PLOT SCALE =	DRAWN - MMY	REVISED -	
PLOT DATE =	CHECKED - MJT	REVISED -	

STATE OF ILLINOIS
DEPARTMENT OF TRANSPORTATION

PREFORMED JOINT STRIP SEAL
STRUCTURE NO. 050-0077 (SB) & 050-0078 (NB)

SHEET 11 OF 25 SHEETS

F.A.P. RTE.	SECTION	COUNTY	TOTAL SHEETS	SHEET NO.
46	(50-2HB)BRR	LASALLE	48	34
		CONTRACT NO. 66R21		
	ILLINOIS	FED. AID PROJECT		

12/8/2025 2:32:59 PM

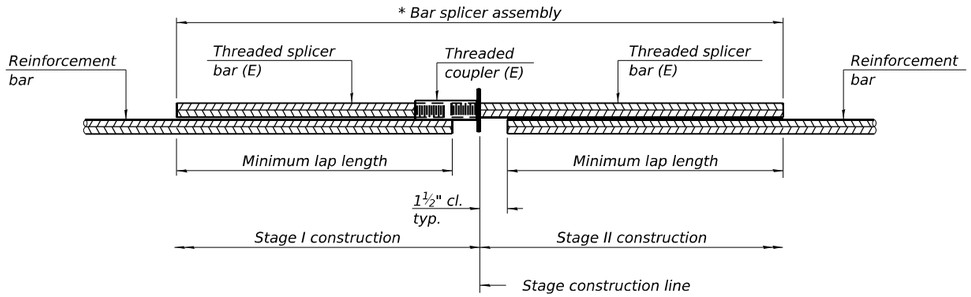

STANDARD BAR SPLICER ASSEMBLY PLAN

Only bar splicer assemblies as presented on the approved QPL list may be used.

Threaded splicer bar length = min. lap length + 1½" + thread length

* Epoxy not required on Bar Splicer Assembly components used in conjunction with black bars.

S.N. 050-0077 S.B.

Location	Bar size	No. assemblies required	Minimum lap length
N. Abut. - Hatch Block	#6	4	4'-1"
N. Abut. - Deck	#6	4	4'-1"
S. Abut. - Hatch Block	#6	4	4'-1"
S. Abut. - Deck	#6	4	4'-1"
Pier 1 - Deck	#6	8	4'-1"
Pier 2 - Deck	#6	8	4'-10"
Pier 3 - Deck	#6	8	4'-1"

S.N. 050-0078 N.B.

Location	Bar size	No. assemblies required	Minimum lap length
N. Abut. - Hatch Block	#6	4	4'-1"
N. Abut. - Deck	#6	4	4'-1"
S. Abut. - Hatch Block	#6	4	4'-1"
S. Abut. - Deck	#6	4	4'-1"
Pier 1 - Deck	#6	8	4'-1"
Pier 2 - Deck	#6	8	4'-10"
Pier 3 - Deck	#6	8	4'-1"

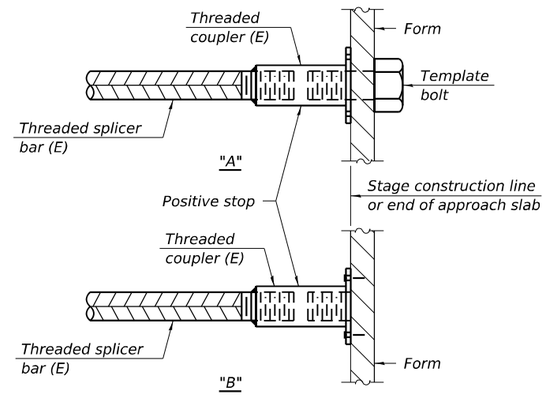

INSTALLATION AND SETTING METHODS

"A" : Set bar splicer assembly by means of a template bolt.
"B" : Set bar splicer assembly by nailing to wood forms or cementing to steel forms.
(E) : Indicates epoxy coating.

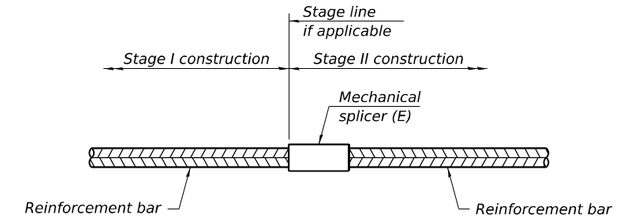

STANDARD MECHANICAL SPLICER

Location	Bar size	No. assemblies required

Notes:
Splicer bars shall be deformed with threaded ends and have a minimum 60 ksi yield strength.
All reinforcement shall be lapped and tied to the splicer bars.
Bar splicer assemblies shall be epoxy coated according to the requirements for reinforcement bars. See Section 508 of the Standard Specifications.
See approved list of bar splicer assemblies and mechanical splicers for alternatives.

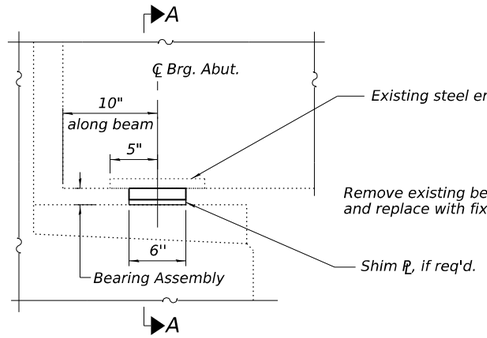

ELEVATION AT ABUT.

North abutment beam 1 shown, all other locations sim.

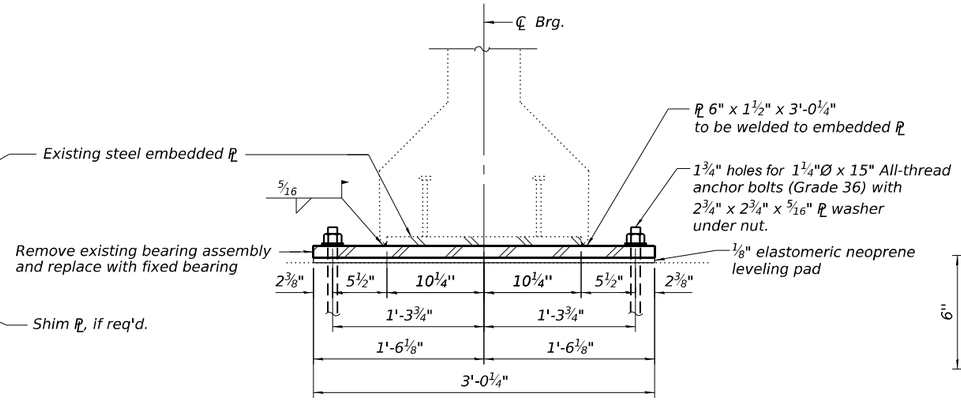

SECTION A-A

(All beams, both structures)

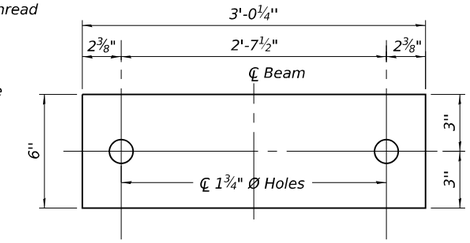

PLAN OF PLATE

Notes:

Prior to ordering any material, the Contractor shall verify in the field all bearing height and shim thickness dimensions. Adjustment must account for deck heave due to pack rust (if present).

Min. jack capacity = 66 Tons at Brg's of N & S Abutments - both structures.

Min. jack capacity = 70 Tons at Pier 2 - both structures.

Anchor bolts shall be ASTM F1554 all-thread (or an Engineer-approved alternate material) of the grade(s) and diameter(s) specified.

Drilled and set anchor bolts shall be installed according to Article 521.06 of the Standard Specifications.

Stainless steel plates and shims shall be included in the cost of Furnishing and Erecting Structural Steel.

All exposed bearing plates and side retainers shall be hot dip galvanized according to AASHTO M111.

The structural steel plates of the Bearing Assembly for the abutments and pier 2 at both structures shall conform to the requirements of AASHTO M270 Grade 50.

The existing bearings contain lead plates. The Contractor shall take precautions to deal with the presence of lead on this project.

Two ⅛" adjusting shims shall be provided for each bearing in addition to all other plates and shims and placed as shown on bearing details.

FIXED BEARINGS AT ABUTMENTS

(5 Required N.A., 5 Required S.A. - Both Structures)

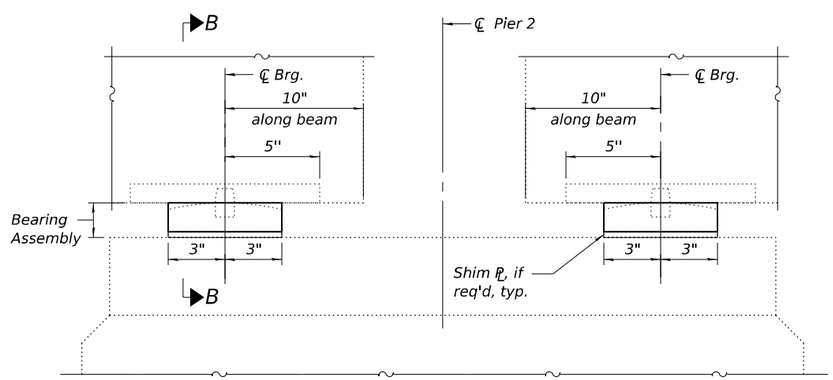

ELEVATION AT PIER 2

Both Structures

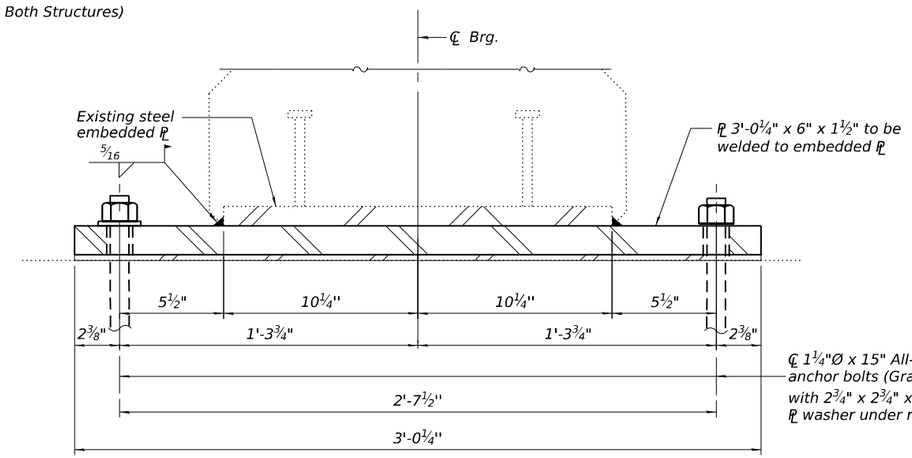

SECTION B-B

(All beams, both structures)

FIXED BEARINGS AT PIER 2

(6 Required each side of Pier 2 - Both Structures)

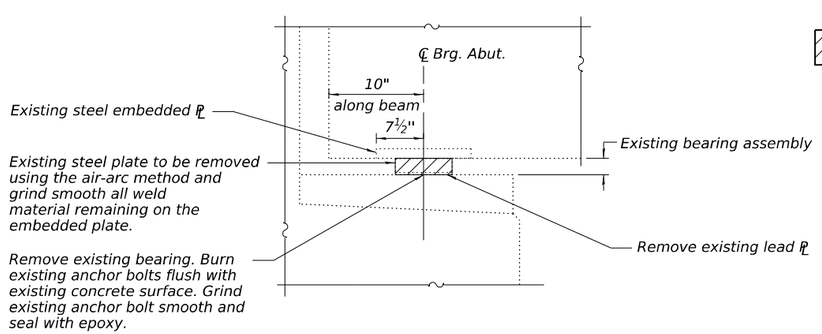

EXISTING FIXED BEARING REMOVAL DETAIL - ABUTMENTS

N. Abut. (NB) beam 1 shown, all other locations similar including South Abut., both structures.

Cost included with Jack and Remove Existing Bearings.

To be removed

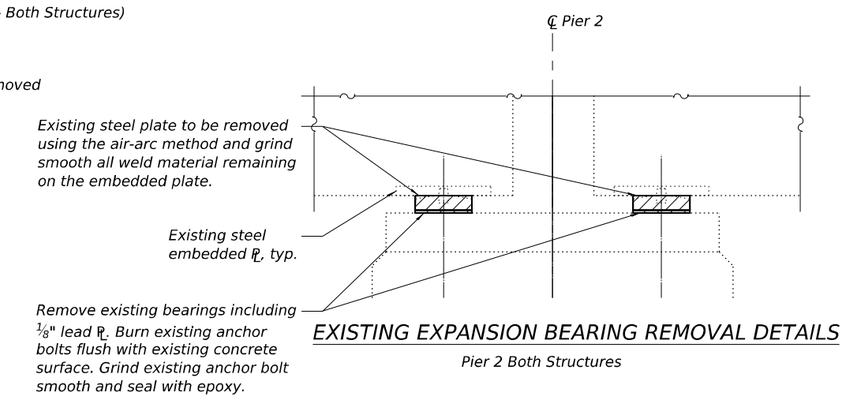

EXISTING EXPANSION BEARING REMOVAL DETAILS

Pier 2 Both Structures

BEAM END REACTION TABLE

	Span 1	Span 2	Span 3	Span 4
R DL (k)	35.3	47.7	47.7	35.3
R LL (k)	40.2	35.3	35.3	40.2
Imp. (k)	12.2	9.6	9.6	12.2
R (Total) (k)	87.7	92.6	92.6	87.7

BILL OF MATERIAL

Item	Unit	Total
Furnishing and Erecting Structural Steel	Pound	4080
Jack & Remove Existing Bearings	Each	44
Anchor Bolts, 1¼"	Each	88

Notes:

Prior to ordering any material, the Contractor shall verify in the field all bearing height and shim thickness dimensions. Adjustment must account for deck heave due to pack rust (if present).

Min. jack capacity = 70 Tons at Brg's of Piers 1 & 3 - both structures.

Anchor bolts shall be ASTM F1554 all-thread (or an Engineer- approved alternate material) of the grade(s) and diameter(s) specified.

Drilled and set anchor bolts shall be installed according to Article 521.06 of the Standard Specifications.

Side retainers, shim plates and stainless steel plates shall be included in the cost of Elastomeric Bearing Assembly, Type II.

All exposed bearing plates and side retainers shall be hot dip galvanized according to AASHTO M111.

The structural steel plates of the Bearing Assembly for piers 1 & 3 at both structures shall conform to the requirements of AASHTO M270 Grade 50.

The existing bearings contain lead plates. The Contractor shall take precautions to deal with the presence of lead on this project.

Two 1/8" adjusting shims shall be provided for each bearing in addition to all other plates and shims and placed as shown on bearing details.

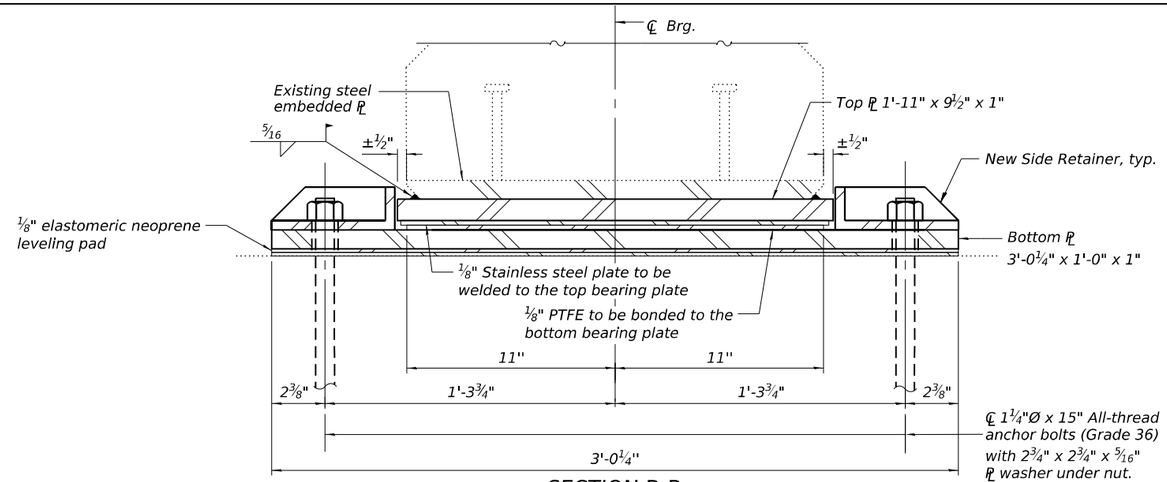

SECTION B-B

(6 Required P1, 6 Required P3, Both Structures)
(Span 2 and Span 3)
North Side Span2 and South side Span 3

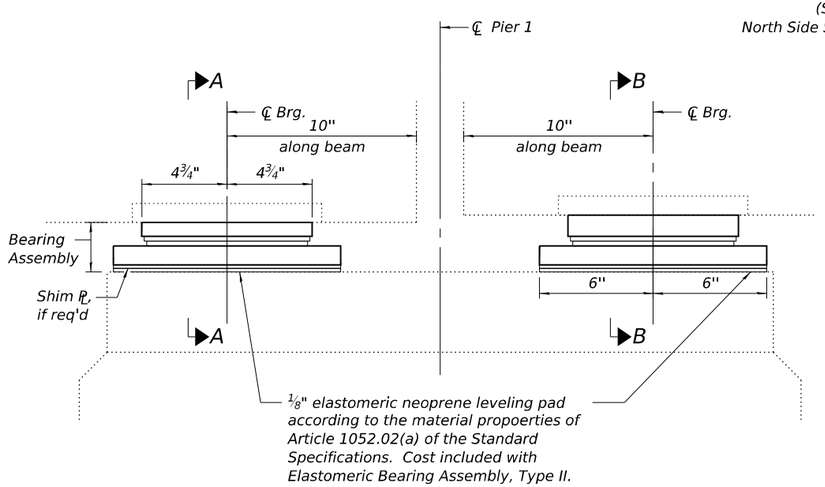

ELEVATION AT PIER 1

Pier 1 shown, Pier 3 similar by opposite hand
Both Structures

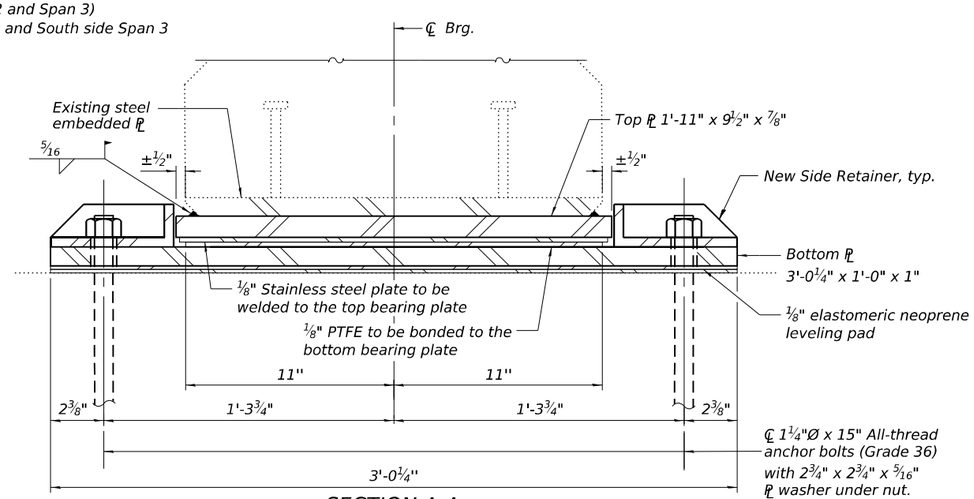

SECTION A-A

(5 Required P1, 5 Required P3, Both Structures)
(Span 1 and Span 4)
South side Span 1 and North side Span 4

EXPANSION BEARINGS AT PIERS 1 & 3

(11 Required Pier 1, 11 Required Pier 3 - Both Structures)

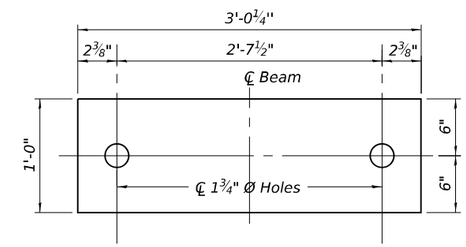

PLAN OF BOTTOM PLATE

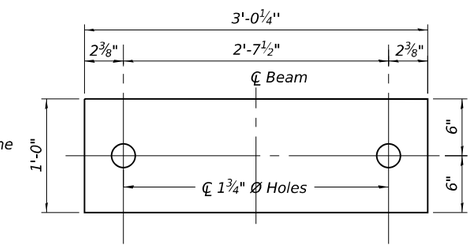

PLAN OF SHIM PLATE

(8 Required)
Pier 1, Span 1, beams 2 & 4, both structures
Pier 3, Span 4, beams 19 & 21, both structures

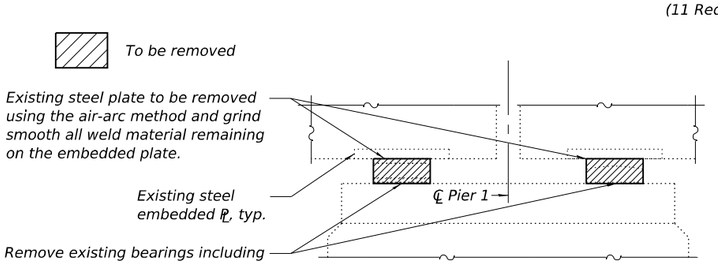

EXISTING EXPANSION BEARING REMOVAL DETAILS

Pier 1 shown, Pier 3 similar by opposite hand, Both Structures

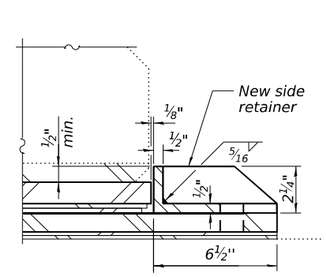

SIDE RETAINER - PIERS 1 & 3

(22 each pier, both structures)
Equivalent rolled angle with stiffeners will be allowed in lieu of welded plates.

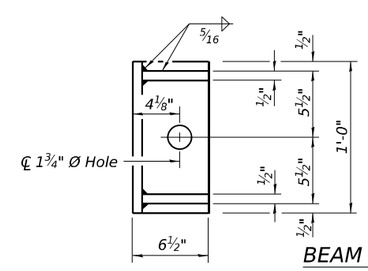

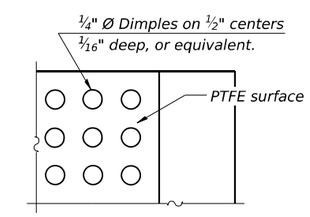

PLAN-PTFE SURFACE

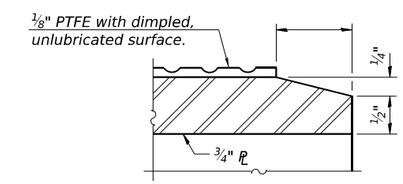

SECTION THRU PTFE

BEAM END REACTION TABLE

		Span 1	Span 2	Span 3	Span 4
R DL	(k)	35.3	47.7	47.7	35.3
R LL	(k)	40.2	35.3	35.3	40.2
Imp.	(k)	12.2	9.6	9.6	12.2
R (Total)	(k)	87.7	92.6	92.6	87.7

BILL OF MATERIAL

Item	Unit	Total
Elastomeric Bearing Assembly Type II	Each	44
Jack & Remove Existing Bearings	Each	44
Anchor Bolts, 1 1/4"	Each	88

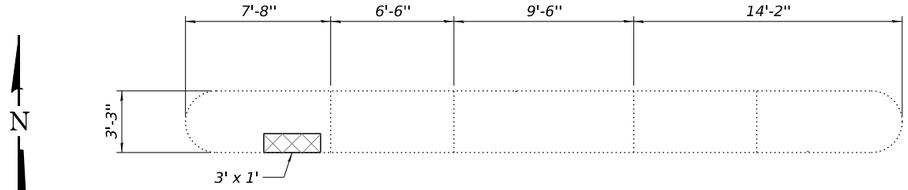

TOP OF CAP PLAN

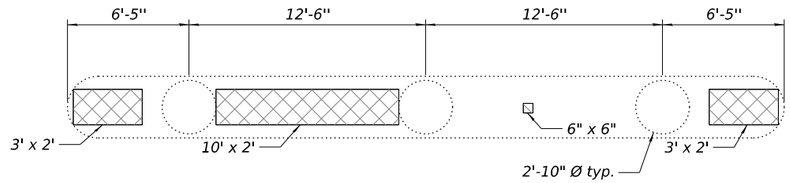

VIEW A-A

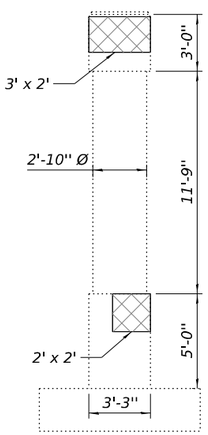

WEST END

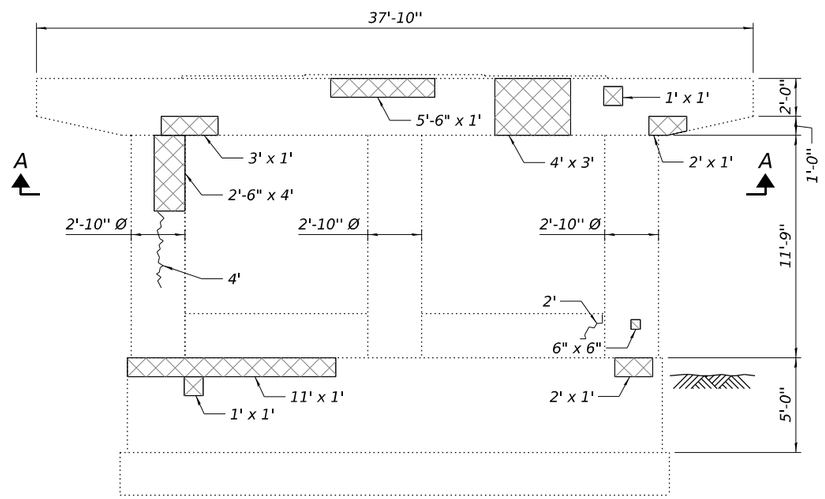

SOUTH FACE

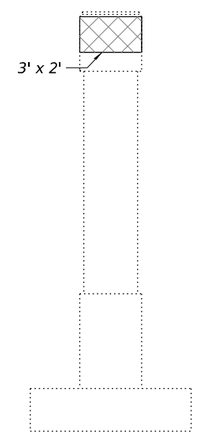

EAST END

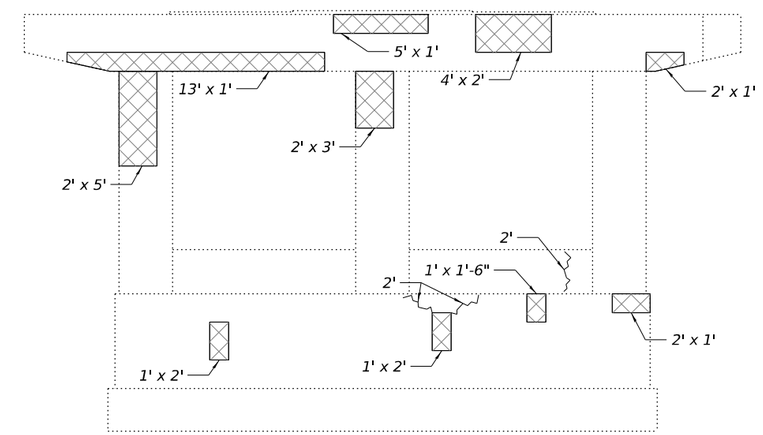

NORTH FACE

PIER #1

SN 050-0078 (NB)

LEGEND

Epoxy Crack Injection

Structural Repair of Concrete
(Depth Equal to or less than 5 Inches)

NOTES

1. Repair of the existing substructure shall include but may not be limited to the areas shown. The actual area to be repaired will be determined by the Engineer at the time of construction.

BILL OF MATERIAL

Item	Unit	Total
Structural Repair of Concrete (Depth Equal to or less than 5 Inches)	Sq. Ft.	151
Epoxy Crack Injection	Foot	12

MODEL: Sheet
FILE NAME: I:\2022\22069.11 IDOT D3 - PTB 205-023 - WO11 - LaSalle County 66R21\CADData\CADsheets\0500077_0078-66R21-015-Substr-Rpr-P1-NB.dgn
12/8/2025 2:04:21 PM

KUHN & TRELLO
CONSULTING ENGINEERS
A Limited Liability Company
109 N. 7th Street, 3rd Floor
Springfield, IL 62701
Phone: 217-679-9044
Professional Design Firm No. 184.006556

USER NAME =	DESIGNED - PDA	REVISED -	
	CHECKED - PRR	REVISED -	
PLOT SCALE =	DRAWN - MMY	REVISED -	
PLOT DATE =	CHECKED - MJT	REVISED -	

STATE OF ILLINOIS
DEPARTMENT OF TRANSPORTATION

SUBSTRUCTURE REPAIR DETAILS - PIER 1
STRUCTURE NO. 050-0078 (NB)

SHEET 15 OF 25 SHEETS

F.A.P. RTE.	SECTION	COUNTY	TOTAL SHEETS	SHEET NO.
46	(50-2HB)BRR	LASALLE	48	38

CONTRACT NO. 66R21

ILLINOIS FED. AID PROJECT

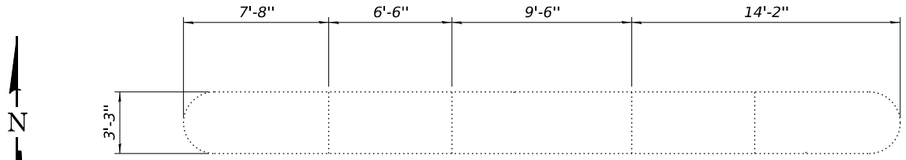

TOP OF CAP PLAN

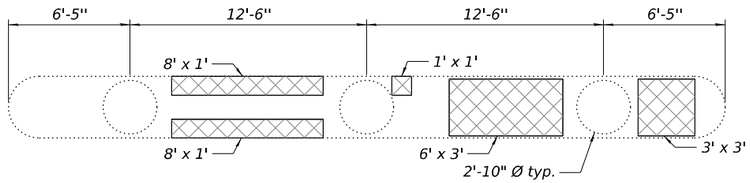

VIEW A-A

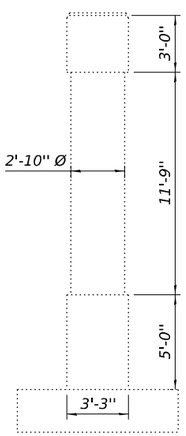

WEST END

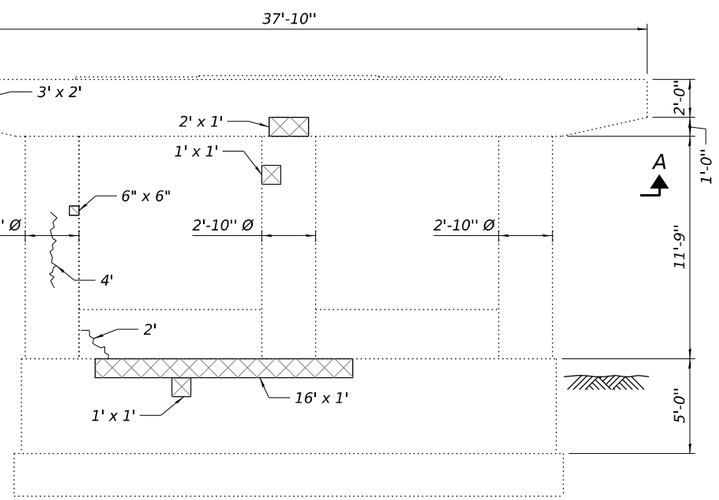

SOUTH FACE

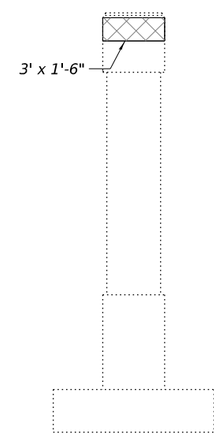

EAST END

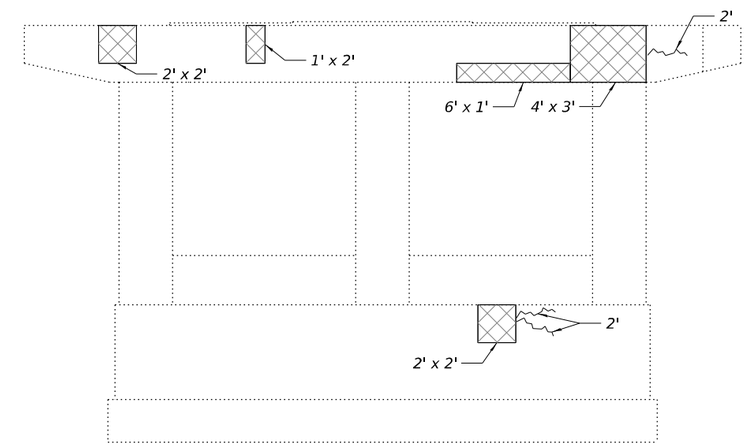

NORTH FACE

Column 1

Column 2

Column 3

PIER #2

SN 050-0078 (NB)

LEGEND

Epoxy Crack Injection

Structural Repair of Concrete
(Depth Equal to or less than 5 Inches)

NOTES

1. Repair of the existing substructure shall include but may not be limited to the areas shown. The actual area to be repaired will be determined by the Engineer at the time of construction.

BILL OF MATERIAL

Item	Unit	Total
Structural Repair of Concrete (Depth Equal to or less than 5 Inches)	Sq. Ft.	103
Epoxy Crack Injection	Foot	12

MODEL: Sheet
FILE NAME: I:\2022\2\2069.11 IDOT D3 - PTB 205-023 - WO11 - LaSalle County 66R21\CADData\CADsheets\050077_0078-66R21-016-Substr-Rpr-P2-NB.dgn

KUHN & TRELLO
CONSULTING ENGINEERS
A Limited Liability Company
109 N. 7th Street, 3rd Floor
Springfield, IL 62701
Phone: 217-679-0044
Professional Design Firm No. 184.006516

USER NAME =	DESIGNED - PDA	REVISED -	
	CHECKED - PRR	REVISED -	
PLOT SCALE =	DRAWN - MMY	REVISED -	
PLOT DATE =	CHECKED - MJT	REVISED -	

STATE OF ILLINOIS
DEPARTMENT OF TRANSPORTATION

SUBSTRUCTURE REPAIR DETAILS - PIER 2
STRUCTURE NO. 050-0078 (NB)

SHEET 16 OF 25 SHEETS

F.A.P. RTE.	SECTION	COUNTY	TOTAL SHEETS	SHEET NO.
46	(50-2HB)BRR	LASALLE	48	39

CONTRACT NO. 66R21

ILLINOIS FED. AID PROJECT

12/8/2025 2:05:04 PM

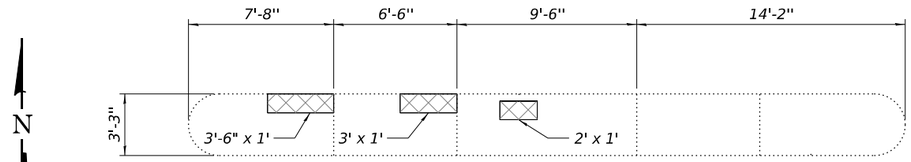

TOP OF CAP PLAN

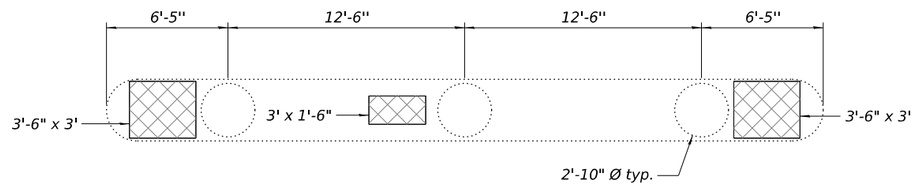

VIEW A-A

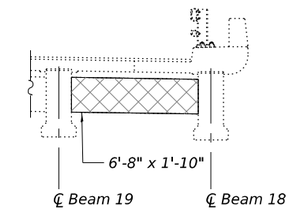

DIAPHRAGM REPAIR DETAIL

(South east end of Pier 3 - looking North)
(South fascia of diaphragm shown)
(See Sheet 1 of 25 for location)

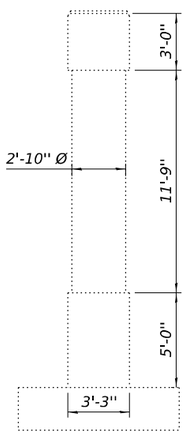

WEST END

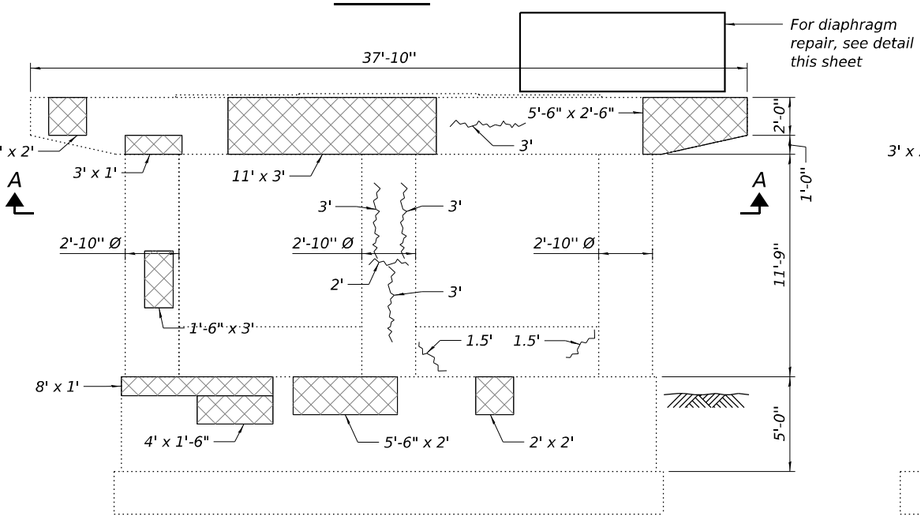

SOUTH FACE

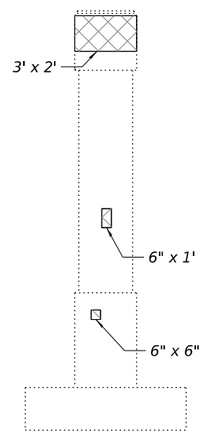

EAST END

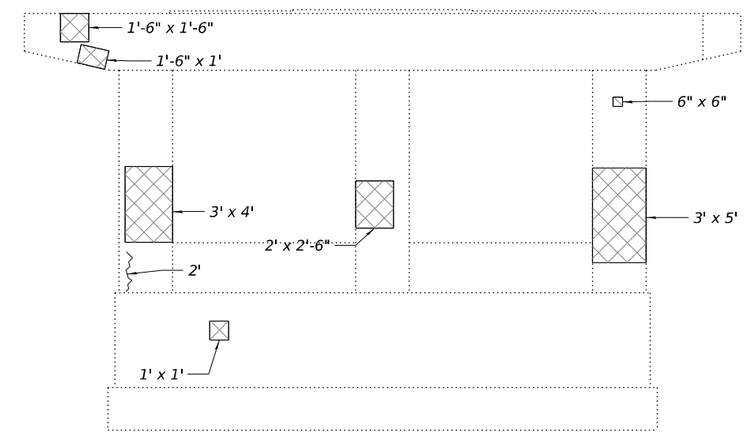

NORTH FACE

Column 1 Column 2 Column 3

PIER #3

SN 050-0078 (NB)

LEGEND

Epoxy Crack Injection

Structural Repair of Concrete
(Depth Equal to or less than 5 Inches)

NOTES

1. Repair of the existing substructure shall include but may not be limited to the areas shown. The actual area to be repaired will be determined by the Engineer at the time of construction.

BILL OF MATERIAL

Item	Unit	Total
Structural Repair of Concrete (Depth Equal to or less than 5 Inches)	Sq. Ft.	181
Epoxy Crack Injection	Foot	19

MODEL: Sheet
FILE NAME: I:\2022\22069.11 IDOT D3 - PTB 205-023 - WO11 - LaSalle County 66R21\CADdata\CADsheets\0500077_0079-66R21-017-Substr-Rgn-P3-NB.dgn
12/10/2025 2:45:26 PM

KUHN & TRELLO
CONSULTING ENGINEERS
A Limited Liability Company
109 N. 7th Street, 3rd Floor
Springfield, IL 62701
Phone: 217-679-0644
Professional Design Firm No. 184.006516

USER NAME =	DESIGNED - PDA	REVISED -	
	CHECKED - PRR	REVISED -	
PLOT SCALE =	DRAWN - MMY	REVISED -	
PLOT DATE =	CHECKED - MJT	REVISED -	

STATE OF ILLINOIS
DEPARTMENT OF TRANSPORTATION

SUBSTRUCTURE REPAIR DETAILS - PIER 3
STRUCTURE NO. 050-0078 (NB)

SHEET 17 OF 25 SHEETS

F.A.P. RTE.	SECTION	COUNTY	TOTAL SHEETS	SHEET NO.
46	(50-2HB)BRR	LASALLE	48	40
		CONTRACT NO. 66R21		
	ILLINOIS	FED. AID PROJECT		

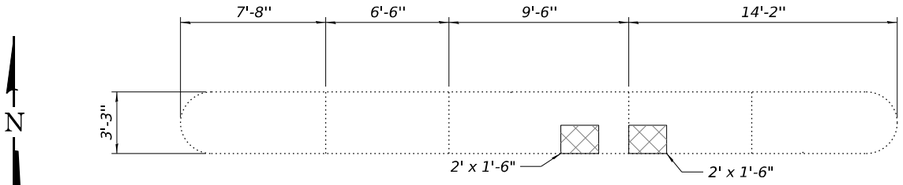

TOP OF CAP PLAN

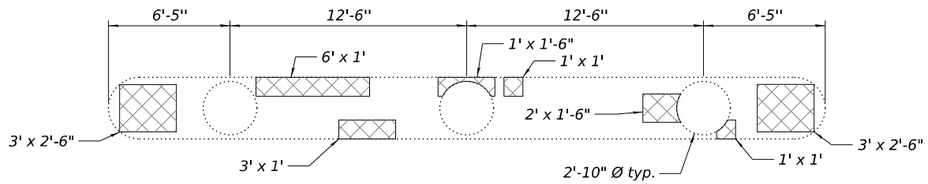

VIEW D-D

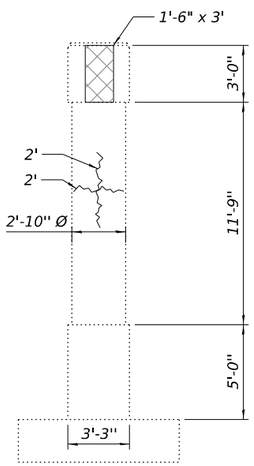

WEST END

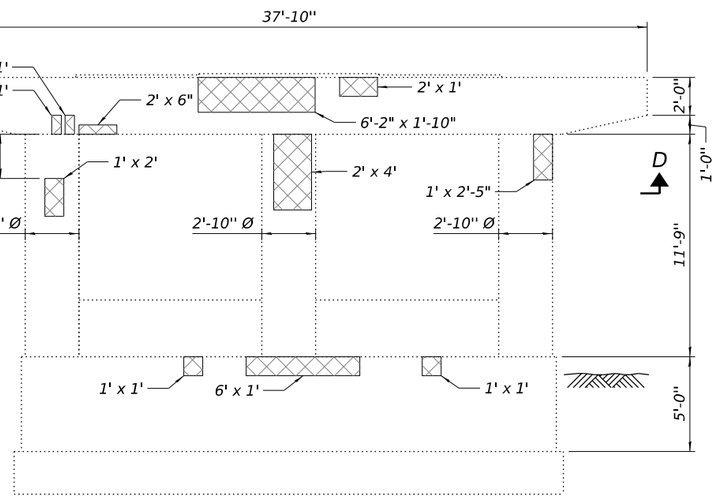

SOUTH FACE

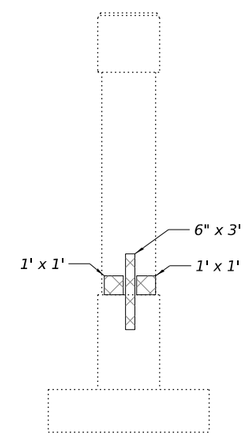

EAST END

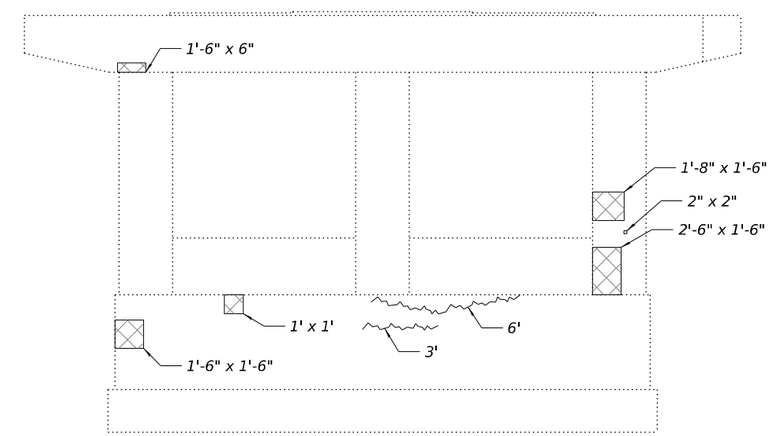

NORTH FACE

Column 1 Column 2 Column 3

PIER #1

SN 050-0077 (SB)

LEGEND

Epoxy Crack Injection

Structural Repair of Concrete
(Depth Equal to or less than 5 Inches)

NOTES

1. Repair of the existing substructure shall include but may not be limited to the areas shown. The actual area to be repaired will be determined by the Engineer at the time of construction.

BILL OF MATERIAL

Item	Unit	Total
Structural Repair of Concrete (Depth Equal to or less than 5 Inches)	Sq. Ft.	92
Epoxy Crack Injection	Foot	13

MODEL: Sheet
FILE NAME: t:\2022\22069.11 IDOT D3 - PTB 205-023 - WO11 - LaSalle County 66R21\CADData\CADSheets\0500077_0079-66R21-016-Substr-Rpr-P1-SB.dgn

KUHN & TRELLO
CONSULTING ENGINEERS
A Limited Liability Company
109 N. 7th Street, 3rd Floor
Springfield, IL 62701
Phone: 217-679-9044
Professional Design Firm No. 184-006516

USER NAME =	DESIGNED - PDA	REVISED -	
	CHECKED - PRR	REVISED -	
PLOT SCALE =	DRAWN - MMY	REVISED -	
PLOT DATE =	CHECKED - MJT	REVISED -	

STATE OF ILLINOIS
DEPARTMENT OF TRANSPORTATION

SUBSTRUCTURE REPAIR DETAILS - PIER 1
STRUCTURE NO. 050-0077 (SB)

SHEET 18 OF 25 SHEETS

F.A.P. RTE.	SECTION	COUNTY	TOTAL SHEETS	SHEET NO.
46	(50-2HB)BRR	LASALLE	48	41
		CONTRACT NO. 66R21		
	ILLINOIS	FED. AID PROJECT		

12/8/2025 2:06:58 PM

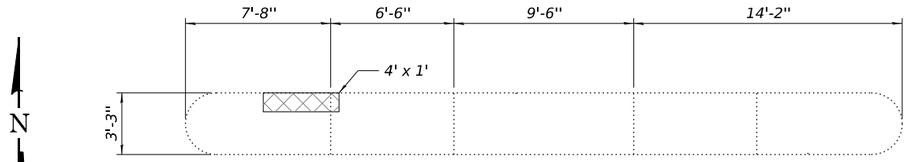

TOP OF CAP PLAN

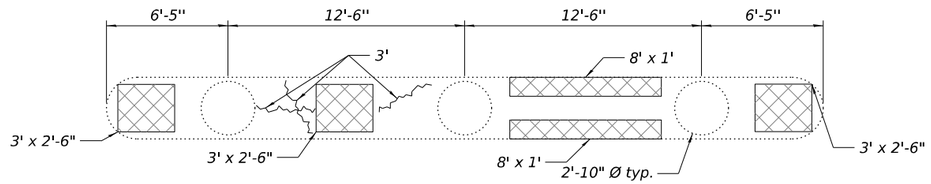

VIEW D-D

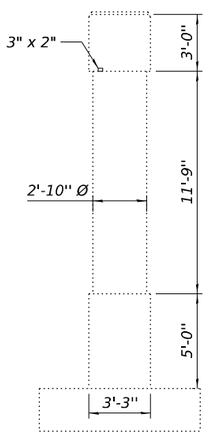

WEST END

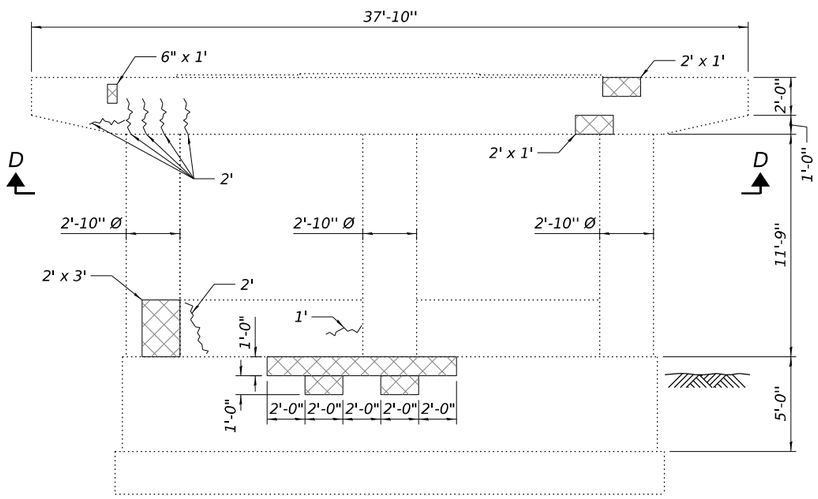

SOUTH FACE

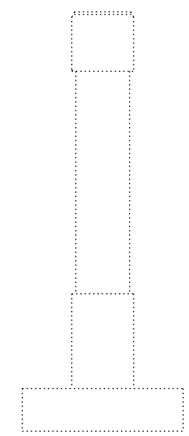

EAST END

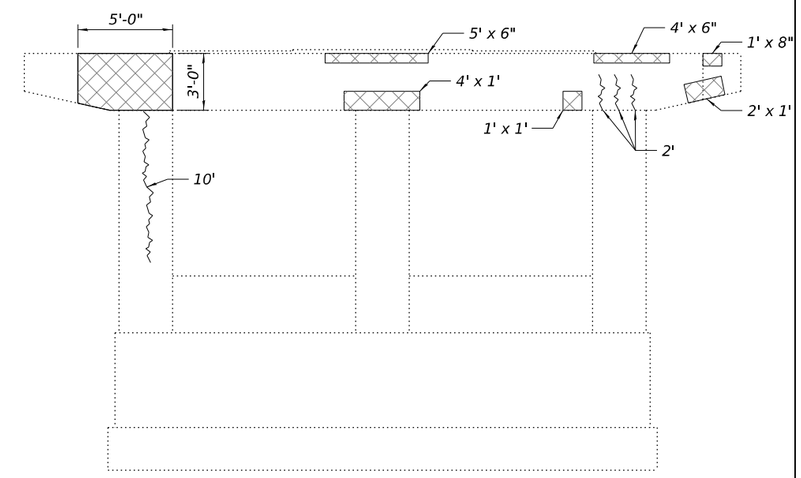

NORTH FACE

Column 1 Column 2 Column 3

PIER #2

SN 050-0077 (SB)

LEGEND

Epoxy Crack Injection

Structural Repair of Concrete
(Depth Equal to or less than 5 Inches)

NOTES

1. Repair of the existing substructure shall include but may not be limited to the areas shown. The actual area to be repaired will be determined by the Engineer at the time of construction.

BILL OF MATERIAL

Item	Unit	Total
Structural Repair of Concrete (Depth Equal to or less than 5 Inches)	Sq. Ft.	95
Epoxy Crack Injection	Foot	38

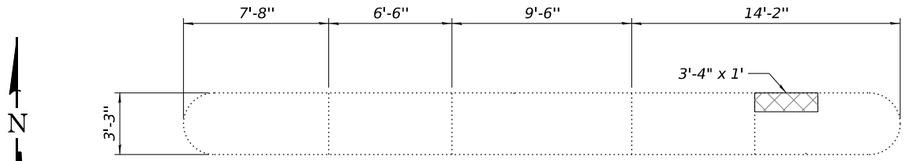

TOP OF CAP PLAN

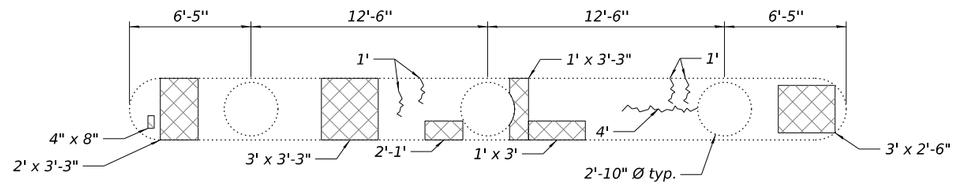

VIEW D-D

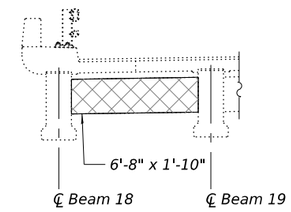

DIAPHRAGM REPAIR DETAIL

(South west end of Pier 3 - looking North)
(South fascia of diaphragm shown)
(See Sheet 1 of 25 for location)

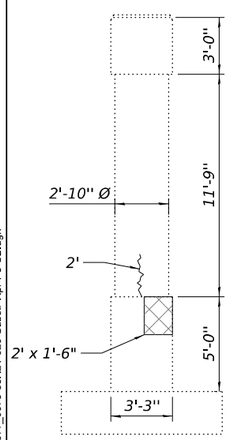

WEST END

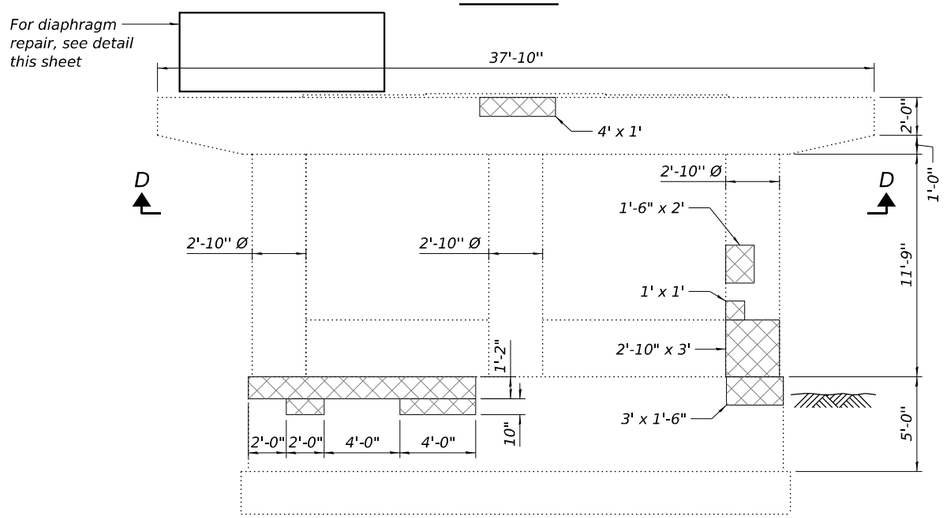

SOUTH FACE

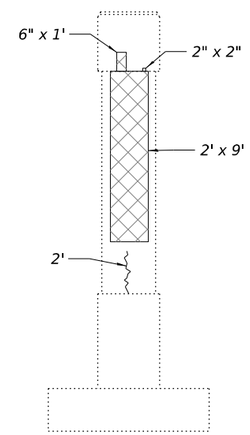

EAST END

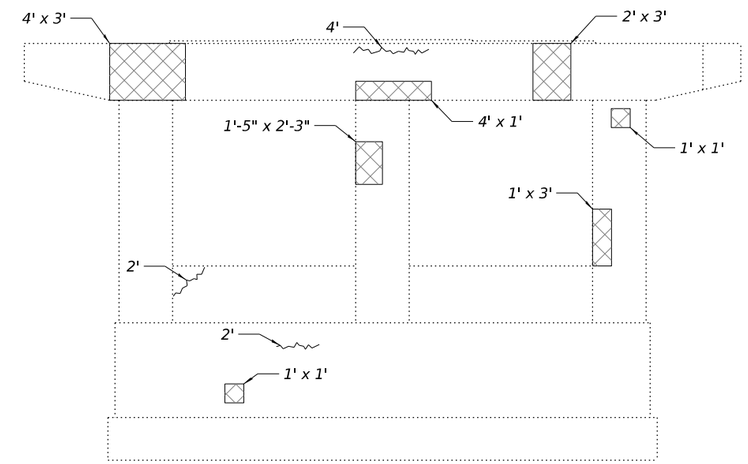

NORTH FACE

PIER #3

SN 050-0077 (SB)

LEGEND

Epoxy Crack Injection

Structural Repair of Concrete
(Depth Equal to or less than 5 Inches)

NOTES

1. Repair of the existing substructure shall include but may not be limited to the areas shown. The actual area to be repaired will be determined by the Engineer at the time of construction.

BILL OF MATERIAL

Item	Unit	Total
Structural Repair of Concrete (Depth Equal to or less than 5 Inches)	Sq. Ft.	141
Epoxy Crack Injection	Foot	20

MODEL: Sheet
FILE NAME: I:\2022\22069.11 IDOT D3 - PTB 205-023 - WO11 - LaSalle County 66R21\CADData\CADsheets\0500077_0079-66R21-020-Substr-Rpr-P3-SB.dgn
12/10/2025 2:46:26 PM

KUHN & TRELLO
CONSULTING ENGINEERS
A Limited Liability Company
109 N. 7th Street, 3rd Floor
Springfield, IL 62701
Phone: 217-679-0644
Professional Design Firm No. 184-006516

USER NAME =	DESIGNED - PDA	REVISED -	
	CHECKED - PRR	REVISED -	
PLOT SCALE =	DRAWN - MMY	REVISED -	
PLOT DATE =	CHECKED - MJT	REVISED -	

STATE OF ILLINOIS
DEPARTMENT OF TRANSPORTATION

SUBSTRUCTURE REPAIR DETAILS - PIER 3
STRUCTURE NO. 050-0077 (SB)

SHEET 20 OF 25 SHEETS

F.A.P. RTE.	SECTION	COUNTY	TOTAL SHEETS	SHEET NO.
46	(50-2HB)BRR	LASALLE	48	43
		CONTRACT NO. 66R21		
	ILLINOIS	FED. AID PROJECT		

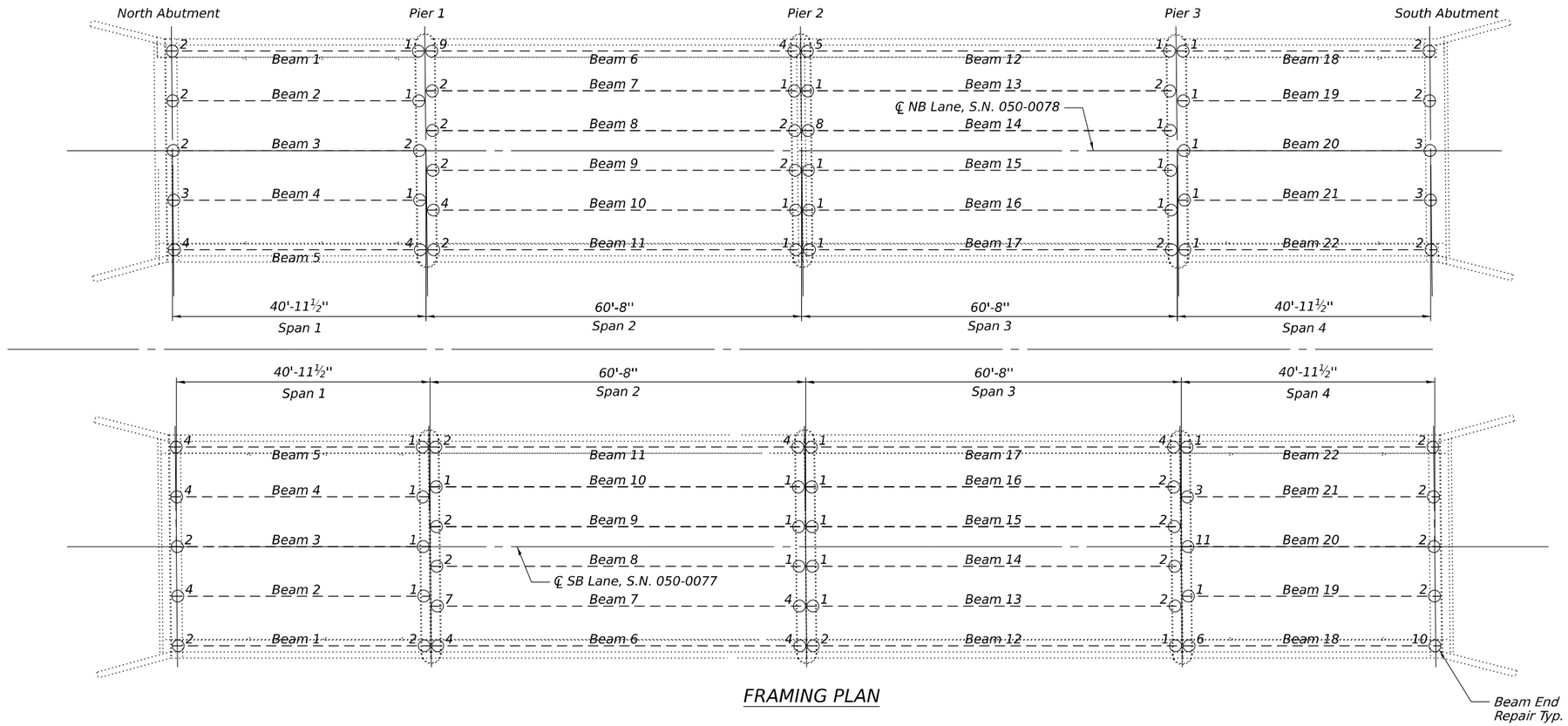

FRAMING PLAN

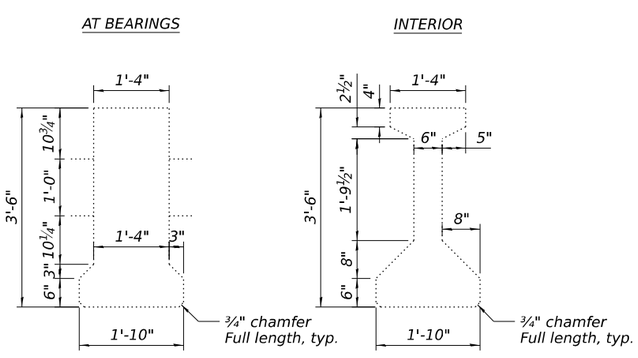

TYPICAL BEAM DIMENSIONS

DETAIL 1						
050-0078						
South Bm Ends	a	b	c	d	e	f
1	10"	10"	10"	10"	22"	10"
2	15"	10"	15"	10"	22"	10"
4	10"	10"	10"	10"	22"	10"
7	10"	6"	10"	10"	22"	15"
10	15"	10"	10"	10"	22"	10"
11	10"	10"	10"	10"	22"	10"
12	10"	10"	15"	10"	22"	10"
14	10"	10"	10"	10"	22"	10"
15	10"	10"	15"	10"	22"	10"
16	10"	10"	15"	10"	22"	10"
North Bm Ends						
13	10"	10"	10"	10"	22"	10"
15	10"	10"	15"	10"	22"	10"
16	10"	10"	10"	10"	22"	10"
17	10"	6"	15"	10"	22"	10"
18	10"	10"	15"	10"	22"	10"
19	10"	10"	10"	10"	22"	10"
20	10"	10"	10"	10"	22"	10"
21	4"	2"	10"	10"	22"	10"
22	0	0	10"	10"	22"	10"
050-0077						
South Bm Ends	a	b	c	d	e	f
2	10"	10"	10"	10"	22"	10"
3	10"	10"	10"	10"	22"	10"
4	15"	10"	10"	10"	22"	10"
5	10"	10"	15"	15"	22"	10"
8	10"	10"	15"	6"	22"	16"
9	10"	10"	10"	10"	22"	10"
10	15"	10"	10"	6"	22"	10"
12	15"	10"	10"	10"	22"	10"
North Bm Ends						
10	15"	10"	10"	15"	22"	10"
13	10"	10"	10"	10"	22"	10"
14	10"	10"	10"	10"	22"	10"
15	10"	10"	10"	10"	22"	10"
16	10"	10"	10"	10"	22"	10"
17	15"	10"	15"	10"	22"	10"
19	6"	6"	10"	10"	22"	10"
22	6"	4"	15"	10"	22"	10"

DETAIL 2						
050-0078						
South Bm Ends	a	b	c	d	e	f
3	20"	6"	10"	10"	22"	10"
8	20"	10"	10"	10"	22"	22"
9	20"	6"	10"	10"	22"	22"
13	10"	10"	20"	6"	22"	10"
17	10"	10"	15"	10"	22"	20"
18	20"	6"	25"	6"	22"	5"
19	30"	6"	25"	6"	22"	25"
22	30"	6"	20"	6"	22"	20"
North Bm Ends						
1	25"	6"	20"	6"	22"	5"
2	25"	6"	20"	6"	22"	20"
3	20"	6"	20"	10"	22"	20"
7	15"	15"	15"	10"	22"	20"
8	15"	10"	15"	10"	22"	20"
9	15"	10"	15"	10"	22"	20"
11	15"	10"	15"	15"	22"	25"
050-0077						
South Bm Ends	a	b	c	d	e	f
1	0	0	0	0	0	0
13	10"	10"	10"	10"	22"	20"
14	10"	10"	10"	10"	22"	20"
15	10"	10"	10"	10"	22"	20"
16	10"	10"	10"	10"	22"	20"
19	30"	6"	30"	6"	22"	30"
20	25"	6"	25"	6"	22"	25"
21	15"	15"	15"	15"	22"	20"
22	20"	10"	15"	15"	22"	10"
North Bm Ends						
1	0	0	20"	15"	22"	10"
3	10"	6"	20"	6"	22"	5"
8	15"	10"	15"	15"	22"	20"
9	15"	10"	10"	10"	22"	20"
11	10"	10"	15"	15"	22"	20"
12	10"	10"	15"	10"	22"	20"

DETAIL 3												
050-0078												
South Bm Ends	a	b	c	d	e	f	g	h	i	j	k	l
20	20"	43"	15"	37"	25"	43"	20"	37"	22"	20"	0	0
21	25"	6"	0	0	25"	10"	15"	4"	22"	5"	0	0
North Bm Ends												
4	25"	40"	20"	34"	10"	10"	0	0	22"	10"	0	0
050-0077												
North Bm Ends	a	b	c	d	e	f	g	h	i	j	k	l
21	10"	38"	5"	28"	15"	15"	0	0	22"	10"	0	0

DETAIL 4										
050-0078										
South Bm Ends	a	b	c	d	e	f	g	h	i	j
5	20"	15"	10"	10"	22"	10"	10"	5"	20"	6"
6	15"	15"	10"	10"	22"	20"	10"	10"	25"	6"
North Bm Ends										
5	25"	6"	20"	6"	0	0	12"	24"	30"	5"
10	15"	10"	15"	10"	22"	10"	12"	15"	10"	0
050-0077										
South Bm Ends	a	b	c	d	e	f	g	h	i	j
6	15"	6"	10"	10"	22"	10"	10"	10"	10"	0
7	0	0	10"	10"	22"	10"	22"	12"	20"	0
11	10"	10"	10"	6"	22"	10"	12"	12"	20"	5"
17	10"	10"	15"	10"	22"	25"	10"	15"	25"	6"
North Bm Ends										
2	20"	6"	20"	6"	0	0	22"	10"	20"	0
4	20"	6"	25"	6"	0	0	22"	15"	20"	0
5	10"	6"	20"	6"	0	0	22"	15"	20"	0
6	15"	10"	15"	10"	22"	10"	11"	10"	10"	0

LEGEND

Precast Prestressed Concrete I-Beam Repair

Horizontal Anchorage Strip (Wrap onto end of beam, typ.)

FRP with fibers oriented vertically. Fiber wrap shall bend to follow beam contours. Typ.

L.O.A.C. Limits of acrylic coating

(Sheet 1 of 5)

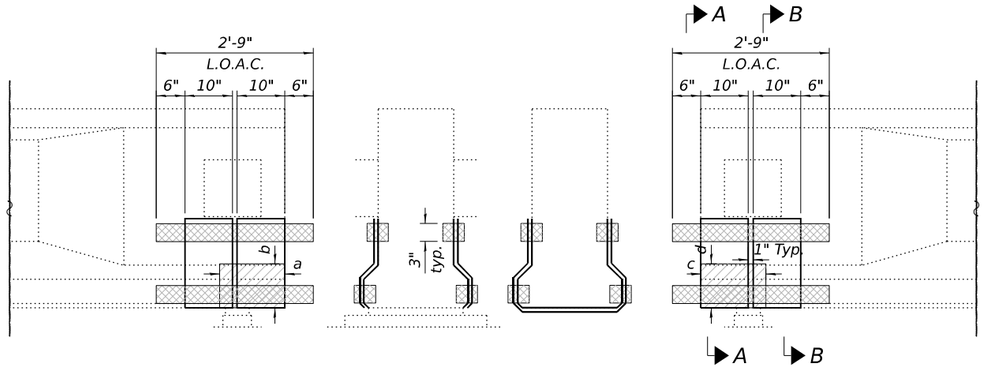

WEST FACE FOR S. BEAM ENDS
EAST FACE FOR N. BEAM ENDS

SECTION A-A

SECTION B-B

EAST FACE FOR S. BEAM ENDS
WEST FACE FOR N. BEAM ENDS

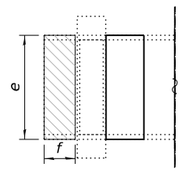

BOTTOM FACE

BEAM END REPAIR
DETAIL 1

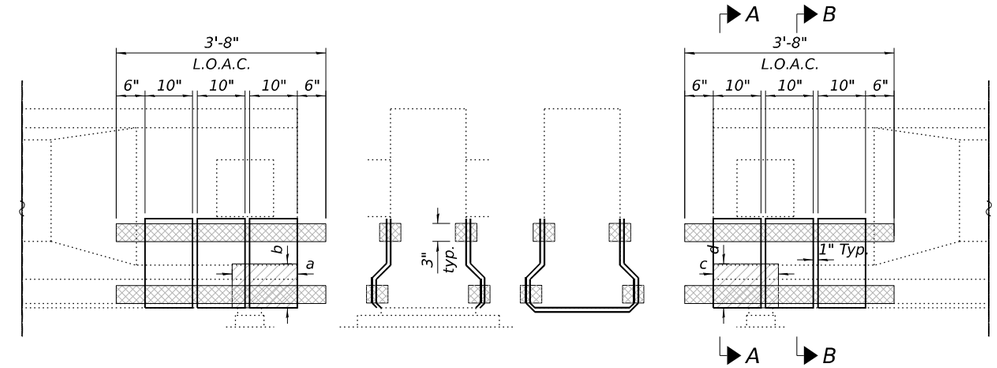

WEST FACE FOR S. BEAM ENDS
EAST FACE FOR N. BEAM ENDS

SECTION A-A

SECTION B-B

EAST FACE FOR S. BEAM ENDS
WEST FACE FOR N. BEAM ENDS

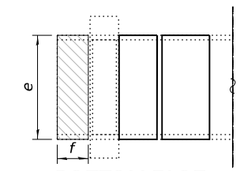

BOTTOM FACE

BEAM END REPAIR
DETAIL 2

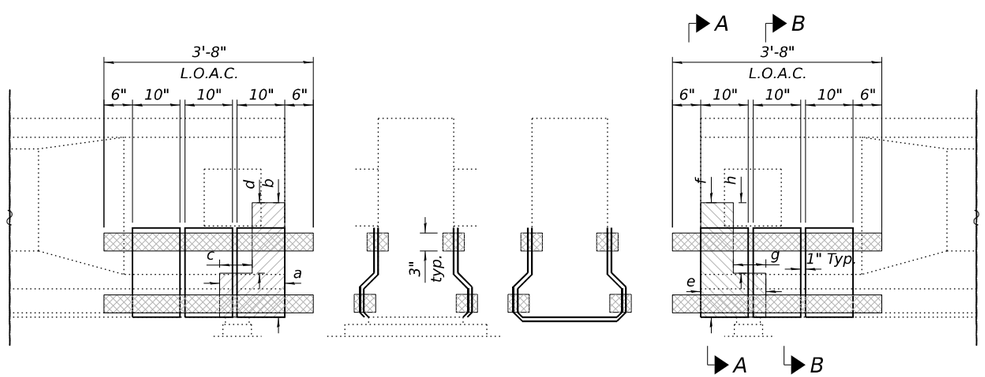

WEST FACE FOR S. BEAM ENDS
EAST FACE FOR N. BEAM ENDS

SECTION A-A

SECTION B-B

EAST FACE FOR S. BEAM ENDS
WEST FACE FOR N. BEAM ENDS

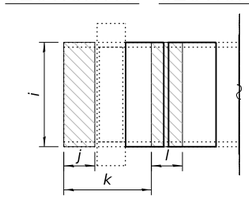

BOTTOM FACE

BEAM END REPAIR
DETAIL 3

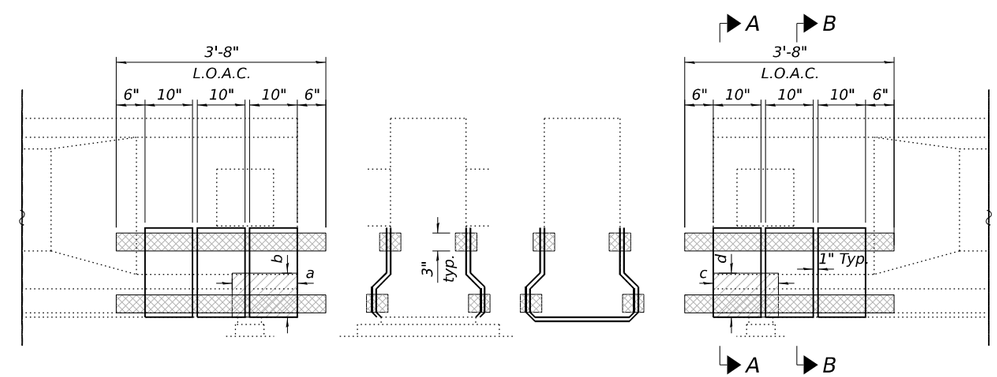

WEST FACE FOR S. BEAM ENDS
EAST FACE FOR N. BEAM ENDS

SECTION A-A

SECTION B-B

EAST FACE FOR S. BEAM ENDS
WEST FACE FOR N. BEAM ENDS

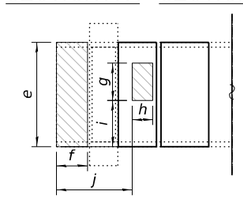

BOTTOM FACE

BEAM END REPAIR
DETAIL 4

LEGEND

- Precast Prestressed Concrete I-Beam Repair
- Horizontal Anchorage Strip (Wrap onto end of beam, typ.)
- FRP with fibers oriented vertically. Fiber wrap shall bend to follow beam contours. Typ.

L.O.A.C. Limits of acrylic coating

(Sheet 2 of 5)

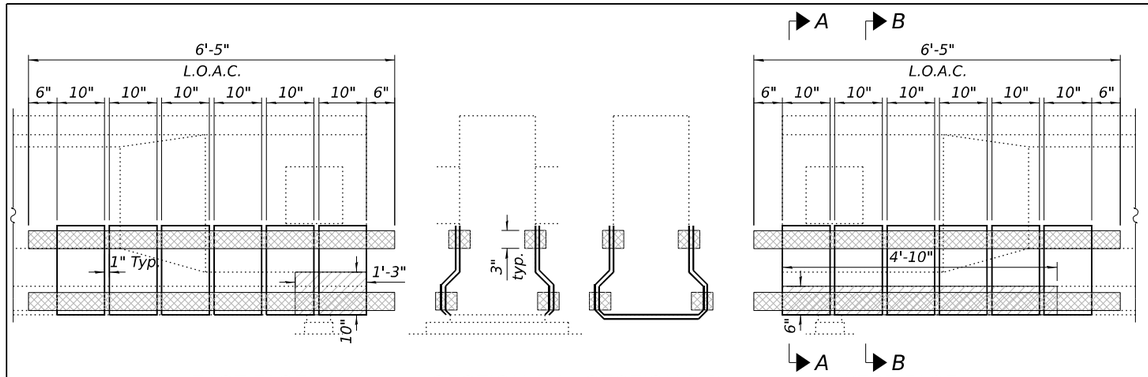

EAST FACE SECTION A-A SECTION B-B WEST FACE

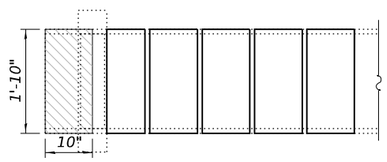

BOTTOM FACE

BEAM END REPAIR
DETAIL 5
(BM 12 N BM END STR 0078)

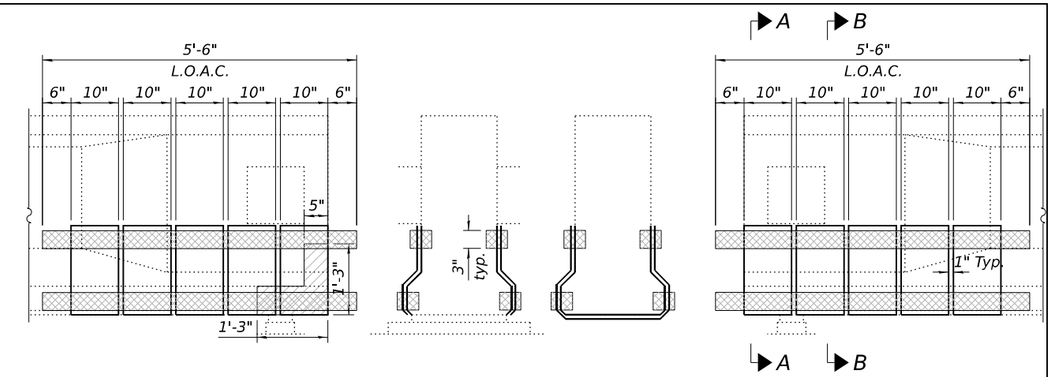

EAST FACE SECTION A-A SECTION B-B WEST FACE

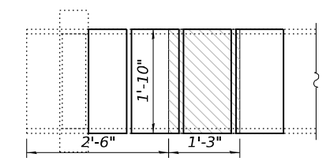

BOTTOM FACE

BEAM END REPAIR
DETAIL 7
(BM 7 N BM END STR 0077)

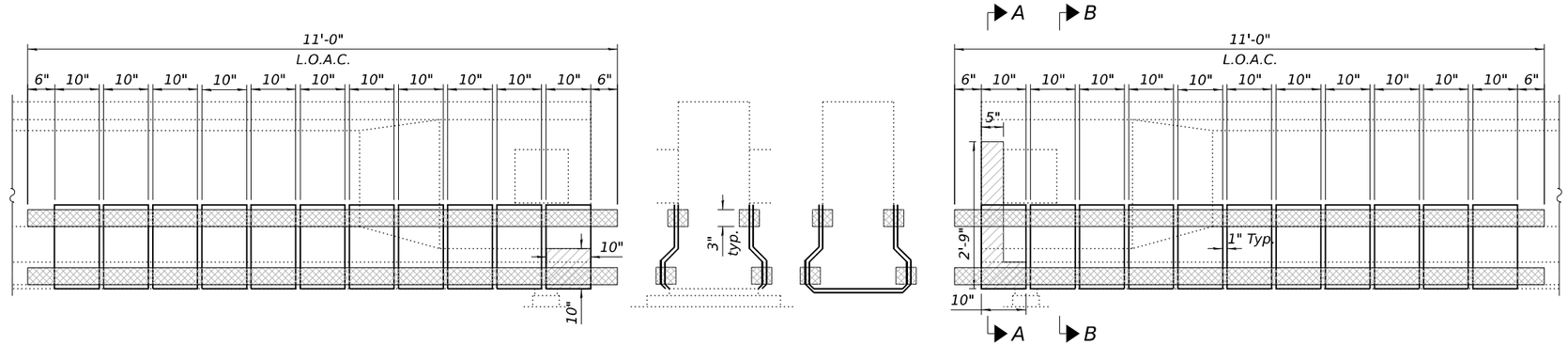

EAST FACE SECTION A-A SECTION B-B WEST FACE

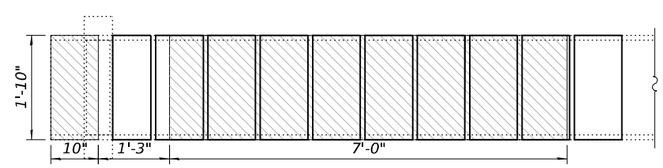

BOTTOM FACE

BEAM END REPAIR
DETAIL 6
(BM 18 N BM END STR 0077)

LEGEND

- Precast Prestressed Concrete I-Beam Repair
- Horizontal Anchorage Strip (Wrap onto end of beam, typ.)
- FRP with fibers oriented vertically. Fiber wrap shall bend to follow beam contours. Typ.

L.O.A.C. Limits of acrylic coating

(Sheet 3 of 5)

MODEL: Sheet
FILE NAME: I:\2022\22069.11 IDOT D3 - PTB 205-023 - WO11 - LaSalle County 66R21\CADData\CADsheets\0500077_0078-66R21-023-Beam End Repair.dgn

KUHN & TRELLO
CONSULTING ENGINEERS
A Limited Liability Company
109 N. 7th Street, 3rd Floor
Springfield, IL 62701
Phone: 217-678-9044
Professional Design Firm No. 184-006516

USER NAME =	DESIGNED - PDA	REVISED -	
	CHECKED - PRR	REVISED -	
PLOT SCALE =	DRAWN - MMY	REVISED -	
PLOT DATE =	CHECKED - MJT	REVISED -	

STATE OF ILLINOIS
DEPARTMENT OF TRANSPORTATION

BEAM REPAIR DETAILS
STRUCTURE NO. 050-0077 (SB) & 050-0078 (NB)

SHEET 23 OF 25 SHEETS

F.A.P. RTE.	SECTION	COUNTY	TOTAL SHEETS	SHEET NO.
46	(50-2HB)BRR	LASALLE	48	46
		CONTRACT NO. 66R21		
	ILLINOIS	FED. AID PROJECT		

12/8/2025 2:18:03 PM

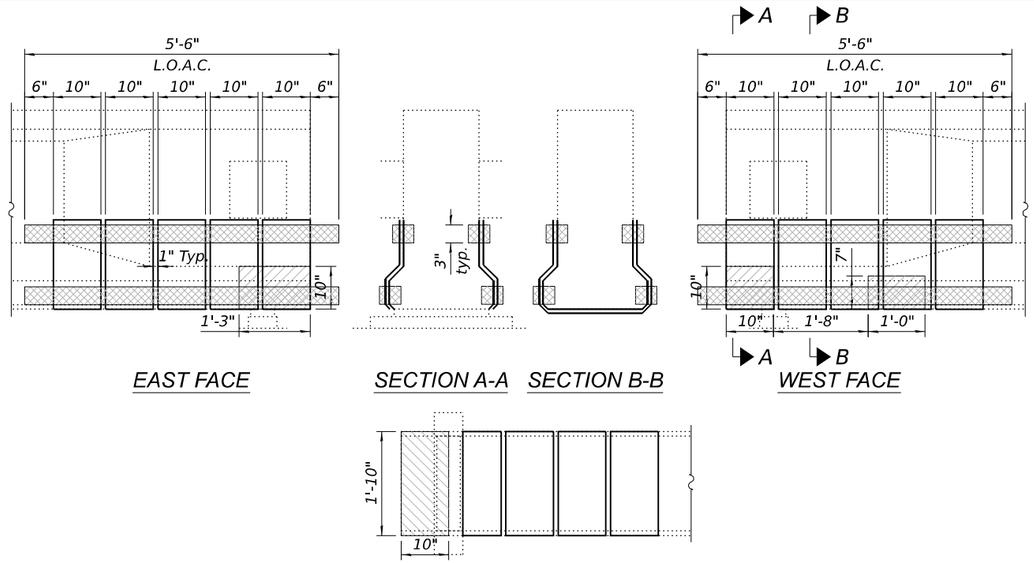

EAST FACE

SECTION A-A

SECTION B-B

WEST FACE

BOTTOM FACE

BEAM END REPAIR
DETAIL 8
(BM 14 N BM END STR 0078)

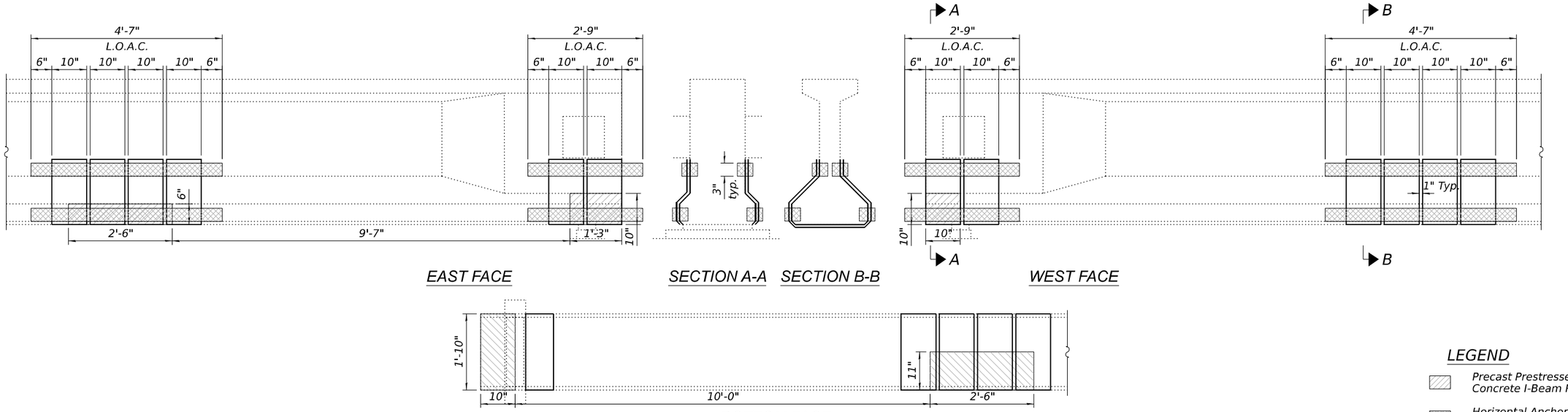

EAST FACE

SECTION A-A

SECTION B-B

WEST FACE

BOTTOM FACE

BEAM END REPAIR
DETAIL 9
(BM 6 N BM END STR 0078)

LEGEND

- Precast Prestressed Concrete I-Beam Repair
- Horizontal Anchorage Strip (Wrap onto end of beam, typ.)
- FRP with fibers oriented vertically. Fiber wrap shall bend to follow beam contours. Typ.

L.O.A.C. Limits of acrylic coating

(Sheet 4 of 5)

MODEL: Sheet
FILE NAME: I:\2022\2069.11 IDOT D3 - PTB 205-023 - WO11 - LaSalle County 66R21\CADData\CADsheets\0500077_0078-66R21-024-Beam End Repair.dgn

KUHN & TRELLO
CONSULTING ENGINEERS
A Limited Liability Company
109 N. 7th Street, 3rd Floor
Springfield, IL 62701
Phone: 217-679-0044
Professional Design Firm No. 184-006516

USER NAME =	DESIGNED - PDA	REVISED -	
	CHECKED - PRR	REVISED -	
PLOT SCALE =	DRAWN - MMY	REVISED -	
PLOT DATE =	CHECKED - MJT	REVISED -	

STATE OF ILLINOIS
DEPARTMENT OF TRANSPORTATION

BEAM REPAIR DETAILS
STRUCTURE NO. 050-0077 (SB) & 050-0078 (NB)

SHEET 24 OF 25 SHEETS

F.A.P. RTE.	SECTION	COUNTY	TOTAL SHEETS	SHEET NO.
46	(50-2HB)BRR	LASALLE	48	47
		CONTRACT NO. 66R21		
	ILLINOIS	FED. AID PROJECT		

12/8/2025 2:18:41 PM

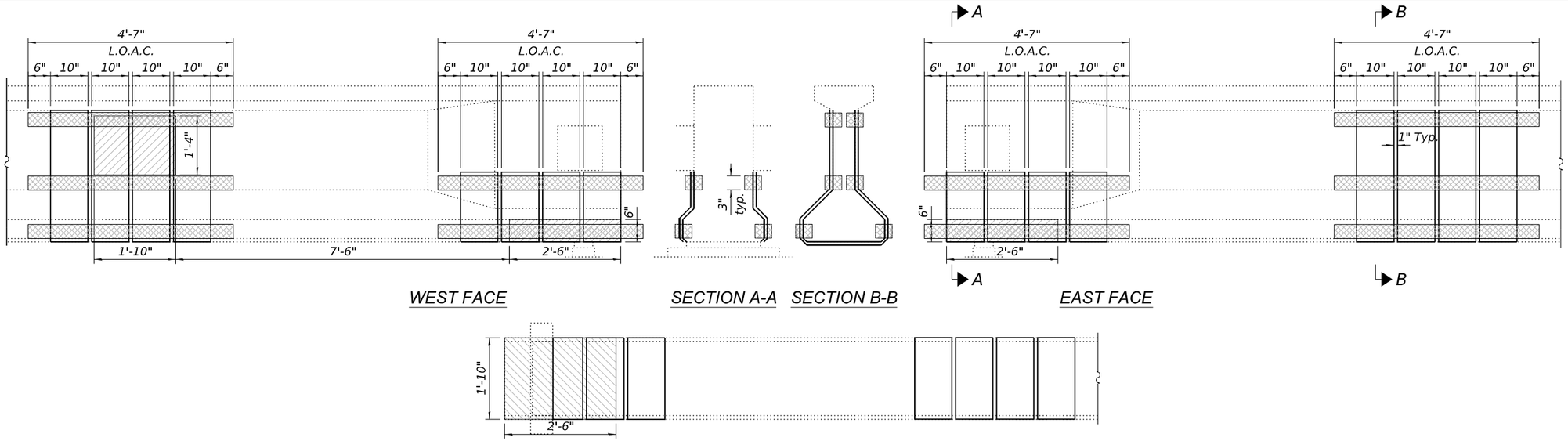

BEAM END REPAIR
DETAIL 10
(BM 18 S BM END STR 0077)

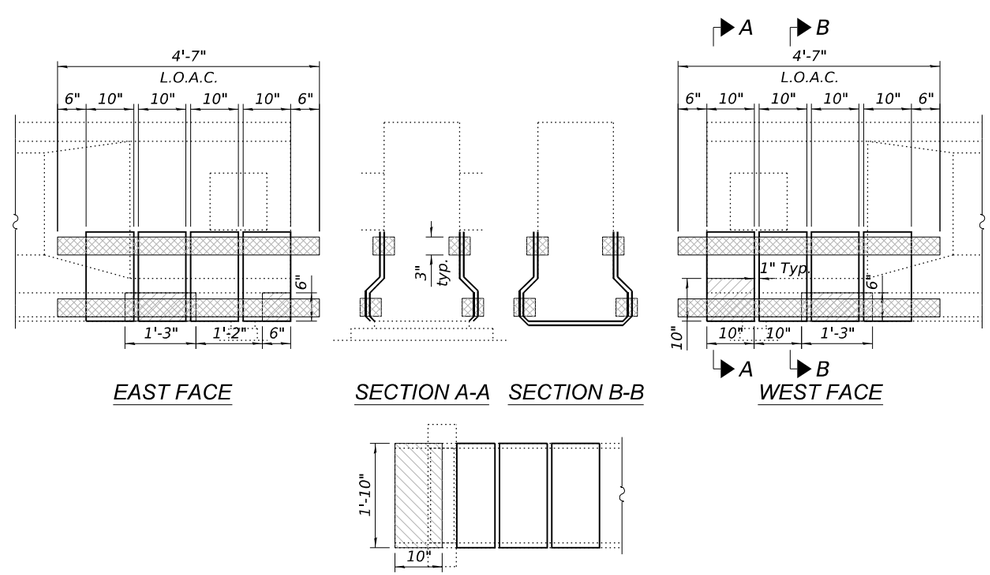

BEAM END REPAIR
DETAIL 11
(BM 20 N BM END STR 0078)

LEGEND

- Precast Prestressed Concrete I-Beam Repair
- Horizontal Anchorage Strip (Wrap onto end of beam, typ.)
- FRP with fibers oriented vertically. Fiber wrap shall bend to follow beam contours. Typ.
- L.O.A.C. Limits of acrylic coating

BILL OF MATERIAL

Item	Unit	Total
Fiber Wrap	Sq. Ft.	1087
Acrylic Coating	Sq. Yd.	184.9
Precast Prestressed Concrete I-Beam Repair	Sq. Ft.	363

(Sheet 5 of 5)

MODEL: Sheet
FILE NAME: I:\2022\22069.11 IDOT D3 - PTB 205-023 - WO11 - LaSalle County 66R21\CADData\CADsheets\050077_0078-66R21-025-Beam End Repair.dgn

KUHN & TRELLO
CONSULTING ENGINEERS
A Limited Liability Company
109 N. 7th Street, 3rd Floor
Springfield, Il 62701
Phone: 217-679-0044
Professional Design Firm No. 184-006516

USER NAME =	DESIGNED - PDA	REVISED -	
	CHECKED - PRR	REVISED -	
PLOT SCALE =	DRAWN - MMY	REVISED -	
PLOT DATE =	CHECKED - MJT	REVISED -	

STATE OF ILLINOIS
DEPARTMENT OF TRANSPORTATION

BEAM REPAIR DETAILS
STRUCTURE NO. 050-0077 (SB) & 050-0078 (NB)

SHEET 25 OF 25 SHEETS

F.A.P. RTE.	SECTION	COUNTY	TOTAL SHEETS	SHEET NO.
46	(50-2HB)BRR	LASALLE	48	48
		CONTRACT NO. 66R21		
	ILLINOIS	FED. AID PROJECT		

12/10/2025 2:51:23 PM

FOR INFORMATION ONLY

ROUT. NO.	SECTION	COUNTY	TOTAL SHEETS	SHEET NO.
F.A.I. 80	50-2HB	LA SALLE	22	2
STA.	TO STA.			
U.S. R.R. REG. NO. 6	ILLINOIS	PROJECT I-80-3(31)76		

B.M. # 1: ELEV. 652.64
R.R. SPIKE IN 12" CATALPA 100' LT. OF F.A.I. RTE. 80 STA. 556+26
B.M.# 5A: ELEV: 641.53
SPIKE IN POWER POLE 45' RT. OF F.A.I. RTE 178 STA. 40+24

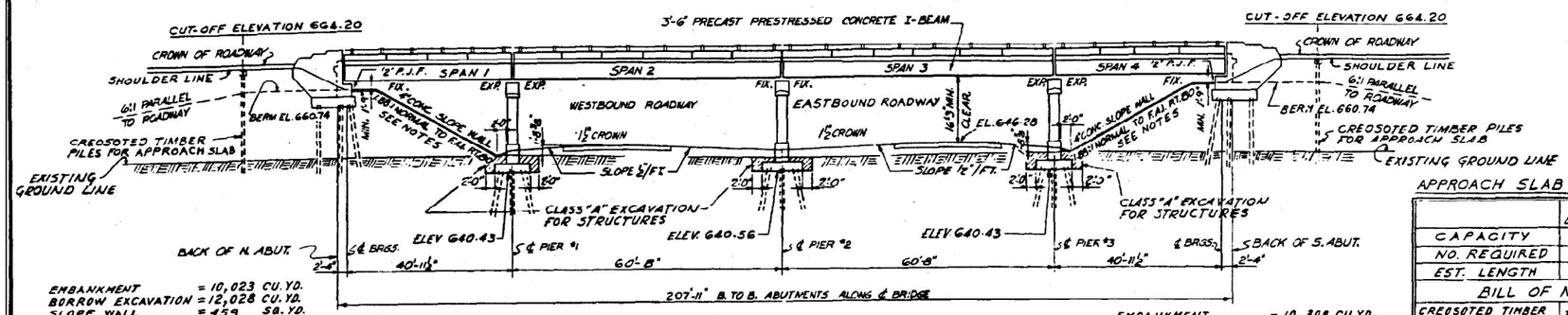

EMBANKMENT = 10,023 CU. YD.
BORROW EXCAVATION = 12,028 CU. YD.
SLOPE WALL = 459 SQ. YD.
CLASS A EXCAVATION = 9 CU. YD.
FOR TOEWALL

EMBANKMENT = 10,308 CU. YD.
BORROW EXCAVATION = 12,369 CU. YD.
SLOPE WALL = 459 SQ. YD.
CLASS A EXCAVATION = 9 CU. YD.
FOR TOEWALL

ELEVATION
SCALE: 1" = 15'-0"

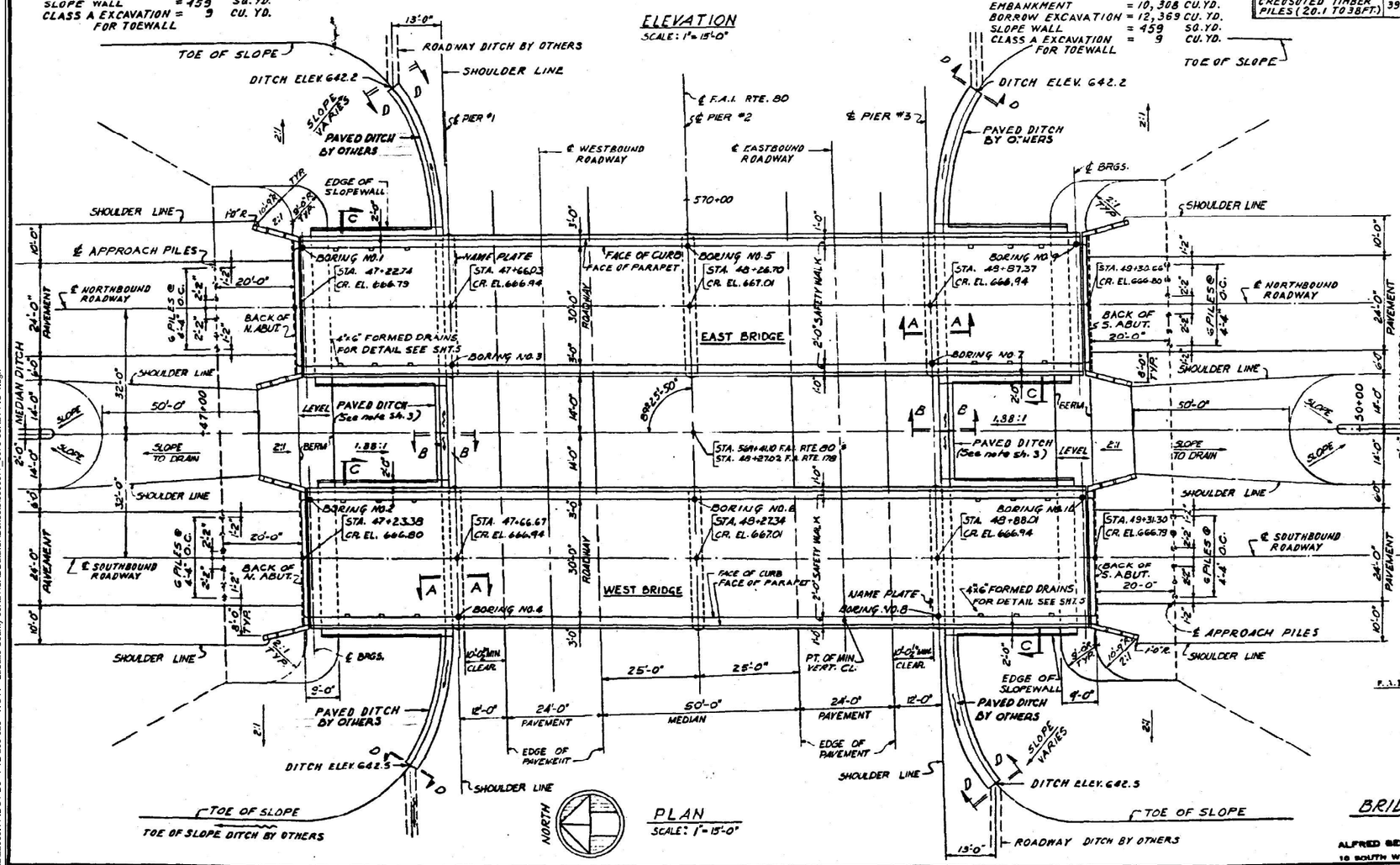

PLAN
SCALE: 1" = 15'-0"

APPROACH SLAB PILE SCHEDULE

	EAST BRIDGE	WEST BRIDGE
CAPACITY	15 TONS	15 TONS
NO. REQUIRED	12	12
EST. LENGTH	33 FT.	33 FT.

BILL OF MATERIAL

CREOSOTED TIMBER PILES (20.1 TO 38 FT.)	396 LIN. FT.	396 LIN. FT.

INDEX OF SHEETS

NOTES:
SLOPEWALLS ARE REINFORCED WITH WELDED WIRE FABRIC. 6"x6" MESH No. 4 WIRE, WEIGHING APPROX. 58# PER 100 SQ. FT.
FOR SECTIONS A-A, B-B, C-C, AND D-D SEE SHEET 3.
FOR LOCATION OF NAME PLATES ON PIERS SEE SHEET 11.

ROAD CLASSIFICATION

D.H.V	TYPE	M.P.H
1095	T	70

DESIGN LOAD
L.L. HS20-S16-44
FUTURE D.L. 1½ BIT. WEARING SURFACE

DESIGN STRESSES
CONCRETE (CAST IN PLACE)
f_c = 3,500 LBS. PER SQ. IN.
f_c = 1,400 LBS. PER SQ. IN.
f_c = (WITH EARTH PRESSURE) 1000 LBS. PER SQ. IN.
v = (PIER FOOTING) 75 LBS. PER SQ. IN.
n = 10
PRESTRESSED CONCRETE
f_c = 5,000 LBS. PER SQ. IN.
f'_{ci} = 4,000 LBS. PER SQ. IN.
f_c = 2,000 LBS. PER SQ. IN.
REINFORCING STEEL
f_s = 20,000 LBS. PER SQ. IN.
PRETENSIONING STEEL
f_{su} = 248,000 LBS. PER SQ. IN.
f_{si} = 173,600 LBS. PER SQ. IN.
PILE LOADS
ABUTMENT AND WINGWALLS = 30 TONS (CONCRETE)
APPROACH SLAB = 15 TONS (TIMBER)
PIERS = 20 TONS (TIMBER)

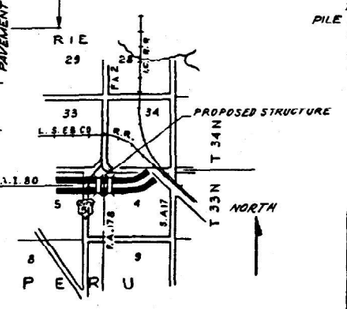

BRIDGE LOCATION PLAN

ALFRED BENESCH & ASSOCIATES CONSULTING ENGINEERS
10 SOUTH WABASH AVENUE 706 CHICAGO, ILLINOIS

GENERAL PLAN AND ELEVATION
GRADE SEPARATION
F. A. ROUTE 178
OVER F.A.I. ROUTE 80
F.A. PROJECT I-80-3(31)76
F.A.I. ROUTE 80 SECTION 50-2HB
LA SALLE COUNTY
STATION 569+41.10

STD. 2153 CHANGED TO STD. 2153-1

KUHN & TRELLO
CONSULTING ENGINEERS
A Limited Liability Company
109 N. 7th Street, 3rd Floor
Springfield, IL 62701
Phone: 217-679-0044
Professional Design Firm No. 184-006556

USER NAME =	DESIGNED - PDA	REVISED -	
	CHECKED - PRR	REVISED -	
PLOT SCALE =	DRAWN - MMY	REVISED -	
PLOT DATE =	CHECKED - MJT	REVISED -	

STATE OF ILLINOIS
DEPARTMENT OF TRANSPORTATION

EXISTING STRUCTURE PLANS - FOR INFORMATION ONLY
STRUCTURE NO. 050-0077 (SB) & 050-0078 (NB)
SHEET 1 OF 3 SHEETS

F.A.P. RTE.	SECTION	COUNTY	TOTAL SHEETS	SHEET NO.
46	(50-2HB)BRR	LASALLE	48	48A
		CONTRACT NO. 66R21		
		ILLINOIS	FED. AID PROJECT	

MODEL: Sheet
FILE NAME: I:\2022\2\2069.11 IDOT D3 - PTB 205-023 - WO11 - LaSalle County 66R21\CADData\CADsheets\050077_0078-66R21-FIO-1.dgn
10/2/2025 8:57:30 AM

FOR INFORMATION ONLY

ROUTE NO.	SECTION	COUNTY	TOTAL SHEETS	SHEET NO.
F.A.I.-80	50-2HB	LA SALLE	22	5
STA.		TO STA.		
B.P.R. REG. NO. 4	R.J.HCIS	PROJECT		

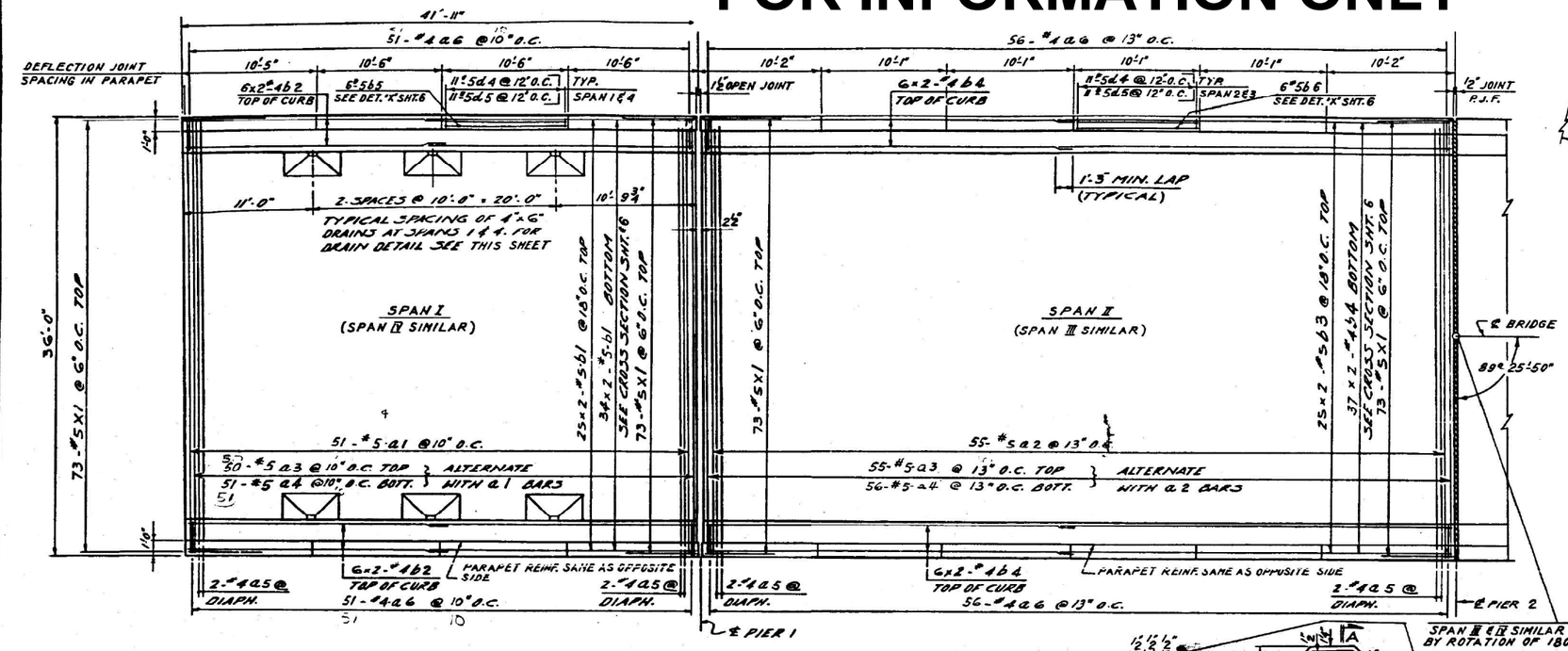

PLAN OF DECK REINFORCEMENT - EAST BRIDGE SHOWN

WEST BRIDGE SIMILAR

SCALE 3/8" = 1'-0"

NOTE:
BARS NOTED THUSLY 25x2-#5 ETC. INDICATE 25 LINES OF BARS WITH 2 LENGTHS OF BARS PER LINE.

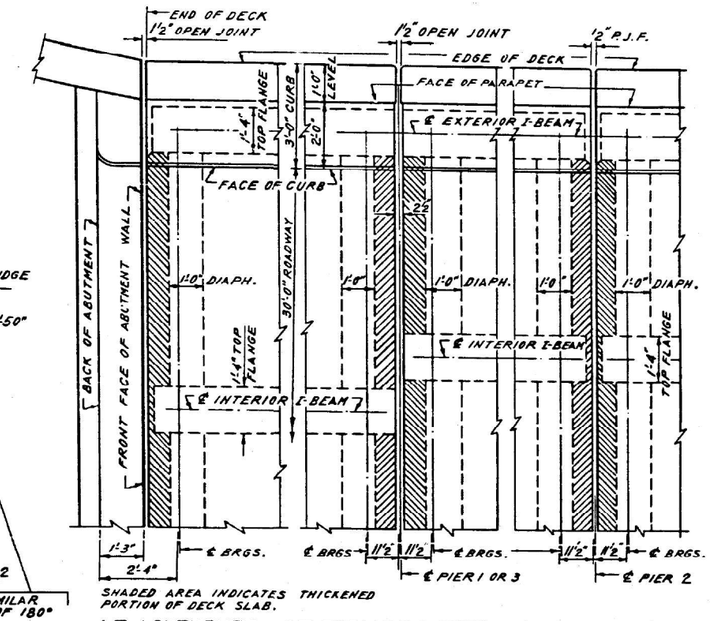

AT ABUTMENTS AT EXPANSION PIERS AT FIXED PIERS

PARTIAL PLAN OF DECK

SCALE: 1/2" = 1'-0"

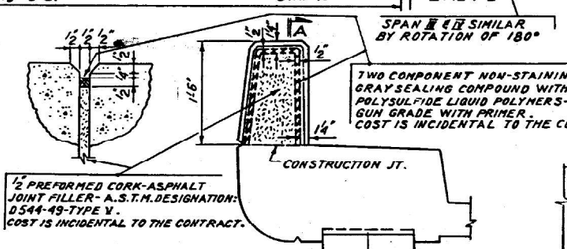

SECTION A-A ELEVATION

DEFLECTION JOINT

SCALE: 1" = 1'-0"

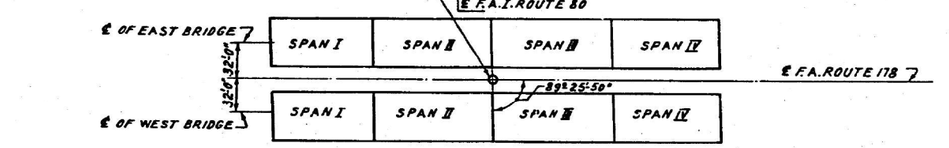

SCHEMATIC PLAN

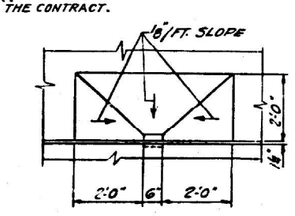

PLAN AT DRAINS

SCALE: 1/2" = 1'-0"

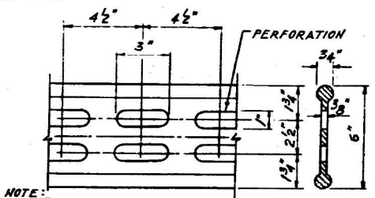

NOTE:
COST OF WATER SEAL IS INCIDENTAL TO THE CONTRACT UNIT PRICE PER CU. YD. OF CLASS X CONCRETE. SEE SPECIAL PROVISIONS.

DETAIL OF 6"-RUBBER WATER SEAL

SCALE: 3" = 1'-0"

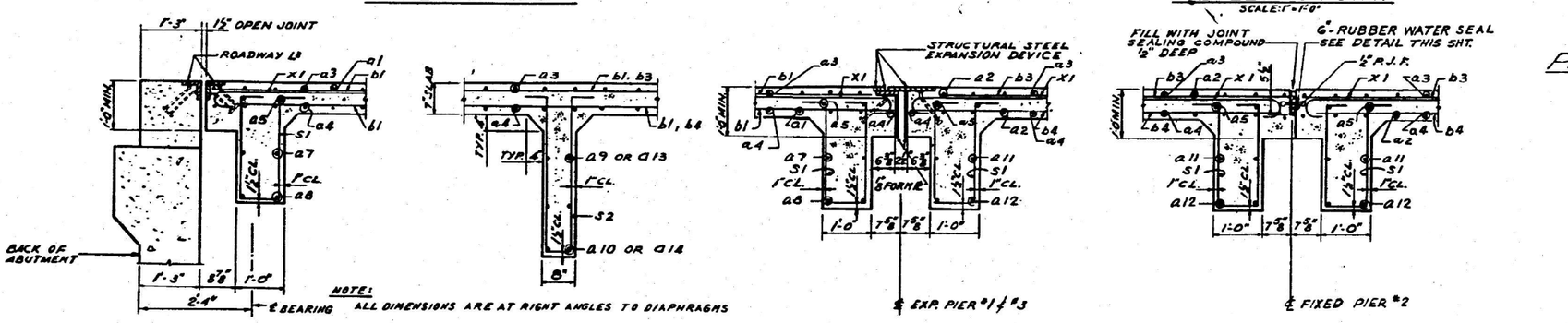

NOTE:
ALL DIMENSIONS ARE AT RIGHT ANGLES TO DIAPHRAGMS

TYPICAL DIAPHRAGM SECTIONS

SEE SHEETS NO. 7 & 8 FOR DIAPHRAGM LOCATIONS

SCALE: 3/8" = 1'-0"

BILL OF MATERIALS - SUPERSTRUCTURE

ITEM	UNIT	EAST BRIDGE	WEST BRIDGE
CLASS X CONCRETE	CU. YD.	244.8	244.8
REINFORCEMENT BARS	POUND	48,790	48,790
ALUMINUM HANDRAIL	LIN. FT.	410	410
STRUCTURAL STEEL	POUND	11,700	11,700
FURNISHING AND ERECTING PRECAST PRESTRESSED CONCRETE I-BEAMS	LIN. FT.	1,142	1,142

DECK REINFORCEMENT PLAN
GRADE SEPARATION
F.A. ROUTE 178
OVER F.A.I. ROUTE 80
F.A. PROJECT
F.A.I. ROUTE 80 SECTION 50-2HB
LA SALLE COUNTY
STATION 569+41.10

ALFRED BENESCH & ASSOCIATES CONSULTING ENGINEERS
10 SOUTH WABASH AVENUE 706 CHICAGO, ILLINOIS

KUHN & TRELLO
CONSULTING ENGINEERS
A Limited Liability Company
109 N. 7th Street, 3rd Floor
Springfield, IL 62701
Phone: 217-679-0044
Professional Design Firm No. 184.006356

USER NAME =	DESIGNED - PDA	REVISED -	
	CHECKED - PRR	REVISED -	
PLOT SCALE =	DRAWN - MMY	REVISED -	
PLOT DATE =	CHECKED - MJT	REVISED -	

STATE OF ILLINOIS
DEPARTMENT OF TRANSPORTATION

EXISTING STRUCTURE PLANS - FOR INFORMATION ONLY
STRUCTURE NO. 050-0077 (SB) & 050-0078 (NB)
SHEET 2 OF 3 SHEETS

F.A.P. RTE.	SECTION	COUNTY	TOTAL SHEETS	SHEET NO.
46	(50-2HB)BRR	LASALLE	48	48B

CONTRACT NO. 66R21
ILLINOIS FED. AID PROJECT

MODEL: Sheet
FILE NAME: I:\2022\22069.11 IDOT D3 - PTB 205-023 - WO11 - LaSalle County 66R21\CADData\CADsheets\050\0077_0078-66R21-FIO-2.dgn
10/2/2025 9:06:28 AM

FOR INFORMATION ONLY

ROUTE NO	SECTION	COUNTY	TOTAL SHEETS	SHEET NO
F.A.I.80	50-2HB	LA SALLE	22	8
STA.	TO STA.			
B. P. R. REG NO. 4	ILLINOIS	PROJECT		

SECTION "Z-Z"

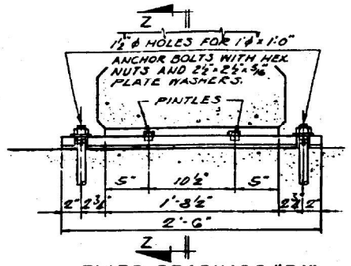

FIXED BEARINGS "B1"

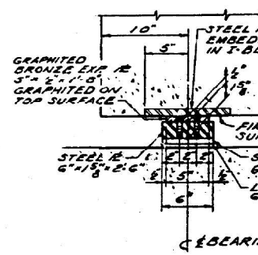

SECTION "Y-Y"

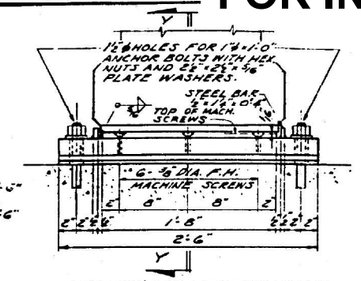

EXPANSION BEARING "B2"

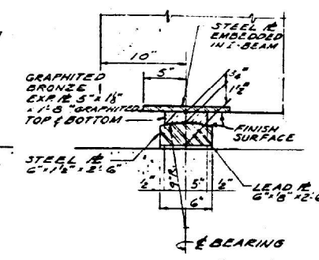

SECTION "W-W"

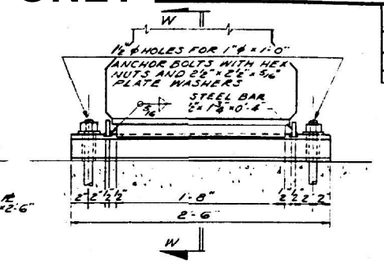

EXPANSION BEARING "B3"

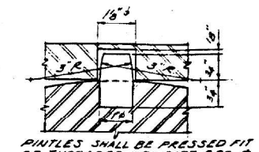

PINTLES SHALL BE PRESSED FIT OR THREADED INTO BOTT. BRG. ℞.

PINTLE DETAIL

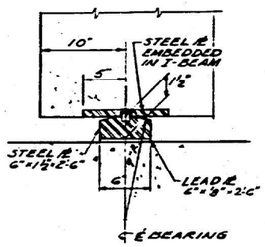

SECTION "X-X"

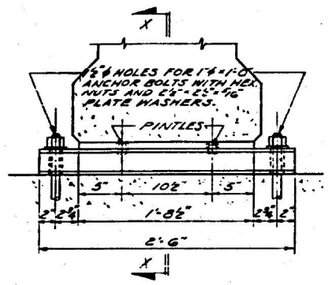

FIXED BEARING "B4"

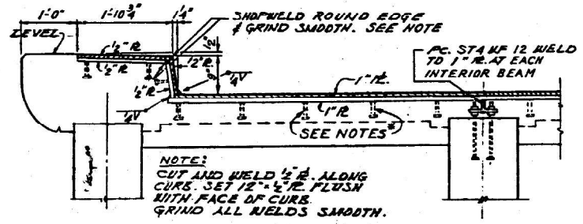

SECTION "C-C"

SCALE: ¾"=1'-0"

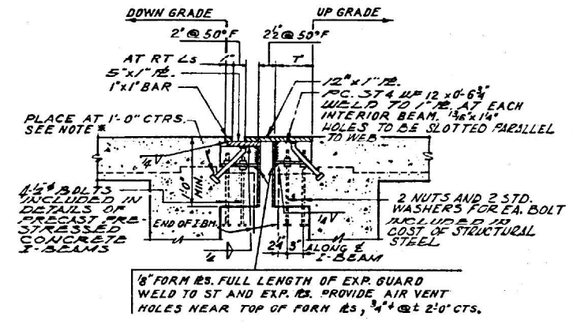

SECTION "A-A"

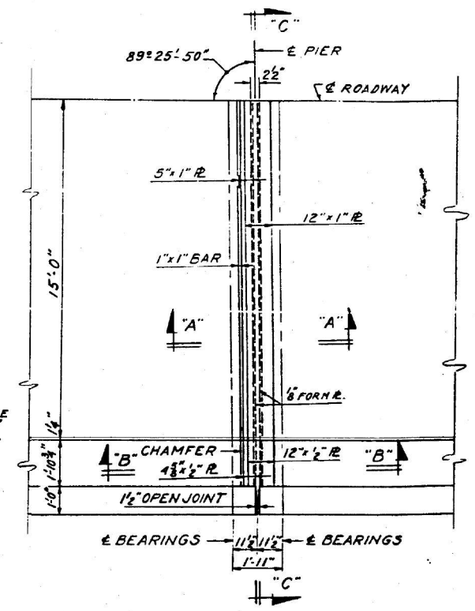

HALF PLAN OF EXPANSION JOINT

SCALE: ¾"=1'-0"

"t" DIMENSIONS - SHIM PLATES - EAST AND WEST BRIDGE

BEAM NO.	1	2	3	4	5	6	7	8	9	10	11
PIER 1, SPAN 1	—	⅜"	—	⅜"	—						
PIER 1, SPAN 2						—	—	—	—	—	—
PIER 2, SPAN 2						—	—	—	—	—	—
PIER 2, SPAN 3						—	—	—	—	—	—
PIER 3, SPAN 3						—	—	—	—	—	—
PIER 3, SPAN 4	—	⅜"	—	⅜"	—						

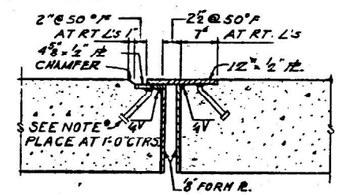

SECTION "B-B"

SCALE: 1"=1'-0"

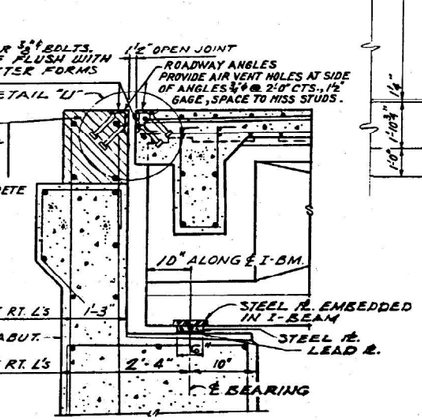

SECTION AT ABUTMENTS

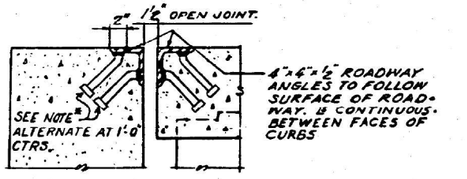

DETAIL "U"

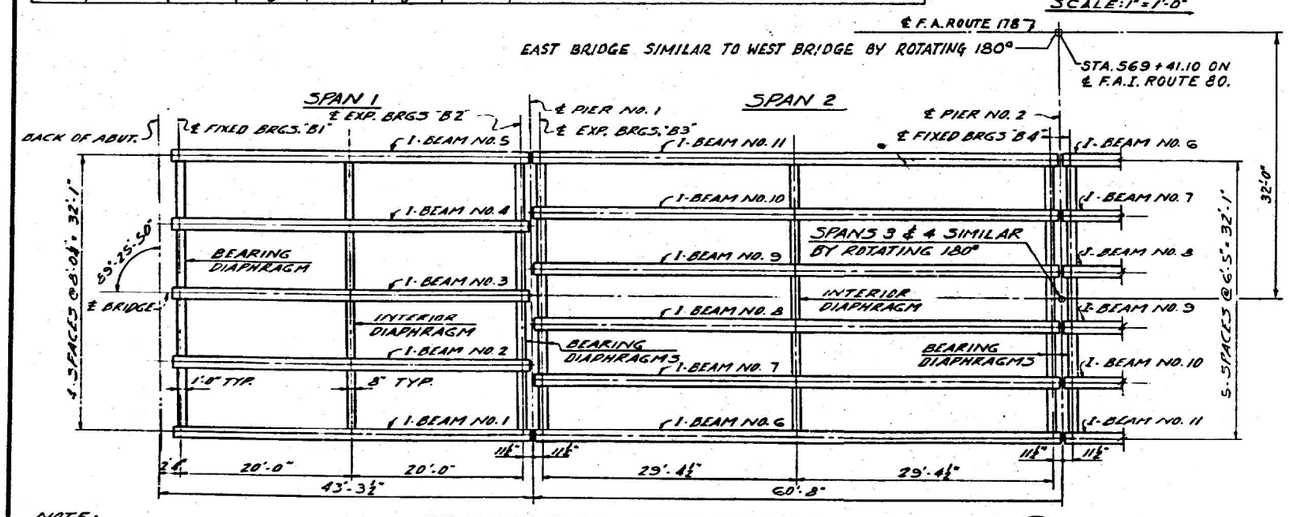

NOTE:
FOR BEARING DIAPHRAGM LOCATIONS SEE SHEET 7
ALL BEAMS ARE 3'-6" I-BEAMS.

FRAMING PLAN - WEST BRIDGE SHOWN

EAST BRIDGE SIMILAR

SCALE: ⅛"=1'-0"

NOTES:

* ¾"ϕ x 8" CR1020 STEEL GRANULAR OR SOLID FLUX FILLED HEADED STUDS AUTOMATICALLY END WELDED.

ALL MATERIAL FOR EXPANSION DEVICE SHALL BE STRUCTURAL STEEL.

DIMENSIONS NOTED AT 50°F SHALL BE INCREASED 0.07 INCH FOR EACH 10° DROP IN TEMPERATURE FROM 50°F AND DECREASED 0.07 INCH FOR EACH 10° INCREASE IN TEMPERATURE FROM 50°F.

ROADWAY EXPANSION DEVICES SHALL BE FABRICATED AND ERECTED TO CONFORM TO ROADWAY CROWN.

ASSEMBLE IN SHOP FOR INSPECTION.

ALL SURFACES INACCESSIBLE AFTER ERECTION SHALL RECEIVE TWO SHOP COATS OF RED LEAD PAINT EXCEPT PORTIONS EMBEDDED IN CONCRETE.

FRAMING PLAN AND BEARING DETAILS
GRADE SEPARATION
F.A. ROUTE 178
OVER F.A.I. ROUTE 80
F.A. PROJECT
F.A.I. ROUTE 80 SECTION 50-2HB
LA SALLE COUNTY
STATION 569+41.10

ALFRED BENESCH & ASSOCIATES CONSULTING ENGINEERS
10 SOUTH WABASH AVENUE 706 CHICAGO, ILLINOIS

MODEL: Sheet
FILE NAME: I:\2022\220693.11 IDOT D3 - PTB 205-023 - WO11 - LaSalle County 66R21\CADData\CADsheets\0500077_0079-66R21-FIO-3.dgn

KUHN & TRELLO
CONSULTING ENGINEERS
A Limited Liability Company
109 N. 7th Street, 3rd Floor
Springfield, IL 62701
Phone: 217-679-0044
Professional Design Firm No. 184.006316

USER NAME =	DESIGNED - PDA	REVISED -	
	CHECKED - PRR	REVISED -	
PLOT SCALE =	DRAWN - MMY	REVISED -	
PLOT DATE =	CHECKED - MJT	REVISED -	

STATE OF ILLINOIS
DEPARTMENT OF TRANSPORTATION

EXISTING STRUCTURE PLANS - FOR INFORMATION ONLY
STRUCTURE NO. 050-0077 (SB) & 050-0078 (NB)
SHEET 3 OF 3 SHEETS

F.A.P. RTE.	SECTION	COUNTY	TOTAL SHEETS	SHEET NO.
46	(50-2HB)BRR	LASALLE	48	48C
		CONTRACT NO. 66R21		
		ILLINOIS	FED. AID PROJECT	

10/2/2025 9:00:54 AM