01-16-2026 LETTING ITEM 022

F.A.I. RTE.	SECTION	COUNTY	TOTAL SHEETS	SHEET NO.
290	2019-191-B-R	COOK	265	1
	LIN IS	CONTRACT NO. 62K64		

STATE OF ILLINOIS
DEPARTMENT OF TRANSPORTATION

D-91-361-20

PROPOSED
HIGHWAY PLANS

FAI 290 (INTERSTATE 290) AT PAULINA STREET
SECTION 2019-191-B-R
PROJECT NHPP-5D61(451)
BRIDGE SUPERSTRUCTURE REPLACEMENT AND ADA IMPROVEMENTS
COOK COUNTY
C-91-171-20

IMPROVEMENTS LOCATED IN THE CITY OF CHICAGO

FOR INDEX OF SHEETS, SEE SHEET NO. 3

TRAFFIC DATA

	ADT-EXISTING	ADT-FUTURE
SOUTH PAULINA STREET	4,300	4,500
WEST VAN BUREN STREET	11,000	11,500
WEST CONGRESS PARKWAY	15,000	15,500

	DESIGN SPEED	POSTED SPEED
SOUTH PAULINA STREET	35 MPH	30 MPH
WEST VAN BUREN STREET	35 MPH	30 MPH
WEST CONGRESS PARKWAY	35 MPH	30 MPH

HIGHWAY FUNCTIONAL CLASSIFICATION

SOUTH PAULINA STREET	MAJOR COLLECTOR
WEST VAN BUREN STREET	LOCAL ROAD
WEST CONGRESS PARKWAY	LOCAL ROAD

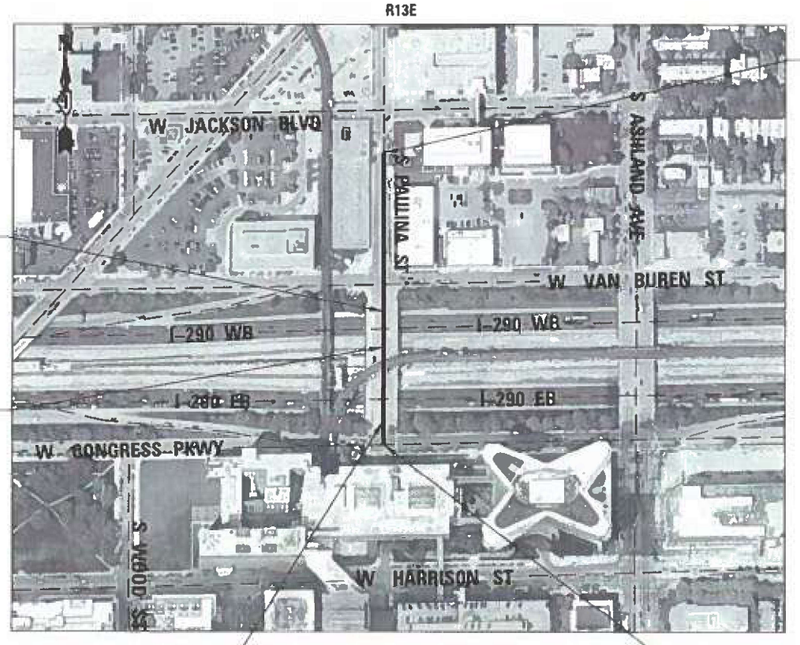

END IMPROVEMENTS
STA 407+80

END SUPERSTRUCTURE IMPROVEMENTS
STA 403+69.18

STRUCTURE NUMBER
016-0098

BEGIN SUPERSTRUCTURE IMPROVEMENTS
STA 400+94.28

GROSS LENGTH = 780.00 FT. = 0.147 MILE
NET LENGTH = 780.00 FT. = 0.147 MILE

BEGIN IMPROVEMENTS
STA 400+00.00





FULL SIZE PLANS HAVE BEEN PREPARED USING STANDARD ENGINEERING SCALES. REDUCED SIZED PLANS WILL NOT CONFORM TO STANDARD SCALES. IN MAKING MEASUREMENTS ON REDUCED PLANS, THE ABOVE SCALES MAY BE USED.

C.U.A.N.
1-312-744-7000 OR 811

MEADE ELECTRIC CO. DISTRICT ONE ELECTRICAL MAINTENANCE CONTRACTOR LOCATES IDOT ELECTRICAL EQUIPMENT AND UNDERGROUND CABLES 773-287-7672

COLLINS ENGINEERS INC
Accurate
HORNER SHIFRIN
WWW HORNERSHIFRIN COM
AMES Engineering, Inc.
CONSULTING ENGINEERS
6330 Belmont Road, Suite 4B
Downers Grove IL 60516

STATE OF ILLINOIS
DEPARTMENT OF TRANSPORTATION

SUBMITTED July 1st 20 25
Indicos IR
REGIONAL ENGINEER

December 5 20 25
ENGINEER OF DESIGN AND ENVIRONMENT

December 5 20 25
DIRECTOR OF HIGHWAYS PROJECT IMPLEMENTATION

PRINTED BY THE AUTHORITY OF THE STATE OF ILLINOIS

PROJECT MANAGER: PRAVEEN KAINI (847) 705-4237

CONTRACT NO. 62K64

PROFESSIONAL ENGINEER'S SIGN & SEAL

FOR SHEETS: 1-47, 98-104



RACIEL OCAMPO, P.E.
EXPIRES 11-30-2025

PROFESSIONAL ENGINEER'S SIGN & SEAL

FOR SHEETS: 112-146

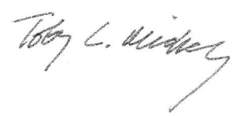

TOBY C. MICKEY, P.E.
EXPIRES 11-30-2025

PROFESSIONAL ENGINEER'S SIGN & SEAL

FOR SHEETS: 48-97, 105-111



RYAN GALL, P.E.
EXPIRES 11-30-2025

PROFESSIONAL ENGINEER'S SIGN & SEAL

FOR SHEETS: 147-163

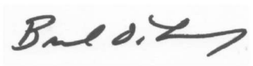

BRENDA D LOWERY, P.E.
EXPIRES 11-30-2025

STRUCTURAL ENGINEER'S SIGN & SEAL

FOR SHEETS: S1- TO S-17 AND S-22 TO S-56
SA-01 TO SA-03



EWA MROCZEK, S.E.
EXPIRES 11-30-2026

STRUCTURAL ENGINEER'S SIGN & SEAL

FOR SHEETS: S-18 TO S-21

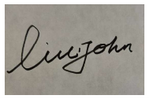

JUNSHAN LIU, S.E.
EXPIRES 11-30-2026

MODEL: Default
FILE NAME: pw:\\PW01.hornershifrin.com:HS_IDOT\Documents\230560000-PTB195-007_D1_RoadSuc_Phil_SueCollins\CAD Sheets\D162K64_PaulinaID162K64-cht-cetseal.dgn

HORNER SHIFRIN
WWW. HORNERSHIFRIN .COM

USER NAME = krkubalanza	DESIGNED -	REVISED -
	DRAWN -	REVISED -
PLOT SCALE = 10.0000 ' / in.	CHECKED -	REVISED -
PLOT DATE = 9/4/2025	DATE -	REVISED -

STATE OF ILLINOIS
DEPARTMENT OF TRANSPORTATION

FAI–290 (EISENHOWER EXPRESSWAY) AT PAULINA STREET
SEALS & SIGNATURES

SCALE: 1" = 20' | SHEET 1 OF 1 SHEETS | STA. | TO STA.

F.A.I. RTE.	SECTION	COUNTY	TOTAL SHEETS	SHEET NO.
290	2019-191-B-R	COOK	265	2
		CONTRACT NO. 62K64		
	ILLINOIS	FED. AID PROJECT		

INDEX OF SHEETS

SHEET NO.	DESCRIPTION
1	COVER SHEET
2	SEALS AND SIGNATURES
3	INDEX OF SHEETS
4	GENERAL NOTES
5-23	SUMMARY OF QUANTITIES
24-26	TYPICAL SECTIONS
27-30	SCHEDULE OF QUANTITIES
31-32	ALIGNMENT, TIES, AND BENCHMARKS
33-35	ROADWAY REMOVAL PLANS
36-37	PLAN AND PROFILE
38-39	ELEVATION DETAIL SHEET
40-42	ISOMETRIC DETAIL
43-44	ADA RAMP DETAILS - CONGRESS PARKWAY
45-46	ADA RAMP DETAILS - VAN BUREN STREET
47	DETAIL - DETECTABLE DIRECTIONAL SURFACE TILE
48-75	MAINTENANCE OF TRAFFIC
76	TEMPORARY ADA DETAILS
77-84	TEMPORARY SIGN DETAILS
85-89	EROSION AND SEDIMENT CONTROL PLAN
90-97	DRAINAGE AND UTILITIES PLAN
98-99	PLAT OF HIGHWAYS
100-101	SCHEDULE OF QUANTITIES - SIGNING (PAULINA)
102-104	PAVEMENT MARKING AND SIGNAGE (PAULINA)
105-108	PAVEMENT MARKING (I-290)
109-111	LANDSCAPING PLAN
112-146	TRAFFIC CONTROL SIGNALS
147-163	LIGHTING PLANS
164-166	EXISTING ITS PLANS
167-222	STRUCTURE PLANS
223-225	BRIDGE MOUNT SIGN STRUCTURES
226-255	DISTRICT 1 DETAILS
256-265	CDOT DETAILS

HIGHWAY STANDARDS (IDOT)

000001-09	STANDARD SYMBOLS, ABBREVIATIONS AND PATTERNS
001001-02	AREAS OF REINFORCEMENT BARS
001006	DECIMAL OF AN INCH AND OF A FOOT
280001-07	TEMPORARY EROSION CONTROL SYSTEMS
420401-13	PAVEMENT CONNECTOR (PCC) FOR BRIDGE APPROACH SLAB
420701-03	PAVEMENT WELDED WIRE REINFORCEMENT
442201-04	CLASS C AND D PATCHES
515001-04	NAME PLATE FOR BRIDGES
602601-06	PRECAST REINFORCED CONCRETE FLAT SLAB TOP
635001-02	DELINEATORS
642001-03	SHOULDER RUMBLE STRIPS, 16 IN.
664001-02	CHAIN LINK FENCE
701001-02	OFF-RD OPERATIONS, 2L, 2W, MORE THAN 15' (4.5 m) AWAY
701006-05	OFF-RD OPERATIONS, 2L, 2W, 15' (4.5 m) TO 24" (600 mm) FROM PAVEMENT EDGE
701011-04	OFF-ROAD OPERATIONS, 2L, 2W, DAY ONLY
701101-05	OFF-RD OPERATIONS, MULTILANE, 15' (4.5 m) TO 24" (600 mm) FROM PAVEMENT EDGE
701106-02	OFF-RD OPERATIONS, MULTILANE, MORE THAN 15' (4.5 m) AWAY
701301-04	LANE CLOSURE, 2L, 2W, SHORT TIME OPERATIONS
701311-03	LANE CLOSURE, 2L, 2W MOVING OPERATIONS - DAY ONLY
701400-12	APPROACH TO LANE CLOSURE, FREEWAY/EXPRESSWAY
701401-13	LANE CLOSURE, FREEWAY/EXPRESSWAY
701411-09	LANE CLOSURE, MULTILANE, AT ENTRANCE OR EXIT RAMP, FOR SPEEDS ≥ 45 MPH
701427-05	LANE CLOSURE, MULTILANE, INTERMITTENT OR MOVING OPER., FOR SPEEDS ≤ 40 MPH
701428-01	TRAFFIC CONTROL SETUP AND REMOVAL FREEWAY/EXPRESSWAY
701446-11	TWO LANE CLOSURE, FREEWAY/EXPRESSWAY
701601-09	URBAN LANE CLOSURE, MULTILANE, 1W OR 2W WITH NONTRAVERSABLE MEDIAN
701606-10	URBAN SINGLE LANE CLOSURE, MULTILANE, 2W WITH MOUNTABLE MEDIAN
701611-01	URBAN HALF ROAD CLOSURE, MULTILANE, 2W WITH MOUNTABLE MEDIAN
701701-10	URBAN LANE CLOSURE, MULTILANE INTERSECTION
701801-06	SIDEWALK, CORNER OR CROSSWALK CLOSURE
701901-11	TRAFFIC CONTROL DEVICES
704001-08	TEMPORARY CONCRETE BARRIER
720001-01	SIGN PANEL MOUNTING DETAILS
720006-04	SIGN PANEL ERECTION DETAILS
720016-04	MAST ARM MOUNTED STREET NAME SIGNS
728001-01	TELESCOPING STEEL SIGN SUPPORT
731001-01	BASE FOR TELESCOPING STEEL SIGN SUPPORT
780001-05	TYPICAL PAVEMENT MARKINGS
781001-04	TYPICAL APPLICATIONS RAISED REFLECTIVE PAVEMENT MARKERS
782006-01	GUARDRAIL AND BARRIER WALL REFLECTOR MOUNTING DETAILS
880001-01	SPAN WIRE MOUNTED SIGNALS AND FLASHING BEACON INSTALLATION

DISTRICT 1 DETAILS

BD-07	STORM SEWER CONNECTION TO EXISTING SEWER
BD-08	FRAMES AND LIDS ADJUSTMENT WITH MILLING
BD-09	CITY OF CHICAGO DRAINAGE DETAILS TYPE "A" PRECAST MANHOLE FOR SEWERS 21" DIA. AND SMALLER (SHEET 1 OF 4)
	CITY OF CHICAGO DRAINAGE DETAILS TYPE "A" PRECAST RISERS, AND RINGS 24" AND LARGER (SHEET 2 OF 4)
	CITY OF CHICAGO DRAINAGE DETAILS REINFORCEMENT FOR TYPE "A" PRECAST BASES AND RINGS 24" TO 36" (SHEET 3 OF 4)
	CITY OF CHICAGO DRAINAGE DETAILS TYPE "A" BASE TEE MANHOLE BASES 42" AND LARGER (SHEET 4 OF 4)
BD-17	CITY OF CHICAGO PCC CONC DRIVEWAY, ALLEY RETURN AND SIDEWALK
BD-22	PAVEMENT PATCHING FOR HMA SURFACED PAVEMENT
BD-32	BUTT JOINTS AND HMA TAPER
BD-33	HMA TAPER AT EDGE OF P.C.C. PAVEMENT
BD-47	CITY OF CHICAGO MANHOLE LIDS AND FRAMES (SHEET 1 OF 4)
	CITY OF CHICAGO MANHOLE DRAINAGE STRUCTURE DETAILS (SHEET 2 OF 4)
	CITY OF CHICAGO MANHOLE DRAINAGE LADDER RUNGS (SHEET 3 OF 4)
	CITY OF CHICAGO MANHOLE MISCELLANEOUS DETAILS (SHEET 4 OF 4)
BD-58	CITY OF CHICAGO DETECTABLE WARNINGS
BM-20	PRUNING FOR SAFETY AND EQUIPMENT CLEARANCE
TC-08	ENTRANCE AND EXIT RAMP CLOSURE DETAILS
TC-09	FREEWAY SINGLE AND MULTI LANE WEAVE
TC-10	TRAFFIC CONTROL AND PROTECTION FOR SIDE ROADS, INTERSECTIONS AND DRIVEWAYS
TC-11	RAISED REFLECTIVE PAVEMENT MARKERS (SNOW PLOW RESISTANT)
TC-12	MULTI-LANE FREEWAY PAVEMENT MARKING (2 SHEETS)
TC-16	SHORT-TERM PAVEMENT MARKING LETTERS AND SYMBOLS
TC-17	TRAFFIC CONTROL FOR FREEWAY SHOULDER CLOSURES AND PARTIAL RAMP CLOSURES
TC-18	FREEWAY/EXPRESSWAY SIGNING FOR FLAGGING OPERATIONS AT WORK ZONE OPENINGS
TC-21	DETOUR SIGNING FOR CLOSING STATE HIGHWAYS

STANDARD DETAILS (CDOT)

A-1-3	INTERSECTION CROSSWALK LAYOUT
A-2-6	CONCRETE CURB & GUTTER DETAIL
A-3-1	PORTLAND CEMENT CONCRETE SIDEWALK CONSTRUCTION
A-7-1A	CROSSWALK MARKING DETAIL
A-7-2	6' BIKE SYMBOL
A-7-4	BIKE ARROW
A-7-8	BIKE AND ARROW SYMBOL SPACING
B-1-1	TYPICAL CORNER RAMP LAYOUTS
B-1-2	2 PERPENDICULAR RAMPS AT CORNER
B-1-3	2 PERPENDICULAR RAMPS AT CORNER WITH RAMPS IN CURB RADIUS
B-1-4	PERPENDICULAR RAMP AT CORNER IN CURB RADIUS WITH SINGLE CROSSING
B-1-6	COMBINATION RAMP AT CORNER (PARALLEL AND PERPENDICULAR RAMPS)
B-1-7	BLENDED TRANSITION AT CORNER
B-3-1	CONVERSION CHARTS
B-3-2	GENERAL NOTES
B-3-3	GENERAL NOTES (CONTINUED)
B-3-4	ADA COMPLIANCE AND TRANSITION GUIDELINES
B-4-3	CURB & GUTTER DETAILS
CS-5-10	PROTECTED BIKE LANES CAST-IN-PLACE CONCRETE CONSTRAINED MEDIAN DETAILS
526	ALUMINUM PEDESTAL BASE WITH HANDHOLE
579	STANDARD METHOD FOR BACKFILLING CABLE AND CONDUIT TRENCHES IN SODDED PARKWAY AND LAWNS
659	2 BOLT MAST ARM ATTACHMENT POLE PLATE DETAILS
729	3' X 4' X 4' CONCRETE MANHOLE WITH 30' FRAME AND COVER
730	3' X 4' X 4' CONCRETE MANHOLE WITH 24" FRAME AND COVER
733	4' X 6' X 6' CONCRETE MANHOLE WITH 30' FRAME AND COVER
736	TYPICAL GROUNDING METHODS FOR BUREAU OF ELECTRICITY EQUIPMENT
740	TRAFFIC SIGNAL UPPER AND LOWER BRACKET ARM ASSEMBLY
741	TRAFFIC SIGNAL BRACKET ARM ASSEMBLY
806	1½" X 60" STEEL ANCHOR ROD
808	5.17" X 10.0" STEEL/34'-6" POLE 7 OR 3 GAUGE
811	1-1/4" X 60" STEEL ANCHOR ROD
813	INSTALLATION METHOD OF INSTALLING CONDUIT UNDER PAVED ROADWAY
816	FOUNDATION FOR 34'-6" TRAFFIC SIGNAL POLE WITH 17¼" BOLT CIRCLE
818	FOUNDATION FOR 34' - 6" ARTERIAL STREET LIGHT OR TRAFFIC SIGNAL
826	STANDARD CODE FOR TRAFFIC SIGNALS/STREET LIGHTING
827	7.67" X 12.5" STEEL/34-6" POLE 3 GAUGE
834	TYPICAL TRAFFIC SIGNAL MOUNTING DETAILS
835	TYPICAL TRAFFIC SIGNAL MOUNTING DETAILS
839	12' MAST ARM FOR 2-BOLT ATTACHMENT
867	30" DIA. CONCRETE HANDHOLE
870	STEEL TRAFFIC SIGNAL MAST ARM-MONOTUBE
871	36" DIA. HEAVY DUTY CONCRETE HANDHOLEWITH 30" FRAME AND COVER FOR STREET INSTALLATION
872	24" DIA. CIRCULAR MANHOLE FRAME AND COVER WITH 41-3/4" O.D. FRAME
874	30" CIRCULAR STREET MANHOLE FRAME
888	TYPE "P" FOUNDATION FOR BASE MOUNTED TRAFFIC SIGNAL CONTROL CABINET
954	JUNCTION BOX FOR TRAFFIC SIGNAL & FIRE ALARM
7878	PULLING IRON
11420-A	CAST POLETOP FOR STEEL POLE
11925	INSTALLATION OF SERVICE EQUIPMENT ON C.E. CO. WOOD POLES
11984	BANDING FITTINGS FOR POLE MOUNTING TRAFFIC SIGNAL

MODEL: Default
FILE NAME: P:\IDOT\1441-IDOT - Sacramento and Pulaski over I-290\Work\0A0C0\Paulina\2025.10.15 Revised Final PSE\Revised CAD Files\D162K64-sht-index-01.dgn

HORNER SHIFRIN
WWW. HORNERSHIFRIN .COM

USER NAME = omartinez	DESIGNED - KRK	REVISED -
	DRAWN - RO	REVISED -
PLOT SCALE = 10.0000 ' / in.	CHECKED - BLP	REVISED -
PLOT DATE = 10/31/2025	DATE -	REVISED -

STATE OF ILLINOIS
DEPARTMENT OF TRANSPORTATION

INDEX OF SHEETS, HIGHWAY STANDARDS, DETAILS, GENERAL NOTES, AND COMMITMENTS

SCALE: NTS | SHEET 1 OF 2 SHEETS | STA. | TO STA.

F.A.I. RTE.	SECTION	COUNTY	TOTAL SHEETS	SHEET NO.
290	2019-191-B-R	COOK	265	3
		CONTRACT NO. 62K64		
		ILLINOIS	FED. AID PROJECT	

GENERAL NOTES (DISTRICT 1)

1. THE CONTRACTOR WILL NOT BE ALLOWED TO SET UP A YARD OR FIELD OFFICE ON STATE PROPERTY OR WITHIN THE CITY OF CHICAGO WITHOUT WRITTEN PERMISSION FROM IDOT INCLUDING THE ROADSIDE DEVELOPMENT UNIT OR THE CITY.
2. ALL MILLED SURFACES SHALL BE A UNIFORM CROSS SLOPE PER LANE AND FREE OF RIDGES BETWEEN PASSES. ANY DEVIATIONS SHALL BE CORRECTED AT NO COST TO THE DEPARTMENT.
3. BUTT JOINTS SHALL BE INSTALLED AT THE ENDS OF ALL RESURFACING (WHERE RESURFACING MEETS EXISTING PAVEMENT) ACCORDING TO THE "BUTT JOINT AND HOT-MIX ASPHALT TAPER DETAILS" SHEET INCLUDED IN THE PLANS, UNLESS OTHERWISE SPECIFIED.
4. ALL PAVEMENT PATCHING LOCATIONS WILL BE DETERMINED IN THE FIELD BY THE ENGINEER.
5. TEN (10) FOOT TRANSITIONS SHALL BE USED TO MATCH PROPOSED CURB AND GUTTER AND MEDIAN ITEMS OF WORK OF WORK TO EXISTING CURBS AND GUTTER AND MEDIANS IN THE FIELD.
6. IT SHALL BE THE CONTRACTOR'S RESPONSIBILITY TO VERIFY ALL DIMENSIONS AND CONDITIONS EXISTING IN THE FIELD PRIOR TO CONSTRUCTION AND ORDERING OF MATERIALS.
7. FRAMES AND GRATES ADJUSTMENT OF PRIVATE UTILITIES WITHIN THE LIMITS OF THE IMPROVEMENTS SHALL BE DONE BY THEIR RESPECTIVE OWNERS AND ARE NOT PART OF THIS CONTRACT.
8. STORM SEWER CONSTRUCTED UNDER THE ROADWAY SHALL BE BACKFILLED ACCORDING TO METHOD 1 OF ARTICLE 550.07 OF THE STANDARD SPECIFICATIONS.
9. THE CONTRACTOR SHALL BE REQUIRED TO KEEP A RECORD OF THE LOCATIONS OF PLATED STRUCTURES BY STATION AND OFFSET LEFT OR RIGHT OF THE CENTERLINE OF PAVEMENT.
10. THE CONTRACTOR SHALL BE REQUIRED TO KEEP A RECORD OF THE LOCATIONS OF THE BURIED STRUCTURES ACCORDING TO THE STATION AND DISTANCE LEFT OR RIGHT OF THE CENTERLINE OF PAVEMENT. UPON COMPLETION OF THE WORK, THE CONTRACTOR SHALL DELIVER THE RECORD TO THE ENGINEER.
11. FOR WORK OUTSIDE THE LIMITS OF BRIDGE APPROACH PAVEMENT, ALL REFERENCES IN THE HIGHWAY STANDARDS AND STANDARD SPECIFICATIONS FOR REINFORCEMENT, DOWEL BARS AND TIE BARS IN PAVEMENT, SHOULDERS, CURB, GUTTER, COMBINATION CURB AND GUTTER AND MEDIAN, AND CHAIR SUPPORTS FOR CRC PAVEMENT, SHALL BE EPOXY COATED, UNLESS NOTED ON THE PLAN.
12. THE CONTRACTOR SHALL CONTACT BOTH THE IDOT ARTERIAL TRAFFIC CONTROL SUPERVISOR, KALPANA KANNAN-HOSADURGA, AT KALPANA.KANNAN-HOSADURGA@ILLINOIS.GOV AND THE EXPRESSWAY TRAFFIC CONTROL SUPERVISOR, AT (847) 705-4155 A MINIMUM OF 72 HOURS IN ADVANCE OF BEGINNING WORK.
13. THE ENGINEER SHALL CONTACT BOTH ABDULLA ALI, AREA TRAFFIC FIELD ENGINEER, AT ABDULLA.ALI@ILLINOIS.GOV AND REGINA COOPER EXPRESSWAY AREA ENGINEER, AT REGINA.COOPER2@ILLINOIS.GOV or (847)705-4153 A MINIMUM OF TWO (2) WEEKS PRIOR TO THE PLACEMENT OF PERMANENT PAVEMENT MARKINGS.
14. THE CONTRACTOR SHALL CONTACT THE DISTRICT ONE EXPRESSWAYS TRAFFIC CONTROL SUPERVISOR CARLOS MUNOS (CARLOS.MUNOZ@ILLINOIS.GOV) A MINIMUM OF 72 HOURS IN ADVANCE OF BEGINNING WORK.
15. THE CONTRACTOR SHALL BE RESPONSIBLE FOR THE NOTIFICATION OF ALL EMERGENCY SERVICES, SCHOOL DISTRICTS, I.D.O.T.'S COMMUNICATIONS CENTER, SPRINGFIELD TRUCK PERMIT SECTION AND OTHER AGENCIES AFFECTED BY THE CLOSURE. THE CONTRACTOR SHALL ALSO BE RESPONSIBLE FOR POSTING SIGNS THAT WILL INDICATE THE DATES THE CLOSURE WILL BE IN PLACE.
16. PAVEMENT MARKING TAPE, TYPE IV SHALL BE USED FOR SHORT TERM PAVEMENT MARKINGS ON ALL FINAL SURFACES.
17. THE "ARTERIAL ROAD INFORMATION SIGN (TC-22)" IS APPLICABLE ONLY TO ARTERIAL ROADS AND SHALL NOT BE APPLIED TO EXPRESSWAYS/TOLLWAYS.
18. OVERNIGHT LANE CLOSURES SHALL NOT BE ALLOWED FOR REHABILITATION PROJECTS INVOLVING DAYTIME MILLING AND RESURFACING OPERATIONS AND CLASS D PATCHING UNLESS OTHER CONDITIONS WARRANT EXTENDED LANE CLOSURES AS DETERMINED AND APPROVED IN WRITING BY THE ENGINEER OR AS PROVIDED FOR IN THE CONTRACT SPECIFICATIONS.
19. MATERIALS RESULTING FROM THE ROUTING OF CRACKS IN THE EXISTING PAVEMENT MAY BE PLACED, SHAPED AND COMPACTED TO THE SATISFACTION OF THE ENGINEER ALONG EXISTING AGGREGATE SHOULDERS ADJACENT TO THE PAVEMENT. ALL MATERIALS RESULTING FROM THE ROUTING OF CRACKS IN PAVEMENTS WITHOUT AGGREGATE SHOULDERS AND SURPLUS MATERIALS RESULTING FROM THE ROUTING OF CRACKS IN PAVEMENTS WITH AGGREGATE SHOULDERS, WHERE ALL MATERIALS ARE NOT PLACED ALONG EXISTING AGGREGATE SHOULDERS, SHALL BE DISPOSED OF AS SPECIFIED IN ARTICLE 202.03 OF THE STANDARD SPECIFICATIONS. OLD SEALANTS REMOVED PRIOR TO ROUTING SHALL BE DISPOSED OF AS SPECIFIED IN ARTICLE 202.03.
20. THE SUBGRADE STABILITY SHALL BE VERIFIED BY PROOF ROLLING WITH A FULL LOADED TANDEM-AXLE TRUCK.
21. GEOTECHNICAL FABRIC FOR GROUND STABILIZATION AND / OR AGGREGATE SUBGRADE IMPROVEMENT (CU YD) HAVE BEEN PROVIDED FOR USE AT THE LOCATIONS INDICATED FOR SOILS THAT TEND TO BE UNSTABLE AND / OR UNSUITABLE. THE ACTUAL NEED FOR REMOVAL AND REPLACEMENT WITH ABOVE ITEM WILL BE DETERMINED IN THE FIELD AT THE TIME OF CONSTRUCTION BY THE GEOTECHNICAL ENGINEER. ALL POTENTIALLY UNSUITABLE SOILS SHOULD BE TESTED WITH A STATIC OR DYNAMIC CONE PENETROMETER AND TREATED IN ACCORDANCE WITH ARTICALE 301.04 OF THE SSRBC AND IDOT SUBGRADE STABILITY MANUAL. IF UNSTABLE AND / OR UNSUITABLE SOILS ARE NOT ENCOUNTERED, THEN THE QUANTITY SHALL BE DEDUCTED AND NO ADDITIONAL COMPENSATION WILL BE DUE TO THE CONTRACTOR.

GENERAL NOTES (CDOT)

1. THE CONTRACTOR SHALL COORDINATE CONSTRUCTION ACTIVITIES WITH UTILITY COMPANIES AND THE CITY OF CHICAGO AND OBTAIN ALL NECESSARY PERMITS.
2. ALL CATCH BASINS IN THE CITY OF CHICAGO SHALL MEET THE DEPARTMENT OF SEWERS' STANDARDS.
3. THE LICENSED SEWER CONTRACTOR MUST SUBMIT TWO (2) SETS OF PLANS APPROVED BY THE DEPARTMENT OF SEWERS FOR THE ISSUE OF THE SEWER PERMIT IN SUITE 410 - 333 SOUTH STATE STREET, CHICAGO, IL 60604. INSPECTION WILL BE PROVIDED BY THE DEPARTMENT OF SEWERS.
4. IF THE SEWER PIPE COVER IS REDUCED TO LESS THAN THREE (3) FEET, CONCRETE ENCASEMENT OF THE SEWER OR REPLACEMENT OF THESE SEWERS WITH CLASS 52 DUCTILE IRON PIPE WILL BE REQUIRED.
5. PERFORATED LIDS SHALL BE PLACED ON ALL MANHOLES AND CATCH BASINS.
6. BENCH MONUMENT LOCATIONS WITHIN THE LIMITS OF THE IMPROVEMENT CAN BE OBTAINED IN SUITE 410 - 333 SOUTH STATE STREET, CHICAGO, IL 60604.
7. ALL BROKEN, CRACKED, WORN OR OTHERWISE DAMAGED OR BICYCLE UNSAFE FRAMES AND LIDS ON SEWER STRUCTURES, SHALL BE REPLACED WITH NEW DEPARTMENT OF SEWERS' STANDARD FRAMES AND LIDS.
8. OPEN LID DRAINAGE STRUCTURES SHALL NOT BE CLOSED, COVERED OR OTHERWISE OBSTRUCTED DURING CONSTRUCTION OF THIS ROADWAY WITHOUT THE WRITTEN PERMISSION FROM THE CITY OF CHICAGO.
9. CITY OF CHICAGO CASTINGS ARE THE PROPERTY OF THE CITY OF CHICAGO AND THE CONTRACTOR SHALL NOTIFY THE CITY FOR REMOVAL AND DISPOSITION OF THE CASTINGS.
10. THE CONTRACTOR SHALL COORDINATE WITH THE OFFICE OF UNDERGROUND COORDINATION (OUC) TO OBTAIN PERMITS / APPROVAL FROM THE CHICAGO DEPARTMENT OF TRANSPORTATION, DIVISION OF INFRASTRUCTURE MANAGEMENT PRIOR TO ANY EXCAVATION OR DEMOLITION ACTIVITIES WITHIN THE PUBLIC RIGHT-OF-WAY. COORDINATION AND PERMITTING WITH THE OUC SHALL NOT BE PAID FOR SEPERATELY, BUT WILL BE INCLUDED IN THE CONTRACT.
11. IN CASE OF DAMAGE TO CITY OF CHICAGO SEWERS, PRIVATE AND PUBLIC DRAINS, SEWER STRUCTURES AND/OR BENCH MONUMENTS, THE CONTRACTOR SHALL IMMEDIATELY CONTACT THE DEPARTMENT OF SEWERS AT (312) 747-7892 OR (312) 747-7893.
12. THE CONTRACTOR SHALL CONTACT THE CHICAGO TRANSIT AUTHORITY AT TRAFFIC.PLANNING@TRANSITCHICAGO.COM OR BY PHONE AT (312) 681-4151 SIX (6) WEEKS PRIOR TO CONSTRUCTION, TO REPORT TRAFFIC IMPACTS.
13. THE CHICAGO DEPARTMENT OF WATER MANAGEMENT (CDWM) FACILITIES TO BE ADJUSTED SHALL BE PERFORMED BY THE CONTRACTOR, THE FINAL PAYMENT TO THE CONTRACTOR SHALL BE WITHHELD UNTIL THE CDWM HAS INSPECTED AND FOUND THE ADJUSTED FACILITIES ACCEPTABLE. PLEASE CONTACT MR. ALBERT WTORKOWSKI OF THE CDWM AT ALBERT.WTORKOWSKI@CITYOFCHICAGO.ORG OR BY PHONE AT (312) 744-5070 IN ORDER TO SCHEDULE THE FINAL INSPECTION OF ANY ADJUSTED WATER FACILITIES.
14. CAUTION IS TO BE TAKEN TO ENSURE THAT NO FACILITY OWNED AND MAINTAINED BY CDWM ARE DAMAGED DURING CONSTRUCTION. IF DAMAGE OCCURS TO ANY FACILITIES, CONTRACTOR SHALL BE HELD RESPONSIBLE FOR THE COST OF REPAIRING OR REPLACING THEM.
15. PROJECT IS BOTH ABOVE AND BELOW TO THE CTA'S CONGRESS BRANCH BLUE LINE TRACK STRUCTURES, AND STATION HOUSE, SIGNALS AND OTHER ELECTRICAL EQUIPMENT, AT S. PAULINA ST. AND I-290. THE CONTRACTOR SHALL USE EXTREME CAUTION WHEN WORKING NEAR AND ABOVE OR BELOW TRACK STRUCTURES AND THE STATION HOUSE, NEAR THE TRACKS AND THEIR FOUNDATIONS, AND BELOW EXISTING SIGNAL & COMMUNICATION CABLES. ALL EXCAVATION AND DEMOLITION WORK, MINIMUM 4'-6" NEAR EXISTING CTA'S STRUCTURES SHALL BE DONE BY HAND. THE CONTRACTOR SHALL PROTECT ALL CTA'S STRUCTURES AND TRAINS FROM CONSTRUCTION DEBRIS. THE CONTRACTOR SHALL RESTORE ALL DAMAGED STRUCTURES AND UTILITIES TO THE SATISFACTION OF THE CTA. SEE THE FOLLOWING LOCATION FOR ACM: HTTPS://WWW.TRANSITCHICAGO.COM/ASSETS/1/6/ADJACENT_CONSTRUCTION_MANUAL_MARCH_2022.PDF COORDINATE INSURANCE REQUIREMENTS WITH L. LINDA LEE, CPCU, ARM, AIC, AINS, CSM – CTA RISK COMPLIANCE – LAW DEPARTMENT, PHONE: 312-681-2921, EMAIL: LLEE@TRANSITCHICAGO.COM. THIS WORK IS SUBJECT TO THE REQUIREMENTS ESTABLISHED IN THE CTA ADJACENT CONSTRUCTION MANUAL AND "CTA REQUIREMENTS FOR CONTRACTORS WORKING ALONG THE RIGHT –OF – WAY (R.O.W.)" WHICH CAN BE FOUND HERE: HTTP://WWW.TRANSITCHICAGO.COM/NEARBYCONSTRUCTION/ COORDINATE ALL ACTIVITIES WITH ABDIN CARRILLO, CONSTRUCTION PROJECT MANAGER III, CAPITAL CONSTRUCTION, PHONE: 312-681-3913, REFERENCE OUC NUMBER: EFP-129939, RE: SAFETY, SECURITY, INSURANCE, FLAGGING SERVICE, ETC.
16. CONTRACTOR SHALL CONTACT THE CHICAGO TRANSIT AUTHORITY COORDINATOR, TRAFFIC PLANNING, JACK CHALABIAN, AT JCHALABIAN@TRANSITCHICAGO.COM AT LEAST TWO (2) WEEKS BEFORE ANY BUS SERVICE CHANGES.

PAVEMENT DESIGN

HOT-MIX ASPHALT MIXTURE REQUIREMENTS		QMP
MIXTURE TYPE	AIR VOIDS @ Ndesign	
PAVEMENT RESURFACING		
POLYMERIZED HOT MIX ASPHALT SURFACE COURSE, IL-9.5, MIX E, N70; 2"	4.0% @ 70 Gyr.	QC/QA
PATCHING		
CLASS D PATCHES (HMA BINDER, IL-19.0)	4.0% @ 70 Gyr.	QC/QA
PAVEMENT RECONSTRUCTION		
POLYMERIZED HOT MIX ASPHALT SURFACE COURSE, IL-9.5, MIX E, N70; 2"	4.0% @ 70 Gyr.	QC/QA
TEMPORARY PAVEMENT		
HOT MIX ASPHALT SURFACE COURSE, IL-9.5, MIX "D", N70; 2"	4.0% @ 70 Gyr.	QC/QA
HOT MIX ASPHALT BINDER COURSE, IL-19.0, N70; 8"	4.0% @ 70 Gyr.	QC/QA
SHOULDER RUMBLE STRIP REMOVAL		
HOT MIX ASPHALT SURFACE COURSE, IL-9.5, MIX "D", N70; 2"	4.0% @ 70 Gyr.	QC/QA
QMP Designations: Quality Control/Quality Assurance (QC/QA); Quality Control for Performance (QCP); Pay for Performance (PFP)		

NOTES:

THE CONTRACTOR SHALL PATCH FIRST BEFORE MILLING. PATCHES TO BE CONSTRUCTED TO GRADE. PATCHES INSIDE RESURFACING AREA SHALL THEN BE MILLED AND OVERLAYED DURING RESURFACING.

THE UNIT WEIGHT USED TO CALCULATE ALL HOT-MIX ASPHALT SURFACE MIXTURE QUANTITIES IS 112 LB/SY/IN.

THE "AC TYPE" FOR POLYMERIZED HMA MIXES SHALL BE "SBS/SBR PG 76-22" AND FOR NON-POLYMERIZED HMA THE "AC TYPE" SHALL BE PG 64-22" UNLESS MODIFIED BY RECLAIMED MATERIALS SPECIAL PROVISIONS.

THE CONTRACTOR HAS THE OPTION TO USE PCC TEMPORARY PAVEMENT. PCC TEMPORARY PAVEMENT SHALL CONSIST OF CLASS PV CONCRETE MEETING THE REQUIREMENTS OF ART. 1020 OF THE STANDARD SPECIFICATIONS; PAVEMENT SHALL BE 10" THICK.

TEMPORARY PAVEMENT DOES NOT REQUIRE DOWEL BAR.

ALL TEMPORARY PAVEMENT SHALL BE PROVIDED OVER SUBBASE GRANULAR MATERIAL, TYPE B, 6".

LONGITUDINAL JOINT SEALANT SHALL BE PLACED ON TOP OF THE MILLED SURFACE FOR THE RESURFACING AREAS AND ON TOP OF THE PCC BASE COURSE FOR THE PAVEMENT RECONSTRUCTION AREAS.

GENERAL NOTES (PEOPLE'S GAS)

1. EXCAVATIONS PROHIBITED WITHIN 50 FEET OF HIGH PRESSURE GAS MAINS UNLESS A REPRESENTATIVE OF THE PIPELINE IS NOTIFIED.
2. THIS PROJECT WILL BE PLACED ON PEOPLE'S GAS WATCH & PROTECT. NOTIFY SYSTEM INTEGRITY OPERATIONS SUPERVISOR AT CENTAL-SHOP-OUC@PEOPLESGASDELIVERY.COM A MINIMUM OF FIVE (5) BUSINESS DAYS PRIOR TO EXCAVATION TO SET UP ON-SITE INSPECTION.

COMMITMENTS

1. ADJACENT I-290 OVERHEAD BRIDGES SHALL NOT BE CLOSED/DETOURED CONCURRENTLY DURING CONSTRUCTION.

MODEL: Default
FILE NAME: P:\IDH\144\1-IDOT - Sacramento and Paulina over I-290\Work\CADD\Paulina - Contract 62K64\CADD Sheets\Civil\From Subs\D1626k64-ahr-notes-02.dgn

HORNER SHIFRIN
WWW. HORNERSHIFRIN .COM

USER NAME = orush	DESIGNED - KRK	REVISED -
	DRAWN - RO	REVISED -
PLOT SCALE = 10.0000 ' / in.	CHECKED - BLP	REVISED -
PLOT DATE = 11/20/2025	DATE -	REVISED -

STATE OF ILLINOIS
DEPARTMENT OF TRANSPORTATION

INDEX OF SHEETS, HIGHWAY STANDARDS
DETAILS, GENERAL NOTES, AND COMMITMENTS

SCALE: NTS | SHEET 2 OF 2 SHEETS | STA. | TO STA.

F.A.I. RTE.	SECTION	COUNTY	TOTAL SHEETS	SHEET NO.
290	2019-191-B-R	COOK	265	4
		CONTRACT NO. 62K64		
		ILLINOIS	FED. AID PROJECT	

					CONSTRUCTION CODE						
					90% FED 10% STATE	100% STATE	90% FED 10% STATE	90% FED 10% STATE	100% CDOT	100% CDOT	100% CDOT
					ROADWAY	SAFETY	BRIDGE	ROADWAY LIGHTING		TRAFFIC SIGNALS	
	CODE NO.	ITEM	UNIT	TOTAL QUANTITY	0004	0005	0013	0021	0021	0021	0021
					URBAN	URBAN	SN 016-0098	IDOT	CDOT	CONGRESS	VAN BUREN
	20101000	TEMPORARY FENCE	FOOT	190	190						
*	20101100	TREE TRUNK PROTECTION	EACH	1	1						
*	20101300	TREE PRUNING (1TO 10 INCH DIAMETER)	EACH	1	1						
*	20101350	TREE PRUNING (OVER 10 INCH DIAMETER)	EACH	5	5						
	20200100	EARTH EXCAVATION	CU YD	210	210						
	20201200	REMOVAL AND DISPOSAL OF UNSUITABLE MATERIAL	CU YD	100	100						
	20800150	TRENCH BACKFILL	CU YD	92	92						
	21001000	GEOTECHNICAL FABRIC FOR GROUND STABILIZATION	SQ YD	477	477						
	21101505	TOPSOIL EXCAVATION AND PLACEMENT	CU YD	52	52						
	21101645	TOPSOIL FURNISH AND PLACE, 12"	SQ YD	46	46						
*	25000210	SEEDING, CLASS 2A	ACRE	0.25	0.25						
*	25000400	NITROGEN FERTILIZER NUTRIENT	POUND	276	276						
*	25000600	POTASSIUM FERTILIZER NUTRIENT	POUND	276	276						
	25000750	MOWING	ACRE	10.00	10.00						

X = SPECIALTY ITEM

MODEL: Default
FILE NAME: P:\IDOT\144\1-IDOT - Sacramento and Paulina over I-290\Work\QA\QC\Paulina\2025.10.15 Revised Final PSE\Revised CAD Files\D167K64-cht-SQQ.dgn

HORNER SHIFRIN
WWW. HORNERSHIFRIN .COM

USER NAME = amartinez	DESIGNED - KRK	REVISED -	
	DRAWN - RO	REVISED -	
PLOT SCALE = 2.0000 ' / in.	CHECKED - BLP	REVISED -	
PLOT DATE = 10/16/2025	DATE -	REVISED -	

STATE OF ILLINOIS
DEPARTMENT OF TRANSPORTATION

FAI–290 (EISENHOWER EXPRESSWAY) AT PAULINA STREET
SUMMARY OF QUANTITIES

SCALE: NTS | SHEET 1 OF 19 SHEETS | STA. | TO STA.

F.A.I. RTE.	SECTION	COUNTY	TOTAL SHEETS	SHEET NO.
290	2019-191-B-R	COOK	265	5
		CONTRACT NO. 62K64		
		ILLINOIS	FED. AID PROJECT	

	CODE NO.	ITEM	UNIT	TOTAL QUANTITY	CONSTRUCTION CODE						
					90% FED 10% STATE	100% STATE	90% FED 10% STATE	90% FED 10% STATE	100% CDOT	100% CDOT	100% CDOT
					ROADWAY	SAFETY	BRIDGE	ROADWAY LIGHTING		TRAFFIC SIGNALS	
					0004	0005	0013	0021	0021	0021	0021
					URBAN	URBAN	SN 016-0098	IDOT	CDOT	CONGRESS	VAN BUREN
*	25003210	INTERSEEDING, CLASS 2A	ACRE	1.50	1.50						
*	25100115	MULCH, METHOD 2	ACRE	0.25	0.25						
*	25100630	EROSION CONTROL BLANKET	SQ YD	298	298						
	25200200	SUPPLEMENTAL WATERING	UNIT	105	105						
	28000250	TEMPORARY EROSION CONTROL SEEDING	POUND	18	18						
	28000400	PERIMETER EROSION BARRIER	FOOT	263	263						
*	28000510	INLET FILTERS	EACH	36	36						
	30300001	AGGREGATE SUBGRADE IMPROVEMENT	CU YD	100	100						
	31100300	SUBBASE GRANULAR MATERIAL, TYPE A 4"	SQ YD	111	111						
	31101200	SUBBASE GRANULAR MATERIAL, TYPE B 4"	SQ YD	474	474						
	31101400	SUBBASE GRANULAR MATERIAL, TYPE B 6"	SQ YD	520	520						
	35300500	PORTLAND CEMENT CONCRETE BASE COURSE 10"	SQ YD	260	260						
	40600290	BITUMINOUS MATERIALS (TACK COAT)	POUND	518	518						
	40600370	LONGITUDINAL JOINT SEALANT	FOOT	118	118						

X = SPECIALTY ITEM

MODEL: Default
FILE NAME: P:\104I\14411-IDOT - Sacramento and Paulina over I-290\Work\QAQC\Paulina\2025.10.15 Revised Final PSE\Revised CAD Files\D162K64-sht-SOQ.dgn

HORNER SHIFRIN
WWW. HORNERSHIFRIN .COM

USER NAME = omartinez	DESIGNED - KRK	REVISED -	
	DRAWN - RO	REVISED -	
PLOT SCALE = 2.0000 ' / in.	CHECKED - BLP	REVISED -	
PLOT DATE = 10/16/2025	DATE -	REVISED -	

STATE OF ILLINOIS
DEPARTMENT OF TRANSPORTATION

FAI–290 (EISENHOWER EXPRESSWAY) AT PAULINA STREET
SUMMARY OF QUANTITIES

SCALE: NTS | SHEET 2 OF 19 SHEETS | STA. TO STA.

F.A.I. RTE.	SECTION	COUNTY	TOTAL SHEETS	SHEET NO.
290	2019-191-B-R	COOK	265	6

CONTRACT NO. 62K64
ILLINOIS FED. AID PROJECT

CODE NO.	ITEM	UNIT	TOTAL QUANTITY	CONSTRUCTION CODE						
				90% FED 10% STATE	100% STATE	90% FED 10% STATE	90% FED 10% STATE	100% CDOT	100% CDOT	100% CDOT
				ROADWAY	SAFETY	BRIDGE	ROADWAY LIGHTING		TRAFFIC SIGNALS	
				0004	0005	0013	0021	0021	0021	0021
				URBAN	URBAN	SN 016-0098	IDOT	CDOT	CONGRESS	VAN BUREN
40600400	MIXTURE FOR CRACKS, JOINTS, AND FLANGEWAYS	TON	0.3	0.3						
40600982	HOT-MIX ASPHALT SURFACE REMOVAL - BUTT JOINT	SQ YD	117	117						
40601005	HOT-MIX ASPHALT REPLACEMENT OVER PATCHES	TON	23	23						
40604172	POLYMERIZED HOT-MIX ASPHALT SURFACE COURSE, IL-9.5, MIX "E", N70	TON	129	129						
42000060	WELDED WIRE REINFORCEMENT	SQ YD	127	127						
42000080	PAVEMENT CONNECTOR (PCC) FOR BRIDGE APPROACH SLAB	SQ YD	127	127						
42001300	PROTECTIVE COAT	SQ YD	719	719						
42400410	PORTLAND CEMENT CONCRETE SIDEWALK 8 INCH	SQ FT	3,751	3,751						
44000100	PAVEMENT REMOVAL	SQ YD	594	594						
44000157	HOT-MIX ASPHALT SURFACE REMOVAL, 2"	SQ YD	890	890						
44000500	COMBINATION CURB AND GUTTER REMOVAL	FOOT	313	313						
44000600	SIDEWALK REMOVAL	SQ FT	2,517	2,517						
44002208	HOT-MIX ASPHALT REMOVAL OVER PATCHES, 2"	SQ YD	200	200						
44003100	MEDIAN REMOVAL	SQ FT	424	424						

X = SPECIALTY ITEM

MODEL: Default
FILE NAME: P:\IDOH\144\1-IDOT - Sacramento and Paulina over I-290\Work\QAQC\Paulina\2025.10.15 Revised Final PSE\Revised CAD Files\D162K64-chc-SQQ.dgn

CODE NO.	ITEM	UNIT	TOTAL QUANTITY	CONSTRUCTION CODE						
				90% FED 10% STATE	100% STATE	90% FED 10% STATE	90% FED 10% STATE	100% CDOT	100% CDOT	100% CDOT
				ROADWAY	SAFETY	BRIDGE	ROADWAY LIGHTING		TRAFFIC SIGNALS	
				0004	0005	0013	0021	0021	0021	0021
				URBAN	URBAN	SN 016-0098	IDOT	CDOT	CONGRESS	VAN BUREN
44201761	CLASS D PATCHES, TYPE I, 10 INCH	SQ YD	30	30						
44201765	CLASS D PATCHES, TYPE II, 10 INCH	SQ YD	30	30						
44201769	CLASS D PATCHES, TYPE III, 10 INCH	SQ YD	104	104						
50101500	REMOVAL OF EXISTING SUPERSTRUCTURES	EACH	1			1				
50102400	CONCRETE REMOVAL	CU YD	202.4			202.4				
50157300	PROTECTIVE SHIELD	SQ YD	2,633			2633				
50300225	CONCRETE STRUCTURES	CU YD	330.5			330.5				
50300255	CONCRETE SUPERSTRUCTURE	CU YD	1,301.2			1,301.2				
50300260	BRIDGE DECK GROOVING	SQ YD	1,332			1,332				
50300300	PROTECTIVE COAT	SQ YD	3,508			3,508				
50301350	CONCRETE SUPERSTRUCTURE (APPROACH SLAB)	CU YD	251			251				
50500105	FURNISHING AND ERECTING STRUCTURAL STEEL	L SUM	1			1				
50500505	STUD SHEAR CONNECTORS	EACH	19,773			19,773				
50800205	REINFORCEMENT BARS, EPOXY COATED	POUND	319,490			319,490				

X = SPECIALTY ITEM

MODEL: Default
FILE NAME: P:\104I\14411-IDOT - Sacramento and Paulina over I-290\Work\QAQC\Paulina\2025.10.15 Revised Final PSE\Revised CAD Files\D162K64-sht-SOQ.dgn

HORNER SHIFRIN
WWW. HORNERSHIFRIN .COM

USER NAME = omartinez	DESIGNED - KRK	REVISED -	
	DRAWN - RO	REVISED -	
PLOT SCALE = 2.0000 ' / in.	CHECKED - BLP	REVISED -	
PLOT DATE = 10/16/2025	DATE -	REVISED -	

STATE OF ILLINOIS
DEPARTMENT OF TRANSPORTATION

FAI–290 (EISENHOWER EXPRESSWAY) AT PAULINA STREET
SUMMARY OF QUANTITIES

SCALE: NTS | SHEET 4 OF 19 SHEETS | STA. TO STA.

F.A.I. RTE.	SECTION	COUNTY	TOTAL SHEETS	SHEET NO.
290	2019-191-B-R	COOK	265	8

CONTRACT NO. 62K64
ILLINOIS FED. AID PROJECT

CODE NO.	ITEM	UNIT	TOTAL QUANTITY	CONSTRUCTION CODE						
				90% FED 10% STATE	100% STATE	90% FED 10% STATE	90% FED 10% STATE	100% CDOT	100% CDOT	100% CDOT
				ROADWAY	SAFETY	BRIDGE	ROADWAY LIGHTING		TRAFFIC SIGNALS	
				0004	0005	0013	0021	0021	0021	0021
				URBAN	URBAN	SN 016-0098	IDOT	CDOT	CONGRESS	VAN BUREN
50800515	BAR SPLICERS	EACH	1,693			1,693				
50900105	ALUMINUM RAILING, TYPE L	FOOT	180			180				
50901739	BRIDGE FENCE RAILING, CURVED	FOOT	526			526				
51500100	NAME PLATES	EACH	1			1				
52100010	ELASTOMERIC BEARING ASSEMBLY, TYPE I	EACH	52			52				
52100510	ANCHOR BOLTS, 3/4"	EACH	130			130				
52200020	TEMPORARY SOIL RETENTION SYSTEM	SQ FT	654			654				
52318802	DRAINAGE SYSTEM FOR STRUCTURES	L SUM	1			1				
550A0330	STORM SEWERS, CLASS A, TYPE 2 10"	FOOT	17	17						
550A0340	STORM SEWERS, CLASS A, TYPE 2, 12"	FOOT	10	10						
55100300	STORM SEWER REMOVAL 8"	FOOT	5	5						
55100500	STORM SEWER REMOVAL 12"	FOOT	63	63						
58600101	GRANULAR BACKFILL FOR STRUCTURES	CU YD	142			142				
58700300	CONCRETE SEALER	SQ FT	5,743			5,743				

X = SPECIALTY ITEM

MODEL: Default
FILE NAME: P:\IDOH\144\1-IDOT - Sacramento and Paulina over I-290\Work\QAQC\Paulina\2025.10.15 Revised Final PSE\Revised CAD Files\D162K64-sht-SQQ.dgn

HORNER SHIFRIN
WWW. HORNERSHIFRIN .COM

USER NAME = amartinez	DESIGNED - KRK	REVISED -	
	DRAWN - RO	REVISED -	
PLOT SCALE = 2.0000 ' / in.	CHECKED - BLP	REVISED -	
PLOT DATE = 10/16/2025	DATE -	REVISED -	

STATE OF ILLINOIS
DEPARTMENT OF TRANSPORTATION

FAI–290 (EISENHOWER EXPRESSWAY) AT PAULINA STREET
SUMMARY OF QUANTITIES

SCALE: NTS | SHEET 5 OF 19 SHEETS | STA. | TO STA.

F.A.I. RTE.	SECTION	COUNTY	TOTAL SHEETS	SHEET NO.
290	2019-191-B-R	COOK	265	9
		CONTRACT NO. 62K64		
		ILLINOIS	FED. AID PROJECT	

					CONSTRUCTION CODE						
					90% FED 10% STATE	100% STATE	90% FED 10% STATE	90% FED 10% STATE	100% CDOT	100% CDOT	100% CDOT
					ROADWAY	SAFETY	BRIDGE	ROADWAY LIGHTING		TRAFFIC SIGNALS	
	CODE NO.	ITEM	UNIT	TOTAL QUANTITY	0004	0005	0013	0021	0021	0021	0021
					URBAN	URBAN	SN 016-0098	IDOT	CDOT	CONGRESS	VAN BUREN
	59000200	EPOXY CRACK INJECTION	FOOT	34			34				
	59100100	GEOCOMPOSITE WALL DRAIN	SQ YD	192			192				
	60146304	PIPE UNDERDRAINS FOR STRUCTURES 4"	FOOT	422			422				
	60250200	CATCH BASINS TO BE ADJUSTED	EACH	2	2						
	60252800	CATCH BASINS TO BE RECONSTRUCTED	EACH	2	2						
	60255500	MANHOLES TO BE ADJUSTED	EACH	1	1						
	60300305	FRAMES AND LIDS TO BE ADJUSTED	EACH	1	1						
	60500040	REMOVING MANHOLES	EACH	3	3						
	60500060	REMOVING INLETS	EACH	3	3						
	61000050	CONCRETE THRUST BLOCKS	EACH	4	4						
	64200116	SHOULDER RUMBLE STRIPS, 16 INCH	FOOT	2,711	2,711						
	66400305	CHAIN LINK FENCE, 6'	FOOT	324	324						
X	66900200	NON-SPECIAL WASTE DISPOSAL	CU YD	195	195						
X	66900530	SOIL DISPOSAL ANALYSIS	EACH	2	2						

X = SPECIALTY ITEM

MODEL: Default
FILE NAME: P:\IDH\144\1-IDOT - Sacramento and Paulina over I-290\Work\QAQC\Paulina\2025.10.15 Revised Final PSE\Revised CAD Files\D167K64-cht-SOQ.dgn

HORNER SHIFRIN
WWW. HORNERSHIFRIN .COM

USER NAME = amartinez	DESIGNED - KRK	REVISED -
	DRAWN - RO	REVISED -
PLOT SCALE = 2.0000 ' / in.	CHECKED - BLP	REVISED -
PLOT DATE = 10/16/2025	DATE -	REVISED -

STATE OF ILLINOIS
DEPARTMENT OF TRANSPORTATION

FAI–290 (EISENHOWER EXPRESSWAY) AT PAULINA STREET
SUMMARY OF QUANTITIES

SCALE: NTS | SHEET 6 OF 19 SHEETS | STA. | TO STA.

F.A.I. RTE.	SECTION	COUNTY	TOTAL SHEETS	SHEET NO.
290	2019-191-B-R	COOK	265	10
		CONTRACT NO. 62K64		
		ILLINOIS	FED. AID PROJECT	

					CONSTRUCTION CODE						
					90% FED 10% STATE	100% STATE	90% FED 10% STATE	90% FED 10% STATE	100% CDOT	100% CDOT	100% CDOT
					ROADWAY	SAFETY	BRIDGE	ROADWAY LIGHTING		TRAFFIC SIGNALS	
	CODE NO.	ITEM	UNIT	TOTAL QUANTITY	0004	0005	0013	0021	0021	0021	0021
					URBAN	URBAN	SN 016-0098	IDOT	CDOT	CONGRESS	VAN BUREN
X	66901001	REGULATED SUBSTANCES PRE-CONSTRUCTION PLAN	L SUM	1	1						
X	66901003	REGULATED SUBSTANCES FINAL CONSTRUCTION REPORT	L SUM	1	1						
X	66901006	REGULATED SUBSTANCES MONITORING	CAL DA	30	30						
	67100100	MOBILIZATION	L SUM	1	1						
	70107025	CHANGEABLE MESSAGE SIGN	CAL DA	168	168						
	70200100	NIGHTTIME WORK ZONE LIGHTING	L SUM	1	1						
	70300100	SHORT TERM PAVEMENT MARKING	FOOT	1,864	1864						
	70300150	SHORT TERM PAVEMENT MARKING REMOVAL	SQ FT	33,809	33,809						
	70300241	TEMPORARY PAVEMENT MARKING - LINE 6"- PAINT	FOOT	1,175	1,175						
	70303100	TEMPORARY PAVEMENT MARKING LETTERS AND SYMBOLS - MODIFIED URETHANE	SQ FT	954	954						
	70303120	TEMPORARY PAVEMENT MARKING - LINE 4" - MODIFIED URETHANE	FOOT	18,826	18,826						
	70303125	TEMPORARY PAVEMENT MARKING - LINE 5" - MODIFIED URETHANE	FOOT	4,320	4,320						
	70303130	TEMPORARY PAVEMENT MARKING - LINE 6" - MODIFIED URETHANE	FOOT	2,094	2,094						
	70303140	TEMPORARY PAVEMENT MARKING - LINE 8" - MODIFIED URETHANE	FOOT	204	204						

X = SPECIALTY ITEM

MODEL: Default
FILE NAME: P:\IDH\144\1-IDOT - Sacramento and Paulina over I-290\Work\QAQC\Paulina\2025.10.15 Revised Final PSE\Revised CAD Files\D167K64-cht-SQQ.dgn

CODE NO.	ITEM	UNIT	TOTAL QUANTITY	CONSTRUCTION CODE						
				90% FED 10% STATE	100% STATE	90% FED 10% STATE	90% FED 10% STATE	100% CDOT	100% CDOT	100% CDOT
				ROADWAY	SAFETY	BRIDGE	ROADWAY LIGHTING		TRAFFIC SIGNALS	
				0004	0005	0013	0021	0021	0021	0021
				URBAN	URBAN	SN 016-0098	IDOT	CDOT	CONGRESS	VAN BUREN
70303160	TEMPORARY PAVEMENT MARKING - LINE 12"- MODIFIED URETHANE	FOOT	636	636						
70303210	TEMPORARY PAVEMENT MARKING - LINE 24"- MODIFIED URETHANE	FOOT	316	316						
70307100	TEMPORARY PAVEMENT MARKING LETTERS AND SYMBOLS - TYPE IV TAPE	SQ FT	754	754						
70307120	TEMPORARY PAVEMENT MARKING - LINE 4" - TYPE IV TAPE	FOOT	69,932	69,932						
70307125	TEMPORARY PAVEMENT MARKING - LINE 5" - TYPE IV TAPE	FOOT	17,280	17,280						
70307130	TEMPORARY PAVEMENT MARKING - LINE 6" - TYPE IV TAPE	FOOT	722	722						
70307140	TEMPORARY PAVEMENT MARKING - LINE 8" - TYPE IV TAPE	FOOT	816	816						
70307160	TEMPORARY PAVEMENT MARKING - LINE 12"- TYPE IV TAPE	FOOT	358	358						
70307210	TEMPORARY PAVEMENT MARKING - LINE 24"- TYPE IV TAPE	FOOT	372	372						
70400100	TEMPORARY CONCRETE BARRIER	FOOT	1,312.5	1,312.5						
70400125	PINNING TEMPORARY CONCRETE BARRIER	EACH	486	486						
70400200	RELOCATE TEMPORARY CONCRETE BARRIER	FOOT	2,425	2,425						
70600255	IMPACT ATTENUATORS, TEMPORARY (FULLY REDIRECTIVE, NARROW), TEST LEVEL 2	EACH	2	2						
70600260	IMPACT ATTENUATORS, TEMPORARY (FULLY REDIRECTIVE, NARROW), TEST LEVEL 3	EACH	2	2						

X = SPECIALTY ITEM

MODEL: Default
FILE NAME: P:\GH\144\1-IDOT - Sacramento and Paulina over I-290\Work\QAQC\Paulina\2025.10.15 Revised Final PSE\Revised CAD Files\D167K64-cht-SOQ.dgn

HORNER SHIFRIN
WWW. HORNERSHIFRIN .COM

USER NAME = amartinez	DESIGNED - KRK	REVISED -	
	DRAWN - RO	REVISED -	
PLOT SCALE = 2.0000 ' / in.	CHECKED - BLP	REVISED -	
PLOT DATE = 10/16/2025	DATE -	REVISED -	

STATE OF ILLINOIS
DEPARTMENT OF TRANSPORTATION

FAI–290 (EISENHOWER EXPRESSWAY) AT PAULINA STREET
SUMMARY OF QUANTITIES

SCALE: NTS | SHEET 8 OF 19 SHEETS | STA. | TO STA.

F.A.I. RTE.	SECTION	COUNTY	TOTAL SHEETS	SHEET NO.
290	2019-191-B-R	COOK	265	12
		CONTRACT NO. 62K64		
		ILLINOIS	FED. AID PROJECT	

					CONSTRUCTION CODE						
					90% FED 10% STATE	100% STATE	90% FED 10% STATE	90% FED 10% STATE	100% CDOT	100% CDOT	100% CDOT
					ROADWAY	SAFETY	BRIDGE	ROADWAY LIGHTING		TRAFFIC SIGNALS	
	CODE NO.	ITEM	UNIT	TOTAL QUANTITY	0004	0005	0013	0021	0021	0021	0021
					URBAN	URBAN	SN 016-0098	IDOT	CDOT	CONGRESS	VAN BUREN
	70600322	IMPACT ATTENUATORS, RELOCATE (FULLY REDIRECTIVE, NARROW), TEST LEVEL 2	EACH	4	4						
	70600332	IMPACT ATTENUATORS, RELOCATE (FULLY REDIRECTIVE, NARROW), TEST LEVEL 3	EACH	8	8						
X	72000100	SIGN PANEL - TYPE 1	SQ FT	127	127						
X	72400100	REMOVE SIGN PANEL ASSEMBLY - TYPE A	EACH	8	8						
X	72400200	REMOVE SIGN PANEL ASSEMBLY - TYPE B	EACH	1	1						
X	72400310	REMOVE SIGN PANEL - TYPE 1	SQ FT	86	86						
X	73304000	OVERHEAD SIGN STRUCTURE - BRIDGE MOUNTED	FOOT	44			44				
X	73602000	REMOVE OVERHEAD SIGN STRUCTURE - BRIDGE MOUNTED	EACH	2			2				
X	78000100	THERMOPLASTIC PAVEMENT MARKING - LETTERS AND SYMBOLS	SQ FT	137	137						
X	78000200	THERMOPLASTIC PAVEMENT MARKING - LINE 4"	FOOT	8,712	8,712						
X	78000300	THERMOPLASTIC PAVEMENT MARKING - LINE 5"	FOOT	2,160	2,160						
X	78000400	THERMOPLASTIC PAVEMENT MARKING - LINE 6"	FOOT	240	240						
X	78000500	THERMOPLASTIC PAVEMENT MARKING - LINE 8"	FOOT	102	102						
X	78000600	THERMOPLASTIC PAVEMENT MARKING - LINE 12"	FOOT	169	169						

X = SPECIALTY ITEM

MODEL: Default
FILE NAME: P:\IDOT\144113-IDOT - Sacramento and Paulina over I-290\Work\QA\QC\Paulina\2025.10.15 Revised Final PSE\Revised CAD Files\D162K64-cht-SQQ.dgn

HORNER SHIFRIN
WWW. HORNERSHIFRIN .COM

USER NAME = amartinez	DESIGNED - KRK	REVISED -	
	DRAWN - RO	REVISED -	
PLOT SCALE = 2.0000 ' / in.	CHECKED - BLP	REVISED -	
PLOT DATE = 10/16/2025	DATE -	REVISED -	

STATE OF ILLINOIS
DEPARTMENT OF TRANSPORTATION

FAI–290 (EISENHOWER EXPRESSWAY) AT PAULINA STREET
SUMMARY OF QUANTITIES

SCALE: NTS | SHEET 9 OF 19 SHEETS | STA. | TO STA.

F.A.I. RTE.	SECTION	COUNTY	TOTAL SHEETS	SHEET NO.
290	2019-191-B-R	COOK	265	13
		CONTRACT NO. 62K64		
		ILLINOIS	FED. AID PROJECT	

					CONSTRUCTION CODE						
					90% FED 10% STATE	100% STATE	90% FED 10% STATE	90% FED 10% STATE	100% CDOT	100% CDOT	100% CDOT
					ROADWAY	SAFETY	BRIDGE	ROADWAY LIGHTING		TRAFFIC SIGNALS	
	CODE NO.	ITEM	UNIT	TOTAL QUANTITY	0004	0005	0013	0021	0021	0021	0021
					URBAN	URBAN	SN 016-0098	IDOT	CDOT	CONGRESS	VAN BUREN
X	78000650	THERMOPLASTIC PAVEMENT MARKING - LINE 24"	FOOT	521	521						
X	78006100	PREFORMED THERMOPLASTIC PAVEMENT MARKING - LETTERS AND SYMBOLS	SQ FT	796	796						
X	78009000	MODIFIED URETHANE PAVEMENT MARKING - LETTERS AND SYMBOLS	SQ FT	111	111						
X	78009004	MODIFIED URETHANE PAVEMENT MARKING - LINE 4"	FOOT	1,732	1,732						
X	78009006	MODIFIED URETHANE PAVEMENT MARKING - LINE 6"	FOOT	298	298						
X	78009024	MODIFIED URETHANE PAVEMENT MARKING - LINE 24"	FOOT	59	59						
	78300202	PAVEMENT MARKING REMOVAL - WATER BLASTING	SQ FT	15,499	15,499						
*	81028200	UNDERGROUND CONDUIT, GALVANIZED STEEL, 2" DIA.	FOOT	141					141		
X	81100320	CONDUIT ATTACHED TO STRUCTURE, 1" DIA., PVC COATED GALVANIZED STEEL	FOOT	504				504			
X	81100805	CONDUIT ATTACHED TO STRUCTURE, 3" DIA. PVC COATED, GALVANIZED STEEL	FOOT	360				30		330	
X	81200230	CONDUIT EMBEDDED IN STRUCTURE, 2" DIA., PVC	FOOT	1,340					1,340		
X	81300220	JUNCTION BOX, STAINLESS STEEL, ATTACHED TO STRUCTURE, 6"X6"X4"	EACH	12				12			
X	81300530	JUNCTION BOX, STAINLESS STEEL, ATTACHED TO STRUCTURE, 12"X10"X6"	EACH	6				6			
X	81300830	JUNCTION BOX, STAINLESS STEEL, ATTACHED TO STRUCTURE, 18"X18"X8"	EACH	2				2			

X = SPECIALTY ITEM

MODEL: Default
FILE NAME: P:\DH\144\1-IDOT - Sacramento and Paulina over I-290\Work\QAQC\Paulina\2025.10.15 Revised Final PSE\Revised CAD Files\D162K64-cht-SQQ.dgn

HORNER SHIFRIN
WWW. HORNERSHIFRIN .COM

USER NAME = amartinez	DESIGNED - KRK	REVISED -	
	DRAWN - RO	REVISED -	
PLOT SCALE = 2.0000 ' / in.	CHECKED - BLP	REVISED -	
PLOT DATE = 10/16/2025	DATE -	REVISED -	

STATE OF ILLINOIS
DEPARTMENT OF TRANSPORTATION

FAI–290 (EISENHOWER EXPRESSWAY) AT PAULINA STREET
SUMMARY OF QUANTITIES

SCALE: NTS | SHEET 10 OF 19 SHEETS | STA. | TO STA.

F.A.I. RTE.	SECTION	COUNTY	TOTAL SHEETS	SHEET NO.
290	2019-191-B-R	COOK	265	14
		CONTRACT NO. 62K64		
		ILLINOIS	FED. AID PROJECT	

	CODE NO.	ITEM	UNIT	TOTAL QUANTITY	CONSTRUCTION CODE						
					90% FED 10% STATE	100% STATE	90% FED 10% STATE	90% FED 10% STATE	100% CDOT	100% CDOT	100% CDOT
					ROADWAY	SAFETY	BRIDGE	ROADWAY LIGHTING		TRAFFIC SIGNALS	
					0004	0005	0013	0021	0021	0021	0021
					URBAN	URBAN	SN 016-0098	IDOT	CDOT	CONGRESS	VAN BUREN
X	81702110	ELECTRIC CABLE IN CONDUIT, 600V (XLP-TYPE USE) 1/C NO. 10	FOOT	1,572				1,572			
X	81800230	AERIAL CABLE, 2-1/C NO. 6 WITH MESSENGER WIRE	FOOT	434					434		
X	82110025	LUMINAIRE, LED, UNDERPASS, SUSPENDED, OUPUT DESIGNATION C	EACH	12				12			
X	84200500	REMOVAL OF LIGHTING UNIT, SALVAGE	EACH	5					5		
X	84200600	REMOVAL OF LIGHTING UNIT, NO SALVAGE	EACH	12				12			
X	87301790	ELECTRIC CABLE IN CONDUIT, SERVICE, NO. 2 2C	FOOT	972						661	311
*	87502640	TRAFFIC SIGNAL POST, ALUMINUM 10 FT	EACH	4						2	2
X	88040070	SIGNAL HEAD, POLYCARBONATE, LED, 3-SECTION, BRACKET MOUNTED	EACH	6						3	3
X	88040090	SIGNAL HEAD, POLYCARBONATE, LED, 3-SECTION, MAST ARM MOUNTED	EACH	12						6	6
X	88102825	PEDESTRIAN SIGNAL HEAD, POLYCARBONATE, LED, 1-FACE, BRACKET MOUNTED WITH COUNTDOWN TIMER	EACH	14						6	8
X	89000100	TEMPORARY TRAFFIC SIGNAL INSTALLATION	EACH	2						1	1
X	89502375	REMOVE EXISTING TRAFFIC SIGNAL EQUIPMENT	EACH	2						1	1
X	89502380	REMOVE EXISTING HANDHOLE	EACH	12					4	4	4
	Z0012754	STRUCTURAL REPAIR OF CONCRETE (DEPTH EQUAL TO OR LESS THAN 5 INCHES)	SQ FT	1,245			1,245				

X = SPECIALTY ITEM

MODEL: Default
FILE NAME: P:\DH\144\1-IDOT - Sacramento and Paulina over I-290\Work\QAQC\Paulina\2025.10.15 Revised Final PSE\Revised CAD Files\D162K64-chi-SQQ.dgn

HORNER SHIFRIN
WWW. HORNERSHIFRIN .COM

USER NAME = amartinez	DESIGNED - KRK	REVISED -	
	DRAWN - RO	REVISED -	
PLOT SCALE = 2.0000 ' / in.	CHECKED - BLP	REVISED -	
PLOT DATE = 10/16/2025	DATE -	REVISED -	

STATE OF ILLINOIS
DEPARTMENT OF TRANSPORTATION

FAI–290 (EISENHOWER EXPRESSWAY) AT PAULINA STREET
SUMMARY OF QUANTITIES

SCALE: NTS | SHEET 11 OF 19 SHEETS | STA. | TO STA.

F.A.I. RTE.	SECTION	COUNTY	TOTAL SHEETS	SHEET NO.
290	2019-191-B-R	COOK	265	15
		CONTRACT NO. 62K64		
	ILLINOIS	FED. AID PROJECT		

REV-SEP

					CONSTRUCTION CODE						
					90% FED 10% STATE	100% STATE	90% FED 10% STATE	90% FED 10% STATE	100% CDOT	100% CDOT	100% CDOT
					ROADWAY	SAFETY	BRIDGE	ROADWAY LIGHTING		TRAFFIC SIGNALS	
	CODE NO.	ITEM	UNIT	TOTAL QUANTITY	0004	0005	0013	0021	0021	0021	0021
					URBAN	URBAN	SN 016-0098	IDOT	CDOT	CONGRESS	VAN BUREN
	Z0012755	STRUCTURAL REPAIR OF CONCRETE (DEPTH GREATER THAN 5 INCHES)	SQ FT	251			251				
	Z0013798	CONSTRUCTION LAYOUT	L SUM	1	1						
	Z0018500	DRAINAGE STRUCTURES TO BE CLEANED	EACH	15		15					
	Z0018940	DRILL EXISTING MANHOLE OR HANDHOLE	EACH	2						2	
	Z0036200	PAINT CURB	FOOT	37	37						
	Z0048665	RAILROAD PROTECTIVE LIABILITY INSURANCE	L SUM	1	1						
	Z0051200	REMOVING AND REPLACING EXPANSION JOINT	FOOT	24			24				
	Z0062456	TEMPORARY PAVEMENT	SQ YD	213	213						
X	A2002716	TREE, CARYA OVATA (SHAGBARK HICKORY), 2" CALIPER, BALLED AND BURLAPPED	EACH	4	4						
X	A2006716	TREE, QUERCUS MACROCARPA (BUR OAK), 2" CALIPER, BALLED AND BURLAPPED	EACH	3	3						
X	A2007208	TREE, QUERCUS X WAREI 'NADLER', (KINDRED SPIRIT HYBRID OAK), 2-1/2" CALIPER, BALLED AND BURLAPPED	EACH	4	4						
X	B2001466	TREE, CORNUS MAS (CORNELIAN CHERRY DOG WOOD), 6' HEIGHT, SHRUB FORM, BALLED AND BURLAPPED	EACH	12	12						
X	C2000139	SHRUB, AESCULUS PARVIFLORA (BOTTLEBRUSH BUCKEYE), CONTAINER GROWN, 5-GALLON	EACH	40	40						
X	E20150G5	VINE-HYDRANGEA ANOMALA SUBSP. PETIOLARIS (CLIMBING HYDRANGEA), 5-GALLONPOT	EACH	4	4						

X = SPECIALTY ITEM

MODEL: Default
FILE NAME: P:\DH\144\1-IDOT - Sacramento and Paulina over I-290\Work\QAQC\Paulina\2025.10.15 Revised Final PSE\Revised CAD Files\D162K64-cht-SQQ.dgn

					CONSTRUCTION CODE						
					90% FED 10% STATE	100% STATE	90% FED 10% STATE	90% FED 10% STATE	100% CDOT	100% CDOT	100% CDOT
					ROADWAY	SAFETY	BRIDGE	ROADWAY LIGHTING		TRAFFIC SIGNALS	
	CODE NO.	ITEM	UNIT	TOTAL QUANTITY	0004	0005	0013	0021	0021	0021	0021
					URBAN	URBAN	SN 016-0098	IDOT	CDOT	CONGRESS	VAN BUREN
X	E20200G1	VINE-PARTHENOCISSUS QUINQUEFOLIA (VIRGINIA CREEPER), 1-GALLONPOT	EACH	92	92						
X	K0013110	PERENNIAL PLANTS, WOODLAND TYPE, GALLONPOT	UNIT	3	3						
X	K0026850	PERENNIAL PLANT CARE	SQ YD	575	575						
X	K0029618	WEED CONTROL, BROADLEAF IN TURF	POUND	3	3						
X	K0029632	WEED CONTROL, NON-SELECTIVE AND NON-RESIDUAL	GALLON	3	3						
X	K0036120	MULCH PLACEMENT 4"	SQ YD	500	500						
X	K1002564	INTERSEEDING (SPECIAL)	ACRE	0.50	0.50						
X	K1004595	PRUNING FOR SAFETY AND EQUIPMENT CLEARANCE	LSUM	1	1						
X	K1005863	TREE ROOT PRUNING	EACH	6	6						
	X0300062	GRAFFITI REMOVAL	SQ YD	13			13				
	X0320087	DEBRIS SCREEN	SQ YD	400	400						
X	X0322679	CONCRETE FOUNDATION FOR TYPE "SUPER P" BASE MOUNTED TRAFFIC SIGNAL CONTROLLER CABINET	EACH	2						1	1
X	X0322690	POLE STEEL, ANCHOR BASE, 10" DIAMETER, 3 GAUGE, 34'-6"	EACH	2						1	1
X	X0322691	POLE STEEL, ANCHOR BASE, 11" DIAMETER, 3 GAUGE, 34'-6"	EACH	4						2	2

X = SPECIALTY ITEM

MODEL: Default
FILE NAME: P:\IDH\144\1-IDOT - Sacramento and Paulina over I-290\Work\QAQC\Paulina\2025.10.15 Revised Final PSE\Revised CAD Files\D167K64-cht-SOQ.dgn

HORNER SHIFRIN
WWW. HORNERSHIFRIN .COM

USER NAME = amartinez	DESIGNED - KRK	REVISED -
	DRAWN - RO	REVISED -
PLOT SCALE = 2.0000 ' / in.	CHECKED - BLP	REVISED -
PLOT DATE = 10/16/2025	DATE -	REVISED -

STATE OF ILLINOIS
DEPARTMENT OF TRANSPORTATION

FAI–290 (EISENHOWER EXPRESSWAY) AT PAULINA STREET
SUMMARY OF QUANTITIES

SCALE: NTS | SHEET 13 OF 19 SHEETS | STA. | TO STA.

F.A.I. RTE.	SECTION	COUNTY	TOTAL SHEETS	SHEET NO.
290	2019-191-B-R	COOK	265	17
		CONTRACT NO. 62K64		
		ILLINOIS	FED. AID PROJECT	

	CODE NO.	ITEM	UNIT	TOTAL QUANTITY	CONSTRUCTION CODE						
					90% FED 10% STATE	100% STATE	90% FED 10% STATE	90% FED 10% STATE	100% CDOT	100% CDOT	100% CDOT
					ROADWAY	SAFETY	BRIDGE	ROADWAY LIGHTING		TRAFFIC SIGNALS	
					0004	0005	0013	0021	0021	0021	0021
					URBAN	URBAN	SN 016-0098	IDOT	CDOT	CONGRESS	VAN BUREN
	X0323868	DRAINAGE RESTRICTOR	EACH	2	2						
X	X0324478	CONDUIT IN TRENCH 3" PVC (SCHEDULE 40)	FOOT	2,530						1,350	1,180
X	X0324517	ELECTRICAL MANHOLE 3'X4'X4' WITH 30" FRAME AND LID	EACH	2						1	1
X	X0324519	CONCRETE FOUNDATION, 30" DIAMETER, 1 1/4" ANCHOR RODS, 17 1/4" BOLT CIRCLE, 9 FEET	EACH	4						2	2
	X0325207	TELEVISION INSPECTION OF SEWER	FOOT	3,099	3,099						
X	X0325222	WEED CONTROL, BASAL TREATMENT	GALLON	5	5						
	X0325318	LIGHTWEIGHT CELLULAR CONCRETE FILL	CU YD	2,640			2,640				
	X0326326	CABLE IN CONDUIT, TRIPLEX, 2-1/C NO. 6 AND 1-1/C NO. 8 GROUND	FOOT	662					662		
	X0326801	COMBINED SEWERS TO BE CLEANED	FOOT	1,138		1,138					
X	X1400238	LUMINAIRE, LED, SPECIAL	EACH	8					8		
X	X1400382	ELECTRIC CABLE IN CONDUIT, SIGNAL NO. 14 19/C	FOOT	2,348						1,077	1,271
X	X2080251	TRENCH AND BACKFILL WITH SCREENINGS	FOOT	1,041						651	390
X	X2503110	MOWING (SPECIAL)	ACRE	2	2						
X	X2503315	INTERSEEDING, CLASS 4A (MODIFIED)	ACRE	0.75	0.75						

X = SPECIALTY ITEM

MODEL: Default
FILE NAME: P:\IDH\144\1-IDOT - Sacramento and Paulina over I-290\Work\QA\QC\Paulina\2025.10.15 Revised Final PSE\Revised CAD Files\D162K64-cht-SOQ.dgn

HORNER SHIFRIN
WWW. HORNERSHIFRIN .COM

USER NAME = amartinez	DESIGNED - KRK	REVISED -	
	DRAWN - RO	REVISED -	
PLOT SCALE = 2.0000 ' / in.	CHECKED - BLP	REVISED -	
PLOT DATE = 10/16/2025	DATE -	REVISED -	

STATE OF ILLINOIS
DEPARTMENT OF TRANSPORTATION

FAI–290 (EISENHOWER EXPRESSWAY) AT PAULINA STREET
SUMMARY OF QUANTITIES

SCALE: NTS | SHEET 14 OF 19 SHEETS | STA. | TO STA.

F.A.I. RTE.	SECTION	COUNTY	TOTAL SHEETS	SHEET NO.
290	2019-191-B-R	COOK	265	18
		CONTRACT NO. 62K64		
		ILLINOIS	FED. AID PROJECT	

					CONSTRUCTION CODE						
					90% FED 10% STATE	100% STATE	90% FED 10% STATE	90% FED 10% STATE	100% CDOT	100% CDOT	100% CDOT
					ROADWAY	SAFETY	BRIDGE	ROADWAY LIGHTING		TRAFFIC SIGNALS	
					0004	0005	0013	0021	0021	0021	0021
	CODE NO.	ITEM	UNIT	TOTAL QUANTITY	URBAN	URBAN	SN 016-0098	IDOT	CDOT	CONGRESS	VAN BUREN
X	X2503321	INTERSEEDING, CLASS 5 (MODIFIED)	ACRE	0.50	0.50						
*	X2800500	INLET PROTECTION (SPECIAL)	EACH	4	4						
	X4240114	TEMPORARY SIDEWALK	SQ FT	340	340						
*	X4240800	DETECTABLE WARNINGS (SPECIAL)	SQ FT	143	143						
*	X5080530	BAR TERMINATORS	EACH	946			946				
	X5230174	DRAINAGE SCUPPERS, DS-11	EACH	10			10				
	X5504000	STORM SEWERS, DUCTILE IRON, TYPE 2 8"	FOOT	160	160						
	X5509900	ABANDON AND FILL EXISTING STORM SEWER	FOOT	50	50						
	X5537600	STORM SEWERS TO BE CLEANED 8"	FOOT	20		20					
	X5537700	STORM SEWERS TO BE CLEANED 10"	FOOT	167		167					
	X5537800	STORM SEWERS TO BE CLEANED 12"	FOOT	117		117					
	X6022505	CATCH BASINS, TYPE A, 4'-DIAMETER, TYPE 1 FRAME, OPEN LID (CITY OF CHICAGO)	EACH	4	4						
	X6028050	TEMPORARY MANHOLE	EACH	1	1						
	X6030310	FRAMES AND LIDS TO BE ADJUSTED (SPECIAL)	EACH	4	4						

X = SPECIALTY ITEM

MODEL: Default
FILE NAME: P:\DH\144\1-IDOT - Sacramento and Paulina over I-290\Work\QAQC\Paulina\2025.10.15 Revised Final PSE\Revised CAD Files\D167K64-cht-SQQ.dgn

HORNER SHIFRIN
WWW. HORNERSHIFRIN .COM

USER NAME = amartinez	DESIGNED - KRK	REVISED -	
	DRAWN - RO	REVISED -	
PLOT SCALE = 2.0000 ' / in.	CHECKED - BLP	REVISED -	
PLOT DATE = 10/16/2025	DATE -	REVISED -	

STATE OF ILLINOIS
DEPARTMENT OF TRANSPORTATION

FAI–290 (EISENHOWER EXPRESSWAY) AT PAULINA STREET
SUMMARY OF QUANTITIES

SCALE: NTS | SHEET 15 OF 19 SHEETS | STA. | TO STA.

F.A.I. RTE.	SECTION	COUNTY	TOTAL SHEETS	SHEET NO.
290	2019-191-B-R	COOK	265	19
		CONTRACT NO. 62K64		
		ILLINOIS	FED. AID PROJECT	

					CONSTRUCTION CODE						
					90% FED 10% STATE	100% STATE	90% FED 10% STATE	90% FED 10% STATE	100% CDOT	100% CDOT	100% CDOT
					ROADWAY	SAFETY	BRIDGE	ROADWAY LIGHTING		TRAFFIC SIGNALS	
	CODE NO.	ITEM	UNIT	TOTAL QUANTITY	0004	0005	0013	0021	0021	0021	0021
					URBAN	URBAN	SN 016-0098	IDOT	CDOT	CONGRESS	VAN BUREN
	X6050190	TEMPORARY STORM SEWER PLUGS	EACH	1	1						
	X6060045	COMBINATION CONCRETE CURB AND GUTTER, TYPE B V-.12 (CDOT)	FOOT	361	361						
	X6060714	CONCRETE MEDIAN (SPECIAL)	SQ FT	949	949						
*	X6350108	FLEXIBLE DELINEATORS	EACH	100	100						
	X6350120	DELINEATOR REMOVAL	EACH	68	68						
	X6420100	SHOULDER RUMBLE STRIP REMOVAL	SQ YD	904	904						
	X6640300	CHAIN LINK FENCE REMOVAL	FOOT	139	139						
	X6700410	ENGINEER'S FIELD OFFICE, TYPE A (SPECIAL)	CAL MO	18	18						
	X7010216	TRAFFIC CONTROL AND PROTECTION, (SPECIAL)	L SUM	1	1						
	X7011015	TRAFFIC CONTROL AND PROTECTION (EXPRESSWAYS)	L SUM	1	1						
	X7013820	TRAFFIC CONTROL SURVEILLANCE, EXPRESSWAYS	CAL DA	275	275						
	X7200061	TEMPORARY INFORMATION SIGNING	SQ FT	304	304						
*	X7200072	STREET NAME SIGNS	EACH	6						3	3
*	X7290002	INSTALL ROUND STEEL SIGN SUPPORT	FOOT	131	131						

X = SPECIALTY ITEM

MODEL: Default
FILE NAME: P:\IDOH\144\1-IDOT - Sacramento and Paulina over I-290\Work\QAQC\Paulina\2025.10.15 Revised Final PSE\Revised CAD Files\D167K64-sht-SQQ.dgn

HORNER SHIFRIN
WWW. HORNERSHIFRIN .COM

USER NAME = amartinez	DESIGNED - KRK	REVISED -	
	DRAWN - RO	REVISED -	
PLOT SCALE = 2.0000 ' / in.	CHECKED - BLP	REVISED -	
PLOT DATE = 10/16/2025	DATE -	REVISED -	

STATE OF ILLINOIS
DEPARTMENT OF TRANSPORTATION

FAI–290 (EISENHOWER EXPRESSWAY) AT PAULINA STREET
SUMMARY OF QUANTITIES

SCALE: NTS | SHEET 16 OF 19 SHEETS | STA. | TO STA.

F.A.I. RTE.	SECTION	COUNTY	TOTAL SHEETS	SHEET NO.
290	2019-191-B-R	COOK	265	20
		CONTRACT NO. 62K64		
		ILLINOIS	FED. AID PROJECT	

					CONSTRUCTION CODE						
					90% FED 10% STATE	100% STATE	90% FED 10% STATE	90% FED 10% STATE	100% CDOT	100% CDOT	100% CDOT
					ROADWAY	SAFETY	BRIDGE	ROADWAY LIGHTING		TRAFFIC SIGNALS	
	CODE NO.	ITEM	UNIT	TOTAL QUANTITY	0004	0005	0013	0021	0021	0021	0021
					URBAN	URBAN	SN 016-0098	IDOT	CDOT	CONGRESS	VAN BUREN
*	X7800010	METHYL METHACRYLATE PAVEMENT COLORIZATION GREEN	SQ YD	587	587						
	X7830050	RAISED REFLECTIVE PAVEMENT MARKER, REFLECTOR REMOVAL	EACH	432	432						
*	X7830052	RAISED REFLECTIVE PAVEMENT MARKER, REFLECTOR REPLACEMENT	EACH	432	432						
X	X8000003	MAINTENANCE OF LIGHTING SYSTEM	CAL MO	12				12			
X	X8100863	INTERCEPT EXISTING CONDUIT	EACH	2						1	1
X	X8130108	JUNCTION BOX, POLE OR POST MOUNTED	EACH	9						4	5
X	X8250500	LIGHTING UNIT COMPLETE (SPECIAL)	EACH	5					5		
X	X8362247	CONCRETE FOUNDATION, 24" DIAMETER, 1 1/4" ANCHOR RODS, 15" BOLT CIRCLE, 7 FEET	EACH	4					1	1	2
X	X8362249	CONCRETE FOUNDATION, 24" DIAMETER, 1 1/4" ANCHOR RODS, 15" BOLT CIRCLE, 9 FEET	EACH	2						1	1
X	X8400104	MAINTENANCE OF STREET LIGHTING SYSTEM (CITY OF CHICAGO)	L SUM	1						1	
X	X8570304	ADVANCED TRANSPORTATION CONTROLLER, 16 LOAD BAY, "SUPER P" CABINET UPS	EACH	2						1	1
X	X8710024	FIBER OPTIC CABLE IN CONDUIT, NO. 62.5/125, MM12F, SM12F	FOOT	661						661	
X	X8760200	ACCESSIBLE PEDESTRIAN SIGNALS	EACH	14						6	8
X	X8774126	MAST ARM, STEEL, MONOTUBE, 26 FT	EACH	2						1	1

X = SPECIALTY ITEM

MODEL: Default
FILE NAME: P:\IDH\144\1-IDOT - Sacramento and Paulina over I-290\Work\QAQC\Paulina\2025.10.15 Revised Final PSE\Revised CAD Files\D162K64-cht-SQQ.dgn

					CONSTRUCTION CODE						
					90% FED 10% STATE	100% STATE	90% FED 10% STATE	90% FED 10% STATE	100% CDOT	100% CDOT	100% CDOT
					ROADWAY	SAFETY	BRIDGE	ROADWAY LIGHTING		TRAFFIC SIGNALS	
	CODE NO.	ITEM	UNIT	TOTAL QUANTITY	0004	0005	0013	0021	0021	0021	0021
					URBAN	URBAN	SN 016-0098	IDOT	CDOT	CONGRESS	VAN BUREN
X	X8774130	MAST ARM, STEEL, MONOTUBE, 30 FT	EACH	4						2	2
X	X8780012	CONCRETE FOUNDATION, TYPE A, 12-INCH DIAMETER	FOOT	16						8	8
X	X8900104	TEMPORARY TRAFFIC SIGNAL TIMING	EACH	2						1	1
X	D2003777	EVERGREEN, THUJA OCCIDENTALIS SMARAGD (EMERALD GREEN AMERICAN ARBORVITAE), 6' HEIGHT, BALLED AND BURLAPPE	EACH	5	5						
*											
*	X4240804	DETECTABLE DIRECTIONAL SURFACE TILE	FOOT	629	629						
X	X8140105	HANDHOLE (SPECIAL)	EACH	6						3	3
	X6022302	HANDHOLES, TYPE A, 4'- DIAMETER, TYPE 1 FRAME, OPEN LID (SPECIAL)	EACH	2	2						
	X6025600	HANDHOLES TO BE ADJUSTED (SPECIAL)	EACH	2	2						
X	X0328540	PLATE, WELD TO POLE 2-BOLT	EACH	6						3	3
X	X8308120	POLE STEEL, ANCHOR BASE, 10" DIAMETER, 7 GAUGE, 34'-6"	EACH	3						1	2
*	X0321830	RELOCATE EXISTING ANTENNA	EACH	1							1
*	X8891503	REMOVE AND REINSTALL VIDEO DETECTION CAMERA	EACH	2						2	
*	C2011600	SHRUB, VIBURNUM DENTATUM BLUE MUFFIN (BLUE MUFFIN ARROWHEAD), 3' HEIGHT, BALLED AND BURLAPPED	EACH	3	3						

X = SPECIALTY ITEM

MODEL: Default
FILE NAME: P:\DH\144\1-IDOT - Sacramento and Paulina over I-290\Work\QAQC\Paulina\2025.10.15 Revised Final PSE\Revised CAD Files\D167K64-chtc-SQQ.dgn

					CONSTRUCTION CODE						
					90% FED 10% STATE	100% STATE	90% FED 10% STATE	90% FED 10% STATE	100% CDOT	100% CDOT	100% CDOT
					ROADWAY	SAFETY	BRIDGE	ROADWAY LIGHTING		TRAFFIC SIGNALS	
	CODE NO.	ITEM	UNIT	TOTAL QUANTITY	0004	0005	0013	0021	0021	0021	0021
					URBAN	URBAN	SN 016-0098	IDOT	CDOT	CONGRESS	VAN BUREN
	X5504012	STORM SEWERS, DUCTILE IRON, TYPE 2, 12"	FOOT	47	47						
	X5537816	STORM SEWERS TO BE CLEANED, 16"	FOOT	163		163					
Ø	Z0076600	TRAINEES	HOUR	1000	1000						
Ø	Z0076604	TRAINEES - TRAINING PROGRAM GRADUATE	HOUR	1000	1000						

X = SPECIALTY ITEM

Ø 0042

MODEL: Default
FILE NAME: P:\104\1441-IDOT - Sacramento and Paulina over I-290\Work\QAQC\Paulina\2025.10.15 Revised Final PSE\Revised CAD Files\D162K64-sht-500.dgn

HORNER SHIFRIN
WWW. HORNERSHIFRIN .COM

USER NAME = omartinez	DESIGNED - KRK	REVISED -
	DRAWN - RO	REVISED -
PLOT SCALE = 2.0000 ' / in.	CHECKED - BLP	REVISED -
PLOT DATE = 10/16/2025	DATE -	REVISED -

STATE OF ILLINOIS
DEPARTMENT OF TRANSPORTATION

FAI–290 (EISENHOWER EXPRESSWAY) AT PAULINA STREET
SUMMARY OF QUANTITIES

SCALE: NTS | SHEET 19 OF 19 SHEETS | STA. | TO STA.

F.A.I. RTE.	SECTION	COUNTY	TOTAL SHEETS	SHEET NO.
290	2019-191-B-R	COOK	265	23
		CONTRACT NO. 62K64		
	ILLINOIS	FED. AID PROJECT		

REV-SEP

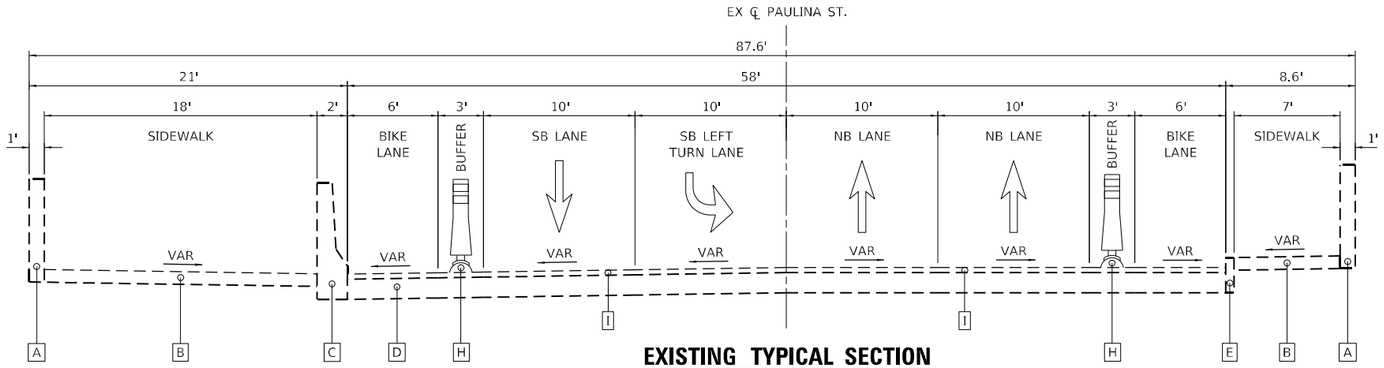

EXISTING TYPICAL SECTION

STA 400+33.11 TO STA 400+54.65
STA 400+54.65 TO 404+08.64 (BRIDGE OMISSION)

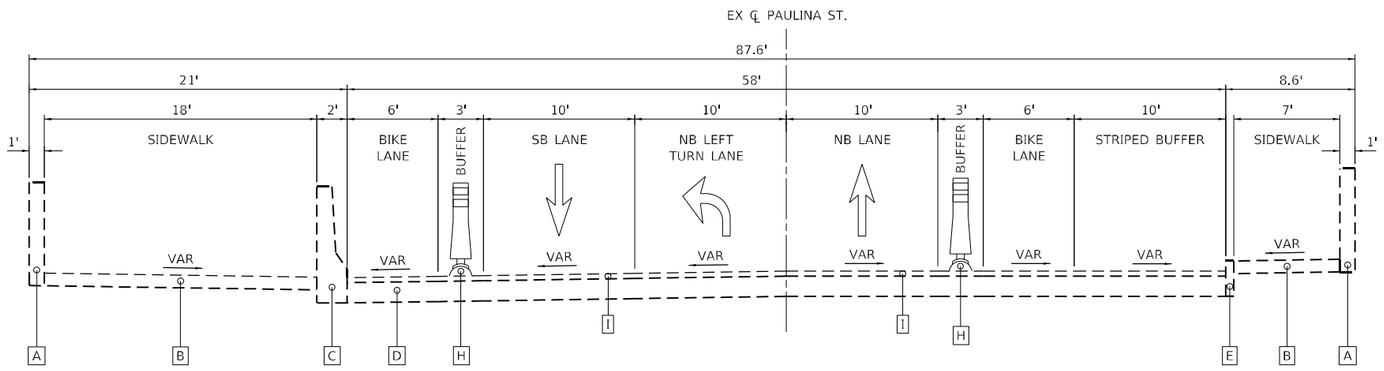

EXISTING TYPICAL SECTION

STA 404+08.64 TO STA 404+34.73

EXISTING TYPICAL LEGEND

- A PARAPET
- B SIDEWALK
- C SINGLE FACED CONCRETE BARRIER WALL
- D CONCRETE PAVEMENT
- E BARRIER CURB
- F CURB AND GUTTER
- G HMA PAVEMENT
- H FLEXIBLE DELINEATOR
- I HMA OVERLAY

PROPOSED TYPICAL LEGEND

- A PARAPET (SEE STRUCTURAL PLANS)
- B PORTLAND CEMENT CONCRETE SIDEWALK 8"
- C CONCRETE MEDIAN (SPECIAL)
- D FLEXIBLE DELINEATOR
- E PCC BASE COURSE 10"
- F SUBBASE GRANULAR MATERIAL, TYPE B 4"
- H SUBBASE GRANULAR MATERIAL, TYPE B 6"
- I COMBINATION CONCRETE CURB AND GUTTER, TYPE B V-.12 (CDOT)
- J GEOTECHNICAL FABRIC FOR GROUND STABILIZATION
- K POLYMERIZED HMA SURFACE COURSE, IL-9.5, MIX "E", N70, 2"
- L CONCRETE BARRIER MEDIAN (PER CDOT STANDARD CS-5-10 BIKE LANE MEDIAN, MONOLITHIC)

NOTES

1. REFER TO ELEVATION DETAIL SHEETS FOR PROPOSED SLOPES IN RECONSTRUCTION AREAS.
2. CONTINGENT QUANTITIES FOR CLASS D PATCHING TYPES I AND II, 10" PROVIDED. RESIDENT ENGINEER TO DETERMINE LOCATION AND SIZES FOR CLASS D PATCHES WITHIN RESURFACING LIMITS.
3. REFER TO STRUCTURAL SHEETS FOR PROPOSED BRIDGE MATERIALS AND THICKNESSES.
4. REFER TO ISOMETRIC DETAIL SHEETS FOR CONCRETE MEDIAN (SPECIAL) ELEVATIONS FOR CONGRESS AND VAN BUREN INTERSECTIONS.
5. VARIATIONS IN THE THICKNESS OF SUBBASE GRANULAR MATERIAL, 4" DUE TO MEDIAN AND SIDEWALK ELEVATION DIFFERENCES SHALL BE CONSIDERED INCLUDED IN THE COST OF THE PAY ITEM.
6. LONGITUDINAL JOINT SEALANT SHALL BE PLACED ON TOP OF THE MILLED SURFACE FOR THE RESURFACING AREAS AND ON TOP OF PCC BASE COURSE FOR THE PAVEMENT RECONSTRUCTION AREAS.

MODEL: Default
FILE NAME: pw:\\PW01.hornershifrin.com:HS IDOT\Documents\230560000-PTB195-007_D1_Paul-Sac_Phil_SubCollins\CAD_Sheets\D162K64_Paulina\D162K64-sht-typical-01.dgn

HORNER SHIFRIN
WWW.HORNERSHIFRIN.COM

USER NAME = krkubalanza	DESIGNED - KRK	REVISED -	
	DRAWN - RO	REVISED -	
PLOT SCALE = 10.0000 ' / in.	CHECKED - BLP	REVISED -	
PLOT DATE = 9/5/2025	DATE -	REVISED -	

STATE OF ILLINOIS
DEPARTMENT OF TRANSPORTATION

FAI–290 (EISENHOWER EXPRESSWAY) AT PAULINA STREET
TYPICAL SECTIONS

SCALE: NTS | SHEET OF SHEETS | STA. TO STA.

F.A.I. RTE.	SECTION	COUNTY	TOTAL SHEETS	SHEET NO.
290	2019-191-B-R	COOK	265	24

CONTRACT NO. 62K64
ILLINOIS FED. AID PROJECT

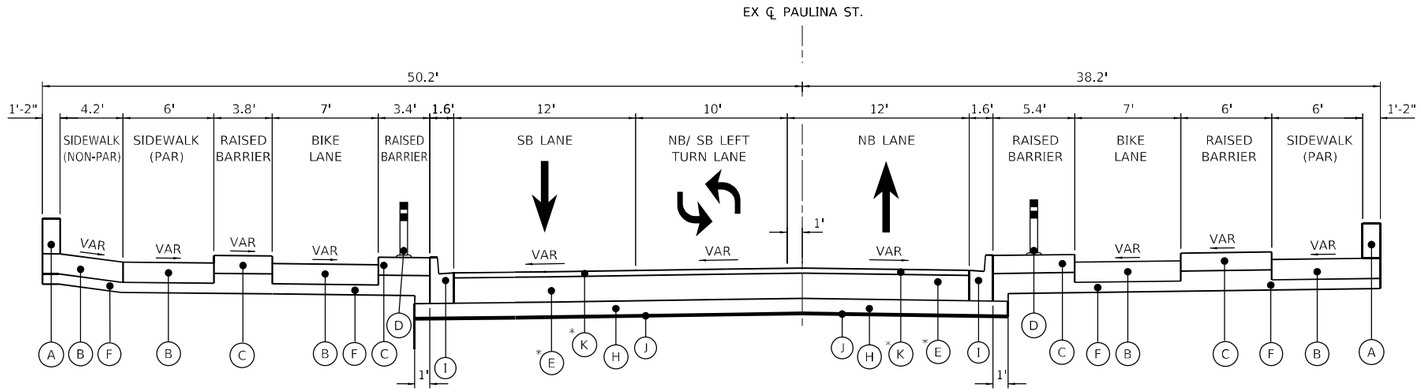

PROPOSED TYPICAL SECTION – ROADWAY RECONSTRUCTION

STA 400+33.11 TO STA 400+65.28
STA 400+65.28 TO STA 403+98.18 (BRIDGE OMISSION)
STA 403+98.18 TO STA 404+34.73

* PAVEMENT CONNECTOR (PCC) FOR BRIDGE APPROACH SLAB (STD 420401) FROM STA 400+50.28 TO STA 400+65.28 ON SOUTH SIDE OF BRIDGE AND STA 403+98.18 TO STA 404+13.18 ON NORTH SIDE OF BRIDGE. THE PAY ITEM SUBBASE GRANULAR MATERIAL, TYPE A 4" IS PROVIDED TO SERVE AS THE STABILIZED SUBBASE AS DESCRIBED IN ARTICLE 420.16 OF THE STANDARD SPECIFICATIONS AND NOTED IN THE STD 420401

EXISTING TYPICAL LEGEND

- A PARAPET
- B SIDEWALK
- C SINGLE FACED CONCRETE BARRIER WALL
- D CONCRETE PAVEMENT
- E BARRIER CURB
- F CURB AND GUTTER
- G HMA PAVEMENT
- H FLEXIBLE DELINEATOR
- I HMA OVERLAY

PROPOSED TYPICAL LEGEND

- (A) PARAPET (SEE STRUCTURAL PLANS)
- (B) PORTLAND CEMENT CONCRETE SIDEWALK 8"
- (C) CONCRETE MEDIAN (SPECIAL)
- (D) FLEXIBLE DELINEATOR
- (E) PCC BASE COURSE 10"
- (F) SUBBASE GRANULAR MATERIAL, TYPE B 4"
- (H) SUBBASE GRANULAR MATERIAL, TYPE B 6"
- (I) COMBINATION CONCRETE CURB AND GUTTER, TYPE B V-.12 (CDOT)
- (J) GEOTECHNICAL FABRIC FOR GROUND STABILIZATION
- (K) POLYMERIZED HMA SURFACE COURSE, IL-9.5, MIX "E", N70, 2"
- (L) CONCRETE BARRIER MEDIAN (PER CDOT STANDARD CS-5-10 BIKE LANE MEDIAN, MONOLITHIC)

NOTES

1. REFER TO ELEVATION DETAIL SHEETS FOR PROPOSED SLOPES IN RECONSTRUCTION AREAS.
2. CONTINGENT QUANTITIES FOR CLASS D PATCHING TYPES I AND II, 10" PROVIDED. RESIDENT ENGINEER TO DETERMINE LOCATION AND SIZES FOR CLASS D PATCHES WITHIN RESURFACING LIMITS.
3. REFER TO STRUCTURAL SHEETS FOR PROPOSED BRIDGE MATERIALS AND THICKNESSES.
4. REFER TO ISOMETRIC DETAIL SHEETS FOR CONCRETE MEDIAN (SPECIAL) ELEVATIONS FOR CONGRESS AND VAN BUREN INTERSECTIONS.
5. VARIATIONS IN THE THICKNESS OF SUBBASE GRANULAR MATERIAL, 4" DUE TO MEDIAN AND SIDEWALK ELEVATION DIFFERENCES SHALL BE CONSIDERED INCLUDED IN THE COST OF THE PAY ITEM.
6. LONGITUDINAL JOINT SEALANT SHALL BE PLACED ON TOP OF THE MILLED SURFACE FOR THE RESURFACING AREAS AND ON TOP OF PCC BASE COURSE FOR THE PAVEMENT RECONSTRUCTION AREAS.

MODEL: Default
FILE NAME: pw:\\PW01.hornershifrin.com:HS DOT\Documents\30960000-PTB195-007_D1_PrJtSec_Plot_SuiteCollinsCAD Sheets\D162K64_PaulinaSD162K64-ohtypical02.dgn

HORNER SHIFRIN
WWW. HORNERSHIFRIN .COM

USER NAME = ahernandez	DESIGNED - KRK	REVISED -	
	DRAWN - RO	REVISED -	
PLOT SCALE = 10.0000 ' / in.	CHECKED - BLP	REVISED -	
PLOT DATE = 9/8/2025	DATE -	REVISED -	

STATE OF ILLINOIS
DEPARTMENT OF TRANSPORTATION

FAI–290 (EISENHOWER EXPRESSWAY) AT PAULINA STREET
TYPICAL SECTIONS

SCALE: NTS | SHEET OF SHEETS | STA. | TO STA.

F.A.I. RTE.	SECTION	COUNTY	TOTAL SHEETS	SHEET NO.
290	2019-191-B-R	COOK	265	25
		CONTRACT NO. 62K64		
		ILLINOIS	FED. AID PROJECT	

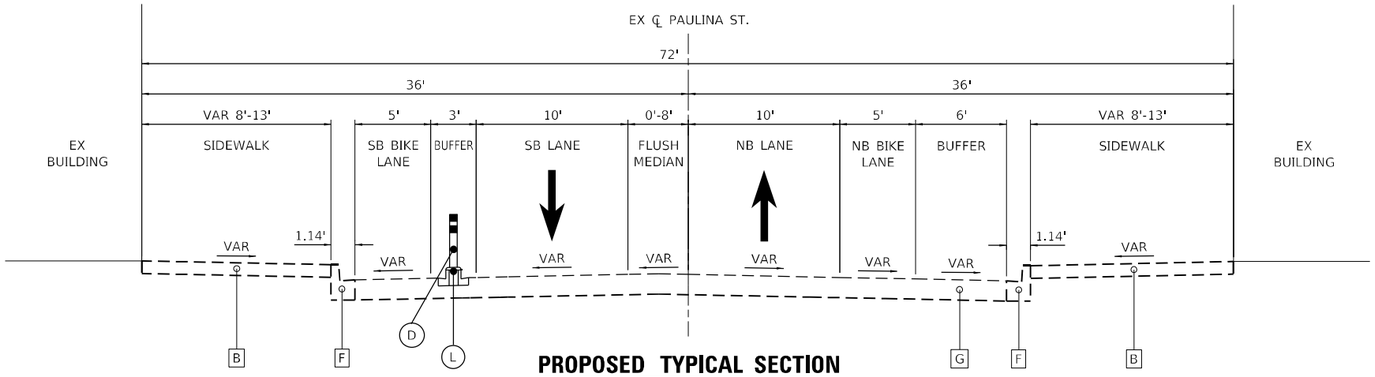

PROPOSED TYPICAL SECTION

STA 404+85 TO STA 407+80

EXISTING TYPICAL LEGEND

- A PARAPET
- B SIDEWALK
- C SINGLE FACED CONCRETE BARRIER WALL
- D CONCRETE PAVEMENT
- E BARRIER CURB
- F CURB AND GUTTER
- G HMA PAVEMENT
- H FLEXIBLE DELINEATOR
- I HMA OVERLAY

PROPOSED TYPICAL LEGEND

- (A) PARAPET (SEE STRUCTURAL PLANS)
- (B) PORTLAND CEMENT CONCRETE SIDEWALK 8"
- (C) CONCRETE MEDIAN (SPECIAL)
- (D) FLEXIBLE DELINEATOR
- (E) PCC BASE COURSE 10"
- (F) SUBBASE GRANULAR MATERIAL, TYPE B 4"
- (H) SUBBASE GRANULAR MATERIAL, TYPE B 6"
- (I) COMBINATION CONCRETE CURB AND GUTTER, TYPE B V-.12 (CDOT)
- (J) GEOTECHNICAL FABRIC FOR GROUND STABILIZATION
- (K) POLYMERIZED HMA SURFACE COURSE, IL-9.5, MIX "E", N70, 2"
- (L) CONCRETE BARRIER MEDIAN (PER CDOT STANDARD CS-5-10 BIKE LANE MEDIAN, MONOLITHIC)

NOTES

1. REFER TO ELEVATION DETAIL SHEETS FOR PROPOSED SLOPES IN RECONSTRUCTION AREAS.
2. CONTINGENT QUANTITIES FOR CLASS D PATCHING TYPES I AND II, 10" PROVIDED. RESIDENT ENGINEER TO DETERMINE LOCATION AND SIZES FOR CLASS D PATCHES WITHIN RESURFACING LIMITS.
3. REFER TO STRUCTURAL SHEETS FOR PROPOSED BRIDGE MATERIALS AND THICKNESSES.
4. REFER TO ISOMETRIC DETAIL SHEETS FOR CONCRETE MEDIAN (SPECIAL) ELEVATIONS FOR CONGRESS AND VAN BUREN INTERSECTIONS.
5. VARIATIONS IN THE THICKNESS OF SUBBASE GRANULAR MATERIAL, 4" DUE TO MEDIAN AND SIDEWALK ELEVATION DIFFERENCES SHALL BE CONSIDERED INCLUDED IN THE COST OF THE PAY ITEM.
6. LONGITUDINAL JOINT SEALANT SHALL BE PLACED ON TOP OF THE MILLED SURFACE FOR THE RESURFACING AREAS AND ON TOP OF PCC BASE COURSE FOR THE PAVEMENT RECONSTRUCTION AREAS.

MODEL: Default
FILE NAME: pw:\\PW01.hornershifrin.com:HS_IDOT_Documents\23056000-PTB195-007_D1_RoJuSo_Phil_SuiCollins\CAD_Sheets\D162K64_PaulinaSt_D162K64-sht-typtc1-03.dgn

HORNER SHIFRIN
WWW. HORNERSHIFRIN .COM

USER NAME = krkubalanza	DESIGNED -	REVISED -
	DRAWN -	REVISED -
PLOT SCALE = 10.0000 ' / in.	CHECKED -	REVISED -
PLOT DATE = 9/5/2025	DATE -	REVISED -

STATE OF ILLINOIS
DEPARTMENT OF TRANSPORTATION

FAI–290 (EISENHOWER EXPRESSWAY) AT PAULINA STREET
TYPICAL SECTIONS

SCALE: NTS | SHEET OF SHEETS | STA. | TO STA.

F.A.I. RTE.	SECTION	COUNTY	TOTAL SHEETS	SHEET NO.
290	2019-191-B-R	COOK	265	26
		CONTRACT NO. 62K64		
		ILLINOIS	FED. AID PROJECT	

REMOVALS

LOCATION			HOT-MIX ASPHALT SURFACE REMOVAL BUTT JOINT	PAVEMENT REMOVAL	HOT-MIX ASPHALT SURFACE REMOVAL, 2"	COMBINATION CURB AND GUTTER REMOVAL	SIDEWALK REMOVAL	MEDIAN REMOVAL	DELINEATOR REMOVAL	CHAIN LINK FENCE REMOVAL	REMARKS
STATION	STATION	SIDE	SQ YD	SQ YD	SQ YD	FOOT	SQ FT	SQ FT	EACH	FOOT	
PAULINA STREET											
400+19.11	400+32.94	LT	7.0								CONGRESS WEST LEG
400+19.11	400+33.11				152.8						CONGRESS RESURFACING
400+19.28	400+33.28	RT	7.0								CONGRESS EAST LEG
400+33.11	400+54.65			170.4							CONGRESS RECONSTRUCTION
400+37.23	400+54.25	RT				35.2	162.6				CONGRESS NE CORNER
400+42.21	400+55.05	LT				28.7	193.7				CONGRESS NW CORNER
400+43.86	400+49.44	LT		11.1							CONGRESS NW HMA SURFACE REMOVAL
400+54.65	404+08.64	LT							27.0		BRIDGE SB BIKE LANE
400+54.65	404+08.64	RT							27.0		BRIDGE NB BIKE LANE
404+08.28	404+30.29	LT				51.2	552.1				VAN BUREN SW CORNER
404+08.64	404+34.73			198.6							VAN BUREN RECONSTRUCTION
404+08.68	404+29.25	RT				37.2	189.7				VAN BUREN SE CORNER
404+29.77	404+66.18	LT	18.2								VAN BUREN WEST LEG
404+34.73	404+99.65				737.1						VAN BUREN RESURFACING
404+34.84	404+66.00	RT	15.6								VAN BUREN EAST LEG
404+66.49	404+87.15	LT				34.7	245.7				VAN BUREN NW CORNER
404+66.89	404+99.65	RT				66.8	615.2				VAN BUREN NE CORNER
405+20.89	406+30.75	LT						230.9	6.0		PAULINA SB BIKE LANE MEDIAN
406+41.39	406+51.67	LT						19.8	2.0		PAULINA SB BIKE LANE MEDIAN
406+59.86	407+36.53	LT						138.2	4.0		PAULINA SB BIKE LANE MEDIAN
407+55.91	407+80.00	LT						34.3	2.0		PAULINA SB BIKE LANE MEDIAN
CONGRESS PARKWAY											
2035+50.92	2035+90.92	LT								40.9	CONGRESS NW CORNER
2035+96.26	2036+85.00	RT	44.6								CONGRESS INTERSECTION
2035+95.84	2036+13.20	RT					234.5				CONGRESS SW CORNER
2036+59.61	2036+83.10	RT					323.5				CONGRESS SE CORNER
2036+81.00	2037+21.10	RT								39.7	CONGRESS NE CORNER
VAN BUREN STREET											
1035+39.24	1035+49.10	RT								16.7	VAN BUREN SW CORNER
1035+70.46	1036+20.12	LT	24.6								VAN BUREN INTERSECTION
1036+38.25	1036+78.25	RT								41.1	VAN BUREN SE CORNER
TEMPORARY ADA RAMP FOR MOT											
404+66.89	404+99.65	RT		213.0		59.0					VAN BUREN NE CORNER
SCHEDULE TOTAL			116.9	593.1	889.8	312.8	2517.0	423.3	68.0	138.3	
SCHEDULE PAY			117	594	890	313	2517	424	68	139	

PATCHING

LOCATION			HOT-MIX ASPHALT REPLACEMENT OVER PATCHES	HOT-MIX ASPHALT REMOVAL OVER PATCHES, 2"	CLASS D PATCHES, TYPE I, 10 INCH	CLASS D PATCHES, TYPE II, 10 INCH	CLASS D PATCHES, TYPE III, 10 INCH	REMARKS
STATION	STATION	SIDE	TON	SQ YD	SQ YD	SQ YD	SQ YD	
PAULINA STREET								
400+00.00	400+37.25	RT	2.30	20.5			16.4	TS CONDUIT
400+00.00	400+42.20	LT	2.64	23.6			18.9	TS CONDUIT
404+29.06	404+65.96	RT	2.59	23.2			18.5	TS CONDUIT
404+30.62	404+66.44	LT	2.24	20.0			16.0	TS CONDUIT
404+62.26	404+84.87	RT	2.09	18.6			16.6	NE ADA CORNER
404+62.48	404+87.13	LT	2.11	18.8			16.7	NW ADA CORNER
CONTINGENCY								
			8.34	74.4	30.0	30.0		
SCHEDULE TOTAL			22.3	199.1	30.0	30.0	103.1	
SCHEDULE PAY			23	200	30	30	104	

MODEL: Default
FILE NAME: pw:\\PW01.hornershifrin.com:HS_IDOT\Documents\2305K0000-PTB195-007_D1_PaulAsSp_PNF_SisCollins\CAD Sheets\D162K64_PaulinaID162K64-sht-schedule-01.dgn

PAVEMENT													
LOCATION		EARTH EXCAVATION	GEOTECHNICAL FABRIC FOR GROUND STABILIZATION	SUBBASE GRANULAR MATERIAL, TYPE A 4"	SUBBASE GRANULAR MATERIAL, TYPE B 6"	PORTLAND CEMENT CONCRETE BASE COURSE 10"	BITUMINOUS MATERIALS (TACK COAT)	LONGITUDINAL JOINT SEALANT	MIXTURE FOR CRACKS, JOINTS, AND FLANGEWAYS	POLYMERIZED HOT-MIX ASPHALT SURFACE COURSE, IL-9.5, MIX "E", N70	WELDED WIRE REINFORCEMENT	PAVEMENT CONNECTOR (PCC) FOR BRIDGE APPROACH SLAB	REMARKS
STATION	STATION	CU YD	SQ YD	SQ YD	SQ YD	SQ YD	POUND	FOOT	TON	TON	SQ YD	SQ YD	
PAULINA STREET													
400+19.11	400+33.11						68.8	14.0		17.1			CONGRESS RESURFACING
400+33.11	400+50.28	28.37	132.4		132.4	110.6	49.8	17.2	0.05	12.4			CONGRESS RECONSTRUCTION
400+39.75	400+65.28	31.54											CONGRESS ADA RECONSTRUCTION
400+50.28	400+65.28	24.48		52.2							56.7	56.7	CONGRESS PAVEMENT CONNECTOR
403+98.18	404+13.18	30.70									69.3	69.3	VAN BUREN PAVEMENT CONNECTOR
403+98.18	404+28.07	35.73											VAN BUREN ADA RECONSTRUCTION
404+13.18	404+34.73	35.95	173.8	58.7	173.8	148.9	67.0	21.6	0.2	16.7			VAN BUREN RECONSTRUCTION
404+34.73	404+99.65						332.3	64.9		82.7			VAN BUREN RESURFACING
404+66.39	404+99.65	11.60											VAN BUREN ADA
CONGRESS PARKWAY													
2035+95.32	2036+83.02	7.13											CONGRESS ADA
TEMPORARY ADA RAMP FOR MOT													
					213.0								MOT DESIGN
CONTINGENCY													
			170.0										POTENTIAL FOR UNDERCUTS
SCHEDULE TOTAL		205.50	476.2	110.9	519.2	259.5	517.8	117.6	0.3	128.9	126.0	126.0	
SCHEDULE PAY		210	477	111	520	260	518	118	0.3	129	127	127	

PROTECTIVE COAT	
PAY ITEM DESCRIPTION	QUANTITY (SQ YD)
PAVEMENT CONNECTOR (PCC) FOR BRIDGE APPROACH SLAB	127.0
PORTLAND CEMENT CONCRETE SIDEWALK 8 INCH	416.8
CONCRETE MEDIAN (SPECIAL)	
ADA AREAS AT CONGRESS PARKWAY	50.0
ADA AREAS AT VAN BUREN STREET	7.9
BIKE LANE MEDIAN BETWEEN VAN BUREN AND JACKSON	47.5
COMBINATION CONCRETE CURB AND GUTTER, TYPE B V-. 12 (CDOT)	69.8
SCHEDULE TOTAL	718.9
SCHEDULE PAY	719

CONCRETE MEDIAN (SPECIAL)				
LOCATION			CONCRETE MEDIAN (SPECIAL)	REMARKS
STATION	STATION	SIDE	SQ FT	
PAULINA STREET				
400+39.79	400+65.28	RT	298.4	ADA CURB RAMP AREA: NE CORNER OF CONGRESS
400+43.81	400+65.28	LT	151.5	ADA CURB RAMP AREA: NW CORNER OF CONGRESS
403+68.18	404+17.03	RT	71.0	ADA CURB RAMP AREA: SE CORNER OF CONGRESS
405+20.89	406+30.75	LT	220.9	CDOT BIKE MEDIAN
406+41.39	406+51.67	LT	20.5	CDOT BIKE MEDIAN
406+59.86	407+36.53	LT	137.7	CDOT BIKE MEDIAN
407+55.91	407+80.00	LT	48.2	CDOT BIKE MEDIAN
SCHEDULE TOTAL			948.2	
SCHEDULE PAY			949	

CONCRETE CURB				
LOCATION			COMBINATION CONCRETE CURB AND GUTTER, TYPE B V-. 12 (CDOT)	REMARKS
STATION	STATION	SIDE	FOOT	
PAULINA STREET				
400+38.75	400+65.28	RT	61.8	NE CORNER OF CONGRESS
400+43.95	400+65.28	LT	45.3	NW CORNER OF CONGRESS
403+98.18	404+29.03	LT	64.4	SW CORNER OF VAN BUREN
404+13.18	404+27.58	RT	38.2	SE CORNER OF VAN BUREN
404+67.47	404+87.11	LT	33.1	NW CORNER OF VAN BUREN
404+67.47	404+99.65	RT	58.5	NE CORNER OF VAN BUREN
TEMPORARY ADA RAMP FOR MOT				
404+67.47	404+99.65	RT	59.0	NE CORNER OF VAN BUREN
SCHEDULE TOTAL			360.3	
SCHEDULE PAY			361	

SIDEWALKS						
LOCATION			SUBBASE GRANULAR MATERIAL, TYPE B 4"	PORTLAND CEMENT CONCRETE SIDEWALK 8"	DETECTABLE WARNINGS (SPECIAL)	REMARKS
STATION	STATION	SIDE	SQ YD	SQ FT	SQ FT	
CONGRESS PARKWAY						
2035+95.32	2036+12.96	RT	26.1	234.9	12.6	SW CORNER OF CONGRESS
2036+59.61	2036+83.02	RT	36.1	324.4	23.6	SE CORNER OF CONGRESS
PAULINA STREET						
400+38.75	400+65.28	RT	80.8	428.4	12.0	NE CORNER OF CONGRESS
400+43.95	400+65.28	LT	71.2	489.0	12.0	NW CORNER OF CONGRESS
403+98.18	404+27.58	RT	75.5	614.4	20.0	SE CORNER OF VAN BUREN
403+98.18	404+29.03	LT	88.6	797.3	20.0	SW CORNER OF VAN BUREN
404+67.89	404+87.11	LT	28.0	251.8	18.7	NW CORNER OF VAN BUREN
404+67.94	404+99.65	RT	67.8	610.4	24.0	NE CORNER OF VAN BUREN
SCHEDULE TOTAL			473.9	3750.6	142.9	
SCHEDULE PAY			474	3751	143	

MODEL: Default
FILE NAME: pw:\\PW01.HornerShifrin.com:HS DOT\Documents\039560002-PTB 195-007 D1 Pa,dSoc PhIP SluCollins\CAD Sheets\D162K64_PaulinaD162K64-athc-cchedule-01.dgn

HORNER SHIFRIN
WWW. HORNERSHIFRIN .COM

USER NAME = rocampo	DESIGNED - KRK	REVISED -
	DRAWN - RO	REVISED -
PLOT SCALE = 2.0000 ' / in.	CHECKED - BLP	REVISED -
PLOT DATE = 10/8/2025	DATE -	REVISED -

STATE OF ILLINOIS
DEPARTMENT OF TRANSPORTATION

FAI–290 (EISENHOWER EXPRESSWAY) AT PAULINA STREET
SCHEDULE OF QUANTITIES

SCALE: NTS | SHEET OF SHEETS | STA. TO STA.

F.A.I. RTE.	SECTION	COUNTY	TOTAL SHEETS	SHEET NO.
290	2019-191-B-R	COOK	265	28
		CONTRACT NO. 62K64		
	ILLINOIS	FED. AID PROJECT		

FENCE

LOCATION					CHAIN LINK FENCE, 6'	REMARKS
STATION	OFFSET	STATION	OFFSET	SIDE	FOOT	
CONGRESS PARKWAY						
2035+50.92	28.92'	2035+90.92	30.89'	LT	40.1	NW CORNER
2036+81.10	25.87'	2037+21.10	25.31'	LT	40.0	NE CORNER
VAN BUREN STREET						
1035+39.24	39.01'	1035+49.10	34.24'	RT	16.9	SW CORNER
1036+38.25	21.06'	1036+78.25	18.39'	RT	40.2	SE CORNER
I-290						
291+74.53	43.50'	296+67.53	43.50'	LT	93.0	ALONG CTA TRACKS
291+88.35	38.00'	292+81.35	38.00'	RT	93.0	ALONG CTA TRACKS

SCHEDULE TOTAL 323.2

SCHEDULE PAY 324

FLEXIBLE DELINEATOR

LOCATION			FLEXIBLE DELINEATOR	REMARKS
STATION	STATION	SIDE	EACH	
PAULINA STREET				
400+43.70	400+93.70	RT	22.0	NE CORNER OF CONGRESS
400+48.70	400+93.70	LT	20.0	NW CORNER OF CONGRESS
401+04.80	403+64.80	LT	14.0	BRIDGE SB BIKE LANE
403+72.12	403+97.43	LT	6.0	SW CORNER OF VAN BUREN
401+04.94	403+64.94	RT	14.0	BRIDGE NB BIKE LANE
403+70.53	404+15.50	RT	10.0	SE CORNER OF VAN BUREN
405+21.84	407+75.34	LT	14.0	PAULINA SB BIKE LANE MEDIAN

SCHEDULE TOTAL 100.0

SCHEDULE PAY 100

DETECTABLE DIRECTIONAL SURFACE TILE

LOCATION					DETECTABLE DIRECTIONAL SURFACE TILE
STATION	OFFSET	STATION	OFFSET	SIDE	FOOT
PAULINA STREET					
400+65.28	38.34'	400+95.28	39.49'	LT	30.0
400+95.27	39.49'	403+68.18	39.49'	LT	272.9
403+68.18	39.49'	404+14.93	37.00'	LT	46.8
400+95.28	30.50'	401+15.44	26.50'	RT	20.6
401+15.44	26.50'	403+48.14	26.50'	RT	232.7
403+48.14	26.50'	403+68.18	23.70'	RT	20.3
VAN BUREN STREET					
1036+31.36	20.54	1036+36.86	20.57	RT	5.5

SCHEDULE TOTAL 628.8

SCHEDULE PAY 629

PAVEMENT MARKING REMOVAL - WATER BLASTING

LOCATION			REMARKS	WIDTH	LENGTH OR AREA		QUANTITY
STATION	STATION	SIDE			QUANTITY	UNIT	SQ FT
PAULINA STREET (CONGRESS PARKWAY TO VAN BUREN STREET)							
400+00.00	400+42.20	LT	WEST LEG CROSSWALK	24"	60.0	FT	120.0
400+01.73	400+35.73	RT	EAST LEG CROSSWALK	24"	60.0	FT	120.0
400+54.65	404+08.58	LT & RT	FLUSH MEDIAN - DOUBLE YELLOW	4"	354.3	FT	236.2
400+54.65	401+73.10	LT	SB LEFT TURN LANE - WHITE	6"	118.3	FT	59.1
400+54.65	404+08.64	LT	SB BIKE EDGE - WHITE	4"	353.5	FT	117.8
400+54.65	404+08.64	LT	SB BIKE EDGE - WHITE	4"	353.5	FT	117.8
400+54.65	404+08.64	LT	SB BIKE DIAGONAL - WHITE	12"	74.9	FT	74.9
400+61.75		LT	SB STOP BAR - WHITE	24"	27.5	FT	55.0
400+62.97	400+87.99	LT	SB BIKE LANE - GREEN		147.0	SQ FT	147.0
400+71.51		LT	SB BIKE LANE - THROUGH ARROW SYMBOL	L&S	6.5	SQ FT	6.5
400+83.86		LT	SB BIKE LANE - BIKE SYMBOL	L&S	4.7	SQ FT	4.7
400+90.13		LT	SB LEFT TURN LANE - LEFT ARROW SYMBOL	L&S	8.8	SQ FT	8.8
401+15.85		LT	SB LEFT TURN LANE - "ONLY"	L&S	11.8	SQ FT	11.8
401+73.10	402+75.72	LT	SB LEFT TURN LANE - WHITE DOTTED	6"	103.3	FT	12.9
403+60.75		LT	NB LEFT TURN LANE - "ONLY"	L&S	11.8	SQ FT	11.8
403+76.38	404+06.31	LT	SB BIKE LANE - GREEN		168.0	SQ FT	168.0
403+86.82		LT	NB LEFT TURN LANE - LEFT ARROW SYMBOL	L&S	8.8	SQ FT	8.8
403+92.18		LT	SB BIKE LANE - THROUGH ARROW SYMBOL	L&S	6.5	SQ FT	6.5
404+04.53		LT	SB BIKE LANE - BIKE SYMBOL	L&S	4.7	SQ FT	4.7
404+11.20		LT & RT	NB STOP BAR - WHITE	24"	72.4	FT	72.4
404+17.53	404+23.75	LT & RT	SOUTH LEG CROSSWALK	24"	60.0	FT	120.0
404+24.15	404+66.30	LT	SB BIKE LANE - GREEN	L&S	77.1	SQ FT	77.1
404+29.90	404+65.27	LT & RT	EAST LEG CROSSWALK	24"	60.0	FT	120.0
404+31.42	404+65.44	LT & RT	WEST LEG CROSSWALK	24"	60.0	FT	120.0
404+31.57	404+73.51	RT	NB BIKE LANE - GREEN	L&S	72.0	SQ FT	72.0
404+73.22	404+79.34	LT & RT	NORTH LEG CROSSWALK	24"	60.0	FT	120.0
PAULINA STREET (VAN BUREN STREET TO JACKSON BOULEVARD)							
404+80.70	408+43.46	RT	NB BIKE EDGE - WHITE	4"	121.0	FT	121.0
404+80.70	408+43.46	RT	NB BIKE EDGE - WHITE	4"	121.0	FT	121.0
404+85.00	408+72.00	LT & RT	FLUSH MEDIAN DIAGONALS - YELLOW	12"	120.5	FT	120.5
404+85.00	408+72.00	LT & RT	FLUSH MEDIAN - DOUBLE YELLOW	4"	661.0	FT	441.3
404+86.52		LT	SB STOP BAR - WHITE	24"	35.3	FT	35.3
404+86.74	405+10.32	LT	SB BIKE LANE - WHITE DOTTED	4"	2.0	FT	2.0
404+89.95	405+08.15	LT	SB BIKE LANE - GREEN		30.5	SQ FT	30.5
404+96.37			SB BIKE LANE - BIKE SYMBOL	L&S	4.7	SQ FT	4.7
405+08.69			SB BIKE LANE - THROUGH ARROW SYMBOL	L&S	6.5	SQ FT	6.5
405+18.80	408+72.00	LT	SB BIKE LANE EDGE - WHITE	4"	117.2	FT	117.2
405+18.80	408+72.00	LT	SB BIKE LANE EDGE - WHITE	4"	117.2	FT	117.2
406+33.47	408+54.89	LT	SB BIKE LANE DIAGONALS - WHITE	12"	19.7	FT	19.7
408+32.36	408+72.00	LT	SB BIKE LANE - GREEN		179.2	SQ FT	179.2
408+43.41	408+72.00	RT	NB BIKE LANE - GREEN		239.5	SQ FT	239.5
408+43.47	408+72.00	RT	SB BIKE LANE DIAGONALS - WHITE	12"	21.8	FT	21.8
408+54.58			SB BIKE LANE - THROUGH ARROW SYMBOL	L&S	6.5	SQ FT	6.5
408+66.52		LT	SB BIKE LANE - BIKE SYMBOL	L&S	4.7	SQ FT	4.7
408+66.52		RT	NB BIKE LANE - BIKE SYMBOL	L&S	4.7	SQ FT	4.7
CONGRESS PARKWAY							
2031+15.00	2035+96.26	RT	EB SKIP-DASH - WHITE	4"	476.6	FT	39.7
2035+43.26	2035+96.26	LT	EB LEFT TURN LANE - WHITE	4"	48.7	FT	16.2
2035+53.33		LT & RT	WEST LEG - "ONLY" SYMBOL	L&S	35.4	SQ FT	35.4
2035+79.61		LT	EB LT - LEFT TURN ARROW SYMBOL	L&S	8.8	SQ FT	8.8
2035+79.61		LT	EB LANE - THROUGH ARROW SYMBOL	L&S	6.5	SQ FT	6.5
2035+79.61		RT	EB RT - RIGHT TURN ARROW SYMBOL	L&S	8.8	SQ FT	8.8
2035+91.76	2035+93.76	LT & RT	EB STOP BAR	24"	32.3	FT	64.6
2036+20.47	2036+61.12	RT	RUSH HOSPITAL CROSSWALK	6"	71.3	FT	35.6
2036+85.50	2040+60.00	LT	EB SKIP DASH	4"	375.0	FT	31.3
VAN BUREN STREET (RESURFACING)							
1031+64.41	1035+53.00	RT	WB SKIP-DASH	4"	32.4	FT	32.4
1036+38.31	1036+40.28	LT & RT	WB STOP BAR - WHITE	24"	36.5	FT	72.9
1036+75.62	1040+22.12	LT	WB SKIP-DASH	4"	28.9	FT	28.9
I-290 (MOT)							
							11480.0

SCHEDULE TOTAL 15499.0

SCHEDULE PAY 15499

MODEL: Default
FILE NAME: P:\104\1441 I-80DOT - Sacramento and Paulina over I-290\Work\0AOC\Paulina\2025.10.15 Revised Final PSE\Revised - CAD Files\D 16K64-pht-schedule-01.dgn

HORNER SHIFRIN
WWW. HORNERSHIFRIN .COM

USER NAME = amartinez	DESIGNED - KRK	REVISED -	
	DRAWN - RO	REVISED -	
PLOT SCALE = 2.0000 ' / in.	CHECKED - BLP	REVISED -	
PLOT DATE = 10/16/2025	DATE -	REVISED -	

STATE OF ILLINOIS
DEPARTMENT OF TRANSPORTATION

FAI–290 (EISENHOWER EXPRESSWAY) AT PAULINA STREET
SCHEDULE OF QUANTITIES

SCALE: NTS | SHEET OF SHEETS | STA. | TO STA.

F.A.I. RTE.	SECTION	COUNTY	TOTAL SHEETS	SHEET NO.
290	2019-191-B-R	COOK	265	29
		CONTRACT NO. 62K64		
	ILLINOIS	FED. AID PROJECT		

PAVEMENT MARKING																				
LOCATION				THERMOPLASTIC PAVEMENT MARKING							PREFORMED THERMOPLASTIC PAVEMENT MARKING - LETTERS AND SYMBOLS	MODIFIED URETHANE PAVEMENT MARKING						METHYL METHACRYLATE PAVEMENT COLORIZATION GREEN	PAINT CURB	REMARKS
				LETTERS & SYMBOLS	LINE							LETTERS & SYMBOLS	LINE							
					4 INCH		6 INCH	12 INCH		24 INCH			4 INCH		6 INCH	24 INCH				
					WHITE	YELLOW	WHITE	WHITE	YELLOW	WHITE			WHITE	YELLOW	WHITE	WHITE				
STATION	STATION	OFFSET	SIDE	SQ FT	FOOT	FOOT	FOOT	FOOT	FOOT	FOOT	SQ FT	SQ FT	FOOT	FOOT	FOOT	FOOT		SQ YD	FOOT	
PAULINA STREET																				
400+00.00	400+37.65									54.0										CONGRESS EAST LEG: SOLID WHITE CROSSWALK
400+00.00	400+42.24									42.1										CONGRESS WEST LEG: SOLID WHITE STOP BAR
400+00.00	400+42.24									60.0										CONGRESS WEST LEG: SOLID WHITE CROSSWALK
400+38.76	404+13.18		RT															289.5		NB BIKE LANE: GREEN
400+43.84	404+13.18		LT															286.0		SB BIKE LANE: GREEN
400+48.00																	7.0			SB BIKE LANE: STOP BAR
400+58.00																	12.0			SB LANE: SOLID WHITE STOP BAR
400+58.00	401+74.00															116.0				SB TURN LANE: SOLID WHITE
400+50.28	404+11.00	11.00'	RT										360.8							NB EDGE LINE: SOLID WHITE
400+50.28	404+08.14	23.00'	LT										388.2							SB EDGE LINE: SOLID WHITE
400+68.00	404+00.00													664.9						CENTERLINE: DOUBLE SOLID YELLOW
400+68.00																	10.0			NB LANE: SOLID WHITE STOP BAR
400+73.00		20.82'	RT								8.4									NB BIKE LANE: BIKE SYMBOL
400+73.00		18.50'	LT									14.7								SB LANE: THROUGH / LEFT ARROW
400+75.29		31.58'	LT								4.6									SB BIKE LANE: ARROW
400+85.86		19.53'	RT								4.6									NB BIKE LANE: ARROW
400+88.00		31.49'	LT								8.4									SB BIKE LANE: BIKE SYMBOL
400+95.28	404+13.18	15.00'	RT										318.0							NB BIKE LANE: EDGE LINE SOLID WHITE
401+33.71		17.70'	LT									14.7								SB LANE: THROUGH/ LEFT ARROW
401+33.71		5.90'	LT									8.8								SB LANE: LEFT ARROW
401+61.00		5.90'	LT									11.8								SB LANE: "ONLY"
401+74.00	402+84.00	11.00'	LT													27.5				SB TURN LANE: DOTTED WHITE
401+74.00	402+84.00	1.00'	LT													27.5				NB TURN LANE: DOTTED WHITE
402+84.00	404+11.00															127.0				NB TURN LANE: SOLID WHITE
402+97.03		6.33'	LT									11.8								NB LANE: "ONLY"
402+97.03		4.77'	RT									11.8								NB LANE: "ONLY"
403+23.00		6.33'	LT									8.8								LEFT ARROW
403+23.00		4.77'	RT									6.5								THROUGH ARROW
403+89.73		17.48'	RT								8.4									NB BIKE LANE: BIKE SYMBOL
403+92.30		29.47'	LT								4.6									SB BIKE LANE: BIKE ARROW
404+00.00																	10.0			SB LANE: SOLID WHITE STOP BAR
404+02.43		16.81'	RT								4.6									NB BIKE LANE: BIKE ARROW
404+04.67		27.18'	LT								8.4									SB BIKE LANE: BIKE SYMBOL
404+11.00																	20.0			NB LANE AND BIKE LANE: SOLID WHITE STOP BAR
404+16.00	404+22.00									72.0										VAN BUREN SOUTH LEG: SOLID WHITE CROSSWALK
404+28.00	404+70.00	24.11'	LT				12.0											5.3		SB BIKE LANE: WHITE DOTTED AND GREEN
404+28.00	404+70.00	29.11'	LT				12.0													SB BIKE LANE: WHITE DOTTED
404+28.00	404+70.00	10.64'	RT				12.0											5.3		NB BIKE LANE: WHITE DOTTED AND GREEN
404+28.00	404+70.00	15.64'	RT				12.0													NB BIKE LANE: WHITE DOTTED
404+29.05	404+66.33		RT							37.3										VAN BUREN EAST LEG: SOLID WHITE STOP BAR
404+29.05	404+68.05									54.0										VAN BUREN EAST LEG: SOLID WHITE CROSSWALK
404+30.65	404+65.64									54.0										VAN BUREN WEST LEG: SOLID WHITE CROSSWALK
404+67.27	404+99.39		RT																36.2	VAN BUREN NE CORNER BUMPOUT
404+74.28	404+80.28									66.0										VAN BUREN NORTH LEG: SOLID WHITE CROSSWALK
404+79.82	405+14.68		RT								175.0									NB BIKE LANE: GREEN AND SYMBOLS
404+82.38	408+70.00					1292.9														VAN BUREN NORTH LEG: DOUBLE YELLOW FLUSH MEDIAN
404+82.38	407+37.59								96.4											VAN BUREN NORTH LEG: MEDIAN DIAGONALS
404+83.00	405+18.00	15.00'					8.7													SB BIKE LANE: WHITE DOTTED
404+83.35	405+18.00		LT								194.2									SB BIKE LANE: GREEN AND SYMBOLS
404+84.46										19.4										VAN BUREN NORTH LEG: SOLID WHITE STOP BAR
404+85.25	404+18.00	15.00'	LT		8.2															SB BIKE LANE: WHITE DOTTED
404+89.21	408+61.09	13.74'	RT		372.2															NB BIKE LANE: SOLID WHITE
404+89.21	408+70.00	18.74'	RT		396.1															NB BIKE LANE: SOLID WHITE
405+18.00	408+72.00	18.00'	LT		354.1															SB CONCRETE BIKE MEDIAN: SOLID WHITE
405+18.00	408+72.00	15.00'	LT		357.1															SB CONCRETE BIKE MEDIAN: SOLID WHITE
408+32.36	408+72.00		RT								162.0									SB BIKE LANE: GREEN AND SYMBOLS
408+37.97	408+72.00	11.50'	LT					8.5												SB CONCRETE BIKE MEDIAN: SOLID WHITE DIAGONALS
408+43.48	408+65.56	13.50'	RT					19.0												NB BIKE LANE: SOLID WHITE DIAGONALS
408+43.48	408+70.00		RT								212.0									NB BIKE LANE:GREEN AND SYMBOL
408+61.07										10.0										JACKSON SOUTH LEG: SOLID WHITE STOP BAR
CONGRESS PARKWAY																				
2031+15.00	2035+90.04				118.8															EB LANE: SKIP-DASH
2034+10.00	2035+93.27	7.89'	LT				183.3													EB TURN LANE: SOLID WHITE
2034+23.03		3.37'	LT	11.8																EB LANE: "ONLY"
2034+23.03		13.38'	LT	11.8																EB LANE: "ONLY"
2034+49.51		8.28'	RT	14.7																EB LANE: THROUGH / RIGHT ARROW
2034+49.51		2.80'	LT	6.5																EB LANE: THROUGH ARROW
2034+49.51		12.96'	LT	8.8																EB LANE: LEFT ARROW
2035+50.04		3.37'	LT	11.8																EB LANE: "ONLY"
2035+50.04		13.38'	LT	11.8																EB LANE: "ONLY"
2035+76.11		12.69'	LT	8.8																EB LANE: LEFT ARROW
2035+76.11		2.80'	LT	6.5																EB LANE: THROUGH ARROW
2035+76.11		8.28'	RT	14.7																EB LANE: THROUGH / RIGHT ARROW
2036+24.04	2036+58.03									52.1										CONGRESS SOUTH LEG: SOLID WHITE CROSSWALK
2036+85.00	2040+60.00				91.9															EB LANE: SKIP-DASH
VAN BUREN STREET																				
1031+79.00	1035+51.00				95.3															WB LANE: SKIP DASH
1036+14.06		47.47'	LT									21.3								YELLOW CURB
1036+35.72	1040+38.00				100.7															WB LANE: SKIP DASH
1036+56.33		11.88'	LT	14.7																WB LANE: THROUGH / LEFT ARROW
1036+56.33		2.61'	RT	14.7																WB LANE: THROUGH / RIGHT ARROW
SCHEDULE TOTAL				136.6	3187.0		239.9	123.9		520.9	795.2	110.2	1731.9		298.0	59.0	586.1		36.2	
SCHEDULE PAY				137	3188		240	124		521	796	111	1732		298	59	587		37	

MODEL: Default
FILE NAME: pw:\\PW01.hornershifrin.com:HS_IDOT\Documents\2305600\0-PTB 195-001 D1 Pa.J-Sur_Phil Sis\Collins\CAD Sheets\D162K64 Paulina\D162K64-sht-schedule-02.dgn

HORNER SHIFRIN
WWW. HORNERSHIFRIN .COM

USER NAME = krkubalanza	DESIGNED - KRK	REVISED -
	DRAWN - RO	REVISED -
PLOT SCALE = 2.0000 ' / in.	CHECKED - BLP	REVISED -
PLOT DATE = 10/8/2025	DATE -	REVISED -

STATE OF ILLINOIS
DEPARTMENT OF TRANSPORTATION

FAI–290 (EISENHOWER EXPRESSWAY) AT PAULINA STREET
SCHEDULE OF QUANTITIES

SCALE: NTS | SHEET OF SHEETS | STA. | TO STA.

F.A.I. RTE.	SECTION	COUNTY	TOTAL SHEETS	SHEET NO.
290	2019-191-B-R	COOK	265	30
		CONTRACT NO. 62K64		
		ILLINOIS	FED. AID PROJECT	

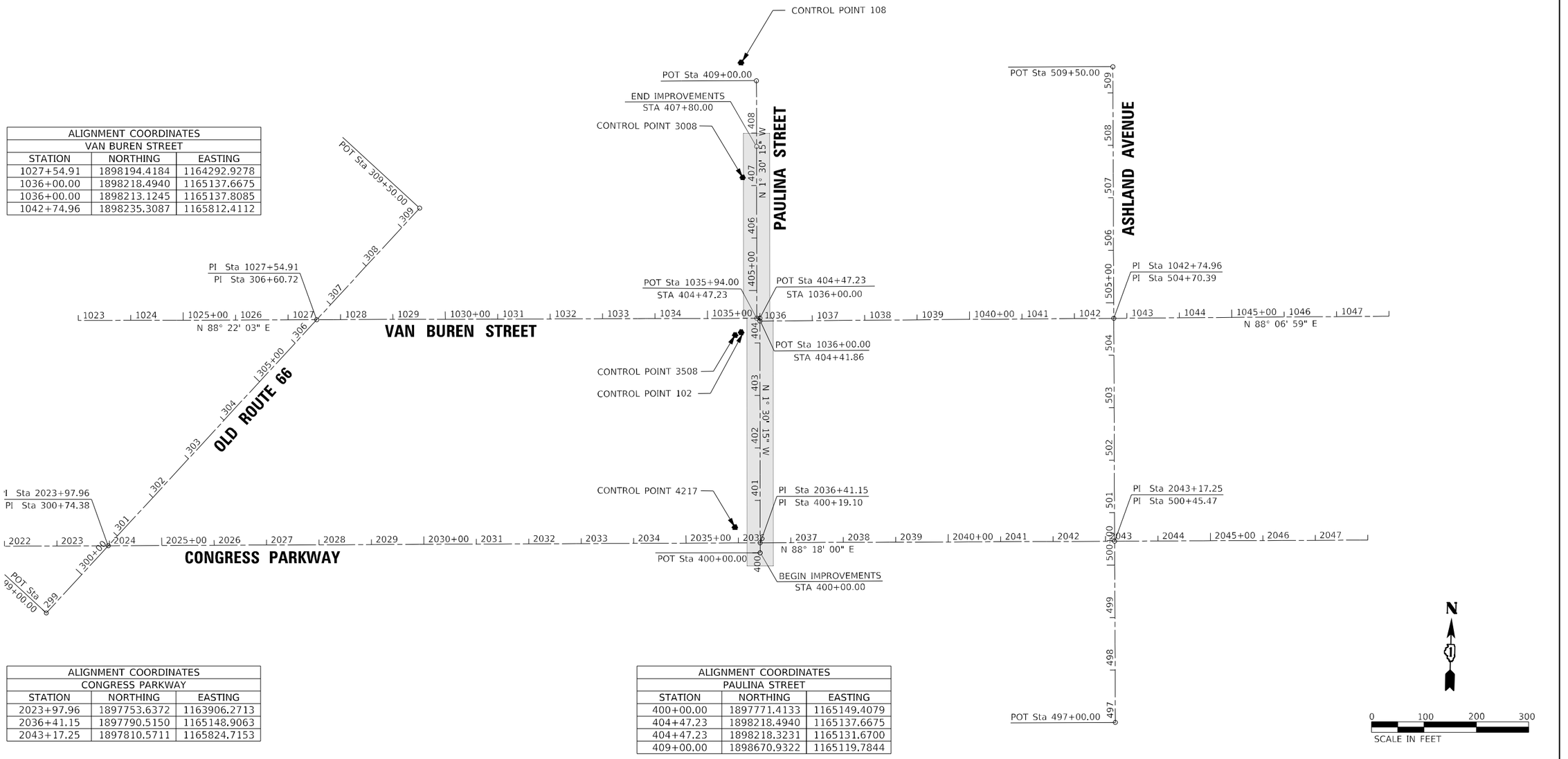

ALIGNMENT COORDINATES		
VAN BUREN STREET		
STATION	NORTHING	EASTING
1027+54.91	1898194.4184	1164292.9278
1036+00.00	1898218.4940	1165137.6675
1036+00.00	1898213.1245	1165137.8085
1042+74.96	1898235.3087	1165812.4112

ALIGNMENT COORDINATES		
CONGRESS PARKWAY		
STATION	NORTHING	EASTING
2023+97.96	1897753.6372	1163906.2713
2036+41.15	1897790.5150	1165148.9063
2043+17.25	1897810.5711	1165824.7153

ALIGNMENT COORDINATES		
PAULINA STREET		
STATION	NORTHING	EASTING
400+00.00	1897771.4133	1165149.4079
404+47.23	1898218.4940	1165137.6675
404+47.23	1898218.3231	1165131.6700
409+00.00	1898670.9322	1165119.7844

BENCHMARKS

BOX CUT ON N.E. CORNER OF IDOT TRAFFIC SIGNAL CONTROLLER FOUNDATION AT N.W. CORNER OF W. VAN BUREN ST. AND S. SACRAMENTO BLVD.
ELEVATION 596.92

MODEL: Default
FILE NAME: pw:\\PW01.hornershifrin.com:HS IDOT\Documents\230560000-PTB195-007_D1_Paul-Sac_PhII_SubCollins\CAD_Sheets\D162K64_Paulina\D162K64-sht-ATB-01.dgn

HORNER SHIFRIN
WWW.HORNERSHIFRIN.COM

USER NAME = ahernandez	DESIGNED - KRK	REVISED -	
	DRAWN - RO	REVISED -	
PLOT SCALE = 200.0000 ' / in.	CHECKED - BLP	REVISED -	
PLOT DATE = 9/4/2025	DATE -	REVISED -	

STATE OF ILLINOIS
DEPARTMENT OF TRANSPORTATION

FAI–290 (EISENHOWER EXPRESSWAY) AT PAULINA STREET
ALIGNMENT, TIES, AND BENCHMARKS

SCALE: 1" = 100' | SHEET 1 OF 2 SHEETS | STA. TO STA.

F.A.I. RTE.	SECTION	COUNTY	TOTAL SHEETS	SHEET NO.
290	2019-191-B-R	COOK	265	31
		CONTRACT NO. 62K64		
		ILLINOIS FED. AID PROJECT		

CONTROL POINT 108

NORTHING: 1898704.5030
EASTING: 1165089.5030
ELEV. = 593.3890

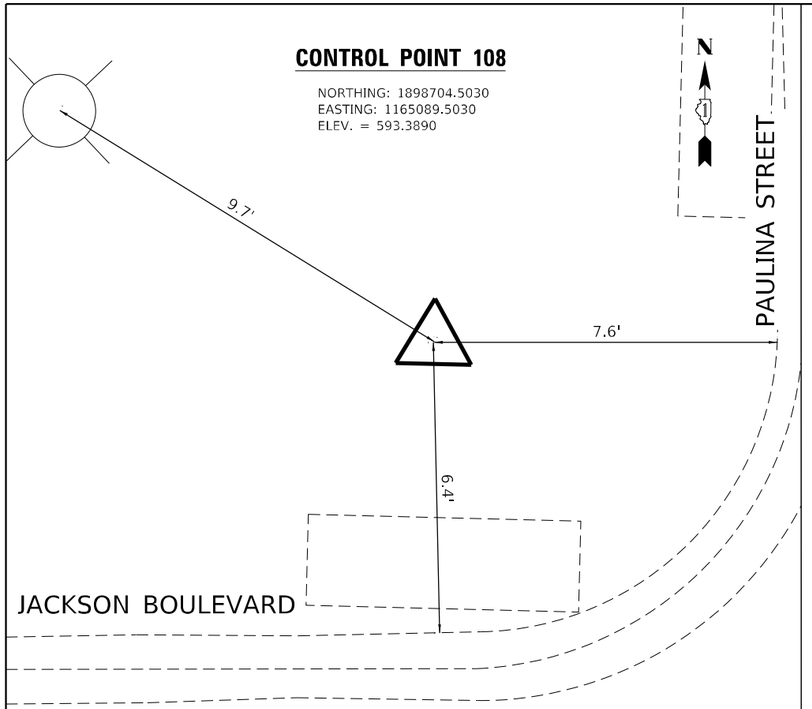

CONTROL POINT 3008

NORTHING: 1898485.9600
EASTING: 1165098.1230
ELEV. = 592.2600
STATION: 407+15.73
OFFSET: 26.50' RT

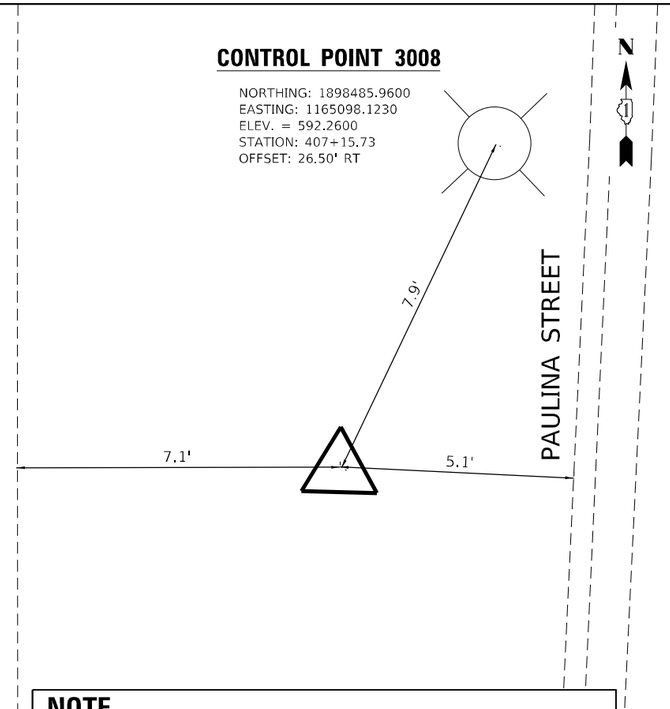

NOTE

ALL ELEVATIONS SHOWN ARE BASED ON THE CHICAGO CITY DATUM. THE CONVERSION FACTOR FROM CCD TO NAVD 88 IS: NAVD88 ELEVATION = CCD+579.19

CONTROL POINTS 3508 AND 102

NORTHING: 1898190.6080
EASTING: 1165102.6980
ELEV. = 593.0670
STATION: 404+15.06
OFFSET: 47.24' RT
AND
NORTHING: 1898185.0990
EASTING: 1165091.2790
ELEV. = 593.2890
STATION: 404+23.09
OFFSET:35.76' RT

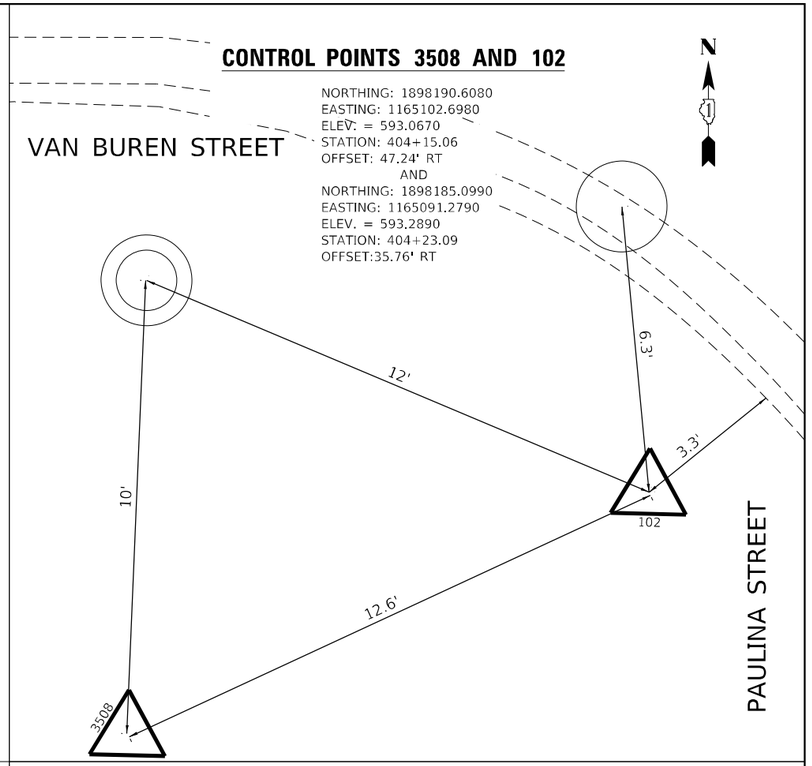

CONTROL POINT 4217

NORTHING: 1897819.0900
EASTING: 1165100.0510
ELEV. = 593.4130
STATION: 400+48.95
OFFSET: 48.07' RT

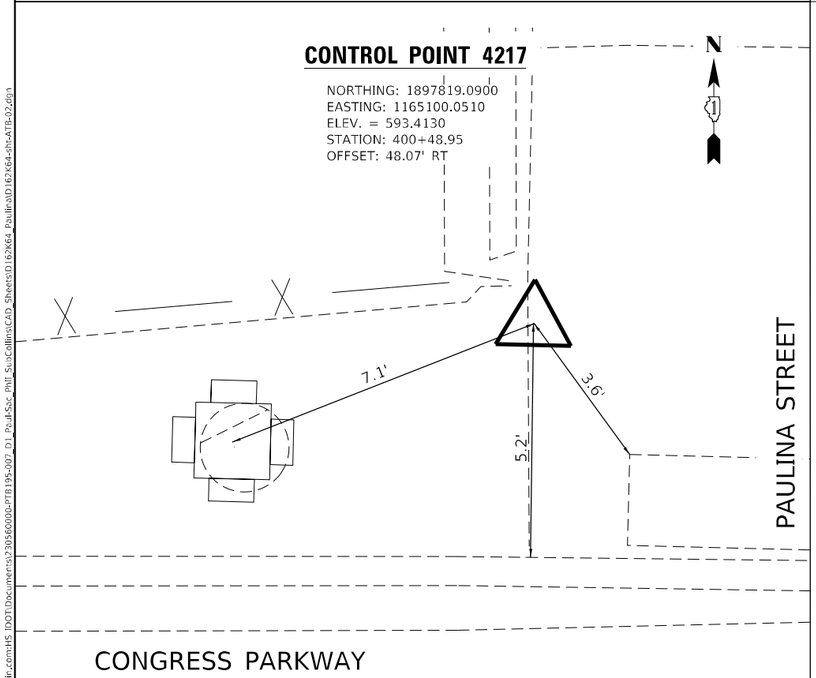

MODEL: Default
FILE NAME: pw:\\PW01.hornershifrin.com:HS_IDOT_Documents\1230560000-PTB195-007_01_Paulina_Sec_Phil_Sub\Cadlinks\CAD_Sheets\D162K64_Paulina3D162K64-IM-ATB-02.dgn

HORNER SHIFRIN
WWW. HORNERSHIFRIN .COM

USER NAME = ahernandez	DESIGNED -	REVISED -
	DRAWN -	REVISED -
PLOT SCALE = 3.3333 ' / in.	CHECKED -	REVISED -
PLOT DATE = 9/4/2025	DATE -	REVISED -

STATE OF ILLINOIS
DEPARTMENT OF TRANSPORTATION

FAI–290 (EISENHOWER EXPRESSWAY) AT PAULINA STREET
ALIGMENT, TIES, AND BENCHMARKS

SCALE: 1" = 20' | SHEET 2 OF 2 SHEETS | STA. | TO STA.

F.A.I. RTE.	SECTION	COUNTY	TOTAL SHEETS	SHEET NO.
290	2019-191-B-R	COOK	265	32
		CONTRACT NO. 62K64		
		ILLINOIS FED. AID PROJECT		

HOT-MIX ASPHALT SURFACE REMOVAL
BUTT JOINT (7.0 SQ YD)

400+19.11
49.39' LT

CHAIN LINK FENCE REMOVAL
STA. 2035+50.92 TO STA. 2035+90.92
(40.9 FT)

400+43.86
70.82' LT
(SEE TRAFFIC SIGNAL SHEETS)

400+32.94
49.39' LT

400+42.21
49.39' LT

SEE REMOVAL NOTES

2035+95.32
20.34' LT

2035+95.84
32.43' RT

2036+07.27
33.46' RT

2036+13.20
28.36' RT

COMB C&G REMOVAL (28.7 FT)

400+55.05
27.86' LT

DELINEATOR REMOVAL (27 EACH)

CTA BLUE LINE
ILLINOIS MEDICAL DISTRICT
(NO IMPROVEMENTS)

400+73.01
9.75' LT

PAVEMENT MARKING REMOVAL - WATER
BLAST (PRIOR TO STAGE 1)

400+33.11
0' RT

400+19.11
0' RT

400+00

400+54.65
0' RT

HOT-MIX ASPHALT SURFACE REMOVAL
BUTT JOINT (44.6 SQ YD)

2036+59.61
34.18' RT

2036+83.10
20.28' RT

2036+82.95
34.13' RT

HOT-MIX ASPHALT SURFACE REMOVAL
BUTT JOINT (7.0 SQ YD)

W. CONGRESS PKWY

400+19.28
48.85' RT

400+33.28
48.80' RT

400+37.23
48.79' RT

400+43.84
48.78' RT

400+54.25
28.19' RT

COMB C&G REMOVAL (35.2 FT)
CHAIN LINK FENCE REMOVAL
STA. 2036+81.00 TO STA. 2037+21.10
(39.7 FT)

EX PAVEMENT MARKING TO BE REMOVED
IN STAGE 1 VIA REMOVAL OF EXISTING
SUPER STRUCTURE.

REFER TO STRUCTURAL SHEETS FOR
REMOVAL OF EX STRUCTURE

PAULINA STREET

36.6'
48.3'
6.3'
10.1'
8.7'
10'
6'

404+34.36
59.06' LT

404+30.29
58.96' LT

404+16.37
58.41' LT

CHAIN LINK FENCE REMOVAL
STA. 1035+39.24 TO STA. 1035+49.10
(16.7 FT)

COMB C&G REMOVAL (51.2 FT)

404+08.28
27.33' LT

404+08.64
0' RT

404+34.73
0' RT

404+08.68
28.69' RT

COMB C&G REMOVAL (37.2 FT)
CHAIN LINK FENCE REMOVAL
STA. 1036+38.25 TO STA. 1036+78.25
(41.1 FT)

404+29.25
45.09' RT

404+34.84
45.05' RT

404+66.89
41.55' RT

404+66.00
50.84' RT

W. VAN BUREN ST.

404+66.49
44.31' LT

404+73.06
44.58' LT

COMB C&G REMOVAL (34.7 FT)

MEDIAN REMOVAL TO BE
REMOVED PRIOR
TO STAGE 1

404+80.45
44.53' LT

404+87.15
23.85' LT

405+20.89
16.13' LT

404+99.65
0' RT

405+00

404+99.65
25.73' RT

404+99.09
34.41' RT

HOT-MIX ASPHALT SURFACE
REMOVAL BUTT JOINT
(24.6 SQ YD)

404+84.99
18.95' RT

COMB C&G REMOVAL (57.5 FT)

HOT-MIX ASPHALT SURFACE
REMOVAL BUTT JOINT
(15.6 SQ YD)

PEOPLE'S GAS
42" HIGH PRESSURE GAS MAIN
(SEE PEOPLE'S GAS NOTE)

MATCH LINE STA 405+50

REMOVALS LEGEND

- PAVEMENT REMOVAL
- HOT-MIX ASPHALT SURFACE REMOVAL, 2"
- SIDEWALK REMOVAL
- MEDIAN REMOVAL
- HOT-MIX ASPHALT SURFACE REMOVAL - BUTT JOINT
- PR CLASS D, TYPE III PATCHES
- PAVEMENT MARKING REMOVAL - WATERBLASTING
- LINEAR ITEM REMOVAL

406+51.67
16.65' LT

406+41.39
16.84' LT

406+30.75
16.88' LT

406+59.86
16.14' LT

MEDIAN REMOVAL TO BE
REMOVED PRIOR
TO STAGE 1

407+36.53
13.01' LT

407+55.91
12.74' LT

407+80.00
12.83' LT

MATCH LINE STA 405+50

PAULINA STREET

18.6'
17.8'

PEOPLE'S GAS
42" HIGH PRESSURE GAS MAIN
(SEE PEOPLE'S GAS NOTE)

407+51.27
0' RT

408+43.91
10.10' RT

408+72
0' RT

PAULINA STREET

W. JACKSON ST.

REMOVAL NOTES

1. THE HMA SURFACE IN THE NORTHWEST CORNER OF CONGRESS PARKWAY INTERSECTION, ADJACENT TO SIDEWALK REMOVAL, TO BE PAID FOR AS PAVEMENT REMOVAL.
2. REFER TO STRUCTURAL SHEETS FOR REMOVAL OF EXISTING STRUCTURE, PARAPETS, STRUCTURAL FENCING, BARRIER WALL, RETAINING WALL, ETC.
3. THE CONTRACTOR SHALL PATCH FIRST BEFORE MILLING, PATCHES TO BE CONSTRUCTED TO GRADE PER DISTRICT 1 DETAIL BD-22. PATCHES INSIDE RESURFACING AREA SHALL THEN BE MILLED AND OVERLAYED DURING RESURFACING, UNLESS NOTED OTHERWISE.

PEOPLE'S GAS NOTES

THIS PROJECT WILL BE PLACED ON PEOPLE'S GAS WATCH & PROJECT. NOTIFY SYSTEM INTEGRITY OPERATIONS SUPERVISOR AT Central-Shop-OUC@peoplesgasdelivery.com A MINIMUM OF 5 BUSINESS DAYS PRIOR TO EXCAVATION TO SET UP ON-SITE INSPECTION.

PEOPLE'S GAS HIGH PRESSURE GAS MAIN IS PRESENT WITHIN AREA OF CONSTRUCTION. USE EXTREME CAUTION NEAR ALL GAS FACILITIES. HAND EXCAVATION IS REQUIRED TO LOCATE AND EXPOSE GAS MAINS PRIOR TO CROSSING AND WORKING WITHIN 5 FEET OF ALL GAS FACILITIES. A MINIMUM OF 5' HORIZONTAL EDGE TO EDGE CLEARANCE AND 24" VERTICAL EDGE TO EDGE CLEARANCE IS REQUIRED FOR HIGH PRESSURE GAS MAINS. CONTRACTOR SHALL NOTIFY Central-Shop-OUC@peoplesgasdelivery.com, A MINIMUM OF 5 BUSINESS DAYS PRIOR TO EXCAVATION TO SET UP ON SITE INSPECTION. PEOPLE'S GAS TO BE ON SITE TO MONITOR CONSTRUCTION ACTIVITIES WHEN WITHIN 5 FEET AND WHENEVER CROSSING HIGH PRESSURE GAS FACILITIES. PIPELINE MARKERS SHALL BE MAINTAINED.

0 20 40 60
SCALE IN FEET

MODEL: Default
FILE NAME: pw:\\PW0.hornershifrin.com:HS_IDOT\Documents\2305600\0-PTB195-007 D1 Paulina Str_Phil Sus\Collins\CAD Sheets\D162K64 - Paulina\D162K64-sht-removal01.dgn

HORNER SHIFRIN
WWW. HORNERSHIFRIN .COM

USER NAME = krkubalanza	DESIGNED - KRK	REVISED -
	DRAWN - RO	REVISED -
PLOT SCALE = 40.0000 ' / in.	CHECKED - BLP	REVISED -
PLOT DATE = 11/5/2025	DATE -	REVISED -

STATE OF ILLINOIS
DEPARTMENT OF TRANSPORTATION

FAI–290 (EISENHOWER EXPRESSWAY) AT PAULINA STREET
ROADWAY REMOVAL PLANS

SCALE: 1" = 20' | SHEET 1 OF 3 SHEETS | STA. 400+00 | TO STA. 408+72

F.A.I. RTE.	SECTION	COUNTY	TOTAL SHEETS	SHEET NO.
290	2019-191-B-R	COOK	265	33
		CONTRACT NO. 62K64		
		ILLINOIS	FED. AID PROJECT	

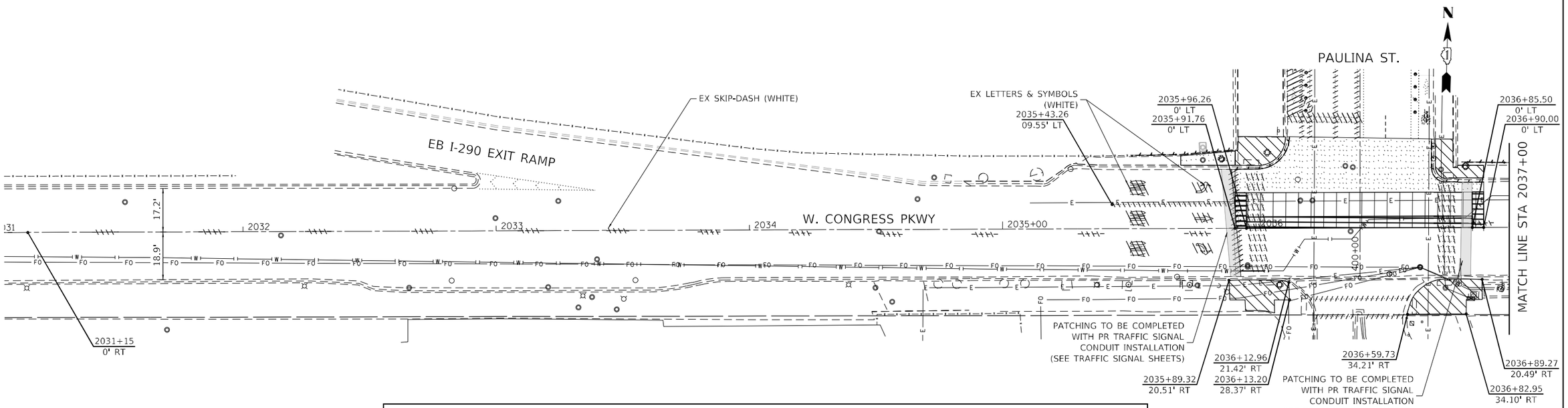

REMOVAL NOTES

THE CONTRACTOR SHALL PATCH FIRST BEFORE MILLING, PATCHES TO BE CONSTRUCTED TO GRADE PER DISTRRICT 1 DETAIL BD-22. PATCHES INSIDE RESURFACING AREA SHALL THEN BE MILLED AND OVERLAYED DURING RESURFACING, UNLESS NOTED OTHERWISE.

REMOVALS LEGEND

- PAVEMENT REMOVAL
- HOT-MIX ASPHALT SURFACE REMOVAL, 2"
- SIDEWALK REMOVAL
- MEDIAN REMOVAL
- HOT-MIX ASPHALT SURFACE REMOVAL - BUTT JOINT
- PR CLASS D, TYPE III PATCHES
- PAVEMENT MARKING REMOVAL - WATERBLASTING
- LINEAR ITEM REMOVAL

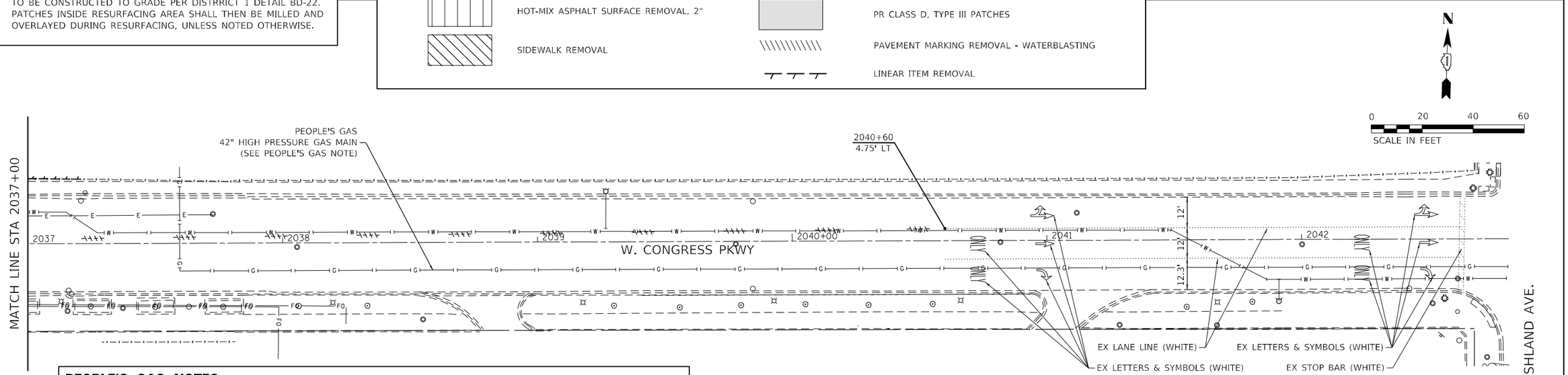

PEOPLE'S GAS NOTES

THIS PROJECT WILL BE PLACED ON PEOPLE'S GAS WATCH & PROJECT. NOTIFY SYSTEM INTEGRITY OPERATIONS SUPERVISOR AT Central-Shop-OUC@peoplesgasdelivery.com A MINIMUM OF 5 BUSINESS DAYS PRIOR TO EXCAVATION TO SET UP ON-SITE INSPECTION.

PEOPLE'S GAS HIGH PRESSURE GAS MAIN IS PRESENT WITHIN AREA OF CONSTRUCTION. USE EXTREME CAUTION NEAR ALL GAS FACILITIES. HAND EXCAVATION IS REQUIRED TO LOCATE AND EXPOSE GAS MAINS PRIOR TO CROSSING AND WORKING WITHIN 5 FEET OF ALL GAS FACILITIES. A MINIMUM OF 5' HORIZONTAL EDGE TO EDGE CLEARANCE AND 24" VERTICAL EDGE TO EDGE CLEARANCE IS REQUIRED FOR HIGH PRESSURE GAS MAINS. CONTRACTOR SHALL NOTIFY Central-Shop-OUC@peoplesgasdelivery.com, A MINIMUM OF 5 BUSINESS DAYS PRIOR TO EXCAVATION TO SET UP ON SITE INSPECTION. PEOPLE'S GAS TO BE ON SITE TO MONITOR CONSTRUCTION ACTIVITIES WHEN WITHIN 5 FEET AND WHENEVER CROSSING HIGH PRESSURE GAS FACILITIES. PIPELINE MARKERS SHALL BE MAINTAINED.

MODEL: Default
FILE NAME: pw:\\PW01.hornershifrin.com:HS IDOT\Documents\230560000-PTB195-007_D1_Paul-Sac_PhII_SubCollins\CAD_Sheets\D162K64_Paulina\D162K64-sht-removal-02.dgn

HORNER SHIFRIN
WWW. HORNERSHIFRIN .COM

USER NAME = krkubalanza	DESIGNED - KRK	REVISED -	
	DRAWN - RO	REVISED -	
PLOT SCALE = 40.0000 ' / in.	CHECKED - BLP	REVISED -	
PLOT DATE = 11/5/2025	DATE -	REVISED -	

STATE OF ILLINOIS
DEPARTMENT OF TRANSPORTATION

VAN BUREN STREET AND CONGRESS PARKWAY
ROADWAY REMOVAL PLANS

SCALE: 1" = 20' | SHEET 2 OF 3 SHEETS | STA. 2031+06 TO STA. 2042+82

F.A.I. RTE.	SECTION	COUNTY	TOTAL SHEETS	SHEET NO.
290	2019-191-B-R	COOK	265	34
		CONTRACT NO. 62K64		
		ILLINOIS	FED. AID PROJECT	

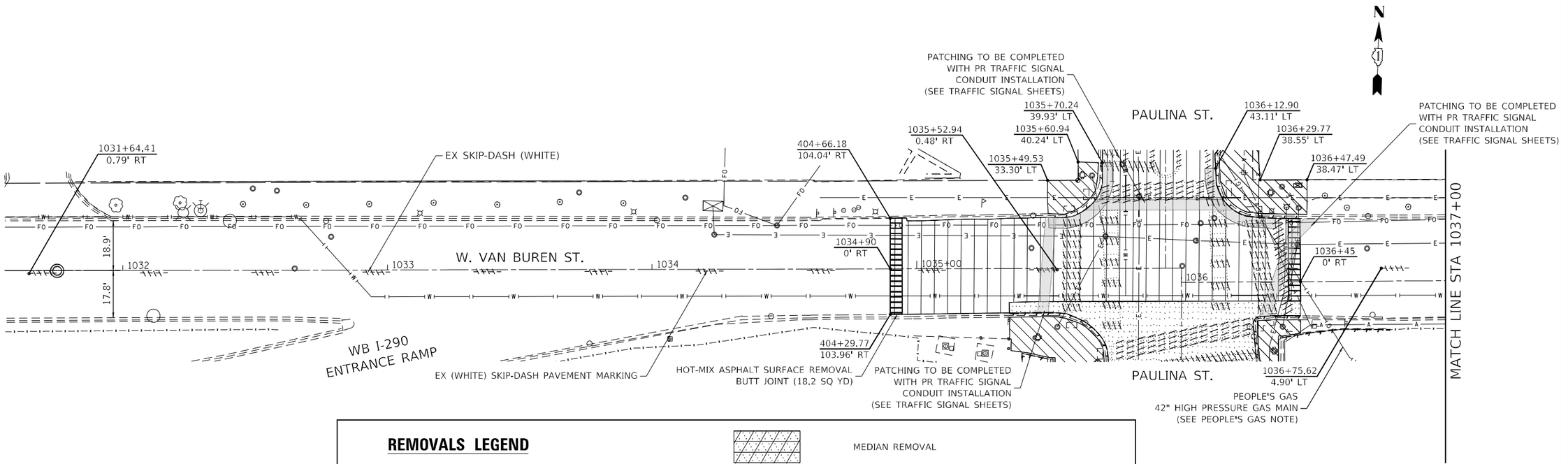

REMOVAL NOTES

THE CONTRACTOR SHALL PATCH FIRST BEFORE MILLING, PATCHES TO BE CONSTRUCTED TO GRADE PER DISTRRICT 1 DETAIL BD-22. PATCHES INSIDE RESURFACING AREA SHALL THEN BE MILLED AND OVERLAYED DURING RESURFACING, UNLESS NOTED OTHERWISE.

REMOVALS LEGEND

- PAVEMENT REMOVAL
- HOT-MIX ASPHALT SURFACE REMOVAL, 2"
- SIDEWALK REMOVAL
- MEDIAN REMOVAL
- HOT-MIX ASPHALT SURFACE REMOVAL - BUTT JOINT
- PR CLASS D, TYPE III PATCHES
- PAVEMENT MARKING REMOVAL - WATERBLASTING
- LINEAR ITEM REMOVAL

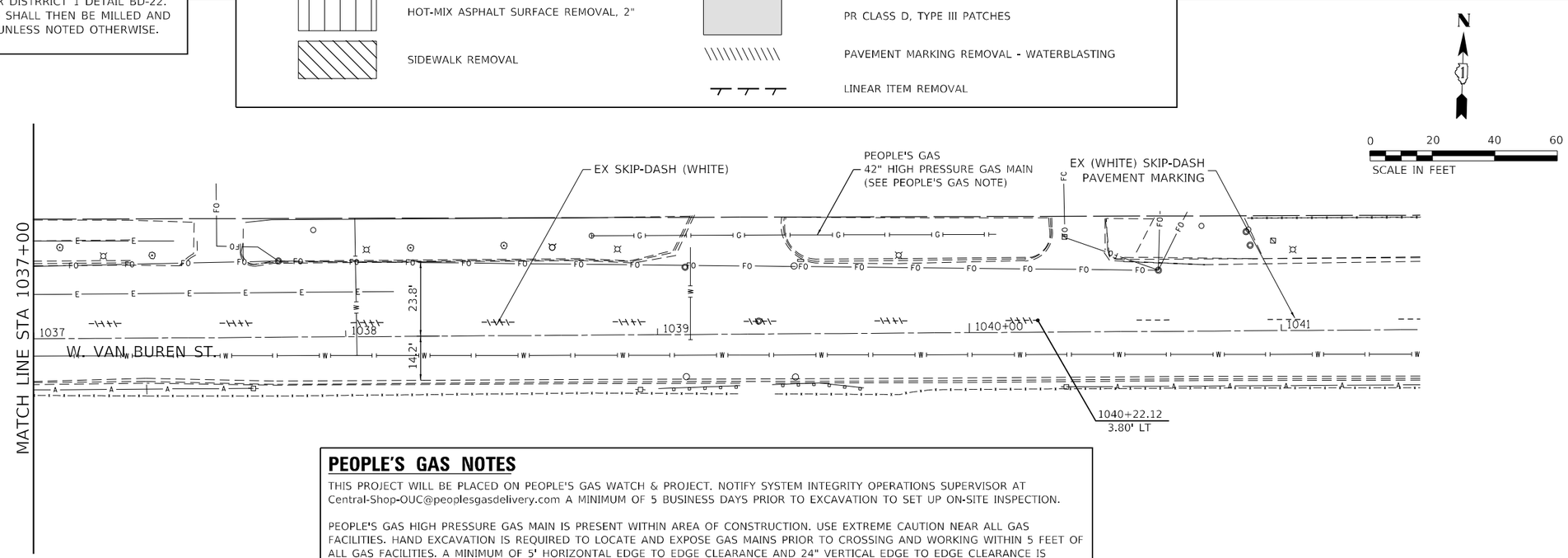

PEOPLE'S GAS NOTES

THIS PROJECT WILL BE PLACED ON PEOPLE'S GAS WATCH & PROJECT. NOTIFY SYSTEM INTEGRITY OPERATIONS SUPERVISOR AT Central-Shop-OUC@peoplesgasdelivery.com A MINIMUM OF 5 BUSINESS DAYS PRIOR TO EXCAVATION TO SET UP ON-SITE INSPECTION.

PEOPLE'S GAS HIGH PRESSURE GAS MAIN IS PRESENT WITHIN AREA OF CONSTRUCTION. USE EXTREME CAUTION NEAR ALL GAS FACILITIES. HAND EXCAVATION IS REQUIRED TO LOCATE AND EXPOSE GAS MAINS PRIOR TO CROSSING AND WORKING WITHIN 5 FEET OF ALL GAS FACILITIES. A MINIMUM OF 5' HORIZONTAL EDGE TO EDGE CLEARANCE AND 24" VERTICAL EDGE TO EDGE CLEARANCE IS REQUIRED FOR HIGH PRESSURE GAS MAINS. CONTRACTOR SHALL NOTIFY Central-Shop-OUC@peoplesgasdelivery.com, A MINIMUM OF 5 BUSINESS DAYS PRIOR TO EXCAVATION TO SET UP ON SITE INSPECTION. PEOPLE'S GAS TO BE ON SITE TO MONITOR CONSTRUCTION ACTIVITIES WHEN WITHIN 5 FEET AND WHENEVER CROSSING HIGH PRESSURE GAS FACILITIES. PIPELINE MARKERS SHALL BE MAINTAINED.

MODEL: Default
FILE NAME: pw:\\PW01.hornershifrin.com:HS IDOT\Documents\230560000-PTB195-007_D1_Paul-Sac_Phil_SubCollins\CAD_Sheets\D162K64_Paulina\D162K64-sht-removal-03.dgn

HORNER SHIFRIN
WWW.HORNERSHIFRIN.COM

USER NAME = krkubalanza	DESIGNED -	REVISED -	
	DRAWN -	REVISED -	
PLOT SCALE = 40.0000 ' / in.	CHECKED -	REVISED -	
PLOT DATE = 11/5/2025	DATE -	REVISED -	

STATE OF ILLINOIS
DEPARTMENT OF TRANSPORTATION

FAI–290 (EISENHOWER EXPRESSWAY) AT PAULINA STREET
ROADWAY REMOVAL PLANS

SCALE: 1" = 20' | SHEET 3 OF 3 SHEETS | STA. 1031+55 TO STA. 1041+44

F.A.I. RTE.	SECTION	COUNTY	TOTAL SHEETS	SHEET NO.
290	2019-191-B-R	COOK	265	35
		CONTRACT NO. 62K64		
		ILLINOIS	FED. AID PROJECT	

PROPOSED LEGEND

- RECONSTRUCTION
  - P HMA SC IL-9.5 E N70, 2"
  - PCC BASE COURSE 10"
  - AGGREGATE SUBBASE, TY B 6"
  - GEOTECHNICAL FABRIC FOR GROUND STABILIZATION
- PR HMA SURF REM 2" / PR P HMA SC IL-9.5 E N70, 2"
- CONCRETE MEDIAN (SPECIAL) (SEE ISOMETRIC DETAILS)
- PR PC CONC SIDEWALK 8

SCALE IN FEET 0 20 40 60

EXISTING CC&G TO REMAIN
PR CH LK FENCE 6 STA. 2035+50.92 TO STA. 2035+90.92
PR COMB CC&G TBV.12 CDOT
PR PC CONC SIDEWALK 8 AND DETECTABLE WARN SPL
PR FLEXIBLE DELINEATORS, 14 EACH (20' C-C)
PR FENCE ON PARAPET
PR PEDESTRIAN ACCESS ROUTE
PR BIKE LANE
PR RAISED MEDIAN
CTA BLUE LINE ILLINOIS MEDICAL DISTRICT (NO IMPROVEMENTS)
PR DETECTABLE DIRECTIONAL SURFACE TILE (350 FT) STA. 400+65.28 TO STA. 404+14.93
PR FLEXIBLE DELINEATORS, 20 EACH (5' C-C)
PR FLEXIBLE DELINEATORS, 6 EACH (5' C-C)
PR FLEXIBLE DELINEATORS, 10 EACH (5' C-C)
PR FLEXIBLE DELINEATORS, 22 EACH (5' C-C)
PR RAISED BIKE LANE
PR FLEXIBLE DELINEATORS, 14 EACH (20' C-C)
PR DETECTABLE DIRECTIONAL SURFACE TILE (274 FT) STA. 400+95.27 TO STA. 403+68.18
PR PAULINA ST STA 404+47.24 / PR VAN BUREN ST STA 1035+94.00
PR CH LK FENCE 6 STA. 1035+39.24 TO STA. 1035+49.10
PR PC CONC SIDEWALK 8 AND DETECTABLE WARN SPL
PR COMB CC&G TBV.12 CDOT
PR PAULINA ST STA 404+41.86 / PR VAN BUREN ST STA 1036+00.00
PR PVT CON PCC BR APP SL; SEE STD 420401-13
PR CH LK FENCE 6 STA. 1036+38.25 TO STA. 1036+78.25
PR COMB CC&G TBV.12 CDOT
PR PC CONC SIDEWALK 8 AND DETECTABLE WARN SPL
PR PAULINA ST STA 400+19.11 / PR CONGRESS PKWY STA 2036+41.15
PR PC CONC SIDEWALK 8
PR DETECTABLE WARN SPL
PR CH LK FENCE 6 STA. 2036+81.10 TO STA. 2037+21.10
PR COMB CC&G TBV.12 CDOT

℄ W. CONGRESS PARKWAY
W. CONGRESS PKWY
EX ROW
400+32.94 49.39' LT
400+19.11 49.39' LT
400+33.11 0' RT
BEGIN ROADWAY IMPROVEMENTS STA. 400+00
400+00
400+33.28 48.80' RT
+50.28 23' LT
+50.28 11' RT
+95.27 12' RT
+95.67
℄ PAULINA STREET
PAULINA ST
401
402
403
1034+90 17.22' RT
1034+90 19.13' LT
℄ W. VAN BUREN STREET
W. VAN BUREN ST.
EXISTING CC&G TO REMAIN
404+34.36 65.06' LT
+87.81
+13.18 12' RT
+13.18 19' RT
1035+00
1036
17-18-231-012 EX ROW
+87.11 23.85' LT
+28.89 16.31' LT
+99.65 0' LT
405+00
PR COMB CC&G TBV.12 CDOT
PAULINA ST
+99.65 25.73' LT
EX ROW
PEOPLE'S GAS 42" HIGH PRESSURE GAS MAIN (SEE PEOPLE'S GAS NOTE)
MATCH LINE STA 405+50
+45 13' RT
+45 24.03' LT
5.6'
31.4'
PR PC CONC SIDEWALK 8 AND DETECTABLE WARN SPL

PEOPLE'S GAS NOTES

THIS PROJECT WILL BE PLACED ON PEOPLE'S GAS WATCH & PROJECT. NOTIFY SYSTEM INTEGRITY OPERATIONS SUPERVISOR AT Central-Shop-OUC@peoplesgasdelivery.com A MINIMUM OF 5 BUSINESS DAYS PRIOR TO EXCAVATION TO SET UP ON-SITE INSPECTION.

PEOPLE'S GAS HIGH PRESSURE GAS MAIN IS PRESENT WITHIN AREA OF CONSTRUCTION. USE EXTREME CAUTION NEAR ALL GAS FACILITIES. HAND EXCAVATION IS REQUIRED TO LOCATE AND EXPOSE GAS MAINS PRIOR TO CROSSING AND WORKING WITHIN 5 FEET OF ALL GAS FACILITIES. A MINIMUM OF 5' HORIZONTAL EDGE TO EDGE CLEARANCE AND 24" VERTICAL EDGE TO EDGE CLEARANCE IS REQUIRED FOR HIGH PRESSURE GAS MAINS. CONTRACTOR SHALL NOTIFY Central-Shop-OUC@peoplesgasdelivery.com, A MINIMUM OF 5 BUSINESS DAYS PRIOR TO EXCAVATION TO SET UP ON SITE INSPECTION. PEOPLE'S GAS TO BE ON SITE TO MONITOR CONSTRUCTION ACTIVITIES WHEN WITHIN 5 FEET AND WHENEVER CROSSING HIGH PRESSURE GAS FACILITIES. PIPELINE MARKERS SHALL BE MAINTAINED.

NOTES

1. REFER TO ELEVATION DETAIL SHEETS FOR PROPOSED SLOPES, ELEVATIONS, AND CRITICAL GEOMETRIC INFORMATION.
2. CONTINGENT QUANTITIES FOR CLASS D PATCHING TYPES I AND II, 10" WITH 2" HMA OVERLAY PROVIDED. RESIDENT ENGINEER TO DETERMINE LOCATION AND SIZES FOR CLASS D PATCHES WITHIN RESURFACING LIMITS.
3. REFER TO DETECTABLE DIRECTIONAL SURFACE TILE SCHEDULE FOR STATION AND OFFSETS OF THE CENTER OF THE TILES.

REFERENCE STRUCTURAL GENERAL PLAN AND ELEVATION SHEET

BEGIN RECONSTRUCTION STA 400+33.11 ELEV 592.65
VPI STATION 400+98.33 ELEVATION 595.34
+4.28%
+3.60%
VPI STA 400+37.39 ELEVATION 592.73
+21.80 EL 596.18
SSD = 60'
ex = -1.98'
K = 31
220.00' VC
PR PROFILE GRADE LINE AT PR ℄ PAULINA ST
EX PROFILE GRADE LINE AT PR ℄ PAULINA ST
VPI STA 402+31.80 ELEVATION 600.14
+3.60%
-2.60%
+41.80 EL 596.18
END RECONSTRUCTION BEGIN RESURFACING STA 404+34.73
VPI STA 403+68.34 ELEVATION 595.23
-2.60%
-4.22%
+93.53 EL 594.16
ex = 0.38
K = 21
80.00' VC
-4.22%
-0.40%
VPI STA 404+33.53 ELEVATION 592.47
+73.53 EL 592.31
END RESURFACING STA 404+99.65

592.04 593.23 593.26 595.43 595.40 597.06 597.07 598.03 598.00 598.17 598.11 597.33 597.40 595.88 595.89 593.91 593.90 592.55 592.54 592.32 592.66

400+00 400+50 401+00 401+50 402+00 402+50 403+00 403+50 404+00 404+50 405+00 405+50

606 604 602 600 598 596 594 592 590

PROFILE — SURVEYED — PLOTTED — CHECKED — NOT CHECKED — NOTE BOOK — NO. — BY — DATE

PLAN — SURVEYED — PLOTTED — CHECKED — NOT CHECKED — R.O.W. CHECKED — CADD FILE NAME — NOTE BOOK — NO. — BY — DATE

MODEL: Default
FILE NAME: pw:\\PW01.hornershifrin.com:HS IDOT\Documents\s2309660000-PTB195-007_D1_Paul-Sac_PhII_SouCollins\CAD_Sheets\D162K64_PaulinaD162K64-sht-plan.dgn

HORNER SHIFRIN
WWW. HORNERSHIFRIN .COM

USER NAME = krkubalanza	DESIGNED -	REVISED -
	DRAWN -	REVISED -
PLOT SCALE = 40.0000 ' / in.	CHECKED -	REVISED -
PLOT DATE = 11/5/2025	DATE -	REVISED -

STATE OF ILLINOIS
DEPARTMENT OF TRANSPORTATION

FAI–290 (EISENHOWER EXPRESSWAY) AT PAULINA STREET
PLAN AND PROFILE

SCALE: | SHEET 1 OF SHEETS | STA. | TO STA.

F.A. RTE.	SECTION	COUNTY	TOTAL SHEETS	SHEET NO.
			265	36
		CONTRACT NO.		
		ILLINOIS	FED. AID PROJECT	

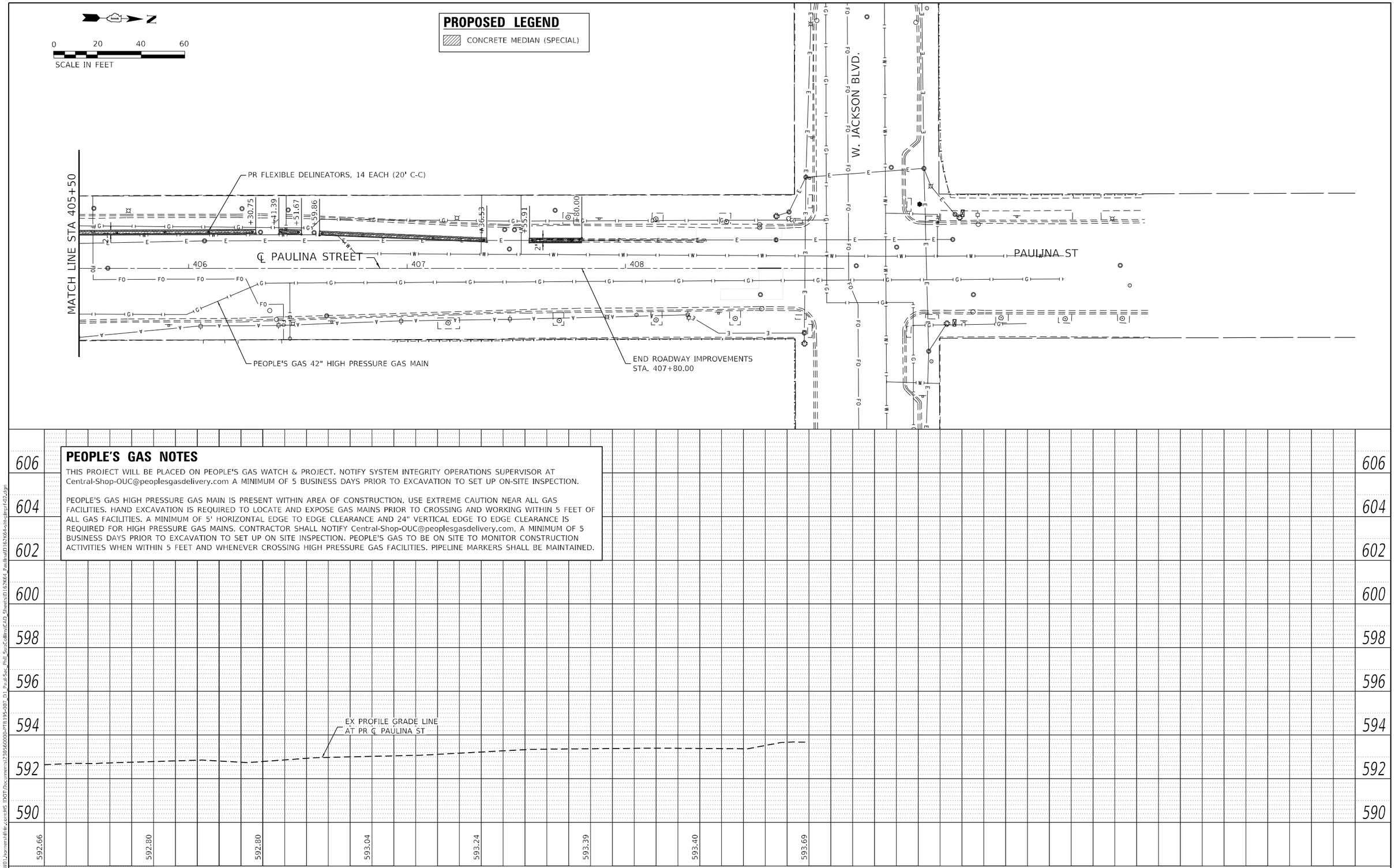

PEOPLE'S GAS NOTES

THIS PROJECT WILL BE PLACED ON PEOPLE'S GAS WATCH & PROJECT. NOTIFY SYSTEM INTEGRITY OPERATIONS SUPERVISOR AT Central-Shop-OUC@peoplesgasdelivery.com A MINIMUM OF 5 BUSINESS DAYS PRIOR TO EXCAVATION TO SET UP ON-SITE INSPECTION.

PEOPLE'S GAS HIGH PRESSURE GAS MAIN IS PRESENT WITHIN AREA OF CONSTRUCTION. USE EXTREME CAUTION NEAR ALL GAS FACILITIES. HAND EXCAVATION IS REQUIRED TO LOCATE AND EXPOSE GAS MAINS PRIOR TO CROSSING AND WORKING WITHIN 5 FEET OF ALL GAS FACILITIES. A MINIMUM OF 5' HORIZONTAL EDGE TO EDGE CLEARANCE AND 24" VERTICAL EDGE TO EDGE CLEARANCE IS REQUIRED FOR HIGH PRESSURE GAS MAINS. CONTRACTOR SHALL NOTIFY Central-Shop-OUC@peoplesgasdelivery.com, A MINIMUM OF 5 BUSINESS DAYS PRIOR TO EXCAVATION TO SET UP ON SITE INSPECTION. PEOPLE'S GAS TO BE ON SITE TO MONITOR CONSTRUCTION ACTIVITIES WHEN WITHIN 5 FEET AND WHENEVER CROSSING HIGH PRESSURE GAS FACILITIES. PIPELINE MARKERS SHALL BE MAINTAINED.

PLAN: SURVEYED / PLOTTED / ALIGNMENT CHECKED / RT. OF WAY CHECKED / CADD FILE NAME / NOTE BOOK NO. / BY / DATE

PROFILE: SURVEYED / PLOTTED / GRADES CHECKED / B.M. NOTED / STRUCTURE NOTATIONS CHKD / NOTE BOOK NO. / BY / DATE

MODEL: Default
FILE NAME: pw:\\PW01.hornershifrin.com:HS IDOT\Documents\230560000-PTB195-007_D1_Paul-Sac_Phil_SubCollins\CAD_Sheets\D162K64_Paulina\D162K64-sht-plnprf-02.dgn

HORNER SHIFRIN
WWW.HORNERSHIFRIN.COM

USER NAME = krkubalanza	DESIGNED - KRK	REVISED -	
	DRAWN - RO	REVISED -	
PLOT SCALE = 40.0000 ' / in.	CHECKED - BLP	REVISED -	
PLOT DATE = 11/5/2025	DATE -	REVISED -	

STATE OF ILLINOIS
DEPARTMENT OF TRANSPORTATION

FAI–290 (EISENHOWER EXPRESSWAY) AT PAULINA STREET
PLAN AND PROFILE

SCALE: 1" = 20' | SHEET OF SHEETS | STA. TO STA.

F.A.I. RTE.	SECTION	COUNTY	TOTAL SHEETS	SHEET NO.
290	2019-191-B-R	COOK	265	37
		CONTRACT NO. 62K64		
		ILLINOIS FED. AID PROJECT		

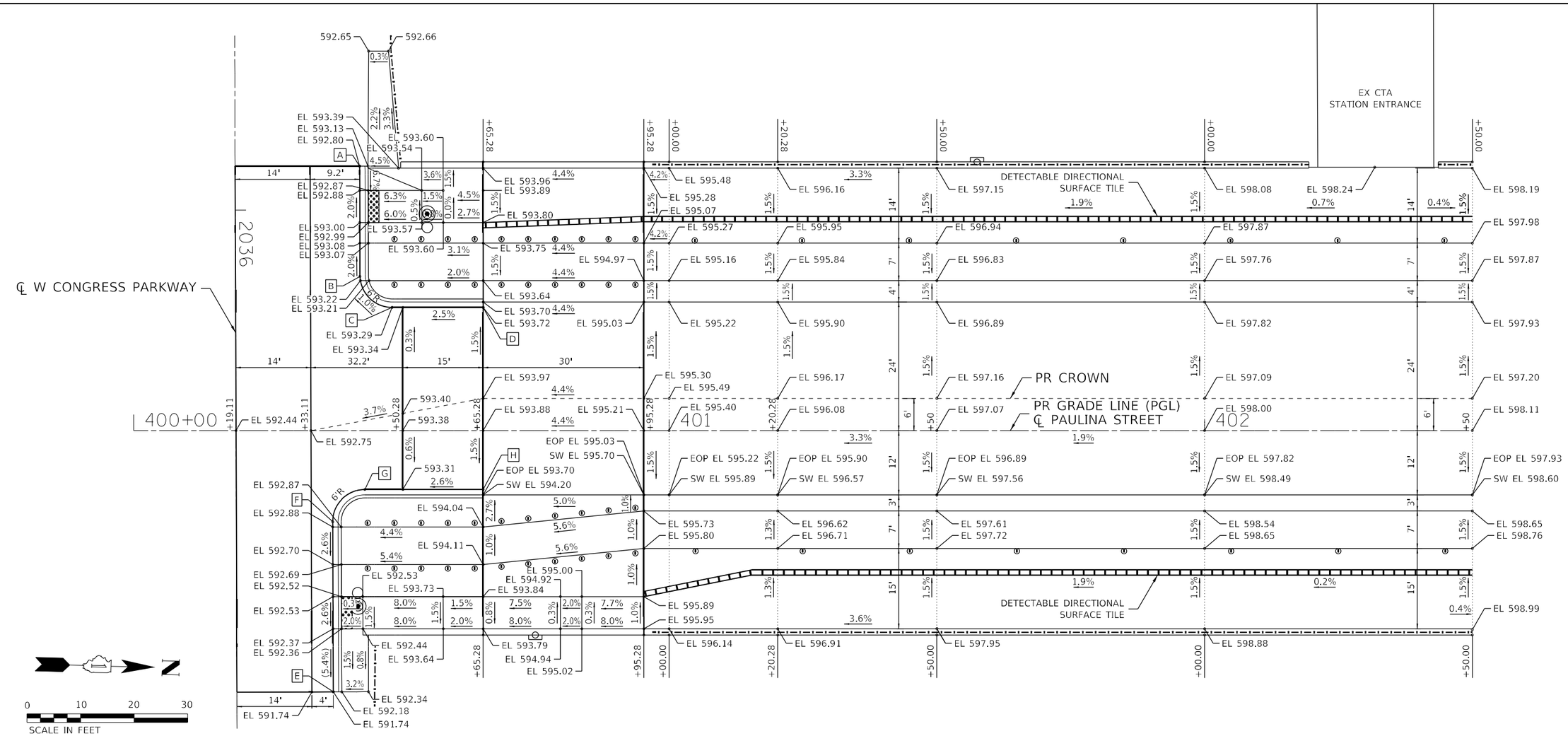

NOTES

1. ALL PROPOSED ELEVATIONS ARE AT TOP OF FINISHED SURFACE UNLESS OTHERWISE NOTED. ELEVATIONS ARE BASED ON NORTH AMERICAN VERTICAL DATUM OF 1988 (NAVD88).
2. REFER TO ADA DETAIL SHEETS FOR ANY MISSING ELEVATIONS, SLOPES, OR GEOMETRIC INFORMATION.

GEOMETRIC CRITICAL POINTS AND ELEVATIONS

POINT	STA.	OFFSET	ELEVATION
A	400+42.19	49.39' LT	592.80
B	400+42.26	28.78' LT	593.20
C	400+48.26	23.00' LT	593.29
D	400+65.28	23.00' LT	593.72
E	400+37.28	48.79' RT	591.74
F	400+37.17	17.02' RT	592.91
G	400+43.17	11.00' RT	593.14
H	400+65.28	11.00' RT	593.72

MODEL: Default
FILE NAME: pw:\\PW01.hornershifrin.com:HS DOT\Documents\2305600\0-PTB195-007 D1 Pa.dgSec_Plot_St.uCollinsCAD Sheets\D162K64_PaulinaD162K64-alts-detail01.dgn

HORNER SHIFRIN
WWW. HORNERSHIFRIN .COM

USER NAME = krkubalanza	DESIGNED -	REVISED -
	DRAWN -	REVISED -
PLOT SCALE = 20.0000 ' / in.	CHECKED -	REVISED -
PLOT DATE = 9/4/2025	DATE -	REVISED -

STATE OF ILLINOIS
DEPARTMENT OF TRANSPORTATION

FAI–290 (EISENHOWER EXPRESSWAY) AT PAULINA STREET
ELEVATION DETAIL SHEET

SCALE: 1" = 10' | SHEET 1 OF 2 SHEETS | STA. | TO STA.

F.A.I. RTE.	SECTION	COUNTY	TOTAL SHEETS	SHEET NO.
290	2019-191-B-R	COOK	265	38
		CONTRACT NO. 62K64		
		ILLINOIS	FED. AID PROJECT	

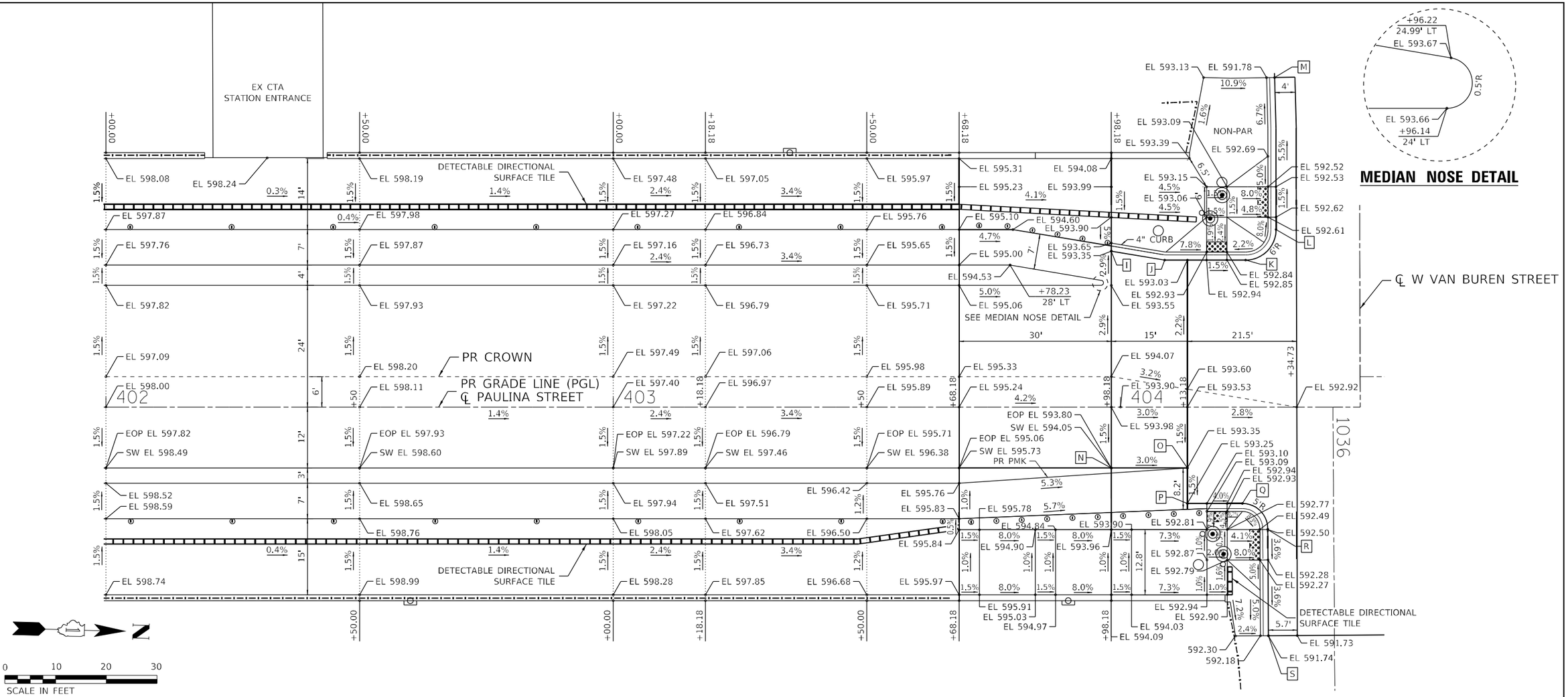

MEDIAN NOSE DETAIL

NOTES

1. ALL PROPOSED ELEVATIONS ARE AT TOP OF FINISHED SURFACE UNLESS OTHERWISE NOTED. ELEVATIONS ARE BASED ON NORTH AMERICAN VERTICAL DATUM OF 1988 (NAVD88).
2. REFER TO ADA DETAIL SHEETS FOR ANY MISSING ELEVATIONS, SLOPES, OR GEOMETRIC INFORMATION.

GEOMETRIC CRITICAL POINTS AND ELEVATIONS

POINT	STA.	OFFSET	ELEVATION
I	403+98.18	30.75' LT	593.35
J	404+08.70	28.99' LT	593.13
K	404+24.66	28.99' LT	592.79
L	404+30.66	35.01' LT	592.66
M	404+30.36	64.96' LT	591.34
N	403+98.18	12.00' RT	593.80 & 594.05
O	404+13.18	12.00' RT	593.35
P	404+13.18	19.00' RT	593.25
Q	404+24.02	19.00' RT	592.82
R	404+29.03	24.12' RT	592.50
S	404+29.16	45.09' RT	591.74

MODEL: Default
FILE NAME: pw:\\PW01.hornershifrin.com:HS IDOT Documents\239560000-PTB 195-007_01_Pro_HSoc_Phtl_SuiCollinsCAD Sheets\D162K64_PaulinaID162K64-alts-detail02.dgn

HORNER SHIFRIN
WWW. HORNERSHIFRIN .COM

USER NAME = krkubalanza	DESIGNED -	REVISED -	
	DRAWN -	REVISED -	
PLOT SCALE = 20.0000 ' / in.	CHECKED -	REVISED -	
PLOT DATE = 9/4/2025	DATE -	REVISED -	

STATE OF ILLINOIS
DEPARTMENT OF TRANSPORTATION

FAI–290 (EISENHOWER EXPRESSWAY) AT PAULINA STREET
ELEVATION DETAIL SHEET

SCALE: 1" = 10' | SHEET 2 OF 2 SHEETS | STA. | TO STA.

F.A.I. RTE.	SECTION	COUNTY	TOTAL SHEETS	SHEET NO.
290	2019-191-B-R	COOK	265	39
		CONTRACT NO. 62K64		
		ILLINOIS	FED. AID PROJECT	

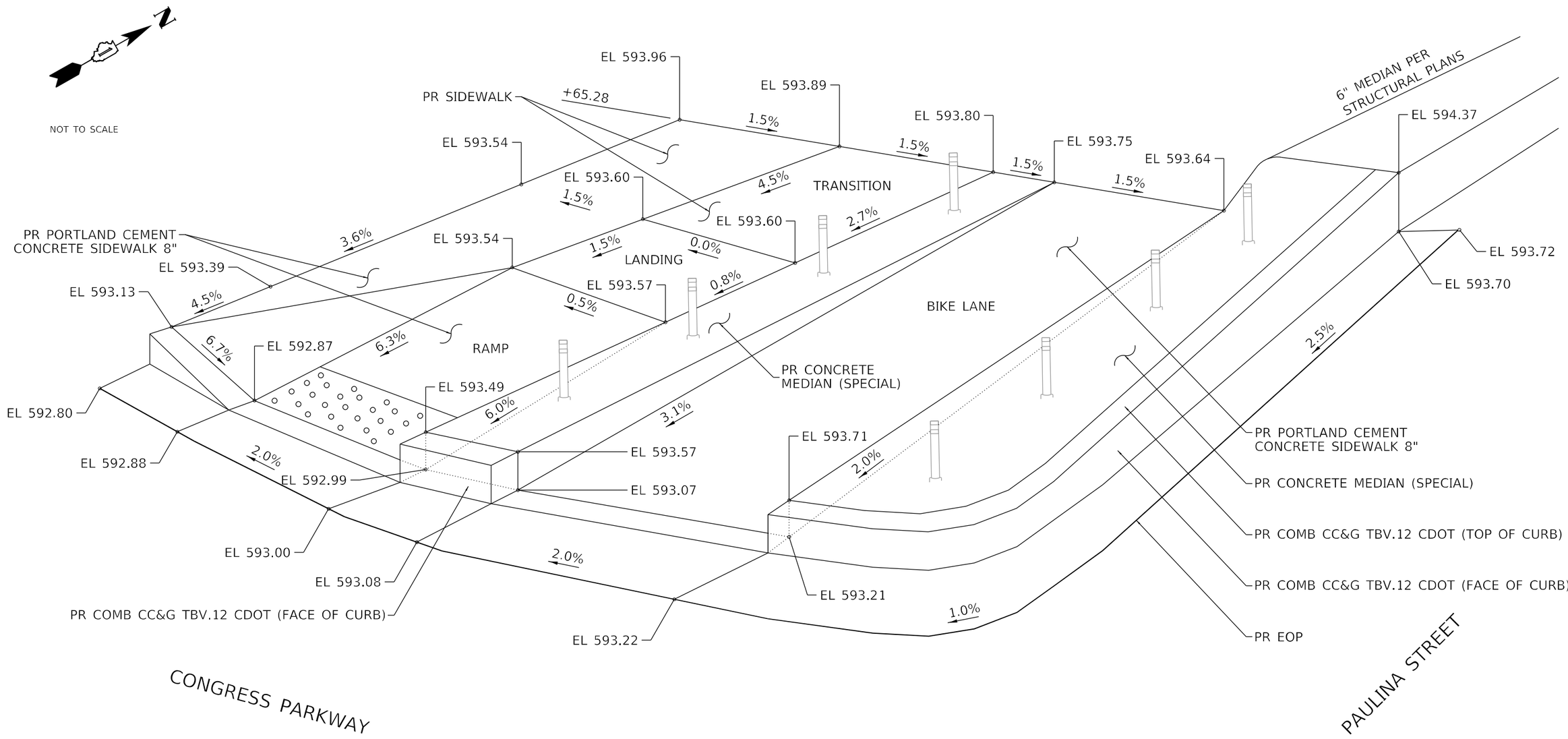

ISOMETRIC DETAIL – NORTHWEST CORNER OF CONGRESS PARKWAY

THIS ISOMETRIC DETAIL WAS CREATED WITH THE INTENT TO DISPLAY THE ELEVATION DIFFERENCES AND CURB HEIGHTS. THE CONTRACTOR IS TO INSTALL AN 8" CONCRETE MEDIAN, 0"-6" EXPOSED PER ISOMETRIC, TO SEPARATE THE PEDESTRIAN ACCESS ROUTE AND THE BIKE LANE.

THIS DETAIL ALSO SHOWS THE TRANSITION FROM THE SUPERSTRUCTURE MEDIAN, SEPARATING SB THROUGH LANE AND BIKE LANE, TO THE COMB CC&G TBV.12 CDOT. CONTRACTOR IS TO TRANSITION THE MEDIAN TO THE C&G HEIGHT OVER A TEN FOOT TRANSITION. ADDITIONAL COMPENSATION FOR THE TRANSITION WILL NOT BE PROVIDED.

MODEL: Default
FILE NAME: pw:\\PW01.hornershifrin.com:HS DOT\Documents\2305600\0-PTB195-007_01_PrjJrSec_PltT_SuiCollins\CAD Sheets\D162K64_PaulinaID162K64-ihs-detail-03.dgn

HORNER SHIFRIN
WWW. HORNERSHIFRIN .COM

USER NAME = krkubalanza	DESIGNED -	REVISED -
	DRAWN -	REVISED -
PLOT SCALE = 20.0000 ' / in.	CHECKED -	REVISED -
PLOT DATE = 9/5/2025	DATE -	REVISED -

STATE OF ILLINOIS
DEPARTMENT OF TRANSPORTATION

ISOMETRIC DETAIL
CONGRESS PARKWAY – NORTHWEST CORNER

SCALE: N.T.S. | SHEET OF SHEETS | STA. | TO STA.

F.A.I. RTE.	SECTION	COUNTY	TOTAL SHEETS	SHEET NO.
290	2019-191-B-R	COOK	265	40
		CONTRACT NO. 62K64		
	ILLINOIS	FED. AID PROJECT		

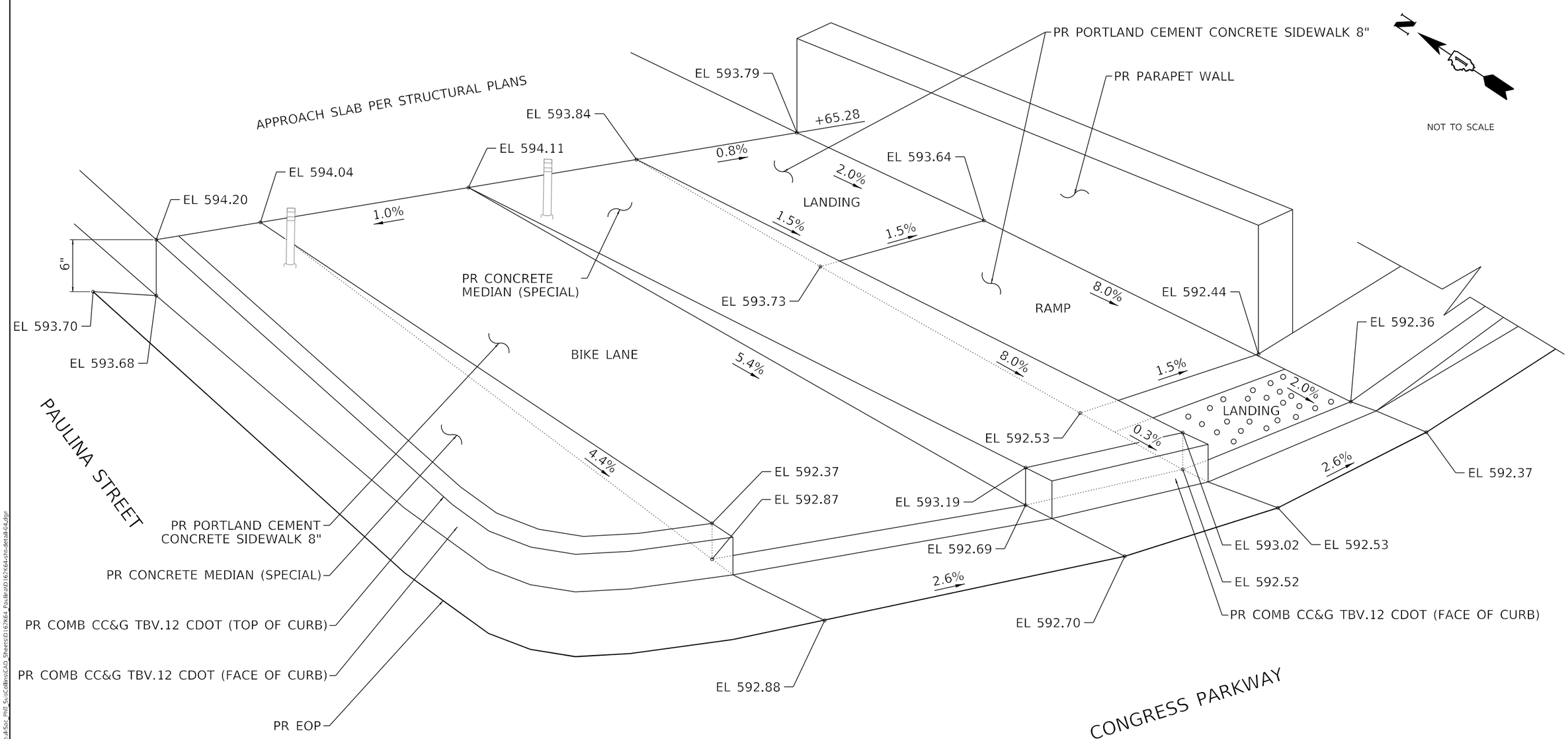

ISOMETRIC DETAIL – NORTHEAST CORNER OF CONGRESS PARKWAY

THIS ISOMETRIC DETAIL WAS CREATED WITH THE INTENT TO DISPLAY THE ELEVATION DIFFERENCES AND CURB HEIGHTS. THE CONTRACTOR IS TO INSTALL AN 8" CONCRETE MEDIAN, 0"-6" EXPOSED PER ISOMETRIC, TO SEPARATE THE PEDESTRIAN ACCESS ROUTE AND THE BIKE LANE.

THIS DETAIL ALSO SHOWS THE TRANSITION FROM THE SUPERSTRUCTURE MEDIAN, SEPARATING SB THROUGH LANE AND BIKE LANE, TO THE COMB CC&G TBV.12 CDOT. CONTRACTOR IS TO TRANSITION THE MEDIAN TO THE C&G HEIGHT OVER A TEN FOOT TRANSITION. ADDITIONAL COMPENSATION FOR THE TRANSITION WILL NOT BE PROVIDED.

MODEL: Default
FILE NAME: zw:\\PW01\Jhornershifrin.com\HS IDOT Documents\2 19056000-PTB 195-007 - D1 PcJLSsc - Phil_SuscCollins\CAD Sheets\D162K64_Paulina\D162K64-shts-detail04.dgn

HORNER SHIFRIN WWW. HORNERSHIFRIN .COM	USER NAME = krkubalanza	DESIGNED -	REVISED -
		DRAWN -	REVISED -
	PLOT SCALE = 20.0000 ' / in.	CHECKED -	REVISED -
	PLOT DATE = 9/5/2025	DATE -	REVISED -

STATE OF ILLINOIS
DEPARTMENT OF TRANSPORTATION

ISOMETRIC DETAIL
CONGRESS PARKWAY – NORTHEAST CORNER

SCALE: N.T.S. | SHEET OF SHEETS | STA. | TO STA.

F.A.I. RTE.	SECTION	COUNTY	TOTAL SHEETS	SHEET NO.
290	2019-191-B-R	COOK	265	41
		CONTRACT NO. 62K64		
	ILLINOIS	FED. AID PROJECT		

NOT TO SCALE

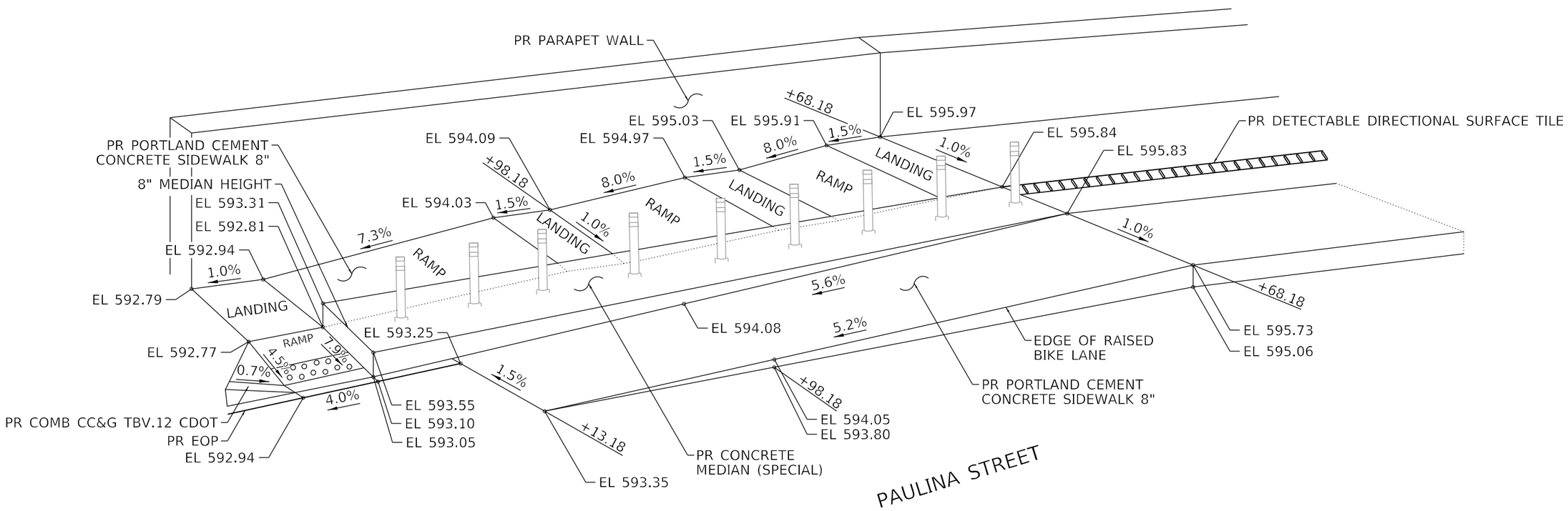

ISOMETRIC DETAIL – SOUTHEAST CORNER OF VAN BUREN STREET

THIS ISOMETRIC DETAIL WAS CREATED WITH THE INTENT TO DISPLAY THE ELEVATION DIFFERENCES AND CURB HEIGHTS. THE CONTRACTOR IS TO INSTALL AN 8" CONCRETE MEDIAN, 0"-8" EXPOSED PER ISOMETRIC, TO SEPARATE THE PEDESTRIAN ACCESS ROUTE AND THE BIKE LANE.

MODEL: Default
FILE NAME: pw:\\PW01.hornershifrin.com:HS IDOT\Documents\30906000-PTB195-007_D1_PrJtSac_Plnt_SuiteCollins\CAD Sheets\D162K64_PaulinaStD162K64-str-detail-05.dgn

HORNER SHIFRIN
WWW. HORNERSHIFRIN .COM

USER NAME = krkubalanza	DESIGNED -	REVISED -
	DRAWN -	REVISED -
PLOT SCALE = 20.0000 ' / in.	CHECKED -	REVISED -
PLOT DATE = 9/5/2025	DATE -	REVISED -

STATE OF ILLINOIS
DEPARTMENT OF TRANSPORTATION

ISOMETRIC DETAIL
VAN BUREN STREET – SOUTHEAST CORNER

SCALE: N.T.S. | SHEET OF SHEETS | STA. | TO STA.

F.A.J. RTE.	SECTION	COUNTY	TOTAL SHEETS	SHEET NO.
290	2019-191-B-R	COOK	265	42
		CONTRACT NO. 62K64		
		ILLINOIS	FED. AID PROJECT	

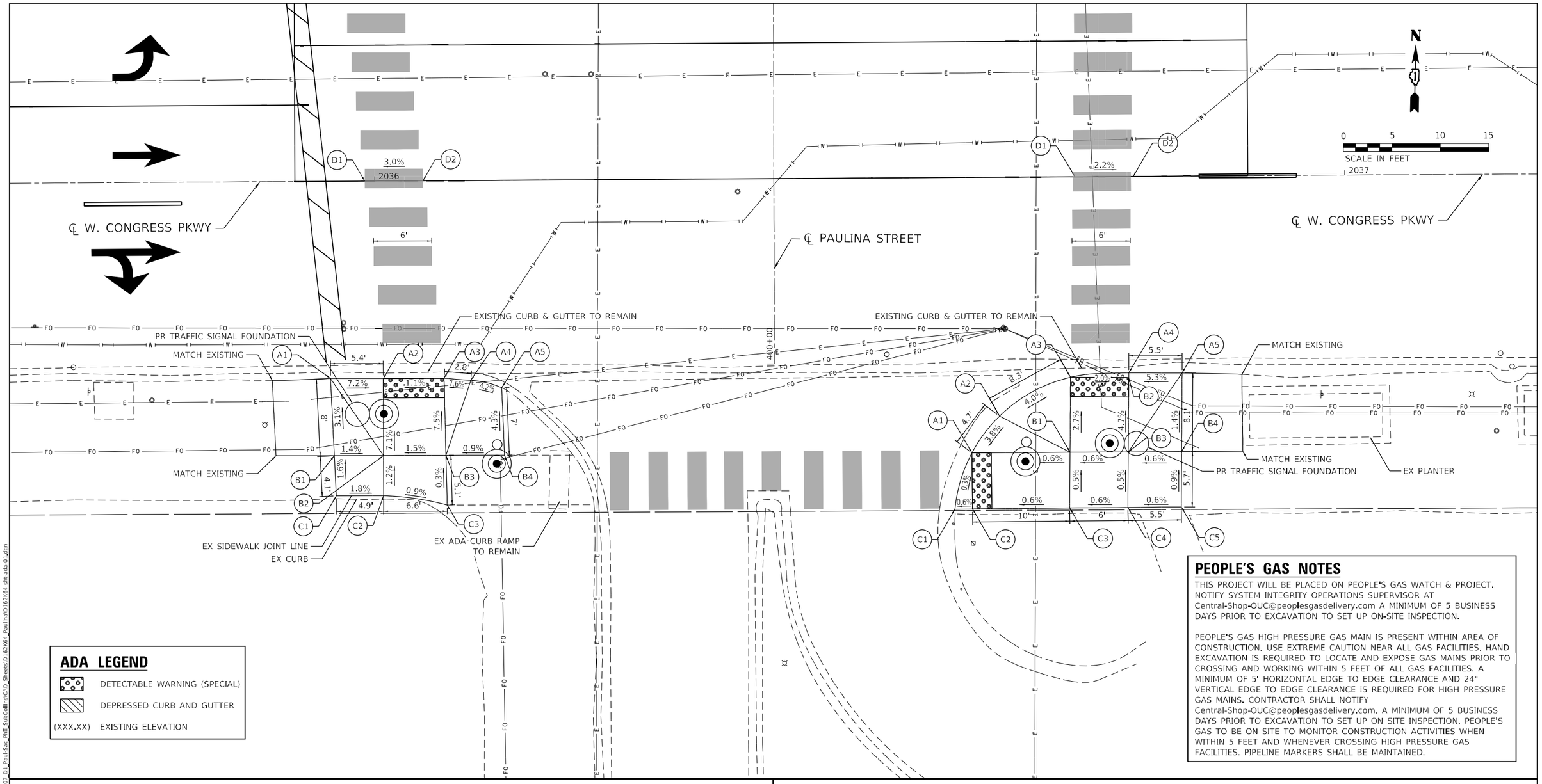

ADA LEGEND

- DETECTABLE WARNING (SPECIAL)
- DEPRESSED CURB AND GUTTER
- (XXX.XX) EXISTING ELEVATION

PEOPLE'S GAS NOTES

THIS PROJECT WILL BE PLACED ON PEOPLE'S GAS WATCH & PROJECT. NOTIFY SYSTEM INTEGRITY OPERATIONS SUPERVISOR AT Central-Shop-OUC@peoplesgasdelivery.com A MINIMUM OF 5 BUSINESS DAYS PRIOR TO EXCAVATION TO SET UP ON-SITE INSPECTION.

PEOPLE'S GAS HIGH PRESSURE GAS MAIN IS PRESENT WITHIN AREA OF CONSTRUCTION. USE EXTREME CAUTION NEAR ALL GAS FACILITIES. HAND EXCAVATION IS REQUIRED TO LOCATE AND EXPOSE GAS MAINS PRIOR TO CROSSING AND WORKING WITHIN 5 FEET OF ALL GAS FACILITIES. A MINIMUM OF 5' HORIZONTAL EDGE TO EDGE CLEARANCE AND 24" VERTICAL EDGE TO EDGE CLEARANCE IS REQUIRED FOR HIGH PRESSURE GAS MAINS. CONTRACTOR SHALL NOTIFY Central-Shop-OUC@peoplesgasdelivery.com. A MINIMUM OF 5 BUSINESS DAYS PRIOR TO EXCAVATION TO SET UP ON SITE INSPECTION. PEOPLE'S GAS TO BE ON SITE TO MONITOR CONSTRUCTION ACTIVITIES WHEN WITHIN 5 FEET AND WHENEVER CROSSING HIGH PRESSURE GAS FACILITIES. PIPELINE MARKERS SHALL BE MAINTAINED.

ADA ELEVATIONS (WEST)

POINT	STATION	OFFSET (LT/RT)	ELEVATION
A1	2035+95.32	20.34' RT	(591.95)
A2	2036+00.76	20.36' RT	(591.56)
A3	2036+07.02	20.38' RT	(591.63)
A4	2036+09.78	20.61' RT	(591.84)
A5	2036+12.96	21.39' RT	(591.98)
B1	2035+95.66	28.30' RT	(592.20)
B2	2036+00.74	28.32' RT	592.13

POINT	STATION	OFFSET (LT/RT)	ELEVATION
B3	2036+07.17	28.34' RT	(592.23)
B4	2036+13.20	28.37' RT	(592.28)
C1	2035+95.84	32.44' RT	(592.27)
C2	2036+00.72	32.46' RT	(592.18)
C3	2036+07.27	33.46' RT	(592.24)
D1	2035+98.98	00.00' RT	(592.15)
D2	2036+04.98	00.00' RT	(592.33)

ADA ELEVATIONS (EAST)

POINT	STATION	OFFSET (LT/RT)	ELEVATION
A1	2036+61.39	28.41' RT	(592.10)
A2	2036+64.26	24.64' RT	(592.28)
A3	2036+71.59	20.68' RT	(591.94)
A4	2036+77.60	20.26' RT	(591.82)
A5	2036+83.10	20.31' RT	(592.11)
B1	2036+71.51	28.41' RT	592.15
B2	2036+77.59	20.74' RT	591.83
B3	2036+77.51	28.41' RT	592.19

POINT	STATION	OFFSET (LT/RT)	ELEVATION
B4	2036+83.01	28.41' RT	(592.22)
C1	2036+59.61	34.21' RT	(592.12)
C2	2036+61.42	34.20' RT	592.13
C3	2036+71.45	34.16' RT	592.18
C4	2036+77.45	34.14' RT	592.22
C5	2036+82.95	34.11' RT	(592.27)
D1	2036+72.19	00.00' RT	(592.08)
D2	2036+78.19	00.00' RT	(591.95)

HORNER SHIFRIN
WWW. HORNERSHIFRIN .COM

USER NAME = krkubalanza	DESIGNED - KRK	REVISED -
	DRAWN - RO	REVISED -
PLOT SCALE = 10.0000 ' / in.	CHECKED - BLP	REVISED -
PLOT DATE = 11/5/2025	DATE -	REVISED -

STATE OF ILLINOIS
DEPARTMENT OF TRANSPORTATION

FAI–290 (EISENHOWER EXPRESSWAY) AT PAULINA STREET
ADA DETAILS

SCALE: 1" = 5' | SHEET OF SHEETS | STA. | TO STA.

F.A.I. RTE.	SECTION	COUNTY	TOTAL SHEETS	SHEET NO.
290	2019-191-B-R	COOK	265	43
		CONTRACT NO. 62K64		
	ILLINOIS	FED. AID PROJECT		

MODEL: Default
FILE NAME: zw:\JPW01.HornerShifrin.com:HS TDOT\Documents\2305600\00-PTB195-007_01_Paul-Sec_PhII_SiuiCellInfo\CAD_Sheets\D162K64_PaulinaID162K64_PhII-ada-01.dgn

ADA LEGEND

- DETECTABLE WARNING (SPECIAL)
- DEPRESSED CURB AND GUTTER
- (XXX.XX) EXISTING ELEVATION

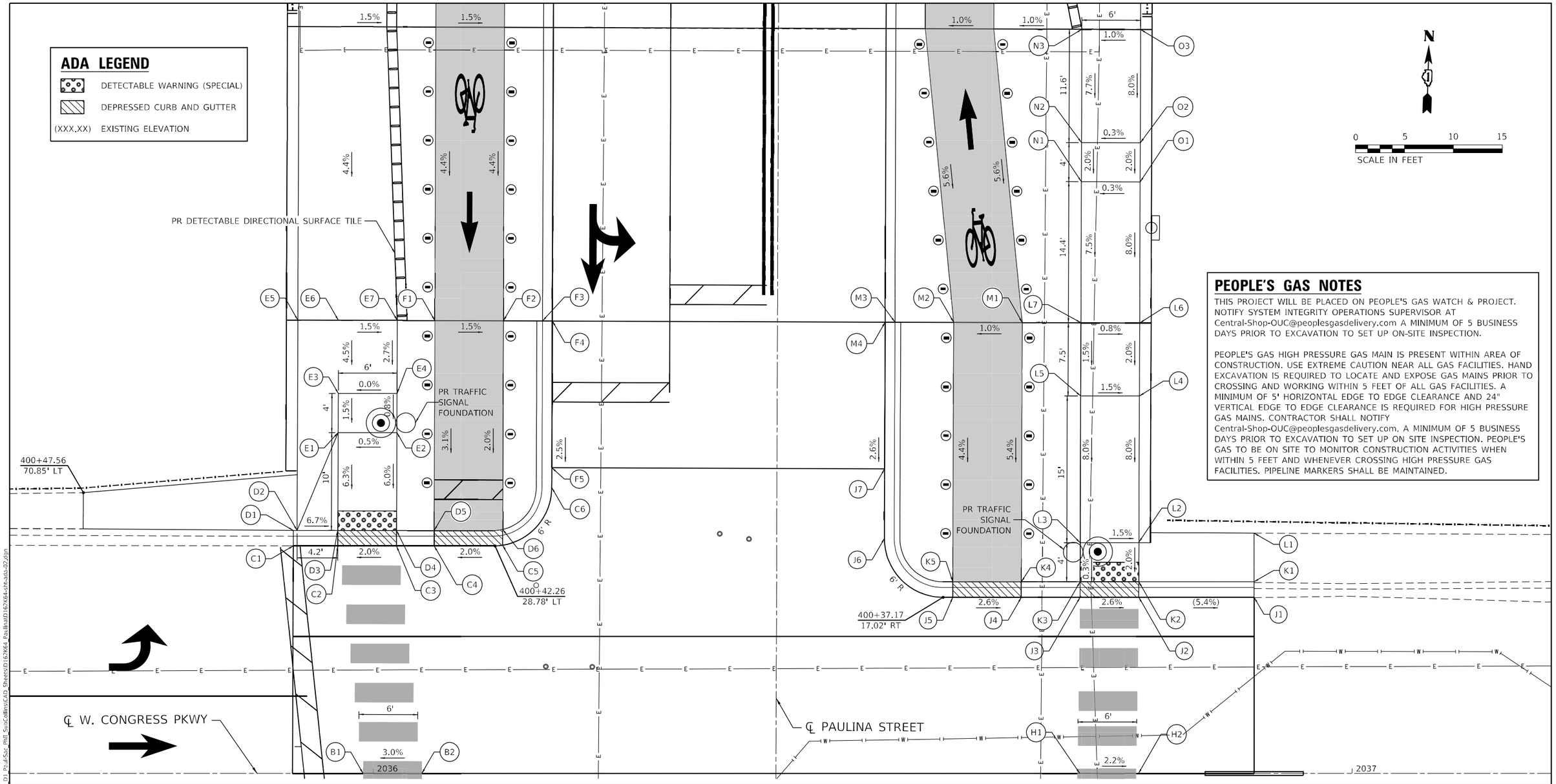

PEOPLE'S GAS NOTES

THIS PROJECT WILL BE PLACED ON PEOPLE'S GAS WATCH & PROJECT. NOTIFY SYSTEM INTEGRITY OPERATIONS SUPERVISOR AT Central-Shop-OUC@peoplesgasdelivery.com A MINIMUM OF 5 BUSINESS DAYS PRIOR TO EXCAVATION TO SET UP ON-SITE INSPECTION.

PEOPLE'S GAS HIGH PRESSURE GAS MAIN IS PRESENT WITHIN AREA OF CONSTRUCTION. USE EXTREME CAUTION NEAR ALL GAS FACILITIES. HAND EXCAVATION IS REQUIRED TO LOCATE AND EXPOSE GAS MAINS PRIOR TO CROSSING AND WORKING WITHIN 5 FEET OF ALL GAS FACILITIES. A MINIMUM OF 5' HORIZONTAL EDGE TO EDGE CLEARANCE AND 24" VERTICAL EDGE TO EDGE CLEARANCE IS REQUIRED FOR HIGH PRESSURE GAS MAINS. CONTRACTOR SHALL NOTIFY Central-Shop-OUC@peoplesgasdelivery.com, A MINIMUM OF 5 BUSINESS DAYS PRIOR TO EXCAVATION TO SET UP ON SITE INSPECTION. PEOPLE'S GAS TO BE ON SITE TO MONITOR CONSTRUCTION ACTIVITIES WHEN WITHIN 5 FEET AND WHENEVER CROSSING HIGH PRESSURE GAS FACILITIES. PIPELINE MARKERS SHALL BE MAINTAINED.

ADA ELEVATIONS (WEST)

POINT	STATION	OFFSET (LT/RT)	ELEVATION
B1	400+18.96	42.17' LT	(592.15)
B2	400+18.98	36.17' LT	(592.33)
C1	400+42.19	49.39' LT	(592.80)
C2	400+42.21	44.84' LT	592.88
C3	400+42.23	38.84' LT	593.00
C4	400+42.24	34.99' LT	593.08
C5	400+42.34	28.00' LT	593.22
C6	400+48.26	23.00' LT	593.29
D1	400+43.77	49.39' LT	(593.13)
D2	400+43.77	49.00' LT	593.15
D3	400+43.79	44.84' LT	592.87
D4	400+43.81	38.84' LT	592.99
D5	400+43.82	35.00' LT	593.07
D6	400+43.95	28.00' LT	593.21
E1	400+53.79	44.84' LT	593.54
E2	400+53.81	38.84' LT	593.57
E3	400+57.79	44.84' LT	593.60
E4	400+57.81	38.84' LT	593.60
E5	400+65.28	49.00' LT	593.96
E6	400+65.28	44.87' LT	593.89
E7	400+65.28	38.84' LT	593.80
F1	400+65.28	35.00' LT	593.75
F2	400+65.28	28.00' LT	593.64
F3	400+65.28	24.00' LT	593.70
F4	400+65.28	23.00' LT	593.72
F5	400+50.28	23.00' LT	593.34

ADA ELEVATIONS (EAST)

POINT	STATION	OFFSET (LT/RT)	ELEVATION
H1	400+19.21	31.04' RT	(592.08)
H2	400+19.23	37.04' RT	(591.95)
J1	400+37.28	48.79' RT	(591.74)
J2	400+37.23	37.00' RT	592.37
J3	400+37.21	31.01' RT	592.53
J4	400+37.19	25.00' RT	592.70
J5	400+37.17	18.00' RT	592.88
J6	400+43.17	11.00' RT	593.14
J7	400+50.28	11.00' RT	593.31
K1	400+38.86	48.78' RT	(592.18)
K2	400+38.82	37.00' RT	592.36
K3	400+38.80	31.00' RT	592.52
K4	400+38.78	25.00' RT	592.69
K5	400+38.75	18.00' RT	592.87
L1	400+43.84	48.77' RT	(592.34)
L2	400+42.86	37.00' RT	592.44
L3	400+42.79	31.00' RT	592.53
L4	400+57.81	37.00' RT	593.64
L5	400+57.79	31.00' RT	593.73
L6	400+65.28	37.00' RT	593.79
L7	400+65.28	31.00' RT	593.84
M1	400+65.28	25.00' RT	594.11
M2	400+65.28	18.00' RT	594.04
M3	400+65.28	12.00' RT	594.20
M4	400+65.28	11.00' RT	593.72
N1	400+79.69	31.00' RT	594.92
N2	400+83.69	31.00' RT	595.00
N3	400+95.28	31.00' RT	595.89
O1	400+79.69	37.00' RT	594.94
O2	400+83.69	37.00' RT	595.02
O3	400+95.28	37.00' RT	595.95

HORNER SHIFRIN
WWW. HORNERSHIFRIN .COM

USER NAME = krkubalanza	DESIGNED - KRK	REVISED -	
	DRAWN - RO	REVISED -	
PLOT SCALE = 10.0000 ' / in.	CHECKED - BLP	REVISED -	
PLOT DATE = 11/5/2025	DATE -	REVISED -	

STATE OF ILLINOIS
DEPARTMENT OF TRANSPORTATION

FAI–290 (EISENHOWER EXPRESSWAY) AT PAULINA STREET
ADA DETAILS

SCALE: 1" = 5' | SHEET OF SHEETS | STA. | TO STA.

F.A.I. RTE.	SECTION	COUNTY	TOTAL SHEETS	SHEET NO.
290	2019-191-B-R	COOK	265	44
		CONTRACT NO. 62K64		
		ILLINOIS	FED. AID PROJECT	

MODEL: Default
FILE NAME: pw:\\PW01.HornerShifrin.com:HS DOT\Documents\30960000-PTB195-007 D1 Paul-Soc_Pint_SouCollins\CAD Sheets\D162K64_PaulinaD162K64_PaulinaD162K64-ithe-ada-02.dgn

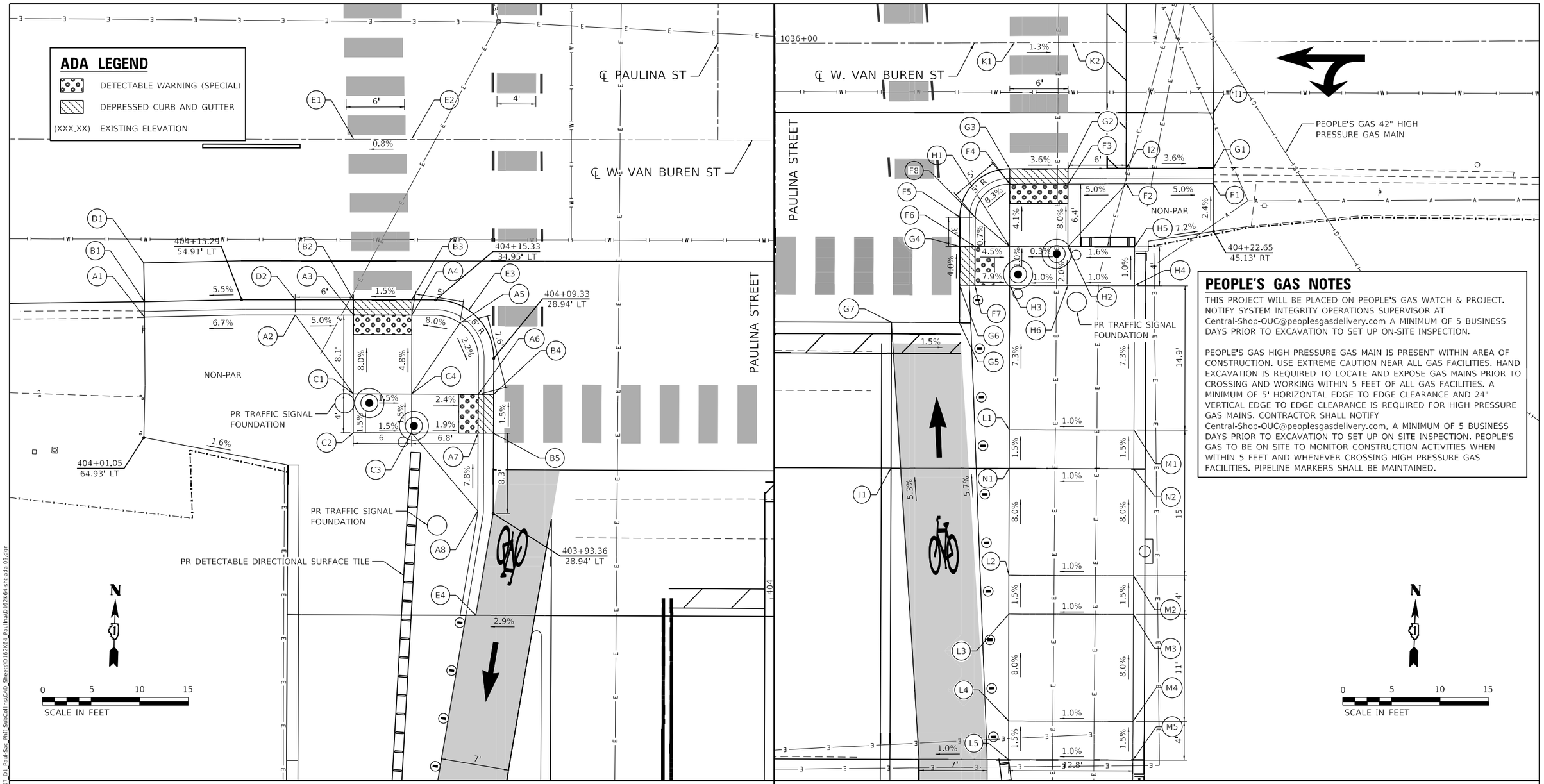

PEOPLE'S GAS NOTES

THIS PROJECT WILL BE PLACED ON PEOPLE'S GAS WATCH & PROJECT. NOTIFY SYSTEM INTEGRITY OPERATIONS SUPERVISOR AT Central-Shop-OUC@peoplesgasdelivery.com A MINIMUM OF 5 BUSINESS DAYS PRIOR TO EXCAVATION TO SET UP ON-SITE INSPECTION.

PEOPLE'S GAS HIGH PRESSURE GAS MAIN IS PRESENT WITHIN AREA OF CONSTRUCTION. USE EXTREME CAUTION NEAR ALL GAS FACILITIES. HAND EXCAVATION IS REQUIRED TO LOCATE AND EXPOSE GAS MAINS PRIOR TO CROSSING AND WORKING WITHIN 5 FEET OF ALL GAS FACILITIES. A MINIMUM OF 5' HORIZONTAL EDGE TO EDGE CLEARANCE AND 24" VERTICAL EDGE TO EDGE CLEARANCE IS REQUIRED FOR HIGH PRESSURE GAS MAINS. CONTRACTOR SHALL NOTIFY Central-Shop-OUC@peoplesgasdelivery.com, A MINIMUM OF 5 BUSINESS DAYS PRIOR TO EXCAVATION TO SET UP ON SITE INSPECTION. PEOPLE'S GAS TO BE ON SITE TO MONITOR CONSTRUCTION ACTIVITIES WHEN WITHIN 5 FEET AND WHENEVER CROSSING HIGH PRESSURE GAS FACILITIES. PIPELINE MARKERS SHALL BE MAINTAINED.

ADA ELEVATIONS (WEST)

POINT	STATION	OFFSET (LT/RT)	ELEVATION
A1	404+28.78	64.96' LT	(591.78)
A2	404+29.04	49.44' LT	592.82
A3	404+29.05	43.44' LT	592.52
A4	404+29.07	37.44' LT	592.61
A5	404+28.28	32.47' LT	593.01
A6	404+20.95	30.58' LT	592.84
A7	404+16.95	30.58' LT	592.93
A8	404+08.93	30.58' LT	593.58
B1	404+30.36	64.96' LT	(591.34)
B2	404+30.64	43.44' LT	592.53
B3	404+30.65	37.44' LT	592.62

POINT	STATION	OFFSET (LT/RT)	ELEVATION
B4	404+20.95	28.99' LT	592.85
B5	404+16.95	28.99' LT	592.94
C1	404+20.95	43.43' LT	593.09
C2	404+16.95	43.43' LT	593.15
C3	404+16.95	37.43' LT	593.06
C4	404+20.95	37.43' LT	593.00
D1	404+34.36	65.06' LT	(592.29)
D2	404+30.79	49.33L LT	592.44
E1	404+47.14	43.50' LT	592.31
E2	404+47.15	37.50' LT	592.36
E3	404+29.59	31.57' LT	592.71
E4	403+98.18	30.75' LT	593.35

ADA ELEVATIONS (EAST)

POINT	STATION	OFFSET (LT/RT)	ELEVATION
F1	404+27.58	45.10' RT	(592.18)
F2	404+27.52	36.13' RT	592.57
F3	404+27.48	30.13' RT	592.27
F4	404+27.44	24.13' RT	592.49
F5	404+24.02	19.00' RT	592.70
F6	404+21.02	20.58' RT	592.93
F7	404+17.02	20.58' RT	593.09
F8	404+24.02	20.58' RT	592.95
G1	404+29.16	45.09' RT	(591.74)
G2	404+29.06	30.12' RT	592.28
G3	404+29.02	24.12' RT	592.50
G4	404+21.02	19.00' RT	592.94

POINT	STATION	OFFSET (LT/RT)	ELEVATION
G5	404+13.18	19.00' RT	593.25
G6	404+17.02	19.00' RT	593.10
G7	404+13.18	12.00' RT	593.35
H1	404+21.03	24.13' RT	592.77
H2	404+21.04	30.13' RT	592.79
H3	404+17.03	24.14' RT	592.81
H4	404+17.05	37.00' RT	592.94
H5	404+21.05	37.00' RT	592.90
H6	404+32.36	30.14' RT	592.87
I1	404+34.84	45.05' RT	(591.73)
I2	404+29.10	36.12' RT	592.06
J1	403+98.18	12.00' RT	594.05
K1	404+42.04	24.55' RT	592.09

POINT	STATION	OFFSET (LT/RT)	ELEVATION
K2	404+42.08	30.55' RT	592.01
L1	404+02.18	24.16' RT	593.90
L2	403+87.18	24.18' RT	594.84
L3	403+83.18	24.18' RT	594.90
L4	403+72.18	24.20' RT	595.78
L5	403+68.18	24.20' RT	595.84
M1	404+02.18	37.00' RT	594.03
M2	403+87.18	37.00' RT	594.97
M3	403+83.18	37.00' RT	595.03
M4	403+72.18	37.00' RT	595.91
M5	403+68.18	37.00' RT	595.97
N1	403+98.18	24.16' RT	593.96
N2	403+98.18	37.00' RT	594.09

HORNER SHIFRIN
WWW. HORNERSHIFRIN .COM

USER NAME = krkubalanza	DESIGNED - KRK	REVISED -	
	DRAWN - RO	REVISED -	
PLOT SCALE = 10.0000 ' / in.	CHECKED - BLP	REVISED -	
PLOT DATE = 11/5/2025	DATE -	REVISED -	

STATE OF ILLINOIS
DEPARTMENT OF TRANSPORTATION

FAI–290 (EISENHOWER EXPRESSWAY) AT PAULINA STREET
ADA DETAILS

SCALE: 1" = 5' | SHEET OF SHEETS | STA. | TO STA.

F.A.I. RTE.	SECTION	COUNTY	TOTAL SHEETS	SHEET NO.
290	2019-191-B-R	COOK	265	45
		CONTRACT NO. 62K64		
		ILLINOIS	FED. AID PROJECT	

MODEL: Default
FILE NAME: z:\xfer0\Hornershifrin.com-HS TDOT\Documents\330560000-PTB195-007 D1 PauLSse PhII SusCollins\CAD Sheets\D1 62K64 PaulinaID162K64-sht-ada-03.dgn

PEOPLE'S GAS NOTES

THIS PROJECT WILL BE PLACED ON PEOPLE'S GAS WATCH & PROJECT. NOTIFY SYSTEM INTEGRITY OPERATIONS SUPERVISOR AT Central-Shop-OUC@peoplesgasdelivery.com A MINIMUM OF 5 BUSINESS DAYS PRIOR TO EXCAVATION TO SET UP ON-SITE INSPECTION.

PEOPLE'S GAS HIGH PRESSURE GAS MAIN IS PRESENT WITHIN AREA OF CONSTRUCTION. USE EXTREME CAUTION NEAR ALL GAS FACILITIES. HAND EXCAVATION IS REQUIRED TO LOCATE AND EXPOSE GAS MAINS PRIOR TO CROSSING AND WORKING WITHIN 5 FEET OF ALL GAS FACILITIES. A MINIMUM OF 5' HORIZONTAL EDGE TO EDGE CLEARANCE AND 24" VERTICAL EDGE TO EDGE CLEARANCE IS REQUIRED FOR HIGH PRESSURE GAS MAINS. CONTRACTOR SHALL NOTIFY Central-Shop-OUC@peoplesgasdelivery.com, A MINIMUM OF 5 BUSINESS DAYS PRIOR TO EXCAVATION TO SET UP ON SITE INSPECTION. PEOPLE'S GAS TO BE ON SITE TO MONITOR CONSTRUCTION ACTIVITIES WHEN WITHIN 5 FEET AND WHENEVER CROSSING HIGH PRESSURE GAS FACILITIES. PIPELINE MARKERS SHALL BE MAINTAINED.

N

0 5 10 15
SCALE IN FEET

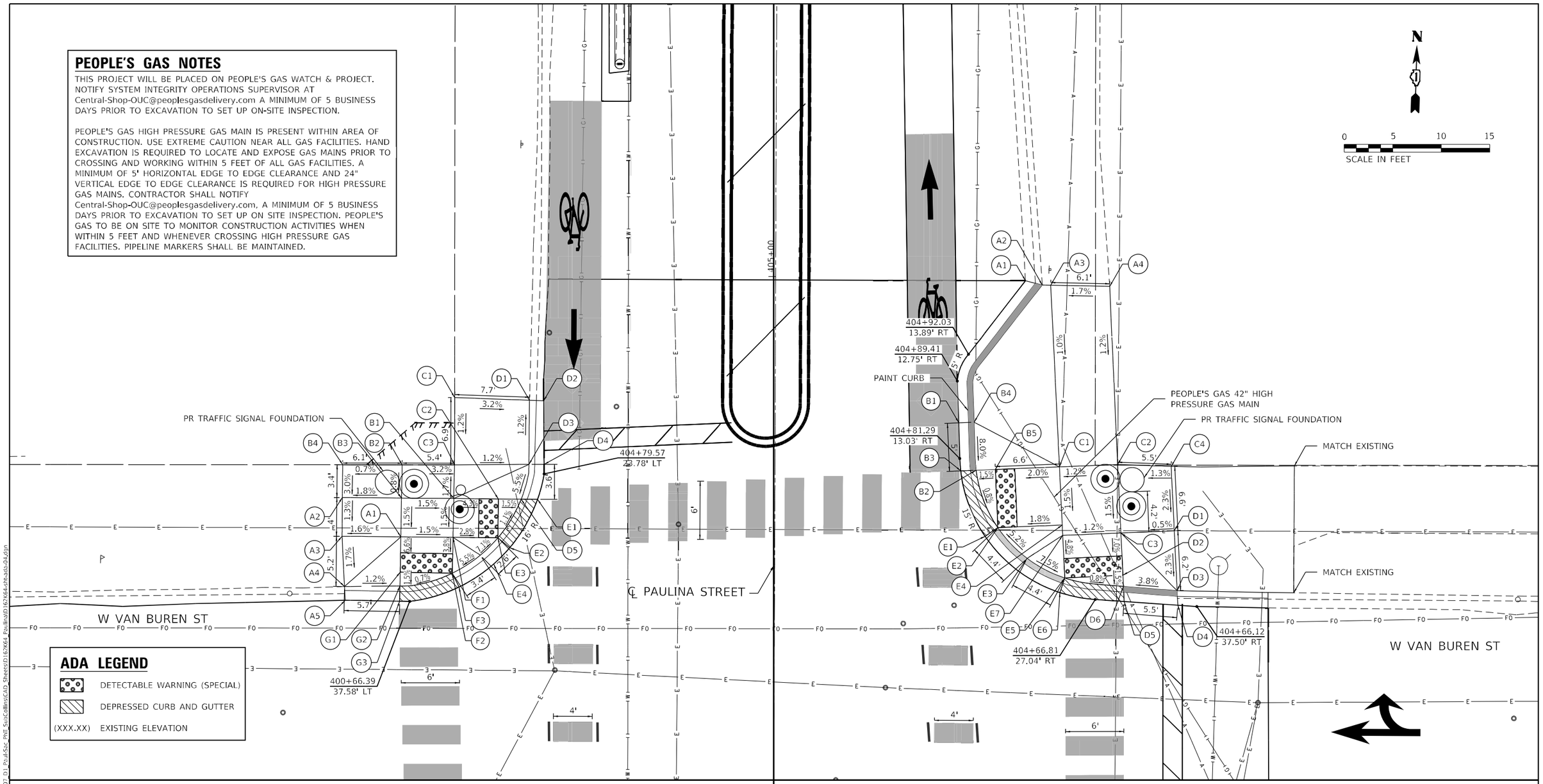

ADA ELEVATIONS (WEST)

POINT	STATION	OFFSET (LT/RT)	ELEVATION
A1	404+73.03	38.52' LT	592.35
A2	404+77.07	44.56' LT	(592.30)
A3	404+73.07	44.58' LT	(592.25)
A4	404+67.91	44.31' LT	(592.16)
A5	404+66.49	44.23' LT	(591.85)
B1	404+77.00	33.08' LT	592.33
B2	404+80.46	38.41' LT	(592.44)
B3	404+77.03	38.46' LT	(592.41)
B4	404+80.44	44.54' LT	(592.40)
C1	404+87.41	33.04' LT	(592.35)
C2	404+76.97	28.50' LT	592.13
C3	404+80.48	33.02' LT	(592.27)
D1	404+87.16	25.32' LT	(592.10)
D2	404+87.10	23.85' LT	(591.76)

POINT	STATION	OFFSET (LT/RT)	ELEVATION
D3	404+80.55	25.36' LT	592.27
D4	404+80.56	23.79' LT	591.96
D5	404+76.96	26.14' LT	592.09
E1	404+76.95	24.46' LT	592.10
E2	404+71.95	27.31' LT	592.15
E3	404+72.97	28.52' LT	592.14
E4	404+70.28	28.95' LT	592.19
F1	404+73.00	33.20' LT	592.27
F2	404+69.30	33.23' LT	592.13
F3	404+67.89	32.51' LT	592.14
G1	404+69.38	38.58' LT	592.11
G2	404+67.97	38.60' LT	592.09
G3	404+66.40	38.62' LT	592.10

ADA ELEVATIONS (EAST)

POINT	STATION	OFFSET (LT/RT)	ELEVATION
A1	404+99.65	25.74' RT	(591.76)
A2	404+99.21	27.47' RT	(592.00)
A3	404+99.20	28.34' RT	(592.02)
A4	404+99.10	34.41' RT	(592.12)
B1	404+85.00	18.91' RT	591.70
B2	404+80.10	20.72' RT	591.67
B3	404+80.03	19.14' RT	591.68
B4	404+85.05	20.49' RT	592.07
B5	404+80.19	22.71' RT	591.70
C1	404+80.48	29.30' RT	591.83
C2	404+80.74	35.29' RT	591.90
C3	404+73.69	35.66' RT	591.80
C4	404+80.56	40.81' RT	(591.97)

POINT	STATION	OFFSET (LT/RT)	ELEVATION
D1	404+73.93	41.15' RT	591.83
D2	404+69.34	35.88' RT	591.49
D3	404+67.75	41.47' RT	(591.68)
D4	404+66.27	41.54' RT	(591.47)
D5	404+66.63	36.02' RT	591.48
D6	404+68.19	35.94' RT	591.47
E1	404+73.30	21.66' RT	591.63
E2	404+74.20	22.97' RT	591.62
E3	404+71.04	26.00' RT	591.85
E4	404+74.49	29.61' RT	591.74
E5	404+69.03	29.89' RT	591.52
E6	404+67.53	29.40' RT	591.53
E7	404+73.43	29.66' RT	591.73

HORNER SHIFRIN
WWW. HORNERSHIFRIN .COM

USER NAME = krkubalanza	DESIGNED - KRK	REVISED -
	DRAWN - RO	REVISED -
PLOT SCALE = 10.0000 ' / in.	CHECKED - BLP	REVISED -
PLOT DATE = 11/5/2025	DATE -	REVISED -

STATE OF ILLINOIS
DEPARTMENT OF TRANSPORTATION

FAI–290 (EISENHOWER EXPRESSWAY) AT PAULINA STREET
ADA DETAILS

SCALE: 1" = 5' | SHEET OF SHEETS | STA. | TO STA.

F.A.I. RTE.	SECTION	COUNTY	TOTAL SHEETS	SHEET NO.
290	2019-191-B-R	COOK	265	46
		CONTRACT NO. 62K64		
		ILLINOIS	FED. AID PROJECT	

MODEL: Default
FILE NAME: pw:\\PW01.Hornershifrin.com:HS IDOT Documents\2305600\D-PTB 195-007 D1 Pt.4 Sec Phtl Sus Collins\CAD Sheets\D162K64 Paulina ID 162K64-ph4-sus-04.dgn

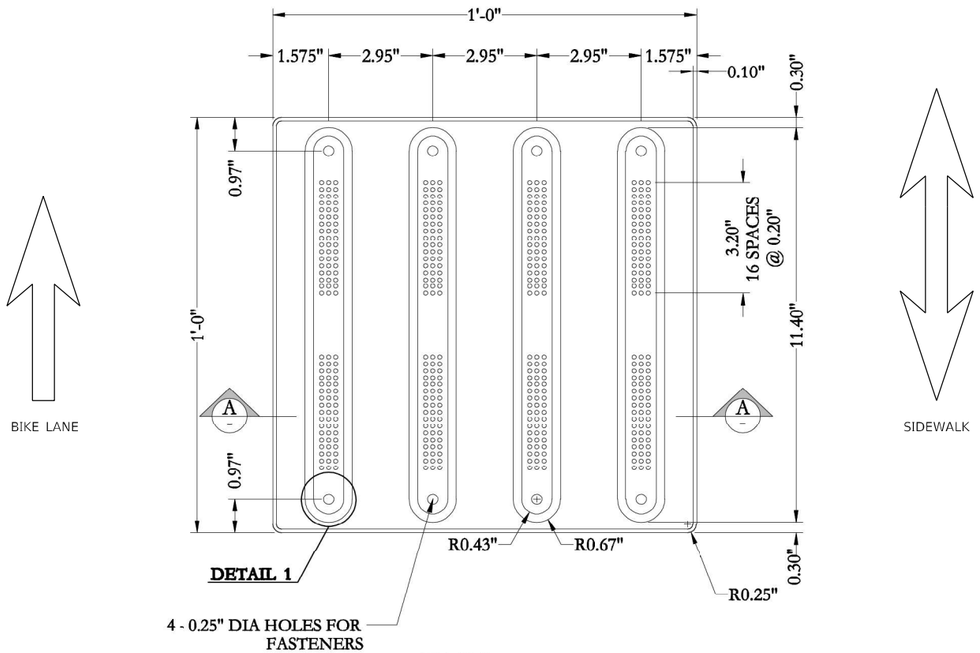

PLAN

1' x 1' PANELS SHALL BE INSTALLED TO ASSURE THE RAISED LONGITUDINAL DOMES (APPROX. 11.40 INCHES LONG) ARE PARALLEL TO THE DIRECTION OF TRAFFIC AND BIKE LANE.

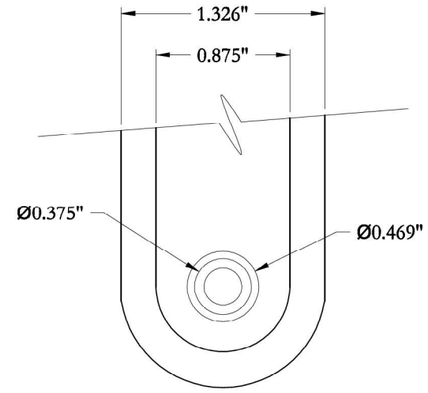

DETAIL 1

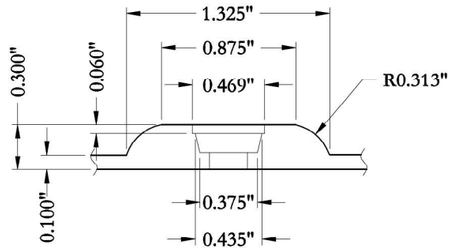

SECTION B-B
CONCEALED MECHANICAL FASTENING

NOTES

1. PROPOSED ON BRIDGE; REFER TO SCHEDULE, PLAN AND PROFILE SHEETS, AND ELEVATION DETAIL SHEETS.

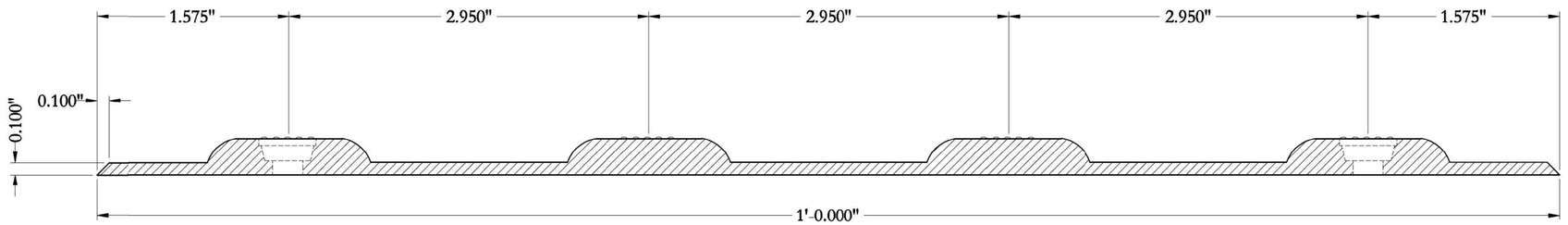

SECTION A-A

MODEL: Default
FILE NAME: pw:\\PW01.hornershifrin.com:HS IDOT\Documents\230560000-PTB195-007_D1_Paul-Sac_PhII_SubCollins\CAD_Sheets\D162K64_Paulina\D162K64-sht-detail-surface-tile.dgn

HORNER SHIFRIN WWW.HORNERSHIFRIN.COM	USER NAME = ahernandez	DESIGNED -	REVISED -	STATE OF ILLINOIS DEPARTMENT OF TRANSPORTATION	FAI-290 (EISENHOWER EXPRESSWAY) AT PAULINA STREET DETAIL – DETECTABLE DIRECTIONAL SURFACE TILE
		DRAWN -	REVISED -		
	PLOT SCALE = 10.0000 ' / in.	CHECKED -	REVISED -		
	PLOT DATE = 9/4/2025	DATE -	REVISED -		SCALE: NTS SHEET 1 OF 1 SHEETS STA. TO STA.

F.A.I. RTE.	SECTION	COUNTY	TOTAL SHEETS	SHEET NO.
290	2019-191-B-R	COOK	265	47
		CONTRACT NO. 62K64		
		ILLINOIS FED. AID PROJECT		

MAINTENANCE OF TRAFFIC – GENERAL NOTES

1. TRAFFIC CONDITIONS, CRASHES, AND OTHER UNFORESEEN EMERGENCY CONDITIONS MAY REQUIRE THE ENGINEER TO RESTRICT, MODIFY, OR REMOVE LANE CLOSURES OR CHANNELIZATIONS SHOWN ON THE PLANS. THE CONTRACTOR SHALL MAKE THE NECESSARY ADJUSTMENTS AS DIRECTED BY THE ENGINEER WITHOUT DELAY. COMPLIANCE WITH THIS REQUIREMENT SHALL BE CONSIDERED INCLUDED IN THE CONTRACT UNIT PRICE OF "TRAFFIC CONTROL AND PROTECTION (EXPRESSWAYS)." NO ADDITIONAL COMPENSATION WILL BE ALLOWED.

2. THE MAINTENANCE OF TRAFFIC PLANS SHALL SERVE AS A GUIDE FOR THE SAFE DIVERSION OF TRAFFIC DURING EXECUTION OF THE CONTRACT. THE CONTRACTOR MAY MODIFY THE MAINTENANCE OF TRAFFIC PLANS TO MEET CONSTRUCTION NEEDS, BUT NOT AT THE EXPENSE OF PUBLIC SAFETY OR CONVENIENCE. ANY CHANGES TO THE TRAFFIC CONTROL SHALL BE SUBMITTED TO THE ENGINEER FOR REVIEW AND APPROVAL.

3. THE CONTRACTOR SHALL BE RESPONSIBLE FOR THE NOTIFICATION OF ALL EMERGENCY SERVICES, SCHOOL DISTRICTS, I.D.O.T.'S COMMUNICATION CENTER, SPRINGFIELD TRUCK PERMIT SECTION, AND OTHER AGENCIES AFFECTED BY THE WORK.

4. THE CONTRACTOR SHALL REMOVE OR COVER ALL EXISTING SIGNS THAT CONFLICT WITH OR DO NOT APPLY TO THE REVISED TRAFFIC PATTERNS AND SHALL RESTORE THE SIGNS AT THE END OF CONSTRUCTION AS DIRECTED BY THE ENGINEER.

5. THE CONTRACTOR SHALL PROVIDE 48 HOURS ADVANCE NOTICE TO THE ENGINEER OF ANY CONSTRUCTION WORK.

6. ALL TEMPORARY PAVEMENT MARKINGS SHOWING DETERIORATION AFTER 7 DAYS OF SERVICE SHALL BE REPLACED BY THE CONTRACTOR AS DIRECTED BY THE ENGINEER, SUFFICIENT QUANTITIES FOR 2 APPLICATIONS OF TEMPORARY PAVEMENT MARKINGS HAVE BEEN PROVIDED FOR EACH STAGE.

7. DURING CONSTRUCTION ACTIVITIES, THE CONTRACTOR SHALL TAKE THE NECESSARY PRE-CAUTIONS TO AVOID ANY CONSTRUCTION DEBRIS FROM ENCROACHING INTO THE ADJACENT THROUGH LANES.

8. THE CONTRACTOR SHALL REQUEST AND GAIN THE APPROVAL FROM THE ILLINOIS DEPARTMENT OF TRANSPORTATION'S EXPRESSWAY TRAFFIC OPERATIONS ENGINEER AT WWW.IDOTLCS.COM TWENTY-FOUR (24) HOURS IN ADVANCE OF ALL DAILY LANE, RAMP, AND SHOULDER CLOSURES. SEE KEEPING THE EXPRESSWAY OPEN TO TRAFFIC SPECIAL PROVISION FOR MORE INFORMATION.

9. ALL STAGE CHANGES REQUIRING THE STOPPING AND/OR THE PACING OF TRAFFIC SHALL TAKE PLACE DURING THE ALLOWABLE HOURS FOR FULL EXPRESSWAY CLOSURES AND SHALL BE APPROVED BY THE DEPARTMENT. THE CONTRACTOR SHALL NOTIFY THE DISTRICT ONE EXPRESSWAY TRAFFIC CONTROL SUPERVISOR AT LEAST 3 WORKING DAYS (WEEKENDS AND HOLIDAYS DO NOT COUNT INTO THIS 72 HOURS NOTIFICATION) IN ADVANCE OF ANY PROPOSED STAGE CHANGE.

10. A MAINTENANCE OF TRAFFIC PLAN SHALL BE SUBMITTED TO THE DISTRICT ONE EXPRESSWAY TRAFFIC CONTROL SUPERVISOR 14 DAYS IN ADVANCE OF ANY STAGE CHANGES OR FULL EXPRESSWAY CLOSURES. THE MAINTENANCE OF TRAFFIC PLAN SHALL INCLUDE, BUT NOT BE LIMITED TO: LANE AND RAMP CLOSURES, EXISTING GEOMETRICS, AND EQUIPMENT AND MATERIAL LOCATIONS.

11. CHANGEABLE MESSAGE SIGNS SHALL BE INSTALLED TWO WEEKS PRIOR TO ALL TRAFFIC STAGE CHANGES ON EACH APPROACH OF THE EFFECTED ARTERIAL ROADWAY TO WARN MOTORISTS OF THE UPCOMING EVENT. THE SIGN MESSAGES SHALL BE REVISED TWO WEEKS THEREAFTER WITH MESSAGES WARNING TRAFFIC OF POTENTIAL TRAFFIC DELAYS, QUEUING AND/OR WITH MESSAGES NOTIFYING TRAFFIC TO USE ALTERNATE ROUTES. THE SIGN LOCATIONS AND MESSAGES SHALL BE DETERMINED BY THE ENGINEER.

12. TEMPORARY CONCRETE BARRIER SHALL BE INSTALLED IN ACCORDANCE WITH SECTION 704 OF THE IDOT STANDARD SPECIFICATIONS. ALL TEMPORARY CONCRETE BARRIER APPROACH AND DEPARTING END UNITS SHALL BE ANCHORED TO THE PAVEMENT USING SIX ANCHOR PINS AS SHOWN IN IDOT STANDARD 704001. PINNING OF ADDITIONAL BARRIER UNITS WITH THREE ANCHOR PINS ON THE TRAFFIC SIDE HOLES WITHIN THE INSTALLATION SHALL BE REQUIRED WHEN EQUIPMENT, VEHICLES, MATERIALS, FIXED OBJECTS, OR A DROP-OFF IS LOCATED WITHIN 24" BEHIND THE BARRIER. THE 24"OF CLEAR PAVEMENT MEASUREMENT SHALL BE FROM THE BASE OF THE NON-TRAFFIC SIDE OF THE BARRIER. TRAFFIC SIDE PINNED BARRIER SHALL HAVE A MINIMUM OF 6" OF CLEAR PAVEMENT BEHIND THE BARRIER. WHERE BOTH PINNED AND UNPINNED BARRIER UNITS ARE USED IN A CONTINUOUS INSTALLATION, A TRANSITION SHALL BE PROVIDED BETWEEN THEM. THE TRANSITION FROM PINNED TO UNPINNED BARRIER SHALL CONSIST OF TWO ANCHOR PINS INSTALLED IN THE END HOLES ON THE TRAFFIC SIDE OF THE FIRST BARRIER BEYOND THE PINNED SECTION AND ONE ANCHOR PIN INSTALLED IN THE MIDDLE HOLE OF THE TRAFFIC SIDE OF THE SECOND BARRIER BEYOND THE PINNED SECTION. THE THIRD BARRIER BEYOND THE PINNED SECTION SHALL THEN BE UNPINNED.

MAINTENANCE OF TRAFFIC – GENERAL NOTES (CONT.)

14. WHEN WORKING ADJACENT TO THE ROAD AND UTILIZING DAILY LANE CLOSURES, DROP-OFFS ADJACENT TO THE TRAVEL LANES SHALL BE KEPT TO A MINIMUM. PROTECTION OF THE DROP-OFF SHALL BE ACCORDING TO THE IDOT BUREAU OF SAFETY PROGRAMS AND ENGINEERING, SAFETY ENGINEERING POLICY MEMORANDUM 4-21. DROP-OFFS GREATER THAN THE SPECIFIED MAXIMUM DROP-OFF DEPTH SHOWN IN TABLE 2, CONDITION II OF THE SAFETY 4-21 POLICY WILL NOT BE ALLOWED AT LOCATIONS WHERE THE DROP-OFF IS LOCATED WITHIN 8 FT OF THE EDGE OF THE NEAREST OPEN TRAFFIC LANE. THE CONTRACTOR WILL BE REQUIRED TO PERFORM THE EXCAVATION REQUIRED FOR THE CONSTRUCTION DURING THE TIME THAT THE ADJACENT LANE IS CLOSED. AS NOTED ABOVE, PRIOR TO REOPENING THE LANE TO TRAFFIC, THE CONTRACTOR SHALL PLACE SUFFICIENT MATERIAL TO REDUCE THE DROP-OFF TO LESS THAN THE SPECIFIED MAXIMUM DROP-OFF DEPTH SHOWN IN TABLE 2, CONDITION II OF THE SAFETY 4-21 POLICY AND ENSURE THAT THE DROP-OFF AREAS MEET THE OFFSET, HEIGHT, AND DURATION REQUIREMENTS TO USE BARRICADES/DRUMS AT THE END OF EACH WORKDAY. THE CONTRACTOR SHALL BE RESPONSIBLE TO DETERMINE THE AMOUNT OF WORK THAT CAN BE COMPLETED WITHIN THE TIME OF THE DAILY LANE CLOSURE. IF THE ABOVE REQUIREMENTS CAN'T BE MET, AND IT IS DETERMINED THAT OVERNIGHT LANE CLOSURES AND/OR TEMPORARY CONCRETE BARRIER WALL INSTALLATION WILL BE NECESSARY, THEN IDOT WRITTEN APPROVAL WILL BE REQUIRED PRIOR TO THE INSTALLATION OF THESE ITEMS. NO ADDITIONAL COMPENSATION SHALL BE ALLOWED TO COMPLY WITH THIS REQUIREMENT. WHERE POSITIVE PROTECTION (TEMPORARY CONCRETE BARRIER PER STD. 704001) IS PROVIDED, THIS REQUIREMENT IS NULLIFIED.

15. ALL EXISTING LANE LINE PAVEMENT MARKINGS LOCATED WITHIN TEMPORARY LANE CLOSURE TAPERS, LANE SHIFT TAPERS OR IN LOCATIONS THAT CONFLICT WITH THE TEMPORARY PAVEMENT MARKING TAPE USED FOR STAGING SHALL BE REMOVED VIA WATER BLASTING WITH VACUUM RECOVERY IF THE STAGING WILL REMAIN IN PLACE FOR MORE THAN 14 DAYS. SEE ROADWAY REMOVAL PLANS AND PAVEMENT MARKING PLANS FOR ANTICIPATED PAVEMENT MARKINGS IN CONFLICT TO BE REMOVED AND RESTORATION AND PROPOSED PAVEMENT MARKINGS TO BE INSTALLED AFTER THE COMPLETION OF THE STAGING.

16. THE "ROAD CONSTRUCTION AHEAD"SIGNS SHALL REMAIN INSTALLED UNTIL THE COMPLETION OF THE PROJECT OR WHEN NO ROADWAY HAZARDS REMAIN WITHIN THE WORK ZONE.

17. THE CONTRACTOR SHALL CONTACT KALPANA KANNAN-HOSADURGA, THE DISTRICT ONE TRAFFIC CONTROL SUPERVISOR AT KALPANA.KANNAN-HOSADURGA@LLLINOIS.GOV A MINIMUM OF 72 HOURS IN ADVANCE OF BEGINNING WORK.

18. THE CONTRACTOR SHALL CONTACT THE EXPRESSWAYS CARLOS MUNOZ AT CARLOS.MUNOZ@ILLINOIS.GOV A MINIMUM OF 72 HOURS IN ADVANCE OF BEGINNING WORK.

19. CONTRACTOR IN COORDINATION WITH THE RESIDENT ENGINEER SHALL NOTIFY EXPRESSWAYS 14 DAYS IN ADVANCE PRIOR TO FULLSTOPS FOR BEAM REMOVAL AND PLACEMENT ON I-290.

20. CONTRACTOR SHALL CONTACT THE CHICAGO TRANSPORTATION AUTHORITY (CTA) TRAFFIC PLANNING'S JACK CHALABIAN AT JCHALABIAN@TRANSITCHICAGO.COM A MINIMUM TWO WEEKS IN ADVANCE TO NOTIFY OF ANY REQUIRED BUS SERVICE CHANGES.

21. MANHOLE/CATCHBASIN LIDS ON EXPRESSWAY WITHIN THE PROJECT STAGING LIMITS SHALL BE WELDED DOWN PRIOR TO BEGINNING ANY WORK. THIS WORK SHALL BE INCLUDED IN THE COST OF TRAFFIC CONTROL AND PROTECTION (EXPRESSWAYS).

22. ACCESS FOR PEDESTRIANS TO BE PROVIDED AT ALL TIMES DURING CONSTRUCTION AND AT NO TIME CAN TWO ADJACENT CURB RAMPS BE CLOSED AT AN INTERSECTION AT THE SAME TIME.

23. OPEN LID DRAINAGE STRUCTURES SHALL NOT BE CLOSED, COVERED, OR OTHERWISE OBSTRUCTED DURING CONSTRUCTION OF THIS ROADWAY WITHOUT PERMISSION FROM THE CITY OF CHICAGO.

24. THE "ARTERIAL ROAD INFORMATION SIGN (TC-22)" IS APPLICABLE ONLY TO ARTERIAL ROADS AND SHALL NOT BE APPLIED TO EXPRESSWAYS.

25. AT LOCATIONS WHERE TRAFFIC IS SHIFTED ONTO THE EXISTING SHOULDERS THE EXISTING RUMBLE STRIPS SHALL BE REMOVED.

26. PAVEMENT MARKING TAPE, TYPE IV SHALL BE USED FOR SHORT TERM PAVEMENT MARKINGS ON ALL FINAL SURFACES.

27. REFER TO KEEPING THE EXPRESSWAYS OPEN TO TRAFFIC SPECIAL PROVISION FOR LANE CLOSURE REQUIREMENTS ON I-290.

28. FLAGGERS WILL BE REQUIRED ON CONGRESS PKWY, VAN BUREN ST, AND ASHLAND AVE FOR FULLSTOPS ON I-290. TOTAL NUMBER OF FLAGGERS AND FLAGGER LOCATIONS WILL BE DEPENDANT ON MOT PLANS SUBMITTED FOR FULLSTOPS.

FILE NAME = P:\10-IL\14111-IDOT - Sacramento and Paulina over I-290\Work\CADD\Paulina - Contract 62K64\CADD_Sheets\Civil\D162K64-sht-mot-gen.dgn

COLLINS ENGINEERS INC.

USER NAME = omartinez	DESIGNED - OAM	REVISED -
	DRAWN - OAM	REVISED -
PLOT SCALE = 100.0000 ' / in.	CHECKED - RAG	REVISED -
PLOT DATE = 10/15/2025	DATE - 09/08/2025	REVISED -

STATE OF ILLINOIS
DEPARTMENT OF TRANSPORTATION

FAI–290 (EISENHOWER EXPRESSWAY) AT PAULINA STREET
MAINTENANCE OF TRAFFIC GENERAL NOTES

SCALE: NTS | SHEET NO. 1 OF 2 SHEETS | STA. | TO STA.

F.A.I. RTE.	SECTION	COUNTY	TOTAL SHEETS	SHEET NO.
290	2019-191-B-R	COOK	265	48
		CONTRACT NO. 62K64		
FED. ROAD DIST. NO.	ILLINOIS	FED. AID PROJECT		

SUGGESTED STAGING NOTES

PRE-STAGE 1

TRAFFIC
PAULINA STREET
1. ALL WORK MUST BE DONE DURING OFF PEAK HOURS UTILIZING DAILY LANE CLOSURES.
I-290 (EISENHOWER EXPRESSWAY)
1. ALL WORK MUST BE DONE DURING OFF PEAK HOURS.
2. CLOSE LANES OF TRAFFIC AS NEEDED UTILIZING HIGHWAY STANDARDS 701400, 701401, 701428, AND 701446. A MAXIMUM OF 3 LANES CAN BE CLOSED. ONE LANE SHALL REMAIN OPEN TO TRAFFIC AT ALL TIMES.
3. WORK CAN BE PERFORMED IN THE EASTBOUND AND WESTBOUND LANES AT THE SAME TIME.
4. REMOVE ALL TRAFFIC CONTROL DURING PEAK HOURS OR WHEN NO WORK IS BEING PERFORMED.
CTA.
1. REFER TO THE CTA FLAGGING AND COORDINATION SPECIAL PROVISION FOR REQUIREMENTS WORKING ADJACENT TO OR ABOVE THE CTA RIGHT-OF-WAY.

CONSTRUCTION
1. REMOVE AND STORE EXISTING SIGNS ATTACHED TO PAULINA ST BRIDGE.
2. PLACE PROPOSED PROTECTIVE SHIELDING AT LOCATIONS AS SHOWN ON THE STRUCTURAL PLANS.
3. PERFORM SHOULDER RUMBLE STRIP REMOVAL ON EASTBOUND AND WESTBOUND SHOULDERS OF I-290.
4. REMOVE SIDEWALK AT NORTHEAST CORNER OF VAN BUREN STREET AND PAULINA STREET INTERSECTION AND PLACE TEMPORARY PAVEMENT AND TEMPORARY SIDEWALK AS SHOWN ON THE PLANS.
5. REMOVE EXISTING RAISED BIKE MEDIAN BETWEEN VAN BUREN STREET AND JACKSON STREET AND PLACE TEMPORARY PAVEMENT TO BE UTILIZED IN STAGE 1 AS SHOWN ON THE PLANS.
6. REMOVE EXISTING FLEXIBLE DELINEATORS ON THE WEST SIDE OF PAULINA STREET BETWEEN CONGRESS PARKWAY AND VAN BUREN STREET.

STAGE 1

TRAFFIC
PAULINA STREET
1. SHIFT NORTHBOUND TRAFFIC TO THE SOUTHBOUND LANES AS SHOWN ON THE PLANS. PROVIDE ONE (1) 10-FOOT-LANE IN EACH DIRECTION ALONG PAULINA ST AS SHOWN ON THE PLANS.
2. PLACE TEMPORARY CONCRETE BARRIER WALL BETWEEN TRAFFIC AND CONSTRUCTION ACTIVITIES
3. CLOSE SOUTHBOUND BIKE LANE ALONG PAULINA STREET FROM JACKSON STREET TO CONGRESS PARKWAY. BICYCLISTS TO WALK BIKES ON SIDEWALK.
4. CLOSE NORTHBOUND BIKE LANE ALONG PAULINA ST FROM CONGRESS PARKWAY TO VAN BUREN STREET. BICYCLISTS TO WALK BIKES ON SIDEWALK.
CONGRESS PARKWAY
1. SHIFT TRAFFIC TO THE OUTSIDE MAINTAINING TWO (2) LANES OF TRAFFIC AS SHOWN ON THE PLANS.
VAN BUREN STREET
1. SHIFT TRAFFIC TO THE OUTSIDE MAINTAINING TWO (2) LANES OF TRAFFIC AS SHOWN ON THE PLANS.
CTA
1. REFER TO THE CTA FLAGGING AND COORDINATION SPECIAL PROVISON FOR REQUIREMENTS WORKING ADJACENT TO OR ABOVE THE CTA RIGHT-OF-WAY.

CONSTRUCTION
1. INSTALL TEMPORARY TRAFFIC SIGNALS AS SHOWN ON THE PLANS.
2. INSTALL TEMPORARY LIGHTING AS SHOWN ON THE PLANS.
3. REMOVE EXISTING BRIDGE DECK AND BEAMS ON THE EAST HALF OF THE BRIDGE. SEE STAGE 1 - REMOVE/ERECT BRIDGE BEAMS AND UTILIZE AS NEEDED FOR BEAM REMOVAL.
4. CONSTRUCT PROPOSED BRIDGE DECK AND PROPOSED BRIDGE BEAM ON THE EAST HALF OF THE BRIDGE. SEE STAGE 1 - REMOVE/ERECT BRIDGE BEAMS AND UTILIZE AS NEEDED FOR BEAM ERECTION.
5. CONSTRUCT TEMPORARY PAVEMENT TO BE UTILIZED IN WINTER STAGE AS SHOWN ON THE PLANS.

STAGE 1A

TRAFFIC
I-290 (EISENHOWER EXPRESSWAY)
1. CLOSE THE INSIDE SHOULDER AND SHIFT TRAFFIC TO THE OUTSIDE UTILIZING DISTRICT ONE STANDARD TC-09 AND AS SHOWN ON THE PLANS. PROVIDE FOUR 11-FOOT-WIDE LANES OF TRAFFIC.
2. PLACE TEMPORARY CONCRETE BARRIER WALL BETWEEN TRAFFIC AND CONSTRUCTION ACTIVITIES.
CTA
1. REFER TO THE CTA FLAGGING AND COORDINATION SPECIAL PROVISION FOR REQUIREMENTS WORKING ADJACENT TO OR ABOVE THE CTA RIGHT-OF-WAY.

CONSTRUCTION
1. PERFORM PIER REPAIRS AND SEAT EXTENSIONS ON EAST SIDE OF PIERS.

STAGE 1B

TRAFFIC
I-290 (EISENHOWER EXPRESSWAY)
1. CLOSE THE OUTSIDE SHOULDER AND SHIFT TRAFFIC TO THE INSIDE UTILIZING DISTRICT ONE STANDARD TC-09 AND AS SHOWN ON THE PLANS. PROVIDE FOUR 11-FOOT-WIDE LANES OF TRAFFIC.
2. PLACE TEMPORARY CONCRETE BARRIER WALL BETWEEN TRAFFIC AND CONSTRUCTION ACTIVITIES.
CTA
1. REFER TO THE CTA FLAGGING AND COORDINATION SPECIAL PROVISION FOR REQUIREMENTS WORKING ADJACENT TO OR ABOVE THE CTA RIGHT-OF-WAY.

CONSTRUCTION
1. PERFORM ABUTMENT REPAIRS AND SEAT EXTENSIONS ON EAST SIDE OF ABUTMENT.

SUGGESTED STAGING NOTES (CONT.)

STAGE 1 - REMOVE/ERECT BRIDGE BEAMS

TRAFFIC
I-290 (EISENHOWER EXPRESSWAY)
1. ALL WORK TO BE DONE DURING ALLOWABLE HOURS.
2. STARTING FROM STAGE 1A OR 1B CONFIGURATION, CLOSE THREE LANES OF TRAFFIC UTILIZING HIGHWAY STANDARDS 701400, 701401, 701428, AND 701446. LEAVE REMAINING LANE OPEN TO TRAFFIC.
3. CLOSE REMAINING LANE FOR 15-MINUTE DURATIONS AS NEEDED FOR BEAM REMOVAL. FULLSTOPS ARE ONLY ALLOWED DURING ALLOWABLE HOURS STATED ON THE KEEPING THE EXPRESSWAY OPEN TO TRAFFIC SPECIAL PROVISION.
4. CLOSE RAMPS AS NEEDED UTILIZING DISTRICT ONE STANDARD TC-08. RAMPS MAY BE CLOSED DURING ALLOWABLE TIMES.
5. RETURN TO STAGE 1A/1B CONFIGURATION DURING PEAK HOURS.
CTA
1. REFER TO THE CTA FLAGGING AND COORDINATION SPECIAL PROVISION FOR REQUIREMENTS WORKING ADJACENT TO OR ABOVE THE CTA RIGHT-OF-WAY.

CONSTRUCTION
1. REMOVE EXISTING BRIDGE BEAMS ON EAST HALF OF THE BRIDGE.
2. ERECT PROPOSED BRIDGE BEAMS ON EAST HALF OF THE BRIDGE.

WINTER STAGE

TRAFFIC
PAULINA STREET
1. SHIFT NORTHBOUND AND SOUTHBOUND TRAFFIC LANES AS SHOWN ON THE PLANS. PROVIDE ONE (1) 10-FOOT-LANE IN EACH DIRECTION ALONG PAULINA ST AS SHOWN ON THE PLANS.
2. PLACE TEMPORARY CONCRETE BARRIER WALL BETWEEN TRAFFIC AND OPENING IN BRIDGE DECK TO REMAIN OVER WINTER.
3. CLOSE SOUTHBOUND BIKE LANE ALONG PAULINA STREET FROM VAN BUREN STREET TO JACKSON STREET. BICYCLISTS TO WALK BIKES ON SIDEWALK.
4. MAINTAIN NORTHBOUND BIKE LANE FROM CONGRESS PARKWAY TO JACKSON STREET AS SHOWN ON THE PLANS.
CONGRESS PARKWAY
1. ALL LANES OF TRAFFIC IN ORIGINAL CONFIGURATION
VAN BUREN STREET
1. ALL LANES OF TRAFFIC IN ORIGINAL CONFIGURATION
I-290 (EISENHOWER EXPRESSWAY)
1. ALL LANES OF TRAFFIC IN ORIGINAL CONFIGURATION

STAGE 2

TRAFFIC
PAULINA STREET
1. SHIFT SOUTHBOUND TRAFFIC TO THE NORTHBOUND LANES AS SHOWN ON THE PLANS. PROVIDE ONE (1) 10-FOOT-LANE IN EACH DIRECTION ALONG PAULINA ST AS SHOWN ON THE PLANS.
2. PLACE TEMPORARY CONCRETE BARRIER WALL BETWEEN TRAFFIC AND CONSTRUCTION ACTIVITIES
3. CLOSE SOUTHBOUND BIKE LANE ALONG PAULINA STREET FROM CONGRESS PARKWAY TO VAN BUREN STREET. BICYCLISTS TO WALK BIKES ON SIDEWALK.
CONGRESS PARKWAY
1. SHIFT TRAFFIC TO THE OUTSIDE MAINTAINING TWO (2) LANES OF TRAFFIC AS SHOWN ON THE PLANS.
VAN BUREN STREET
1. SHIFT TRAFFIC TO THE OUTSIDE MAINTAINING TWO (2) LANES OF TRAFFIC AS SHOWN ON THE PLANS.
CTA
1. REFER TO THE CTA FLAGGING AND COORDINATION SPECIAL PROVISION FOR REQUIREMENTS WORKING ADJACENT TO OR ABOVE THE CTA RIGHT-OF-WAY.

CONSTRUCTION
1. REMOVE EXISTING BRIDGE DECK AND BEAMS ON THE WEST HALF OF THE BRIDGE. SEE STAGE 2 - REMOVE/ERECT BRIDGE BEAMS AND UTILIZE STAGE 2C AS NEEDED FOR BEAM REMOVAL.
2. CONSTRUCT PROPOSED BRIDGE DECK AND PROPOSED BRIDGE BEAM ON THE WEST HALF OF THE BRIDGE. SEE STAGE 2 - REMOVE/ERECT BRIDGE BEAMS AND UTILIZE AS NEEDED FOR BEAM ERECTION.
3. RE-INSTALL EXISTING SIGN PANELS.

STAGE 2A

TRAFFIC
I-290 (EISENHOWER EXPRESSWAY)
1. CLOSE THE INSIDE SHOULDER AND SHIFT TRAFFIC TO THE OUTSIDE UTILIZING DISTRICT ONE STANDARD TC-09 AND AS SHOWN ON THE PLANS. PROVIDE FOUR 11-FOOT-WIDE LANES OF TRAFFIC.
2. PLACE TEMPORARY CONCRETE BARRIER WALL BETWEEN TRAFFIC AND CONSTRUCTION ACTIVITIES.
CTA
1. REFER TO THE CTA FLAGGING AND COORDINATION SPECIAL PROVISION FOR REQUIREMENTS WORKING ADJACENT TO OR ABOVE THE CTA RIGHT-OF-WAY.

CONSTRUCTION
1. PERFORM PIER REPAIRS AND SEAT EXTENSIONS ON WEST SIDE OF PIERS.

SUGGESTED STAGING NOTES (CONT.)

STAGE 2B

TRAFFIC
I-290 (EISENHOWER EXPRESSWAY)
1. CLOSE THE OUTSIDE SHOULDER AND SHIFT TRAFFIC TO THE INSIDE UTILIZING DISTRICT ONE STANDARD TC-09 AND AS SHOWN ON THE PLANS. PROVIDE FOUR 11-FOOT-WIDE LANES OF TRAFFIC.
2. PLACE TEMPORARY CONCRETE BARRIER WALL BETWEEN TRAFFIC AND CONSTRUCTION ACTIVITIES.
CTA
1. REFER TO THE CTA FLAGGING AND COORDINATION SPECIAL PROVISION FOR REQUIREMENTS WORKING ADJACENT TO OR ABOVE THE CTA RIGHT-OF-WAY.

CONSTRUCTION
1. PERFORM ABUTMENT REPAIRS AND SEAT EXTENSIONS ON WEST SIDE OF ABUTMENT.

STAGE 2 - REMOVE/ERECT BRIDGE BEAMS

TRAFFIC
I-290 (EISENHOWER EXPRESSWAY)
1. ALL WORK TO BE DONE DURING ALLOWABLE HOURS.
2. STARTING FROM STAGE 2A OR 2B CONFIGURATION, CLOSE THREE LANES OF TRAFFIC UTILIZING HIGHWAY STANDARDS 701400, 701401, 701428, AND 701446. LEAVE REMAINING LANE OPEN TO TRAFFIC.
3. CLOSE REMAINING LANE FOR 15-MINUTE DURATIONS AS NEEDED FOR BEAM REMOVAL OR BEAM ERECTION. FULLSTOPS ARE ONLY ALLOWED DURING ALLOWABLE HOURS STATED ON THE KEEPING THE EXPRESSWAY OPEN TO TRAFFIC SPECIAL PROVISION.
4. CLOSE RAMPS AS NEEDED UTILIZING DISTRICT ONE STANDARD TC-08. RAMPS MAY BE CLOSED DURING ALLOWABLE TIMES.
5. RETURN TO STAGE 2A/2B CONFIGURATION DURING PEAK HOURS.

CONSTRUCTION
1. REMOVE EXISTING BRIDGE BEAMS ON WEST HALF OF THE BRIDGE.
2. ERECT PROPOSED BRIDGE BEAMS ON WEST HALF OF THE BRIDGE.

POST-STAGE 2

TRAFFIC
I-290 (EISENHOWER EXPRESSWAY)
1. ALL WORK TO BE DONE DURING ALLOWABLE HOURS.
2. WORK CAN BE PERFORMED IN THE EASTBOUND AND WESTBOUND LANES AT THE SAME TIME.

CONSTRUCTION
1. INSTALL RUMBLE STRIPS ON OUTSIDE SHOULDER UTILIZING HIGHWAY STANDARDS 701400, 401406, AND 701426 DURING ALLOWABLE HOURS.
2. INSTALL PERMANENT PAVEMENT MARKINGS ON I-290.

STAGE 3

TRAFFIC
PAULINA STREET
1. SHIFT THE NORTHBOUND AND SOUTHBOUND LANES AS SHOWN ON THE PLANS. PROVIDE (1) 12-FOOT-LANE IN EACH DIRECTION AS SHOWN ON THE PLANS.
2. MAINTAIN NORTHBOUND AND SOUTHBOUND BIKE LANES FROM CONGRESS PARKWAY TO JACKSON ST AS SHOWN ON THE PLANS.
CONGRESS PARKWAY
1. SHIFT TRAFFIC TO THE OUTSIDE MAINTAINING TWO (2) LANES OF TRAFFIC AS SHOWN ON THE PLANS.
VAN BUREN STREET
1. SHIFT TRAFFIC TO THE OUTSIDE MAINTAINING TWO (2) LANES OF TRAFFIC AS SHOWN ON THE PLANS.
I-290 (EISENHOWER EXPRESSWAY)
1. ALL LANES OF TRAFFIC IN THE ORIGINAL CONFIGURATION.

CONSTRUCTION
1. CONSTRUCT REMAINDER OF RAISED BIKE LANE AND RAISED SIDEWALK ON TOP OF THE BRIDGE DECK ALONG THE EAST HALF OF THE BRIDGE.

STAGE 4

TRAFFIC
PAULINA STREET
1. ALL WORK TO BE DONE DURING OFF-PEAK HOURS UTILIZING DAILY LANE CLOSURES.
CONGRESS PARKWAY
1. ALL WORK TO BE DONE DURING OFF-PEAK HOURS UTILIZING DAILY LANE CLOSURES.
VAN BUREN STREET
1. ALL WORK TO BE DONE DURING OFF-PEAK HOURS UTILIZING DAILY LANE CLOSURES.

CONSTRUCTION
1. CONSTRUCT ADA IMPROVEMENTS AT THE SOUTH LEG OF THE INTERSECTION OF PAULINA STREET AND CONGRESS PARKWAY AND THE NORTH LEG OF THE INTERSECTION OF PAULINA STREET AND VAN BUREN STREET.
2. INSTALL PERMANENT TRAFFIC SIGNALS AT THE PAULINA STREET AND CONGRESS PARKWAY INTERSECTION AND PAULINA STREET AND VAN BUREN STREET INTERSECTION.
3. PERFORM PATCHING, MILLING, AND RESURFACING ON PAULINA STREET, VAN BUREN STREET, AND CONGRESS PARKWAY.
4. INSTALL PERMANENT PAVEMENT MARKINGS ON PAULINA STREET, CONGRESS PARKWAY, AND VAN BUREN STREET.
5. REMOVE TEMPORARY PAVEMENT AND INSTALL RAISED BIKE MEDIAN BETWEEN VAN BUREN STREET AND JACKSON STREET.

FILE NAME = \\nasuni-hl\Data\Projects\10-IL\14411-DOT - Sacramento and Paulina over I-290\Work\CADD\Paulina - Contract 62K64\CADD_Sheets\civil\D162K64-sht-mro-gsm.dgn

COLLINS ENGINEERS INC

USER NAME = omartinez	DESIGNED - OAM	REVISED -	
	DRAWN - OAM	REVISED -	
PLOT SCALE = 100.0000 ' / in.	CHECKED - RAG	REVISED -	
PLOT DATE = 10/15/2025	DATE - 09/08/2025	REVISED -	

STATE OF ILLINOIS
DEPARTMENT OF TRANSPORTATION

FAI-290 (EISENHOWER EXPRESSWAY) AT PAULINA STREET
MAINTENANCE OF TRAFFIC STAGING NOTES

SCALE: NTS | SHEET NO. 2 OF 2 SHEETS | STA. | TO STA.

F.A.I. RTE.	SECTION	COUNTY	TOTAL SHEETS	SHEET NO.
290	2019-191-B-R	COOK	265	49
		CONTRACT NO. 62K64		
FED. ROAD DIST. NO.	ILLINOIS	FED. AID PROJECT		

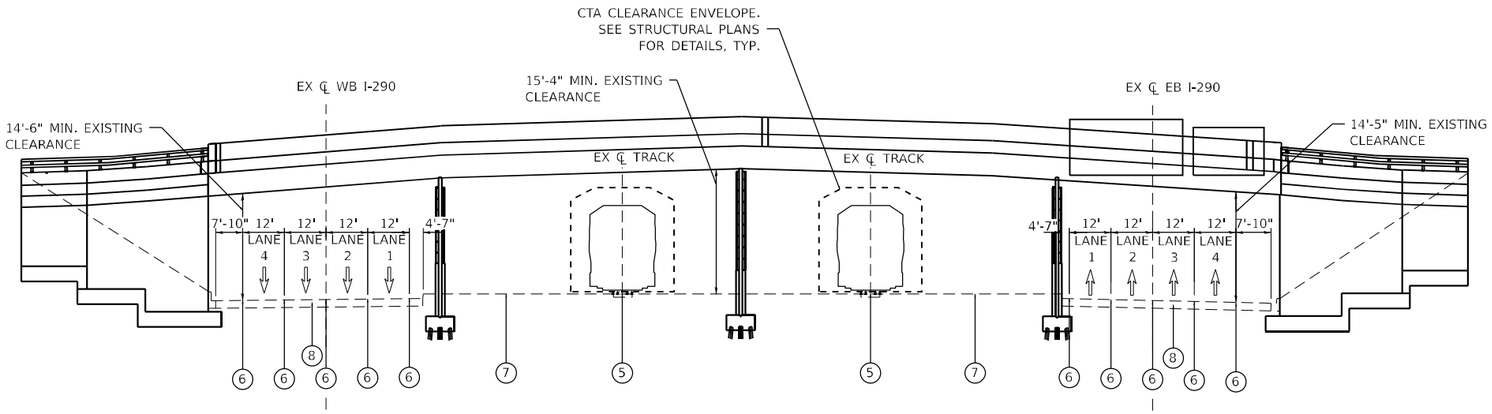

WESTBOUND **PAULINA ST BRIDGE OVER I–290** **EASTBOUND**

EXISTING CONDITIONS

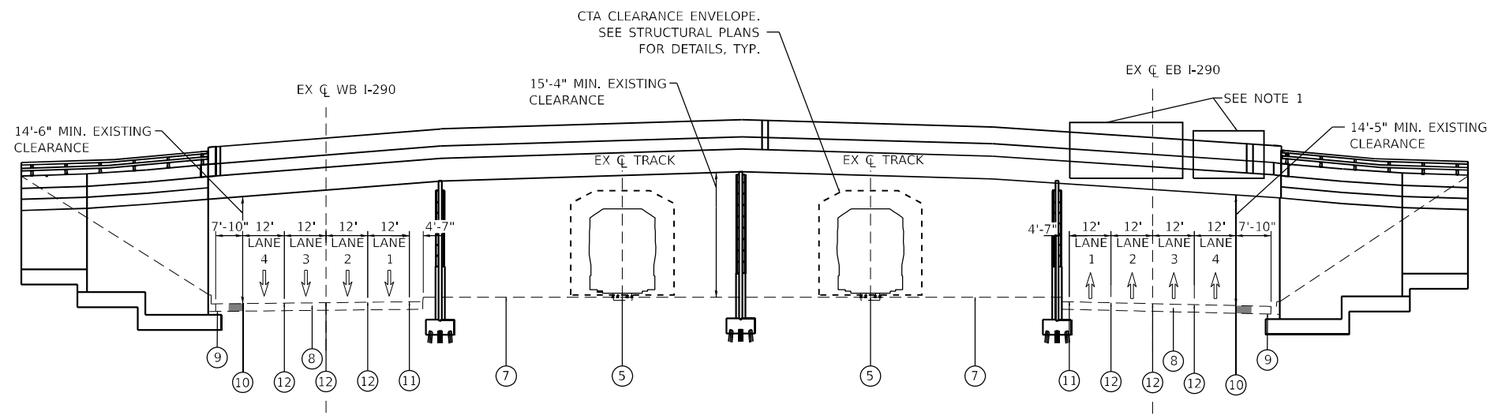

WESTBOUND **PAULINA ST BRIDGE OVER I–290** **EASTBOUND**

WINTER STAGE

LEGEND

1. TEMPORARY CONCRETE BARRIER
2. TEMPORARY PAVEMENT MARKING - LINE 4" TYPE IV TAPE (SOLID WHITE)
3. TEMPORARY PAVEMENT MARKING - LINE 4" TYPE IV TAPE (SOLID YELLOW)
4. TEMPORARY PAVEMENT MARKING - LINE 5" TYPE IV TAPE (10' DASH - 30' SKIP WHITE)
5. EXISTING CTA TRACKS
6. EXISTING PAVEMENT MARKING
7. EXISTING GROUND
8. EXISTING PAVEMENT
9. HMA SHOULDER RUMBLE STRIP REMOVAL:
   3' WIDTH
   PR HMA SURFACE COURSE MIX "D", IL-9.5, N70, 2"
10. TEMPORARY PAVEMENT MARKING - LINE 4" - MODIFIED URETHANE (SOLID WHITE)
11. TEMPORARY PAVEMENT MARKING - LINE 4" - MODIFIED URETHANE (SOLID YELLOW)
12. TEMPORARY PAVEMENT MARKING - LINE 5" - MODIFIED URETHANE (10' DASH - 30' SKIP WHITE)

P. PINNING TEMPORARY CONCRETE BARRIER

WORK AREA

DIRECTION OF TRAFFIC

DRUM OR TYPE II BARRICADE AT 100' C-C SPACING IN TANGENTS AND 50' SPACING IN TAPERS

TEMPORARY CONCRETE BARRIER WITH MONO-DIRECTIONAL, TYPE C REFLECTORS PER STD 704001 AND STD 782006

NOTES:

1. EXISTNG SIGN PANELS SHALL BE REMOVED AND STORED DURING STAGE 1 & 2.

FILE NAME = P:\10-IL\14111-DOT - Sacramento and Paulina over I-290\Work\CADD\Paulina - Contract 62K64\CADD_Sheets\Civil\D162K64-sht-sys_MOT-I290.dgn

COLLINS ENGINEERS INC.

USER NAME = omartinez	DESIGNED - OAM	REVISED -
	DRAWN - OAM	REVISED -
PLOT SCALE = 40.0000 ' / in.	CHECKED - RAG	REVISED -
PLOT DATE = 10/15/2025	DATE - 09/08/2025	REVISED -

STATE OF ILLINOIS
DEPARTMENT OF TRANSPORTATION

FAI–290 (EISENHOWER EXPRESSWAY) AT PAULINA STREET
MAINTENANCE OF TRAFFIC – TYPICAL SECTIONS

SCALE: NTS | SHEET NO. 1 OF 4 SHEETS | STA. | TO STA.

F.A.I. RTE.	SECTION	COUNTY	TOTAL SHEETS	SHEET NO.
290	2019-191-B-R	COOK	265	50
		CONTRACT NO. 62K64		
FED. ROAD DIST. NO.	ILLINOIS	FED. AID PROJECT		

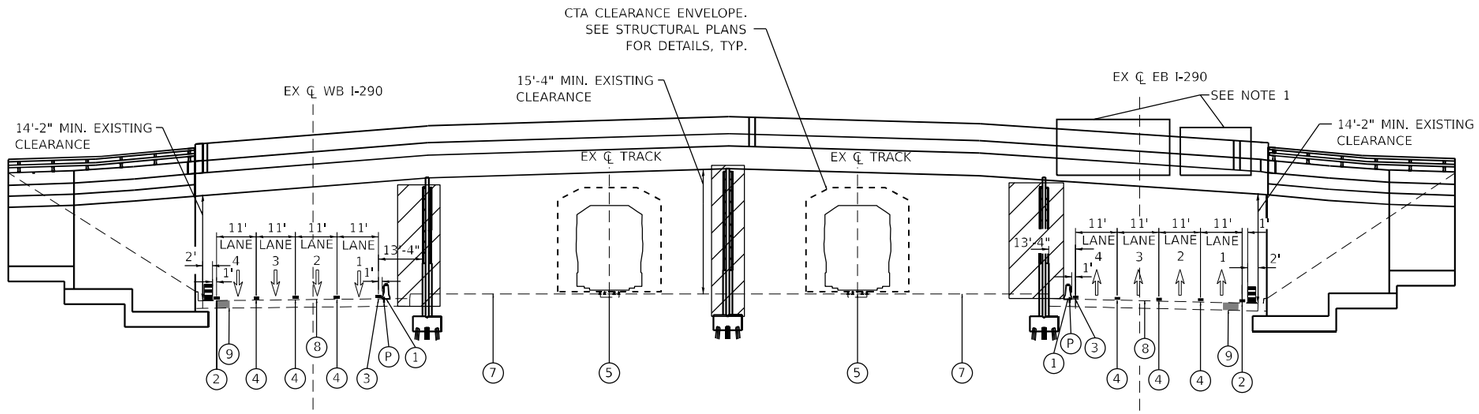

WESTBOUND

PAULINA ST BRIDGE OVER I–290

STAGE 1A & 2A

EASTBOUND

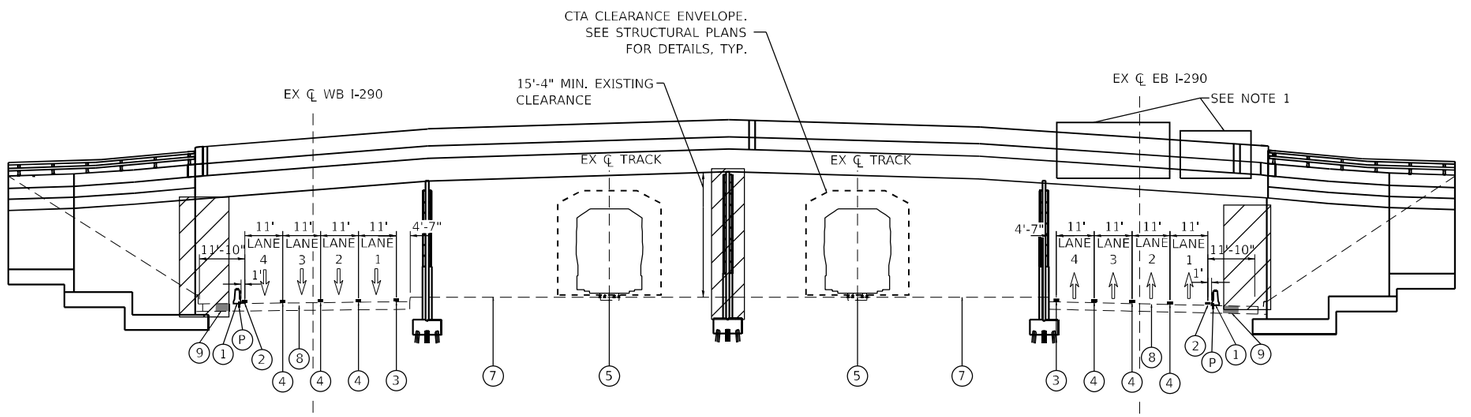

WESTBOUND

PAULINA ST BRIDGE OVER I–290

STAGE 1B & 2B

EASTBOUND

LEGEND

1. TEMPORARY CONCRETE BARRIER
2. TEMPORARY PAVEMENT MARKING - LINE 4" TYPE IV TAPE (SOLID WHITE)
3. TEMPORARY PAVEMENT MARKING - LINE 4" TYPE IV TAPE (SOLID YELLOW)
4. TEMPORARY PAVEMENT MARKING - LINE 5" TYPE IV TAPE (10' DASH - 30' SKIP WHITE)
5. EXISTING CTA TRACKS
6. EXISTING PAVEMENT MARKING
7. EXISTING GROUND
8. EXISTING PAVEMENT
9. HMA SHOULDER RUMBLE STRIP REMOVAL:
   3' WIDTH
   PR HMA SURFACE COURSE MIX "D", IL-9.5, N70, 2"
10. TEMPORARY PAVEMENT MARKING - LINE 4" - MODIFIED URETHANE (SOLID WHITE)
11. TEMPORARY PAVEMENT MARKING - LINE 4" - MODIFIED URETHANE (SOLID YELLOW)
12. TEMPORARY PAVEMENT MARKING - LINE 5" - MODIFIED URETHANE (10' DASH - 30' SKIP WHITE)

(P) PINNING TEMPORARY CONCRETE BARRIER

WORK AREA

DIRECTION OF TRAFFIC

DRUM OR TYPE II BARRICADE AT 100' C-C SPACING IN TANGENTS AND 50' SPACING IN TAPERS

TEMPORARY CONCRETE BARRIER WITH MONO-DIRECTIONAL, TYPE C REFLECTORS PER STD 704001 AND STD 782006

NOTES:

1. EXISTNG SIGN PANELS SHALL BE REMOVED AND STORED DURING STAGE 1 & 2.

FILE NAME = P:\10-IL\14111-DOT - Sacramento and Paulina over I-290\Work\CADD\Paulina - Contract 62K64\CADD_Sheets\Civil\D162K64-sht-syp_MOT-I290.dgn

COLLINS ENGINEERS INC.

USER NAME = omartinez	DESIGNED - OAM	REVISED -	
	DRAWN - OAM	REVISED -	
PLOT SCALE = 40.0000 ' / in.	CHECKED - RAG	REVISED -	
PLOT DATE = 10/15/2025	DATE - 09/08/2025	REVISED -	

STATE OF ILLINOIS
DEPARTMENT OF TRANSPORTATION

FAI–290 (EISENHOWER EXPRESSWAY) AT PAULINA STREET
MAINTENANCE OF TRAFFIC – TYPICAL SECTIONS

SCALE: NTS | SHEET NO. 2 OF 4 SHEETS | STA. | TO STA.

F.A.I. RTE.	SECTION	COUNTY	TOTAL SHEETS	SHEET NO.
290	2019-191-B-R	COOK	265	51
		CONTRACT NO. 62K64		
FED. ROAD DIST. NO.	ILLINOIS	FED. AID PROJECT		

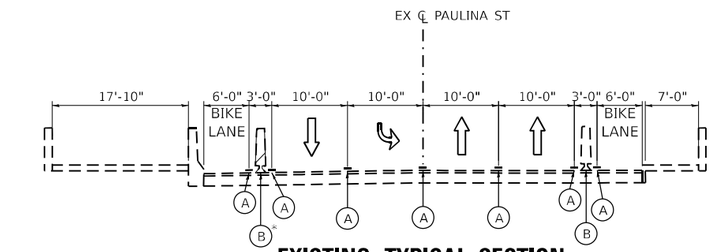

*TO BE REMOVED IN PRE-STAGE 1

EXISTING TYPICAL SECTION
PAULINA ST

(LOOKING NORTH)

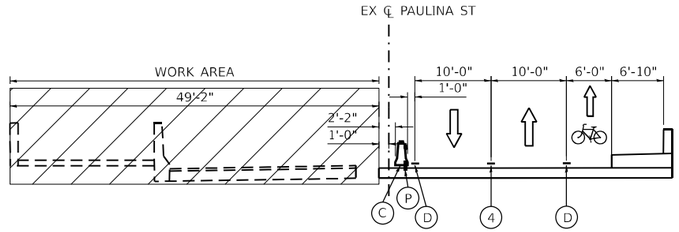

PROPOSED TYPICAL SECTION
PAULINA ST – STAGE 2

(LOOKING NORTH)

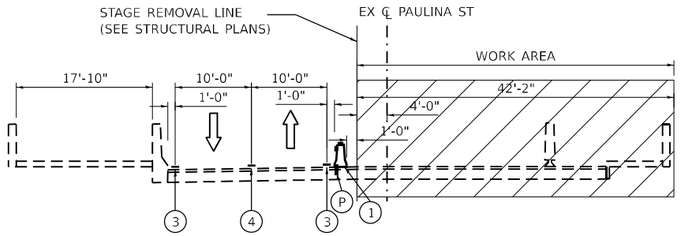

PROPOSED TYPICAL SECTION
PAULINA ST – STAGE 1

(LOOKING NORTH)

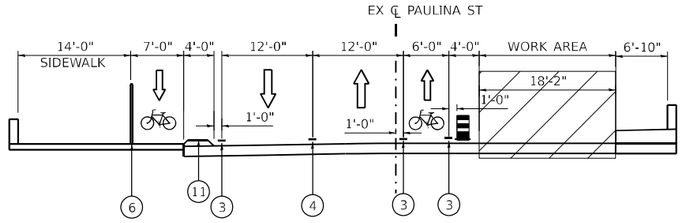

PROPOSED TYPICAL SECTION
PAULINA ST – STAGE 3

(LOOKING NORTH)

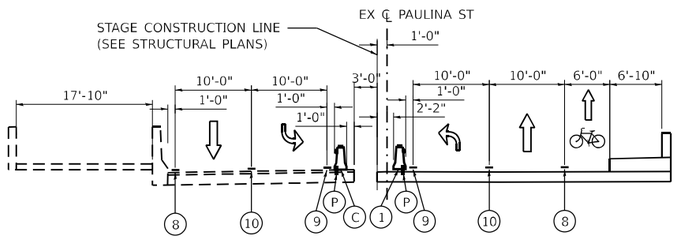

PROPOSED TYPICAL SECTION
PAULINA ST – WINTER STAGE

(LOOKING NORTH)

PROPOSED LEGEND:

1. TEMPORARY CONCRETE BARRIER
2. RELOCATE TEMPORARY CONCRETE BARRIER
3. TEMPORARY PAVEMENT MARKING - LINE 4" - TYPE IV TAPE (SOLID WHITE)
4. TEMPORARY PAVEMENT MARKING - LINE 4" - TYPE IV TAPE (DOUBLE YELLOW 8" C-C)
5. TEMPORARY PAVEMENT MARKING - LINE 4" - TYPE IV TAPE (6' DASH - 18' SKIP WHITE)
6. PROPOSED FLEXIBLE DELINEATORS
7. TEMPORARY PAVEMENT MARKING - LINE 4" MODIFIED URETHANE (6' DASH - 18' SKIP WHITE)
8. TEMPORARY PAVEMENT MARKING - LINE 4" MODIFIED URETHANE (SOLID WHITE)
9. TEMPORARY PAVEMENT MARKING - LINE 4" MODIFIED URETHANE (SOLID YELLOW)
10. TEMPORARY PAVEMENT MARKING - LINE 6" MODIFIED URETHANE (SOLID WHITE)
11. PROPOSED MEDIAN (SEE STRUCTURAL PLANS)

- A — EXISTING PAVEMENT MARKING
- B — EXISTING FLEXIBLE DELINEATORS
- C — TEMPORARY CONCRETE BARRIER PLACED IN PREVIOUS STAGE
- D — TEMPORARY PAVEMENT MARKING PLACED IN PREVIOUS STAGE
- P — PINNING TEMPORARY CONCRETE BARRIER

TEMPORARY CONCRETE BARRIER WITH MONO-DIRECTIONAL, TYPE C REFLECTORS PER STD 704001 AND STD 782006

DIRECTION OF TRAFFIC

DRUM OR TYPE II BARRICADE AT 50' C-C SPACING IN TANGENTS AND 25' SPACING IN TAPERS

WORK AREA

FILE NAME = P:\10-ILL14411-IDOT - Sacramento and Paulina over I-290\Work\CADD\Paulina - Contract 62K64\CADD_Sheets\Civil\D16262K64-SH-typ_MOT-Paulina.dgn

COLLINS ENGINEERS INC

USER NAME = omartinez	DESIGNED - OAM	REVISED -	
	DRAWN - OAM	REVISED -	
PLOT SCALE = 20.0000 ' / in.	CHECKED - RAG	REVISED -	
PLOT DATE = 10/15/2025	DATE - 09/08/2025	REVISED -	

STATE OF ILLINOIS
DEPARTMENT OF TRANSPORTATION

FAI-290 (EISENHOWER EXPRESSWAY) AT PAULINA STREET
MAINTENANCE OF TRAFFIC – TYPICAL SECTIONS

SCALE: NTS | SHEET NO. 3 OF 4 SHEETS | STA. | TO STA.

F.A.I. RTE.	SECTION	COUNTY	TOTAL SHEETS	SHEET NO.
290	2019-191-B-R	COOK	265	52
		CONTRACT NO. 62K64		
FED. ROAD DIST. NO.	ILLINOIS	FED. AID PROJECT		

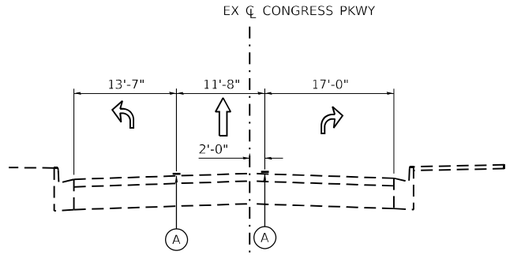

EXISTING TYPICAL SECTION
CONGRESS PKWY
(WEST LEG, LOOKING EAST)

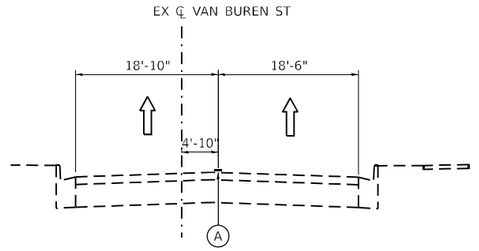

EXISTING TYPICAL SECTION
VAN BUREN ST
(EAST LEG, LOOKING WEST)

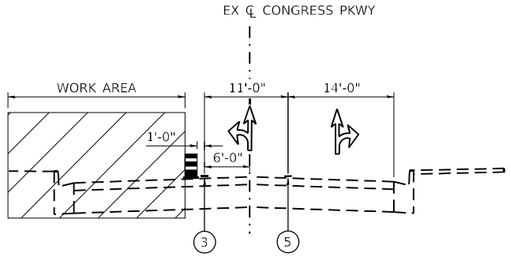

PROPOSED TYPICAL SECTION
CONGRESS PKWY STAGE 1, 2, & 3
(WEST LEG, LOOKING EAST)

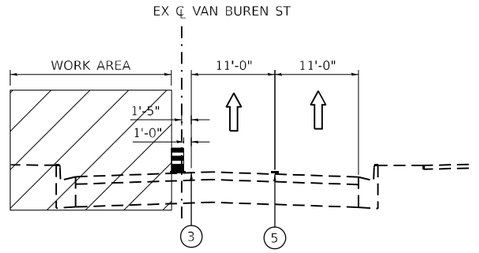

PROPOSED TYPICAL SECTION
VAN BUREN ST – STAGE 1, 2, & 3
(EAST LEG, LOOKING WEST)

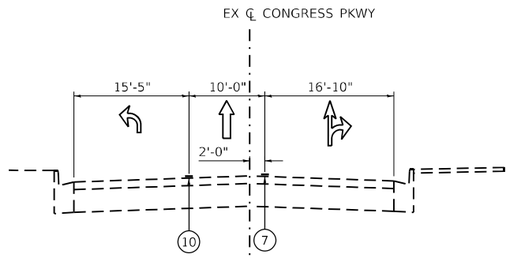

PROPOSED TYPICAL SECTION
CONGRESS PKWY – WINTER STAGE
(WEST LEG, LOOKING EAST)

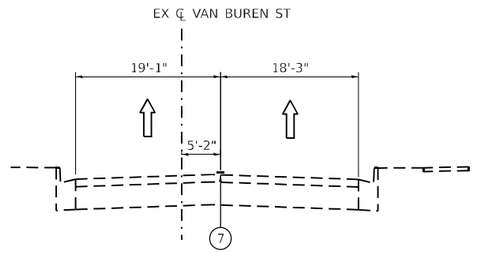

PROPOSED TYPICAL SECTION
VAN BUREN ST – WINTER STAGE
(EAST LEG, LOOKING WEST)

PROPOSED LEGEND:

1. TEMPORARY CONCRETE BARRIER
2. RELOCATE TEMPORARY CONCRETE BARRIER
3. TEMPORARY PAVEMENT MARKING - LINE 4" - TYPE IV TAPE (SOLID WHITE)
4. TEMPORARY PAVEMENT MARKING - LINE 4" - TYPE IV TAPE (DOUBLE YELLOW 8" C-C)
5. TEMPORARY PAVEMENT MARKING - LINE 4" - TYPE IV TAPE (6' DASH - 18' SKIP WHITE)
6. PROPOSED FLEXIBLE DELINEATORS
7. TEMPORARY PAVEMENT MARKING - LINE 4" MODIFIED URETHANE (6' DASH - 18' SKIP WHITE)
8. TEMPORARY PAVEMENT MARKING - LINE 4" MODIFIED URETHANE (SOLID WHITE)
9. TEMPORARY PAVEMENT MARKING - LINE 4" MODIFIED URETHANE (SOLID YELLOW)
10. TEMPORARY PAVEMENT MARKING - LINE 6" MODIFIED URETHANE (SOLID WHITE)
11. PROPOSED MEDIAN (SEE STRUCTURAL PLANS)

- A. EXISTING PAVEMENT MARKING
- B. EXISTING FLEXIBLE DELINEATORS
- C. TEMPORARY CONCRETE BARRIER PLACED IN PREVIOUS STAGE
- D. TEMPORARY PAVEMENT MARKING PLACED IN PREVIOUS STAGE
- P. PINNING TEMPORARY CONCRETE BARRIER

TEMPORARY CONCRETE BARRIER WITH MONO-DIRECTIONAL, TYPE C REFLECTORS PER STD 704001 AND STD 782006

DIRECTION OF TRAFFIC

DRUM OR TYPE II BARRICADE AT 50' C-C SPACING IN TANGENTS AND 25' SPACING IN TAPERS

WORK AREA

FILE NAME = P:\10-IL\14411-IDOT - Sacramento and Paulina over I-290\Work\CADD\Paulina - Contract 62K64\CADD_Sheets\Civil\D1162K64-sht-typ_MOT-Paulina.dgn

COLLINS ENGINEERS INC.

USER NAME = omartinez	DESIGNED - OAM	REVISED -
	DRAWN - OAM	REVISED -
PLOT SCALE = 20.0000 ' / in.	CHECKED - RAG	REVISED -
PLOT DATE = 10/15/2025	DATE - 09/08/2025	REVISED -

STATE OF ILLINOIS
DEPARTMENT OF TRANSPORTATION

FAI–290 (EISENHOWER EXPRESSWAY) AT PAULINA STREET
MAINTENANCE OF TRAFFIC – TYPICAL SECTIONS

SCALE: NTS | SHEET NO. 4 OF 4 SHEETS | STA. | TO STA.

F.A.I. RTE.	SECTION	COUNTY	TOTAL SHEETS	SHEET NO.
290	2019-191-B-R	COOK	265	53
		CONTRACT NO. 62K64		
FED. ROAD DIST. NO.	ILLINOIS	FED. AID PROJECT		

ADVANCED SIGNING DETAIL – I–290 EASTBOUND – STAGE 1

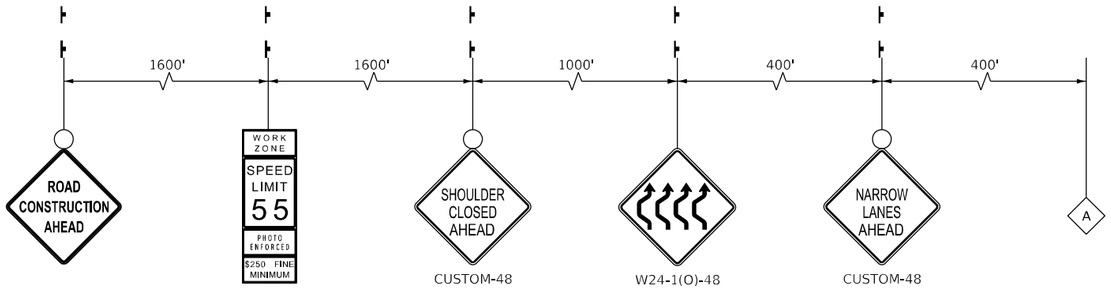

W20-I103(O)-48

W21-I115(O)-3618
R2-1-3648
R10-I108-3618
R2-I106P-3618

CUSTOM-48

W24-1(O)-48

CUSTOM-48

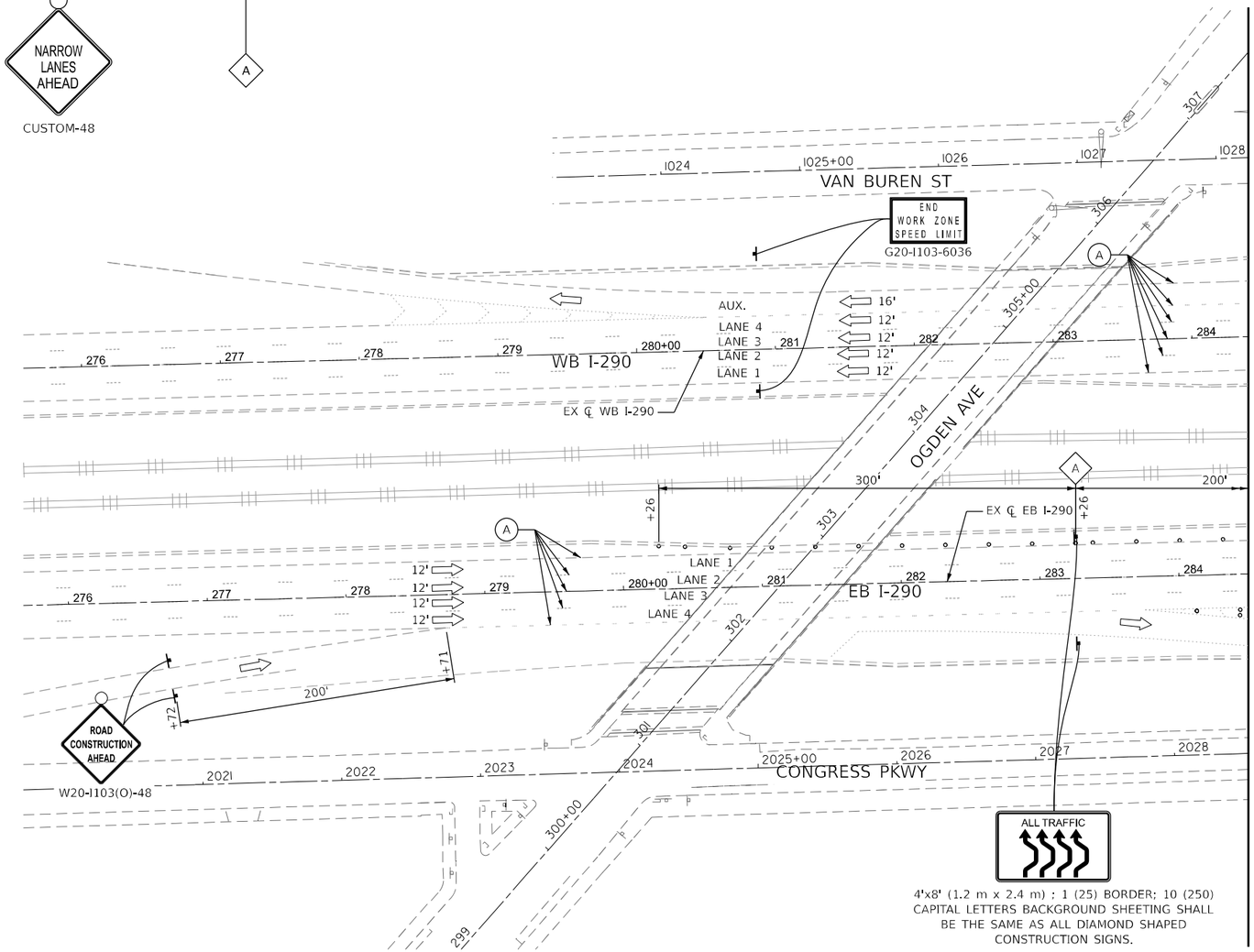

LEGEND

- CONSTRUCTION ZONE
- TEMPORARY CONCRETE BARRIER (CONTINOUSLY PINNED) WITH MONO-DIRECTIONAL, TYPE C REFLECTORS PER STD 704001 AND STD 782006
- IMPACT ATTENUATOR, TEMPORARY (FULLY REDIRECTIVE, NARROW) TEST LEVEL 3
- DRUMS SPACED 100' C-C OR AS NOTED: DRUMS IN TAPER (50' C-C) DRUMS IN RADII (25' C-C)
- TYPE III BARRICADE WITH TWO FLASHING BEACONS
- SIGN ON PORTABLE OR PERMANENT SUPPORT
- DIRECTION OF TRAFFIC
- ARROW BOARD

(1) TEMPORARY PAVEMENT MARKING - LINE 4" - TYPE IV TAPE (SOLID WHITE)
(2) TEMPORARY PAVEMENT MARKING - LINE 4" - TYPE IV TAPE (SOLID YELLOW)
(3) TEMPORARY PAVEMENT MARKING - LINE 5" - TYPE IV TAPE (10' DASH - 30' SKIP WHITE)
(4) TEMPORARY PAVEMENT MARKING - LINE 8" - TYPE IV TAPE (SOLID YELLOW)
(A) EXISTING PAVEMENT MARKING

N

0 50 100
SCALE IN FEET

COLLINS ENGINEERS INC.

USER NAME = omartinez	DESIGNED - OAM	REVISED -
	DRAWN - OAM	REVISED -
PLOT SCALE = 100.0000 ' / in.	CHECKED - RAG	REVISED -
PLOT DATE = 10/15/2025	DATE - 09/08/2025	REVISED -

STATE OF ILLINOIS
DEPARTMENT OF TRANSPORTATION

FAI–290 (EISENHOWER EXPRESSWAY) AT PAULINA STREET
MAINTENANCE OF TRAFFIC – STAGE 1A & 2A (I–290)

SCALE: 1" = 50' | SHEET NO. 1 OF 17 SHEETS | STA. | TO STA.

F.A.I. RTE.	SECTION	COUNTY	TOTAL SHEETS	SHEET NO.
290	2019-191-B-R	COOK	265	54
		CONTRACT NO. 62K64		
FED. ROAD DIST. NO.	ILLINOIS	FED. AID PROJECT		

FILE NAME = P:\10-IL\14111-IDOT - Sacramento and Paulina over I-290\Work\CADD\Paulina - Contract 62K64\CADD_Sheets\Civil\D162K64-sht-mot-stage1-I-290.dgn

MATCHLINE EB I-290 STA 284+50

MATCHLINE EB I-290 STA 298+50

OGDEN AVE

VAN BUREN ST

PAULINA ST

CONGRESS PKWY

WB I-290

EB I-290

EX ℄ WB I-290

EX ℄ EB I-290

W21-I1105(O)-3618
R2-1-3648
R10-I108-3618
R2-I106P-3618

W1-6R(O)-6030
PLACED ABOVE TYPE III BARRICADE
WITH FLASHING LIGHTS

SEE NOTE 1

SHOULDER RUMBLE STRIP REMOVAL
COMPLETED IN PRE-STAGE 1

550' LANE SHIFT TAPER (55:1)

200' (CONT.)

12:1 TAPER

REMOVE AND SAFELY
STORE EXISTING SIGN
(APPROX 204"x102")

REMOVE AND SAFELY
STORE EXISTING SIGN
(APPROX 186"x102")

Wisconsin Indiana EXIT 1 MILE

Racine Ave ½ MILE

CUSTOM - 78x72 WOOD POST MOUNTED BREAKAWAY DESIGN

CUSTOM - 54x60 WOOD POST MOUNTED BREAKAWAY DESIGN

NOTES

1. SEE PAULINA ST MAINTENANCE OF TRAFFIC SHEETS FOR STAGING DETAILS.

LEGEND

- CONSTRUCTION ZONE
- TEMPORARY CONCRETE BARRIER (CONTINOUSLY PINNED) WITH MONO-DIRECTIONAL, TYPE C REFLECTORS PER STD 704001 AND STD 782006
- IMPACT ATTENUATOR, TEMPORARY (FULLY REDIRECTIVE, NARROW) TEST LEVEL 3
- DRUMS SPACED 100' C-C OR AS NOTED: DRUMS IN TAPER (50' C-C) DRUMS IN RADII (25' C-C)
- TYPE III BARRICADE WITH TWO FLASHING BEACONS
- SIGN ON PORTABLE OR PERMANENT SUPPORT
- DIRECTION OF TRAFFIC
- ARROW BOARD

(1) TEMPORARY PAVEMENT MARKING - LINE 4" - TYPE IV TAPE (SOLID WHITE)

(2) TEMPORARY PAVEMENT MARKING - LINE 4" - TYPE IV TAPE (SOLID YELLOW)

(3) TEMPORARY PAVEMENT MARKING - LINE 5" - TYPE IV TAPE (10' DASH - 30' SKIP WHITE)

(4) TEMPORARY PAVEMENT MARKING - LINE 8" - TYPE IV TAPE (SOLID YELLOW)

(A) EXISTING PAVEMENT MARKING

N

0 50 100

SCALE IN FEET

FILE NAME = P:\10-IL\14111-HDOT - Sacramento and Paulina over I-290\Work\CADD\Paulina - Contract 62K64\CADD_Sheets\CivilD\62K64-sht-mot-stage1-290.dgn

COLLINS ENGINEERS INC.

USER NAME = omartinez	DESIGNED - OAM	REVISED -	
	DRAWN - OAM	REVISED -	
PLOT SCALE = 100.0000 ' / in.	CHECKED - RAG	REVISED -	
PLOT DATE = 10/15/2025	DATE - 09/08/2025	REVISED -	

STATE OF ILLINOIS
DEPARTMENT OF TRANSPORTATION

FAI-290 (EISENHOWER EXPRESSWAY) AT PAULINA STREET
MAINTENANCE OF TRAFFIC – STAGE 1A & 2A (I-290)

SCALE: 1" = 50' | SHEET NO. 2 OF 17 SHEETS | STA. | TO STA.

F.A.I. RTE.	SECTION	COUNTY	TOTAL SHEETS	SHEET NO.
290	2019-191-B-R	COOK	265	55
		CONTRACT NO. 62K64		
FED. ROAD DIST. NO.	ILLINOIS	FED. AID PROJECT		

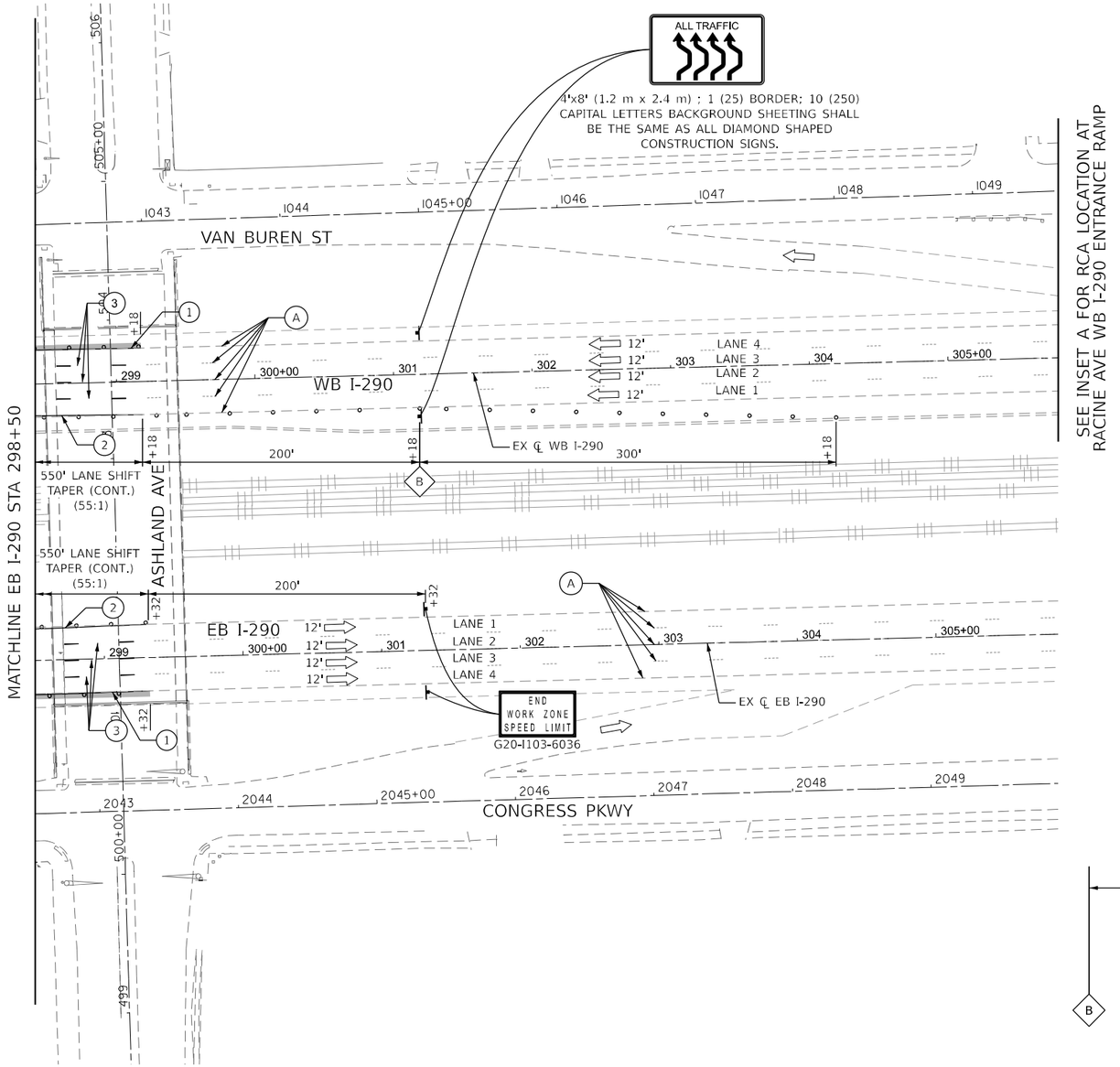

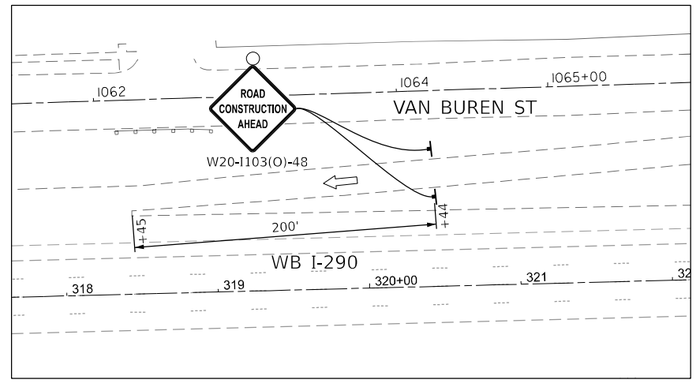

INSET A -
RACINE AVE WB I-290 ENTRANCE RAMP

ADVANCED SIGNING DETAIL – I–290 WESTBOUND – STAGE 1

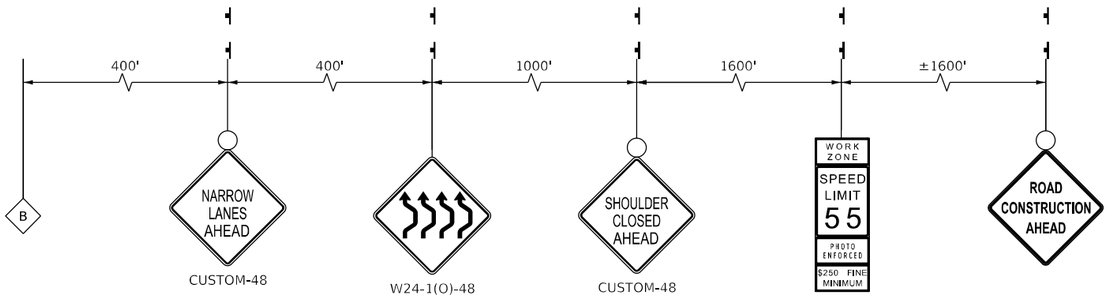

LEGEND

- CONSTRUCTION ZONE
- TEMPORARY CONCRETE BARRIER (CONTINOUSLY PINNED) WITH MONO-DIRECTIONAL, TYPE C REFLECTORS PER STD 704001 AND STD 782006
- IMPACT ATTENUATOR, TEMPORARY (FULLY REDIRECTIVE, NARROW) TEST LEVEL 3
- DRUMS SPACED 100' C-C OR AS NOTED: DRUMS IN TAPER (50' C-C) DRUMS IN RADII (25' C-C)
- TYPE III BARRICADE WITH TWO FLASHING BEACONS
- SIGN ON PORTABLE OR PERMANENT SUPPORT
- DIRECTION OF TRAFFIC
- ARROW BOARD

(1) TEMPORARY PAVEMENT MARKING - LINE 4" - TYPE IV TAPE (SOLID WHITE)
(2) TEMPORARY PAVEMENT MARKING - LINE 4" - TYPE IV TAPE (SOLID YELLOW)
(3) TEMPORARY PAVEMENT MARKING - LINE 5" - TYPE IV TAPE (10' DASH - 30' SKIP WHITE)
(4) TEMPORARY PAVEMENT MARKING - LINE 8" - TYPE IV TAPE (SOLID YELLOW)
(A) EXISTING PAVEMENT MARKING

N

0 50 100
SCALE IN FEET

FILE NAME = P:\10-IL\14111-HDOT - Sacramento and Paulina over I-290\Work\CADD\Paulina - Contract 62K64\CADD_Sheets\CivilD\162K64-shl-mot-stage1-290.dgn

COLLINS ENGINEERS INC.

USER NAME = omartinez	DESIGNED - OAM	REVISED -	
	DRAWN - OAM	REVISED -	
PLOT SCALE = 100.0000 ' / in.	CHECKED - RAG	REVISED -	
PLOT DATE = 10/15/2025	DATE - 09/08/2025	REVISED -	

STATE OF ILLINOIS
DEPARTMENT OF TRANSPORTATION

FAI–290 (EISENHOWER EXPRESSWAY) AT PAULINA STREET
MAINTENANCE OF TRAFFIC – STAGE 1A & 2A (I–290)

SCALE: 1" = 50' | SHEET NO. 3 OF 17 SHEETS | STA. | TO STA.

F.A.I. RTE.	SECTION	COUNTY	TOTAL SHEETS	SHEET NO.
290	2019-191-B-R	COOK	265	56
		CONTRACT NO. 62K64		
FED. ROAD DIST. NO.	ILLINOIS	FED. AID PROJECT		

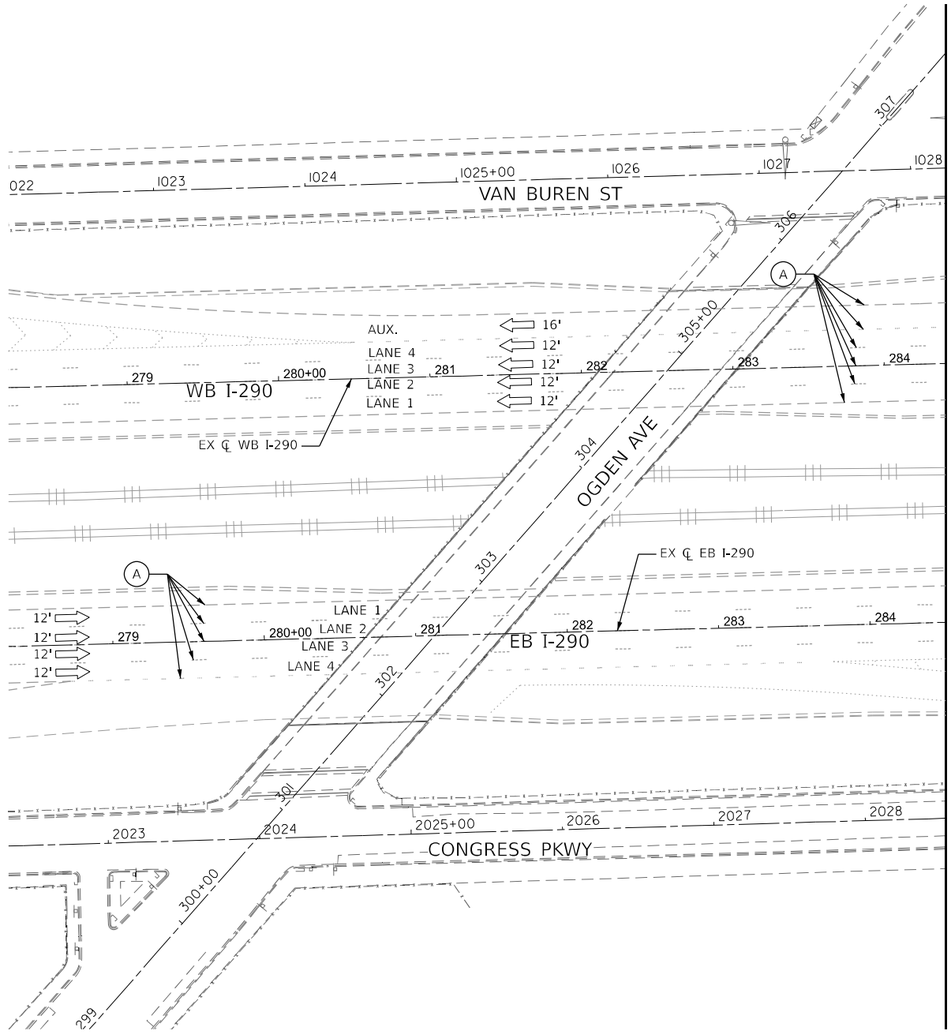

LEGEND

1. TEMPORARY PAVEMENT MARKING - LINE 4" - MODIFIED URETHANE (SOLID WHITE)
2. TEMPORARY PAVEMENT MARKING - LINE 4" - MODIFIED URETHANE (SOLID YELLOW)
3. TEMPORARY PAVEMENT MARKING - LINE 5" - MODIFIED URETHANE (10' DASH - 30' SKIP WHITE)
4. TEMPORARY PAVEMENT MARKING - LINE 8" - MODIFIED URETHANE (SOLID WHITE)
5. TEMPORARY PAVEMENT MARKING - LINE 12" - MODIFIED URETHANE (SOLID WHITE)
6. RAISED REFLECTIVE PAVEMENT MARKER, REFLECTOR REPLACEMENT

A. EXISTING PAVEMENT MARKING

DIRECTION OF TRAFFIC

N

0 50 100

SCALE IN FEET

FILE NAME = P:\10-IL\14411-ADOT - Sacramento and Paulina over I-290\Work\CADD\Paulina - Contract 62K64\CADD_Sheets\CivilD16\62K64-sht-mot-I-290 winter.dgn

COLLINS ENGINEERS INC.

USER NAME = amartinez	DESIGNED - OAM	REVISED -
	DRAWN - OAM	REVISED -
PLOT SCALE = 100.0000 ' / in.	CHECKED - RAG	REVISED -
PLOT DATE = 10/15/2025	DATE - 09/08/2025	REVISED -

STATE OF ILLINOIS
DEPARTMENT OF TRANSPORTATION

FAI–290 (EISENHOWER EXPRESSWAY) AT PAULINA STREET
MAINTENANCE OF TRAFFIC – WINTER STAGE (I–290)

SCALE: 1" = 50' | SHEET NO. 4 OF 17 SHEETS | STA. | TO STA.

F.A.I. RTE.	SECTION	COUNTY	TOTAL SHEETS	SHEET NO.
290	2019-191-B-R	COOK	265	57
		CONTRACT NO. 62K64		
FED. ROAD DIST. NO.	ILLINOIS	FED. AID PROJECT		

MATCHLINE EB I-290 STA 284+50

MATCHLINE EB I-290 STA 298+50

OGDEN AVE

VAN BUREN ST

PAULINA ST

WB I-290

EB I-290

CONGRESS PKWY

EX ℄ WB I-290

EX ℄ EB I-290

LANE 1
LANE 2
LANE 3
LANE 4

N

0 50 100

SCALE IN FEET

LEGEND

1. TEMPORARY PAVEMENT MARKING - LINE 4" - MODIFIED URETHANE (SOLID WHITE)
2. TEMPORARY PAVEMENT MARKING - LINE 4" - MODIFIED URETHANE (SOLID YELLOW)
3. TEMPORARY PAVEMENT MARKING - LINE 5" - MODIFIED URETHANE (10' DASH - 30' SKIP WHITE)
4. TEMPORARY PAVEMENT MARKING - LINE 8" - MODIFIED URETHANE (SOLID WHITE)
5. TEMPORARY PAVEMENT MARKING - LINE 12" - MODIFIED URETHANE (SOLID WHITE)
6. RAISED REFLECTIVE PAVEMENT MARKER, REFLECTOR REPLACEMENT

A EXISTING PAVEMENT MARKING

DIRECTION OF TRAFFIC

FILE NAME = P:\10-IL\14111-IDOT - Sacramento and Paulina over I-290\Work\CADD\Paulina - Contract 62K64\CADD_Sheets\CivilD16\62K64-sht-met-I-290 white.dgn

COLLINS ENGINEERS INC.

USER NAME = omartinez	DESIGNED - OAM	REVISED -
	DRAWN - OAM	REVISED -
PLOT SCALE = 100.0000 ' / in.	CHECKED - RAG	REVISED -
PLOT DATE = 10/15/2025	DATE - 09/08/2025	REVISED -

STATE OF ILLINOIS
DEPARTMENT OF TRANSPORTATION

FAI–290 (EISENHOWER EXPRESSWAY) AT PAULINA STREET
MAINTENANCE OF TRAFFIC – WINTER STAGE (I–290)

SCALE: 1" = 50' | SHEET NO. 5 OF 17 SHEETS | STA. | TO STA.

F.A.I. RTE.	SECTION	COUNTY	TOTAL SHEETS	SHEET NO.
290	2019-191-B-R	COOK	265	58
		CONTRACT NO. 62K64		
FED. ROAD DIST. NO.	ILLINOIS	FED. AID PROJECT		

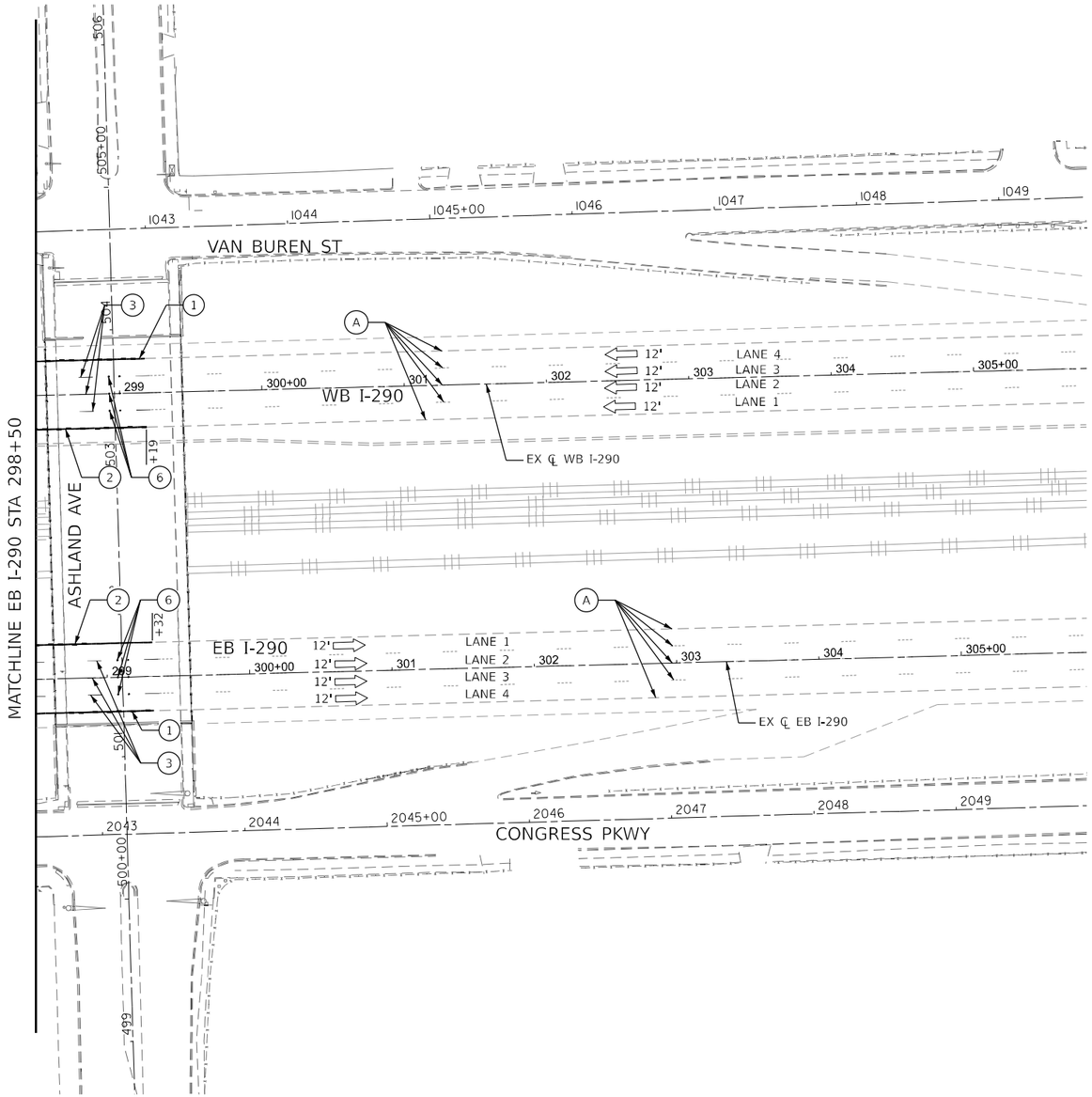

LEGEND

1. TEMPORARY PAVEMENT MARKING - LINE 4" - MODIFIED URETHANE (SOLID WHITE)
2. TEMPORARY PAVEMENT MARKING - LINE 4" - MODIFIED URETHANE (SOLID YELLOW)
3. TEMPORARY PAVEMENT MARKING - LINE 5" - MODIFIED URETHANE (10' DASH - 30' SKIP WHITE)
4. TEMPORARY PAVEMENT MARKING - LINE 8" - MODIFIED URETHANE (SOLID WHITE)
5. TEMPORARY PAVEMENT MARKING - LINE 12" - MODIFIED URETHANE (SOLID WHITE)
6. RAISED REFLECTIVE PAVEMENT MARKER, REFLECTOR REPLACEMENT

A. EXISTING PAVEMENT MARKING

⇨ DIRECTION OF TRAFFIC

FILE NAME = P:\10-IL14111-1D01 - Sacramento and Paulina over I-290\Work\CADD\Paulina - Contract 62K64\CADD_Sheets\Civil\D1E2K64-sht-mdl-290 winter.dgn

COLLINS ENGINEERS INC.

USER NAME = omartinez	DESIGNED - OAM	REVISED -
	DRAWN - OAM	REVISED -
PLOT SCALE = 100.0000 ' / in.	CHECKED - RAG	REVISED -
PLOT DATE = 10/15/2025	DATE - 09/08/2025	REVISED -

STATE OF ILLINOIS
DEPARTMENT OF TRANSPORTATION

FAI–290 (EISENHOWER EXPRESSWAY) AT PAULINA STREET
MAINTENANCE OF TRAFFIC – WINTER STAGE (I–290)

SCALE: 1" = 50' | SHEET NO. 6 OF 17 SHEETS | STA. | TO STA.

F.A.I. RTE.	SECTION	COUNTY	TOTAL SHEETS	SHEET NO.
290	2019-191-B-R	COOK	265	59
		CONTRACT NO. 62K64		
FED. ROAD DIST. NO.	ILLINOIS	FED. AID PROJECT		

ADVANCED SIGNING DETAIL – I–290 EASTBOUND – STAGE 2

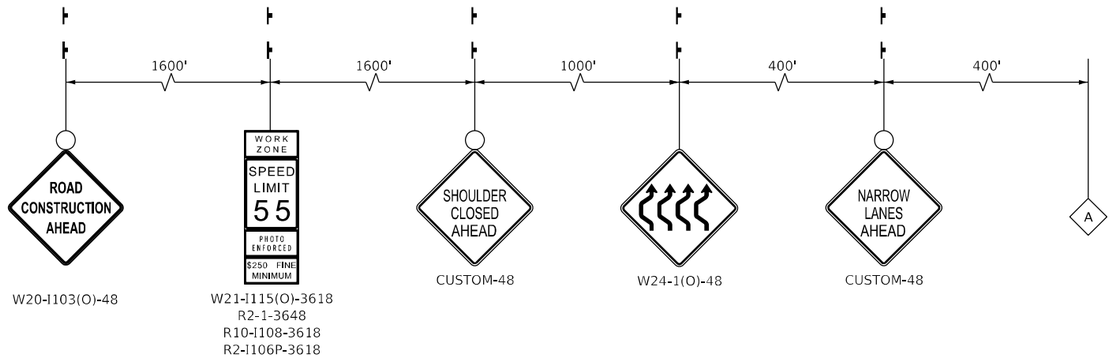

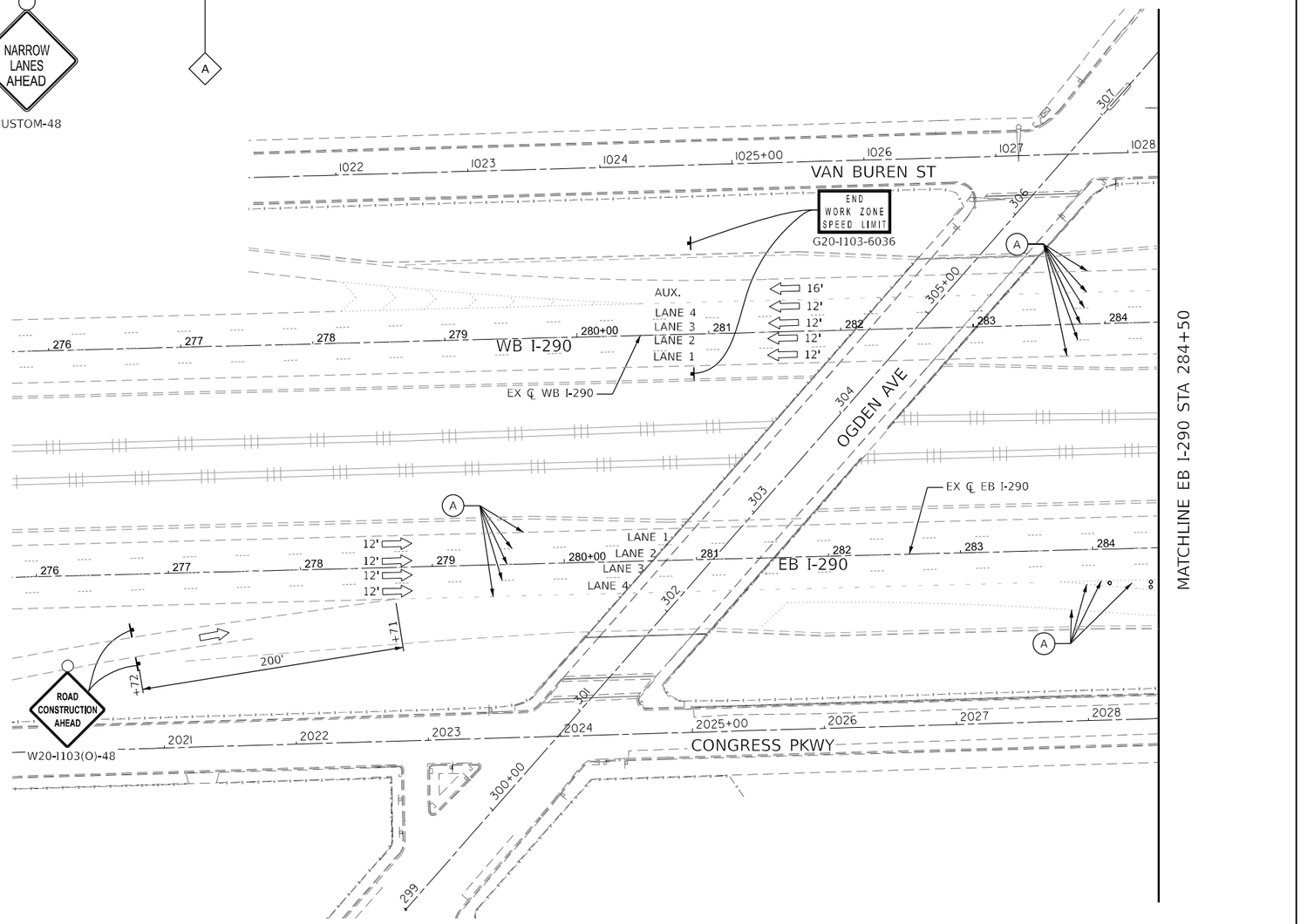

LEGEND

- CONSTRUCTION ZONE
- TEMPORARY CONCRETE BARRIER (CONTINOUSLY PINNED) WITH MONO-DIRECTIONAL, TYPE C REFLECTORS PER STD 704001 AND STD 782006
- IMPACT ATTENUATOR, TEMPORARY (FULLY REDIRECTIVE, NARROW) TEST LEVEL 3
- DRUMS SPACED 100' C-C OR AS NOTED: DRUMS IN TAPER (50' C-C) DRUMS IN RADII (25' C-C)
- TYPE III BARRICADE WITH TWO FLASHING BEACONS
- SIGN ON PORTABLE OR PERMANENT SUPPORT
- DIRECTION OF TRAFFIC
- ARROW BOARD

1. TEMPORARY PAVEMENT MARKING - LINE 4" - TYPE IV TAPE (SOLID WHITE)
2. TEMPORARY PAVEMENT MARKING - LINE 4" - TYPE IV TAPE (SOLID YELLOW)
3. TEMPORARY PAVEMENT MARKING - LINE 5" - TYPE IV TAPE (10' DASH - 30' SKIP WHITE)
4. TEMPORARY PAVEMENT MARKING - LINE 8" - TYPE IV TAPE (SOLID YELLOW)
5. TEMPORARY PAVEMENT MARKING - LINE 12" - TYPE IV TAPE (SOLID YELLOW)

A. EXISTING PAVEMENT MARKING

N

0 50 100
SCALE IN FEET

FILE NAME = P:\10-IL\14411-IDOT - Sacramento and Paulina over I-290\Work\CADD\Paulina - Contract 62K64\CADD_Sheets\Civil\D162K64-sht-mot-stage2-290.dgn

COLLINS ENGINEERS INC.	USER NAME = omartinez	DESIGNED - OAM	REVISED -	STATE OF ILLINOIS DEPARTMENT OF TRANSPORTATION	FAI–290 (EISENHOWER EXPRESSWAY) AT PAULINA STREET MAINTENANCE OF TRAFFIC – STAGE 1B & 2B (I–290)
		DRAWN - OAM	REVISED -		
	PLOT SCALE = 100.0000 ' / in.	CHECKED - RAG	REVISED -		
	PLOT DATE = 10/15/2025	DATE - 09/08/2025	REVISED -		SCALE: 1" = 50' SHEET NO. 7 OF 17 SHEETS STA. TO STA.

F.A.I. RTE.	SECTION	COUNTY	TOTAL SHEETS	SHEET NO.
290	2019-191-B-R	COOK	265	60
		CONTRACT NO. 62K64		
FED. ROAD DIST. NO.	ILLINOIS	FED. AID PROJECT		

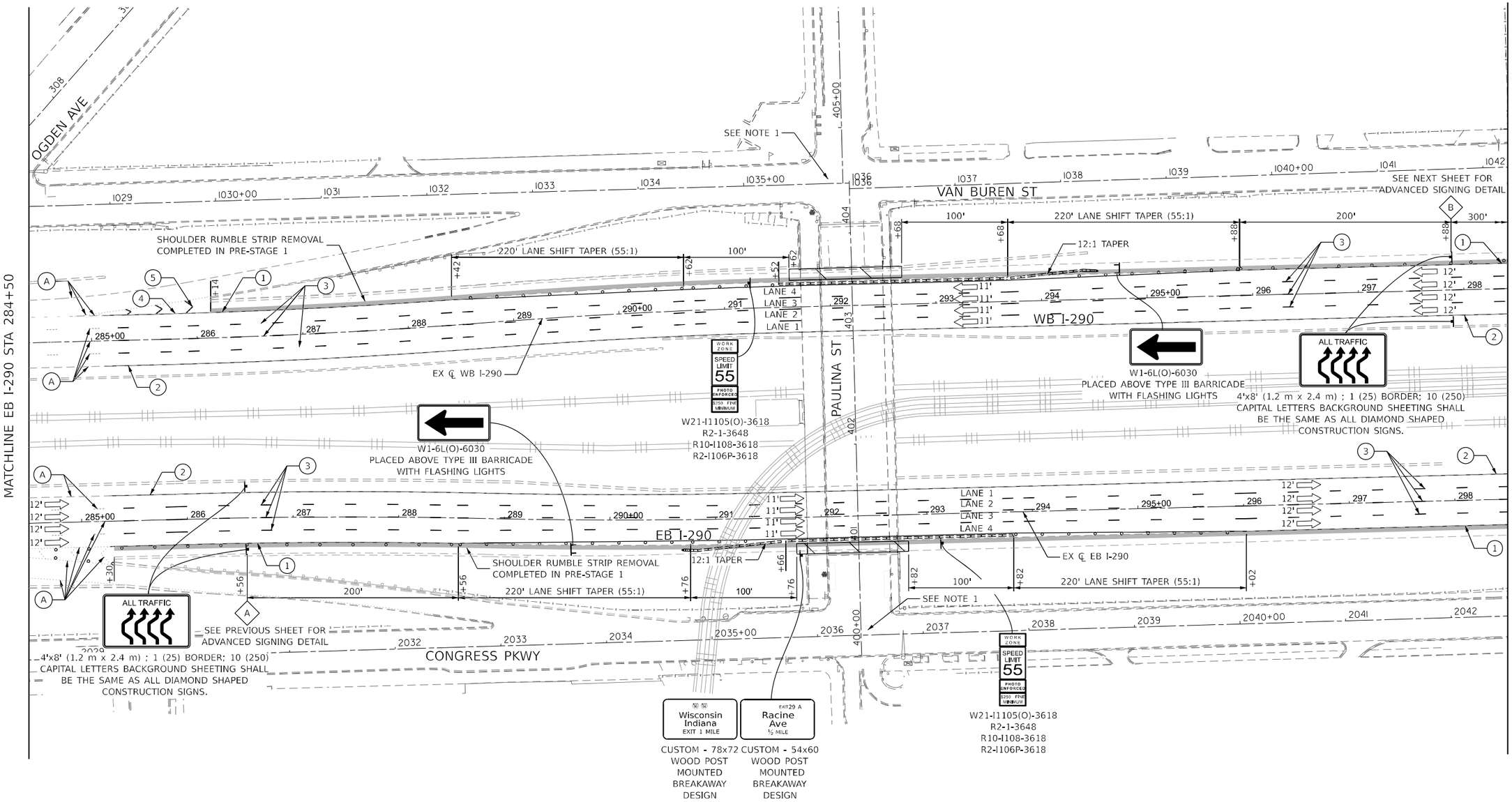

NOTES

1. SEE PAULINA ST MAINTENANCE OF TRAFFIC SHEETS FOR STAGING DETAILS.

LEGEND

- CONSTRUCTION ZONE
- TEMPORARY CONCRETE BARRIER (CONTINOUSLY PINNED) WITH MONO-DIRECTIONAL, TYPE C REFLECTORS PER STD 704001 AND STD 782006
- IMPACT ATTENUATOR, TEMPORARY (FULLY REDIRECTIVE, NARROW) TEST LEVEL 3
- DRUMS SPACED 100' C-C OR AS NOTED: DRUMS IN TAPER (50' C-C) DRUMS IN RADII (25' C-C)
- TYPE III BARRICADE WITH TWO FLASHING BEACONS
- SIGN ON PORTABLE OR PERMANENT SUPPORT
- DIRECTION OF TRAFFIC
- ARROW BOARD

(1) TEMPORARY PAVEMENT MARKING - LINE 4" - TYPE IV TAPE (SOLID WHITE)
(2) TEMPORARY PAVEMENT MARKING - LINE 4" - TYPE IV TAPE (SOLID YELLOW)
(3) TEMPORARY PAVEMENT MARKING - LINE 5" - TYPE IV TAPE (10' DASH - 30' SKIP WHITE)
(4) TEMPORARY PAVEMENT MARKING - LINE 8" - TYPE IV TAPE (SOLID YELLOW)
(5) TEMPORARY PAVEMENT MARKING - LINE 12" - TYPE IV TAPE (SOLID YELLOW)
(A) EXISTING PAVEMENT MARKING

FILE NAME = P:\10-ILL\14111-IDOT - Sacramento and Paulina over I-290\Work\CADD\Paulina - Contract 62K64\CADD_Sheets\Civil\D16762K64-sht-mot-stage2-290.dgn

COLLINS ENGINEERS INC.

USER NAME = omartinez	DESIGNED - OAM	REVISED -
	DRAWN - OAM	REVISED -
PLOT SCALE = 100.0000 ' / in.	CHECKED - RAG	REVISED -
PLOT DATE = 10/15/2025	DATE - 09/08/2025	REVISED -

STATE OF ILLINOIS
DEPARTMENT OF TRANSPORTATION

FAI–290 (EISENHOWER EXPRESSWAY) AT PAULINA STREET
MAINTENANCE OF TRAFFIC – STAGE 1B & 2B (I–290)

SCALE: 1" = 50' | SHEET NO. 8 OF 17 SHEETS | STA. | TO STA.

F.A.I. RTE.	SECTION	COUNTY	TOTAL SHEETS	SHEET NO.
290	2019-191-B-R	COOK	265	61
		CONTRACT NO. 62K64		
FED. ROAD DIST. NO.	ILLINOIS	FED. AID PROJECT		

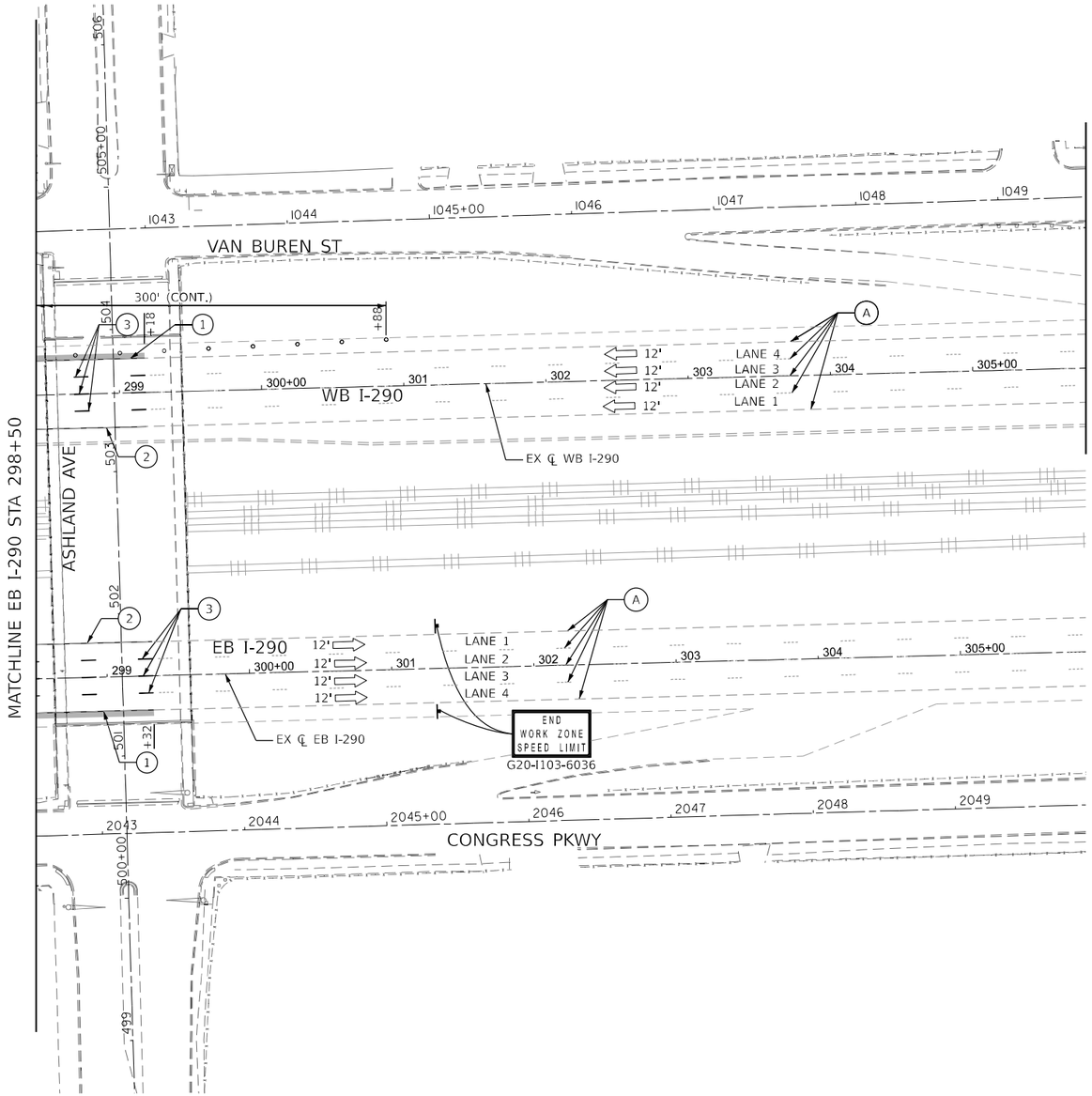

SEE INSET A FOR RCA LOCATION AT RACINE AVE WB I-290 ENTRANCE RAMP

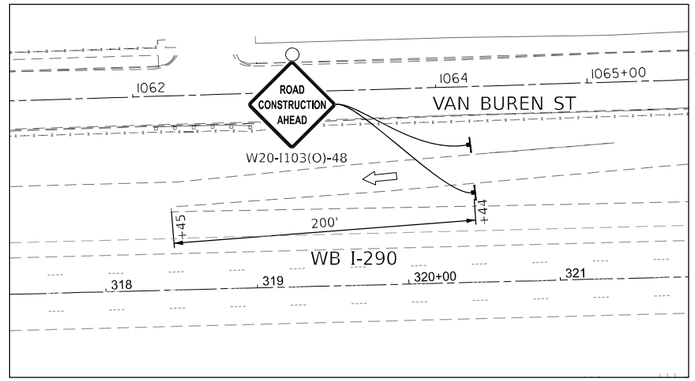

INSET A -
RACINE AVE WB I-290 ENTRANCE RAMP

ADVANCED SIGNING DETAIL – I–290 WESTBOUND – STAGE 2

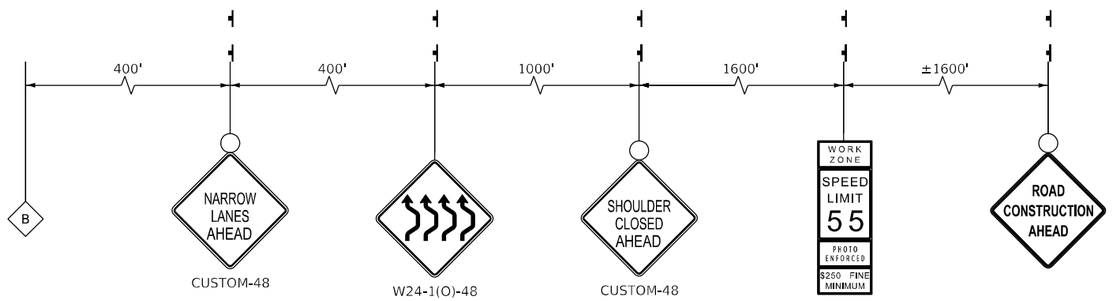

LEGEND

- CONSTRUCTION ZONE
- TEMPORARY CONCRETE BARRIER (CONTINOUSLY PINNED) WITH MONO-DIRECTIONAL, TYPE C REFLECTORS PER STD 704001 AND STD 782006
- IMPACT ATTENUATOR, TEMPORARY (FULLY REDIRECTIVE, NARROW) TEST LEVEL 3
- DRUMS SPACED 100' C-C OR AS NOTED: DRUMS IN TAPER (50' C-C) DRUMS IN RADII (25' C-C)
- TYPE III BARRICADE WITH TWO FLASHING BEACONS
- SIGN ON PORTABLE OR PERMANENT SUPPORT
- DIRECTION OF TRAFFIC
- ARROW BOARD

1. TEMPORARY PAVEMENT MARKING - LINE 4" - TYPE IV TAPE (SOLID WHITE)
2. TEMPORARY PAVEMENT MARKING - LINE 4" - TYPE IV TAPE (SOLID YELLOW)
3. TEMPORARY PAVEMENT MARKING - LINE 5" - TYPE IV TAPE (10' DASH - 30' SKIP WHITE)
4. TEMPORARY PAVEMENT MARKING - LINE 8" - TYPE IV TAPE (SOLID YELLOW)
5. TEMPORARY PAVEMENT MARKING - LINE 12" - TYPE IV TAPE (SOLID YELLOW)

A EXISTING PAVEMENT MARKING

N

0 50 100
SCALE IN FEET

FILE NAME = P:\10-IL\14111-HDOT - Sacramento and Paulina over I-290\Work\CADD\Paulina - Contract 62K64\CADD_Sheets\Civil\162K64-sht-mot-stage2-290.dgn

COLLINS ENGINEERS INC.

USER NAME = omartinez	DESIGNED - OAM	REVISED -	
	DRAWN - OAM	REVISED -	
PLOT SCALE = 100.0000 ' / in.	CHECKED - RAG	REVISED -	
PLOT DATE = 10/15/2025	DATE - 09/08/2025	REVISED -	

STATE OF ILLINOIS
DEPARTMENT OF TRANSPORTATION

FAI–290 (EISENHOWER EXPRESSWAY) AT PAULINA STREET
MAINTENANCE OF TRAFFIC – STAGE 1B & 2B (I–290)

SCALE: 1" = 50' | SHEET NO. 9 OF 17 SHEETS | STA. | TO STA.

F.A.I. RTE.	SECTION	COUNTY	TOTAL SHEETS	SHEET NO.
290	2019-191-B-R	COOK	265	62
		CONTRACT NO. 62K64		
FED. ROAD DIST. NO.	ILLINOIS	FED. AID PROJECT		

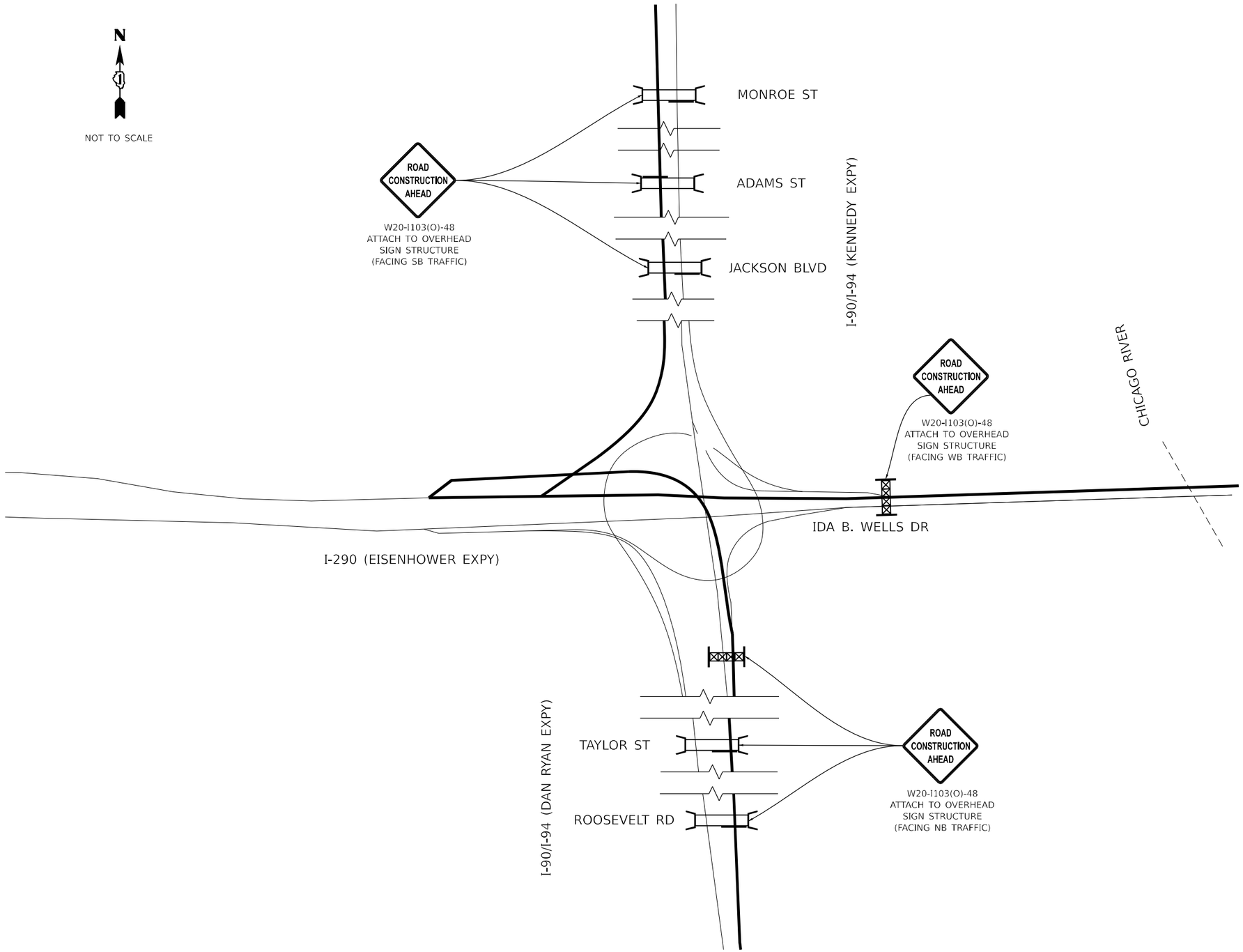

FILE NAME = P:\10-IL\14411-IDOT - Sacramento and Paulina over I-290\Work\CADD\Paulina - Contract 62K64\CADD_Sheets\Civil\D162K64-sht-mot-adv_signing.dgn

COLLINS ENGINEERS INC.	USER NAME = omartinez	DESIGNED - OAM	REVISED -	STATE OF ILLINOIS DEPARTMENT OF TRANSPORTATION	FAI–290 (EISENHOWER EXPRESSWAY) AT PAULINA STREET MAINTENANCE OF TRAFFIC – ADVANCED SIGNING	F.A.I. RTE. 290	SECTION 2019-191-B-R	COUNTY COOK	TOTAL SHEETS 265 / SHEET NO. 63
		DRAWN - OAM	REVISED -					CONTRACT NO. 62K64	
	PLOT SCALE = $SCALE$	CHECKED - RAG	REVISED -						
	PLOT DATE = 10/15/2025	DATE - 09/08/2025	REVISED -		SCALE: NTS / SHEET NO. 1 OF 1 SHEETS / STA. TO STA.	FED. ROAD DIST. NO.	ILLINOIS	FED. AID PROJECT	

MATCH LINE 2034+50
SEE NEXT PAGE

END WORK ZONE SPEED LIMIT
G20-I103-6036

R8-3-2430

W1-4b(O)-48

N

0 20 40 60
SCALE IN FEET

VAN BUREN ST

200'

19'-10"

16'-11"

A

3

EX ℄ VAN BUREN ST

11'

11'

+70

I032

I033

I034

100' TAPER (CONT)

+92

100' SHIFTING TAPER

100'

+70

+70

+70

1

MATCH LINE 1034+50

MATCH LINE 1034+50

100' TAPER

+92

VAN BUREN ST

2035+00

EX ℄ VAN BUREN ST

EX CTA OVERHEAD TRACKS

+68

+18

+88

+62

+86

+39

+37

+10

+15

+65

+98

+90

+92

+152

WEST
INTERSTATE
290
M3-4-2412
M1-1-3024
M6-2-2115

W1-6R(O)-6030
PLACED ABOVE TYPE III BARRICADE
WITH FLASHING LIGHTS

EX CTA OVERHEAD TRACKS

CTA BLUE LINE
ILLINOIS MEDICAL DISTRICT
PAULINA ENTRANCE
(OPEN DURING THIS STAGE)

WORK ZONE
SPEED LIMIT
30
$250 FINE MINIMUM
W21-I115(O)-3648
R2-1-3648
R10-I108-3618

W21-I115(O)-3648
R2-1-3648
R10-I108-3618

M4-4-2412(O)
TRUCK
R3-2-2424

R8-3-2430

SIDEWALK CLOSED
USE OTHER SIDE
R11-I102-2430
(FACING WEST)

M4-4-2412(O)
TRUCK
R3-2-2424

R8-3-2430

R8-3-2430

14'

11'

14'

11'

11'

11'

A

A

A

6

6

6

6

6

2036

2036

2037

2037

262

262

262

R3-5R-3036
ONLY

TEMPORARY CONCRETE BARRIER
(CONTINOUSLY PINNED),
50 FOOT

TEMPORARY CONCRETE BARRIER
(CONTINOUSLY PINNED),
50 FOOT

EX ℄ PAULINA ST

PAULINA ST

2

1

2

10'

10'

10'

10'

400+00

401

402

403

404

405+00

7

TEMPORARY MANHOLE

DRAINAGE STR S-01
TO BE COVERED

STAGE REMOVAL LINE
STAGE CONSTRUCTION LINE

TEMPORARY PLUG

DRAINAGE STR ES-04
TO BE COVERED

TEMPORARY CONCRETE BARRIER
(RESTRAINED, SEE STRUCTURAL PLANS),
262.5 FOOT

WORK ZONE
SPEED LIMIT
30
$250 FINE MINIMUM
W21-I115(O)-3648
R2-1-3648
R10-I108-3618

MAY USE FULL LANE
R9-20-3030

ONE WAY
R6-2R-3036

SIDEWALK CLOSED
USE OTHER SIDE
R11-I102-2430
(FACING SOUTH)

R8-3-2430

BIKE LANE CLOSED
R9-12-2412

SIDEWALK CLOSED
R11-I101-2418
(SEE INSET A FOR
ASHLAND AVE
SIGNING)

100' SHIFTING TAPER

CONGRESS PKWY

I-290 EXPRESSWAY
EASTBOUND

I-290 EXPRESSWAY
WESTBOUND

R8-3-2430

G20-I103-6036
END
WORK ZONE
SPEED LIMIT

EX ℄ CONGRESS PKWY

21'-5"

14'-7"

SIDEWALK CLOSED
USE OTHER SIDE
R11-I102-2430
(FACING EAST)

ASHLAND AVE

CONGRESS PKWY

2043

501

INSET A -
CONGRESS PKWY AND ASHLAND AVE INTERSECTION
NORTHWEST CORNER

SIDEWALK CLOSED
USE OTHER SIDE
R11-I102-2430
(FACING NORTH)

R8-3-2430

TEMPORARY SIDEWALK
(SEE NOTE 1)

W1-3R(O)-48

EX ℄ VAN BUREN ST

MATCH LINE 1037+00
SEE NEXT PAGE

R8-3-2430

MATCH LINE 405+80
SEE NEXT PAGE

NOTES

1. SEE TEMPORARY ADA RAMP DETAIL SHEET FOR TEMPORARY CURB RAMP DETAILS.

LEGEND

- CONSTRUCTION ZONE
- TEMPORARY CONCRETE BARRIER
- IMPACT ATTENUATOR, TEMPORARY (FULLY-REDIRECTIVE, NARROW) TEST LEVEL 2
- TEMPORARY PAVEMENT
- DRUMS SPACED 50' C-C OR AS NOTED: DRUMS IN TAPER (25' C-C) DRUMS IN RADII (10' C-C)
- TYPE III BARRICADE WITH TWO FLASHING BEACONS
- DETECTABLE PEDESTRIAN CHANNELIZING BARRICADE
- SIGN ON PORTABLE OR PERMANENT SUPPORT
- DIRECTION OF TRAFFIC
- ARROW BOARD

(1) TEMPORARY PAVEMENT MARKING - LINE 4" - TYPE IV TAPE (SOLID WHITE)

(2) TEMPORARY PAVEMENT MARKING - LINE 4" - TYPE IV TAPE (DOUBLE YELLOW 8" C-C)

(3) TEMPORARY PAVEMENT MARKING - LINE 4" - TYPE IV TAPE (6' DASH - 18' SKIP WHITE)

(4) TEMPORARY PAVEMENT MARKING - LINE 4" - TYPE IV TAPE (2' DASH - 6' SKIP YELLOW)

(5) TEMPORARY PAVEMENT MARKING - LINE 6" - TYPE IV TAPE (SOLID WHITE)

(6) TEMPORARY PAVEMENT MARKING - LINE 24" - TYPE IV TAPE (SOLID WHITE)

(7) TEMPORARY PAVEMENT MARKING LETTERS AND SYMBOLS - TYPE IV TAPE

(A) EXISTING PAVEMENT MARKING

FILE NAME = P:\10-IL\14111-HDOT - Sacramento and Paulina over I-290\Work\CADD\Paulina - Contract 62K64\CADD_Sheets\[CivilD162K64-sht-mot-stage1.dgn

COLLINS ENGINEERS INC.

USER NAME = omartinez	DESIGNED - OAM	REVISED -	
	DRAWN - OAM	REVISED -	
PLOT SCALE = 40.0000 ' / in.	CHECKED - RAG	REVISED -	
PLOT DATE = 10/15/2025	DATE - 09/08/2025	REVISED -	

STATE OF ILLINOIS
DEPARTMENT OF TRANSPORTATION

FAI–290 (EISENHOWER EXPRESSWAY) AT PAULINA STREET
MAINTENANCE OF TRAFFIC – STAGE 1 (PAULINA)

SCALE: 1" = 20' | SHEET NO. 10 OF 17 SHEETS | STA. | TO STA.

F.A.I. RTE.	SECTION	COUNTY	TOTAL SHEETS	SHEET NO.
290	2019-191-B-R	COOK	265	64
		CONTRACT NO. 62K64		
FED. ROAD DIST. NO.	ILLINOIS	FED. AID PROJECT		

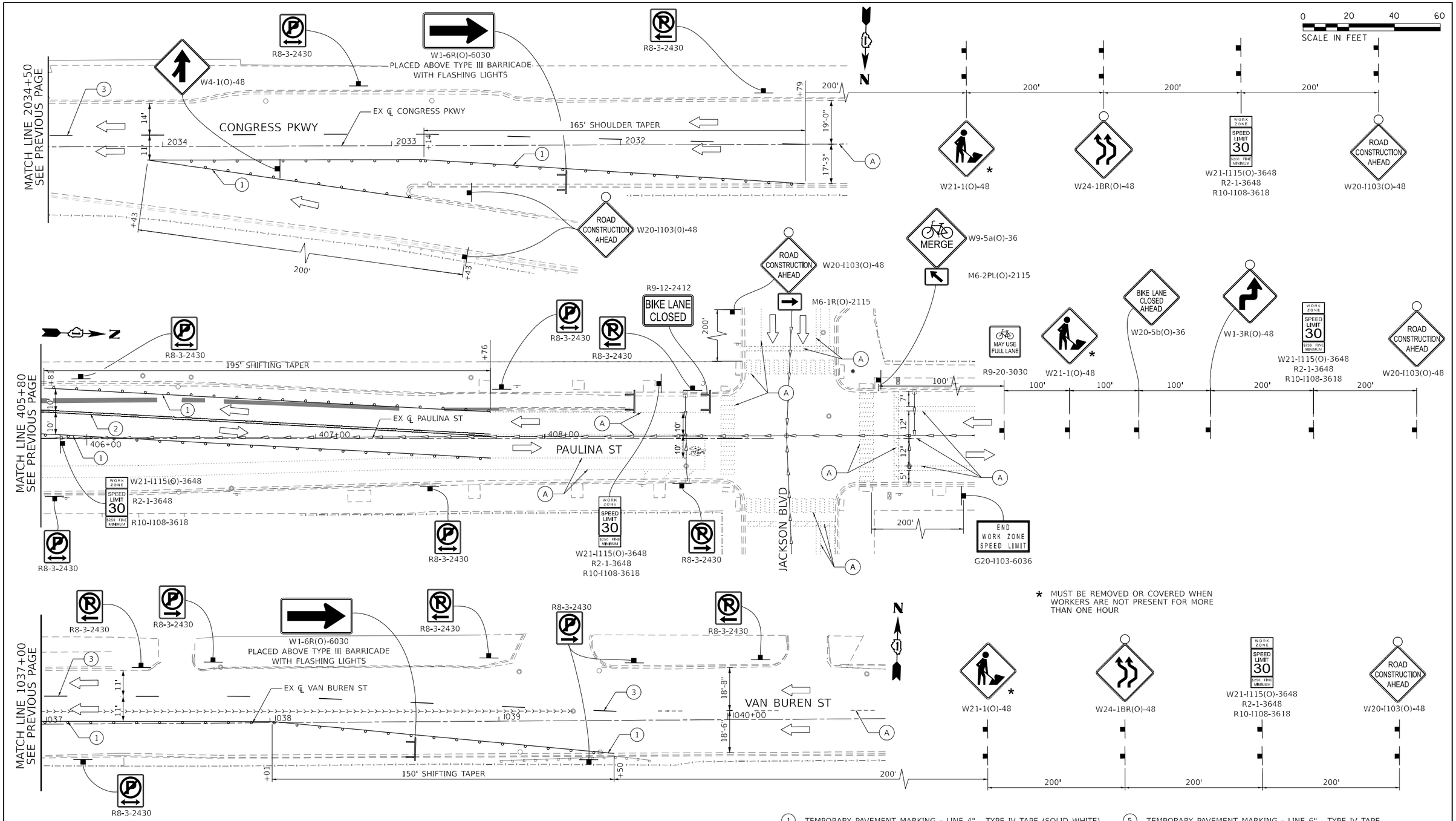

LEGEND

- CONSTRUCTION ZONE
- TEMPORARY CONCRETE BARRIER
- IMPACT ATTENUATOR, TEMPORARY (FULLY-REDIRECTIVE, NARROW) TEST LEVEL 2
- TEMPORARY PAVEMENT
- DRUMS SPACED 50' C-C OR AS NOTED: DRUMS IN TAPER (25' C-C) DRUMS IN RADII (10' C-C)
- TYPE III BARRICADE WITH TWO FLASHING BEACONS
- DETECTABLE PEDESTRIAN CHANNELIZING BARRICADE
- SIGN ON PORTABLE OR PERMANENT SUPPORT
- DIRECTION OF TRAFFIC
- ARROW BOARD

1. TEMPORARY PAVEMENT MARKING - LINE 4" - TYPE IV TAPE (SOLID WHITE)
2. TEMPORARY PAVEMENT MARKING - LINE 4" - TYPE IV TAPE (DOUBLE YELLOW 8" C-C)
3. TEMPORARY PAVEMENT MARKING - LINE 4" - TYPE IV TAPE (6' DASH - 18' SKIP WHITE)
4. TEMPORARY PAVEMENT MARKING - LINE 4" - TYPE IV TAPE (2' DASH - 6' SKIP YELLOW)
5. TEMPORARY PAVEMENT MARKING - LINE 6" - TYPE IV TAPE (SOLID WHITE)
6. TEMPORARY PAVEMENT MARKING - LINE 24" - TYPE IV TAPE (SOLID WHITE)
7. TEMPORARY PAVEMENT MARKING LETTERS AND SYMBOLS - TYPE IV TAPE

(A) EXISTING PAVEMENT MARKING

FILE NAME = P:\10-ILL1411-IDOT - Sacramento and Paulina over I-290\Work\CADD\Paulina - Contract 62K64\CADD_Sheets\Civil\D162K64-sht-mot-stage1.dgn

COLLINS ENGINEERS INC.

USER NAME = omartinez	DESIGNED - OAM	REVISED -
	DRAWN - OAM	REVISED -
PLOT SCALE = 40.0000 ' / in.	CHECKED - RAG	REVISED -
PLOT DATE = 10/15/2025	DATE - 09/08/2025	REVISED -

STATE OF ILLINOIS
DEPARTMENT OF TRANSPORTATION

FAI–290 (EISENHOWER EXPRESSWAY) AT PAULINA STREET
MAINTENANCE OF TRAFFIC – STAGE 1 (PAULINA)

SCALE: 1" = 20' | SHEET NO. 11 OF 17 SHEETS | STA. | TO STA.

F.A.J. RTE.	SECTION	COUNTY	TOTAL SHEETS	SHEET NO.
290	2019-191-B-R	COOK	265	65
		CONTRACT NO. 62K64		
FED. ROAD DIST. NO.	ILLINOIS	FED. AID PROJECT		

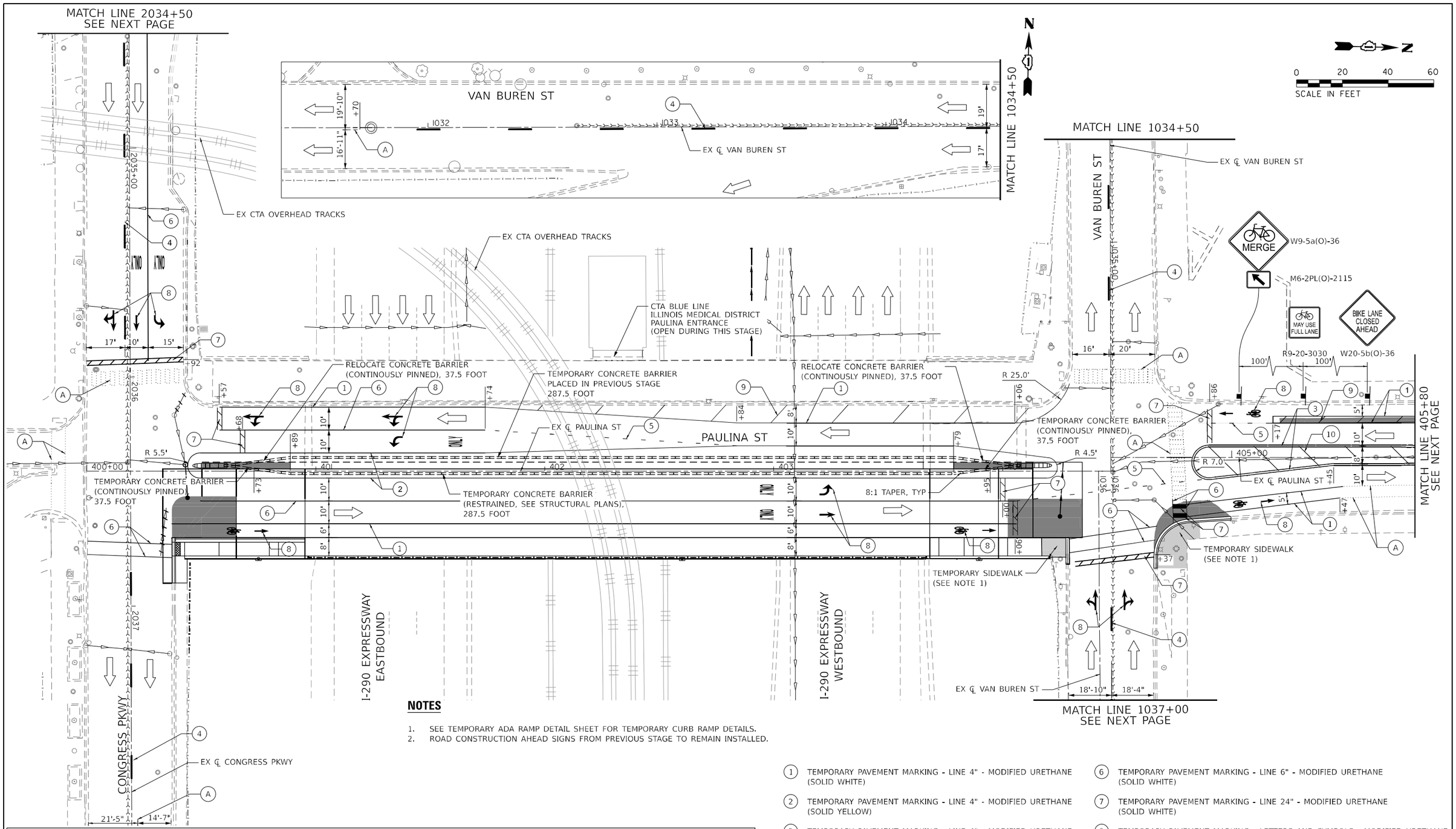

NOTES

1. SEE TEMPORARY ADA RAMP DETAIL SHEET FOR TEMPORARY CURB RAMP DETAILS.
2. ROAD CONSTRUCTION AHEAD SIGNS FROM PREVIOUS STAGE TO REMAIN INSTALLED.

LEGEND

- CONSTRUCTION ZONE
- TEMPORARY CONCRETE BARRIER
- IMPACT ATTENUATOR, TEMPORARY (FULLY-REDIRECTIVE, NARROW) TEST LEVEL 2
- TEMPORARY PAVEMENT
- DRUMS SPACED 50' C-C OR AS NOTED: DRUMS IN TAPER (25' C-C) DRUMS IN RADII (10' C-C)
- TYPE III BARRICADE WITH TWO FLASHING BEACONS
- DETECTABLE PEDESTRIAN CHANNELIZING BARRICADE
- SIGN ON PORTABLE OR PERMANENT SUPPORT
- DIRECTION OF TRAFFIC
- ARROW BOARD

1. TEMPORARY PAVEMENT MARKING - LINE 4" - MODIFIED URETHANE (SOLID WHITE)
2. TEMPORARY PAVEMENT MARKING - LINE 4" - MODIFIED URETHANE (SOLID YELLOW)
3. TEMPORARY PAVEMENT MARKING - LINE 4" - MODIFIED URETHANE (DOUBLE YELLOW 8" C-C)
4. TEMPORARY PAVEMENT MARKING - LINE 4" - MODIFIED URETHANE (6' DASH - 18' SKIP WHITE)
5. TEMPORARY PAVEMENT MARKING - LINE 6" - MODIFIED URETHANE (2' DASH - 8' SKIP YELLOW)
6. TEMPORARY PAVEMENT MARKING - LINE 6" - MODIFIED URETHANE (SOLID WHITE)
7. TEMPORARY PAVEMENT MARKING - LINE 24" - MODIFIED URETHANE (SOLID WHITE)
8. TEMPORARY PAVEMENT MARKING - LETTERS AND SYMBOLS - MODIFIED URETHANE
9. TEMPORARY PAVEMENT MARKING - LINE 12" - MODIFIED URETHANE (20'-SPACING, 45° DIAGONALS, WHITE)
10. TEMPORARY PAVEMENT MARKING - LINE 12" - MODIFIED URETHANE (20'-SPACING, 45° DIAGONALS, YELLOW)

(A) EXISTING PAVEMENT MARKING

FILE NAME = P:\10-IL\14111-BDOT - Sacramento and Paulina over I-290\Work\CADD\Paulina - Contract 62K64\CADD_Sheets\Civil\D162K64-sht-mcl-Winter stage Paulina.dgn

COLLINS ENGINEERS INC.

USER NAME = omartinez	DESIGNED - OAM	REVISED -	
	DRAWN - OAM	REVISED -	
PLOT SCALE = 40.0000 ' / in.	CHECKED - RAG	REVISED -	
PLOT DATE = 10/15/2025	DATE - 09/08/2025	REVISED -	

STATE OF ILLINOIS
DEPARTMENT OF TRANSPORTATION

FAI–290 (EISENHOWER EXPRESSWAY) AT PAULINA STREET
MAINTENANCE OF TRAFFIC – WINTER STAGE (PAULINA)

SCALE: 1" = 20' | SHEET NO. 12 OF 17 SHEETS | STA. | TO STA.

F.A.I. RTE.	SECTION	COUNTY	TOTAL SHEETS	SHEET NO.
290	2019-191-B-R	COOK	265	66
		CONTRACT NO. 62K64		
FED. ROAD DIST. NO.	ILLINOIS	FED. AID PROJECT		

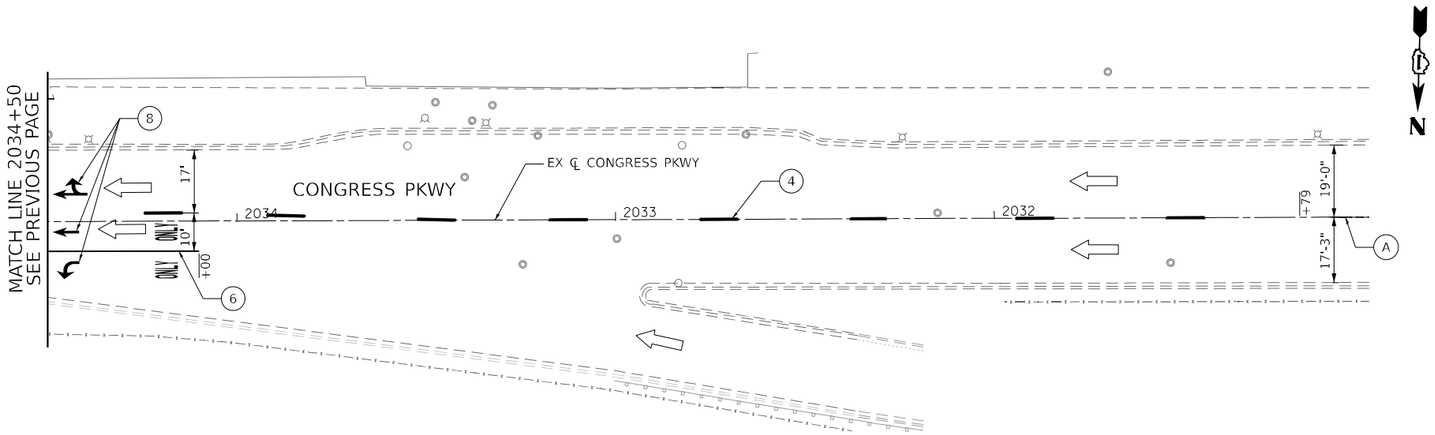



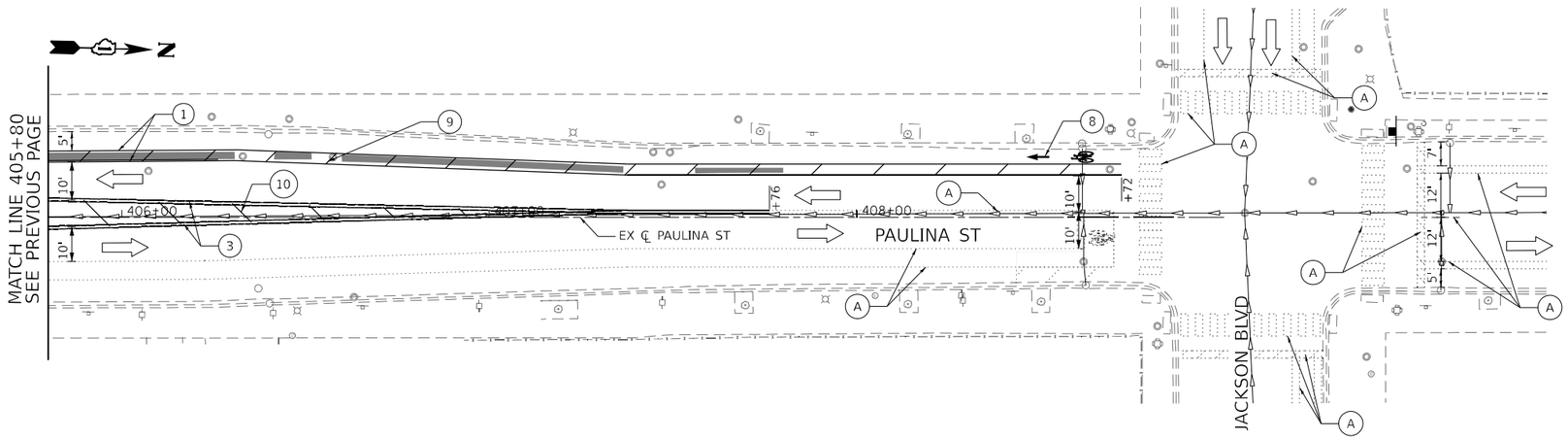

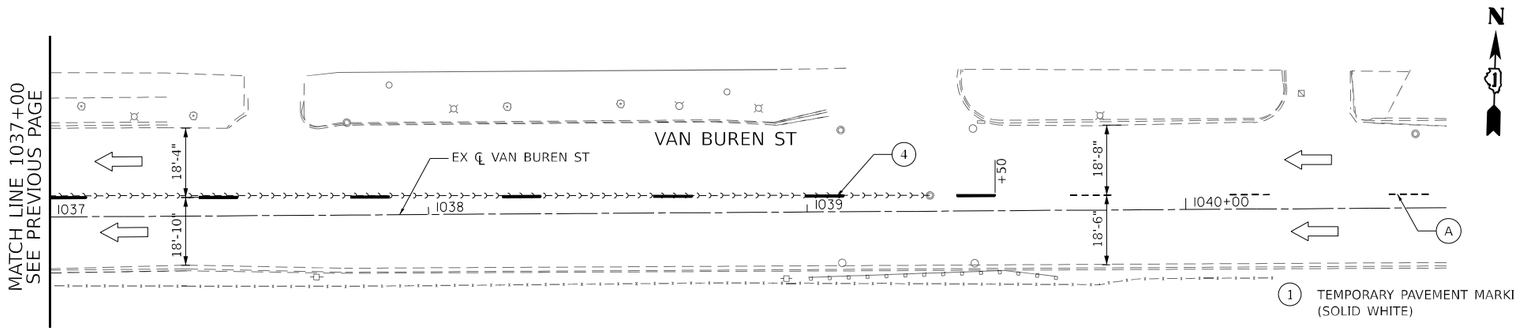

LEGEND

- CONSTRUCTION ZONE
- TEMPORARY CONCRETE BARRIER
- IMPACT ATTENUATOR, TEMPORARY (FULLY-REDIRECTIVE, NARROW) TEST LEVEL 2
- TEMPORARY PAVEMENT
- DRUMS SPACED 50' C-C OR AS NOTED: DRUMS IN TAPER (25' C-C) DRUMS IN RADII (10' C-C)
- TYPE III BARRICADE WITH TWO FLASHING BEACONS
- DETECTABLE PEDESTRIAN CHANNELIZING BARRICADE
- SIGN ON PORTABLE OR PERMANENT SUPPORT
- DIRECTION OF TRAFFIC
- ARROW BOARD

1. TEMPORARY PAVEMENT MARKING - LINE 4" - MODIFIED URETHANE (SOLID WHITE)
2. TEMPORARY PAVEMENT MARKING - LINE 4" - MODIFIED URETHANE (SOLID YELLOW)
3. TEMPORARY PAVEMENT MARKING - LINE 4" - MODIFIED URETHANE (DOUBLE YELLOW 8" C-C)
4. TEMPORARY PAVEMENT MARKING - LINE 4" - MODIFIED URETHANE (6' DASH - 18' SKIP WHITE)
5. TEMPORARY PAVEMENT MARKING - LINE 6" - MODIFIED URETHANE (2' DASH - 8' SKIP YELLOW)
6. TEMPORARY PAVEMENT MARKING - LINE 6" - MODIFIED URETHANE (SOLID WHITE)
7. TEMPORARY PAVEMENT MARKING - LINE 24" - MODIFIED URETHANE (SOLID WHITE)
8. TEMPORARY PAVEMENT MARKING - LETTERS AND SYMBOLS - MODIFIED URETHANE
9. TEMPORARY PAVEMENT MARKING - LINE 12" - MODIFIED URETHANE (20'-SPACING, 45° DIAGONALS, WHITE)
10. TEMPORARY PAVEMENT MARKING - LINE 12" - MODIFIED URETHANE (20'-SPACING, 45° DIAGONALS, YELLOW)

(A) EXISTING PAVEMENT MARKING

FILE NAME = P:\10-LI\14111-IDOT - Sacramento and Paulina over I-290\Work\CADD\Paulina - Contract 62K64\CADD_Sheets\Civil\D162K64-sht-not-winter stage Paulina.dgn

COLLINS ENGINEERS INC.

USER NAME = omartinez	DESIGNED - OAM	REVISED -	
	DRAWN - OAM	REVISED -	
PLOT SCALE = 40.0000 ' / in.	CHECKED - RAG	REVISED -	
PLOT DATE = 10/15/2025	DATE - 09/08/2025	REVISED -	

STATE OF ILLINOIS
DEPARTMENT OF TRANSPORTATION

FAI-290 (EISENHOWER EXPRESSWAY) AT PAULINA STREET
MAINTENANCE OF TRAFFIC – WINTER STAGE (PAULINA)

SCALE: 1" = 20' | SHEET NO. 13 OF 17 SHEETS | STA. | TO STA.

F.A.I. RTE.	SECTION	COUNTY	TOTAL SHEETS	SHEET NO.
290	2019-191-B-R	COOK	265	67
		CONTRACT NO. 62K64		
FED. ROAD DIST. NO.	ILLINOIS	FED. AID PROJECT		

MATCH LINE 2034+50
SEE NEXT PAGE

END WORK ZONE SPEED LIMIT
G20-I103-6036

R8-3-2430

W1-4b(O)-48

VAN BUREN ST

EX ℄ VAN BUREN ST

200'

19'-10"

16'-11"

100' SHIFTING TAPER

100' TAPER (CONT)

MATCH LINE 1034+50

N

0 20 40 60
SCALE IN FEET

MATCH LINE 1034+50

EX ℄ VAN BUREN ST

100' TAPER

VAN BUREN ST

W21-I115(O)-3648
SPEED LIMIT 30
$250 FINE MINIMUM
R2-1-3648
R10-I108-3618

R8-3-2430

SIDEWALK CLOSED
USE OTHER SIDE
R11-I102-2430
(FACING NORTH)

MERGE
W9-5a(O)-36
M6-2PL(O)-2115

R8-3-2430

EX CTA OVERHEAD TRACKS

M4-4-2412(O)
TRUCK
R3-2-2424

R8-3-2430

SIDEWALK CLOSED
USE OTHER SIDE
R11-I102-2430
(FACING SOUTH)

KEEP RIGHT
R4-7a-2430

R5-1-2420
DO NOT ENTER

W1-6R(O)-6030
PLACED ABOVE TYPE III BARRICADE
WITH FLASHING LIGHTS

WEST
INTERSTATE
290
M3-4-2412
M1-1-3024
M6-2-2115

CTA BLUE LINE
ILLINOIS MEDICAL DISTRICT
PAULINA ENTRANCE
SEE NOTE 1

BIKE LANE CLOSED
R9-12-2412

KEEP LEFT
R4-8a-2430

RELOCATE TEMPORARY CONCRETE BARRIER
(CONTINUOUSLY PINNED)
37.5 FOOT

EX ℄ PAULINA ST

PAULINA ST

RELOCATE TEMPORARY CONCRETE BARRIER
(CONTINUOUSLY PINNED)
37.5 FOOT

TEMPORARY SIDEWALK
(SEE NOTE 2)

EX ℄ PAULINA ST

MATCH LINE 405+80
SEE NEXT PAGE

TEMPORARY CONCRETE BARRIER
PLACED IN PREVIOUS STAGE
287.5 FOOT

I-290 EXPRESSWAY
EASTBOUND

I-290 EXPRESSWAY
WESTBOUND

W21-I115(O)-3648
R2-1-3648
R10-I108-3618

M4-4-2412(O)
TRUCK
R3-2-2424

R8-3-2430

W1-3L(O)-48

EX ℄ CONGRESS PKWY

CONGRESS PKWY

100' SHIFTING TAPER

END WORK ZONE SPEED LIMIT
G20-I103-6036

EX ℄ VAN BUREN ST

MATCH LINE 1037+00
SEE NEXT PAGE

NOTES

1. THE ENTRANCE TO THE CHICAGO TRANSIT AUTHORITY (CTA) PAULINA STATION SHALL BE CLOSED DURING THIS STAGE. THE CONTRACTOR SHALL CONTACT THE CTA TWO WEEKS IN ADVANCE OF BEGINNING WORK. PEDESTRIANS SHALL BE ROUTED TO THE OGDEN AVENUE ENTRANCE. SEE PEDESTRIAN DETOUR SHEET FOR ADDITIONAL DETAILS.
2. SEE TEMPORARY ADA RAMP DETAIL SHEET FOR TEMPORARY CURB RAMP DETAILS.

LEGEND

- CONSTRUCTION ZONE
- TEMPORARY CONCRETE BARRIER
- IMPACT ATTENUATOR, TEMPORARY (FULLY-REDIRECTIVE, NARROW) TEST LEVEL 2
- TEMPORARY PAVEMENT
- DRUMS SPACED 50' C-C OR AS NOTED:
  DRUMS IN TAPER (25' C-C)
  DRUMS IN RADII (10' C-C)
- TYPE III BARRICADE WITH TWO FLASHING BEACONS
- DETECTABLE PEDESTRIAN CHANNELIZING BARRICADE
- SIGN ON PORTABLE OR PERMANENT SUPPORT
- DIRECTION OF TRAFFIC
- ARROW BOARD

(1) TEMPORARY PAVEMENT MARKING - LINE 4" - TYPE IV TAPE (SOLID WHITE)

(2) TEMPORARY PAVEMENT MARKING - LINE 4" - TYPE IV TAPE (DOUBLE YELLOW 8" C-C)

(3) TEMPORARY PAVEMENT MARKING - LINE 4" - TYPE IV TAPE (6' DASH - 18' SKIP WHITE)

(4) TEMPORARY PAVEMENT MARKING - LINE 4" - TYPE IV TAPE (2' DASH - 6' SKIP YELLOW)

(5) TEMPORARY PAVEMENT MARKING - LINE 6" - TYPE IV TAPE (SOLID WHITE)

(5) TEMPORARY PAVEMENT MARKING - LINE 6" - TYPE IV TAPE (SOLID WHITE)

(6) TEMPORARY PAVEMENT MARKING - LINE 24" - TYPE IV TAPE (SOLID WHITE)

(7) TEMPORARY PAVEMENT MARKING LETTERS AND SYMBOLS - TYPE IV TAPE

(A) EXISTING PAVEMENT MARKING

(B) TEMPORARY PAVEMENT MARKING PLACED IN PREVIOUS STAGE

FILE NAME = P:\10-IL\14411-DOT - Sacramento and Paulina over I-290\Work\CADD\Paulina - Contract 62K64\CADD_Sheets\CivilD16\62K64-sht-mot-stage2.dgn

COLLINS ENGINEERS INC

USER NAME = omartinez	DESIGNED - OAM	REVISED -	
	DRAWN - OAM	REVISED -	
PLOT SCALE = 40.0000 ' / in.	CHECKED - RAG	REVISED -	
PLOT DATE = 10/15/2025	DATE - 09/08/2025	REVISED -	

STATE OF ILLINOIS
DEPARTMENT OF TRANSPORTATION

FAI–290 (EISENHOWER EXPRESSWAY) AT PAULINA STREET
MAINTENANCE OF TRAFFIC – STAGE 2 (PAULINA)

SCALE: 1" = 20' | SHEET NO. 14 OF 17 SHEETS | STA. | TO STA.

F.A.I. RTE.	SECTION	COUNTY	TOTAL SHEETS	SHEET NO.
290	2019-191-B-R	COOK	265	68
		CONTRACT NO. 62K64		
FED. ROAD DIST. NO.	ILLINOIS	FED. AID PROJECT		

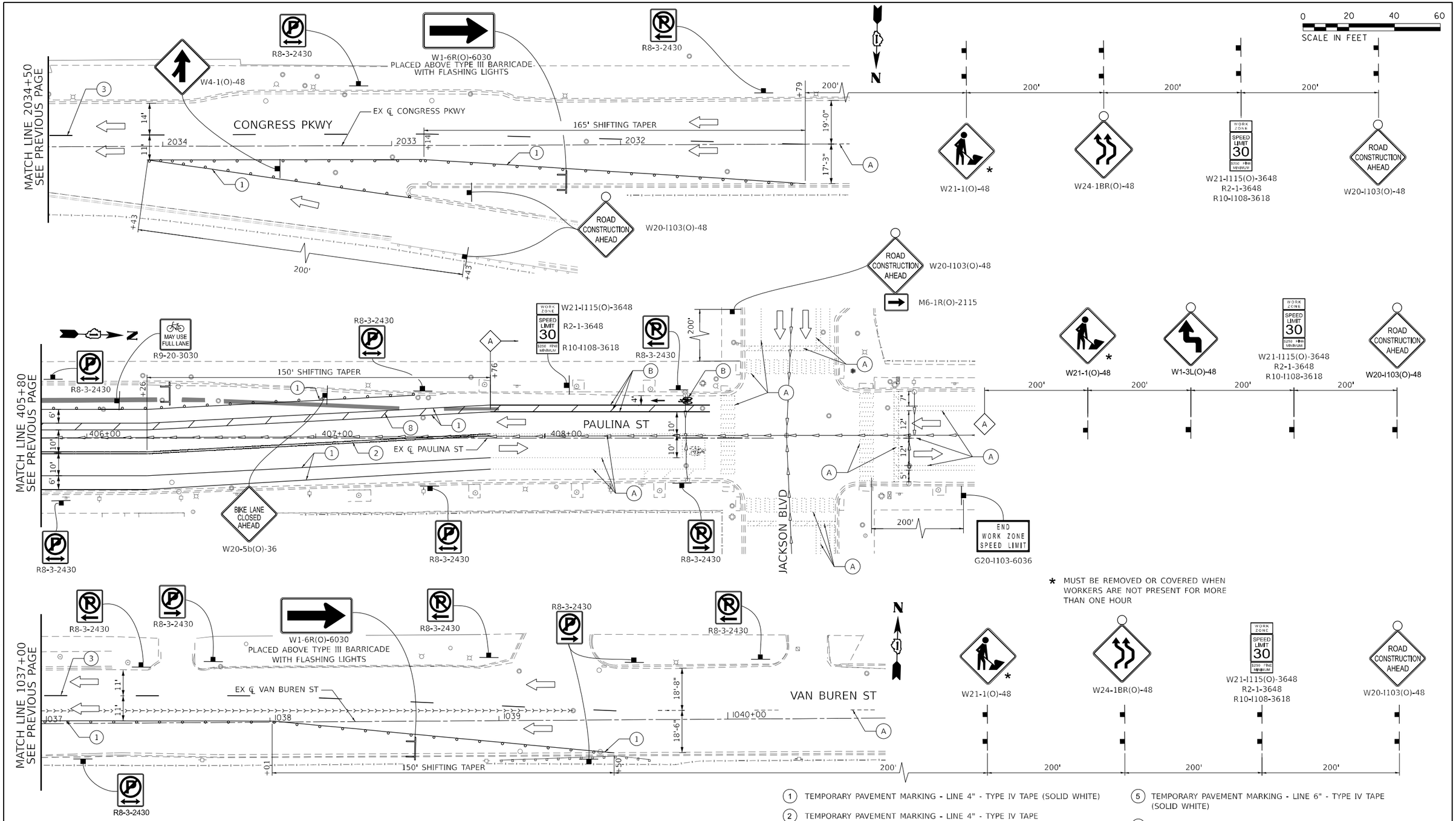

* MUST BE REMOVED OR COVERED WHEN WORKERS ARE NOT PRESENT FOR MORE THAN ONE HOUR

1. TEMPORARY PAVEMENT MARKING - LINE 4" - TYPE IV TAPE (SOLID WHITE)
2. TEMPORARY PAVEMENT MARKING - LINE 4" - TYPE IV TAPE (DOUBLE YELLOW 8" C-C)
3. TEMPORARY PAVEMENT MARKING - LINE 4" - TYPE IV TAPE (6' DASH - 18' SKIP WHITE)
4. TEMPORARY PAVEMENT MARKING - LINE 4" - TYPE IV TAPE (2' DASH - 6' SKIP YELLOW)
5. TEMPORARY PAVEMENT MARKING - LINE 6" - TYPE IV TAPE (SOLID WHITE)
5. TEMPORARY PAVEMENT MARKING - LINE 6" - TYPE IV TAPE (SOLID WHITE)
6. TEMPORARY PAVEMENT MARKING - LINE 24" - TYPE IV TAPE (SOLID WHITE)
7. TEMPORARY PAVEMENT MARKING LETTERS AND SYMBOLS - TYPE IV TAPE

A. EXISTING PAVEMENT MARKING

B. TEMPORARY PAVEMENT MARKING PLACED IN PREVIOUS STAGE

LEGEND

- CONSTRUCTION ZONE
- TEMPORARY CONCRETE BARRIER
- IMPACT ATTENUATOR, TEMPORARY (FULLY-REDIRECTIVE, NARROW) TEST LEVEL 2
- TEMPORARY PAVEMENT
- DRUMS SPACED 50' C-C OR AS NOTED: DRUMS IN TAPER (25' C-C) DRUMS IN RADII (10' C-C)
- TYPE III BARRICADE WITH TWO FLASHING BEACONS
- DETECTABLE PEDESTRIAN CHANNELIZING BARRICADE
- SIGN ON PORTABLE OR PERMANENT SUPPORT
- DIRECTION OF TRAFFIC
- ARROW BOARD

FILE NAME = P:\10-IL\14411-IDOT - Sacramento and Paulina over I-290\Work\CADD\Paulina - Contract 62K64\CADD_Sheets\Civil\D162K64-sht-mot-stage2.dgn

COLLINS ENGINEERS INC.	USER NAME = omartinez	DESIGNED - OAM	REVISED -
		DRAWN - OAM	REVISED -
	PLOT SCALE = 40.0000 ' / in.	CHECKED - RAG	REVISED -
	PLOT DATE = 10/15/2025	DATE - 09/08/2025	REVISED -

STATE OF ILLINOIS
DEPARTMENT OF TRANSPORTATION

FAI-290 (EISENHOWER EXPRESSWAY) AT PAULINA STREET
MAINTENANCE OF TRAFFIC – STAGE 2 (PAULINA)

SCALE: 1" = 20' | SHEET NO. 15 OF 17 SHEETS | STA. | TO STA.

F.A.I. RTE.	SECTION	COUNTY	TOTAL SHEETS	SHEET NO.
290	2019-191-B-R	COOK	265	69
		CONTRACT NO. 62K64		
FED. ROAD DIST. NO.	ILLINOIS	FED. AID PROJECT		

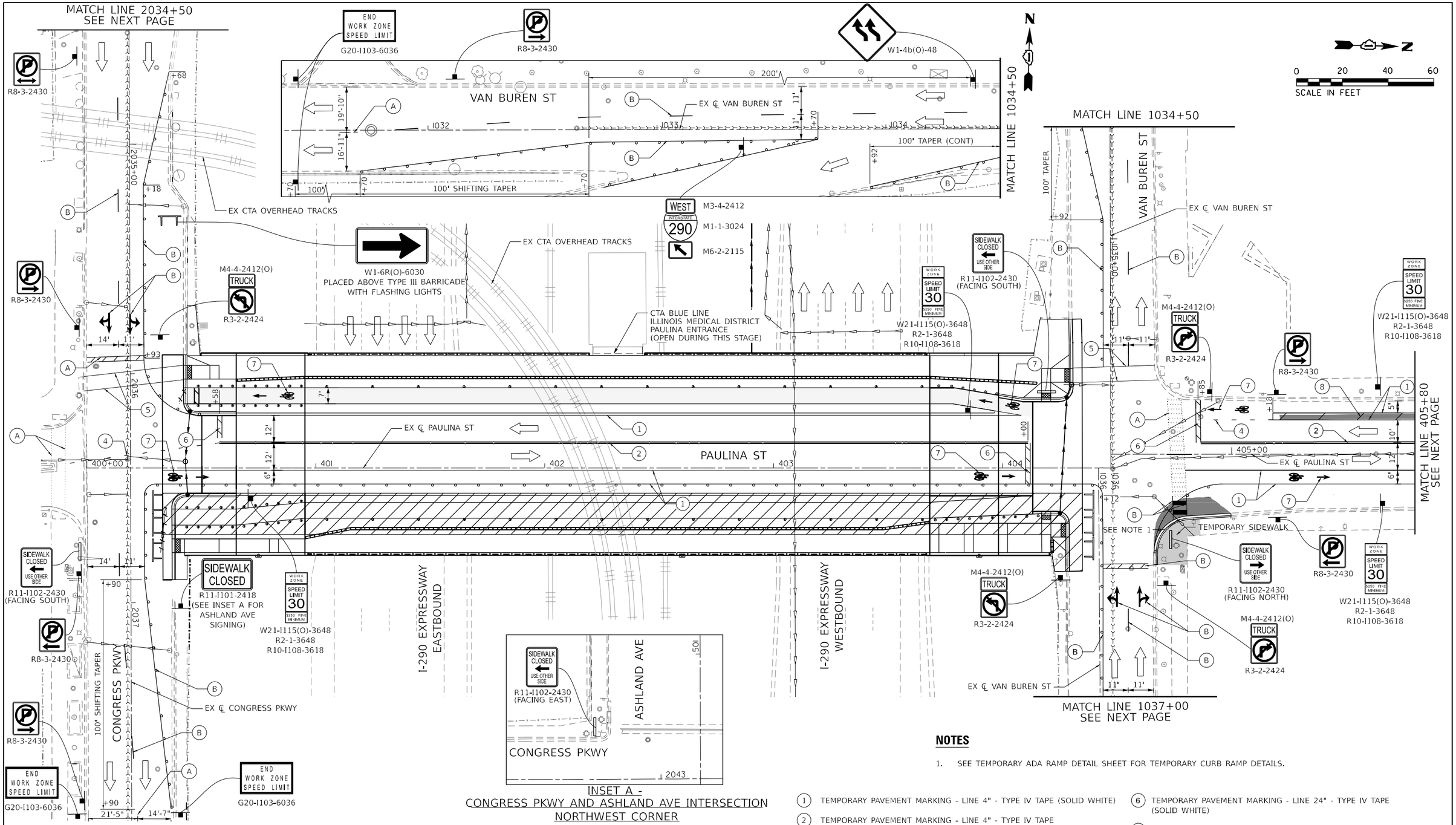

INSET A -
CONGRESS PKWY AND ASHLAND AVE INTERSECTION
NORTHWEST CORNER

NOTES

1. SEE TEMPORARY ADA RAMP DETAIL SHEET FOR TEMPORARY CURB RAMP DETAILS.

LEGEND

- CONSTRUCTION ZONE
- TEMPORARY CONCRETE BARRIER
- IMPACT ATTENUATOR, TEMPORARY (FULLY-REDIRECTIVE, NARROW) TEST LEVEL 2
- TEMPORARY PAVEMENT
- DRUMS SPACED 50' C-C OR AS NOTED: DRUMS IN TAPER (25' C-C) DRUMS IN RADII (10' C-C)
- TYPE III BARRICADE WITH TWO FLASHING BEACONS
- DETECTABLE PEDESTRIAN CHANNELIZING BARRICADE
- SIGN ON PORTABLE OR PERMANENT SUPPORT
- DIRECTION OF TRAFFIC
- ARROW BOARD

1. TEMPORARY PAVEMENT MARKING - LINE 4" - TYPE IV TAPE (SOLID WHITE)
2. TEMPORARY PAVEMENT MARKING - LINE 4" - TYPE IV TAPE (DOUBLE YELLOW 8" C-C)
3. TEMPORARY PAVEMENT MARKING - LINE 4" - TYPE IV TAPE (6' DASH - 18' SKIP WHITE)
4. TEMPORARY PAVEMENT MARKING - LINE 4" - TYPE IV TAPE (2' DASH - 6' SKIP YELLOW)
5. TEMPORARY PAVEMENT MARKING - LINE 4" - TYPE IV TAPE (SOLID WHITE)
6. TEMPORARY PAVEMENT MARKING - LINE 24" - TYPE IV TAPE (SOLID WHITE)
7. TEMPORARY PAVEMENT MARKING LETTERS AND SYMBOLS - TYPE IV TAPE
8. TEMPORARY PAVEMENT MARKING - TYPE IV TAPE - LINE 12" (20'-SPACING, 45° DIAGONALS, WHITE)

A. EXISTING PAVEMENT MARKING

B. TEMPORARY PAVEMENT MARKING PLACED IN PREVIOUS STAGE

FILE NAME = P:\10-IL14411-HDOT - Sacramento and Paulina over I-290\Work\CADD\Paulina - Contract 62K64\CADD_Sheets\Civil\D162K64-sht-mcls-stage3.dgn

COLLINS ENGINEERS INC

USER NAME = omartinez	DESIGNED - OAM	REVISED -	
	DRAWN - OAM	REVISED -	
PLOT SCALE = 40.0000 ' / in.	CHECKED - RAG	REVISED -	
PLOT DATE = 10/15/2025	DATE - 09/08/2025	REVISED -	

STATE OF ILLINOIS
DEPARTMENT OF TRANSPORTATION

FAI-290 (EISENHOWER EXPRESSWAY) AT PAULINA STREET
MAINTENANCE OF TRAFFIC – STAGE 3 (PAULINA)

SCALE: 1" = 20' | SHEET NO. 16 OF 17 SHEETS | STA. | TO STA.

F.A.I. RTE.	SECTION	COUNTY	TOTAL SHEETS	SHEET NO.
290	2019-191-B-R	COOK	265	70
		CONTRACT NO. 62K64		
FED. ROAD DIST. NO.	ILLINOIS	FED. AID PROJECT		

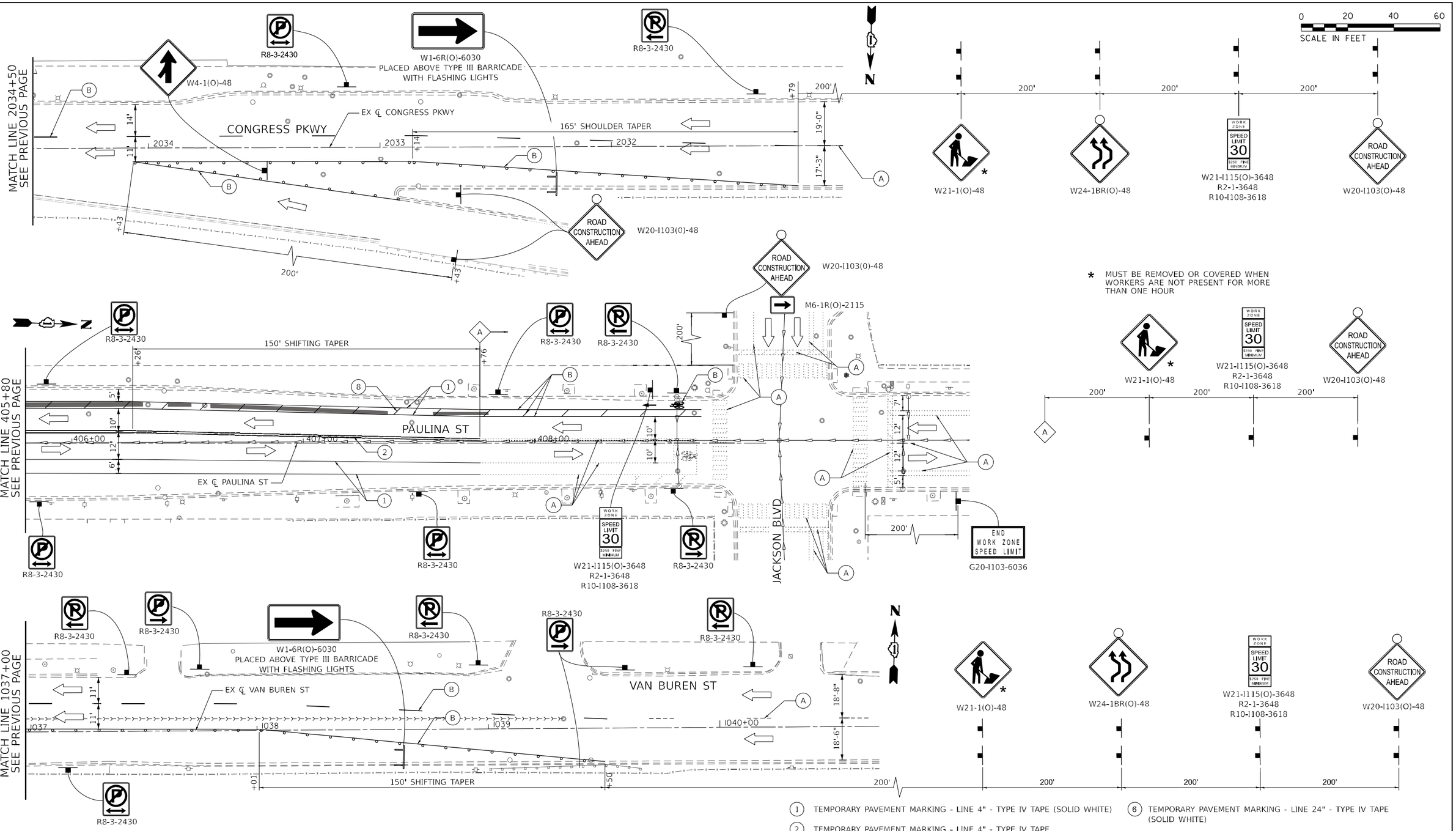

LEGEND

- CONSTRUCTION ZONE
- TEMPORARY CONCRETE BARRIER
- IMPACT ATTENUATOR, TEMPORARY (FULLY-REDIRECTIVE, NARROW) TEST LEVEL 2
- TEMPORARY PAVEMENT
- DRUMS SPACED 50' C-C OR AS NOTED: DRUMS IN TAPER (25' C-C) DRUMS IN RADII (10' C-C)
- TYPE III BARRICADE WITH TWO FLASHING BEACONS
- DETECTABLE PEDESTRIAN CHANNELIZING BARRICADE
- SIGN ON PORTABLE OR PERMANENT SUPPORT
- DIRECTION OF TRAFFIC
- ARROW BOARD

1. TEMPORARY PAVEMENT MARKING - LINE 4" - TYPE IV TAPE (SOLID WHITE)
2. TEMPORARY PAVEMENT MARKING - LINE 4" - TYPE IV TAPE (DOUBLE YELLOW 8" C-C)
3. TEMPORARY PAVEMENT MARKING - LINE 4" - TYPE IV TAPE (6' DASH - 18' SKIP WHITE)
4. TEMPORARY PAVEMENT MARKING - LINE 4" - TYPE IV TAPE (2' DASH - 6' SKIP YELLOW)
5. TEMPORARY PAVEMENT MARKING - LINE 4" - TYPE IV TAPE (SOLID WHITE)
6. TEMPORARY PAVEMENT MARKING - LINE 24" - TYPE IV TAPE (SOLID WHITE)
7. TEMPORARY PAVEMENT MARKING LETTERS AND SYMBOLS - TYPE IV TAPE
8. TEMPORARY PAVEMENT MARKING - TYPE IV TAPE - LINE 12" (20'-SPACING, 45° DIAGONALS, WHITE)

A. EXISTING PAVEMENT MARKING

B. TEMPORARY PAVEMENT MARKING PLACED IN PREVIOUS STAGE

FILE NAME = P:\10-IL\14111-IDOT - Sacramento and Paulina over I-290\Work\CADD\Paulina - Contract 62K64\CADD_Sheets\CivilD16\2K64-sht-not-stage3.dgn

COLLINS ENGINEERS INC.

USER NAME = omartinez	DESIGNED - OAM	REVISED -	
	DRAWN - OAM	REVISED -	
PLOT SCALE = 40.0000 ' / in.	CHECKED - RAG	REVISED -	
PLOT DATE = 10/15/2025	DATE - 09/08/2025	REVISED -	

STATE OF ILLINOIS
DEPARTMENT OF TRANSPORTATION

FAI–290 (EISENHOWER EXPRESSWAY) AT PAULINA STREET
MAINTENANCE OF TRAFFIC – STAGE 3 (PAULINA)

SCALE: 1" = 20' | SHEET NO. 17 OF 17 SHEETS | STA. | TO STA.

F.A.I. RTE.	SECTION	COUNTY	TOTAL SHEETS	SHEET NO.
290	2019-191-B-R	COOK	265	71
		CONTRACT NO. 62K64		
FED. ROAD DIST. NO.	ILLINOIS	FED. AID PROJECT		

N

NOT TO SCALE

VAN BUREN ST

OGDEN AVE

WB I-290

PAULINA ST

CTA HEADHOUSE CLOSED
STAGE 2

CTA BLUE LINE

CTA HEADHOUSE

EB I-290

CONGRESS PKWY

WOOD ST

1 — CTA ENTRANCE — SPECIAL - 30x24

2 — CTA ENTRANCE — SPECIAL - 30x24

3 — SIDEWALK CLOSED — R11-I101-24x18

4 — CTA ENTRANCE CLOSED USE OGDEN AVE ENTRANCE — SPECIAL - 48x36

LEGEND

- EXISTING TRAFFIC SIGNAL
- TYPE III BARRICADE
- PROPOSED DETOUR ROUTE
  DETOURED VIA CONGRESS PKWY- OGDEN AVE - VAN BUREN ST
  0.51 MILES
- SIGN ON PORTABLE OR PERMANENT SUPPORT
- CLOSED PORTION OF PAULINA ST

FILE NAME = P:\10-IL14411-3D0T - Sacramento and Paulina over I-290\Work\CADD\Paulina - Contract 62K64\CADD_Sheets\CivilD162K64-sht-mot-pedestrian_detour.dgn

COLLINS ENGINEERS INC.

USER NAME = omartinez	DESIGNED - OAM	REVISED -	
	DRAWN - OAM	REVISED -	
PLOT SCALE = 40.0000 ' / in.	CHECKED - RAG	REVISED -	
PLOT DATE = 10/15/2025	DATE - 09/08/2025	REVISED -	

STATE OF ILLINOIS
DEPARTMENT OF TRANSPORTATION

FAI–290 (EISENHOWER EXPRESSWAY) AT PAULINA STREET
PEDESTRIAN DETOUR MAP – STAGE 2

SCALE: NTS | SHEET NO. 1 OF 1 SHEETS | STA. | TO STA.

F.A.I. RTE.	SECTION	COUNTY	TOTAL SHEETS	SHEET NO.
290	2019-191-B-R	COOK	265	72
		CONTRACT NO. 62K64		
FED. ROAD DIST. NO.	ILLINOIS	FED. AID PROJECT		

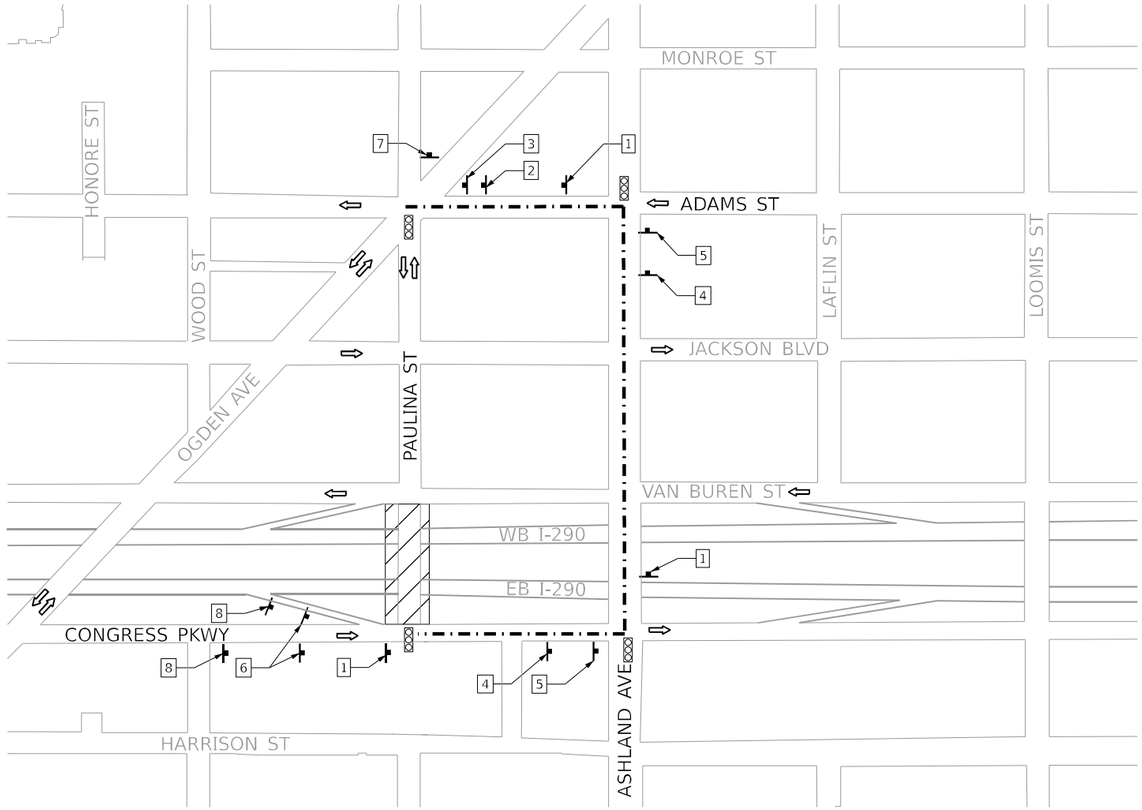

N

NOT TO SCALE

LEGEND

- DIRECTION OF TRAVEL
- EXISTING TRAFFIC SIGNAL
- SIGN ON PORTABLE OR PERMANENT SUPPORT
- PROPOSED NORTHBOUND TRUCK DETOUR ROUTE
  DETOURED VIA:
  -0.13 MI EAST ON CONGRESS PKWY (LOCAL STREET = 8,300 ADT)
  -0.08 MI NORTH ON ASHLAND AVE (MINOR ARTERIAL = 21,600 ADT)
  -0.13 MI WEST ON ADAMS ST (MAJOR COLLECTOR = 1,800 ADT)
  TOTAL DETOUR LENGTH = 0.34 MI
- PAULINA ST WORK AREA

NOTES

1. SIGNS DESIGNATED AS (O) SHALL HAVE FLUORESCENT ORANGE SHEETING MATERIAL.
2. THE CONTRACTOR SHALL NOT OBSTRUCT ANY NON-CONFLICTING EXISTING SIGN WITH PLACEMENT OF THE DETOUR SIGNAGE.
3. SEE TC-21 FOR TYPICAL SIGN SPACING.

TRUCK DETOUR ROUTE: NO LEFT TURNS EB CONGRESS PKWY TO NB PAULINA

(STAGE 1, 2, 3)

1 — TRUCK / DETOUR / NORTH / PAULINA STREET ↑
M4-4-2412(O)
M4-8-2412(O)
M3-1-2412(O)
SPECIAL-2418(O)
M6-3-2115(O)

2 — TRUCK / DETOUR / NORTH / PAULINA STREET ↱
M4-4-2412(O)
M4-8-2412(O)
M3-1-2412(O)
SPECIAL-2418(O)
M5-1R-2115(O)

3 — TRUCK / DETOUR / NORTH / PAULINA STREET →
M4-4-2412(O)
M4-8-2412(O)
M3-1-2412(O)
SPECIAL-2418(O)
M6-1R-2115(O)

4 — TRUCK / DETOUR / NORTH / PAULINA STREET ↰
M4-4-2412(O)
M4-8-2412(O)
M3-1-2412(O)
SPECIAL-2418(O)
M5-1L-2115(O)

5 — TRUCK / DETOUR / NORTH / PAULINA STREET ←
M4-4-2412(O)
M4-8-2412(O)
M3-1-2412(O)
SPECIAL-2418(O)
M6-1L-2115(O)

6 — DETOUR AHEAD
W20-2-48(O)
(W AMBER BEACON)
TRUCK / NORTH / PAULINA STREET
M4-4-2412(O)
M3-1-2412(O)
SPECIAL-2418(O)

7 — TRUCK / END DETOUR
M4-4-2412(O)
M4-8A-2418(O)

8 — NO TRUCK LEFT TURNS AT PAULINA ST AND CONGRESS PKWY FOLLOW DETOUR
CUSTOM-6042(O)

FILE NAME = P:\10-IL\14411-4D01 - Sacramento and Paulina over I-290\Work\CADD\Paulina - Contract 62K64\CADD_Sheets\CivilD\62K64-tfi-staging-detour map-sheet 1.dgn

COLLINS ENGINEERS INC.	USER NAME = omartinez	DESIGNED - OAM	REVISED -
		DRAWN - OAM	REVISED -
	PLOT SCALE = 40.0000 ' / in.	CHECKED - RAG	REVISED -
	PLOT DATE = 10/15/2025	DATE - 09/08/2025	REVISED -

STATE OF ILLINOIS
DEPARTMENT OF TRANSPORTATION

FAI–290 (EISENHOWER EXPRESSWAY) AT PAULINA STREET
TRUCK DETOUR ROUTE

SCALE: NTS | SHEET NO. 1 OF 3 SHEETS | STA. | TO STA.

F.A.I. RTE.	SECTION	COUNTY	TOTAL SHEETS	SHEET NO.
290	2019-191-B-R	COOK	265	73
		CONTRACT NO. 62K64		
FED. ROAD DIST. NO.	ILLINOIS	FED. AID PROJECT		

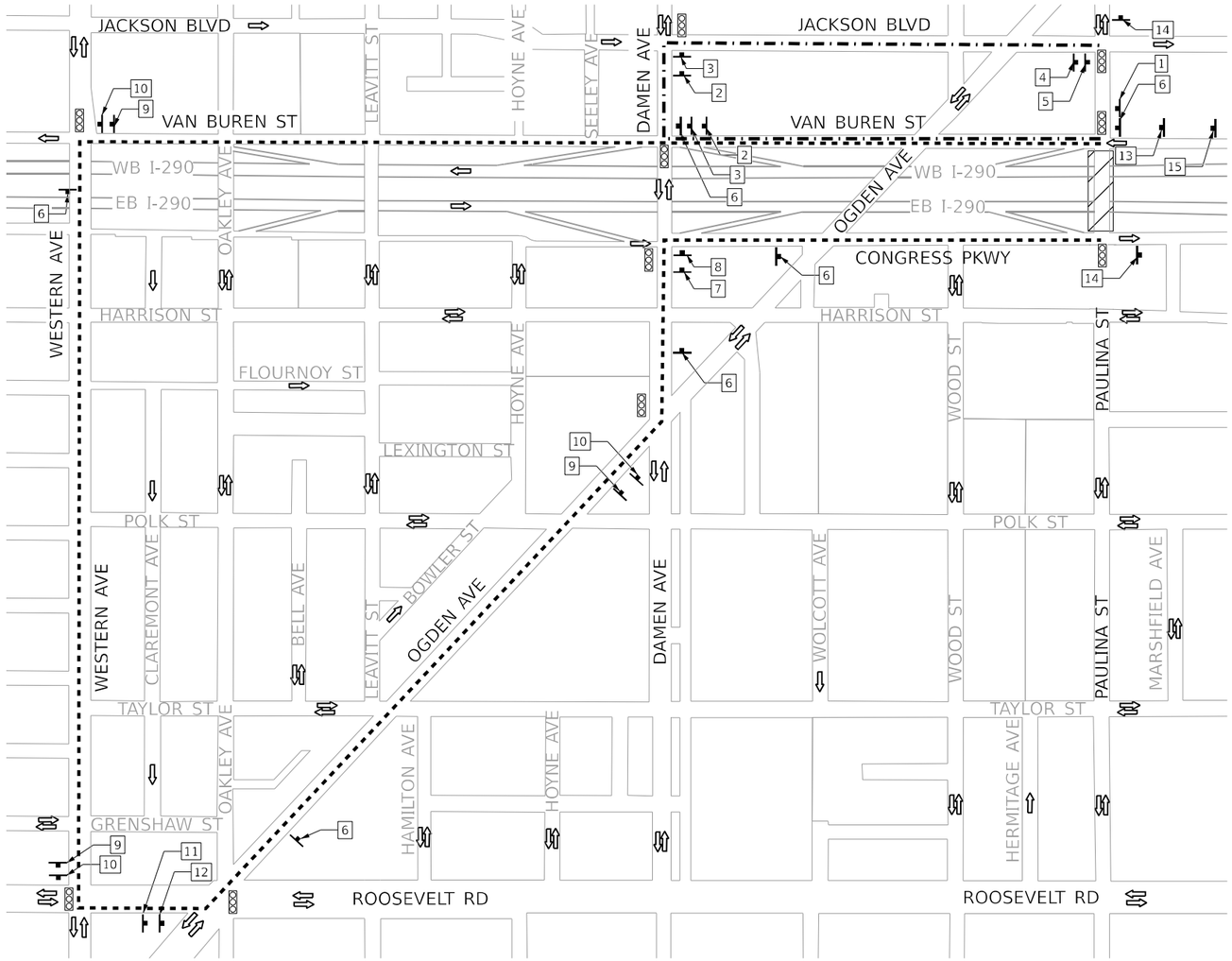

NOT TO SCALE

LEGEND

- DIRECTION OF TRAVEL
- EXISTING TRAFFIC SIGNAL
- SIGN ON PORTABLE OR PERMANENT SUPPORT
- PROPOSED NORTHBOUND TRUCK DETOUR ROUTE
  DETOURED VIA:
  -0.38 MI WEST ON VAN BUREN ST (LOCAL STREET = 11,000 ADT)
  -0.09 MI NORTH ON DAMEN AVE (MAJOR COLLECTOR = 15,500 ADT)
  -0.38 MI EAST ON JACKSON BLVD (MAJOR COLLECTOR = 2,550 ADT)
  TOTAL DETOUR LENGTH = 0.85 MI
- PROPOSED SOUTHBOUND TRUCK DETOUR ROUTE
  DETOURED VIA:
  -0.87 MI WEST ON VAN BUREN ST (LOCAL STREET = 11,000 ADT)
  -0.65 MI SOUTH ON WESTERN AVE (OTHER PRINCIPAL ARTERIAL = 24,000 ADT)
  -0.13 MI EAST ON ROOSEVELT RD (OTHER PRINCIPAL ARTERIAL = 20,800 ADT)
  -0.57 MI NORTHEAST ON OGDEN AVE (MAJOR COLLECTOR = 14,500 ADT)
  -0.15 MI NORTH ON DAMEN AVE (MAJOR COLLECTOR = 17,700 ADT)
  -0.38 MI EAST ON CONGRESS PKWY (LOCAL STREET = 15,000 ADT)
  TOTAL = 2.75 MI
- PAULINA ST WORK AREA

NOTES

1. SIGNS DESIGNATED AS (O) SHALL HAVE FLUORESCENT ORANGE SHEETING MATERIAL.
2. THE CONTRACTOR SHALL NOT OBSTRUCT ANY NON-CONFLICTING EXISTING SIGN WITH PLACEMENT OF THE DETOUR SIGNAGE.
3. SEE TC-21 FOR TYPICAL SIGN SPACING.

TRUCK DETOUR ROUTE: NO RIGHT OR LEFT TURNS WB VAN BUREN ST TO PAULINA ST

(STAGE 2, 3 NORTHBOUND AND SOUTHBOUND)
(STAGE 1 SOUTHBOUND ONLY)

1 — TRUCK / DETOUR / NORTH / PAULINA STREET
M4-4-2412(O)
M4-8-2412(O)
M3-1-2412(O)
SPECIAL-2418(O)
M6-3-2115(O)

2 — TRUCK / DETOUR / NORTH / PAULINA STREET
M4-4-2412(O)
M4-8-2412(O)
M3-1-2412(O)
SPECIAL-2418(O)
M5-1R-2115(O)

3 — TRUCK / DETOUR / NORTH / PAULINA STREET
M4-4-2412(O)
M4-8-2412(O)
M3-1-2412(O)
SPECIAL-2418(O)
M6-1R-2115(O)

4 — TRUCK / DETOUR / NORTH / PAULINA STREET
M4-4-2412(O)
M4-8-2412(O)
M3-1-2412(O)
SPECIAL-2418(O)
M5-1L-2115(O)

5 — TRUCK / DETOUR / NORTH / PAULINA STREET
M4-4-2412(O)
M4-8-2412(O)
M3-1-2412(O)
SPECIAL-2418(O)
M6-1L-2115(O)

6 — TRUCK / DETOUR / SOUTH / PAULINA STREET
M4-4-2412(O)
M4-8-2412(O)
M3-3-2412(O)
SPECIAL-2418(O)
M6-3-2115(O)

7 — TRUCK / DETOUR / SOUTH / PAULINA STREET
M4-4-2412(O)
M4-8-2412(O)
M3-3-2412(O)
SPECIAL-2418(O)
M5-1R-2115(O)

8 — TRUCK / DETOUR / SOUTH / PAULINA STREET
M4-4-2412(O)
M4-8-2412(O)
M3-3-2412(O)
SPECIAL-2418(O)
M6-1R-2115(O)

9 — TRUCK / DETOUR / SOUTH / PAULINA STREET
M4-4-2412(O)
M4-8-2412(O)
M3-3-2412(O)
SPECIAL-2418(O)
M5-1L-2115(O)

10 — TRUCK / DETOUR / SOUTH / PAULINA STREET
M4-4-2412(O)
M4-8-2412(O)
M3-3-2412(O)
SPECIAL-2418(O)
M6-1L-2115(O)

11 — TRUCK / DETOUR / SOUTH / PAULINA STREET
M4-4-2412(O)
M4-8-2412(O)
M3-3-2412(O)
SPECIAL-2418(O)
M5-2L-2115(O)

12 — TRUCK / DETOUR / SOUTH / PAULINA STREET
M4-4-2412(O)
M4-8-2412(O)
M3-3-2412(O)
SPECIAL-2418(O)
M6-2L-2115(O)

13 — DETOUR AHEAD / TRUCK / PAULINA STREET
W20-2-48(O)
(W AMBER BEACON)
M4-4-2412(O)
SPECIAL-2418(O)

14 — TRUCK / END DETOUR
M4-4-2412(O)
M4-8A-2418(O)

15 — NO TRUCK TURNING AT PAULINA ST AND VAN BUREN ST FOLLOW DETOUR
CUSTOM-6042(O)

FILE NAME = P:\10-IL\14111-DOT - Sacramento and Paulina over I-290\Work\CADD\Paulina - Contract 62K64\CADD_Sheets\Civil\D162K64-tht-staging-detour map-sheet 2.dgn

COLLINS ENGINEERS INC.

USER NAME = amartinez	DESIGNED - OAM	REVISED -	
	DRAWN - OAM	REVISED -	
PLOT SCALE = 40.0000 ' / in.	CHECKED - RAG	REVISED -	
PLOT DATE = 10/15/2025	DATE - 09/08/2025	REVISED -	

STATE OF ILLINOIS
DEPARTMENT OF TRANSPORTATION

FAI–290 (EISENHOWER EXPRESSWAY) AT PAULINA STREET
TRUCK DETOUR ROUTE

SCALE: NTS | SHEET NO. 2 OF 3 SHEETS | STA. | TO STA.

F.A.I. RTE.	SECTION	COUNTY	TOTAL SHEETS	SHEET NO.
290	2019-191-B-R	COOK	265	74
		CONTRACT NO. 62K64		
FED. ROAD DIST. NO.	ILLINOIS	FED. AID PROJECT		

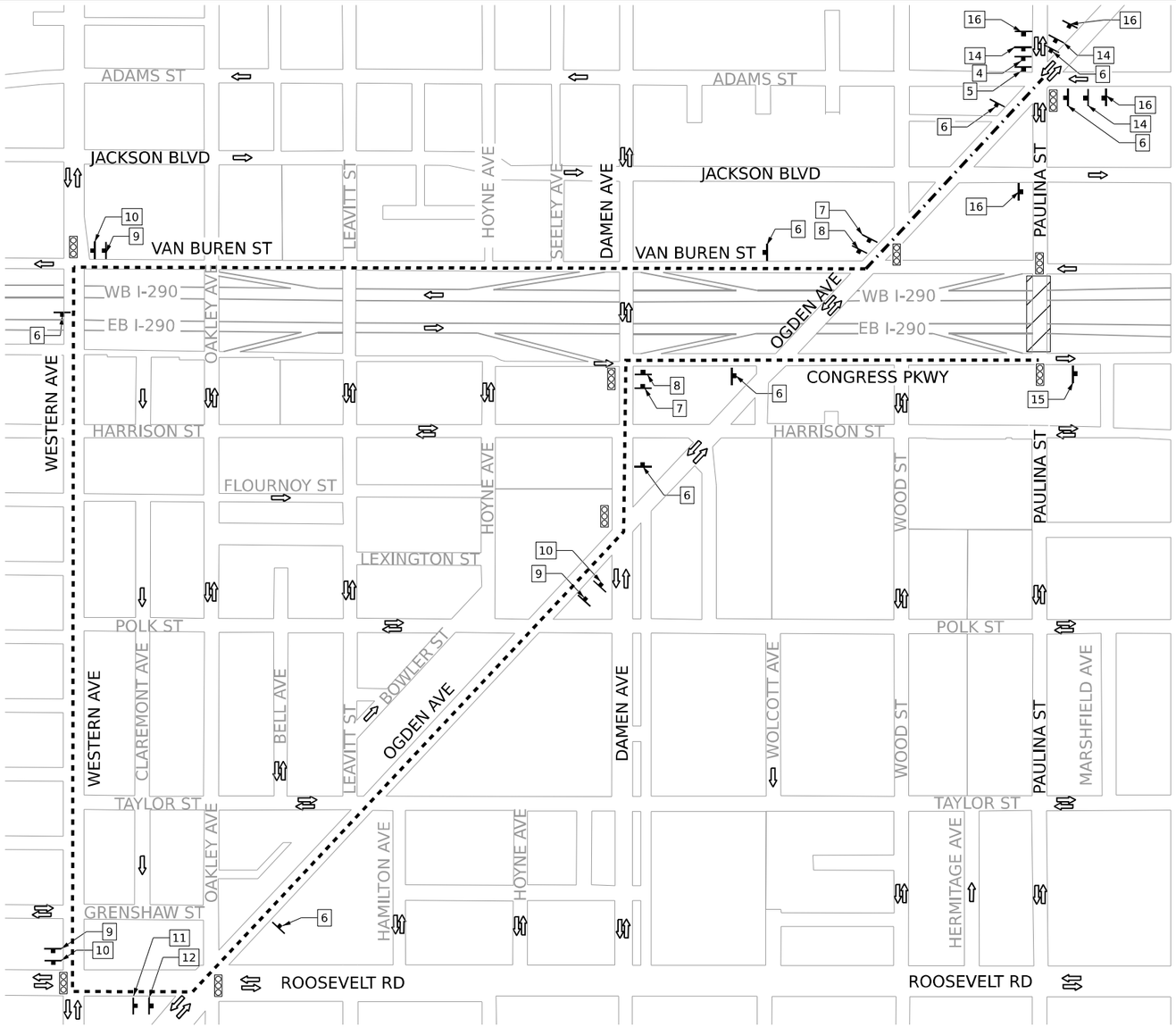

NOT TO SCALE

LEGEND

- DIRECTION OF TRAVEL
- EXISTING TRAFFIC SIGNAL
- SIGN ON PORTABLE OR PERMANENT SUPPORT
- PROPOSED SOUTHBOUND PAULINA ST TO WESTBOUND VAN BUREN ST TRUCK DETOUR ROUTE DETOURED VIA:
  - -0.23 MI SOUTHWEST ON OGDEN AVE (MAJOR COLLECTOR = 14,300 ADT)
  - TOTAL DETOUR LENGTH = 0.23 MI
- PROPOSED SOUTHBOUND PAULINA ST TO EASTBOUND CONGRESS PKWY TRUCK DETOUR ROUTE DETOURED VIA:
  - -0.23 MI SOUTHWEST ON OGDEN AVE (MAJOR COLLECTOR = 14,300 ADT)
  - -0.72 MI WEST ON VAN BUREN ST (LOCAL STREET = 11,000 ADT)
  - -0.65 MI SOUTH ON WESTERN AVE (OTHER PRINCIPAL ARTERIAL = 24,000 ADT)
  - -0.13 MI EAST ON ROOSEVELT RD (OTHER PRINCIPAL ARTERIAL = 20,800 ADT)
  - -0.57 MI NORTHEAST ON OGDEN AVE (MAJOR COLLECTOR = 14,500 ADT)
  - -0.15 MI NORTH ON DAMEN AVE (MAJOR COLLECTOR = 17,700 ADT)
  - -0.38 MI EAST ON CONGRESS PKWY (LOCAL STREET = 15,000 ADT)
  - TOTAL = 2.83 MI
- PAULINA ST WORK AREA

NOTES

1. SIGNS DESIGNATED AS (O) SHALL HAVE FLUORESCENT ORANGE SHEETING MATERIAL.
2. THE CONTRACTOR SHALL NOT OBSTRUCT ANY NON-CONFLICTING EXISTING SIGN WITH PLACEMENT OF THE DETOUR SIGNAGE.
3. SEE TC-21 FOR TYPICAL SIGN SPACING.

TRUCK DETOUR ROUTE: NO TURNS SB PAULINA ST TO WB VAN BUREN ST AND EB CONGRESS PKWY

(STAGE 1, 3)

1	TRUCK DETOUR NORTH PAULINA STREET	M4-4-2412(O) M4-8-2412(O) M3-1-2412(O) SPECIAL-2418(O) M6-3-2115(O)	2	TRUCK DETOUR NORTH PAULINA STREET	M4-4-2412(O) M4-8-2412(O) M3-1-2412(O) SPECIAL-2418(O) M5-1R-2115(O)	3	TRUCK DETOUR NORTH PAULINA STREET	M4-4-2412(O) M4-8-2412(O) M3-1-2412(O) SPECIAL-2418(O) M6-1R-2115(O)	4	TRUCK DETOUR SOUTH PAULINA STREET	M4-4-2412(O) M4-8-2412(O) M3-3-2412(O) SPECIAL-2418(O) M5-2R-2115(O)	5	TRUCK DETOUR SOUTH PAULINA STREET	M4-4-2412(O) M4-8-2412(O) M3-3-2412(O) SPECIAL-2418(O) M6-2R-2115(O)	6	TRUCK DETOUR SOUTH PAULINA STREET	M4-4-2412(O) M4-8-2412(O) M3-3-2412(O) SPECIAL-2418(O) M6-3-2115(O)	7	TRUCK DETOUR SOUTH PAULINA STREET	M4-4-2412(O) M4-8-2412(O) M3-3-2412(O) SPECIAL-2418(O) M5-1R-2115(O)
8	TRUCK DETOUR SOUTH PAULINA STREET	M4-4-2412(O) M4-8-2412(O) M3-3-2412(O) SPECIAL-2418(O) M6-1R-2115(O)	9	TRUCK DETOUR SOUTH PAULINA STREET	M4-4-2412(O) M4-8-2412(O) M3-3-2412(O) SPECIAL-2418(O) M5-1L-2115(O)	10	TRUCK DETOUR SOUTH PAULINA STREET	M4-4-2412(O) M4-8-2412(O) M3-3-2412(O) SPECIAL-2418(O) M6-1L-2115(O)	11	TRUCK DETOUR SOUTH PAULINA STREET	M4-4-2412(O) M4-8-2412(O) M3-3-2412(O) SPECIAL-2418(O) M5-2L-2115(O)	12	TRUCK DETOUR SOUTH PAULINA STREET	M4-4-2412(O) M4-8-2412(O) M3-3-2412(O) SPECIAL-2418(O) M6-2L-2115(O)	13	DETOUR AHEAD TRUCK NORTH PAULINA STREET	W20-2-48(O) (W AMBER BEACON) M4-4-2412(O) M3-1-2412(O) SPECIAL-2418(O)	14	DETOUR AHEAD TRUCK SOUTH PAULINA STREET	W20-2-48(O) (W AMBER BEACON) M4-4-2412(O) M3-3-2412(O) SPECIAL-2418(O)
15	TRUCK END DETOUR	M4-4-2412(O) M4-8A-2418(O)	16	NO TRUCK TURNS AT PAULINA ST AND VAN BUREN/CONGRESS FOLLOW DETOUR	CUSTOM-6042(O)												

FILE NAME = P:\10-IL14411-IDOT - Sacramento and Paulina over I-290\Work\CADD\Paulina - Contract 62K64\CADD_Sheets\ChiRD162K64-sht-staging-detour map-sheet 3.dgn

COLLINS ENGINEERS INC

USER NAME = omartinez	DESIGNED - OAM	REVISED -	
	DRAWN - OAM	REVISED -	
PLOT SCALE = 40.0000 ' / in.	CHECKED - RAG	REVISED -	
PLOT DATE = 10/15/2025	DATE - 09/08/2025	REVISED -	

STATE OF ILLINOIS
DEPARTMENT OF TRANSPORTATION

FAI–290 (EISENHOWER EXPRESSWAY) AT PAULINA STREET
TRUCK DETOUR ROUTE

SCALE: NTS | SHEET NO. 3 OF 3 SHEETS | STA. | TO STA.

F.A.I. RTE.	SECTION	COUNTY	TOTAL SHEETS	SHEET NO.
290	2019-191-B-R	COOK	265	75
		CONTRACT NO. 62K64		
FED. ROAD DIST. NO.	ILLINOIS	FED. AID PROJECT		

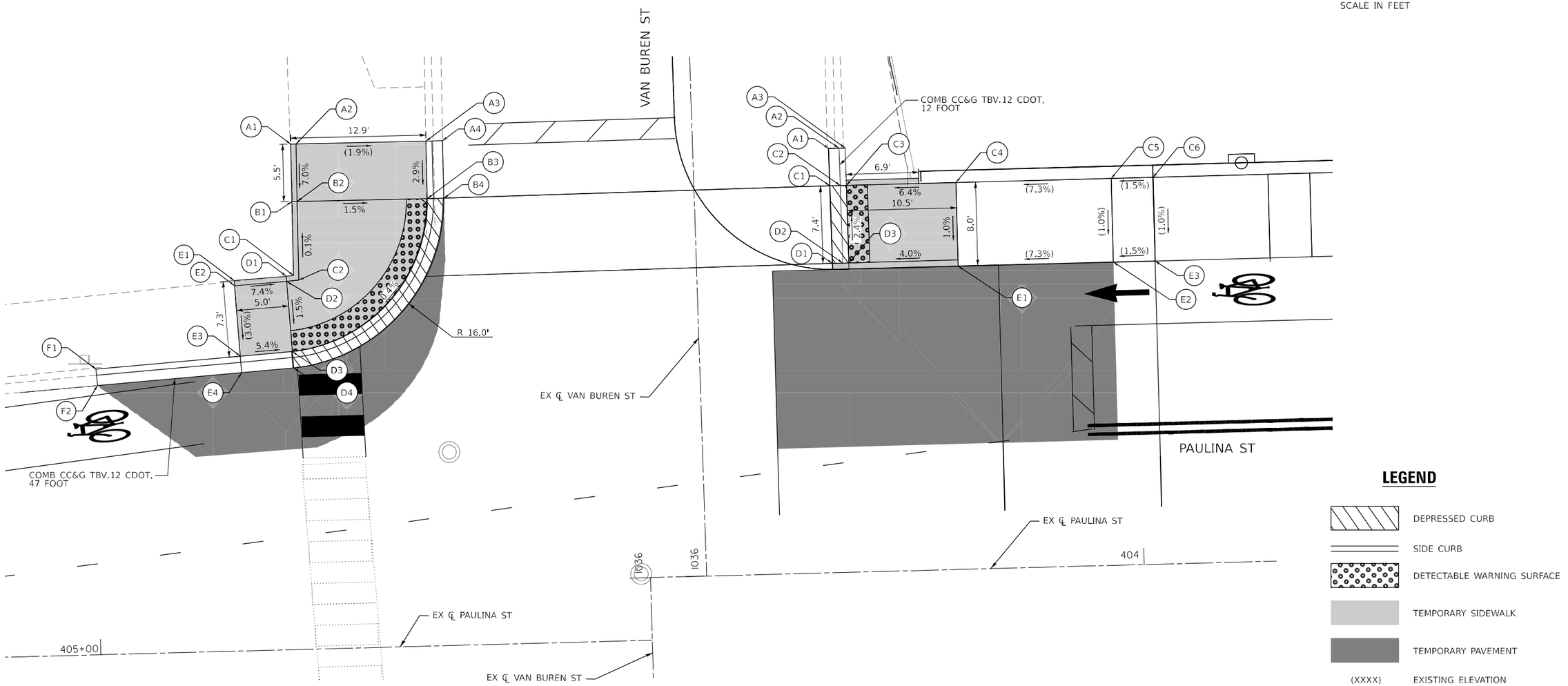

LEGEND

- DEPRESSED CURB
- SIDE CURB
- DETECTABLE WARNING SURFACE
- TEMPORARY SIDEWALK
- TEMPORARY PAVEMENT
- (XXXX) EXISTING ELEVATION

ADA ELEVATIONS (NORTH)

POINT	STATION	OFFSET (LT/RT)	ELEVATION
A1	404+80.57	48.35 RT	(592.06)
A2	404+80.07	48.35 RT	(592.03)
A3	404+67.63	48.30 RT	(591.79)
A4	404+66.04	48.29 RT	(591.47)

POINT	STATION	OFFSET (LT/RT)	ELEVATION
B1	404+80.59	42.85 RT	(591.96)
B2	404+80.09	42.85 RT	591.65
B3	404+67.65	42.80 RT	591.46
B4	404+66.06	42.79 RT	(591.47)

POINT	STATION	OFFSET (LT/RT)	ELEVATION
C1	404+80.63	35.78 RT	(592.00)
C2	404+80.13	35.32 RT	591.65

POINT	STATION	OFFSET (LT/RT)	ELEVATION
D1	404+81.33	35.72 RT	(592.00)
D2	404+81.30	35.22 RT	591.65
D3	404+80.93	28.51 RT	591.55
D4	404+80.84	26.93 RT	591.56

POINT	STATION	OFFSET (LT/RT)	ELEVATION
E1	404+86.32	35.44 RT	(592.03)
E2	404+86.30	34.94 RT	(592.03)
E3	404+85.92	28.20 RT	(591.82)
E4	404+85.83	26.62 RT	591.58

POINT	STATION	OFFSET (LT/RT)	ELEVATION
F1	404+99.75	27.32 RT	(592.00)
F2	404+99.65	25.74 RT	(591.76)

ADA ELEVATIONS (SOUTH)

POINT	STATION	OFFSET (LT/RT)	ELEVATION
A1	404+29.13	40.58 RT	(592.04)
A2	404+28.13	40.58 RT	(591.99)
A3	404+27.55	40.58 RT	(592.28)

POINT	STATION	OFFSET (LT/RT)	ELEVATION
B1	404+27.53	37.50 RT	(592.33)
B2	404+20.60	37.50 RT	(592.54)

POINT	STATION	OFFSET (LT/RT)	ELEVATION
C1	404+29.11	37.00 RT	(592.23)
C2	404+28.10	37.00 RT	592.24
C3	404+27.52	37.00 RT	592.27
C4	404+17.05	37.00 RT	(592.94)
C5	404+02.18	37.00 RT	(594.03)
C6	403+98.18	37.00 RT	(594.09)

POINT	STATION	OFFSET (LT/RT)	ELEVATION
D1	404+29.06	29.58 RT	(592.46)
D2	404+28.06	29.58 RT	592.42
D3	404+27.48	29.58 RT	592.45

POINT	STATION	OFFSET (LT/RT)	ELEVATION
E1	404+17.03	29.00 RT	(592.85)
E2	404+02.18	29.00 RT	(593.95)
E3	403+98.18	29.00 RT	(594.01)

COLLINS ENGINEERS INC.

USER NAME = omartinez	DESIGNED - OAM	REVISED -	
	DRAWN - OAM	REVISED -	
PLOT SCALE = 10.0000 ' / in.	CHECKED - RAG	REVISED -	
PLOT DATE = 10/15/2025	DATE - 09/08/2025	REVISED -	

STATE OF ILLINOIS
DEPARTMENT OF TRANSPORTATION

FAI–290 (EISENHOWER EXPRESSWAY) AT PAULINA STREET
MAINTENANCE OF TRAFFIC – TEMPORARY ADA DETAILS

SCALE: 1" = 5' | SHEET NO. 1 OF 1 SHEETS | STA. | TO STA.

F.A.I. RTE.	SECTION	COUNTY	TOTAL SHEETS	SHEET NO.
290	2019-191-B-R	COOK	265	76
		CONTRACT NO. 62K64		
FED. ROAD DIST. NO.	ILLINOIS	FED. AID PROJECT		

FILE NAME = P:\10-LL\14111-HDOT - Sacramento and Paulina over I-290\Work\CADD\Paulina - Contract 62K64\CADD_Sheets\Civil\D162K64-sht-mot-temporary ADA.dgn

SIGN DETAIL
1:30

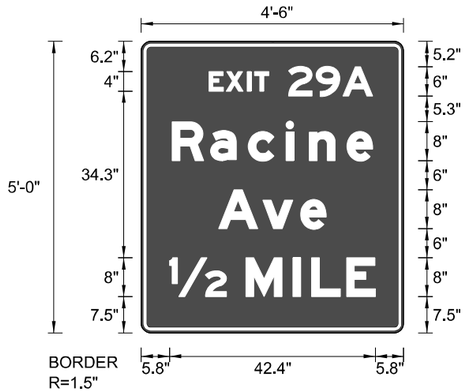

BORDER
R=1.5"
TH=0.6"
IN=0.5"

Panel Style: Construction Guide
Dimensions are in inches,tenths

Letter locations are panel edge to lower left corner

SIGN NUMBER	TEMP 1
WIDTH x HGHT.	54" x 60"
BORDER WIDTH	0.6"
CORNER RADIUS	1.5"
MOUNTING	Ground
BACKGROUND	TYPE: Reflective
	COLOR: Orange
LEGEND/BORDER	TYPE: Reflective
	COLOR: Black/Black

SYMBOL	ROT	X	Y	WID	HT

LETTER POSITIONS (X)

																																			LENGTH	SERIES/SIZE
E	X	I	T	2	9	A																															EM 2000
14"	17.5"	21.8"	23.3"	30.3"	36"	41.5"																														33.7"	4",6"
R	a	c	i	n	e																																EM 2000
6.4"	14.3"	22"	29.8"	34.6"	42.4"																															41.3"	8"/6"
A	v	e																																			EM 2000
16"	25"	32.8"																																		22.2"	8"/6"
1/2	M	I	L	E																																	EM 2000
5.8"	21.5"	31.2"	35.1"	42.3"																																42.4"	8"

FILE NAME = P:\10-IL\14411-ADD1 - Sacramento and Paulina over I-290\Work\CADD\Paulina - Contract 62K64\CADD_Sheets\CivilD162K64-sht-mot-sign details.dgn

COLLINS ENGINEERS INC.

USER NAME = amartinez	DESIGNED - OAM	REVISED -	
	DRAWN - OAM	REVISED -	
PLOT SCALE = 100.0000 ' / in.	CHECKED - RAG	REVISED -	
PLOT DATE = 10/9/2025	DATE - 09/08/2025	REVISED -	

STATE OF ILLINOIS
DEPARTMENT OF TRANSPORTATION

FAI–290 (EISENHOWER EXPRESSWAY) AT PAULINA STREET
MAINTENANCE OF TRAFFIC – TEMPORARY SIGN DETAILS

SCALE: NTS | SHEET NO. 1 OF 8 SHEETS | STA. | TO STA.

F.A.I. RTE.	SECTION	COUNTY	TOTAL SHEETS	SHEET NO.
290	2019-191-B-R	COOK	265	77
		CONTRACT NO. 62K64		
FED. ROAD DIST. NO.	ILLINOIS	FED. AID PROJECT		

SIGN DETAIL
1:30



BORDER
R=1.5"
TH=0.6"
IN=0.5"

Panel Style: Construction Guide
Dimensions are in inches,tenths

Letter locations are panel edge to lower left corner

SIGN NUMBER	Temp-2
WIDTH x HGHT.	78" x 72"
BORDER WIDTH	0.6"
CORNER RADIUS	1.5"
MOUNTING	Ground
BACKGROUND	TYPE: Reflective
	COLOR: Orange
LEGEND/BORDER	TYPE: Reflective
	COLOR: Black/Black

SYMBOL	ROT	X	Y	WID	HT
M1_1		19.1"	49.2"	13.7"	13.7"
M1_1		45.2"	49.2"	13.7"	13.7"

LETTER POSITIONS (X)

																																		LENGTH	SERIES/SIZE
W	i	s	c	o	n	s	i	n																											EM 2000
8.1"	18.5"	22.4"	29.5"	36.5"	44.4"	52"	59.8"	64.6"																										61.8"	8"/6"
l	n	d	i	a	n	a																													EM 2000
16"	20.2"	28"	36.5"	40.6"	49"	56.8"																												46.2"	8"/6"
E	X	I	T	1	M	I	L	E																											EM 2000
8.2"	15.2"	23.8"	26.9"	36.8"	43.2"	52.9"	56.7"	64"																										61.7"	8"

FILE NAME = P:\10-IL\14111-ADD1 - Sacramento and Paulina over I-290\Work\CADD\Paulina - Contract 62K64\CADD_Sheets\CivilD162K64-sht-mot-sign details.dgn

COLLINS ENGINEERS INC.

USER NAME = omartinez	DESIGNED - OAM	REVISED -
	DRAWN - OAM	REVISED -
PLOT SCALE = 100.0000 ' / in.	CHECKED - RAG	REVISED -
PLOT DATE = 10/9/2025	DATE - 09/08/2025	REVISED -

STATE OF ILLINOIS
DEPARTMENT OF TRANSPORTATION

FAI–290 (EISENHOWER EXPRESSWAY) AT PAULINA STREET
MAINTENANCE OF TRAFFIC – TEMPORARY SIGN DETAILS

SCALE: NTS | SHEET NO. 2 OF 8 SHEETS | STA. | TO STA.

F.A.I. RTE.	SECTION	COUNTY	TOTAL SHEETS	SHEET NO.
290	2019-191-B-R	COOK	265	78
		CONTRACT NO. 62K64		
FED. ROAD DIST. NO.	ILLINOIS	FED. AID PROJECT		

SIGN DETAIL

1:30

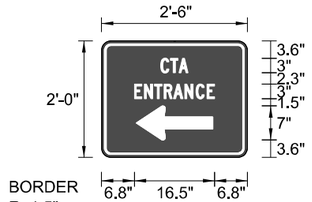

BORDER
R=1.5"
TH=0.6"
IN=0.5"

SIGN NUMBER	Temp-3
WIDTH x HGHT.	30" x 24"
BORDER WIDTH	0.6"
CORNER RADIUS	1.5"
MOUNTING	Ground
BACKGROUND	TYPE: Reflective
	COLOR: Orange
LEGEND/BORDER	TYPE: Reflective
	COLOR: Black/Black

SYMBOL	ROT	X	Y	WID	HT
Custom	90"	7.1"	3.6"	7"	15.8"

Panel Style: Construction Guide
Dimensions are in inches,tenths

Letter locations are panel edge to lower left corner

LETTER POSITIONS (X)

																																		LENGTH	SERIES/SIZE
C	T	A																																	C 2000
12.2"	14.2"	16"																																5.7"	3"
E	N	T	R	A	N	C	E																												C 2000
6.8"	8.8"	11"	12.9"	14.8"	17.1"	19.4"	21.7"																											16.5"	3"

SIGN DETAIL

1:30

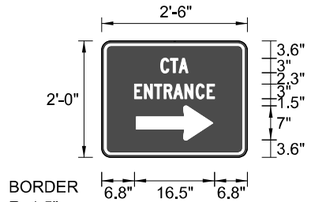

BORDER
R=1.5"
TH=0.6"
IN=0.5"

SIGN NUMBER	Temp-4
WIDTH x HGHT.	30" x 24"
BORDER WIDTH	0.6"
CORNER RADIUS	1.5"
MOUNTING	Ground
BACKGROUND	TYPE: Reflective
	COLOR: Orange
LEGEND/BORDER	TYPE: Reflective
	COLOR: Black/Black

SYMBOL	ROT	X	Y	WID	HT
Custom	270"	7.1"	3.6"	7"	15.8"

Panel Style: Construction Guide
Dimensions are in inches,tenths

Letter locations are panel edge to lower left corner

LETTER POSITIONS (X)

																																			LENGTH	SERIES/SIZE
C	T	A																																			C 2000
12.2"	14.2"	16"																																		5.7"	3"
E	N	T	R	A	N	C	E																														C 2000
6.8"	8.8"	11"	12.9"	14.8"	17.1"	19.4"	21.7"																													16.5"	3"

FILE NAME = P:\10-IL\14411-4D01 - Sacramento and Paulina over I-290\Work\CADD\Paulina - Contract 62K64\CADD_Sheets\CivilD162K64-sht-mot-sign details.dgn

COLLINS ENGINEERS INC.

USER NAME = amartinez	DESIGNED - OAM	REVISED -
	DRAWN - OAM	REVISED -
PLOT SCALE = 100.0000 ' / in.	CHECKED - RAG	REVISED -
PLOT DATE = 10/9/2025	DATE - 09/08/2025	REVISED -

STATE OF ILLINOIS
DEPARTMENT OF TRANSPORTATION

FAI–290 (EISENHOWER EXPRESSWAY) AT PAULINA STREET
MAINTENANCE OF TRAFFIC – TEMPORARY SIGN DETAILS

SCALE: NTS | SHEET NO. 4 OF 8 SHEETS | STA. | TO STA.

F.A.I. RTE.	SECTION	COUNTY	TOTAL SHEETS	SHEET NO.
290	2019-191-B-R	COOK	265	80
		CONTRACT NO. 62K64		
FED. ROAD DIST. NO.	ILLINOIS	FED. AID PROJECT		

SIGN DETAIL

1:30

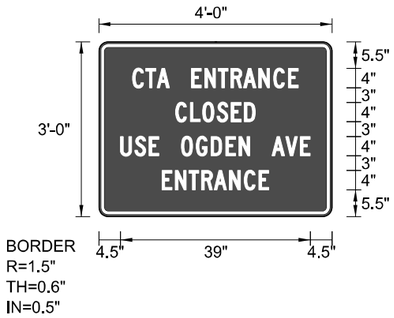

SIGN NUMBER	Temp-5
WIDTH x HGHT.	48" x 36"
BORDER WIDTH	0.6"
CORNER RADIUS	1.5"
MOUNTING	Ground
BACKGROUND	TYPE: Reflective
	COLOR: Orange
LEGEND/BORDER	TYPE: Reflective
	COLOR: Black/Black

SYMBOL	ROT	X	Y	WID	HT

Panel Style: Construction Guide
Dimensions are in inches,tenths

Letter locations are panel edge to lower left corner

LETTER POSITIONS (X)

																																		LENGTH	SERIES/SIZE
C	T	A		E	N	T	R	A	N	C	E																								C 2000
7"	9.7"	12"	14.6"	19.1"	21.8"	24.6"	27.2"	29.8"	33"	36"	39"																							34.1"	4"
C	L	O	S	E	D																														C 2000
15.8"	18.8"	21.4"	24.3"	27.2"	30"																													16.4"	4"
U	S	E		O	G	D	E	N		A	V	E																							C 2000
4.5"	7.4"	10.3"	12.6"	17"	20"	23.1"	26.1"	28.8"	31.5"	35.6"	38.4"	41.5"																							39.1"	4"
E	N	T	R	A	N	C	E																												C 2000
13"	15.7"	18.5"	21.1"	23.7"	26.9"	30"	33"																											22"	4"

FILE NAME = P:\10-IL\14111-ADD1 - Sacramento and Paulina over I-290\Work\CADD\Paulina - Contract 62K64\CADD_Sheets\CivilD162K64-sht-mot-sign details.dgn

COLLINS ENGINEERS INC.

USER NAME = amartinez	DESIGNED - OAM	REVISED -	
	DRAWN - OAM	REVISED -	
PLOT SCALE = 100.0000 ' / in.	CHECKED - RAG	REVISED -	
PLOT DATE = 10/9/2025	DATE - 09/08/2025	REVISED -	

STATE OF ILLINOIS
DEPARTMENT OF TRANSPORTATION

FAI–290 (EISENHOWER EXPRESSWAY) AT PAULINA STREET
MAINTENANCE OF TRAFFIC – TEMPORARY SIGN DETAILS

SCALE: NTS | SHEET NO. 5 OF 8 SHEETS | STA. | TO STA.

F.A.I. RTE.	SECTION	COUNTY	TOTAL SHEETS	SHEET NO.
290	2019-191-B-R	COOK	265	81
		CONTRACT NO. 62K64		
FED. ROAD DIST. NO.	ILLINOIS	FED. AID PROJECT		

SIGN DETAIL

1:30

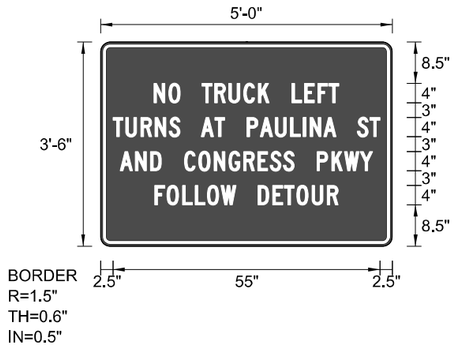

SIGN NUMBER	Temp-6
WIDTH x HGHT.	60" x 42"
BORDER WIDTH	0.6"
CORNER RADIUS	1.5"
MOUNTING	Ground
BACKGROUND	TYPE: Reflective
	COLOR: Orange
LEGEND/BORDER	TYPE: Reflective
	COLOR: Black/Black

SYMBOL	ROT	X	Y	WID	HT

Panel Style: Construction Guide
Dimensions are in inches,tenths

Letter locations are panel edge to lower left corner

LETTER POSITIONS (X)

																																				LENGTH	SERIES/SIZE
N	O		T	R	U	C	K		L	E	F	T																									C 2000
11"	14"	16.7"	20.9"	23.5"	26.4"	29.4"	32.5"	35"	39.4"	42"	44.7"	47"																								38"	4"
T	U	R	N	S		A	T		P	A	U	L	I	N	A		S	T																			C 2000
2.5"	5.1"	8.3"	11.2"	14.1"	16.6"	20.7"	23.5"	25.7"	30.1"	32.8"	36"	39.1"	41.7"	43.1"	46"	48.6"	52.8"	55.4"																		55"	4"
A	N	D		C	O	N	G	R	E	S	S		P	K	W	Y																					C 2000
4"	7.1"	10.3"	12.9"	17.2"	20.2"	23.3"	26.4"	29.4"	32.3"	34.9"	37.6"	40.1"	44.5"	47.5"	50.1"	53.4"																				52"	4"
F	O	L	L	O	W		D	E	T	O	U	R																									C 2000
11.1"	13.7"	16.8"	19.4"	22"	24.8"	28"	32.4"	35.4"	37.8"	40.3"	43.5"	46.6"																								37.7"	4"

FILE NAME = P:\10-ILL\14111-ADD1 - Sacramento and Paulina over I-290\Work\CADD\Paulina - Contract 62K64\CADD_Sheets\CivilD162K64-sht-mot-sign details.dgn

SIGN DETAIL

1:30

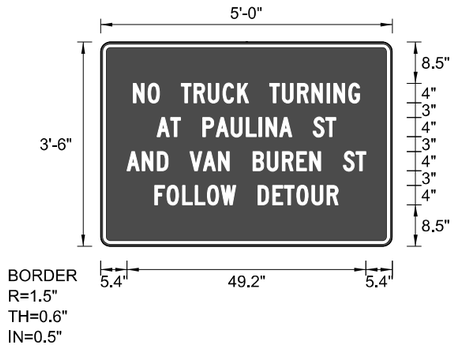

SIGN NUMBER	Temp-7
WIDTH x HGHT.	60" x 42"
BORDER WIDTH	0.6"
CORNER RADIUS	1.5"
MOUNTING	Ground
BACKGROUND	TYPE: Reflective
	COLOR: Orange
LEGEND/BORDER	TYPE: Reflective
	COLOR: Black/Black

SYMBOL	ROT	X	Y	WID	HT

Panel Style: Construction Guide
Dimensions are in inches,tenths

Letter locations are panel edge to lower left corner

LETTER POSITIONS (X)

																	LENGTH	SERIES/SIZE
N	O		T	R	U	C	K		T	U	R	N	I	N	G			C 2000
6.7"	9.8"	12.5"	16.6"	19.2"	22.1"	25.2"	28.2"	30.7"	34.8"	37.4"	40.5"	43.4"	46.6"	48"	51"		46.6"	4"
A	T		P	A	U	L	I	N	A		S	T						C 2000
11.6"	14.4"	16.6"	21"	23.7"	26.9"	30"	32.6"	34"	36.8"	39.5"	43.7"	46.3"					36.8"	4"
A	N	D		V	A	N		B	U	R	E	N		S	T			C 2000
5.4"	8.5"	11.7"	14.3"	18.4"	21.1"	24.2"	27"	31.3"	34.3"	37.4"	40.3"	43"	45.7"	50"	52.5"		49.2"	4"
F	O	L	L	O	W		D	E	T	O	U	R						C 2000
11.2"	13.7"	16.8"	19.4"	22"	24.8"	28"	32.4"	35.4"	37.8"	40.4"	43.5"	46.6"					37.7"	4"

FILE NAME = P:\10-IL\14111-ID01 - Sacramento and Paulina over I-290\Work\CADD\Paulina - Contract 62K64\CADD_Sheets\CivilD162K64-sht-mot-sign details.dgn

COLLINS ENGINEERS INC.

USER NAME = amartinez	DESIGNED - OAM	REVISED -
	DRAWN - OAM	REVISED -
PLOT SCALE = 100.0000 ' / in.	CHECKED - RAG	REVISED -
PLOT DATE = 10/9/2025	DATE - 09/08/2025	REVISED -

STATE OF ILLINOIS
DEPARTMENT OF TRANSPORTATION

FAI–290 (EISENHOWER EXPRESSWAY) AT PAULINA STREET
MAINTENANCE OF TRAFFIC – TEMPORARY SIGN DETAILS

SCALE: NTS | SHEET NO. 7 OF 8 SHEETS | STA. | TO STA.

F.A.I. RTE.	SECTION	COUNTY	TOTAL SHEETS	SHEET NO.
290	2019-191-B-R	COOK	265	83
		CONTRACT NO. 62K64		
FED. ROAD DIST. NO.	ILLINOIS	FED. AID PROJECT		

SIGN DETAIL

1:30

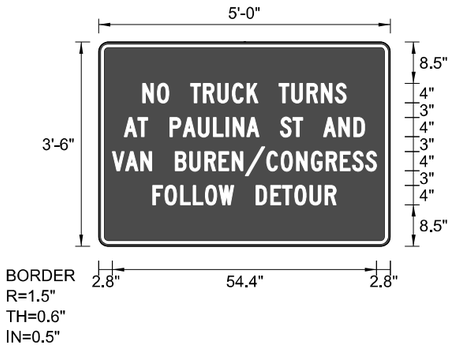

SIGN NUMBER	Temp-8
WIDTH x HGHT.	60" x 42"
BORDER WIDTH	0.6"
CORNER RADIUS	1.5"
MOUNTING	Ground
BACKGROUND	TYPE: Reflective
	COLOR: Orange
LEGEND/BORDER	TYPE: Reflective
	COLOR: Black/Black

SYMBOL	ROT	X	Y	WID	HT

Panel Style: Construction Guide
Dimensions are in inches,tenths

Letter locations are panel edge to lower left corner

LETTER POSITIONS (X)

																		LENGTH	SERIES/SIZE
N	O		T	R	U	C	K		T	U	R	N	S						C 2000
9.1"	12.1"	14.8"	19"	21.5"	24.4"	27.5"	30.5"	33"	37.1"	39.7"	42.9"	45.8"	48.7"					41.9"	4"
A	T		P	A	U	L	I	N	A		S	T		A	N	D			C 2000
5.3"	8.1"	10.2"	14.7"	17.4"	20.5"	23.6"	26.2"	27.7"	30.5"	33.1"	37.4"	40"	42.1"	46.3"	49.4"	52.5"		49.5"	4"
V	A	N		B	U	R	E	N	/	C	O	N	G	R	E	S	S		C 2000
2.8"	5.5"	8.7"	11.3"	15.8"	18.7"	21.8"	24.7"	27.5"	30.1"	34.6"	37.5"	40.7"	43.7"	46.8"	49.7"	52.2"	55"	54.4"	4"
F	O	L	L	O	W		D	E	T	O	U	R							C 2000
11.1"	13.7"	16.8"	19.4"	22"	24.8"	28"	32.4"	35.4"	37.8"	40.3"	43.5"	46.6"						37.7"	4"

FILE NAME = P:\10-IL\14111-ADD1 - Sacramento and Paulina over I-290\Work\CADD\Paulina - Contract 62K64\CADD_Sheets\CivilD162K64-sht-mot-sign details.dgn

COLLINS ENGINEERS INC.

USER NAME = amartinez	DESIGNED - OAM	REVISED -
	DRAWN - OAM	REVISED -
PLOT SCALE = 100.0000 ' / in.	CHECKED - RAG	REVISED -
PLOT DATE = 10/9/2025	DATE - 09/08/2025	REVISED -

STATE OF ILLINOIS
DEPARTMENT OF TRANSPORTATION

FAI–290 (EISENHOWER EXPRESSWAY) AT PAULINA STREET
MAINTENANCE OF TRAFFIC – TEMPORARY SIGN DETAILS

SCALE: NTS | SHEET NO. 8 OF 8 SHEETS | STA. | TO STA.

F.A.I. RTE.	SECTION	COUNTY	TOTAL SHEETS	SHEET NO.
290	2019-191-B-R	COOK	265	84
		CONTRACT NO. 62K64		
FED. ROAD DIST. NO.	ILLINOIS	FED. AID PROJECT		

EROSION CONTROL GENERAL NOTES

1. DIRECT OR INDIRECT PUMPING OF SEDIMENT-LADEN WATER INTO A STORMWATER FACILITY WITHOUT FILTRATION IS PROHIBITED.
2. RUNOFF FROM EXCAVATED AREAS SHALL LEAVE THE SITE THROUGH SEDIMENT CONTROL DEVICES SHOWN IN IDOT STD. 280001-07, AND/OR NRCS DETAILS FROM THE MOST RECENT VERSION OF THE ILLINOIS URBAN MANUAL.
3. THE CONTRACTOR SHALL SURROUND ANY NECESSARY EARTH STOCKPILES WITH PERIMETER EROSION BARRIER.
4. ALL ESC MEASURES SHOULD BE CHECKED WEEKLY AND AFTER EACH RAINFALL, 0.5 INCHES OR GREATER. ADDITIONALLY DURING WINTER MONTHS, ALL MEASURES SHOULD BE CHECKED AFTER EACH SNOWMELT.
5. TEMPORARY OR PERMANENT STABILIZATION SHALL BE INITIATED IMMEDIATELY UPON COMPLETION OF DISTURBANCE OR IF THE WORK AREA IS TO BE LEFT UNDISTURBED FOR 14 DAYS OR MORE.
6. ALL WASTE GENERATED AS A RESULT OF THE PROJECT INCLUDING DISCARDED BUILDING MATERIALS, CONCRETE TRUCK WASHOUT, CHEMICALS, LITTER, SANITARY WASTE, OR ANY OTHER WASTE SHALL BE PROPERLY DISPOSED OF AND BE PREVENTED FROM BEING CARRIED OFF THE SITE BY EITHER WIND OR WATER.
7. ALL EXPOSED IDLE EARTH, INCLUDING EARTH STOCKPILES, WILL BE SEEDED WITH TEMPORARY EROSION CONTROL SEEDING. THE APPLICATION RATE FOR TEMPORARY EROSION CONTROL SEEDING IS 100 POUNDS PER ACRE FOR THREE APPLICATIONS.
8. ALL TEMPORARY EROSION AND SEDIMENT CONTROL MEASURES SHALL BE REMOVED WITHIN 30 DAYS OF ACHIEVING PERMANENT SOIL STABILIZATION. TRAPPED SEDIMENT AND OTHER DISTURBED SOILS RESULTING FROM TEMPORARY MEASURES SHALL BE PROPERLY DISPOSED OF AND THE AREA PERMANENTLY STABILIZED.
9. ANY LOOSE MATERIAL DEPOSITION IN THE FLOW LINE OF DRAINAGE STRUCTURES, WHICH OBSTRUCTS THE NATURAL FLOW OF WATER, SHALL BE REMOVED AT THE CLOSE OF EACH WORKING DAY. PRIOR TO ACCEPTANCE OF THE IMPROVEMENT, ALL DRAINAGE STRUCTURES SHALL BE FREE OF DIRT AND DEBRIS. THIS WORK WILL NOT BE PAID FOR SEPARATELY BUT SHALL BE CONSIDERED AS INCIDENTAL.
10. MULCH METHOD 2 SHOULD BE APPLIED TO SLOPES FOR TEMPORARY STABILIZATION PRIOR TO SEASONS WHEN TEMPORARY SEED WILL NOT GERMINATE, FOR EXAMPLE MID-JULY OR DURING WINTER.
11. ALL ESC MEASURES WILL BE MAINTAINED IN ACCORDANCE WITH THE IDOT EROSION AND SEDIMENT CONTROL FIELD GUIDE FOR CONSTRUCTION INSPECTION FOUND ON THE CONSTRUCTION TAB AT: (https://idot.illinois.gov/transportation-system/environment/storm-water-management-program/erosion-and-sediment-control/construction.html)
12. THE CONTRACTOR WILL ASSUME RESPONSIBILITY FOR MAINTENANCE OF ALL SOIL EROSION CONTROL DURING CONSTRUCTION.
13. THE CONTRACTOR SHOULD PROVIDE TO THE RE A PLAN TO ENSURE THAT A STABILIZED FLOW LINE WILL BE PROVIDED DURING STORM SEWER CONSTRUCTION. THE USE OF A STABILIZED FLOW LINE BETWEEN THE INSTALLED STORM SEWER AND OPEN DISTURBANCE WILL REDUCE THE POTENTIAL FOR THE OFFSITE DISCHARGE OF SEDIMENT BEARING WATERS, ESPECIALLY WHEN RAIN IS FORECASTED, SO THAT FLOW WILL NOT ERODE. LACK OF AN APPROVED PLAN OR FAILURE TO COMPLY WILL RESULT IN AN ESC DEFICIENCY DEDUCTION.
14. A DEPARTMENT OF THE ARMY (DA) PERMIT IS NOT REQUIRED TO COMPLETE THE PROPOSED WORK. ANY UNPERMITTED DISCHARGE INTO AN AREA WITHIN THE JURISDICTION OF THE DA MAY RESULT IN CIVIL OR CRIMINAL ENFORCEMENT UNDER THE CLEAN WATER ACT, 33 U.S.C. SEC. 1319.
15. UNDER NO CIRCUMSTANCES SHALL THE CONTRACTOR PROLONG FINAL GRADING AND SHAPING SO THAT THE ENTIRE PROJECT CAN BE PERMANENTLY SEEDED AT ONE TIME.
16. EROSION CONTROL ITEMS ARE CONSIDERED TO BE A HIGH PRIORITY ON THIS CONTRACT. THE CONTRACTOR IS RESPONSIBLE FOR THE INSTALLATION OF ANY ADDITIONAL EROSION CONTROL MEASURES NECESSARY TO PREVENT EROSION AND SEDIMENTATION AS DETERMINED BY THE RE.
17. EXISTING VEGETATED AREAS (TREES, SHRUBS, VEGETATIVE BUFFERS, TURF AREAS, ETC.) WHERE DISTURBANCE IS NOT OCCURRING (INCLUDING AREAS OUTSIDE THE PROJECT LIMITS) SHALL NOT BE DISTURBED TO ENSURE THAT EXISTING VEGETATION IS PRESERVED HEALTHY TO MINIMIZE SOIL EROSION AND TO ELIMINATE SOIL COMPACTION. NO MATERIALS ARE TO BE STORED OR VEHICLES DRIVEN OR PARKED WITHIN THESE UNDISTURBED AREAS AT ANY TIME.
18. TEMPORARY FENCE SHOULD BE ERECTED ALONG THE DRIPLINE OF THE TREES, SHRUBS, AND LANDSCAPED BEDS WITHIN THE LIMITS OF CONSTRUCTION DESIGNATED TO REMAIN TO ESTABLISH A "TREE PROTECTION ZONE" BEFORE ANY WORK BEGINS OR ANY MATERIAL IS DELIVERED TO THE JOBSITE. NO WORK IS TO BE PERFORMED (OTHER THAN ROOT PRUNING), MATERIALS STORED, OR VEHICLES DRIVEN OR PARKED WITHIN THE "TREE PROTECTION ZONE". REMOVE PROTECTIVE TEMPORARY FENCE ONLY AFTER ALL CONSTRUCTION WORK HAS BEEN COMPLETED.
19. THE CONTRACTOR WILL CONTACT THE ROADSIDE DEVELOPMENT UNIT AT 847.705.4171, TO SCHEDULE WALKTHROUGH TO DETERMINE LOCATION OF THE TEMPORARY FENCE FOR TREE PROTECTION AND WHICH TREES MAY REQUIRE ROOT PRUNING, TO SCHEDULE LAYOUT OF AREAS TO BE TREATED WITH HERBICIDE AT LEAST 7 DAYS PRIOR TO THE APPLICATION.

EROSION CONTROL SCHEDULE

LOCATION				INLET FILTERS	INLET PROTECTION (SPECIAL)
ALIGNMENT	STATION	OFFSET (FT)	LT/RT	EACH	EACH
PAULINA ST	400+00.94	12	RT	1	
PAULINA ST	400+38.25	25	LT	1	
PAULINA ST	400+43.06	3	LT	1	
PAULINA ST	400+44.03	12	RT	1	
PAULINA ST	400+44.94	25	LT	1	
PAULINA ST	401+02.62	11	RT	1	
PAULINA ST	401+10.63	23	LT	1	
PAULINA ST	401+10.63	29	LT	1	
PAULINA ST	401+16.52	11	RT	1	
PAULINA ST	401+70.60	11	RT	1	
PAULINA ST	402+92.86	1	RT	1	
PAULINA ST	403+46.88	11	RT	1	
PAULINA ST	403+52.83	23	LT	1	
PAULINA ST	403+52.85	29	LT	1	
PAULINA ST	403+60.84	11	RT	1	
PAULINA ST	404+94.30	29	LT	1	
PAULINA ST	406+39.84	29	LT	1	
PAULINA ST	408+61.45	18	LT	1	
CONGRESS PKWY	2035+26.97	24	LT	1	
CONGRESS PKWY	2035+68.82	19	RT	1	
CONGRESS PKWY	2037+17.12	20	RT	1	
CONGRESS PKWY	2037+20.87	17	LT	1	
VAN BUREN ST	1034+44.91	18	RT	1	
VAN BUREN ST	1034+47.21	17	LT	1	
VAN BUREN ST	1035+44.10	20	LT	1	
VAN BUREN ST	1035+63.62	17	RT	1	
VAN BUREN ST	1035+69.27	19	RT	1	
VAN BUREN ST	1036+00.41	6	LT	1	
VAN BUREN ST	1036+12.66	24	LT	1	
VAN BUREN ST	1036+19.60	17	RT	1	
VAN BUREN ST	1036+70.69	25	LT	1	
VAN BUREN ST	1036+72.09	13	RT	1	
I-290 EB	291+71.74	37	RT		1
I-290 EB	291+71.88	30	RT	1	
I-290 EB	291+72.11	26	LT	1	
I-290 EB	291+72.65	42	LT		1
I-290 WB	291+61.09	30	LT	1	
I-290 WB	291+61.02	42	LT		1
I-290 WB	291+61.49	55	RT		1
I-290 WB	291+62.15	26	RT	1	
			TOTAL:	36	4

EROSION CONTROL SCHEDULE (CONT.)

LOCATION				TEMPORARY EROSION CONTROL SEEDING	PERIMETER EROSION BARRIER
ALIGNMENT	FROM STATION	TO STATION	OFFSET (FT)	POUND	FOOT
PAULINA ST	400+45.02	400+98.06	RT	6	65
PAULINA ST	400+48.04	401+00.29	LT	3	74
PAULINA ST	403+67.90	404+22.65	RT	3	62
PAULINA ST	403+69.52	404+16.37	LT	6	62
			TOTAL:	18	263

TREE PROTECTION SCHEDULE

LOCATION				TEMPORARY FENCE	TREE TRUNK PROTECTION	TREE ROOT PRUNING
ALIGNMENT	STATION	OFFSET (FT)	LT/RT	FOOT	EACH	EACH
PAULINA ST	400+55.00	50	RT	38		1
PAULINA ST	400+60.00	58	LT	38		1
PAULINA ST	400+93.08	50	RT	38		1
PAULINA ST	403+82.54	58	LT	38		1
PAULINA ST	403+99.06	43	RT		1	1
PAULINA ST	404+03.97	57	LT	38		1
			TOTAL:	190	1	6

FILE NAME = P:\10-ILL\14411-IDOT - Sacramento and Paulina over I-290\Work\CADD\Paulina - Contract 62K64\CADD_Sheets\Civil\D16\2K64-sht-eros-01.dgn

COLLINS ENGINEERS INC.

USER NAME = omartinez	DESIGNED - OAM	REVISED -	
	DRAWN - OAM	REVISED -	
PLOT SCALE = 40.0000 ' / in.	CHECKED - RAG	REVISED -	
PLOT DATE = 9/8/2025	DATE - 09/08/2025	REVISED -	

STATE OF ILLINOIS
DEPARTMENT OF TRANSPORTATION

FAI-290 (EISENHOWER EXPRESSWAY) AT PAULINA STREET
EROSION CONTROL GENERAL NOTES AND SCHEDULES

SCALE: NTS | SHEET NO. 1 OF 5 SHEETS | STA. | TO STA.

F.A.I. RTE.	SECTION	COUNTY	TOTAL SHEETS	SHEET NO.
290	2019-191-B-R	COOK	265	85
		CONTRACT NO. 62K64		
FED. ROAD DIST. NO.	ILLINOIS	FED. AID PROJECT		

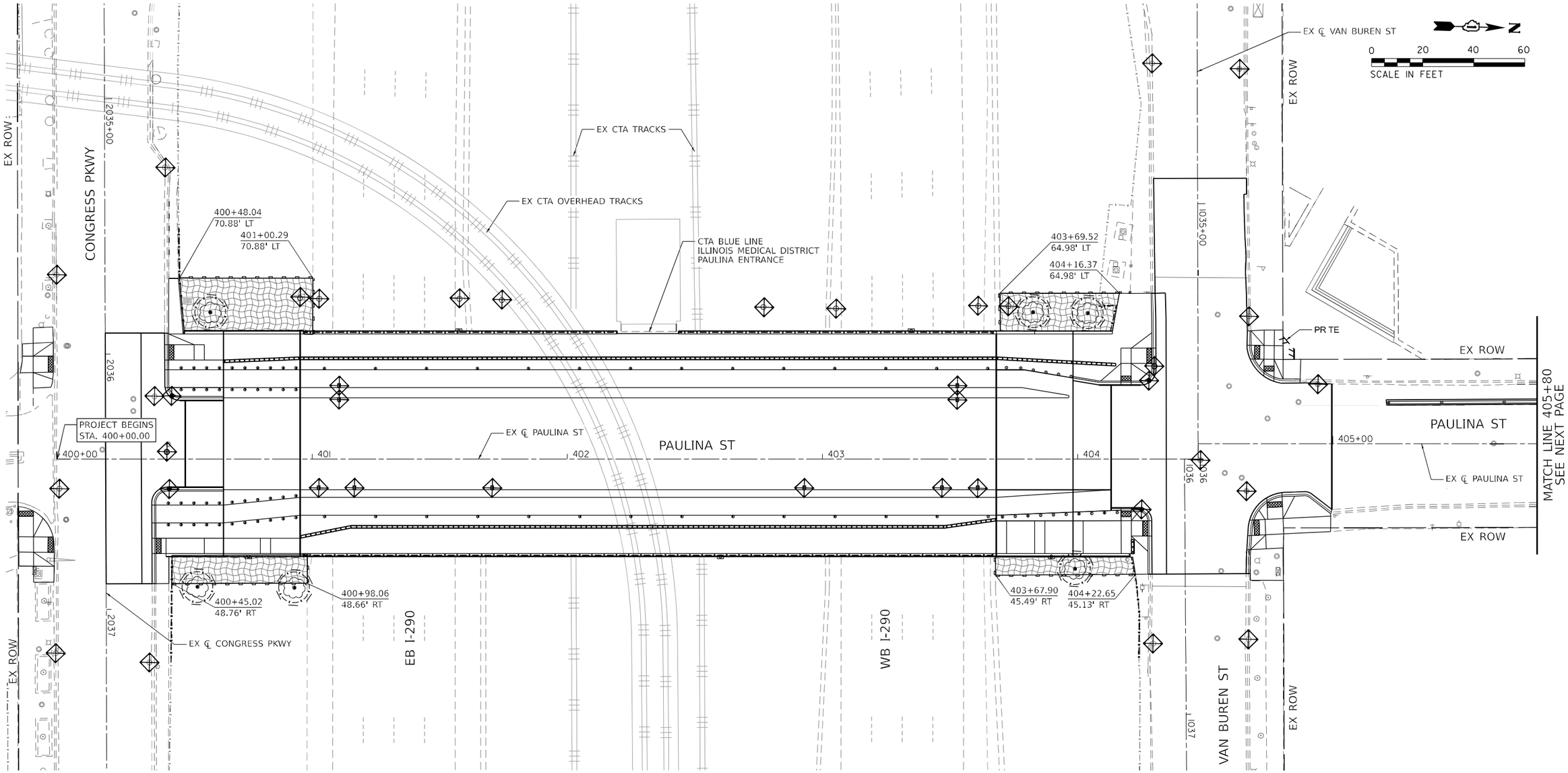

LEGEND

- INLET FILTER / INLET PROTECTION (SPECIAL)
- TEMPORARY EROSION CONTROL SEEDING
- PERIMETER EROSION BARRIER
- TREE TRUNK PROTECTION / TEMPORARY FENCE / TREE ROOT PRUNING

FILE NAME = P:\10-IL14411-4\DOT - Sacramento and Paulina over I-290\Work\CADD\Paulina - Contract 62K64\CADD_Sheets\CivilD162K64-sht-eros-02.dgn

COLLINS ENGINEERS INC.

USER NAME = omartinez	DESIGNED - OAM	REVISED -
	DRAWN - OAM	REVISED -
PLOT SCALE = 40.0000 ' / in.	CHECKED - RAG	REVISED -
PLOT DATE = 9/8/2025	DATE - 09/08/2025	REVISED -

STATE OF ILLINOIS
DEPARTMENT OF TRANSPORTATION

FAI-290 (EISENHOWER EXPRESSWAY) AT PAULINA STREET
EROSION AND SEDIMENT CONTROL PLAN

SCALE: 1" = 20' | SHEET NO. 2 OF 5 SHEETS | STA. | TO STA.

F.A.I. RTE.	SECTION	COUNTY	TOTAL SHEETS	SHEET NO.
290	2019-191-B-R	COOK	265	86
		CONTRACT NO. 62K64		
FED. ROAD DIST. NO.	ILLINOIS	FED. AID PROJECT		

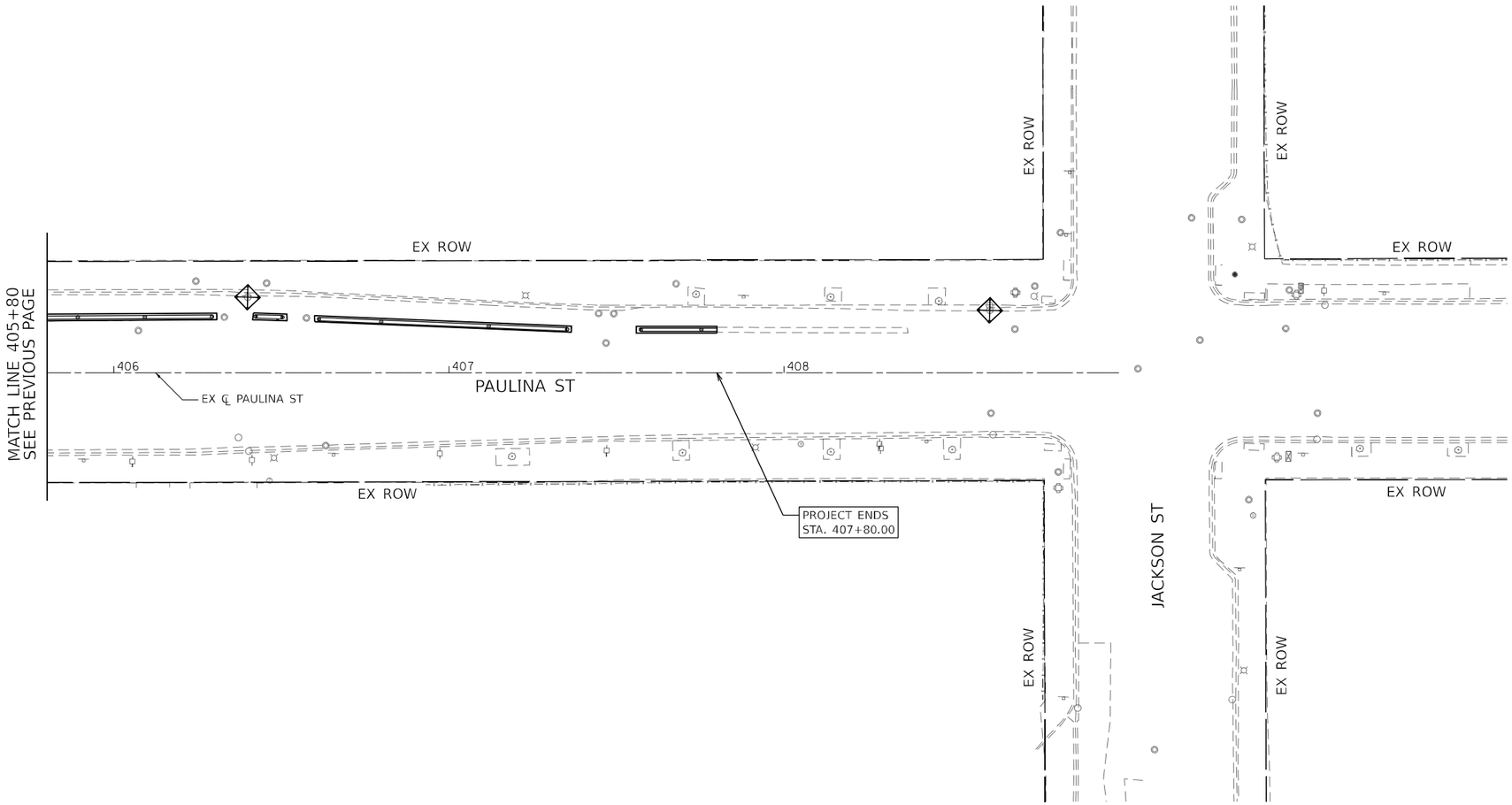

LEGEND

- INLET FILTER / INLET PROTECTION (SPECIAL)
- TEMPORARY EROSION CONTROL SEEDING
- PERIMETER EROSION BARRIER
- TREE TRUNK PROTECTION / TEMPORARY FENCE

FILE NAME = P:\10-IL114111-IDOT - Sacramento and Paulina over I-290\Work\CADD\Paulina - Contract 62K64\CADD_Sheets\CivilD162K64-sht-eros-02.dgn

COLLINS ENGINEERS INC.

USER NAME = omartinez	DESIGNED - OAM	REVISED -	
	DRAWN - OAM	REVISED -	
PLOT SCALE = 40.0000 ' / in.	CHECKED - RAG	REVISED -	
PLOT DATE = 9/8/2025	DATE - 09/08/2025	REVISED -	

STATE OF ILLINOIS
DEPARTMENT OF TRANSPORTATION

FAI–290 (EISENHOWER EXPRESSWAY) AT PAULINA STREET
EROSION AND SEDIMENT CONTROL PLAN

SCALE: 1" = 20' | SHEET NO. 3 OF 5 SHEETS | STA. | TO STA.

F.A.I. RTE.	SECTION	COUNTY	TOTAL SHEETS	SHEET NO.
290	2019-191-B-R	COOK	265	87
		CONTRACT NO. 62K64		
FED. ROAD DIST. NO.	ILLINOIS	FED. AID PROJECT		

AUTOCAD2006

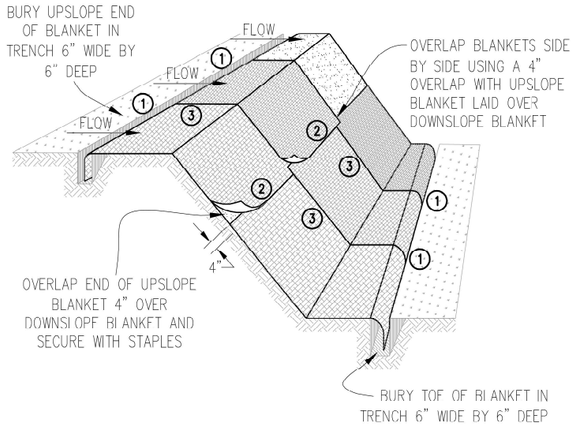

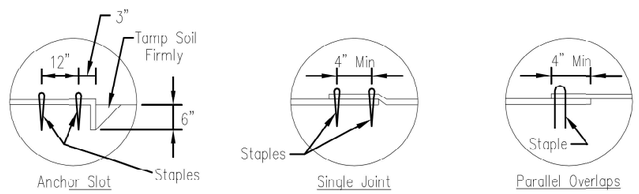

DETAIL 1 DETAIL 2 DETAIL 3

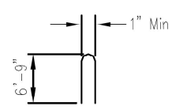

STAPLE DETAIL

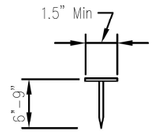

PUSH PIN DETAIL

NOTES:

1. Staples shall be placed in a diamond pattern at 2 per s.y. for stiched blankets. Non-stiched shall use 4 staples per s.y. of material. This equates to 200 staples with stiched blanket and 400 stapels with non-stiched blanket per 100 s.y. of material.
2. Staple or push pin lengths shall be selected based on soil type and conditions. (minimum staple length is 6")
3. Erosion control material shall be placed in contact with the soil over a prepared seedbed.
4. All anchor slots shall be stapled at approximately 12" intervals.

Sheet 1 of 1 | File No. IUM-530 | Drawing No.

EROSION CONTROL
BLANKET INSTALLATION DETAILS

	Date
Designed	
Drawn B. JOHNSON	11/08
Checked	
Approved	

AUTOCAD2006

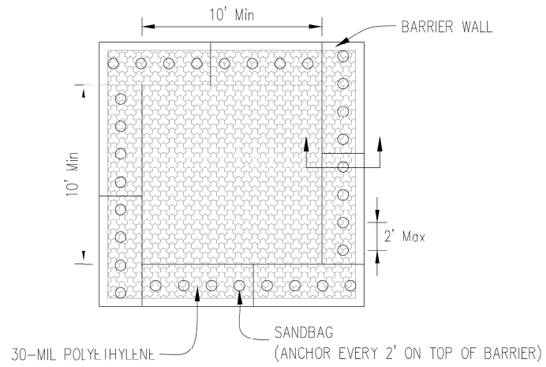

PLAN VIEW

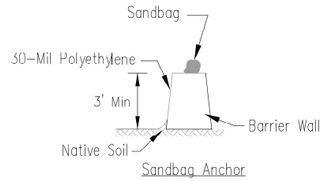

BARRIER WALL ANCHOR SECTION

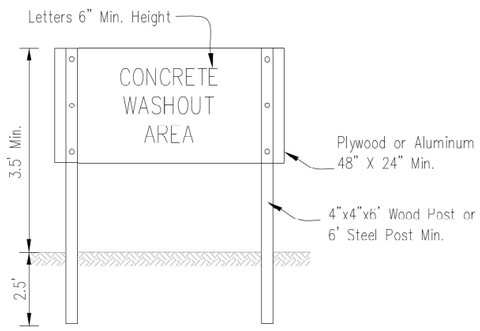

SIGN DETAIL

NOTES:

1. Maintaining temporary concrete washout facilities shall include removing and disposing of hardend concrete and/or slurry and returning the faciliities to a functional condition.
2. Facility shall be cleaned or reconstructed in a new area once washout becomes two-thirds full.

Sheet 3 of 3 | File No. IUM-654BW | Drawing No.

TEMPORARY CONCRETE
WASHOUT FACILITY – BARRIER WALL

	Date
Designed	
Drawn B. JOHNSON	6/08
Checked	
Approved	

FILE NAME = P:\10-IL\14411-IDOT - Sacramento and Paulina over I-290\Work\CADD\Paulina - Contract 62K64\CADD_Sheets\Civil\D162K64-sht-eros-03.dgn

COLLINS ENGINEERS INC.

USER NAME = omartinez	DESIGNED - OAM	REVISED -	
	DRAWN - OAM	REVISED -	
PLOT SCALE = 40.0000 ' / in.	CHECKED - RAG	REVISED -	
PLOT DATE = 9/8/2025	DATE - 09/08/2025	REVISED -	

STATE OF ILLINOIS
DEPARTMENT OF TRANSPORTATION

FAI-290 (EISENHOWER EXPRESSWAY) AT PAULINA STREET
EROSION CONTROL DETAILS

SCALE: NTS | SHEET NO. 4 OF 5 SHEETS | STA. | TO STA.

F.A.I. RTE.	SECTION	COUNTY	TOTAL SHEETS	SHEET NO.
290	2019-191-B-R	COOK	265	88
		CONTRACT NO. 62K64		
FED. ROAD DIST. NO.	ILLINOIS	FED. AID PROJECT		

INLET PROTECTION - PAVED AREAS
DROP-IN PROTECTION

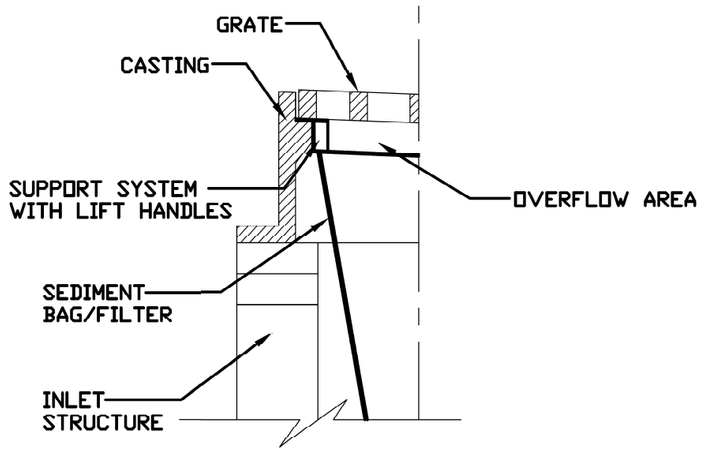

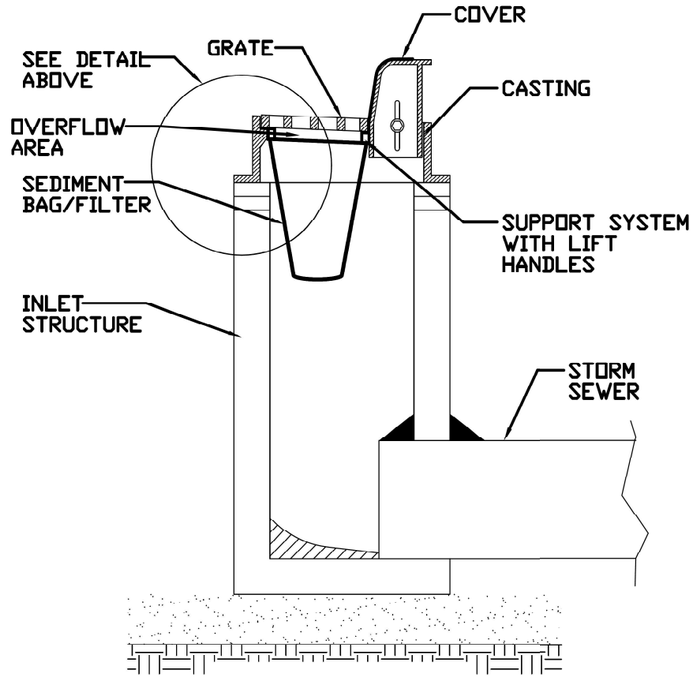

REFERENCE
Project
Designed _____ Date _____
Checked _____ Date _____
Approved _____ Date _____

STANDARD DWG. NO.
IUM-561D
SHEET 1 OF 1
DATE 01-11-11

INLET PROTECTION -MONOFILAMENT FABRIC BARRIER FENCE

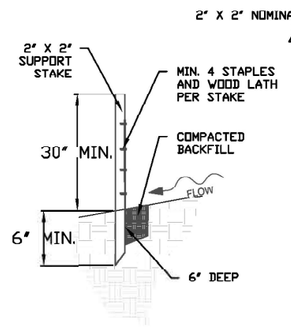

STAKE DETAIL

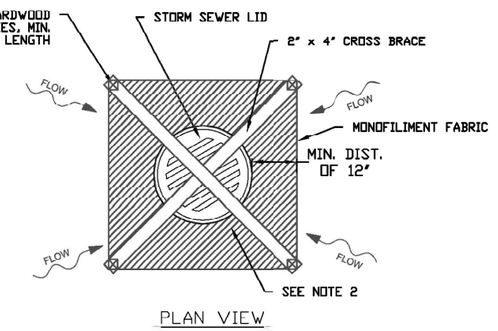

PLAN VIEW

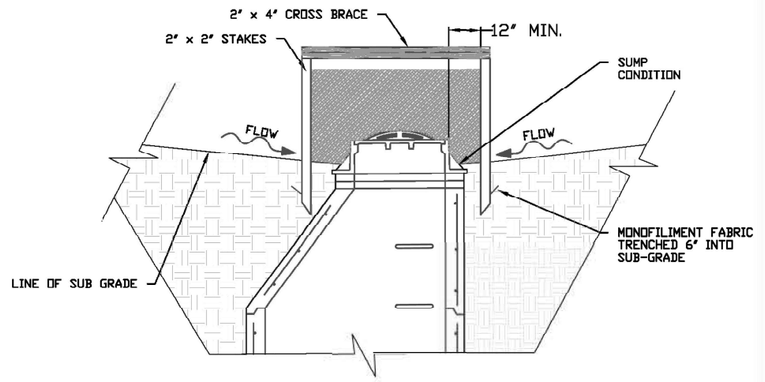

SECTION

NOTES:
1. 2 x 2 nominal hardwood stakes, 4 foot minimum length, driven into ground approximately 18 inches, stakes driven a minimum width of 12 inches away from the drop inlet.
2. Area inside the fence, from edge of fabric to structure, must be stabilized with Erosion Control Blanket, Turf Reinforcement Mat, Geotextile 592 Table 2 Class 2 or CA-7 stone
3. Maximum height of the fabric above the crest of the drop inlet shall be 30". Place the bottom 6 inches of the fabric in a trench and backfill with 6 inches of 95% compacted soil.
4. Stakes must be a maximum of 4 feet apart.
5. A maintenance schedule must maintain a sediment accumulation of less than 50% of the height of the monofilment fabric.
6. Monofilment fabric shall meet the requirement of Material Specification 592 Geotextile Table 1, Class 4.
7. Monofiliment fabric shall be secured to each 2" x 2" nominal hardwood stake with a minimum of 4 steel staple fasteners and wood lath. Wood lath shall be a minimum length of 10 inches. Wire fasteners should be used if metal T-Posts are installed in place of hardwood stakes.

REFERENCE
Project
Designed _____ Date _____
Checked _____ Date _____
Approved _____ Date _____

STANDARD DWG. NO.
IUM-560
SHEET 1 OF 1
DATE 04-6-15

INLET PROTECTION (SPECIAL)

FILE NAME = P:\10-IL14411-1D01 - Sacramento and Paulina over I-290\Work\CADD\Paulina - Contract 62K64\CADD_Sheets\Civil\D162K64-sht-eros-04.dgn

COLLINS ENGINEERS INC

USER NAME = omartinez	DESIGNED - OAM	REVISED -
	DRAWN - OAM	REVISED -
PLOT SCALE = 40.0000 ' / in.	CHECKED - RAG	REVISED -
PLOT DATE = 9/8/2025	DATE - 09/08/2025	REVISED -

STATE OF ILLINOIS
DEPARTMENT OF TRANSPORTATION

FAI-290 (EISENHOWER EXPRESSWAY) AT PAULINA STREET
EROSION CONTROL DETAILS

SCALE: NTS | SHEET NO. 5 OF 5 SHEETS | STA. | TO STA.

F.A.I. RTE.	SECTION	COUNTY	TOTAL SHEETS	SHEET NO.
290	2019-191-B-R	COOK	265	89
		CONTRACT NO. 62K64		
FED. ROAD DIST. NO.	ILLINOIS	FED. AID PROJECT		

DRAINAGE AND UTILITY GENERAL NOTES

1. FRAMES AND GRATES ADJUSTMENT OF PRIVATE UTILITIES WITHIN THE LIMITS OF THE IMPROVEMENTS SHALL BE DONE BY THEIR RESPECTIVE OWNERS AND ARE NOT PART OF THIS CONTRACT.
2. STORM SEWER CONSTRUCTED UNDER THE ROADWAY SHALL BE BACKFILLED ACCORDING TO METHOD 1 OF ARTICLE 550.07 OF THE STANDARD SPECIFICATIONS.
3. THE CONTRACTOR SHALL BE REQUIRED TO KEEP A RECORD OF THE LOCATIONS OF PLATED STRUCTURES BY STATION AND OFFSET LEFT OR RIGHT OF THE CENTERLINE OF PAVEMENT.
4. THE CONTRACTOR SHALL BE REQUIRED TO KEEP A RECORD OF THE LOCATIONS OF THE BURIED STRUCTURES ACCORDING TO THE STATION AND DISTANCE LEFT OR RIGHT OF THE CENTERLINE OF PAVEMENT. UPON COMPLETION OF THE WORK, THE CONTRACTOR SHALL DELIVER THE RECORD TO THE ENGINEER.
5. THE CONNECTION OF PROPOSED STORM SEWER TO EXISTING STORM SEWER OR DRAINAGE STRUCTURES SHALL BE INCLUDED IN THE COST OF THE PROPOSED STORM SEWER BEING CONNECTED.
6. THE TYPE, SIZE, LOCATION AND INVERT ELEVATIONS FOR EXISTING PIPES HAVE BEEN TAKEN FROM SURVEY AND AS-BUILT DRAWINGS AS AVAILABLE. THE CONTRACTOR SHALL VERIFY ALL INFORMATION FOR EXISTING PIPES IN THE FIELD PRIOR TO ORDERING MATERIALS. BEFORE ORDERING STORM SEWERS, CATCH BASINS, PIPE CULVERTS, PIPE DRAINS, MANHOLES, INLETS, AND SCUPPERS, THE CONTRACTOR SHALL REVIEW THE EXISTING FIELD CONDITIONS AND THE DRAINAGE SCHEDULES FOUND IN THE PLANS FOR THE EXACT LENGTH AND QUANTITY NEEDED.
7. THE CONTRACTOR SHALL MAINTAIN THE SURFACE DRAINAGE OF ALL ROADWAYS DURING CONSTRUCTION OF THIS PROJECT. WHEN EXISTING DRAINAGE FACILITIES ARE DISTURBED, THE CONTRACTOR SHALL PROVIDE AND MAINTAIN TEMPORARY OUTLETS AND CONNECTIONS FOR ALL PRIVATE OR PUBLIC DRAINS, SEWERS, INLETS, AND CATCH BASINS. THE CONTRACTOR SHALL PROVIDE FACILITIES TO TAKE IN ALL STORM WATER, WHICH WILL BE RECEIVED BY THESE DRAINS AND SEWERS AND DISCHARGE SAME. THE CONTRACTOR SHALL PROVIDE AND MAINTAIN TEMPORARY OUTLET AND BE PREPARED AT ALL TIMES TO DISPOSE OF THE WATER RECEIVED FROM ALL THESE TEMPORARY CONNECTIONS UNTIL INSTALLATION IS COMPLETE. INCLUDING PAVEMENT, THIS WORK SHALL NOT BE PAID FOR DIRECTLY BUT SHALL BE CONSIDERED INCLUDED IN THE CONTRACT. COORDINATION WITH ALL AGENCIES INVOLVED IS REQUIRED.
8. THE LOCATION AND ELEVATION OF EXISTING UTILITIES ARE APPROXIMATE AND ARE PROVIDED BY THE OWNERS. THE EXACT LOCATIONS AND ELEVATIONS ARE TO BE VERIFIED BY THE CONTRACTOR THROUGH THE OWNERS OF THE UTILITIES.
9. EMBANKMENTS SHALL BE COMPLETED TO THE SATISFACTION OF THE ENGINEER PRIOR TO EXCAVATION FOR STORM SEWER.
10. MANHOLES AND CATCH BASINS SHALL BE CONSTRUCTED WITH FLAT TOPS WHERE THE DIFFERENCE BETWEEN THE RIM ELEVATION AND INVERT ELEVATION IS LESS THAN SIX (6) FEET.
11. ALL ADJUSTMENTS OR RECONSTRUCTIONS SHALL INCLUDE THE REMOVAL AND REPLACEMENT, AT THE CONTRACTOR'S EXPENSE, OF ALL UNSUITABLE TWO (2) FOOT INSIDE DIAMETER ADJUSTING RINGS.
12. ALL FIELD TILES ENCOUNTERED SHALL BE CAREFULLY PRESERVED AND CONNECTED TO PROPOSED DRAINAGE STRUCTURES, SEWERS, OR DITCHES, AS DIRECTED BY THE ENGINEER. THIS WORK WILL BE PAID FOR AT THE APPLICABLE CONTRACT UNIT PRICE OR IN ACCORDANCE WITH ARTICLE 109.04 OF THE STANDARD SPECIFICATIONS.
13. THE CONTRACTOR SHALL BE RESPONSIBLE FOR THE PROTECTION OF ALL UNDERGROUND OR SURFACE UTILITIES EVEN THOUGH THEY MAY NOT BE SHOWN ON THE PLANS. ANY UTILITY THAT IS DAMAGED DURING CONSTRUCTION SHALL BE REPAIRED OR REPLACED TO THE SATISFACTION OF THE ENGINEER. THIS WORK SHALL BE AT THE CONTRACTOR'S EXPENSE.
14. THE STATION/ OFFSET/ ELEVATIONS NOTED FOR ALL DRAINAGE STRUCTURES LOCATED IN THE CURB LINE REFER TO THE POSITION OF THE ADJACENT PROPOSED EDGE OF PAVEMENT. THE CONTRACTOR SHALL BE RESPONSIBLE FOR DETERMINING THE OFFSET NECESSARY FOR THE STRUCTURES TO SET THE FRAME AND GRATES IN THE PROPER LOCATION. ALL OTHER STRUCTURES ARE DIMENSIONED TO THE CENTER OF THE STRUCTURE. ELEVATION INDICATES RIM GRADES.
15. PEOPLES GAS HIGH PRESSURE GAS MAIN IS PRESENT WITHIN AREA OF CONSTRUCTION. USE EXTREME CAUTION NEAR ALL GAS FACILITIES. HAND EXCAVATION IS REQUIRED TO LOCATE AND EXPOSE GAS MAINS PRIOR TO CROSSING AND WORKING WITHIN 5 FEET OF ALL GAS FACILITIES. A MINIMUM OF 5' HORIZONTAL EDGE TO EDGE CLEARANCE AND 24" VERTICAL EDGE TO EDGE CLEARANCE IS REQUIRED FOR HIGH PRESSURE GAS MAINS. CONTRACTOR SHALL NOTIFY Central-Shop-OUC@peoplesgasdelivery.com, A MINIMUM OF 5 BUSINESS DAYS PRIOR TO EXCAVATION TO SET UP ON SITE INSPECTION. PEOPLES GAS TO BE ON SITE TO MONITOR CONSTRUCTION ACTIVITIES WHEN WITHIN 5 FEET AND WHENEVER CROSSING HIGH PRESSURE GAS FACILITIES. PIPELINE MARKERS SHALL BE MAINTAINED.
16. EXCAVATIONS PROHIBITED WITHIN 50 FEET OF HIGH PRESSURE GAS MAINS UNLESS A REPRESENTATIVE OF THE PIPELINE IS NOTIFIED.
17. THIS PROJECT WILL BE PLACED ON PEOPLES GAS WATCH & PROTECT. NOTIFY SYSTEM INTEGRITY OPERATIONS SUPERVISOR AT CENTAL-SHOP-OUC@PEOPLESGASDELIVERY.COM A MINIMUM OF 5 BUSINESS DAYS PRIOR TO EXCAVATION TO SET UP ON-SITE INSPECTION.
18. CONTRACTOR SHALL NOTIFY ANGELA WILLIAMS AT ANGELA.WILLIAMS@COMED.COM WITH ANY ISSUES OR WORK NEEDED WHEN CROSSING OR ADJACENT TO ANY COMED ASSETS.
19. USE CAUTION NEAR ALL AT&T FACILITIES IN WORK AREA. HAND EXCAVATION IS REQUIRED TO LOCATE, PROTECT, AND SUPPORT FACILITIES AS REQUIRED. A MINIMUM OF 12 INCHES VERTICAL CLEARANCE AND 3 FEET OF HORIZONTAL CLEARANCE IS REQUIRED FOR AT&T FACILITIES.
20. IF DRAIN CONNECTION IS NOT IEPA COMPLIANT, THE DRAIN CONNECTION SHALL BE WATER MAIN QUALITY PIPE AND MUST MEET ALL IEPA CLEARANCE REQUIREMENTS.
21. USE EXTREME CAUTION NEAR ALL ASTOUND FACILITIES IN WORK AREA. HAND EXCAVATION IS REQUIRED TO LOCATE AND EXPOSE FIBER OPTIC FACILITIES PRIOR TO CROSSING AND WHEN WORKING WITHIN 3 FEET OF ALL ASTOUND FACILITIES.
22. USE EXTREME CAUTION NEAR ALL ABOVENET-ZAYO FACILITIES. HAND EXCAVATION IS REQUIRED TO LOCATE AND EXPOSE FIBER OPTIC FACILITIES PRIOR TO CROSSING AND WHEN WORKING WITHIN 3 FEET OF ALL ABOVENET-ZAYO FACILITIES.

CITY OF CHICAGO

1. ALL CATCH BASINS IN THE CITY OF CHICAGO SHALL MEET THE DEPARTMENT OF SEWERS' STANDARDS.
2. THE LICENSED SEWER CONTRACTOR MUST SUBMIT TWO (2) SETS OF PLANS APPROVED BY THE DEPARTMENT OF SEWERS FOR THE ISSUE OF THE SEWER PERMIT IN SUITE 410 - 333 SOUTH STATE STREET, CHICAGO, IL 60604. INSPECTION WILL BE PROVIDED BY THE DEPARTMENT OF SEWERS.
3. IF THE SEWER PIPE COVER IS REDUCED TO LESS THAN THREE (3) FEET, CONCRETE ENCASEMENT OF THE SEWER OR REPLACEMENT OF THESE SEWERS WITH CLASS 52 DUCTILE IRON PIPE WILL BE REQUIRED.
4. PERFORATED LIDS SHALL BE PLACED ON ALL MANHOLES AND CATCH BASINS.
5. ALL BROKEN, CRACKED, WORN OR OTHERWISE DAMAGED OR BICYCLE UNSAFE FRAMES AND LIDS ON SEWER STRUCTURES, SHALL BE REPLACED WITH NEW DEPARTMENT OF SEWERS' STANDARD FRAMES AND LIDS.
6. CITY OF CHICAGO CASTINGS ARE THE PROPERTY OF THE CITY OF CHICAGO AND THE CONTRACTOR SHALL NOTIFY THE CITY FOR REMOVAL AND DISPOSITION OF THE CASTINGS.

DRAINAGE AND UTILITY LEGENDS

UTILITIES

⊙	EXISTING MANHOLE
⊙	EXISTING WATER VALVE VAULT
⊙	EXISTING GAS VALVE VAULT
W-ADJ	CITY WATER STRUCTURE TO BE ADJUSTED
E-ADJ	CITY ELECTRIC STRUCTURE TO BE ADJUSTED
U-ADJ	MISC UTILITY STRUCTURE TO BE ADJUSTED BY OTHERS
——— A ———	EXISTING AERIAL LINE
——— E ———	EXISTING ELECTRIC
——— W ———	EXISTING WATER
——— G ———	EXISTING GAS

EXISTING /REMOVAL DRAINAGE

⊙	EXISTING MANHOLE
○	EXISTING CATCH BASIN
▭	EXISTING INLET
ES-##	EXISTING DRAINAGE STRUCTURE LABEL
EP-##	EXISTING PIPE LABEL
ABN	EXISTING PIPE TO BE ABANDONED AND FILLED
ADJ	DRAINAGE STRUCTURE TO BE ADJUSTED
R	DRAINAGE STRUCTURE TO BE REMOVED
C	DRAINAGE STRUCTURE TO BE CLEANED
REC	DRAINAGE STRUCTURE TO BE RECONSTRUCTED
	EXISTING STORM SEWER
	STORM SEWER TO BE REMOVED
	EXISTING COMBINED SEWER

PROPOSED DRAINAGE

⊙	PROPOSED MANHOLE
●	PROPOSED CATCH BASIN
S-##	PROPOSED DRAINAGE STRUCTURE LABEL
P-##	PROPOSED PIPE LABEL
	PROPOSED STORM SEWER

COLLINS ENGINEERS INC.

USER NAME = drush	DESIGNED - OR	REVISED -
	DRAWN - OR	REVISED -
PLOT SCALE = 40.0000 ' / in.	CHECKED - RG	REVISED -
PLOT DATE = 11/20/2025	DATE - 09/08/2025	REVISED -

STATE OF ILLINOIS
DEPARTMENT OF TRANSPORTATION

FAI-290 (EISENHOWER EXPRESSWAY) AT PAULINA STREET
DRAINAGE AND UTILITY GENERAL NOTES AND LEGEND

SCALE: | SHEET NO. OF SHEETS | STA. | TO STA.

F.A.I. RTE.	SECTION	COUNTY	TOTAL SHEETS	SHEET NO.
290	2019-191-B-R	COOK	265	90
		CONTRACT NO. 62K64		
	ILLINOIS FED. AID PROJECT			

EXISTING DRAINAGE STRUCTURES SCHEDULE

STRUCTURE NAME	STATION	OFFSET (FT)	LT/RT	OFFSET LOCATION (EDGE OF PAVEMENT OR CENTER OF	ALIGNMENT	RIM ELEV	INVERT ELEVATIONS				REMOVING INLETS	REMOVING MANHOLES	CATCH BASINS TO BE ADJUSTED	MANHOLES TO BE ADJUSTED	MANHOLES TO BE ADJUSTED (SPECIAL)	DRAINAGE STRUCTURES TO BE CLEANED	CATCH BASINS TO BE RECONSTRUCTED	DRAINAGE RESTRICTOR	LID TYPE (STANDARD VS ADA COMPLIANT)	NOTES
							N	E	S	W	EACH		EACH	EACH	EACH	EACH	EACH	EACH		
ES-01	400+51.55	28.2	RT	EOP	PAULINA ST	592.82			UNK		1									INVERT UNKNOWN
ES-02	400+46.52	28.2	RT	EOP	PAULINA ST	592.57	UNK		UNK		1									INVERT UNKNOWN
ES-03	400+35.25	11.6	RT	COS	PAULINA ST	592.71	588.51	587.71				1								
ES-04	400+38.25	24.6	LT	COS	PAULINA ST	592.86		586.66				1								
ES-05	400+43.06	2.8	LT	COS	PAULINA ST	592.42		586.38	586.38	586.38		1								INVERTS APPROXIMATE
ES-06	400+17.79	3.7	LT	COS	PAULINA ST	592.37		583.34	583.64	583.34						1				
ES-07	1035+44.09	19.2	LT	EOP	W VAN BUREN ST	591.61			590.51				1			1		1		ORIFICE RESTRICTOR
ES-08	1035+43.41	7.8	LT	COS	W VAN BUREN ST	592.08	586.18		586.53					1		1				
ES-09	404+26.85	36.3	LT	EOP	PAULINA ST	592.55	587.34				1									
ES-10	404+94.12	29.7	LT	EOP	PAULINA ST	591.56			587.56				1			1		1		ORIFICE RESTRICTOR
ES-11	404+48.11	0.4	RT	COS	PAULINA ST	592.62	584.42	UNK		UNK					1	1			STANDARD	
ES-12	404+66.16	12.5	RT	COS	PAULINA ST	592.23	589.03		586.23						1	1			STANDARD	
ES-15	291+71.82	37.0	RT	COS	I-290 EB	UNK	INVERT ELEVATIONS ALONG I-290 UNKNOWN									1	1			
ES-16	291+72.01	29.3	RT	COS	I-290 EB	UNK										1				
ES-17	291+72.12	25.6	LT	COS	I-290 EB	UNK										1				
ES-18	291+71.14	33.9	LT	COS	I-290 EB	576.47	570.32			570.62						1				
ES-19	291+62.13	32.4	RT	COS	I-290 WB	UNK	INVERT ELEVATIONS ALONG I-290 UNKNOWN									1	1			
ES-20	291+61.51	54.5	RT	COS	I-290 WB	UNK										1				
ES-21	291+61.02	35.2	LT	COS	I-290 WB	UNK										1				
ES-22	291+61.11	25.3	LT	COS	I-290 WB	UNK										1				
ES-23	290+37.52	39.8	RT	COS	I-290 WB	576.03										1				OWNED BY THE CTA
										TOTALS	3	3	2	1	2	15	2	2		

PROPOSED DRAINAGE STRUCTURES SCHEDULE

STRUCTURE NAME	STATION	OFFSET (FT)	LT/RT	OFFSET LOCATION (EDGE OF PAVEMENT OR CENTER OF STRUCTURE)	ALIGNMENT	RIM ELEV	INVERT ELEVATIONS				CATCH BASINS, TYPE A, 4'-DIAMETER, TYPE 1 FRAME, OPEN LID (CITY OF CHICAGO)	MANHOLES TYPE A, 4' DIA., TYPE 1 FRAME, OPEN LID (SPECIAL)	LID TYPE (STANDARD VS ADA COMPLIANT) SEE NOTE 1	RESTRICTOR TYPE (IF APPLICABLE)	NOTES
							N	E	S	W	EACH	EACH			
S-01	400+44.00	11.0	RT	EOP	PAULINA ST	593.16			587.80		1		STANDARD	ORIFICE	
S-02	400+45.00	24.0	LT	EOP	PAULINA ST	593.26			587.80		1		STANDARD	ORIFICE	
S-03	400+43.06	2.8	LT	COS	PAULINA ST	593.13		587.60	586.38*	587.60		1	STANDARD		
S-04	404+25.00	19.1	RT	EOP	PAULINA ST	592.80				588.00	1		STANDARD		
S-05	404+28.00	30.0	LT	EOP	PAULINA ST	592.74		587.50		587.50	1		STANDARD		
S-06	404+30.65	36.3	LT	EOP	PAULINA ST	592.64	587.30*	587.40				1	STANDARD	ORIFICE	
										TOTALS	4	2			

*INVERT AT THIS LOCATION IS AN APPROXIMATION, TRUE INVERT TO BE DETERMINED BASED ON THE EXISTING PIPE ELEVATION AT THAT POINT

UTILITY ADJUSTMENT SCHEDULE

STRUCTURE TYPE	STATION	OFFSET (FT)	LT/RT	ALIGNMENT	FRAMES AND LIDS TO BE ADJUSTED	FRAMES AND LIDS TO BE ADJUSTED (SPECIAL)	NOTES
					EACH	EACH	
WATER	2035+79.16	27.0	LT	CONGRESS PKWY	1		
CITY	404+59.28	22.6	LT	PAULINA ST		1	
WATER	404+86.64	16.4	LT	PAULINA ST		1	
CITY	404+57.67	11.5	RT	PAULINA ST		1	
CITY	1036+43.92	14.1	RT	W VAN BUREN ST		1	
				TOTALS	1	4	

NOTES:

1. SEE IDOT DISTRICT 1 STANDARD BD600-13 (BD-47) FOR STANDARD AND ADA COMPLIANT LIDS AND FRAMES.
2. I-290 STORM SEWER INFORMATION PER CITY OF CHICAGO SEWER ATLAS AND I-290 AS-BUILT PLANS.
3. UNK = UNKNOWN INVERT, PIPE MATERIAL, OR STRUCTURE TYPE.

EXISTING DRAINAGE PIPES SCHEDULE

PIPE NAME	US STRUCTURE	US INVERT	DS STRUCTURE	DS INVERT	ALIGNMENT	EXISTING PIPE SIZE AND MATERIAL	EXISTING SEWER TYPE	LENGTH	SLOPE	TELEVISION INSPECTION OF SEWER (SEE NOTE 1)	STORM SEWER REMOVAL 8"	STORM SEWER REMOVAL 12"	STORM SEWERS TO BE CLEANED 8"	STORM SEWERS TO BE CLEANED 10"	STORM SEWERS TO BE CLEANED 12"	STORM SEWERS TO BE CLEANED 16"	COMBINED SEWERS TO BE CLEANED	TRENCH BACKFILL	NOTES
								FOOT	%	FOOT	FOOT	FOOT	FOOT	FOOT	FOOT	FOOT	FOOT	CU YD	
EP-01	ES-01	UNK	ES-02	UNK	PAULINA ST	UNK	STORM SEWER	5.0			5.0							1.5	
EP-02	ES-02	UNK	ES-03	587.71	PAULINA ST	12" RCP	STORM SEWER	20.8				20.8						6.2	
EP-03	ES-03	588.51	ES-05	586.38	PAULINA ST	12" RCP	STORM SEWER	16.4	13.0%			16.4						4.7	
EP-04	ES-04	586.66	ES-05	586.38	PAULINA ST	12" RCP	STORM SEWER	22.2	1.3%			22.2						7.8	
EP-05	ES-05	586.38	ES-06	UNK	PAULINA ST	12" RCP	STORM SEWER	25.3							25.3				
EP-06a	UNK	UNK	ES-06	583.34	CONGRESS PKWY	36" RCP	COMBINED SEWER	15.1		168.2							168.2		
EP-06b	ES-06	583.34	UNK	UNK	CONGRESS PKWY	36" RCP	COMBINED SEWER	65.6		186.2							186.2		
EP-07	ES-07	590.51	ES-08	586.18	VAN BUREN ST	8" UNK	STORM SEWER	12.3	35.2%	12.3			12.3						
EP-08	ES-08	586.53	EP-11a	UNK	VAN BUREN ST	8" VCP	STORM SEWER	6.8		6.8			6.8						BLIND CONNECTION TO EP-11a
EP-09	ES-09	587.34	EP-11a	UNK	PAULINA ST	12" RCP	STORM SEWER	21.4		17.9		3.5			17.9			0.8	BLIND CONNECTION TO EP-11a
EP-10	ES-10	587.56	EP-11a	UNK	PAULINA ST	12" UNK	STORM SEWER	52.9		52.9					52.9				BLIND CONNECTION TO EP-11a
EP-11a	UNK	UNK	ES-11	UNK	VAN BUREN	48" UNK	COMBINED SEWER	335.4		335.4							335.4		
EP-11b	UNK	UNK	ES-11	UNK	VAN BUREN ST	24" RCP	COMBINED SEWER	115.7		115.7							115.7		
EP-11c	ES-11	584.42	UNK	UNK	VAN BUREN ST	48" UNK	COMBINED SEWER	332.1		332.1							332.1		
EP-12	ES-12	586.23	EP-11c	UNK	PAULINA	10" RCP	STORM SEWER	18.1		18.1				18.1					BLIND CONNECTION TO EP-11c
EP-15	ES-15	UNK	ES-16	UNK	I-290 EB	10" RCP	STORM SEWER	7.7		7.7				7.7					
EP-16	ES-16	UNK	ES-17	UNK	I-290 EB	10" RCP	STORM SEWER	54.0		54.0				54.0					
EP-17	ES-17	UNK	UNK	UNK	I-290 EB	12" RCP	STORM SEWER	8.3		8.3					8.3				
EP-18	ES-18	UNK	UNK	UNK	I-290 EB	16" RCP	STORM SEWER	135.0		135.0						135.0			
EP-19	ES-19	UNK	ES-20	UNK	I-290 WB	10" RCP	STORM SEWER	11.8		11.8				11.8					
EP-20	ES-20	UNK	EP-21	UNK	I-290 WB	10" RCP	STORM SEWER	55.8		55.8				55.8					
EP-21	ES-21	UNK	UNK	UNK	I-290 WB	12" RCP	STORM SEWER	12.0		12.0					12.0				
EP-22	ES-22	UNK	UNK	UNK	I-290 WB	10" RCP	STORM SEWER	19.0		19.0				19.0					
EP-23	ES-23	569.63	UNK	569.26	I-290 WB	12" RCP	STORM SEWER	28.0	1.3%							28.0			
								TOTAL LENGTH		3099	5	63	20	167	117	163	1138	22	

PROPOSED DRAINAGE PIPES SCHEDULE

PIPE NAME	US STRUCTURE	US INVERT	DS STRUCTURE	DS INVERT	ALIGNMENT	LENGTH	SLOPE	COVER	STORM SEWERS, DUCTILE IRON, TYPE 2 8"	STORM SEWER, CLASS A, TYPE 2, 10"	STORM SEWERS, DUCTILE IRON, TYPE 2 12"	STORM SEWER, CLASS A, TYPE 2, 12"	TRENCH BACKFILL	NOTES
						FOOT	%	FOOT	FOOT	FOOT	FOOT	FOOT	CU YD	
P-01	S-01	587.80	S-03	587.60	PAULINA ST	9.6	2%	3.4				9.6	2.7	EXTRA STRENGTH CLAY PIPE
P-02	S-02	587.80	S-03	587.60	PAULINA ST	17.0	1%	3.6		17.0			5.0	EXTRA STRENGTH CLAY PIPE
P-03	S-04	588.00	S-05	587.50	PAULINA ST	45.7	1%	3.6			45.7		13.7	
P-04	S-05	587.50	S-06	587.40	PAULINA ST	1.1	9%	3.4			1.1		0.3	
P-05	-	-	ES-15	UNK	I-290 EB	10.5	1%*	3.0**	10.5				3.1	
P-06	-	-	ES-18	UNK	I-290 EB	11.3	1%*	3.0**	11.3				3.4	
P-07	-	-	ES-22	UNK	I-290 WB	130.1	1%*	3.0**	130.1				39.0	
P-08	-	-	ES-19	UNK	I-290 WB	7.4	1%*	3.0**	7.4				2.2	
								TOTALS	160	17	47	10	70	

*MINIMUM RECOMMENDED PIPE SLOPE
**MINIMUM RECOMMENDED COVER FROM TOP OF SURFACE TO TOP OF PIPE

NOTES:

1. SEWER TO BE TELEVISED BEFORE AND AFTER CONSTRUCTION.
2. I-290 STORM SEWER INFORMATION PER CITY OF CHICAGO SEWER ATLAS AND I-290 AS-BUILT PLANS.
3. UNK = UNKNOWN INVERT, PIPE MATERIAL, OR STRUCTURE TYPE.

COLLINS ENGINEERS INC.

USER NAME = orush	DESIGNED - OR	REVISED -
	DRAWN - OR	REVISED -
PLOT SCALE = 40.0000 ' / in.	CHECKED - RG	REVISED -
PLOT DATE = 10/9/2025	DATE - 09/08/2025	REVISED -

STATE OF ILLINOIS
DEPARTMENT OF TRANSPORTATION

FAI-290 (EISENHOWER EXPRESSWAY) AT PAULINA STREET
EXISTING AND PROPOSED DRAINAGE PIPE SCHEDULES

SCALE: | SHEET NO. OF SHEETS | STA. | TO STA.

F.A.I. RTE.	SECTION	COUNTY	TOTAL SHEETS	SHEET NO.
290	2019-191-B-R	COOK	265	92
		CONTRACT NO. 62K64		
	ILLINOIS	FED. AID PROJECT		

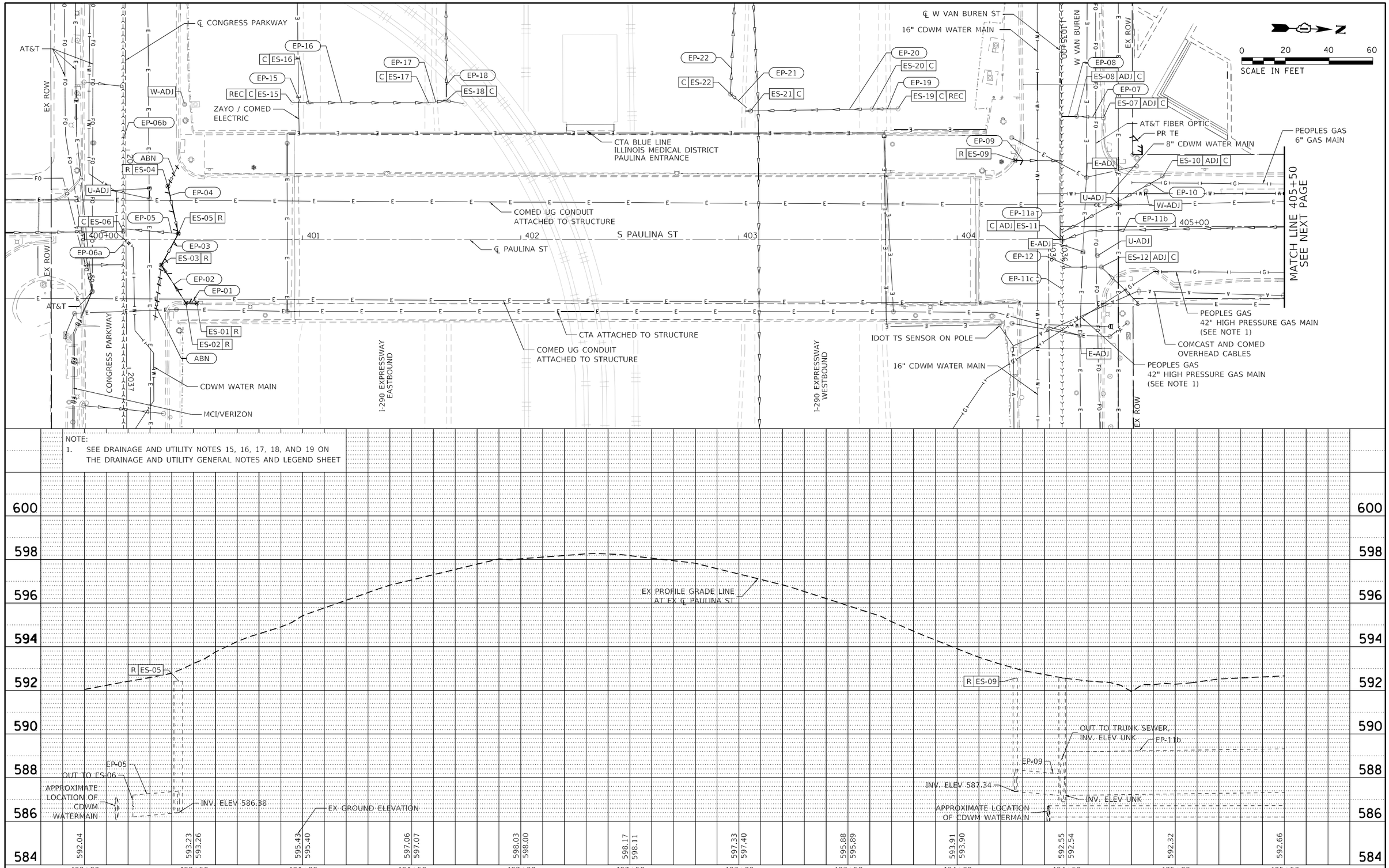

NOTE:
1. SEE DRAINAGE AND UTILITY NOTES 15, 16, 17, 18, AND 19 ON THE DRAINAGE AND UTILITY GENERAL NOTES AND LEGEND SHEET

COLLINS ENGINEERS INC.

USER NAME = drush	DESIGNED - OR	REVISED -
	DRAWN - OR	REVISED -
PLOT SCALE = 40.0000 ' / in.	CHECKED - RG	REVISED -
PLOT DATE = 11/5/2025	DATE - 09/08/2025	REVISED -

STATE OF ILLINOIS
DEPARTMENT OF TRANSPORTATION

FAI-290 (EISENHOWER EXPRESSWAY) AT PAULINA STREET
EXISTING DRAINAGE AND UTILITY PLAN

SCALE: | SHEET NO. OF SHEETS | STA. TO STA.

F.A.I. RTE.	SECTION	COUNTY	TOTAL SHEETS	SHEET NO.
290	2019-191-B-R	COOK	265	93
		CONTRACT NO. 62K64		
		ILLINOIS FED. AID PROJECT		

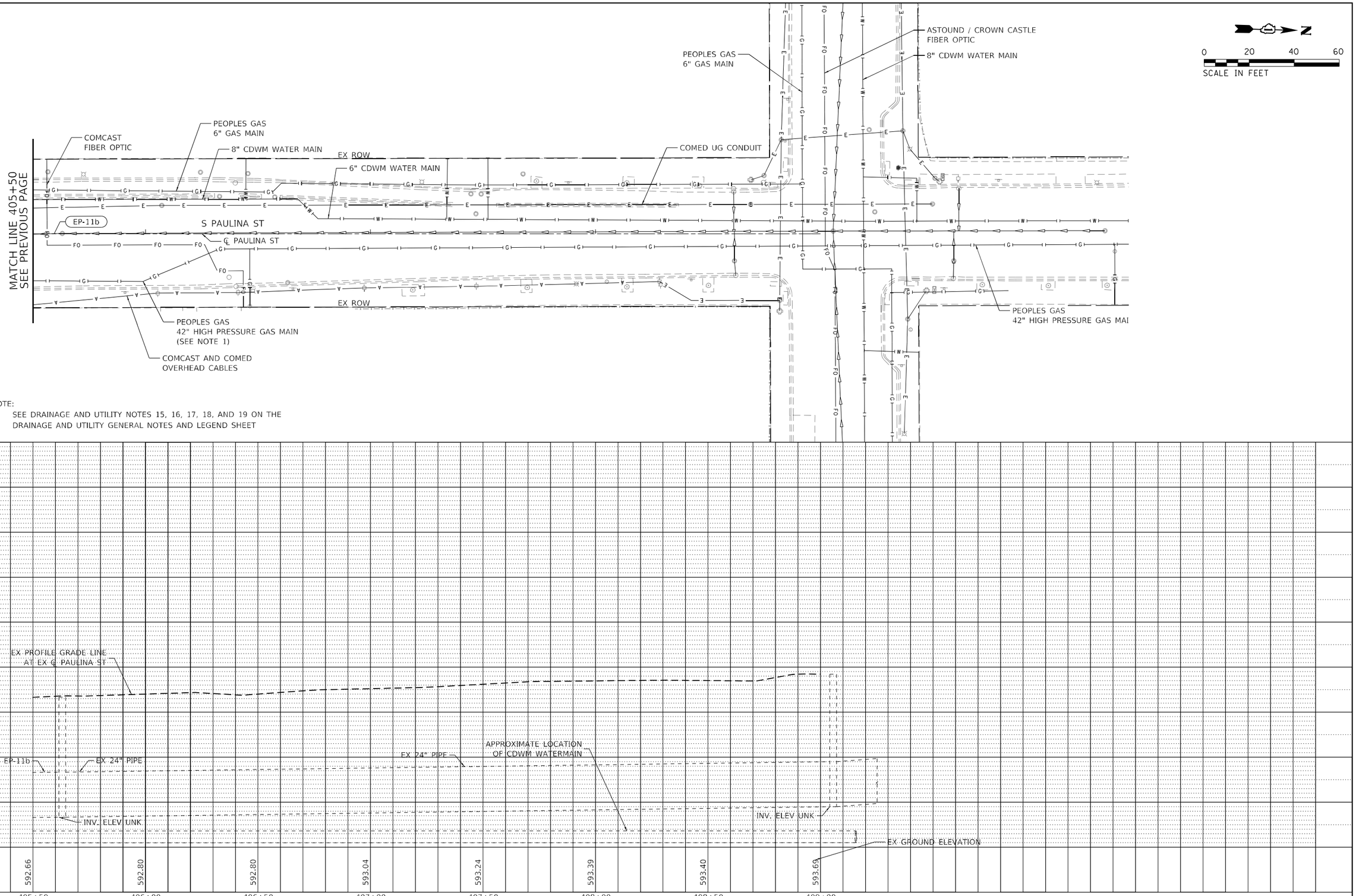

NOTE:

1. SEE DRAINAGE AND UTILITY NOTES 15, 16, 17, 18, AND 19 ON THE DRAINAGE AND UTILITY GENERAL NOTES AND LEGEND SHEET

COLLINS ENGINEERS INC.

USER NAME = drush	DESIGNED - OR	REVISED -
	DRAWN - OR	REVISED -
PLOT SCALE = 40.0000 ' / in.	CHECKED - RG	REVISED -
PLOT DATE = 11/5/2025	DATE - 09/08/2025	REVISED -

STATE OF ILLINOIS
DEPARTMENT OF TRANSPORTATION

FAI-290 (EISENHOWER EXPRESSWAY) AT PAULINA STREET
EXISTING DRAINAGE AND UTILITY PLAN

SCALE: | SHEET NO. OF SHEETS | STA. TO STA.

F.A.I. RTE.	SECTION	COUNTY	TOTAL SHEETS	SHEET NO.
290	2019-191-B-R	COOK	265	94
		CONTRACT NO. 62K64		
	ILLINOIS FED. AID PROJECT			

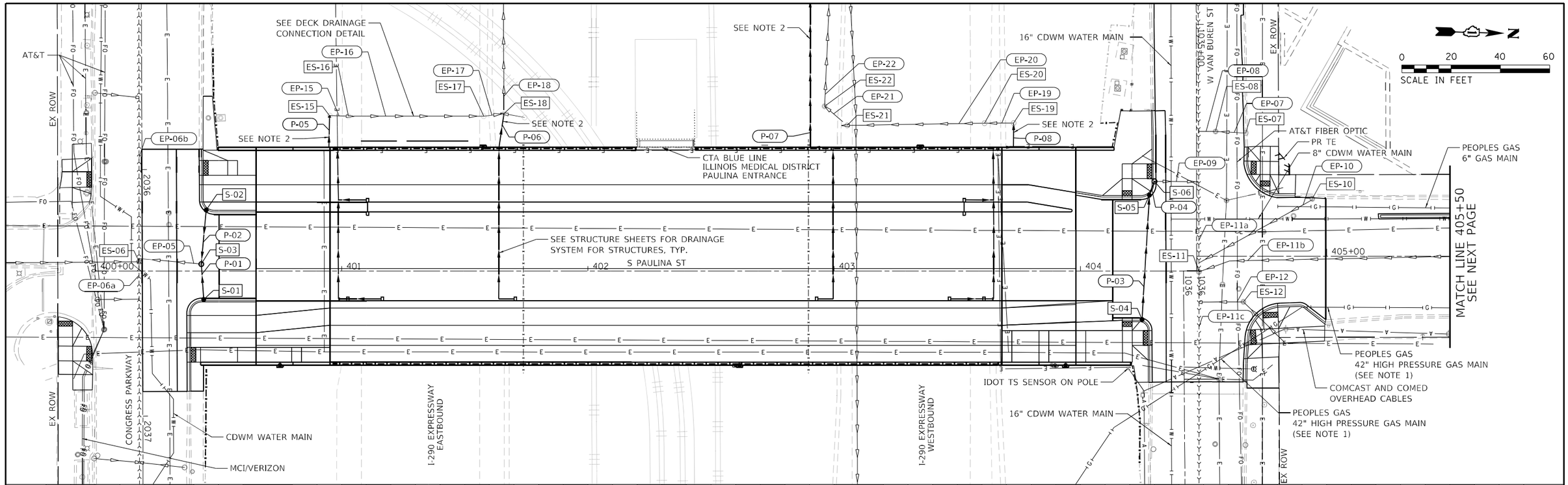

NOTE:

1. SEE DRAINAGE AND UTILITY NOTES 15, 16, 17, 18, AND 19 ON THE DRAINAGE AND UTILITY GENERAL NOTES AND LEGEND SHEET.
2. SEE DECK DRAINAGE CONNECTION DETAIL SHEET FOR CONNECTIONS OF DECK DRAINAGE TO EXISTING STORM SEWERS.

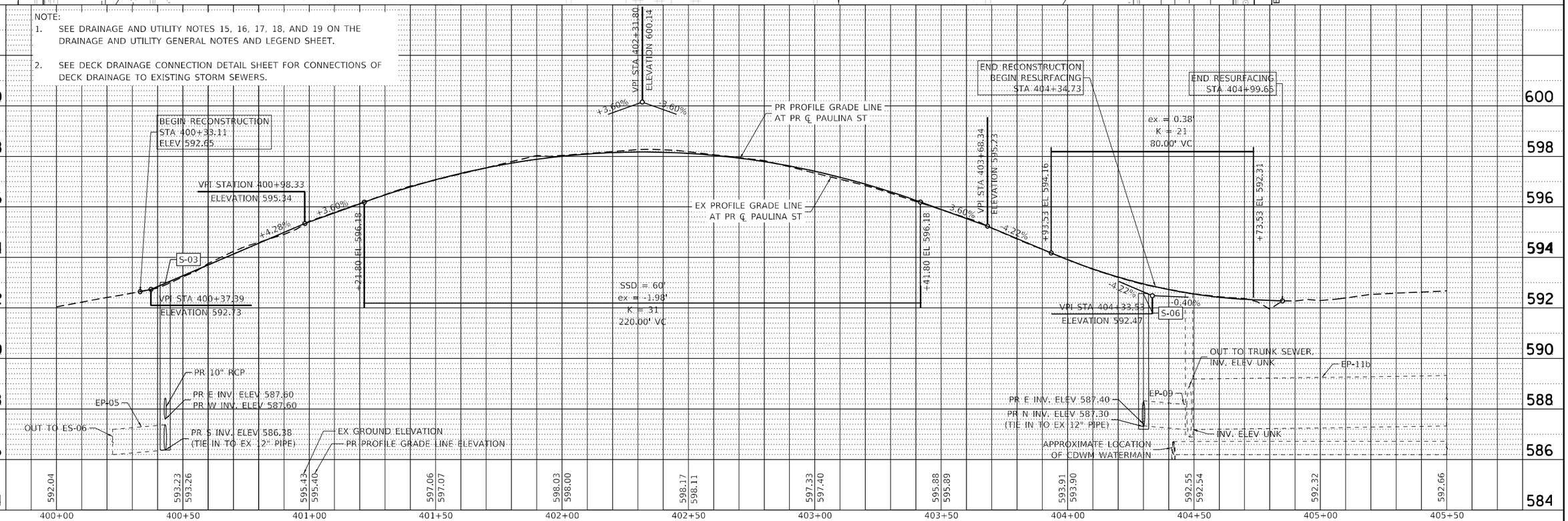

USER NAME = orush	DESIGNED - OR	REVISED -	
	DRAWN - OR	REVISED -	
PLOT SCALE = 40.0000 ' / in.	CHECKED - RG	REVISED -	
PLOT DATE = 11/5/2025	DATE - 09/08/2025	REVISED -	

COLLINS ENGINEERS INC.

STATE OF ILLINOIS
DEPARTMENT OF TRANSPORTATION

FAI-290 (EISENHOWER EXPRESSWAY) AT PAULINA STREET
PROPOSED DRAINAGE AND UTILITY PLAN

SCALE: | SHEET NO. OF SHEETS | STA. TO STA.

F.A.I. RTE.	SECTION	COUNTY	TOTAL SHEETS	SHEET NO.
290	2019-191-B-R	COOK	265	95
		CONTRACT NO. 62K64		
		ILLINOIS FED. AID PROJECT		

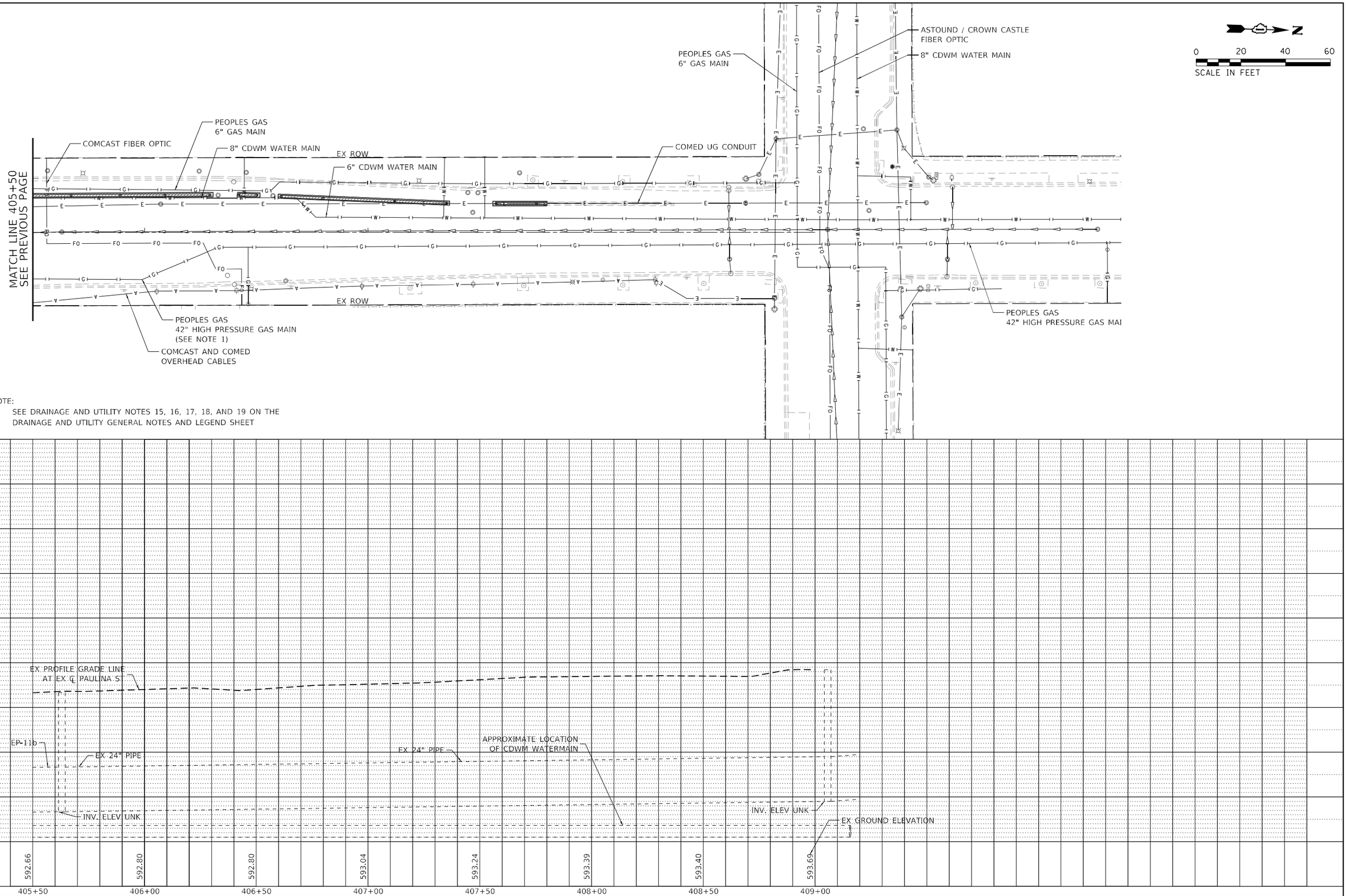

NOTE:

1. SEE DRAINAGE AND UTILITY NOTES 15, 16, 17, 18, AND 19 ON THE DRAINAGE AND UTILITY GENERAL NOTES AND LEGEND SHEET

COLLINS ENGINEERS INC.

USER NAME = drush	DESIGNED - OR	REVISED -
	DRAWN - OR	REVISED -
PLOT SCALE = 40.0000 ' / in.	CHECKED - RG	REVISED -
PLOT DATE = 11/5/2025	DATE - 09/08/2025	REVISED -

STATE OF ILLINOIS
DEPARTMENT OF TRANSPORTATION

FAI-290 (EISENHOWER EXPRESSWAY) AT PAULINA STREET
PROPOSED DRAINAGE AND UTILITY PLAN

SCALE: | SHEET NO. OF SHEETS | STA. | TO STA.

F.A.I. RTE.	SECTION	COUNTY	TOTAL SHEETS	SHEET NO.
290	2019-191-B-R	COOK	265	96
		CONTRACT NO. 62K64		
	ILLINOIS FED. AID PROJECT			

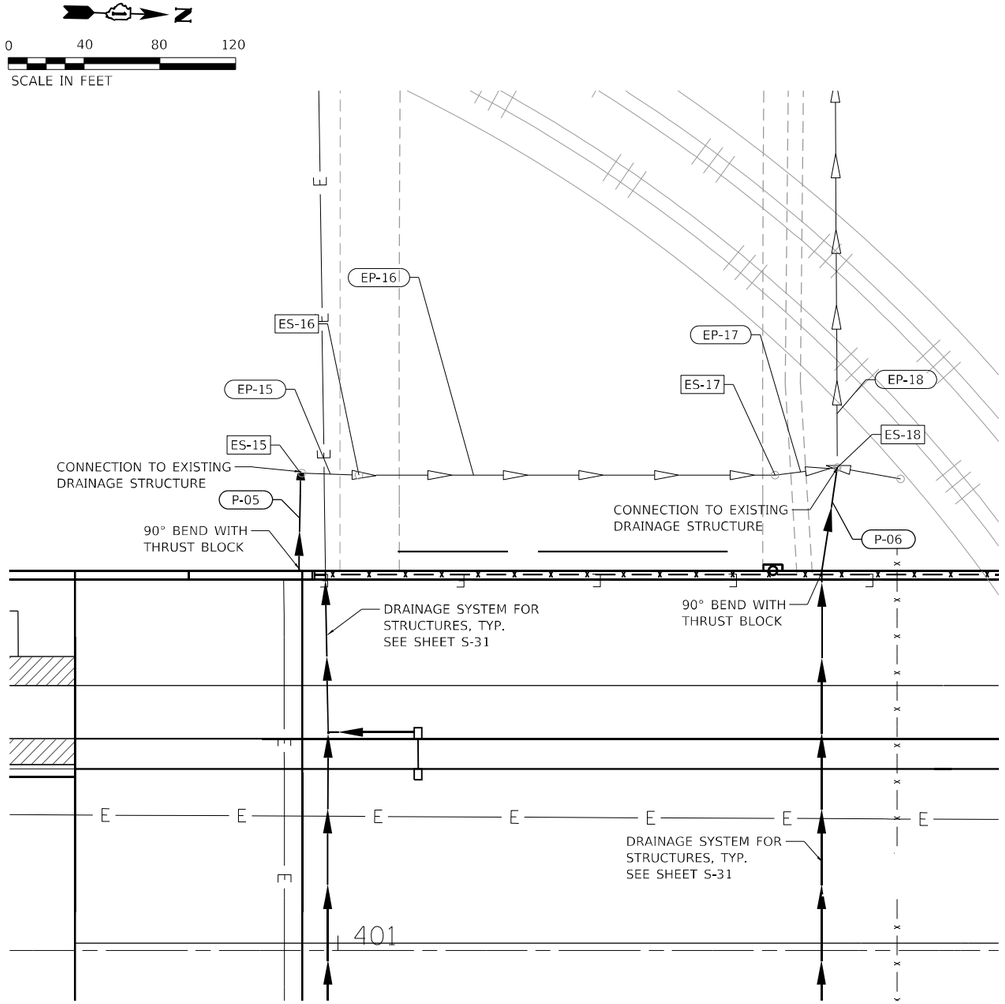

PLAN VIEW – SOUTH ABUTMENT AND PIER

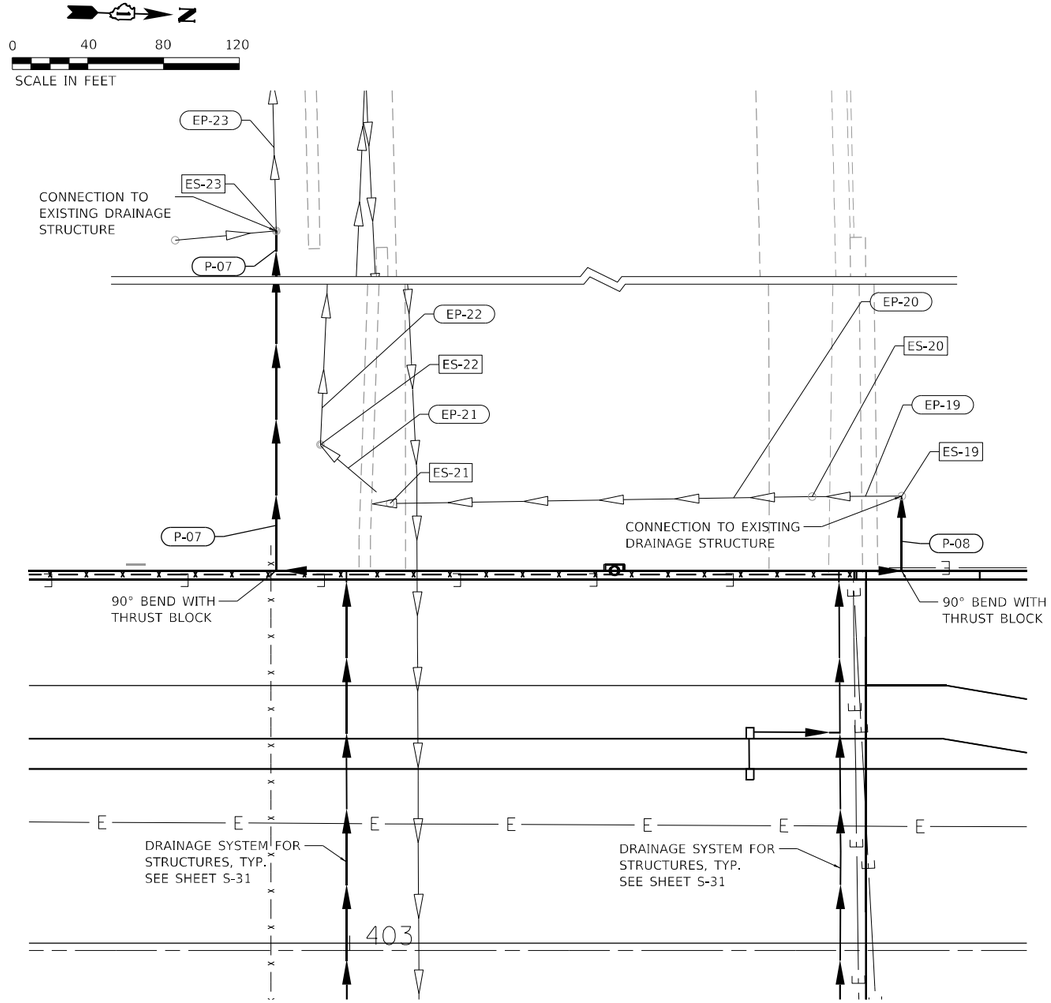

PLAN VIEW – NORTH ABUTMENT AND PIER

NOTES:

1. CONCRETE THRUST BLOCKS SHALL BE 20"(W) X 20"(H) X 20"(L) IN SIZE.
2. CONTRACTOR MUST MAINTAIN POSITIVE DRAINAGE FROM INSTALLED BRIDGE DECK SCUPPERS TO THE EXISTING I-290 DRAINAGE SYSTEM ALL THROUGHOUT CONSTRUCTION AND SUBMIT A TEMPORARY BRIDGE DRAINAGE PLAN TO THE ENGINEER FOR REVIEW PRIOR TO CONSTRUCTION. AT NO POINT WILL ANY BRIDGE DECK FLOWS BE ALLOWED TO OUTLET AND POND BEHIND THE I-290 BARRIER WALL IN GRASS AREAS AND ALL HORIZONTAL TEMPORARY BRIDGE SCUPPER PIPING SHALL HAVE A MINIMUM 1.0% SLOPE. THIS WORK WILL NOT BE PAID FOR SEPARATELY, BUT THE COST SHALL BE CONSIDERED AS INCLUDED IN THE CONTRACT UNIT PRICE FOR THE CONSTRUCTION ITEMS INVOLVED, AND NO ADDITIONAL COMPENSATION WILL BE ALLOWED.

COLLINS ENGINEERS INC.

USER NAME = brush	DESIGNED - OR	REVISED -
	DRAWN - OR	REVISED -
PLOT SCALE = 40.0000 ' / in.	CHECKED - RG	REVISED -
PLOT DATE = 10/9/2025	DATE - 09/08/2025	REVISED -

STATE OF ILLINOIS
DEPARTMENT OF TRANSPORTATION

FAI-290 (EISENHOWER EXPRESSWAY) AT PAULINA STREET
DECK DRAINAGE CONNECTION DETAIL

SCALE: | SHEET NO. OF SHEETS | STA. | TO STA.

F.A.I. RTE.	SECTION	COUNTY	TOTAL SHEETS	SHEET NO.
290	2019-191-B-R	COOK	265	97
		CONTRACT NO. 62K64		
		ILLINOIS FED. AID PROJECT		

STATE OF ILLINOIS
DEPARTMENT OF TRANSPORTATION
DIVISION OF HIGHWAYS

PLAT OF HIGHWAYS

ROUTE: I-290 BRIDGE
SECTION:
COUNTY: COOK
LIMITS: AT PAULINA STREET
JOB NO.: R-90-023-22

PARCEL NUMBER	OWNER	SHEET NUMBER	PROPERTY ACQUIRED BY
0NL0001TE	NWI TRIANGLE OFFICE BUILDING LP, A DELAWARE LIMITED PARTNERSHIP	2	



LOCATION MAP

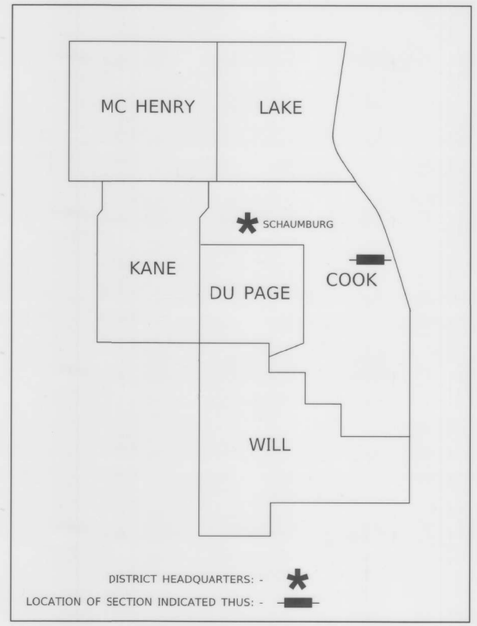

PRINTED BY THE AUTHORITY
OF THE STATE OF ILLINOIS

3/13/25 ISSUED SIGNED MYLAR
3/23/23 ADDED BUILDING DIMS & TIES
3/17/23 ISSUED PRELIM FOR REVIEW

PREPARED BY:
WT Group
Engineering • Design • Consulting

WT GROUP
Structural | Mechanical/Electrical/Plumbing
Civil | Land Survey | Telecommunication| Aquatic
Accessibility Consulting | Design & Program Management
Engineering with Precision, Pace & Passion.
2675 Pratum Avenue | Hoffman Estates, IL 60192
P: 224.293.6333 | F: 224.293.6444
wtengineering.com
IL License No: 184.007570-0018 | Exp: 04.30.2025
©COPYRIGHT 2025 THE W-T GROUP, LLC

IDOT USE ONLY

PLAT OF HIGHWAYS
STATE OF ILLINOIS
DEPARTMENT OF TRANSPORTATION
I-290 BRIDGE

LIMITS: AT PAULINA STREET — COUNTY: Cook
SECTION: — JOB NO.: R-90-023-22
STATION: 404+80.46 — TO STATION: 404+84.80
SCALE: — SHEET 1 OF 2

BUREAU OF LAND ACQUISITION
201 WEST CENTER COURT
SCHAUMBURG, ILLINOIS 60196-1096

MODEL: Default
FILE NAME: pw:\\PW01.hornershifrin.com:HS IDOT\Documents\230560000-PTB195-007 D1 Pl...ul Sqe Plat Sus Collins\CAD Sheets\D162K64_PaulinaD162K64-sht-plats-01.dgn

HORNER SHIFRIN
WWW. HORNERSHIFRIN .COM

USER NAME = ahernandez	DESIGNED -	REVISED -
	DRAWN -	REVISED -
PLOT SCALE = 10.0000 ' / in.	CHECKED -	REVISED -
PLOT DATE = 9/4/2025	DATE -	REVISED -

STATE OF ILLINOIS
DEPARTMENT OF TRANSPORTATION

FAI–290 (EISENHOWER EXPRESSWAY) AT PAULINA STREET
PLAT OF HIGHWAYS
SCALE: NTS | SHEET 1 OF 2 SHEETS | STA. | TO STA.

F.A.I. RTE.	SECTION	COUNTY	TOTAL SHEETS	SHEET NO.
290	2019-191-B-R	COOK	265	98
		CONTRACT NO. 62K64		
	ILLINOIS FED. AID PROJECT			

PART OF THE NE 1/4 OF SECTION 18, T39N, R14E OF THE 3RD P.M., COOK COUNTY, ILLINOIS

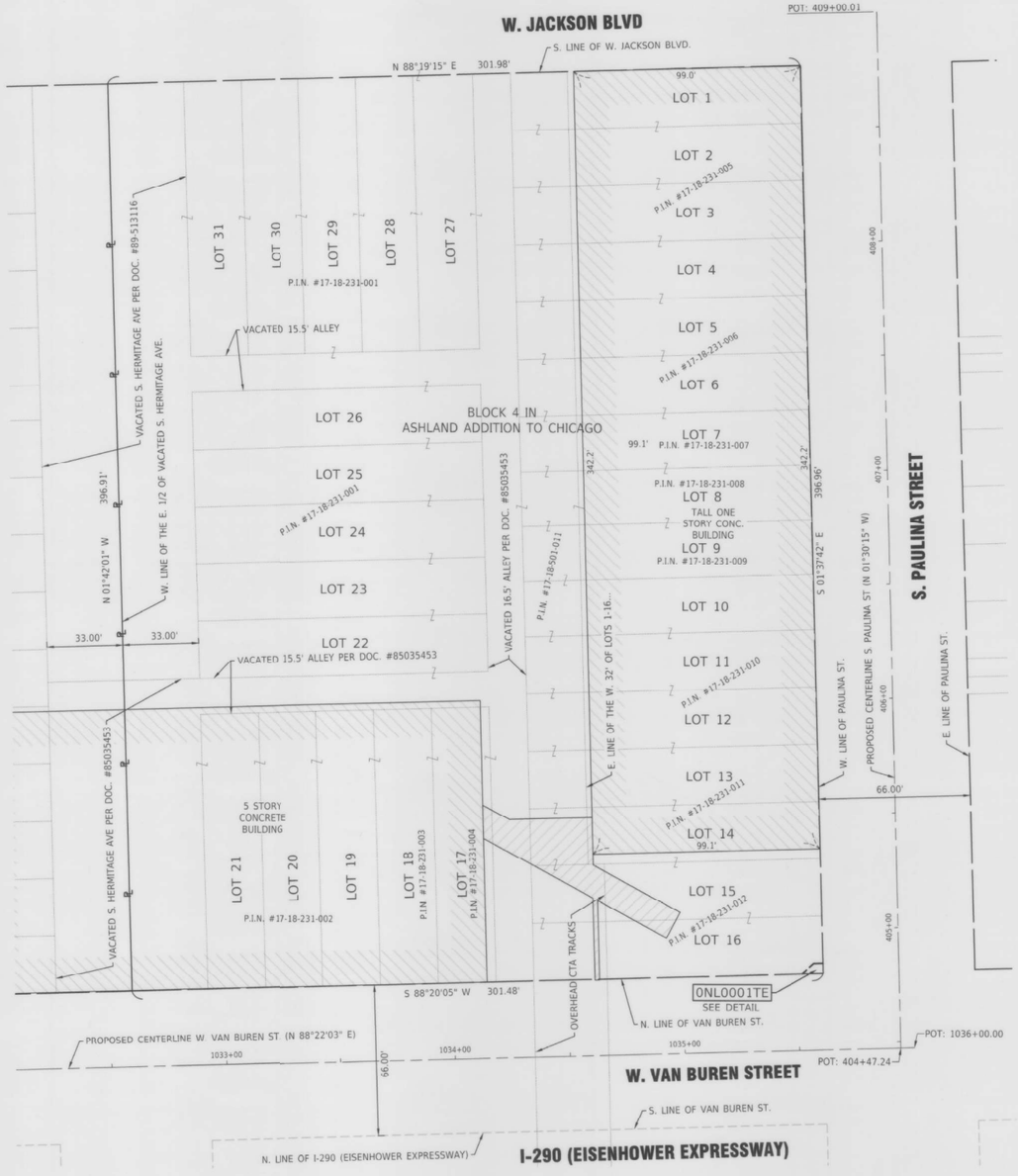

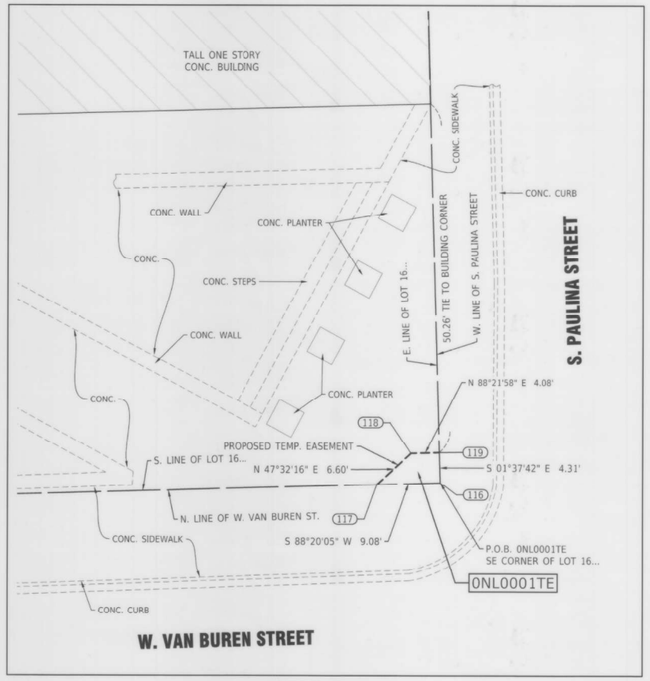

0NL0001TE DETAIL
SCALE: 1"=10'

PARCEL NUMBER	TOTAL HOLDINGS ACRES/SQ. FT	PART TAKEN ACRES/SQ. FT.	AREA IN EXISTING R.O.W. ACRES/SQ. FT.	REMAINDER AREA ACRES/SQ. FT.	EASEMENT AREA		PARCEL INDEX NUMBER
					ACRES	SQUARE FEET	
0NL0001TE	2.749 AC or 119,763 SQ. FT.	N/A	N/A	2.749 AC or 119,763 SQ. FT.	0.001	28	17-18-231-012 17-18-231-001 thru 011 17-18-501-011

LEGEND

SECTION CORNER

QUARTER SECTION CORNER

N

GRAPHIC SCALE
FEET
0 30 60
SCALE: 1"=30

- SECTION / QUARTER SECTION LINE
- PLATTED LOT LINES
- PROPERTY (DEED) LINE
- APPARENT PROPERTY LINE
- EXISTING CENTERLINE
- PROPOSED CENTERLINE
- EXISTING RIGHT OF WAY LINE
- PROPOSED RIGHT OF WAY LINE
- EXISTING EASEMENT
- PROPOSED EASEMENT
- EXISTING ACCESS CONTROL LINE
- PROPOSED ACCESS CONTROL LINE
- 129.32' MEASURED DIMENSION
- 129.32' (COMP) COMPUTED DIMENSION
- (129.32') RECORDED DIMENSION
- EXISTING BUILDING

- IRON PIPE OR ROD FOUND
- "MAG" NAIL SET
- CUT CROSS FOUND OR SET
- 5 / 8" REBAR SET
- STAKING OF PROPOSED RIGHT OF WAY. SET DIVISION OF HIGHWAYS SURVEY MARKER TO MONUMENT THE POSITION SHOWN. IDENTIFIED BY INSCRIPTION DATA AND SURVEYORS REGISTRATION NUMBER.
- M STAKING OF PROPOSED RIGHT OF WAY IN CULTIVATED AREAS. BURIED 5/8 INCH METAL ROD 20 INCHES BELOW GROUND TO MARK FUTURE SURVEY MARKER POSITION IDENTIFIED BY COLORED PLASTIC CAP BEARING SURVEYORS REGISTRATION NUMBER.
- PERMANENT SURVEY MARKER, I.D.O.T. STANDARD 2135 (TO BE SET BY OTHERS)
- RIGHT OF WAY STAKING PROPOSED TO BE SET

NOTES:

1. BASIS OF BEARINGS ARE REFERENCED TO THE ILLINOIS STATE PLANE COORDINATE SYSTEM, ILLINOIS EAST (1201) ZONE NAD83 (2011). COORDINATES/DISTANCES SHOWN ARE "GRID". GRID DISTANCE / THE COMBINED SCALE FACTOR OF 0.999975900 = GROUND DISTANCE.
2. ALL STATIONING IS SHOWN IN FEET.
3. SHEET 1 IS THE COVER SHEET AND IS NOT RECORDED.
4. BUILDING TIES SHOWN ARE TO THE PROPOSED RIGHT OF WAY LINE, UNLESS THERE ARE NO TAKINGS ON SAID PROPERTY, IN WHICH CASE THEY ARE TO THE EXISTING RIGHT OF WAY LINE.

STATE OF ILLINOIS)
) SS
COUNTY OF COOK)

THIS IS TO DECLARE THAT WE, WT GROUP., HAVE SURVEYED THE PLAT OF HIGHWAYS SHOWN HEREON IN THE NORTHEAST 1/4 OF SECTION 18 IN TOWNSHIP 39 NORTH, RANGE 14 EAST OF THE THIRD PRINCIPAL MERIDIAN, COOK COUNTY; THAT THE SURVEY IS TRUE AND COMPLETE AS SHOWN TO THE BEST OF MY KNOWLEDGE AND BELIEF; THAT THE PLAT CORRECTLY REPRESENTS SAID SURVEY, THAT ALL MONUMENTS FOUND AND ESTABLISHED ARE OF PERMANENT QUALITY AND OCCUPY THE POSITIONS SHOWN THEREON AND THAT THE MONUMENTS ARE SUFFICIENT TO ENABLE THE SURVEY TO BE RETRACED. MADE FOR THE DEPARTMENT OF TRANSPORTATION, STATE OF ILLINOIS.

GIVEN UNDER OUR HAND AND SEAL THIS 13th DAY OF MARCH A.D. 2025
AT HOFFMAN ESTATES, ILLINOIS.

ILLINOIS PROFESSIONAL LAND SURVEYOR NO. 035-003556
LICENSE EXPIRATION DATE: 11/30/2026

PROFESSIONAL LAND SURVEYOR
FRANJO I. MATICIC
035-003556
HOFFMAN ESTATES ILLINOIS
STATE OF ILLINOIS

THIS PROFESSIONAL SERVICE CONFORMS TO THE CURRENT ILLINOIS MINIMUM STANDARDS FOR A BOUNDARY SURVEY.

PROJECT COORDINATES ILLINOIS STATE PLANE, EAST ZONE, NAD83 (2011)				
COORDINATE TABLE - PAULINA STREET				
PNT #	STATION	OFFSET	NORTHING	EASTING
116	404+80.48	33.02 LT	1,898,250.6867	1,165,097.7882
117	404+80.46	42.10 LT	1,898,250.4229	1,165,088.7160
118	404+84.79	37.11 LT	1,898,254.8818	1,165,093.5885
119	404+84.80	33.03 LT	1,898,254.9981	1,165,097.6657
COORDINATE TABLE - VAN BUREN STREET				
PNT #	STATION	OFFSET	NORTHING	EASTING
116	1035+61.05	33.32 LT	1,898,250.6867	1,165,097.7882
117	1035+51.98	33.31 LT	1,898,250.4229	1,165,088.7160
118	1035+56.98	37.63 LT	1,898,254.8818	1,165,093.5885
119	1035+61.05	37.63 LT	1,898,254.9981	1,165,097.6657

3/13/25 ISSUED SIGNED MYLAR
3/23/23 ADDED BUILDING DIMS & TIES
3/17/23 ISSUED PRELIM FOR REVIEW

PREPARED BY:
WT Group
Engineering • Design • Consulting

WT GROUP
Structural | Mechanical/Electrical/Plumbing
Civil | Land Survey | Telecommunication| Aquatic Accessibility Consulting | Design & Program Management
Engineering with Precision, Pace & Passion.
2875 Pratum Avenue | Hoffman Estates, IL 60192
P: 224.293.6333 | F: 224.293.6444
wtengineering.com
IL License No: 184.007670-0015 | Exp: 04.30.2025
©COPYRIGHT 2025 THE W-T GROUP, LLC

PLAT OF HIGHWAYS
STATE OF ILLINOIS
DEPARTMENT OF TRANSPORTATION
I-290 BRIDGES

LIMITS: AT PAULINA STREET
SECTION:
STATION: 404+80.46
SCALE: 1"=30'
COUNTY: Cook
JOB NO.: R-90-023-22
TO STATION: 404+84.80
SHEET 2 OF 2

IDOT USE ONLY

BUREAU OF LAND ACQUISITION
201 WEST CENTER COURT
SCHAUMBURG, ILLINOIS 60196-1096

MODEL: Default
FILE NAME: pw:\\PW01.hornershifrin.com:HS IDOT Documents\330560000-PTB195-007 D1 Paul-Stw_Pkg\ SuiteCollinsIC4D_Sheets\D162K64_PaulinaSD162K64-sht-plat-02.dgn

HORNER SHIFRIN
WWW. HORNERSHIFRIN .COM

USER NAME = ahernandez	DESIGNED -	REVISED -	
	DRAWN -	REVISED -	
PLOT SCALE = 10.0000 ' / in.	CHECKED -	REVISED -	
PLOT DATE = 9/4/2025	DATE -	REVISED -	

STATE OF ILLINOIS
DEPARTMENT OF TRANSPORTATION

FAI–290 (EISENHOWER EXPRESSWAY) AT PAULINA STREET
PLAT OF HIGHWAYS

SCALE: NTS | SHEET 2 OF 2 SHEETS | STA. | TO STA.

F.A.I. RTE.	SECTION	COUNTY	TOTAL SHEETS	SHEET NO.
290	2019-191-B-R	COOK	265	99
		CONTRACT NO. 62K64		
	ILLINOIS FED. AID PROJECT			

SIGN REMOVALS									REMOVE SIGN PANEL ASSEMBLY - TYPE A	REMOVE SIGN PANEL ASSEMBLY - TYPE B	REMOVE SIGN PANEL - TYPE 1
STATION	OFFSET	SIDE	SIGN CODE	DESCRIPTION	SUPPLEMENTAL INFORMATION	SIGN WIDTH	SIGN HEIGHT	SIGN AREA			
						INCHES	INCHES	SQ FT	EACH	EACH	SQ FT
PAULINA STREET											
400+46	54.87'	LT	R7-1-4	NO PARKING, TOW ZONE	ON EXISTING TRAFFIC SIGNAL POST	18	18	2.3			2.3
400+53	45.95'	LT	R6-2 R	ONE WAY (RIGHT)	ON EXISTING TRAFFIC SIGNAL POST	24	30	5.0			5.0
			R6-2 L	ONE WAY (LEFT)		24	30	5.0			5.0
			R5-1	DO NOT ENTER		30	30	6.3			6.3
400+60	15.23'	RT	R7-401-4	NO PARKING, NO STOPPING, NO STANDING	BLACK ROUND POST AND BASE SUPPORT	18	18	2.3	1.0		
400+75	30.70'	RT	R7-1-4	NO PARKING, TOW ZONE	ON LIGHT POLE	18	18	2.3			2.3
401+50	30.36'	LT	R7-1-4	NO PARKING, TOW ZONE	ON LIGHT POLE	18	18	2.3			2.3
402+20	30.70'	RT	R7-1-4	NO PARKING, TOW ZONE	BLACK ROUND POST AND BASE SUPPORT	18	18	2.3	1.0		
402+30	24.13'	RT	R7-401-4	NO PARKING, NO STOPPING, NO STANDING	BLACK ROUND POST AND BASE SUPPORT	18	18	2.3	1.0		
402+72	30.50'	LT	M3-2	EAST (BLUE)	ON LIGHT POLE	24	12	2.0			2.0
			M1-1	INTERSTATE 290		30	24	5.0			5.0
			M6-1 L	LEFT ARROW (BLUE)		21	15	2.2			2.2
			R7-1-4	NO PARKING, TOW ZONE		18	18	2.3			2.3
403+70	31.67'	LT	R7-1-3	NO PARKING, TOW ZONE, LEFT ARROW	BLACK ROUND POST AND BASE SUPPORT	18	18	2.3	1.0		
403+83	30.50'	RT	R7-1-3	NO PARKING, TOW ZONE, LEFT ARROW	BLACK ROUND POST AND BASE SUPPORT	18	18	2.3	1.0		
404+10	30.50'	RT	R7-1-4	NO PARKING, TOW ZONE	ON LIGHT POLE	18	18	2.3			2.3
404+13	36.00'	LT	R10-15 (SPECIAL)	TURNING TRAFFIC MUST YIELD TO PEDS	ON EXISTING TRAFFIC SIGNAL MAST ARM POST	36	36	9.0			9.0
404+74	40.10'	RT	M3-4	WEST (BLUE)	ON LIGHT POLE	24	12	2.0			2.0
			M1-1.3	INTERSTATE 290		24	24	4.0			4.0
			M6-1 L	LEFT ARROW (BLUE)		21	15	2.2			2.2
404+81	31.40'	LT	R6-2 L	ONE WAY (LEFT)	ON EXISTING TRAFFIC SIGNAL MAST ARM POST	24	30	5.0			5.0
			R6-2 R	ONE WAY (RIGHT)		24	30	5.0			5.0
405+01	28.26'	RT	R7-1-1	NO PARKING, TOW ZONE, RIGHT ARROW	ROUND POST AND BASE SUPPORT	18	18	2.3	1.0		
405+14	26.20'	LT	R10-15R	TURNING TRAFFIC MUST YIELD TO PEDS	ROUND POST AND BASE SUPPORT	30	30	6.3	1.0		
CONGRESS PARKWAY											
2035+70	21.50'	RT	W11-2	YIELD TO PEDESTRIAN	DOUBLE ROUNDED POSTS; DAMAGED, ON GROUND	30	30	6.3		1.0	
			CUSTOM	DO NOT BLOCK CROSSWALK		24	36	6.0			
2036+09	22.28'	RT	R6-2R	ONE WAY (RIGHT)	ON EXISTING TRAFFIC SIGNAL MAST ARM POST	24	30	5.0			5.0
			R6-2 L	ONE WAY (LEFT)		24	30	5.0			5.0
2036+40.0	34.49'	RT	R4-7a	KEEP RIGHT	BLACK ROUND POST AND BASE SUPPORT	24	30	5.0	1.0		
I-290											
400+77	51.70'	LT	D3-2	PAULINA ST	ABUTMENT	48	18	6.0			6.0
403+73	41.10'	RT	D3-2	PAULINA ST	ABUTMENT	48	18	6.0			6.0
								SCHEDULE TOTAL	8.0	1.0	85.9
								SCHEDULE PAY	8.0	1.0	86.0

MODEL: Default
FILE NAME: awx:\PW01-hornershifrin.com:HS IDOT Documents\2 30560000-PTB 195-007 D1 Paulina_ Phil Sus Collins\CAD Sheets\D162K64_Paulina\D162K64-phi-schedule-03.dgn

HORNER SHIFRIN
WWW. HORNERSHIFRIN .COM

USER NAME = krkubalanza	DESIGNED - KRK	REVISED -	
	DRAWN - RO	REVISED -	
PLOT SCALE = 20.0000 ' / in.	CHECKED - BLP	REVISED -	
PLOT DATE = 10/8/2025	DATE -	REVISED -	

STATE OF ILLINOIS
DEPARTMENT OF TRANSPORTATION

FAI–290 (EISENHOWER EXPRESSWAY) AT PAULINA STREET
SCHEDULE OF QUANTITIES – SIGNING

SCALE: NTS | SHEET OF SHEETS | STA. | TO STA.

F.A.I. RTE.	SECTION	COUNTY	TOTAL SHEETS	SHEET NO.
290	2019-191-B-R	COOK	265	100
		CONTRACT NO. 62K64		
	ILLINOIS FED. AID PROJECT			

PROPOSED SIGNING								SIGN PANEL - TYPE 1	INSTALL ROUND STEEL SIGN SUPPORT	
STATION	OFFSET	SIDE	SIGN CODE	DESCRIPTION	SIGN WIDTH	SIGN HEIGHT	SIGN AREA		(POST)	(BASE)
					INCHES	INCHES	SQ FT	SQ FT	FT	EACH
PAULINA STREET										
400+46	54.87	LT	R7-1-4	NO PARKING, TOW ZONE	18	18	2.3	2.3	9.7	1.0
400+49	28.27	RT	R9-7	BIKES KEEP LEFT, PEDS KEEP RIGHT	12	18	1.5	1.5	9.7	1.0
400+54	46.32	LT	R6-2R	ONE WAY (RIGHT)	24	30	5.0	5.0	ON TRAFFIC SIGNAL	
			R5-1	DO NOT ENTER	30	30	6.3	6.3		
			R6-2L	ONE WAY (LEFT)	24	30	5.0	5.0		
400+60	15.23	RT	R7-401-4	NO PARKING, NO STOPPING, NO STANDING	18	18	2.3	2.3	9.7	1.0
401+74	24.14	RT	R3-8 (SPECIAL)	LANE CONFIGURATION: LEFT ONLY | THRU ONLY	36	36	9.0	9.0	10.0	1.0
401+74	37.36	LT	M3-2	EAST	24	12	2.0	2.0	11.6	1.0
			M1-1	INTERSTATE 290	24	24	4.0	4.0		
			M6-1L	DIRECTIONAL ARROW: LEFT	21	15	2.2	2.2		
402+30	37.36	LT	R7-401-4	NO PARKING, NO STOPPING, NO STANDING	18	18	2.3	2.3	9.7	1.0
	24.13	RT	R7-401-4	NO PARKING, NO STOPPING, NO STANDING	18	18	2.3	2.3	9.7	1.0
402+84	24.13	RT	M3-4	WEST	24	12	2.0	2.0	11.6	1.0
			M1-1	INTERSTATE 290	24	24	4.0	4.0		
			M6-1L	DIRECTIONAL ARROW: LEFT	21	15	2.2	2.2		
402+84	37.36	LT	R3-8L (SPECIAL)	LANE CONFIGURATION: LEFT ONLY | THRU-LEFT	36	36	9.0	9.0	10.0	1.0
404+00	35.00	LT	R9-7	BIKES KEEP LEFT, PEDS KEEP RIGHT	12	18	1.5	1.5	9.7	1.0
404+21	44.76	LT	R10-15R (SPECIAL)	TURNING TRAFFIC MUST YIELD TO PEDS AND BIKES	30	30	6.3	6.3	ON TRAFFIC SIGNAL	
404+78	36.81	RT	M3-4	WEST	24	12	2.0	2.0	ON TRAFFIC SIGNAL	
			M1-1	INTERSTATE 290	24	24	4.0	4.0		
			M6-1L	DIRECTIONAL ARROW: LEFT	21	15	2.2	2.2		
404+78	40.08	LT	R6-2L	ONE WAY (LEFT)	24	30	5.0	5.0	ON TRAFFIC SIGNAL	
			R6-2R	ONE WAY (RIGHT)	24	30	5.0	5.0		
405+01	28.26	RT	R7-1-1	NO PARKING, TOW ZONE, RIGHT ARROW	18	18	2.3	2.3	9.7	1.0
405+73	26.43	LT	M3-4	WEST				TO REMAIN		
			M1-1	INTERSTATE 290				TO REMAIN		
			M6-1R	DIRECTIONAL ARROW: RIGHT				TO REMAIN		
405+91	26.12	RT	R7-601-93	NO PARKING, LOADING ZONE, LEFT ARROW				TO REMAIN		
406+66	24.44	RT	R7-601-91	NO PARKING, LOADING ZONE, RIGHT ARROW				TO REMAIN		
407+23	23.08	LT	R7-1-4	NO PARKING, TOW ZONE				TO REMAIN		
			M2-1	JCT				TO REMAIN		
			M1-1	INTERSTATE 290				TO REMAIN		
			CUSTOM	SOUTH TO ILLINOIS MEDICAL DISTRICT				TO REMAIN		
407+88	22.77	LT	R7-1-4	NO PARKING, TOW ZONE				TO REMAIN		
407+91	22.22	RT	D1-2C	BIKES TOWARD DOWNTOWN, WOOD GREENWAY				TO REMAIN		
408+43	20.49	RT	R7-1-3	NO PARKING, TOW ZONE, LEFT ARROW				TO REMAIN		
ABUTMENT		EB I-29	D3-2	STREET NAME SIGN ON ABUTMENT	48	24	8.0	8.0	ON ABUTMENT	
ABUTMENT		WB I-29	D3-2	STREET NAME SIGN ON ABUTMENT	48	24	8.0	8.0	ON ABUTMENT	
CONGRESS PARKWAY										
2032+24	21.51	RT	R1-2	YIELD				TO REMAIN		
			R7-1-4	NO PARKING EX EMERGENCY VEH, TOW ZONE				TO REMAIN		
2032+62	50.05	LT	R5-1	DO NOT ENTER				TO REMAIN		
	23.03	LT	R5-1	DO NOT ENTER				TO REMAIN		
2033+33	25.69	RT	R7-1-4	NO PARKING EX EMERGENCY VEH, TOW ZONE				TO REMAIN		
2034+39	21.73	RT	R7-1-3	NO PARKING, TOW ZONE, LEFT ARROW				TO REMAIN		
			R7-1-1	NO PARKING EX EMERGENCY VEH, TOW ZONE, RIGHT ARROW				TO REMAIN		
2035+70	21.50	RT	W11-2	YIELD PEDESTRIAN	30	30	6.3	6.3	9.7	1.0
2036+09	22.28	RT	R6-2R	ONE WAY (RIGHT)	24	30	5.0	5.0	ON TRAFFIC SIGNAL	
			R6-2 L	ONE WAY (LEFT)	24	30	5.0	5.0		
2036+40	34.49	RT	R4-7a	KEEP RIGHT	24	30	5.0	5.0	9.7	1.0
2036+97	22.64	RT	R7-1-3	NO PARKING, TOW ZONE, LEFT ARROW				TO REMAIN		
2037+12	22.64	RT	R7-1-4	NO PARKING EX EMERGENCY VEH, TOW ZONE				TO REMAIN		
2038+19	23.48	RT	R7-1-4	NO PARKING EX EMERGENCY VEH, TOW ZONE				TO REMAIN		
2039+17	23.72	RT	R7-1-4	NO PARKING EX EMERGENCY VEH, TOW ZONE				TO REMAIN		
2039+93	23.36	RT	R7-1-4	NO PARKING EX EMERGENCY VEH, TOW ZONE				TO REMAIN		
2040+66	23.10	RT	R7-401-3	NO PARKING, NO STOPPING, NO STANDING, LEFT ARROW				TO REMAIN		
			R7-1-1	NO PARKING EX EMERGENCY VEH, TOW ZONE, RIGHT ARROW				TO REMAIN		
VAN BUREN STREET										
1033+94	21.79	LT	R7-1-4	NO PARKING, TOW ZONE				TO REMAIN		
1034+63	21.12	LT	R7-207-1	NO PARKING, TOW ZONE, BUS STOP, RIGHT ARROW				TO REMAIN		
1034+69	21.45	LT	CUSTOM	CTA BUS STOP				TO REMAIN		
1035+35	19.55	RT	R7-1-3	NO PARKING, TOW ZONE, LEFT ARROW				TO REMAIN		
1036+62	15.41	RT	R7-1-1	NO PARKING, TOW ZONE, RIGHT ARROW				TO REMAIN		
1037+22	26.35	LT	R7-1-4	NO PARKING, TOW ZONE				TO REMAIN		
SCHEDULE TOTAL								126.6	130.1	13.0
SCHEDULE PAY								127	131	

(NOTE) 'INSTALL ROUND STEEL SIGN SUPPORT BASE' INCLUDED IN THE COST OF 'INSTALL ROUND STEEL SIGN SUPPORT'; ALL PROPOSED POSTS ARE TO BE INSTALLED VIA DRILLED METHOD.

MODEL: Default
FILE NAME: pw:\\PW01.hornershifrin.com:HS_IDOT\Documents\230360000-PTB195-007_D1_PaulASoc_PhII_SuiCollinsCAD_Sheets\D162K64_PaulinaSD162K64-cht-schedule43.dgn

HORNER SHIFRIN
WWW. HORNERSHIFRIN .COM

USER NAME = krkubalanza	DESIGNED - KRK	REVISED -	
	DRAWN - RO	REVISED -	
PLOT SCALE = 20.0000 ' / in.	CHECKED - BLP	REVISED -	
PLOT DATE = 10/8/2025	DATE -	REVISED -	

STATE OF ILLINOIS
DEPARTMENT OF TRANSPORTATION

FAI-290 (EISENHOWER EXPRESSWAY) AT PAULINA STREET
SCHEDULE OF QUANTITIES - SIGNING

SCALE: NTS | SHEET OF SHEETS | STA. | TO STA.

F.A.I. RTE.	SECTION	COUNTY	TOTAL SHEETS	SHEET NO.
290	2019-191-B-R	COOK	265	101
		CONTRACT NO. 62K64		
		ILLINOIS	FED. AID PROJECT	

NOTES

1. REFER TO DETECTABLE DIRECTIONAL SURFACE TILE SCHEDULE FOR STATION AND OFFSETS OF THE CENTER OF THE TILES.

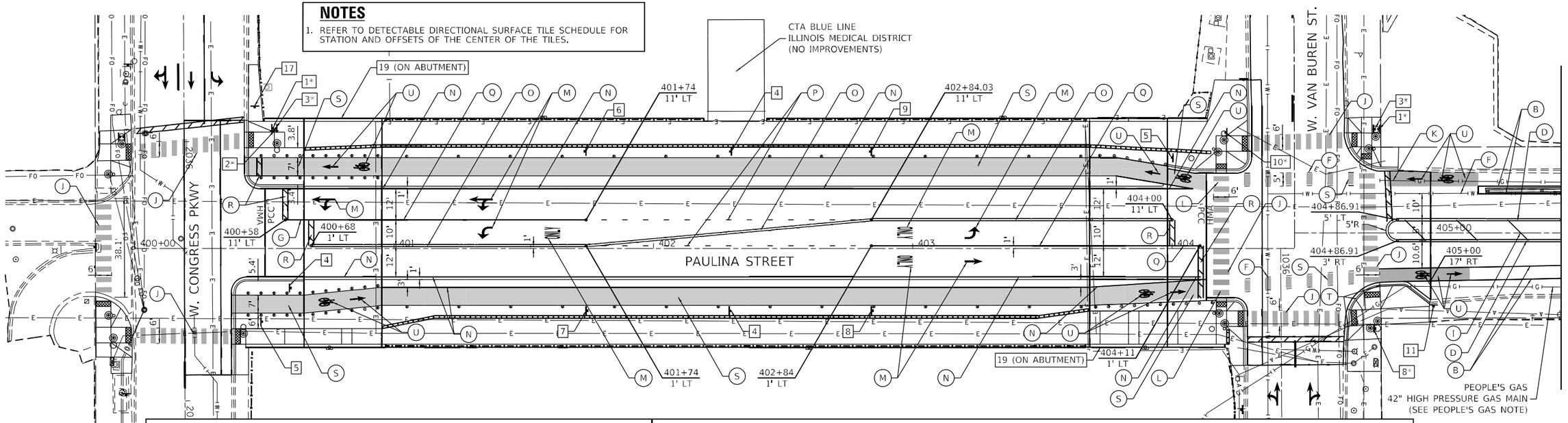

PAVEMENT MARKING LEGEND

- (A) THPL PVT MK LTR & SYM (WHITE)
- (B) THPL PVT MK LINE 4 (SOLID WHITE)
- (C) THPL PVT MK LINE 4 (SOLID YELLOW)
- (D) THPL PVT MK LINE 4 (DOUBLE YELLOW)
- (E) THPL PVT MK LINE 4 (WHITE; 18' SKIP, 6' DASH)
- (F) THPL PVT MK LINE 6 (WHITE; 6' SKIP, 2' DASH)
- (G) THPL PVT MK LINE 6 (SOLID WHITE)
- (H) THPL PVT MK LINE 12 (SOLID WHITE, 45°)
- (I) THPL PVT MK LINE 12 (SOLID YELLOW, 45°)
- (J) THPL PVT MK LINE 24 (WHITE CROSSWALK)
- (K) THPL PVT MK LINE 24 (SOLID WHITE)
- (L) THPL PVT MK (GREEN, BIKE LANE)
- (M) MOD URETH PM LTR-SYM (WHITE)
- (N) MOD URETH PM LINE 4 (SOLID WHITE)
- (O) MOD URETH PM LINE 4 (DOUBLE YELLOW) 8"C-C
- (P) MOD URETH PM LINE 6 (WHITE; 6' SKIP, 2' DASH)
- (Q) MOD URETH PM LINE 6 (SOLID WHITE)
- (R) MOD URETH PM LINE 24 (SOLID WHITE)
- (S) METHYL METH PVMT COLO (GREEN, BIKE LANE)
- (T) PAINT CURB (YELLOW, CURB)
- (U) PREF THPL PM LTR-SYM (WHITE)

SIGNING LEGEND

1	2	3	4	5	6	7	8	9	10	11	12
R6-2R	R5-1	R6-2L	R7-401-4	R9-7	M3-2, M1-1, M6-1L	R3-8 (SPECIAL)	M3-4, M1-1, M6-1L	R3-8L (SPECIAL)	R10-15R (SPECIAL)	R7-1-1	REMAIN

13	14	15	16	17	18	19	20
REMAIN	REMAIN	REMAIN	REMAIN	R7-1-4	REMAIN	D3-2	REMAIN

* MOUNTED ON TRAFFIC SIGNAL POST

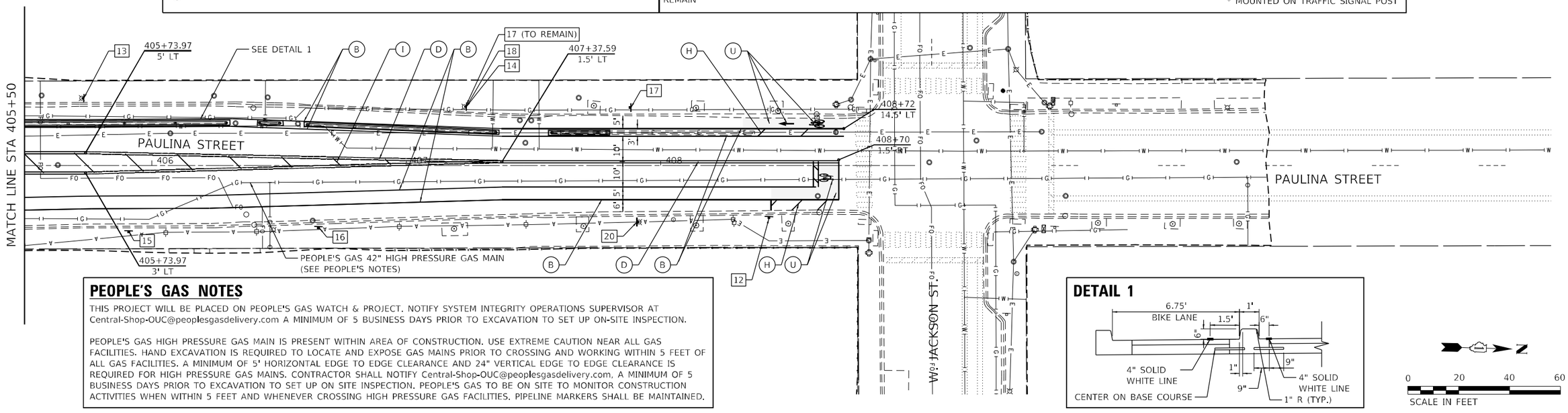

PEOPLE'S GAS NOTES

THIS PROJECT WILL BE PLACED ON PEOPLE'S GAS WATCH & PROJECT. NOTIFY SYSTEM INTEGRITY OPERATIONS SUPERVISOR AT Central-Shop-OUC@peoplesgasdelivery.com A MINIMUM OF 5 BUSINESS DAYS PRIOR TO EXCAVATION TO SET UP ON-SITE INSPECTION.

PEOPLE'S GAS HIGH PRESSURE GAS MAIN IS PRESENT WITHIN AREA OF CONSTRUCTION. USE EXTREME CAUTION NEAR ALL GAS FACILITIES. HAND EXCAVATION IS REQUIRED TO LOCATE AND EXPOSE GAS MAINS PRIOR TO CROSSING AND WORKING WITHIN 5 FEET OF ALL GAS FACILITIES. A MINIMUM OF 5' HORIZONTAL EDGE TO EDGE CLEARANCE AND 24" VERTICAL EDGE TO EDGE CLEARANCE IS REQUIRED FOR HIGH PRESSURE GAS MAINS. CONTRACTOR SHALL NOTIFY Central-Shop-OUC@peoplesgasdelivery.com, A MINIMUM OF 5 BUSINESS DAYS PRIOR TO EXCAVATION TO SET UP ON SITE INSPECTION. PEOPLE'S GAS TO BE ON SITE TO MONITOR CONSTRUCTION ACTIVITIES WHEN WITHIN 5 FEET AND WHENEVER CROSSING HIGH PRESSURE GAS FACILITIES. PIPELINE MARKERS SHALL BE MAINTAINED.

DETAIL 1

0 20 40 60
SCALE IN FEET

HORNER SHIFRIN
WWW. HORNERSHIFRIN .COM

USER NAME = krkubalanza	DESIGNED - KRK	REVISED -
	DRAWN - RO	REVISED -
PLOT SCALE = 40.0000 ' / in.	CHECKED - BLP	REVISED -
PLOT DATE = 11/5/2025	DATE -	REVISED -

STATE OF ILLINOIS
DEPARTMENT OF TRANSPORTATION

FAI–290 (EISENHOWER EXPRESSWAY) AT PAULINA STREET
PAVEMENT MARKING AND SIGNAGE

SCALE: 1" = 20' | SHEET OF SHEETS | STA. | TO STA.

F.A.I. RTE.	SECTION	COUNTY	TOTAL SHEETS	SHEET NO.
290	2019-191-B-R	COOK	265	102
		CONTRACT NO. 62K64		
	ILLINOIS FED. AID PROJECT			

MODEL: Default
FILE NAME: z:\c\IPW01.HornerShifrin.com\HS DOT\Documents\2309600\0-PTB195-007 D1 Paul-Stic PhIII SuuCellnis\CAD Sheets\D162K64 Paulina\D162K64-sht-pmk-01.dgn

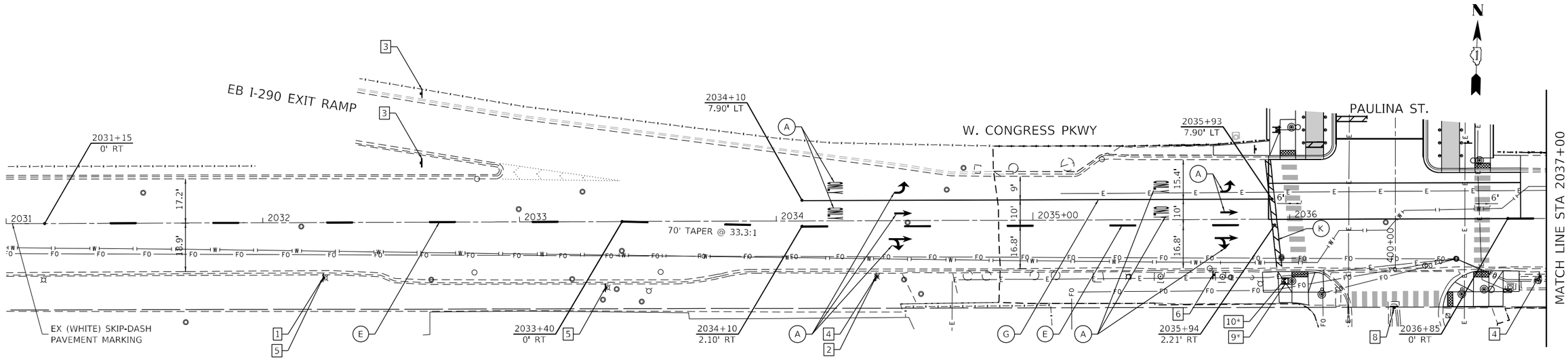

PAVEMENT MARKING LEGEND

- (A) THPL PVT MK LTR & SYM (WHITE)
- (B) THPL PVT MK 4 (SOLID WHITE)
- (C) THPL PVT MK 4 (SOLID YELLOW)
- (D) THPL PVT MK 4 (DOUBLE YELLOW)
- (E) THPL PVT MK 4 (WHITE; 18' SKIP, 6' DASH)
- (F) THPL PVT MK 6 (WHITE; 6' SKIP, 2' DASH)
- (G) THPL PVT MK 6 (SOLID WHITE)
- (H) THPL PVT MK 12 (SOLID WHITE, 45°)
- (I) THPL PVT MK 12 (SOLID YELLOW, 45°)
- (J) THPL PVT MK 24 (WHITE CROSSWALK)
- (K) THPL PVT MK 24 (SOLID WHITE)
- (L) THPL PVT MK (GREEN, BIKE LANE)

SIGNING LEGEND

1	2	3	4	5	6	7	8	9	10
YIELD	R	DO NOT ENTER	R	R		R	KEEP RIGHT	ONE WAY	ONE WAY
REMAIN	REMAIN	REMAIN	REMAIN	REMAIN	W11-2	REMAIN	R4-7a	R6-2R	R6-2L

* MOUNTED ON TRAFFIC SIGNAL POST

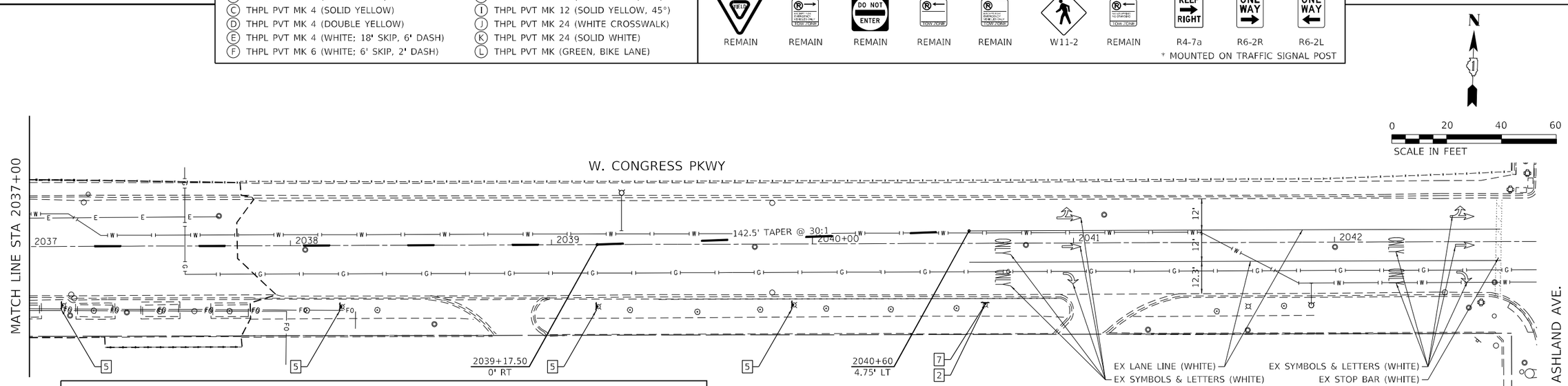

PEOPLE'S GAS NOTES

THIS PROJECT WILL BE PLACED ON PEOPLE'S GAS WATCH & PROJECT. NOTIFY SYSTEM INTEGRITY OPERATIONS SUPERVISOR AT Central-Shop-OUC@peoplesgasdelivery.com A MINIMUM OF 5 BUSINESS DAYS PRIOR TO EXCAVATION TO SET UP ON-SITE INSPECTION.

PEOPLE'S GAS HIGH PRESSURE GAS MAIN IS PRESENT WITHIN AREA OF CONSTRUCTION. USE EXTREME CAUTION NEAR ALL GAS FACILITIES. HAND EXCAVATION IS REQUIRED TO LOCATE AND EXPOSE GAS MAINS PRIOR TO CROSSING AND WORKING WITHIN 5 FEET OF ALL GAS FACILITIES. A MINIMUM OF 5' HORIZONTAL EDGE TO EDGE CLEARANCE AND 24" VERTICAL EDGE TO EDGE CLEARANCE IS REQUIRED FOR HIGH PRESSURE GAS MAINS. CONTRACTOR SHALL NOTIFY Central-Shop-OUC@peoplesgasdelivery.com, A MINIMUM OF 5 BUSINESS DAYS PRIOR TO EXCAVATION TO SET UP ON SITE INSPECTION. PEOPLE'S GAS TO BE ON SITE TO MONITOR CONSTRUCTION ACTIVITIES WHEN WITHIN 5 FEET AND WHENEVER CROSSING HIGH PRESSURE GAS FACILITIES. PIPELINE MARKERS SHALL BE MAINTAINED.

MODEL: Default
FILE NAME: pw:\\PW01.hornershifrin.com:HS IDOT\Documents\230560000-PTB195-007_D1_Paul-Sac_PhII_SubCollins\CAD_Sheets\D162K64_Paulina\D162K64-sht-pmk-02.dgn

HORNER SHIFRIN
WWW.HORNERSHIFRIN.COM

USER NAME = krkubalanza	DESIGNED - KRK	REVISED -	
	DRAWN - RO	REVISED -	
PLOT SCALE = 40.0000 ' / in.	CHECKED - BLP	REVISED -	
PLOT DATE = 11/5/2025	DATE -	REVISED -	

STATE OF ILLINOIS
DEPARTMENT OF TRANSPORTATION

CONGRESS PARKWAY
PAVEMENT MARKING AND SIGNAGE

SCALE: 1" = 20' | SHEET OF SHEETS | STA. TO STA.

F.A.I. RTE.	SECTION	COUNTY	TOTAL SHEETS	SHEET NO.
290	2019-191-B-R	COOK	265	103
		CONTRACT NO. 62K64		
		ILLINOIS	FED. AID PROJECT	

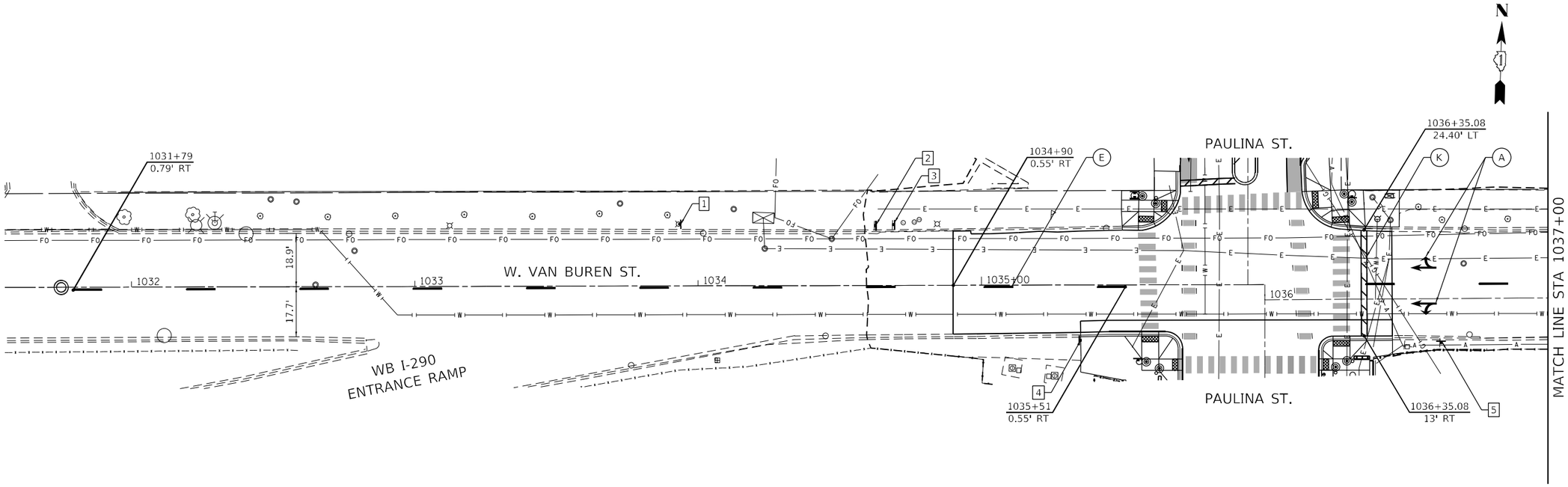

PAVEMENT MARKING LEGEND

- (A) THPL PVT MK LTR & SYM (WHITE)
- (B) THPL PVT MK 4 (SOLID WHITE)
- (C) THPL PVT MK 4 (SOLID YELLOW)
- (D) THPL PVT MK 4 (DOUBLE YELLOW)
- (E) THPL PVT MK 4 (WHITE; 18' SKIP, 6' DASH)
- (F) THPL PVT MK 6 (WHITE; 6' SKIP, 2' DASH)
- (G) THPL PVT MK 6 (SOLID WHITE)
- (H) THPL PVT MK 12 (SOLID WHITE, 45°)
- (I) THPL PVT MK 12 (SOLID YELLOW, 45°)
- (J) THPL PVT MK 24 (WHITE CROSSWALK)
- (K) THPL PVT MK 24 (SOLID WHITE)
- (L) THPL PVT MK (GREEN, BIKE LANE)

SIGNING LEGEND

1	2	3	4	5
REMAIN	REMAIN	REMAIN	REMAIN	REMAIN

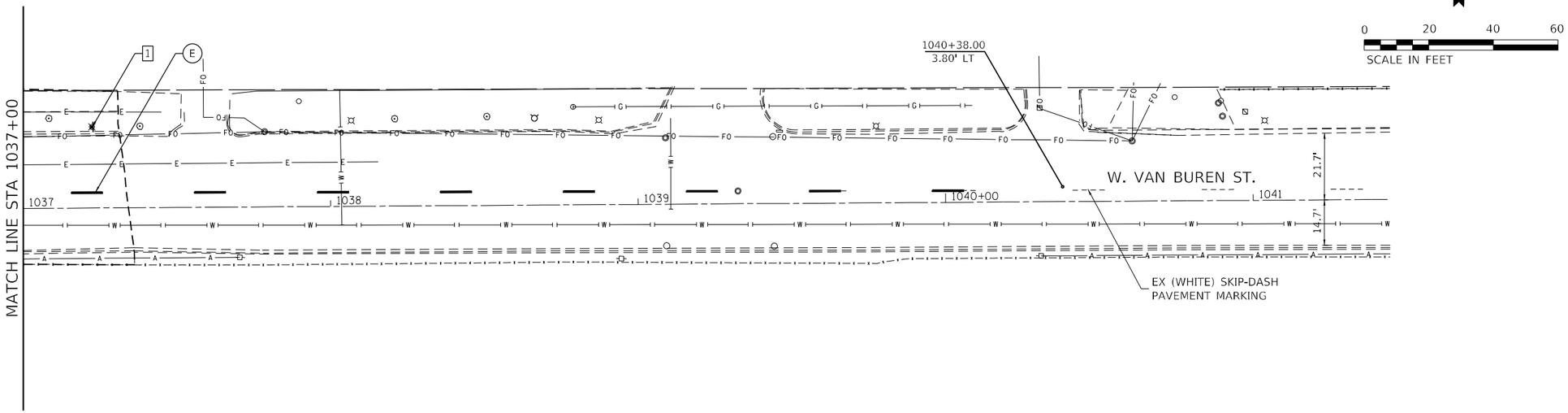

MODEL: Default
FILE NAME: :xx:\PW0\.HornerShifrin.com:HS TDOT Documents\2305600\0-PTB195-007_D1_Paul-Stic_PhIF_SouthCellInfo\CAD Sheets\D162K64_PaulInx03162K64-sht-pmk-03.dgn

HORNER SHIFRIN
WWW. HORNERSHIFRIN .COM

USER NAME = krkubalanza	DESIGNED -	REVISED -
	DRAWN -	REVISED -
PLOT SCALE = 40.0000 ' / in.	CHECKED -	REVISED -
PLOT DATE = 11/5/2025	DATE -	REVISED -

STATE OF ILLINOIS
DEPARTMENT OF TRANSPORTATION

VAN BUREN STREET
PAVEMENT MARKING AND SIGNAGE

SCALE: | SHEET OF SHEETS | STA. | TO STA.

F.A.I. RTE.	SECTION	COUNTY	TOTAL SHEETS	SHEET NO.
290	2019-191-B-R	COOK	265	104
		CONTRACT NO. 62K64		
	ILLINOIS FED. AID PROJECT			

PAVEMENT MARKING SCHEDULE

LOCATION													PERMANENT PMK - THERMOPLASTIC				RRPM REMOVAL AND REPLACEMENT					
STREET	STA	STA	OFF (RT/LT/CTR)	TYPE OF MARKING					LENGTH	PMK SPACING			THERMOPLASTIC PAVEMENT MARKING - LINE 4"	THERMOPLASTIC PAVEMENT MARKING - LINE 5"	THERMOPLASTIC PAVEMENT MARKING - LINE 8"	THERMOPLASTIC PAVEMENT MARKING - LINE 12"	COLOR	RRPM SPACING			RAISED REFLECTIVE PAVEMENT MARKER, REFLECTOR REMOVAL (SEE NOTE 1)	RAISED REFLECTIVE PAVEMENT MARKER, REFLECTOR REPLACEMENT (SEE NOTE 1)
													FOOT	FOOT	FOOT	FOOT					EACH	EACH
I-290 WB	285+11	299+18	RT	EDGE LINE	THERMOPLASTIC	4	YELLOW	SOLID	1407	1	@	1	1,407	-	-	-					-	-
I-290 WB	285+11	299+18	LT	LANE LINE-GROOVED	THERMOPLASTIC	5	WHITE	SKIP DASH	1407	10	@	40	-	360	-	-	CRYSTAL	2	@	80	72	72
I-290 WB	285+11	299+18	CTR	LANE LINE-GROOVED	THERMOPLASTIC	5	WHITE	SKIP DASH	1407	10	@	40	-	360	-	-	CRYSTAL	2	@	80	72	72
I-290 WB	285+11	299+18	RT	LANE LINE-GROOVED	THERMOPLASTIC	5	WHITE	SKIP DASH	1407	10	@	40	-	360	-	-	CRYSTAL	2	@	80	72	72
I-290 WB	285+11	286+14	LT	GORE EDGE	THERMOPLASTIC	8	WHITE	SOLID	102	1	@	1	-	-	102	-					-	-
I-290 WB	285+11	286+14	LT	GORE STRIPING	THERMOPLASTIC	12	WHITE	SOLID	45	1	@	1	-	-	-	45					-	-
I-290 WB	286+14	299+18	LT	EDGE LINE	THERMOPLASTIC	4	WHITE	SOLID	1305	1	@	1	1,305	-	-	-					-	-
I-290 EB	285+26	299+33	RT	EDGE LINE	THERMOPLASTIC	4	WHITE	SOLID	1406	1	@	1	1,406	-	-	-					-	-
I-290 EB	285+26	299+33	LT	EDGE LINE	THERMOPLASTIC	4	YELLOW	SOLID	1406	1	@	1	1,406	-	-	-					-	-
I-290 EB	285+26	299+33	LT	LANE LINE-GROOVED	THERMOPLASTIC	5	WHITE	SKIP DASH	1406	10	@	40	-	360	-	-	CRYSTAL	2	@	80	72	72
I-290 EB	285+26	299+33	CTR	LANE LINE-GROOVED	THERMOPLASTIC	5	WHITE	SKIP DASH	1406	10	@	40	-	360	-	-	CRYSTAL	2	@	80	72	72
I-290 EB	285+26	299+33	RT	LANE LINE-GROOVED	THERMOPLASTIC	5	WHITE	SKIP DASH	1406	10	@	40	-	360	-	-	CRYSTAL	2	@	80	72	72
									TOTAL =				5,524	2,160	102	45					432	432

NOTES:

1. REFLECTOR UNITS WILL BE REMOVED IN STAGE 1 AND REINSTALLED FOR WINTER STAGE. REFLECTOR UNITS WILL BE REMOVED IN STAGE 2 AND REINSTALLED UPON COMPLETION OF STAGE 2 WHEN ALL LANES ALONG I-290 ARE RETURNED TO THE ORIGINAL CONFIGURATION. QUANTITY FOR TWO REMOVALS AND INSTALLATION OF REFLECTORS ARE PROVIDED.

FILE NAME = P:\10-IL14411-IDOT - Sacramento and Paulina over I-290\Work\CADD\Paulina - Contract 62K64\CADD_Sheets\Civil\D162K64-sht-smk-290.dgn

COLLINS ENGINEERS INC

USER NAME = omartinez	DESIGNED - OAM	REVISED -
	DRAWN - OAM	REVISED -
PLOT SCALE = 100.0000 ' / in.	CHECKED - RAG	REVISED -
PLOT DATE = 10/16/2025	DATE - 09/08/2025	REVISED -

STATE OF ILLINOIS
DEPARTMENT OF TRANSPORTATION

FAI–290 (EISENHOWER EXPRESSWAY) AT PAULINA STREET
SCHEDULE OF QUANTITIES – PAVEMENT MARKINGS (I–290)

SCALE: NTS | SHEET NO. 1 OF 4 SHEETS | STA. | TO STA.

F.A.I. RTE.	SECTION	COUNTY	TOTAL SHEETS	SHEET NO.
290	2019-191-B-R	COOK	265	105
		CONTRACT NO. 62K64		
FED. ROAD DIST. NO.	ILLINOIS	FED. AID PROJECT		

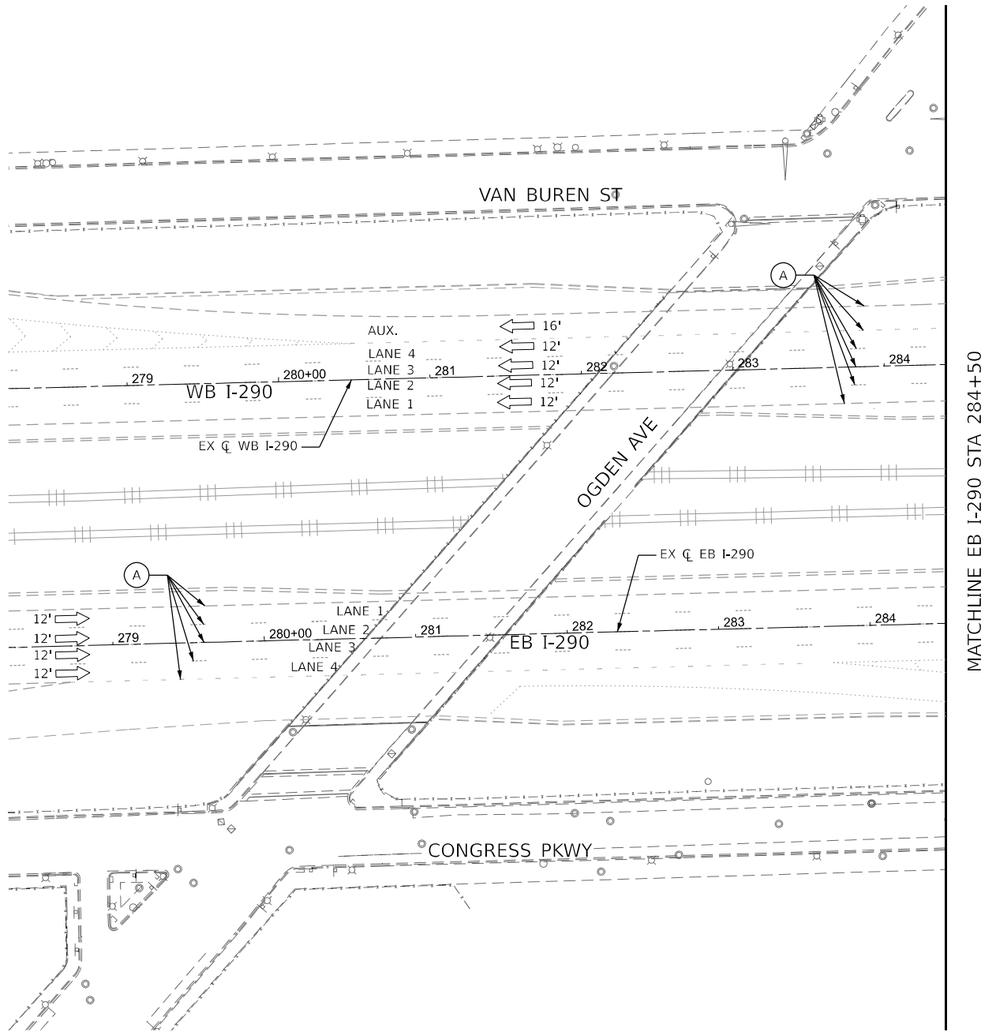

LEGEND

1. THERMOPLASTIC PAVEMENT MARKING - LINE 4" (SOLID WHITE)
2. THERMOPLASTIC PAVEMENT MARKING - LINE 4" (SOLID YELLOW)
3. THERMOPLASTIC PAVEMENT MARKING - LINE 5" (10' DASH - 30' SKIP WHITE)
4. THERMOPLASTIC PAVEMENT MARKING - LINE 8" (SOLID WHITE)
5. THERMOPLASTIC PAVEMENT MARKING - LINE 12" (SOLID WHITE)
6. SHOULDER RUMBLE STRIP, 16 INCH
7. RAISED REFLECTIVE PAVEMENT MARKER, REFLECTOR REPLACEMENT

A. EXISTING PAVEMENT MARKING

N

0 50 100
SCALE IN FEET

FILE NAME = P:\10-IL\14411-3\DOT - Sacramento and Paulina over I-290\Work\CADD\Paulina - Contract 62K64\CADD_Sheets\CivilD162K64-sht-pmk-290.dgn

COLLINS ENGINEERS INC.

USER NAME = omartinez	DESIGNED - OAM	REVISED -	
	DRAWN - OAM	REVISED -	
PLOT SCALE = 100.0000 ' / in.	CHECKED - RAG	REVISED -	
PLOT DATE = 10/16/2025	DATE - 09/08/2025	REVISED -	

STATE OF ILLINOIS
DEPARTMENT OF TRANSPORTATION

FAI–290 (EISENHOWER EXPRESSWAY) AT PAULINA STREET
PAVEMENT MARKINGS (I–290)

SCALE: 1" = 50' | SHEET NO. 2 OF 4 SHEETS | STA. | TO STA.

F.A.I. RTE.	SECTION	COUNTY	TOTAL SHEETS	SHEET NO.
290	2019-191-B-R	COOK	265	106
		CONTRACT NO. 62K64		
FED. ROAD DIST. NO.	ILLINOIS	FED. AID PROJECT		

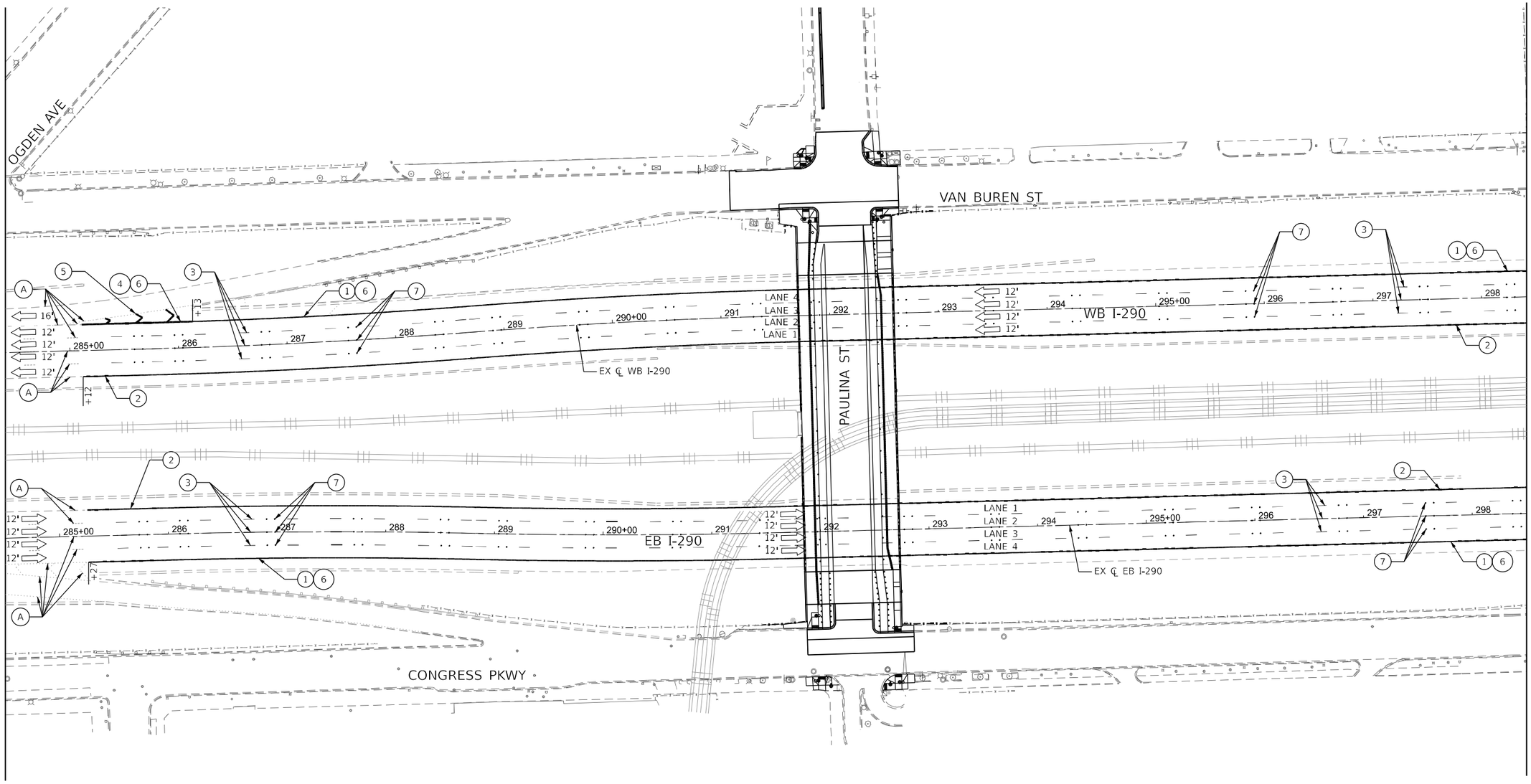

N

0 50 100

SCALE IN FEET

LEGEND

1. THERMOPLASTIC PAVEMENT MARKING - LINE 4" (SOLID WHITE)
2. THERMOPLASTIC PAVEMENT MARKING - LINE 4" (SOLID YELLOW)
3. THERMOPLASTIC PAVEMENT MARKING - LINE 5" (10' DASH - 30' SKIP WHITE)
4. THERMOPLASTIC PAVEMENT MARKING - LINE 8" (SOLID WHITE)
5. THERMOPLASTIC PAVEMENT MARKING - LINE 12" (SOLID WHITE)
6. SHOULDER RUMBLE STRIP, 16 INCH
7. RAISED REFLECTIVE PAVEMENT MARKER, REFLECTOR REPLACEMENT

A. EXISTING PAVEMENT MARKING

FILE NAME = P:\10-IL\14111-IDOT - Sacramento and Paulina over I-290\Work\CADD\Paulina - Contract 62K64\CADD_Sheets\CivilD\162K64-sht-pmk-290.dgn

COLLINS ENGINEERS INC.

USER NAME = omartinez	DESIGNED - OAM	REVISED -
	DRAWN - OAM	REVISED -
PLOT SCALE = 100.0000 ' / in.	CHECKED - RAG	REVISED -
PLOT DATE = 10/16/2025	DATE - 09/08/2025	REVISED -

STATE OF ILLINOIS
DEPARTMENT OF TRANSPORTATION

FAI–290 (EISENHOWER EXPRESSWAY) AT PAULINA STREET
PAVEMENT MARKINGS (I–290)

SCALE: 1" = 50' | SHEET NO. 3 OF 4 SHEETS | STA. | TO STA.

F.A.I. RTE.	SECTION	COUNTY	TOTAL SHEETS	SHEET NO.
290	2019-191-B-R	COOK	265	107
		CONTRACT NO. 62K64		
FED. ROAD DIST. NO.	ILLINOIS	FED. AID PROJECT		

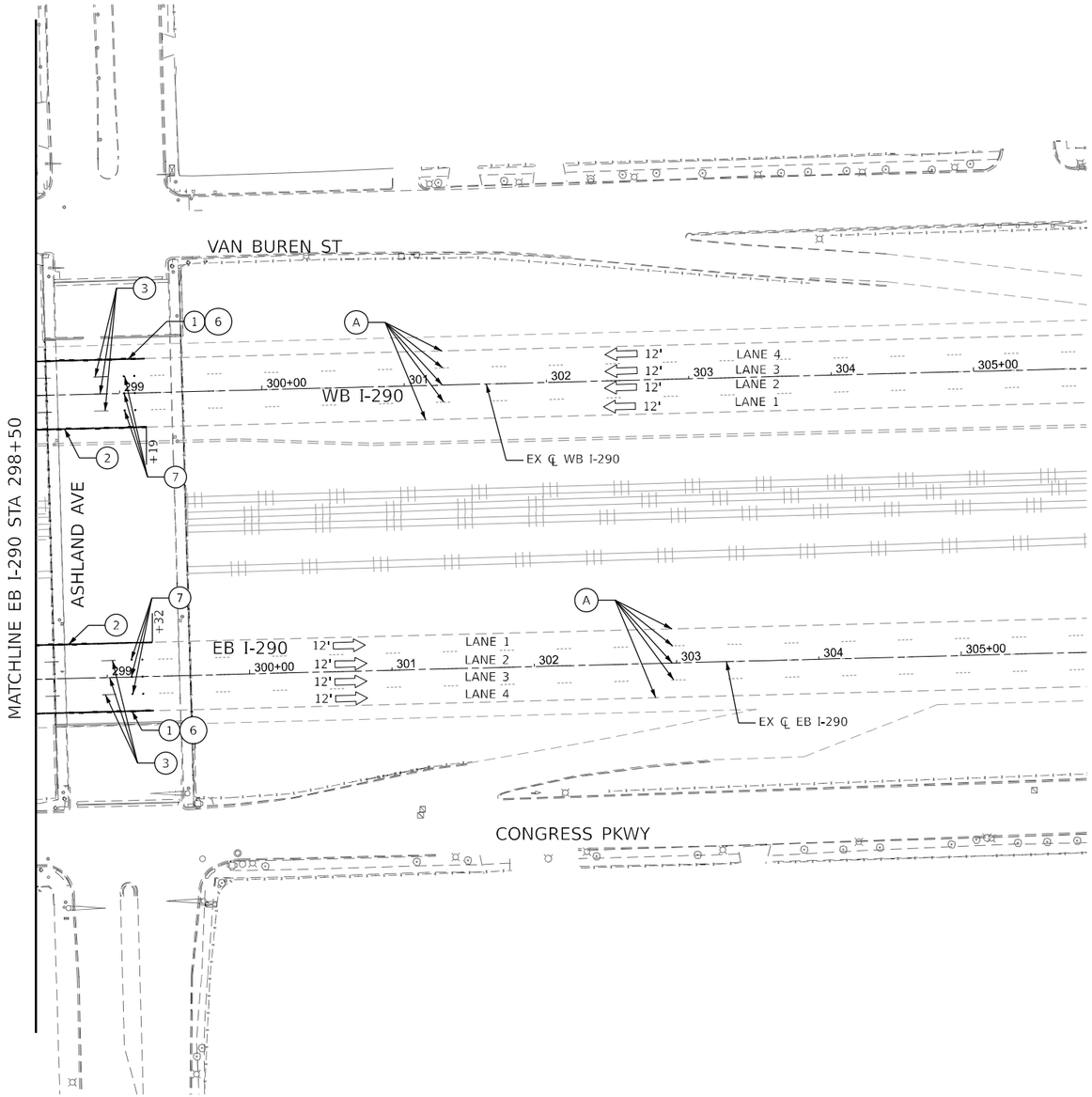

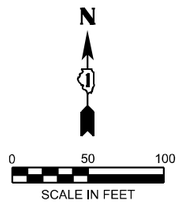

LEGEND

1. THERMOPLASTIC PAVEMENT MARKING - LINE 4" (SOLID WHITE)
2. THERMOPLASTIC PAVEMENT MARKING - LINE 4" (SOLID YELLOW)
3. THERMOPLASTIC PAVEMENT MARKING - LINE 5" (10' DASH - 30' SKIP WHITE)
4. THERMOPLASTIC PAVEMENT MARKING - LINE 8" (SOLID WHITE)
5. THERMOPLASTIC PAVEMENT MARKING - LINE 12" (SOLID WHITE)
6. SHOULDER RUMBLE STRIP, 16 INCH
7. RAISED REFLECTIVE PAVEMENT MARKER, REFLECTOR REPLACEMENT

A. EXISTING PAVEMENT MARKING

FILE NAME = P:\10-IL\14411-DOT - Sacramento and Paulina over I-290\Work\CADD\Paulina - Contract 62K64\CADD_Sheets\Civil\D162K64-sht-pmk-290.dgn

COLLINS ENGINEERS INC.

USER NAME = amartinez	DESIGNED - OAM	REVISED -	
	DRAWN - OAM	REVISED -	
PLOT SCALE = 100.0000 ' / in.	CHECKED - RAG	REVISED -	
PLOT DATE = 10/16/2025	DATE - 09/08/2025	REVISED -	

STATE OF ILLINOIS
DEPARTMENT OF TRANSPORTATION

FAI–290 (EISENHOWER EXPRESSWAY) AT PAULINA STREET
PAVEMENT MARKINGS (I–290)

SCALE: 1" = 50' | SHEET NO. 4 OF 4 SHEETS | STA. | TO STA.

F.A.I. RTE.	SECTION	COUNTY	TOTAL SHEETS	SHEET NO.
290	2019-191-B-R	COOK	265	108
		CONTRACT NO. 62K64		
FED. ROAD DIST. NO.	ILLINOIS	FED. AID PROJECT		

LANDSCAPING GENERAL NOTES

1. CITY WATER AND SEWER MAINS MAY BE LOCATED IN THE LANDSCAPE AREA.
2. THE CONTRACTOR WILL NOT BE ALLOWED TO PROCEED WITH ANY PLANTING WORK UNTIL ALL UTILITY OWNERS FIELD LOCATE THEIR FACILITIES WHICH MAY INTERFERE WITH CONSTRUCTION OPERATIONS,
3. THE ACTUAL LOCATION OF PROPOSED LANDSCAPING WILL BE ADJUSTED IN THE FIELD TO AVOID UTILITIES.
4. INTERSEEDING, CLASS 2A IS TO BE USED TO RENOVATE AREAS WHERE EXISTING TURF IS IN POOR CONDITION. EXACT LOCATIONS WILL BE DETERMINED DURING CONSTRUCTION BY THE ENGINEER.
5. UNDERBRUSH OR DEBRIS AT PLANTING LOCATIONS SHALL BE REMOVED AND DISPOSED OF ACCORDING TO SECTION 201 OF THE STANDARD SPECIFICATIONS. THIS WORK WILL NOT BE PAID FOR SEPARATELY, BUT THE COSTS SHALL BE CONSIDERED AS INCLUDED IN THE CONTRACT UNIT PRICES FOR THE CONSTRUCTION ITEMS INVOLVED, AND NO ADDITIONAL COMPENSATION WILL BE ALLOWED.
6. TOPSOIL EXCAVATED TO A DEPTH OF 6" IN AREAS THAT WILL BE DISTURBED BY PROPOSED WORK.
7. TOPSOIL REQUIRED BASED ON AREA OF PROPOSED LANDSCAPING.
8. PAY ITEM "TOPSOIL EXCAVATION AND PLACEMENT" WILL BE MEASURED FOR PAYMENT BASED ON THE TOTAL VOLUME OF TOPSOIL EXCAVATED.
9. EXCAVATED TOPSOIL IS TO BE STORED EITHER WITHIN CONTRACT'S LIMITS, OR OFF SITE AND THEN PLACED AGAIN FOR LANDSCAPING PURPOSES.
10. EXCAVATED TOPSOIL NOT REQUIRED ON THE PROJECT SHALL BE REMOVED FROM THE PROJECT SITE BY THE CONTRACTOR. THIS WORK IS INCLUDED IN THE PAY ITEM "TOPSOIL EXCAVATION AND PLACEMENT."
11. THE CONTRACTOR WILL CONTACT THE ROADSIDE DEVELOPMENT UNIT AT 847.705.4171,AND TO SCHEDULE LAYOUT OF INTERSEEDING, TREES, VINES, AND PERENNIALS AT LEAST 7 DAYS PRIOR TO PLANTING.
12. THE CONTRACTOR SHALL OBSERVE AND COMPLY WITH ALL SECTIONS OF THE ILLINOIS CUSTOM SPRAY LAW, INCLUDING LICENSING. CONTRACTOR PERSONNEL APPLYING HERBICIDES SHALL HAVE A VALID PESTICIDE APPLICATOR LICENSE ISSUED BY THE ILLINOIS DEPARTMENT OF AGRICULTURE. THE LICENSED PESTICIDE APPLICATOR SHALL SUBMIT THEIR CURRENT LICENSE TO THE ENGINEER. THE LICENSED PESTICIDE APPLICATOR SHALL BE QUALIFIED AT A MINIMUM IN RIGHT-OF-WAY AND AQUATICS. THE LICENSED APPLICATOR SHALL WORK ON-SITE.

LANDSCAPING SCHEDULE

LOCATION				TOPSOIL EXCAVATION AND PLACEMENT	TOPSOIL FURNISH AND PLACE, 12"	SEEDING, CLASS 2A	NITROGEN FERTILIZER NUTRIENT	POTASSIUM FERTILIZER NUTRIENT	EROSION CONTROL BLANKET
ALIGNMENT	FROM STATION	TO STATION	OFFSET	CU YD	SQ YD	ACRE	POUND	POUND	SQ YD
PAULINA ST	400+45.02	400+98.06	RT	11	12	0.02	1	1	62
PAULINA ST	400+48.04	401+00.29	LT	20	11	0.01	2	2	118
PAULINA ST	403+67.90	404+22.65	RT	8	13	0.01	1	1	43
PAULINA ST	403+69.52	404+16.37	LT	13	10	0.02	2	2	75
NOMINAL QUANTITY							270	270	
TOTAL:				52	46	0.25	276	276	298

LANDSCAPING SCHEDULE (CONT.)

	MOWING	INTERSEEDING, CLASS 2A	MULCH, METHOD 2	SUPPLEMENTAL WATERING	TREE, CARYA OVATA (SHAGBARK HICKORY), 2" CALIPER, BALLED AND BURLAPPED	TREE, QUERCUS MACROCARPA (BUR OAK), 2" CALIPER, BALLED AND BURLAPPED	TREE, QUERCUS X WAREI 'NADLER', (KINDRED SPIRIT HYBRID OAK), 2-1/2" CALIPER, BALLED AND BURLAPPED	TREE, CORNUS MAS (CORNELIAN CHERRY DOG WOOD), 6' HEIGHT, SHRUB FORM, BALLED AND BURLAPPED	SHRUB, AESCULUS PARVIFLORA (BOTTLEBRUSH BUCKEYE), CONTAINER GROWN, 5-GALLON	SHRUB, VIBURNUM DENTATUM CHRISTOM (BLUE MUFFIN ARROWWOOD VIBURNUM), 36" HEIGHT, BALLED AND BURLAPPED	EVERGREEN, THUJA OCCIDENTALIS SMARAGD (EMERALD GREEN AMERICAN ARBORVITAE), 6' HEIGHT, BALLED AND	VINE-HYDRANGEA ANOMALA SUBSP. PETIOLARIS (CLIMBING HYDRANGEA), 5-GALLON POT	VINE-PARTHENOCISSUS QUINQUEFOLIA (VIRGINIA CREEPER), 1-GALLON POT
	ACRE	ACRE	ACRE	UNIT	EACH	EACH	EACH	EACH	EACH	EACH	EACH	EACH	EACH
NOMINAL QUANTITY (SEE NOTE 11)	10	1.5	0.25	105	4	3	4	12	40	3	5	4	92
TOTAL:	10	1.5	0.25	105	4	3	4	12	40	3	5	4	92

LANDSCAPING SCHEDULE (CONT.)

	PERENNIAL PLANTS, WOODLAND TYPE, GALLON POT	PERENNIAL PLANT CARE	WEED CONTROL, BROADLEAF IN TURF	WEED CONTROL, NON-SELECTIVE AND NON-RESIDUAL	MULCH PLACEMENT 4"	INTERSEEDING (SPECIAL)	WEED CONTROL, BASAL TREATMENT	MOWING (SPECIAL)	INTERSEEDING, CLASS 4A (MODIFIED)	INTERSEEDING, CLASS 5 (MODIFIED)
	UNIT	SQ YD	POUND	GALLON	SQ YD	ACRE	GALLON	ACRE	ACRE	ACRE
NOMINAL QUANTITY (SEE NOTE 11)	3	575	3	3	500	0.3	5	2	0.7	0.5
TOTAL:	3	575	3	3	500	0.3	5	2	0.7	0.5

FILE NAME = P:\10-IL11411-IDOT - Sacramento and Paulina over I-290\Work\CADD\Paulina - Contract 62K64\CAD\2_Sheets\Civil\D1062K64-sht-lndscp-01.dgn

COLLINS ENGINEERS INC.

USER NAME = omartinez	DESIGNED - OAM	REVISED -
	DRAWN - OAM	REVISED -
PLOT SCALE = 40.0000 ' / in.	CHECKED - RAG	REVISED -
PLOT DATE = 9/4/2025	DATE - 09/08/2025	REVISED -

STATE OF ILLINOIS
DEPARTMENT OF TRANSPORTATION

FAI–290 (EISENHOWER EXPRESSWAY) AT PAULINA STREET
LANDSCAPING GENERAL NOTES AND SCHEDULES

SCALE: NTS | SHEET NO. 1 OF 3 SHEETS | STA. | TO STA.

F.A.I. RTE.	SECTION	COUNTY	TOTAL SHEETS	SHEET NO.
290	2019-191-B-R	COOK	265	109
		CONTRACT NO. 62K64		
FED. ROAD DIST. NO.	ILLINOIS	FED. AID PROJECT		

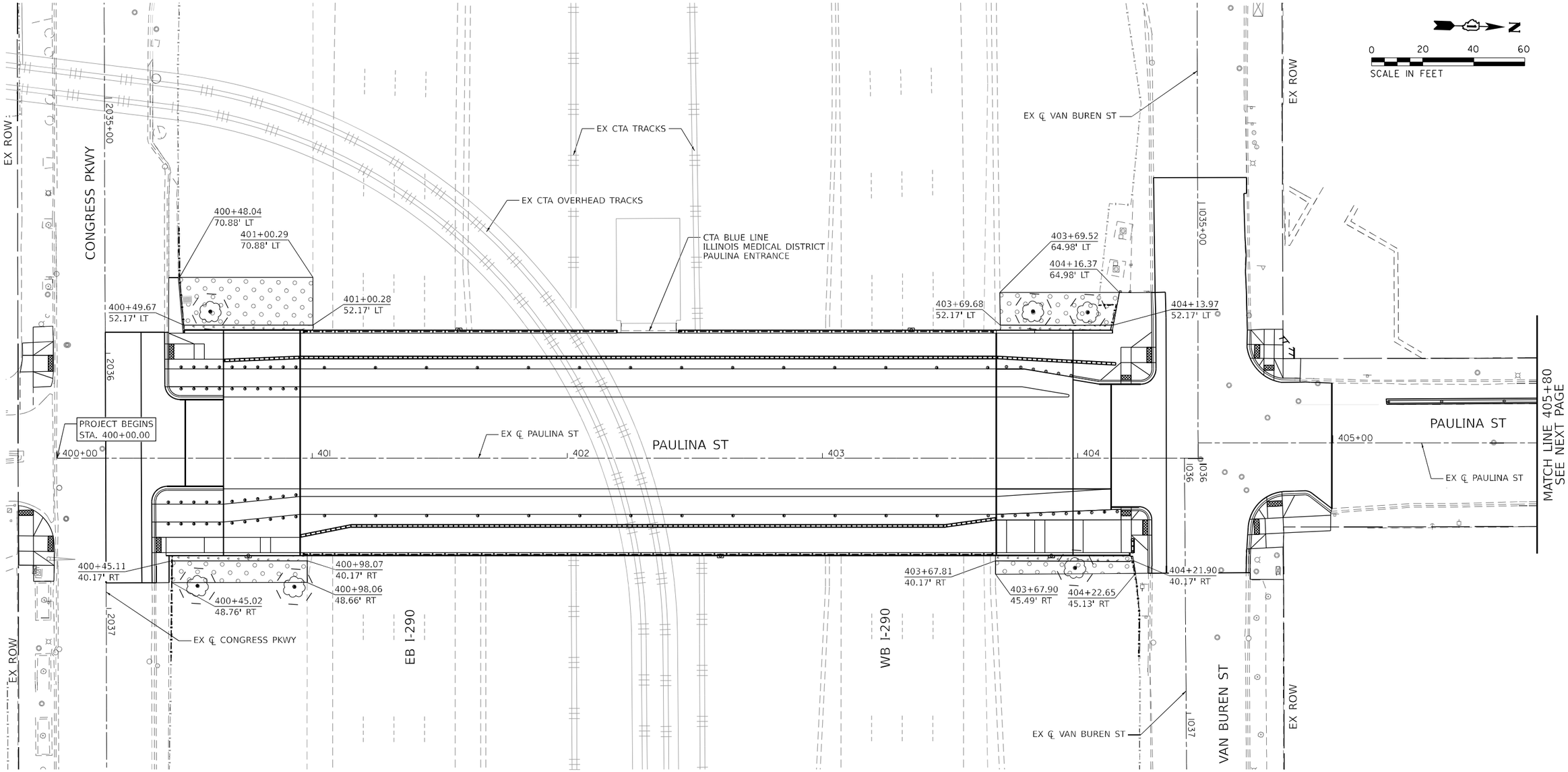

LEGEND

SEEDING CLASS 2A
TOPSOIL, 6"
EROSION CONTROL BLANKET

SEEDING CLASS 2A
TOPSOIL FURNISH AND PLACE, 12"
EROSION CONTROL BLANKET

TREE PRUINING

FILE NAME = P:\10-IL14411-4D01 - Sacramento and Paulina over I-290\Work\CADD\Paulina - Contract 62K64\CADD_Sheets\Civil\D162K64-sht-lndscp-02.dgn

COLLINS ENGINEERS INC.

USER NAME = omartinez	DESIGNED - OAM	REVISED -
	DRAWN - OAM	REVISED -
PLOT SCALE = 40.0000 ' / in.	CHECKED - RAG	REVISED -
PLOT DATE = 9/4/2025	DATE - 09/08/2025	REVISED -

STATE OF ILLINOIS
DEPARTMENT OF TRANSPORTATION

FAI–290 (EISENHOWER EXPRESSWAY) AT PAULINA STREET
LANDSCAPING PLAN

SCALE: 1" = 20' | SHEET NO. 2 OF 3 SHEETS | STA. | TO STA.

F.A.I. RTE.	SECTION	COUNTY	TOTAL SHEETS	SHEET NO.
290	2019-191-B-R	COOK	265	110
		CONTRACT NO. 62K64		
FED. ROAD DIST. NO.	ILLINOIS	FED. AID PROJECT		

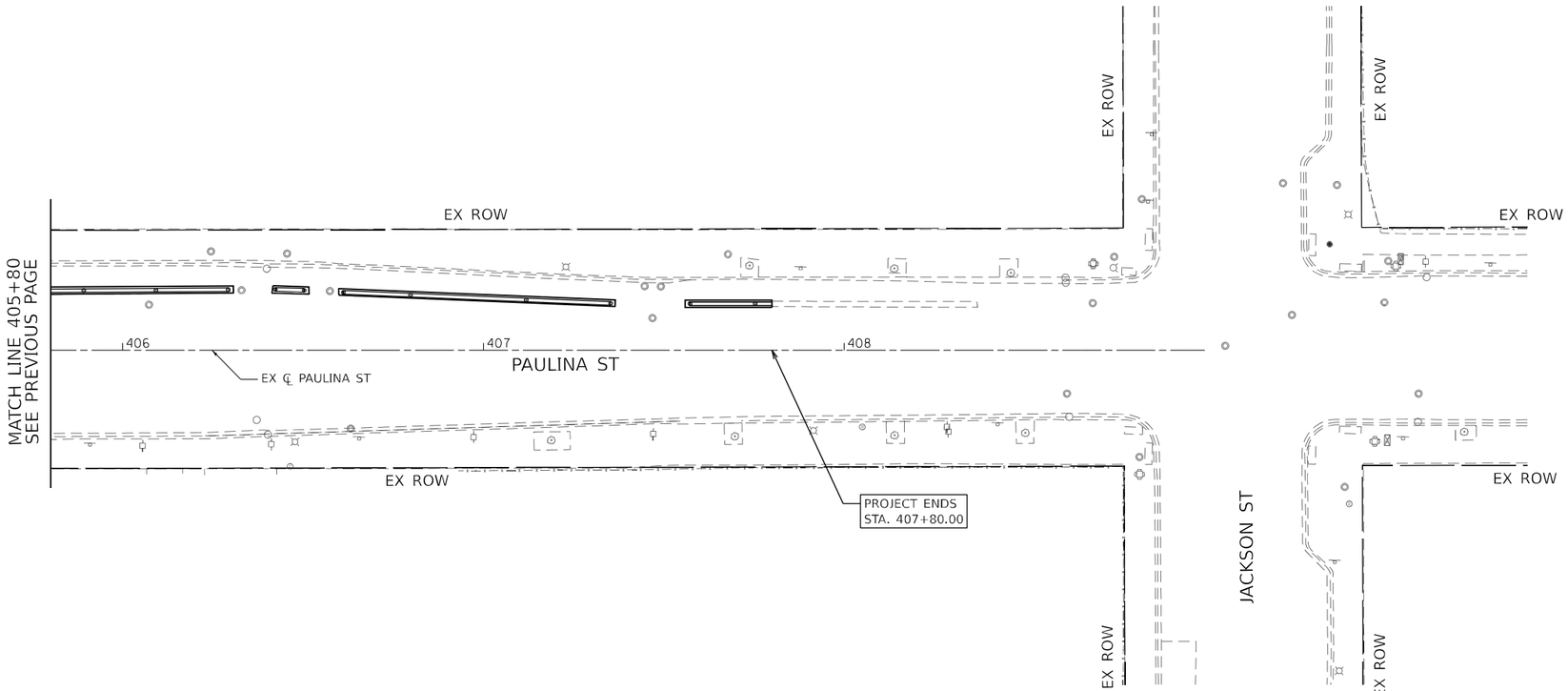

LEGEND

SEEDING CLASS 2A
TOPSOIL, 6"
EROSION CONTROL BLANKET

SEEDING CLASS 2A
TOPSOIL FURNISH AND PLACE, 12"
EROSION CONTROL BLANKET

TREE PRUINING

FILE NAME = P:\10-IL14411-3D01 - Sacramento and Paulina over I-290\Work\CADD\Paulina - Contract 62K64\CADD_Sheets\CivilD162K64-sht-Indscp-02.dgn

COLLINS ENGINEERS INC.

USER NAME = omartinez	DESIGNED - OAM	REVISED -	
	DRAWN - OAM	REVISED -	
PLOT SCALE = 40.0000 ' / in.	CHECKED - RAG	REVISED -	
PLOT DATE = 9/4/2025	DATE - 09/08/2025	REVISED -	

STATE OF ILLINOIS
DEPARTMENT OF TRANSPORTATION

FAI–290 (EISENHOWER EXPRESSWAY) AT PAULINA STREET
LANDSCAPING PLAN

SCALE: 1" = 20' | SHEET NO. 3 OF 3 SHEETS | STA. | TO STA.

F.A.I. RTE.	SECTION	COUNTY	TOTAL SHEETS	SHEET NO.
290	2019-191-B-R	COOK	265	111
		CONTRACT NO. 62K64		
FED. ROAD DIST. NO.	ILLINOIS	FED. AID PROJECT		

PROPOSED	PRESENT	
○➤	●➤	SIGNAL, TRAFFIC 3 SECTION 1-WAY ADJUSTABLE, 12" OR AS NOTED
◁○▷	◀●▶	SIGNAL, TRAFFIC 3 SECTION 2-WAY ADJUSTABLE, 12" OR AS NOTED
✳	✳	SIGNAL OPTICALLY PROGRAMMED
DON'T WALK	DON'T WALK	SIGNAL, PEDESTRIAN, DON'T WALK/WALK
→	→	SIGNAL FACE ARROW, 12" COLOR AS NOTED
	Y G	SIGNAL FACE, 1 SECTION YELLOW/GREEN ARROW DUAL INDICATION
◎	◉	PUSH BUTTON, PEDESTRIAN
		SIGN, ILLUMINATED, WITH MESSAGE OR SYMBOL AS INDICATED
		MAST ARM, MONOTUBE, STEEL. SIZE AS INDICATED (SEE DWG. #870)
		MAST ARM, TRUSS, ALUMINUM. SIZE AS INDICATED
◇	◇	CONTROLLER, TRAFFIC SIGNAL. PEDESTAL OR BASE MOUNTED AS INDICATED
⊠	⊠	CONTROLLER, STREET LIGHTING. PEDESTAL OR BASE MOUNTED. (DWG. 876 or 880)
⊠	⊠	CONTROLLER, STREET LIGHTING. POLE MOUNTED (DWG. #11940)
	⊗	POLE, WOOD. COMMONWEALTH EDISON COMPANY, SERVICE
◫	◧	POLE, CITY STEEL, ANCHOR BASE, 34'6",7 GA. 10" DI A. AND 15"B.C. 24"X7' FND. W/1¼" ANCHOR RODS DRG. #818.
◫H	◧H	POLE, CITY STEEL, ANCHOR BASE, 34'-6", 3 GA. 10" DIA. AND 15" B.C. 24"X9' FND. W/1¼" ANCHOR RODS DRG. #818 (16',20' or 26' M.A.)
◪	◪	POLE, CITY STEEL, ANCHOR BASE, 34"-6", 3GA., 11" DIA. AND 17¼" B.C. 30"X9' FND. W/1¼" ANCHOR RODS DRG. #816. (30' M.A.)
⊗H	●H	POLE, CITY STEEL, ANCHOR BASE 34'-6", 3 GA. 12½" DIA. AND 16½"B.C. 30"X11' FND. W/1½" ANCHOR RODS DRG.#317. (35',40' or 44' M.A.)
◫H	◧H	POLE, CITY STEEL, ANCHOR BASE, 32'-6", 3 GA. 10" DIA., WITH 3 GA. BAL. HSG. BASE AND 17¼" B. C. ON 30"X9' FND. W/ 11/4" ANCHOR RODS DRG. #816.
	◧	POLE, CITY STEEL, ANCHOR BASE, 20',27'-6",29'-6", 7 GA. WITH STEEL BAL. HSG. BASE AND FND. W/10" D. B.C. AND 1" ANCHOR RODS DRG. #716.
	◧H	POLE, CITY STEEL, ANCHOR BASE, 20',27'-6",29'-6", 3 GA., WITH STEEL BAL. HSG. BASE AND FND. W/10" D. B.C. AND 1" ANCHOR RODS DWG.#719.
	◐	POLE, CITY STEEL, ANCHOR BASE, 20',27'-6",29'-6" 7 GA., AND FND. WITH 10" B.C. AND 1" ANCHOR RODS DWG. #11408B.
	◐H	POLE, CITY STEEL, ANCHOR BASE, 20',27'-6",29'-6" 3 GA.,AND FND. WITH 10" B.C. AND 1" ANCHOR RODS DWG. #11408B.
⊘	◕	POLE , CITY STEEL, ANCHOR BASE, 32'-6", 7 GA., AND FND. WITH 11½" B.C. AND 1" ANCHOR RODS DWG. #753.
⊘H	◕H	POLE, CITY STEEL, ANCHR BASE, 32'-6", 3 GA., AND FND. WITH 11½" B.C. AND 1" ANCHOR RODS DWG. #753.
	◙	POLE, CITY STEEL, ANCHOR BASE, 32'-6" 7 GA., ALUM. BHB AND FND. WITH 15" B.C.-24"X7' WITH 1" ANCHOR RODS DRG. #691.
	◙H	POLE, CITY STEEL, ANCHOR BASE, 32'-6", 3 GA., ALUM. BHB AND FND. WITH 15" B.C. 24"X 7' WITH 1" ANCHOR RODS DWG. #691.
	◐	POLE, CITY ALUMINUM, WITH ROUND BAL. HSG. BASE, 25', 28', or 30' ON FND.WITH 14" B.C., ACQUIRED FROM CHICAGO PARK DISTRICT.
◉	◉	POLE, CITY STEEL, EMBEDDED, 4"X 9"X 35' 7 GA., TAPERED TUBULAR. (DWG. #658)
◉H	◉H	POLE, CITY STEEL, EMBEDDED, 4"X 9"X 35' 3 GA., TAPERED TUBULAR. (DWG. #658)
	●	POLE, CITY STEEL, EMBEDDED. (ACQUIRED FROM CTA)
	⊠	COLUMN,ELEVATED STRUCTURE
⊘	●	POLE, WOOD. (SIZE AS NOTED)
⊘	●	POLE, FOUNDATION WITH ELBOWS AS INDICATED.(SIZE AS NOTED)
○	●	POLE, ORNAMENTAL OR OTHER, AS INDICATED ON THE PLANS

PROPOSED	PRESENT	
Ⓗ	Ⓗ	HANDHOLE, HEAVY DUTY, 36" I.D. (DWG.#866)
○	○	HANDHOLE, CIRCULAR WITH 24"FRAME & COVER,30"I.D. (#867)
⬚	□	MANHOLE, CITY 3'X4'X4' DWG. #729 or 730; 4'X6'X6' DWG. #732or 733.
◿	◢	FOUNDATION, CONTROLLER OR PEDESTAL, 13" B.C.,20"X5' (DWG. #709)
▭	▭	FOUNDATION, TRAFFIC CONTROLLER DWG. #854. F.A. TERMINAL FND. DWG. #11972
Ⓟ	Ⓟ	FOUNDATION, TRAFFIC TYPE "P", BASE MOUNT. (DWG. #888)
⬭	⬭	FOUNDATION,CONTROLLER STREET LIGHT ,SPECIAL, 100A & 200A. (DWG.#876 & # 880)
◹	◣	FOUNDATION, TRANSCLOSURE; TRANSCLOSURE HOUSING. (DWG.# 583 & #891)
⊠	⊠	CONTROLLER,UNDERPASS LIGHTING 120V. & 240V. (DWG. #860 & #861)
	Ⓒ	MANHOLE, UTILITY, E=COMMONWEALTH EDISON; T=ILL.BELL TEL.; G=PEOPLES GAS; W=CITY WATER; P=CHGO PARK DISTRICT; CTA=C.T.A; S= SEWER
Ⓙ	⊘	JUNCTION BOX, IN PAVEMENT (DWG. #815)
▨	▨	DETECTOR LOOP IN PAVEMENT
		CONDUIT or P.V.C., NUMBER,SIZE & TYPE. (AS NOTED)
2D	2D	CONDUIT or P.V.C. ENCASED IN CONCRETE. (SECTION or NUMBER OF CONDUIT INDICATED
◬	◭	LUMINAIRE, H.P.S.V. 400W LAMP, 240V, SEMI-CUTOFF
◈	◈	LUMINAIRE, H.P.S.V. 400W LAMP, 240V, CUTOFF
⊗	⊗	LUMINAIRE, H.P.S.V. 310W LAMP, 240V
⊗	⊗	LUMINAIRE, H.P.S.V. 310W LAMP 240V, CUTOFF
Ⓥ	◒	LUMINAIRE, H.P.S.V. 150W LAMP, 240V
⊖	⊖	LUMINAIRE, H.P.S.V. 150W LAMP, 120V
◬	◭	LUMINAIRE, H.P.S.V. 250W LAMP, 120V, (ALLEY LIGHT)
⊕	⊕	LUMINAIRE, H.P.S.V. 250W LAMP, 120V
Ⓣ	Ⓣ	TERMINAL, CABINET F.A. & P.C.
Ⓕ	Ⓕ	FIRE ALARM BOX, MOUNTED
Ⓕ	Ⓕ	FIRE ALARM BOX, POLE MOUNTED
PR	PR	CABLE, TRAFFIC SIGNAL, COMMUNICATION, 1-PAIR #14 SHIELDED, IN CONDUIT
2	2	CABLE, TRAFFIC SIGNAL POWER SUPPLY, 2/C- #4, 600 V. EPR. IN CONDUIT
III	III	CABLE, TRAFFIC SIGNAL POWER SUPPLY, 2 1/C-#2 or #1/0 600V. EPR IN CONDUIT
II	II	CABLE, TRAFFIC SIGNAL POWER SUPPLY, 2/C-#10 or #6, 600V NSRI, IN CONDUIT
VII	VII	CABLE, TRAFFIC SIGNAL, 7/C-#12 or #14, 600V, EPR IN CONDUIT
X	X	CABLE, TRAFFIC SIGNAL, 10/C-#12 600V. EPR IN CONDUIT
	XIV	CABLE, TRAFFIC SIGNAL, 14/C-#14, 600V. EPR IN CONDUIT
XIX	XIX	CABLE, TRAFFIC SIGNAL, 19/C-#12 600V, EPR IN CONDUIT
2N	2N	CABLE, STREET LIGHT, 2 1/C-#6, 600V. RINS IN PARKWAY
2NC	2NC	CABLE, STREET LIGHT, 2 1/C-#6, 600V. RINS IN CONDUIT
3TC	3TC	CABLE, STREET LIGHT, 2 1/C-#6 EPRN 600V. & 1 1/C-#8 GREEN, TRIPLEXED,IN CONDUIT
3NC	3NC	CABLE, STREET LIGHT, 3 1/C-#1/0, or #2/0, or #4, 600V. EPR IN CONDUIT
2W	2W	WIRE, STREET LIGHT, 2 1/C-#6, HDNS. AERIAL
3W	3W	WIRE, STREET LIGHT, 2 1/C-#6 & 1 1/C #8, HDNS. AERIAL
111	111	CABLE, STREET LIGHT AERIAL, 3 1/C-#4 or #2 SELF SUPPORTING, 600V EPR
W FA	W FA	WIRE, F.A. & P.C. AERIAL, 1/C-#10, NUMERAL DENOTES QUANTITY
PR	PR	CABLE, F.A. & P.C. AERIAL, W/ MESSENGER #19-(NUMBER OF PAIRS AS INDICATED)
PR 6 6	6 PR	CABLE, F.A. & P.C. AERIAL, SELF SUPPORTING, #19-(NUMBER OF PAIRS AS INDICATED)
37 PR	37 PR	CABLE, F.A. & P.C., IN CONDUIT, #19-(NUMBER OF PAIRS AS INDICATED)
		DOWNLIGHT ASSEMBLY. (DWG. #850)
		LIGHT, TRAFFIC SAFETY ISLAND
◁○	◀●	FLASHING BEACON & DOWNLIGHT

ORNAMENTAL LUMINAIRES

PROPOSED	EXISTING		
◈	◈	310W PENDANT	(240V)
◈	◈	400W PENDANT	(240V)
◈	◈	250W PENDANT	(240V)
⬭	⬭	150W ACORN	(120V)
ⓥ	ⓥ	150W ACORN	(240V)
⬡	⬡	50W ACORN	(240V)
⬡	⬡	100W ACORN	(240V)
Ⓥ	Ⓥ	150W GLOBE	(240V)
⊡	⊡	100W GLOBE	(240V)
⊠	⊠	50W GLOBE	(240V)

C	04-01-02	REVISED/REDRAW R.POOL/B.I.
B	12-4-01	ADDED ORNAMENTAL SYMBOLS
A	8-6-96	REDRAWN
DATE		REVISION

STANDARD CODE FOR TRAFFIC SIGNALS/ STREET LIGHTING

CITY OF CHICAGO
DEPT. OF STREETS AND SANITATION
BUREAL OF ELECTRICITY
DIVISION OF ILECTRICAL ENGINEERING

DRAFTSMAN:	CHIEF DRAFTSMAN:	ENGINEER:
R. IVY	R. CARTER	R. POOL/R.C/W.T.

SUPERVISING ENGINEER: ELEC. DESIGN ENGR.
ENGINEER OF ELECTRICITY:
GEN'L SUPT. OF CONSTRUCTION:
DEPUTY COMMISSIONER:
SIZE: 22"| 36" SCALE:
DWG. NO. 826
DATE:

MODEL: Default
FILE NAME: F:\Projects\1058-Eisenhower\DOT-Cdline\Design\Shit\Traffic Signals\Paulina\TS 01 - CDOT CODE.dgn

AMES Engineering, Inc.
CONSULTING ENGINEERS
6330 Belmont Road, Suite 4B
Downers Grove, IL 60516

USER NAME = Srahman	DESIGNED - TM		REVISED -
	DRAWN - SR		REVISED -
PLOT SCALE = 39.9985 ' / in.	CHECKED - AS		REVISED -
PLOT DATE = 9/5/2025	DATE - $DATE		REVISED -

STATE OF ILLINOIS
DEPARTMENT OF TRANSPORTATION

TRAFFIC CONTROL SIGNALS
S. PAULINA STREET AND W. VAN BUREN STREET
S. PAULINA STREET AND W. CONGRESS PARKWAY

SCALE: SHEET OF SHEETS STA. TO STA.

F.A.I. RTE.	SECTION	COUNTY	TOTAL SHEETS	SHEET NO.
290	2019-191-B-R	COOK	265	112

CONTRACT NO. 62K64
ILLINOIS | FED. AID PROJECT

CITY OF CHICAGO STANDARD DRAWINGS

579. STANDARD METHOD FOR BACKFILLING CABLE AND CONDUIT TRENCHES IN SODDED PARKWAY AND LAWNS.

659. 2 BOLT MAST ARM ATTACHMENT POLE PLATE DETAILS

729. 3' X 4' X 4' CONCRETE MANHOLE WITH 24'' FRAME AND COVER

730. 3' X 4' X 4' CONCRETE MANHOLE WITH 24'' FRAME AND COVER

733. 4' X 6' X 6' CONCRETE MANHOLE WITH 24'' FRAME AND COVER

736. TYPICAL GROUNDING METHODS FOR BUREAU OF ELECTRICITY EQUIPMENT

740. TRAFFIC SIGNAL UPPER AND LOWER BRACKET ARM ASSEMBLY

741. TRAFFIC SIGNAL BRACKET ARM ASSEMBLY

806. 1½'' X 60'' STEEL ANCHOR ROD

808. 5.17'' X 10.0'' STEEL/34'-6'' POLE 7 OR 3 GAUGE

811. 1-1/4'' X 60'' STEEL ANCHOR ROD

813. INSTALLATION METHOD OF INSTALLING CONDUIT UNDER PAVED ROADWAY

816. FOUNDATION FOR 34'-6'' TRAFFIC SIGNAL POLE WITH 17¼'' BOLT CIRCLE

817. FOUNDATION FOR 34'-6'' TRAFFIC SIGNAL POLE WITH 16 1/2'' BOLT CIRCLE

818 FOUNDATION FOR 34' - 6'' ARTERIAL STREET LIGHT OR TRAFFIC SIGNAL POLE - 3 OR 7 GUAGE WITH 15'' BOLT CIRCLE

827. 7.67'' X 12.5'' STEEL/34-6-'' POLE 3 GAUGE

834. TYPICAL TRAFFIC SIGNAL MOUNTING DETAILS

835. TYPICAL TRAFFIC SIGNAL MOUNTING DETAILS

839. 12' MAST ARM FOR 2-BOLT ATTACHMENT

867. 30'' DIA. CONCRETE HANDHOLE

870. STEEL TRAFFIC SIGNAL MAST ARM-MONOTUBE

871. 36'' DIA. HEAVY DUTY CONCRETE HANDHOLE WITH 30'' FRAME AND COVER FOR STREET INSTALLATION

872. 24'' DIA. CIRCULAR MANHOLE FRAME AND COVER WITH 41-3/4'' O.D. FRAME

874. 30'' CIRCULAR STREET MANHOLE FRAME

888. TYPE ''P'' FOUNDATION FOR BASE MOUNTED TRAFFIC SIGNAL CONTROL CABINET

953. FOUNDATION FOR CHICAGO 200 GATEWAY POLE & CHICAGO 2000 PEDESTRIAN POLE

954. JUNCTION BOX FOR TRAFFIC SIGNAL & FIRE ALARM

7878. PULLING IRON

11420-A. CAST POLETOP FOR STEEL POLE.

11925. INSTALLATION OF SERVICE EQUIPMENT ON C.E. CO. WOOD POLES

11984. BANDING FITTINGS FOR POLE MOUNTING TRAFFIC SIGNAL

12268-A. TRAFFIC CONTROL SIGNALS STRIP WIRING LAYOUT

A		
DATE	REVISION	

TRAFFIC CONTROL SIGNALS
INDEX OF STANDARD DRAWINGS

CITY OF CHICAGO
DEPARTMENT OF TRANSPORTATION
DIVISION OF ENGINEERING

CONSULTING ENGINEERS:

AMES Engineering, Inc.
CONSULTING ENGINEERS
6330 Belmont Road, Suite 4B
Downers Grove, IL 60516

PROJECT # 10 8

DWG. NO.

SIZE: 22'' X 34'' | SCALE: AS NOTED | DATE: 9/8/2025

AMES Engineering, Inc.
CONSULTING ENGINEERS
6330 Belmont Road, Suite 4B
Downers Grove, IL 60516

USER NAME = Srahman	DESIGNED - TM	REVISED -	
	DRAWN - SR	REVISED -	
PLOT SCALE = 99.9962 ' / in.	CHECKED - AS	REVISED -	
PLOT DATE = 9/5/2025	DATE - $DATE	REVISED -	

STATE OF ILLINOIS
DEPARTMENT OF TRANSPORTATION

TRAFFIC CONTROL SIGNALS
S. PAULINA STREET AND W. VAN BUREN STREET
S. PAULINA STREET AND W. CONGRESS PARKWAY

SCALE: | SHEET OF SHEETS | STA. | TO STA.

F.A.I. RTE.	SECTION	COUNTY	TOTAL SHEETS	SHEET NO.
290	2019-191-B-R	COOK	265	113
		CONTRACT NO. 62K64		
	ILLINOIS	FED. AID PROJECT		

MODEL: Default
FILE NAME: F:\Projects\1058\Eisenhower IDOT-Collins\Design\Sht\Traffic Signals\Paulina\TS 02 - CDOT Indox.dgn

SCHEDULE OF QUANTITIES

ITEM NO.	DESCRIPTION	UNIT	PAULINA STREET @ CONGRESS PARKWAY	PAULINA STREET @ VAN BUREN STREET	TOTAL
1	ELECTRICAL MANHOLE 3'X4'X4' WITH 30" FRAME AND LID	EACH	1	1	2.0
2	HANDHOLE (SPECIAL)	EACH	3	3	6.0
3	DRILL EXISTING MANHOLE OR HANDHOLE	EACH	2		2.0
4	CONDUIT IN TRENCH 3" PVC (SCHEDULE 40)	FOOT	1350	1180	2530.0
5	CONDUIT ATTACHED TO STRUCTURE, 3" DIA. PVC COATED, GALVANIZED STEEL	FOOT	330		330.0
6	TRENCH AND BACKFILL WITH SCREENINGS	FOOT	651	390	1041.0
7	CONCRETE FOUNDATION FOR TYPE "SUPER P" BASE MOUNTED TRAFFIC SIGNAL CONTROLLER CABINET	EACH	1	1	2.0
8	CONCRETE FOUNDATION, 24" DIAMETER, 1 1/4" ANCHOR RODS, 15" BOLT CIRCLE, 7 FEET	EACH	1	2	3.0
9	CONCRETE FOUNDATION, 24" DIAMETER, 1 1/4" ANCHOR RODS, 15" BOLT CIRCLE, 9 FEET	EACH	1	1	2.0
10	CONCRETE FOUNDATION, 30" DIAMETER, 1 1/4" ANCHOR RODS, 17 1/4" BOLT CIRCLE, 9 FEET	EACH	2	2	4.0
11	ELECTRIC CABLE IN CONDUIT, SIGNAL NO. 14 19/C	FOOT	1086	1271	2357.0
12	ELECTRIC CABLE IN CONDUIT, SERVICE, NO. 2 2C	FOOT	661	311	972.0
13	ADVANCED TRANSPORTATION CONTROLLER, 16 LOAD BAY, "SUPER P" CABINET UPS	EACH	1	1	2.0
14	POLE STEEL, ANCHOR BASE, 10" DIAMETER, 7 GAUGE, 34'-6"	EACH	1	2	3.0
15	POLE STEEL, ANCHOR BASE, 10" DIAMETER, 3 GAUGE, 34'-6"	EACH	1	1	2.0
16	POLE STEEL, ANCHOR BASE, 11" DIAMETER, 3 GAUGE, 34'-6"	EACH	2	2	4.0
17	TRAFFIC SIGNAL POST, ALUMINUM, 10'	EACH	2	2	4.0
18	CONCRETE FOUNDATION, TYPE A, 12-INCH DIAMETER	FOOT	8	8	16.0
19	JUNCTION BOX, POLE OR POST MOUNTED	EACH	4	5	9.0
20	PLATE, WELD TO POLE 2-BOLT	EACH	3	3	6.0
21	SIGNAL HEAD, POLYCARBONATE, LED, 3-SECTION, BRACKET MOUNTED	EACH	3	3	6.0
22	SIGNAL HEAD, POLYCARBONATE, LED, 3-SECTION, MAST ARM MOUNTED	EACH	6	6	12.0
23	PEDESTRIAN SIGNAL HEAD, POLYCARBONATE, LED, 1-FACE, BRACKET MOUNTED WITH COUNT DOWN TIMER	EACH	6	8	14.0
24	ACCESSIBLE PEDESTRIAN SIGNALS	EACH	6	8	14.0
25	MAST ARM, STEEL, MONOTUBE, 26 FOOT	EACH	1	1	2.0
26	MAST ARM, STEEL, MONOTUBE, 30 FOOT	EACH	2	2	4.0
27	FIBER OPTIC CABLE IN CONDUIT, NO 62.5/125, MM12F, SM24F	FOOT	661		661.0
28	REMOVE EXISTING HANDHOLE	EACH	4	4	8.0
29	TEMPORARY TRAFFIC SIGNAL INSTALLATION	EACH	1	1	2.0
30	REMOVE EXISTING TRAFFIC SIGNAL EQUIPMENT	EACH	1	1	2.0
31	STREET NAME SIGNS	EACH	3	3	6.0
32	TEMPORARY TRAFFIC SIGNAL TIMING	EACH	1	1	2.0
33	RELOCATE EXISTING CAMERA	EACH	2		2.0
34	RELOCATE EXISTING ANTENNA	EACH		1	1.0
35	INTERCEPT EXISTING CONDUIT	EACH	1	1	2.0

NOTES:

1. EXISTING HANDHOLE FRAMES OR COVERS DEEMED RE-USABLE BY THE ENGINEER MUST BE DELIVERED TO THE CITY OF CHICAGO (CDOT) BUREAU OF ELECTRICITY AT A LOCATION INDENTIFIED BY THE ENGINEER. THE COST OF DELIVERING SALVAGED FRAMES AND COVERS TO CDOT WILL NOT BE PAID FOR SEPARATELY BUT SHALL BE CONSIDERED INCIDENTAL TO REMOVAL OF EXISTING HANDHOLES.

A		
DATE	REVISION	

TRAFFIC CONTROL SIGNALS
SCHEDULE OF QUANTITIES

S. PAULINA ST. & W. VAN BUREN ST.
S. PAULINA ST. AND W. CONGRESS PKWY.

CITY OF CHICAGO
DEPARTMENT OF TRANSPORTATION
DIVISION OF ENGINEERING

CONSULTING ENGINEERS:

AMES Engineering, Inc.
CONSULTING ENGINEERS
6330 Belmont Road, Suite 4B
Downers Grove, IL 60516

PROJECT # 1058

DWG. NO. XXXX

SIZE: 22" X 34" | SCALE: AS NOTED | DATE: 9/8/2025

AMES Engineering, Inc.
CONSULTING ENGINEERS
6330 Belmont Road, Suite 4B
Downers Grove, IL 60516

USER NAME = tmickey	DESIGNED - TM	REVISED -	
	DRAWN - SR	REVISED -	
PLOT SCALE = 39.9984 ' / in.	CHECKED - AS	REVISED -	
PLOT DATE = 10/8/2025	DATE - $DATE	REVISED -	

STATE OF ILLINOIS
DEPARTMENT OF TRANSPORTATION

TRAFFIC CONTROL SIGNALS
S. PAULINA STREET AND W. VAN BUREN STREET
S. PAULINA STREET AND W. CONGRESS PARKWAY

SCALE: | SHEET OF SHEETS | STA. | TO STA.

F.A.I. RTE.	SECTION	COUNTY	TOTAL SHEETS	SHEET NO.
290	2019-191-B-R	COOK	265	114
		CONTRACT NO. 62K64		
	ILLINOIS	FED. AID PROJECT		

MODEL: Default
FILE NAME: F:\Projects\1058-Eisenhower IDOT-Collins\Design\Sht\Traffic Signals\Paulina\TS 03 - CDOT Quantities.dgn

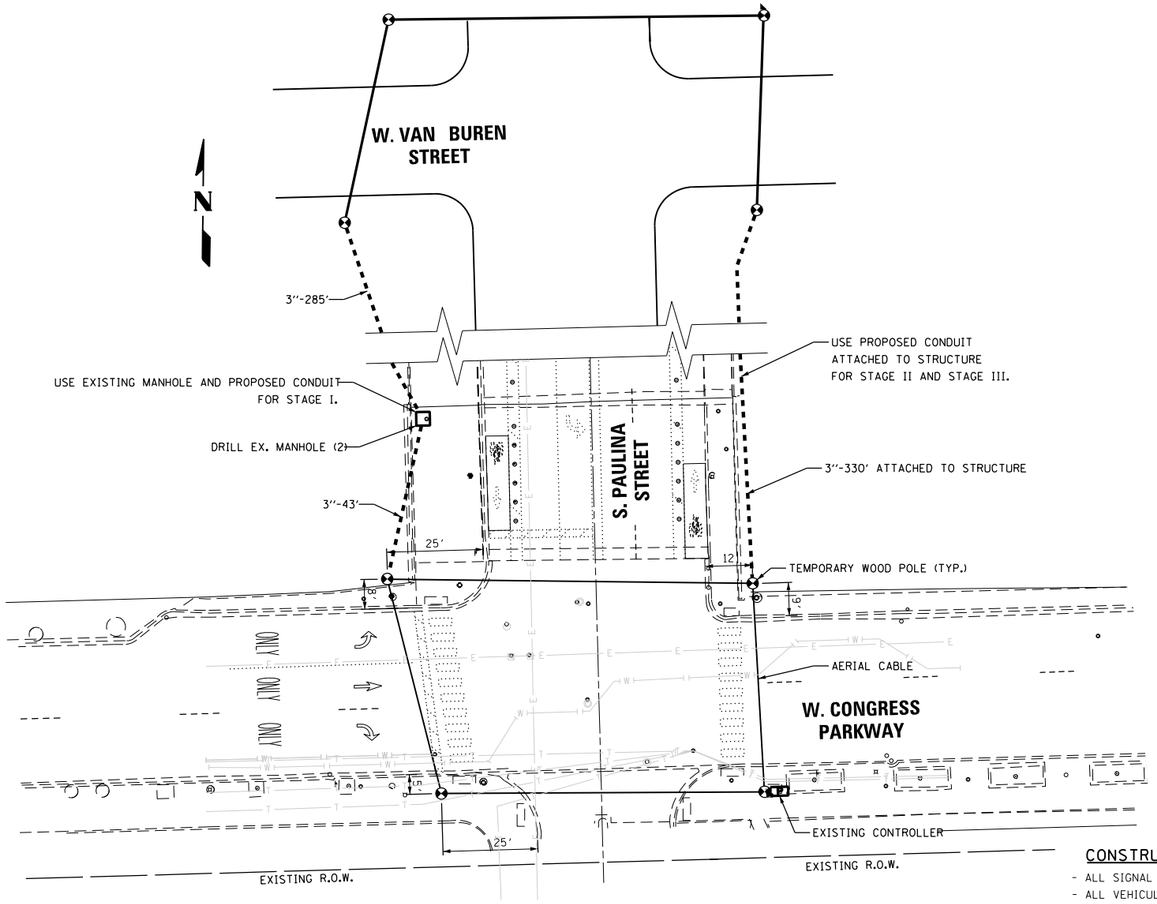

TEMPORARY TRAFFIC SIGNAL PLAN

SCALE: 1"=20'

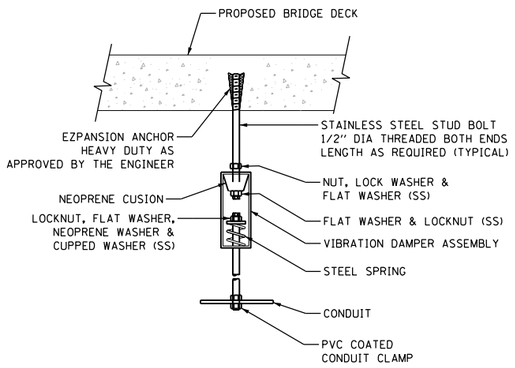

BRIDGE DECK CONDUIT INSTALLATION

BETWEEN TWO OUTER BEAMS - EAST SIDE

NOTES:

1. LIQUID TIGHT FLEXIBLE METAL CONDUIT, MAXIMUM LENGTH 6'-0". TYPICAL FOR EACH INSTANCE AS SHOWN. PROVIDE PVC COATED RIGID GALVANIZED STEEL CONDUIT AS REQUIRED NOT TO EXCEED 6'-0" OF FLEXIBLE LIQUID TIGHT METAL CONDUIT. LIQUID TIGHT FLEXIBLE METAL CONDUIT WILL BE INCLUDED IN THE COST OF THE CONDUIT ATTACHED TO STRUCTURE OF THE CORRESPONDING DIA., GALVANIZED STEEL, PVC COATED PAY ITEM EXCEPT THAT "DIA. CONDUIT AND " DIA. FLEXIBLE CONDUIT SHALL BE INCLUDED IN THE COST OF UNDERPASS LUMINAIRE INSTALLATION.
2. SECURE THE CONDUIT WITH CONDUIT BEAM CLAMPS AS SHOWN AT 5'-0" INTERVALS AND WITHIN 2'-0" MAXIMUM FROM ANY JUNCTION BOX, FLEXIBLE CONDUIT, OR CHANGE IN DIRECTION. ALL PVC COATED CONDUIT CLAMPS SHALL BE INCLUDED WITH THE COST OF THE "CONDUIT ATTACHED TO STRUCTURE, OF THE CORRESPONDING DIA., GALVANIZED STEEL, PVC COATED" PAY ITEM.
3. ALL CONDUIT ATTACHED TO STRUCTURE SHALL BE PVC COATED RIGID STEEL CONDUIT (PVCC RGC) TYPICAL.
4. IN NO INSTANCE SHALL ANY UNDERPASS CONDUIT OR ANY OTHER ELECTRICAL EQUIPMENT BE INSTALLED BELOW THE ELEVATION OF THE BOTTOM OF THE BRIDGE BEAM WHEN OVER ANY PAVEMENT (ROADWAY OR SHOULDER).

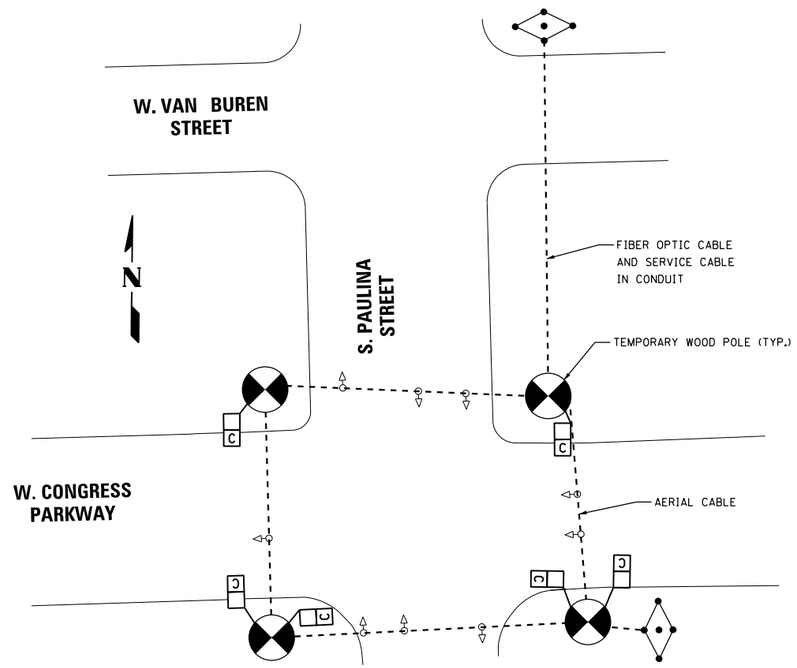

SIGNAL AND CABLE PLAN

NO SCALE

CONSTRUCTION NOTES

- ALL SIGNAL SECTIONS TO BE STANDARD 12" SIZE.
- ALL VEHICULAR SIGNAL HEADS TO BE OF STANDARD LED 3-SECTION UNITS UNLESS OTHERWISE NOTED.
- THIS PROJECT WILL BE PLACED ON PEOPLES GAS WATCH & PROTECT. NOTIFY SYSTEM INTEGRITY OPERATIONS SUPERVISOR AT CENTRAL-SHOP-OUC@PEOPLESGASDELIVERY.COM A MINIMUM OF 5 BUSINESS DAYS PRIOR TO EXCAVATION TO SET UP ON-SITE INSPECTION.
- EXCAVATIONS PROHIBITED WITHIN 50 FEET OF HIGH PRESSURE GAS MAINS UNLESS A REPRESENTATIVE OF THE PIPELINE IS NOTIFIED.
- PEOPLES GAS HIGH PRESSURE GAS MAIN IS PRESENT WITHIN AREA OF CONSTRUCTION. USE EXTREME CAUTION NEAR ALL GAS FACILITIES. HAND EXCAVATION IS REQUIRED TO LOCATE AND EXPOSE GAS MAINS PRIOR TO CROSSING AND WORKING WITHIN 5 FEET OF ALL GAS FACILITIES. A MINIMUM OF 5' HORIZONTAL EDGE TO EDGE CLEARANCE AND 24" VERTICAL EDGE TO EDGE CLEARANCE IS REQUIRED FOR HIGH PRESSURE GAS MAINS. CONTRACTOR SHALL NOTIFY CENTRAL-SHOP-OUC@PEOPLESGASDELIVERY.COM A MINIMUM OF 5 BUSINESS DAYSPRIOR TO EXCAVATION TO SET UPON SITE INSPECTION. PEOPLES GAS TO BE ON SITE TO MONITOR CONSTRUCTION ACTIVITIES WHEN WITHIN 5 FEET AND WHENEVER CROSSING HIGH PRESSURE GAS FACILITIES. PIPELINE MARKERS SHALL BE MAINTAINED.

REMOVE EXISTING TRAFFIC SIGNAL EQUIPMENT LSUM BREAKDOWN

3	EACH	MAST ARM ASSEMBLY AND POLE
2	EACH	TRAFFIC SIGNAL POST
10	EACH	SIGNAL HEAD, 1-FACE, 3-SECTION
6	EACH	PEDESTRIAN SIGNAL HEAD, 1-FACE

A	
DATE	REVISION

TEMPORARY TRAFFIC SIGNALS

S. PAULINA STREET &
W. CONGRESS PARKWAY

CITY OF CHICAGO
DEPARTMENT OF TRANSPORTATION
DIVISION OF ENGINEERING

CONSULTING ENGINEERS:

AMES Engineering, Inc.
CONSULTING ENGINEERS
6330 Belmont Road, Suite 4B
Downers Grove, IL 60516
PROJECT # 10 8

DWG. NO. T

SIZE: 22" X 34" | SCALE: AS NOTED | DATE: 9/8/2025

AMES Engineering, Inc.
CONSULTING ENGINEERS
6330 Belmont Road, Suite 4B
Downers Grove, IL 60516

USER NAME = Srahman	DESIGNED - TM	REVISED -	STATE OF ILLINOIS DEPARTMENT OF TRANSPORTATION	TRAFFIC CONTROL SIGNALS S. PAULINA STREET AND W. VAN BUREN STREET S. PAULINA STREET AND W. CONGRESS PARKWAY	
	DRAWN - SR	REVISED -			
PLOT SCALE = 39.9984 ' / in.	CHECKED - AS	REVISED -			
PLOT DATE = 11/7/2025	DATE - $DATE	REVISED -		SCALE: SHEET OF SHEETS STA. TO STA.	

F.A.I. RTE.	SECTION	COUNTY	TOTAL SHEETS	SHEET NO.
290	2019-191-B-R	COOK	265	115
		CONTRACT NO. 62K64		
	ILLINOIS FED. AID PROJECT			

MODEL: Default
FILE NAME: P:\Projects\1058-Eisenhower IDOT-Collins\Design\Sht\Traffic Signal\Paulina\TS 04 TMP - Paulina and Congress.dgn

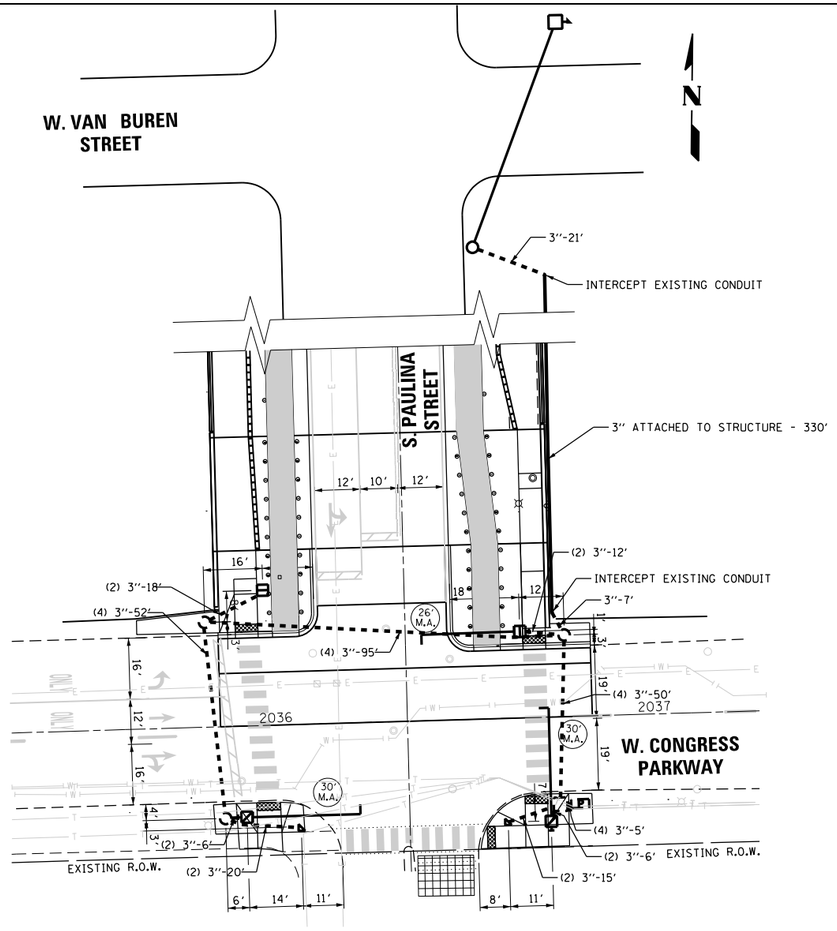

FOUNDATION AND CONDUIT PLAN
SCALE: 1"=20'

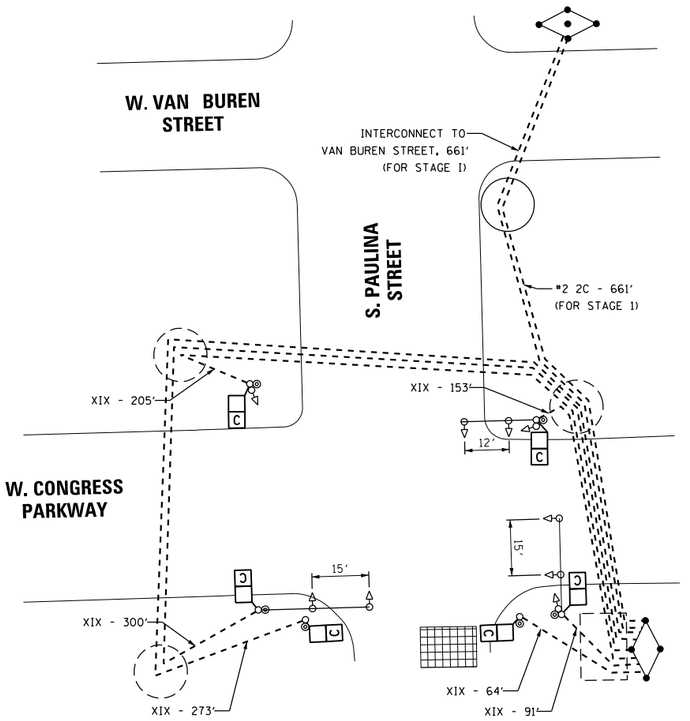

SIGNAL AND CABLE PLAN
NO SCALE

⊣ - DENOTES INSTALL D3-2 STREET NAME SIGN; 5' OFF POLE CENTERLINE

2 EACH - W. CONGRESS PARKWAY
1 EACH - S. PAULINA STREET

▦ - VIDEO DETECTOR ZONE

CONSTRUCTION NOTES

- THE CAMERAS AT THE NW AND SW CORNERS OF THE INTERSECTION SHALL BE RELOCATED TO THE NEW SIGNAL.
- FOREMAN TO CALL ALL UG UTILITIES PRIOR TO DIGGING TO DETERMINE THE EXACT LOCATION OF THEIR UG FACILITIES.
- MAINTAIN 3' MINIMUM CLEARANCE FROM ALL GAS MAIN.
- ALL SIGNAL SECTIONS TO BE STANDARD 12" SIZE.
- ALL VEHICULAR SIGNAL HEADS TO BE OF STANDARD LED 3-SECTION UNITS UNLESS OTHERWISE NOTED.
- ALL PEDESTRIAN SIGNAL HEADS TO BE 16" LED 1-SECTION UNITS WITH COUNTDOWN TIMERS, AND TO BE INSTALLED BELOW VEHICULAR SIGNAL WHERE APPLICABLE.
- ALL CONDUIT SHALL BE INSTALLED AT A DEPTH OF A MINIMUM OF 30 INCHES.
- THE METHOD OF INSTALLATION FOR CONDUIT SHALL BE TRENCH AND BACKFILL.

A	
DATE	REVISION

TRAFFIC CONTROL SIGNALS

S. PAULINA STREET &
W. CONGRESS PARKWAY

CITY OF CHICAGO
DEPARTMENT OF TRANSPORTATION
DIVISION OF ENGINEERING

CONSULTING ENGINEERS:

AMES Engineering, Inc.
CONSULTING ENGINEERS
6330 Belmont Road, Suite 4B
Downers Grove, IL 60516
PROJECT # 10 8

DWG. NO.
XXXX

SIZE: 22" X 34" | SCALE: AS NOTED | DATE: 9/8/2025

AMES Engineering, Inc.
CONSULTING ENGINEERS
6330 Belmont Road, Suite 4B
Downers Grove, IL 60516

USER NAME = Srahman	DESIGNED - TM	REVISED -			
	DRAWN - SR	REVISED -			
PLOT SCALE = 40.0000 ' / in.	CHECKED - AS	REVISED -			
PLOT DATE = 11/7/2025	DATE - $DATE	REVISED -			

STATE OF ILLINOIS
DEPARTMENT OF TRANSPORTATION

TRAFFIC CONTROL SIGNALS
S. PAULINA STREET AND W. VAN BUREN STREET
S. PAULINA STREET AND W. CONGRESS PARKWAY

SCALE: | SHEET OF SHEETS | STA. | TO STA.

F.A.I. RTE.	SECTION	COUNTY	TOTAL SHEETS	SHEET NO.
290	2019-191-B-R	COOK	265	116

CONTRACT NO. 62K64

ILLINOIS | FED. AID PROJECT

MODEL: Default
FILE NAME: F:\Projects\1058-Eisenhower IDOT-Collins\Design\Shit\Traffic Signals\Paulina\TS 05 TS MOD - Paulina and Congress.dgn

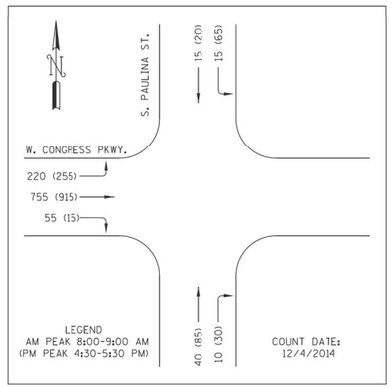

TRAFFIC SIGNAL REQUIREMENTS

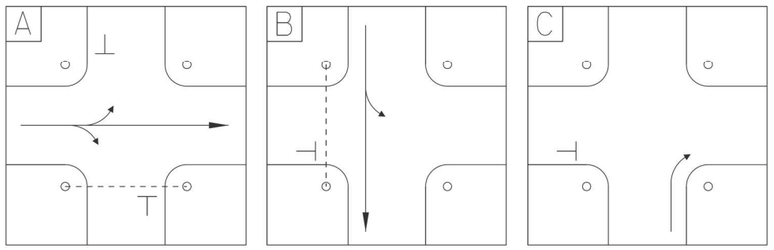

NOTES:

1. PAULINA STREET, SPEED LIMIT 30 MPH
   CONGRESS PARKWAY, SPEED LIMIT 30 MPH

GENERAL NOTES, TRAFFIC SIGNAL REQUIREMENTS

1. UNLESS OTHERWISE NOTED ALL VEHICULAR SIGNALS SHALL BE STANDARD 12-INCH DIA., ADJUSTABLE 3-SECTION UNITS, AND ALL PEDESTRIAN SIGNALS SHALL BE STANDARD 16-INCH, ADJUSTABLE, 1-SECTION UNITS WITH I.T.E. SPECIFICATION ("HAND-MAN") SYMBOLIC LENSES AND COUNTDOWN TIMERS. ALL OPTICALLY PROGRAMMABLE SHALL BE DENOTED BY AN ASTERISK (*), OR BY THE DESIGNATION "3M", AND SHALL BE AIMED AND PROGRAMMED WITH THE GUIDANCE OF THE DESIGNING TRAFFIC ENGINEER.
2. UNLESS OTHERWISE NOTED, ALL MAST ARMS SHOWN SHALL BE CANTILEVER MOUNTED. TAPERED STEEL. MONOTUBE ARM.
3. ANY SIGNAL MOUNTING SHOWN LABELED IS THE RECOMMENDATION OF THE DESIGNING TRAFFIC ENGINEER, AND SHALL BE FINALIZED BY THE DIVISION OF ELECTRICAL OPERATIONS. ALL SIGNAL HARDWARE SHALL PREFERABLY BE INSTALLED ON THE SIDE OF POLE/PEDESTAL AWAY FROM THE TRAVELED WAY.
4. CARE SHALL BE TAKEN DURING CONSTRUCTION TO ACCOMMODATE ANY UNDERGROUND STRUCTURES ENCOUNTERED (VAULTS, MANHOLES, CONDUITS, ETC.).
5. A MINIMUM DISTANCE OF 3 FEET FROM CURB FACE TO POLE/PEDESTAL CENTERLINE IS DESIRABLE, BUT MAY BE CHANGED FOR THE ABOVE MENTIONED ACCOMMODATION, UPON CONSULTING WITH THE DESIGNING TRAFFIC ENGINEER.
6. TACTILE ARROW FOR APS PUSHBUTTONS SHALL BE ALIGNED PARALLEL TO THE DIRECTION OF TRAVEL ON THE ASSOCIATED CROSSWALK.
7. APS PUSHBUTTONS ON PARKWAY OR ON LEDGE SHALL BE EITHER ALIGNED FLUSH WITH EDGE OR LEVEL ACCESSIBLE PATH OR LESS THAN 10" FROM IT. APS EXTENSIONS SHALL BE USED TO SATISFY REQUIREMENT.

LEGEND

- EXISTING TRAFFIC SIGNAL HEAD
- PROPOSED TRAFFIC SIGNAL HEAD
- EXISTING COUNTDOWN PEDESTRIAN SIGNAL
- PROPOSED COUNTDOWN PEDESTRIAN SIGNAL
- EXISTING TRAFFIC SIGNAL POLE OR POST
- PROPOSED TRAFFIC SIGNAL POLE OR POST
- EXISTING TRAFFIC SIGNAL MAST ARM
- PROPOSED TRAFFIC SIGNAL MAST ARM
- EXISTING COLUMNS
- STRUCTURE MOUNTED
- PROPOSED BUS "QUEUE JUMP" SIGNAL
- B PROPOSED BIKE SIGNAL
- L RETROREFLECTIVE "LEFT/RIGHT TURN ON GREEN ARROW ONLY" SIGN
- T RETROREFLECTIVE "BUS SIGNAL" SIGN
- H HORIZONTALLY MOUNTED
- TEMPORARY WOOD POLE

CONSULTANT FIRM NAME/ ADDRESS AMES Engineering, Inc. CONSULTING ENGINEERS 6330 Belmont Road, Suite 4B Downers Grove, IL 60516	CITY OF CHICAGO DEPARTMENT OF TRANSPORTATION DIVISION OF TRAFFIC SAFETY
	TRAFFIC SIGNAL REQUIREMENT PLAN
	S. PAULINA STREET AT W. CONGESS PARKWAY MAINTENANCE OF TRAFFIC - STAGE 1
DESIGNED BY: TOBY MICKEY	REVIEWED BY: TRAFFIC ENGINEER
APPROVED BY: AHSAN SIDDIQI	APPROVED BY: TRAFFIC ENGINEER
DATE: 07-18-2025	DATE: / SCALE: 1"=20' / SHEET 1 OF 1

MODEL: Default
FILE NAME: F:\Projects\1054-Eisenhower EDOT-Collins\Design\Shl\Traffic Signals\Paulina TS 08 MOT TSRs - Paulina and Congress.dgn

AMES Engineering, Inc. CONSULTING ENGINEERS 6330 Belmont Road, Suite 4B Downers Grove, IL 60516	USER NAME = Srahman	DESIGNED - TM	REVISED -	STATE OF ILLINOIS DEPARTMENT OF TRANSPORTATION	TRAFFIC CONTROL SIGNALS S. PAULINA STREET AND W. VAN BUREN STREET S. PAULINA STREET AND W. CONGRESS PARKWAY
		DRAWN - SR	REVISED -		
	PLOT SCALE = 39.9984 ' / In.	CHECKED - AS	REVISED -		
	PLOT DATE = 9/5/2025	DATE - $DATE	REVISED -		SCALE: / SHEET OF SHEETS / STA. / TO STA.

F.A.I. RTE.	SECTION	COUNTY	TOTAL SHEETS	SHEET NO.
290	2019-191-B-R	COOK	265	117
		CONTRACT NO. 62K64		
		ILLINOIS	FED. AID PROJECT	

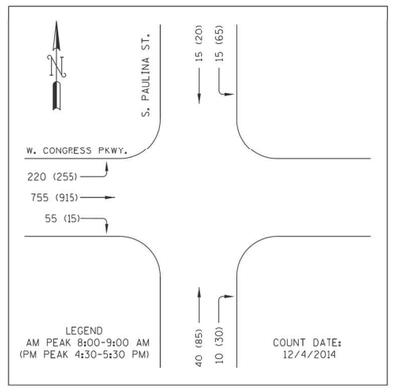

TRAFFIC SIGNAL REQUIREMENTS

NOTES:

1. PAULINA STREET, SPEED LIMIT 30 MPH
   CONGRESS PARKWAY, SPEED LIMIT 30 MPH

GENERAL NOTES, TRAFFIC SIGNAL REQUIREMENTS

1. UNLESS OTHERWISE NOTED ALL VEHICULAR SIGNALS SHALL BE STANDARD 12-INCH DIA., ADJUSTABLE 3-SECTION UNITS, AND ALL PEDESTRIAN SIGNALS SHALL BE STANDARD 16-INCH, ADJUSTABLE, 1-SECTION UNITS WITH I.T.E.-SPECIFICATION ('HAND-MAN') SYMBOLIC LENSES AND COUNTDOWN TIMERS. ALL OPTICALLY PROGRAMMABLE SHALL BE DENOTED BY AN ASTERISK (•), OR BY THE DESIGNATION "3M", AND SHALL BE AIMED AND PROGRAMMED WITH THE GUIDANCE OF THE DESIGNING TRAFFIC ENGINEER.
2. UNLESS OTHERWISE NOTED, ALL MAST ARMS SHOWN SHALL BE CANTILEVER MOUNTED, TAPERED STEEL, MONOTUBE ARM.
3. ANY SIGNAL MOUNTING SHOWN LABELED IS THE RECOMMENDATION OF THE DESIGNING TRAFFIC ENGINEER, AND SHALL BE FINALIZED BY THE DIVISION OF ELECTRICAL OPERATIONS. ALL SIGNAL HARDWARE SHALL PREFERABLY BE INSTALLED ON THE SIDE OF POLE/PEDESTAL AWAY FROM THE TRAVELED WAY.
4. CARE SHALL BE TAKEN DURING CONSTRUCTION TO ACCOMMODATE ANY UNDERGROUND STRUCTURES ENCOUNTERED (VAULTS, MANHOLES, CONDUITS, ETC.).
5. A MINIMUM DISTANCE OF 3 FEET FROM CURB FACE TO POLE/PEDESTAL CENTERLINE IS DESIRABLE, BUT MAY BE CHANGED FOR THE ABOVE MENTIONED ACCOMMODATION, UPON CONSULTING WITH THE DESIGNING TRAFFIC ENGINEER.
6. TACTILE ARROW FOR APS PUSHBUTTONS SHALL BE ALIGNED PARALLEL TO THE DIRECTION OF TRAVEL ON THE ASSOCIATED CROSSWALK.
7. APS PUSHBUTTONS ON PARKWAY OR ON LEDGE SHALL BE EITHER ALIGNED FLUSH WITH EDGE OR LEVEL ACCESSIBLE PATH OR LESS THAN 10" FROM IT. APS EXTENSIONS SHALL BE USED TO SATISFY REQUIREMENT.

LEGEND

- EXISTING TRAFFIC SIGNAL HEAD
- PROPOSED TRAFFIC SIGNAL HEAD
- EXISTING COUNTDOWN PEDESTRIAN SIGNAL
- PROPOSED COUNTDOWN PEDESTRIAN SIGNAL
- EXISTING TRAFFIC SIGNAL POLE OR POST
- PROPOSED TRAFFIC SIGNAL POLE OR POST
- EXISTING TRAFFIC SIGNAL MAST ARM
- PROPOSED TRAFFIC SIGNAL MAST ARM
- EXISTING COLUMNS
- STRUCTURE MOUNTED
- PROPOSED BUS "QUEUE JUMP" SIGNAL
- B PROPOSED BIKE SIGNAL
- L RETROREFLECTIVE "LEFT/RIGHT TURN ON GREEN ARROW ONLY" SIGN
- T RETROREFLECTIVE "BUS SIGNAL" SIGN
- H HORIZONTALLY MOUNTED
- TEMPORARY WOOD POLE

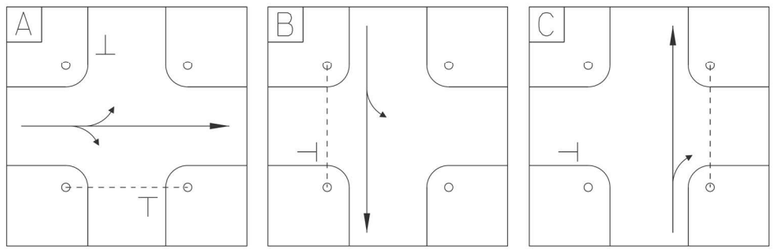

CONSULTANT FIRM NAME/ ADDRESS	CITY OF CHICAGO DEPARTMENT OF TRANSPORTATION DIVISION OF TRAFFIC SAFETY	
AMES Engineering, Inc. CONSULTING ENGINEERS 6330 Belmont Road, Suite 4B Downers Grove, IL 60516	TRAFFIC SIGNAL REQUIREMENT PLAN	
	S. PAULINA STREET AT W. CONGESS PARKWAY MAINTENANCE OF TRAFFIC - WINTER STAGE	
DESIGNED BY: TOBY MICKEY	REVIEWED BY: TRAFFIC ENGINEER	
APPROVED BY: AHSAN SIDDIQI	APPROVED BY: TRAFFIC ENGINEER	
DATE: 07-18-2025	DATE:	SCALE: 1"=20' / SHEET 1 OF 1

MODEL: Default
FILE NAME: F:\Projects\1058-Eisenhower IDOT-Collins\Design\Shit\Traffic Signals\Paulina\TS 07 MOT TSRs - Paulina and Congress.dgn

AMES Engineering, Inc. CONSULTING ENGINEERS 6330 Belmont Road, Suite 4B Downers Grove, IL 60516					
USER NAME = Srahman	DESIGNED - TM	REVISED -	STATE OF ILLINOIS DEPARTMENT OF TRANSPORTATION	TRAFFIC CONTROL SIGNALS S. PAULINA STREET AND W. VAN BUREN STREET S. PAULINA STREET AND W. CONGRESS PARKWAY	
	DRAWN - SR	REVISED -			
PLOT SCALE = 39.9984 ' / In.	CHECKED - AS	REVISED -			
PLOT DATE = 9/5/2025	DATE - $DATE	REVISED -		SCALE: / SHEET OF SHEETS / STA. / TO STA.	

F.A.I. RTE.	SECTION	COUNTY	TOTAL SHEETS	SHEET NO.
290	2019-191-B-R	COOK	265	118
		CONTRACT NO. 62K64		
	ILLINOIS	FED. AID PROJECT		

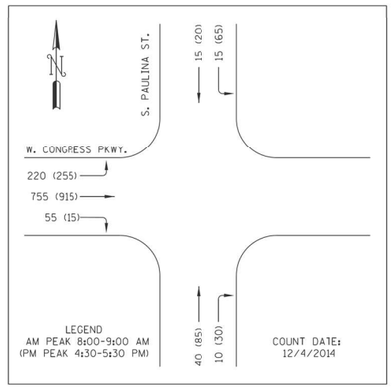

TRAFFIC SIGNAL REQUIREMENTS

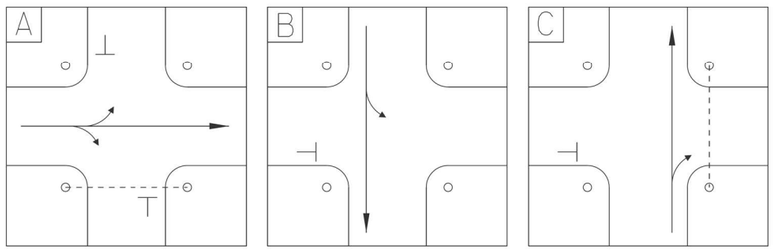

NOTES:

1. PAULINA STREET, SPEED LIMIT 30 MPH
   CONGRESS PARKWAY, SPEED LIMIT 30 MPH

GENERAL NOTES, TRAFFIC SIGNAL REQUIREMENTS

1. UNLESS OTHERWISE NOTED ALL VEHICULAR SIGNALS SHALL BE STANDARD 12-INCH DIA., ADJUSTABLE 3-SECTION UNITS, AND ALL PEDESTRIAN SIGNALS SHALL BE STANDARD 16-INCH, ADJUSTABLE, 1-SECTION UNITS WITH I.T.E.-SPECIFICATION ('HAND-MAN') SYMBOLIC LENSES AND COUNTDOWN TIMERS. ALL OPTICALLY PROGRAMMABLE SHALL BE DENOTED BY AN ASTERISK (*), OR BY THE DESIGNATION "3M", AND SHALL BE AIMED AND PROGRAMMED WITH THE GUIDANCE OF THE DESIGNING TRAFFIC ENGINEER.
2. UNLESS OTHERWISE NOTED, ALL MAST ARMS SHOWN SHALL BE CANTILEVER MOUNTED, TAPERED STEEL, MONOTUBE ARM.
3. ANY SIGNAL MOUNTING SHOWN LABELED IS THE RECOMMENDATION OF THE DESIGNING TRAFFIC ENGINEER, AND SHALL BE FINALIZED BY THE DIVISION OF ELECTRICAL OPERATIONS. ALL SIGNAL HARDWARE SHALL PREFERABLY BE INSTALLED ON THE SIDE OF POLE/PEDESTAL AWAY FROM THE TRAVELED WAY.
4. CARE SHALL BE TAKEN DURING CONSTRUCTION TO ACCOMMODATE ANY UNDERGROUND STRUCTURES ENCOUNTERED (VAULTS, MANHOLES, CONDUITS, ETC.).
5. A MINIMUM DISTANCE OF 3 FEET FROM CURB FACE TO POLE/PEDESTAL CENTERLINE IS DESIRABLE, BUT MAY BE CHANGED FOR THE ABOVE MENTIONED ACCOMMODATION, UPON CONSULTING WITH THE DESIGNING TRAFFIC ENGINEER.
6. TACTILE ARROW FOR APS PUSHBUTTONS SHALL BE ALIGNED PARALLEL TO THE DIRECTION OF TRAVEL ON THE ASSOCIATED CROSSWALK.
7. APS PUSHBUTTONS ON PARKWAY OR ON LEDGE SHALL BE EITHER ALIGNED FLUSH WITH EDGE OR LEVEL ACCESSIBLE PATH OR LESS THAN 10" FROM IT. APS EXTENSIONS SHALL BE USED TO SATISFY REQUIREMENT.

LEGEND

- EXISTING TRAFFIC SIGNAL HEAD
- PROPOSED TRAFFIC SIGNAL HEAD
- EXISTING COUNTDOWN PEDESTRIAN SIGNAL
- PROPOSED COUNTDOWN PEDESTRIAN SIGNAL
- EXISTING TRAFFIC SIGNAL POLE OR POST
- PROPOSED TRAFFIC SIGNAL POLE OR POST
- EXISTING TRAFFIC SIGNAL MAST ARM
- PROPOSED TRAFFIC SIGNAL MAST ARM
- EXISTING COLUMNS
- STRUCTURE MOUNTED
- PROPOSED BUS "QUEUE JUMP" SIGNAL
- PROPOSED BIKE SIGNAL
- RETROREFLECTIVE "LEFT/RIGHT TURN ON GREEN ARROW ONLY" SIGN
- RETROREFLECTIVE "BUS SIGNAL" SIGN
- HORIZONTALLY MOUNTED
- TEMPORARY WOOD POLE

CONSULTANT FIRM NAME/ ADDRESS AMES Engineering, Inc. CONSULTING ENGINEERS 6330 Belmont Road, Suite 4B Downers Grove, IL 60516	CITY OF CHICAGO DEPARTMENT OF TRANSPORTATION DIVISION OF TRAFFIC SAFETY
	TRAFFIC SIGNAL REQUIREMENT PLAN
	S. PAULINA STREET AT W. CONGESS PARKWAY MAINTENANCE OF TRAFFIC - STAGE 2
DESIGNED BY: TOBY MICKEY	REVIEWED BY: TRAFFIC ENGINEER
APPROVED BY: AHSAN SIDDIQI	APPROVED BY: TRAFFIC ENGINEER
DATE: 07-18-2025	DATE: / SCALE: 1"=20' / SHEET 1 OF 1

MODEL: Default
FILE NAME: F:\Projects\1058-Eisenhower IDOT-Collins\Design\Shift\Traffic Signals\Paulina\TS 08 MOT TSRs - Paulina and Congress.dgn

AMES Engineering, Inc.
CONSULTING ENGINEERS
6330 Belmont Road, Suite 4B
Downers Grove, IL 60516

USER NAME = Srahman	DESIGNED - TM	REVISED -	STATE OF ILLINOIS DEPARTMENT OF TRANSPORTATION	TRAFFIC CONTROL SIGNALS S. PAULINA STREET AND W. VAN BUREN STREET S. PAULINA STREET AND W. CONGRESS PARKWAY	
	DRAWN - SR	REVISED -			
PLOT SCALE = 39.9984 ' / In.	CHECKED - AS	REVISED -			
PLOT DATE = 9/5/2025	DATE - $DATE	REVISED -		SCALE: / SHEET OF SHEETS / STA. / TO STA.	

F.A.I. RTE.	SECTION	COUNTY	TOTAL SHEETS	SHEET NO.
290	2019-191-B-R	COOK	265	119
		CONTRACT NO. 62K64		
	ILLINOIS	FED. AID PROJECT		

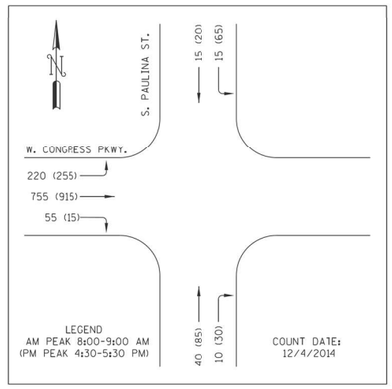

TRAFFIC SIGNAL REQUIREMENTS

NOTES:

1. PAULINA STREET, SPEED LIMIT 30 MPH
   CONGRESS PARKWAY, SPEED LIMIT 30 MPH

GENERAL NOTES, TRAFFIC SIGNAL REQUIREMENTS

1. UNLESS OTHERWISE NOTED ALL VEHICULAR SIGNALS SHALL BE STANDARD 12-INCH DIA., ADJUSTABLE 3-SECTION UNITS, AND ALL PEDESTRIAN SIGNALS SHALL BE STANDARD 16-INCH, ADJUSTABLE, 1-SECTION UNITS WITH I.T.E.-SPECIFICATION ('HAND-MAN') SYMBOLIC LENSES AND COUNTDOWN TIMERS. ALL OPTICALLY PROGRAMMABLE SHALL BE DENOTED BY AN ASTERISK (*), OR BY THE DESIGNATION "3M", AND SHALL BE AIMED AND PROGRAMMED WITH THE GUIDANCE OF THE DESIGNING TRAFFIC ENGINEER.
2. UNLESS OTHERWISE NOTED, ALL MAST ARMS SHOWN SHALL BE CANTILEVER MOUNTED, TAPERED STEEL, MONOTUBE ARM.
3. ANY SIGNAL MOUNTING SHOWN LABELED IS THE RECOMMENDATION OF THE DESIGNING TRAFFIC ENGINEER, AND SHALL BE FINALIZED BY THE DIVISION OF ELECTRICAL OPERATIONS. ALL SIGNAL HARDWARE SHALL PREFERABLY BE INSTALLED ON THE SIDE OF POLE/PEDESTAL AWAY FROM THE TRAVELED WAY.
4. CARE SHALL BE TAKEN DURING CONSTRUCTION TO ACCOMMODATE ANY UNDERGROUND STRUCTURES ENCOUNTERED (VAULTS, MANHOLES, CONDUITS, ETC.).
5. A MINIMUM DISTANCE OF 3 FEET FROM CURB FACE TO POLE/PEDESTAL CENTERLINE IS DESIRABLE, BUT MAY BE CHANGED FOR THE ABOVE MENTIONED ACCOMMODATION, UPON CONSULTING WITH THE DESIGNING TRAFFIC ENGINEER.
6. TACTILE ARROW FOR APS PUSHBUTTONS SHALL BE ALIGNED PARALLEL TO THE DIRECTION OF TRAVEL ON THE ASSOCIATED CROSSWALK.
7. APS PUSHBUTTONS ON PARKWAY OR ON LEDGE SHALL BE EITHER ALIGNED FLUSH WITH EDGE OR LEVEL ACCESSIBLE PATH OR LESS THAN 10" FROM IT. APS EXTENSIONS SHALL BE USED TO SATISFY REQUIREMENT.

LEGEND

- EXISTING TRAFFIC SIGNAL HEAD
- PROPOSED TRAFFIC SIGNAL HEAD
- EXISTING COUNTDOWN PEDESTRIAN SIGNAL
- PROPOSED COUNTDOWN PEDESTRIAN SIGNAL
- EXISTING TRAFFIC SIGNAL POLE OR POST
- PROPOSED TRAFFIC SIGNAL POLE OR POST
- EXISTING TRAFFIC SIGNAL MAST ARM
- PROPOSED TRAFFIC SIGNAL MAST ARM
- EXISTING COLUMNS
- STRUCTURE MOUNTED
- PROPOSED BUS "QUEUE JUMP" SIGNAL
- PROPOSED BIKE SIGNAL
- L — RETROREFLECTIVE "LEFT/RIGHT TURN ON GREEN ARROW ONLY" SIGN
- T — RETROREFLECTIVE "BUS SIGNAL" SIGN
- H — HORIZONTALLY MOUNTED
- TEMPORARY WOOD POLE

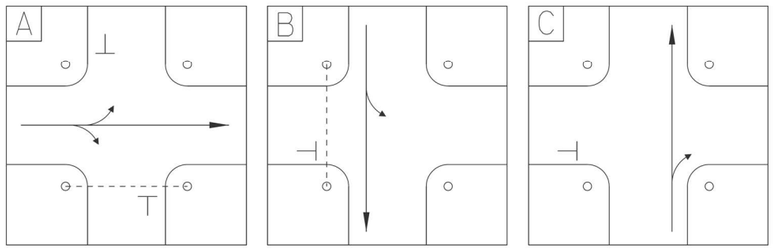

CONSULTANT FIRM NAME/ ADDRESS	CITY OF CHICAGO DEPARTMENT OF TRANSPORTATION DIVISION OF TRAFFIC SAFETY
AMES Engineering, Inc. CONSULTING ENGINEERS 6330 Belmont Road, Suite 4B Downers Grove, IL 60516	TRAFFIC SIGNAL REQUIREMENT PLAN
	S. PAULINA STREET AT W. CONGESS PARKWAY MAINTENANCE OF TRAFFIC - STAGE 3
DESIGNED BY: TOBY MICKEY	REVIEWED BY: TRAFFIC ENGINEER
APPROVED BY: AHSAN SIDDIQI	APPROVED BY: TRAFFIC ENGINEER
DATE: 07-18-2025	DATE: SCALE: 1"=20' SHEET 1 OF 1

MODEL: Default
FILE NAME: F:\Projects\1054-Eisenhower EDOT-Collins\Design\Sht\Traffic Signals\Paulina TS 09 MOT TSRs - Paulina and Congress.dgn

AMES Engineering, Inc. CONSULTING ENGINEERS 6330 Belmont Road, Suite 4B Downers Grove, IL 60516					
USER NAME = Srahman	DESIGNED - TM	REVISED -	STATE OF ILLINOIS DEPARTMENT OF TRANSPORTATION	TRAFFIC CONTROL SIGNALS S. PAULINA STREET AND W. VAN BUREN STREET S. PAULINA STREET AND W. CONGRESS PARKWAY	
	DRAWN - SR	REVISED -			
PLOT SCALE = 39.9984 ' / In.	CHECKED - AS	REVISED -			
PLOT DATE = 9/5/2025	DATE - $DATE	REVISED -		SCALE: SHEET OF SHEETS STA. TO STA.	

F.A.I. RTE.	SECTION	COUNTY	TOTAL SHEETS	SHEET NO.
290	2019-191-B-R	COOK	265	120
		CONTRACT NO. 62K64		
		ILLINOIS	FED. AID PROJECT	

DIAL	CYCLE LENGTH	OFFSET	TIMES OF OPERATION	FLASH OPERATION
1	100"	0"	ALL OTHER TIMES	RØ2, RØ4, RØ8.
2	100"	0"	6:00 TO 10:00 AM MONDAY - FRIDAY	WALK/DON'T WALK OFF
3	100"	0"	3:00 TO 7:00 PM MONDAY - FRIDAY	

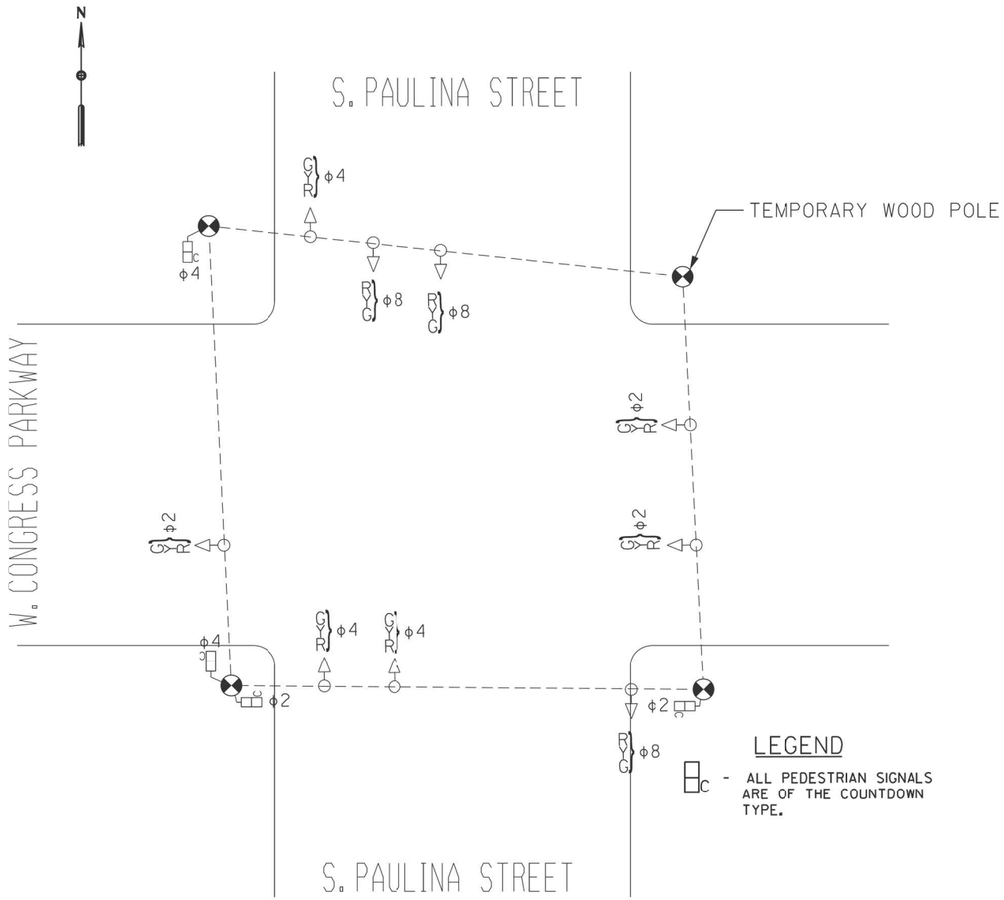

S. PAULINA STREET AND W. CONGRESS PARKWAY STAGE 1

DIAL 1

	PHASE							
PHASE NUMBER	1	2	3	4	5	6	7	8
DIRECTION	WBLT	EB	NBLT	SB	EBLT	WB	SBLT	NB
MINIMUM GREEN								
VEHICLE EXTENSION								
MAX GREEN (MAX I)		56		19	56			13
YELLOW CHANGE		3		3	3			3
RED CLEARANCE		1		1	1			1
WALK		45		8				
PED CLEARANCE		11		11				
SPLITS		60		23	60			17
COORDINATED PHASE								

DIAL 2

	PHASE							
PHASE NUMBER	1	2	3	4	5	6	7	8
DIRECTION	WBLT	EB	NBLT	SB	EBLT	WB	SBLT	NB
MINIMUM GREEN								
VEHICLE EXTENSION								
MAX GREEN (MAX I)		56		19	56			13
YELLOW CHANGE		3		3	3			3
RED CLEARANCE		1		1	1			1
WALK		45		8				
PED CLEARANCE		11		11				
SPLITS		60		23	60			17
COORDINATED PHASE								

DIAL 3

	PHASE							
PHASE NUMBER	1	2	3	4	5	6	7	8
DIRECTION	WBLT	EB	NBLT	SB	EBLT	WB	SBLT	NB
MINIMUM GREEN								
VEHICLE EXTENSION								
MAX GREEN (MAX I)		56		19	56			13
YELLOW CHANGE		3		3	3			3
RED CLEARANCE		1		1	1			1
WALK		45		8				
PED CLEARANCE		11		11				
SPLITS		60		23	60			17
COORDINATED PHASE								

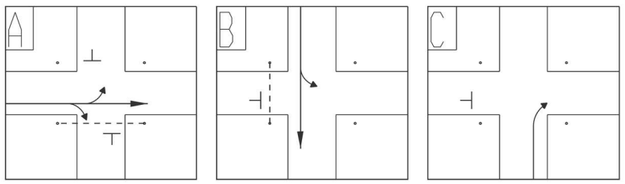

CITY OF CHICAGO
DEPARTMENT OF TRANSPORTATION

S. PAULINA ST. & W. CONGRESS PARKWAY

TRAFFIC SIGNAL TIMING SCHEDULE

DESIGNED BY: TCM
DATE: 2025/07/18
CHECKED BY: AS
DATE: 2015/07/18

APPROVED:
TRAFFIC ENGINEER:

PAGE 1 OF 1

SENT: INSTALLED:

CONTROLLER SEQUENCE

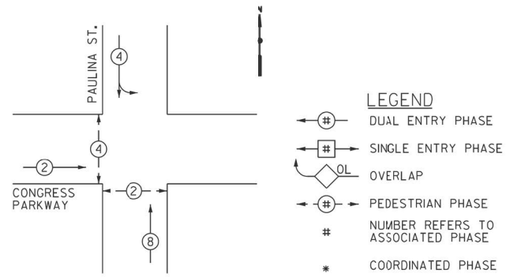

MODEL: Default
FILE NAME: F:\Projects\1058-Eisenhower IDOT-Collins Design\Sht\Traffic Signals\Paulina\TS 10 TMP Timing Plans - Paulina and Congress.dgn

AMES Engineering, Inc.
CONSULTING ENGINEERS
6330 Belmont Road, Suite 4B
Downers Grove, IL 60516

USER NAME = Srahman	DESIGNED - TM	REVISED -	
	DRAWN - SR	REVISED -	
PLOT SCALE = 39.9984 ' / in.	CHECKED - AS	REVISED -	
PLOT DATE = 9/5/2025	DATE - $DATE	REVISED -	

STATE OF ILLINOIS
DEPARTMENT OF TRANSPORTATION

TRAFFIC CONTROL SIGNALS
S. PAULINA STREET AND W. VAN BUREN STREET
S. PAULINA STREET AND W. CONGRESS PARKWAY

SCALE: | SHEET OF SHEETS | STA. | TO STA.

F.A.I. RTE.	SECTION	COUNTY	TOTAL SHEETS	SHEET NO.
290	2019-191-B-R	COOK	265	121
		CONTRACT NO. 62K64		
	ILLINOIS	FED. AID PROJECT		

DIAL	CYCLE LENGTH	OFFSET	TIMES OF OPERATION	FLASH OPERATION
1	100"	0"	ALL OTHER TIMES	R02, R04, R08.
2	100"	0"	6:00 TO 10:00 AM MONDAY - FRIDAY	WALK/DON'T WALK OFF
3	100"	0"	3:00 TO 7:00 PM MONDAY - FRIDAY	

DIAL 1

	PHASE							
PHASE NUMBER	1	2	3	4	5	6	7	8
DIRECTION	WBLT	EB	NBLT	SB	EBLT	WB	SBLT	NB
MINIMUM GREEN								
VEHICLE EXTENSION								
MAX GREEN (MAX 1)		56		19	56			13
YELLOW CHANGE		3		3	3			3
RED CLEARANCE		1		1	1			1
WALK		45		8				2
PED CLEARANCE		11		11				11
SPLITS		60		23	60			17
COORDINATED PHASE								

DIAL 2

	PHASE							
PHASE NUMBER	1	2	3	4	5	6	7	8
DIRECTION	WBLT	EB	NBLT	SB	EBLT	WB	SBLT	NB
MINIMUM GREEN								
VEHICLE EXTENSION								
MAX GREEN (MAX 1)		56		19	56			13
YELLOW CHANGE		3		3	3			3
RED CLEARANCE		1		1	1			1
WALK		45		8				2
PED CLEARANCE		11		11				11
SPLITS		60		23	60			17
COORDINATED PHASE								

DIAL 3

	PHASE							
PHASE NUMBER	1	2	3	4	5	6	7	8
DIRECTION	WBLT	EB	NBLT	SB	EBLT	WB	SBLT	NB
MINIMUM GREEN								
VEHICLE EXTENSION								
MAX GREEN (MAX 1)		56		19	56			13
YELLOW CHANGE		3		3	3			3
RED CLEARANCE		1		1	1			1
WALK		45		8				2
PED CLEARANCE		11		11				11
SPLITS		60		23	60			17
COORDINATED PHASE								

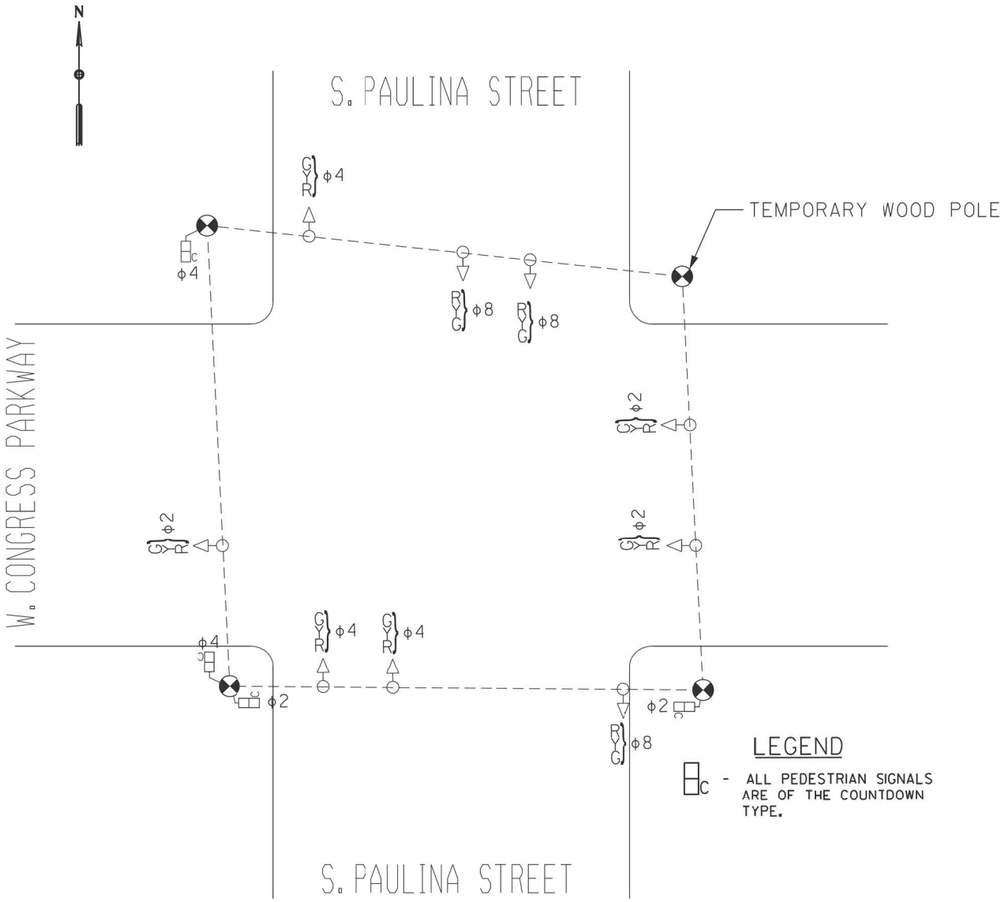

S. PAULINA STREET AND W. CONGRESS PARKWAY WINTER STAGE

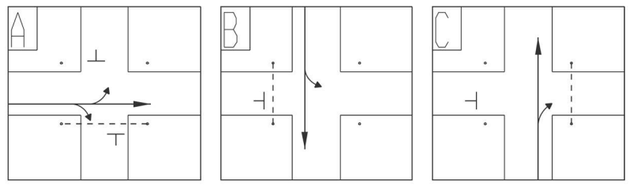

CITY OF CHICAGO
DEPARTMENT OF TRANSPORTATION

S. PAULINA ST. & W. CONGRESS PARKWAY

TRAFFIC SIGNAL TIMING SCHEDULE

DESIGNED BY: TCM
DATE: 2025/07/18
CHECKED BY: AS
DATE: 2015/07/18

APPROVED:
TRAFFIC ENGINEER:

PAGE 1 OF 1

SENT: INSTALLED:

CONTROLLER SEQUENCE

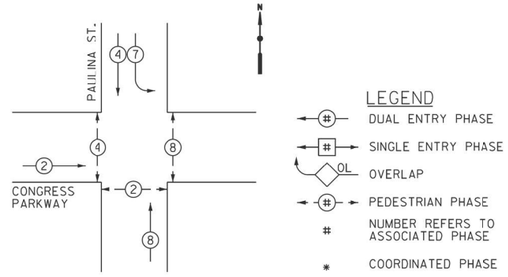

MODEL: Default
FILE NAME: F:\Projects\10584\Eisenhower IDOT-Collins\Design\Sht\Traffic Signals\PaulinaTS 11 TMP Timing Plans - Paulina and Congress.dgn

AMES Engineering, Inc.
CONSULTING ENGINEERS
6330 Belmont Road, Suite 4B
Downers Grove, IL 60516

USER NAME = Srahman	DESIGNED - TM	REVISED -	
	DRAWN - SR	REVISED -	
PLOT SCALE = 39.9984 ' / in.	CHECKED - AS	REVISED -	
PLOT DATE = 9/5/2025	DATE - $DATE	REVISED -	

STATE OF ILLINOIS
DEPARTMENT OF TRANSPORTATION

TRAFFIC CONTROL SIGNALS
S. PAULINA STREET AND W. VAN BUREN STREET
S. PAULINA STREET AND W. CONGRESS PARKWAY

SCALE: SHEET OF SHEETS STA. TO STA.

F.A.I. RTE.	SECTION	COUNTY	TOTAL SHEETS	SHEET NO.
290	2019-191-B-R	COOK	265	122
		CONTRACT NO. 62K64		
		ILLINOIS	FED. AID PROJECT	

DIAL	CYCLE LENGTH	OFFSET	TIMES OF OPERATION	FLASH OPERATION
1	100"	0"	ALL OTHER TIMES	RØ2, RØ4, RØ8.
2	100"	0"	6:00 TO 10:00 AM MONDAY - FRIDAY	WALK/DON'T WALK OFF
3	100"	0"	3:00 TO 7:00 PM MONDAY - FRIDAY	

DIAL 1

	PHASE							
PHASE NUMBER	1	2	3	4	5	6	7	8
DIRECTION	WBLT	EB	NBLT	SB	EBLT	WB	SBLT	NB
MINIMUM GREEN								
VEHICLE EXTENSION								
MAX GREEN (MAX I)		56		19	56			13
YELLOW CHANGE		3		3	3			3
RED CLEARANCE		1		1	1			1
WALK		45						2
PED CLEARANCE		11						11
SPLITS		60		23	60			17
COORDINATED PHASE								

DIAL 2

	PHASE							
PHASE NUMBER	1	2	3	4	5	6	7	8
DIRECTION	WBLT	EB	NBLT	SB	EBLT	WB	SBLT	NB
MINIMUM GREEN								
VEHICLE EXTENSION								
MAX GREEN (MAX I)		56		19	56			13
YELLOW CHANGE		3		3	3			3
RED CLEARANCE		1		1	1			1
WALK		45						2
PED CLEARANCE		11						11
SPLITS		60		23	60			17
COORDINATED PHASE								

DIAL 3

	PHASE							
PHASE NUMBER	1	2	3	4	5	6	7	8
DIRECTION	WBLT	EB	NBLT	SB	EBLT	WB	SBLT	NB
MINIMUM GREEN								
VEHICLE EXTENSION								
MAX GREEN (MAX I)		56		19	56			13
YELLOW CHANGE		3		3	3			3
RED CLEARANCE		1		1	1			1
WALK		45						2
PED CLEARANCE		11						11
SPLITS		60		23	60			17
COORDINATED PHASE								

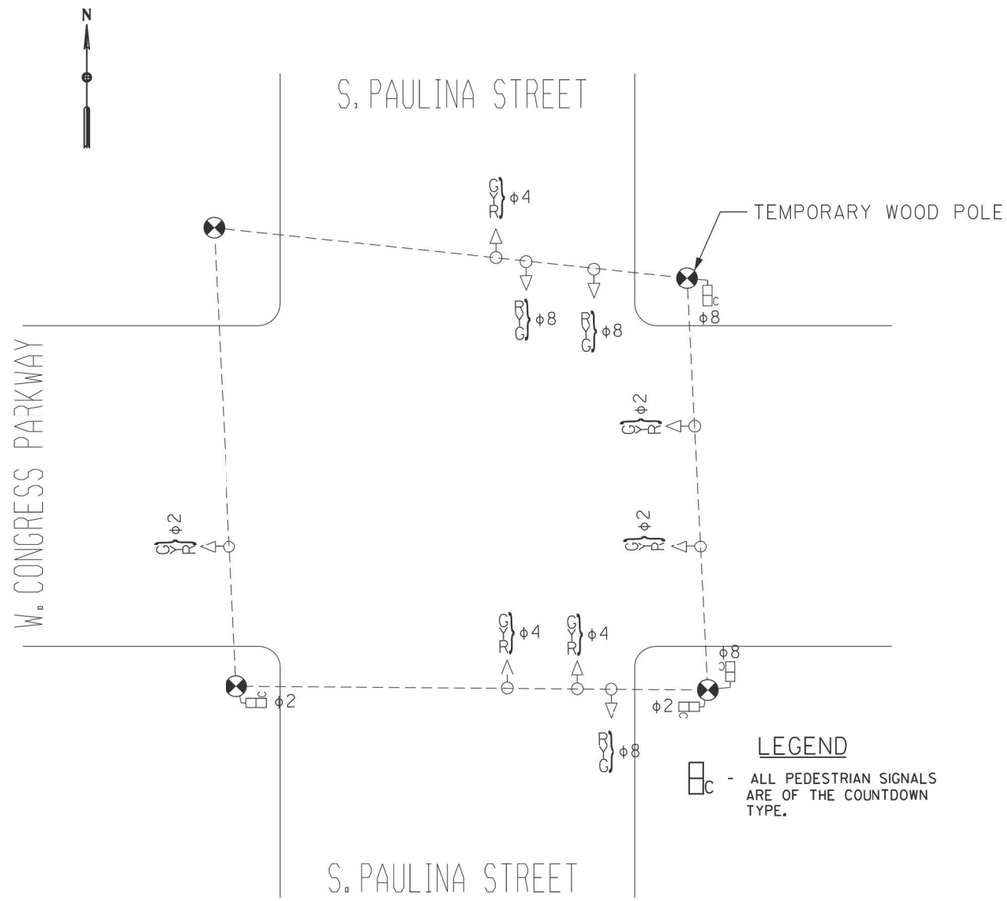

S. PAULINA STREET AND W. CONGRESS PARKWAY STAGE 2

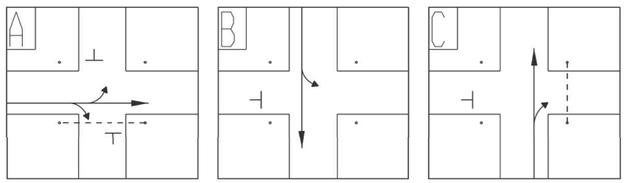

CITY OF CHICAGO
DEPARTMENT OF TRANSPORTATION

S. PAULINA ST. & W. CONGRESS PARKWAY

TRAFFIC SIGNAL TIMING SCHEDULE

DESIGNED BY: TCM
DATE: 2025/07/18
CHECKED BY: AS
DATE: 2015/07/18

APPROVED:
TRAFFIC ENGINEER:

PAGE 1 OF 1

SENT: _____ INSTALLED: _____

CONTROLLER SEQUENCE

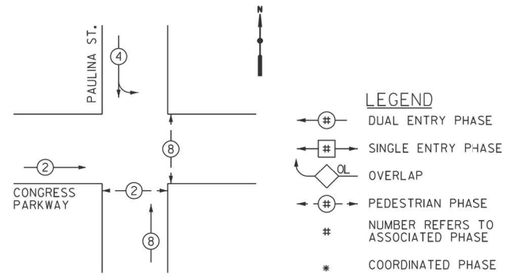

MODEL: Default
FILE NAME: F:\Projects\1058-Eisenhower IDOT-Collins\Design\Shit\Traffic Signals\Paulina\TS 12 TMP Timing Plans • Paulina and Congress.dgn

AMES Engineering, Inc.
CONSULTING ENGINEERS
6330 Belmont Road, Suite 4B
Downers Grove, IL 60516

USER NAME = Srahman	DESIGNED - TM	REVISED -	STATE OF ILLINOIS DEPARTMENT OF TRANSPORTATION	TRAFFIC CONTROL SIGNALS S. PAULINA STREET AND W. VAN BUREN STREET S. PAULINA STREET AND W. CONGRESS PARKWAY
	DRAWN - SR	REVISED -		
PLOT SCALE = 39.9984 ' / in.	CHECKED - AS	REVISED -		
PLOT DATE = 9/5/2025	DATE - $DATE	REVISED -		SCALE: SHEET OF SHEETS STA. TO STA.

F.A.I. RTE.	SECTION	COUNTY	TOTAL SHEETS	SHEET NO.
290	2019-191-B-R	COOK	265	123
		CONTRACT NO. 62K64		
		ILLINOIS	FED. AID PROJECT	

DIAL	CYCLE LENGTH	OFFSET	TIMES OF OPERATION	FLASH OPERATION
1	100"	0"	ALL OTHER TIMES	R02, R04, R08.
2	100"	0"	6:00 TO 10:00 AM MONDAY - FRIDAY	WALK/DON'T WALK OFF
3	100"	0"	3:00 TO 7:00 PM MONDAY - FRIDAY	

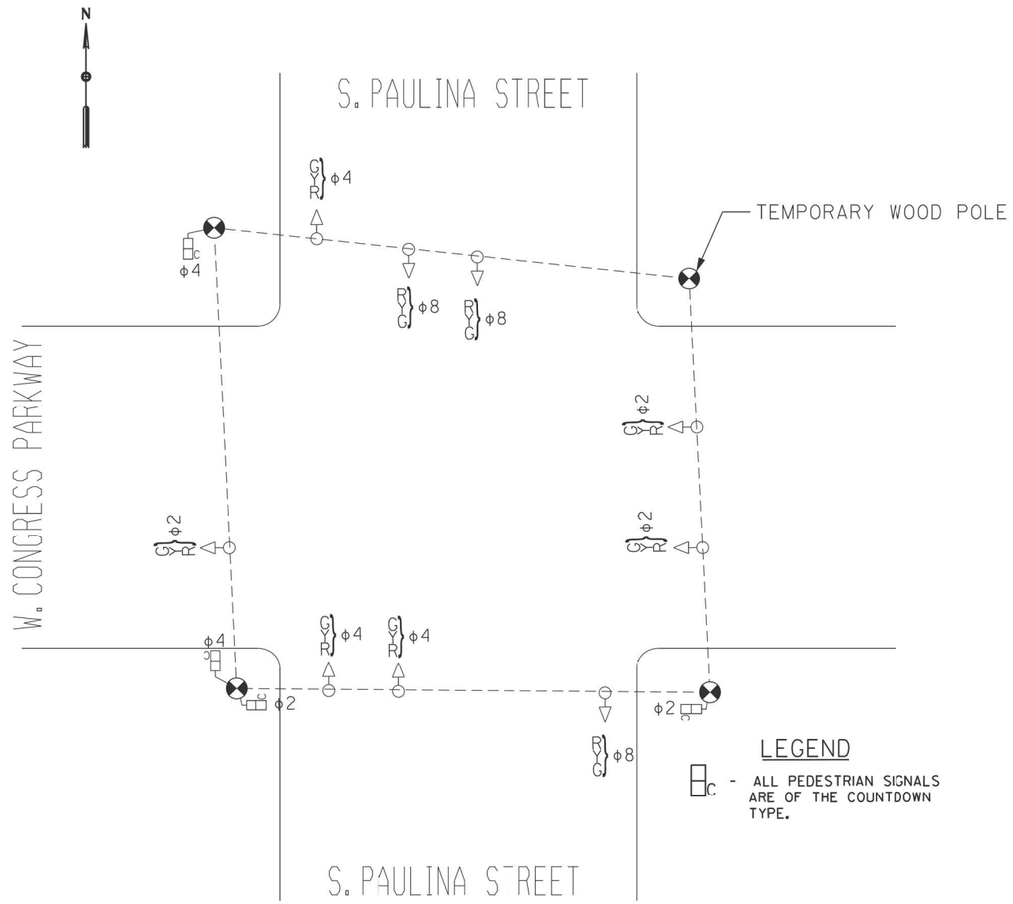

S. PAULINA STREET AND W. CONGRESS PARKWAY STAGE 3

DIAL 1

	PHASE							
PHASE NUMBER	1	2	3	4	5	6	7	8
DIRECTION	WBLT	EB	NBLT	SB	EBLT	WB	SBLT	NB
MINIMUM GREEN								
VEHICLE EXTENSION								
MAX GREEN (MAX I)		56		19	56			13
YELLOW CHANGE		3		3	3			3
RED CLEARANCE		1		1	1			1
WALK		45		8				
PED CLEARANCE		II		II				
SPLITS		60		23	60			17
COORDINATED PHASE								

DIAL 2

	PHASE							
PHASE NUMBER	1	2	3	4	5	6	7	8
DIRECTION	WBLT	EB	NBLT	SB	EBLT	WB	SBLT	NB
MINIMUM GREEN								
VEHICLE EXTENSION								
MAX GREEN (MAX I)		56		19	56			13
YELLOW CHANGE		3		3	3			3
RED CLEARANCE		1		1	1			1
WALK		45		8				
PED CLEARANCE		II		II				
SPLITS		60		23	60			17
COORDINATED PHASE								

DIAL 3

	PHASE							
PHASE NUMBER	1	2	3	4	5	6	7	8
DIRECTION	WBLT	EB	NBLT	SB	EBLT	WB	SBLT	NB
MINIMUM GREEN								
VEHICLE EXTENSION								
MAX GREEN (MAX I)		56		19	56			13
YELLOW CHANGE		3		3	3			3
RED CLEARANCE		1		1	1			1
WALK		45		8				
PED CLEARANCE		II		II				
SPLITS		60		23	60			17
COORDINATED PHASE								

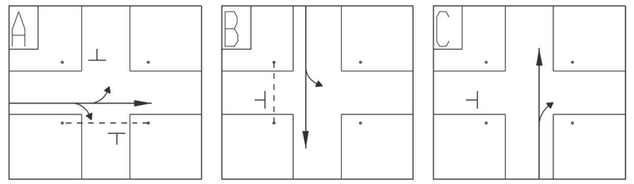

CITY OF CHICAGO
DEPARTMENT OF TRANSPORTATION

S. PAULINA ST. & W. CONGRESS PARKWAY

TRAFFIC SIGNAL TIMING SCHEDULE

DESIGNED BY: TCM
DATE: 2025/07/18
CHECKED BY: AS
DATE: 2015/07/18

APPROVED:
TRAFFIC ENGINEER:

PAGE 1 OF 1

SENT: INSTALLED:

CONTROLLER SEQUENCE

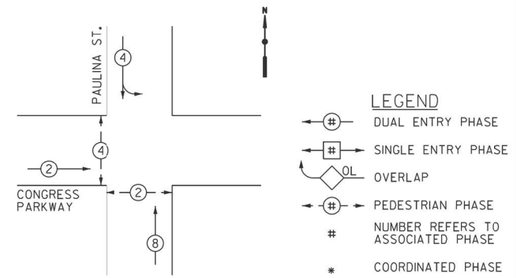

MODEL: Default
FILE NAME: F:\Projects\1058-Eisenhower IDOT-Collins\Design\Shift\Traffic Signals\Paulina\TS 13 TMP Timing Plans - Paulina and Congress.dgn

AMES Engineering, Inc.
CONSULTING ENGINEERS
6330 Belmont Road, Suite 4B
Downers Grove, IL 60516

USER NAME = Srahman	DESIGNED - TM	REVISED -	
	DRAWN - SR	REVISED -	
PLOT SCALE = 39.9984 ' / in.	CHECKED - AS	REVISED -	
PLOT DATE = 9/5/2025	DATE - $DATE	REVISED -	

STATE OF ILLINOIS
DEPARTMENT OF TRANSPORTATION

TRAFFIC CONTROL SIGNALS
S. PAULINA STREET AND W. VAN BUREN STREET
S. PAULINA STREET AND W. CONGRESS PARKWAY

SCALE: SHEET OF SHEETS STA. TO STA.

F.A.I. RTE.	SECTION	COUNTY	TOTAL SHEETS	SHEET NO.
290	2019-191-B-R	COOK	265	124
		CONTRACT NO. 62K64		
	ILLINOIS	FED. AID PROJECT		

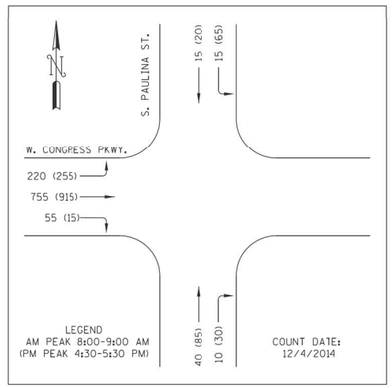

TRAFFIC SIGNAL REQUIREMENTS

NOTES:

1. PAULINA STREET, SPEED LIMIT 30 MPH
   CONGRESS PARKWAY, SPEED LIMIT 30 MPH

GENERAL NOTES, TRAFFIC SIGNAL REQUIREMENTS

1. UNLESS OTHERWISE NOTED ALL VEHICULAR SIGNALS SHALL BE STANDARD 12-INCH DIA., ADJUSTABLE 3-SECTION UNITS, AND ALL PEDESTRIAN SIGNALS SHALL BE STANDARD 16-INCH, ADJUSTABLE, 1-SECTION UNITS WITH I.T.E.-SPECIFICATION ('HAND-MAN') SYMBOLIC LENSES AND COUNTDOWN TIMERS. ALL OPTICALLY PROGRAMMABLE SHALL BE DENOTED EY AN ASTERISK (*), OR BY THE DESIGNATION "3M", AND SHALL BE AIMED AND PROGRAMMED WITH THE GUIDANCE OF THE DESIGNING TRAFFIC ENGINEER.
2. UNLESS OTHERWISE NOTED, ALL MAST ARMS SHOWN SHALL BE CANTILEVER MOUNTED, TAPERED STEEL, MONOTUBE ARM.
3. ANY SIGNAL MOUNTING SHOWN LABELED IS THE RECOMMENDATION OF THE DESIGNING TRAFFIC ENGINEER, AND SHALL BE FINALIZED BY THE DIVISION OF ELECTRICAL OPERATIONS. ALL SIGNAL HARDWARE SHALL PREFERABLY BE INSTALLED ON THE SIDE OF POLE/PEDESTAL AWAY FROM THE TRAVELED WAY.
4. CARE SHALL BE TAKEN DURING CONSTRUCTION TO ACCOMMODATE ANY UNDERGROUND STRUCTURES ENCOUNTERED (VAULTS, MANHOLES, CONDUITS, ETC.).
5. A MINIMUM DISTANCE OF 3 FEET FROM CURB FACE TO POLE/PEDESTAL CENTERLINE IS DESIRABLE, BUT MAY BE CHANGED FOR THE ABOVE MENTIONED ACCOMMODATION, UPON CONSULTING WITH THE DESIGNING TRAFFIC ENGINEER.
6. TACTILE ARROW FOR APS PUSHBUTTONS SHALL BE ALIGNED PARALLEL TO THE DIRECTION OF TRAVEL ON THE ASSOCIATED CROSSWALK.

LEGEND

- PROPOSED TRAFFIC SIGNAL HEAD
- PROPOSED COUNTDOWN PEDESTRIAN SIGNAL
- PROPOSED TRAFFIC SIGNAL POLE OR POST
- PROPOSED TRAFFIC SIGNAL MAST ARM
- PROPOSED ADA LEVEL LANDING AREA
- PROPOSED APS PUSHBUTTON
- PROPOSED APS PUSHBUTTON SHORT POST
- VEHICLE DETECTION ZONE

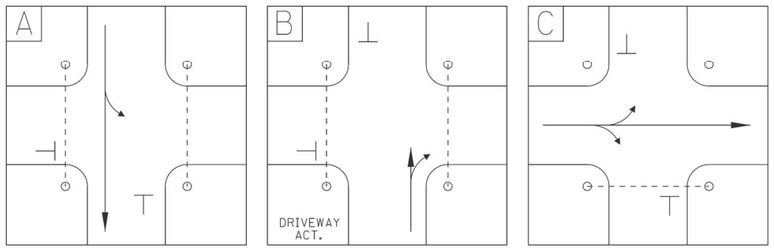

CONSULTANT FIRM NAME/ ADDRESS	CITY OF CHICAGO DEPARTMENT OF TRANSPORTATION DIVISION OF TRAFFIC SAFETY
AMES Engineering, Inc. CONSULTING ENGINEERS 6330 Belmont Road, Suite 4B Downers Grove, IL 60516	TRAFFIC SIGNAL REQUIREMENT PLAN
	S. PAULINA STREET AT W. CONGESS PARKWAY
DESIGNED BY: TOBY MICKEY	REVIEWED BY: TRAFFIC ENGINEER
APPROVED BY: AHSAN SIDDIOI	APPROVED BY: TRAFFIC ENGINEER
DATE: 08-01-2025	DATE: / SCALE: 1"=20' / SHEET 1 OF 1

MODEL: Default
FILE NAME: F:\Projects\1094-Eisenhower IDOT-Collins\Design\Sht\Traffic Signals\Paulina TS 14 Perm TSR - Paulina and Congress.dgn

AMES Engineering, Inc. CONSULTING ENGINEERS 6330 Belmont Road, Suite 4B Downers Grove, IL 60516	USER NAME = Srahman	DESIGNED - TM	REVISED -	STATE OF ILLINOIS DEPARTMENT OF TRANSPORTATION
		DRAWN - SR	REVISED -	
	PLOT SCALE = 39.9984 ' / In.	CHECKED - AS	REVISED -	
	PLOT DATE = 9/5/2025	DATE - $DATE	REVISED -	

TRAFFIC CONTROL SIGNALS
S. PAULINA STREET AND W. VAN BUREN STREET
S. PAULINA STREET AND W. CONGRESS PARKWAY

SCALE: | SHEET OF SHEETS | STA. TO STA.

F.A.I. RTE.	SECTION	COUNTY	TOTAL SHEETS	SHEET NO.
290	2019-191-B-R	COOK	265	125
		CONTRACT NO. 62K64		
		ILLINOIS	FED. AID PROJECT	

DIAL	CYCLE LENGTH	OFFSET	TIMES OF OPERATION	FLASH OPERATION
1	100"	0"	ALL OTHER TIMES	R02, R04, R08.
2	100"	0"	6:00 TO 10:00 AM MONDAY - FRIDAY	WALK/DON'T WALK OFF
3	100"	0"	3:00 TO 7:00 PM MONDAY - FRIDAY	

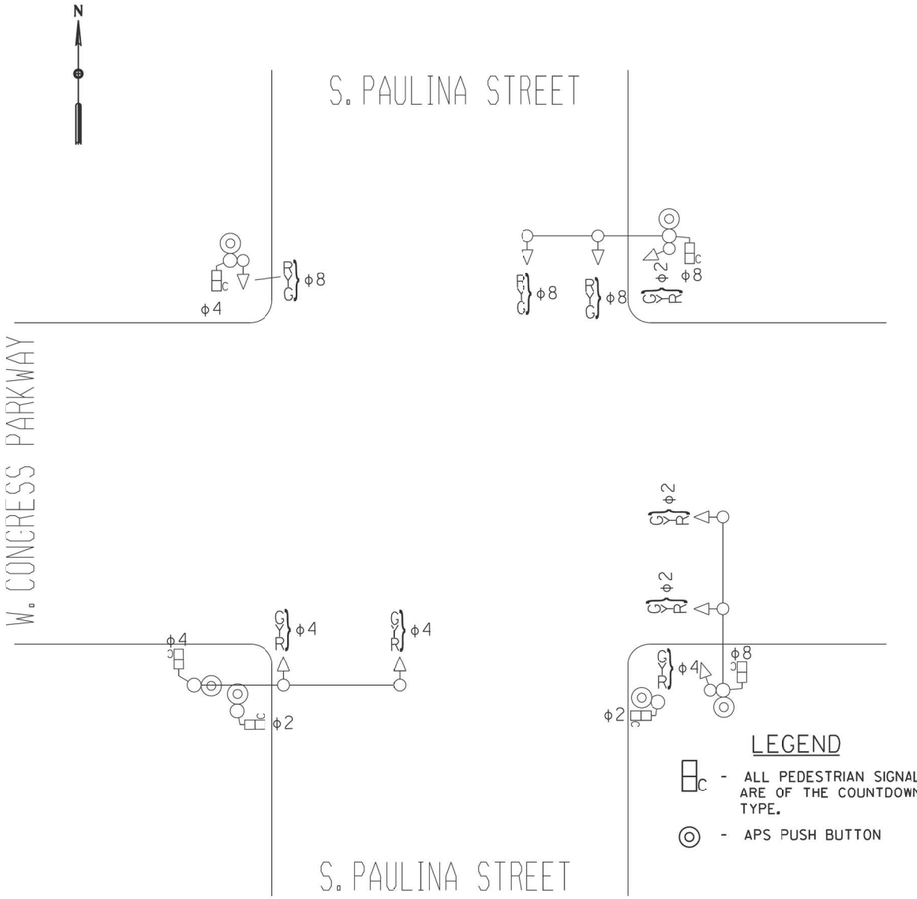

DIAL 1

	PHASE							
PHASE NUMBER	1	2	3	4	5	6	7	8
DIRECTION	WBLT	EB	NBLT	SB	EBLT	WB	SBLT	NB
MINIMUM GREEN								
VEHICLE EXTENSION								
MAX GREEN (MAX 1)		56		19	56			13
YELLOW CHANGE		3		3	3			3
RED CLEARANCE		1		1	1			1
WALK		45		8				2
PED CLEARANCE		11		11				11
SPLITS		60		23	60			17
COORDINATED PHASE								

DIAL 2

	PHASE							
PHASE NUMBER	1	2	3	4	5	6	7	8
DIRECTION	WBLT	EB	NBLT	SB	EBLT	WB	SBLT	NB
MINIMUM GREEN								
VEHICLE EXTENSION								
MAX GREEN (MAX 1)		56		19	56			13
YELLOW CHANGE		3		3	3			3
RED CLEARANCE		1		1	1			1
WALK		45		8				2
PED CLEARANCE		11		11				11
SPLITS		60		23	60			17
COORDINATED PHASE								

DIAL 3

	PHASE							
PHASE NUMBER	1	2	3	4	5	6	7	8
DIRECTION	WBLT	EB	NBLT	SB	EBLT	WB	SBLT	NB
MINIMUM GREEN								
VEHICLE EXTENSION								
MAX GREEN (MAX 1)		56		19	56			13
YELLOW CHANGE		3		3	3			3
RED CLEARANCE		1		1	1			1
WALK		45		8				2
PED CLEARANCE		11		11				11
SPLITS		60		23	60			17
COORDINATED PHASE								

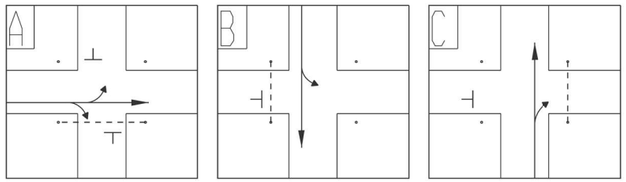

S. PAULINA STREET AND W. CONGRESS PARKWAY

CITY OF CHICAGO
DEPARTMENT OF TRANSPORTATION

S. PAULINA ST. & W. CONGRESS PARKWAY

TRAFFIC SIGNAL TIMING SCHEDULE

DESIGNED BY: TCM
DATE: 2025/07/18
CHECKED BY: AS
DATE: 2015/07/18

APPROVED:
TRAFFIC ENGINEER:

PAGE 1 OF 1

SENT: INSTALLED:

CONTROLLER SEQUENCE

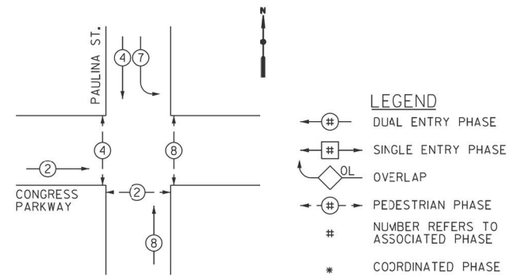

MODEL: Default
FILE NAME: F:\Projects\1064\Eisenhower IDOT-Collins\Design\Shit\Traffic Signals\Paulina\TS 15 Perm Timing Plan - Paulina and Congress.dgn

AMES Engineering, Inc.
CONSULTING ENGINEERS
6330 Belmont Road, Suite 4B
Downers Grove, IL 60516

USER NAME = Srahman	DESIGNED - TM	REVISED -	
	DRAWN - SR	REVISED -	
PLOT SCALE = 39.9984 ' / in.	CHECKED - AS	REVISED -	
PLOT DATE = 9/5/2025	DATE - $DATE	REVISED -	

STATE OF ILLINOIS
DEPARTMENT OF TRANSPORTATION

TRAFFIC CONTROL SIGNALS
S. PAULINA STREET AND W. VAN BUREN STREET
S. PAULINA STREET AND W. CONGRESS PARKWAY

SCALE: SHEET OF SHEETS STA. TO STA.

F.A.I. RTE.	SECTION	COUNTY	TOTAL SHEETS	SHEET NO.
290	2019-191-B-R	COOK	265	126
		CONTRACT NO. 62K64		
	ILLINOIS	FED. AID PROJECT		

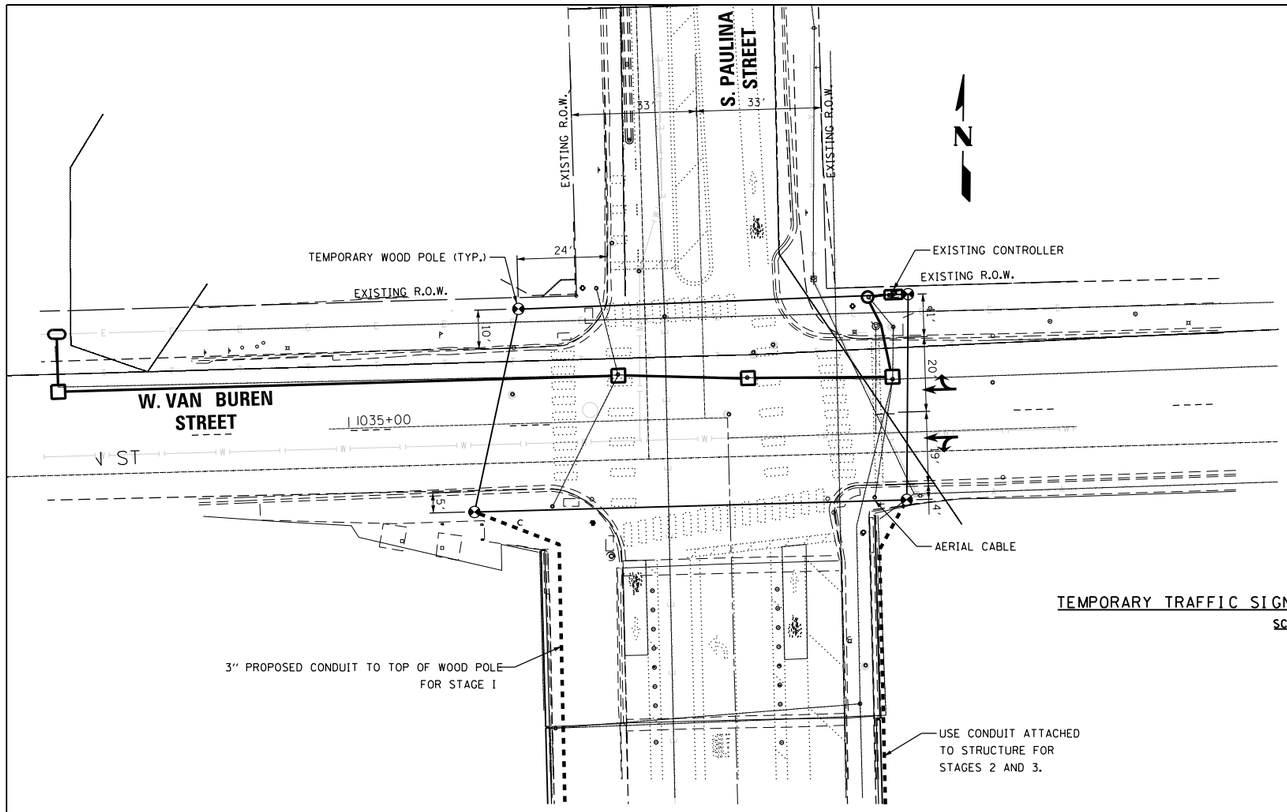

TEMPORARY TRAFFIC SIGNAL PLAN

SCALE: 1"=20'

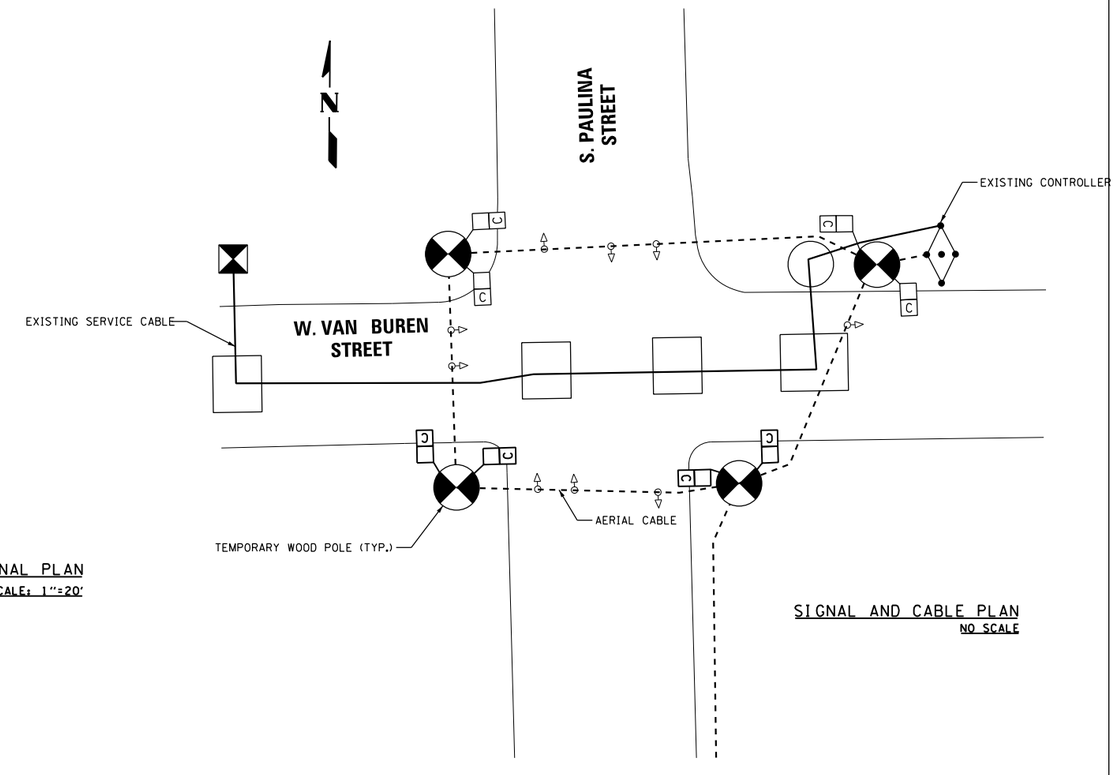

SIGNAL AND CABLE PLAN

NO SCALE

REMOVE EXISTING TRAFFIC SIGNAL EQUIPMENT LSUM BREAKDOWN

3	EACH	MAST ARM ASSEMBLY AND POLE
2	EACH	TRAFFIC SIGNAL POST
9	EACH	SIGNAL HEAD, 1-FACE, 3-SECTION
6	EACH	PEDESTRIAN SIGNAL HEAD, 1-FACE

CONSTRUCTION NOTES

- ALL SIGNAL SECTIONS TO BE STANDARD 12" SIZE.
- ALL VEHICULAR SIGNAL HEADS TO BE OF STANDARD LED 3-SECTION UNITS UNLESS OTHERWISE NOTED.
- THIS PROJECT WILL BE PLACED ON PEOPLES GAS WATCH & PROTECT. NOTIFY SYSTEM INTEGRITY OPERATIONS SUPERVISOR AT CENTRAL-SHOP-OUC@PEOPLESGASDELIVERY.COM A MINIMUM OF 5 BUSINESS DAYS PRIOR TO EXCAVATION TO SET UP ON-SITE INSPECTION.
- EXCAVATIONS PROHIBITED WITHIN 50 FEET OF HIGH PRESSURE GAS MAINS UNLESS A REPRESENTATIVE OF THE PIPELINE IS NOTIFIED.
- PEOPLES GAS HIGH PRESSURE GAS MAIN IS PRESENT WITHIN AREA OF CONSTRUCTION. USE EXTREME CAUTION NEAR ALL GAS FACILITIES. HAND EXCAVATION IS REQUIRED TO LOCATE AND EXPOSE GAS MAINS PRIOR TO CROSSING AND WORKING WITHIN 5 FEET OF ALL GAS FACILITIES. A MINIMUM OF 5' HORIZONTAL EDGE TO EDGE CLEARANCE AND 24" VERTICAL EDGE TO EDGE CLEARANCE IS REQUIRED FOR HIGH PRESSURE GAS MAINS. CONTRACTOR SHALL NOTIFY CENTRAL-SHOP-OUC@PEOPLESGASDELIVERY.COM A MINIMUM OF 5 BUSINESS DAYSPRIOR TO EXCAVATION TO SET UPON SITE INSPECTION. PEOPLES GAS TO BE ON SITE TO MONITOR CONSTRUCTION ACTIVITIES WHEN WITHIN 5 FEET AND WHENEVER CROSSING HIGH PRESSURE GAS FACILITIES. PIPELINE MARKERS SHALL BE MAINTAINED.
- ALL CONDUIT SHALL BE INSTALLED AT A MINIMUM DEPTH OF 30 INCHES.
- THE METHOD OF INSTALLATION FOR CONDUIT SHALL BE TRENCH AND BACKFILL.

A		
DATE	REVISION	

TEMPORARY TRAFFIC SIGNALS

S. PAULINA STREET &
W. VAN BUREN STREET

CITY OF CHICAGO
DEPARTMENT OF TRANSPORTATION
DIVISION OF ENGINEERING

CONSULTING ENGINEERS:

AMES Engineering, Inc.
CONSULTING ENGINEERS
6330 Belmont Road, Suite 4B
Downers Grove, IL 60516

PROJECT # 10 8

DWG. NO. T

SIZE: 22" X 34" | SCALE: AS NOTED | DATE: 9/8/2025

AMES Engineering, Inc.
CONSULTING ENGINEERS
6330 Belmont Road, Suite 4B
Downers Grove, IL 60516

USER NAME = Srahman	DESIGNED - TM	REVISED -	
	DRAWN - SR	REVISED -	
PLOT SCALE = 39.9984 ' / In.	CHECKED - AS	REVISED -	
PLOT DATE = 11/6/2025	DATE - $DATE	REVISED -	

STATE OF ILLINOIS
DEPARTMENT OF TRANSPORTATION

TRAFFIC CONTROL SIGNALS
S. PAULINA STREET AND W. VAN BUREN STREET
S. PAULINA STREET AND W. CONGRESS PARKWAY

SCALE: | SHEET OF SHEETS | STA. | TO STA.

F.A.I. RTE.	SECTION	COUNTY	TOTAL SHEETS	SHEET NO.
290	2019-191-B-R	COOK	265	127
		CONTRACT NO. 62K64		
		ILLINOIS	FED. AID PROJECT	

MODEL: Default
FILE NAME: F:\Projects\1058-Eisenhower IDOT-Collins\Design\Sht\Traffic Signals\Paulina TS 17 TMP - Paulina and Van Buren.dgn

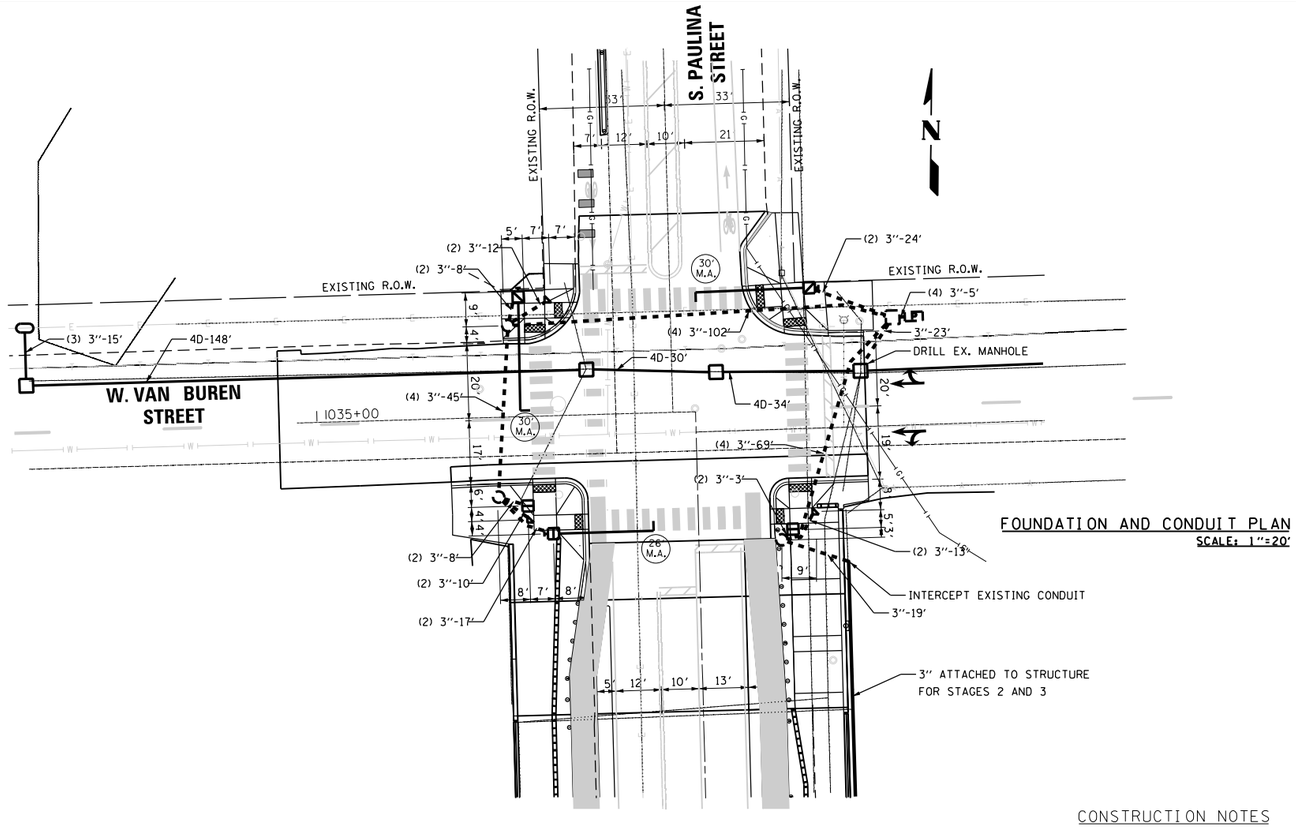

FOUNDATION AND CONDUIT PLAN
SCALE: 1"=20'

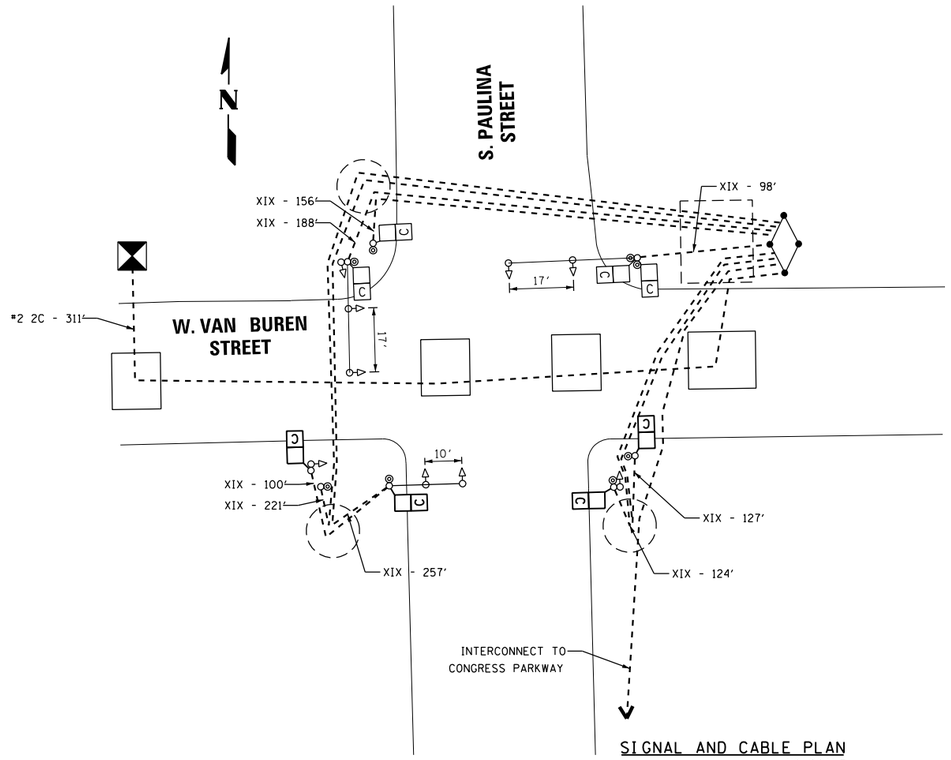

SIGNAL AND CABLE PLAN
NO SCALE

CONSTRUCTION NOTES

- THE ANTENNA AT THE NW CORNER OF THE INTERSECTION SHALL BE RELOCATED TO THE NEW SIGNAL.
- MAXIMUM DEPTH OF OPEN CUT TRENCH TO BE 30" OVER WATER MAIN.
- FOREMAN TO CALL ALL UG UTILITIES PRIOR TO DIGGING TO DETERMINE THE EXACT LOCATION OF THEIR UG FACILITIES.
- MAINTAIN 3' MINIMUM CLEARANCE FROM ALL GAS MAIN.
- ALL SIGNAL SECTIONS TO BE STANDARD 12" SIZE.
- ALL VEHICULAR SIGNAL HEADS TO BE OF STANDARD LED 3-SECTION UNITS UNLESS OTHERWISE NOTED.
- ALL PEDESTRIAN SIGNAL HEADS TO BE 16" LED 1-SECTION UNITS WITH COUNTDOWN TIMERS, AND TO BE INSTALLED BELOW VEHICULAR SIGNAL WHERE APPLICABLE.
- ALL CONDUIT TO BE INSTALLED AT A MINIMUM DEPTH OF 30 INCHES.
- THE METHOD OF INSTALLATIOB FOR CONDUIT SHALL BE TRENCH AND BACKFILL.

⊣ - DENOTES INSTALL D3-2 STREET NAME SIGN; 5' OFF POLE CENTERLINE
2 EACH - W. VAN BUREN ST
1 EACH - S. PAULINA STREET

EXCAVATIONS PROHIBITED WITHIN 50 FEET OF NATURAL GAS TRANSMISSION PIPELINES/HP GAS MAINS UNLESS A REPRESENTATIVE OF THE PIPELINE IS NOTIFIED.

PEOPLES GAS HIGH PRESSURE GAS MAIN IS PRESENT WITHIN AREA OF CONSTRUCTION. USE EXTREME CAUTION NEAR ALL GAS FACILITIES. HAND EXCAVATION IS REQUIRED TO LOCATE AND EXPOSE GAS MAINS PRIOR TO CROSSING AND WORKING WITHIN 5 FEET OF ALL GAS FACILITIES. A MINIMUM OF 5' HORIZONTAL EDGE TO EDGE CLEARANCE AND 24" VERTICAL EDGE TO EDGE CLEARANCE IS REQUIRED FOR HIGH PRESSURE GAS MAINS. CONTRACTOR SHALL CONTACT: CENTRAL SHOP SYSTEM INTEGRITY OPERATIONS SUPERVISOR, LUCERO MARTINEZ, 872-285-4016 AND SEND NOTIFICATION TO Central-Shop-OUC@peoplesgasdelivery.com, A MINIMUM OF 5 BUSINESS DAYS PRIOR TO EXCAVATION TO SET UP ON SITE INSPECTION. PEOPLES GAS TO BE ON SITE TO MONITOR CONSTRUCTION ACTIVITIES WHEN WITHIN 5 FEET AND WHENEVER CROSSING HIGH PRESSURE GAS FACILITIES. PIPELINE MARKERS SHALL BE MAINTAINED.

THE CONTRACTOR SHALL PROVIDE 24" VERTICAL CLEARANCE WHEN CROSSING 18" AND LARGER GAS MAIN, AND 18" WHEN CROSSING 16" AND SAMLLER GAS MAINS.

A	
DATE	REVISION

TRAFFIC CONTROL SIGNALS

S. PAULINA STREET &
W. VAN BUREN STREET

CITY OF CHICAGO
DEPARTMENT OF TRANSPORTATION
DIVISION OF ENGINEERING

CONSULTING ENGINEERS:

AMES Engineering, Inc.
CONSULTING ENGINEERS
6330 Belmont Road, Suite 4B
Downers Grove, IL 60516

PROJECT # 10 8

DWG. NO. XXX

SIZE: 22" X 34" | SCALE: AS NOTED | DATE: 9/8/2025

AMES Engineering, Inc.
CONSULTING ENGINEERS
6330 Belmont Road, Suite 4B
Downers Grove, IL 60516

USER NAME = Srahman	DESIGNED - TM	REVISED -	
	DRAWN - SR	REVISED -	
PLOT SCALE = 39.9984 ' / In.	CHECKED - AS	REVISED -	
PLOT DATE = 11/6/2025	DATE - $DATE	REVISED -	

STATE OF ILLINOIS
DEPARTMENT OF TRANSPORTATION

TRAFFIC CONTROL SIGNALS
S. PAULINA STREET AND W. VAN BUREN STREET
S. PAULINA STREET AND W. CONGRESS PARKWAY

SCALE: | SHEET OF SHEETS | STA. | TO STA.

F.A.I. RTE.	SECTION	COUNTY	TOTAL SHEETS	SHEET NO.
290	2019-191-B-R	COOK	265	128
		CONTRACT NO. 62K64		
		ILLINOIS	FED. AID PROJECT	

MODEL: Default
FILE NAME: F:\Projects\1058-Eisenhower IDOT-Collins\Design\Shit\Traffic Signals\Paulina\TS 18 TS MOD - Paulina and Van Buren.dgn

TRAFFIC SIGNAL REQUIREMENTS

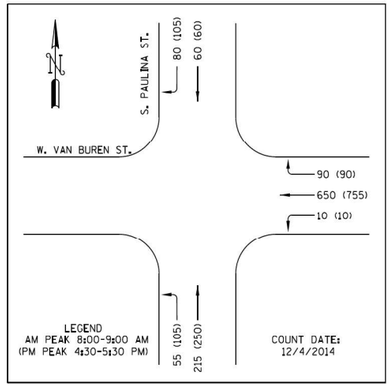

NOTES:

1. PAULINA STREET, SPEED LIMIT 30 MPH
   VAN BUREN STREET, SPEED LIMIT 30 MPH

GENERAL NOTES, TRAFFIC SIGNAL REQUIREMENTS

1. UNLESS OTHERWISE NOTED ALL VEHICULAR SIGNALS SHALL BE STANDARD 12-INCH DIA., ADJUSTABLE 3-SECTION UNITS, AND ALL PEDESTRIAN SIGNALS SHALL BE STANDARD 16-INCH, ADJUSTABLE, 1-SECTION UNITS WITH I.T.E.-SPECIFICATION ("HAND-MAN") SYMBOLIC LENSES AND COUNTDOWN TIMERS. ALL OPTICALLY PROGRAMMABLE SHALL BE DENOTED BY AN ASTERISK (*), OR BY THE DESIGNATION "3M", AND SHALL BE AIMED AND PROGRAMMED WITH THE GUIDANCE OF THE DESIGNING TRAFFIC ENGINEER.
2. UNLESS OTHERWISE NOTED, ALL MAST ARMS SHOWN SHALL BE CANTILEVER MOUNTED, TAPERED STEEL, MONOTUBE ARM.
3. ANY SIGNAL MOUNTING SHOWN LABELED IS THE RECOMMENDATION OF THE DESIGNING TRAFFIC ENGINEER, AND SHALL BE FINALIZED BY THE DIVISION OF ELECTRICAL OPERATIONS. ALL SIGNAL HARDWARE SHALL PREFERABLY BE INSTALLED ON THE SIDE OF POLE/PEDESTAL AWAY FROM THE TRAVELED WAY.
4. CARE SHALL BE TAKEN DURING CONSTRUCTION TO ACCOMMODATE ANY UNDERGROUND STRUCTURES ENCOUNTERED (VAULTS, MANHOLES, CONDUITS, ETC.).
5. A MINIMUM DISTANCE OF 3 FEET FROM CURB FACE TO POLE/PEDESTAL CENTERLINE IS DESIRABLE, BUT MAY BE CHANGED FOR THE ABOVE MENTIONED ACCOMMODATION, UPON CONSULTING WITH THE DESIGNING TRAFFIC ENGINEER.
6. TACTILE ARROW FOR APS PUSHBUTTONS SHALL BE ALIGNED PARALLEL TO THE DIRECTION OF TRAVEL ON THE ASSOCIATED CROSSWALK.
7. APS PUSHBUTTONS ON PARKWAY OR ON LEDGE SHALL BE EITHER ALIGNED FLUSH WITH EDGE OR LEVEL ACCESSIBLE PATH OR LESS THAN 10" FROM IT. APS EXTENSIONS SHALL BE USED TO SATISFY REQUIREMENT.

LEGEND

- EXISTING TRAFFIC SIGNAL HEAD
- PROPOSED TRAFFIC SIGNAL HEAD
- EXISTING COUNTDOWN PEDESTRIAN SIGNAL
- PROPOSED COUNTDOWN PEDESTRIAN SIGNAL
- EXISTING TRAFFIC SIGNAL POLE OR POST
- PROPOSED TRAFFIC SIGNAL POLE OR POST
- EXISTING TRAFFIC SIGNAL MAST ARM
- PROPOSED TRAFFIC SIGNAL MAST ARM
- EXISTING COLUMNS
- STRUCTURE MOUNTED
- PROPOSED BUS "QUEUE JUMP" SIGNAL
- B PROPOSED BIKE SIGNAL
- L RETROREFLECTIVE "LEFT/RIGHT TURN ON GREEN ARROW ONLY" SIGN
- T RETROREFLECTIVE "BUS SIGNAL" SIGN
- H HORIZONTALLY MOUNTED
- TEMPORARY WOOD POLE

CONSULTANT FIRM NAME/ ADDRESS AMES Engineering, Inc. CONSULTING ENGINEERS 6330 Belmont Road, Suite 4B Downers Grove, IL 60516	CITY OF CHICAGO DEPARTMENT OF TRANSPORTATION DIVISION OF TRAFFIC SAFETY TRAFFIC SIGNAL REQUIREMENT PLAN S. PAULINA STREET AT W. VAN BUREN STREET MAINTENANCE OF TRAFFIC - STAGE 1
DESIGNED BY: TOBY MICKEY	REVIEWED BY: TRAFFIC ENGINEER
APPROVED BY: AHSAN SIDDIQI	APPROVED BY: TRAFFIC ENGINEER
DATE: 07-18-2025	DATE: SCALE: 1"=20' SHEET 1 OF 1

MODEL: Default
FILE NAME: F:\Projects\1058-Eisenhower IDOT-Collins\Design\Sht\Traffic Signals\Paulina\TS 18 MOT TSRs - Paulina and Van Buren.dgn

AMES Engineering, Inc. CONSULTING ENGINEERS 6330 Belmont Road, Suite 4B Downers Grove, IL 60516	USER NAME = tmickey	DESIGNED - TM	REVISED -	STATE OF ILLINOIS DEPARTMENT OF TRANSPORTATION	TRAFFIC CONTROL SIGNALS S. PAULINA STREET AND W. VAN BUREN STREET S. PAULINA STREET AND W. CONGRESS PARKWAY
		DRAWN - SR	REVISED -		
	PLOT SCALE = 39.9984 ' / in.	CHECKED - AS	REVISED -		SCALE: SHEET OF SHEETS STA. TO STA.
	PLOT DATE = 9/5/2025	DATE - $DATE	REVISED -		

F.A.I. RTE.	SECTION	COUNTY	TOTAL SHEETS	SHEET NO.
290	2019-191-B-R	COOK	265	129
		CONTRACT NO. 62K64		
		ILLINOIS	FED. AID PROJECT	

TRAFFIC SIGNAL REQUIREMENTS

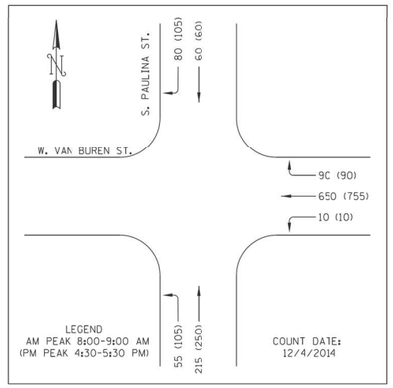

NOTES:

1. PAULINA STREET, SPEED LIMIT 30 MPH
   VAN BUREN STREET, SPEED LIMIT 30 MPH

GENERAL NOTES, TRAFFIC SIGNAL REQUIREMENTS

1. UNLESS OTHERWISE NOTED ALL VEHICULAR SIGNALS SHALL BE STANDARD 12-INCH DIA., ADJUSTABLE 3-SECTION UNITS, AND ALL PEDESTRIAN SIGNALS SHALL BE STANDARD 16-INCH, ADJUSTABLE, 1-SECTION UNITS WITH I.T.E.-SPECIFICATION ('HAND-MAN') SYMBOLIC LENSES AND COUNTDOWN TIMERS. ALL OPTICALLY PROGRAMMABLE SHALL BE DENOTED BY AN ASTERISK (•), OR BY THE DESIGNATION "3M", AND SHALL BE AIMED AND PROGRAMMED WITH THE GUIDANCE OF THE DESIGNING TRAFFIC ENGINEER.
2. UNLESS OTHERWISE NOTED, ALL MAST ARMS SHOWN SHALL BE CANTILEVER MOUNTED, TAPERED STEEL, MONOTUBE ARM.
3. ANY SIGNAL MOUNTING SHOWN LABELED IS THE RECOMMENDATION OF THE DESIGNING TRAFFIC ENGINEER, AND SHALL BE FINALIZED BY THE DIVISION OF ELECTRICAL OPERATIONS. ALL SIGNAL HARDWARE SHALL PREFERABLY BE INSTALLED ON THE SIDE OF POLE/PEDESTAL AWAY FROM THE TRAVELED WAY.
4. CARE SHALL BE TAKEN DURING CONSTRUCTION TO ACCOMMODATE ANY UNDERGROUND STRUCTURES ENCOUNTERED (VAULTS, MANHOLES, CONDUITS, ETC.).
5. A MINIMUM DISTANCE OF 3 FEET FROM CURB FACE TO POLE/PEDESTAL CENTERLINE IS DESIRABLE, BUT MAY BE CHANGED FOR THE ABOVE MENTIONED ACCOMMODATION, UPON CONSULTING WITH THE DESIGNING TRAFFIC ENGINEER.
6. TACTILE ARROW FOR APS PUSHBUTTONS SHALL BE ALIGNED PARALLEL TO THE DIRECTION OF TRAVEL ON THE ASSOCIATED CROSSWALK.
7. APS PUSHBUTTONS ON PARKWAY OR ON LEDGE SHALL BE EITHER ALIGNED FLUSH WITH EDGE OR LEVEL ACCESSIBLE PATH OR LESS THAN 10" FROM IT. APS EXTENSIONS SHALL BE USED TO SATISFY REQUIREMENT.

LEGEND

- EXISTING TRAFFIC SIGNAL HEAD
- PROPOSED TRAFFIC SIGNAL HEAD
- EXISTING COUNTDOWN PEDESTRIAN SIGNAL
- PROPOSED COUNTDOWN PEDESTRIAN SIGNAL
- EXISTING TRAFFIC SIGNAL POLE OR POST
- PROPOSED TRAFFIC SIGNAL POLE OR POST
- EXISTING TRAFFIC SIGNAL MAST ARM
- PROPOSED TRAFFIC SIGNAL MAST ARM
- EXISTING COLUMNS
- STRUCTURE MOUNTED
- PROPOSED BUS "QUEUE JUMP" SIGNAL
- PROPOSED BIKE SIGNAL
- RETROREFLECTIVE "LEFT/RIGHT TURN ON GREEN ARROW ONLY" SIGN
- RETROREFLECTIVE "BUS SIGNAL" SIGN
- HORIZONTALLY MOUNTED
- TEMPORARY WOOD POLE

CONSULTANT FIRM NAME/ ADDRESS AMES Engineering, Inc. CONSULTING ENGINEERS 6330 Belmont Road, Suite 4B Downers Grove, IL 60516	CITY OF CHICAGO DEPARTMENT OF TRANSPORTATION DIVISION OF TRAFFIC SAFETY TRAFFIC SIGNAL REQUIREMENT PLAN S. PAULINA STREET AT W. VAN BUREN STREET MAINTENANCE OF TRAFFIC - WINTER STAGE
DESIGNED BY: TOBY MICKEY	REVIEWED BY: TRAFFIC ENGINEER
APPROVED BY: AHSAN SIDDIQI	APPROVED BY: TRAFFIC ENGINEER
DATE: 07-18-2025	DATE: SCALE: 1"=20' SHEET 1 OF 1

MODEL: Default
FILE NAME: F:\Projects\1058-Eisenhower EDOT-Cullinan\Design\Shit\Traffic Signals\Paulina TS 19 MOT TSRs • Paulina and Van Buren.dgn

AMES Engineering, Inc. CONSULTING ENGINEERS 6330 Belmont Road, Suite 4B Downers Grove, IL 60516	USER NAME = Srahman	DESIGNED - TM	REVISED -	STATE OF ILLINOIS DEPARTMENT OF TRANSPORTATION	TRAFFIC CONTROL SIGNALS S. PAULINA STREET AND W. VAN BUREN STREET S. PAULINA STREET AND W. CONGRESS PARKWAY
		DRAWN - SR	REVISED -		
	PLOT SCALE = 39.9984 ' / In.	CHECKED - AS	REVISED -		
	PLOT DATE = 9/5/2025	DATE - $DATE	REVISED -		SCALE: SHEET OF SHEETS STA. TO STA.

F.A.I. RTE.	SECTION	COUNTY	TOTAL SHEETS	SHEET NO.
290	2019-191-B-R	COOK	265	130
		CONTRACT NO. 62K64		
	ILLINOIS FED. AID PROJECT			

TRAFFIC SIGNAL REQUIREMENTS

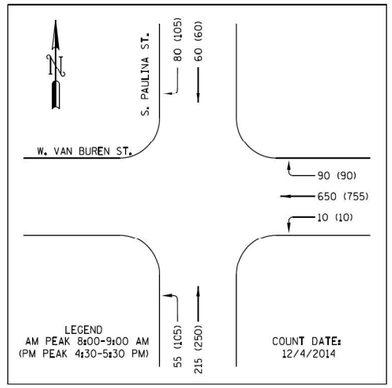

NOTES:

1. PAULINA STREET, SPEED LIMIT 30 MPH
   VAN BUREN STREET, SPEED LIMIT 30 MPH

GENERAL NOTES, TRAFFIC SIGNAL REQUIREMENTS

1. UNLESS OTHERWISE NOTED ALL VEHICULAR SIGNALS SHALL BE STANDARD 12-INCH DIA., ADJUSTABLE 3-SECTION UNITS, AND ALL PEDESTRIAN SIGNALS SHALL BE STANDARD 16-INCH, ADJUSTABLE, 1-SECTION UNITS WITH I.T.E.-SPECIFICATION ('HAND-MAN') SYMBOLIC LENSES AND COUNTDOWN TIMERS. ALL OPTICALLY PROGRAMMABLE SHALL BE DENOTED BY AN ASTERISK (*), OR BY THE DESIGNATION "3M", AND SHALL BE AIMED AND PROGRAMMED WITH THE GUIDANCE OF THE DESIGNING TRAFFIC ENGINEER.
2. UNLESS OTHERWISE NOTED, ALL MAST ARMS SHOWN SHALL BE CANTILEVER MOUNTED, TAPERED STEEL, MONOTUBE ARM.
3. ANY SIGNAL MOUNTING SHOWN LABELED IS THE RECOMMENDATION OF THE DESIGNING TRAFFIC ENGINEER, AND SHALL BE FINALIZED BY THE DIVISION OF ELECTRICAL OPERATIONS. ALL SIGNAL HARDWARE SHALL PREFERABLY BE INSTALLED ON THE SIDE OF POLE/PEDESTAL AWAY FROM THE TRAVELED WAY.
4. CARE SHALL BE TAKEN DURING CONSTRUCTION TO ACCOMMODATE ANY UNDERGROUND STRUCTURES ENCOUNTERED (VAULTS, MANHOLES, CONDUITS, ETC.).
5. A MINIMUM DISTANCE OF 3 FEET FROM CURB FACE TO POLE/PEDESTAL CENTERLINE IS DESIRABLE, BUT MAY BE CHANGED FOR THE ABOVE MENTIONED ACCOMMODATION, UPON CONSULTING WITH THE DESIGNING TRAFFIC ENGINEER.
6. TACTILE ARROW FOR APS PUSHBUTTONS SHALL BE ALIGNED PARALLEL TO THE DIRECTION OF TRAVEL ON THE ASSOCIATED CROSSWALK.
7. APS PUSHBUTTONS ON PARKWAY OR ON LEDGE SHALL BE EITHER ALIGNED FLUSH WITH EDGE OR LEVEL ACCESSIBLE PATH OR LESS THAN 10" FROM IT. APS EXTENSIONS SHALL BE USED TO SATISFY REQUIREMENT.

LEGEND

- EXISTING TRAFFIC SIGNAL HEAD
- PROPOSED TRAFFIC SIGNAL HEAD
- EXISTING COUNTDOWN PEDESTRIAN SIGNAL
- PROPOSED COUNTDOWN PEDESTRIAN SIGNAL
- EXISTING TRAFFIC SIGNAL POLE OR POST
- PROPOSED TRAFFIC SIGNAL POLE OR POST
- EXISTING TRAFFIC SIGNAL MAST ARM
- PROPOSED TRAFFIC SIGNAL MAST ARM
- EXISTING COLUMNS
- STRUCTURE MOUNTED
- PROPOSED BUS "QUEUE JUMP" SIGNAL
- PROPOSED BIKE SIGNAL
- RETROREFLECTIVE "LEFT/RIGHT TURN ON GREEN ARROW ONLY" SIGN
- RETROREFLECTIVE "BUS SIGNAL" SIGN
- HORIZONTALLY MOUNTED
- TEMPORARY WOOD POLE

CONSULTANT FIRM NAME/ ADDRESS AMES Engineering, Inc. CONSULTING ENGINEERS 6330 Belmont Road, Suite 4B Downers Grove, IL 60516	CITY OF CHICAGO DEPARTMENT OF TRANSPORTATION DIVISION OF TRAFFIC SAFETY
	TRAFFIC SIGNAL REQUIREMENT PLAN
	S. PAULINA STREET AT W. VAN BUREN STREET MAINTENANCE OF TRAFFIC - STAGE 2
DESIGNED BY: TOBY MICKEY	REVIEWED BY: TRAFFIC ENGINEER
APPROVED BY: AHSAN SIDDIOI	APPROVED BY: TRAFFIC ENGINEER
DATE: 07-18-2025	DATE: / SCALE: 1"=20' / SHEET 1 OF 1

MODEL: Default
FILE NAME: F:\Projects\1058-Eisenhower IDOT-Collins\Design\Shts\Traffic Signals\PaulinaTS 20 MOT TSRs - Paulina and Van Buren.dgn

AMES Engineering, Inc. CONSULTING ENGINEERS 6330 Belmont Road, Suite 4B Downers Grove, IL 60516	USER NAME = tmickey	DESIGNED - TM	REVISED -	
		DRAWN - SR	REVISED -	
	PLOT SCALE = 39.9984 ' / in.	CHECKED - AS	REVISED -	
	PLOT DATE = 9/5/2025	DATE - $DATE	REVISED -	

STATE OF ILLINOIS
DEPARTMENT OF TRANSPORTATION

TRAFFIC CONTROL SIGNALS
S. PAULINA STREET AND W. VAN BUREN STREET
S. PAULINA STREET AND W. CONGRESS PARKWAY

SCALE: | SHEET OF SHEETS | STA. | TO STA.

F.A.I. RTE.	SECTION	COUNTY	TOTAL SHEETS	SHEET NO.
290	2019-191-B-R	COOK	265	131
		CONTRACT NO. 62K64		
		ILLINOIS	FED. AID PROJECT	

TRAFFIC SIGNAL REQUIREMENTS

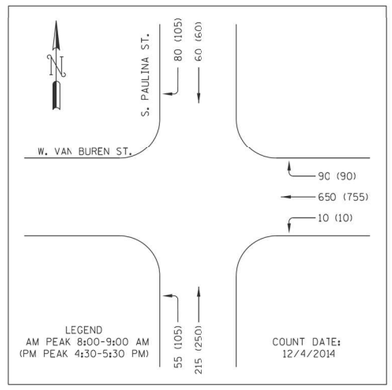

NOTES:

1. PAULINA STREET, SPEED LIMIT 30 MPH
   VAN BUREN STREET, SPEED LIMIT 30 MPH

GENERAL NOTES, TRAFFIC SIGNAL REQUIREMENTS

1. UNLESS OTHERWISE NOTED ALL VEHICULAR SIGNALS SHALL BE STANDARD 12-INCH DIA., ADJUSTABLE 3-SECTION UNITS, AND ALL PEDESTRIAN SIGNALS SHALL BE STANDARD 16-INCH, ADJUSTABLE, 1-SECTION UNITS WITH I.T.E.-SPECIFICATION ("HAND-MAN") SYMBOLIC LENSES AND COUNTDOWN TIMERS. ALL OPTICALLY PROGRAMMABLE SHALL BE DENOTED BY AN ASTERISK (*), OR BY THE DESIGNATION "3M", AND SHALL BE AIMED AND PROGRAMMED WITH THE GUIDANCE OF THE DESIGNING TRAFFIC ENGINEER.
2. UNLESS OTHERWISE NOTED, ALL MAST ARMS SHOWN SHALL BE CANTILEVER MOUNTED. TAPERED STEEL. MONOTUBE ARM.
3. ANY SIGNAL MOUNTING SHOWN LABELED IS THE RECOMMENDATION OF THE DESIGNING TRAFFIC ENGINEER, AND SHALL BE FINALIZED BY THE DIVISION OF ELECTRICAL OPERATIONS. ALL SIGNAL HARDWARE SHALL PREFERABLY BE INSTALLED ON THE SIDE OF POLE/PEDESTAL AWAY FROM THE TRAVELED WAY.
4. CARE SHALL BE TAKEN DURING CONSTRUCTION TO ACCOMMODATE ANY UNDERGROUND STRUCTURES ENCOUNTERED (VAULTS, MANHOLES, CONDUITS, ETC.).
5. A MINIMUM DISTANCE OF 3 FEET FROM CURB FACE TO POLE/PEDESTAL CENTERLINE IS DESIRABLE, BUT MAY BE CHANGED FOR THE ABOVE MENTIONED ACCOMMODATION, UPON CONSULTING WITH THE DESIGNING TRAFFIC ENGINEER.
6. TACTILE ARROW FOR APS PUSHBUTTONS SHALL BE ALIGNED PARALLEL TO THE DIRECTION OF TRAVEL ON THE ASSOCIATED CROSSWALK.
7. APS PUSHBUTTONS ON PARKWAY OR ON LEDGE SHALL BE EITHER ALIGNED FLUSH WITH EDGE OR LEVEL ACCESSIBLE PATH OR LESS THAN 10' FROM IT. APS EXTENSIONS SHALL BE USED TO SATISFY REQUIREMENT.

LEGEND

- EXISTING TRAFFIC SIGNAL HEAD
- PROPOSED TRAFFIC SIGNAL HEAD
- EXISTING COUNTDOWN PEDESTRIAN SIGNAL
- PROPOSED COUNTDOWN PEDESTRIAN SIGNAL
- EXISTING TRAFFIC SIGNAL POLE OR POST
- PROPOSED TRAFFIC SIGNAL POLE OR POST
- EXISTING TRAFFIC SIGNAL MAST ARM
- PROPOSED TRAFFIC SIGNAL MAST ARM
- EXISTING COLUMNS
- STRUCTURE MOUNTED
- PROPOSED BUS "QUEUE JUMP" SIGNAL
- B PROPOSED BIKE SIGNAL
- L RETROREFLECTIVE "LEFT/RIGHT TURN ON GREEN ARROW ONLY" SIGN
- T RETROREFLECTIVE "BUS SIGNAL" SIGN
- H HORIZONTALLY MOUNTED
- TEMPORARY WOOD POLE

CONSULTANT FIRM NAME/ ADDRESS AMES Engineering, Inc. CONSULTING ENGINEERS 6330 Belmont Road, Suite 4B Downers Grove, IL 60516	CITY OF CHICAGO DEPARTMENT OF TRANSPORTATION DIVISION OF TRAFFIC SAFETY TRAFFIC SIGNAL REQUIREMENT PLAN S. PAULINA STREET AT W. VAN BUREN STREET MAINTENANCE OF TRAFFIC - STAGE 3
DESIGNED BY: TOBY MICKEY	REVIEWED BY: TRAFFIC ENGINEER
APPROVED BY: AHSAN SIDDIQI	APPROVED BY: TRAFFIC ENGINEER
DATE: 07-18-2025	DATE: SCALE: 1"=20' SHEET 1 OF 1

MODEL: Default
FILE NAME: F:\Projects\1058-Eisenhower IDOT-Collins\Design\Shift\Traffic Signals\Paulina\TS 21 MOT TSRs - Paulina and Van Buren.dgn

AMES Engineering, Inc.
CONSULTING ENGINEERS
6330 Belmont Road, Suite 4B
Downers Grove, IL 60516

USER NAME = Srahman	DESIGNED - TM	REVISED -	STATE OF ILLINOIS DEPARTMENT OF TRANSPORTATION	TRAFFIC CONTROL SIGNALS S. PAULINA STREET AND W. VAN BUREN STREET S. PAULINA STREET AND W. CONGRESS PARKWAY	
	DRAWN - SR	REVISED -			
PLOT SCALE = 39.9984 ' / In.	CHECKED - AS	REVISED -		SCALE: SHEET OF SHEETS STA. TO STA.	
PLOT DATE = 9/5/2025	DATE - $DATE	REVISED -			

F.A.I. RTE.	SECTION	COUNTY	TOTAL SHEETS	SHEET NO.
290	2019-191-B-R	COOK	265	132
		CONTRACT NO. 62K64		
	ILLINOIS FED. AID PROJECT			

DIAL	CYCLE LENGTH	OFFSET	TIMES OF OPERATION	FLASH OPERATION
1	90"	0"	ALL OTHER TIMES	R04, R06, R08.
2	90"	0"	6:00 TO 10:00 AM MONDAY - FRIDAY	WALK/DON'T WALK OFF
3	90"	0"	3:00 TO 7:00 PM MONDAY - FRIDAY	

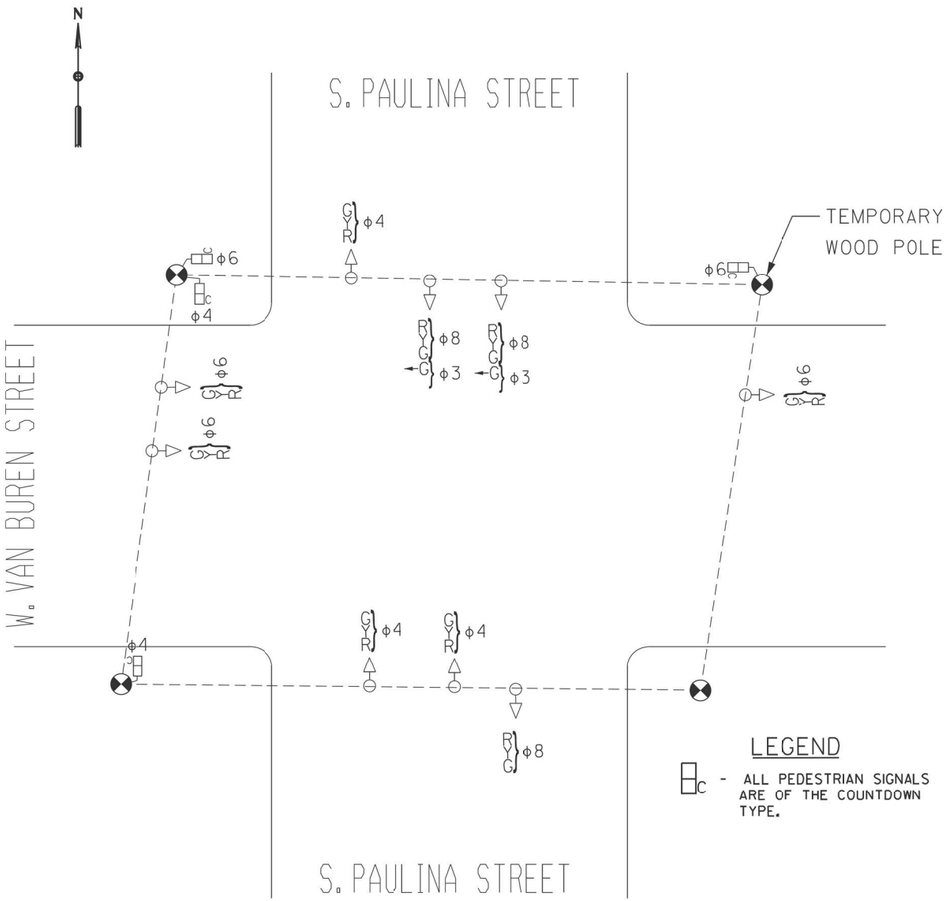

S. PAULINA STREET AND W. VAN BUREN STREET STAGE 1

DIAL 1

	PHASE							
PHASE NUMBER	1	2	3	4	5	6	7	8
DIRECTION	WBLT	EB	NBLT	SB	EBLT	WB	SBLT	NB
MINIMUM GREEN								
VEHICLE EXTENSION								
MAX GREEN (MAX 1)			26	26		26		26
YELLOW CHANGE			3	3		3		3
RED CLEARANCE			1	1		1		1
WALK				15		15		
PED CLEARANCE				11		11		
SPLITS			30	30		30		30
COORDINATED PHASE								

DIAL 2

	PHASE							
PHASE NUMBER	1	2	3	4	5	6	7	8
DIRECTION	WBLT	EB	NBLT	SB	EBLT	WB	SBLT	NB
MINIMUM GREEN								
VEHICLE EXTENSION								
MAX GREEN (MAX 1)			26	26		26		26
YELLOW CHANGE			3	3		3		3
RED CLEARANCE			1	1		1		1
WALK				15		15		
PED CLEARANCE				11		11		
SPLITS			30	30		30		30
COORDINATED PHASE								

DIAL 3

	PHASE							
PHASE NUMBER	1	2	3	4	5	6	7	8
DIRECTION	WBLT	EB	NBLT	SB	EBLT	WB	SBLT	NB
MINIMUM GREEN								
VEHICLE EXTENSION								
MAX GREEN (MAX 1)			26	26		26		26
YELLOW CHANGE			3	3		3		3
RED CLEARANCE			1	1		1		1
WALK				15		15		
PED CLEARANCE				11		11		
SPLITS			30	30		30		30
COORDINATED PHASE								

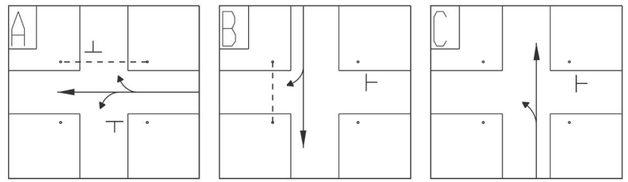

CITY OF CHICAGO
DEPARTMENT OF TRANSPORTATION

S. PAULINA ST. & W. VAN BUREN STREET

TRAFFIC SIGNAL TIMING SCHEDULE

DESIGNED BY: TCM
DATE: 2025/07/18
CHECKED BY: AS
DATE: 2015/07/18

APPROVED:
TRAFFIC ENGINEER:

PAGE 1 OF 1

SENT: INSTALLED:

CONTROLLER SEQUENCE

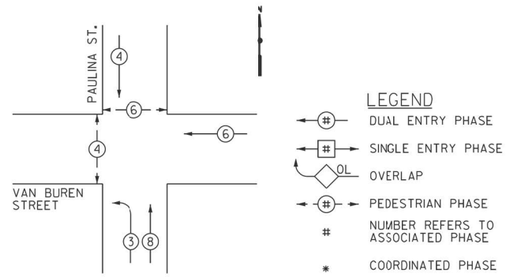

MODEL: Default
FILE NAME: F:\Projects\1064\Ekenhower IDOT-Collins\Design\Sht\Traffic Signals\Paulina\TS 22 TMP Timing Plans - Paulina and Van Buren.dgn

AMES Engineering, Inc.
CONSULTING ENGINEERS
6330 Belmont Road, Suite 4B
Downers Grove, IL 60516

USER NAME = Srahman	DESIGNED - TM	REVISED -		
	DRAWN - SR	REVISED -		
PLOT SCALE = 39.9984 ' / in.	CHECKED - AS	REVISED -		
PLOT DATE = 9/5/2025	DATE - $DATE	REVISED -		

STATE OF ILLINOIS
DEPARTMENT OF TRANSPORTATION

TRAFFIC CONTROL SIGNALS
S. PAULINA STREET AND W. VAN BUREN STREET
S. PAULINA STREET AND W. CONGRESS PARKWAY

SCALE: SHEET OF SHEETS STA. TO STA.

F.A.I. RTE.	SECTION	COUNTY	TOTAL SHEETS	SHEET NO.
290	2019-191-B-R	COOK	265	133
		CONTRACT NO. 62K64		
	ILLINOIS	FED. AID PROJECT		

DIAL	CYCLE LENGTH	OFFSET	TIMES OF OPERATION	FLASH OPERATION
1	90"	0"	ALL OTHER TIMES	R04, R06, R08.
2	90"	0"	6:00 TO 10:00 AM MONDAY - FRIDAY	WALK/DON'T WALK OFF
3	90"	0"	3:00 TO 7:00 PM MONDAY - FRIDAY	

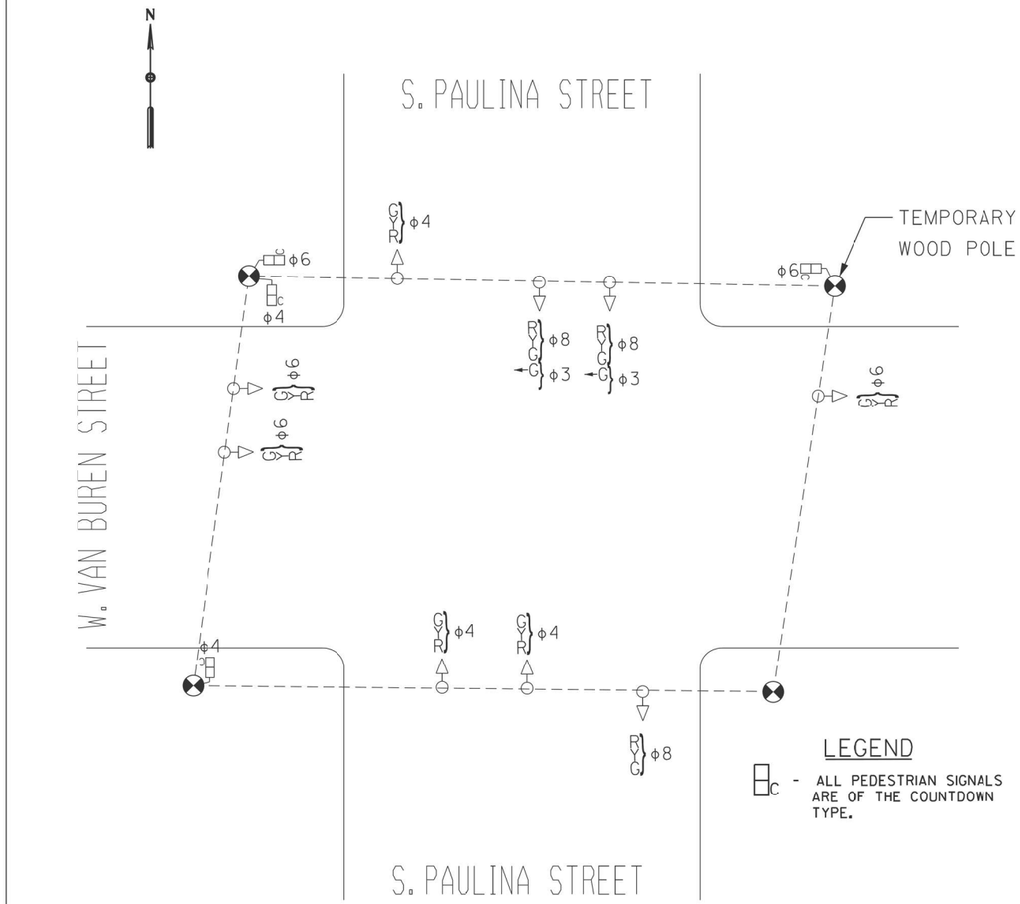

S. PAULINA STREET AND W. VAN BUREN STREET WINTER STAGE

DIAL 1

	PHASE							
PHASE NUMBER	1	2	3	4	5	6	7	8
DIRECTION	WBLT	EB	NBLT	SB	EBLT	WB	SBLT	NB
MINIMUM GREEN								
VEHICLE EXTENSION								
MAX GREEN (MAX 1)			26	26		26		26
YELLOW CHANGE			3	3		3		3
RED CLEARANCE			1	1		1		1
WALK				15		15		15
PED CLEARANCE				11		11		11
SPLITS			30	30		30		30
COORDINATED PHASE								

DIAL 2

	PHASE							
PHASE NUMBER	1	2	3	4	5	6	7	8
DIRECTION	WBLT	EB	NBLT	SB	EBLT	WB	SBLT	NB
MINIMUM GREEN								
VEHICLE EXTENSION								
MAX GREEN (MAX 1)			26	26		26		26
YELLOW CHANGE			3	3		3		3
RED CLEARANCE			1	1		1		1
WALK				15		15		15
PED CLEARANCE				11		11		11
SPLITS			30	30		30		30
COORDINATED PHASE								

DIAL 3

	PHASE							
PHASE NUMBER	1	2	3	4	5	6	7	8
DIRECTION	WBLT	EB	NBLT	SB	EBLT	WB	SBLT	NB
MINIMUM GREEN								
VEHICLE EXTENSION								
MAX GREEN (MAX 1)			26	26		26		26
YELLOW CHANGE			3	3		3		3
RED CLEARANCE			1	1		1		1
WALK				15		15		15
PED CLEARANCE				11		11		11
SPLITS			30	30		30		30
COORDINATED PHASE								

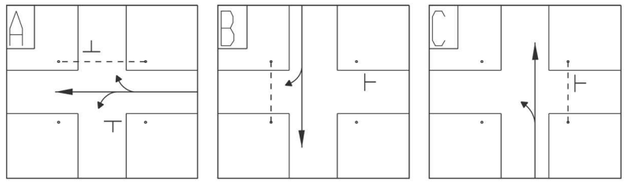

CITY OF CHICAGO
DEPARTMENT OF TRANSPORTATION

S. PAULINA ST. & W. VAN BUREN STREET

TRAFFIC SIGNAL TIMING SCHEDULE

DESIGNED BY: TCM
DATE: 2025/07/18
CHECKED BY: AS
DATE: 2015/07/18

APPROVED:
TRAFFIC ENGINEER:

PAGE 1 OF 1

SENT: INSTALLED:

CONTROLLER SEQUENCE

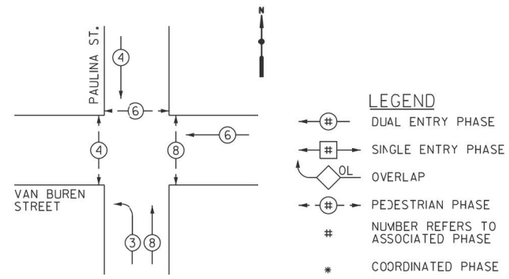

MODEL: Default
FILE NAME: F:\Projects\1058-Eisenhower EDOT-Collins\Design\Sht\Traffic Signals\Paulina TS 23 TMP Timing Plans - Paulina and Van Buren.dgn

AMES Engineering, Inc.
CONSULTING ENGINEERS
6330 Belmont Road, Suite 4B
Downers Grove, IL 60516

USER NAME = Srahman	DESIGNED - TM	REVISED -	
	DRAWN - SR	REVISED -	
PLOT SCALE = 39.9984 ' / In.	CHECKED - AS	REVISED -	
PLOT DATE = 9/5/2025	DATE - $DATE	REVISED -	

STATE OF ILLINOIS
DEPARTMENT OF TRANSPORTATION

TRAFFIC CONTROL SIGNALS
S. PAULINA STREET AND W. VAN BUREN STREET
S. PAULINA STREET AND W. CONGRESS PARKWAY

SCALE: SHEET OF SHEETS STA. TO STA.

F.A.I. RTE.	SECTION	COUNTY	TOTAL SHEETS	SHEET NO.
290	2019-191-B-R	COOK	265	134
		CONTRACT NO. 62K64		
	ILLINOIS	FED. AID PROJECT		

DIAL	CYCLE LENGTH	OFFSET	TIMES OF OPERATION	FLASH OPERATION
1	90"	0"	ALL OTHER TIMES	R04, R06, R08.
2	90"	0"	6:00 TO 10:00 AM MONDAY - FRIDAY	WALK/DON'T WALK OFF
3	90"	0"	3:00 TO 7:00 PM MONDAY - FRIDAY	

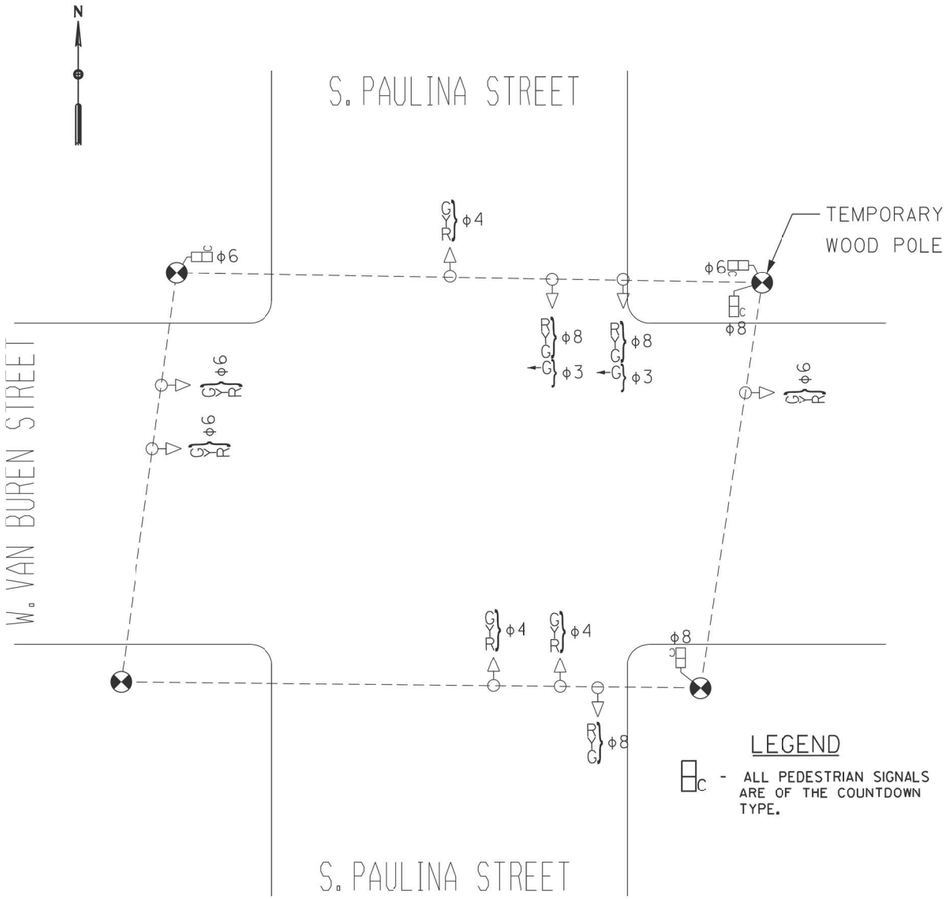

S. PAULINA STREET AND W. VAN BUREN STREET STAGE 2

DIAL 1

	PHASE							
PHASE NUMBER	1	2	3	4	5	6	7	8
DIRECTION	WBLT	EB	NBLT	SB	EBLT	WB	SBLT	NB
MINIMUM GREEN								
VEHICLE EXTENSION								
MAX GREEN (MAX 1)			26	26		26		26
YELLOW CHANGE			3	3		3		3
RED CLEARANCE			1	1		1		1
WALK						15		15
PED CLEARANCE						11		11
SPLITS			30	30		30		30
COORDINATED PHASE								

DIAL 2

	PHASE							
PHASE NUMBER	1	2	3	4	5	6	7	8
DIRECTION	WBLT	EB	NBLT	SB	EBLT	WB	SBLT	NB
MINIMUM GREEN								
VEHICLE EXTENSION								
MAX GREEN (MAX 1)			26	26		26		26
YELLOW CHANGE			3	3		3		3
RED CLEARANCE			1	1		1		1
WALK						15		15
PED CLEARANCE						11		11
SPLITS			30	30		30		30
COORDINATED PHASE								

DIAL 3

	PHASE							
PHASE NUMBER	1	2	3	4	5	6	7	8
DIRECTION	WBLT	EB	NBLT	SB	EBLT	WB	SBLT	NB
MINIMUM GREEN								
VEHICLE EXTENSION								
MAX GREEN (MAX 1)			26	26		26		26
YELLOW CHANGE			3	3		3		3
RED CLEARANCE			1	1		1		1
WALK						15		15
PED CLEARANCE						11		11
SPLITS			30	30		30		30
COORDINATED PHASE								

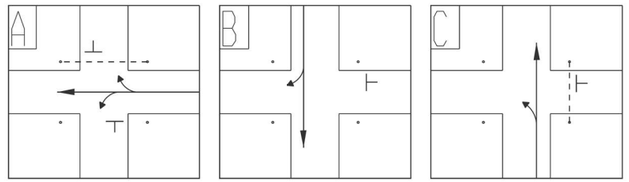

CITY OF CHICAGO
DEPARTMENT OF TRANSPORTATION

S. PAULINA ST. & W. VAN BUREN STREET

TRAFFIC SIGNAL TIMING SCHEDULE

DESIGNED BY: TCM
DATE: 2025/07/18
CHECKED BY: AS
DATE: 2015/07/18

APPROVED:
TRAFFIC ENGINEER:

PAGE 1 OF 1

SENT: INSTALLED:

CONTROLLER SEQUENCE

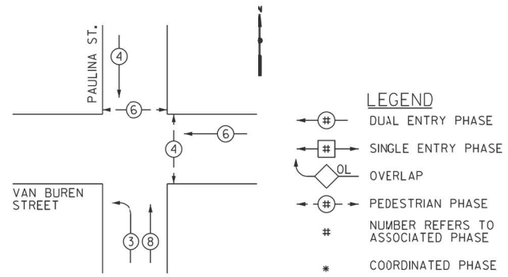

MODEL: Default
FILE NAME: F:\Projects\10584\Eisenhower IDOT-Collins\Design\Shr\Traffic Signals\Paulina\TS 24 TMP Timing Plans - Paulina and Van Buren.dgn

AMES Engineering, Inc.
CONSULTING ENGINEERS
6330 Belmont Road, Suite 4B
Downers Grove, IL 60516

USER NAME = Srahman	DESIGNED - TM	REVISED -	
	DRAWN - SR	REVISED -	
PLOT SCALE = 39.9984 ' / in.	CHECKED - AS	REVISED -	
PLOT DATE = 9/5/2025	DATE - $DATE	REVISED -	

STATE OF ILLINOIS
DEPARTMENT OF TRANSPORTATION

TRAFFIC CONTROL SIGNALS
S. PAULINA STREET AND W. VAN BUREN STREET
S. PAULINA STREET AND W. CONGRESS PARKWAY

SCALE: SHEET OF SHEETS STA. TO STA.

F.A.I. RTE.	SECTION	COUNTY	TOTAL SHEETS	SHEET NO.
290	2019-191-B-R	COOK	265	135
		CONTRACT NO. 62K64		
	ILLINOIS	FED. AID PROJECT		

DIAL	CYCLE LENGTH	OFFSET	TIMES OF OPERATION	FLASH OPERATION
1	90"	0"	ALL OTHER TIMES	R04, R06, R08.
2	90"	0"	6:00 TC 10:00 AM MONDAY - FRIDAY	WALK/DON'T WALK OFF
3	90"	0"	3:00 TO 7:00 PM MONDAY - FRIDAY	

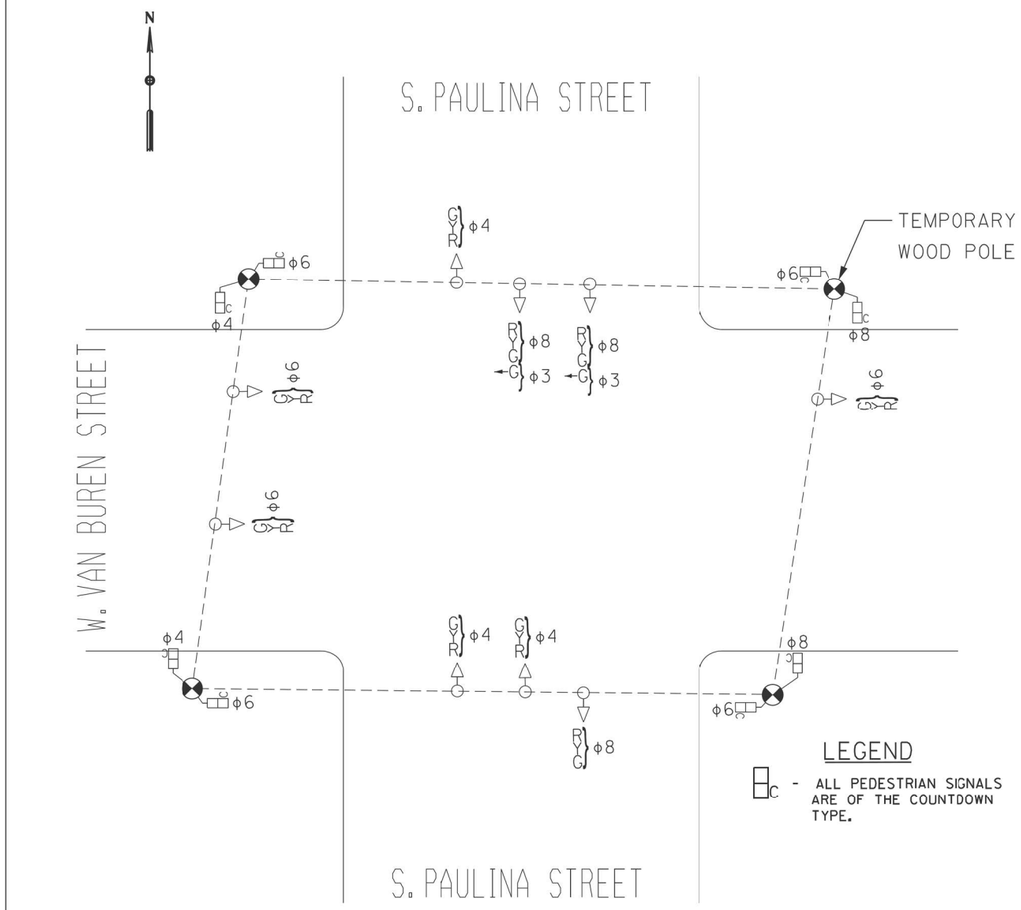

LEGEND

C - ALL PEDESTRIAN SIGNALS ARE OF THE COUNTDOWN TYPE.

S. PAULINA STREET AND W. VAN BUREN STREET STAGE 3

DIAL 1

	PHASE							
PHASE NUMBER	1	2	3	4	5	6	7	8
DIRECTION	WBLT	EB	NBLT	SB	EBLT	WB	SBLT	NB
MINIMUM GREEN								
VEHICLE EXTENSION								
MAX GREEN (MAX I)			26	26		26		26
YELLOW CHANGE			3	3		3		3
RED CLEARANCE			1	1		1		1
WALK				15		15		
PED CLEARANCE				11		11		
SPLITS			30	30		30		30
COORDINATED PHASE								

DIAL 2

	PHASE							
PHASE NUMBER	1	2	3	4	5	6	7	8
DIRECTION	WBLT	EB	NBLT	SB	EBLT	WB	SBLT	NB
MINIMUM GREEN								
VEHICLE EXTENSION								
MAX GREEN (MAX I)			26	26		26		26
YELLOW CHANGE			3	3		3		3
RED CLEARANCE			1	1		1		1
WALK				15		15		
PED CLEARANCE				11		11		
SPLITS			30	30		30		30
COORDINATED PHASE								

DIAL 3

	PHASE							
PHASE NUMBER	1	2	3	4	5	6	7	8
DIRECTION	WBLT	EB	NBLT	SB	EBLT	WB	SBLT	NB
MINIMUM GREEN								
VEHICLE EXTENSION								
MAX GREEN (MAX I)			26	26		26		26
YELLOW CHANGE			3	3		3		3
RED CLEARANCE			1	1		1		1
WALK				15		15		
PED CLEARANCE				11		11		
SPLITS			30	30		30		30
COORDINATED PHASE								

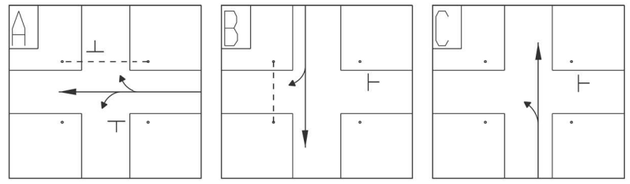

CITY OF CHICAGO
DEPARTMENT OF TRANSPCRTATION

S. PAULINA ST. & W. VAN BUREN STREET

TRAFFIC SIGNAL TIMING SCHEDULE

DESIGNED BY: TCM
DATE: 2025/07/18
CHECKED BY: AS
DATE: 2015/07/18

APPROVED:
TRAFFIC ENGINEER:

PAGE 1 OF 1

SENT: INSTALLED:

CONTROLLER SEQUENCE

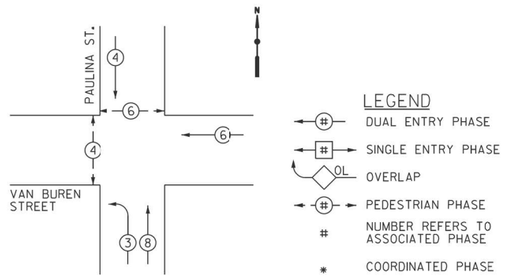

MODEL: Default
FILE NAME: F:\Projects\1059-Eisenhower IDOT-Collins\Design\Shit\Traffic Signals\Paulina TS 25 TMP Timing Plans • Paulina and Van Buren.dgn

AMES Engineering, Inc.
CONSULTING ENGINEERS
6330 Belmont Road, Suite 4B
Downers Grove, IL 60516

USER NAME = Srahman	DESIGNED - TM	REVISED -
	DRAWN - SR	REVISED -
PLOT SCALE = 39.9984 ' / In.	CHECKED - AS	REVISED -
PLOT DATE = 9/5/2025	DATE - $DATE	REVISED -

STATE OF ILLINOIS
DEPARTMENT OF TRANSPORTATION

TRAFFIC CONTROL SIGNALS
S. PAULINA STREET AND W. VAN BUREN STREET
S. PAULINA STREET AND W. CONGRESS PARKWAY

SCALE: SHEET OF SHEETS STA. TO STA.

F.A.I. RTE.	SECTION	COUNTY	TOTAL SHEETS	SHEET NO.
290	2019-191-B-R	COOK	265	136
		CONTRACT NO. 62K64		
	ILLINOIS	FED. AID PROJECT		

TRAFFIC SIGNAL REQUIREMENTS

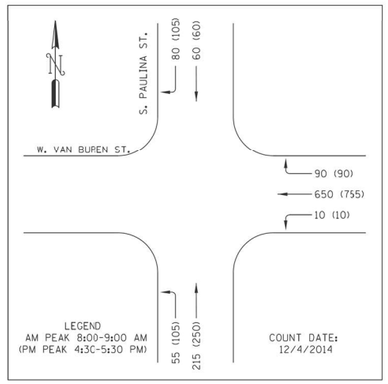

NOTES:

1. PAULINA STREET, SPEED LIMIT 30 MPH
   VAN BUREN STREET, SPEED LIMIT 30 MPH

GENERAL NOTES, TRAFFIC SIGNAL REQUIREMENTS

1. UNLESS OTHERWISE NOTED ALL VEHICULAR SIGNALS SHALL BE STANDARD 12-INCH DIA., ADJUSTABLE 3-SECTION UNITS, AND ALL PEDESTRIAN SIGNALS SHALL BE STANDARD 16-INCH, ADJUSTABLE, 1-SECTION UNITS WITH I.T.E.-SPECIFICATION ("HAND-MAN") SYMBOLIC LENSES AND COUNTDOWN TIMERS. ALL OPTICALLY PROGRAMMABLE SHALL BE DENOTED BY AN ASTERISK (•), OR BY THE DESIGNATION "3M", AND SHALL BE AIMED AND PROGRAMMED WITH THE GUIDANCE OF THE DESIGNING TRAFFIC ENGINEER.
2. UNLESS OTHERWISE NOTED, ALL MAST ARMS SHOWN SHALL BE CANTILEVER MOUNTED, TAPERED STEEL, MONOTUBE ARM.
3. ANY SIGNAL MOUNTING SHOWN LABELED IS THE RECOMMENDATION OF THE DESIGNING TRAFFIC ENGINEER, AND SHALL BE FINALIZED BY THE DIVISION OF ELECTRICAL OPERATIONS. ALL SIGNAL HARDWARE SHALL PREFERABLY BE INSTALLED ON THE SIDE OF POLE/PEDESTAL AWAY FROM THE TRAVELED WAY.
4. CARE SHALL BE TAKEN DURING CONSTRUCTION TO ACCOMMODATE ANY UNDERGROUND STRUCTURES ENCOUNTERED (VAULTS, MANHOLES, CONDUITS, ETC.).
5. A MINIMUM DISTANCE OF 3 FEET FROM CURB FACE TO POLE/PEDESTAL CENTERLINE IS DESIRABLE, BUT MAY BE CHANGED FOR THE ABOVE MENTIONED ACCOMMODATION, UPON CONSULTING WITH THE DESIGNING TRAFFIC ENGINEER.
6. TACTILE ARROW FOR APS PUSHBUTTONS SHALL BE ALIGNED PARALLEL TO THE DIRECTION OF TRAVEL ON THE ASSOCIATED CROSSWALK.

LEGEND

- PROPOSED TRAFFIC SIGNAL HEAD
- PROPOSED COUNTDOWN PEDESTRIAN SIGNAL
- PROPOSED TRAFFIC SIGNAL POLE OR POST
- PROPOSED TRAFFIC SIGNAL MAST ARM
- PROPOSED ADA LEVEL LANDING AREA
- PROPOSED APS PUSHBUTTON
- PROPOSED APS PUSHBUTTON SHORT POST

CONSULTANT FIRM NAME/ ADDRESS AMES Engineering, Inc. CONSULTING ENGINEERS 6330 Belmont Road, Suite 4B Downers Grove, IL 60516	CITY OF CHICAGO DEPARTMENT OF TRANSPORTATION DIVISION OF TRAFFIC SAFETY
	TRAFFIC SIGNAL REQUIREMENT PLAN
	S. PAULINA STREET AT W. VAN BUREN STREET
DESIGNED BY: TOBY MICKEY	REVIEWED BY: TRAFFIC ENGINEER
APPROVED BY: AHSAN SIDDIOI	APPROVED BY: TRAFFIC ENGINEER
DATE: 08-01-2025	DATE: SCALE: 1"=20' SHEET 1 OF 1

MODEL: Default
FILE NAME: F:\Projects\1058-Eisenhower IDOT-Collins\Design\SmiTraffic Signals\Paulina TS 26 Perm TSR - Paulina and Van Buren.dgn

AMES Engineering, Inc. CONSULTING ENGINEERS 6330 Belmont Road, Suite 4B Downers Grove, IL 60516	USER NAME = Srahman	DESIGNED - TM	REVISED -	STATE OF ILLINOIS DEPARTMENT OF TRANSPORTATION	TRAFFIC CONTROL SIGNALS S. PAULINA STREET AND W. VAN BUREN STREET S. PAULINA STREET AND W. CONGRESS PARKWAY
		DRAWN - SR	REVISED -		
	PLOT SCALE = 39.9984 ' / In.	CHECKED - AS	REVISED -		
	PLOT DATE = 9/5/2025	DATE - $DATE	REVISED -		SCALE: SHEET OF SHEETS STA. TO STA.

F.A.I. RTE.	SECTION	COUNTY	TOTAL SHEETS	SHEET NO.
290	2019-191-B-R	COOK	265	137
		CONTRACT NO. 62K64		
		ILLINOIS	FED. AID PROJECT	

DIAL	CYCLE LENGTH	OFFSET	TIMES OF OPERATION	FLASH OPERATION
1	90"	0"	ALL OTHER TIMES	R04, R06, R08.
2	90"	0"	6:00 TO 10:00 AM MONDAY - FRIDAY	WALK/DON'T WALK OFF
3	90"	0"	3:00 TO 7:00 PM MONDAY - FRIDAY	

DIAL 1

	PHASE							
PHASE NUMBER	1	2	3	4	5	6	7	8
DIRECTION	WBLT	EB	NBLT	SB	EBLT	WB	SBLT	NB
MINIMUM GREEN								
VEHICLE EXTENSION								
MAX GREEN (MAX 1)	56			26		56		26
YELLOW CHANGE	3			3		3		3
RED CLEARANCE	1			1		1		1
WALK				15		45		15
PED CLEARANCE				11		11		11
SPLITS	60			30		60		30
COORDINATED PHASE								

DIAL 2

	PHASE							
PHASE NUMBER	1	2	3	4	5	6	7	8
DIRECTION	WBLT	EB	NBLT	SB	EBLT	WB	SBLT	NB
MINIMUM GREEN								
VEHICLE EXTENSION								
MAX GREEN (MAX 1)	56			26		56		26
YELLOW CHANGE	3			3		3		3
RED CLEARANCE	1			1		1		1
WALK				15		45		15
PED CLEARANCE				11		11		11
SPLITS	60			30		60		30
COORDINATED PHASE								

DIAL 3

	PHASE							
PHASE NUMBER	1	2	3	4	5	6	7	8
DIRECTION	WBLT	EB	NBLT	SB	EBLT	WB	SBLT	NB
MINIMUM GREEN								
VEHICLE EXTENSION								
MAX GREEN (MAX 1)	56			26		56		26
YELLOW CHANGE	3			3		3		3
RED CLEARANCE	1			1		1		1
WALK				15		45		15
PED CLEARANCE				11		11		11
SPLITS	60			30		60		30
COORDINATED PHASE								

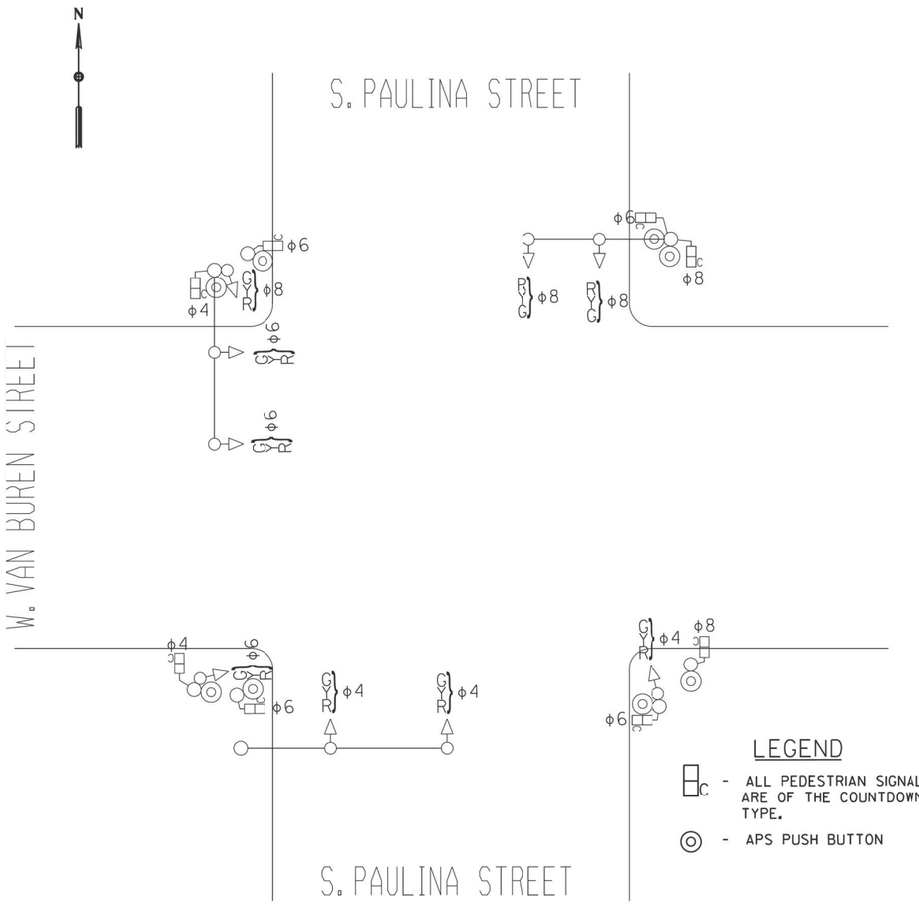

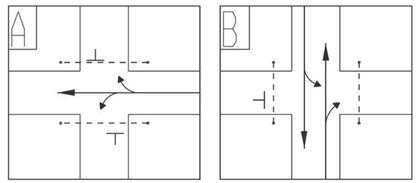

S. PAULINA STREET AND W. VAN BUREN STREET

CITY OF CHICAGO
DEPARTMENT OF TRANSPORTATION

S. PAULINA ST. & W. VAN BUREN STREET

TRAFFIC SIGNAL TIMING SCHEDULE

DESIGNED BY: TCM
DATE: 2025/07/18
CHECKED BY: AS
DATE: 2015/07/18

APPROVED:
TRAFFIC ENGINEER:

PAGE 1 OF 1

SENT: INSTALLED:

CONTROLLER SEQUENCE

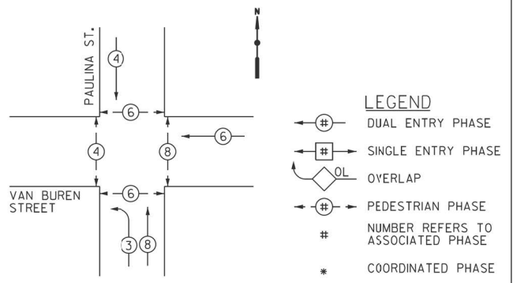

MODEL: Default
FILE NAME: F:\Projects\1058-Eisenhower IDOT-Collins\Design\Sht\Traffic Signals\Paulina TS 27 Perm Timing Plan - Paulina and Van Buren.dgn

AMES Engineering, Inc.
CONSULTING ENGINEERS
6330 Belmont Road, Suite 4B
Downers Grove, IL 60516

USER NAME = Srahman	DESIGNED - TM	REVISED -		
	DRAWN - SR	REVISED -		
PLOT SCALE = 39.9984 ' / in.	CHECKED - AS	REVISED -		
PLOT DATE = 9/5/2025	DATE - $DATE	REVISED -		

STATE OF ILLINOIS
DEPARTMENT OF TRANSPORTATION

TRAFFIC CONTROL SIGNALS
S. PAULINA STREET AND W. VAN BUREN STREET
S. PAULINA STREET AND W. CONGRESS PARKWAY

SCALE: SHEET OF SHEETS STA. TO STA.

F.A.I. RTE.	SECTION	COUNTY	TOTAL SHEETS	SHEET NO.
290	2019-191-B-R	COOK	265	138
		CONTRACT NO. 62K64		
	ILLINOIS FED. AID PROJECT			

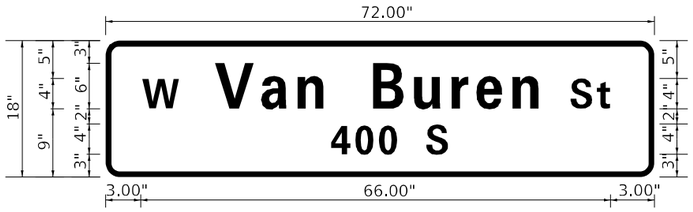

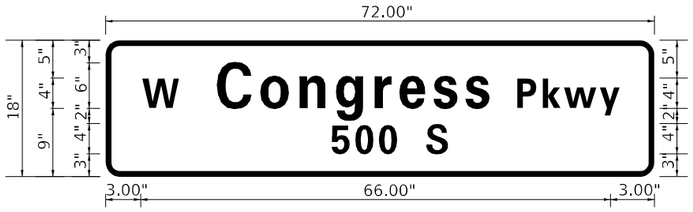

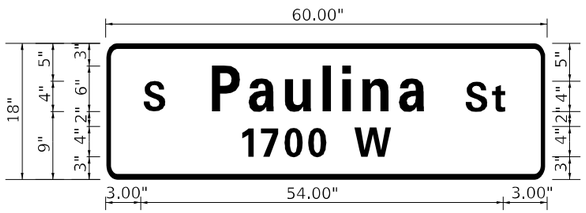

A		
DATE	REVISION	

MAST ARM MOUNTED STREET NAME SIGNS

S. PAULINA STREET &
W. VAN BUREN STREET

CITY OF CHICAGO
DEPARTMENT OF TRANSPORTATION
DIVISION OF ENGINEERING

CONSULTING ENGINEERS:

AMES Engineering, Inc.
CONSULTING ENGINEERS
6330 Belmont Road, Suite 4B
Downers Grove, IL 60516

PROJECT # 1058

DWG. NO.
XXXX

SIZE: 22" X 34" | SCALE: AS NOTED | DATE: 9/8/2025

AMES Engineering, Inc.
CONSULTING ENGINEERS
6330 Belmont Road, Suite 4B
Downers Grove, IL 60516

USER NAME = tmickey	DESIGNED - TM	REVISED -	
	DRAWN - SR	REVISED -	
PLOT SCALE = 39.9984 ' / in.	CHECKED - AS	REVISED -	
PLOT DATE = 11/5/2025	DATE - $DATE	REVISED -	

STATE OF ILLINOIS
DEPARTMENT OF TRANSPORTATION

TRAFFIC CONTROL SIGNALS
S. PAULINA STREET AND W. VAN BUREN STREET
S. PAULINA STREET AND W. CONGRESS PARKWAY

SCALE: | SHEET OF SHEETS | STA. TO STA.

F.A.I. RTE.	SECTION	COUNTY	TOTAL SHEETS	SHEET NO.
290	2019-191-B-R	COOK	265	139
		CONTRACT NO. 62K64		
	ILLINOIS	FED. AID PROJECT		

MODEL: Default
FILE NAME: F:\Projects\1058-Eisenhower IDOT-Collins\Design\Shts\Traffic Signals\Paulina\TS 06 TS STN - Paulina.dgn

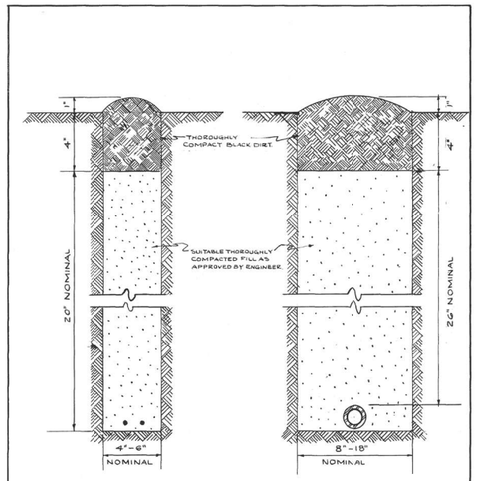

CABLE TRENCH CONDUIT TRENCH

NOTE

EXCESS SOIL FROM TRENCH TO BE COMPLETELY REMOVED FROM SITE AS SOON AS PRACTICABLE.

BLACK DIRT TO BE TAMPED & THOROUGHLY COMPACTED AS SHOWN.

STANDARD METHOD FOR BACKFILLING CABLE & CONDUIT TRENCHES IN SODDED PARKWAY & LAWNS

CITY OF CHICAGO
DEPT. OF STREETS & SANITATION
DIVISION OF ELECTRICAL ENGINEERING

REVISION	DRAWN	CHECKED	ENGINEER
	DEPT. OF STREETS & SANITATION		
	DRAWN W. E. HAEP	CHECKED M. J. Lane	ENGINEER J. O'CONNOR
	ENGIN CHARGE		DRG. NO.
	SUPT. OF CONST.		579
	DRAFTSMAN		
	SIZE 8½"x14"	SCALE N	DATE: 7-14-61

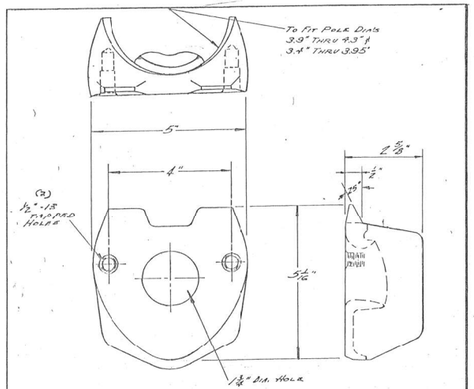

MATERIAL: CAST STEEL

REVISED	DRAWN	CHECKED	ENGINEER
A 3-27-74	W.HENSFELDT	J.DORE	J.DORE
B			
C			
D			
E			
F			
G			

A J.O'C. MATERIAL NOTE ADDED.

2 BOLT MAST ARM ATTACHMENT POLE PLATE DETAILS

CITY OF CHICAGO
DEPT. OF STREETS AND SANITATION
DIVISION OF ELECTRICAL ENGINEERING

DRAWN W.HENSFELDT CHECKED J.DORE ENGINEER J.DORE
DRG. NO. 659
SIZE 8½"x14" SCALE ~ DATE 10-25-66

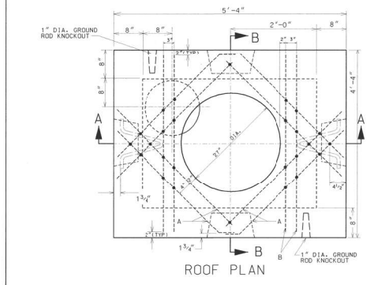

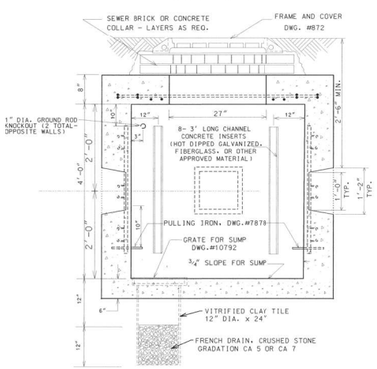

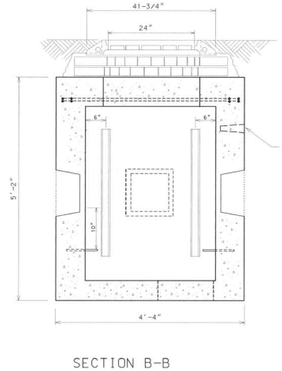

EXCAVATION (CONSTRUCTION INFORMATION)

COMPLETE MANHOLE	6.0 CU. YDS.
NEW ROOF ONLY	2.0 CU. YDS
SHEETING MANHOLE 150.0 SQ. FT.	

#5 REINFORCING BARS

BAR	LENG'H	NO. OF RODS	TOTAL FT.
A	3'-4"	4	13'-4"
B	4'-0"	10	40'-0"

MATERIALS FOR ROOF ONLY

CONCRETE	0.45 CU. YDS.
REINFORCING BARS #5	54'

DRG.	MATERIAL	CODE	SIZE	No. Req.
	FORM FOR MANHOLE	17-4674-4000 17-4648-5320	3'x4'x4'	1
	CONDUIT END BELL		AS REQ.	
	TILE, SEWER	39-4038-3200	12"/24"	1
	SLAB BOLSTER		2"	20'
	BAR, REINFORCING	20-5472-9650	⅝" ø	54
	TIE WIRE	13-9938-6106	#20GA.	35'
7878	PULLING IRON	02-4483-6970	¾" ø	2
	CONCRETE	05-3267-2940	3 CU.	YDS
	SEWER BRICK	05-1452-9720	STD.	50
10792	GRATE FOR SUMP	02-4368-1100	15" ø	1
	GROUND ROD	09-7796-8000	¾"x10'	1
	GROUND ROD CLAMP	09-2636-3240	¾"	1
	CRUSHED STONE	05-9057-5471	¾"	TWO BAGS
872	MANHOLE FRAME	02-4299-5524	24"	1
872	MANHOLE COVER	02-4574-5040	24"	1
	CONC. CHANNEL INSERT	02-4574-5040	3'	8

NOTES:
1. PRECAST MANHOLES MUST BE PROVIDED WITH CHANNEL INSERTS, PULLING IRONS, AND CONDUIT KNOCK-OUTS.
2. ALL CONCRETE MUST BE PORTLAND CEMENT CONCRETE MEETING IDOT REQUIREMENTS FOR CLASS PC CONCRETE FOR PRE-CAST STRUCTURES, OR CLASS S1 CONCRETE FOR CAST-IN-PLACE STRUCTURES.
3. REINFORCING BARS MUST MEET ASTM A615 GRADE 60.

DATE	REVISION
8/21/02	SUPERCEDES DWG. 730 DATED JAN 12. 1996
1/12/96	SUPERCEDES DWG. 730 DATED NOV. 21, 1973

3' x 4' x 4'
CONCRETE MANHOLE
WITH 24" FRAME AND COVER

CITY OF CHICAGO
DEPT. OF STREETS AND SANITATION
BUREAU OF ELECTRICITY
DIVISION OF ELECTRICAL ENGINEERING

DRAFTSMAN	CHECKED	ENGINEER
D. GARNSEY	T. CARTER	B. GARNSEY
ELECTRICAL DESIGN ENGINEER		DRAWING NO.
ENGINEER OF ELECTRICITY		730
GENERAL SUPERINTENDENT		
DEPUTY COMMISSIONER		
SIZE 17" x 22"	SCALE NONE	DATE 8/21/02

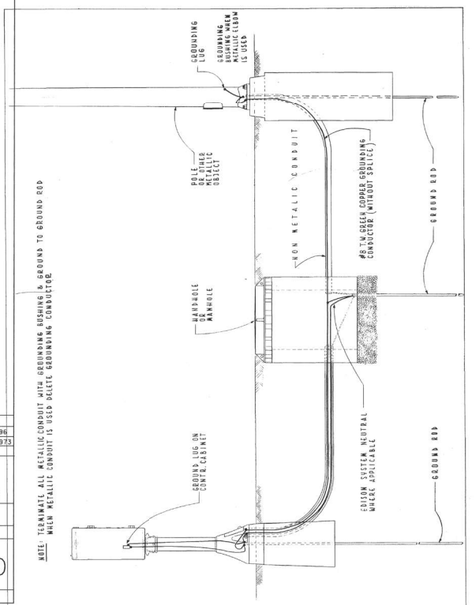

NOTE: THE MANHOLE, ALL METALLIC CONDUIT WITH GROUNDING BUSHINGS, & GROUND TO GROUND ROD MUST BE METALLIC CONDUIT TO ROD PASSING GROUNDING CONDUCTOR.

TYPICAL GROUNDING METHODS FOR BUREAU OF ELECTRICITY EQUIPMENT

CITY OF CHICAGO
DEPT. OF STREETS & SANITATION
BUREAU OF ELECTRICITY
DIVISION OF ELECTRICAL ENGINEERING

REVISED	DRAWN	CHECKED	ENGINEER
A	E. SEGUILLE	M. SWING	J. O'CONNOR
B			
C			
D			
E			
F	SIZE 8½"x14"	SCALE 1" = 1'	DATE 5-12-72

DWG. NO. 736

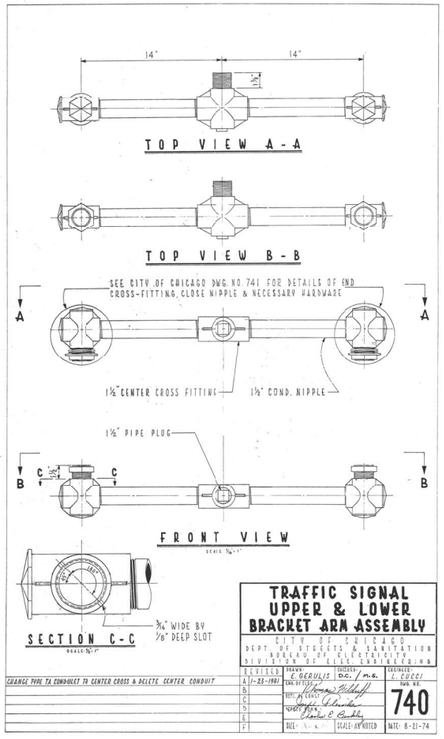

TRAFFIC SIGNAL UPPER & LOWER BRACKET ARM ASSEMBLY

CITY OF CHICAGO
DEPT. OF STREETS & SANITATION
BUREAU OF ELECTRICITY
DIVISION OF ELECTRICAL ENGINEERING

REVISED	DRAWN	CHECKED	ENGINEER
A 1-23-1981	E. SEGUILLE	DC. / M.S.	L. CECCI
B			
C			
D			
E			
F	SIZE 17"x 22"	SCALE: AS NOTED	DATE: 8-23-74

DRG. NO. 740

CHANGE TYPE TO CONDUCT TO CENTER CROSS & DELETE CENTER CONDUIT

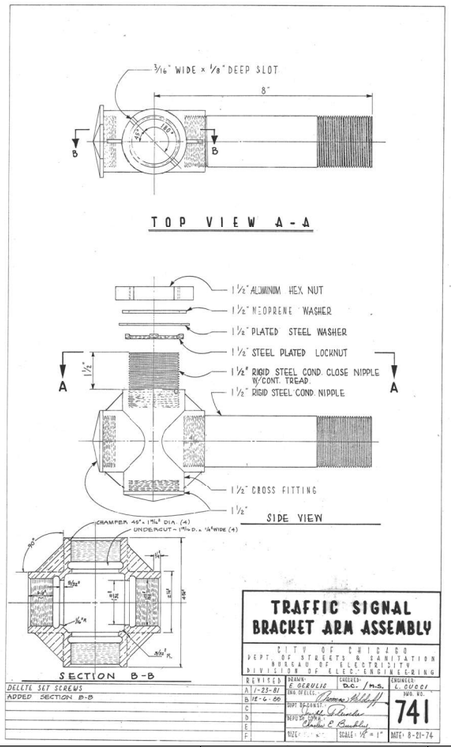

TRAFFIC SIGNAL BRACKET ARM ASSEMBLY

CITY OF CHICAGO
DEPT. OF STREETS & SANITATION
BUREAU OF ELECTRICITY
DIVISION OF ELECTRICAL ENGINEERING

REVISED	DRAWN	CHECKED	ENGINEER
A 1-23-74	M. SEGUILLE	DC. / M.S.	L. CECCI
B 12-6-00			
C			
D			
E			
F	SIZE 17"x 22"	SCALE 1/2" = 1"	DATE: 8-23-74

DELETE SET SCREWS
ADDED SECTION B-B

DRG. NO. 741

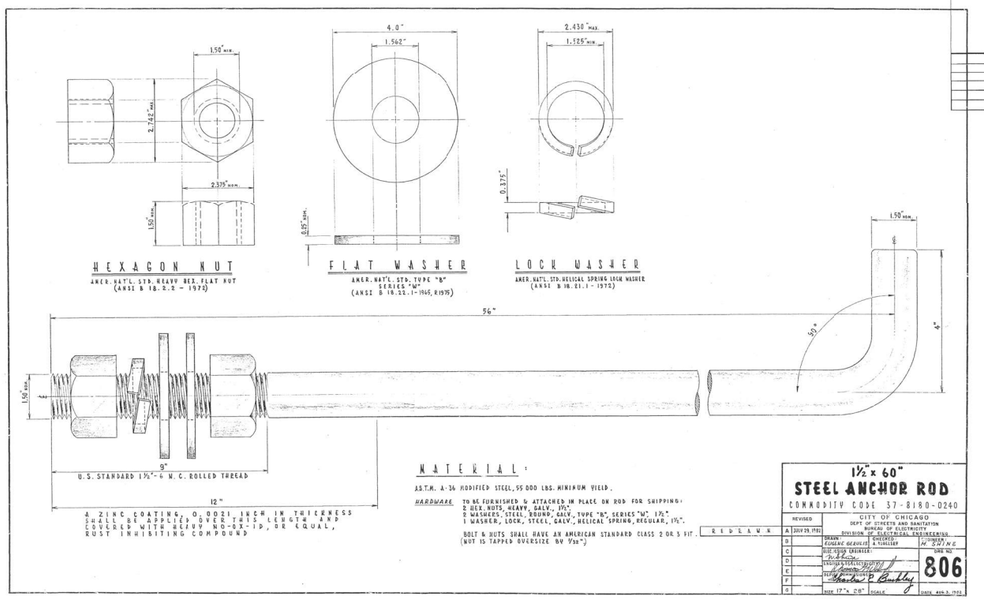

MATERIAL:

ASTM. A-36 MODIFIED: STEEL, 55 000 LBS. MINIMUM YIELD.

HARDWARE: TO BE FURNISHED & ATTACHED IN PLACE OR ROD FOR SHIPPING:
2 HEX NUTS, HEAVY, GALV., 1½"-6 N.C. THD.
2 WASHERS, STEEL ROUND, GALV., TYPE "A", SERIES "W", 1⅞".
1 WASHER, LOCK, STEEL, GALV., HELICAL SPRING, REGULAR, 1⅝".

BOLT & NUTS SHALL HAVE AN AMERICAN STANDARD CLASS 2 OR 3 FIT. (NUT IS TAPPED OVERSIZE BY 1/16")

1½" x 60" STEEL ANCHOR ROD
COMMODITY CODE 37-8180-0240

CITY OF CHICAGO
DEPT OF STREETS AND SANITATION
BUREAU OF ELECTRICITY
DIVISION OF ELECTRICAL ENGINEERING

REVISED	DRAWN	DESIGNED	ENGINEER
A (MAY 29, 1981)	EUGENE SEGUILLE	A. FINKLER	M. SWING
B			
C			
D			
E			
F			
G	SIZE 17"x 22"	SCALE	DATE AUG. 3, 1972

DRG. NO. 806

A	
DATE	REVISION

BUREAU OF ELECTRICITY
STANDARD DRAWINGS

CITY OF CHICAGO
DEPARTMENT OF TRANSPORTATION
DIVISION OF ENGINEERING

CONSULTING ENGINEERS:

AMES Engineering, Inc.
CONSULTING ENGINEERS
6330 Belmont Road, Suite 4B
Downers Grove, IL 60516

DWG. NO.

PROJECT # 10 8

SIZE: 22" X 34" | SCALE: AS NOTED | DATE: 9/8/2025

MODEL: Default
FILE NAME: F:\Projects\10584\Elsenhower IDOT-Collins\Design\Shit\Traffic Signals\Paulina TS 28 - CDOT DTL1.dgn

AMES Engineering, Inc.
CONSULTING ENGINEERS
6330 Belmont Road, Suite 4B
Downers Grove, IL 60516

USER NAME = Srahman	DESIGNED - TM	REVISED -	
	DRAWN - SR	REVISED -	
PLOT SCALE = 39,9985 ' / In.	CHECKED - AS	REVISED -	
PLOT DATE = 9/5/2025	DATE - $DATE	REVISED -	

STATE OF ILLINOIS
DEPARTMENT OF TRANSPORTATION

TRAFFIC CONTROL SIGNALS
S. PAULINA STREET AND W. VAN BUREN STREET
S. PAULINA STREET AND W. CONGRESS PARKWAY

SCALE: | SHEET OF SHEETS | STA. TO STA.

F.A.I. RTE.	SECTION	COUNTY	TOTAL SHEETS	SHEET NO.
290	2019-191-B-R	COOK	265	140
		CONTRACT NO. 62K64		
	ILLINOIS	FED. AID PROJECT		

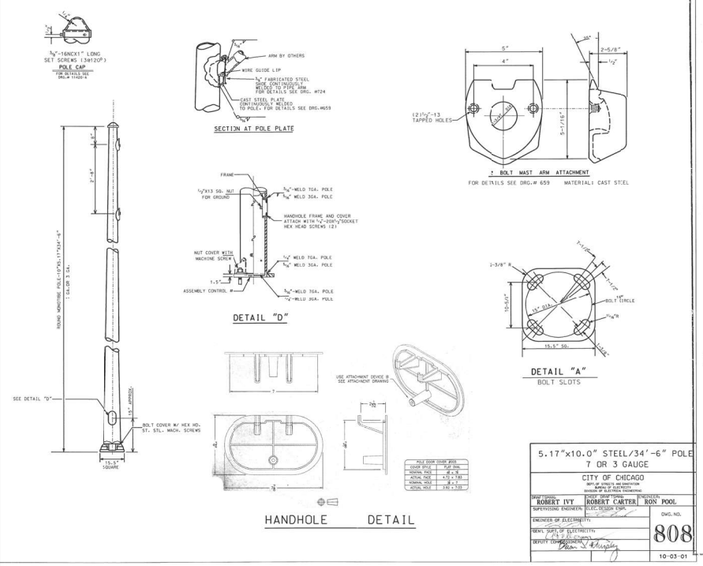

5.17"x10.0" STEEL/34'-6" POLE 7 OR 3 GAUGE		
CITY OF CHICAGO DEPT. OF STREETS AND SANITATION BUREAU OF ELECTRICITY DIVISION OF ELECTRICAL ENGINEERING		
DRAWN: ROBERT IVY	CHECKED: ROBERT CARTER	ENGINEER: RON POOL
SUPERVISING ENGINEER, ELEC. DESIGN:		DWG. NO. 808
ENGINEER OF ELECTRICITY:		
CHIEF, BUR. OF ELECTRICITY:		
DEPUTY COMMISSIONER: Brian S. Murphy		10-03-01

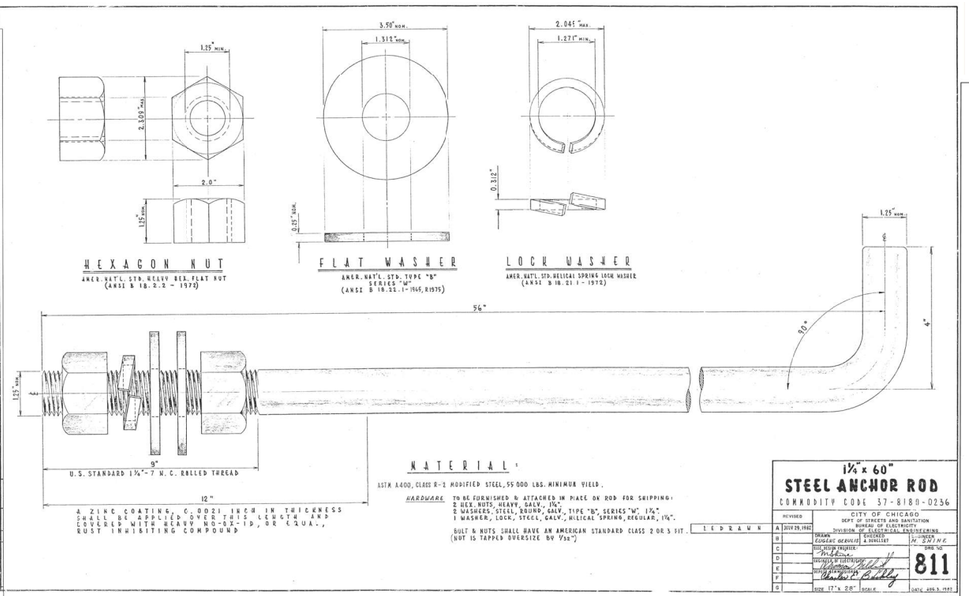

MATERIAL:

ASTM A400, CLASS R-1 MODIFIED STEEL, 55 000 LBS. MINIMUM YIELD.

HARDWARE: TO BE FURNISHED & ATTACHED IN PLACE OR ROD FOR SHIPPING:
2 HEX. NUTS, HEAVY, GALV., 1¼".
2 WASHERS, STEEL, ROUND, GALV., TYPE "B", SERIES "W" 1¾".
1 WASHER, LOCK, STEEL, GALV., HELICAL SPRING, REGULAR, 1¼".

BOLT & NUTS SHALL HAVE AN AMERICAN STANDARD CLASS 2 OR 3 FIT. (NUT IS TAPPED OVERSIZE BY 1/32")

1 ED DRAWN

1¼" x 60" STEEL ANCHOR ROD		
COMMODITY CODE 37-8180-0236		
REVISED	CITY OF CHICAGO DEPT. OF STREETS AND SANITATION BUREAU OF ELECTRICITY DIVISION OF ELECTRICAL ENGINEERING	
A 2019.09.19 RE-DRAWN	DRAWN: EDWARD G. GERVILIS	ENGINEER: M. GARNSEY
B	ENGR. OF ELECTRICITY: Brian S. Murphy	DWG. NO. 811
C	CHIEF, BUR. OF ELECTRICITY: Charles E. Buckley	
D	DEPUTY COMMISSIONER: Walter P. Bailey	
E		
F		
G	SIZE 17"x 28" SCALE:	DATE APR 5, 1991

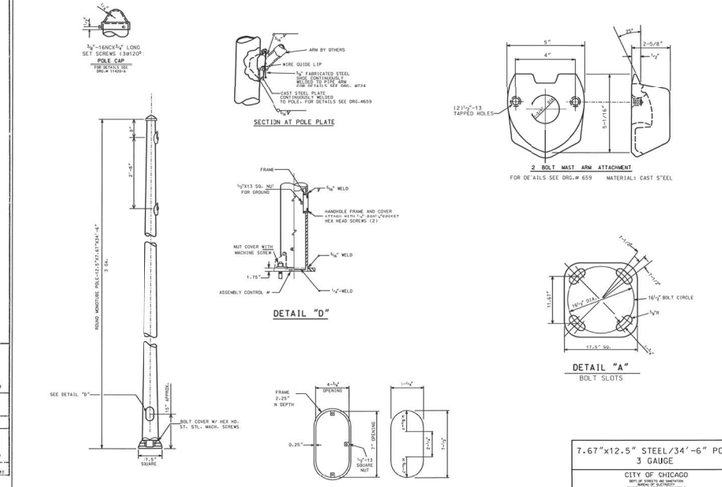

7.67"x12.5" STEEL/34'-6" POLE 3 GAUGE		
CITY OF CHICAGO DEPT. OF STREETS AND SANITATION BUREAU OF ELECTRICITY DIVISION OF ELECTRICAL ENGINEERING		
DRAWN: ROBERT IVY	CHECKED: ROBERT CARTER	ENGINEER: RON POOL
SUPERVISING ENGINEER, ELEC. DESIGN:		DWG. NO. 827
ENGINEER OF ELECTRICITY:		
CHIEF, BUR. OF ELECTRICITY:		
DEPUTY COMMISSIONER: Brian S. Murphy		10-03-01

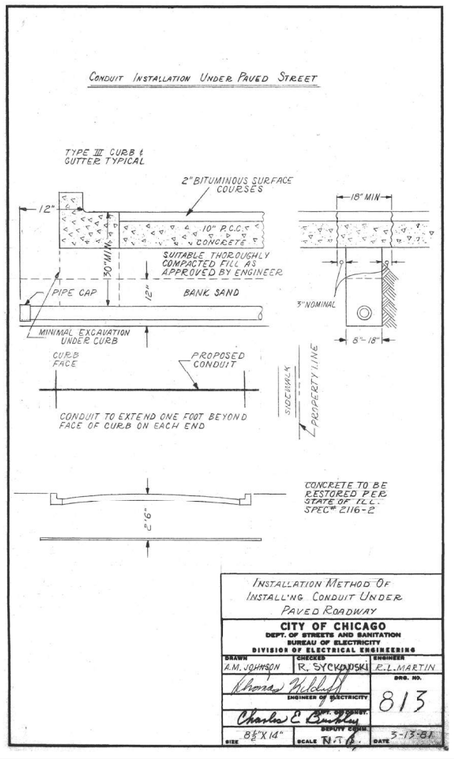

INSTALLATION METHOD OF INSTALLING CONDUIT UNDER PAVED ROADWAY		
CITY OF CHICAGO DEPT. OF STREETS AND SANITATION BUREAU OF ELECTRICITY DIVISION OF ELECTRICAL ENGINEERING		
DRAWN: A.M. JOHNSON	CHECKED: R. SYCHOWSKI	ENGINEER: E.L. MARTIN
ENGINEER OF ELECTRICITY:		DWG. NO. 813
CHIEF, BUR. OF ELECTRICITY: Charles E. Buckley		
DEPUTY COMMISSIONER:		
SIZE 8½"X 14"	SCALE N.T.S.	DATE 5-13-81

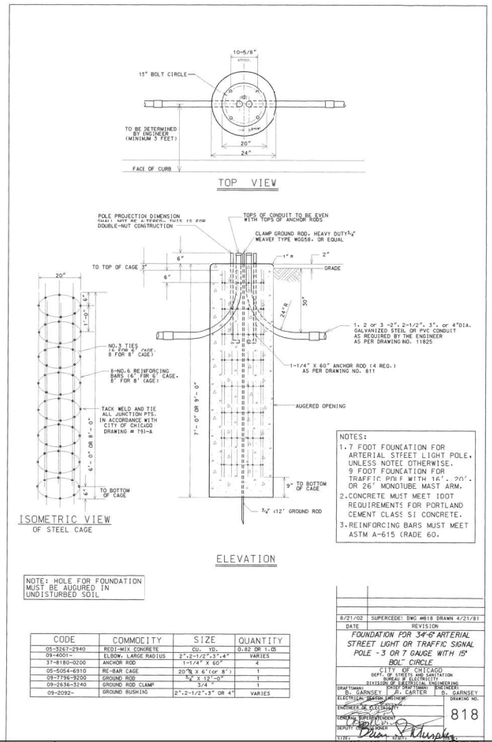

CODE	COMMODITY	SIZE	QUANTITY
05-3267-2940	REINFO. CONCRETE	CU. YD.	0.32 OR 1.05
09-4001-	ELBOW, LARGE RADIUS	2"-2-1/2"-3"-4"	VARIES
37-8180-0200	ANCHOR ROD	1-1/4" X 60"	4
05-5054-6910	RE-BAR CAGE	20"¾ X 6'(or 8')	1
09-3776-9200	GROUND ROD	¾" x 12'-0"	1
09-2636-3240	GROUND ROD CLAMP	3/4 "	1
09-2092-	GROUND BUSHING	2"-2-1/2"-3" OR 4"	VARIES

8/21/02 SUPERCEDES DWG #818 DRAWN 4/21/81	
DATE	REVISION
FOUNDATION FOR 34'-6" ARTERIAL STREET LIGHT OR TRAFFIC SIGNAL POLE - 3 OR 7 GAUGE WITH 15" BOLT CIRCLE	
CITY OF CHICAGO DEPT. OF STREETS AND SANITATION BUREAU OF ELECTRICITY DIVISION OF ELECTRICAL ENGINEERING	
DRAWN: M. GARNSEY	CHECKED: R. CARTER
ELECTRICAL ENGINEER:	
ENGR. OF ELECTRICITY:	
CHIEF, BUR. OF ELECTRICITY:	
DEPUTY COMMISSIONER:	
SIZE: 17"x 28"	SCALE:

GARNSEY DRAWING NO. 818
DATE: 8/21/02

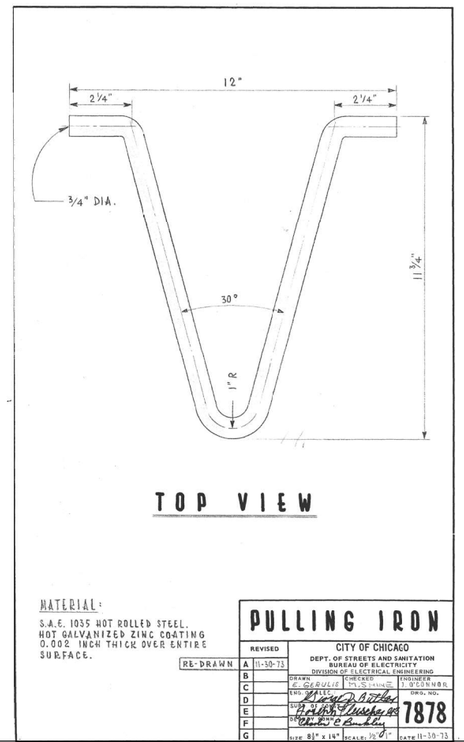

MATERIAL:

S.A.E. 1035 HOT ROLLED STEEL. HOT GALVANIZED ZINC COATING 0.002 INCH THICK OVER ENTIRE SURFACE.

PULLING IRON		
REVISED	CITY OF CHICAGO DEPT. OF STREETS AND SANITATION BUREAU OF ELECTRICITY DIVISION OF ELECTRICAL ENGINEERING	
RE-DRAWN A 11-30-73	DRAWN: E. GERVILIS	ENGINEER: J. O'CONNOR
B	ENGR. OF ELECTRICITY: Brian S. Murphy	DWG. NO. 7878
C	CHIEF, BUR. OF ELECTRICITY: Charles E. Buckley	
D	DEPUTY COMMISSIONER: Walter P. Bailey	
E		
F		
G	SIZE 8½" x 14" SCALE ½" = 1'-0"	DATE 11-30-73

A	
DATE	REVISION

BUREAU OF ELECTRICITY
STANDARD DRAWINGS

CITY OF CHICAGO
DEPARTMENT OF TRANSPORTATION
DIVISION OF ENGINEERING

CONSULTING ENGINEERS:

AMES Engineering, Inc.
CONSULTING ENGINEERS
6330 Belmont Road, Suite 4B
Downers Grove, IL 60516
PROJECT # 10 8

DWG. NO.

SIZE: 22" X 34" | SCALE: AS NOTED | DATE: 9/8/2025

MODEL: Default
FILE NAME: F:\Projects\1058-Eisenhower IDOT-Collins\Design\SIG\Traffic Signals\Paulina TS 29 - CDOT DTL2.dgn

AMES Engineering, Inc.
CONSULTING ENGINEERS
6330 Belmont Road, Suite 4B
Downers Grove, IL 60516

USER NAME = Srahman	DESIGNED - TM	REVISED -	
	DRAWN - SR	REVISED -	
PLOT SCALE = 39.9985 ' / In.	CHECKED - AS	REVISED -	
PLOT DATE = 9/5/2025	DATE - $DATE	REVISED -	

STATE OF ILLINOIS
DEPARTMENT OF TRANSPORTATION

TRAFFIC CONTROL SIGNALS
S. PAULINA STREET AND W. VAN BUREN STREET
S. PAULINA STREET AND W. CONGRESS PARKWAY

SCALE: | SHEET OF SHEETS | STA. | TO STA.

F.A.I. RTE.	SECTION	COUNTY	TOTAL SHEETS	SHEET NO.
290	2019-191-B-R	COOK	265	141
		CONTRACT NO. 62K64		
		ILLINOIS	FED. AID PROJECT	

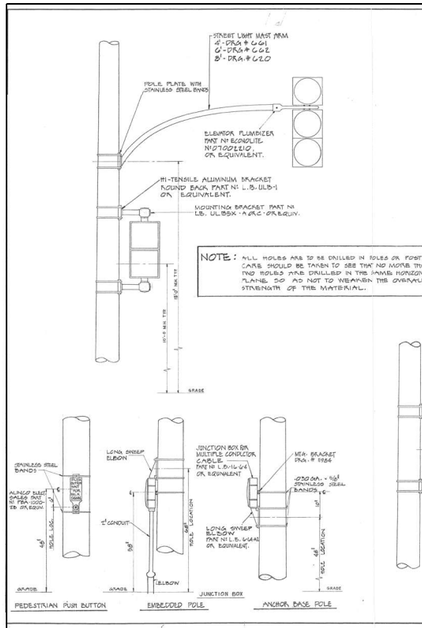

NOTE: OVERHEAD SIGNALS SHALL HAVE A MINIMUM CLEARANCE OF 19'-0" ABOVE PAVEMENT GRADE.

TYPICAL TRAFFIC SIGNAL MOUNTING DETAILS

CITY OF CHICAGO
DEPT. OF STREETS AND SANITATION
BUREAU OF ELECTRICITY
ENGINEERING DIVISION

DRAFTSMAN W. TROMPKA	DESIGNED R.J.S.	ENGINEER M. DeBARTOLO	SHT. NO.
SUPERVISING ENGINEER	REVISED R.J.S. 12-10-94		834
ENGINEER IN CHARGE			
PROJECT ENGINEER			
DATE 12-10-94	SCALE N.T.S.	DATE 12-10-94	

DATE	REVISION
WORK ORDER NO.	DATE
COST ALLOCATION ACCOUNT	
APPROPRIATION ACCOUNT	MATERIAL
	LABOR

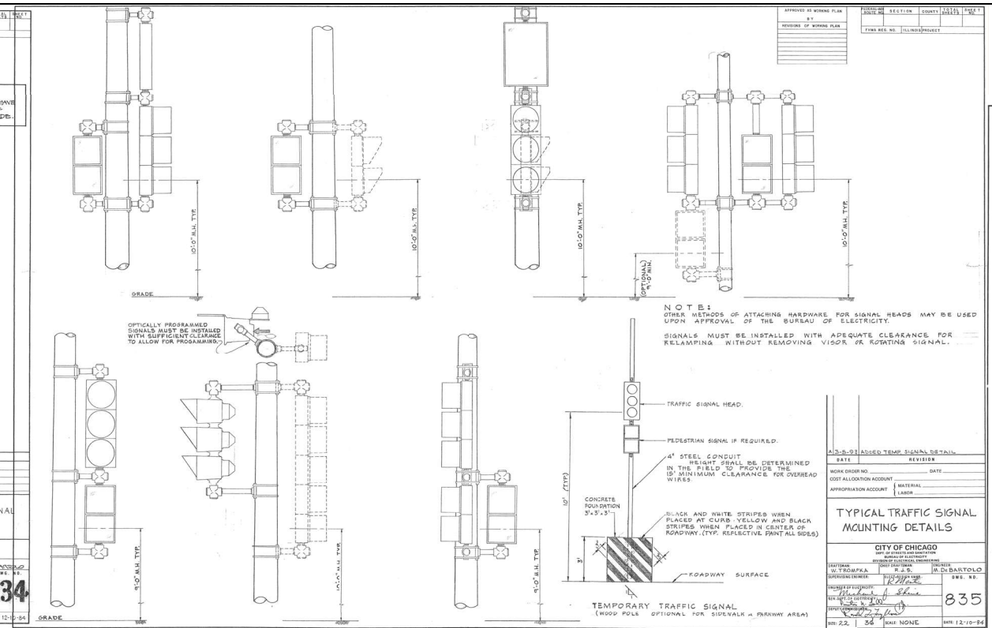

A3-3-93 ADDED TEMP. SIGNAL DETAIL

DATE	REVISION
WORK ORDER NO.	DATE
COST ALLOCATION ACCOUNT	
APPROPRIATION ACCOUNT	MATERIAL
	LABOR

TYPICAL TRAFFIC SIGNAL MOUNTING DETAILS

CITY OF CHICAGO
DEPT. OF STREETS AND SANITATION
BUREAU OF ELECTRICITY
ENGINEERING DIVISION

DRAFTSMAN W. TROMPKA	DESIGNED R.J.S.	ENGINEER M. DeBARTOLO	SHT. NO.
SUPERVISING ENGINEER	REVISED R.J.S. 12-10-94		835
ENGINEER IN CHARGE			
PROJECT ENGINEER			
DATE 12-10-94	SCALE NONE	DATE 12-10-94	

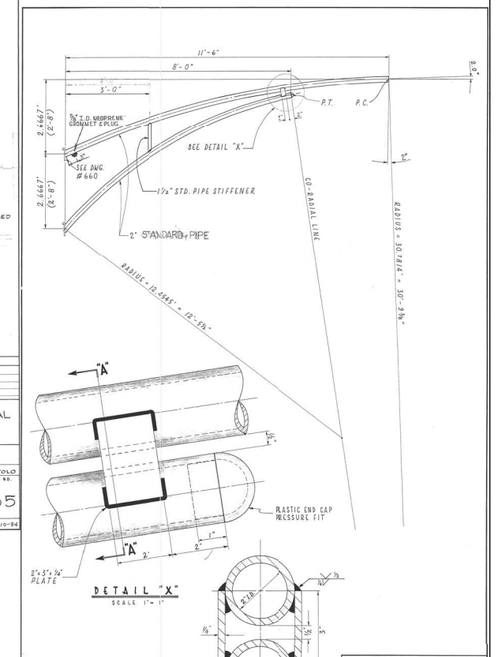

12' MAST ARM FOR 2-BOLT ATTACHMENT

CITY OF CHICAGO
DEPT. OF STREETS AND SANITATION
BUREAU OF ELECTRICITY
ENGINEERING DIVISION

DRAFTSMAN E. GRAGOLE	DESIGNED R.J.S.	ENGINEER M. DeBARTOLO	SHT. NO.
SUPERVISING ENGINEER	REVISED 10-28-1988		839
ENGINEER IN CHARGE			
PROJECT ENGINEER			
DATE 7-8-1988	SCALE 10 x 28 (11x17) AS NOTED	DATE 7-8-1988	

ARM DATA

CLAMP RANGE (INCHES)	POLE END (INCHES)	SIGNAL END (INCHES)	LENGTH (FEET)	GAUGE	WEIGHT (POUNDS)	TEST LOAD (POUNDS)	MAX. DEFLECTION (INCHES)
7.45-7.95	7.0	4.75	16	?	241	1700	8.5
7.45-7.95	7.0	4.20	20	?	274	1300	12.0
7.45-7.95	7.0	3.36	26	?	315	1000	24.0
8.45-8.95	8.0	3.80	30	?	409	1100	29.0
9.95-10.45	9.0	4.10	35	?	529	1200	36.0
9.95-10.45	9.0	3.40	40	?	559	1000	52.0
9.95-10.45	10.0	3.84	44	?		1200	57.0

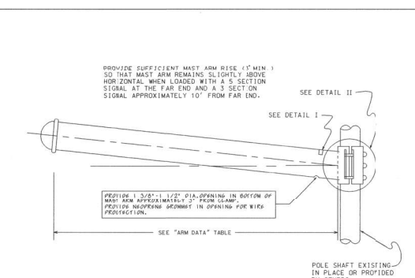

NOTES:

1. TRAFFIC SIGNAL ARM SHAFT ASTM DESIGNATION: A595 GRADE C, 60,000 PSI MINIMUM YIELD STRENGH WITH A LINEAR TAPER .0.14"/FT.
2. TRAFFIC SIGNAL ARM END CAP SECURED IN PLACE WITH 3 SET SCREWS AND 1 THRU ARM END BOLT. (PLATED HARDWARE)
3. ALL THREADED FASTENERS TO BE GALVANIZED TO ASTM DESIGNATION: A153
4. ALL VEHICULAR AND/OR PEDESTRIAN SIGNAL LIGHTS AND NECESSARY HARDWARE FOR ATTACHMENT TO BE FIELD LOCATED AND FURNISHED BY OTHERS.
5. ALL ARM END CAPS AND ARM CLAMPS TO BE FULLY ASSEMBLED AND ATTACHED TO THE ARM PRIOR TO SHIPPING.
6. ARM ASSEMBLY TO BE DEGREASED; CLEANED; CHEMICALLY PRETREATED; GIVEN AN EXTERIOR THERMOSETTING POLYESTER POWDER COAT; AND AN INTERIOR THERMOPLASTIC HYDROCARBON RESIN POWDER COAT. ALL PAINTING TO BE IN ACCORDANCE WITH SPECIFICATION 1454, SECTION 8, "PAINTING".
7. MAST ARM SHALL BE TESTED IN ACCORDANCE WITH SPECIFICATION 1454, SECTION 9 WITH TEST VALUES AS SHOWN ON THE "ARM DATA" TABLE.
8. HOLE IN CLAMP TO BE 4.0" (MIN.). HOLE TO BE GROUND SMOOTH AND REAMED TO PROVIDE A SMOOTH WIRE ENTRY FROM POLE TO MAST ARM.



DETAIL I
I. D. TAG

SIGNAL ARM ATTACHMENT DATA

CLAMP RANGE	"A"	"B"	"C"	"D"	"E"
7.45" - 7.95"	7.25"	9.92"	10.80"	10.32"	1.00" X 7.50"
8.45" - 8.95"	9.00"	10.66"	13.06"	12.50"	1.00" X 8.00"
9.95" - 10.45"	10.25"	12.66"	15.30"	13.50"	1.25" X 8.50"

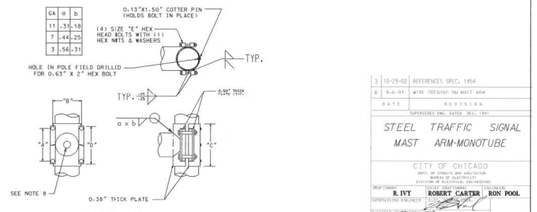

DETAIL II
ARM ATTACHMENT

3	10-29-02	REFERENCES SPEC. 1454
2	8-6-91	WIRE ENTRANCE ON MAST ARM
DATE		REVISION

SUPERSEDES DWG. DATED DEC. 1981

STEEL TRAFFIC SIGNAL MAST ARM-MONOTUBE

CITY OF CHICAGO
DEPT. OF STREETS AND SANITATION
BUREAU OF ELECTRICITY
ENGINEERING DIVISION

DRAFTSMAN R. IVY	DESIGNED ROBERT CARTER	ENGINEER RON POOL	SHT. NO.
SUPERVISING ENGINEER	REVISED		870
ENGINEER IN CHARGE			
PROJECT ENGINEER			
DATE DEC. 1981	SCALE	DATE	

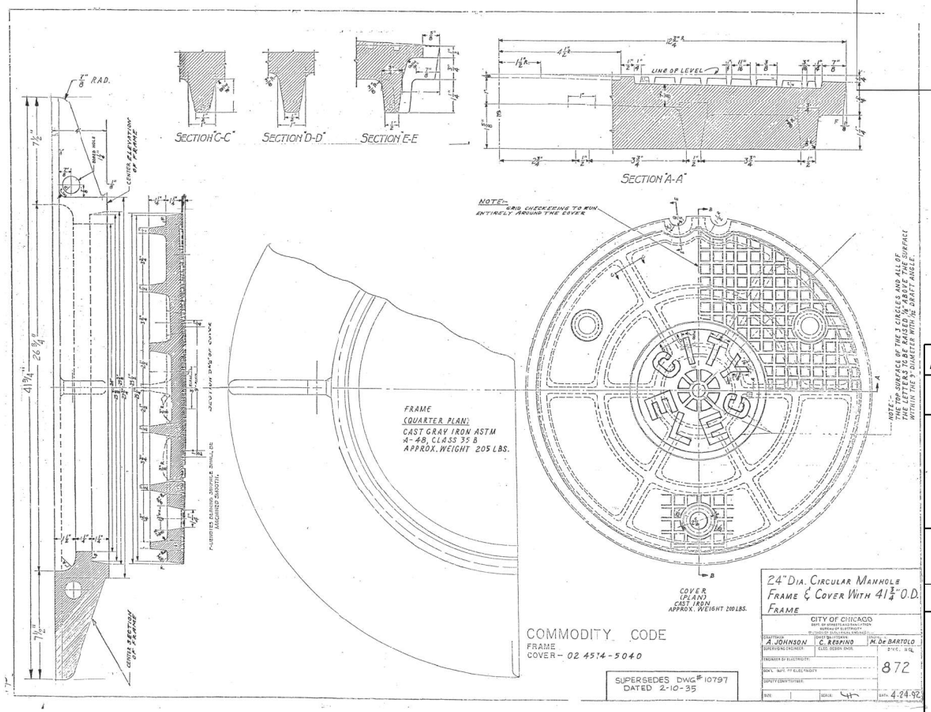

24" Dia. Circular Manhole Frame & Cover With 41⅞" O.D. Frame

CITY OF CHICAGO
DEPT. OF STREETS AND SANITATION
BUREAU OF ELECTRICITY
ENGINEERING DIVISION

DRAFTSMAN A. JOHNSON	DESIGNED C. RESPINO	ENGINEER M. DeBARTOLO	SHT. NO.
SUPERVISING ENGINEER	REVISED ELEC. SERVICE DIVS.		872
ENGINEER IN CHARGE			
PROJECT ENGINEER			
DATE 4-24-92	SCALE	DATE	

COMMODITY CODE
FRAME
COVER - 02 4514-5040

SUPERSEDES DWG # 10797 DATED 2-10-35

A	
DATE	REVISION

BUREAU OF ELECTRICITY
STANDARD DRAWINGS

CITY OF CHICAGO
DEPARTMENT OF TRANSPORTATION
DIVISION OF ENGINEERING

CONSULTING ENGINEERS:

AMES Engineering, Inc.
CONSULTING ENGINEERS
6330 Belmont Road, Suite 4B
Downers Grove, IL 60516

DWG. NO.

PROJECT # 10 8

SIZE: 22" X 34" | SCALE: AS NOTED | DATE: 9/8/2025

MODEL: Default
FILE NAME: F:\Projects\1058-Eisenhower IDOT-Collins\Design\SIGNT\traffic Signals\Paulina TS 30 - CDOT DTL3.dgn

AMES Engineering, Inc.
CONSULTING ENGINEERS
6330 Belmont Road, Suite 4B
Downers Grove, IL 60516

USER NAME = Srahman		DESIGNED - TM		REVISED -	
		DRAWN - SR		REVISED -	
PLOT SCALE = 39.9985 ' / In.		CHECKED - AS		REVISED -	
PLOT DATE = 9/5/2025		DATE - $DATE		REVISED -	

STATE OF ILLINOIS
DEPARTMENT OF TRANSPORTATION

TRAFFIC CONTROL SIGNALS
S. PAULINA STREET AND W. VAN BUREN STREET
S. PAULINA STREET AND W. CONGRESS PARKWAY

SCALE: | SHEET OF SHEETS | STA. | TO STA.

F.A.I. RTE.	SECTION	COUNTY	TOTAL SHEETS	SHEET NO.
290	2019-191-B-R	COOK	265	142
		CONTRACT NO. 62K64		
		ILLINOIS	FED. AID PROJECT	

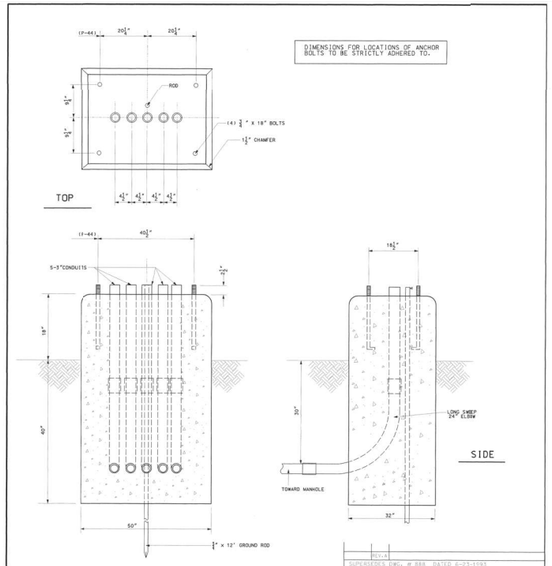

SUPERSEDES DWG. # 888 / DATED 6-23-1983

TYPE "P" FOUNDATION

FOR BASE MOUNTED TRAFFIC SIGNAL CONTROL CABINET

CITY OF CHICAGO
DEPT. OF STREETS AND SANITATION
BUREAU OF ELECTRICITY
DIVISION OF ELECTRICAL ENGINEERING

DRAFTSMAN:	CHIEF DRAFTSMAN:	ENGINEER:
D. LETAMENDI	C.W. CARTER	D. LETAMENDI
SUPERVISING ENGINEER, ELEC. DESIGN ENGR.		
ENGINEER OF ELECTRICITY		DWG. NO. 888
GEN'L SUPT. OF ELECTRICITY		
DEPUTY COMMISSIONER		

SIZE: 16"x 21" SCALE: NONE DATE: 6-19-02

BANDING FITTING FOR POLE MOUNTING JUNCTION BOX

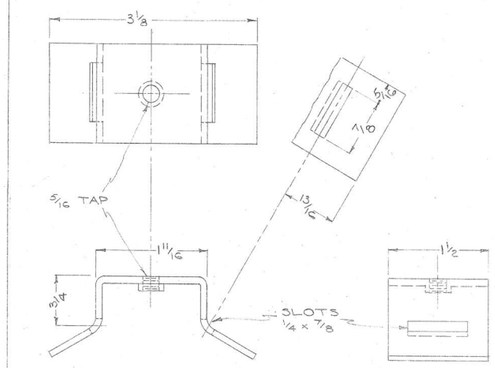

MATERIAL: STAINLESS STEEL - 4 13/16 x 1 1/2 x 3/32

BANDING FITTING FOR POLE MOUNTING SIGNALS

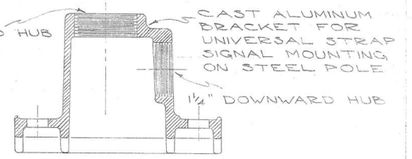

MATERIAL: CAST ALUMINUM

CROUSE HINDS
TL-3301- WITHOUT DOWNWARD HUB
TL-3302 WITH 1 1/4" DOWNWARD HUB

BANDING FITTINGS FOR POLE MOUNTING TRAFFIC SIGNAL
CITY OF CHICAGO
DEPT. OF STREETS AND SANITATION
DIVISION OF ELECTRICAL ENGINEERING
APPROVED: Charles Murphy 11934
DATE: 11-14-67
SUPERSEDES DWG. # 11934 / DATED 11-14-67

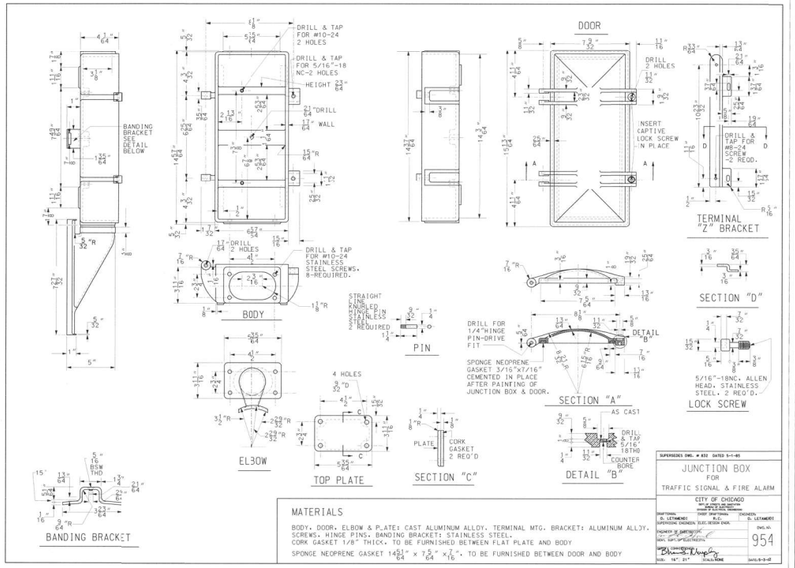

MATERIALS

BODY, DOOR, ELBOW & PLATE: CAST ALUMINUM ALLOY. TERMINAL MTG. BRACKET: ALUMINUM ALLOY. SCREWS, HINGE PINS, BANDING BRACKET: STAINLESS STEEL. CORK GASKET 1/8" THICK. TO BE FURNISHED BETWEEN FLAT PLATE AND BODY

SPONGE NEOPRENE GASKET 14 1/64" x 7/64" x 6 1/16". TO BE FURNISHED BETWEEN DOOR AND BODY

SUPERSEDES DWG. # 832 DATED 5-1-85

JUNCTION BOX FOR TRAFFIC SIGNAL & FIRE ALARM

CITY OF CHICAGO
DEPT. OF STREETS AND SANITATION
BUREAU OF ELECTRICITY
DIVISION OF ELECTRICAL ENGINEERING

DRAFTSMAN: D. LETAMENDI	SUPERVISING ENGINEER, ELEC. DESIGN ENGR.	DESIGNED: D. LETAMENDI
ENGINEER OF ELECTRICITY		DWG. NO. 954
GEN'L SUPT. OF ELECTRICITY		
DEPUTY COMMISSIONER		

SIZE: 16" x 21" SCALE: NONE DATE: 6-13-85

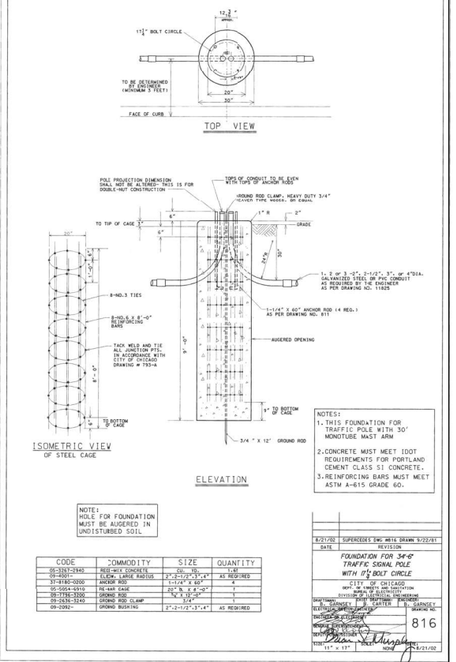

NOTES:
1. THIS FOUNDATION FOR TRAFFIC POLE WITH 30' MONOTUBE MAST ARM
2. CONCRETE MUST MEET IDOT REQUIREMENTS FOR PORTLAND CEMENT CLASS SI CONCRETE.
3. REINFORCING BARS MUST MEET ASTM A-615 GRADE 60.

NOTE: HOLE FOR FOUNDATION MUST BE AUGERED IN UNDISTURBED SOIL

CODE	COMMODITY	SIZE	QUANTITY
05-0367-0940	REIN-MIX CONCRETE	CU. YD.	11.67
05-0367-0950	REIN-MIX CONCRETE	2"-2"-1"-2"-3"-4"	AS REQUIRED
31-8160-0200	ANCHOR RODS	1"x1"x4'-3 3/4"	4
05-0954-6910	RE-MAT CAGE	20" D. x 4'-0"	1
05-2178-5200	GROUND ROD	3/4"x10'-0"	1
09-2634-5240	GROUND ROD CLAMP	3/4"	1
09-2982-	GROUND BUSHING	2"-2"-1"-2"-3"-4"	AS REQUIRED

8/21/02	SUPERSEDES DWG. #816 DRAWN 3/22/83	
DATE	REVISION	

FOUNDATION FOR 34'-0" TRAFFIC SIGNAL POLE WITH 1 1/4" BOLT CIRCLE

CITY OF CHICAGO
DEPT. OF STREETS AND SANITATION
BUREAU OF ELECTRICITY
DIVISION OF ELECTRICAL ENGINEERING

DRAFTSMAN: D. LETAMENDI	SUPERVISING ENGINEER, ELEC. DESIGN ENGR.	DESIGNED: D. LETAMENDI
ENGINEER OF ELECTRICITY		DWG. NO. 816
GEN'L SUPT. OF ELECTRICITY		
DEPUTY COMMISSIONER		

SIZE: 11" x 17" SCALE: NONE DATE: 8/21/02

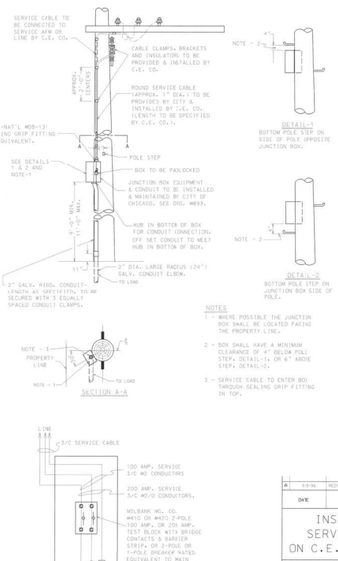

A	3-3-76	NEW
DATE	REVISION	

INSTALLATION OF SERVICE EQUIPMENT ON C.E. CO. WOOD POLES

CITY OF CHICAGO
DEPT. OF STREETS AND SANITATION
BUREAU OF ELECTRICITY
DIVISION OF ELECTRICAL ENGINEERING

DRAFTSMAN:	CHIEF DRAFTSMAN:	ENGINEER:
D. LEMASTER	C.W. CARTER	
SUPERVISING ENGINEER, ELEC. DESIGN ENGR.		
ENGINEER OF ELECTRICITY		DWG. NO. 11925
GEN'L SUPT. OF ELECTRICITY		
DEPUTY COMMISSIONER		

SIZE: DATE: 12-19-77

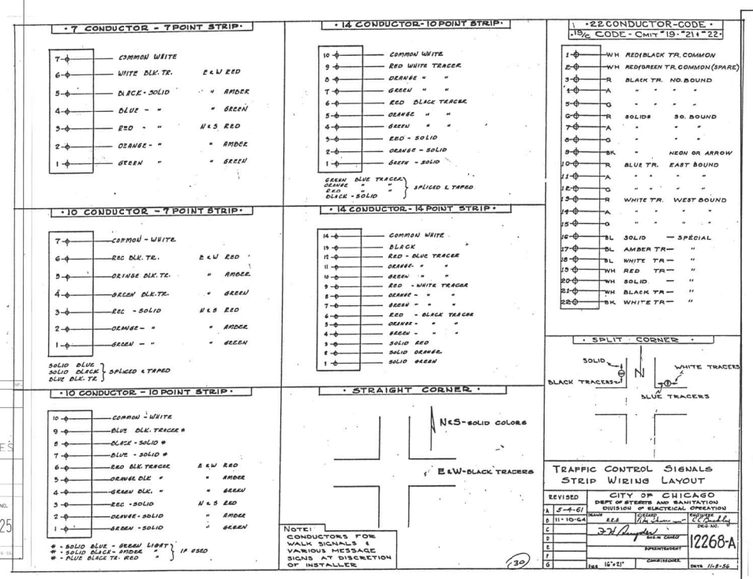

REVISED	CITY OF CHICAGO
A 2-4-61	DEPT. OF STREETS AND SANITATION
B 11-10-64	DIVISION OF ELECTRICAL OPERATION
C	
D	
E	
F	
G	

SCALE: 16"x21" DATE: 11-2-56

12268-A

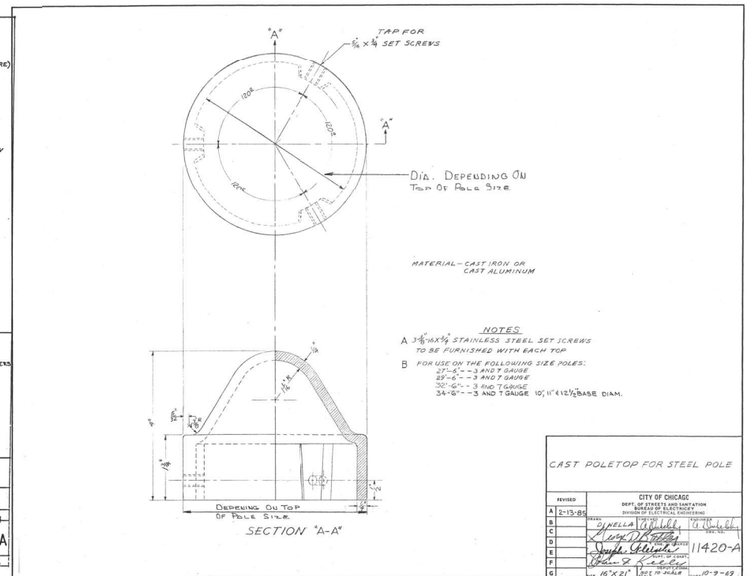

CAST POLETOP FOR STEEL POLE

REVISED	CITY OF CHICAGO
A 2-13-85	DEPT. OF STREETS AND SANITATION
B	DIVISION OF ELECTRICAL ENGINEERING
C	
D	
E	
F	
G	

SCALE: 16"x21" DATE: 10-9-69

11420-A

A		
DATE	REVISION	

BUREAU OF ELECTRICITY STANDARD DRAWINGS

CITY OF CHICAGO
DEPARTMENT OF TRANSPORTATION
DIVISION OF ENGINEERING

CONSULTING ENGINEERS:

AMES Engineering, Inc.
CONSULTING ENGINEERS
6330 Belmont Road, Suite 4B
Downers Grove, IL 60516

DWG. NO.

PROJECT # 10 8

SIZE: 22" X 34" SCALE: AS NOTED DATE: 9/8/2025

MODEL: Default
FILE NAME: F:\Projects\10584\Elsenhower IDOT-Collins Design\Sht\Traffic Signals\Paulina TS 31 • CDOT DTL4.dgn

AMES Engineering, Inc.
CONSULTING ENGINEERS
6330 Belmont Road, Suite 4B
Downers Grove, IL 60516

USER NAME = Srahman		DESIGNED - TM		REVISED -	
		DRAWN - SR		REVISED -	
PLOT SCALE = 39.9985 ' / in.		CHECKED - AS		REVISED -	
PLOT DATE = 9/5/2025		DATE - $DATE		REVISED -	

STATE OF ILLINOIS
DEPARTMENT OF TRANSPORTATION

TRAFFIC CONTROL SIGNALS
S. PAULINA STREET AND W. VAN BUREN STREET
S. PAULINA STREET AND W. CONGRESS PARKWAY

SCALE: SHEET OF SHEETS STA. TO STA.

F.A.I. RTE.	SECTION	COUNTY	TOTAL SHEETS	SHEET NO.
290	2019-191-B-R	COOK	265	143
		CONTRACT NO. 62K64		
	ILLINOIS FED. AID PROJECT			

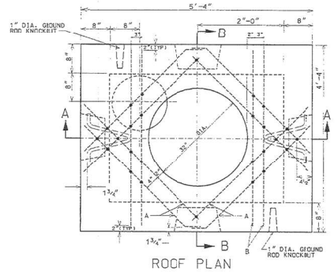

ROOF PLAN

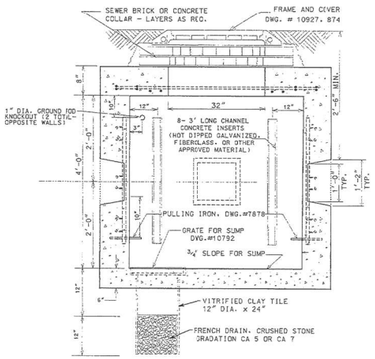

SECTION A-A

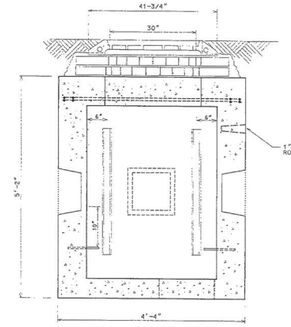

SECTION B-B

EXCAVATION (CONSTRUCTION) INFORMATION	
COMPLETE MANHOLE	5.0 CU. YDS.
NEW ROOF ONLY	2.0 CU. YDS
SHEETING MANHOLE	150.0 SQ. FT.

#5 REINFORCING BARS			
BAR	LENGTH	NO. OF RODS	TOTAL FT.
A	2'-9"	8	22'-0"
B	4'-0"	4	16'-0"

MATERIALS FOR ROOF ONLY	
CONCRETE	0.5 CU. YDS.
REINFORCING BARS #5	38'

DTG.	MATERIAL	CODE	SIZE	REQ. PER
	FORM FOR MANHOLE	17-6674-0000 17-6648-5320	3'-6"x4'- 6"x6'-0"	1
	CONDUIT END BELL		AS REQ.	
	TILE, SEWER	39-4038-3200	12"/24"	
	SLAB BOLSTER		2"	20'
	BAR, REINFORCING	20-5472-9650	⅝" @	36'
	TIE WIRE	13-9938-6106	#20GA.	25'
7878	PULLING IRON	02-4483-6970	¾" @	2
	CONCRETE	05-3267-2940	3 CU. YDS	
	SEWER BRICK	05-1452-9720	STD.	50
10792	GRATE FOR SUMP	02-4268-7100	12" @	1
	GROUND ROD	09-7796-9200	¾"x10'	1
	GROUND ROD CLAMP	09-2636-3240	¾"	1
	CRUSHED STONE	05-9057-5471	¾"	ONE BAG
874	MANHOLE FRAME	02-4299-5524	30"	1
10927	MANHOLE COVER	02-4574-5040	30"	1
	CONC. CHANNEL INSERT	02-4574-5060	3'	8

NOTES:
1. PRECAST MANHOLES MUST BE PROVIDED WITH CHANNEL INSERTS, PULLING IRONS, AND CONDUIT KNOCK-OUTS.
2. ALL CONCRETE MUST BE PORTLAND CEMENT CONCRETE MEETING IDOT REQUIREMENTS FOR CLASS PC CONCRETE FOR PRE-CAST STRUCTURES, OR CLASS SI CONCRETE FOR CAST-IN-PLACE STRUCTURES.
3. REINFORCING BARS MUST MEET ASTM A615 GRADE 60.

DATE	REVISION
8/21/02	SUPERCEDES DWG. 729 DATED JAN 12, 1996
1/12/98	SUPERCEDES DWG. 729 DATED NOV. 21, 1973

3' x 4' x 4'
CONCRETE MANHOLE
WITH 30" FRAME AND COVER

CITY OF CHICAGO
DEPT. OF STREETS AND SANITATION
BUREAU OF ELECTRICITY
DIVISION OF ENGINEERING

DRAFTSMAN:	B. GARNSEY	R. CARTER	B. GARNSEY
ELECTRICAL ENGINEER			DRAWING NO.
ENGINEER OF ELECTRICITY			729
GENERAL SUPERINTENDENT AND CHIEF ELECTRICIAN			
DEPUTY COMMISSIONER			
SIZE: 11" x 22"	SCALE: NONE	DATE: 6/21/02	

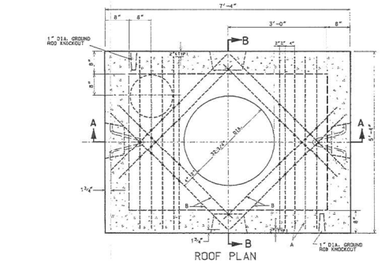

ROOF PLAN

EXCAVATION (CONSTRUCTION) INFORMATION	
COMPLETE MANHOLE	11.5 CU. YDS.
NEW ROOF ONLY	2.2 CU. YDS
SHEETING MANHOLE	254 SQ. FT.

#5 REINFORCING BARS			
BAR	LENGTH	NO. OF RODS	TOTAL FT.
A	5'-0"	10	50'-0"
B	5'-0"	8	40'-0"

MATERIALS FOR ROOF ONLY	
CONCRETE	1.25 CU. YDS.
REINFORCING BARS #5	90'-0"

DTG.	MATERIAL	CODE	SIZE	REQ. PER
	FORM FOR MANHOLE	17-6674-4000 17-6648-5320	4'-6"x6'- 6"x6'-0"	1
	CONDUIT END BELL		AS REQ.	
	TILE, SEWER	39-4038-3200	12"/24"	50
	SLAB BOLSTER		2"	25'
	BAR, REINFORCING	20-5472-9650	⅝" @	54'
	TIE WIRE	13-9938-6106	#20GA.	45'
7878	PULLING IRON	02-4483-6970	¾" @	2
	CONCRETE	05-3267-2940	8.5 CU. YDS.	
	SEWER BRICK	05-1452-9720	STD.	50
10792	GRATE FOR SUMP	02-4268-7100	12" @	1
	GROUND ROD	09-7796-9200	¾"x10'	1
	GROUND ROD CLAMP	09-2636-3240	¾"	1
	CRUSHED STONE	05-9057-5471	¾"	3 BAGS
874	MANHOLE FRAME	02-4299-5524	30"	1
10927	MANHOLE COVER	02-4574-5040	30"	1
	CONC. CHANNEL INSERT	02-4574-5060	5'	8

NOTES:
1. PRECAST MANHOLES MUST BE PROVIDED WITH CHANNEL INSERTS, PULLING IRONS, AND CONDUIT KNOCK-OUTS.
2. ALL CONCRETE MUST BE PORTLAND CEMENT CONCRETE MEETING IDOT REQUIREMENTS FOR CLASS PC CONCRETE FOR PRE-CAST STRUCTURES, OR CLASS SI CONCRETE FOR CAST-IN-PLACE STRUCTURES.
3. REINFORCING BARS MUST MEET ASTM A615 GRADE 60.

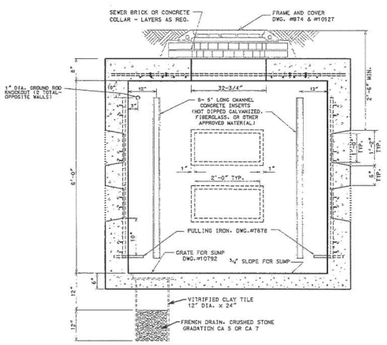

SECTION A-A

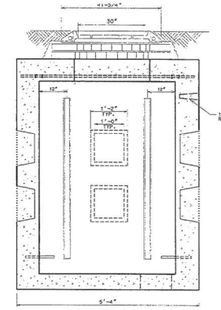

SECTION B-B

DATE	REVISION
10/8/02	SUPERCEDES DWG. 732 DATED 3/21/74

4' x 6' x 6'
CONCRETE MANHOLE
WITH 30" FRAME AND COVER

CITY OF CHICAGO
DEPT. OF STREETS AND SANITATION
BUREAU OF ELECTRICITY
DIVISION OF ENGINEERING

DRAFTSMAN:	B. GARNSEY	R. CARTER	B. GARNSEY
ELECTRICAL ENGINEER			DRAWING NO.
ENGINEER OF ELECTRICITY			733
GENERAL SUPERINTENDENT AND CHIEF ELECTRICIAN			
DEPUTY COMMISSIONER			
SIZE: 11" x 22"	SCALE: NONE	DATE: 10/08/02	

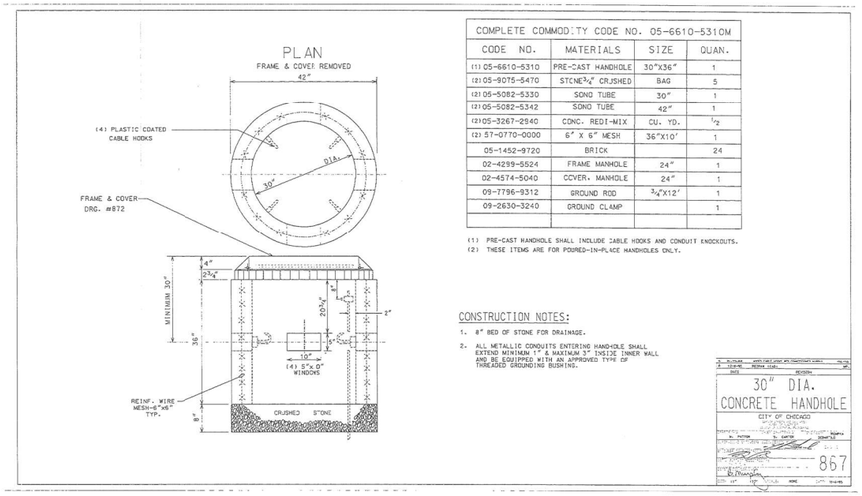

COMPLETE COMMODITY CODE NO. 05-6610-5310M			
CODE NO.	MATERIALS	SIZE	QUAN.
(1) 05-6610-5310	PRE-CAST HANDHOLE	30"X36"	1
(2) 05-9075-5470	STONE ¾" CRUSHED	BAG	5
(2) 05-5082-5330	SONO TUBE	30"	1
(2) 05-5082-5342	SONO TUBE	42"	1
(2) 05-3267-2940	CONC. REDI-MIX	CU. YD.	½
(2) 57-0770-0000	6" X 6" MESH	36"X10'	1
05-1452-9720	BRICK		24
02-4299-5524	FRAME MANHOLE	24"	1
02-4574-5040	COVER, MANHOLE	24"	1
09-7796-9312	GROUND ROD	¾"X12'	1
09-2630-3240	GROUND CLAMP		1

(1) PRE-CAST MANHOLE SHALL INCLUDE CABLE HOOKS AND CONDUIT KNOCKOUTS.
(2) THESE ITEMS ARE FOR POURED-IN-PLACE MANHOLES ONLY.

CONSTRUCTION NOTES:
1. 8" BED OF STONE FOR DRAINAGE.
2. ALL METALLIC CONDUITS ENTERING HAND-HOLE SHALL EXTEND MINIMUM 1" & MAXIMUM 3" INSIDE INNER WALL AND BE EQUIPPED WITH AN APPROVED TYPE OF THREADED GROUNDING BUSHING.

DATE	REVISION
A	

BUREAU OF ELECTRICITY
STANDARD DRAWINGS

CITY OF CHICAGO
DEPARTMENT OF TRANSPORTATION
DIVISION OF ENGINEERING

CONSULTING ENGINEERS:

AMES Engineering, Inc.
CONSULTING ENGINEERS
6330 Belmont Road, Suite 4B
Downers Grove, IL 60516

DWG. NO.

PROJECT # 10 8

SIZE: 22" X 34" | SCALE: AS NOTED | DATE: 9/8/2025

MODEL: Default
FILE NAME: F:\Projects\1058\Eisenhower IDOT-Collins\Design\Str\Traffic Signals\Paulina\TS 32 - CDOT DTL5.dgn

AMES Engineering, Inc.
CONSULTING ENGINEERS
6330 Belmont Road, Suite 4B
Downers Grove, IL 60516

USER NAME = Srahman		DESIGNED - TM	REVISED -	
		DRAWN - SR	REVISED -	
PLOT SCALE = 39.9985 ' / in.		CHECKED - AS	REVISED -	
PLOT DATE = 9/5/2025		DATE - $DATE	REVISED -	

STATE OF ILLINOIS
DEPARTMENT OF TRANSPORTATION

TRAFFIC CONTROL SIGNALS
S. PAULINA STREET AND W. VAN BUREN STREET
S. PAULINA STREET AND W. CONGRESS PARKWAY

SCALE: | SHEET OF SHEETS | STA. | TO STA.

F.A.I. RTE.	SECTION	COUNTY	TOTAL SHEETS	SHEET NO.
290	2019-191-B-R	COOK	265	144
		CONTRACT NO. 62K64		
	ILLINOIS	FED. AID PROJECT		

TOP VIEW
FRAME, COVER & TOP
OF HANDHOLE REMOVED

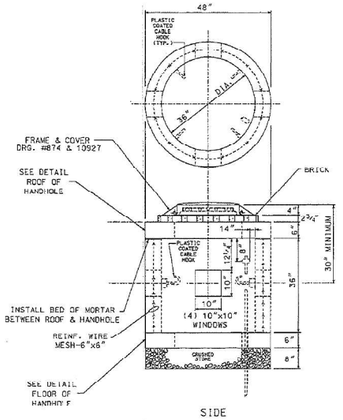

SIDE
ELEVATION

COMPLETE COMMODITY CODE NO. 05-6610-5310M			
CODE NO.	MATERIALS	SIZE	QUAN.
(1) 05-6610-5312	PRE-CAST HANDHOLE	36" X 36"	1
(2) 05-6610-5312	PRE-CAST ROOF & FLOOR	SEE DETAIL	2
05-9075-5470	STONE ¾" CRUSHED	BAG	5
05-1452-9720	BRICK		24
02-4299-5524	FRAME, MANHOLE	30"	1
02-4574-5624	COVER, MANHOLE	30"	1
09-7796-9312	GROUND ROD	¾" x12'	1
09-2636-3240	GROUND CLAMP		1
(3) 03-5082-5330	SONO TUBE	36"	1
(3) 05-5082-5342	SONO TUBE	48"	1
(3) 05-3267-2940	CONC. REDI-MIX	CU. YD.	1
(3) 20-6472-9630	REINFORCING BAR	#3 (⅜")	40'
(3) 20-6472-9630	REINFORCING BAR	#3 (⅜")	16'
(3) 20-5472-9640	REINFORCING BAR	#4 (½")	8'
(3) 57-0770-0000	(MESH (6" X6")	36" X 11'	1

(1) PRE-CAST HANDHOLE SHALL INCLUDE CABLE HOOKS AND CONDUIT KNOCK-OUTS.
(2) PRE-CAST ROOF & FLOOR SHALL INCLUDE LIFTING EYES.
(3) THESE ITEMS ARE FOR POURED-IN-PLACE HANDHOLES ONLY.

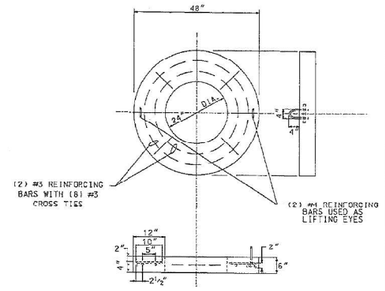

DETAIL-ROOF & FLOOR OF HANDHOLE

CONSTRUCTION NOTES:

1 - 8" BED OF STONE FOR DRAINAGE.

2 - ALL METALLIC CONDUIT(S) ENTERING HANDHOLE SHALL EXTEND MIN. 1" & MAX. OF 3" INSIDE INNER WALL & BE EQUIPPED WITH AN APPROVED TYPE THREADED GROUNDING BUSHING.

DATE	REVISION	
E 10-27-98	ADDT CABLE HOOKS FOR CONNECTOR'S MARKET	DAC/RCD
A	REVISE SCALE	WP

36" DIA. HEAVY DUTY
CONCRETE HANDHOLE
WITH 30" FRAME &
COVER FOR
STREET INSTALLATION

CITY OF CHICAGO
DEPT. OF STREETS AND SANITATION
BUREAU OF ELECTRICITY
DIVISION OF ELECTRICAL ENGINEERING

DRAFTSPERSON	CHECKED BY	ENGINEER IN CHARGE
N. PATTON	R. CARTER	SCHNEIDER, M. TRUMPLA A. ROMATELLO

APPROVED SUPERVISING ELECTRICAL ENGINEER — DWG. NO.
ENGINEER OF ELECTRICITY — 871
SUPERINTENDENT OF ELECTRICITY
DEPUTY COMMISSIONER

SCALE: 11"] — SURVEY NONE — DATED 1-12-98

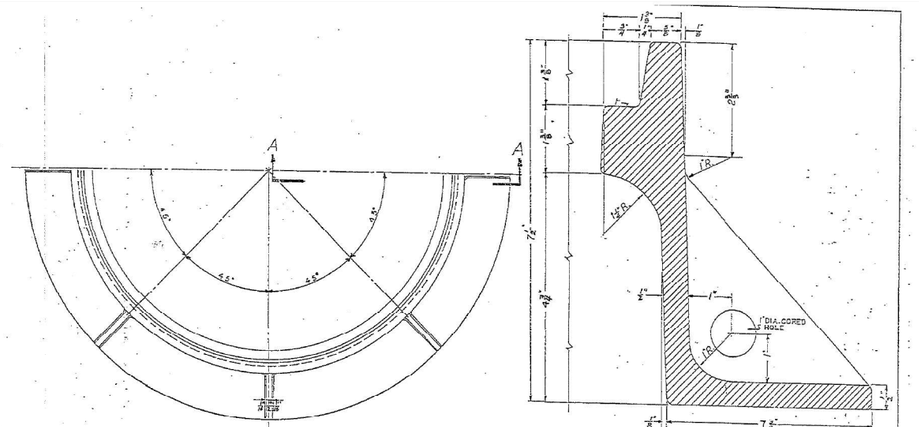

HALF - PLAN

MATERIAL - CAST IRON
ESTIMATED WEIGHT APP. 250 LB.

F - DENOTES BEARING SURFACE SHALL BE MACHINED SMOOTH.

TYPICAL SECTION
THRU FRAME

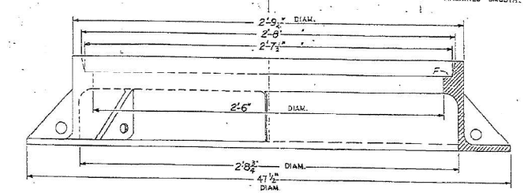

HALF ELEVATION

HALF SECTION A-A

COMMODITY CODE NO.

30" CIRCULAR STREET MANHOLE FRAME

REVISED		CITY OF CHICAGO DEPT. OF PUBLIC WORKS BUREAU OF ELECTRICITY DIVISION OF ELECTRICAL ENGINEERING	
REVISED	A	DRAWN R. SCHNEIDER	CHECKED R. CARTER
REVISED	B	DRAWN M. SCHNEIDER	CHECKED R. SHIMIS
O.D. OF FRAME INCREASED TO 41⅛"	C	5-5-92	ENGINEER IN CHARGE OF ELECTRICITY
	D		
	E		
	F		

SUPERSEDES DRG.# 10926 DATED 6-6-85

874

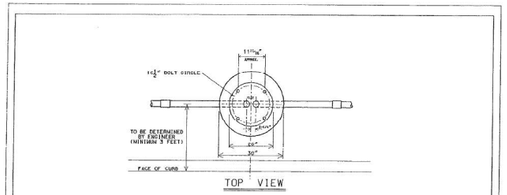

TOP VIEW

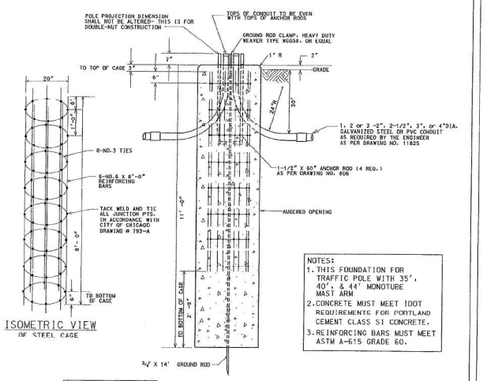

ISOMETRIC VIEW
OF STEEL CAGE

ELEVATION

NOTES:
1. THIS FOUNDATION FOR TRAFFIC POLE WITH 35', 40', & 44' MONOTUBE MAST ARM
2. CONCRETE MUST MEET IDOT REQUIREMENTS FOR PORTLAND CEMENT CLASS SI CONCRETE.
3. REINFORCING BARS MUST MEET ASTM A-615 GRADE 60.

NOTE:
HOLE FOR FOUNDATION MUST BE AUGERED IN UNDISTURBED SOIL

CODE	COMMODITY	SIZE	QUANTITY
05-3267-2940	REDI-MIX CONCRETE	CU. YD.	7.33
09-4001-	ELBOW, LARGE RADIUS	2"-2-1/2"-3"-4"	AS REQUIRED
37-8180-9200	ANCHOR ROD	1-1/2" X 60"	4
06-5054-6910	RE-BAR CAGE	20" D. X 6'-0"	1
09-7796	GROUND ROD	¾" X 14'-0"	1
09-2636-	GROUND ROD CLAMP	5/8"	1
09-2092-	GROUND BUSHING	2"-2-1/2"-3"-4"	AS REQUIRED

4/21/00	SUPERCEDES DWG #817, DRAWN 4/22/83	
DATE	REVISION	

FOUNDATION FOR 34'-6" TRAFFIC SIGNAL POLE WITH 16½ BOLT CIRCLE

CITY OF CHICAGO
DEPT. OF STREETS AND SANITATION
BUREAU OF ELECTRICITY
DIVISION OF ELECTRICAL ENGINEERING

DRAFTSPERSON	CHECKED BY	ENGINEER IN CHARGE
R. CARTER	R. CARTER	E. GARNSEY

DESIGN ENGINEER — DRAWING NO.
ELECTRICAL ENGINEER — 817
ENGINEER OF ELECTRICITY
SUPERINTENDENT OF ELECTRICITY
DEPUTY COMMISSIONER

SIZE: 11" x 17" — SURVEY NONE — DATED 6/21/00

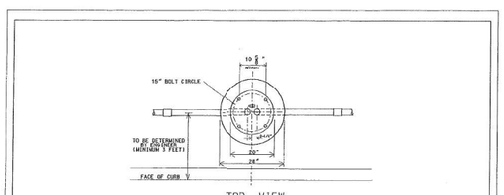

TOP VIEW

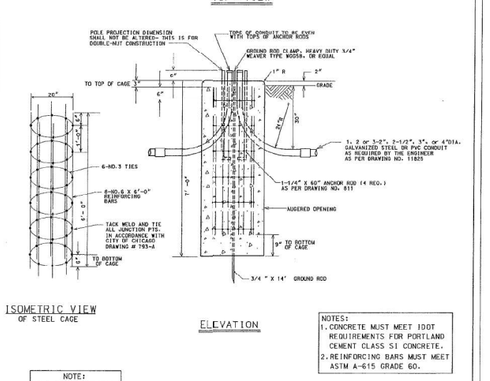

ISOMETRIC VIEW
OF STEEL CAGE

ELEVATION

NOTES:
1. CONCRETE MUST MEET IDOT REQUIREMENTS FOR PORTLAND CEMENT CLASS SI CONCRETE.
2. REINFORCING BARS MUST MEET ASTM A-615 GRADE 60.

NOTE:
HOLE FOR FOUNDATION MUST BE AUGERED IN UNDISTURBED SOIL

CODE	COMMODITY	SIZE	QUANTITY
05-3267-2940	REDI-MIX CONCRETE	CU. YD.	7.33
09-4001-	ELBOW, LARGE RADIUS	2"-2-1/2"-3"-4"	AS REQUIRED
37-8180-9200	ANCHOR ROD	1-1/4" X 60"	4
06-5054-6910	RE-BAR CAGE	20" D. X 6'-0"	1
09-7796	GROUND ROD	¾" X 14'-0"	1
09-2636-	GROUND ROD CLAMP	3/4"	1
	GROUND BUSHING	2"-2-1/2"-3"-4"	AS REQUIRED

DATE	REVISION
	FOUNDATION FOR CHICAGO 2000 GATEWAY POLE & CHICAGO 2000 PEDESTRIAN POLE

CITY OF CHICAGO
DEPT. OF STREETS AND SANITATION
BUREAU OF ELECTRICITY
DIVISION OF ELECTRICAL ENGINEERING

DRAFTSPERSON	CHECKED BY	ENGINEER IN CHARGE
R. CARNEY	R. CARTER	E. GARNSEY

DESIGN ENGINEER — DRAWING NO.
ELECTRICAL ENGINEER — 953
ENGINEER OF ELECTRICITY
SUPERINTENDENT OF ELECTRICITY
DEPUTY COMMISSIONER

SIZE: 11" x 17" — SURVEY NONE — DATED 8/21/02

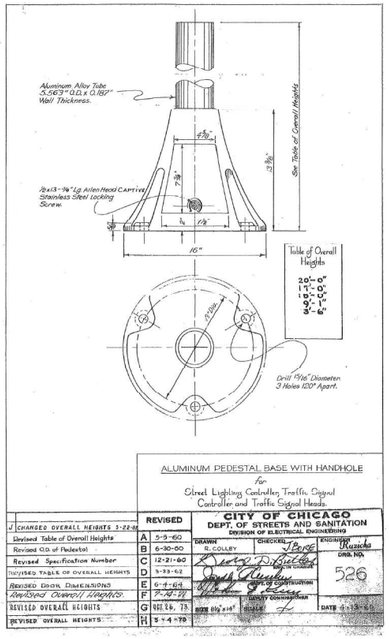

ALUMINUM PEDESTAL BASE WITH HANDHOLE
for
Street Lighting Controller, Traffic Signal Controller and Traffic Signal Heads

REVISED		CITY OF CHICAGO DEPT. OF STREETS AND SANITATION DIVISION OF ELECTRICAL ENGINEERING	
J CHANGED OVERALL HEIGHTS 3-22-96	A	5-9-60	DRAWN R. COLLEY — CHECKED
Revised Table of Overall Heights	B	6-30-60	ENGINEER IN CHARGE OF ELECTRICITY
Revised O.D. of Pedestal	C	12-21-60	DWG. NO. 526
Revised Specification Number	D	1-23-62	
Revised Table of Overall Heights	E	6-1-65	
Revised Base Dimensions	F	7-15-71	
Revised Overall Heights	G	6-16-76	DATE 6-13-60
REVISED OVERALL HEIGHTS	H	5-14-79	

A		
DATE	REVISION	

BUREAU OF ELECTRICITY
STANDARD DRAWINGS

CITY OF CHICAGO
DEPARTMENT OF TRANSPORTATION
DIVISION OF ENGINEERING

CONSULTING ENGINEERS:

AMES Engineering, Inc.
CONSULTING ENGINEERS
6330 Belmont Road, Suite 4B
Downers Grove, IL 60516

PROJECT # 1058

DWG. NO.

SIZE: 22" X 34" | SCALE: AS NOTED | DATE: 9/8/2025

MODEL: Default
FILE NAME: F:\Projects\1058-Elsenhower IDOT-Collins\Design\Sht\Traffic Signals\Paulina\TS 33 - CDOT DTL6.dgn

AMES Engineering, Inc.
CONSULTING ENGINEERS
6330 Belmont Road, Suite 4B
Downers Grove, IL 60516

USER NAME = tmlckey	DESIGNED - TM	REVISED -	
	DRAWN - SR	REVISED -	
PLOT SCALE = 39.9985 ' / in.	CHECKED - AS	REVISED -	
PLOT DATE = 10/8/2025	DATE - $DATE	REVISED -	

STATE OF ILLINOIS
DEPARTMENT OF TRANSPORTATION

TRAFFIC CONTROL SIGNALS
S. PAULINA STREET AND W. VAN BUREN STREET
S. PAULINA STREET AND W. CONGRESS PARKWAY

SCALE: | SHEET OF SHEETS | STA. | TO STA.

F.A.I. RTE.	SECTION	COUNTY	TOTAL SHEETS	SHEET NO.
290	2019-191-B-R	COOK	265	145
		CONTRACT NO. 62K64		
		ILLINOIS	FED. AID PROJECT	

SIGN PANEL – TYPE 1 OR TYPE 2

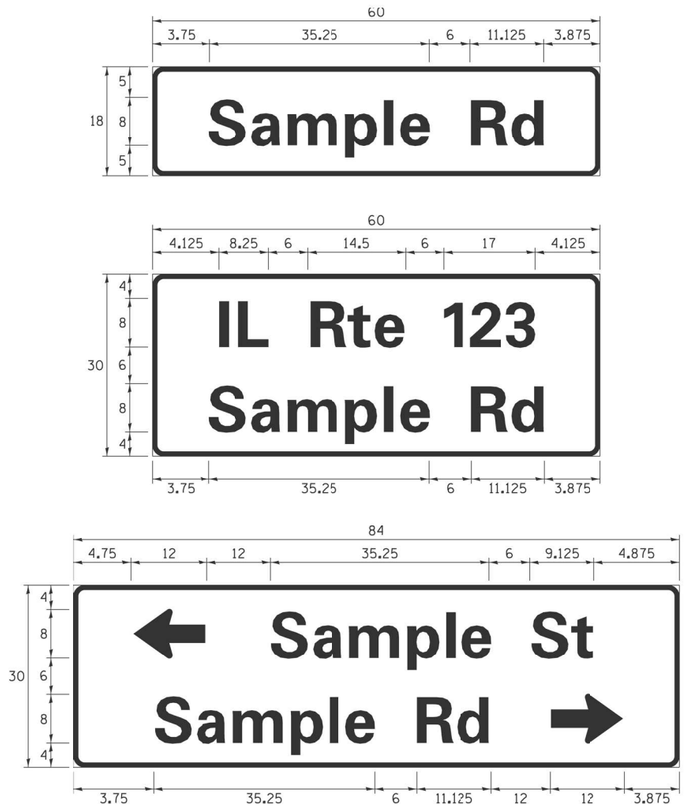

DESIGN SERIES	AREA (SQ FT)	SIGN PANEL TYPE	SHEETING TYPE	QTY. REQUIRED
D OR C	-	1 OR 2	ZZ	-

COMMON STREET NAME ABBREVIATIONS AND WIDTHS

NAME	ABBREVATION	WIDTH (INCH)	
		SERIES "C"	SERIES "D"
AVENUE	Ave	15.000	18.250
BOULEVARD	Blvd	17.125	20.000
CIRCLE	Cir	11.125	13.000
COURT	Ct	8.250	9.625
DRIVE	Dr	8.625	10.125
HIGHWAY	Hwy	18.375	22.000
ILLINOIS	IL	7.000	8.250
LANE	Ln	9.125	10.750
PARKWAY	Pkwy	23.375	27.375
PLACE	Pl	7.125	7.750
ROAD	Rd	9.625	11.125
ROUTE	Rte	12.625	14.500
STREET	St	8.000	9.125
TERRACE	Ter	12.625	14.625
TRAIL	Tr	7.750	9.125
UNITED STATES	US	10.375	12.250

GENERAL NOTES

1. WHERE MAST ARM MOUNTED STREET NAME SIGNS ARE SPECIFIED, THE MAST ARM ASSEMBLY AND POLES SHALL BE DESIGNED TO SUPPORT THE LOADINGS CALLED FOR ON STANDARDS 877001, 877002, 877006, 877011 AND 877012, AS APPLICABLE, PLUS TWO (2) SIGN PANELS 2'-6" x 8'-0" MOUNTED AS SHOWN. THE DESIGN SHALL BE IN ACCORDANCE WITH THE REQUIREMENTS OF THE CURRENT "STANDARD SPECIFICATIONS FOR STRUCTURAL SUPPORTS FOR HIGHWAY SIGNS, LUMINAIRES, AND TRAFFIC SIGNALS" AS PUBLISHED BY THE AMERICAN ASSOCIATION OF STATE HIGHWAY AND TRANSPORTATION OFFICIALS FOR 80 M.P.H. WIND VELOCITY.
2. ALL SIGNS SHALL CONSIST OF A WHITE LEGEND AND BORDER (TYPE ZZ SHEETING) ON A GREEN BACKGROUND (TYPE ZZ SHEETING)
3. THE SIGN LENGTH SHALL BE IN 6-INCH INCREMENTS, BUT THE OVERALL LENGTH SHALL NOT EXCEED 8'-0". ALL BORDERS SHALL BE 3/4" WIDE. CORNER RADIUS SHALL BE 1-7/8". THE SPACING BETWEEN THE WORDS SHOULD BE 6", IF POSSIBLE, BUT MAY BE REDUCED TO 5" WHEN SPACING IS CRITICAL. A MINIMUM OF 2-1/2" SHALL BE INCLUDED BETWEEN THE WORD AND THE RIGHT AND LEFT EDGES OF THE SIGN.
4. A PREFERRED METHOD FOR THE SIGN DESIGN IS TO USE SERIES "D" LETTER ON A ONE-LINE SIGN 18" IN HEIGHT AND A MAXIMUX OF 8'-0" IN WIDTH. IF SERIES "D" DOES NOT FIT ON A 8"-0" SIGN, THEN SERIES "C" SHOULD BE TRIED. IF SERIES "C" DOES NOT FIT ON A 8'-0" SIGN, A 30" HIGH TWO-LINE SIGN CAN BE USED. THE CROSSROAD DESIGNATION AS TO STREET, AVENUE, ETC. SHOULD BE SPELLED OUT ON THE SECOND LINE, IF THERE IS SPACE AVAILABLE.
5. LED ILLUMINATED STREET NAME SIGNS CAN BE USED IN PLACE OF REGULAR SIGN PANELS BUT ANY SPECIAL WORDING AND SYMBOLOGY MUST BE APPROVED BY THE DEPARTMENT. GENERAL DESIGN REQUIREMENT AS LISTED ABOVE (COLOR, FONT, SIZE, ETC.) MUST BE FOLLOWED.
6. SIGNFIX ALUMINUM CHANNEL FRAMING SYSTEM SHALL BE USED FOR ALL SIGNS ATTACHED TO SIGNAL POLES AND POSTS.

LOCAL SUPPLIERS:

- J.O. HERBERT COMPANY, INC
  MIDLOTHIAN, VA
- WESTERN REMAC, INC.
  WOODRIDGE, IL

PARTS LISTING:

SIGN CHANNEL	PART #HPN053 (MED. CHANNEL)
SIGN SCREWS	1/4" x 14 x 1" H.W.H. #3 SELF TAPPING WITH NEOPRENE WASHER
BRACKETS	PART #HPN034 (UNIVERSAL) CHANNEL CLAMPS WITH STAINLESS STEEL STRAPPING

OTHER BRANDS OF MOUNTING HARDWARE ARE ACCEPTABLE, BASED UPON THE DEPARTMENT'S APPROVAL AND COMPATIBILITY WITH THE CHANNEL/BRACKET OF THE ABOVE PRODUCT.

MOUNTING LOCATION

ARM OR POLE MOUNTED

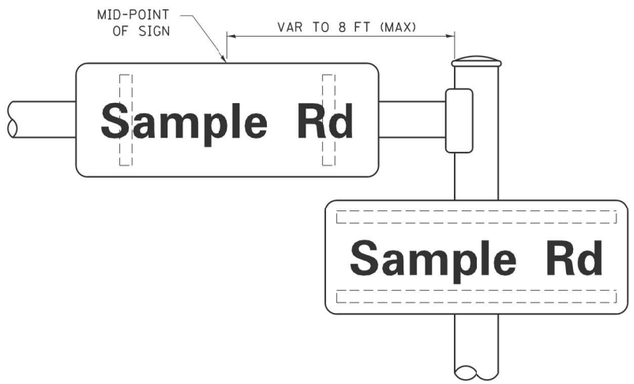

SUPPORTING CHANNELS

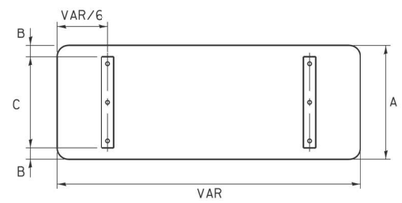

A	B	C
18"	2"	14"
30"	2"	24"

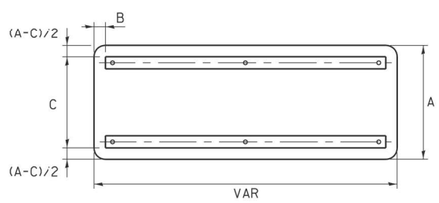

A	B	C
18"	2"	12"
30"	2"	22"

STANDARD ALPHABETS SPACING CHART

(8") UPPER CASE AND (6") LOWER CASE

FHWA SERIES "C"				FHWA SERIES "D"			
CHARACTER	LEFT SPACING (INCH)	WIDTH (INCH)	RIGHT SPACING (INCH)	CHARACTER	LEFT SPACING (INCH)	WIDTH (INCH)	RIGHT SPACING (INCH)
A	0.240	5.122	0.240	A	0.240	6.804	0.240
B	0.880	4.432	0.480	B	0.960	5.446	0.400
C	0.720	4.432	0.720	C	0.800	5.446	0.800
D	0.880	4.432	0.720	D	0.960	5.446	0.800
E	0.880	4.032	0.480	E	0.960	4.962	0.400
F	0.880	4.032	0.240	F	0.960	4.962	0.240
G	0.720	4.432	0.720	G	0.800	5.446	0.800
H	0.880	4.432	0.880	H	0.960	5.446	0.960
I	0.880	1.120	0.880	I	0.960	1.280	0.960
J	0.240	4.032	0.880	J	0.240	5.122	0.960
K	0.880	4.432	0.480	K	0.960	5.604	0.400
L	0.880	4.032	0.240	L	0.960	4.962	0.240
M	0.880	5.234	0.880	M	0.960	6.244	0.960
N	0.880	4.432	0.880	N	0.960	5.446	0.960
O	0.720	4.722	0.720	O	0.800	5.684	0.800
P	0.880	4.432	0.720	P	0.960	5.446	0.240
Q	0.720	4.722	0.720	Q	0.800	5.684	0.800
R	0.880	4.432	0.480	R	0.960	5.446	0.400
S	0.480	4.432	0.480	S	0.400	5.446	0.400
T	0.240	4.032	0.240	T	0.240	4.962	0.240
U	0.880	4.432	0.880	U	0.960	5.446	0.960
V	0.240	4.952	0.240	V	0.240	6.084	0.240
W	0.240	6.084	0.240	W	0.240	7.124	0.240
X	0.240	4.722	0.240	X	0.400	5.446	0.400
Y	0.240	5.122	0.240	Y	0.240	6.884	0.240
Z	0.480	4.432	0.480	Z	0.400	5.446	0.400
a	0.320	3.842	0.640	a	0.400	4.562	0.720
b	0.720	4.032	0.480	b	0.800	4.802	0.480
c	0.480	4.002	0.240	c	0.480	4.722	0.240
d	0.480	4.032	0.720	d	0.480	4.802	0.800
e	0.480	4.032	0.320	e	0.480	4.722	0.320
f	0.320	2.480	0.160	f	0.320	2.882	0.160
g	0.480	4.032	0.720	g	0.480	4.802	0.800
h	0.720	4.032	0.640	h	0.800	4.722	0.720
i	0.720	1.120	0.720	i	0.800	1.280	0.800
j	0.000	2.320	0.720	j	0.000	2.642	0.800
k	0.720	4.322	0.160	k	0.800	5.122	0.160
l	0.720	1.120	0.720	l	0.800	1.280	0.800
m	0.720	6.724	0.640	m	0.800	7.926	0.720
n	0.720	4.032	0.640	n	0.800	4.722	0.720
o	0.480	4.032	0.480	o	0.480	4.882	0.480
p	0.720	4.032	0.480	p	0.800	4.802	0.480
q	0.480	4.032	0.720	q	0.480	4.802	0.800
r	0.720	2.642	0.160	r	0.800	3.042	0.160
s	0.320	3.352	0.240	s	0.320	3.762	0.240
t	0.080	2.832	0.080	t	0.080	3.202	0.080
u	0.640	4.032	0.720	u	0.720	4.722	0.800
v	0.160	4.722	0.160	v	0.160	5.684	0.160
w	0.160	7.524	0.160	w	0.160	9.046	0.160
x	0.000	5.202	0.000	x	0.000	6.244	0.000
y	0.160	4.952	0.160	y	0.160	6.004	0.160
z	0.240	3.352	0.240	z	0.240	4.002	0.240
1	0.720	1.630	0.880	1	0.800	2.000	0.960
2	0.480	4.432	0.480	2	0.800	5.446	0.800
3	0.480	4.432	0.480	3	1.440	5.446	0.800
4	0.240	4.952	0.720	4	0.160	6.004	0.960
5	0.480	4.432	0.480	5	0.800	5.446	0.800
6	0.720	4.432	0.720	6	0.800	5.446	0.800
7	0.240	4.432	0.720	7	0.560	5.446	0.560
8	0.480	4.432	0.480	8	0.800	5.446	0.800
9	0.480	4.432	0.480	9	0.800	5.446	0.800
0	0.720	4.722	0.720	0	0.800	5.684	0.800
-	0.240	2.802	0.240	-	0.240	2.802	0.240

FILE NAME = S:\WP\Design\Manuals and Reference Materials\CADD\Details\ts02.dgn	USER NAME = pociechal	DESIGNED - LP/IP	REVISED -	STATE OF ILLINOIS DEPARTMENT OF TRANSPORTATION
	PLOT SCALE = 50.0000 ' / in.	DRAWN - LP	REVISED -	
Default	PLOT DATE = 9/22/2014	CHECKED - IP	REVISED -	
		DATE - 10/01/2014	REVISED -	

DISTRICT ONE
MAST ARM MOUNTED STREET NAME SIGNS

SCALE: | SHEET OF SHEETS | STA. | TO STA.

F.A.I. RTE.	SECTION	COUNTY	TOTAL SHEETS	SHEET NO.
290	2019-191-B-R	COOK	265	146
	TS-02	CONTRACT NO. 62K64		
	ILLINOIS FED. AID PROJECT			

ts02.dgn 9/22/2014, 12:32:06 PM, Lisenpociechal

GENERAL NOTES:

1. THIS PROJECT INCLUDES THE REPLACEMENT OF PAULINA STREET BRIDGE DECK AND SUPERSTRUCTURE RESULTING IN THE REPLACEMENT OF UNDER DECK AND OVER DECK LIGHTING. THE UNDER DECK LIGHTING OVER I-290 IS OWNED AND MAINTAINED BY IDOT WHERE AS THE OVER DECK LIGHTING ON THE BRIDGE IS OWNED AND MAINTAINED BY CDOT.

2. THE PROJECT LIMITS ALONG PAULINA AVENUE ARE BETWEEN W. VAN BUREN STREET AND W. CONGRESS PARKWAY.

3. THE EXISTING UNDERPASS LIGHTING IS CONNECTED TO EXISTING LIGHTING CONTROLLER "G" WHICH SHALL CONTINUE TO FEED PROPOSED LIGHTING LUMINAIRES DURING AND AFTER CONSTRUCTION.

4. THE EXISTING UNDERPASS LIGHTING SHALL BE REMOVED WHEN THE BRIDGE DECK ALONG WITH BEAMS ARE REMOVED. MAINLINE LIGHTING SHALL PROVIDE LIGHTING FOR THIS PORTION OF THE ROADWAY DURING CONSTRUCTION. THE PROPOSED UNDERPASS LUMINAIRES SHALL BE INSTALLED DURING CONSTRUCTION OF THE NEW DECK.

5. THE CONTRACTOR SHALL NOTIFY J.U.L.I.E. TO LOCATE AND MARK/STAKE ALL UNDERGROUND UTILITIES. MEADE ELECTRIC CO. DISTRICT 1 ELECTRICAL MAINTENANCE CONTRACTOR LOCATES IDOT ELECTRICAL EQUIPMENT AND UNDERGROUND CABLES, CALL MEADE ELECTRIC CO. TRANSFER IDOT MAINTAINED EQUIPMENT TO THE CONTRACTOR BEFORE THE START OF ANY WORK. THEIR PHONE NUMBER IS 773-287-7672. THE CONTRACTOR SHALL ALSO CONTACT 811 CHICAGO (DIGGER) AT 312-744-7000 TO LOCATE CITY OF CHICAGO EQUIPMENT AND UNDERGROUND CABLES.

6. THE LIGHTING SYSTEM INSTALLATION SHALL CONFORM TO THE LATEST NEC, IDOT STANDARDS, CDOT STANDARD AND LOCAL CODES.

7. ALL ELECTRICAL EQUIPMENT AND PRODUCT SHALL BE UL LISTED AND LABELED.

8. THE CONTRACTOR SHALL SUBMIT CDOT EQUIPMENT CATALOG CUTS TO:
   CHICAGO DOT
   2 N LASALLE ST, SUITE 1110
   CHICAGO, IL 60602
   CALL (312) 744-3600 TO COORDINATE.

9. THE CONTRACTOR SHALL PICK UP LIGHTING HARDWARE SUPPLIED BY THE CITY AND SALVAGE AT CITY'S DIVISION OF ELECTRICAL OPERATIONS LOCATED AT 2451 S. ASHLAND AVENUE, CHICAGO, IL.

10. THE COST OF DELIVERING SALVAGED LIGHTING HARDWARE TO CITY OF CHICAGO (CDOT) IS INCLUDED IN PAY ITEM 84200500 REMOVAL OF LIGHTING UNIT, SALVAGE.

11. MAINTENANCE OF THE LIGHTING SYSTEMS ON THE BRIDGE AND BENEATH THE BRIDGE SHALL BE INCLUDED IN PAY ITEM X8000003 MAINTENANCE OF LIGHTING SYSTEM.

12. THERE ARE EXISTING CONDUIT DUCT BANKS BETWEEN BEAMS OF THE PAULINA BRIDGE AT TWO LOCATIONS FROM W. VAN BUREN ST. TO W. CONGRESS PARKWAY. THE CONTRACTOR SHALL REPLACE THESE CONDUIT PER ENGINEER AND CITY OF CHICAGO REQUIREMENTS.

13. THE CONTRACTOR SHALL PROTECT AND MAINTAIN OR REPLACE THE EXISTING ComEd BRIDGE MOUNTED CONDUITS AS NEEDED AND AS DETERMINED BY THE OWNER OF THE FACILITY DURING RECONSTRUCTION OF THE PAULINA BRIDGE. THERE ARE 3 SEPARATE DUCT BANKS BENEATH PAULINA ST. BRIDGE. THE CONTRACTOR SHALL COORDINATE WITH ComEd AND CTA BEFORE STARTING CONSTRUCTION.

14. THE LUMINAIRE USED FOR CDOT PROPOSED LIGHTING UNIT AND PROPOSED COMBINATION LIGHT POLE SHALL BE: GE LED ERLH 016 B3 3000K COBRA HEAD OR EQUIVALENT PROVIDED BY CDOT.

15. EQUIPMENT WHICH WILL BE OWNED AND MAINTAINED BY THE CITY OF CHICAGO SHALL BE REVIEWED AND APPROVED BY THE CITY OF CHICAGO PRIOR TO SUBMITTAL TO THE STATE. THE SUBMITTAL TO THE STATE SHALL INCLUDE ANY COMMENTS MADE BY THE CITY OF CHICAGO.

BILL OF MATERIALS

DESCRIPTION	UNIT	QUANTITY	UNDERPASS IDOT LIGHTING	CDOT LIGHTING
UNDERGROUND CONDUIT, GALVANIZED STEEL, 2" DIA.	FOOT	141		141
CONDUIT ATTACHED TO STRUCTURE, 1" DIA., PVC COATED GALVANIZED STEEL	FOOT	504	504	
CONDUIT ATTACHED TO STRUCTURE, 3" DIA., PVC COATED GALVANIZED STEEL	FOOT	30	30	
CONDUIT EMBEDDED IN STRUCTURE, 2" DIA., PVC	FOOT	1340		1340
JUNCTION BOX, STAINLESS STEEL, ATTACHED TO STRUCTURE, 6"X6"X4"	EACH	12	12	
JUNCTION BOX, STAINLESS STEEL, ATTACHED TO STRUCTURE, 12"X10"X6"	EACH	6	6	
JUNCTION BOX, STAINLESS STEEL, ATTACHED TO STRUCTURE, 18"X18"X8"	EACH	2	2	
ELECTRIC CABLE IN CONDUIT, 600V (XLP-TYPE USE) 1/C NO. 10	FOOT	1572	1572	
AERIAL CABLE, 2-1/C NO. 6 WITH MESSENGER WIRE	FOOT	434		434
LUMINAIRE, LED, UNDERPASS, SUSPENDED, OUPUT DESIGNATION C	EACH	12	12	
REMOVAL OF LIGHTING UNIT, SALVAGE	EACH	5		5
REMOVAL OF LIGHTING UNIT, NO SALVAGE	EACH	12	12	
REMOVAL OF EXISTING HANDHOLE	EACH	4		4
CABLE IN CONDUIT, TRIPLEX, 2-1/C NO. 6 AND 1-1/C NO. 8 GROUND	FOOT	662		662
LUMINAIRE, LED, SPECIAL	EACH	8		8
MAINTENANCE OF LIGHTING SYSTEM	CAL MO	12	12	
LIGHTING UNIT COMPLETE (SPECIAL)	EACH	5		5
CONCRETE FOUNDATION, 24" DIAMETER, 1-1/4" ANCHOR RODS, 15" BOLT CIRCLE, 7 FEET	EACH	1		1
MAINTENANCE OF STREET LIGHTING SYSTEM (CITY OF CHICAGO)	L SUM	1		1

LEGEND

- CABLE IN CONDUIT, TRIPLEX, 2-1/C NO. 6 AND 1-1/C NO. 8 GROUND
- EXISTING HANDHOLE TO BE REMOVED
- EXISTING UNDERPASS LUMINAIRE TO BE REMOVED AND SALVAGED
- PROPOSED UNDERPASS LUMINAIRE, LED, SUSPENDED MOUNT, OUTPUT DESIGNATION C
- JUNCTION BOX, STAINLESS STEEL, ATTACHED TO STRUCTURE, 6"x6"x4"
- JUNCTION BOX, STAINLESS STEEL, ATTACHED TO STRUCTURE, 12"x10"x6"
- JUNCTION BOX, STAINLESS STEEL ATTACHED TO STRUCTURE, 18"x18"x8" WITH OVERCURRENT PROTECTION
- CDOT EXISTING LIGHTING CONTROLLER, BASE MOUNTED TO REMAIN
- CDOT EXISTING LIGHTING UNIT TO BE REMOVED AND SALVAGED
- EXISTING CDOT LIGHTING UNIT TO REMAIN
- EXISTING COMBINATION SIGNAL/LIGHT POLE TO BE REMOVED
- TEMPORARY LIGHTING ON TRAFFIC SIGNAL WOOD POLE
- PROPOSED COMBINATION SIGNAL/LIGHT POLE
- CDOT PROPOSED LIGHTING UNIT MOUNTED ON BRIDGE STRUCTURE
- CDOT PROPOSED LIGHTING UNIT (GROUND MOUNTED)
- CONDUIT ATTACHED TO STRUCTURE (ELECTRIC CABLE WITHIN)
- A/C — AERIAL CABLE, 2-1/C NO. 6 WITH MESSENGER WIRE
- UNDERGROUND CONDUIT, GALVANIZED STEEL, 2" DIA.
- R-A/C — AERIAL CABLE TO BE REMOVED
- EXISTING CDOT POLE TO BE REMOVED
- CABLE IN CONDUIT, TRIPLEX, 2-1/C NO. 6 AND 1-1/C NO. 8 GROUND, WITHIN CONDUIT EMBEDDED IN STRUCTURE 2" DIA., PVC

EL-01

MODEL: Default
FILE NAME: F:\Projects\1059-Eisenhower IDOT-Collins\Design\Sht\D162K64-light01.dgn

AMES Engineering, Inc.
CONSULTING ENGINEERS
6330 Belmont Road, Suite 4B
Downers Grove, IL 60516

USER NAME = Srahman	DESIGNED - BL / KV	REVISED -		
	DRAWN - SR	REVISED -		
PLOT SCALE = 40.0000 ' / in.	CHECKED - MH	REVISED -		
PLOT DATE = 9/2/2025	DATE - 08-21-2025	REVISED -		

STATE OF ILLINOIS
DEPARTMENT OF TRANSPORTATION

GENERAL NOTES, BILL OF MATERIALS AND LEGEND
FAI–290 (EISENHOWER EXPRESSWAY) AT PAULINA STREET

SCALE: NONE | SHEET OF SHEETS | STA. | TO STA.

F.A.I. RTE.	SECTION	COUNTY	TOTAL SHEETS	SHEET NO.
290	2019-191-B-R	COOK	265	147
		CONTRACT NO. 62K64		
	ILLINOIS FED. AID PROJECT			

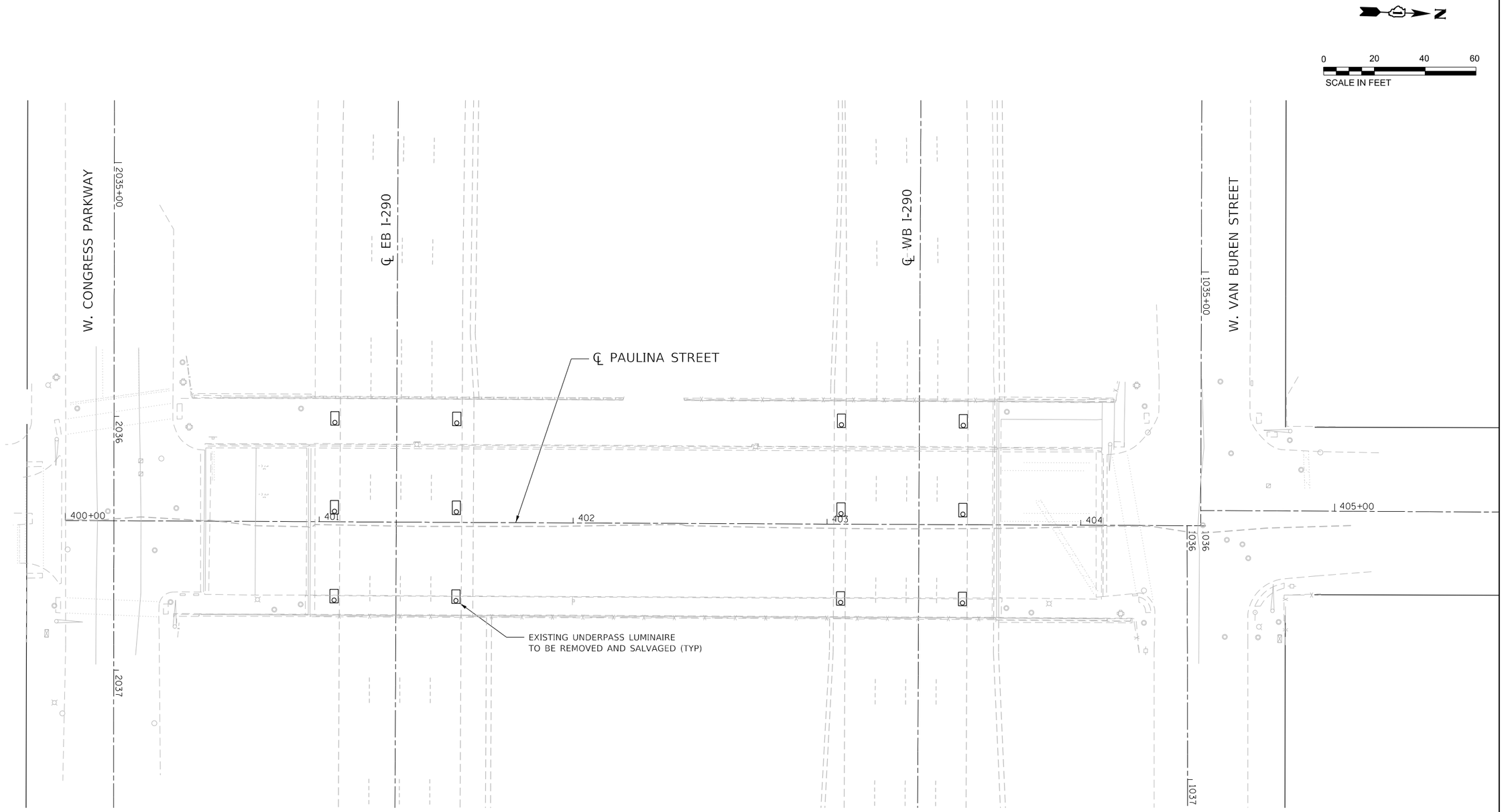

NOTES:

1. FOR GENERAL NOTES AND LEGENDS, SEE SHEET EL-01.
2. SOME OF THE EXISTING UNDERPASS LUMINAIRES MAY HAVE BEEN REMOVED PRIOR TO THE START OF THIS CONTRACT. THE ENGINEER SHALL CONFIRM WHEN MAINTENENANCE IS TRANSFERED TO THE CONTRACTOR.

EL-02

MODEL: Default
FILE NAME: F:\Projects\1058-Eisenhower IDOT-Collins\Design\Sht\D162K64-light02.dgn

AMES Engineering, Inc.
CONSULTING ENGINEERS
6330 Belmont Road, Suite 4B
Downers Grove, IL 60516

USER NAME = Srahman	DESIGNED - BL / KV	REVISED -	
	DRAWN - SR	REVISED -	
PLOT SCALE = 40.000 ' / In.	CHECKED - MH	REVISED -	
PLOT DATE = 8/21/2025	DATE - 08-21-2025	REVISED -	

STATE OF ILLINOIS
DEPARTMENT OF TRANSPORTATION

IDOT REMOVAL UNDERPASS LIGHTING
FAI–290 (EISENHOWER EXPRESSWAY) AT PAULINA STREET

SCALE: 1"=20' | SHEET 1 OF 1 SHEETS | STA. | TO STA.

F.A.I. RTE.	SECTION	COUNTY	TOTAL SHEETS	SHEET NO.
290	2019-191-B-R	COOK	265	148
		CONTRACT NO. 62K64		
		ILLINOIS	FED. AID PROJECT	

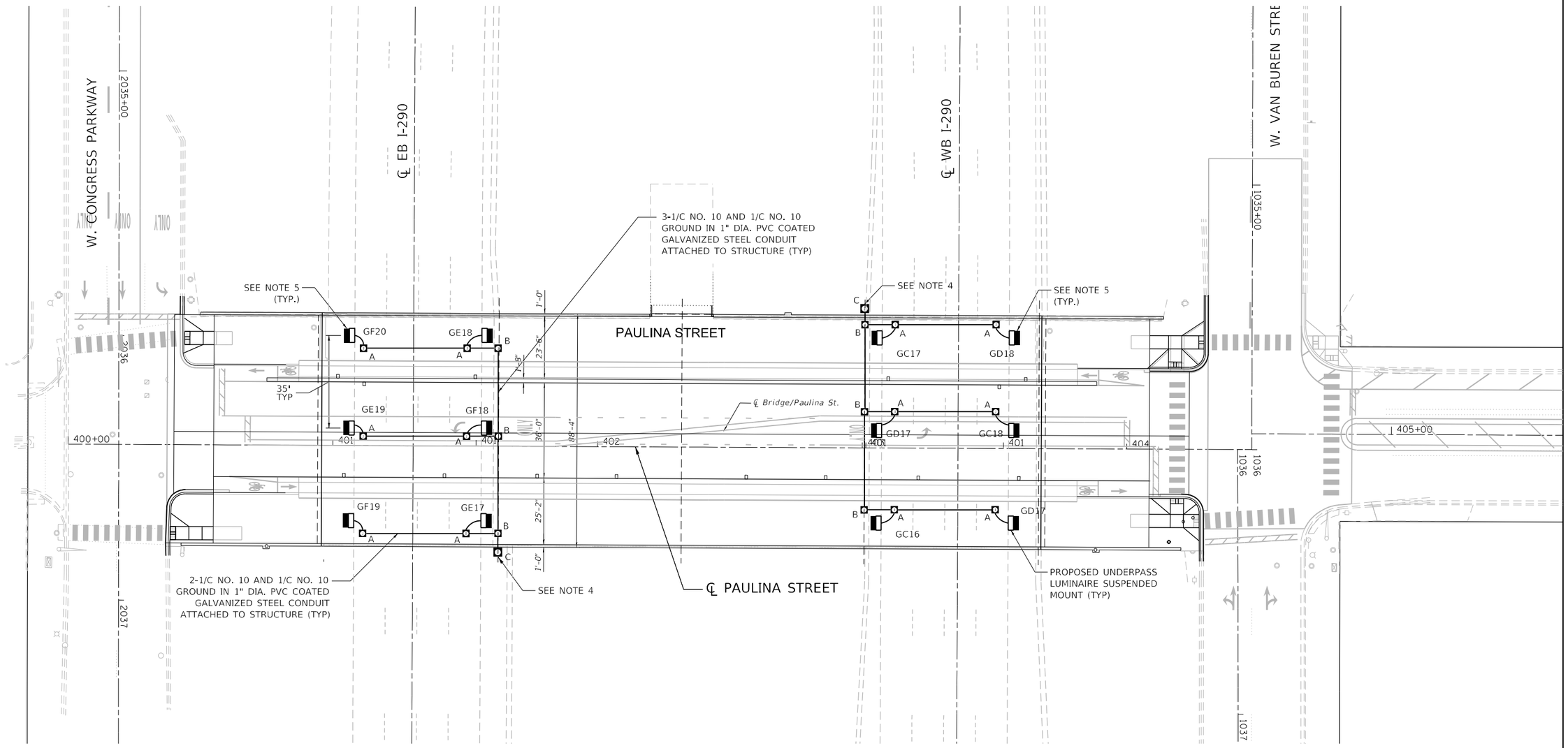

NOTES:

1. FOR GENERAL NOTES AND LEGENDS, SEE SHEET EL-01.
2. THE PROPOSED UNDERPASS LUMINAIRES OVER EB I-290 SHALL BE RECONNECTED TO CIRCUITS E, F OF CONTROLLER G (IDOT).
3. THE PROPOSED UNDERPASS LUMINAIRES OVER WB I-290 SHALL BE RECONNETED TO CIRCUITS C, D OF CONTROLLER G (IDOT).
4. THE PROPOSED JUNCTION BOX SHALL BE ATTACHED TO THE PIER. EXISTING FEED FROM CONTROLLER G (IDOT).
5. SET BACK IS 2' FROM EDGE OF PAVEMENT TO THE CENTER OF UNDERPASS LUMINAIRE.

LEGEND:

- A JUNCTION BOX, STAINLESS STEEL, ATTACHED TO STRUCTURE, 6"x6"x4"
- B JUNCTION BOX, STAINLESS STEEL, ATTACHED TO STRUCTURE, 12"x10"x6"
- C JUNCTION BOX, STAINLESS STEEL ATTACHED TO STRUCTURE, 18"x18"x8" WITH OVERCURRENT PROTECTION

EL-03

AMES Engineering, Inc.
CONSULTING ENGINEERS
6330 Belmont Road, Suite 4B
Downers Grove, IL 60516

USER NAME = Srahman	DESIGNED - BL / KV	REVISED -	
	DRAWN - SR	REVISED -	
PLOT SCALE = 40.000 ' / In.	CHECKED - MH	REVISED -	
PLOT DATE = 8/21/2025	DATE - 08-21-2025	REVISED -	

STATE OF ILLINOIS
DEPARTMENT OF TRANSPORTATION

IDOT PROPOSED UNDERPASS LIGHTING
FAI–290 (EISENHOWER EXPRESSWAY) AT PAULINA STREET

SCALE: 1"=20' | SHEET 1 OF 1 SHEETS | STA. | TO STA.

F.A.I. RTE.	SECTION	COUNTY	TOTAL SHEETS	SHEET NO.
290	2019-191-B-R	COOK	265	149
		CONTRACT NO. 62K64		
		ILLINOIS	FED. AID PROJECT	

MODEL: Default
FILE NAME: F:\Projects\1058-Eisenhower IDOT-Collins\Design\Sht\D1162K64-light03.dgn

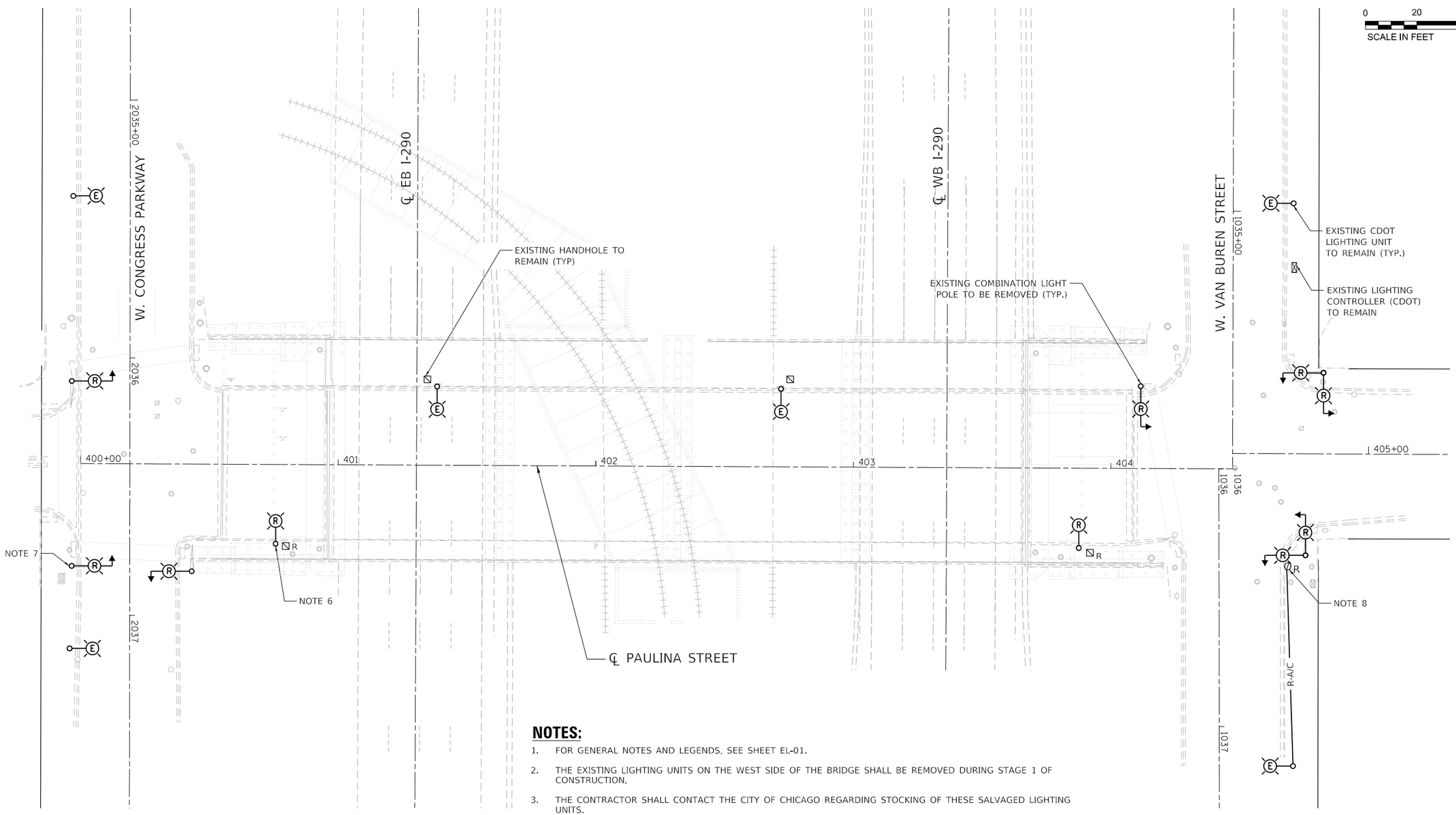

NOTES:

1. FOR GENERAL NOTES AND LEGENDS, SEE SHEET EL-01.
2. THE EXISTING LIGHTING UNITS ON THE WEST SIDE OF THE BRIDGE SHALL BE REMOVED DURING STAGE 1 OF CONSTRUCTION.
3. THE CONTRACTOR SHALL CONTACT THE CITY OF CHICAGO REGARDING STOCKING OF THESE SALVAGED LIGHTING UNITS.
4. THE EXISTING CABLE CONNECTION BETWEEN THE EXISTING LIGHTING UNITS SHALL BE MAINTAINED.
5. THE EXISTING LIGHTING ON THE WEST SIDE OF THE BRIDGE SHALL BE REMOVED DURING STAGE 2 OF CONSTRUCTION WHEN THE PROPOSED LIGHTING ON THE EAST SIDE OF THE BRIDGE IS INSTALLED AND OPERATIONAL.
6. THE EXISTING CAMERA AND COMMUNICATION EQUIPMENT ON THIS POLE SHALL BE SALVAGED AND REINSTALLED AND RECONNECT AT THE NEW POLE.
7. THE EXISTING CAMERA AND THE ASSOCIATED EQUIPMENT SHALL BE DISCONNECTED AND SALVAGED FROM THE EXISTING COMBINATION POLE FOR RECONNECTING TO NEW COMBINATION POLE. THE CONTRACTOR SHALL COORDINATE IN FIELD. THE EXISTING EQUIPMENT IS OWNED BY CDOT.
8. THE EXISTING CDOT LIGHT POLE SHALL BE REMOVED ALONG WITH THE AERIAL CABLE DURING STAGE 2 CONSTRUCTION. WHEN THE PROPOSED TRAFFIC SIGNALS ARE INSTALLED.

MODEL: Default
FILE NAME: F:\Projects\10584-Eisenhower IDOT-Collins\Design\Sht\D162K64-light04.dgn

AMES Engineering, Inc.
CONSULTING ENGINEERS
6330 Belmont Road, Suite 4B
Downers Grove, IL 60516

USER NAME = Srahman	DESIGNED - BL / KV	REVISED -	
	DRAWN - SR	REVISED -	
PLOT SCALE = 40.000 ' / In.	CHECKED - MH	REVISED -	
PLOT DATE = 8/21/2025	DATE - 08-21-2025	REVISED -	

STATE OF ILLINOIS
DEPARTMENT OF TRANSPORTATION

CDOT REMOVAL LIGHTING STAGE 1
FAI–290 (EISENHOWER EXPRESSWAY) AT PAULINA STREET

SCALE: 1"=20' | SHEET 1 OF 1 SHEETS | STA. | TO STA.

F.A.I. RTE.	SECTION	COUNTY	TOTAL SHEETS	SHEET NO.
290	2019-191-B-R	COOK	265	150
		CONTRACT NO. 62K64		
		ILLINOIS	FED. AID PROJECT	

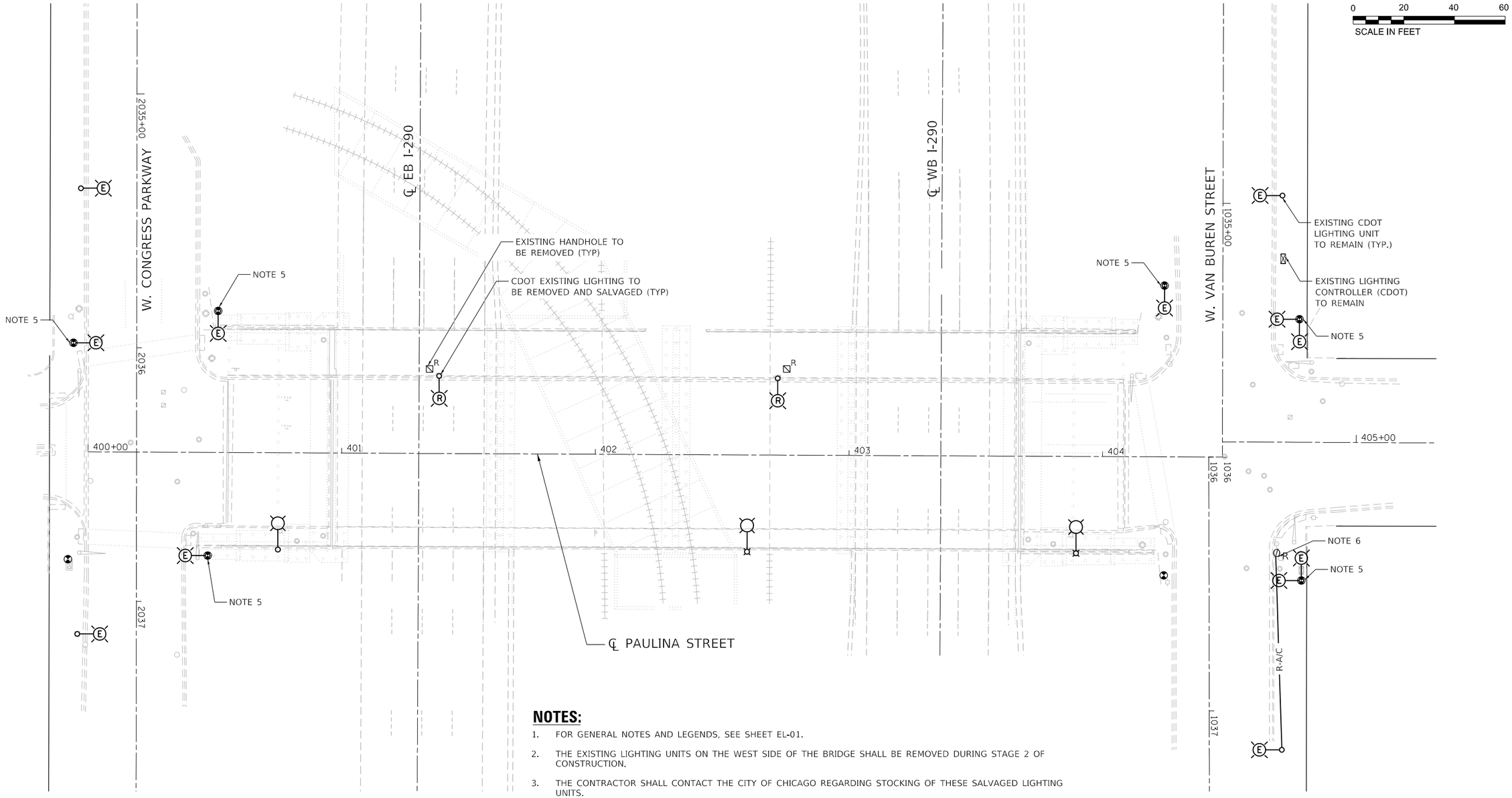

NOTES:

1. FOR GENERAL NOTES AND LEGENDS, SEE SHEET EL-01.
2. THE EXISTING LIGHTING UNITS ON THE WEST SIDE OF THE BRIDGE SHALL BE REMOVED DURING STAGE 2 OF CONSTRUCTION.
3. THE CONTRACTOR SHALL CONTACT THE CITY OF CHICAGO REGARDING STOCKING OF THESE SALVAGED LIGHTING UNITS.
4. THE EXISTING CABLE CONNECTION BETWEEN THE EXISTING LIGHTING UNITS SHALL BE MAINTAINED.
5. THE EXISTING MAST ARMS AND LUMINAIRES REMOVED FROM THE COMBINATION LIGHT POLES DURING STAGE 1 SHALL BE INSTALLED ON THE PROPOSED TEMPORARY WOOD POLES AS INDICATED ON THIS PLAN AND RECONNECTED TO THE TRAFFIC SIGNAL CONTROLLER. SEE THE TRAFFIC SIGNAL PLANS FOR TEMPORARY WOOD POLE LOCATIONS AND CONNECTIONS TO THE CONTROLLER. THE COST OF THIS WORK IS INCLUDED IN THE PAY ITEM TEMPORARY TRAFFIC SIGNAL INSTALLATION.
6. THE EXISTING CDOT LIGHT POLE SHALL BE REMOVED ALONG WITH THE AERIAL CABLE DURING THE STAGE OF CONSTRUCTION. WHEN THE PROPOSED TRAFFIC SIGNALS ARE INSTALLED. REMOVAL OF THIS AERIAL CABLE IS INCLUDED IN THE COST OF REMOVAL OF LIGHTING UNIT PAYITEM

AMES Engineering, Inc.
CONSULTING ENGINEERS
6330 Belmont Road, Suite 4B
Downers Grove, IL 60516

USER NAME = Srahman	DESIGNED - BL / KV	REVISED -	
	DRAWN - SR	REVISED -	
PLOT SCALE = 40.000 ' / in.	CHECKED - MH	REVISED -	
PLOT DATE = 8/21/2025	DATE - 08-21-2025	REVISED -	

STATE OF ILLINOIS
DEPARTMENT OF TRANSPORTATION

CDOT REMOVAL LIGHTING STAGE 2
FAI–290 (EISENHOWER EXPRESSWAY) AT PAULINA STREET

SCALE: 1"=20' | SHEET 1 OF 1 SHEETS | STA. | TO STA.

F.A.I. RTE.	SECTION	COUNTY	TOTAL SHEETS	SHEET NO.
290	2019-191-B-R	COOK	265	151
		CONTRACT NO. 62K64		
		ILLINOIS FED. AID PROJECT		

MODEL: Default
FILE NAME: P:\Projects\1058-Eisenhower IDOT-Collins\Design\Sht\D162K64-llgnt05.dgn

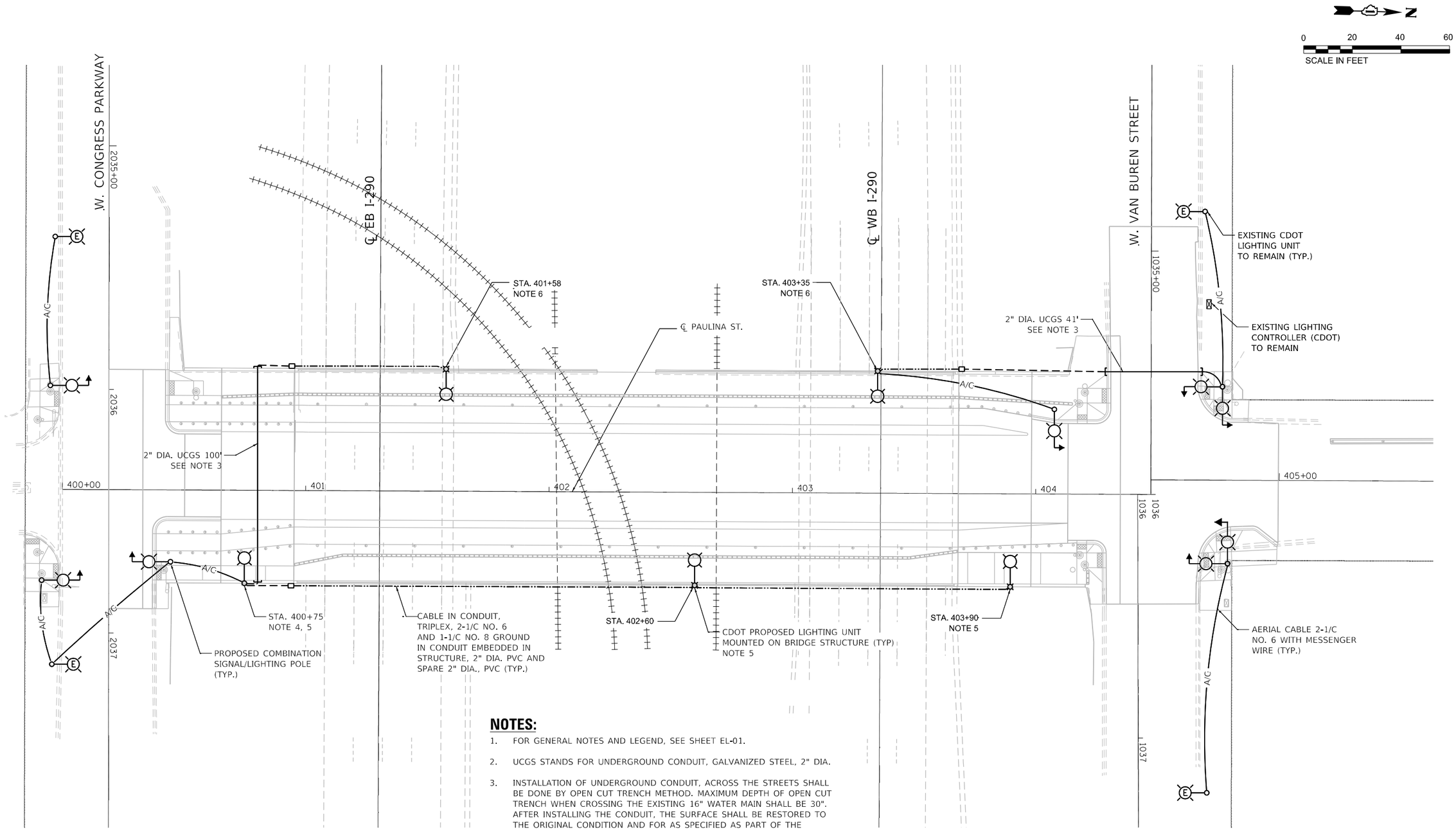

NOTES:

1. FOR GENERAL NOTES AND LEGEND, SEE SHEET EL-01.
2. UCGS STANDS FOR UNDERGROUND CONDUIT, GALVANIZED STEEL, 2" DIA.
3. INSTALLATION OF UNDERGROUND CONDUIT, ACROSS THE STREETS SHALL BE DONE BY OPEN CUT TRENCH METHOD. MAXIMUM DEPTH OF OPEN CUT TRENCH WHEN CROSSING THE EXISTING 16" WATER MAIN SHALL BE 30". AFTER INSTALLING THE CONDUIT, THE SURFACE SHALL BE RESTORED TO THE ORIGINAL CONDITION AND FOR AS SPECIFIED AS PART OF THE UNDERGROUND CONDUIT PAY ITEM.
4. THE SALVAGED CAMERA AND COMMUNICATION EQUIPMENT SHALL BE REINSTALLED AND RECONNECTED AT THIS POLE. SEE SHEET EL-04.
5. LIGHTING UNIT AND CABLE INSTALLED DURING STAGE 1 CONSTRUCTION.
6. LIGHTING UNIT AND CABLE INSTALLED DURING STAGE 2 CONSTRUCTION.

AMES Engineering, Inc.
CONSULTING ENGINEERS
6330 Belmont Road, Suite 4B
Downers Grove, IL 60516

USER NAME = Srahman	DESIGNED - BL / KV	REVISED -	
	DRAWN - SR	REVISED -	
PLOT SCALE = 40.000 ' / In.	CHECKED - MH	REVISED -	
PLOT DATE = 9/2/2025	DATE - 07-31-2025	REVISED -	

STATE OF ILLINOIS
DEPARTMENT OF TRANSPORTATION

CDOT PROPOSED LIGHTING
FAI–290 (EISENHOWER EXPRESSWAY) AT PAULINA STREET

SCALE: 1"=20' | SHEET 1 OF 1 SHEETS | STA. | TO STA.

F.A.I. RTE.	SECTION	COUNTY	TOTAL SHEETS	SHEET NO.
290	2019-191-B-R	COOK	265	152
		CONTRACT NO. 62K64		
	ILLINOIS FED. AID PROJECT			

MODEL: Default
FILE NAME: P:\Projects\1058-Eisenhower IDOT-Collins\Design\Sht\D162K64-ligsht06.dgn

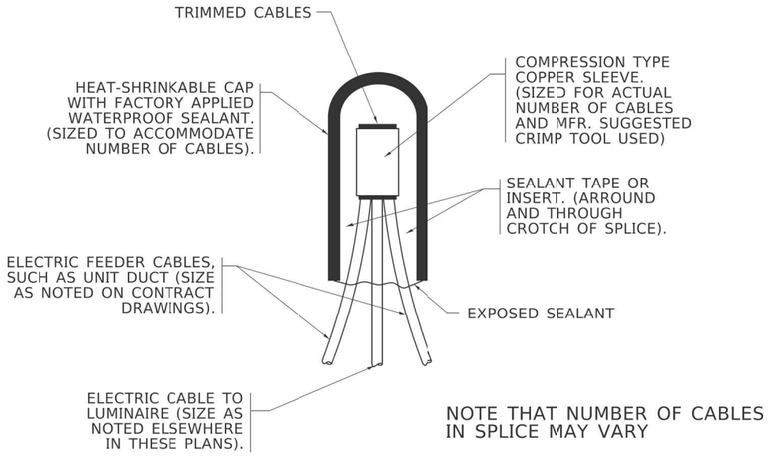

TYPICAL SPLICE DETAIL

N.T.S.

IDOT DETAILS

EL-07

MODEL: Default
FILE NAME: F:\Projects\1064\Eisenhower IDOT-Collins\Design\Str\ID162K64-light07.dgn

AMES Engineering, Inc.
CONSULTING ENGINEERS
6330 Belmont Road, Suite 4B
Downers Grove, IL 60516

USER NAME = Srahman	DESIGNED - BL / KV	REVISED -
	DRAWN - SR	REVISED -
PLOT SCALE = 2.000 ' / in.	CHECKED - MH	REVISED -
PLOT DATE = 8/21/2025	DATE - 08-21-2025	REVISED -

STATE OF ILLINOIS
DEPARTMENT OF TRANSPORTATION

MISC. ELECTRICAL DETAILS A
FAI–290 (EISENHOWER EXPRESSWAY) AT PAULINA STREET

SCALE: | SHEET OF SHEETS | STA. | TO STA.

F.A.I. RTE.	SECTION	COUNTY	TOTAL SHEETS	SHEET NO.
290	2019-191-B-R	COOK	265	153
BE-702		CONTRACT NO. 62K64		
	ILLINOIS FED. AID PROJECT			

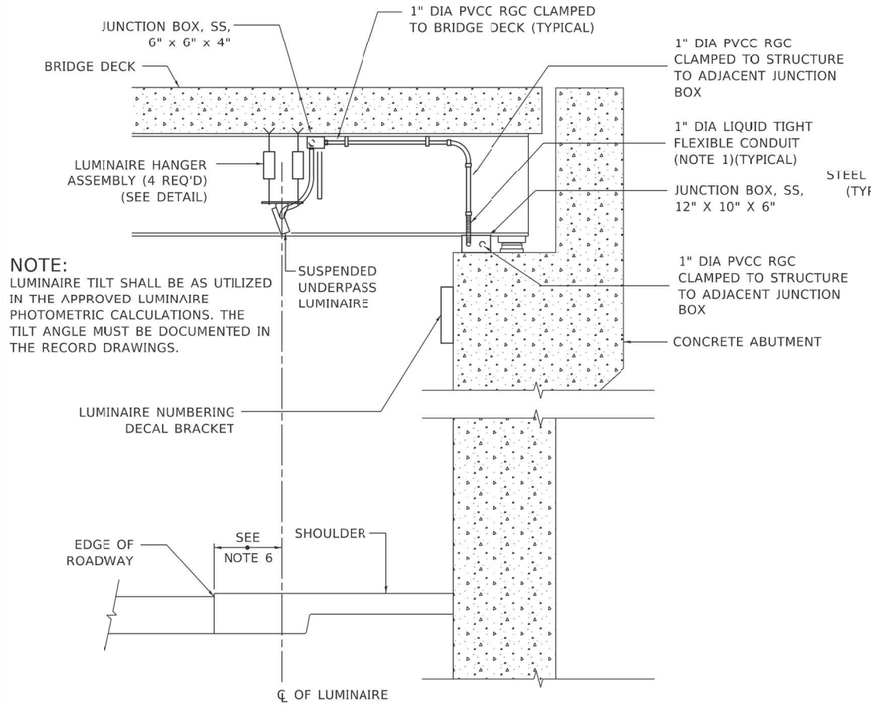

NOTE:
LUMINAIRE TILT SHALL BE AS UTILIZED IN THE APPROVED LUMINAIRE PHOTOMETRIC CALCULATIONS. THE TILT ANGLE MUST BE DOCUMENTED IN THE RECORD DRAWINGS.

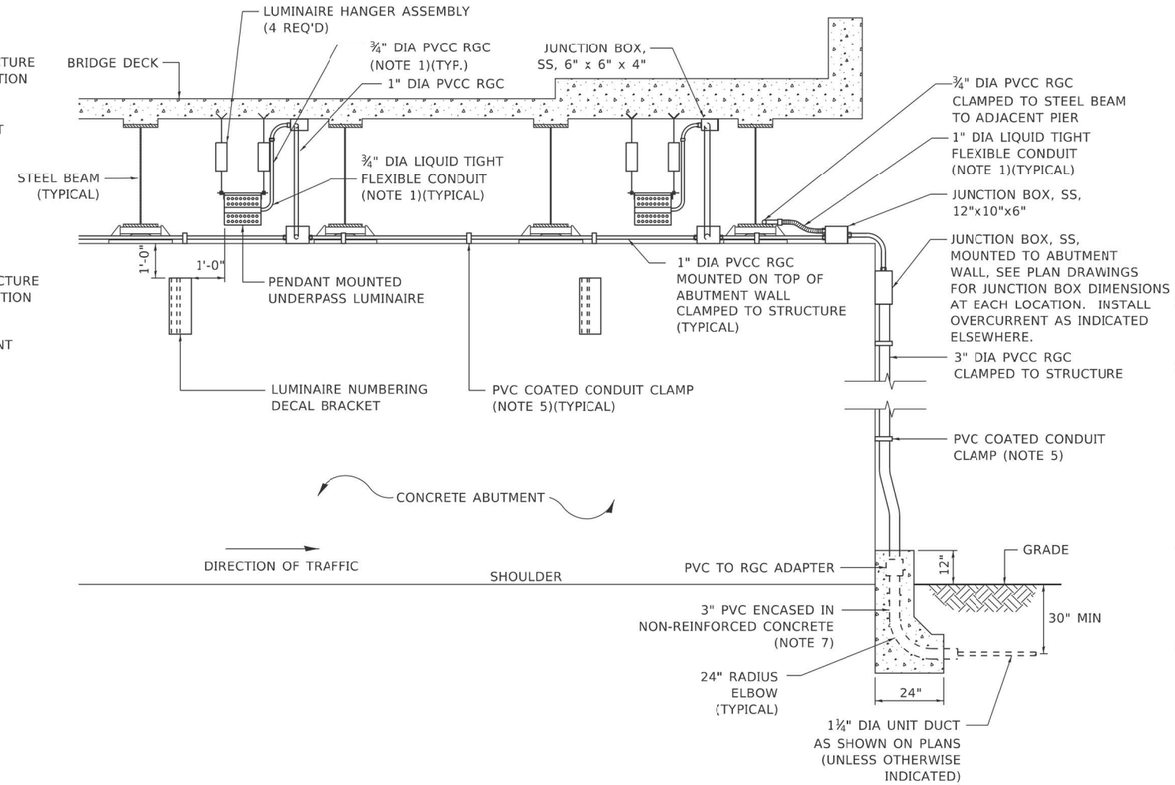

NOTES:

1. LIQUID TIGHT FLEXIBLE METAL CONDUIT, MAXIMUM LENGTH 6'-0", TYPICAL FOR EACH INSTANCE AS SHOWN. PROVIDE PVC COATED RIGID GALVANIZED STEEL CONDUIT AS REQUIRED NOT TO EXCEED 6'-0" OF FLEXIBLE LIQUID TIGHT METAL CONDUIT. LIQUID TIGHT FLEXIBLE METAL CONDUIT WILL BE INCLUDED IN THE COST OF THE CONDUIT ATTACHED TO STRUCTURE, OF THE CORRESPONDING DIA., GALVANIZED STEEL, PVC COATED PAY ITEM EXCEPT THAT " DIA. CONDUIT AND " DIA. FLEXIBLE CONDUIT SHALL BE INCLUDED IN THE COST OF UNDERPASS LUMINAIRE INSTALLATION.
2. SEE UNDERPASS LIGHTING PLANS FOR INSTALLATION LOCATION OF UNDERPASS LIGHTING LUMINAIRES.
3. THE CONTRACTOR SHALL USE APPROVED SINGLE COIL FLARED LOOP INSERTS WHEN SUSPENDED MOUNTING AN UNDERPASS LUMINAIRE TO A NEW BRIDGE DECK. THE FLARED LOOP INSERTS MUST BE CAST INTO THE CONCRETE DECK. THE CONTRACTOR IS RESPONSIBLE FOR LOCATING AND COORDINATING THE INSERT LOCATIONS FOR MOUNTING THE UNDERPASS LIGHTING SYSTEM AS SHOWN ON THE PLANS WITH THE BRIDGE DECK CONTRACTOR. SEE DETAIL.
4. THE UNDERPASS LUMINAIRE HANGER ASSEMBLY COMPLETE WITH HEAVY DUTY ANCHORS/INSERTS AND ALL APPLICABLE HARDWARE SHALL BE INCLUDED IN THE COST OF THE UNDERPASS LUMINAIRE PAY ITEM.
5. SECURE THE CONDUIT WITH PVC COATED CONDUIT CLAMPS OR CONDUIT BEAM CLAMPS AS SHOWN AT 5'-0" INTERVALS FOR LATERALS AND WITHIN 2'-0" MAXIMUM FROM ANY JUNCTION BOX, FLEXIBLE CONDUIT, OR CHANGE IN DIRECTION. ALL PVC COATED CONDUIT CLAMPS OR BEAM CLAMPS SHALL BE INCLUDED WITH THE COST OF THE "CONDUIT ATTACHED TO STRUCTURE, OF THE CORRESPONDING DIA., GALVANIZED STEEL, PVC COATED" PAY ITEM.
6. ALL UNDERPASS LUMINAIRES MUST BE CENTERED IN THE BEAM SPACE AS INDICATED ON THE PLANS UNLESS OTHERWISE DIRECTED BY THE ENGR. LUMINAIRE SETBACK SHALL BE AS INDICATED IN PLANS FOR EACH SPECIFIC UNDERPASS
7. THE CONCRETE ENCASED CONDUIT TRANSITION SHALL BE INCLUDED IN THE COST OF THE GALVANIZED RIGID STEEL CONDUIT PAY ITEMS.
8. ALL CONDUIT ATTACHED TO STRUCTURE SHALL BE PVC COATED RIGID STEEL CONDUIT (PVCC RGC) TYPICAL.
9. IN NO INSTANCE SHALL ANY UNDERPASS LUMINAIRE OR ANY OTHER ELECTRICAL EQUIPMENT BE INSTALLED BELOW THE ELEVATION OF THE BOTTOM OF THE BRIDGE BEAM WHEN OVER ANY PAVEMENT (ROADWAY OR SHOULDER).

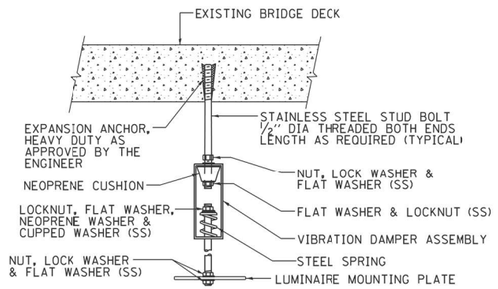

EXISTING BRIDGE DECK INSTALLATION

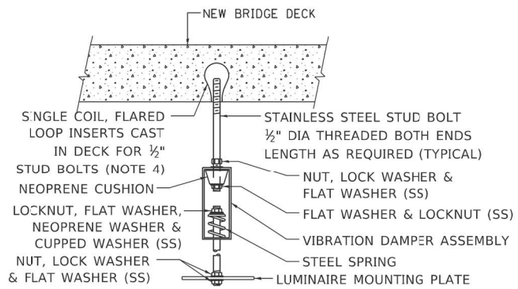

NEW BRIDGE DECK INSTALLATION

TYPICAL LUMINAIRE HANGER ASSEMBLY DETAILS

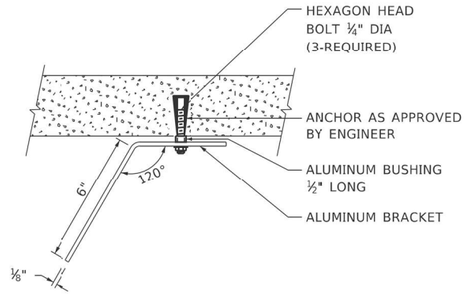

TOP VIEW

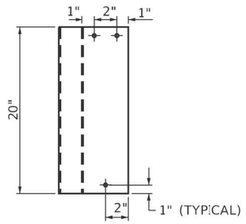

ELEVATION

LUMINAIRE NUMBERING DECAL BRACKET

NOT TO SCALE



PVC COATED CONDUIT BEAM CLAMP
NOT TO SCALE

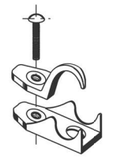

PVC COATED CONDUIT CLAMP
NOT TO SCALE

IDOT DETAILS

EL-08

MODEL: Default
FILE NAME: E:\Projects\1064-Eisenhower IDOT\Civil\ist\Design\Sht\D132694-tghtd08.dgn

AMES Engineering, Inc. CONSULTING ENGINEERS 6330 Belmont Road, Suite 4B Downers Grove, IL 60516	USER NAME = Srahman	DESIGNED - BL / KV	REVISED -	STATE OF ILLINOIS DEPARTMENT OF TRANSPORTATION	SUSPENDED MOUNT LED UNDERPASS LUMINAIRE INSTALLED DETAILS FAI–290 (EISENHOWER EXPRESSWAY) AT PAULINA STREET
		DRAWN - SR	REVISED -		
	PLOT SCALE = 2.000 ' / in.	CHECKED - MH	REVISED -		
	PLOT DATE = 8/21/2025	DATE - 08-21-2025	REVISED -		SCALE: SHEET OF SHEETS STA. TO STA.

F.A.I. RTE.	SECTION	COUNTY	TOTAL SHEETS	SHEET NO.
290	2019-191-B-R	COOK	265	154
BE-901		CONTRACT NO. 62K64		
	ILLINOIS FED. AID PROJECT			

District 7
Atlas L-23

Light Fixtures
- Cobrahead
- Piggy-Back
- Flood
- Aviation / Other / Null

Light Structures
- Alley
- Private
- Street
- Viaduct

Ornamental Styles
- Single-Mast Gateway
- Double-Mast Gateway
- Single Post-Top Acorn
- Double Post-Top Acorn
- Multiple Post-Top Acorn
- Six-Globe Pendant

Circuitry
- Segment
- Feed
- (12) Controller
- Service

Chicago Department of Transportation (CDOT)
Division of Electrical Operations (DEO)
and Globetrotters Engineering Corporation (GEC)

Data Sources:
CDOT-DEO SDE Geodatabase, **Feb. 2, 2023**
Street Light Vision, **Feb. 2, 2023**

0 200 Feet

N

L-22
L-23
L-24
W MADISON ST
W ARCADE PL
W MONROE ST
W ADAMS ST
W QUINCY ST
W JACKSON BLVD
W OGDEN AVE
W VAN BUREN ST
W EISENHOWER EXPY OB
W EISENHOWER EXPY IB
W CONGRESS PKWY
W HARRISON ST
W EISENHOWER DAMEN AV XR
W EISENHOWER PAULINA ST ER
W EISENHOWER DAMEN AV ER
W EISENHOWER PAULINA ST XR
S DAMEN AVE
S WOOD ST
S HONORE ST
S PAULINA ST
N ASHLAND AVE
S ASHLAND AVE

S1 T1 U1 V1 W1 X1 Y1 Z1 A B C D E F G H I J K L M N O P Q R S T U V W X Y Z
03 04 05 06 07 08 09 10 11 12 13 14 15 16 17 18 19 20 21 22 23 24 25 26 27 28 29 30 31 32 33 34 35 36 37 38 39 40 41 42 43 44 45 46 47 48 49 50 51 52 53 54 55

1 2 3 4 5 6 L-23 7 8 9 10 11 12 13 14 15

S1 T1 U1 V1 W1 X1 Y1 Z1 A B C D E F G H I J K L M N O P Q R S T U V W X Y Z
03 04 05 06 07 08 09 10 11 12 13 14 15 16 17 18 19 20 21 22 23 24 25 26 27 28 29 30 31 32 33 34 35 36 37 38 39 40 41 42 43 44 45 46 47 48 49 50 51 52 53 54 55

FOR INFORMATION ONLY

EL-09

MODEL: Default
FILE NAME: F:\Projects\10564-Eisenhower IDOT-Collins\Design\Str\D1623644-light09.dgn

AMES Engineering, Inc.
CONSULTING ENGINEERS
6330 Belmont Road, Suite 4B
Downers Grove, IL 60516

USER NAME = Srahman	DESIGNED - BL / KV	REVISED -	
	DRAWN - SR	REVISED -	
PLOT SCALE = 2,000 ' / in.	CHECKED - MH	REVISED -	
PLOT DATE = 8/21/2025	DATE - 08-21-2025	REVISED -	

STATE OF ILLINOIS
DEPARTMENT OF TRANSPORTATION

ATLAS L–23 DISTRICT 7
FAI–290 (EISENHOWER EXPRESSWAY) AT PAULINA STREET

SCALE: | SHEET OF SHEETS | STA. | TO STA.

F.A.I. RTE.	SECTION	COUNTY	TOTAL SHEETS	SHEET NO.
290	2019-191-B-R	COOK	265	155
		CONTRACT NO. 62K64		
		ILLINOIS	FED. AID PROJECT	

ROUTE NO.	SECTION	COUNTY	TOTAL SHEETS	SHEET NO.
FAI-290	1977 242-R	COOK	197	146
FED. ROAD DIST. NO. 7	ILLINOIS	PROJECT		

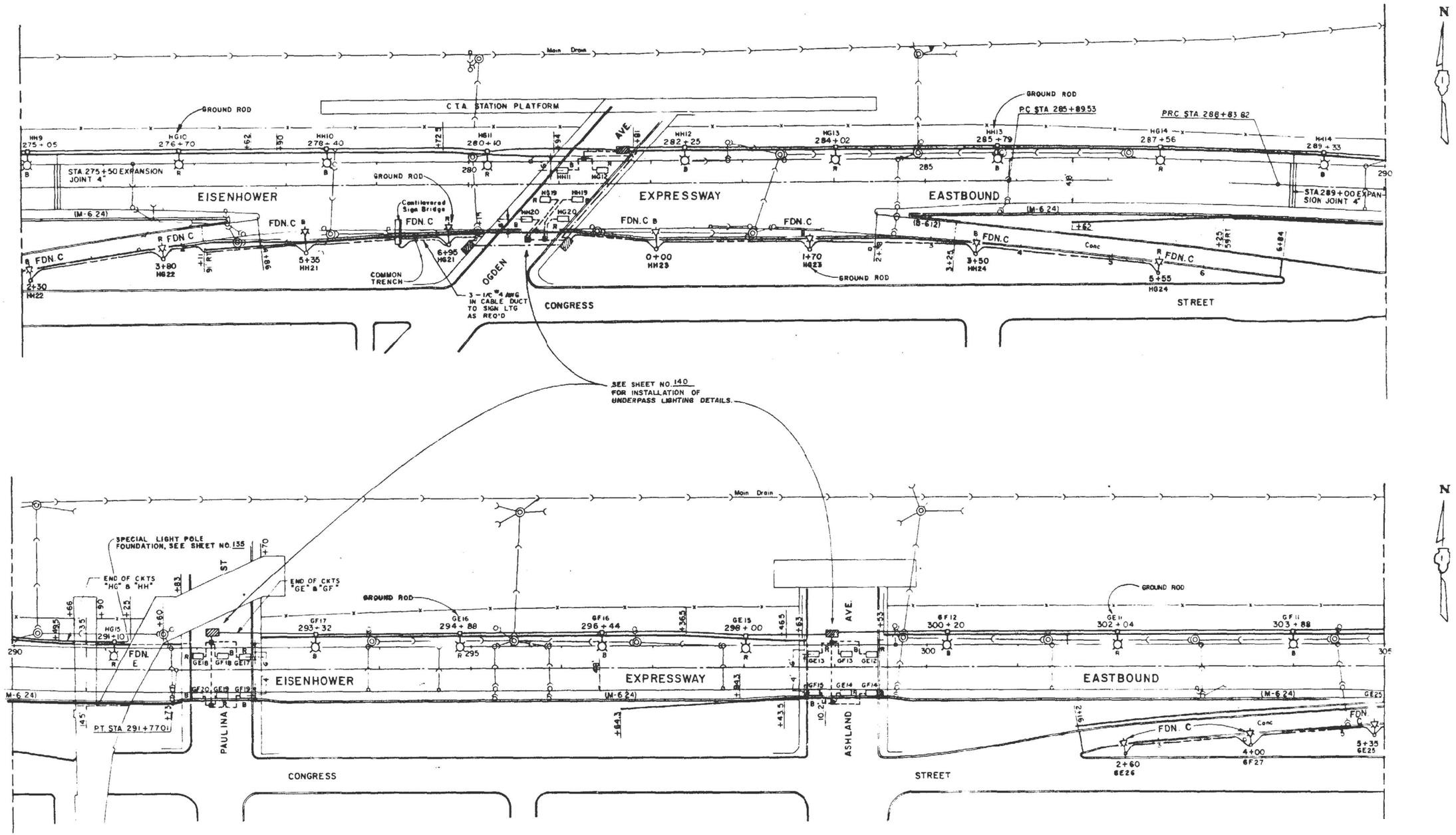

FOR INFORMATION ONLY

EL-10

MODEL: Default
FILE NAME: F:\Projects\1058-Eisenhower IDOT-Collins\Design\Sht\D162K64-light10.dgn

AMES Engineering, Inc. CONSULTING ENGINEERS 6330 Belmont Road, Suite 4B Downers Grove, IL 60516	USER NAME = Srahman	DESIGNED - BL / KV	REVISED -	STATE OF ILLINOIS DEPARTMENT OF TRANSPORTATION	FAI-290 (EISENHOWER EXPRESSWAY) AT PAULINA STREET
		DRAWN - SR	REVISED -		
	PLOT SCALE = 2,000 ' / in.	CHECKED - MH	REVISED -		
	PLOT DATE = 8/21/2025	DATE - 08-21-2025	REVISED -		SCALE: SHEET OF SHEETS STA. TO STA.

F.A.I. RTE.	SECTION	COUNTY	TOTAL SHEETS	SHEET NO.
290	2019-191-B-R	COOK	265	156
		CONTRACT NO. 62K64		
		ILLINOIS	FED. AID PROJECT	

ROUTE NO.	SECTION	COUNTY	TOTAL SHEETS	SHEET NO.
FAI-290	252R (80)	COOK	204	150
FED ROAD DIST NO 7	ILLINOIS	PROJECT-[X]-290-4(		

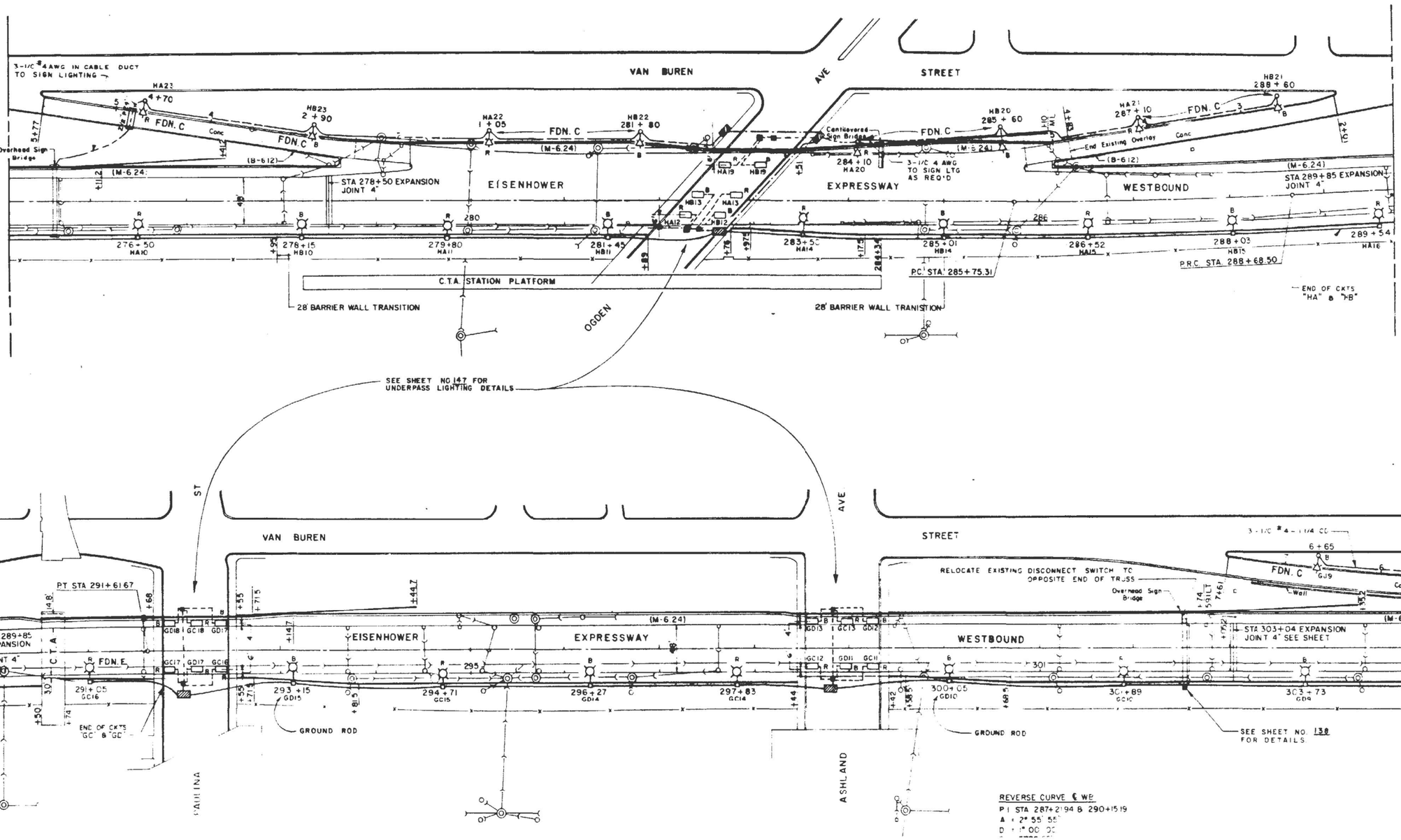

FOR INFORMATION ONLY

EL-11

MODEL: Default
FILE NAME: F:\Projects\1058-Eisenhower IDOT-Collins\Design\Shtd\1622064-tlight11.dgn

AMES Engineering, Inc. CONSULTING ENGINEERS 6330 Belmont Road, Suite 4B Downers Grove, IL 60516	USER NAME = Srahman	DESIGNED - BL / KV	REVISED -	STATE OF ILLINOIS DEPARTMENT OF TRANSPORTATION
		DRAWN - SR	REVISED -	
	PLOT SCALE = 2.000 ' / in.	CHECKED - MH	REVISED -	
	PLOT DATE = 8/21/2025	DATE - 08-21-2025	REVISED -	

FAI–290 (EISENHOWER EXPRESSWAY) AT PAULINA STREET

SCALE: | SHEET OF SHEETS | STA. | TO STA.

F.A.I. RTE.	SECTION	COUNTY	TOTAL SHEETS	SHEET NO.
290	2019-191-B-R	COOK	265	157
		CONTRACT NO. 62K64		
		ILLINOIS	FED. AID PROJECT	

ROUTE NO	SECTION	COUNTY	TOTAL SHEETS	SHEET NO.
FAI-290	1977 241-B	COOK	197	147
FED ROAD DIST NO 7	ILLINOIS	PROJECT-		

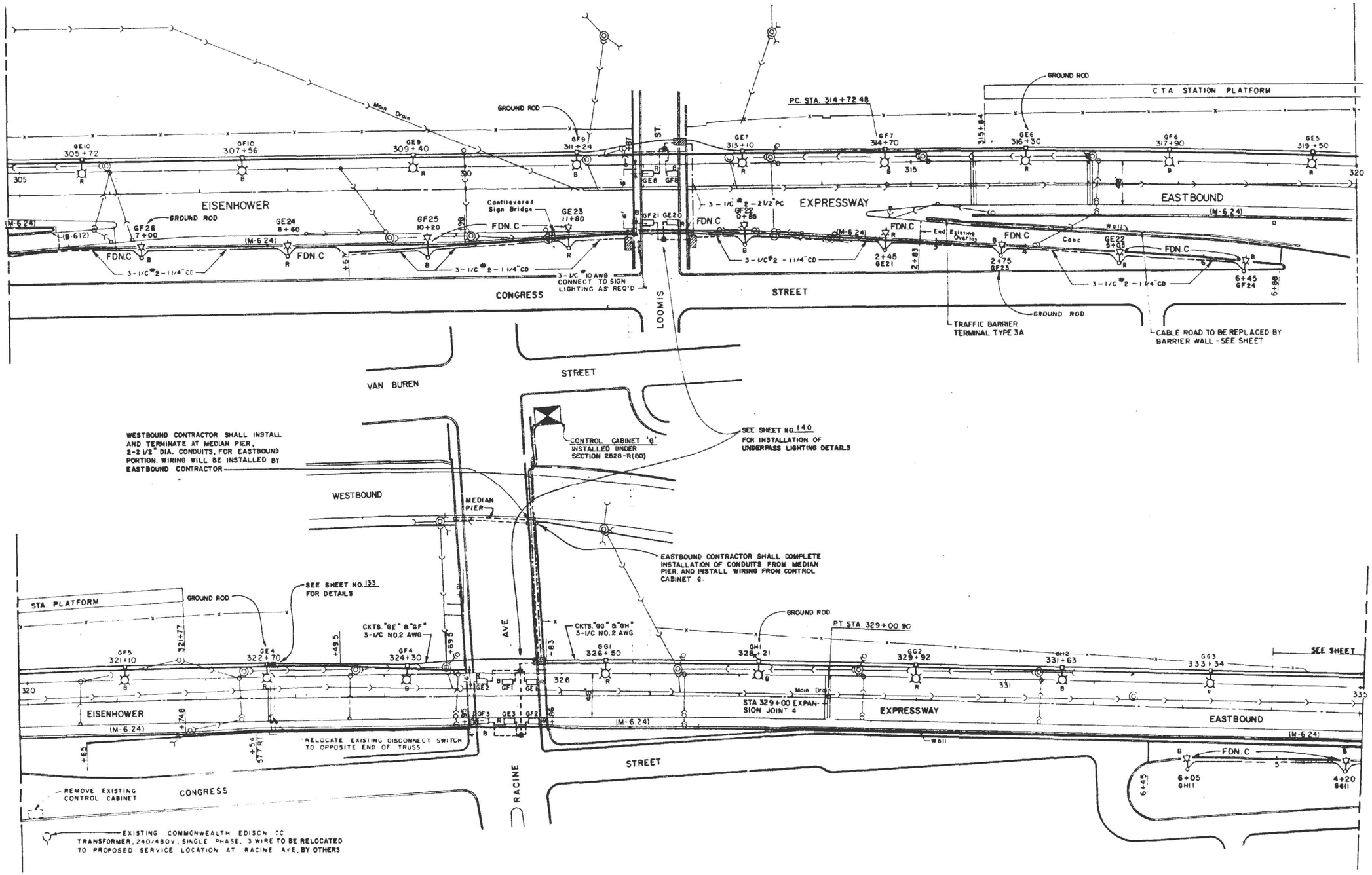

FOR INFORMATION ONLY

EL-12

MODEL: Default
FILE NAME: F:\Projects\1084-Eisenhower IDOT-Collins\Design\Sht\D162K64-Sht12.dgn

AMES Engineering, Inc. CONSULTING ENGINEERS 6330 Belmont Road, Suite 4B Downers Grove, IL 60516	USER NAME = Srahman	DESIGNED - BL / KV	REVISED -	STATE OF ILLINOIS DEPARTMENT OF TRANSPORTATION
		DRAWN - SR	REVISED -	
	PLOT SCALE = 2,000 ' / In.	CHECKED - MH	REVISED -	
	PLOT DATE = 8/21/2025	DATE - 08-21-2025	REVISED -	

FAI–290 (EISENHOWER EXPRESSWAY) AT PAULINA STREET

SCALE: | SHEET OF SHEETS | STA. | TO STA.

F.A.I. RTE.	SECTION	COUNTY	TOTAL SHEETS	SHEET NO.
290	2019-191-B-R	COOK	265	158
		CONTRACT NO. 62K64		
	ILLINOIS FED. AID PROJECT			

ROUTE NO.	SECTION	COUNTY	TOTAL SHEETS	SHEET NO.
FAI-290	2528-R (80)	COOK	204	151
FED. ROAD DIST. NO. 7	ILL. NO. 3	PROJECT- [illegible]		

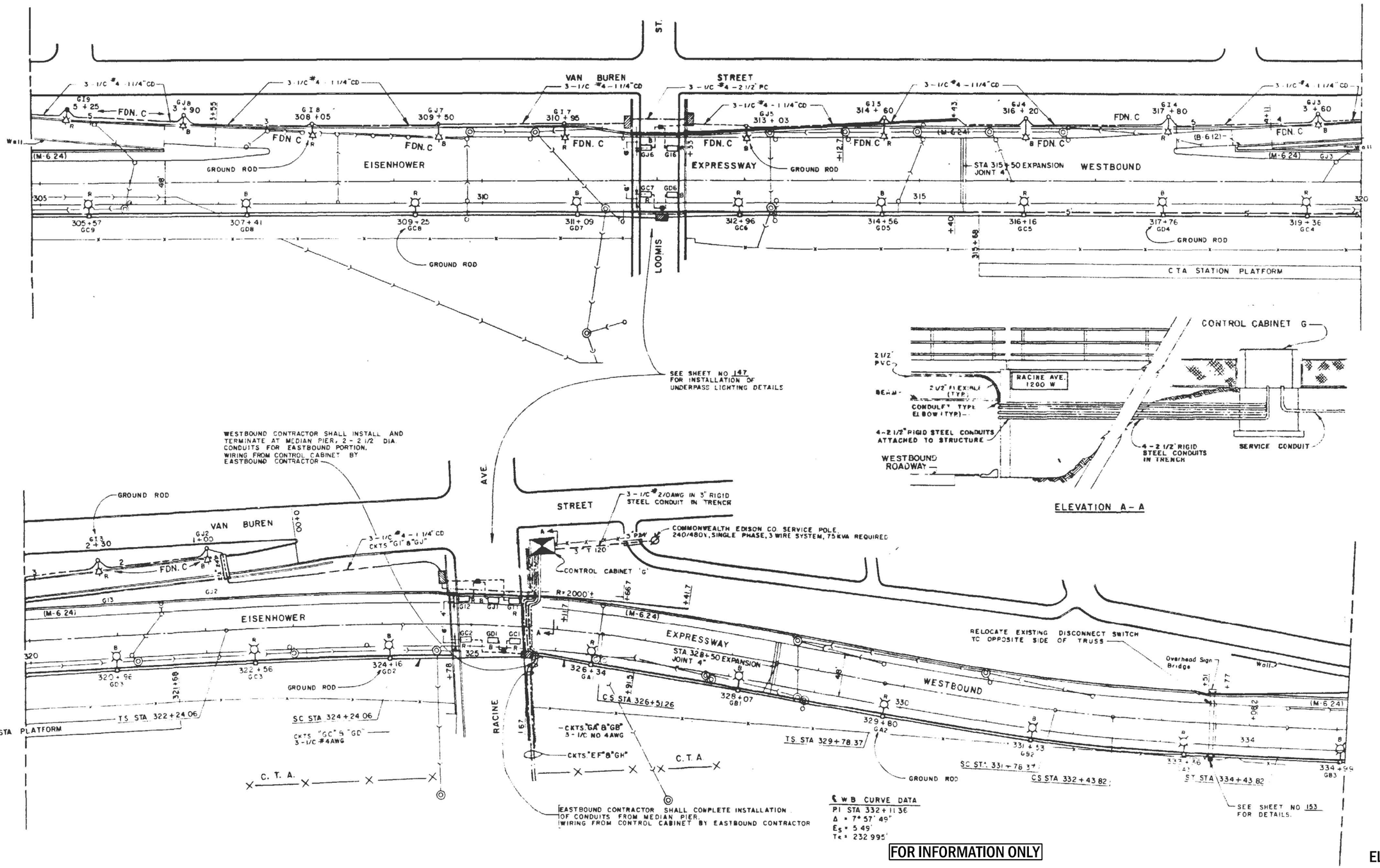

FOR INFORMATION ONLY

EL-13

MODEL: Default
FILE NAME: F:\Projects\10584\Eisenhower IDOT-Collins\Design\Sht\D162K64-Right13.dgn

AMES Engineering, Inc.
CONSULTING ENGINEERS
6330 Belmont Road, Suite 4B
Downers Grove, IL 60516

USER NAME = Srahman	DESIGNED - BL / KV	REVISED -		
	DRAWN - SR	REVISED -		
PLOT SCALE = 2,000 ' / In.	CHECKED - MH	REVISED -		
PLOT DATE = 8/21/2025	DATE - 08-21-2025	REVISED -		

STATE OF ILLINOIS
DEPARTMENT OF TRANSPORTATION

FAI–290 (EISENHOWER EXPRESSWAY) AT PAULINA STREET

SCALE: | SHEET OF SHEETS | STA. | TO STA.

F.A.I. RTE.	SECTION	COUNTY	TOTAL SHEETS	SHEET NO.
290	2019-191-B-R	COOK	265	159
		CONTRACT NO. 62K64		
	ILLINOIS FED. AID PROJECT			

ROUTE NO	SECTION	COUNTY	TOTAL SHEETS	SHEET NO
FAI-290	197 / 242-R	COOK	197	148
FED ROAD DIST NO 7	ILLINOIS	PROJECT		

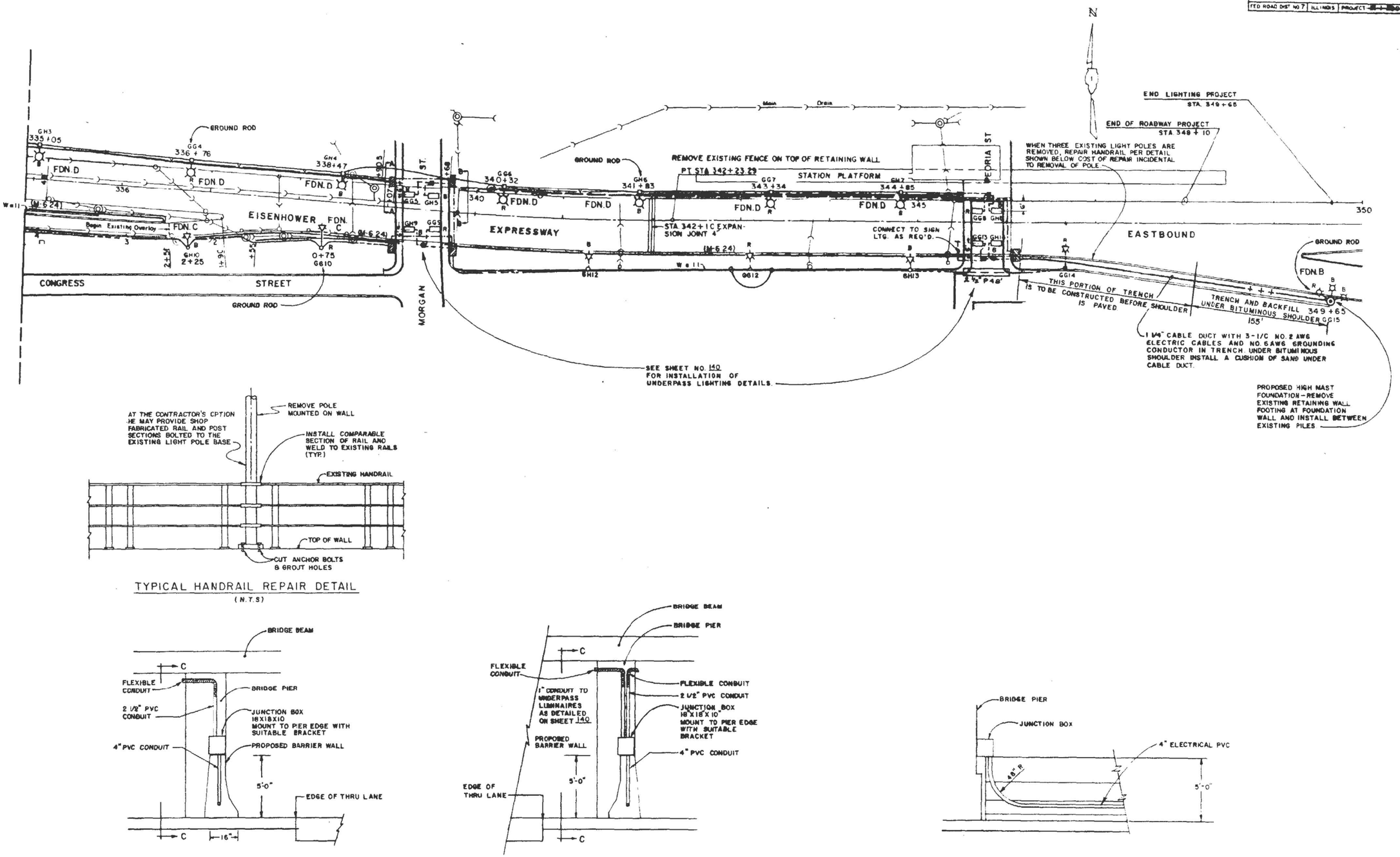

TYPICAL HANDRAIL REPAIR DETAIL
(N.T.S)

SECTION A-A

SECTION B-B

SECTION C-C

FOR INFORMATION ONLY

EL-14

MODEL: Default
FILE NAME: F:\Projects\1058-Eisenhower IDOT-Collins\Design\Sht\D162K64-light14.dgn

AMES Engineering, Inc. CONSULTING ENGINEERS 6330 Belmont Road, Suite 4B Downers Grove, IL 60516	USER NAME = Srahman	DESIGNED - BL / KV	REVISED -	STATE OF ILLINOIS DEPARTMENT OF TRANSPORTATION	FAI-290 (EISENHOWER EXPRESSWAY) AT PAULINA STREET
		DRAWN - SR	REVISED -		
	PLOT SCALE = 2,000 ' / in.	CHECKED - MH	REVISED -		
	PLOT DATE = 8/21/2025	DATE - 08-21-2025	REVISED -		SCALE: SHEET OF SHEETS STA. TO STA.

F.A.I. RTE.	SECTION	COUNTY	TOTAL SHEETS	SHEET NO.
290	2019-191-B-R	COOK	265	160
		CONTRACT NO. 62K64		
		ILLINOIS	FED. AID PROJECT	

ROUTE NO.	SECTION	COUNTY	TOTAL SHEETS	SHEET NO.
FAI-290	2522-R (BOI)	COOK	204	152
FED ROAD DIST. NO. 7	ILLINOIS	PROJECT- IX-1-290-4( )		

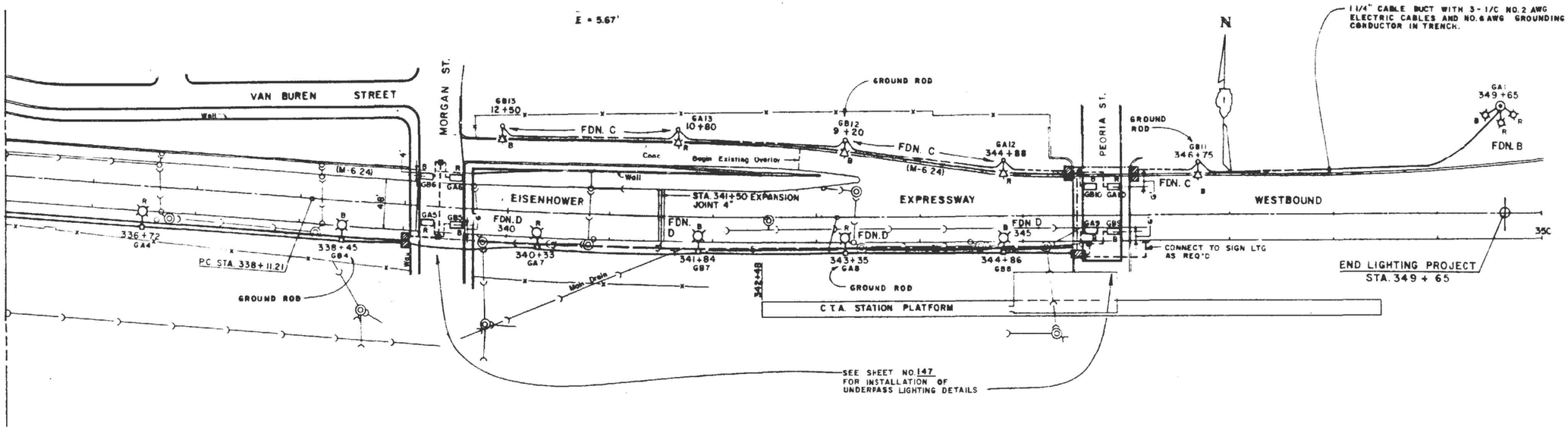

FOR INFORMATION ONLY

EL-15

MODEL: Default
FILE NAME: F:\Projects\1064\Eisenhower IDOT-Collins\Design\Str\ID162K64-light15.dgn

AMES Engineering, Inc. CONSULTING ENGINEERS 6330 Belmont Road, Suite 4B Downers Grove, IL 60516	USER NAME = Srahman	DESIGNED - BL / KV	REVISED -	STATE OF ILLINOIS DEPARTMENT OF TRANSPORTATION
		DRAWN - SR	REVISED -	
	PLOT SCALE = 2,000 ' / in.	CHECKED - MH	REVISED -	
	PLOT DATE = 8/21/2025	DATE - 08-21-2025	REVISED -	

FAI–290 (EISENHOWER EXPRESSWAY) AT PAULINA STREET

SCALE: | SHEET OF SHEETS | STA. | TO STA.

F.A.I. RTE.	SECTION	COUNTY	TOTAL SHEETS	SHEET NO.
290	2019-191-B-R	COOK	265	161
		CONTRACT NO. 62K64		
	ILLINOIS	FED. AID PROJECT		

ROUTE NO.	SECTION	COUNTY	TOTAL SHEETS	SHEET NO.
I-290	1977 242-R	COOK	197	137
FED ROAD DIST NO.	ILLINOIS	PROJECT- ~~IX-I-290-4(~~		

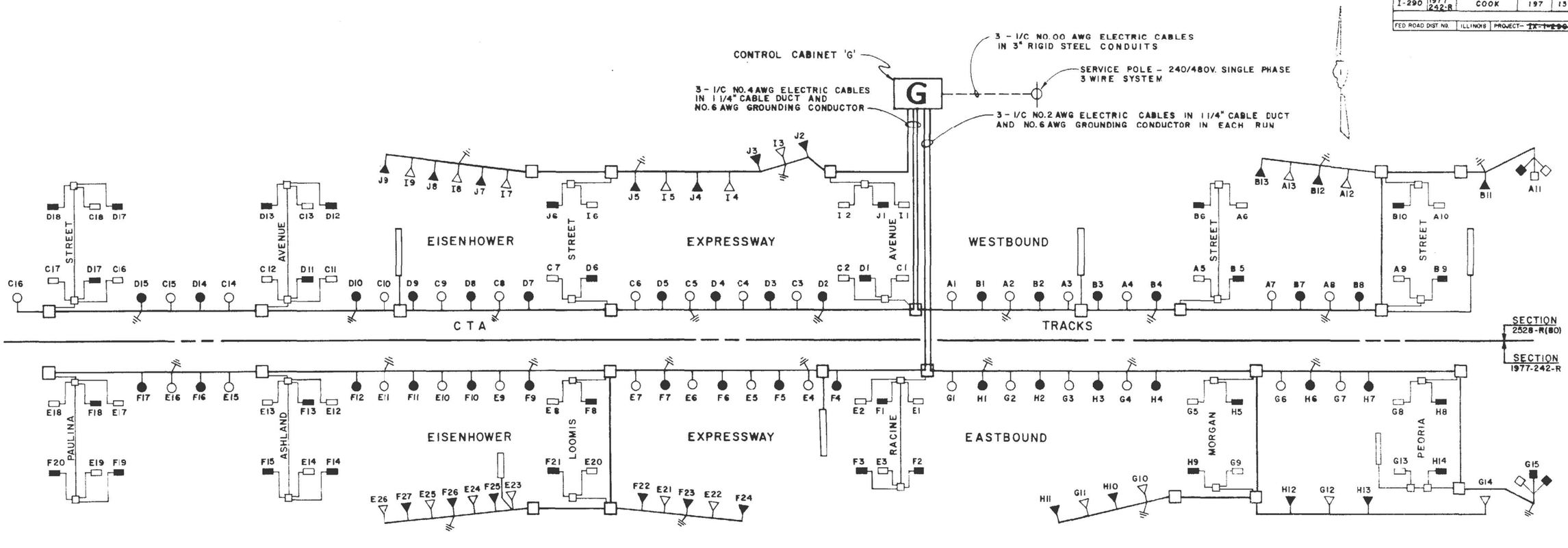

SYMBOLS

- 3-1/C NO. 2 OR 4 AWG ELECTRIC CABLES IN 1-1/4" CABLE DUCT AND NO. 6 AWG GROUNDING CONDUCTOR
- 3-1/C NO. 10 AWG ELECTRIC CABLES IN 1" CONDUIT
- 400 WHPS, M-C-III, LUMINAIRE ON RED CABLE
- 400 WHPS, M-C-III, LUMINAIRE ON BLACK CABLE
- 200 WHPS, M-C-III, LUMINAIRE ON RED CABLE
- 200 WHPS, M-C-III, LUMINAIRE ON BLACK CABLE
- 55 WLPS, UNDERPASS LUMINAIRE ON RED CABLE
- 55 WLPS, UNDERPASS LUMINAIRE ON BLACK CABLE
- JUNCTION BOX FOR UNDERPASS LUMINAIRES - 6" x 6" x 12"
- JUNCTION BOX FOR UNDERGROUND DISTRIBUTION - 10" x 18" x 18"
- LIGHTED SIGN PANEL WITH 3-1/C NO. 4 AWG ELECTRIC CABLES IN 1-1/4" CABLE DUCT AND NO. 6 AWG GROUNDING CONDUCTOR IN TRENCH
- GROUND ROD

EL-16

ILLINOIS DEPARTMENT OF TRANSPORTATION
FAI ROUTE 290
EISENHOWER EXPRESSWAY

WIRING DIAGRAM FOR CONTROL CABINET 'G' AT RACINE AVE.

SCALE: NONE
DATE: AUG.,1983
DRAWN BY: MM
CHECKED BY: RHF

FOR INFORMATION ONLY

MODEL: Default
FILE NAME: F:\Projects\1058-Eisenhower IDOT-Collins\Design\Sht\D162K64-light16.dgn

AMES Engineering, Inc.
CONSULTING ENGINEERS
6330 Belmont Road, Suite 4B
Downers Grove, IL 60516

USER NAME = Srahman	DESIGNED - BL / KV	REVISED -	
	DRAWN - SR	REVISED -	
PLOT SCALE = 2,000 ' / in.	CHECKED - MH	REVISED -	
PLOT DATE = 8/21/2025	DATE - 08-21-2025	REVISED -	

STATE OF ILLINOIS
DEPARTMENT OF TRANSPORTATION

FAI-290 (EISENHOWER EXPRESSWAY) AT PAULINA STREET

SCALE: SHEET OF SHEETS STA. TO STA.

F.A.I. RTE.	SECTION	COUNTY	TOTAL SHEETS	SHEET NO.
290	2019-191-B-R	COOK	265	162
		CONTRACT NO. 62K64		
		ILLINOIS FED. AID PROJECT		

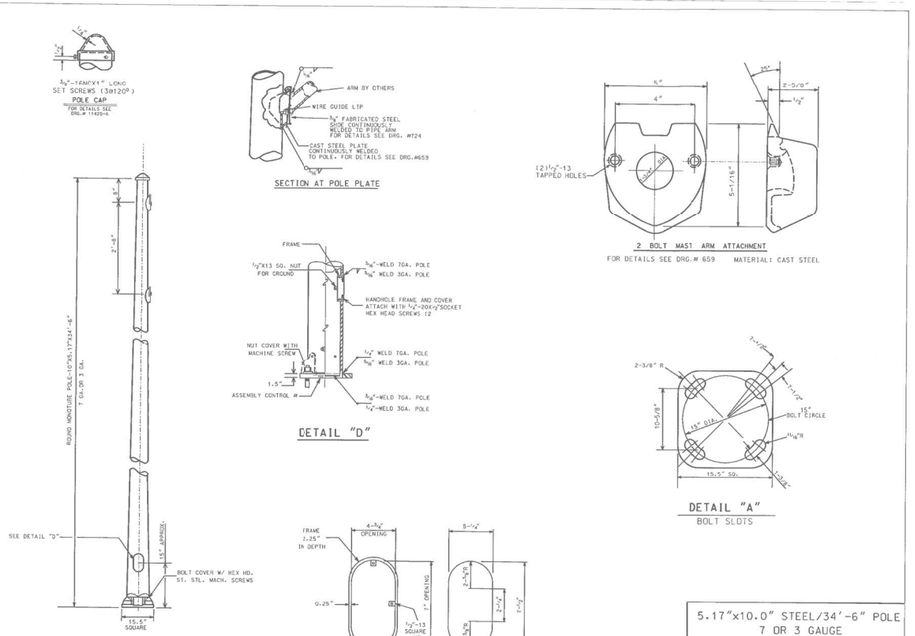

5.17"x10.0" STEEL/34'-6" POLE 7 OR 3 GAUGE		
CITY OF CHICAGO DEPT. OF STREETS AND SANITATION BUREAU OF ELECTRICITY DIVISION OF ELECTRICAL ENGINEERING		
DRAWN: ROBERT IVY	CHECKED: ROBERT CARTER	APPROVED: RON POOL
SUPERVISING ENGINEER:	ELEC. DESIGN ENGR.	DWG. NO. 808
ENGINEER OF ELECTRICITY:		
ASST. SUPT. OF ELECTRICITY:		
DEPUTY COMMISSIONER:		10-03-01

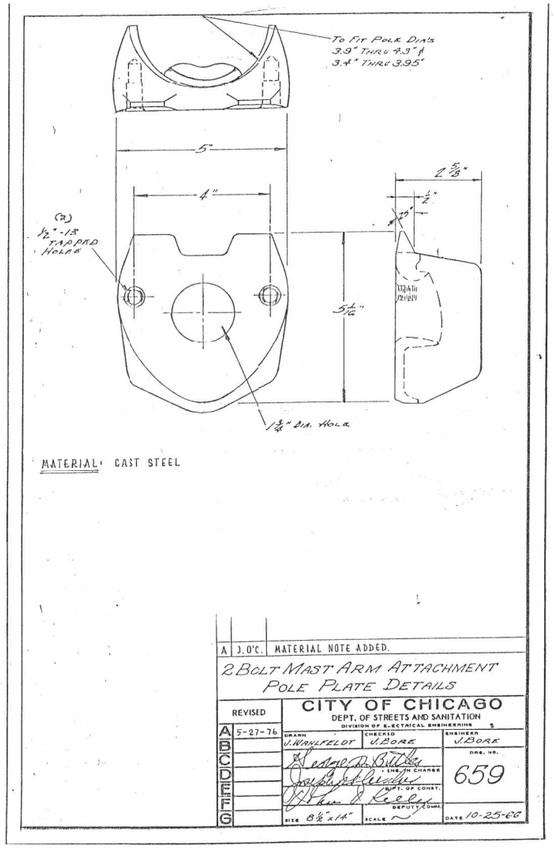

A	J.O'C.	MATERIAL NOTE ADDED.

2 BOLT MAST ARM ATTACHMENT
POLE PLATE DETAILS

REVISED	CITY OF CHICAGO DEPT. OF STREETS AND SANITATION DIVISION OF ELECTRICAL ENGINEERING	
A 5-27-76	DRAWN: J. WAHLFELDT	CHECKED: J. BOAK
B	ENGINEER: J. BOAK	
C	CHIEF ENGINEER: Nelson A. Butler	DWG. NO. 659
D	SUPT. OF CONST.: Joseph J. Fleischer	
E	DEPUTY COMM.: Thomas J. Kelly	
F	SIZE: 8 1/2 x 14" SCALE: ~	DATE: 10-25-60
G		

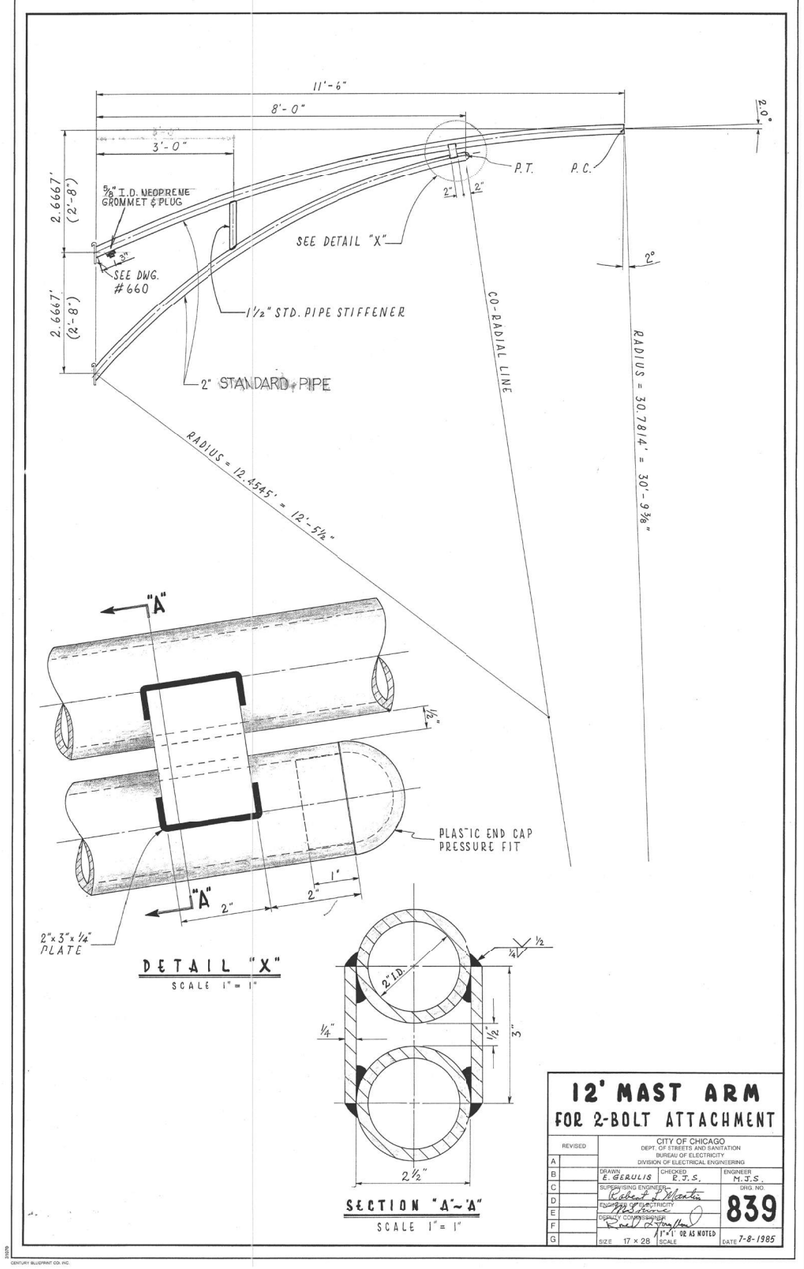

12' MAST ARM FOR 2-BOLT ATTACHMENT		
REVISED	CITY OF CHICAGO DEPT. OF STREETS AND SANITATION BUREAU OF ELECTRICITY DIVISION OF ELECTRICAL ENGINEERING	
A	DRAWN: E. GERULIS	CHECKED: E.T.S.
B	ENGINEER: M.T.S.	
C	SUPERVISING ENGINEER: Robert F. Martin	DWG. NO. 839
D	CHIEF ENGINEER:	
E	DEPUTY COMMISSIONER: Neil O'Hallaran	
F	SIZE: 17 x 28 SCALE: 1/2" AS NOTED	DATE: 7-8-1985
G		

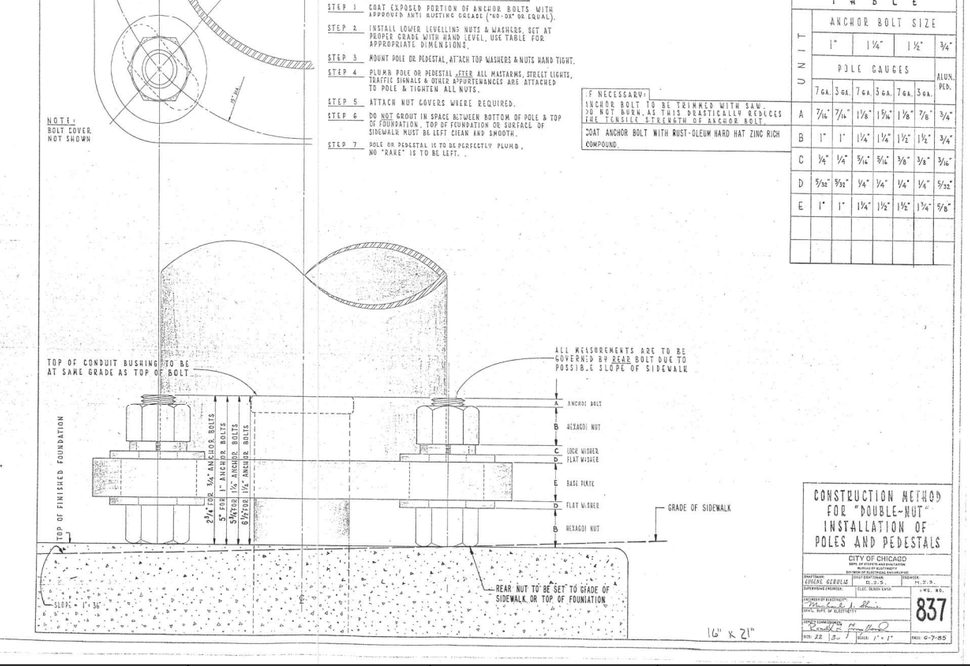

TABLE							
UNIT	ANCHOR BOLT SIZE						
	1"		1 1/4"		1 1/2"		3/4"
	POLE GAUGES						ALUM. PED.
	7 ga.	3 ga.	7 ga.	3 ga.	7 ga.	3 ga.	
A	7/16"	7/16"	1 1/8"	1 5/16"	1 1/8"	7/8"	3/4"
B	1"	1"	1 1/4"	1 1/2"	1 1/2"	1 1/2"	3/4"
C	1/8"	1/4"	5/16"	5/16"	3/8"	3/8"	3/16"
D	5/32"	5/32"	1/4"	1/4"	1/4"	1/4"	5/32"
E	1"	1"	1 1/4"	1 1/2"	1 1/2"	1 3/4"	5/8"

CONSTRUCTION METHOD FOR "DOUBLE-NUT" INSTALLATION OF POLES AND PEDESTALS		
CITY OF CHICAGO DEPT. OF STREETS AND SANITATION BUREAU OF ELECTRICITY DIVISION OF ELECTRICAL ENGINEERING		
DRAWN: LEONARD GERULIS	CHECKED: EL.D.S.	APPROVED: PL.T.S.
SUPERVISING ENGINEER:	ELEC. DESIGN ENGR.	DWG. NO. 837
CHIEF ENGINEER OF ELECTRICITY:		
DEPUTY COMMISSIONER:		
SIZE: 22 1/2 x 36"	SCALE: 1"=1"	DATE: 6-7-85

FOR INFORMATION ONLY

EL-17

MODEL: Default
FILE NAME: F:\Projects\10584-Eisenhower IDOT-Collins\Design\Std\D162064-light17.dgn

AMES Engineering, Inc. CONSULTING ENGINEERS 6330 Belmont Road, Suite 4B Downers Grove, IL 60516					
USER NAME = Srahman		DESIGNED - BL / KV		REVISED -	
		DRAWN - SR		REVISED -	
PLOT SCALE = 2.000 ' / in.		CHECKED - MH		REVISED -	
PLOT DATE = 8/21/2025		DATE - 08-21-2025		REVISED -	

STATE OF ILLINOIS
DEPARTMENT OF TRANSPORTATION

FAI–290 (EISENHOWER EXPRESSWAY) AT PAULINA STREET

SCALE: | SHEET OF SHEETS | STA. | TO STA.

F.A.I. RTE.	SECTION	COUNTY	TOTAL SHEETS	SHEET NO.
290	2019-191-B-R	COOK	265	163
		CONTRACT NO. 62K64		
		ILLINOIS	FED. AID PROJECT	

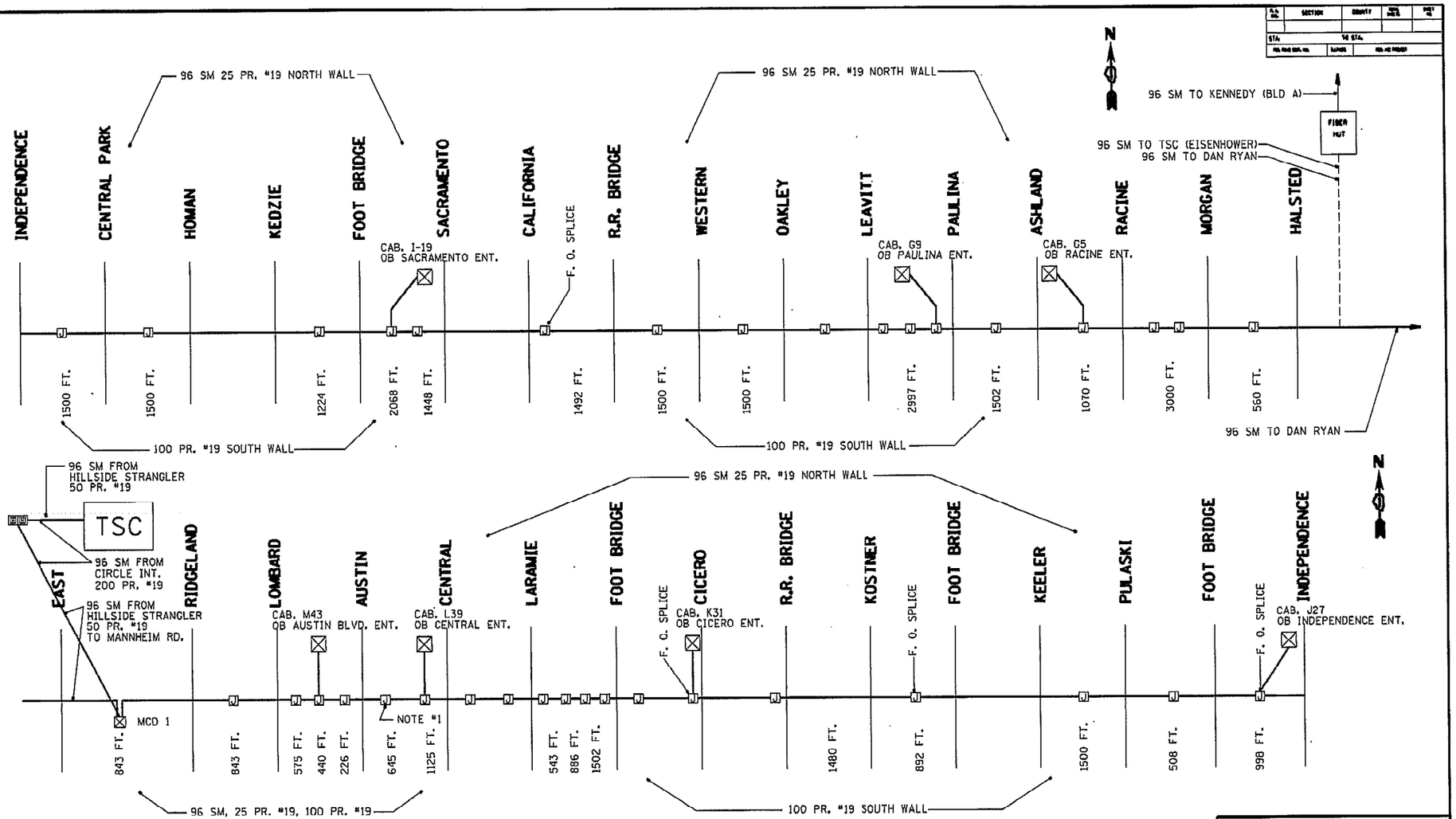

NOTES:

1.- NORTH AND SOUTH BARRIER WALL DUCTS CONVERGE AT WB AUSTIN EXIT.
ONE DUCT IN NORTH WALL AUSTIN EXIT TO TSC.

2.- SPARE 1" FIBER INNER DUCT HILLSIDE STRANGLER TO CIRCLE INT.

REVISIONS	
DESCRIPTION	DATE
R.L.	03-03

ILLINOIS DEPARTMENT OF TRANSPORTATION
TRAFFIC SYSTEMS CENTER

EISENHOWER NORTH BARRIER WALL
FIBER/COPPER AS-BUILT
TSC TO CIRCLE INTERCHANGE

SCALE: VERT. NONE, HORIZ.
DATE: 07-02
DRAWN BY: O.M.
CHECKED BY: R.L.

TRAFFIC SYSTEMS CENTER

FILE NAME = P:\10-IL\14411-IDOT - Sacramento and Paulina over I-290\Work\CADD\Paulina - Contract 62K64\CADD\Sheets\Civil\D162K64-sht-ITS.dgn

COLLINS ENGINEERS INC.

USER NAME = omartinez	DESIGNED - OAM	REVISED -
	DRAWN - OAM	REVISED -
PLOT SCALE = 100.0000 ' / in.	CHECKED - RAG	REVISED -
PLOT DATE = 8/21/2025	DATE - 09/08/2025	REVISED -

STATE OF ILLINOIS
DEPARTMENT OF TRANSPORTATION

FAI-290 (EISENHOWER EXPRESSWAY) AT PAULINA STREET
EXISTING ITS PLANS (FOR INFORMATION ONLY)

SCALE: NTS | SHEET NO. 1 OF 3 SHEETS | STA. | TO STA.

F.A.I. RTE.	SECTION	COUNTY	TOTAL SHEETS	SHEET NO.
290	2019-191-B-R	COOK	265	164
		CONTRACT NO. 62K64		
FED. ROAD DIST. NO.	ILLINOIS	FED. AID PROJECT		

27415

F.A. RTE.	SECTION	COUNTY	TOTAL SHEETS	SHEET NO.
I-290	1977-242-R	COOK	197	165
STA		TO STA		
FED. ROAD DIST. NO. 7	ILLINOIS	FED. AID PROJECT		

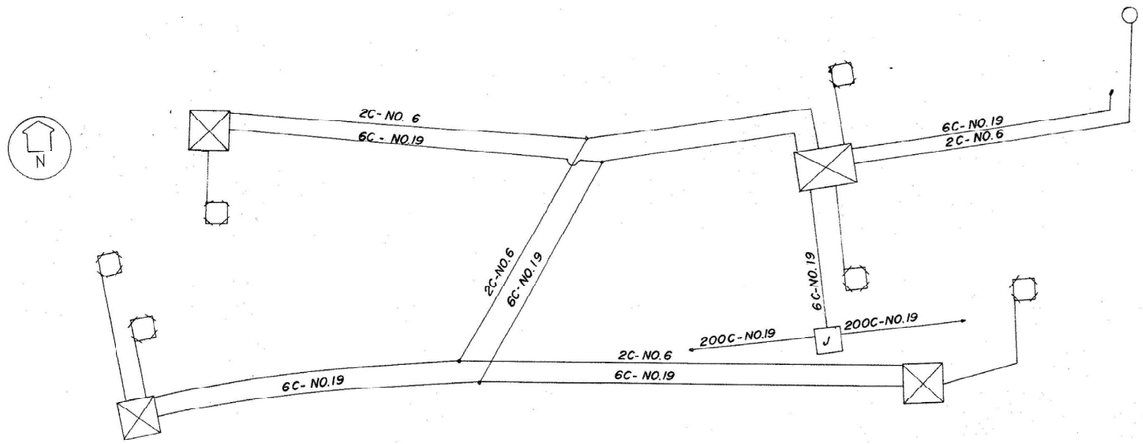

WIRING DIAGRAM

NOTE: ALL LOOP LEAD-IN WIRE IS 2-C NO.14.

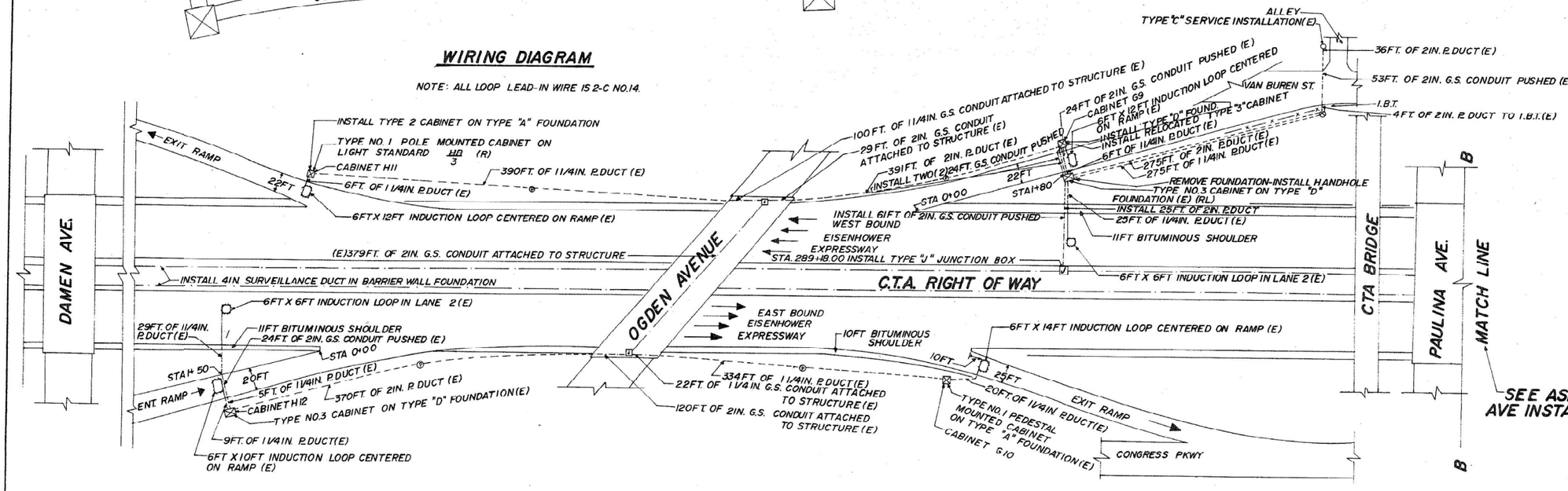

PLAN

ESTIMATE OF QUANTITIES

132	LIN FT.	INDUCTION LOOP
	LIN FT.	GALVS CON P2
20	LIN FT.	GALVS CON AT ST 2
188	LIN FT.	POLY DUCT 1 1/4
200	LIN FT.	POLY DUCT 2
1036	LIN FT.	EL CBL C19 6C
110	LIN FT.	EL CBL C14 2C SHIELD
1036	LIN FT.	EL CBL C6 2C
143	LIN FT.	TRENCH & BACKFILL
1	EACH	INDUCTION LOOP DET SEN UNIT
1	EACH	DIG LOOP DET SEN UNIT 2 CHA
	EACH	CONC. FOUND. TYPE D
	EACH	REMOVE EXISTING CONC. FOUND
3600	LIN. FT.	EL CBL C19 200C
2	EACH	F.S.K. TONE OSCILLATOR XO-30
2	EACH	F.S.K. TONE BAND PASS FILTER XF-10
2	EACH	F.S.K. TONE DISCRIMINATOR XD-30
	EACH	RELOC. EX CONTROL CAB
	EACH	H.D. HAND HOLE
1	EACH	CONC. FOUND. TYPE A
1	EACH	CABINET HOUSING EQ PED MT ESP2

XO-30	XF-10	XD-30
540	540	540
780	780	780
1020	1020	1020
1260	1260	1260
1500	1500	1500
1740	1740	1740

LEGEND

- INDUCTION LOOP
- CABINET
- JUNCTION BOX
- PULL POINT
- HANDHOLE
- SERVICE INSTALLATION
- CONDUIT
- DUCT
- FENCE
- (E) EXISTING FACILITIES
- (R) REMOVE EXISTING FACILITIES
- (RL) RELOCATE EXISTING FACILITIES

REVISIONS	
NAME	DATE

INBOUND S5

ILLINOIS DEPARTMENT OF TRANSPORTATION
TRAFFIC SYSTEMS CENTER

DAMEN AVE AND PAULINA ST. INSTALLATION

SCALE: VERT. HORIZ.
DATE
DRAWN BY KAM
CHECKED BY
REV. 10-83

FILE NAME = P:\10-ILV1441-IDOT - Sacramento and Paulina over I-290\Work\CADD\Paulina - Contract 62K64\CADD\Sheets\Civil\D162K64-sht-ITS.dgn

COLLINS ENGINEERS INC.

USER NAME = omartinez	DESIGNED - OAM	REVISED -	
	DRAWN - OAM	REVISED -	
PLOT SCALE = 100.0000 ' / in.	CHECKED - RAG	REVISED -	
PLOT DATE = 8/21/2025	DATE - 09/08/2025	REVISED -	

STATE OF ILLINOIS
DEPARTMENT OF TRANSPORTATION

FAI-290 (EISENHOWER EXPRESSWAY) AT PAULINA STREET
EXISTING ITS PLANS (FOR INFORMATION ONLY)

SCALE: NTS | SHEET NO. 2 OF 3 SHEETS | STA. | TO STA.

F.A.I. RTE.	SECTION	COUNTY	TOTAL SHEETS	SHEET NO.
290	2019-191-B-R	COOK	265	165
		CONTRACT NO. 62K64		
FED. ROAD DIST. NO.	ILLINOIS	FED. AID PROJECT		

F.A.I. RTE.	SECTION	COUNTY	TOTAL SHEETS	SHEET NO.
I-290	1977-242-R	COOK	197	126
STA.	TO STA.			
FED. ROAD DIST. NO. 7	ILLINOIS	FED. AID PROJECT		

WIRING DIAGRAM

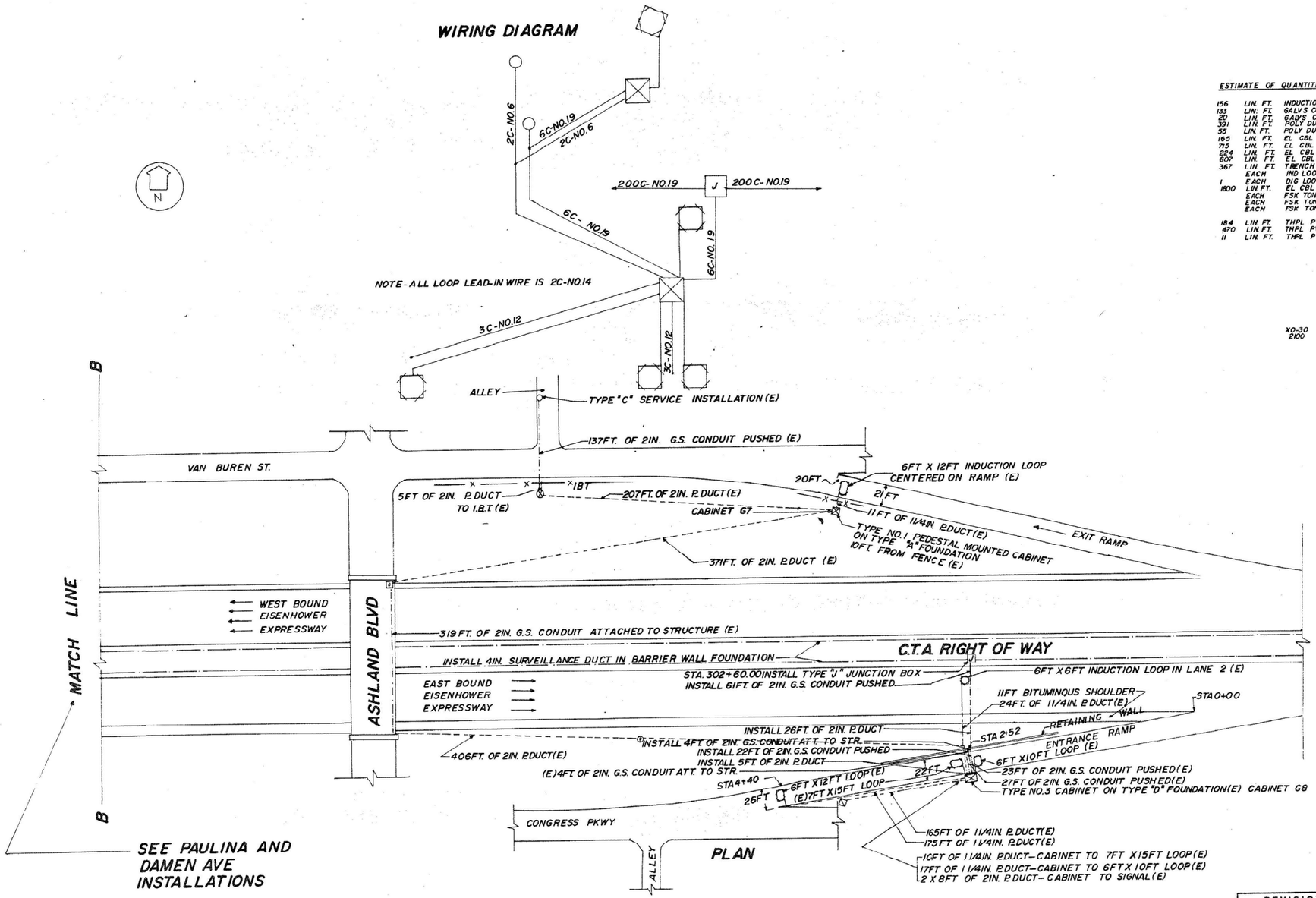

ESTIMATE OF QUANTITIES

156	LIN. FT.	INDUCTION LOOP
133	LIN. FT.	GALVS CON PIPE
20	LIN. FT.	GALVS CON AT ST 2
391	LIN. FT.	POLY DUCT 1/4
55	LIN. FT.	POLY DUCT 2
163	LIN. FT.	EL. CBL. C12 3C
712	LIN. FT.	EL. CBL. C19 6C
224	LIN. FT.	EL. CBL. C14 2C SHIELD
507	LIN. FT.	EL. CBL. C6 2C
367	LIN. FT.	TRENCH & BACKFILL
	EACH	IND LOOP DET SEN UNIT
1	EACH	DIG LOOP DET SEN UNIT 4 CHA
1800	LIN. FT.	EL. CBL. C19 200C
	EACH	FSK TONE OSCILLATOR XO-30
	EACH	FSK TONE BAND PASS FILTER XF-10
	EACH	FSK TONE DISCRIMINATOR XD-30
184	LIN. FT.	THPL PVT MK LINE 8
470	LIN. FT.	THPL PVT MK LINE 12
11	LIN. FT.	THPL PVT MK LINE 18

XO-30 2100 XF-10 2100 XD-30 2100

LEGEND

- INDUCTION LOOP
- CABINET
- JUNCTION BOX
- PULL POINT
- SERVICE INSTALLATION
- HANDHOLE
- DUCT
- CONDUIT
- FENCE
- FLASHER
- (E) EXISTING

INBOUND S6

ILLINOIS DEPARTMENT OF TRANSPORTATION
TRAFFIC SYSTEMS CENTER

ASHLAND BLVD INSTALLATION

SCALE: VERT. HORIZ
DRAWN BY KAM
DATE
CHECKED BY
REV. 10-03

REVISIONS	
NAME	DATE

FILE NAME = P:\10-IL\14411-100T - Sacramento and Paulina over I-290\Work\CADD\Paulina - Contract 62K64\CADD\Sheets\Civil\D162K64-sht-ITS.dgn

COLLINS ENGINEERS INC.

USER NAME = omartinez	DESIGNED - OAM	REVISED -	
	DRAWN - OAM	REVISED -	
PLOT SCALE = 100.0000 ' / in.	CHECKED - RAG	REVISED -	
PLOT DATE = 8/21/2025	DATE - 09/08/2025	REVISED -	

STATE OF ILLINOIS
DEPARTMENT OF TRANSPORTATION

FAI-290 (EISENHOWER EXPRESSWAY) AT PAULINA STREET
EXISTING ITS PLANS (FOR INFORMATION ONLY)

SCALE: NTS | SHEET NO. 3 OF 3 SHEETS | STA. | TO STA.

F.A.I. RTE.	SECTION	COUNTY	TOTAL SHEETS	SHEET NO.
290	2019-191-B-R	COOK	265	166
		CONTRACT NO. 62K64		
FED. ROAD DIST. NO.	ILLINOIS	FED. AID PROJECT		

Bench Mark: Chiseled "X" on the southwest corner of Paulina Street and Van Buren Street, Sta. 404+20.42, Elev. 593.29.

Existing Structure: SN. 016-0098 was originally built in 1954 as F.A. Route 131, Sections 3-B-5 and 3-F-5. The north approach slab was constructed in 1958 as F.A.I. Route 1, Section 2527-108.1. The structure consists of a four span non-composite continuous wide flange steel beam bridge with concrete vaulted abutments and three reinforced concrete multi-column piers all supported on metal shell cast in place concrete piles. The concrete deck, in all spans, is 5¾" thick and includes a 3¾" thick concrete overlay. The structure has no skew and an overall length of 274'-10⅞" from back to back of abutments. The out-to-out width of the structure is 88'-4". Permanent protective shield was added over all I-290 traffic lanes in 2016 under Section 2015-058I.

Traffic Control: Traffic to be maintained using staged construction. During Stage I no access to the CTA Blue Line Station will be provided. Commuters will be detoured to Western Ave. and Ogden Ave. Stations.

Salvage: Aluminum handrails, bridge fence railing (District 1), light poles, mast arms, and luminaires (CDOT).

DESIGN SPECIFICATIONS

(New Construction)
2020 AASHTO LRFD Bridge Design Specifications, 9th Edition

LOADING HL-93

Allow 25#/sq. ft. for future wearing surface.
LL+IM Deflection = L/1,000

DESIGN STRESSES

FIELD UNITS
(NEW CONSTRUCTION)

f'c = 4,000 psi (Superstructure Concrete)
f'c = 3,500 psi (Substructure Concrete)
fy = 60,000 psi (Reinforcement)
fy = 50,000 psi (M270 Grade 50)

FIELD UNITS
(EXISTING CONSTRUCTION)

f'c = 3,500 psi (Substructure Concrete)
fy = 40,000 psi (Reinforcement)

SEISMIC DATA

Seismic Performance Zone (SPZ) = 1
Design Spectral Acceleration at 1.0 sec. (SD1) = 0.08g
Design Spectral Acceleration at 0.2 sec. (SDS) = 0.15g
Soil Site Class = D

SCOPE OF WORK:

1. Existing utilities between girders will be supported or relocated by the Utility Owner to provide uninterrupted service during construction.
2. Remove and replace existing concrete deck, W36 steel beam superstructure, expansion joints, and bearings.
3. Remove existing vaulted approach superstructure and approach slabs.
4. Fill existing vaulted abutment and reconstruct the abutment to semi-integral.
5. Construct concrete seat extensions for new elastomeric bearings on abutments, Pier 1, and Pier 3, and for new fixed bearings on Pier 2.
6. Construct proposed W27 steel beam superstructure with 8" concrete deck and approach slabs.
7. Remove and reinstall CTA headhouse connection platform joint and reinstall existing CTA station railing.
8. Formed concrete repair and epoxy crack sealing on substructure units.
9. Remove, store and reinstall sign structures.
10. Graffiti removal.
11. Apply concrete sealant to existing abutments and pier faces adjacent to I-290.

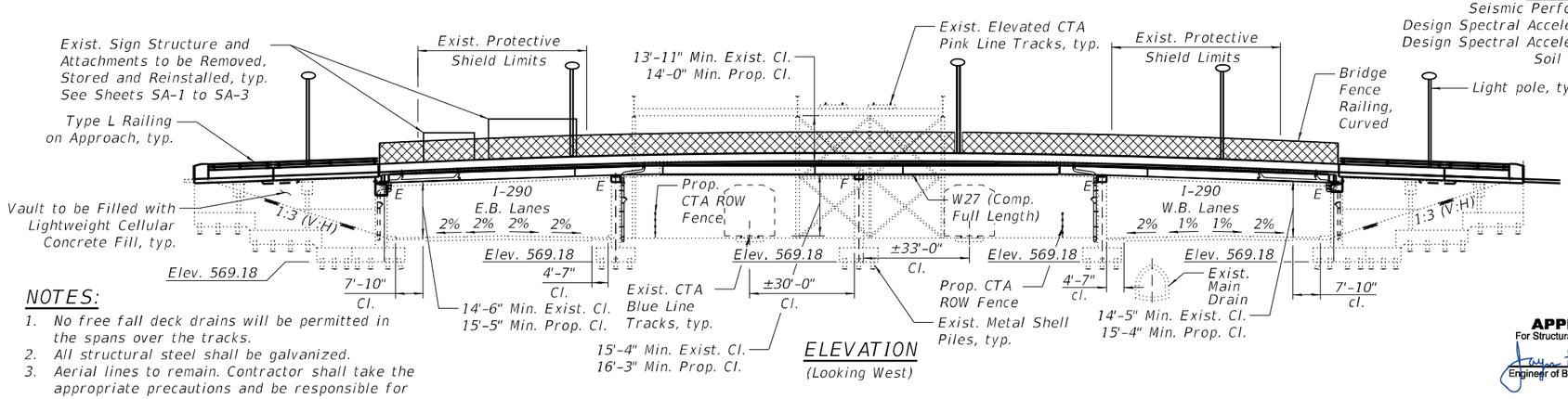

ELEVATION
(Looking West)

NOTES:

1. No free fall deck drains will be permitted in the spans over the tracks.
2. All structural steel shall be galvanized.
3. Aerial lines to remain. Contractor shall take the appropriate precautions and be responsible for the protection of existing aerial lines throughout construction.

APPROVED
For Structural Adequacy Only
Engineer of Bridges & Structures

JUNSHAN LIU
081-008224
STATE OF ILLINOIS
DENSED STRUCTURAL ENGINEER

ACCURATE GROUP, INC.
JUNSHAN LIU, PhD, P.E., S.E.
NO. 081-008224
EXP.: 11/30/2026
FOR SHEETS S-18 TO S-21

EWA K. MROCZEK
081-006067
STATE OF ILLINOIS
CHICAGO, ILLINOIS
LICENSED STRUCTURAL ENGINEER

COLLINS ENGINEERS, INC.
EWA MROCZEK, P.E., S.E.
NO. 081-006067
EXP.: 11/30/2026
FOR SHEETS S-1 TO S-17
AND S-22 TO S-56

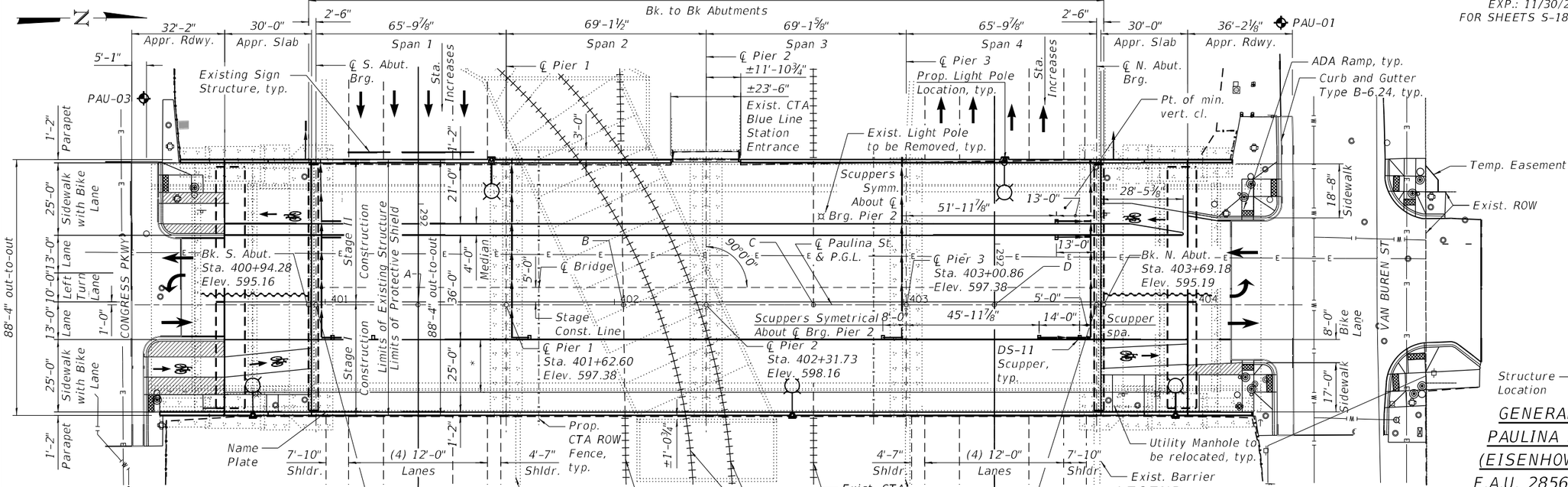

Point	Sta. at Paulina St.	Sta. at Intersecting Align.
A	401+32.09	292+34.85 (I-290 EB)
B	402+03.09	61+37.77 (CTA EB)
C	402+68.81	61+37.77 (CTA WB)
D	403+31.33	292+21.03 (I-290 WB)

PLAN

* Portion of East Sidewalk will be constructed in Stage III.

LEGEND

- Pr. Storm Sewer
- Watermain
- Electric
- Aerial Lines
- TSRS
- Light pole
- Fire Hydrant
- Utility Structure
- Soil Boring

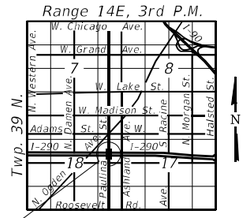

Structure Location

LOCATION SKETCH

GENERAL PLAN AND ELEVATION
PAULINA ST. OVER F.A.I. RTE. 290 (EISENHOWER EXPRESSWAY) & CTA
F.A.U. 2856 - SECTION 2019-191-B-R
COOK COUNTY
STATION 402+31.73
STRUCTURE NO. 016-0098

COLLINS ENGINEERS INC.

USER NAME =	DESIGNED - MR	REVISED -	
	CHECKED - EKM	REVISED -	
P.LOT SCALE =	DRAWN - DR	REVISED -	
P.LOT DATE =	CHECKED - EKM	REVISED -	

STATE OF ILLINOIS
DEPARTMENT OF TRANSPORTATION

SHEET S-1 OF S-56 SHEETS

F.A.I. RTE.	SECTION	COUNTY	TOTAL SHEETS	SHEET NO.
290	2019-191-B-R	COOK	265	167
		CONTRACT NO. 62K64		
		ILLINOIS	FED. AID PROJECT	

MODEL: Default
FILE NAME: P:\10\CL\14411-IDOT - Sacramento and Paulina over I-290\Work\CADD\Paulina - Contract 62K64\CADD_Sheets\Structural\D162K64-0160098-001-GPE.dgn
10/9/2025 4:28:30 PM

GENERAL NOTES:

1. Fasteners shall be ASTM F3125 Grade A325 Type 1. Fasteners shall be hot dip galvanized. See special provision for "Hot Dip Galvanizing for Structural Steel". Bolts 7/8" Ø, holes 15/16" Ø, unless otherwise noted.

2. Calculated weight of structural steel:
   Grade 50 = 706,180 lbs
   Grade 36 = 54,070 lbs

3. All structural steel shall be galvanized. See special provision for "Hot Dip Galvanizing for Structural Steel."

4. No field welding is permitted except as specified in the contract documents.

5. Reinforcement bars designated (E) shall be epoxy coated.

6. The finishing machine rails shall be placed on the top of the top flange of the exterior beams within the deck pour. Beam blocks shall be placed between beams at all tie locations in each bay for the full width of the deck pour.

7. If the Contractor elects to use cantilever forming brackets on the exterior beams or girders, the brackets shall be placed at the same locations as required for the hardwood blocks in Article 503.06(b) of the Standard Specifications. If additional cantilever forming brackets are required, hardwood blocking shall be wedged between the exterior and first interior beam at each of these additional bracket locations.

8. Slipforming of the parapets is not allowed.

9. Bearing seat surfaces shall be constructed or adjusted to the designated elevations within a tolerance of 1/8" (0.01 ft.). Adjustment shall be made either by grinding the surface or by shimming the bearings.

10. Film forming concrete sealer shall be applied on horizontal surfaces, and penetrating concrete sealer shall be applied on vertical surfaces. Concrete Sealer shall be applied to new abutment and pier beam seats prior to setting bearings or structural steel. Concrete Sealer shall be applied to new concrete diaphragms, structural concrete repairs, and to existing abutment and pier faces adjacent to I-290.

11. Plan dimensions and details relative to existing plans are subject to nominal construction variations. The Contractor shall field verify existing dimensions and details affecting new construction and make necessary approved adjustments prior to construction or ordering of materials. Such variations shall not be cause for additional compensation for a change in scope of the work, however, the Contractor will be paid for the quantity actually furnished at the unit price bid for the work.

12. The existing structural steel coating contains lead. The Contractor shall take appropriate precautions to deal with the presence of lead on this project.

13. The existing utilities attached to the bridge may contain asbestos. The Contractor shall take appropriate precautions to address the presence of asbestos on this project. The removal procedure shall comply with City of Chicago, State, and Federal regulations.

14. The Contractor shall salvage the existing aluminum Bridge Railing including all posts, railings, all attachments and the aluminum Pedestrian Fence and Railing. The aluminum Bridge Railing and aluminum Pedestrian Fence and Railing shall be transported and unloaded by the Contractor to the District Bridge Yard in Elk Grove Village at 1101 Biesterfiled Road during the week days Monday-Friday, and between the hours of 8 am and 2 pm. The Contractor shall notify the District Bridge Office 48 hours in advance of the delivery at (847) 956-1444. Cost included in Removal of Existing Structure.

15. Cost of removal of existing protective shield is included in the pay item "Removal of Existing Superstructure" and shall not be paid for separately.

16. Bridge Fence Railing, Curved shall be galvanized.

17. The Contractor shall submit Full Constrution Process Plan to CTA for review and approval. Contractor shall minimize impacts to Rail Operations. See Special Provisions.

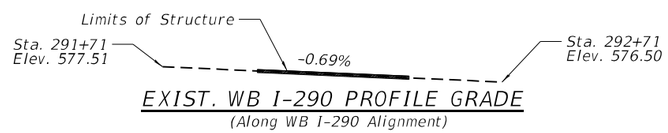

EXIST. WB I-290 PROFILE GRADE
(Along WB I-290 Alignment)



EXIST. EB I-290 PROFILE GRADE
(Along EB I-290 Alignment)

INDEX OF SHEETS

S-1	General Plan and Elevation
S-2	General Notes, Index of Sheets, and Total Bill of Material
S-3 - S-4	Stage Construction Details
S-5	Stage Construction Details - Approach Slab
S-6	Temporary Concrete Barrier
S-7	Superstructure Removal
S-8	Temporary Soil Retention System
S-9	Suggested Beam Erection Plan
S-10 - S-15	Top of Slab Elevations
S-16	Top of South Approach Slab Elevations
S-17	Top of North Approach Slab Elevations
S-18	Superstructure
S-19	Superstructure Details I
S-20	Superstructure Details II
S-21	Concrete Diaphragm Details
S-22	Parapet Reveal Details
S-23 - S-27	Bridge Approach Slab Details
S-28 - S-29	Bridge Fence Railing, Curved
S-30	Aluminum Railing Type L
S-31	Bridge Drainage System
S-32	Drainage Scuppers, DS-11
S-33	Steel Framing Plan and Details
S-34	Moment and Reaction Table
S-35 - S-36	Structural Steel Details
S-37 - S-38	Bearing Details
S-39	South Abutment Repairs and Removal
S-40	South Abutment Concrete Extension
S-41	South Abutment Details
S-42	North Abutment Repairs and Removal
S-43	North Abutment Concrete Extension
S-44	North Abutment Details
S-45	Wingwall Removal and Repairs
S-46	Wingwall Modification
S-47	Pier 1 Repairs
S-48	Pier 1 Cap Concrete Extension
S-49	Pier 2 Repairs
S-50	Pier 2 Cap Concrete Extension
S-51	Pier 3 Repairs
S-52	Pier 3 Cap Concrete Extension
S-53	Bar Splicer Assembly Details
S-54 - S-56	Soil Boring Logs

TOTAL BILL OF MATERIAL

ITEM	UNIT	SUPER	SUB	TOTAL
REMOVAL OF EXISTING SUPERSTRUCTURES	EACH	1		1
CONCRETE REMOVAL	CU YD		202.4	202.4
PROTECTIVE SHIELD	SQ YD	2,633		2,633
CONCRETE STRUCTURES	CU YD		330.5	330.5
CONCRETE SUPERSTRUCTURE	CU YD	1,301.2		1,301.2
BRIDGE DECK GROOVING	SQ YD	1,332		1,332
PROTECTIVE COAT	SQ YD	3,508		3,508
CONCRETE SUPERSTRUCTURE (APPROACH SLAB)	CU YD	251.0		251.0
FURNISHING AND ERECTING STRUCTURAL STEEL	L SUM	1		1
STUD SHEAR CONNECTORS	EACH	19,773		19,773
REINFORCEMENT BARS, EPOXY COATED	POUND	296,920	22,570	319,490
BAR SPLICERS	EACH	1,641	52	1,693
ALUMINUM RAILING, TYPE L	FOOT	180		180
BRIDGE FENCE RAILING, CURVED	FOOT	526		526
NAME PLATES	EACH	1		1
ELASTOMERIC BEARING ASSEMBLY, TYPE I	EACH	52		52
ANCHOR BOLTS, 3/4"	EACH		130	130
TEMPORARY SOIL RETENTION SYSTEM	SQ FT		654	654
DRAINAGE SYSTEM FOR STRUCTURES	L SUM	1		1
GRANULAR BACKFILL FOR STRUCTURES	CU YD		142	142
CONCRETE SEALER	SQ FT		5,743	5,743
EPOXY CRACK INJECTION	FOOT		34	34
GEOCOMPOSITE WALL DRAIN	SQ YD	192		192
PIPE UNDERDRAINS FOR STRUCTURES 4"	FOOT		422	422
GRAFFITI REMOVAL	SQ YD		13	13
LIGHTWEIGHT CELLULAR CONCRETE FILL	CU YD		2,640	2,640
BAR TERMINATORS	EACH	946		946
DRAINAGE SCUPPERS, DS-11	EACH	10		10
STRUCTURAL REPAIR OF CONCRETE (DEPTH EQUAL TO OR LESS THAN 5 INCHES)	SQ FT		1,245	1,245
STRUCTURAL REPAIR OF CONCRETE (DEPTH GREATER THAN 5 INCHES)	SQ FT		251	251
REMOVING AND REPLACING EXPANSION JOINT	FOOT	24		24

STATION 402+31.73
RE-BUILT 202_ BY
STATE OF ILLINOIS
F.A.U. RT. 2856
SEC. 2019-191-B-R
LOADING HL-93
STRUCTURE NO. 016-0098

NAME PLATE

See Std. 515001

Existing Name Plate shall be cleaned and relocated next to new Name Plate. Cost included with Name Plate.

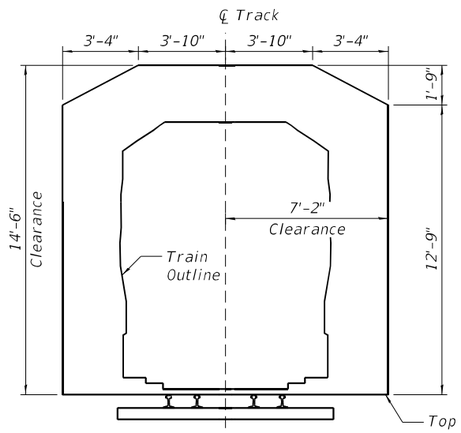

CTA TRAIN CLEARANCE DIAGRAM



EXIST. WB BLUE LINE CTA TRACKS PROFILE GRADE
(Along WB CTA Tracks Alignment)



EXIST. EB BLUE LINE CTA TRACKS PROFILE GRADE
(Along EB CTA Tracks Alignment)

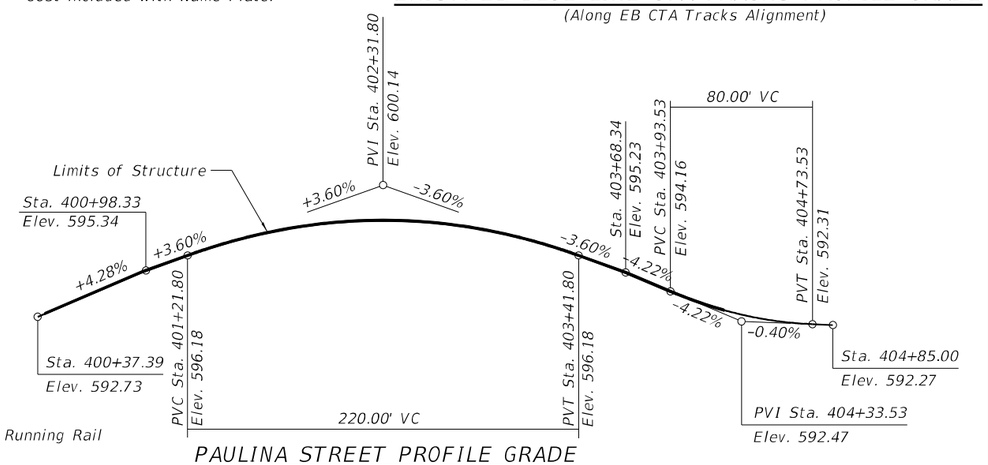

PAULINA STREET PROFILE GRADE
Along ℄ Paulina St. See sheet S-1 for PGL location

MODEL: Default
FILE NAME: P:\10-IL11411-IDOT - Sacramento and Paulina over I-290\Work\CADD\Paulina - Contract 62K64\CADD_Sheets\StructuralID162K64-016098-002-General Notes.dgn
10/9/2025 4:29:40 PM

COLLINS ENGINEERS INC.

USER NAME =	DESIGNED - MR	REVISED -	
	CHECKED - EKM	REVISED -	
PLOT SCALE =	DRAWN - DR	REVISED -	
PLOT DATE =	CHECKED - EKM	REVISED -	

STATE OF ILLINOIS
DEPARTMENT OF TRANSPORTATION

GENERAL NOTES, INDEX OF SHEETS AND TOTAL BILL OF MATERIAL
STRUCTURE NO. 016-0098
SHEET S-2 OF S-56 SHEETS

F.A.I. RTE.	SECTION	COUNTY	TOTAL SHEETS	SHEET NO.
290	2019-191-B-R	COOK	265	168
		CONTRACT NO. 62K64		
	ILLINOIS FED. AID PROJECT			

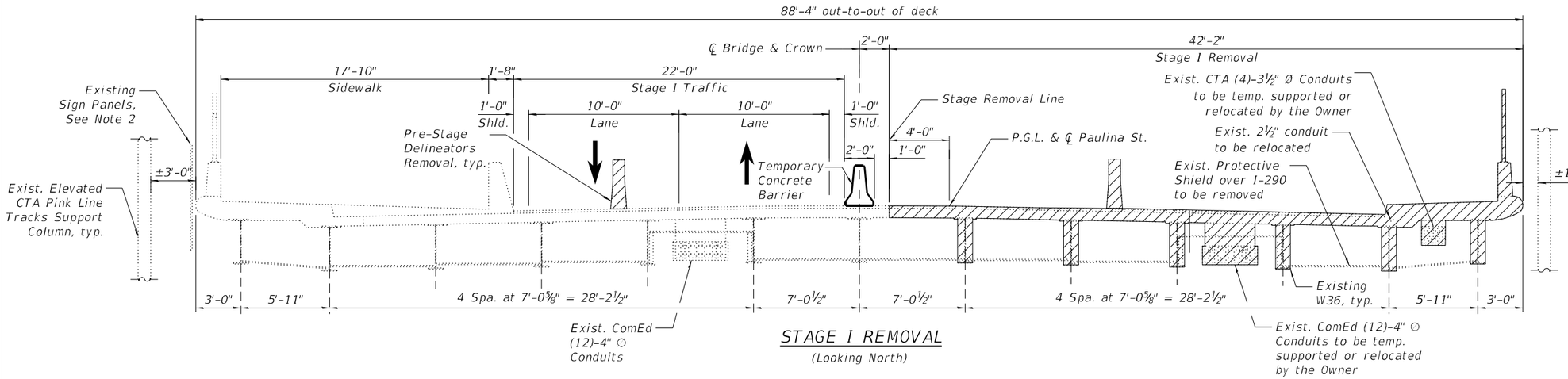

STAGE I REMOVAL

(Looking North)

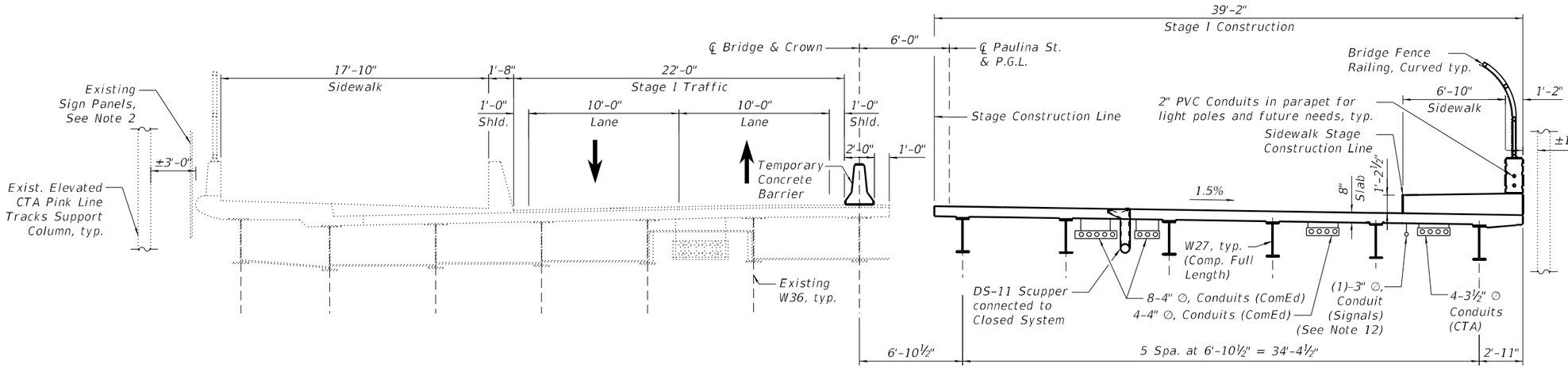

STAGE I CONSTRUCTION

(Looking North)

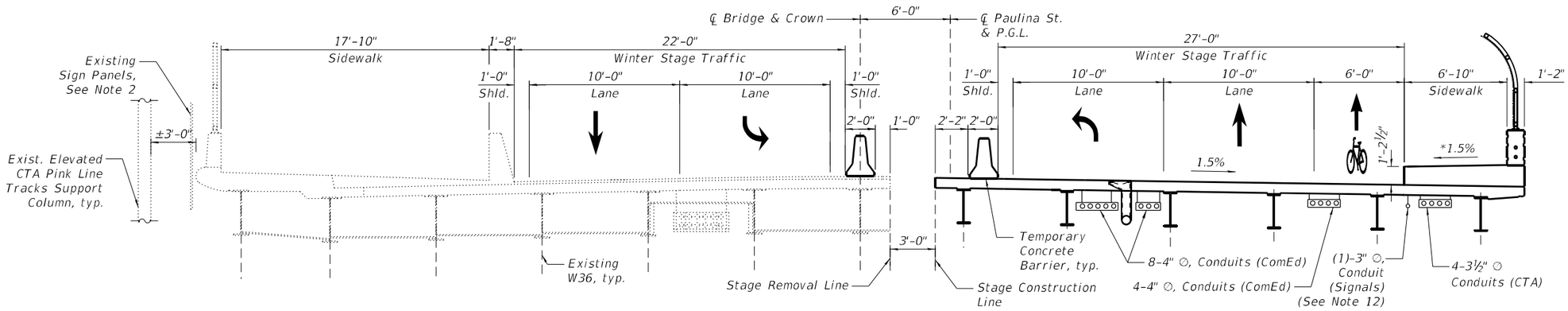

WINTER STAGE

(Looking North)

* East Sidewalk slope varies from 1% to 1.5% at both abutments. Start transition 50 ft from abutments. See Roadway Plans for Elevation Detail Sheet.

NOTES:

1. Stage III construction is for east sidewalk construction. See MOT Stage III sheets for details.
2. Existing sign panels attached to superstructure to be removed, stored, and reinstalled. See Roadway Plans and Sheets SA-1 – SA-3.
3. Existing utilities between girders will be supported or relocated by the Utility Owner to provide uninterrupted service during construction.
4. Contractor shall coordinate attachment of existing or proposed utilities to the structure, including the type and location of the inserts to be embedded in the concrete deck. Inserts may be required to be installed by the Contractor during formwork construction.
5. Existing permanent protective shield to be removed. Cost included with "Removal of Existing Superstructures". See Note 5 on sheet S-7 for more information.
6. Removal of existing railing, joints, bearings, light posts, and all other appurtenances is included with "Removal of Existing Superstructures".
7. The Contractor shall protect the CTA ROW during construction activities in accordance with CTA requirements. The Contractor shall protect the elevated CTA Pink Line Tracks Support Columns during removal and construction operations and install protective net or shield if required to protect the traffic below the elevated CTA structure, to the satisfaction of CTA.
8. See Roadway Plans for existing delineators removal and for proposed Delineator Posts details and quantities.
9. See Sheet S-6 for Temporary Concrete Barrier pinning for Stage I and steel retainer assembly for Stage II.
10. Temporary shoring tower locations on the CTA ROW, if required for the beams erection, need to be included in the Construction Process Plan submitted by the Contractor to CTA for review. Cost included with "Furnishing and Erecting Structural Steel".
11. Temporary shoring towers will not be allowed on I-290 lanes or shoulders. Beam segments may be connected prior to erection operation to avoid temporary shoring towers on I-290.
12. See Electrical Plans for traffic signal conduit and underpass luminaire attachment details. Inserts to be embedded in the concrete deck.

LEGEND:

Removal Limits

(#) Beam Number

MODEL: Default
FILE NAME: P:\10-IL\14411-IDOT - Sacramento and Paulina over I-290\Work\CADD\Paulina - Contract 62K64\CADD_Sheets\StructuralD162K64-GeneralSections.dgn
10/9/2025 4:30:05 PM

COLLINS ENGINEERS INC.

USER NAME =		DESIGNED - MR	REVISED -		
		CHECKED - EKM	REVISED -		
PLOT SCALE =		DRAWN - DR	REVISED -		
PLOT DATE =		CHECKED - EKM	REVISED -		

STATE OF ILLINOIS
DEPARTMENT OF TRANSPORTATION

STAGE CONSTRUCTION DETAILS
STRUCTURE NO. 016-0098

SHEET S-3 OF S-56 SHEETS

F.A.I RTE.	SECTION	COUNTY	TOTAL SHEETS	SHEET NO.
290	2019-191-B-R	COOK	265	169
		CONTRACT NO. 62K64		
	ILLINOIS FED. AID PROJECT			

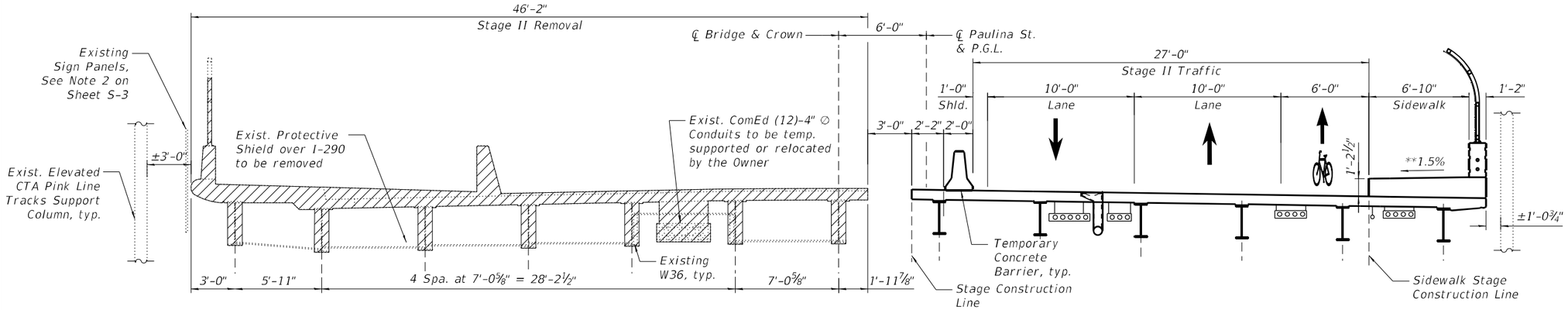

STAGE II REMOVAL

(Looking North)

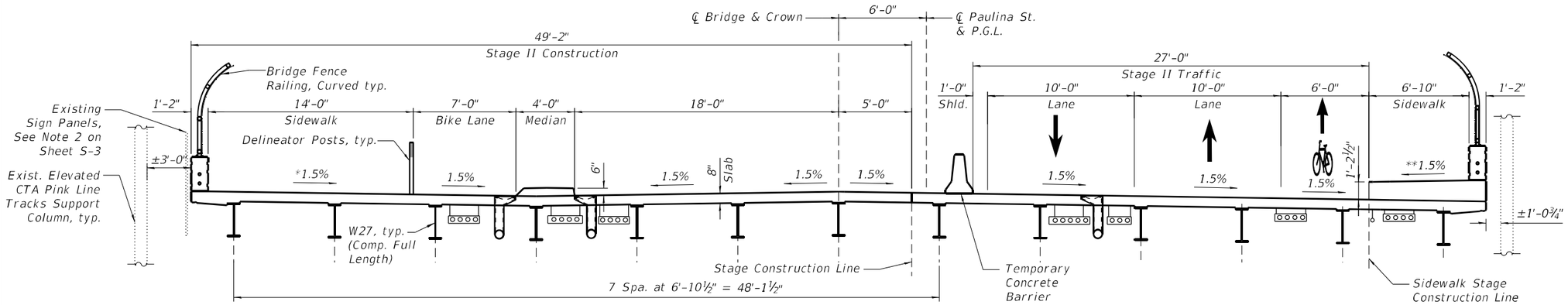

* Slope at CTA station entrance to vary to match existing entrance elevation.

STAGE II CONSTRUCTION

(Looking North)

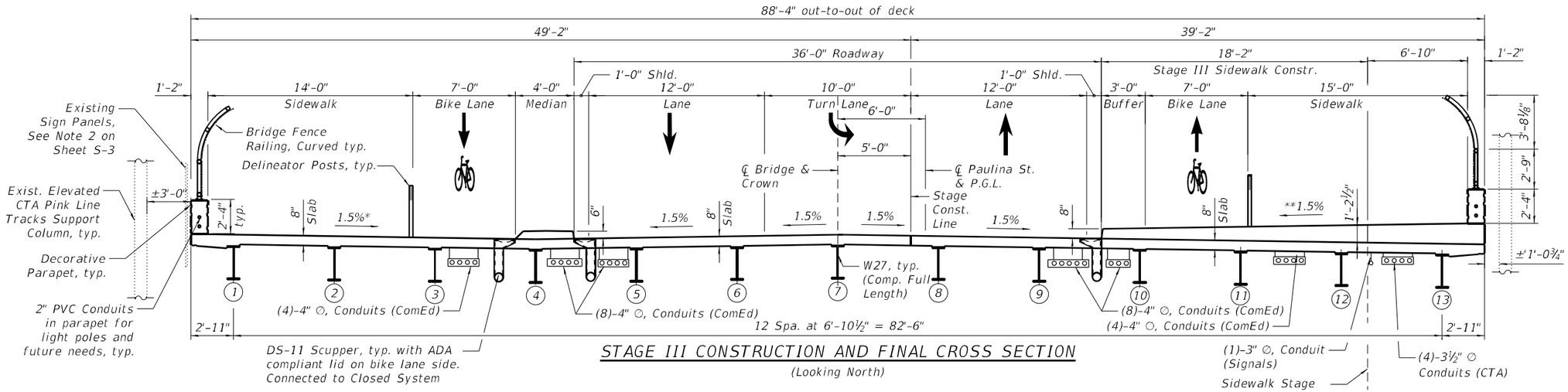

STAGE III CONSTRUCTION AND FINAL CROSS SECTION

(Looking North)

** East Sidewalk slope varies from 1% to 1.5% at both abutments. Start transition 50 ft from abutments. See Roadway Plans for Elevation Detail Sheet.

LEGEND:

- Removal Limits
- (#) Beam Number

COLLINS ENGINEERS INC.	USER NAME =	DESIGNED - MR	REVISED -	STATE OF ILLINOIS DEPARTMENT OF TRANSPORTATION
		CHECKED - EKM	REVISED -	
	PLOT SCALE =	DRAWN - DR	REVISED -	
	PLOT DATE =	CHECKED - EKM	REVISED -	

STAGE CONSTRUCTION DETAILS
STRUCTURE NO. 016-0098
SHEET S-4 OF S-56 SHEETS

F.A.I. RTE.	SECTION	COUNTY	TOTAL SHEETS	SHEET NO.
290	2019-191-B-R	COOK	265	170
		CONTRACT NO. 62K64		
	ILLINOIS	FED. AID PROJECT		

MODEL: Default
FILE NAME: P:\10-IL\14411-IDOT - Sacramento and Paulina over I-290\Work\CADD\Paulina - Contract 62K64\CADD_Sheets\Structural\D162K64-D160986-004-GeneralSections 2.dgn
10/9/2025 4:30:22 PM

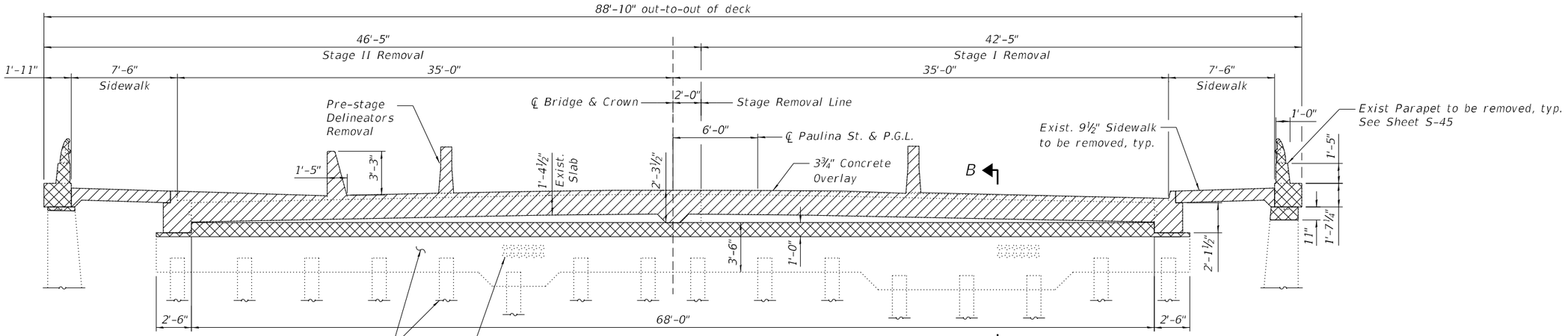

REMOVAL VAULTED APPROACH SPANS

(Looking North)
(Vaulted South Approach Slab Shown)
(Vaulted North Approach Slab Similar)

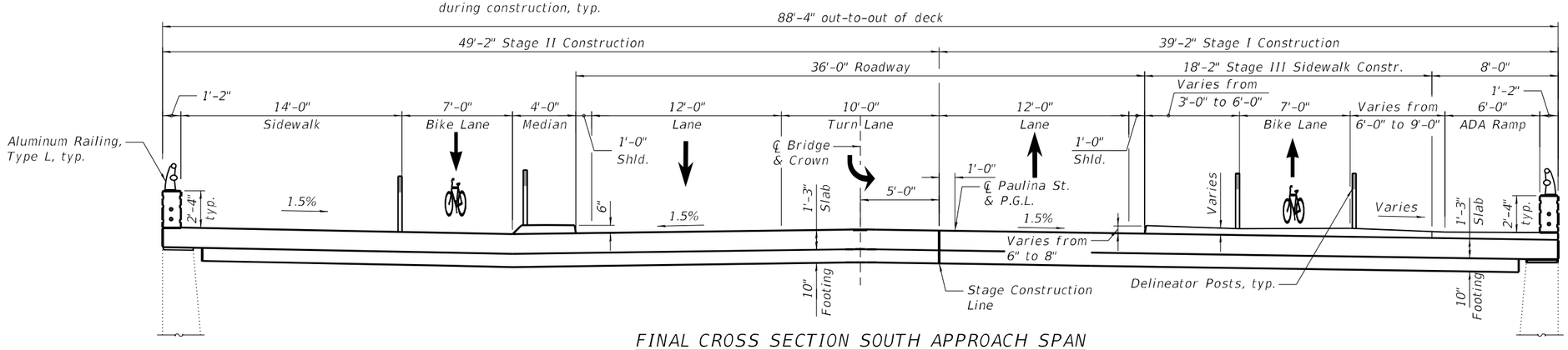

FINAL CROSS SECTION SOUTH APPROACH SPAN

(Looking North)

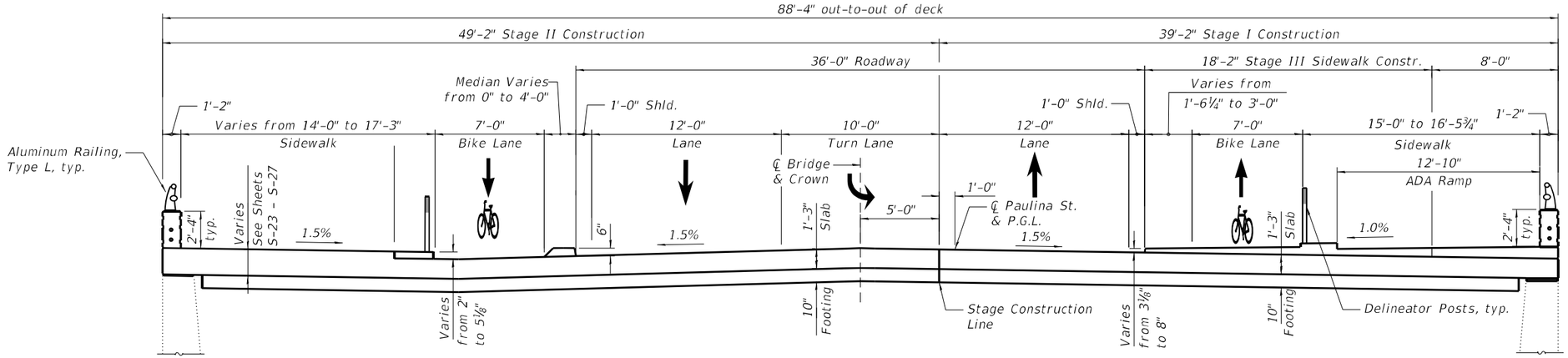

FINAL CROSS SECTION NORTH APPROACH SPAN

(Looking North)

LEGEND:

- Removal of Exist. Superstructure
- Concrete Removal

NOTE:

1. For notes, see Sheet S-3.
2. For Section B-B, see Sheet S-7.
3. See Roadway Plans for Delineator Posts details.
4. See Roadway Plans for detailed Bike Lane, Sidewalk, and ADA Ramp elevations on approach slabs.

MODEL: Default
FILE NAME: P:\10-LL14411-IDOT - Sacramento and Paulina over I-290\Work\CADD\Paulina - Contract 62K64\CADD_Sheets\StructuralD162K64-0160098-005-StageConstDetailsApproach.dgn
10/9/2025 4:30:39 PM

COLLINS ENGINEERS INC.

USER NAME =	DESIGNED - MR	REVISED -	
	CHECKED - EKM	REVISED -	
PLOT SCALE =	DRAWN - DR	REVISED -	
PLOT DATE =	CHECKED - EKM	REVISED -	

STATE OF ILLINOIS
DEPARTMENT OF TRANSPORTATION

STAGE CONSTRUCTION DETAILS - APPROACH SLAB
STRUCTURE NO. 016-0098

SHEET S-5 OF S-56 SHEETS

F.A.I. RTE.	SECTION	COUNTY	TOTAL SHEETS	SHEET NO.
290	2019-191-B-R	COOK	265	171
		CONTRACT NO. 62K64		
		ILLINOIS	FED. AID PROJECT	

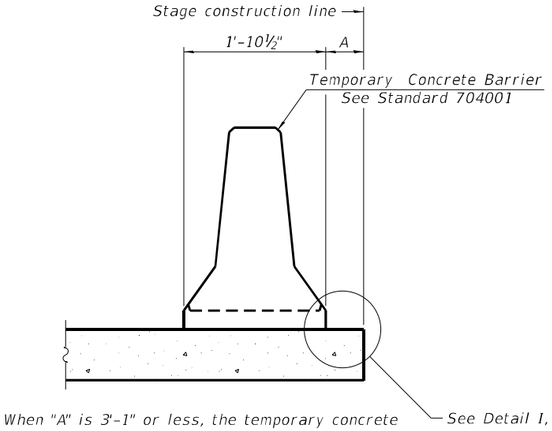

When "A" is 3'-1" or less, the temporary concrete barrier shall be restrained to the new slab according to Detail I, II or III. No restraint is required when "A" is greater than 3'-1".

NEW SLAB OR NEW DECK BEAM

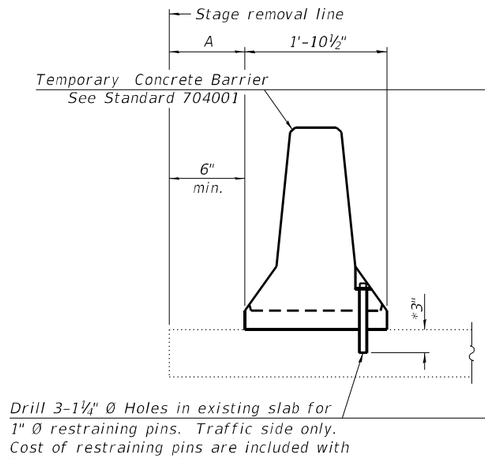

Drill 3-1¼" Ø Holes in existing slab for 1" Ø restraining pins. Traffic side only. Cost of restraining pins are included with Temporary Concrete Barrier. No restraint is required when "A" is greater than 3'-1".

EXISTING SLAB

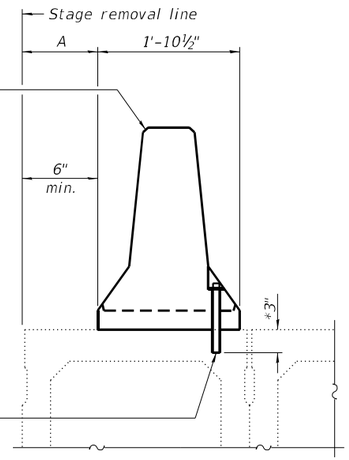

* When hot-mix asphalt wearing surface is present, embedment shall be 3" plus the wearing surface depth.

EXISTING DECK BEAM

SECTIONS THRU SLAB OR DECK BEAM

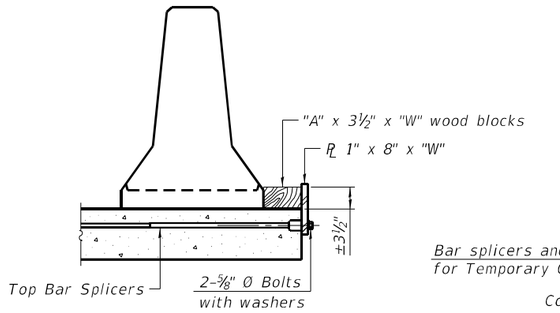

DETAIL I

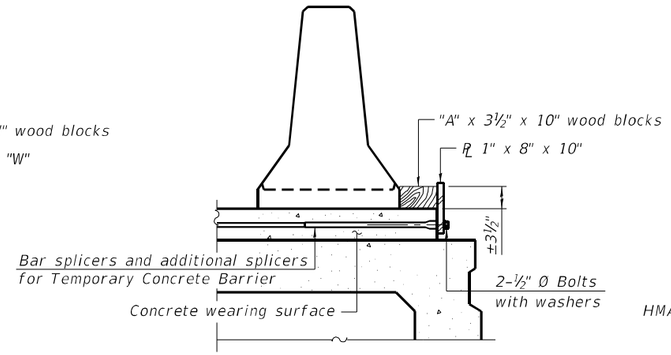

DETAIL II

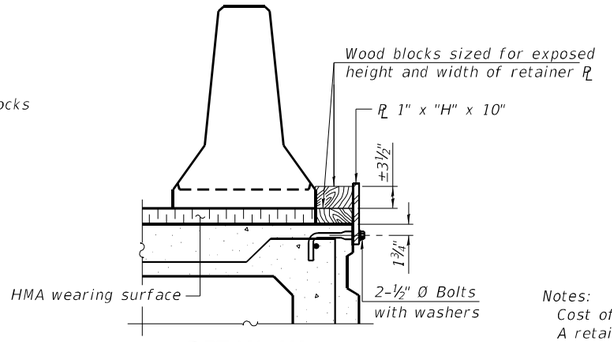

DETAIL III

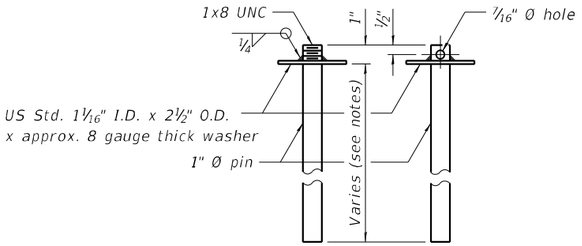

RESTRAINING PIN

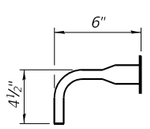

BAR SPLICER FOR #4 BAR - DETAIL III

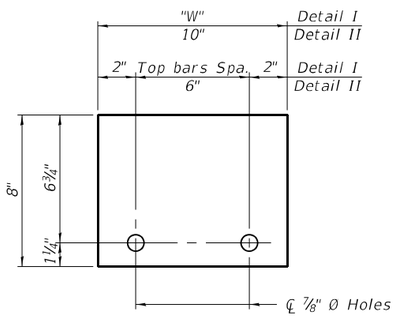

STEEL RETAINER ℄ 1" x 8" x "W"

(Detail I and II)

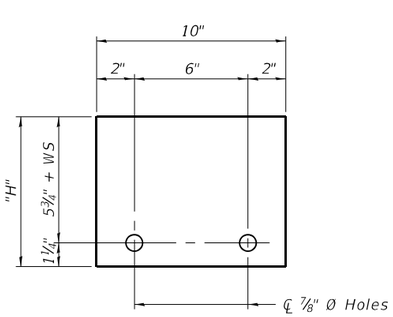

STEEL RETAINER ℄ 1" x "H" x 10"

(Detail III)

Notes:

Cost of retainer assembly is included with Temporary Concrete Barrier.

A retainer assembly shall be located at the approximate ℄ of each temporary concrete barrier.

The retainer plate shall not be removed until the concrete on the adjacent stage is ready to be poured. For Detail III applications the retainer plate shall not be removed until just prior to placing the adjacent beam.

When the 'A' dimension is less than 1½", the wood block shall be omitted and the barrier shall be placed in direct contact with the steel retainer plate. For deck beam applications the minimum required 'A' distance is 6" to accommodate the shear key clamping device.

Detail I - Installation for a new bridge deck or bridge slab.

Detail II - Installation for a new deck beam with an initial concrete wearing surface. Additional bar splicers shall be provided at 6'-0" centers and paired with the bar splicers of the concrete wearing surface reinforcement to accommodate the installation of the retainer assemblies. The cost of the additional bar splicers is included with the concrete wearing surface.

Detail III - Installation for a new deck beam with no initial wearing surface or with an initial hot-mix asphalt (HMA) wearing surface present. The deck beam directly beneath the temporary concrete barrier shall be fabricated with bar splicer inserts in the side of the beam, as detailed, to accommodate the installation of the retainer assemblies. A pair of bar splicers, 6" apart, shall be placed at 6'-0" centers along the length of the beam. The cost of the bar splicers is included with the deck beam.

RAILING CRITERIA

NCHRP 350 Test Level	3
Railing Weight (plf)	440

R-27

5-15-2023

MODEL: Default
FILE NAME: P:\10-IL\14411-IDOT - Sacramento and Paulina over I-290\Work\CADD\Paulina - Contract 62K64\CADD_Sheets\StructuralD162K64-016009B-006-TempConcBarrier.dgn
10/9/2025 4:30:54 PM

COLLINS ENGINEERS INC.

USER NAME =	DESIGNED - MR	REVISED -	
	CHECKED - EKM	REVISED -	
PLOT SCALE =	DRAWN - DR	REVISED -	
PLOT DATE =	CHECKED - EKM	REVISED -	

STATE OF ILLINOIS
DEPARTMENT OF TRANSPORTATION

TEMPORARY CONCRETE BARRIER
STRUCTURE NO. 016-0098

SHEET S-6 OF S-56 SHEETS

F.A.I RTE.	SECTION	COUNTY	TOTAL SHEETS	SHEET NO.
290	2019-191-B-R	COOK	265	172
		CONTRACT NO. 62K64		
	ILLINOIS FED. AID PROJECT			

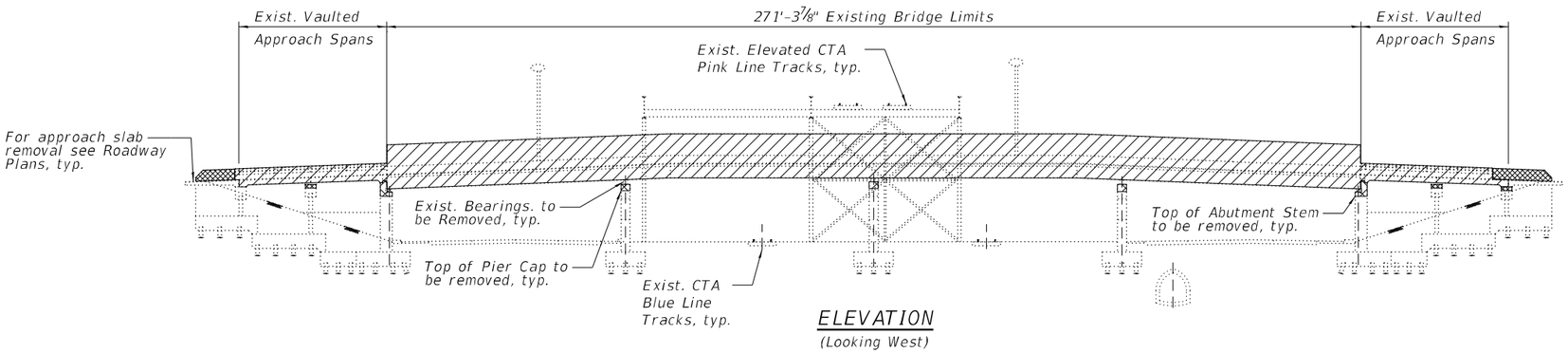

ELEVATION

(Looking West)

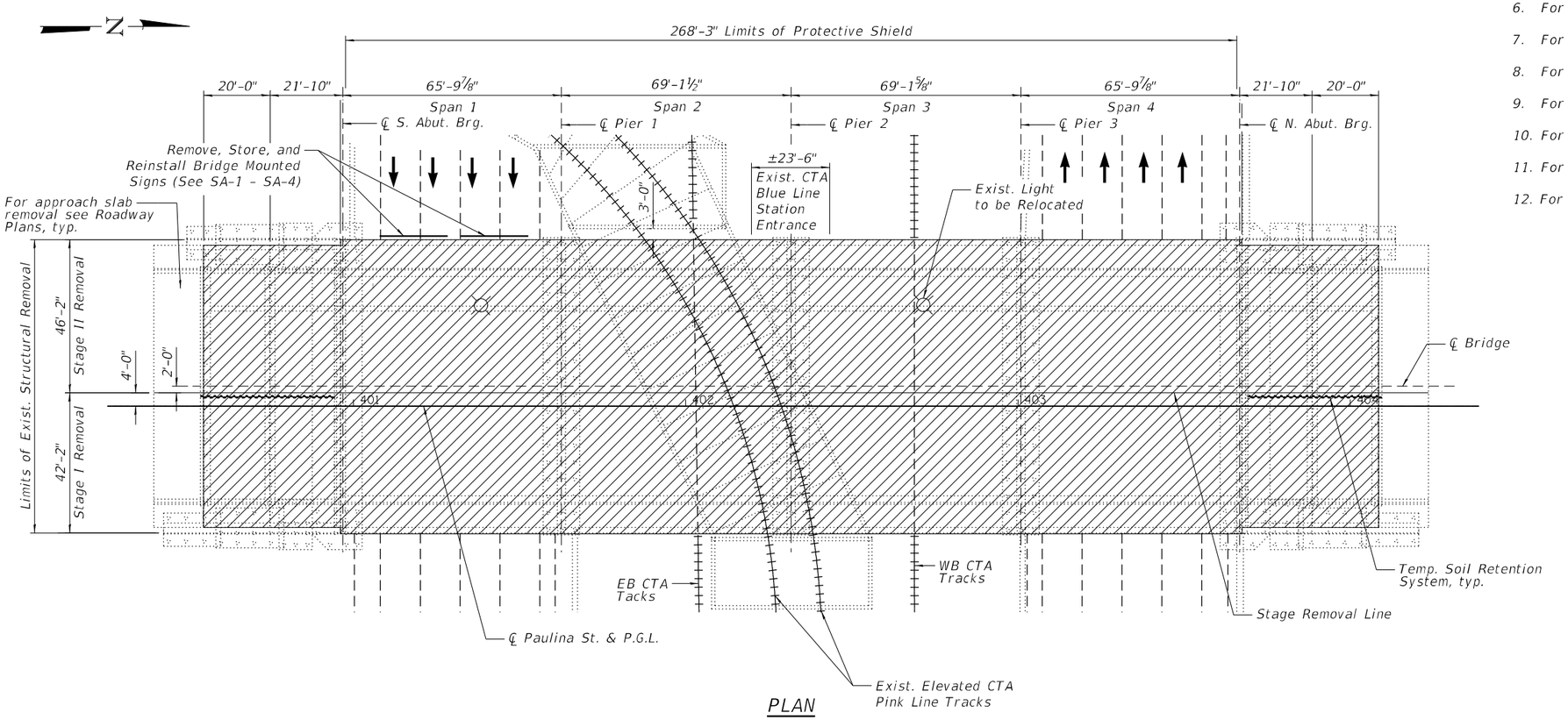

PLAN

NOTES:

1. Existing utilities between girders will be relocated to provide uninterrupted service during construction (by others). Utilities to be incorporated into new structure (by others).
2. The Contractor is responsible to protect the CTA tracks from falling objects and debris during removal of the existing structure.
3. For existing approach slab, sidewalk, curb and gutter, and pavement removal quantities, see Roadway plans.
4. Existing Vaulted Approach Spans, Bearings, Bridge Fence Railing and Parapet removal cost included with Removal of Existing Superstructures.
5. The Contractor may reuse the existing protective shield provided their Structural Engineer verifies its adequacy per Standard Specifications 501.03 and provide calculations of its adequacy for approval. The Contractor shall be fully responsible for the system, including reuse of any existing material, and the calculations shall detail all require supplemental and/or replacement material and be sealed by an Illinois SE. The Contractor will be paid for the plan area shown for Protective Shield, which will include existing protective shield (if being reused), any supplemental materials, and/or new protective shield. The cost for evaluation, calculations, supplemental materials, new materials, and installation/removal is included in the pay item Protective Shield.
6. For South Abutment Concrete Removal, see Sheet S-39.
7. For North Abutment Concrete Removal, see Sheet S-42.
8. For Pier 1 Concrete Removal, see Sheet S-47.
9. For Pier 2 Concrete Removal, see Sheet S-49.
10. For Pier 3 Concrete Removal, see Sheet S-51.
11. For Wingwalls Removal, see Sheet S-45.
12. For Temporary Soil Retention System, see Sheet S-8.

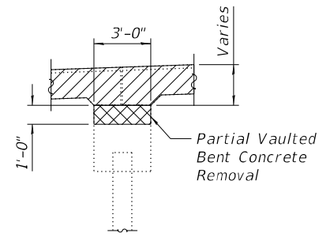

SECTION B-B

See Sheet S-5 for Section B-B location

LEGEND:

Removal of Exist. Superstructure

Concrete Removal

BILL OF MATERIAL

Item	Unit	Total
Removal of Existing Superstructure	Each	1
Concrete Removal*	Cu. Yd.	30.6
Protective Shield	Sq Yd	2,633

*Quantity for Concrete Bent Removal

MODEL: Default
FILE NAME: P:\10eli\14411-IDOT - Sacramento and Paulina over I-290\Work\CADD\Paulina - Contract 62K64\CADD_Sheets\StructuralID162K64-016009B-007-SuperstructureRemoval.dgn
10/9/2025 4:31:06 PM

COLLINS ENGINEERS INC.

USER NAME =	DESIGNED - MR	REVISED -	
	CHECKED - EKM	REVISED -	
PLOT SCALE =	DRAWN - DR	REVISED -	
PLOT DATE =	CHECKED - EKM	REVISED -	

STATE OF ILLINOIS
DEPARTMENT OF TRANSPORTATION

SUPERSTRUCTURE REMOVAL
STRUCTURE NO. 016-0098
SHEET S-7 OF S-56 SHEETS

F.A.I. RTE.	SECTION	COUNTY	TOTAL SHEETS	SHEET NO.
290	2019-191-B-R	COOK	265	173
		CONTRACT NO. 62K64		
		ILLINOIS	FED. AID PROJECT	

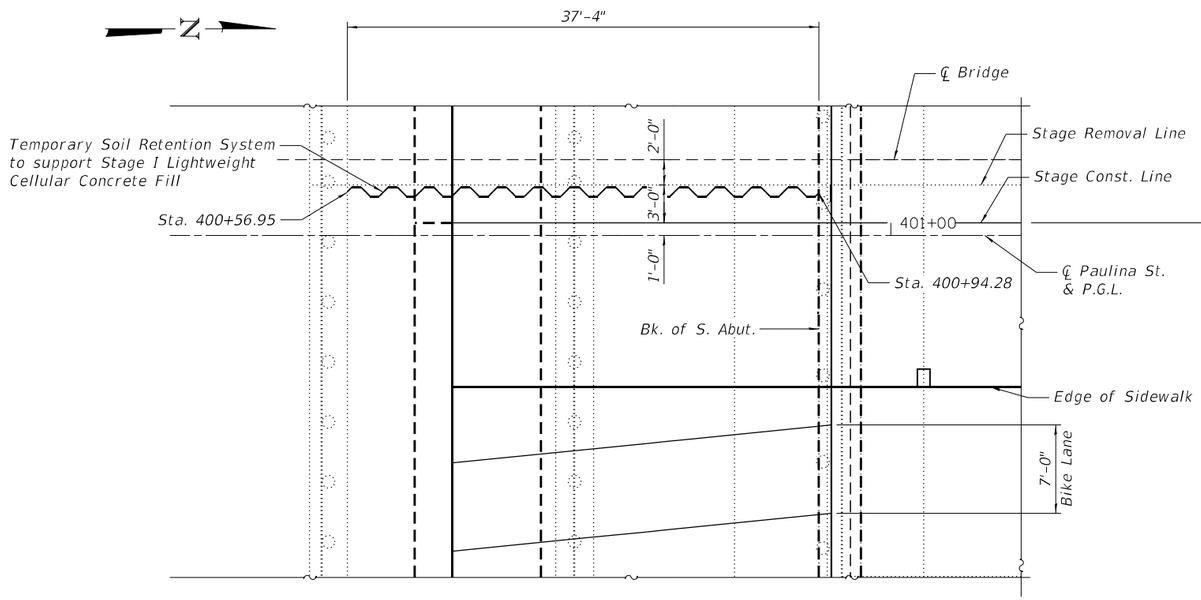

PARTIAL PLAN AT SOUTH ABUTMENT TEMPORARY SOIL RETENTION SYSTEM

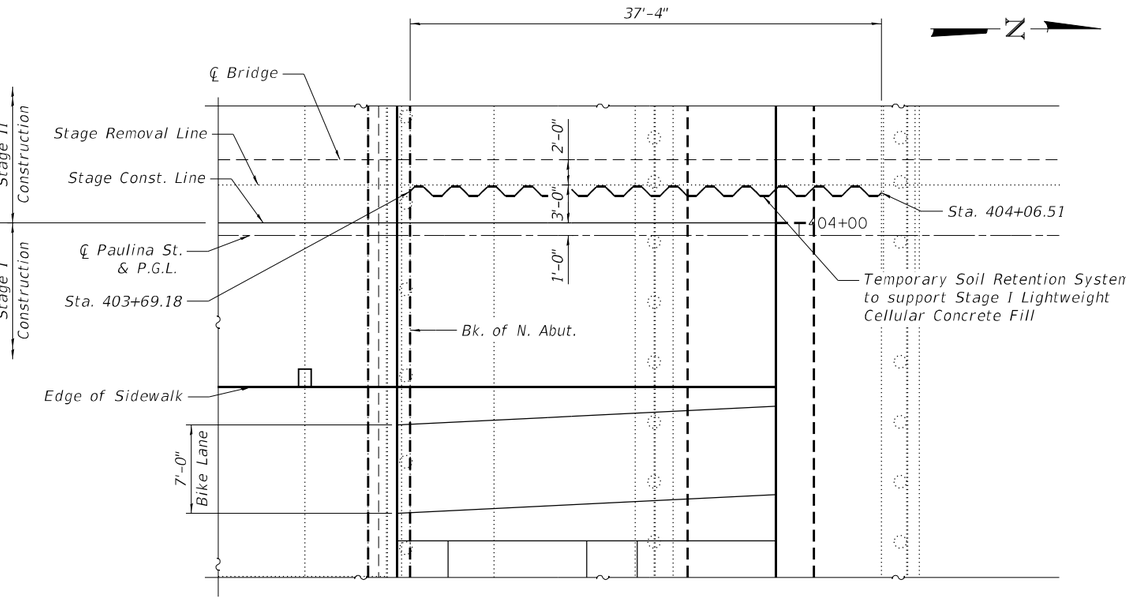

PARTIAL PLAN AT NORTH ABUTMENT TEMPORARY SOIL RETENTION SYSTEM

Notes:

1. A cantilever sheet piling design does not appear feasible and additional members or other retention systems may be necessary. The Contractor shall submit a temporary soil retention system design including plan details and calculations for review and acceptance by the Engineer.

2. The Temporary Soil Retention System may be removed or abandoned in place, with Engineer's approval, once Lightweight Cellular Concrete Fill is cured, at no additional cost.

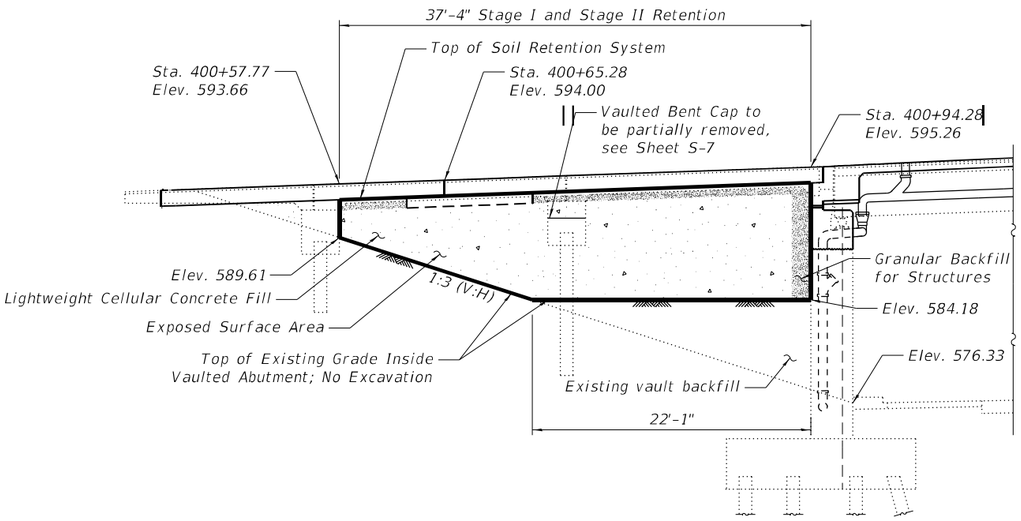

SOUTH ABUTMENT TEMPORARY SOIL RETENTION ELEVATION

Stage I Retention Shown, Stage II Similar
(Looking West)

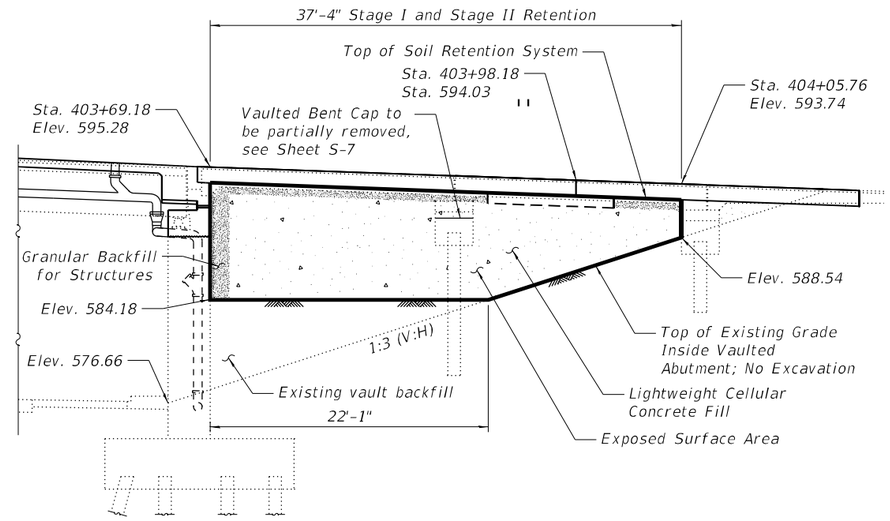

NORTH ABUTMENT TEMPORARY SOIL RETENTION ELEVATION

Stage I Retention Shown, Stage II Similar
(Looking West)

BILL OF MATERIAL

Item	Unit	Quantity
Temporary Soil Retention System	Sq Ft	654

MODEL: Default
FILE NAME: P:\10-IL\14411-IDOT - Sacramento and Paulina over I-290\Work\CADD\Paulina - Contract 62K64\CADD_Sheets\Structural\D162K64-0160098-008-Temporary Soil Retention System.dgn
10/9/2025 4:31:38 PM

COLLINS ENGINEERS INC.

USER NAME =	DESIGNED - MR	REVISED -	
	CHECKED - EKM	REVISED -	
PLOT SCALE =	DRAWN - DR	REVISED -	
PLOT DATE =	CHECKED - EKM	REVISED -	

STATE OF ILLINOIS
DEPARTMENT OF TRANSPORTATION

TEMPORARY SOIL RETENTION SYSTEM
STRUCTURE NO. 016-0098

SHEET S-8 OF S-56 SHEETS

F.A.I. RTE.	SECTION	COUNTY	TOTAL SHEETS	SHEET NO.
290	2019-191-B-R	COOK	265	174

CONTRACT NO. 62K64
ILLINOIS FED. AID PROJECT

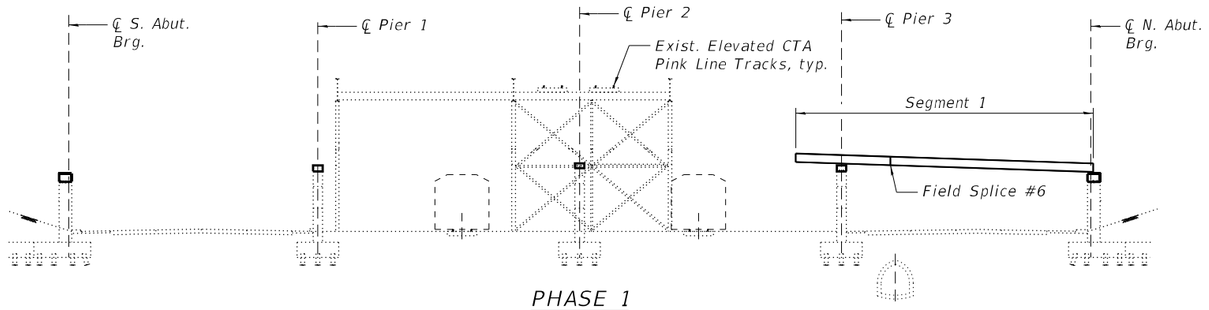

PHASE 1
(Looking West)

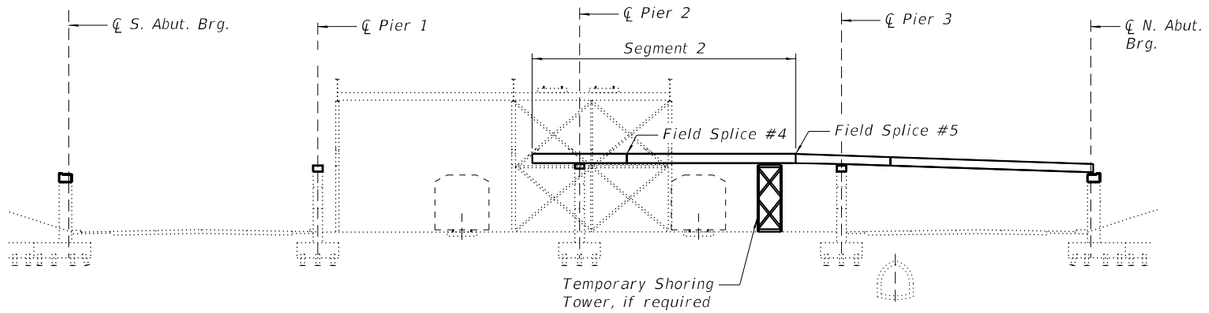

PHASE 2
(Looking West)

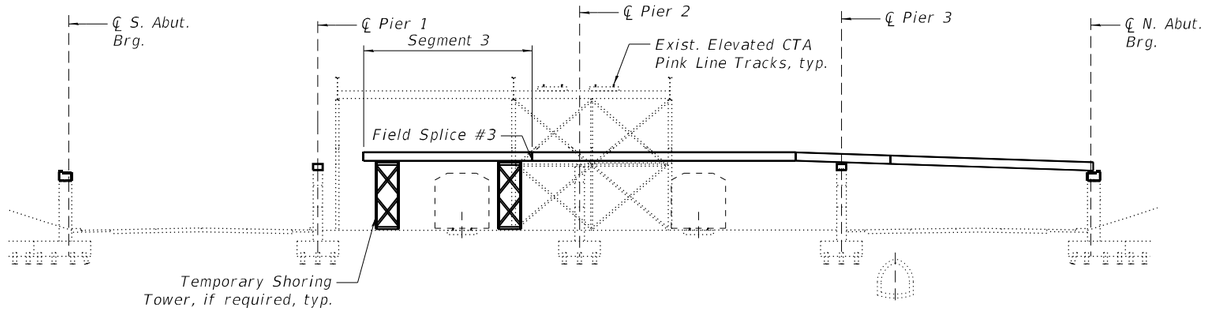

PHASE 3
(Looking West)

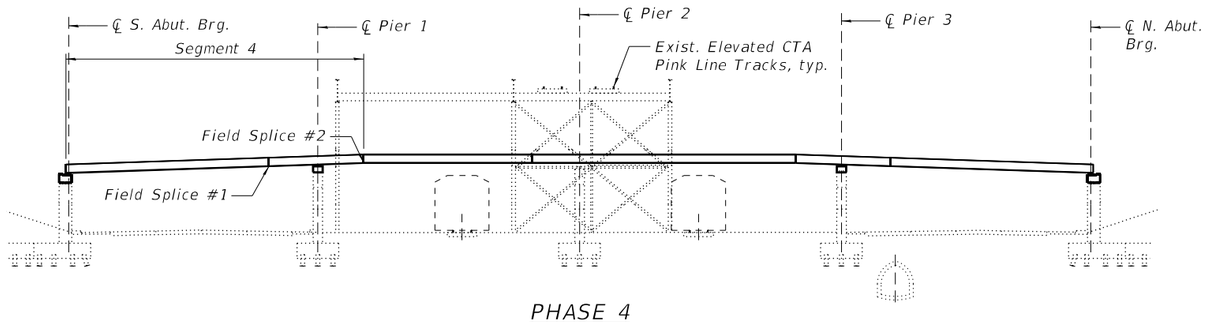

PHASE 4
(Looking West)

STAGE I CONSTRUCTION

PHASE 1

1. Construct North and South Abutment Concrete Extensions.
2. Construct Piers 1, 2, and 3 Cap Concrete Extensions.
3. Bolt Field Splice #6 prior to Segment 1 erection.
4. Erect a pair of Segment 1 and support on North Abutment and Pier 3.

PHASE 2

1. Bolt Field Splice #4 prior to Segment 2 erection.
2. Erect a pair of Segment 2 and support on Pier 2. Bolt Field Splice #5.
3. Use temporary shoring tower, if required.

PHASE 3

1. Erect a pair of Segment 3 and support on temporary shoring towers, if required. Coordinate logistics of crane(s) with overhead CTA structure. Longitudinal beam slide is a feasible alternative.
2. Bolt Field Splice #3.

PHASE 4

1. Bolt Field Splice #1 prior to erection, and erect a pair of Segment 4 supported on South Abutment and Pier 1.
2. Bolt Fiels Splice #2.
3. Repeat process for the rest of the beams.

STAGE II CONSTRUCTION

Repeat the process shown in Phases 1 through 4.

NOTES:

1. See general notes on Sheet S-2 and additional notes on Sheet S-3.
2. The phases are presented as a suggested erection procedure. The Contractor is responsible for the Means and Methods.
3. Before starting work, the Contractor shall submit a steel erection plan for approval detailing the proposed methods of erection and the amount, locations, and types of equipment to be used. The plans shall be prepared and sealed by an Illinois Licensed Structural Engineer. See Special Provisions.
4. The plan shall be submitted at least 60 days prior to the proposed beginning of Erection. Copies of the Erection Plan shall be submitted to the Engineer and the CTA for review.
5. Cost of any temporary shoring is included in the pay item "Furnishing and Erecting Structural Steel."

MODEL: Default
FILE NAME: P:\10-IL11411-IDOT - Sacramento and Paulina over I-290\Work\CADD\Paulina - Contract 62K64\CADD_Sheets\Structural\D162K64-0160098-009-Erection Sequence.dgn
10/9/2025 4:31:50 PM

COLLINS ENGINEERS INC.

USER NAME =	DESIGNED - MR	REVISED -	
	CHECKED - EKM	REVISED -	
PLOT SCALE =	DRAWN - DR	REVISED -	
PLOT DATE =	CHECKED - EKM	REVISED -	

STATE OF ILLINOIS
DEPARTMENT OF TRANSPORTATION

SUGGESTED BEAM ERECTION PLAN
STRUCTURE NO. 016-0098
SHEET S-9 OF S-56 SHEETS

F.A.I. RTE.	SECTION	COUNTY	TOTAL SHEETS	SHEET NO.
290	2019-191-B-R	COOK	265	175
		CONTRACT NO. 62K64		
	ILLINOIS FED. AID PROJECT			

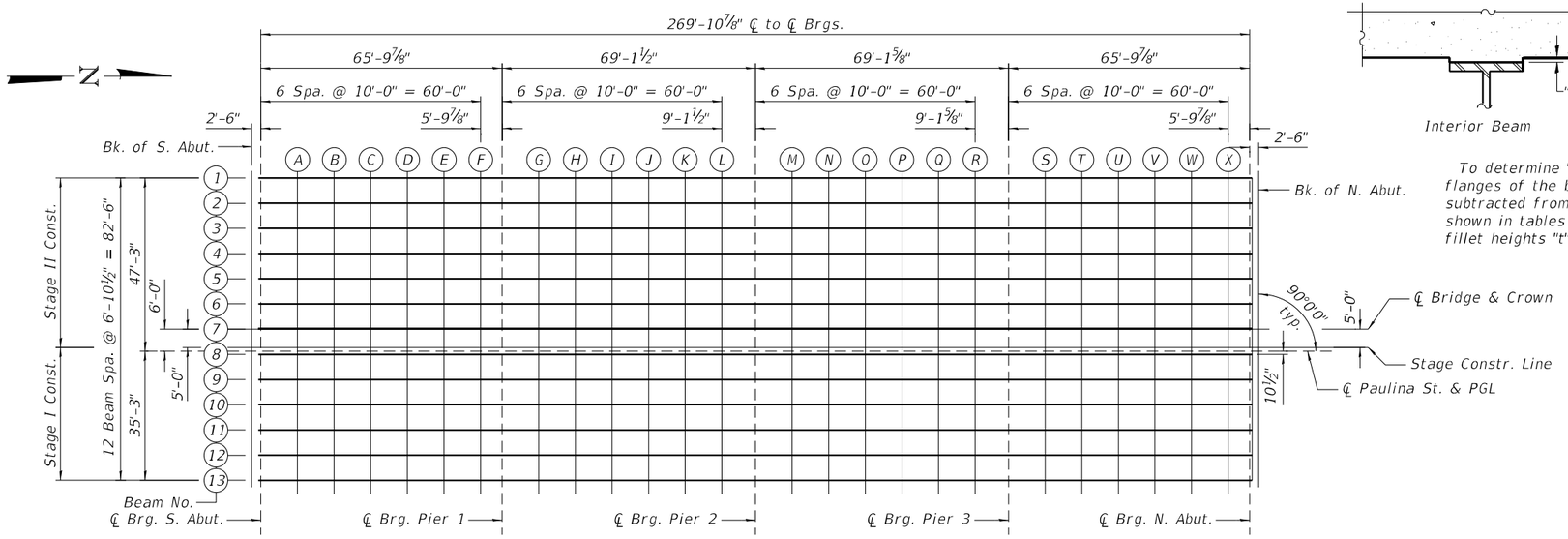

PLAN

Interior Beam

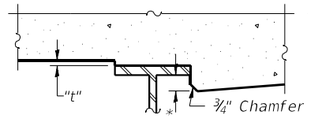

At Minimum Fillet
* Variable (not less than ¼")

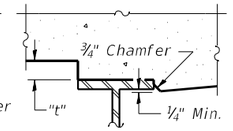

At Maximum Fillet

To determine "t": After all structural steel has been erected, elevations of the top flanges of the beams shall be taken at intervals shown in the Plan. These elevations subtracted from the "Theoretical Grade Elevations Adjusted for Dead Load Deflection" shown in tables below and on Sheets S-11 thru S-15, minus slab thickness, equals the fillet heights "t" above top flange of beams.

FILLET HEIGHTS

BEAM 1

Location	Station	Offset	Theoretical Grade Elevations	Theoretical Grade Elevations Adjusted For Dead Load Deflection
Bk. S. Abut.	400+94.28	-47.25	595.26	595.26
℄ Brg. S. Abut.	400+96.78	-47.25	595.36	595.36
A	401+06.78	-47.25	595.73	595.77
B	401+16.78	-47.25	596.09	596.16
C	401+26.78	-47.25	596.45	596.52
D	401+36.78	-47.25	596.77	596.84
E	401+46.78	-47.25	597.07	597.10
F	401+56.78	-47.25	597.33	597.34
℄ Brg. Pier 1	401+62.60	-47.25	597.47	597.47
G	401+72.60	-47.25	597.68	597.68
H	401+82.60	-47.25	597.85	597.87
I	401+92.60	-47.25	598.00	598.02
J	402+02.60	-47.25	598.11	598.14
K	402+12.60	-47.25	598.19	598.21
L	402+22.60	-47.25	598.24	598.24
℄ Brg. Pier 2	402+31.73	-47.25	598.25	598.25
M	402+41.73	-47.25	598.23	598.24
N	402+51.73	-47.25	598.19	598.20
O	402+61.73	-47.25	598.10	598.13
P	402+71.73	-47.25	597.99	598.01
Q	402+81.73	-47.25	597.84	597.85
R	402+91.73	-47.25	597.66	597.66
℄ Brg. Pier 3	403+00.86	-47.25	597.47	597.47
S	403+10.86	-47.25	597.23	597.25
T	403+20.86	-47.25	596.95	597.00
U	403+30.86	-47.25	596.64	596.72
V	403+40.86	-47.25	596.30	596.38
W	403+50.86	-47.25	595.95	596.01
X	403+60.86	-47.25	595.59	595.62
℄ Brg. N. Abut.	403+66.68	-47.25	595.38	595.38
Bk. N. Abut.	403+69.18	-47.25	595.28	595.28

BEAM 2

Location	Station	Offset	Theoretical Grade Elevations	Theoretical Grade Elevations Adjusted For Dead Load Deflection
Bk. S. Abut.	400+94.28	-40.38	595.15	595.15
℄ Brg. S. Abut.	400+96.78	-40.38	595.26	595.26
A	401+06.78	-40.38	595.63	595.67
B	401+16.78	-40.38	595.99	596.06
C	401+26.78	-40.38	596.34	596.42
D	401+36.78	-40.38	596.67	596.74
E	401+46.78	-40.38	596.96	597.00
F	401+56.78	-40.38	597.23	597.24
℄ Brg. Pier 1	401+62.60	-40.38	597.36	597.36
G	401+72.60	-40.38	597.57	597.57
H	401+82.60	-40.38	597.75	597.76
I	401+92.60	-40.38	597.90	597.92
J	402+02.60	-40.38	598.01	598.03
K	402+12.60	-40.38	598.09	598.10
L	402+22.60	-40.38	598.13	598.14
℄ Brg. Pier 2	402+31.73	-40.38	598.15	598.15
M	402+41.73	-40.38	598.13	598.14
N	402+51.73	-40.38	598.08	598.10
O	402+61.73	-40.38	598.00	598.03
P	402+71.73	-40.38	597.89	597.91
Q	402+81.73	-40.38	597.74	597.75
R	402+91.73	-40.38	597.56	597.56
℄ Brg. Pier 3	403+00.86	-40.38	597.37	597.37
S	403+10.86	-40.38	597.12	597.14
T	403+20.86	-40.38	596.85	596.90
U	403+30.86	-40.38	596.54	596.62
V	403+40.86	-40.38	596.20	596.28
W	403+50.86	-40.38	595.85	595.91
X	403+60.86	-40.38	595.49	595.51
℄ Brg. N. Abut.	403+66.68	-40.38	595.28	595.28
Bk. N. Abut.	403+69.18	-40.38	595.17	595.17

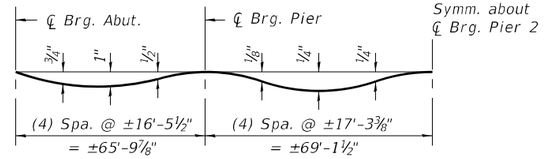

DEAD LOAD DEFLECTION DIAGRAM

Note:
The above deflections are not to be used in the field if the engineer is working from the grade elevations adjusted for dead load deflections as shown on this sheet and on Sheets S-11 thru S-15.

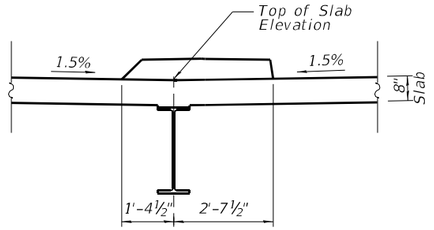

TOP OF SLAB ELEVATION LOCATION

At Beam 4
(Looking North)

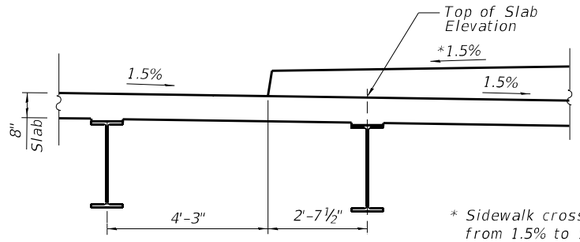

* Sidewalk cross-slope transtions from 1.5% to 1.0% at abutments

TOP OF SLAB ELEVATION LOCATION

Typical for Beams 10, 11, 12, and 13
(Looking North)

MODEL: Default
FILE NAME: P:\10-IL11411-IDOT - Sacramento and Paulina over I-290\Work\CADD\Paulina - Contract 62K64\CADD_Sheets\Structural\D162K64-0160098-010-TopSlabElev1.dgn
10/9/2025 4:32:11 PM

COLLINS ENGINEERS INC.

USER NAME =	DESIGNED - MR	REVISED -	
	CHECKED - EKM	REVISED -	
PLOT SCALE =	DRAWN - DR	REVISED -	
PLOT DATE =	CHECKED - EKM	REVISED -	

STATE OF ILLINOIS
DEPARTMENT OF TRANSPORTATION

TOP OF SLAB ELEVATIONS
STRUCTURE NO. 016-0098
SHEET S-10 OF S-56 SHEETS

F.A.I. RTE.	SECTION	COUNTY	TOTAL SHEETS	SHEET NO.
290	2019-191-B-R	COOK	265	176
		CONTRACT NO. 62K64		
	ILLINOIS	FED. AID PROJECT		

BEAM 3

Location	Station	Offset	Theoretical Grade Elevations	Theoretical Grade Elevations Adjusted For Dead Load Deflection
Bk. S. Abut.	400+94.28	-33.50	595.05	595.05
℄ Brg. S. Abut.	400+96.78	-33.50	595.16	595.16
A	401+06.78	-33.50	595.52	595.57
B	401+16.78	-33.50	595.88	595.96
C	401+26.78	-33.50	596.24	596.32
D	401+36.78	-33.50	596.57	596.63
E	401+46.78	-33.50	596.86	596.90
F	401+56.78	-33.50	597.12	597.13
℄ Brg. Pier 1	401+62.60	-33.50	597.26	597.26
G	401+72.60	-33.50	597.47	597.47
H	401+82.60	-33.50	597.65	597.66
I	401+92.60	-33.50	597.79	597.82
J	402+02.60	-33.50	597.90	597.90
K	402+12.60	-33.50	597.98	598.00
L	402+22.60	-33.50	598.03	598.04
℄ Brg. Pier 2	402+31.73	-33.50	598.04	598.04
M	402+41.73	-33.50	598.03	598.03
N	402+51.73	-33.50	597.98	598.00
O	402+61.73	-33.50	597.90	597.92
P	402+71.73	-33.50	597.78	597.81
Q	402+81.73	-33.50	597.64	597.65
R	402+91.73	-33.50	597.46	597.46
℄ Brg. Pier 3	403+00.86	-33.50	597.26	597.26
S	403+10.86	-33.50	597.02	597.04
T	403+20.86	-33.50	596.75	596.80
U	403+30.86	-33.50	596.44	596.51
V	403+40.86	-33.50	596.10	596.18
W	403+50.86	-33.50	595.74	595.81
X	403+60.86	-33.50	595.38	595.41
℄ Brg. N. Abut.	403+66.68	-33.50	595.17	595.17
Bk. N. Abut.	403+69.18	-33.50	595.07	595.07

BEAM 4

Location	Station	Offset	Theoretical Grade Elevations	Theoretical Grade Elevations Adjusted For Dead Load Deflection
Bk. S. Abut.	400+94.28	-26.63	594.95	594.95
℄ Brg. S. Abut.	400+96.78	-26.63	595.05	595.05
A	401+06.78	-26.63	595.42	595.46
B	401+16.78	-26.63	595.78	595.85
C	401+26.78	-26.63	596.14	596.21
D	401+36.78	-26.63	596.46	596.53
E	401+46.78	-26.63	596.76	596.80
F	401+56.78	-26.63	597.02	597.03
℄ Brg. Pier 1	401+62.60	-26.63	597.16	597.16
G	401+72.60	-26.63	597.37	597.37
H	401+82.60	-26.63	597.54	597.56
I	401+92.60	-26.63	597.69	597.71
J	402+02.60	-26.63	597.80	597.83
K	402+12.60	-26.63	597.88	597.90
L	402+22.60	-26.63	597.93	597.93
℄ Brg. Pier 2	402+31.73	-26.63	597.94	597.94
M	402+41.73	-26.63	597.92	597.93
N	402+51.73	-26.63	597.88	597.89
O	402+61.73	-26.63	597.79	597.82
P	402+71.73	-26.63	597.68	597.70
Q	402+81.73	-26.63	597.53	597.54
R	402+91.73	-26.63	597.35	597.35
℄ Brg. Pier 3	403+00.86	-26.63	597.16	597.16
S	403+10.86	-26.63	596.92	596.94
T	403+20.86	-26.63	596.64	596.69
U	403+30.86	-26.63	596.33	596.41
V	403+40.86	-26.63	595.99	596.07
W	403+50.86	-26.63	595.64	595.70
X	403+60.86	-26.63	595.28	595.31
℄ Brg. N. Abut.	403+66.68	-26.63	595.07	595.07
Bk. N. Abut.	403+69.18	-26.63	594.97	594.97

BEAM 5

Location	Station	Offset	Theoretical Grade Elevations	Theoretical Grade Elevations Adjusted For Dead Load Deflection
Bk. S. Abut.	400+94.28	-19.75	595.05	595.05
℄ Brg. S. Abut.	400+96.78	-19.75	595.16	595.16
A	401+06.78	-19.75	595.52	595.57
B	401+16.78	-19.75	595.88	595.96
C	401+26.78	-19.75	596.24	596.32
D	401+36.78	-19.75	596.57	596.63
E	401+46.78	-19.75	596.86	596.90
F	401+56.78	-19.75	597.12	597.13
℄ Brg. Pier 1	401+62.60	-19.75	597.26	597.26
G	401+72.60	-19.75	597.47	597.47
H	401+82.60	-19.75	597.65	597.66
I	401+92.60	-19.75	597.79	597.82
J	402+02.60	-19.75	597.90	597.93
K	402+12.60	-19.75	597.98	598.00
L	402+22.60	-19.75	598.03	598.04
℄ Brg. Pier 2	402+31.73	-19.75	598.04	598.04
M	402+41.73	-19.75	598.03	598.03
N	402+51.73	-19.75	597.98	598.00
O	402+61.73	-19.75	597.90	597.92
P	402+71.73	-19.75	597.78	597.81
Q	402+81.73	-19.75	597.64	597.65
R	402+91.73	-19.75	597.46	597.46
℄ Brg. Pier 3	403+00.86	-19.75	597.26	597.26
S	403+10.86	-19.75	597.02	597.04
T	403+20.86	-19.75	596.75	596.80
U	403+30.86	-19.75	596.44	596.51
V	403+40.86	-19.75	596.10	596.18
W	403+50.86	-19.75	595.74	595.81
X	403+60.86	-19.75	595.38	595.41
℄ Brg. N. Abut.	403+66.68	-19.75	595.17	595.17
Bk. N. Abut.	403+69.18	-19.75	595.07	595.07

MODEL: Default
FILE NAME: P:\10-IL11411-IDOT - Sacramento and Paulina over I-290\Work\CADD\Paulina - Contract 62K64\CADD_Sheets\Structural\D162K64-0160098-011-TopSlabElev2.dgn
10/9/2025 4:32:25 PM

COLLINS ENGINEERS INC.

USER NAME =	DESIGNED - MR	REVISED -	
	CHECKED - EKM	REVISED -	
PLOT SCALE =	DRAWN - DR	REVISED -	
PLOT DATE =	CHECKED - EKM	REVISED -	

STATE OF ILLINOIS
DEPARTMENT OF TRANSPORTATION

TOP OF SLAB ELEVATIONS
STRUCTURE NO. 016-0098
SHEET S-11 OF S-56 SHEETS

F.A.I. RTE.	SECTION	COUNTY	TOTAL SHEETS	SHEET NO.
290	2019-191-B-R	COOK	265	177
		CONTRACT NO. 62K64		
	ILLINOIS	FED. AID PROJECT		

BEAM 6

Location	Station	Offset	Theoretical Grade Elevations	Theoretical Grade Elevations Adjusted For Dead Load Deflection
Bk. S. Abut.	400+94.28	-12.88	595.15	595.15
℄ Brg. S. Abut.	400+96.78	-12.88	595.26	595.26
A	401+06.78	-12.88	595.63	595.67
B	401+16.78	-12.88	595.99	596.06
C	401+26.78	-12.88	596.34	596.42
D	401+36.78	-12.88	596.67	596.74
E	401+46.78	-12.88	596.96	597.00
F	401+56.78	-12.88	597.23	597.24
℄ Brg. Pier 1	401+62.60	-12.88	597.36	597.36
G	401+72.60	-12.88	597.57	597.57
H	401+82.60	-12.88	597.75	597.76
I	401+92.60	-12.88	597.90	597.92
J	402+02.60	-12.88	598.01	598.03
K	402+12.60	-12.88	598.09	598.10
L	402+22.60	-12.88	598.13	598.14
℄ Brg. Pier 2	402+31.73	-12.88	598.15	598.15
M	402+41.73	-12.88	598.13	598.14
N	402+51.73	-12.88	598.08	598.10
O	402+61.73	-12.88	598.00	598.03
P	402+71.73	-12.88	597.89	597.91
Q	402+81.73	-12.88	597.74	597.75
R	402+91.73	-12.88	597.56	597.56
℄ Brg. Pier 3	403+00.86	-12.88	597.37	597.37
S	403+10.86	-12.88	597.12	597.14
T	403+20.86	-12.88	596.85	596.90
U	403+30.86	-12.88	596.54	596.62
V	403+40.86	-12.88	596.20	596.28
W	403+50.86	-12.88	595.85	595.91
X	403+60.86	-12.88	595.49	595.51
℄ Brg. N. Abut.	403+66.68	-12.88	595.28	595.28
Bk. N. Abut.	403+69.18	-12.88	595.17	595.17

BEAM 7 & ℄ BRIDGE & CROWN

Location	Station	Offset	Theoretical Grade Elevations	Theoretical Grade Elevations Adjusted For Dead Load Deflection
Bk. S. Abut.	400+94.28	-6.00	595.26	595.26
℄ Brg. S. Abut.	400+96.78	-6.00	595.36	595.36
A	401+06.78	-6.00	595.73	595.77
B	401+16.78	-6.00	596.09	596.16
C	401+26.78	-6.00	596.45	596.52
D	401+36.78	-6.00	596.77	596.84
E	401+46.78	-6.00	597.07	597.10
F	401+56.78	-6.00	597.33	597.34
℄ Brg. Pier 1	401+62.60	-6.00	597.47	597.47
G	401+72.60	-6.00	597.68	597.68
H	401+82.60	-6.00	597.85	597.87
I	401+92.60	-6.00	598.00	598.02
J	402+02.60	-6.00	598.11	598.14
K	402+12.60	-6.00	598.19	598.21
L	402+22.60	-6.00	598.24	598.24
℄ Brg. Pier 2	402+31.73	-6.00	598.25	598.25
M	402+41.73	-6.00	598.23	598.24
N	402+51.73	-6.00	598.19	598.20
O	402+61.73	-6.00	598.10	598.13
P	402+71.73	-6.00	597.99	598.01
Q	402+81.73	-6.00	597.84	597.85
R	402+91.73	-6.00	597.66	597.66
℄ Brg. Pier 3	403+00.86	-6.00	597.47	597.47
S	403+10.86	-6.00	597.23	597.25
T	403+20.86	-6.00	596.95	597.00
U	403+30.86	-6.00	596.64	596.72
V	403+40.86	-6.00	596.30	596.38
W	403+50.86	-6.00	595.95	596.01
X	403+60.86	-6.00	595.59	595.62
℄ Brg. N. Abut.	403+66.68	-6.00	595.38	595.38
Bk. N. Abut.	403+69.18	-6.00	595.28	595.28

STAGE CONSTRUCTION LINE

Location	Station	Offset	Theoretical Grade Elevations	Theoretical Grade Elevations Adjusted For Dead Load Deflection
Bk. S. Abut.	400+94.28	-1.00	595.18	595.18
℄ Brg. S. Abut.	400+96.78	-1.00	595.29	595.29
A	401+06.78	-1.00	595.65	595.69
B	401+16.78	-1.00	596.01	596.07
C	401+26.78	-1.00	596.37	596.43
D	401+36.78	-1.00	596.70	596.75
E	401+46.78	-1.00	596.99	597.02
F	401+56.78	-1.00	597.25	597.26
℄ Brg. Pier 1	401+62.60	-1.00	597.39	597.39
G	401+72.60	-1.00	597.60	597.60
H	401+82.60	-1.00	597.78	597.79
I	401+92.60	-1.00	597.92	597.94
J	402+02.60	-1.00	598.04	598.05
K	402+12.60	-1.00	598.11	598.13
L	402+22.60	-1.00	598.16	598.17
℄ Brg. Pier 2	402+31.73	-1.00	598.17	598.17
M	402+41.73	-1.00	598.16	598.16
N	402+51.73	-1.00	598.11	598.12
O	402+61.73	-1.00	598.03	598.05
P	402+71.73	-1.00	597.91	597.93
Q	402+81.73	-1.00	597.77	597.78
R	402+91.73	-1.00	597.59	597.59
℄ Brg. Pier 3	403+00.86	-1.00	597.39	597.39
S	403+10.86	-1.00	597.15	597.17
T	403+20.86	-1.00	596.88	596.92
U	403+30.86	-1.00	596.57	596.63
V	403+40.86	-1.00	596.23	596.29
W	403+50.86	-1.00	595.87	595.92
X	403+60.86	-1.00	595.51	595.53
℄ Brg. N. Abut.	403+66.68	-1.00	595.30	595.30
Bk. N. Abut.	403+69.18	-1.00	595.20	595.20

MODEL: Default
FILE NAME: P:\10-IL11411-IDOT - Sacramento and Paulina over I-290\Work\CADD\Paulina - Contract 62K64\CADD_Sheets\Structural\D162K64-0160098-012-TopSlabElev3.dgn
10/9/2025 4:32:35 PM

COLLINS ENGINEERS INC.

USER NAME =	DESIGNED - MR	REVISED -	
	CHECKED - EKM	REVISED -	
PLOT SCALE =	DRAWN - DR	REVISED -	
PLOT DATE =	CHECKED - EKM	REVISED -	

STATE OF ILLINOIS
DEPARTMENT OF TRANSPORTATION

TOP OF SLAB ELEVATIONS
STRUCTURE NO. 016-0098
SHEET S-12 OF S-56 SHEETS

F.A.I. RTE.	SECTION	COUNTY	TOTAL SHEETS	SHEET NO.
290	2019-191-B-R	COOK	265	178
		CONTRACT NO. 62K64		
	ILLINOIS	FED. AID PROJECT		

℄ PAULINA ST. & PGL

Location	Station	Offset	Theoretical Grade Elevations	Theoretical Grade Elevations Adjusted For Dead Load Deflection
Bk. S. Abut.	400+94.28	0.00	595.17	595.17
℄ Brg. S. Abut.	400+96.78	0.00	595.27	595.27
A	401+06.78	0.00	595.64	595.68
B	401+16.78	0.00	596.00	596.07
C	401+26.78	0.00	596.36	596.43
D	401+36.78	0.00	596.68	596.75
E	401+46.78	0.00	596.98	597.01
F	401+56.78	0.00	597.24	597.25
℄ Brg. Pier 1	401+62.60	0.00	597.38	597.38
G	401+72.60	0.00	597.59	597.59
H	401+82.60	0.00	597.76	597.78
I	401+92.60	0.00	597.91	597.93
J	402+02.60	0.00	598.02	598.05
K	402+12.60	0.00	598.10	598.12
L	402+22.60	0.00	598.15	598.15
℄ Brg. Pier 2	402+31.73	0.00	598.16	598.16
M	402+41.73	0.00	598.14	598.15
N	402+51.73	0.00	598.10	598.11
O	402+61.73	0.00	598.01	598.04
P	402+71.73	0.00	597.90	597.92
Q	402+81.73	0.00	597.75	597.76
R	402+91.73	0.00	597.57	597.57
℄ Brg. Pier 3	403+00.86	0.00	597.38	597.38
S	403+10.86	0.00	597.14	597.16
T	403+20.86	0.00	596.86	596.91
U	403+30.86	0.00	596.55	596.63
V	403+40.86	0.00	596.21	596.29
W	403+50.86	0.00	595.86	595.92
X	403+60.86	0.00	595.50	595.53
℄ Brg. N. Abut.	403+66.68	0.00	595.29	595.29
Bk. N. Abut.	403+69.18	0.00	595.19	595.19

BEAM 8

Location	Station	Offset	Theoretical Grade Elevations	Theoretical Grade Elevations Adjusted For Dead Load Deflection
Bk. S. Abut.	400+94.28	0.88	595.15	595.15
℄ Brg. S. Abut.	400+96.78	0.88	595.26	595.26
A	401+06.78	0.88	595.63	595.67
B	401+16.78	0.88	595.99	596.06
C	401+26.78	0.88	596.34	596.42
D	401+36.78	0.88	596.67	596.74
E	401+46.78	0.88	596.96	597.00
F	401+56.78	0.88	597.23	597.24
℄ Brg. Pier 1	401+62.60	0.88	597.36	597.36
G	401+72.60	0.88	597.57	597.57
H	401+82.60	0.88	597.75	597.76
I	401+92.60	0.88	597.90	597.92
J	402+02.60	0.88	598.01	598.03
K	402+12.60	0.88	598.09	598.10
L	402+22.60	0.88	598.13	598.14
℄ Brg. Pier 2	402+31.73	0.88	598.15	598.15
M	402+41.73	0.88	598.13	598.14
N	402+51.73	0.88	598.08	598.10
O	402+61.73	0.88	598.00	598.03
P	402+71.73	0.88	597.89	597.91
Q	402+81.73	0.88	597.74	597.75
R	402+91.73	0.88	597.56	597.56
℄ Brg. Pier 3	403+00.86	0.88	597.37	597.37
S	403+10.86	0.88	597.12	597.14
T	403+20.86	0.88	596.85	596.90
U	403+30.86	0.88	596.54	596.62
V	403+40.86	0.88	596.20	596.28
W	403+50.86	0.88	595.85	595.91
X	403+60.86	0.88	595.49	595.51
℄ Brg. N. Abut.	403+66.68	0.88	595.28	595.28
Bk. N. Abut.	403+69.18	0.88	595.17	595.17

BEAM 9

Location	Station	Offset	Theoretical Grade Elevations	Theoretical Grade Elevations Adjusted For Dead Load Deflection
Bk. S. Abut.	400+94.28	7.75	595.05	595.05
℄ Brg. S. Abut.	400+96.78	7.75	595.16	595.16
A	401+06.78	7.75	595.52	595.57
B	401+16.78	7.75	595.88	595.96
C	401+26.78	7.75	596.24	596.32
D	401+36.78	7.75	596.57	596.63
E	401+46.78	7.75	596.86	596.90
F	401+56.78	7.75	597.12	597.13
℄ Brg. Pier 1	401+62.60	7.75	597.26	597.26
G	401+72.60	7.75	597.47	597.47
H	401+82.60	7.75	597.65	597.66
I	401+92.60	7.75	597.79	597.82
J	402+02.60	7.75	597.90	597.93
K	402+12.60	7.75	597.98	598.00
L	402+22.60	7.75	598.03	598.04
℄ Brg. Pier 2	402+31.73	7.75	598.04	598.04
M	402+41.73	7.75	598.03	598.03
N	402+51.73	7.75	597.98	598.00
O	402+61.73	7.75	597.90	597.92
P	402+71.73	7.75	597.78	597.81
Q	402+81.73	7.75	597.64	597.65
R	402+91.73	7.75	597.46	597.46
℄ Brg. Pier 3	403+00.86	7.75	597.26	597.26
S	403+10.86	7.75	597.02	597.04
T	403+20.86	7.75	596.75	596.80
U	403+30.86	7.75	596.44	596.51
V	403+40.86	7.75	596.10	596.18
W	403+50.86	7.75	595.74	595.81
X	403+60.86	7.75	595.38	595.41
℄ Brg. N. Abut.	403+66.68	7.75	595.17	595.17
Bk. N. Abut.	403+69.18	7.75	595.07	595.07

MODEL: Default
FILE NAME: P:\10-IL11411-IDOT - Sacramento and Paulina over I-290\Work\CADD\Paulina - Contract 62K64\CADD_Sheets\Structural\D162K64-0160098-013-TopSlabElev4.dgn
10/9/2025 4:32:45 PM

COLLINS ENGINEERS INC.

USER NAME =	DESIGNED - MR	REVISED -	
	CHECKED - EKM	REVISED -	
PLOT SCALE =	DRAWN - DR	REVISED -	
PLOT DATE =	CHECKED - EKM	REVISED -	

STATE OF ILLINOIS
DEPARTMENT OF TRANSPORTATION

TOP OF SLAB ELEVATIONS
STRUCTURE NO. 016-0098
SHEET S-13 OF S-56 SHEETS

F.A.I. RTE.	SECTION	COUNTY	TOTAL SHEETS	SHEET NO.
290	2019-191-B-R	COOK	265	179
		CONTRACT NO. 62K64		
	ILLINOIS	FED. AID PROJECT		

BEAM 10

Location	Station	Offset	Theoretical Grade Elevations	Theoretical Grade Elevations Adjusted For Dead Load Deflection
Bk. S. Abut.	400+94.28	14.63	594.95	594.95
℄ Brg. S. Abut.	400+96.78	14.63	595.05	595.05
A	401+06.78	14.63	595.42	595.46
B	401+16.78	14.63	595.78	595.85
C	401+26.78	14.63	596.14	596.21
D	401+36.78	14.63	596.46	596.53
E	401+46.78	14.63	596.76	596.80
F	401+56.78	14.63	597.02	597.03
℄ Brg. Pier 1	401+62.60	14.63	597.16	597.16
G	401+72.60	14.63	597.37	597.37
H	401+82.60	14.63	597.54	597.56
I	401+92.60	14.63	597.69	597.71
J	402+02.60	14.63	597.80	597.83
K	402+12.60	14.63	597.88	597.90
L	402+22.60	14.63	597.93	597.93
℄ Brg. Pier 2	402+31.73	14.63	597.94	597.94
M	402+41.73	14.63	597.92	597.93
N	402+51.73	14.63	597.88	597.89
O	402+61.73	14.63	597.79	597.82
P	402+71.73	14.63	597.68	597.70
Q	402+81.73	14.63	597.53	597.54
R	402+91.73	14.63	597.35	597.35
℄ Brg. Pier 3	403+00.86	14.63	597.16	597.16
S	403+10.86	14.63	596.92	596.94
T	403+20.86	14.63	596.64	596.69
U	403+30.86	14.63	596.33	596.41
V	403+40.86	14.63	595.99	596.07
W	403+50.86	14.63	595.64	595.70
X	403+60.86	14.63	595.28	595.31
℄ Brg. N. Abut.	403+66.68	14.63	595.07	595.07
Bk. N. Abut.	403+69.18	14.63	594.97	594.97

BEAM 11

Location	Station	Offset	Theoretical Grade Elevations	Theoretical Grade Elevations Adjusted For Dead Load Deflection
Bk. S. Abut.	400+94.28	21.50	594.84	594.84
℄ Brg. S. Abut.	400+96.78	21.50	594.95	594.95
A	401+06.78	21.50	595.32	595.36
B	401+16.78	21.50	595.68	595.75
C	401+26.78	21.50	596.03	596.11
D	401+36.78	21.50	596.36	596.43
E	401+46.78	21.50	596.65	596.69
F	401+56.78	21.50	596.92	596.93
℄ Brg. Pier 1	401+62.60	21.50	597.04	597.04
G	401+72.60	21.50	597.26	597.26
H	401+82.60	21.50	597.44	597.45
I	401+92.60	21.50	597.59	597.61
J	402+02.60	21.50	597.70	597.72
K	402+12.60	21.50	597.78	597.80
L	402+22.60	21.50	597.82	597.83
℄ Brg. Pier 2	402+31.73	21.50	597.84	597.84
M	402+41.73	21.50	597.82	597.83
N	402+51.73	21.50	597.77	597.79
O	402+61.73	21.50	597.69	597.72
P	402+71.73	21.50	597.58	597.60
Q	402+81.73	21.50	597.43	597.44
R	402+91.73	21.50	597.25	597.25
℄ Brg. Pier 3	403+00.86	21.50	597.06	597.06
S	403+10.86	21.50	596.81	596.84
T	403+20.86	21.50	596.54	596.59
U	403+30.86	21.50	596.23	596.31
V	403+40.86	21.50	595.89	595.97
W	403+50.86	21.50	595.54	595.60
X	403+60.86	21.50	595.18	595.20
℄ Brg. N. Abut.	403+66.68	21.50	594.97	594.97
Bk. N. Abut.	403+69.18	21.50	594.86	594.86

BEAM 12

Location	Station	Offset	Theoretical Grade Elevations	Theoretical Grade Elevations Adjusted For Dead Load Deflection
Bk. S. Abut.	400+94.28	28.38	594.74	594.74
℄ Brg. S. Abut.	400+96.78	28.38	594.85	594.85
A	401+06.78	28.38	595.21	595.26
B	401+16.78	28.38	595.57	595.65
C	401+26.78	28.38	595.93	596.01
D	401+36.78	28.38	596.26	596.32
E	401+46.78	28.38	596.55	596.59
F	401+56.78	28.38	596.81	596.82
℄ Brg. Pier 1	401+62.60	28.38	596.95	596.95
G	401+72.60	28.38	597.16	597.16
H	401+82.60	28.38	597.34	597.35
I	401+92.60	28.38	597.48	597.51
J	402+02.60	28.38	597.59	597.62
K	402+12.60	28.38	597.67	597.69
L	402+22.60	28.38	597.72	597.73
℄ Brg. Pier 2	402+31.73	28.38	597.73	597.73
M	402+41.73	28.38	597.72	597.73
N	402+51.73	28.38	597.67	597.69
O	402+61.73	28.38	597.59	597.61
P	402+71.73	28.38	597.47	597.50
Q	402+81.73	28.38	597.33	597.34
R	402+91.73	28.38	597.15	597.15
℄ Brg. Pier 3	403+00.86	28.38	596.95	596.95
S	403+10.86	28.38	596.71	596.73
T	403+20.86	28.38	596.44	596.49
U	403+30.86	28.38	596.13	596.20
V	403+40.86	28.38	595.79	595.87
W	403+50.86	28.38	595.43	595.50
X	403+60.86	28.38	595.07	595.10
℄ Brg. N. Abut.	403+66.68	28.38	594.86	594.86
Bk. N. Abut.	403+69.18	28.38	594.76	594.76

MODEL: Default
FILE NAME: P:\10-IL11411-IDOT - Sacramento and Paulina over I-290\Work\CADD\Paulina - Contract 62K64\CADD_Sheets\Structural\D162K64-0160098-014-TopSlabElev5.dgn
10/9/2025 4:32:56 PM

COLLINS ENGINEERS INC.

USER NAME =	DESIGNED - MR	REVISED -	
	CHECKED - EKM	REVISED -	
PLOT SCALE =	DRAWN - DR	REVISED -	
PLOT DATE =	CHECKED - EKM	REVISED -	

STATE OF ILLINOIS
DEPARTMENT OF TRANSPORTATION

TOP OF SLAB ELEVATIONS
STRUCTURE NO. 016-0098
SHEET S-14 OF S-56 SHEETS

F.A.I. RTE.	SECTION	COUNTY	TOTAL SHEETS	SHEET NO.
290	2019-191-B-R	COOK	265	180
		CONTRACT NO. 62K64		
	ILLINOIS	FED. AID PROJECT		

BEAM 13

Location	Station	Offset	Theoretical Grade Elevations	Theoretical Grade Elevations Adjusted For Dead Load Deflection
Bk. S. Abut.	400+94.28	35.25	594.64	594.64
℄ Brg. S. Abut.	400+96.78	35.25	594.74	594.74
A	401+06.78	35.25	595.11	595.15
B	401+16.78	35.25	595.47	595.54
C	401+26.78	35.25	595.83	595.91
D	401+36.78	35.25	596.15	596.22
E	401+46.78	35.25	596.45	596.49
F	401+56.78	35.25	596.71	596.72
℄ Brg. Pier 1	401+62.60	35.25	596.85	596.85
G	401+72.60	35.25	597.06	597.06
H	401+82.60	35.25	597.24	597.25
I	401+92.60	35.25	597.38	597.40
J	402+02.60	35.25	597.49	597.52
K	402+12.60	35.25	597.57	597.59
L	402+22.60	35.25	597.62	597.62
℄ Brg. Pier 2	402+31.73	35.25	597.63	597.63
M	402+41.73	35.25	597.62	597.62
N	402+51.73	35.25	597.57	597.59
O	402+61.73	35.25	597.48	597.51
P	402+71.73	35.25	597.37	597.39
Q	402+81.73	35.25	597.22	597.23
R	402+91.73	35.25	597.04	597.04
℄ Brg. Pier 3	403+00.86	35.25	596.85	596.85
S	403+10.86	35.25	596.61	596.63
T	403+20.86	35.25	596.33	596.38
U	403+30.86	35.25	596.03	596.10
V	403+40.86	35.25	595.68	595.76
W	403+50.86	35.25	595.33	595.39
X	403+60.86	35.25	594.97	595.00
℄ Brg. N. Abut.	403+66.68	35.25	594.76	594.76
Bk. N. Abut.	403+69.18	35.25	594.66	594.66

MODEL: Default
FILE NAME: P:\10-IL11411-IDOT - Sacramento and Paulina over I-290\Work\CADD\Paulina - Contract 62K64\CADD_Sheets\Structural\D162K64-0160098-015-TopSlabElev6.dgn
10/9/2025 4:33:08 PM

COLLINS ENGINEERS INC.

USER NAME =	DESIGNED - MR	REVISED -	
	CHECKED - EKM	REVISED -	
PLOT SCALE =	DRAWN - DR	REVISED -	
PLOT DATE =	CHECKED - EKM	REVISED -	

STATE OF ILLINOIS
DEPARTMENT OF TRANSPORTATION

TOP OF SLAB ELEVATIONS
STRUCTURE NO. 016-0098
SHEET S-15 OF S-56 SHEETS

F.A.I. RTE.	SECTION	COUNTY	TOTAL SHEETS	SHEET NO.
290	2019-191-B-R	COOK	265	181
		CONTRACT NO. 62K64		
	ILLINOIS	FED. AID PROJECT		

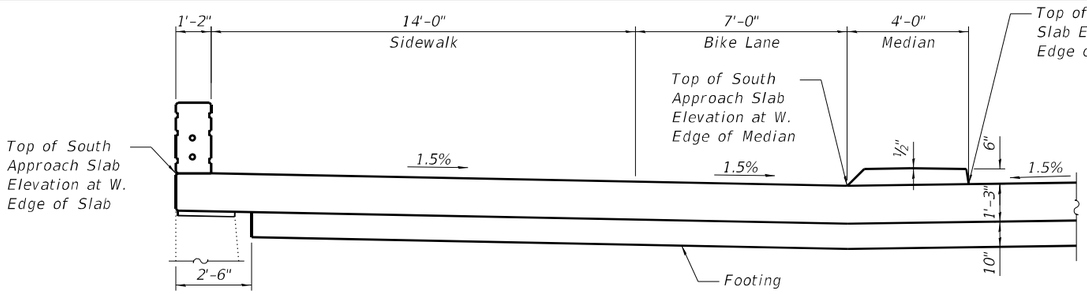

SECTION A-A

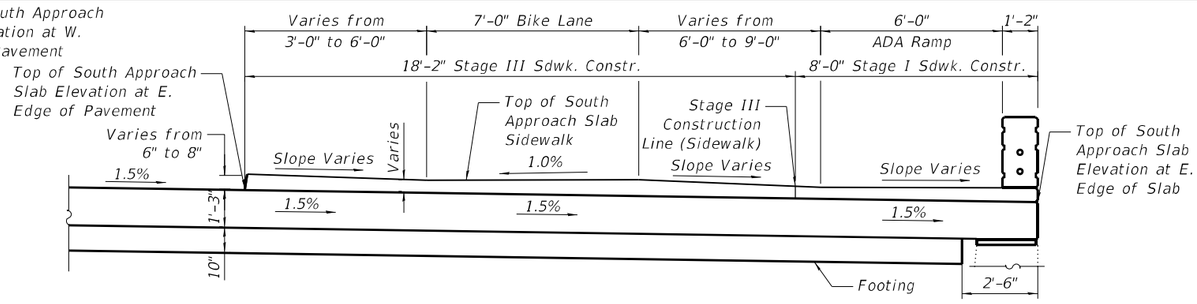

SECTION B-B

See Roadway Sheets for Sidewalk, Bike lane, and ADA detailed elevations

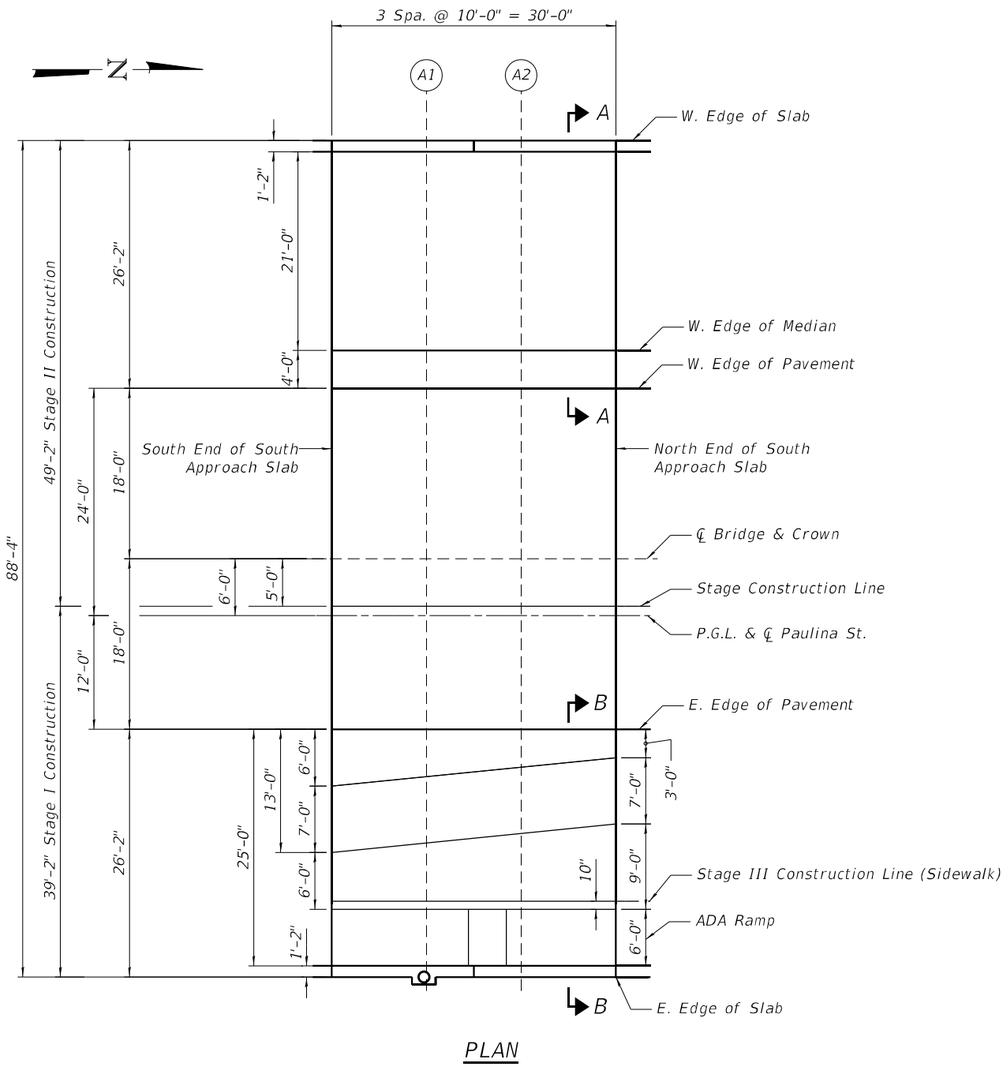

PLAN

WEST EDGE OF SLAB

Location	Station	Offset	Theoretical Grade Elevations
S. End of Approach Slab	400+65.28	-50.17	594.02
A1	400+75.28	-50.17	594.45
A2	400+85.28	-50.17	594.87
N. End of Approach Slab	400+95.28	-50.17	595.30

WEST EDGE OF MEDIAN

Location	Station	Offset	Theoretical Grade Elevations
S. End of Approach Slab	400+65.28	-28.00	593.69
A1	400+75.28	-28.00	594.11
A2	400+85.28	-28.00	594.54
N. End of Approach Slab	400+95.28	-28.00	594.97

WEST EDGE OF PAVEMENT

Location	Station	Offset	Theoretical Grade Elevations
S. End of Approach Slab	400+65.28	-24.00	593.75
A1	400+75.28	-24.00	594.17
A2	400+85.28	-24.00	594.60
N. End of Approach Slab	400+95.28	-24.00	595.03

℄ BRIDGE & CROWN

Location	Station	Offset	Theoretical Grade Elevations
S. End of Approach Slab	400+65.28	-6.00	594.02
A1	400+75.28	-6.00	594.44
A2	400+85.28	-6.00	594.87
N. End of Approach Slab	400+95.28	-6.00	595.30

STAGE CONSTRUCTION LINE

Location	Station	Offset	Theoretical Grade Elevations
S. End of Approach Slab	400+65.28	-1.00	593.94
A1	400+75.28	-1.00	594.37
A2	400+85.28	-1.00	594.80
N. End of Approach Slab	400+95.28	-1.00	595.22

P.G.L. & ℄ PAULINA ST.

Location	Station	Offset	Theoretical Grade Elevations
S. End of Approach Slab	400+65.28	00.00	593.93
A1	400+75.28	00.00	594.35
A2	400+85.28	00.00	594.78
N. End of Approach Slab	400+95.28	00.00	595.21

EAST EDGE OF PAVEMENT

Location	Station	Offset	Theoretical Grade Elevations
S. End of Approach Slab	400+65.28	12.00	593.75
A1	400+75.28	12.00	594.17
A2	400+85.28	12.00	594.60
N. End of Approach Slab	400+95.28	12.00	595.03

EAST EDGE OF SLAB

Location	Station	Offset	Theoretical Grade Elevations
S. End of Approach Slab	400+65.28	38.17	593.35
A1	400+75.28	38.17	593.78
A2	400+85.28	38.17	594.21
N. End of Approach Slab	400+95.28	38.17	594.64

MODEL: Default
FILE NAME: P:\10e\L\14411-IDOT - Sacramento and Paulina over I-290\Work\CADD\Paulina - Contract 62K64\CADD_Sheets\StructuralID162K64-016098-016-TopSouthApprSlabElev.dgn
10/9/2025 4:33:17 PM

COLLINS ENGINEERS INC.

USER NAME =	DESIGNED - MR	REVISED -	
	CHECKED - EKM	REVISED -	
PLOT SCALE =	DRAWN - DR	REVISED -	
PLOT DATE =	CHECKED - EKM	REVISED -	

STATE OF ILLINOIS
DEPARTMENT OF TRANSPORTATION

TOP OF SOUTH APPROACH SLAB ELEVATIONS
STRUCTURE NO. 016-0098
SHEET S-16 OF S-56 SHEETS

F.A.I RTE.	SECTION	COUNTY	TOTAL SHEETS	SHEET NO.
290	2019-191-B-R	COOK	265	182
		CONTRACT NO. 62K64		
		ILLINOIS	FED. AID PROJECT	

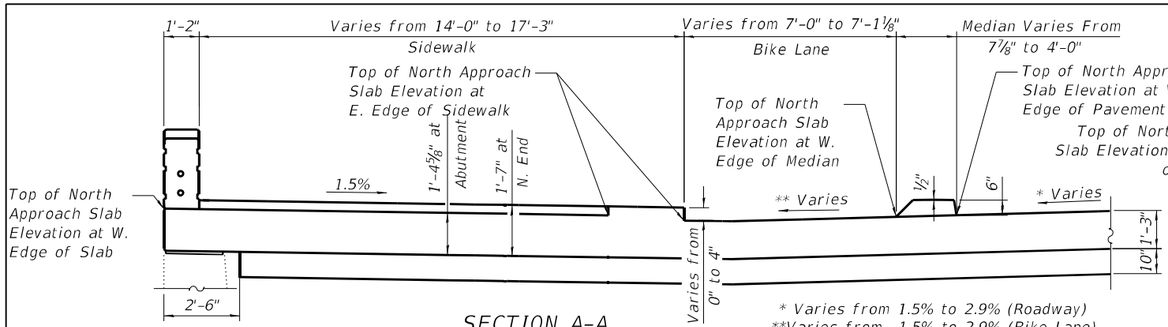

SECTION A-A

* Varies from 1.5% to 2.9% (Roadway)
**Varies from -1.5% to 2.9% (Bike Lane)

See Roadway Sheets for Sidewalk, Bike Lane, and ADA detailed elevations on Aprroach Slabs

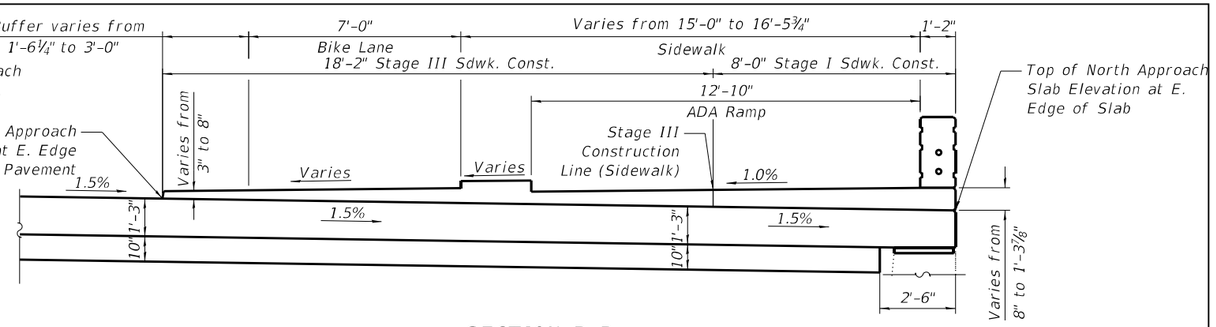

SECTION B-B

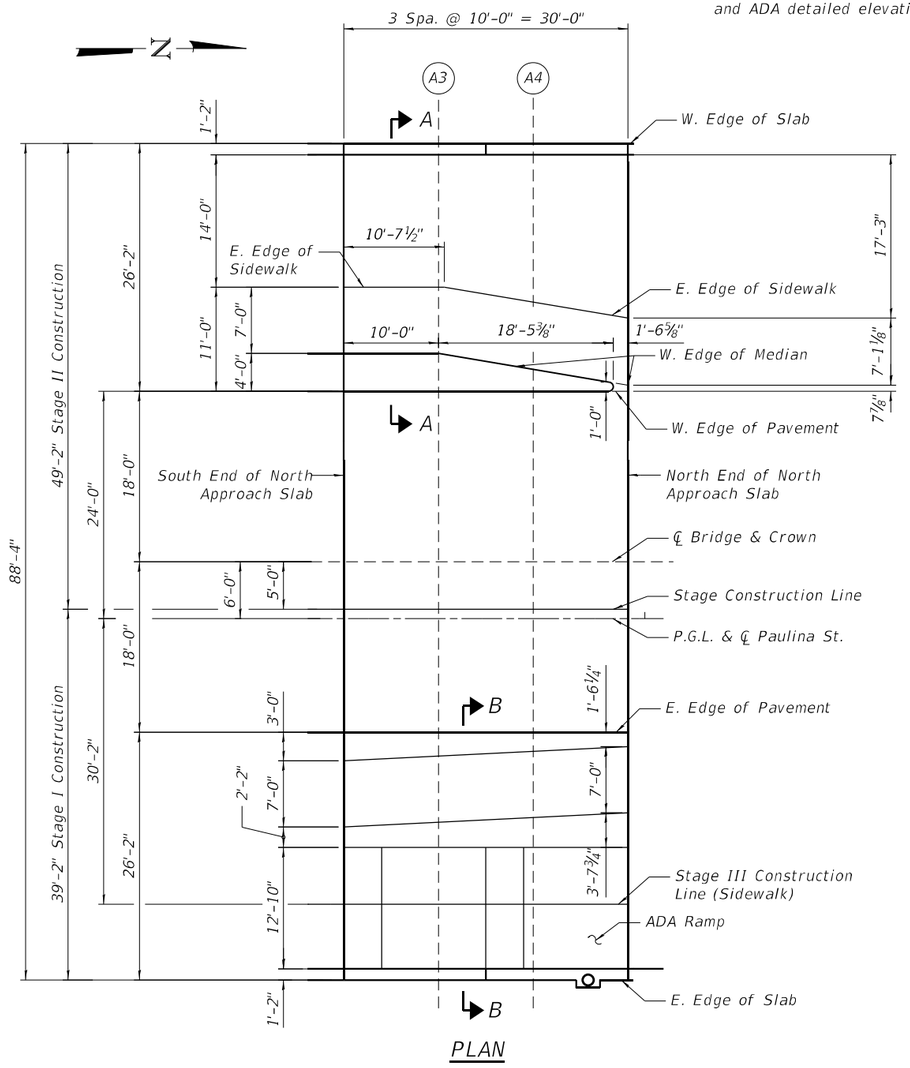

PLAN

WEST EDGE OF SLAB

Location	Station	Offset	Theoretical Grade Elevations
S. End of Approach Slab	403+68.18	-50.17	595.33
A3	403+78.18	-50.17	594.92
A4	403+88.18	-50.17	594.51
N. End of Approach Slab	403+98.18	-50.17	594.10

EAST EDGE OF SIDEWALK

Location	Station	Offset	Theoretical Grade Elevations
S. End of Approach Slab	403+68.18	-35.00	595.10
A3	403+78.18	-35.00	594.51
A4	403+88.18	-33.43	593.92
N. End of Approach Slab	403+98.18	-31.75	593.32

WEST EDGE OF MEDIAN

Location	Station	Offset	Theoretical Grade Elevations
S. End of Approach Slab	403+68.18	-28.00	595.00
A3	403+78.18	-28.00	594.51
A4	403+88.18	-26.32	594.02
N. End of Approach Slab	403+98.18	-24.66	593.53

WEST EDGE OF PAVEMENT

Location	Station	Offset	Theoretical Grade Elevations
S. End of Approach Slab	403+68.18	-24.00	595.06
A3	403+78.18	-24.00	594.56
A4	403+88.18	-24.00	594.06
N. End of Approach Slab	403+98.18	-24.00	593.55

℄ BRIDGE & CROWN

Location	Station	Offset	Theoretical Grade Elevations
S. End of Approach Slab	403+68.18	-6.00	595.33
A3	403+78.18	-6.00	594.90
A4	403+88.18	-6.00	594.47
N. End of Approach Slab	403+98.18	-6.00	594.06

STAGE CONSTRUCTION LINE

Location	Station	Offset	Theoretical Grade Elevations
S. End of Approach Slab	403+68.18	-1.00	595.25
A3	403+78.18	-1.00	594.82
A4	403+88.18	-1.00	594.40
N. End of Approach Slab	403+98.18	-1.00	593.98

P.G.L. AND ℄ PAULINA ST.

Location	Station	Offset	Theoretical Grade Elevations
S. End of Approach Slab	403+68.18	00.00	595.24
A3	403+78.18	00.00	594.81
A4	403+88.18	00.00	594.38
N. End of Approach Slab	403+98.18	00.00	593.97

EAST EDGE OF PAVEMENT

Location	Station	Offset	Theoretical Grade Elevations
S. End of Approach Slab	403+68.18	12.00	595.06
A3	403+78.18	12.00	594.63
A4	403+88.18	12.00	594.20
N. End of Approach Slab	403+98.18	12.00	593.79

EAST EDGE OF SLAB

Location	Station	Offset	Theoretical Grade Elevations
S. End of Approach Slab	403+68.18	38.17	594.66
A3	403+78.18	38.17	594.23
A4	403+88.18	38.17	593.81
N. End of Approach Slab	403+98.18	38.17	593.39

MODEL: Default
FILE NAME: P:\10eIL\14411-IDOT - Sacramento and Paulina over I-290\Work\CADD\Paulina - Contract 62K64\CADD_Sheets\StructuralID162K64-016009
10/9/2025 4:33:28 PM

COLLINS ENGINEERS INC.

USER NAME =	DESIGNED - MR	REVISED -	
	CHECKED - EKM	REVISED -	
PLOT SCALE =	DRAWN - DR	REVISED -	
PLOT DATE =	CHECKED - EKM	REVISED -	

STATE OF ILLINOIS
DEPARTMENT OF TRANSPORTATION

TOP OF NORTH APPROACH SLAB ELEVATIONS
STRUCTURE NO. 016-0098
SHEET S-17 OF S-56 SHEETS

F.A.I RTE.	SECTION	COUNTY	TOTAL SHEETS	SHEET NO.
290	2019-191-B-R	COOK	265	183
		CONTRACT NO. 62K64		
		ILLINOIS	FED. AID PROJECT	

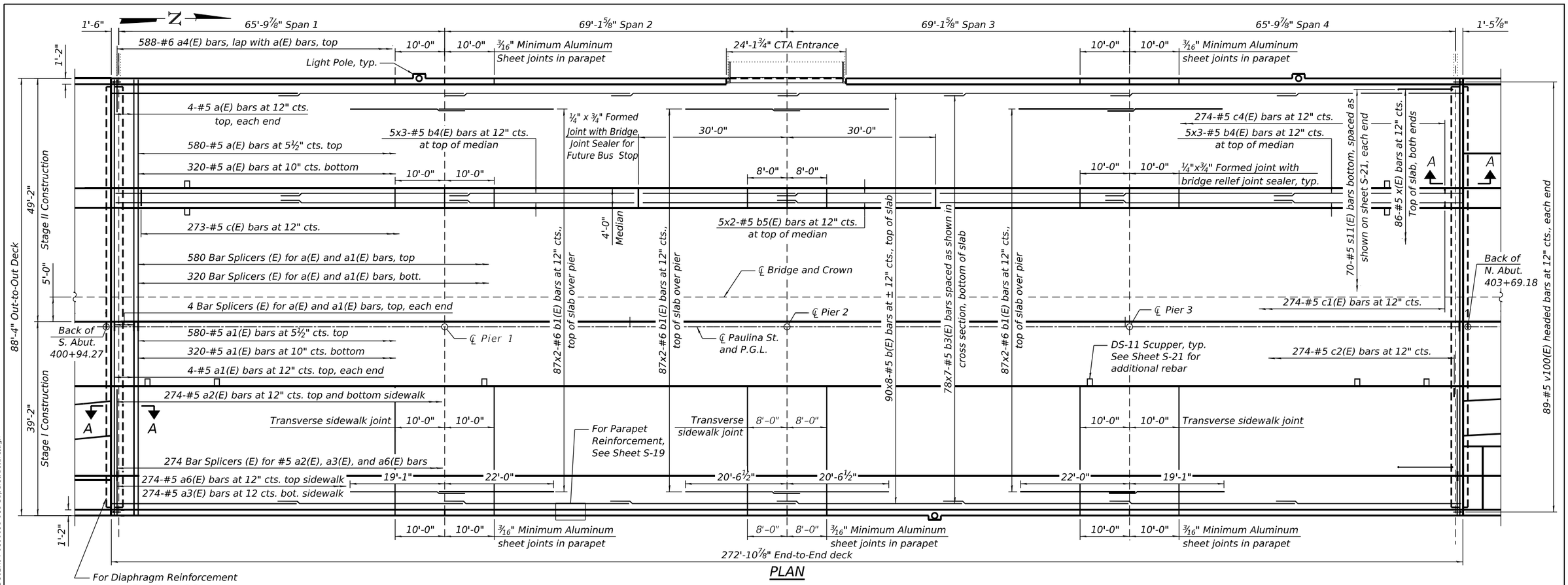

PLAN

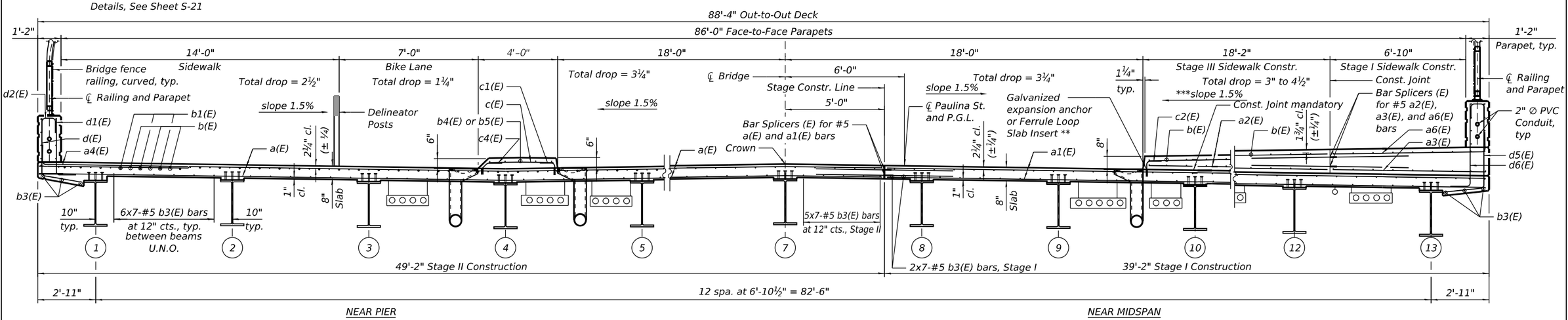

NEAR PIER

NEAR MIDSPAN

* See Sheet S-21 for beam diaphragm reinforcement details

** Galvanized expansion anchor or Ferrule Loop Slab Insert (Proof Load 6600 lb.) for #5 c2(E) bars, typ., with a safe Working Load of 2,200 lbs (6,600 lbs Proof Load / FS = 3). Cost included in the cost of Reinforcement Bars, Epoxy Coated.

*** East Sidewalk slope varies from 1.5% to 1.0% at both abutments. Start transition 50 ft from abutments. See Roadway Plans for Elevation Detail Sheet.

MINIMUM BAR LAP

#4 bar	2'-7"
#5 bar	3'-10"
#6 bar	5'-3"

CROSS SECTION

(Looking North)

NOTES:

1. See Sheet S-20 superstructure details and Bill of Material.
2. Bars indicated thus 20x3-#5 etc. indicates 20 lines of bars with 3 bars per line.
3. Cut longitudinal reinforcement to clear drainage scuppers.
4. See Sheet S-21 for Section A-A.
5. Contractor shall coordinate attachment of existing or proposed utilities to the structure, including the type and location of the inserts to be embedded in the concrete deck. Inserts may be required to be installed by the Contractor during formwork construction.
6. See Sheet S-19 for Scupper Opening Details

Accurate GROUP, INC.

USER NAME =	DESIGNED - MRS	REVISED -	
	CHECKED - JL	REVISED -	
PLOT SCALE =	DRAWN - IH	REVISED -	
PLOT DATE =	CHECKED - JL	REVISED -	

STATE OF ILLINOIS
DEPARTMENT OF TRANSPORTATION

SUPERSTRUCTURE
STRUCTURE NO. 016-0098

SHEET S-18 OF S-56 SHEETS

F.A.I. RTE.	SECTION	COUNTY	TOTAL SHEETS	SHEET NO.
290	2019-191-B-R	COOK	265	184
		CONTRACT NO. 62K64		
	ILLINOIS	FED. AID PROJECT		

MODEL: Default
FILE NAME: Q:\Engineering\LiveProjects\23003_IDOT P & S Strs_Collins\CADD\CADD Sheets\Structural\D162K64-0160098-Pualina\D162K64-0160098-018-Superstructure.dgn

10/7/2025 1:29:32 PM

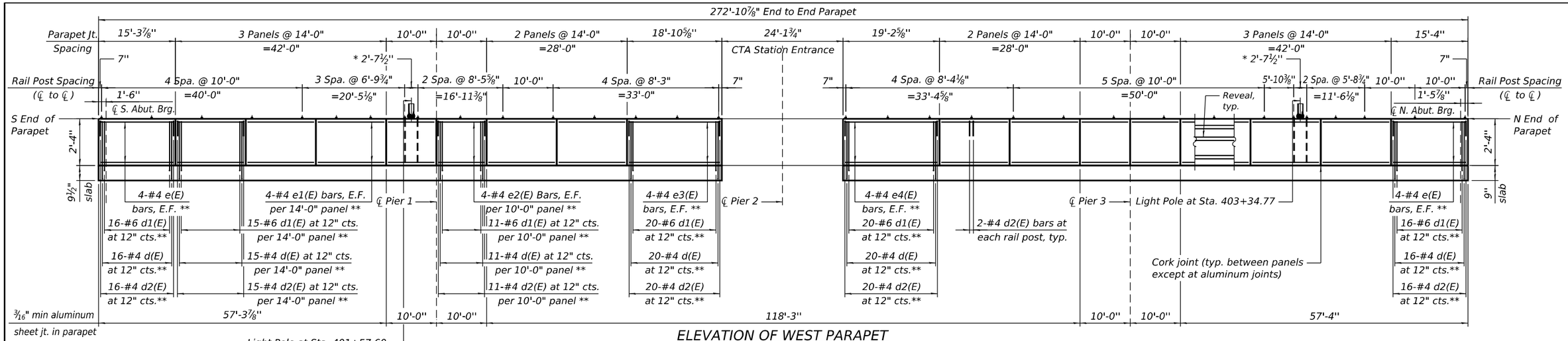

ELEVATION OF WEST PARAPET

(Looking West)

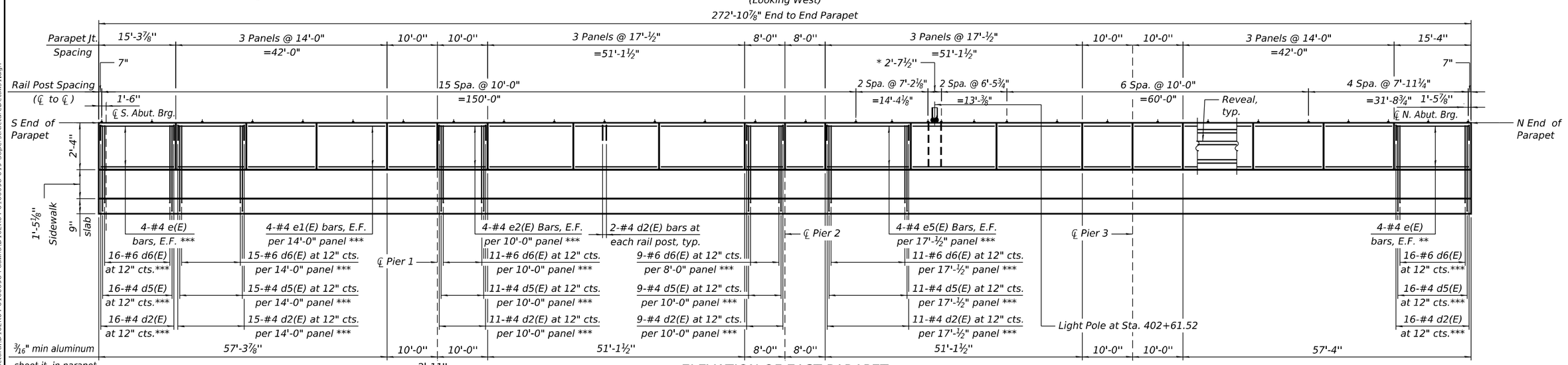

ELEVATION OF EAST PARAPET

(Looking West)

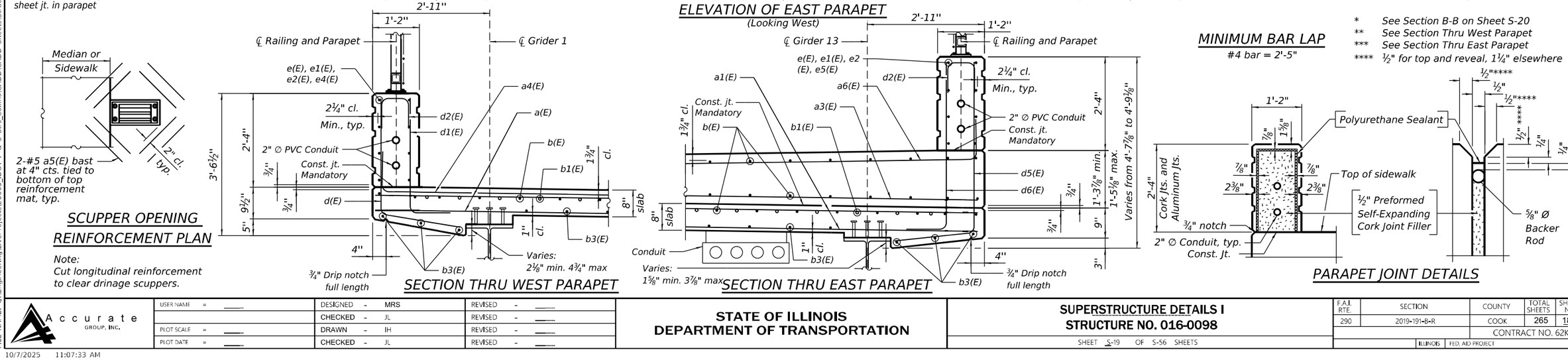

MODEL: Default
FILE NAME: Q:\Engineering\LiveProjects\23003_IDOT P & S Strs_Collins\CADD\CADD Sheets\Structural\D162K64-0160098-PullInal\D162K64-0160098-19-SuperstructureDetails1.dgn
10/7/2025 11:07:33 AM

Accurate GROUP, INC.

USER NAME = ____	DESIGNED - MRS	REVISED - ____	
	CHECKED - JL	REVISED - ____	
PLOT SCALE = ____	DRAWN - IH	REVISED - ____	
PLOT DATE = ____	CHECKED - JL	REVISED - ____	

STATE OF ILLINOIS
DEPARTMENT OF TRANSPORTATION

SUPERSTRUCTURE DETAILS I
STRUCTURE NO. 016-0098

SHEET S-19 OF S-56 SHEETS

F.A.I. RTE.	SECTION	COUNTY	TOTAL SHEETS	SHEET NO.
290	2019-191-B-R	COOK	265	185
		CONTRACT NO. 62K64		
		ILLINOIS	FED. AID PROJECT	

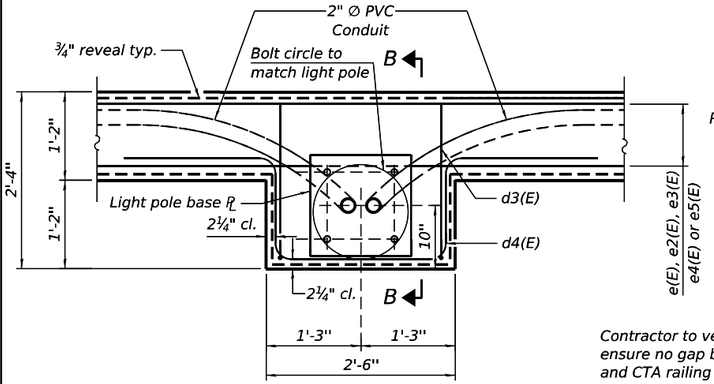

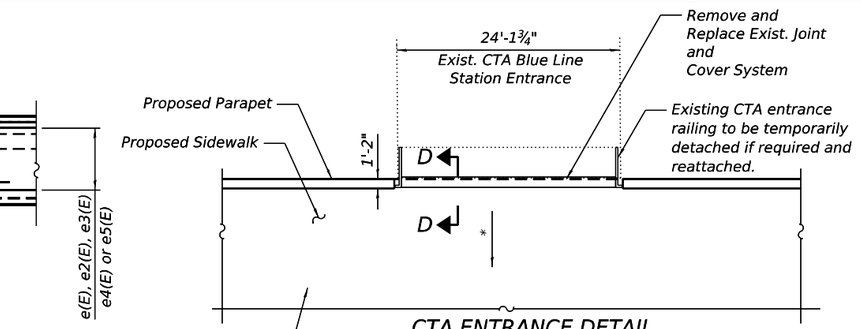

CTA ENTRANCE DETAIL

* Slope sidewalk at CTA station entrance to match existing entrance elevation.

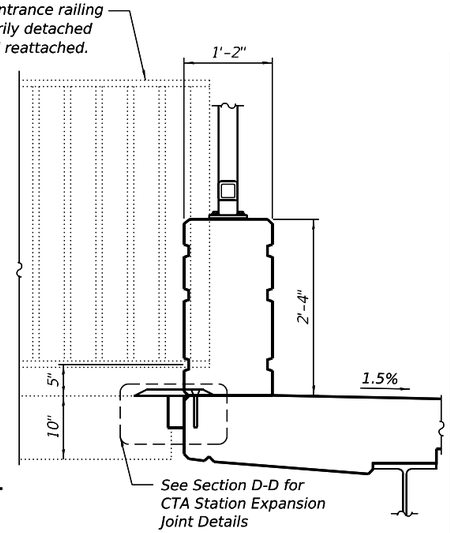

SECTION THRU CTA ENTRANCE

PLAN

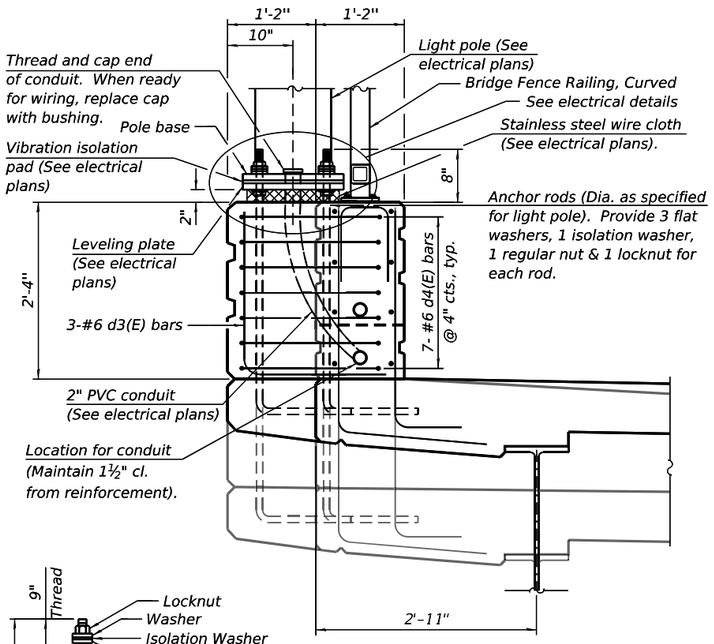

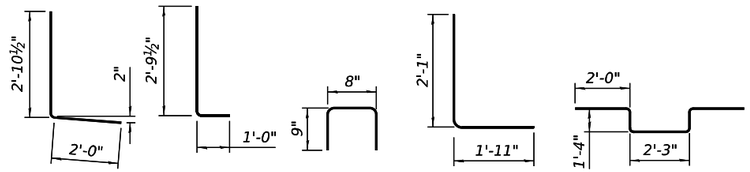

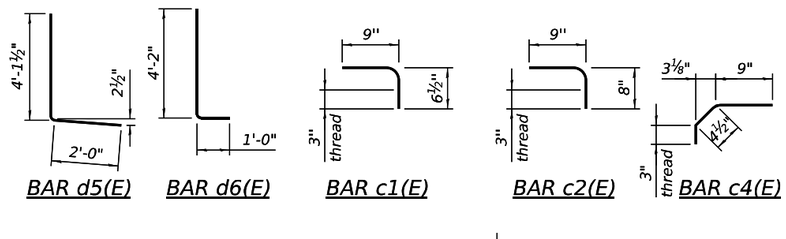

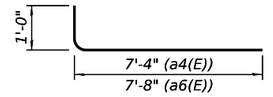

BARS a4(E) & a6(E)

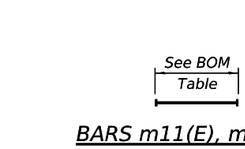

BARS m11(E), m17(E), m19(E) and m21(E)

(Headed - 88-#6, 8-#6, 8-#6 and 16-#6 terminators, respectively)

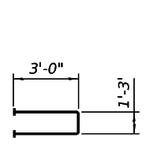

BAR s10(E)

(Headed - 280-#5 terminators)

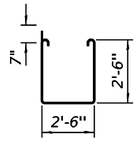

BAR s11(E)

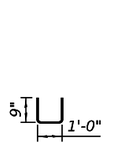

BAR u10(E)

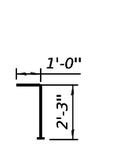

BAR v100(E)

(Headed - 178- #5 terminators)

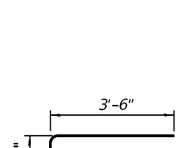

BAR x(E)

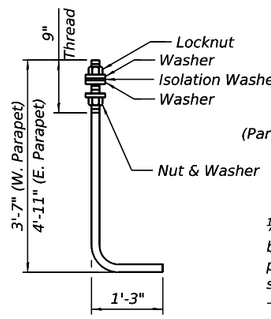

SECTION B-B

(Parapet and Deck reinforcement not shown for clarity. East overhang shown in gray for clarity)

ANCHOR ROD

Diameter as specified for light poles. (ASTM F 1554 Grade 105) Full length hot dipped galvanized. Cost of anchor rods is included with Concrete Superstructure.

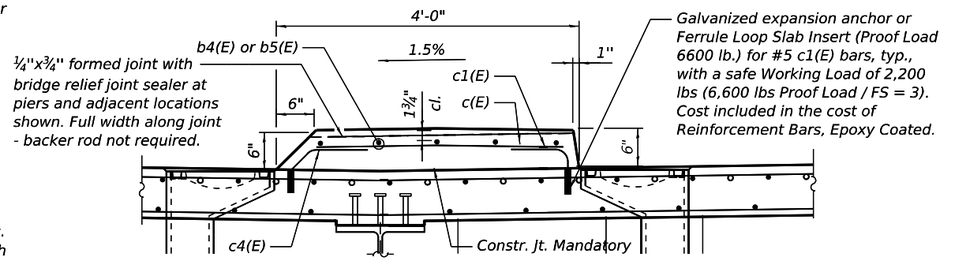

SECTION THRU MEDIAN

b(E) bars in median shall not pass thru aluminum sheet

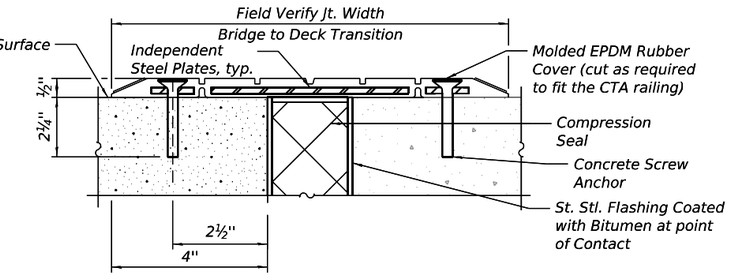

SECTION D-D AT CTA STATION JOINT

(Contractor to submit to CTA for review and approval prior to Construction.)

SUPERSTRUCTURE BILL OF MATERIAL

Bar	No.	Size	Length	Shape
a(E)	908	#5	48'-10"	
a1(E)	908	#5	38'-10"	
a2(E)	548	#5	17'-9"	
a3(E)	274	#5	7'-8"	
a4(E)	588	#6	8'-4"	
a5(E)	160	#5	1'-6"	
a6(E)	274	#5	8'-8"	
b(E)	1152	#5	37'-6"	
b1(E)	522	#6	23'-2"	
b3(E)	33	#5	42'-3"	
b4(E)	30	#5	38'-0"	
b5(E)	10	#5	31'-9"	
c(E)	274	#5	3'-4"	
c1(E)	274	#5	1'-4"	
c2(E)	274	#5	1'-5"	
c4(E)	274	#5	1'-5"	
d(E)	266	#4	4'-11"	
d1(E)	266	#6	3'-10"	
d2(E)	684	#4	2'-6"	
d3(E)	9	#6	4'-0"	
d4(E)	21	#6	8'-11"	
d5(E)	292	#4	6'-2"	
d6(E)	292	#6	5'-2"	
e(E)	32	#4	15'-0"	
e1(E)	128	#4	13'-9"	
e2(E)	64	#4	9'-9"	
e3(E)	8	#4	18'-7"	
e4(E)	8	#4	18'-11"	
e5(E)	48	#4	16'-9"	
e6(E)	16	#4	7'-9"	
m10(E)	4	#4	37'-4"	
m11(E)	44	#6	6'-5"	
m12(E)	44	#6	6'-5"	
m13(E)	10	#6	37'-4"	
m14(E)	4	#4	47'-4"	
m15(E)	10	#6	47'-4"	
m16(E)	4	#6	4'-10"	
m17(E)	4	#6	4'-10"	
m18(E)	4	#6	1'-8"	
m19(E)	4	#6	1'-8"	
m20(E)	8	#6	0'-11"	
m21(E)	8	#6	0'-11"	
m22(E)	224	#5	1'-6"	
s10	140	#5	7'-3"	
s11	140	#5	8'-8"	
u(E)	140	#4	2'-2"	
v100(E)	178	#5	3'-3"	
x(E)	172	#5	4'-1"	
Concrete Superstructure			Cu Yd	1272.6
Protective Coat			Sq Yd	2,857
Reinforcement Bars, Epoxy Coated			Pound	190,540
Bridge Deck Grooving			Sq Yd	1,092

CTA ENTRANCE BILL OF MATERIAL

Removing and Replacing Expansion Joint	Foot	24

NOTES:

1. The 3/16" min. aluminum sheet shall be ASTM B 209 alloy 3003-H14 and coated with 5 mils of either bitumen paint or epoxy paint to minimize reaction with wet concrete. Cost included with Concrete Superstructure.
2. The polyurethane sealant shall be according to Article 1050.04 of the Std. Spec. and the color shall be gray.
3. Bar terminators paid for separately. See Total Bill of Material.
4. Bars indicated thus 1 x 2-#4 etc. indicates 1 line of bars with 2 lengths per line.

MODEL: Default
FILE NAME: Q:\Engineering\LiveProjects\23002_IDOT P. & S. Strs_Collins\CADD\CADD Sheets\Structural\D162K64-0160098-PualInal\D162K64-0160098-020-SuperstructureDetails2.dgn
10/7/2025 10:18:22 AM

Accurate GROUP, INC.

USER NAME =	DESIGNED - MRS	REVISED -	
	CHECKED - JL	REVISED -	
PLOT SCALE =	DRAWN - IH	REVISED -	
PLOT DATE =	CHECKED - JL	REVISED -	

STATE OF ILLINOIS
DEPARTMENT OF TRANSPORTATION

SUPERSTRUCTURE DETAILS II
STRUCTURE NO. 016-0098
SHEET S-20 OF S-56 SHEETS

F.A.I. RTE.	SECTION	COUNTY	TOTAL SHEETS	SHEET NO.
290	2019-191-B-R	COOK	265	186
		CONTRACT NO. 62K64		
		ILLINOIS	FED. AID PROJECT	

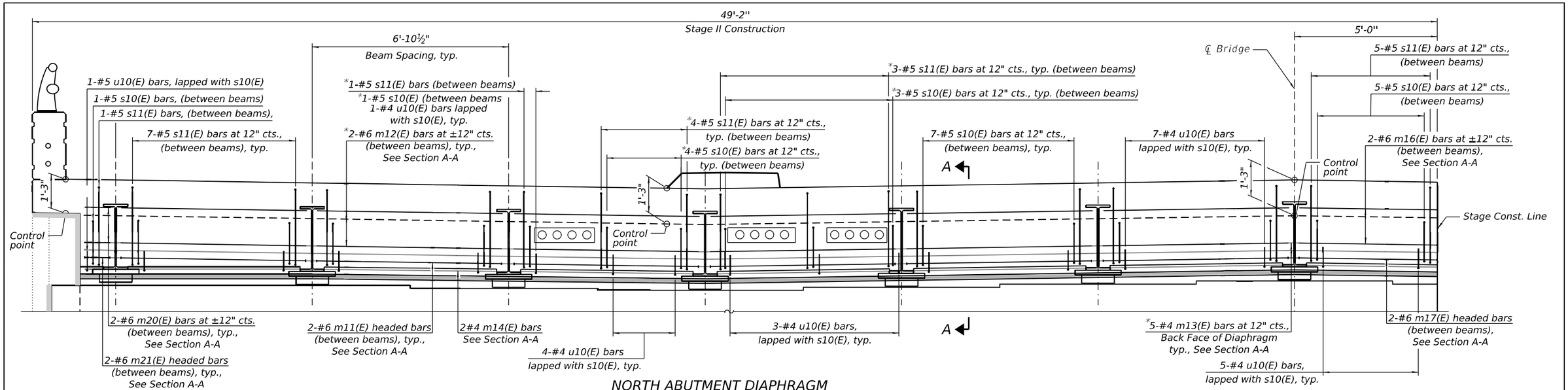

NORTH ABUTMENT DIAPHRAGM

(Looking North)
(Diaphragm at South Abutment Similar Opposite Hand)

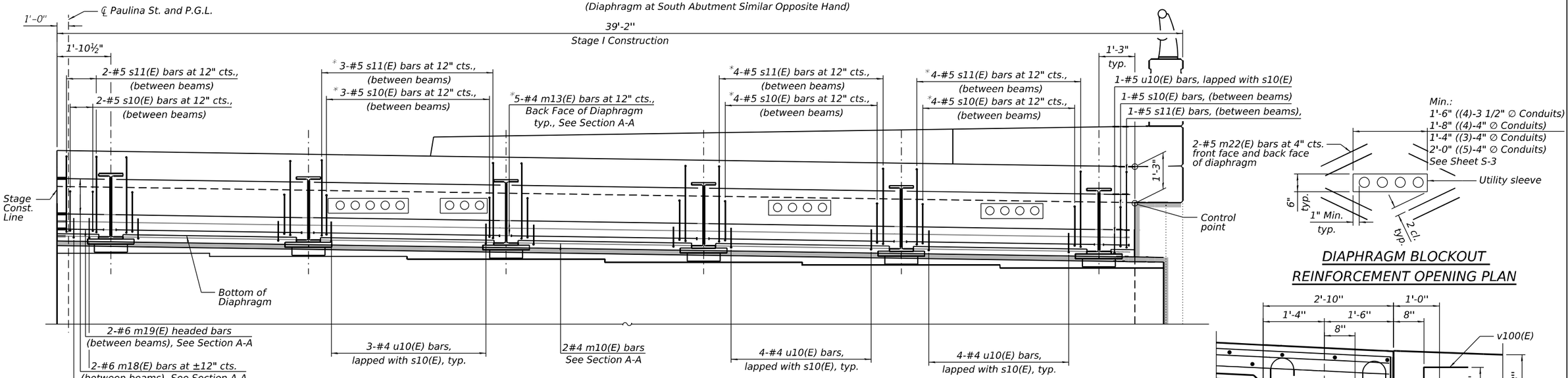

DIAPHRAGM BLOCKOUT REINFORCEMENT OPENING PLAN

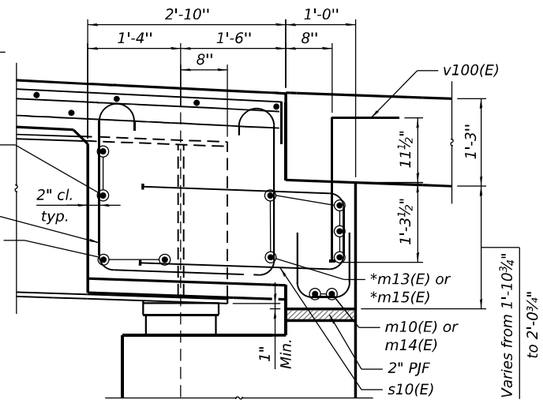

NORTH ABUTMENT DIAPHRAGM

(Looking North)
(Diaphragm at South Abutment Similar Opposite Hand)

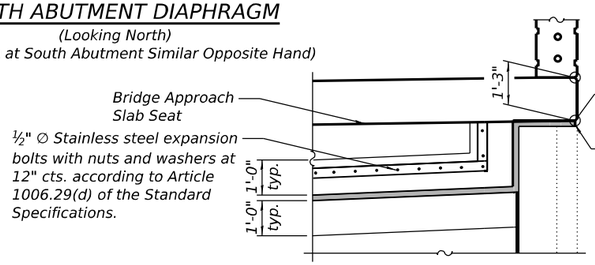

SEMI-INTEGRAL ABUTMENT JOINT DETAILS

SECTION A-A

NOTES:

1. For bar diagrams and Bill of Material, See Sheet S-20.
2. Cost of fabric reinforced elastomeric mat, galvanized plate, stainless steel expansion bolts with nuts and washers and installation are included in the cost of Concrete Superstructure.
3. Reinforcement bars in diaphrams will be at minimum 2" clear distance from the blockouts. Reinforcement bars will be arranged to be continuous rather than cut.
4. Bars indicated thus 1x2-#4 etc. indicates 1 line of bars with 2 lengths per line.

* Space bars to miss utility sleeve.

Accurate GROUP, INC.

USER NAME =	DESIGNED - MRS	REVISED -	
	CHECKED - JL	REVISED -	
PLOT SCALE =	DRAWN - IH	REVISED -	
PLOT DATE =	CHECKED - JL	REVISED -	

STATE OF ILLINOIS
DEPARTMENT OF TRANSPORTATION

CONCRETE DIAPHRAGM DETAILS
STRUCTURE NO. 016-0098
SHEET S-21 OF S-56 SHEETS

F.A.I. RTE.	SECTION	COUNTY	TOTAL SHEETS	SHEET NO.
290	2019-191-B-R	COOK	265	187
		CONTRACT NO. 62K64		
		ILLINOIS	FED. AID PROJECT	

MODEL: Default
FILE NAME: O:\Engineering\LiveProjects\23003_IDOT P & S Srs_Collins\CADD\CADD Sheets\Structural\D162K64-0160098-Paulina\D162K64-0160098-021-ConcreteDiaphragmDetails.dgn
10/7/2025 10:38:57 AM

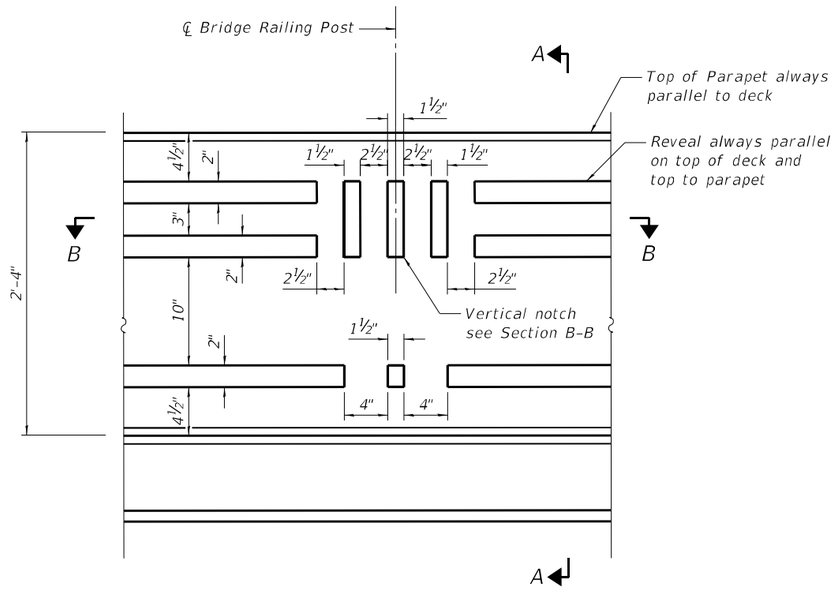

ELEVATION

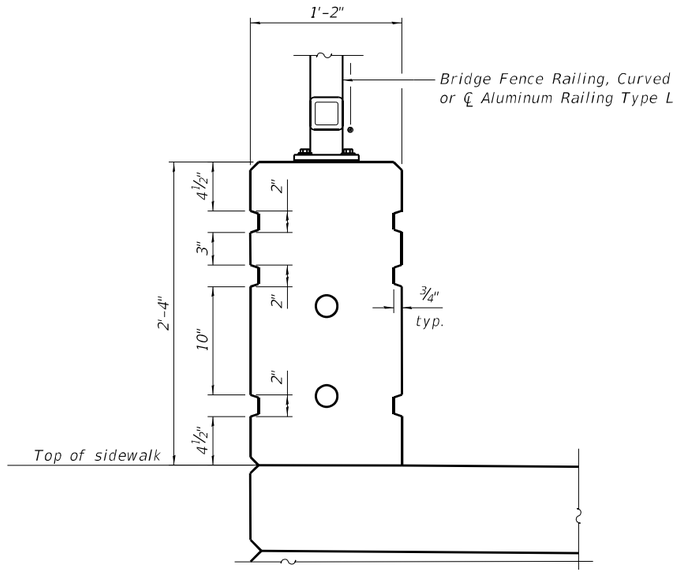

SECTION A-A

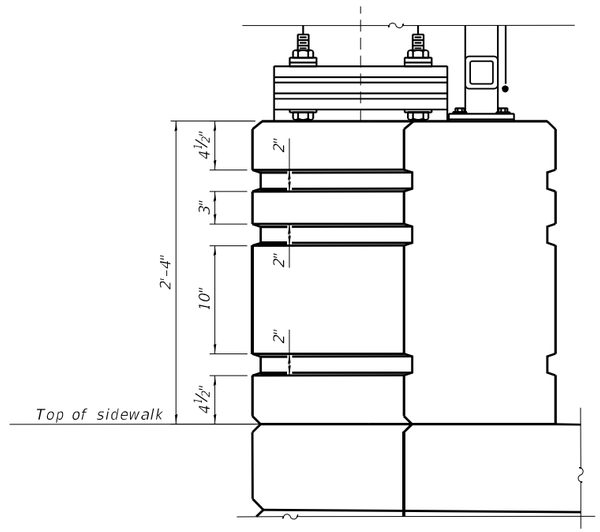

SECTION AT LIGHT POLE

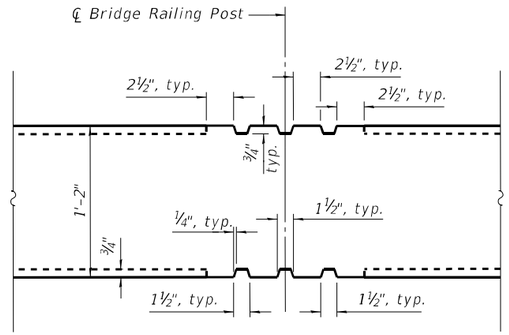

SECTION B-B

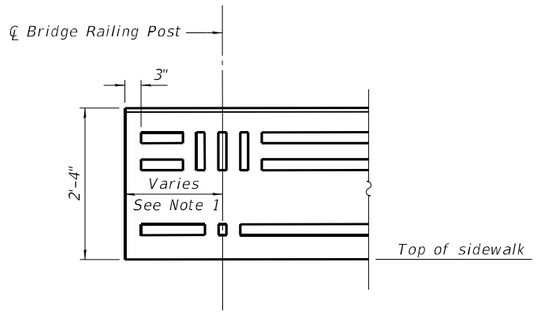

RAIL DETAIL 1 - AT END OF PARAPET

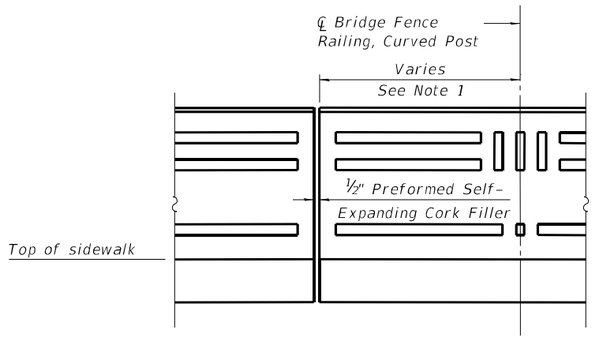

RAIL DETAIL 2 - AT PARAPET JOINT

Notes:

1. The middle 2½" x 1½" rustification shall be aligned with the center of the Bridge Fence posts.
2. The reveal on the Parapet shall be included in the cost of the pay item, "Concrete Superstructure." Shop drawings of parapet with reveals shall be submitted including layout of the Parapet pattern, Bridge Fence Railing Curved, Aluminum Railing, Type L posts, and light poles.
3. For Bridge Fence Railing Curved and Aluminum Railing, Type L locations and spacing, see Sheet S-19, and S-28 - S-30.

MODEL: Default
FILE NAME: P:\10cl\14441-IDOT - Sacramento and Paulina over I-290\Work\CADD\Paulina - Contract 62K64\CADD_Sheets\Structural\D162K64-0160098-022-DecorativeRailingDetails.dgn
10/9/2025 4:34:41 PM

COLLINS ENGINEERS INC.

USER NAME =	DESIGNED - MR	REVISED -	
	CHECKED - EKM	REVISED -	
PLOT SCALE =	DRAWN - DR	REVISED -	
PLOT DATE =	CHECKED - EKM	REVISED -	

STATE OF ILLINOIS
DEPARTMENT OF TRANSPORTATION

PARAPET REVEAL DETAILS
STRUCTURE NO. 016-0098
SHEET S-22 OF S-56 SHEETS

F.A.I. RTE.	SECTION	COUNTY	TOTAL SHEETS	SHEET NO.
290	2019-191-B-R	COOK	265	188
		CONTRACT NO. 62K64		
		ILLINOIS	FED. AID PROJECT	

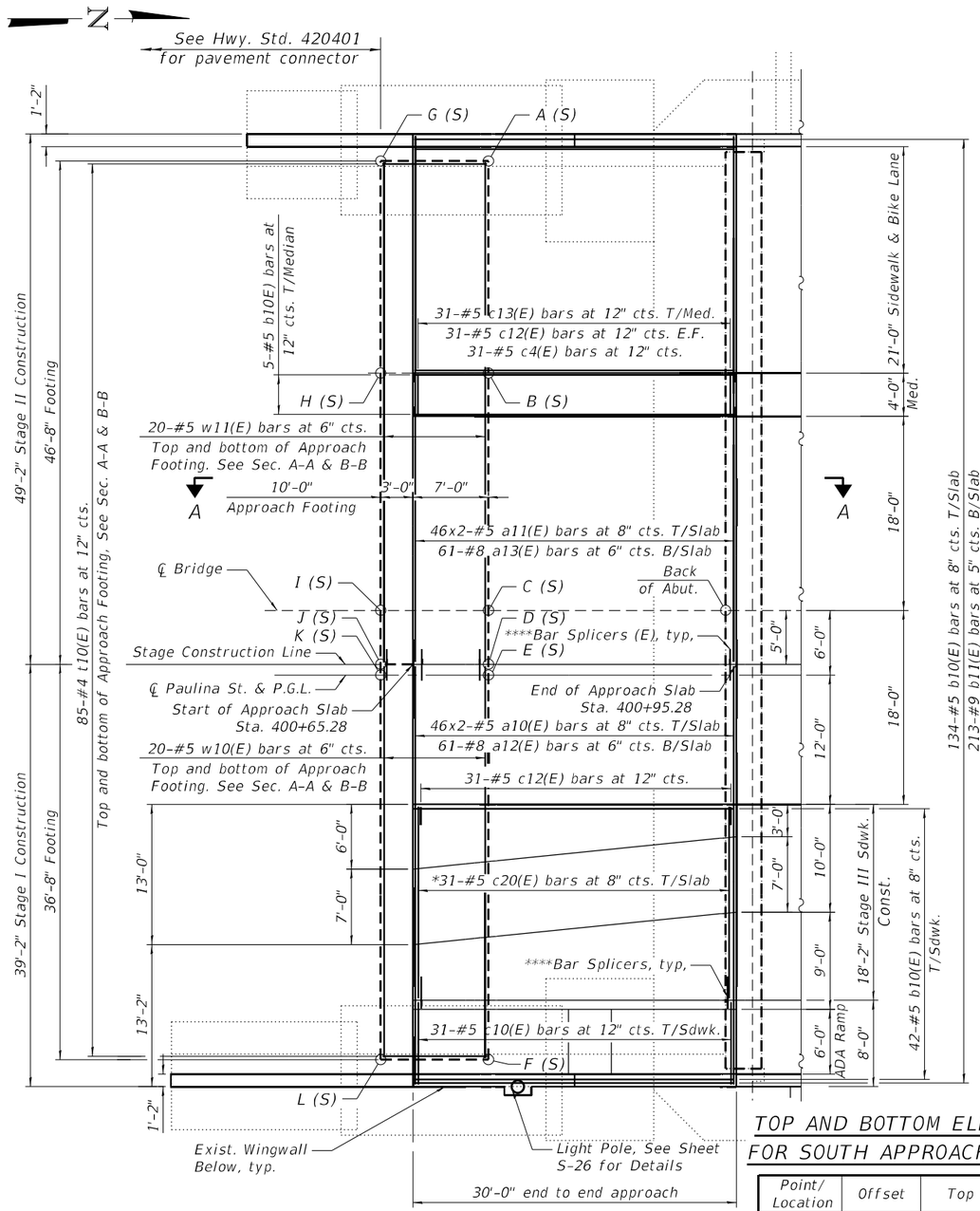

SOUTH APPROACH PLAN

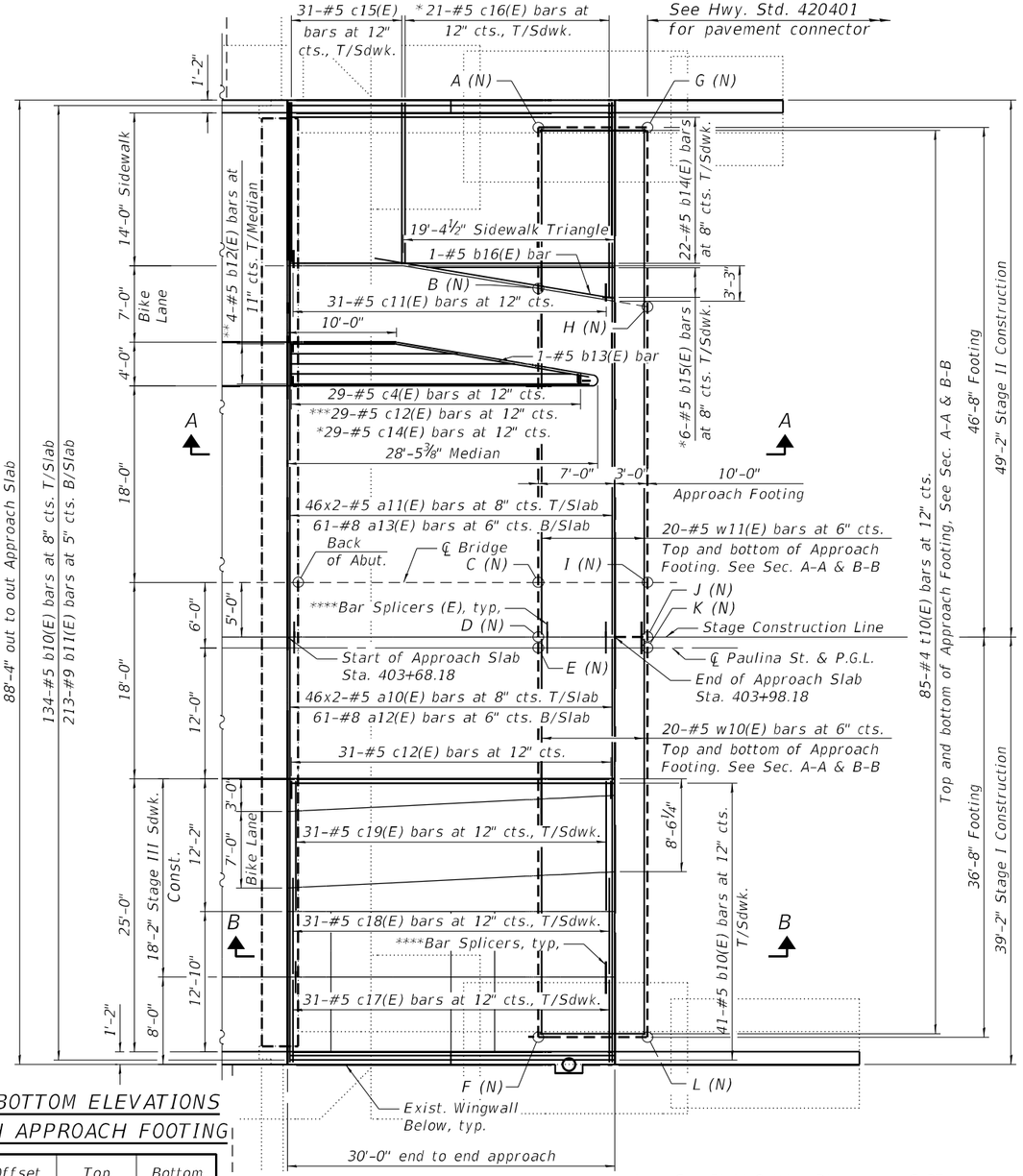

NORTH APPROACH PLAN

TOP AND BOTTOM ELEVATIONS FOR SOUTH APPROACH FOOTING

Point/ Location	Offset	Top	Bottom
A (S)	-47.67	593.03	592.20
B (S)	-28.00	592.97	592.14
C (S)	-6.00	592.80	591.97
D (S)	-1.00	592.60	591.77
E (S)	0.00	592.55	591.71
F (S)	35.67	592.37	591.54
G (S)	-47.67	592.80	591.97
H (S)	-28.00	592.60	591.77
I (S)	-6.00	592.55	591.71
J (S)	-1.00	592.37	591.54
K (S)	0.00	592.55	591.71
L (S)	35.67	592.37	591.54

TOP AND BOTTOM ELEVATIONS FOR NORTH APPROACH FOOTING

Point/ Location	Offset	Top	Bottom
A (N)	-47.67	593.06	592.23
B (N)	-32.92	592.33	591.50
C (N)	-6.00	593.10	592.26
D (N)	-1.00	593.02	592.19
E (N)	0.00	593.01	592.17
F (N)	35.67	592.43	591.60
G (N)	-47.67	592.65	591.82
H (N)	-31.25	591.93	591.10
I (N)	-6.00	592.69	591.86
J (N)	-1.00	592.61	591.78
K (N)	0.00	592.60	591.77
L (N)	35.67	592.03	591.19

Notes:
1. See roadway plans for sidewalk, ADA ramps, and bike lane elevations on approach slab.
2. Bars indicated thus 1x2-#8 etc. indicates 1 line of bars with 2 lengths per line.
3. See S-27 for Sections A-A and B-B.

* See Field Cutting Diagram on S-27
** Cut to fit as necessary.
*** Rotate c12(E) bars to fit as necessary.
**** 46-Bar Splicers (E) for #6 a10(E) or a11(E) bars T/Slab
61-Bar Splicers (E) for #8 a12(E) or a13(E) bars B/Slab
31-Bar Splicers (E) for #5 c10(E) or c20(E) bars T/Sdwk.
31-Bar Splicers (E) for #5 c17(E) or c18(E) bars T/Sdwk.
40-Bar Splicers (E) for #5 w10(E) bars T/ & B/Approach Footing

MODEL: Default
FILE NAME: P:\10-IL11411-IDOT - Sacramento and Paulina over I-290\Work\CADD\Paulina - Contract 62K64\CADD_Sheets\Structural\D162K64-016009-023-ApproachSlabDetails1.dgn
10/9/2025 4:34:52 PM

COLLINS ENGINEERS INC.

USER NAME =	DESIGNED - MR	REVISED -	
	CHECKED - EKM	REVISED -	
PLOT SCALE =	DRAWN - DR	REVISED -	
PLOT DATE =	CHECKED - EKM	REVISED -	

STATE OF ILLINOIS
DEPARTMENT OF TRANSPORTATION

BRIDGE APPROACH SLAB DETAILS
STRUCTURE NO. 016-0098
SHEET S-23 OF S-56 SHEETS

F.A.I. RTE.	SECTION	COUNTY	TOTAL SHEETS	SHEET NO.
290	2019-191-B-R	COOK	265	189
		CONTRACT NO. 62K64		
		ILLINOIS	FED. AID PROJECT	

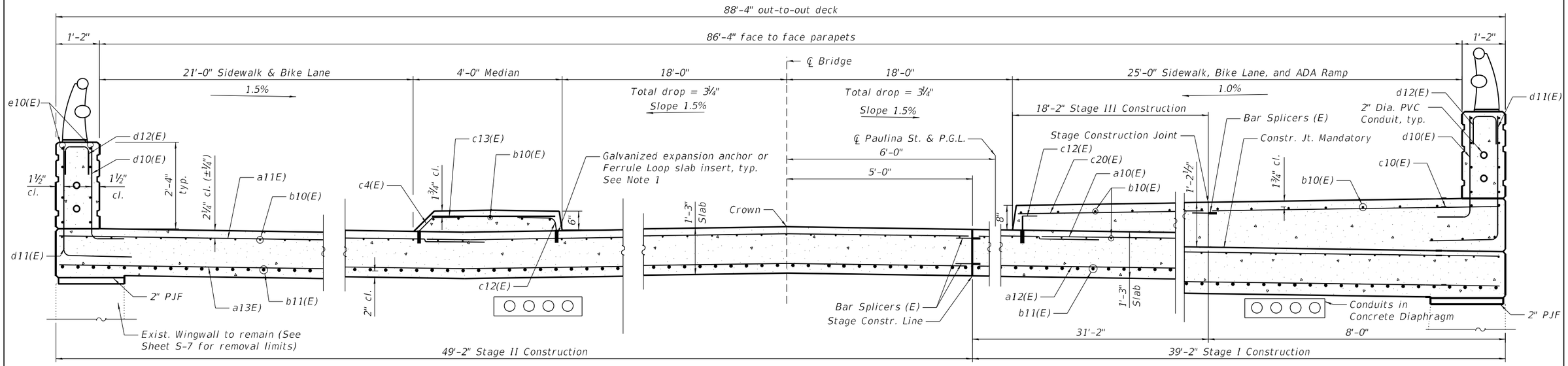

CROSS SECTION - AT SOUTH ABUTMENT

(Looking North)

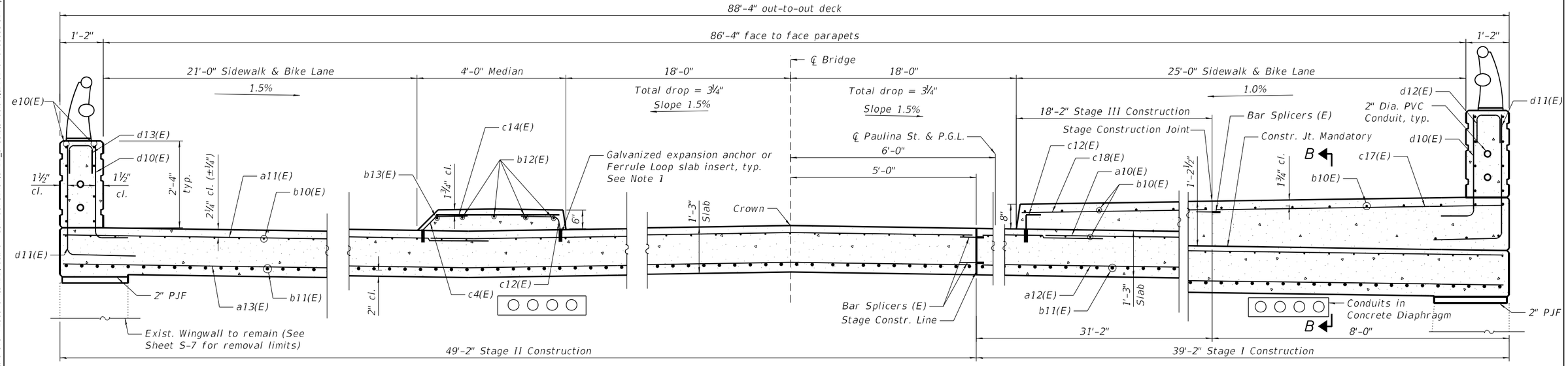

CROSS SECTION - AT NORTH ABUTMENT

(Looking North)

Note:

1. Galvanized expansion anchor or Ferrule Loop Slab Insert (Proof Load 6,600 lbs.) for #5 c4(E) and c12(E) bars, typ., with a safe Working Load of 2,200 lbs., (6,600 lbs. Proof Load/FS = 3). Cost included in the cost of Reinforcement Bars, Epoxy Coated.

MODEL: Default
FILE NAME: P:\10eIL\14411-IDOT - Sacramento and Paulina over I-290\Work\CADD\Paulina - Contract 62K64\CADD_Sheets\StructuralID162K64-0160098-024-ApproachSlabDetails2.dgn
10/9/2025 4:35:01 PM

COLLINS ENGINEERS INC.

USER NAME =	DESIGNED - MR	REVISED -	
	CHECKED - EKM	REVISED -	
PLOT SCALE =	DRAWN - DR	REVISED -	
PLOT DATE =	CHECKED - EKM	REVISED -	

STATE OF ILLINOIS
DEPARTMENT OF TRANSPORTATION

BRIDGE APPROACH SLAB DETAILS
STRUCTURE NO. 016-0098

SHEET S-24 OF S-56 SHEETS

F.A.I RTE.	SECTION	COUNTY	TOTAL SHEETS	SHEET NO.
290	2019-191-B-R	COOK	265	190
		CONTRACT NO. 62K64		
		ILLINOIS	FED. AID PROJECT	

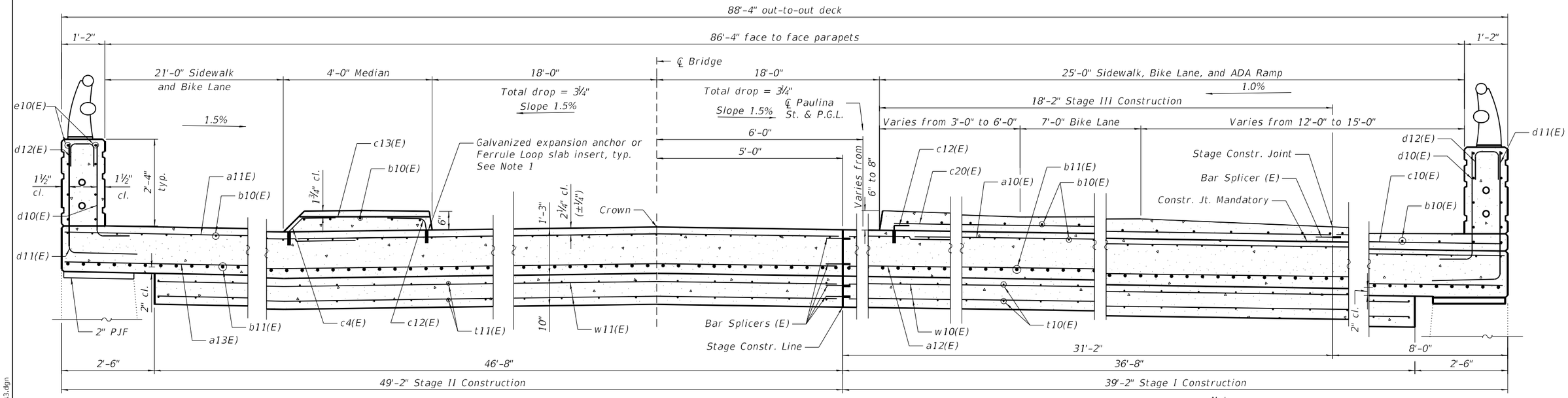

CROSS SECTION – SOUTH APPROACH SLAB NEAR FOOTING

(Looking North)

Note:

1. Galvanized expansion anchor or Ferrule Loop Slab Insert (Proof Load 6,600 lbs.) for #5 c4(E) and c12(E) bars, typ., with a safe Working Load of 2,200 lbs., (6,600 lbs. Proof Load/FS = 3). Cost included in the cost of Reinforcement Bars, Epoxy Coated.
2. For Section B-B see Sheet S-27.

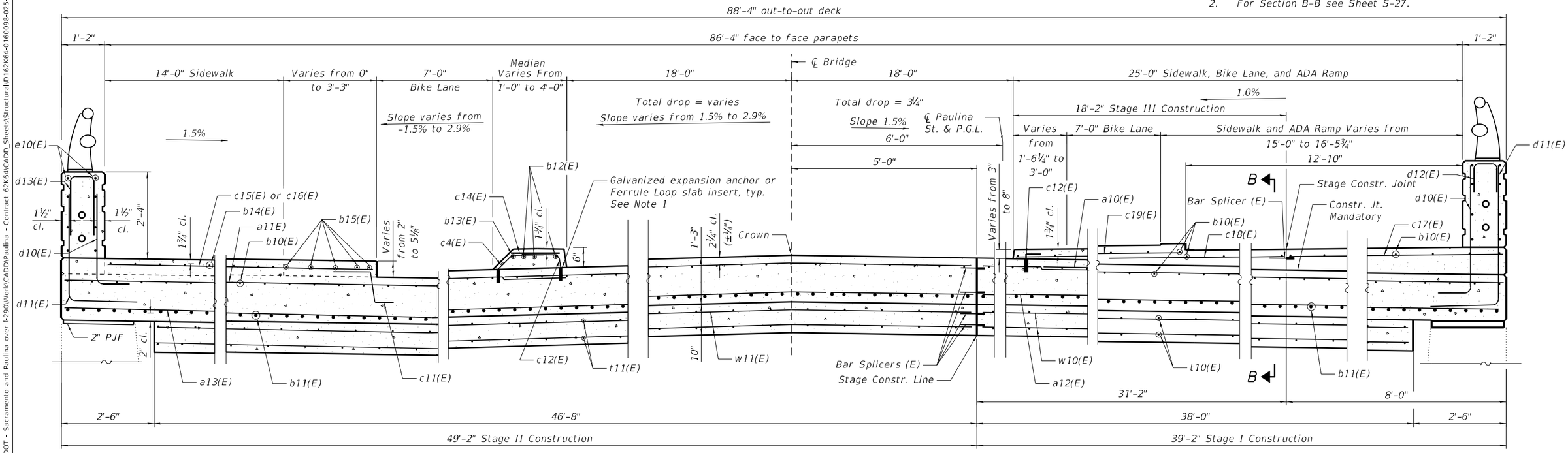

CROSS SECTION – NORTH APPROACH SLAB NEAR FOOTING

(Looking North)

** Cut to fit as necessary

MODEL: Default
FILE NAME: P:\10-L\14411-IDOT - Sacramento and Paulina over I-290\Work\CADD\Paulina - Contract 62K64\CADD_Sheets\Structural\D162K64-0160098-025-ApproachSlabDetails3.dgn
10/9/2025 4:35:12 PM

COLLINS ENGINEERS INC.

USER NAME =	DESIGNED - MR	REVISED -	
	CHECKED - EKM	REVISED -	
PLOT SCALE =	DRAWN - DR	REVISED -	
PLOT DATE =	CHECKED - EKM	REVISED -	

STATE OF ILLINOIS
DEPARTMENT OF TRANSPORTATION

BRIDGE APPROACH SLAB DETAILS
STRUCTURE NO. 016-0098
SHEET S-25 OF S-56 SHEETS

F.A.I. RTE.	SECTION	COUNTY	TOTAL SHEETS	SHEET NO.
290	2019-191-B-R	COOK	265	191
		CONTRACT NO. 62K64		
	ILLINOIS	FED. AID PROJECT		

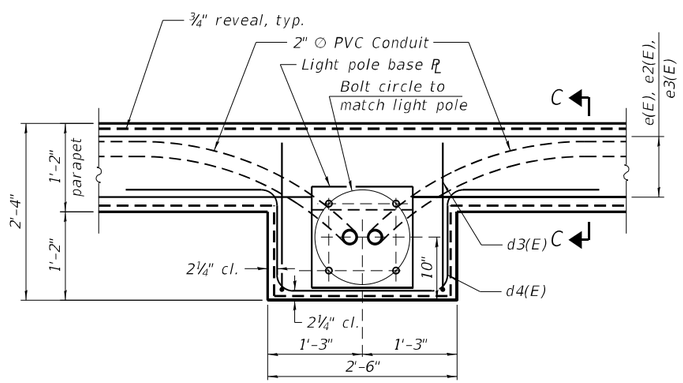

LIGHT POLE MOUNTED ON CONCRETE PARAPET - PLAN

1 location on South Approach Slab and
1 location on North Approach Slab
Quantities are included in the Bill of Material on Sheet S-27.

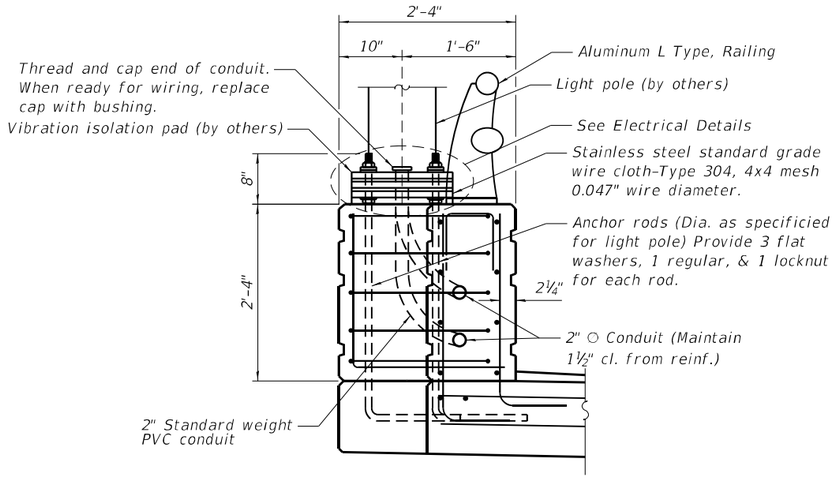

SECTION C-C: LIGHT POLE MOUNTED ON CONCRETE PARAPET

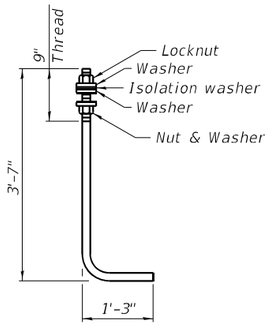

ANCHOR ROD

Diameter as specified for light poles. (ASTM F 1554 Grade 105) Full length hot dipped galvanized. Cost of Anchor Rods is included with Conrete Superstructure.

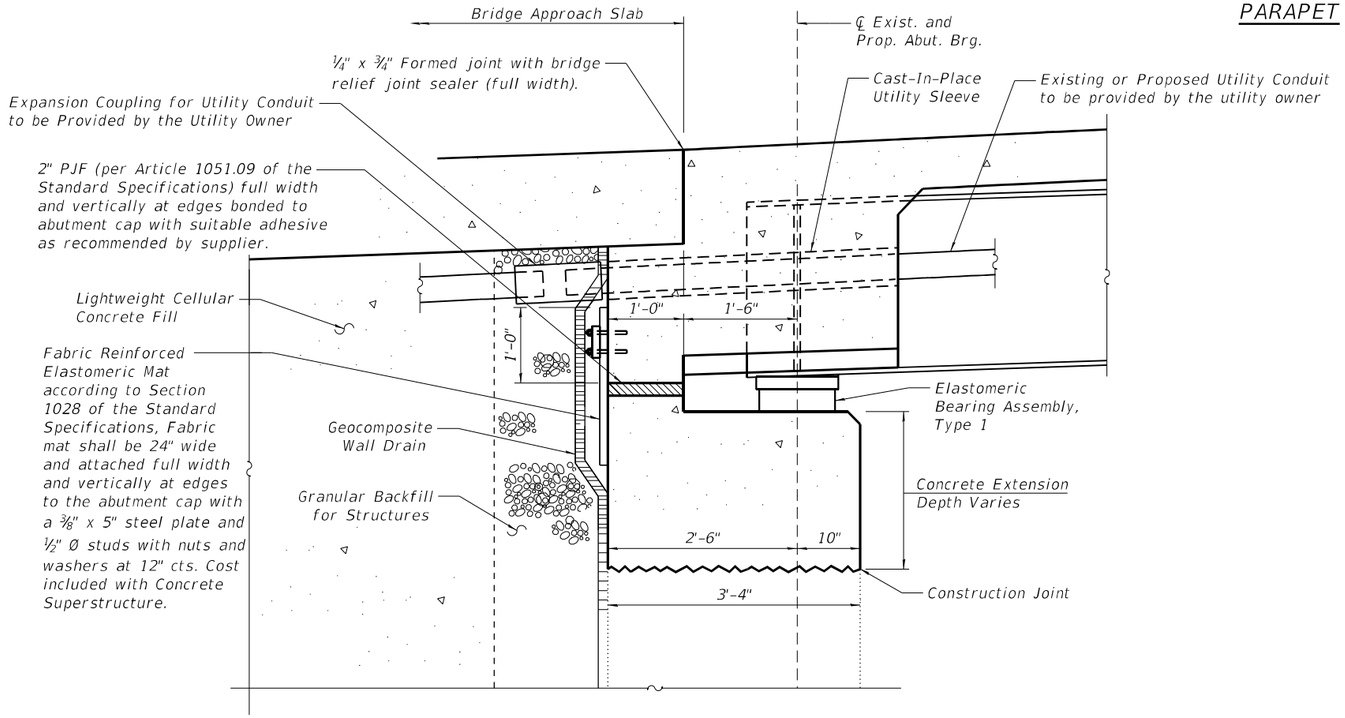

SECTION THRU ABUTMENT

Utility Sleeves, expansion couplings, etc. shall be supplied by the utility owner.

MODEL: Default
FILE NAME: P:\16\LL14411-IDOT - Sacramento and Paulina over I-290\Work\CADD\Paulina - Contract 62K64\CADD_Sheets\Structural\D162K64-016098-026-ApproachSlabDetails4.dgn
10/9/2025 4:35:24 PM

COLLINS ENGINEERS INC.

USER NAME =	DESIGNED - MR	REVISED -	
	CHECKED - EKM	REVISED -	
PLOT SCALE =	DRAWN - DR	REVISED -	
PLOT DATE =	CHECKED - EKM	REVISED -	

STATE OF ILLINOIS
DEPARTMENT OF TRANSPORTATION

BRIDGE APPROACH SLAB DETAILS
STRUCTURE NO. 016-0098
SHEET S-26 OF S-56 SHEETS

F.A.I. RTE.	SECTION	COUNTY	TOTAL SHEETS	SHEET NO.
290	2019-191-B-R	COOK	265	192
		CONTRACT NO. 62K64		
	ILLINOIS FED. AID PROJECT			

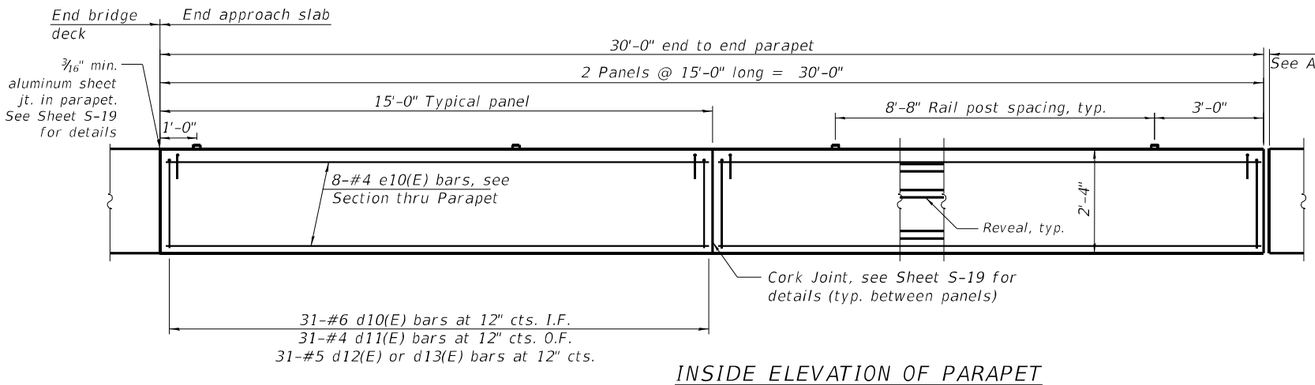

INSIDE ELEVATION OF PARAPET

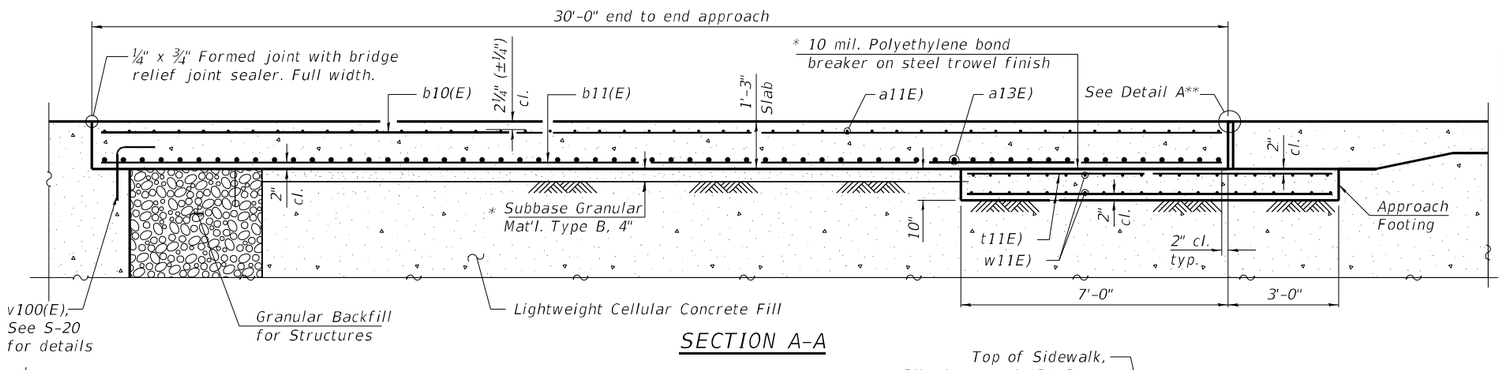

SECTION A-A

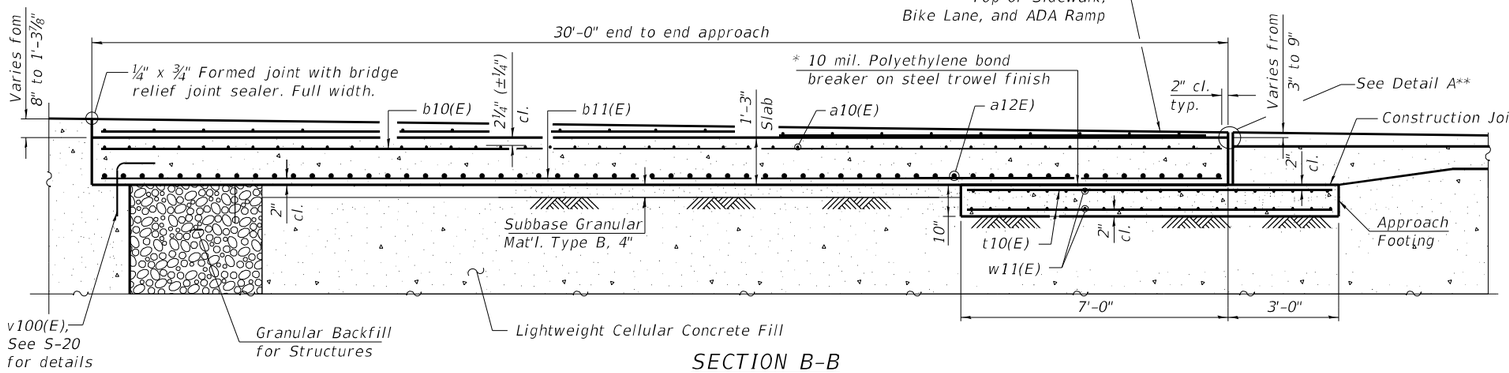

SECTION B-B

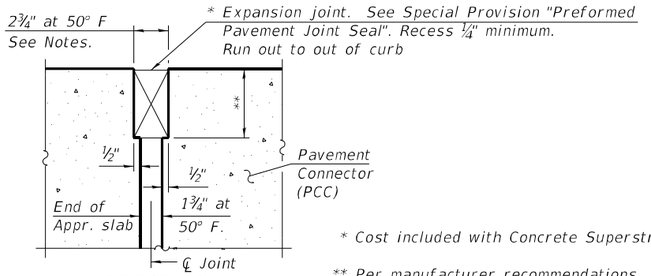

DETAIL A

* Cost included with Concrete Superstructure (Approach Slab).

** Per manufacturer recommendations

Notes:
1. Approach slab shall be paid for as Concrete Superstructure (Approach Slab).
2. Approach footing concrete shall be paid for as Concrete Structures.
3. The approach footing maximum applied service bearing pressure (Qmax) = 2.0 ksf.
4. Cost of excavation for approach footing included with Concrete Structures.
5. For Backfill and drainage treatment details, see Abutment sheets (S-39 thru S-44).
6. Median, West Sidewalk, and Parapet concrete shall be paid for as Concrete Superstructure.
7. See Sheet S-20 for c4(E) bar details.

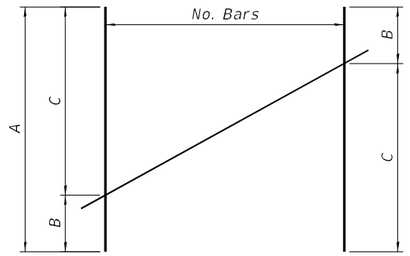

FIELD CUTTING DIAGRAM

Order bars full length. Cut as shown

Bar	No.	A	B	C
b15(E)	6	20'-1"	1'-0"	19'-1"
c14(E)	29	6'-0"	2'-3"	3'-9"
c16(E)	21	30'-7"	13'-8"	16'-11"

MINIMUM BAR LAP

#5 bar = 3'-0"
#6 bar = 4'-2"
#8 bar = 6'-11"



BAR c4(E)

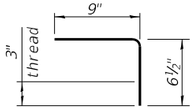

BAR c12(E)

TWO APPROACHES BILL OF MATERIAL

Bar	No.	Size	Length	Shape
a10(E)	184	#5	19'-5"	
a11(E)	184	#5	24'-6"	
a12(E)	122	#8	38'-10"	
a13(E)	122	#8	48'-11"	
b10(E)	355	#5	29'-8"	
b11(E)	426	#9	29'-8"	
b12(E)	4	#5	28'-5"	
b13(E)	1	#5	28'-2"	
b14(E)	22	#5	29'-8"	
b15(E)	5	#5	20'-1"	
b16(E)	1	#5	22'-2"	
t10(E)	340	#4	9'-9"	
w10(E)	80	#5	36'-5"	
w11(E)	80	#5	46'-5"	
c4(E)	60	#5	1'-5"	
c10(E)	31	#5	7'-9"	
c11(E)	31	#5	2'-4"	
c12(E)	122	#5	1'-4"	
c13(E)	31	#5	3'-9"	
c14(E)	31	#5	6'-0"	
c15(E)	29	#5	13'-9"	
c16(E)	12	#5	30'-7"	
c17(E)	21	#5	8'-9"	
c18(E)	31	#5	8'-11"	
c19(E)	31	#5	11'-11"	
c20(E)	31	#5	17'-11"	
d10(E)	124	#6	3'-5"	
d11(E)	124	#4	5'-1"	
d12(E)	62	#5	2'-2"	
d13(E)	62	#5	3'-10"	
e10(E)	32	#4	29'-9"	
Concrete Structures		Cu. Yd.	188.3	
Concrete Superstructure		Cu. Yd.	28.6	
Bridge Deck Grooving		Sq. Yd.	240	
Protective Coat		Sq. Yd.	618	
Concrete Superstructure (Approach Slab)		Cu. Yd.	251.0	
Reinforcement Bars, Epoxy Coated		Pound	106,390	

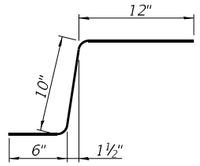

BAR c11(E)

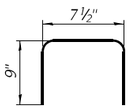

BAR d12(E)

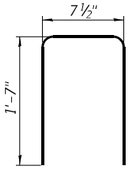

BAR d13(E)

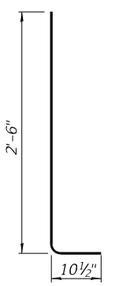

BAR d10(E)

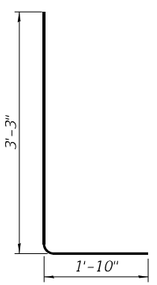

BAR d11(E)

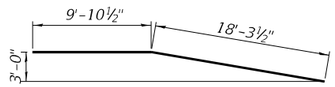

BAR b13(E)

MODEL: Default
FILE NAME: P:\10-IL\11411-IDOT - Sacramento and Paulina over I-290\Work\CADD\Paulina - Contract 62K64\CADD_Sheets\StructuralD162K64-4016009B-027-ApproachSlabDetails5.dgn
10/9/2025 4:35:34 PM

COLLINS ENGINEERS INC.

USER NAME =		DESIGNED -	MR	REVISED -	
		CHECKED -	EKM	REVISED -	
PLOT SCALE =		DRAWN -	DR	REVISED -	
PLOT DATE =		CHECKED -	EKM	REVISED -	

STATE OF ILLINOIS
DEPARTMENT OF TRANSPORTATION

BRIDGE APPROACH SLAB DETAILS
STRUCTURE NO. 016-0098
SHEET S-27 OF S-56 SHEETS

F.A.I. RTE.	SECTION	COUNTY	TOTAL SHEETS	SHEET NO.
290	2019-191-B-R	COOK	265	193
		CONTRACT NO. 62K64		
	ILLINOIS FED. AID PROJECT			

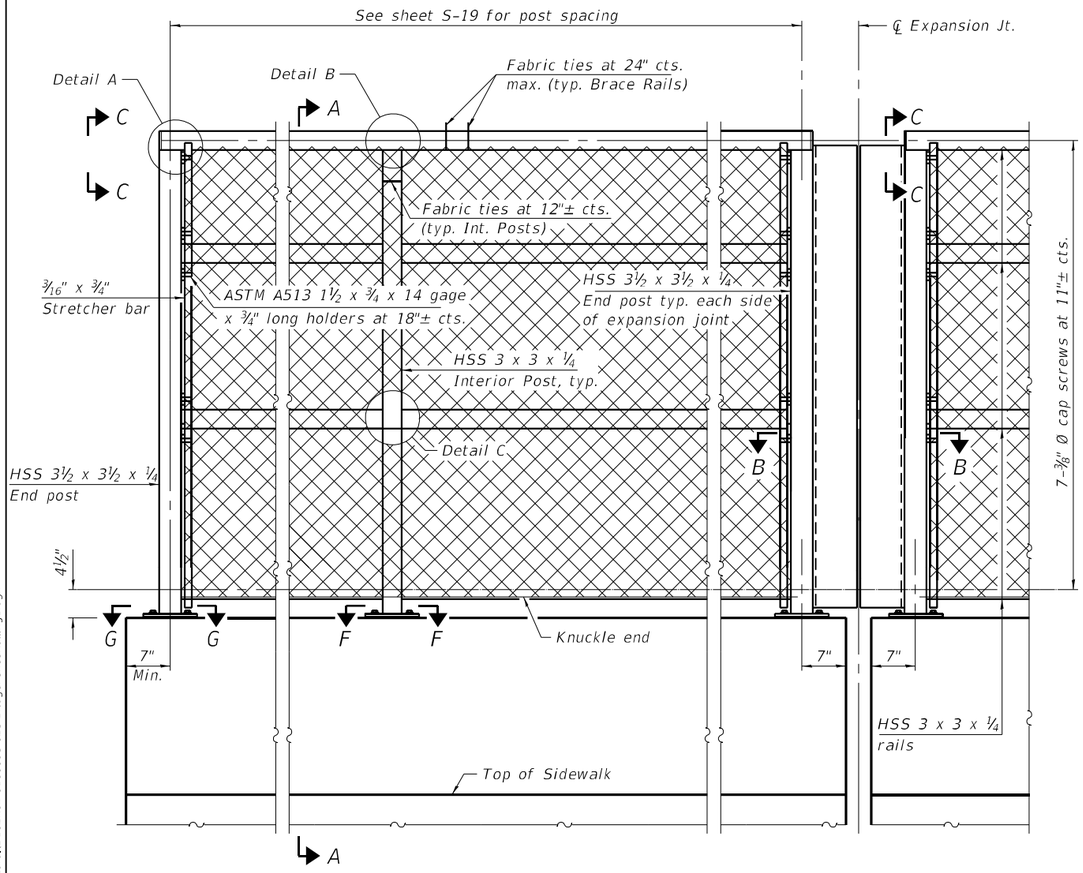

ELEVATION BRIDGE FENCE RAILING, CURVED

(Inside face)

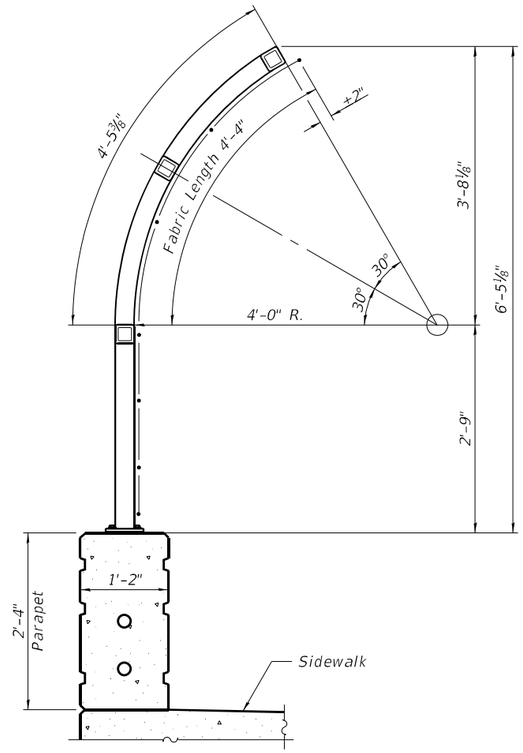

SECTION A-A

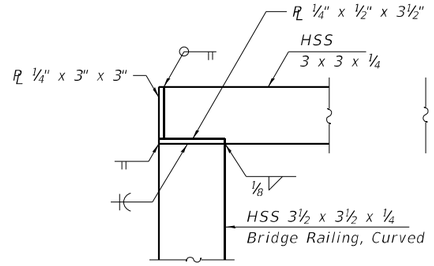

DETAIL A

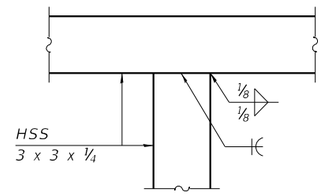

DETAIL B

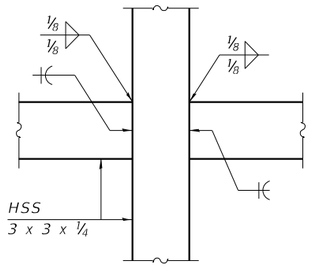

DETAIL C

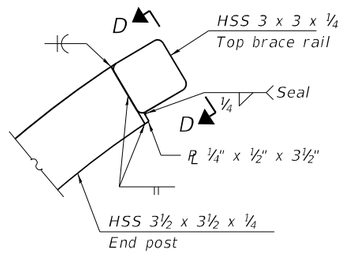

VIEW C-C

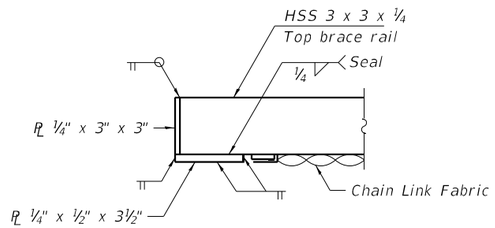

VIEW D-D

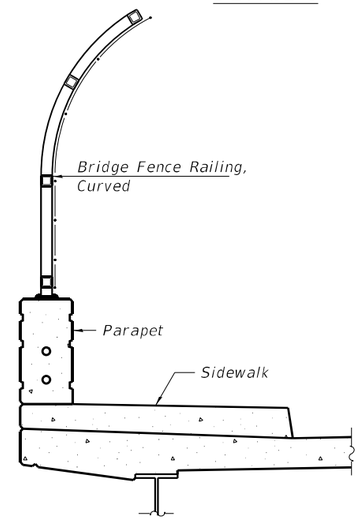

SECTION THRU DECK

RAILING CRITERIA

NCHRP 350 Test Level	4
Railing Weight (plf)	70
Max Post Spacing	10'-0"

MODEL: Default
FILE NAME: P:\10cl\14411-IDOT - Sacramento and Paulina over I-290\Work\CADD\Paulina - Contract 62K64\CADD_Sheets\Structural\D162K64-0160098-028-BridgeFenceRailing1.dgn
10/9/2025 4:35:44 PM

COLLINS ENGINEERS INC.

USER NAME =	DESIGNED - MR	REVISED -	
	CHECKED - EKM	REVISED -	
PLOT SCALE =	DRAWN - DR	REVISED -	
PLOT DATE =	CHECKED - EKM	REVISED -	

STATE OF ILLINOIS
DEPARTMENT OF TRANSPORTATION

BRIDGE FENCE RAILING, CURVED
STRUCTURE NO. 016-0098
SHEET S-28 OF S-56 SHEETS

F.A.I. RTE.	SECTION	COUNTY	TOTAL SHEETS	SHEET NO.
290	2019-191-B-R	COOK	265	194
		CONTRACT NO. 62K64		
		ILLINOIS	FED. AID PROJECT	

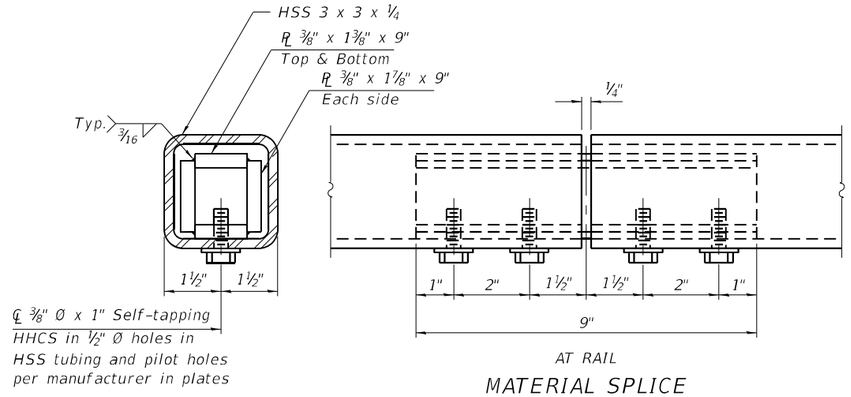

MATERIAL SPLICE

Notes:

Place reinforcement bars to miss anchor rod locations.

CVN testing is not required for the HSS tubing used in the Bridge Fence Railing, Curved.

All HSS tubing used for the Handrail shall be CVN tested according to Article 1006.34(b) of the Standard Specifications.

All heavy hex nuts shall be according to ASTM A 563 grade DH.

All fully threaded anchor rods shall be ASTM F1554 grade 105.

The post base plate shall be fastened to the curb snug tight and given an additional ⅛" turn.

Contractor shall offset posts to miss any aluminum sheet or cork joints for sufficient installation of the anchorage assembly.

Rail splice inserts may be built out of bent plates of the same thicknesses and outside geometry limits as the 4 plate rail splice inserts shown.

All steel rail elements shall be galvanized according to Article 509.05 of the Standard Specifications.

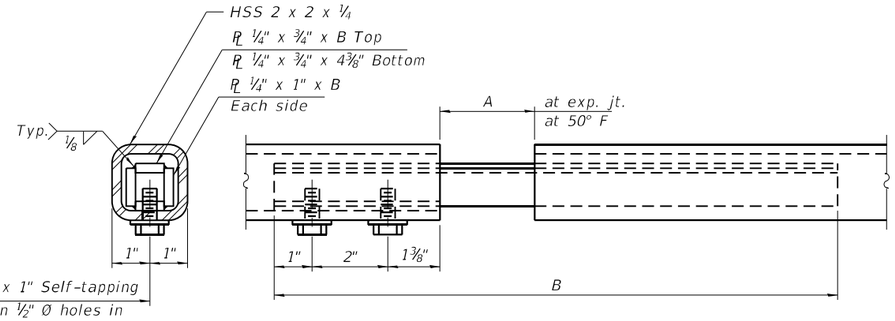

EXPANSION SPLICE

(Weld bottom plate on bolt side)

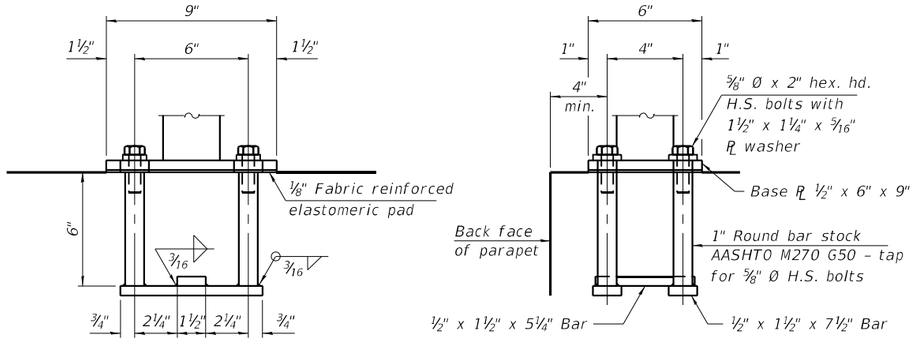

ANCHORAGE ASSEMBLY

The Bridge Fence Railing, Curved fasteners for end posts near expansion joints may need to be installed prior to installing the bent plates.

In lieu of the cast-in-place anchor device shown, the Contractor has the option of drilling and setting ⅝" Ø fully threaded anchor rods with the same plate washers as specified above and heavy hex lock nuts according to Article 509.06 of the Standard Specifications. Embedment shall be according to the manufacturer's specifications.

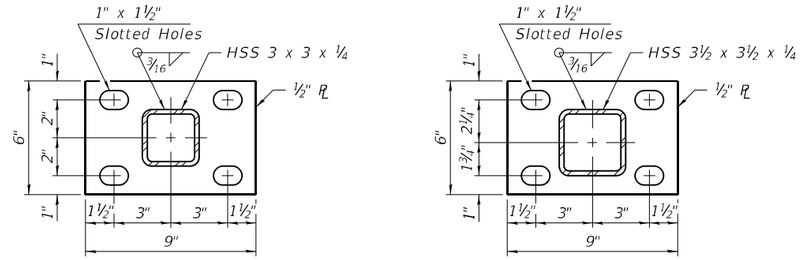

SECTION F-F

SECTION G-G

Location	T	A	B	C	D
Over Strip Seal Jt.	≤4"	2½"	1'-5⅞"	6¼"	3¾"
Over Finger or Modular Jt.	≤9½"	5½"	1'-11⅜"	9¾"	6"
Over Finger or Modular Jt.	≤15"	8¼"	2'-5⅛"	13⅞"	8¾"
At Light Poles	8"	NA	NA	11¾"	10"
At Bridge Relief Joints	NA - Material Splices Per Fabricator				

T= ; total movement based on total temperature range from -20°F to 120°F along centerline of roadway at expansion joint.
OR
8" hand-hole access for maintenance of light poles (when present; replace splice with 8" gap)

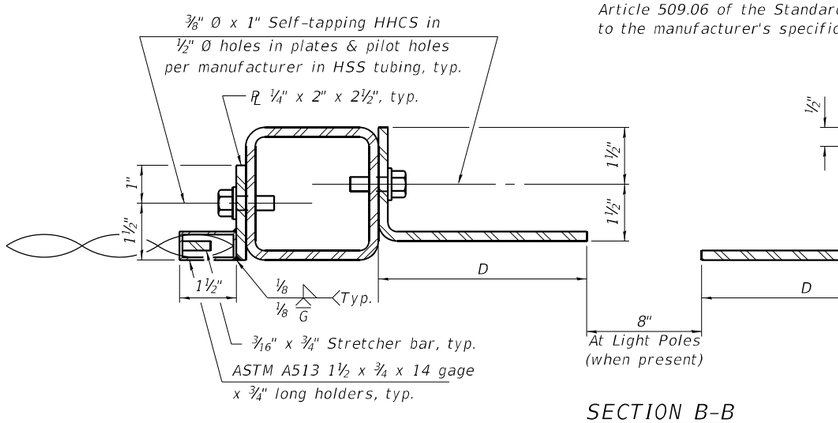

SECTION B-B

BILL OF MATERIAL

Item	Unit	Quantity
Bridge Fence Railing, Curved	Foot	526

MODEL: Default
FILE NAME: P:\10-ILL\14411-IDOT - Sacramento and Paulina over I-290\Work\CADD\Paulina - Contract 62K64\CADD_Sheets\Structural\D162K64-D160098-029-BridgeFenceRailing2.dgn
10/9/2025 4:35:58 PM

COLLINS ENGINEERS INC.

USER NAME =	DESIGNED - MR	REVISED -	
	CHECKED - EKM	REVISED -	
PLOT SCALE =	DRAWN - DR	REVISED -	
PLOT DATE =	CHECKED - EKM	REVISED -	

STATE OF ILLINOIS
DEPARTMENT OF TRANSPORTATION

BRIDGE FENCE RAILING, CURVED
STRUCTURE NO. 016-0098
SHEET S-29 OF S-56 SHEETS

F.A.I. RTE.	SECTION	COUNTY	TOTAL SHEETS	SHEET NO.
290	2019-191-B-R	COOK	265	195
		CONTRACT NO. 62K64		
		ILLINOIS	FED. AID PROJECT	

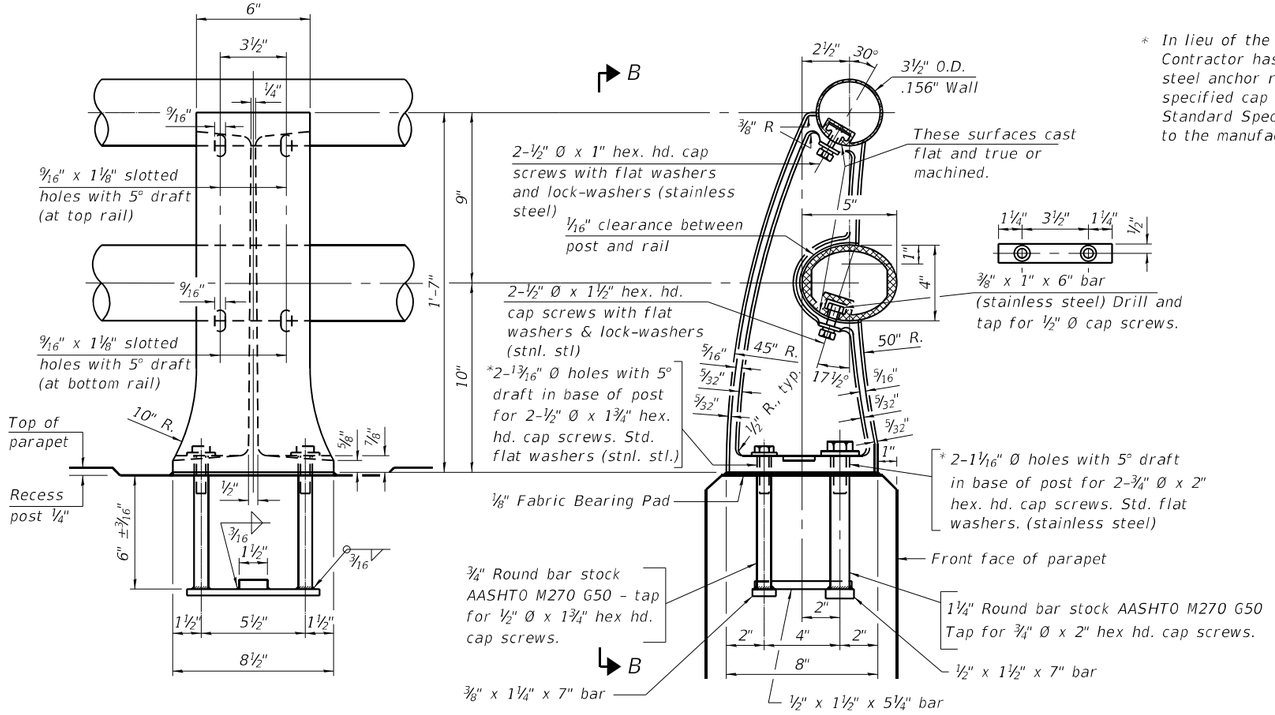

* In lieu of the cast-in-place anchor device shown, the Contractor has the option of drilling and setting stainless steel anchor rods of the same diameter and grade as the specified cap screws according to Article 509.06 of the Standard Specifications. Embedment shall be according to the manufacturer's specifications.

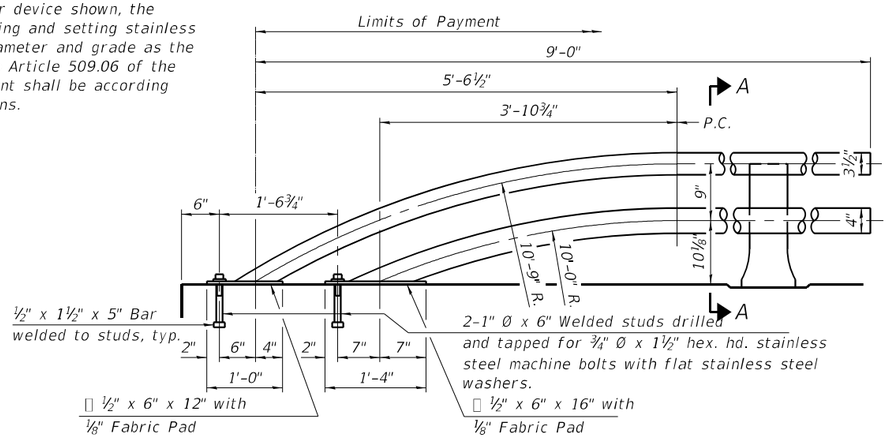

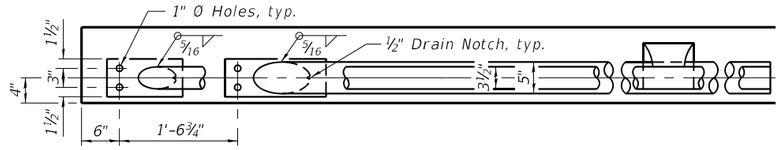

RAIL TERMINAL SECTION

Note: The end rail post shall be set back as required for the terminal rail section.

VIEW B-B

SECTION A-A

RAIL POST DETAILS

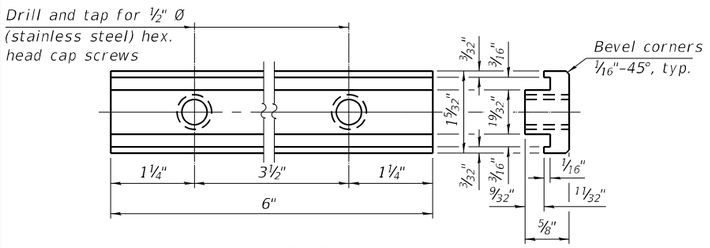

RAIL POST CLAMP BAR

For Top Rail

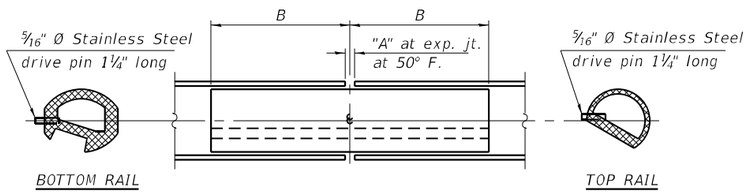

RAIL SPLICE

SPLICE DIMENSIONS

Location	T	A	B
All locs. not over exp. jts.	0	⅜"	1'-2"
Over Strip Seal Jt.	≤4"	2½"	1'-2"
Over Finger or Modular Jt.	≤9½"	5½"	1'-7¾"
Over Finger or Modular Jt.	≤15"	8¼"	2'-1¼"

T = ; total movement along centerline of roadway at expansion joint.

RAILING CRITERIA

NCHRP 350 Test Level	4
Post Spacing Range	7'-0" - 10'-0"
Rail Weight (plf)	40

R-20 5-15-2023

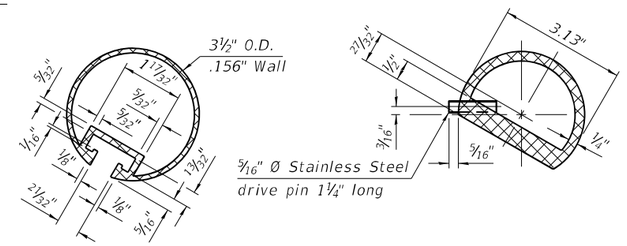

SECTION THRU TOP RAIL

SECTION THRU TOP RAIL SPLICE

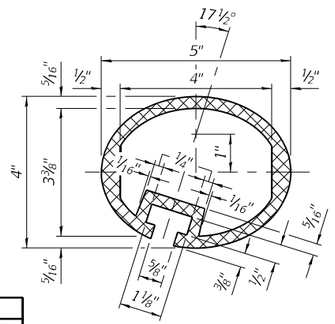

SECTION THRU BOTTOM RAIL

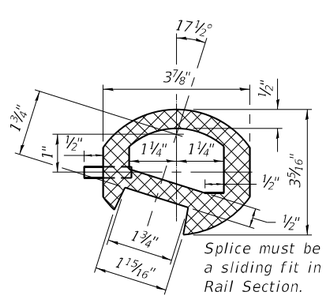

Splice must be a sliding fit in Rail Section.

SECTION THRU BOTTOM RAIL SPLICE

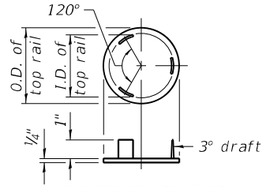

CAST END CAP

For top rail
Drive Fit Type

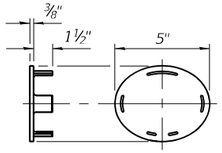

CAST END CAP

For bottom rail
Drive Fit Type

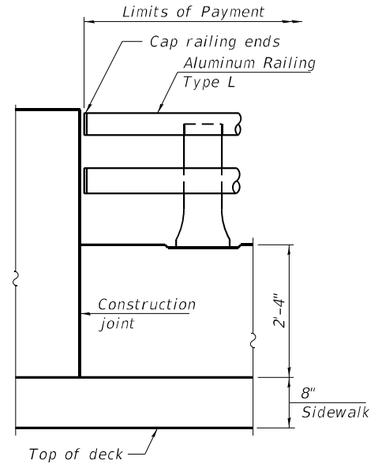

RAIL END TREATMENT FOR TYPE 5 AND 6 TERMINAL

Notes:

All Posts shall be normal to parapet.

All joints in rail shall be spliced per detail.

All exposed rail ends shall be capped per detail.

Provide 1-⅛" and 2-1/16" Aluminum Shims for 25% of the Posts. Rail elements shall be parallel to Grade, high spots shall be ground and low spots shimmed.

Place reinforcement bars to miss anchor rod locations.

See Sheet S-27 and S-46 for rail post spacing.

BILL OF MATERIAL

Item	Unit	Quantity
Aluminum Railing, Type L	Foot	180

MODEL: Default
FILE NAME: P:\10dls\14411-IDOT - Sacramento and Paulina over I-290\Work\CADD\Paulina - Contract 62K64\CADD_Sheets\Structural\D162K64-0160098-030-AluminumRailingTypeL.dgn
10/9/2025 4:36:10 PM

COLLINS ENGINEERS INC.

USER NAME =	DESIGNED - MR	REVISED -	
	CHECKED - EKM	REVISED -	
PLOT SCALE =	DRAWN - DR	REVISED -	
PLOT DATE =	CHECKED - EKM	REVISED -	

STATE OF ILLINOIS
DEPARTMENT OF TRANSPORTATION

ALUMINUM RAILING, TYPE L
STRUCTURE NO. 016-0098
SHEET S-30 OF S-56 SHEETS

F.A.I. RTE.	SECTION	COUNTY	TOTAL SHEETS	SHEET NO.
290	2019-191-B-R	COOK	265	196
		CONTRACT NO. 62K64		
		ILLINOIS	FED. AID PROJECT	

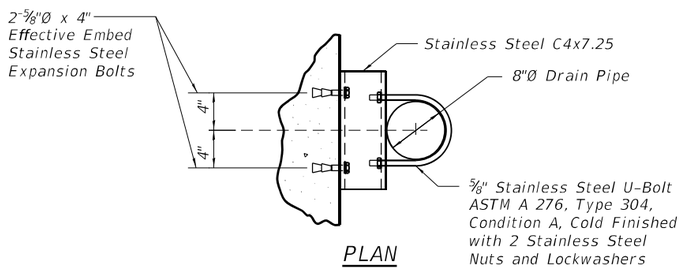

PLAN

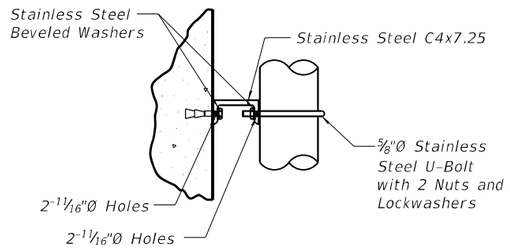

ELEVATION

DETAIL 2

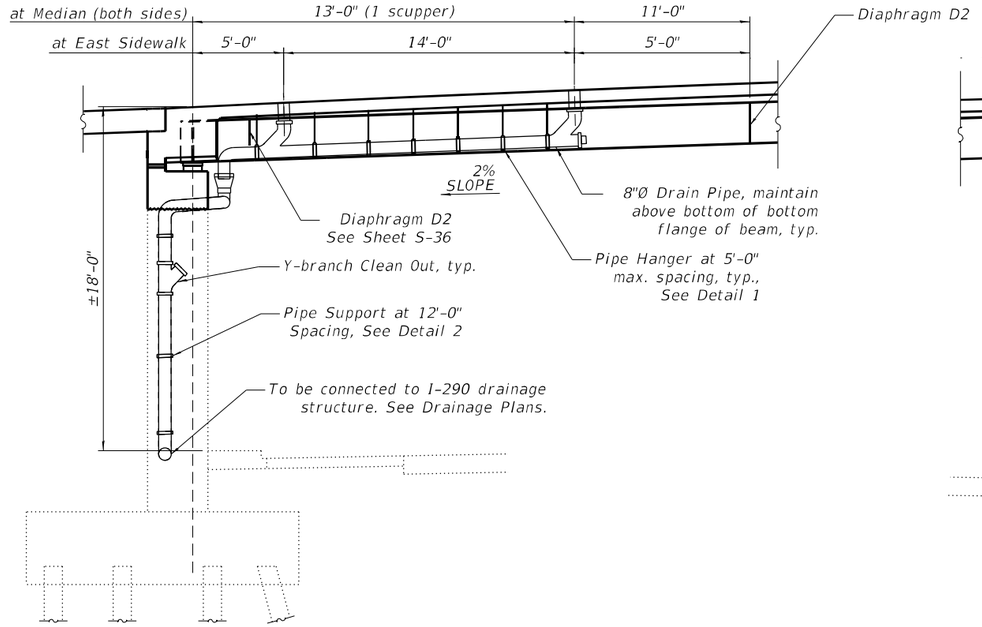

AT ABUTMENT

North Abutment shown, South Abutment similar
Looking East

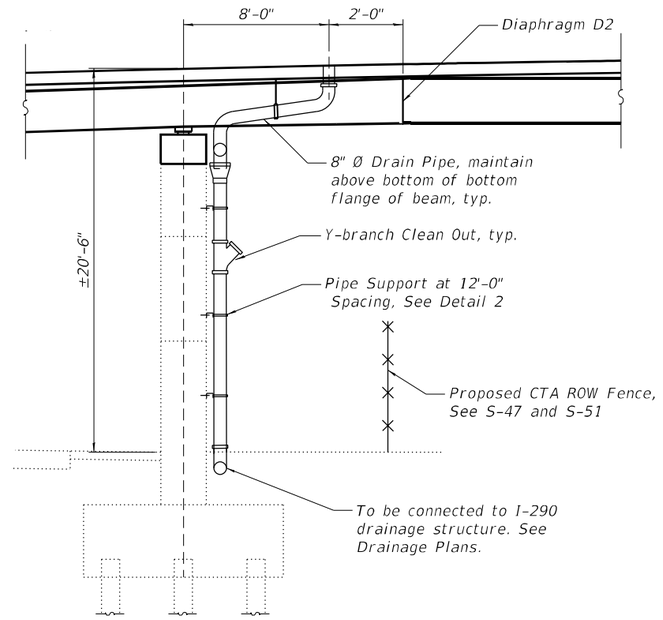

AT PIER 1 AND 3

Looking East

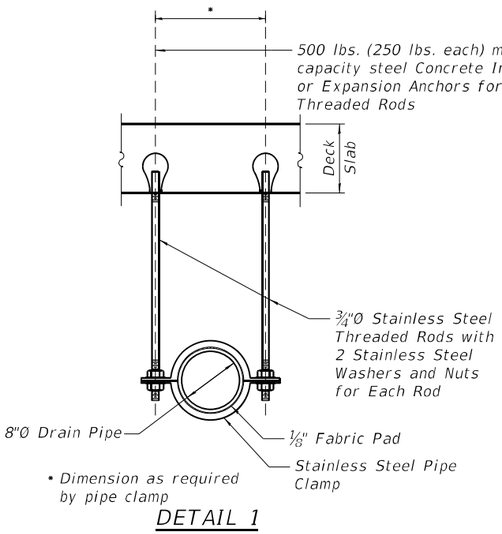

DETAIL 1

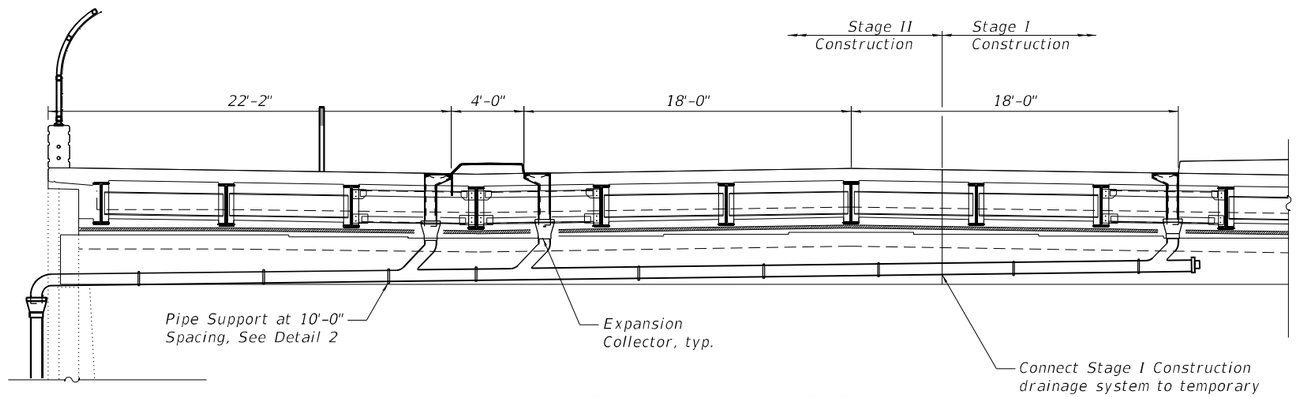

ELEVATION AT ABUTMENT

North Abutment shown
South Abutment, Piers 1 and 3 similar

NOTES:

Drain pipe for bridge drainage system, including all piping, fittings, support brackets, inserts, bolts, and splash blocks shown, shall be as specified in the IDOT Specifications for drainage system.

Reinforced Thermosetting Resin pipe and fittings shall be 8" diameter, meeting the requirements of ASTM D2996 RTRP with a 30,000 psi minimum short-time rupture strength hoop tensile stress.

Expansion Collectors shall allow for 1" movement in each direction.

BILL OF MATERIAL

Item	Unit	Total
Drainage System for Structures	L Sum	1

MODEL: Default
FILE NAME: P:\10-LL14411-IDOT - Sacramento and Paulina over I-290\Work\CADD\Paulina - Contract 62K64\CADD_Sheets\Structural\D162K64-0160098-031-DrainageDetails.dgn
10/9/2025 4:36:20 PM

COLLINS ENGINEERS INC.

USER NAME =		DESIGNED - MR		REVISED -	
		CHECKED - EKM		REVISED -	
PLOT SCALE =		DRAWN - DR		REVISED -	
PLOT DATE =		CHECKED - EKM		REVISED -	

STATE OF ILLINOIS
DEPARTMENT OF TRANSPORTATION

BRIDGE DRAINAGE SYSTEM
STRUCTURE NO. 016-0098
SHEET S-31 OF S-56 SHEETS

F.A.I. RTE.	SECTION	COUNTY	TOTAL SHEETS	SHEET NO.
290	2019-191-B-R	COOK	265	197
		CONTRACT NO. 62K64		
		ILLINOIS	FED. AID PROJECT	

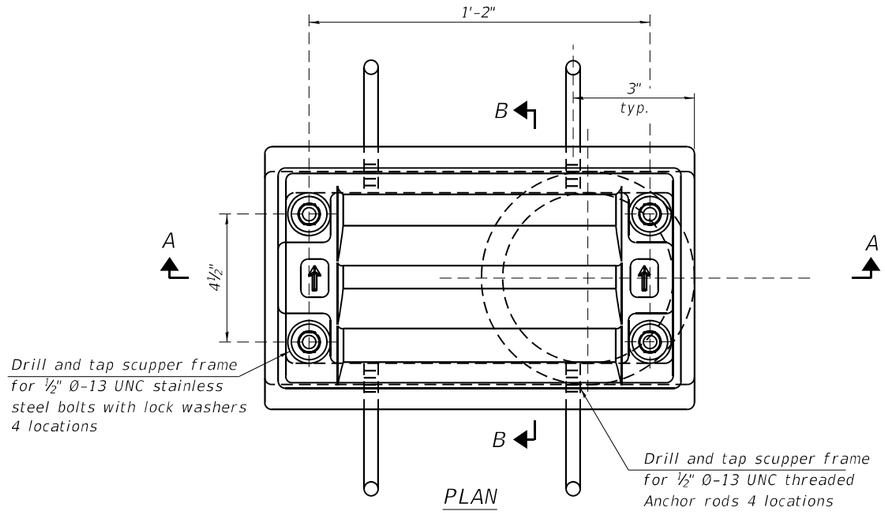

PLAN

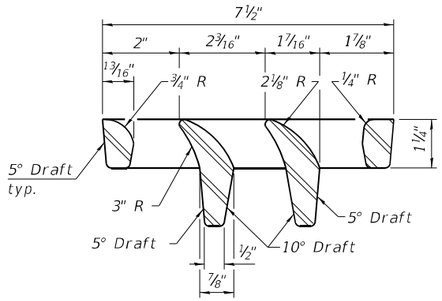

VANE GRATE DETAIL

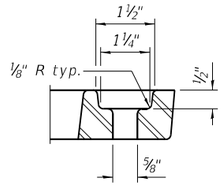

GRATE BOLT HOLE DETAIL

Notes:

All cast iron parts shall be gray iron conforming to the requirements of AASHTO M105, Class 35B and AASHTO M306.

Bolts, anchor rods, nuts and washers shall be according to ASTM A307 and shall be galvanized according to AASHTO M232. As an alternate stainless steel may be used.

Stainless steel hardware shall be according to Article 1006.29(d) of the Standard Specifications.

Structural steel weldments of equal sections and of the same configuration may be substituted for the cast iron scupper frames and downspouts; however, the scupper grates shall remain cast iron. Fillet or full penetration welds shall be used for the weldments. Details shall be submitted to the Engineer for approval.

Structural steel scupper frames and downspouts, when utilized, shall be galvanized according to AASHTO M111.

The Contractor shall take appropriate measures to assure that Protective Coat is not applied to the scupper.

Cost of the grate, frame, downspout, anchor rods, nuts and washers including complete installation of the scupper shall be paid for at the contract unit price for Drainage Scuppers, DS-11.

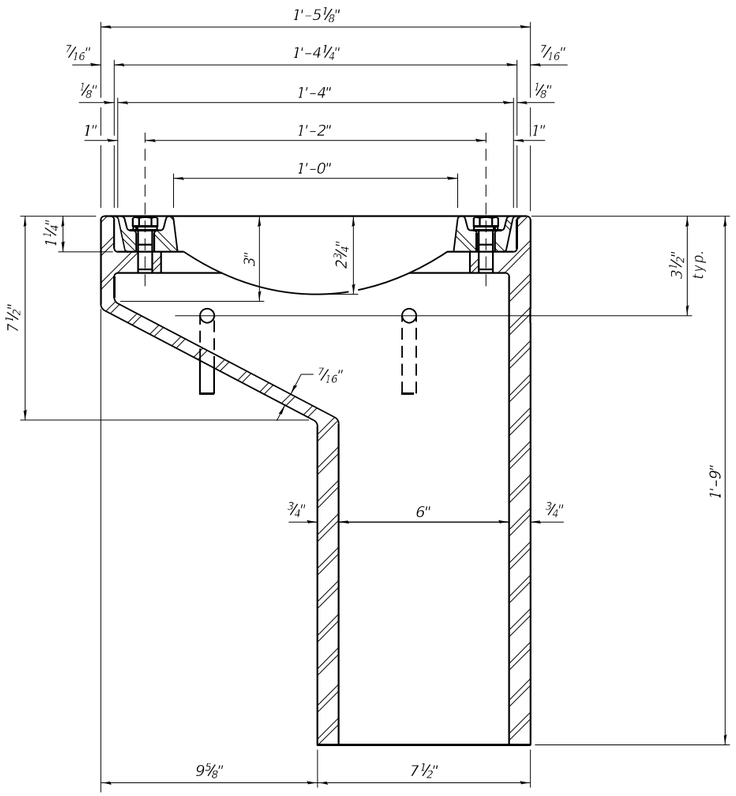

SECTION A-A

See sheet S-18 for scupper location relative to sidewalk and median.

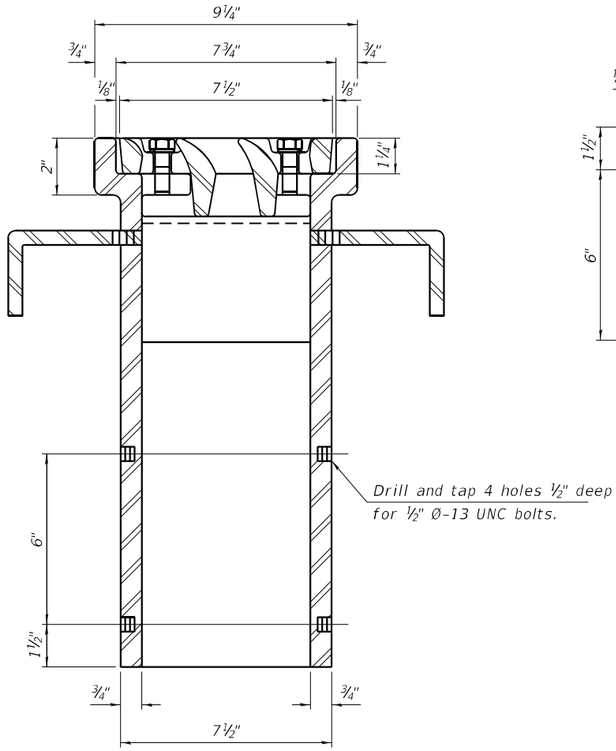

SECTION B-B

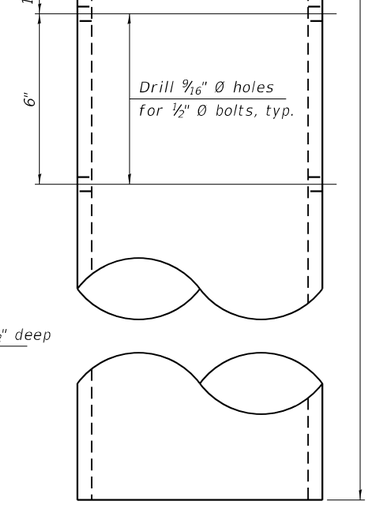

DOWNSPOUT

See Sheet S-31 for Closed Drainage System

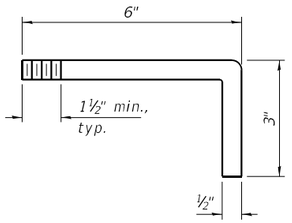

ANCHOR ROD DETAIL

BILL OF MATERIAL

Item	Unit	Quantity
Drainage Scuppers, DS-11	Each	10

MODEL: Default
FILE NAME: P:\10HLL1441-IDOT - Sacramento and Paulina over I-290\Work\CADD\Paulina - Contract 62K64\CADD_Sheets\Structural\D162K64-0160098-032-DrainageScupperDS-11.dgn
10/9/2025 4:36:29 PM

DS-11 4-4-2025

COLLINS ENGINEERS INC.

USER NAME =	DESIGNED - MR	REVISED -	
	CHECKED - EKM	REVISED -	
PLOT SCALE =	DRAWN - DR	REVISED -	
PLOT DATE =	CHECKED - EKM	REVISED -	

STATE OF ILLINOIS
DEPARTMENT OF TRANSPORTATION

DRAINAGE SCUPPERS, DS-11
STRUCTURE NO. 016-0098
SHEET S-32 OF S-56 SHEETS

F.A.I. RTE.	SECTION	COUNTY	TOTAL SHEETS	SHEET NO.
290	2019-191-B-R	COOK	265	198
		CONTRACT NO. 62K64		
		ILLINOIS	FED. AID PROJECT	

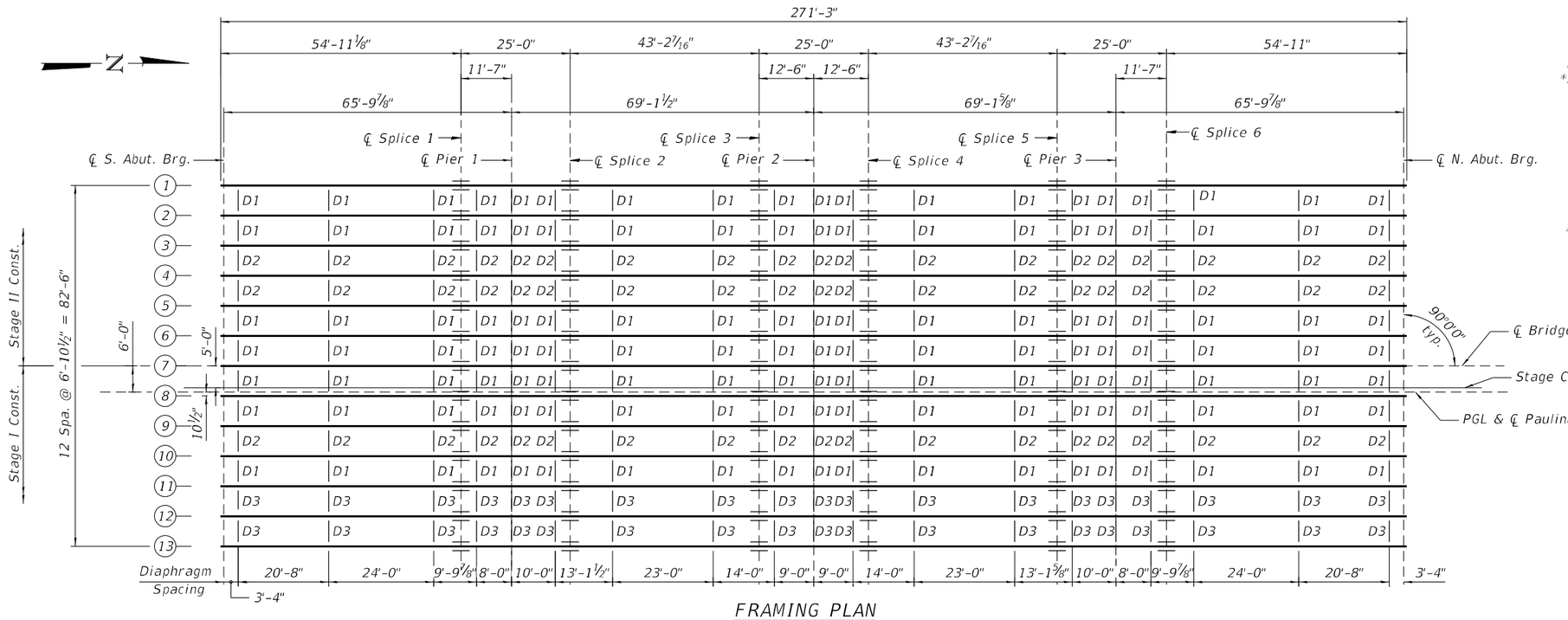

FRAMING PLAN

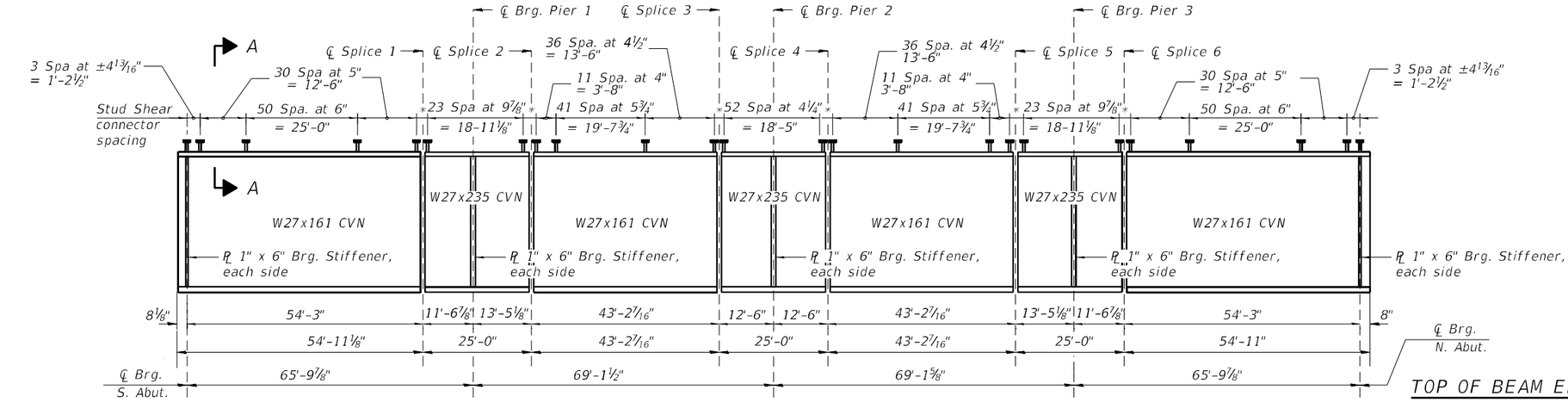

GIRDER ELEVATION

* = 6'-1" (no studs), see Shear Connector Detail at Splices on Sheet S-35

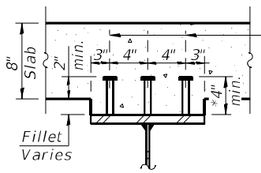

¾" Ø Granular or solid flux filled headed studs automatically end welded to flange. (No. Req'd.= 19,773)

SECTION A-A

Notes:

1. All diaphragms between beams shall be installed with erection pins and bolts in accordance with the erection plan approved by the Engineer. Individual diaphragms at supports may be temporarily disconnected to install bearing anchor bolts.
2. Load carrying components designated "CVN" shall conform to the Charpy-V-Notch Impact Energy Requirement, Zone 2.
3. All W27 beams shall be AASHTO M270 Gr. 50

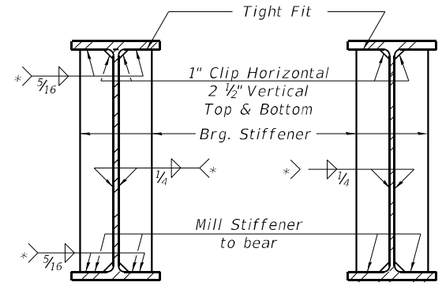

SECTION AT PIER

SECTION AT ABUTMENT

* Terminate ¼" (±⅛") from the end of plate intersects.

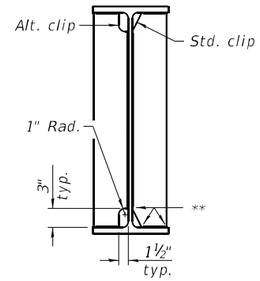

WELD LIMITS AND CLIP DETAILS

** Stop welds ¼" (±⅛") from edges as shown. Typical.

TOP OF BEAM ELEVATIONS TABLE

	℄ Brg. S. Abut.	Splice #1	℄ Pier 1	Splice #2	Splice #3	℄ Pier 2	Splice #4	Splice #5	℄ Pier 3	Splice #6	℄ Brg. N. Abut.
1	594.58	596.33	596.58	596.87	597.35	597.36	597.35	596.87	596.59	596.31	594.60
2	594.54	596.29	596.55	596.84	597.31	597.33	597.32	596.83	596.55	596.28	594.56
3	594.45	596.19	596.45	596.74	597.22	597.23	597.22	596.74	596.45	596.18	594.46
4	594.34	596.08	596.34	596.63	597.11	597.12	597.11	596.63	596.34	596.07	594.35
5	594.44	596.19	596.44	596.73	597.21	597.22	597.21	596.73	596.45	596.17	594.46
6	594.54	596.29	596.55	596.84	597.31	597.33	597.32	596.83	596.55	596.28	594.56
7	594.65	596.39	596.65	596.94	597.42	597.43	597.42	596.94	596.65	596.38	594.66
8	594.54	596.29	596.55	596.84	597.31	597.33	597.32	596.82	596.54	596.26	594.56
9	594.44	596.19	596.44	596.73	597.21	597.22	597.21	596.73	596.45	596.17	594.46
10	594.34	596.08	596.34	596.63	597.11	597.12	597.11	596.63	596.35	596.07	594.36
11	594.23	595.98	596.24	596.53	597.01	597.02	597.01	596.53	596.24	595.97	594.25
12	594.13	595.88	596.13	596.42	596.90	596.91	596.90	596.42	596.14	595.86	594.15
13	594.03	595.77	596.03	596.32	596.80	596.81	596.80	596.32	596.03	595.76	594.04

For Fabrication only

TYPICAL INTERIOR BEAM MOMENT TABLE					
		0.4 Sp. 1 or 0.6 Sp. 4	Pier 1 or Pier 3	0.5 Sp. 2 or 0.5 Sp. 3	Pier 2
I_s	(in^4)	6,310	9,700	6,310	9,700
$I_c(n)$	(in^4)	16,948	---	16,948	---
$I_c(3n)$	(in^4)	12,587	---	12,587	---
$I_c(cr)$	(in^4)	---	11,718	---	11,718
S_s	(in^3)	458	677	458	677
$S_c(n)$	(in^3)	658	---	658	---
$S_c(3n)$	(in^3)	599	---	599	---
$S_c(cr)$	(in^3)	---	738	---	738
S_x	(in^3)	616	751	638	747
DC1	(k/')	0.90	0.98	0.90	0.98
M_{DC1}	('k)	276	-488	133	-341
DC2	(k/')	0.60	0.60	0.60	0.60
M_{DC2}	('k)	151	-234	78	-173
DW	(k/')	0.17	0.17	0.17	0.17
M_{DW}	('k)	55	-85	28	-63
LLDF		0.559	0.576	0.552	0.573
M_{L+IM}	('k)	693	-671	576	-636
f_f (Strength I)	(ksi)	0	0	0	0
$M_u + \frac{1}{3} f_f S_x$	('k)	1,832	-2,206	1,315	-1,849
$\phi_f M_n$	('k)	3,376	-3,196	3,376	-3,196
f_s DC1	(ksi)	7.27	-8.66	3.47	-6.04
f_s DC2	(ksi)	3.03	-3.81	1.56	-2.81
f_s DW	(ksi)	1.11	-1.39	0.57	-1.03
f_s (L+IM)	(ksi)	12.6	-10.9	10.5	-10.3
f_f (Service II)	(ksi)	0	0	0	0
$f_s + f_f/2$ (Service II)	(ksi)	27.8	-28.1	19.3	-23.3
Service II Resistance	(ksi)	47.5	47.5	47.5	47.5
$f_s + f_f/3$ (Strength I)	(ksi)	---	---	---	---
$\phi_f F_n$	(ksi)	---	---	---	---
V_f	(k)	59.9	---	60.3	---

TYPICAL INTERIOR BEAM REACTION TABLE						
		S. Abut.	Pier 1	Pier 2	Pier 3	N. Abut.
LLDF		0.734	0.734	0.734	0.734	0.734
OCF		---	---	---	---	---
R_{DC1}	(k)	*49.5	72.4	60.2	72.4	*49.5
R_{DC2}	(k)	11.9	36.2	30.8	36.2	11.9
R_{DW}	(k)	4.4	13.2	11.2	13.2	4.4
R_L	(k)	61.7	90.5	88.7	90.5	61.7
R_{IM}	(k)	14.4	17.1	17.0	17.1	14.4
R_{Total} (Strength I)(Impact)	(k)	216.5	344.0	315.5	344.0	216.5
R_{Total} (Strength I)(No Impact)	(k)	191.3	314.1	285.8	314.1	191.3

* Includes tributary weight of cast-in-place diaphragm and contributing portion of approach slab.

TYPICAL INTERIOR BEAM DEFLECTION TABLE		
Δ_{ALLOW}	(in)	0.658
Δ_{L+IM}	(in)	0.278

I_s, S_s : Non-composite moment of inertia and section modulus of the steel section used for computing f_s(Total-Strength I, and Service II) due to non-composite dead loads ($in.^4$ and $in.^3$).

$I_c(n)$, $S_c(n)$: Composite moment of inertia and section modulus of the steel and deck based upon the modular ratio, "n", used for computing f_s(Total-Strength I, and Service II) in uncracked sections due to short-term composite live loads ($in.^4$ and $in.^3$).

$I_c(3n)$, $S_c(3n)$: Composite moment of inertia and section modulus of the steel and deck based upon 3 times the modular ratio, "3n", used for computing f_s(Total-Strength I, and Service II) in uncracked sections, due to long-term composite (superimposed) dead loads ($in.^4$ and $in.^3$).

$I_c(cr)$, $S_c(cr)$: Composite moment of inertia and section modulus of the steel and longitudinal deck reinforcement, used for computing f_s (Total-Strength I and Service II) in cracked sections, due to both short-term composite live loads and long-term composite (superimposed) dead loads ($in.^4$ and $in.^3$).

S_x : Section modulus about the major axis of a section to the controlling flange, tension or compression, taken as yield moment with respect to the controlling flange over the yield strength of the controlling flange ($in.^3$).

DC1: Un-factored non-composite dead load (kips/ft.).

M_{DC1}: Un-factored moment due to non-composite dead load (kip-ft.).

DC2: Un-factored long-term composite (superimposed excluding future wearing surface) dead load (kips/ft.).

M_{DC2}: Un-factored moment due to long-term composite (superimposed excluding future wearing surface) dead load (kip-ft.).

DW: Un-factored long-term composite (superimposed future wearing surface only) dead load (kips/ft.).

M_{DW}: Un-factored moment due to long-term composite (superimposed future wearing surface only) dead load (kip-ft.).

LLDF: Live Load Distribution Factor for moment and shear computed according to Article 4.6.2.2 and further IDOT provisions.

M_{L+IM}: Un-factored live load moment plus dynamic load allowance (impact) (kip-ft.).

M_u : Strength I load combination of factored design moments (kip-ft.). $1.25 (M_{DC1} + M_{DC2}) + 1.5 M_{DW} + 1.75 M_{L+IM}$

f_f : Factored calculated flange lateral bending stress as calculated using Article 6.10.1.6 and as further simplified by IDOT provisions (ksi).

$\phi_f M_n$: Factored nominal flexural resistance of the section determined as specified in Article 6.10.7.1 or A6 as applicable (kip-ft.).

f_s DC1: Un-factored stress at edge of flange for controlling steel flange due to vertical non-composite dead loads as calculated below (ksi).
M_{DC1} / S_s

f_s DC2: Un-factored stress at edge of flange for controlling steel flange due to vertical composite dead loads as calculated below (ksi).
$M_{DC2} / S_c(3n)$ or $M_{DC2} / S_c(cr)$ as applicable.

f_s DW: Un-factored stress at edge of flange for controlling steel flange due to vertical composite future wearing surface loads as calculated below (ksi).
$M_{DW} / S_c(3n)$ or $M_{DW} / S_c(cr)$ as applicable.

f_s (L + IM): Un-factored stress at edge of flange for controlling steel flange due to vertical composite live load plus impact loads as calculated below (ksi).
$M_{L+IM} / S_c(n)$ or $M_{L+IM} / S_c(cr)$ as applicable.

$f_s + f_f/2$ (Service II): Sum of stresses as computed below (ksi).
f_s DC1 + f_s DC2 + f_s DW + 1.3 f_s (L + IM) + $f_f/2$

Service II Resistance: Composite ($0.95R_h F_{yf}$) or noncomposite ($0.80R_h F_{yf}$) stress capacity according to Article 6.10.4.2 (ksi).

$f_s + f_f/3$ (Strength I): Sum of stresses as computed below on non-compact sections (ksi).
1.25 (f_s DC1 + f_s DC2) + 1.5 f_s DW + 1.75 f_s (L + IM) + $f_f/3$

$\phi_f F_n$: Factored nominal flexural resistance of the section as specified in Article 6.10.7.2 or 6.10.8 as applicable (ksi).

V_f : Maximum factored shear range in span computed according to Article 6.10.10.

OCF: Obtuse Correction Factor according to Article 4.6.2.2.3c or as further simplified by IDOT provisions.

R_{DC1}: Un-factored reaction due to non-composite dead load (kip).

R_{DC2}: Un-factored reaction due to long-term composite (superimposed excluding future wearing surface) dead load (kip).

R_{DW} : Un-factored reaction due to long-term composite (superimposed future wearing surface only) dead load (kip).

R_L : Un-factored live load reaction (kip).

R_{IM} : Un-factored dynamic load allowance (impact) (kip).

R_{Total} (Strength I)(Impact): Strength I load combination of factored design reactions (kip).
$1.25 (R_{DC1} + R_{DC2}) + 1.5R_{DW} + 1.75 (R_L + R_{IM})$

R_{Total} (Strength I)(No Impact): Strength I load combination of factored design reactions, not including dynamic load allowance (Impact) (kip).
$1.25 (R_{DC1} + R_{DC2}) + 1.5R_{DW} + 1.75 (R_L)$

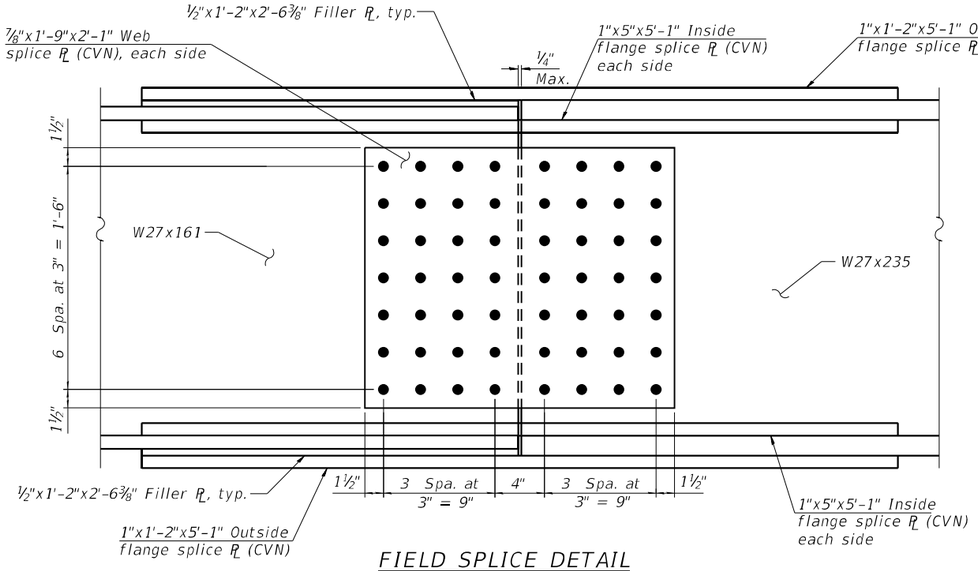

FIELD SPLICE DETAIL

(56 Bolts Required for each Web Splice)
6 Splices per Beam, 78 Splices Total

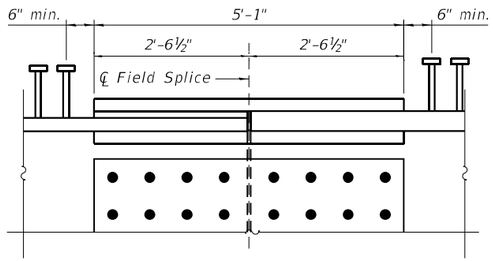

SHEAR CONNECTOR DETAIL AT SPLICES

DO NOT place shear connectors on splice plates.

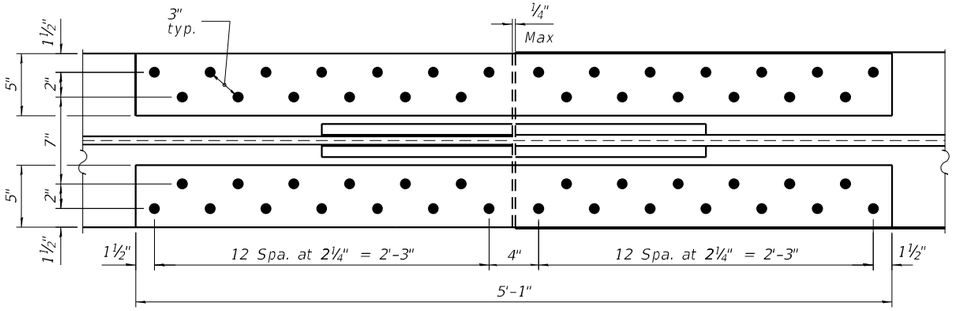

BOTTOM INNER FLANGE PLATE

(Top Inner Flange Plates similar)
(52 Bolts Required for each Bottom Flange Splice)
6 Splices per Beam, 78 Splices Total

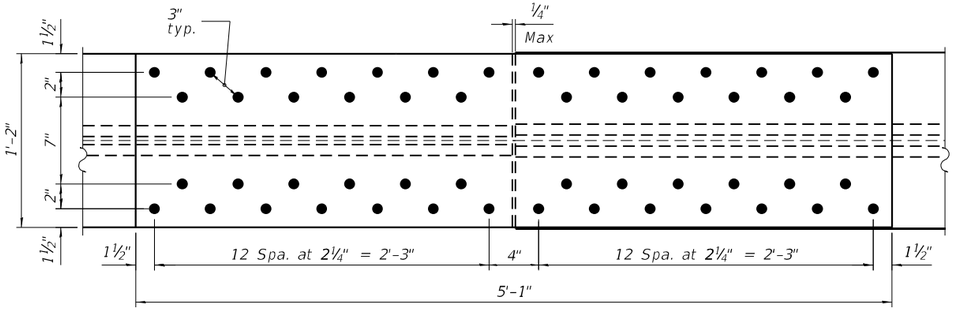

BOTTOM OUTER FLANGE PLATE

(Top Outer Flange Plates similar)
(52 Bolts Required for each Bottom Flange Splice)
6 Splices per Beam, 78 Splices Total

Notes:

1. Diaphragms between Beams 5 thru 9 are type D1 See Sheet S-36 for details.
2. Load carrying components designated CVN shall conform to the Charpy-V-Notch Impact Energy requirements, Zone 2.
3. All splice plates, except for filler plates, shall be AASHTO M270 Gr. 50.

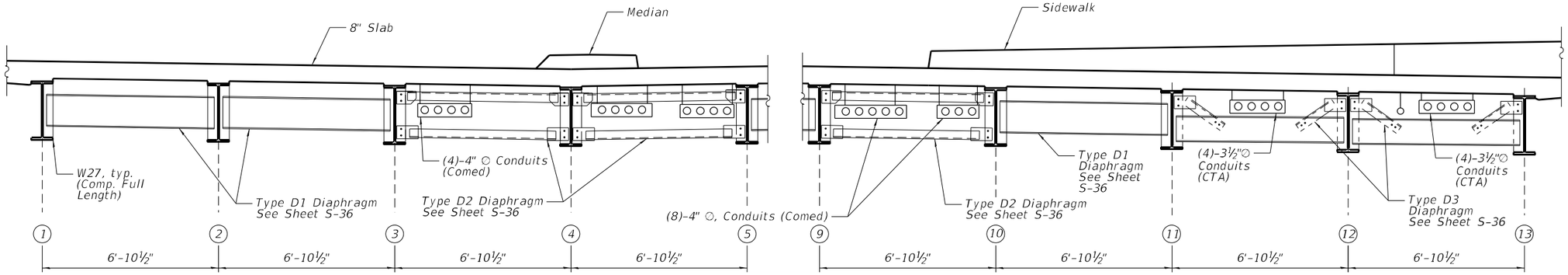

CROSS SECTION

(Diaphragms shown, Looking North)

MODEL: Default
FILE NAME: P:\10-LL14411-IDOT - Sacramento and Paulina over I-290\Work\CADD\Paulina - Contract 62K64\CADD_Sheets\StructuralD162K64-0160098-035-Field Splices.dgn
10/9/2025 4:37:07 PM

COLLINS ENGINEERS INC.

USER NAME =	DESIGNED - MR	REVISED -	
	CHECKED - EKM	REVISED -	
PLOT SCALE =	DRAWN - DR	REVISED -	
PLOT DATE =	CHECKED - EKM	REVISED -	

STATE OF ILLINOIS
DEPARTMENT OF TRANSPORTATION

STRUCTURAL STEEL DETAILS I
STRUCTURE NO. 016-0098
SHEET S-35 OF S-56 SHEETS

F.A.I. RTE.	SECTION	COUNTY	TOTAL SHEETS	SHEET NO.
290	2019-191-B-R	COOK	265	201
		CONTRACT NO. 62K64		
		ILLINOIS	FED. AID PROJECT	

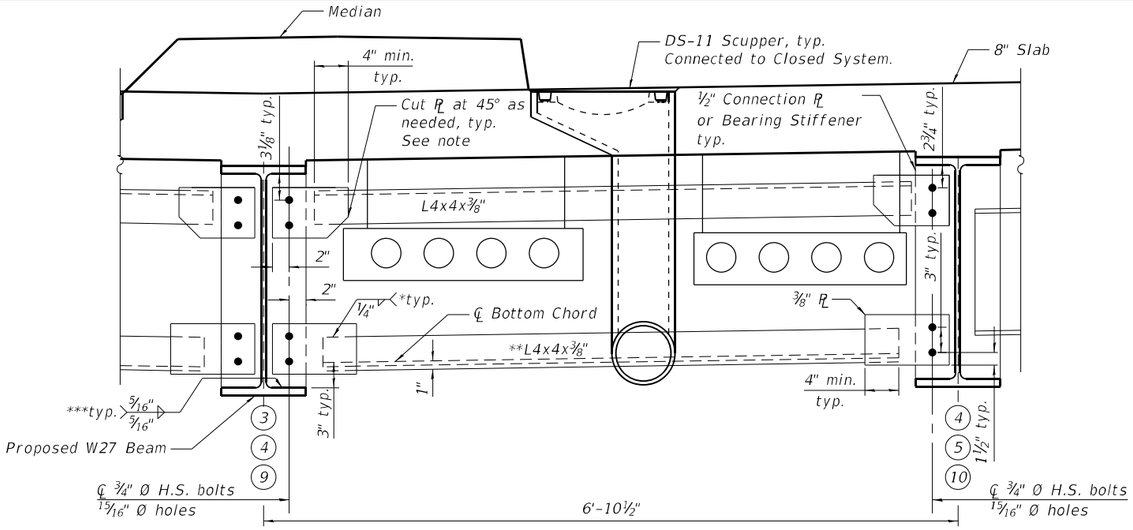

INTERIOR DIAPHRAGM D2

(57 Diaphragms Required)

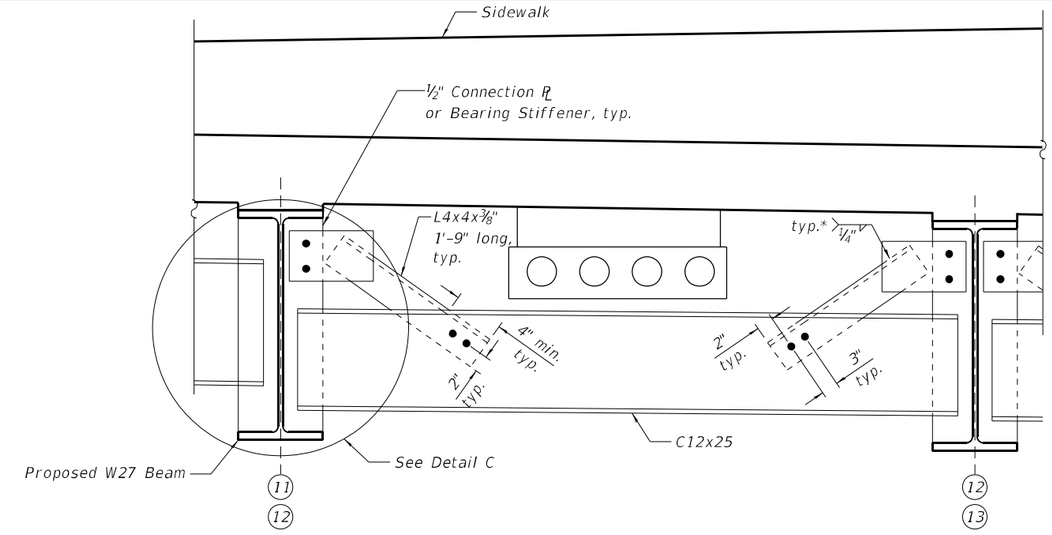

INTERIOR DIAPHRAGM D3

(38 Diaphragms Required)

Note: Contractor shall coordinate with utility owners to ensure utility will fit between diaphragms.

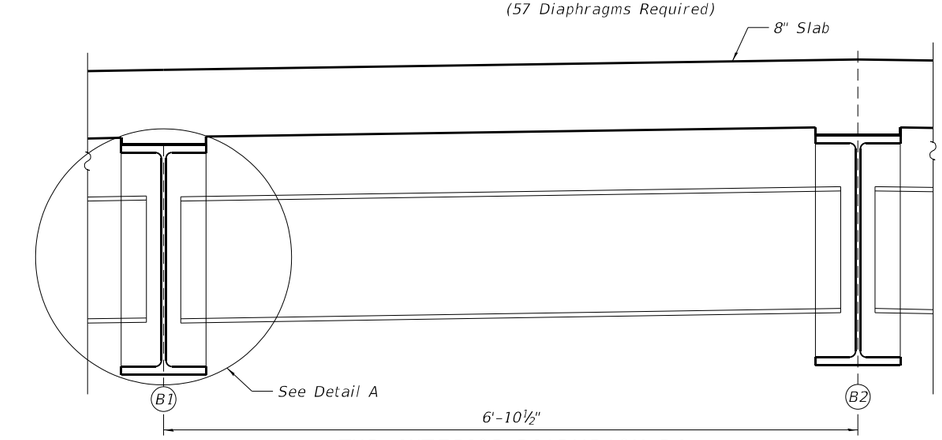

TYP. INTERIOR DIAPHRAGM D1

(133 Diaphragms Required)

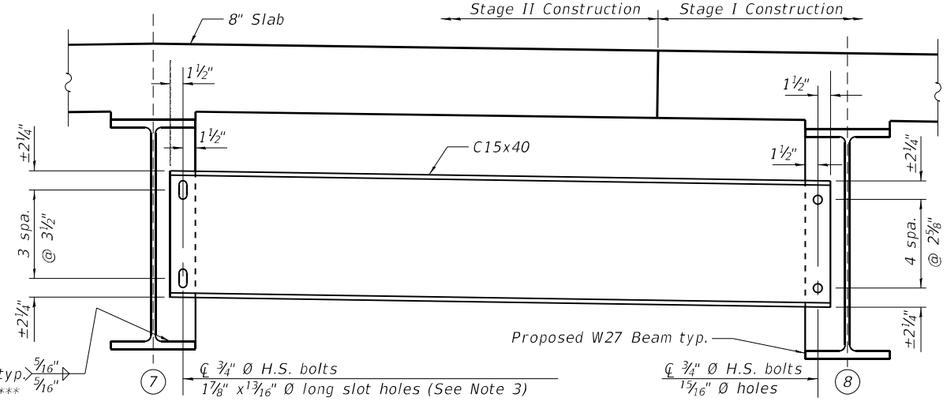

D1 DIAPHRAGM AT STAGE LINE

* Weld all-around

** Bottom chord of D2 diaphragms adjacent to abutments will be in conflict with drainage pipe. Do not install bottom chord at D2 diaphragms adjacent to abutments in bays between Beams 3-4, 4-5 and 9-10.

*** 3 sides of each connection ℄. For bearing stiffener welds, see Sheet S-33.

DIAPHARGM D1

B1	B2
1	2
2	3
5	6
6	7
7	8
8	9
10	11

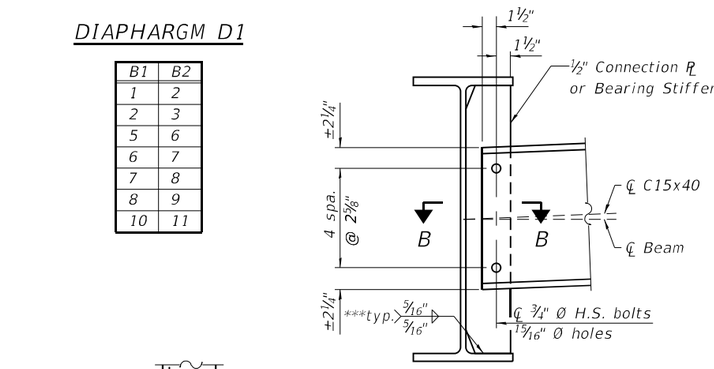

DETAIL A

(Adjacent diaphragm not show for clarity)

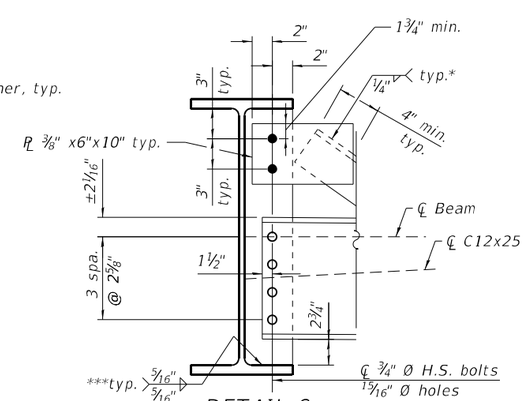

DETAIL C

(Adjacent diaphragm not show for clarity)

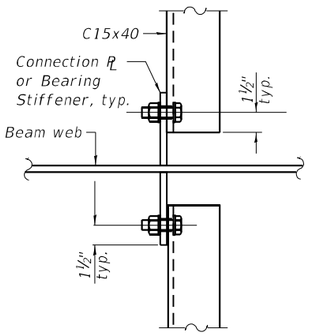

SECTION B-B

LEGEND

- ● Field
- ○ Shop

Note:

1. Two hardened washers required for each set of oversized holes.
2. Alternate channels of equal depth and larger weights are permitted to facilitate material acquisition. Alternate channels, if utilized, shall be provided at no additional cost to the Department.
3. Diaphragms at stage line between Beam 7 and Beam 8 shall have standard long slots (13/16" x 1⅞" for ¾" bolts) on one end and standard oversize holes shall be provided at the other end and in the main member connection plates. The diaphragms shall be installed with finger tightened bolts in the top holes prior to the Stage II deck pour. Install and tighten the remaining bolts.
4. Cost of field drilling included with Furnishing and Erecting Structural Steel.

MODEL: Default
FILE NAME: P:\10-IL\14411-IDOT - Sacramento and Paulina over I-290\Work\CADD\Paulina - Contract 62K64\CADD_Sheets\Structural\D162K64-0160098-036-Steel Diaphragms.dgn
10/9/2025 4:37:17 PM

COLLINS ENGINEERS INC.

USER NAME =		DESIGNED - MR	REVISED -		
		CHECKED - EKM	REVISED -		
PLOT SCALE =		DRAWN - DR	REVISED -		
PLOT DATE =		CHECKED - EKM	REVISED -		

STATE OF ILLINOIS
DEPARTMENT OF TRANSPORTATION

STRUCURAL STEEL DETAILS II
STRUCTURE NO. 016-0098

SHEET S-36 OF S-56 SHEETS

F.A.I RTE.	SECTION	COUNTY	TOTAL SHEETS	SHEET NO.
290	2019-191-B-R	COOK	265	202
		CONTRACT NO. 62K64		
	ILLINOIS FED. AID PROJECT			

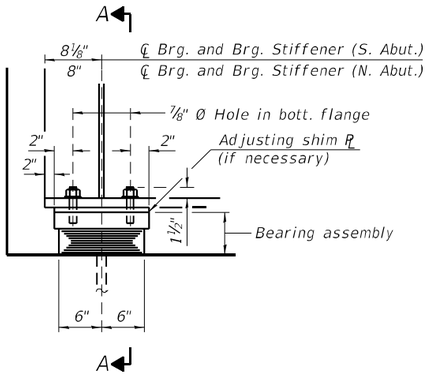

ELEVATION AT ABUTMENTS

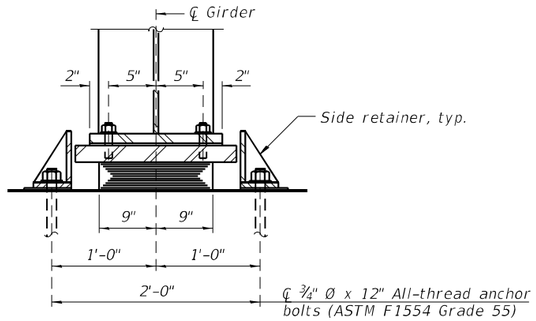

SECTION A-A

TYPE I ELASTOMERIC EXP. BRG.

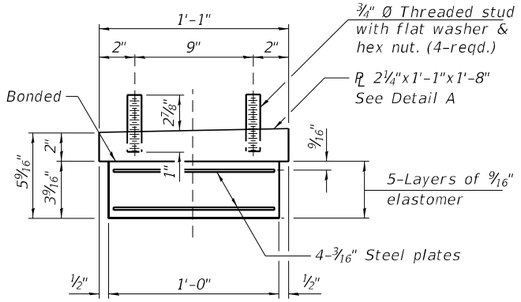

BEARING ASSEMBLY

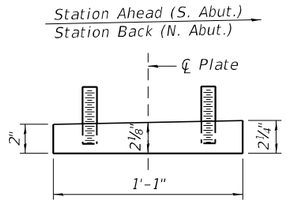

DETAIL A
Top Bearing Plate

Note:
Shim plates shall not be placed under bearing assembly.

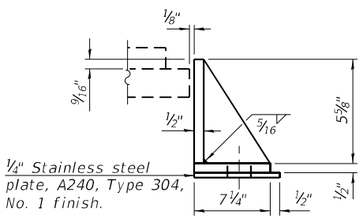

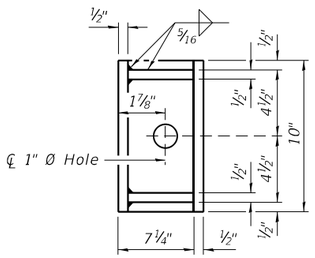

SIDE RETAINER

Equivalent rolled angle with stiffeners will be allowed in lieu of welded plates.

NOTES:

1. Side retainers and other steel members required for the elastomeric bearing assembly shall be included in the cost of Elastomeric Bearing Assembly, Type I.
2. All structural steel included in Bearing Assemblies shall be hot dipped galvanized. Cost included with Furnishing and Erecting Structural Steel or Elastomeric Bearing Assembly, Type I.
3. The structural steel plates of the Bearing Assembly shall conform to the requirements of AASHTO M270 Grade 50.
4. All (embedded and separate) shim plates, anchor bolts, nuts, washers and pintels shall be galvanized according to AASHTO M111 or M232 as applicable.
5. Two ⅛" adjusting shims shall be provided for each bearing in addition to all other plates or shims and placed as shown on bearing details.
6. Anchor bolts and side retainers at all supports shall be installed as each member is erected unless an equivalent temporary means of lateral restraint is used.

BILL OF MATERIAL

Item	Unit	Total
Elastomeric Bearing Assembly Type I	Each	26
Anchor Bolts, ¾"	Each	52

MODEL: Default
FILE NAME: P:\10-LL\14411-IDOT - Sacramento and Paulina over I-290\Work\CADD\Paulina - Contract 62K64\CADD_Sheets\Structural\D162K64-016098-037-BearingDetails1.dgn
10/9/2025 4:37:27 PM

COLLINS ENGINEERS INC.

USER NAME =	DESIGNED - MR	REVISED -	
	CHECKED - EKM	REVISED -	
PLOT SCALE =	DRAWN - DR	REVISED -	
PLOT DATE =	CHECKED - EKM	REVISED -	

STATE OF ILLINOIS
DEPARTMENT OF TRANSPORTATION

BEARING DETAILS I (ABUTMENTS)
STRUCTURE NO. 016-0098
SHEET S-37 OF S-56 SHEETS

F.A.I. RTE.	SECTION	COUNTY	TOTAL SHEETS	SHEET NO.
290	2019-191-B-R	COOK	265	203
		CONTRACT NO. 62K64		
		ILLINOIS	FED. AID PROJECT	

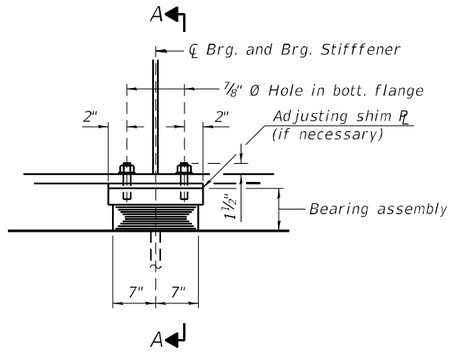

ELEVATION AT PIERS 1 & 3

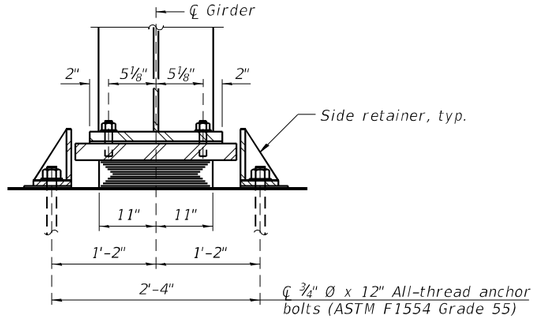

SECTION A-A

℄ ¾" Ø x 12" All-thread anchor bolts (ASTM F1554 Grade 55) with 2" x 2" x 5/16" PL washer under nut.

TYPE I ELASTOMERIC EXP. BRG.

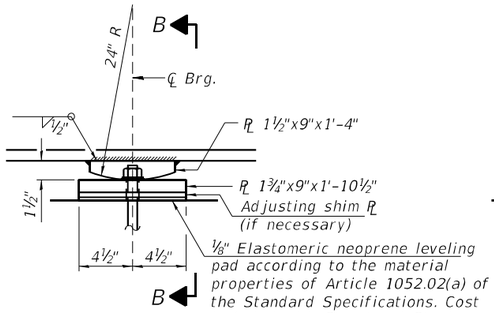

ELEVATION AT PIER 2

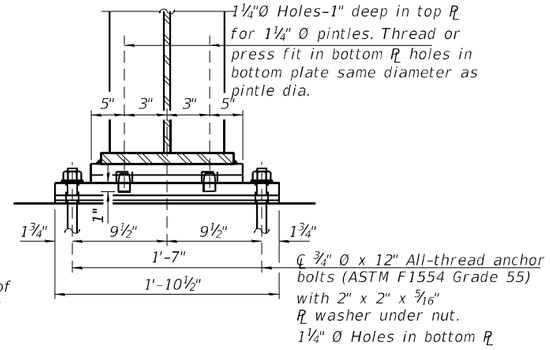

SECTION B-B

FIXED BEARING

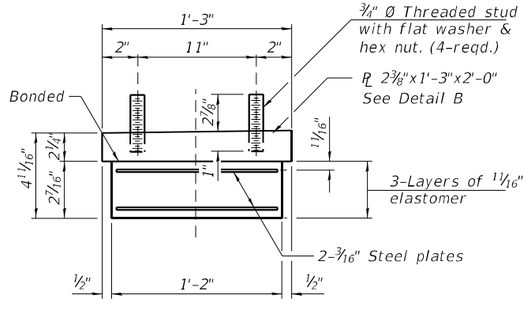

BEARING ASSEMBLY

Note:
Shim plates shall not be placed under bearing assembly.

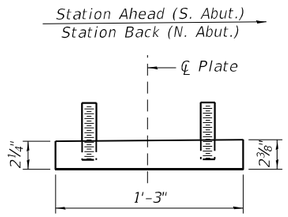

DETAIL B
Top Bearing Plate

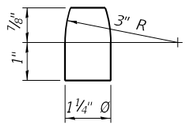

PINTLE

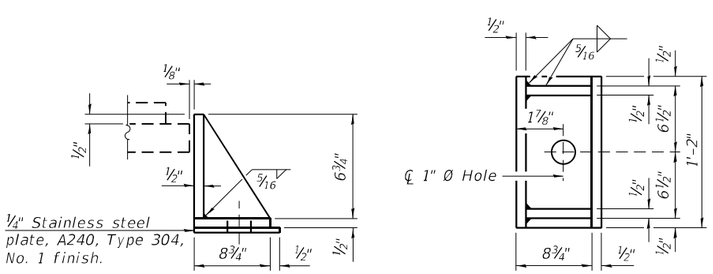

SIDE RETAINER

Equivalent rolled angle with stiffeners will be allowed in lieu of welded plates.

NOTES:

1. Side retainers and other steel members required for the elastomeric bearing assembly shall be included in the cost of Elastomeric Bearing Assembly, Type I.
2. Cost of fixed bearings shall be included with Furnishing and Erecting Structural Steel.
3. All structural steel included in Bearing Assemblies and the plates and pintles of the fixed bearing shall be hot dipped galvanized. Cost included with Furnishing and Erecting Structural Steel or Elastomeric Bearing Assembly, Type I.
4. The structural steel plates of the Bearing Assembly and the plates and pintles of the fixed bearing shall conform to the requirements of AASHTO M270 Grade 50.
5. All (embedded and separate) shim plates, anchor bolts, nuts, washers and pintels shall be galvanized according to AASHTO M111 or M232 as applicable.
6. Two ⅛" adjusting shims shall be provided for each bearing in addition to all other plates or shims and placed as shown on bearing details.
7. Anchor bolts and side retainers at all supports shall be installed as each member is erected unless an equivalent temporary means of lateral restraint is used.

BILL OF MATERIAL

Item	Unit	Total
Elastomeric Bearing Assembly Type I	Each	26
Anchor Bolts, ¾"	Each	78

MODEL: Default
FILE NAME: P:\10-ILL\14411-IDOT - Sacramento and Paulina over I-290\Work\CADD\Paulina - Contract 62K64\CADD_Sheets\StructuralD162K64-D160098-038-BearingDetails2.dgn
10/9/2025 4:37:38 PM

COLLINS ENGINEERS INC.

USER NAME =	DESIGNED - MR	REVISED -	
	CHECKED - EKM	REVISED -	
PLOT SCALE =	DRAWN - DR	REVISED -	
PLOT DATE =	CHECKED - EKM	REVISED -	

STATE OF ILLINOIS
DEPARTMENT OF TRANSPORTATION

BEARING DETAILS II (PIERS)
STRUCTURE NO. 016-0098
SHEET S-38 OF S-56 SHEETS

F.A.I. RTE.	SECTION	COUNTY	TOTAL SHEETS	SHEET NO.
290	2019-191-B-R	COOK	265	204
		CONTRACT NO. 62K64		
		ILLINOIS	FED. AID PROJECT	

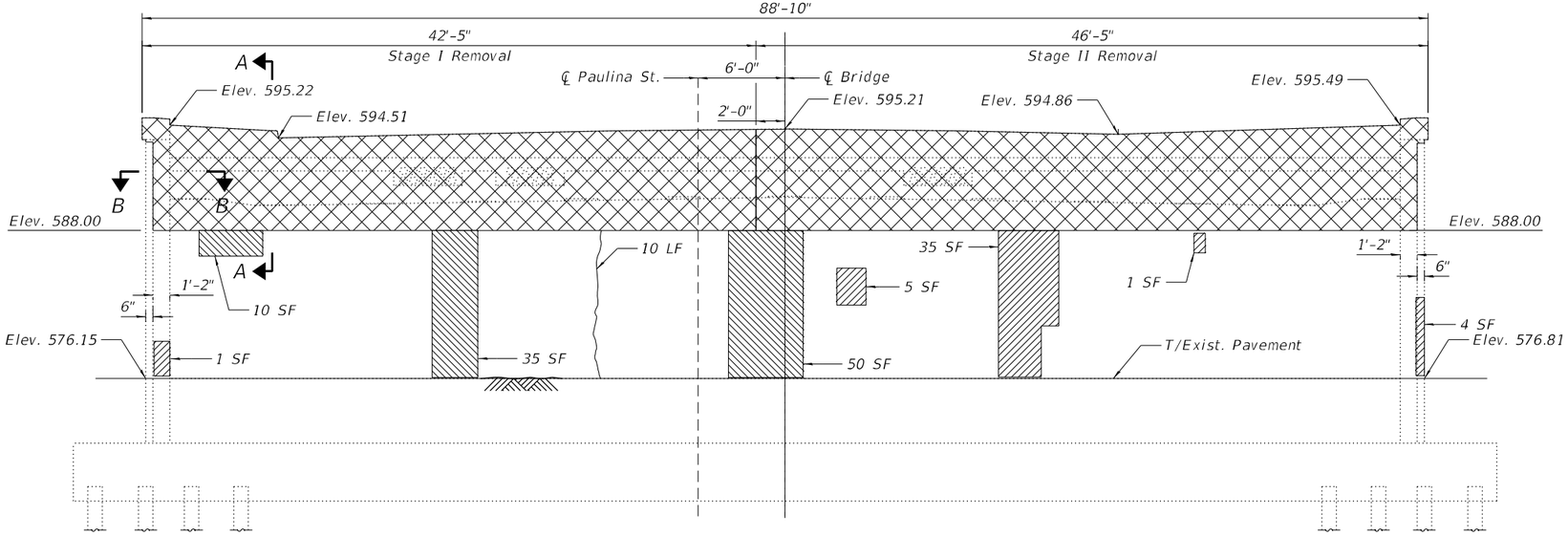

SOUTH ABUTMENT ELEVATION

(Looking South)

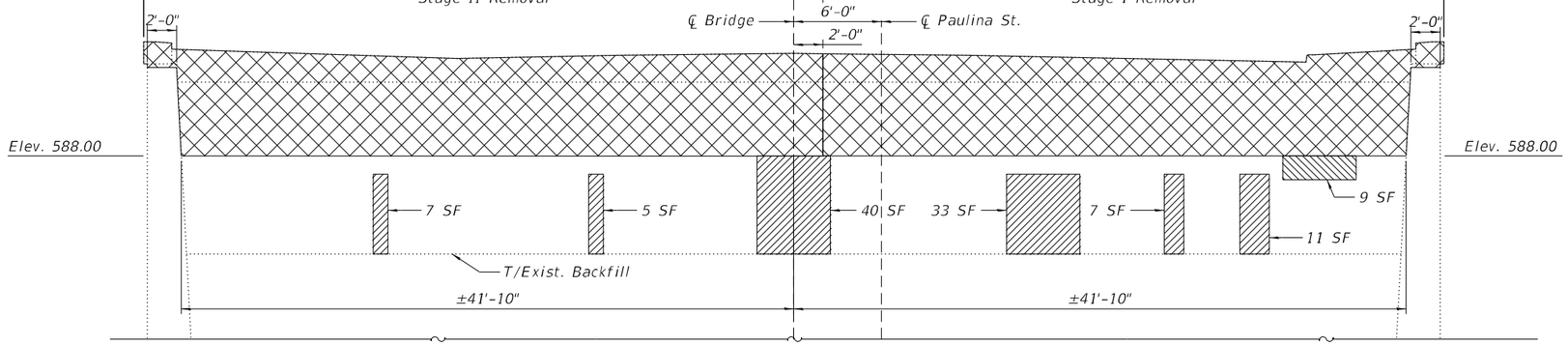

SOUTH ABUTMENT ELEVATION

(Inside Vault, Looking North)

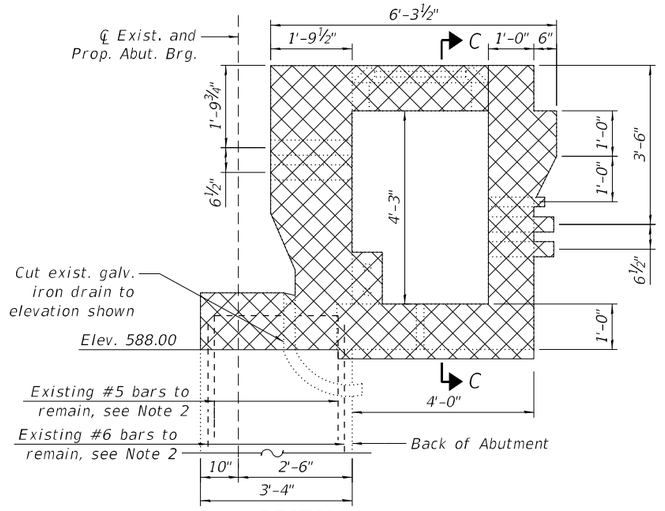

SECTION A-A

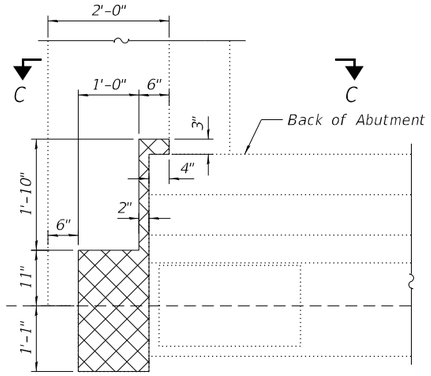

SECTION B-B

Concrete Removal of Abutment not shown for clarity. East corner shown. West corner similar and mirrored.

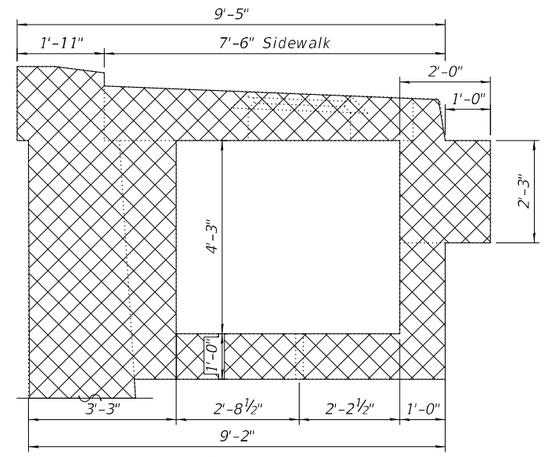

SECTION C-C

NOTES:

1. *Repair areas are estimated based on inspection completed in 2023 and 2025 and increased by 10% to account for future deterioration. Actual repair areas and locations shall be determined by the Engineer and shown on the as-built plans.*
2. *Existing reinforcement shall be cleaned and incorporated into the new construction. Any reinforcement bars to remain that are damaged during concrete removal operations shall be repaired or replaced using an approved bar splicer or anchorage system. Cost included with "Concrete Removal".*
3. *Repairs are to be performed after removal of existing superstructure elements and associated bearings.*
4. *For Wingwall Removal and Repair, see Sheet S-45.*

BILL OF MATERIAL

Item	Unit	Total
Concrete Removal	Cu. Yd.	48.8
Epoxy Crack Injection	Foot	10
Structural Repair of Concrete (Depth Equal to or Less Than 5")	Sq. Ft.	149
Structural Repair of Concrete (Depth Greater Than 5")	Sq. Ft.	104

LEGEND

- Concrete Removal
- Structural Repair of Concrete (Depth Equal to or Less Than 5")
- Structural Repair of Concrete (Depth Greater Than 5")
- 6 LF — Epoxy Crack Sealing

MODEL: Default
FILE NAME: P:\10-IL\14411-IDOT - Sacramento and Paulina over I-290\Work\CADD\Paulina - Contract 62K64\CADD_Sheets\Structural\D162K64-0160098-039-S_Abutment_Repairs.dgn
10/9/2025 4:37:51 PM

COLLINS ENGINEERS INC.

USER NAME =	DESIGNED - MR	REVISED -	
	CHECKED - EKM	REVISED -	
PLOT SCALE =	DRAWN - DR	REVISED -	
PLOT DATE =	CHECKED - EKM	REVISED -	

STATE OF ILLINOIS
DEPARTMENT OF TRANSPORTATION

SOUTH ABUTMENT REPAIRS AND REMOVAL
STRUCTURE NO. 016-0098

SHEET S-39 OF S-56 SHEETS

F.A.I. RTE.	SECTION	COUNTY	TOTAL SHEETS	SHEET NO.
290	2019-191-B-R	COOK	265	205
		CONTRACT NO. 62K64		
		ILLINOIS	FED. AID PROJECT	

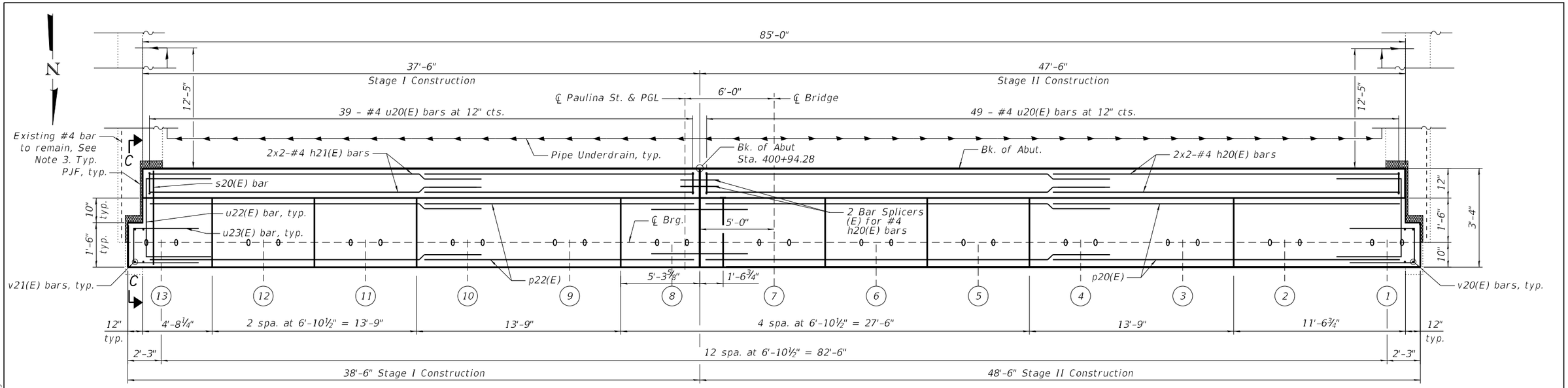

SOUTH ABUTMENT PLAN

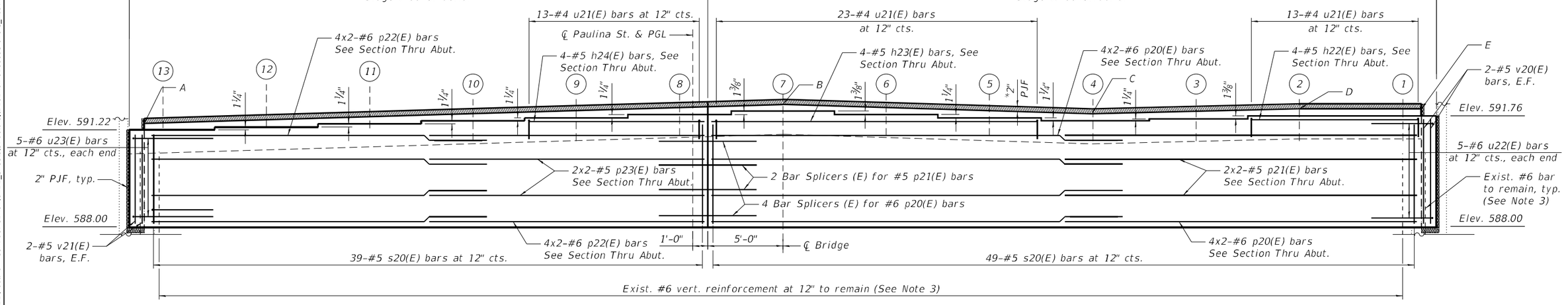

SOUTH ABUTMENT CONCRETE EXTENSION ELEVATION

(Looking South)

NOTES:

*Cost included in Concrete Structures

1. See Sheet S-41 for Section thru Abutment, additional notes, and Bill of Material.
2. Bars indicated thus 1 x 2-#8 etc. indicates 1 line of bars with 2 lengths per line.
3. Existing reinforcement shall be cleaned and incorporated into the new construction. Cost included with Concrete Removal.
4. See Sheet S-46 for Wingwall Modifications.
5. See Sheet S-41 for Section C-C.
6. See General Notes on Sheet S-2 for limits of Concrete Sealer application.

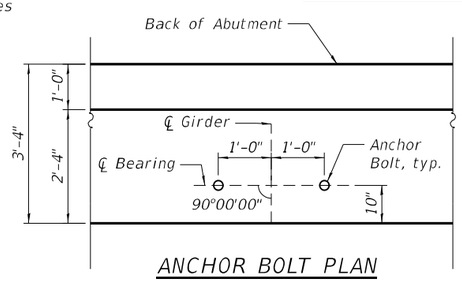

ANCHOR BOLT PLAN

MINIMUM BAR LAP

#4 bar = 2'-11"
#5 bar = 3'-7"
#6 bar = 4'-4"

T/BACKWALL ELEVATION

Location	Elev.
A	591.47
B	592.10
C	591.78
D	591.95
E	591.95

BEARING SEAT ELEVATIONS

Beam No.	Seat Elev.
Beam 1	591.76
Beam 2	591.76
Beam 3	591.64
Beam 4	591.54
Beam 5	591.64
Beam 6	591.75
Beam 7	591.86
Beam 8	591.75
Beam 9	591.64
Beam 10	591.54
Beam 11	591.43
Beam 12	591.33
Beam 13	591.22

MODEL: Default
FILE NAME: P:\10-IL\11411-IDOT - Sacramento and Paulina over I-290\Work\CADD\Paulina - Contract 62K64\CADD_Sheets\Structural\D162K64-0160098-040-S_Abutment_Modifications.dgn
10/9/2025 4:38:02 PM

COLLINS ENGINEERS INC.

USER NAME =	DESIGNED - MR	REVISED -	
	CHECKED - EKM	REVISED -	
PLOT SCALE =	DRAWN - DR	REVISED -	
PLOT DATE =	CHECKED - EKM	REVISED -	

STATE OF ILLINOIS
DEPARTMENT OF TRANSPORTATION

SOUTH ABUTMENT CONCRETE EXTENSION
STRUCTURE NO. 016-0098
SHEET S-40 OF S-56 SHEETS

F.A.I RTE.	SECTION	COUNTY	TOTAL SHEETS	SHEET NO.
290	2019-191-B-R	COOK	265	206
		CONTRACT NO. 62K64		
	ILLINOIS	FED. AID PROJECT		

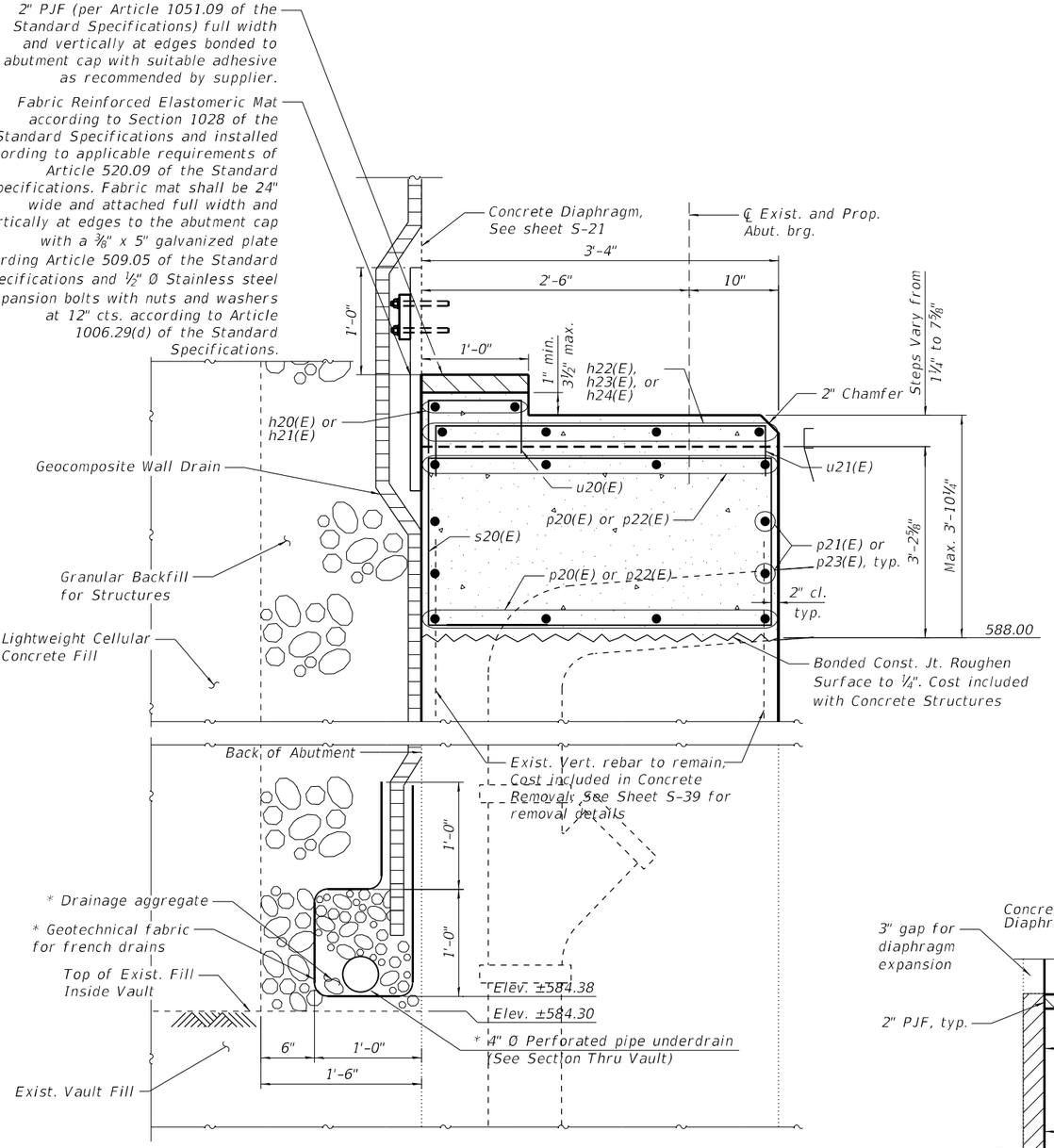

SECTION THRU ABUTMENT

Cost of fabric reinforced elastomeric mat, galvanized plate, stainless steel expansion bolts with nuts and washers and installation are included in the cost of Concrete Superstructure.

* Included in the cost of Pipe Underdrains for Structures

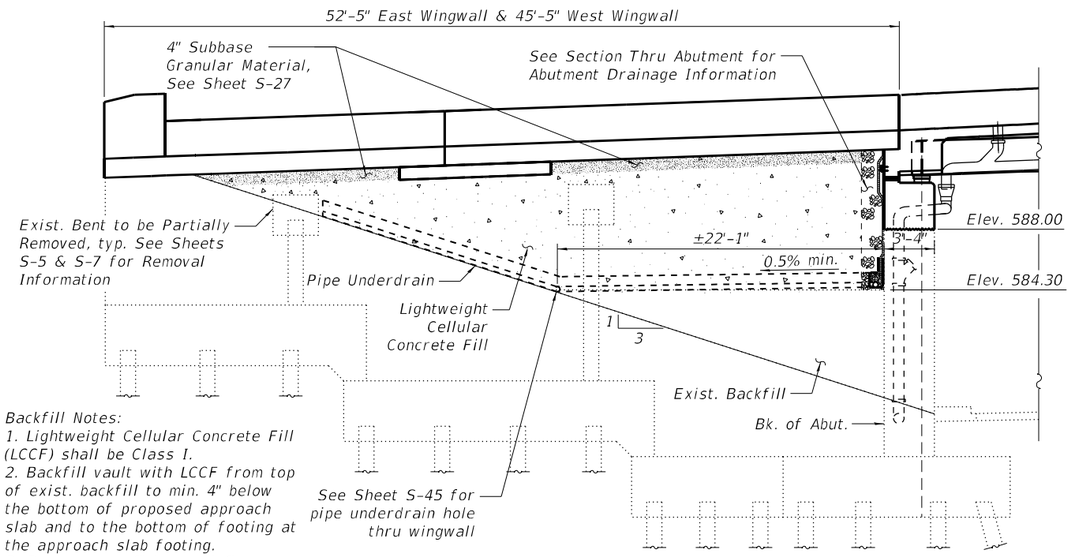

Backfill Notes:
1. Lightweight Cellular Concrete Fill (LCCF) shall be Class I.
2. Backfill vault with LCCF from top of exist. backfill to min. 4" below the bottom of proposed approach slab and to the bottom of footing at the approach slab footing.
3. Place a min. 4" layer of Subbase Granular Material above LCCF after it has cured.
4. Utilities shall be installed in LCCF as specified in the special provision "Lightweight Cellular Concrete Fill".

SECTION THRU VAULT

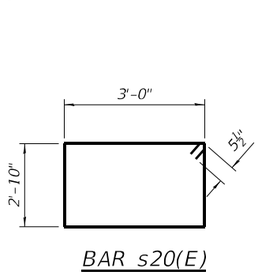

BAR s20(E)

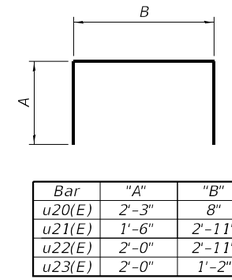

Bar	"A"	"B"
u20(E)	2'-3"	8"
u21(E)	1'-6"	2'-11"
u22(E)	2'-0"	2'-11"
u23(E)	2'-0"	1'-2"

BARS u20(E), u21(E), u22(E), & u23(E)

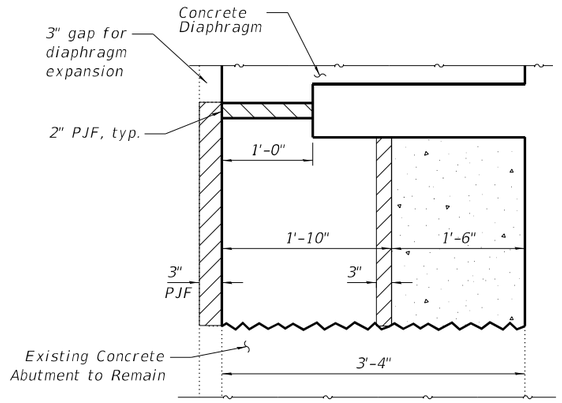

SECTION C-C

For Section C-C location, see sheet S-40

BILL OF MATERIAL

Bar	No.	Size	Length	Shape
h20(E)	4	#4	25'-0"	—
h21(E)	4	#4	20'-0"	—
h22(E)	4	#5	11'-4"	—
h23(E)	4	#5	21'-10"	—
h24E)	4	#5	11'-10"	—
p20(E)	16	#6	25'-9"	—
p21(E)	8	#5	25'-4"	—
p22(E)	16	#6	20'-9"	—
p23(E)	8	#5	20'-4"	—
u20(E)	88	#4	5'-2"	⊓
u21(E)	49	#4	5'-11"	⊓
u22(E)	10	#6	6'-11"	⊓
u23(E)	10	#6	5'-2"	⊓
v20(E)	4	#5	3'-5"	—
v21(E)	4	#5	2'-10"	—
s20(E)	88	#5	12'-7"	□
Concrete Structures		Cu. Yd.	39.5	
Reinforcement Bars, Epoxy Coated		Pound	3,670	
Granular Backfill for Structures		Cu. Yd.	71	
Concrete Sealer		Sq. Ft.	1,433	
Geocomposite Wall Drain		Sq. Yd.	96	
Pipe Underdrains for Structures 4"		Foot	211	
Lightweight Cellular Concrete Fill		Cu. Yd.	1,320	

Notes:
1. For Bar Splicers, see Sheet S-53.
2. Pour steps monolithically with cap.
3. Space reinforcement in cap to miss anchor bolts.
4. Contractor responsible to maintain separation between Granular Backfill and Lightweight Cellular Concrete Fill during installation.
5. See General Notes on Sheet S-2 for limits of Concrete Sealer application.

MODEL: Default
FILE NAME: P:\10e\L\14411-IDOT - Sacramento and Paulina over I-290\Work\CADD\Paulina - Contract 62K64\CADD_Sheets\StructuralID162K64-0160098-04 I-S-Abutment_Detail.dgn
10/9/2025 4:38:11 PM

COLLINS ENGINEERS INC.

USER NAME =	DESIGNED - MR	REVISED -
	CHECKED - EKM	REVISED -
PLOT SCALE =	DRAWN - DR	REVISED -
PLOT DATE =	CHECKED - EKM	REVISED -

STATE OF ILLINOIS
DEPARTMENT OF TRANSPORTATION

SOUTH ABUTMENT DETAILS
STRUCTURE NO. 016-0098
SHEET S-41 OF S-56 SHEETS

F.A.I RTE.	SECTION	COUNTY	TOTAL SHEETS	SHEET NO.
290	2019-191-B-R	COOK	265	207
		CONTRACT NO. 62K64		
		ILLINOIS	FED. AID PROJECT	

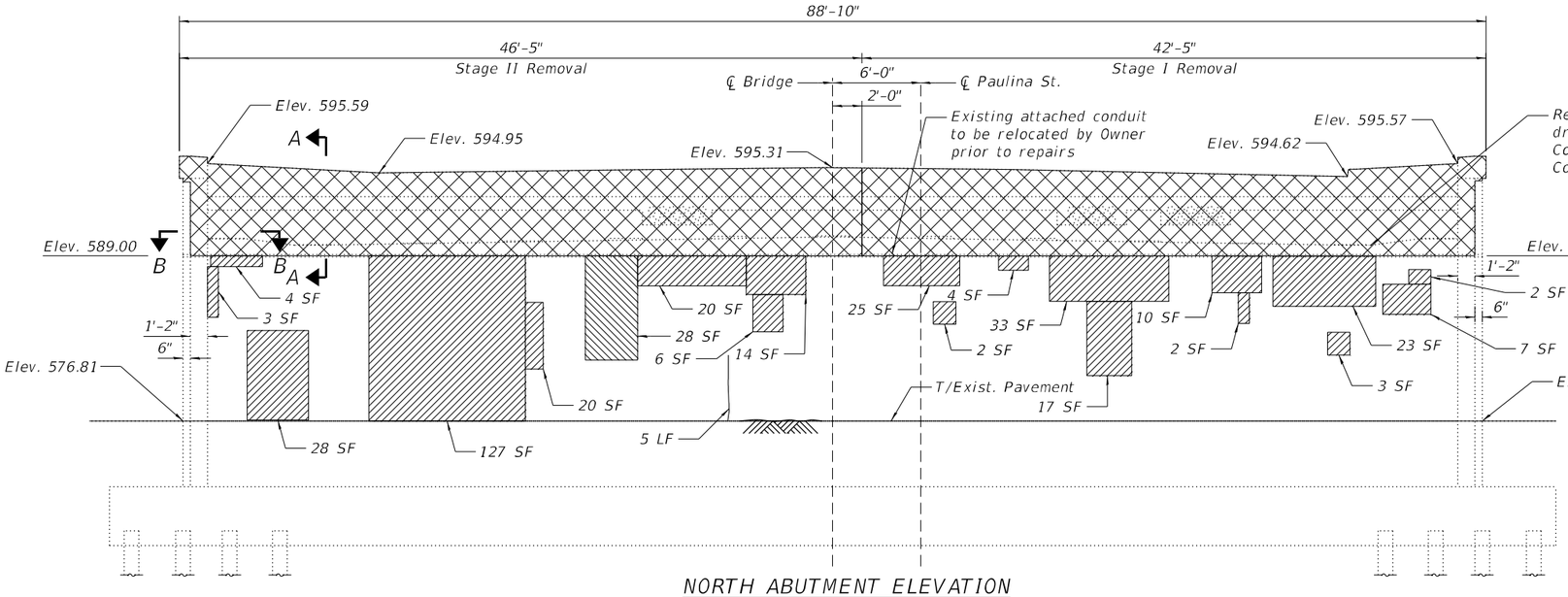

NORTH ABUTMENT ELEVATION

(Looking North)

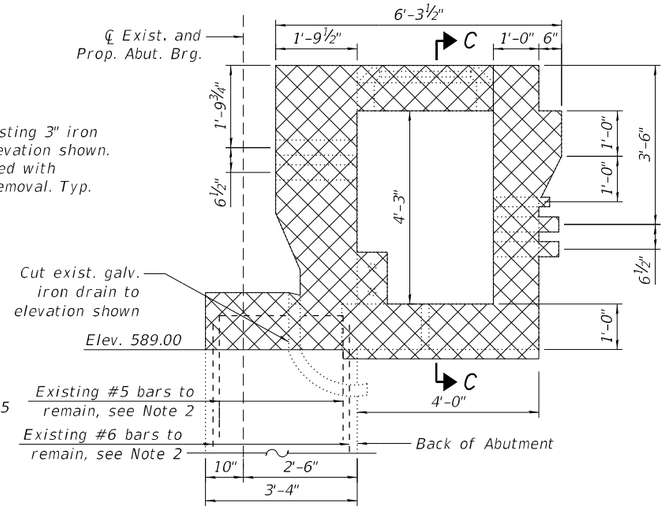

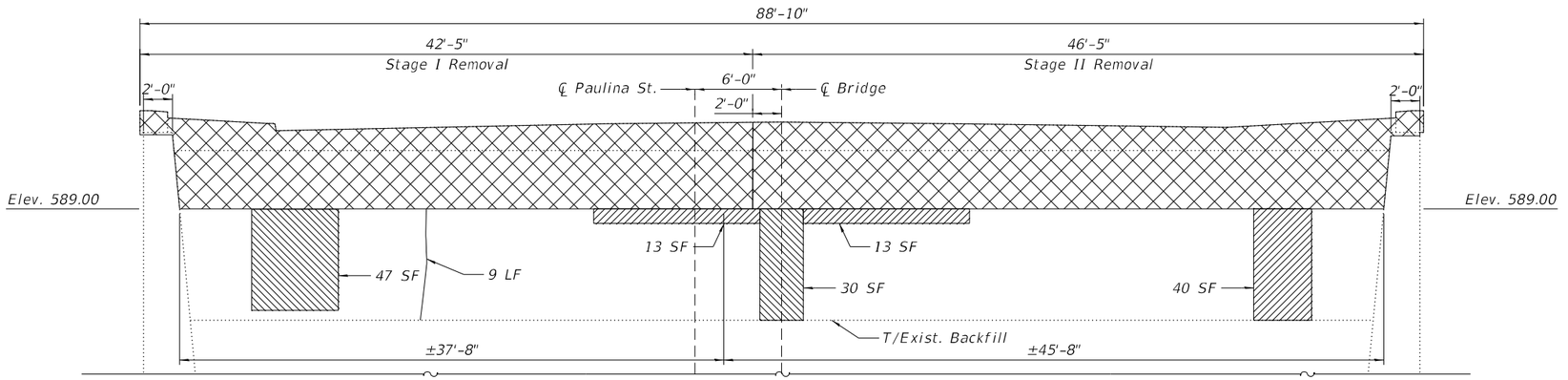

NORTH ABUTMENT ELEVATION

(Inside Vault, Looking South)

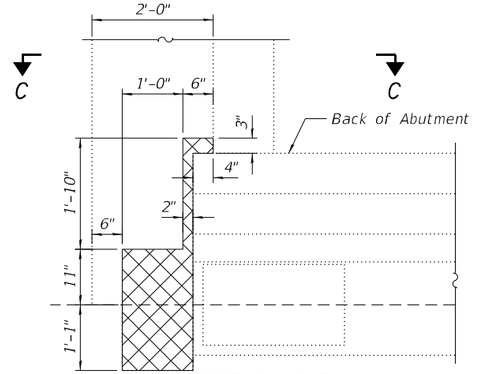

SECTION B-B

Concrete Removal of Abutment not shown for clarity. East corner shown. West corner similar and mirrored.

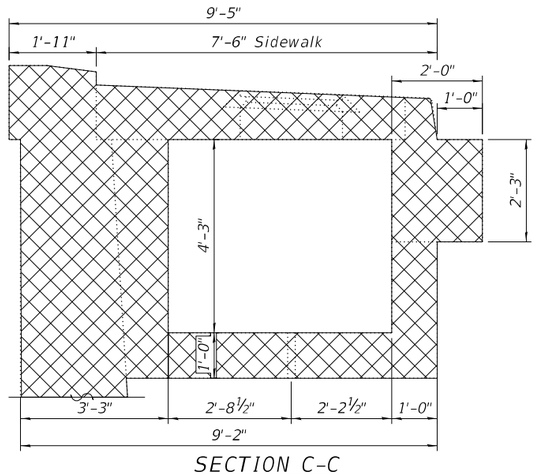

SECTION C-C

NOTES:

1. Repair areas are estimated based on inspection completed in 2023 and 2025 and increased by 10% to account for future deterioration. Deterioration on the vaulted face of the abutment is nominal and will need to be verified in field. Actual repair areas and locations shall be determined by the Engineer and shown on the as-built plans.
2. Existing reinforcement shall be cleaned and incorporated into the new construction. Any reinforcement bars to remain that are damaged during concrete removal operations shall be repaired or replaced using an approved bar splicer or anchorage system. Cost included with "Concrete Removal".
3. Repairs are to be performed after removal of existing superstructure elements and associated bearings.
4. For Wingwall Removal and Repair, see Sheet S-45.
5. A nominal amount of Graffiti Removal has been included; however, an exact quantity and location of Graffiti Removal shall be per the Engineer in the field.

BILL OF MATERIAL

Item	Unit	Total
Concrete Removal	Cu. Yd.	42.7
Epoxy Crack Injection	Foot	14
Graffiti Removal	Sq. Yd.	2
Structural Repair of Concrete (Depth Equal to or Less Than 5")	Sq. Ft.	416
Structural Repair of Concrete (Depth Greater Than 5")	Sq. Ft.	105

LEGEND

- Concrete Removal
- Structural Repair of Concrete (Depth Equal to or Less Than 5")
- Structural Repair of Concrete (Depth Greater Than 5")
- 6 LF — Epoxy Crack Sealing

MODEL: Default
FILE NAME: P:\10-IL11411-IDOT - Sacramento and Paulina over I-290\Work\CADD\Paulina - Contract 62K64\CADD_Sheets\StructuralID162K64-0160098-042-N_Abutment_Repairs.dgn
10/9/2025 4:38:20 PM

COLLINS ENGINEERS INC.

USER NAME =	DESIGNED - MR	REVISED -	
	CHECKED - EKM	REVISED -	
PLOT SCALE =	DRAWN - DR	REVISED -	
PLOT DATE =	CHECKED - EKM	REVISED -	

STATE OF ILLINOIS
DEPARTMENT OF TRANSPORTATION

NORTH ABUTMENT REPAIRS AND REMOVAL
STRUCTURE NO. 016-0098
SHEET S-42 OF S-56 SHEETS

F.A.I. RTE.	SECTION	COUNTY	TOTAL SHEETS	SHEET NO.
290	2019-191-B-R	COOK	265	208
		CONTRACT NO. 62K64		
	ILLINOIS FED. AID PROJECT			

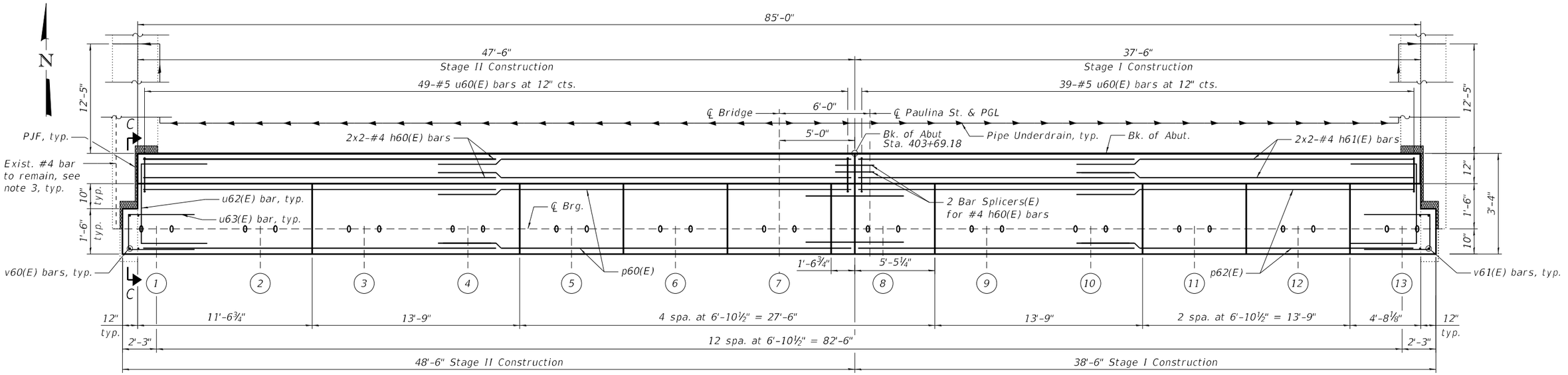

NORTH ABUTMENT PLAN

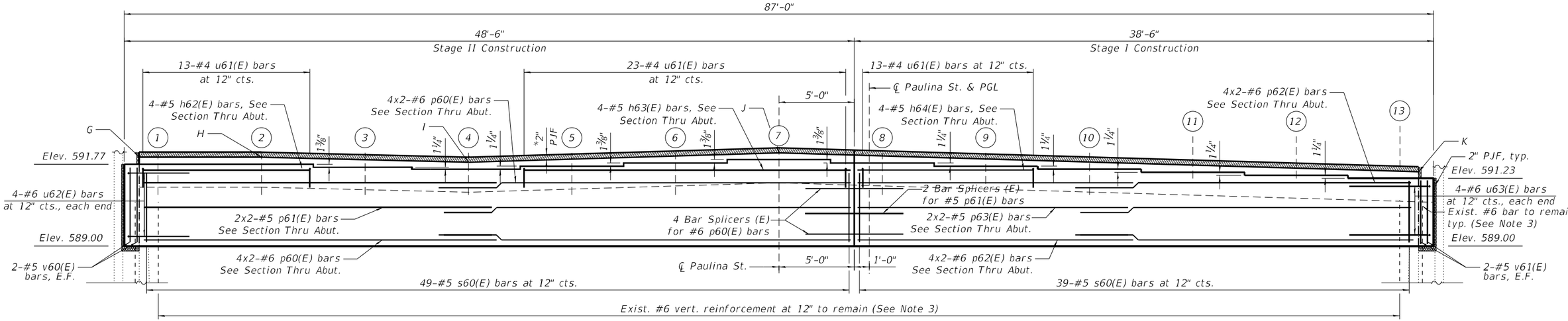

NOTES:

1. See Sheet S-44 for Section thru Abutment, additional notes, and Bill of Material.
2. Bars indicated thus 1 x 2-#8 etc. indicates 1 line of bars with 2 lengths per line.
3. Existing reinforcement shall be cleaned and incorporated into the new construction. Cost included with Concrete Removal.
4. See Sheet S-46 for Wingwall Modifications.
5. See Sheet S-44 for Section C-C.
6. See general notes on sheet S-2 for limits of concrete sealer application.

NORTH ABUTMENT CONCRETE EXTENSION ELEVATION

(Looking North)

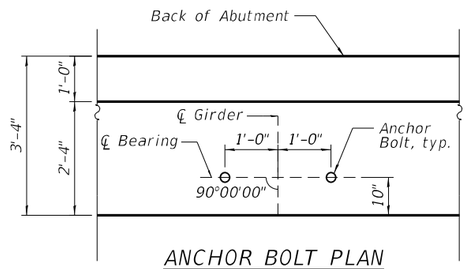

ANCHOR BOLT PLAN

*Cost included in Concrete Structures

MINIMUM BAR LAP

#4 bar = 2'-11"
#5 bar = 3'-7"
#6 bar = 4'-4"

T/BACKWALL ELEVATION

Location	Elev.
G	591.95
H	591.95
I	591.78
J	592.10
K	591.47

BEARING SEAT ELEVATIONS

Beam No.	Seat Elev.
Beam 1	591.77
Beam 2	591.77
Beam 3	591.65
Beam 4	591.55
Beam 5	591.65
Beam 6	591.76
Beam 7	591.87
Beam 8	591.76
Beam 9	591.65
Beam 10	591.55
Beam 11	591.44
Beam 12	591.34
Beam 13	591.23

MODEL: Default
FILE NAME: P:\10dl\14411-IDOT - Sacramento and Paulina over I-290\Work\CADD\Paulina - Contract 62K64\CADD_Sheets\Structural\D162K64-0116098-043N_Abutment_Modifications.dgn

10/9/2025 4:38:29 PM

COLLINS ENGINEERS INC.

USER NAME =	DESIGNED - MR	REVISED -	
	CHECKED - EKM	REVISED -	
PLOT SCALE =	DRAWN - DR	REVISED -	
PLOT DATE =	CHECKED - EKM	REVISED -	

STATE OF ILLINOIS
DEPARTMENT OF TRANSPORTATION

NORTH ABUTMENT CONCRETE EXTENSION
STRUCTURE NO. 016-0098

SHEET S-43 OF S-56 SHEETS

F.A.I. RTE.	SECTION	COUNTY	TOTAL SHEETS	SHEET NO.
290	2019-191-B-R	COOK	265	209
		CONTRACT NO. 62K64		
		ILLINOIS	FED. AID PROJECT	

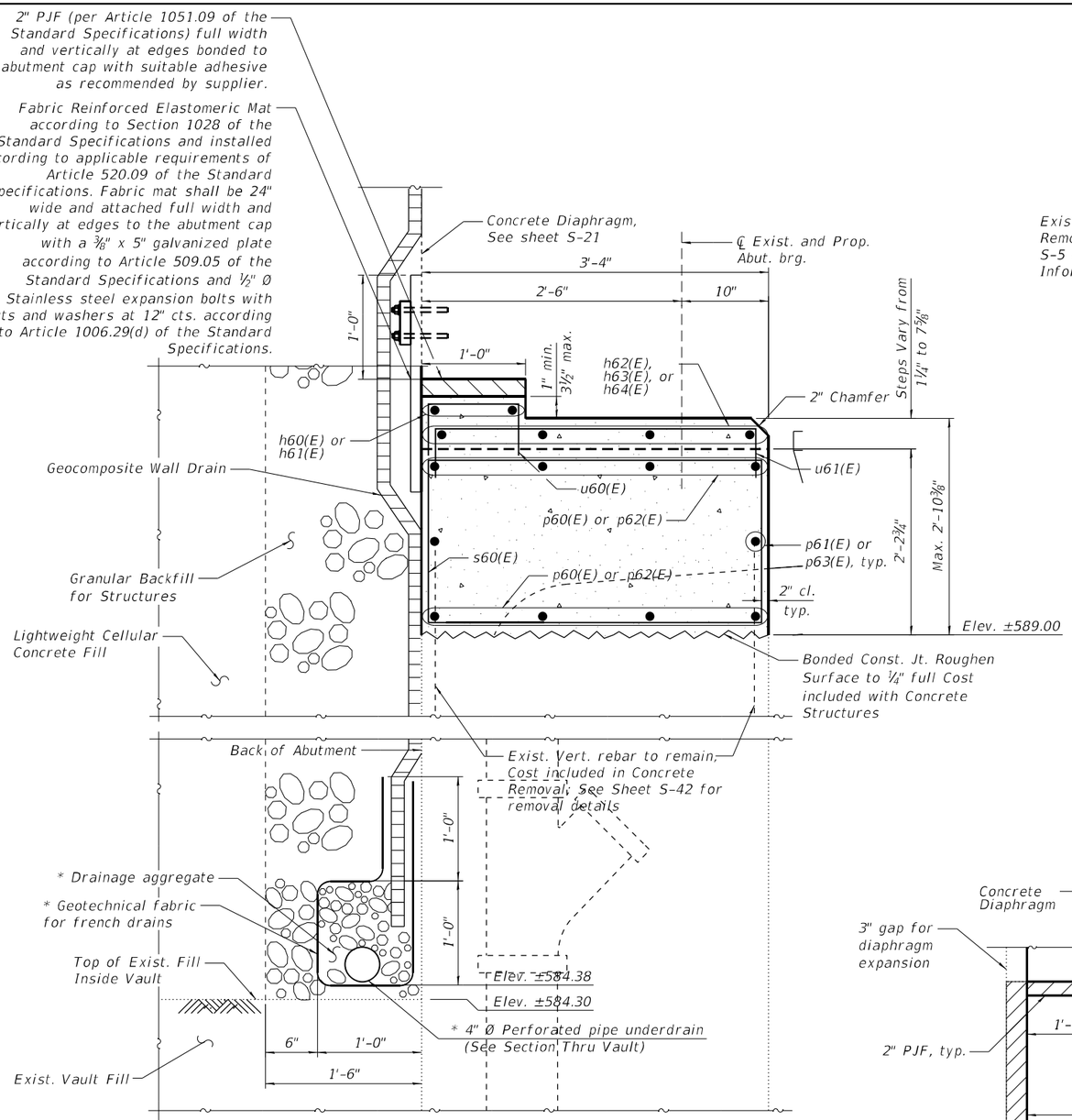

SECTION THRU ABUTMENT

Cost of fabric reinforced elastomeric mat, galvanized plate, stainless steel expansion bolts with nuts and washers and installation are included in the cost of Concrete Superstructure.

* Included in the cost of Pipe Underdrains for Structures.

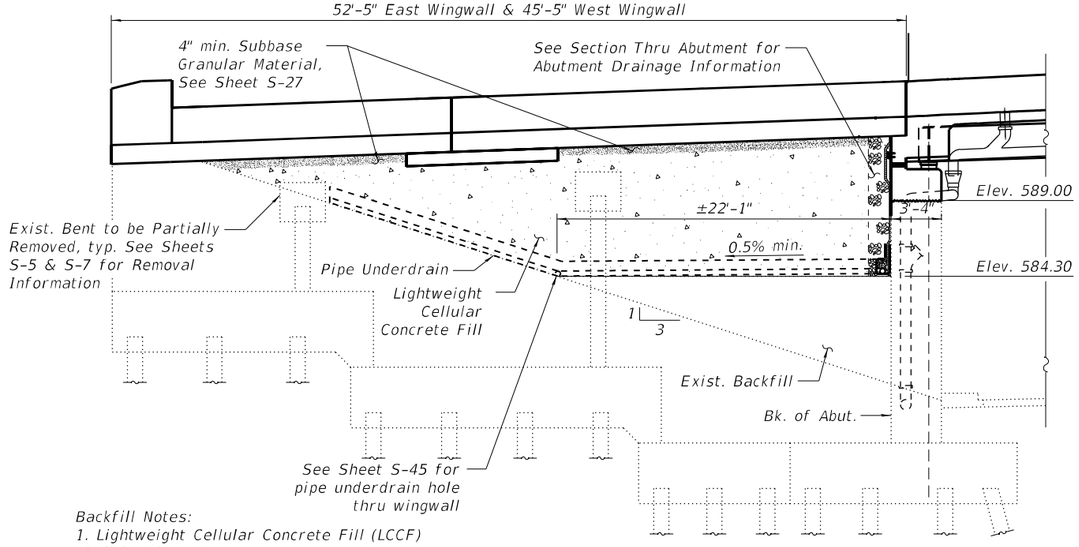

Backfill Notes:
1. Lightweight Cellular Concrete Fill (LCCF) shall be Class 1.
2. Backfill vault with LCCF from top of exist. backfill to min. 4" below the bottom of proposed approach slab and to the bottom of footing at the approach slab footing.
3. Place a min. 4" layer of Subbase Granular Material above LCCF after it has cured.
4. Utilities shall be installed in LCCF as specified in the special provision "Lightweight Cellular Concrete Fill".

SECTION THRU VAULT

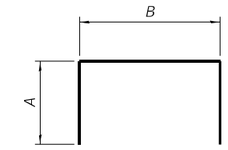

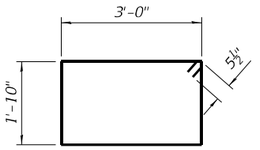

BAR s60(E)

Bar	"A"	"B"
u60(E)	2'-3"	8"
u61(E)	1'-6"	2'-11"
u62(E)	2'-0"	2'-11"
u63(E)	2'-0"	1'-2"

BARS u60(E), u61(E), u62(E), & u63(E)

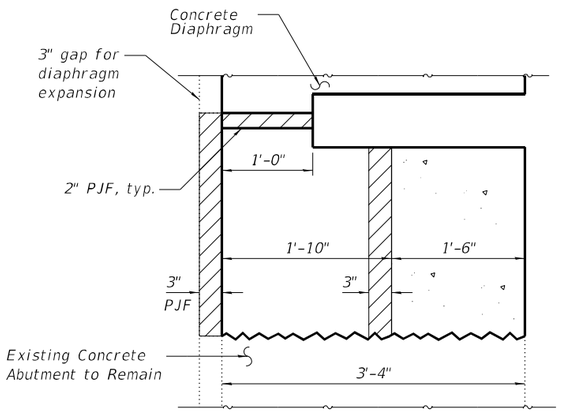

SECTION C-C

For Section C-C location, see Sheet S-43

BILL OF MATERIAL

Bar	No.	Size	Length	Shape
h60(E)	4	#4	25'-0"	
h61(E)	4	#4	20'-0"	
h62(E)	4	#5	11'-2"	
h63(E)	4	#5	21'-10"	
h64(E)	4	#5	11'-10"	
p60(E)	16	#6	25'-9"	
p61(E)	4	#5	25'-4"	
p62(E)	16	#6	20'-9"	
p63(E)	4	#5	20'-4"	
u60(E)	88	#4	5'-2"	
u61(E)	49	#4	5'-11"	
u62(E)	8	#6	6'-11"	
u63(E)	8	#6	5'-2"	
v60(E)	4	#5	2'-5"	
v61(E)	4	#5	1'-10"	
s60(E)	88	#5	10'-7"	
Concrete Structures		Cu. Yd.	28.8	
Reinforcement Bars, Epoxy Coated		Pound	3,440	
Granular Backfill for Structures		Cu. Yd.	71	
Concrete Sealer		Sq. Ft.	1,347	
Geocomposite Wall Drain		Sq. Yd.	96	
Pipe Underdrains for Structures, 4"		Foot	211	
Lightweight Cellular Concrete Fill		Cu. Yd.	1,320	

Notes:
1. For Bar Splicers, see Sheet S-53.
2. Pour steps monolithically with cap.
3. Space reinforcement in cap to miss anchor bolts.
4. Contractor responsible to maintain separation between granular backfill and lightweight cellular concrete fill.
5. See General Notes on Sheet S-2 for limits of Concrete Sealer application.

MODEL: Default
FILE NAME: P:\10C-LL14411-IDOT - Sacramento and Paulina over I-290\Work\CADD\Paulina - Contract 62X64\CADD_Sheets\Structural\D162X64-0160098-044-Abutment_Detail.dgn
10/9/2025 4:38:52 PM

COLLINS ENGINEERS INC.

USER NAME =	DESIGNED - MR	REVISED -	
	CHECKED - EKM	REVISED -	
PLOT SCALE =	DRAWN - DR	REVISED -	
PLOT DATE =	CHECKED - EKM	REVISED -	

STATE OF ILLINOIS
DEPARTMENT OF TRANSPORTATION

NORTH ABUTMENT DETAILS
STRUCTURE NO. 016-0098
SHEET S-44 OF S-56 SHEETS

F.A.I. RTE.	SECTION	COUNTY	TOTAL SHEETS	SHEET NO.
290	2019-191-B-R	COOK	265	210
		CONTRACT NO. 62K64		
		ILLINOIS	FED. AID PROJECT	

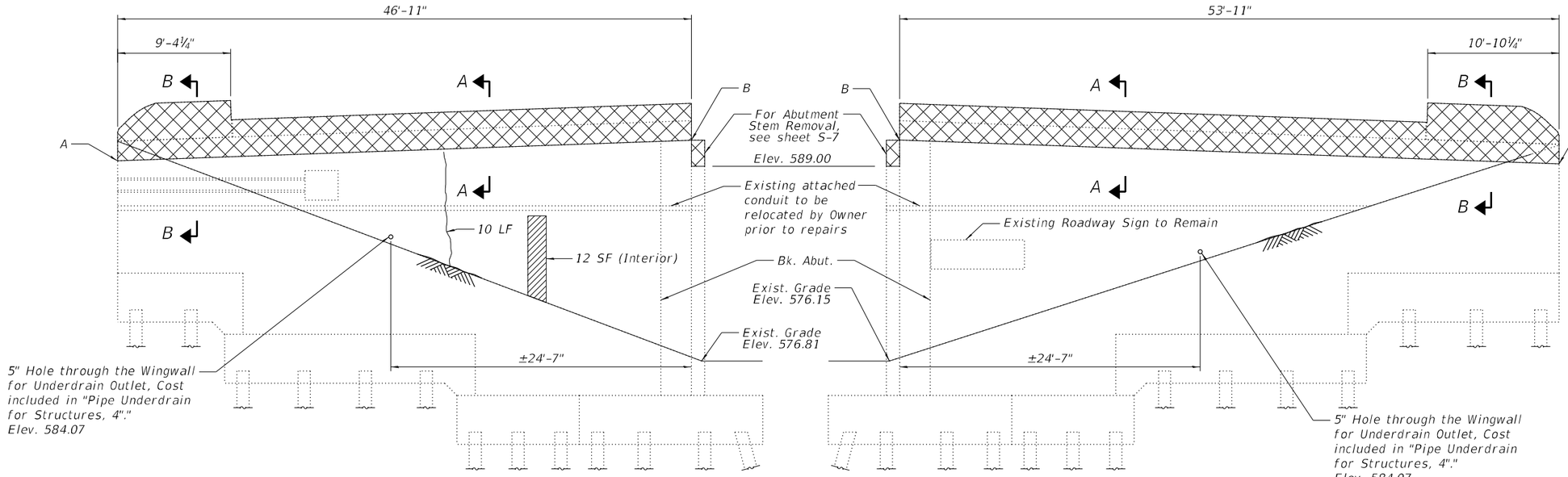

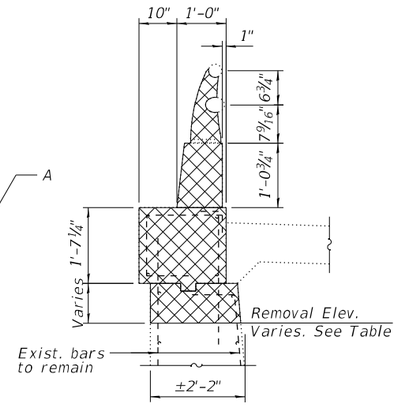

SECTION A-A

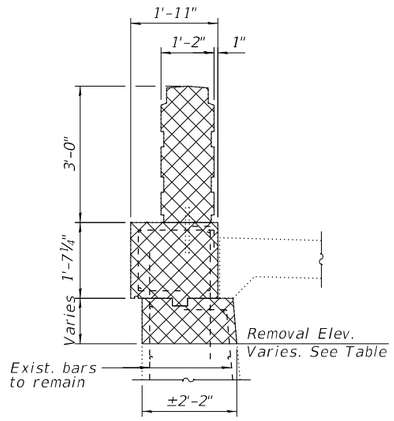

SECTION B-B

Location	Removal Elev. A	Removal Elev. B
SW Wingwall	591.94	593.89
SE Wingwall	590.98	593.22
NW Wingwall	592.08	593.91
NE Wingwall	591.20	593.25

NORTH ABUTMENT WEST WINGWALL

(Looking East)

BILL OF MATERIAL

Item	Unit	Total
Concrete Removal	Cu. Yd.	61.4
Concrete Sealer	Sq. Ft.	77
Epoxy Crack Injection	Foot	10
Graffiti Removal	Sq. Yd.	3
Structural Repair of Concrete (Depth Equal to or Less than 5")	Sq. Ft.	68
Structural Repair of Concrete (Depth Greater Than 5")	Sq. Ft.	9

NORTH ABUTMENT EAST WINGWALL

(Looking West)

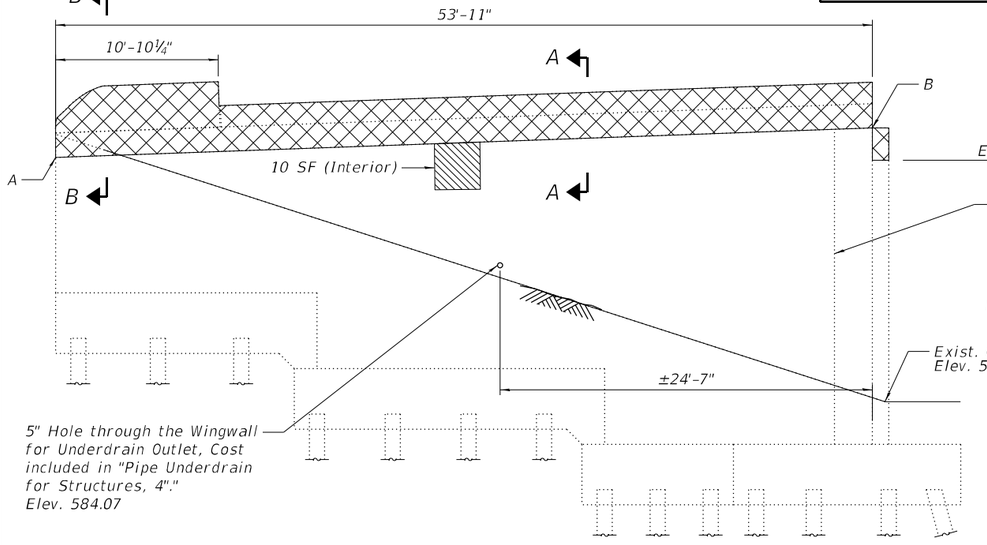

SOUTH ABUTMENT EAST WINGWALL

(Looking West)

Underdrain Outlet (Cost included in "Pipe Underdrain for Structures 4")

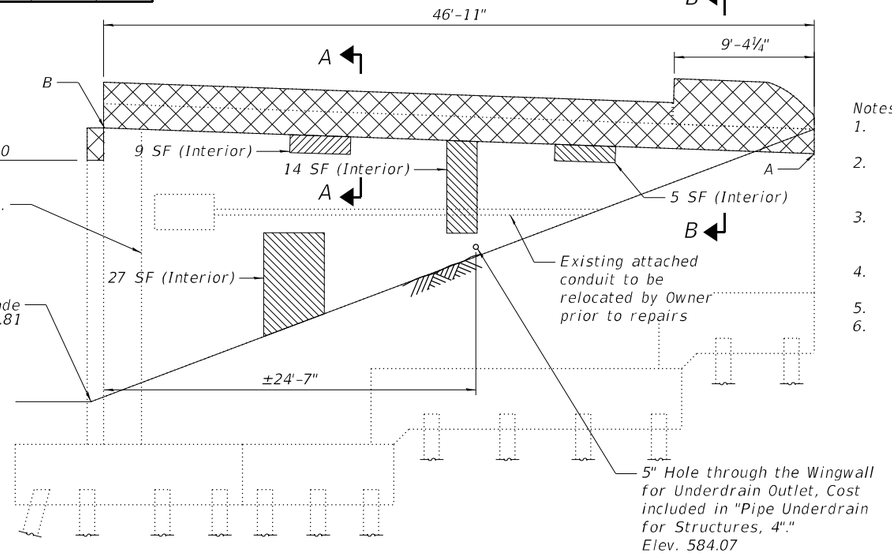

SOUTH ABUTMENT WEST WINGWALL

(Looking East)

Notes:

1. See General Notes on Sheet S-2 for limits of Concrete Sealer application.
2. Saw cut to maintain smooth finish on exposed concrete faces, cost included with Concrete Removal.
3. Exist. Approach Railing and Pylon removal cost included with Removal of Existing Superstructures.
4. See sheets S-39 and S-42 for removal of abutment stem details.
5. See Sheet S-46 for wingwall Bill of Materials.
6. A nominal amount of graffiti removal has been included, however an exact quantity and location of graffiti removal shall be per the Engineer in the field.

LEGEND

- Concrete Removal
- Structural Repair of Concrete (Depth Equal to or Less Than 5")
- Structural Repair of Concrete (Depth Greater Than 5")
- 6 LF — Epoxy Crack Sealing

MODEL: Default
FILE NAME: P:\10eIL\14411-IDOT - Sacramento and Paulina over I-290\Work\CADD\Paulina - Contract 62K64\CADD_Sheets\StructuralD162K64-0160098-045-Wingwall Removal.dgn
10/9/2025 4:38:59 PM

COLLINS ENGINEERS INC.

USER NAME =	DESIGNED - MR	REVISED -	
	CHECKED - EKM	REVISED -	
PLOT SCALE =	DRAWN - DR	REVISED -	
PLOT DATE =	CHECKED - EKM	REVISED -	

STATE OF ILLINOIS
DEPARTMENT OF TRANSPORTATION

WINGWALL REMOVAL AND REPAIRS
STRUCTURE NO. 016-0098
SHEET S-45 OF S-56 SHEETS

F.A.I. RTE.	SECTION	COUNTY	TOTAL SHEETS	SHEET NO.
290	2019-191-B-R	COOK	265	211
		CONTRACT NO. 62K64		
		ILLINOIS	FED. AID PROJECT	

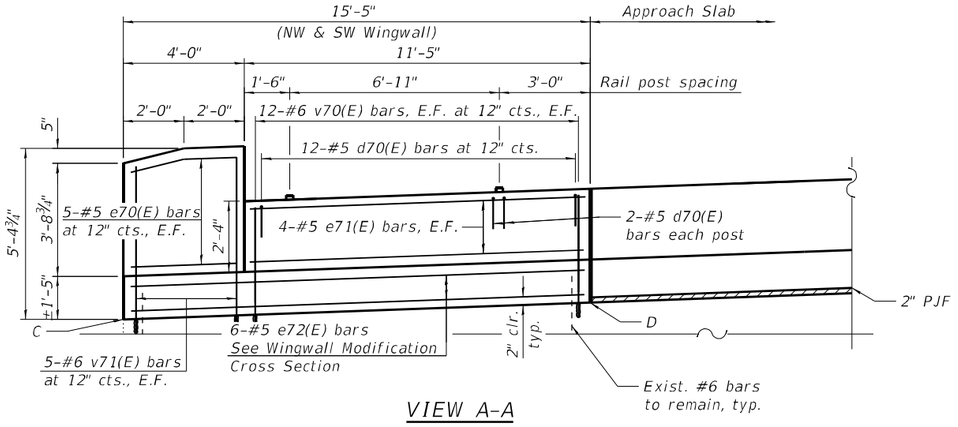

VIEW A-A

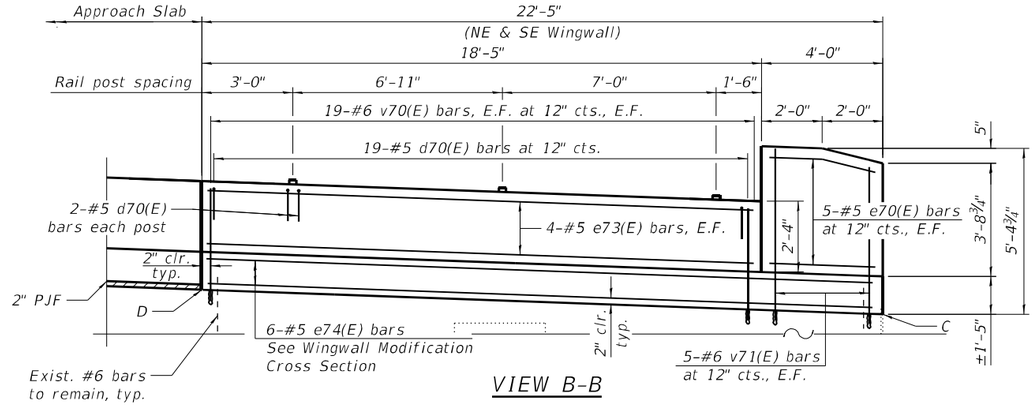

VIEW B-B

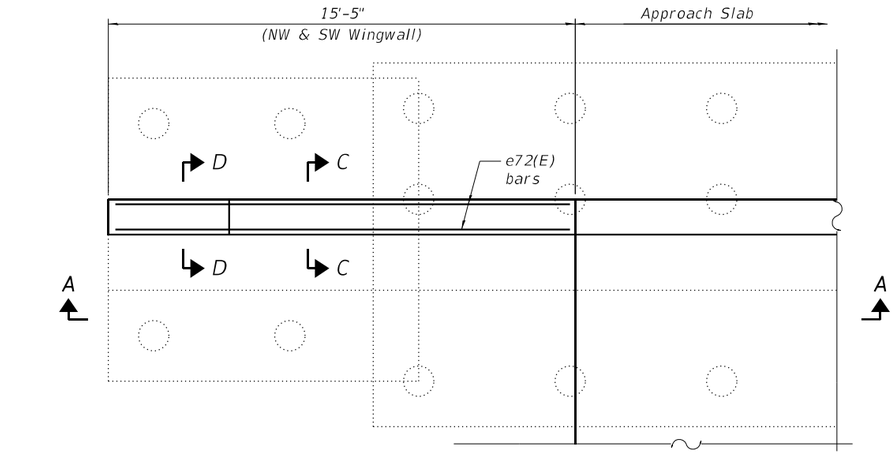

PLAN

SW Wingwall Shown, NW Wingwall Similar

Location	T/Existing Elev. C	D
SW Wingwall	591.94	592.60
SE Wingwall	590.98	591.94
NW Wingwall	592.08	592.64
NE Wingwall	591.20	591.98

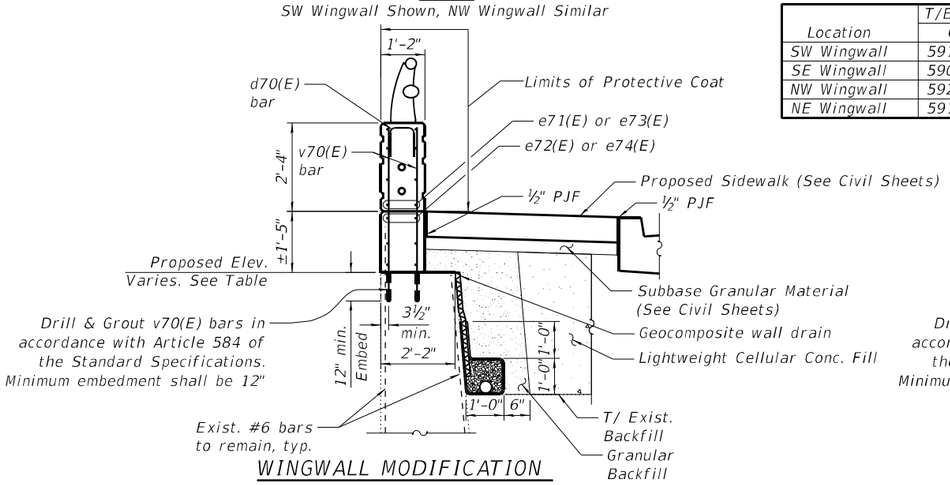

WINGWALL MODIFICATION

SECTION C-C

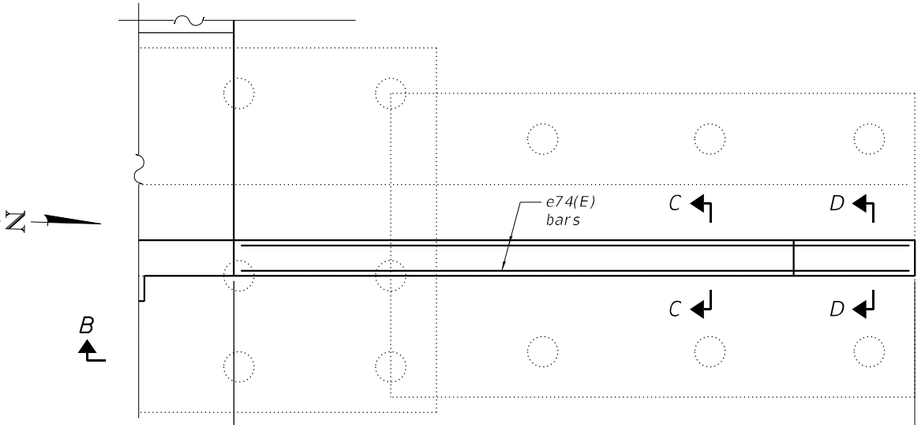

PLAN

NE Wingwall Shown, SE Wingwall Similar

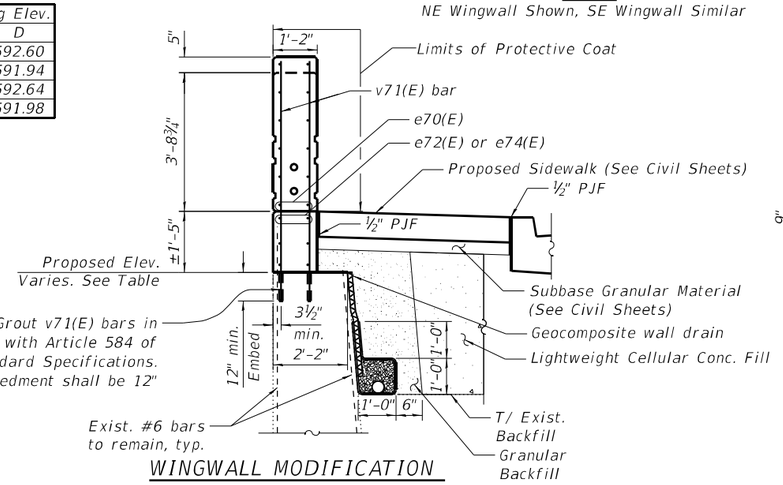

WINGWALL MODIFICATION

SECTION D-D

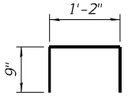

BAR d70(E)

BILL OF MATERIAL

Bar	No.	Size	Length	Shape
d70(E)	62	#5	2'-8"	
e70(E)	20	#5	3'-8"	
e71(E)	16	#5	11'-1"	
e72(E)	24	#5	15'-1"	
e73(E)	16	#5	18'-1"	
e74(E)	24	#5	22'-1"	
v70(E)	62	#6	4'-9"	
v71(E)	20	#6	6'-2"	
Concrete Structures		Cu. Yd.	13.6	
Protective Coat		Sq. Yd.	33	
Reinforcement Bars, Epoxy Coated		Pound	2,110	

Notes:
1. Protective coat is applied on inside and top face of wingwall.
2. Quantities of Granular Backfill, Lightweight Cellular Concrete, and Pipe Underdrain are shown on Sheets S-41 and S-44.
3. See Sheet S-22 for Parapet Reveal Details.

MODEL: Default
FILE NAME: P:\10cl\14411-IDOT - Sacramento and Paulina over I-290\Work\CADD\Paulina - Contract 62K64\CADD_Sheets\StructuralID162K64-0160098-046-Wingwall Mod.dgn
10/9/2025 4:39:10 PM

COLLINS ENGINEERS INC.

USER NAME =	DESIGNED - MR	REVISED -	
	CHECKED - EKM	REVISED -	
PLOT SCALE =	DRAWN - DR	REVISED -	
PLOT DATE =	CHECKED - EKM	REVISED -	

STATE OF ILLINOIS
DEPARTMENT OF TRANSPORTATION

WINGWALL MODIFICATIONS
STRUCTURE NO. 016-0098
SHEET S-46 OF S-56 SHEETS

F.A.I. RTE.	SECTION	COUNTY	TOTAL SHEETS	SHEET NO.
290	2019-191-B-R	COOK	265	212
		CONTRACT NO. 62K64		
		ILLINOIS	FED. AID PROJECT	

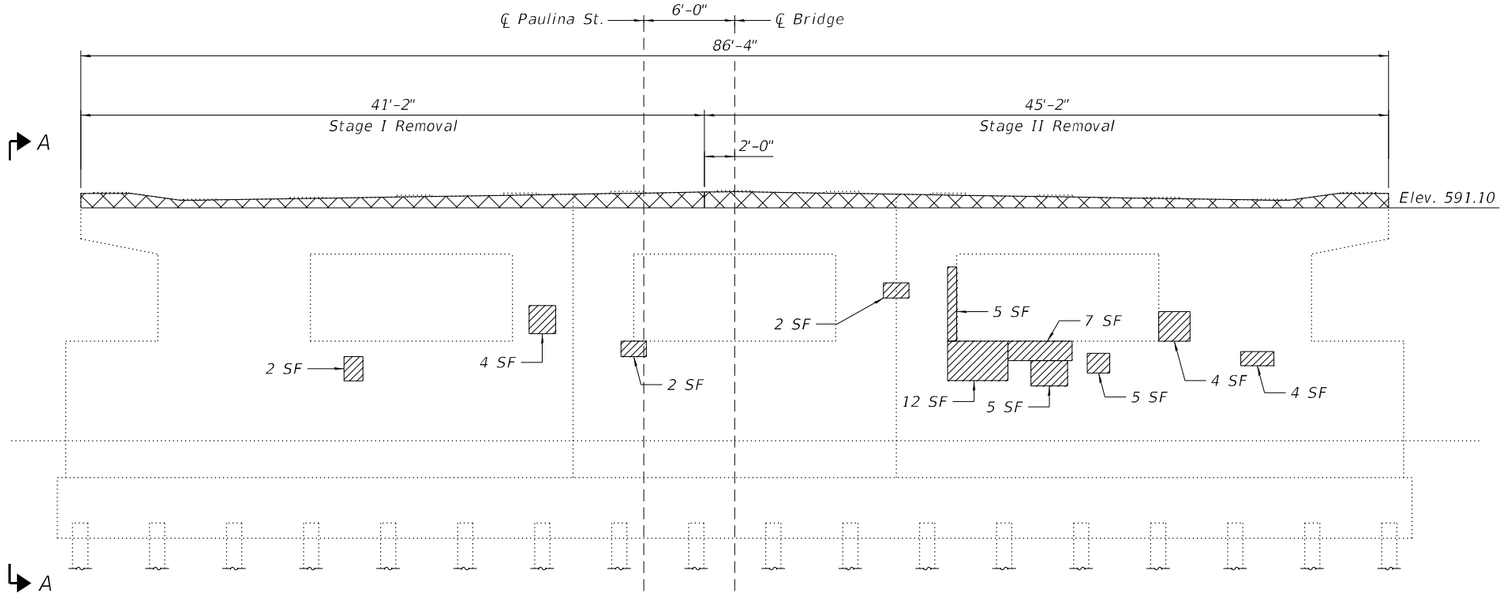

PIER 1 ELEVATION

(Looking South)

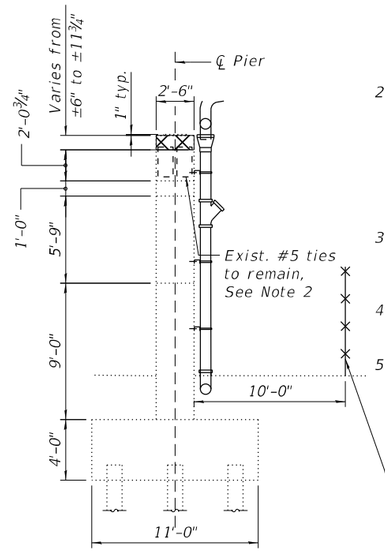

SECTION A-A

NOTES:

1. Repair areas are estimated based on inspection completed in 2023 and increased by 10% to account for future deterioration. Actual repair areas and locations shall be determined by the Engineer at the time of construction and shown on the as-built plans.
2. Existing reinforcement shall be cleaned and incorporated into the new construction. Any reinforcement bars to remain that are damaged during concrete removal operations shall be repaired or replaced using and approved bar splicer or anchorage system. Cost included with "Concrete Removal".
3. Repairs are to be performed after removal of existing superstructure elements and associated bearings.
4. For Pier 1 Cap Concrete Extension, see Sheet S-48.
5. Proposed CTA ROW Fence to be installed on the CTA side of the pier. The length and location shall be coordinated with CTA prior to installation. See Schedule of Quantities and Highway Standard 664001-02 for details.

BILL OF MATERIAL

Item	Unit	Total
Concrete Removal	Cu. Yd.	6.3
Structural Repair of Concrete (Depth Equal to or Less Than 5")	Sq. Ft.	118

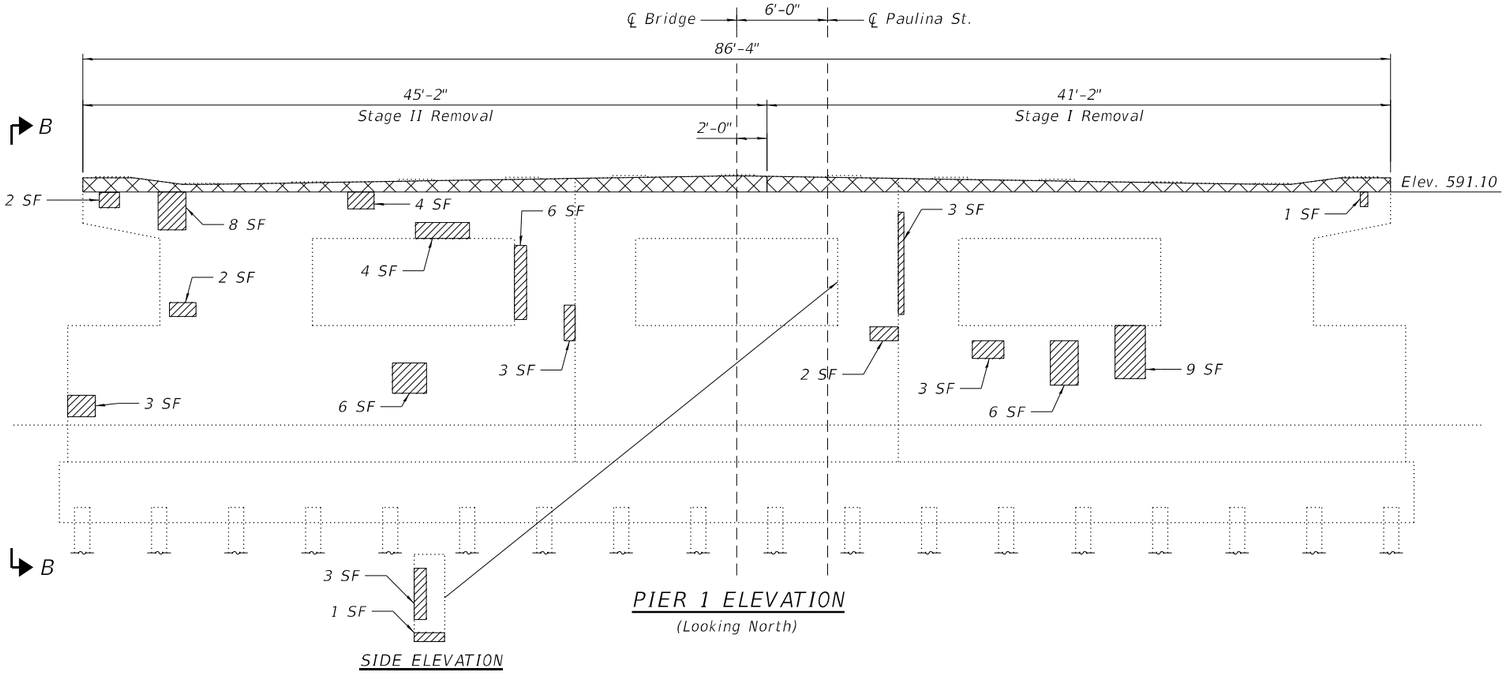

PIER 1 ELEVATION

(Looking North)

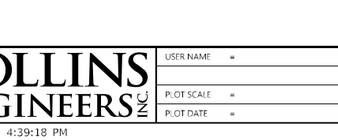

SIDE ELEVATION

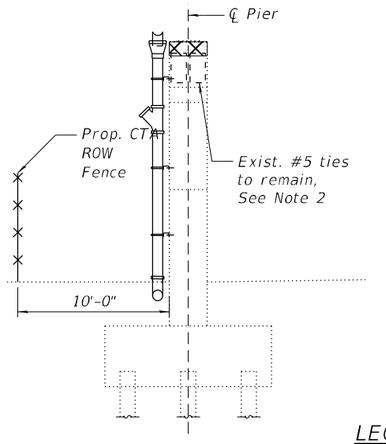

SECTION B-B

LEGEND

- Concrete Removal
- Structural Repair of Concrete (Depth Equal to or Less Than 5")

MODEL: Default
FILE NAME: P:\10-LI1441-IDOT - Sacramento and Paulina over I-290\Work\CADD\Paulina - Contract 62K64\CADD_Sheets\StructuralID162K64-0160098-047-Pier1_Repairs.dgn

10/9/2025 4:39:18 PM

COLLINS ENGINEERS INC.

USER NAME =		DESIGNED - MR	REVISED -		
		CHECKED - EKM	REVISED -		
PLOT SCALE =		DRAWN - DR	REVISED -		
PLOT DATE =		CHECKED - EKM	REVISED -		

STATE OF ILLINOIS
DEPARTMENT OF TRANSPORTATION

PIER 1 REPAIRS
STRUCTURE NO. 016-0098
SHEET S-47 OF S-56 SHEETS

F.A.I. RTE.	SECTION	COUNTY	TOTAL SHEETS	SHEET NO.
290	2019-191-B-R	COOK	265	213
		CONTRACT NO. 62K64		
		ILLINOIS	FED. AID PROJECT	

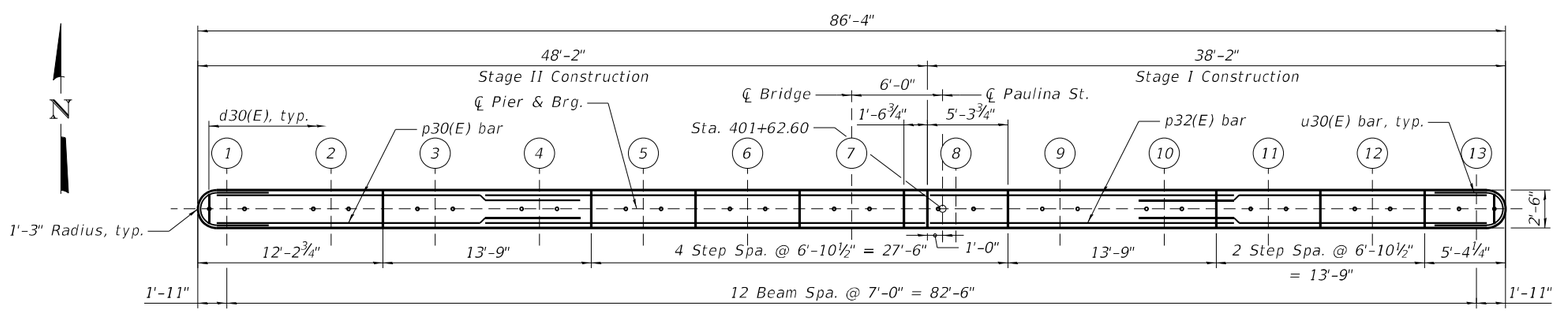

PIER 1 CAP PLAN

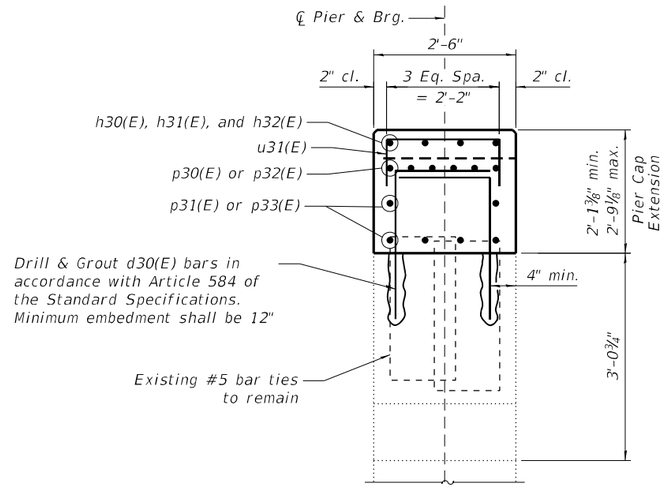

SECTION A-A

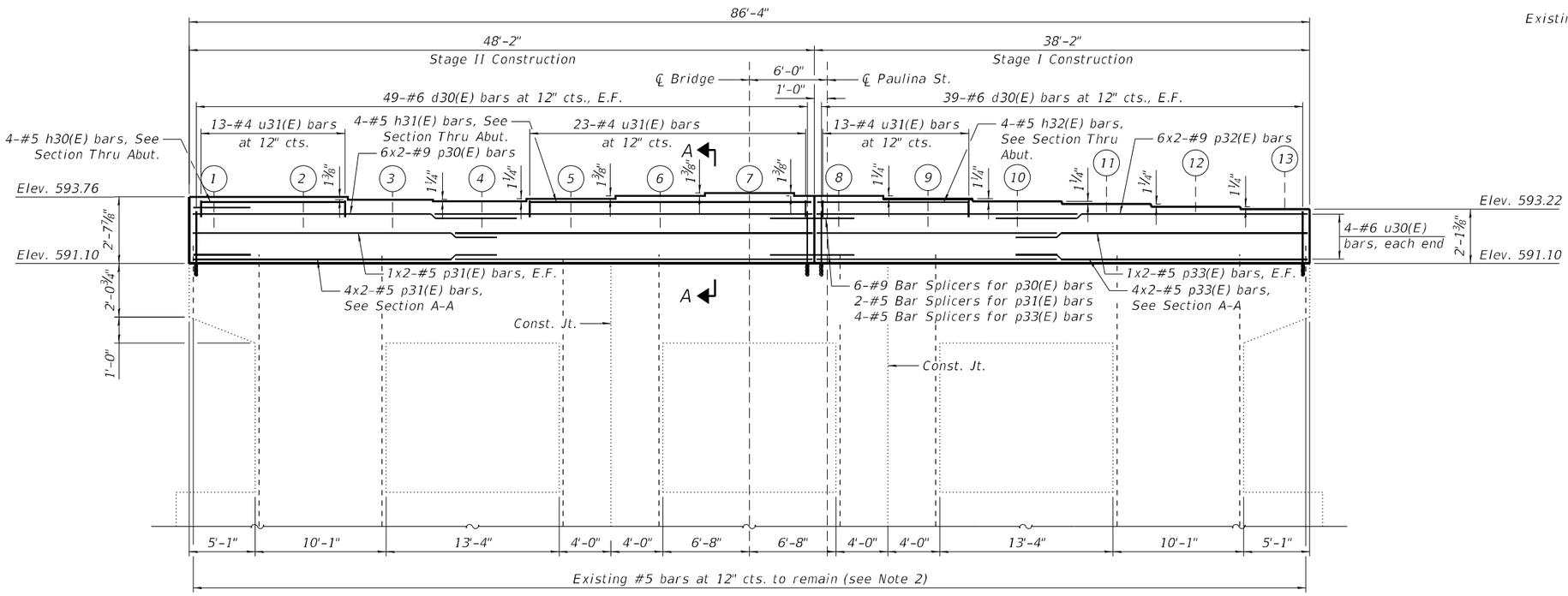

PIER 1 ELEVATION

(Looking North)

MINIMUM BAR LAP

#5 bar = 3'-7"
#9 bar = 7'-1"

BILL OF MATERIAL

Bar	No.	Size	Length	Shape
d30(E)	176	#6	4'-9"	⌐
h30(E)	4	#4	11'-2"	——
h31(E)	4	#5	21'-10"	——
h32(E)	4	#5	11'-10"	——
p30(E)	12	#9	27'-5"	——
p31(E)	10	#5	25'-7"	——
p32(E)	12	#9	22'-5"	——
p33(E)	10	#5	20'-7"	——
u30(E)	8	#6	10'-3"	⊔
u31(E)	49	#6	4'-10"	⊔
Concrete Structures			Cu. Yd.	20.1
Reinforcement Bars, Epoxy Coated			Pound	4,450
Concrete Sealer			Sq. Ft.	1,308

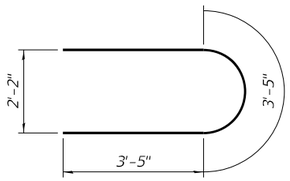

BAR u30(E)

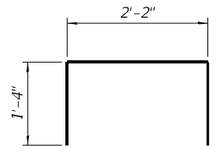

BAR u31(E)

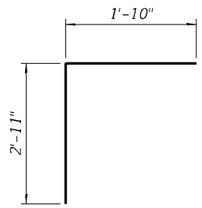

BAR d30(E)

BEARING SEAT ELEVATIONS

Beam No.	Seat Elev.
Beam 1	593.76
Beam 2	593.76
Beam 3	593.64
Beam 4	593.54
Beam 5	593.64
Beam 6	593.75
Beam 7	593.86
Beam 8	593.75
Beam 9	593.64
Beam 10	593.54
Beam 11	593.43
Beam 12	593.33
Beam 13	593.22

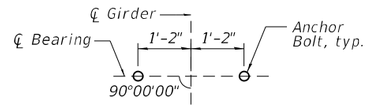

ANCHOR BOLT PLAN

NOTES:

1. For Pier 1 Removal and Repairs, see Sheet S-47.
2. Existing reinforcement shall be cleaned and incorporated into the new construction. Cost included with Concrete Removal.
3. See General Notes on Sheet S-2 for limits of Concrete Sealer application.
4. Bars indicated thus 1 x 2-#8 etc. indicates 1 line of bars with 2 lengths per line.

MODEL: Default
FILE NAME: P:\10-IL\14411-IDOT - Sacramento and Paulina over I-290\Work\CADD\Paulina - Contract 62K64\CADD_Sheets\Structural\D162K64-0160098-048-Pier1_Cap Mod.dgn
10/9/2025 4:39:27 PM

COLLINS ENGINEERS INC.

USER NAME =	DESIGNED - MR	REVISED -	
	CHECKED - EKM	REVISED -	
PLOT SCALE =	DRAWN - DR	REVISED -	
PLOT DATE =	CHECKED - EKM	REVISED -	

STATE OF ILLINOIS
DEPARTMENT OF TRANSPORTATION

PIER 1 CAP CONCRETE EXTENSION
STRUCTURE NO. 016-0098
SHEET S-48 OF S-56 SHEETS

F.A.I. RTE.	SECTION	COUNTY	TOTAL SHEETS	SHEET NO.
290	2019-191-B-R	COOK	265	214
		CONTRACT NO. 62K64		
		ILLINOIS	FED. AID PROJECT	

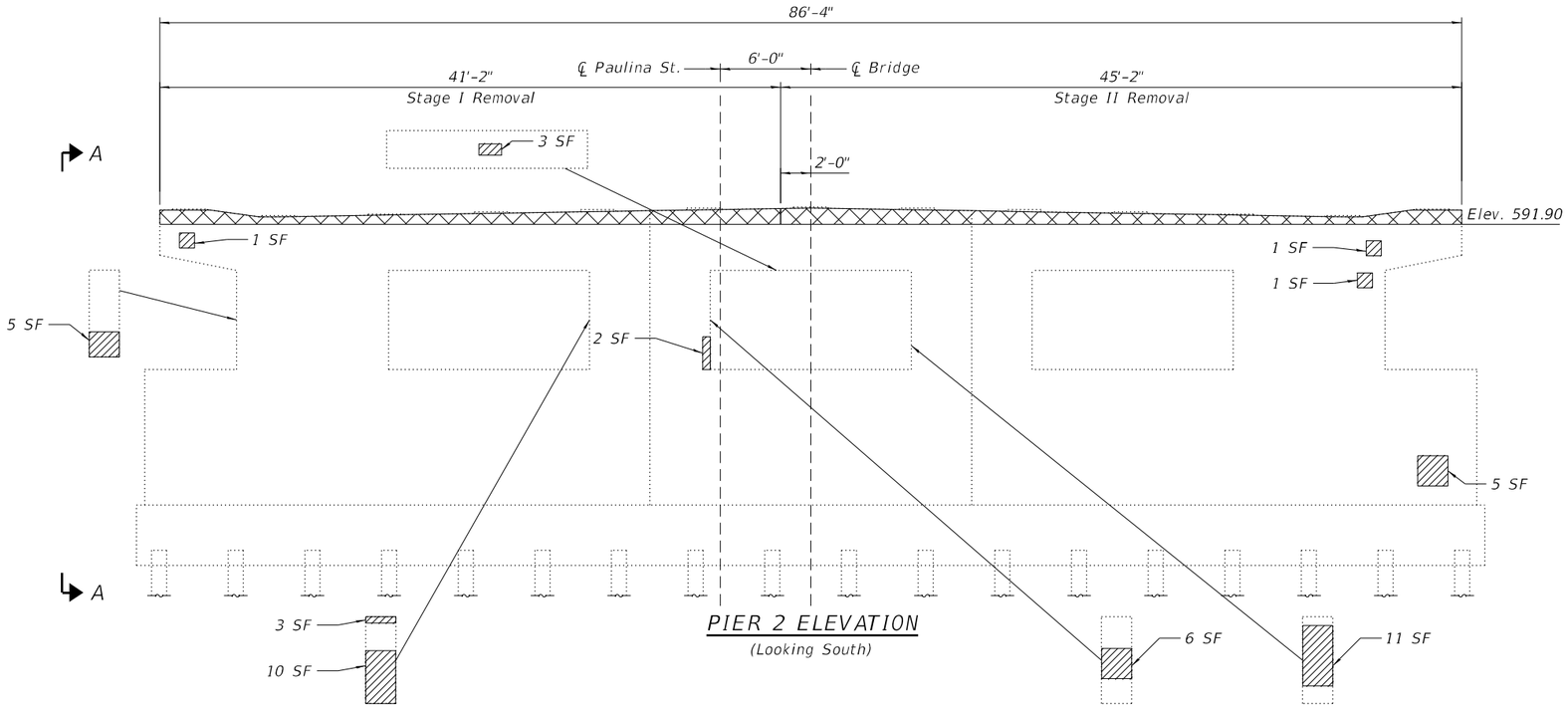

PIER 2 ELEVATION

(Looking South)

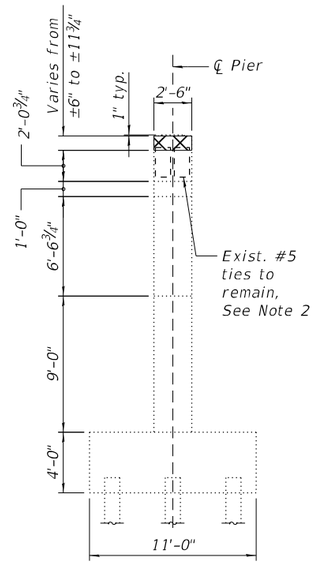

SECTION A-A

NOTES:

1. Repair areas are estimated based on inspection completed in 2025 and increased by 10% to account for future deterioration. Actual repair areas and locations shall be determined by the Engineer at the time of construction and shown on the as-built plans.
2. Existing reinforcement shall be cleaned and incorporated into the new construction. Any reinforcement bars to remain that are damaged during concrete removal operations shall be repaired or replaced using an approved bar splicer or anchorage system. Cost included with "Concrete Removal".
3. Repairs are to be performed after removal of existing superstructure elements and associated bearings.
4. For Pier 2 Cap Concrete Extension, see Sheet S-50.

BILL OF MATERIAL

Item	Unit	Total
Concrete Removal	Cu. Yd.	6.3
Structural Repair of Concrete (Depth Equal to or Less Than 5")	Sq. Ft.	53

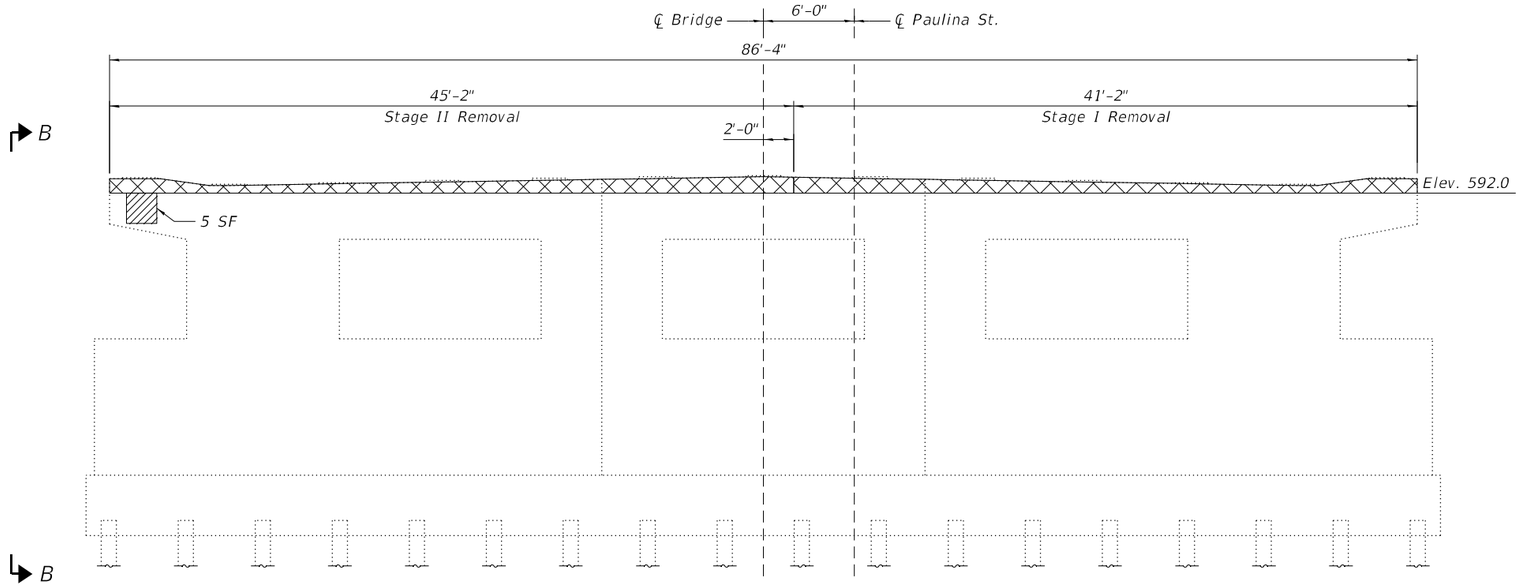

PIER 2 ELEVATION

(Looking North)

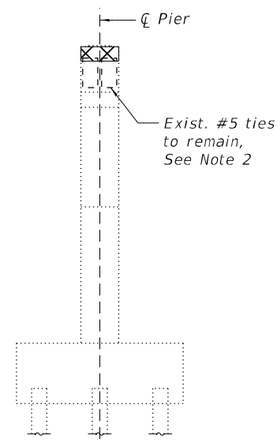

SECTION B-B

LEGEND

Concrete Removal

Structural Repair of Concrete (Depth Equal to or Less Than 5")

MODEL: Default
FILE NAME: P:\10-LI1441-IDOT - Sacramento and Paulina over I-290\Work\CADD\Paulina - Contract 62K64\CADD_Sheets\Structural\D162K64-0160098-049-Pier2_Repairs.dgn
10/9/2025 4:39:36 PM

COLLINS ENGINEERS INC.

USER NAME =	DESIGNED - MR	REVISED -	
	CHECKED - EKM	REVISED -	
PLOT SCALE =	DRAWN - DR	REVISED -	
PLOT DATE =	CHECKED - EKM	REVISED -	

STATE OF ILLINOIS
DEPARTMENT OF TRANSPORTATION

PIER 2 REPAIRS
STRUCTURE NO. 016-0098

SHEET S-49 OF S-56 SHEETS

F.A.I. RTE.	SECTION	COUNTY	TOTAL SHEETS	SHEET NO.
290	2019-191-B-R	COOK	265	215
		CONTRACT NO. 62K64		
	ILLINOIS	FED. AID PROJECT		

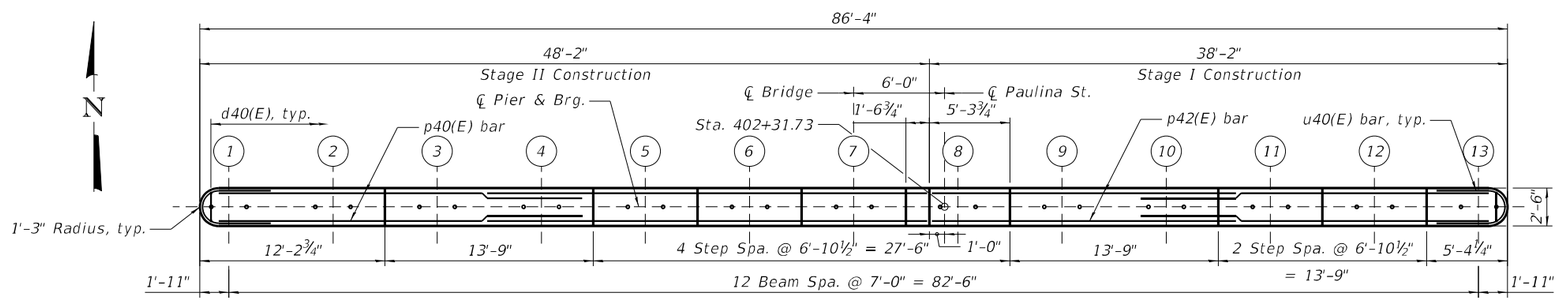

PIER 2 CAP PLAN

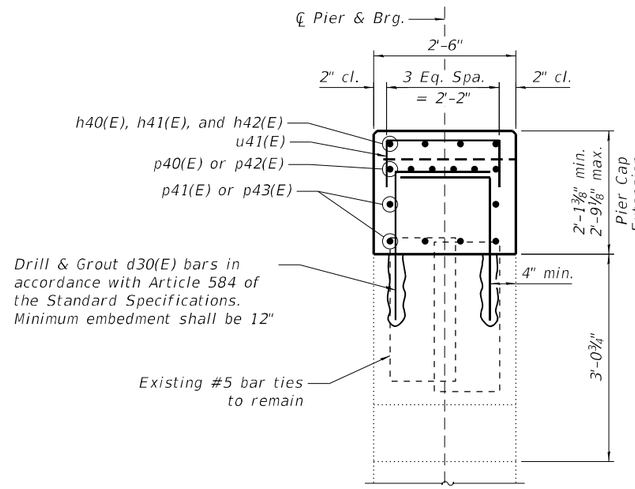

SECTION A-A

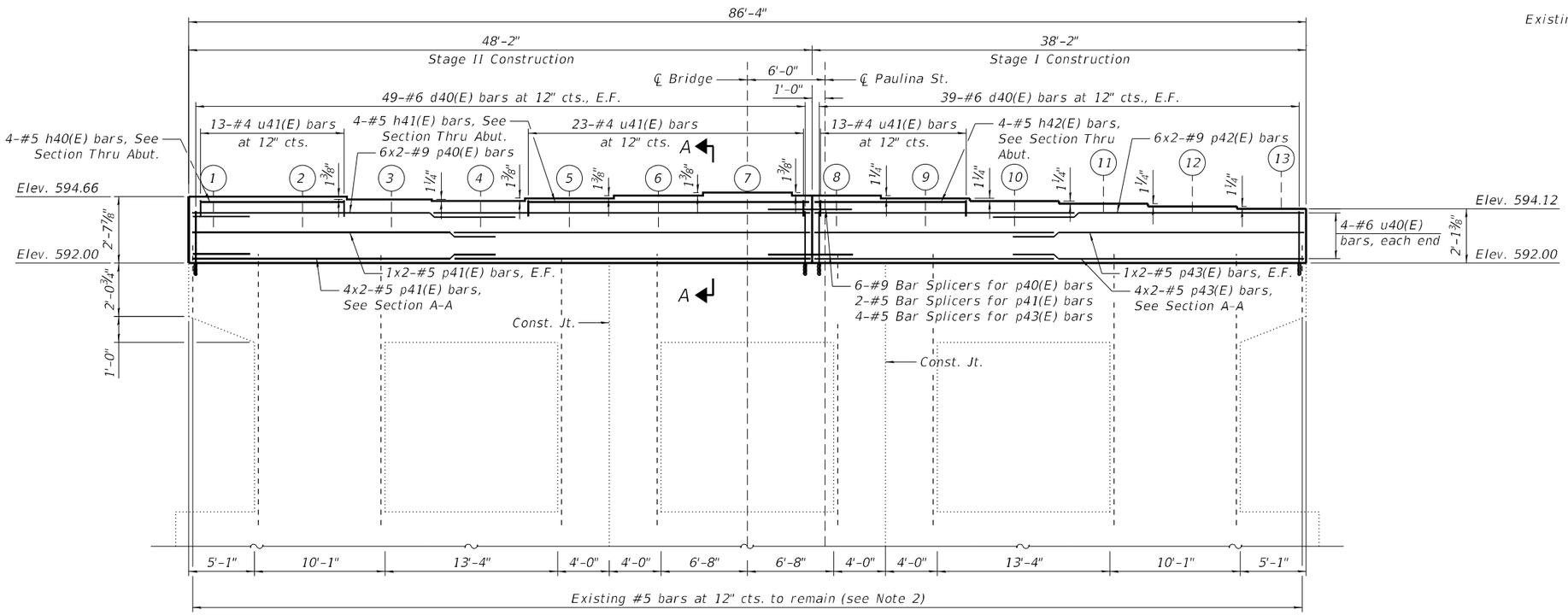

PIER 2 ELEVATION

(Looking North)

MINIMUM BAR LAP

#5 bar = 3'-7"
#9 bar = 7'-1"

BILL OF MATERIAL

Bar	No.	Size	Length	Shape
d40(E)	176	#6	4'-9"	⌐
h40(E)	4	#4	11'-2"	———
h41(E)	4	#5	21'-10"	———
h42(E)	4	#5	11'-10"	———
p40(E)	12	#9	27'-5"	———
p41(E)	10	#5	25'-7"	———
p42(E)	12	#9	22'-5"	———
p43(E)	10	#5	20'-7"	———
u40(E)	8	#6	10'-3"	⊃
u41(E)	49	#6	4'-10"	⊂
Concrete Structures			Cu. Yd.	20.1
Reinforcement Bars, Epoxy Coated			Pound	4,450
Concrete Sealer			Sq. Ft.	270

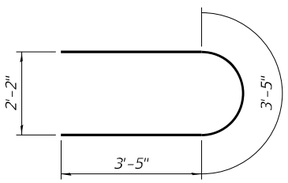

BAR u40(E)

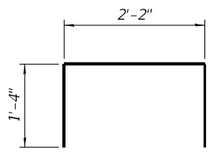

BAR u41(E)

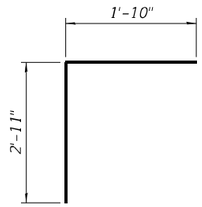

BAR d40(E)

BEARING SEAT ELEVATIONS

Beam No.	Seat Elev.
Beam 1	594.66
Beam 2	594.66
Beam 3	594.54
Beam 4	594.44
Beam 5	594.54
Beam 6	594.65
Beam 7	594.76
Beam 8	594.65
Beam 9	594.54
Beam 10	594.44
Beam 11	594.33
Beam 12	594.23
Beam 13	594.12

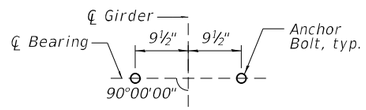

ANCHOR BOLT PLAN

NOTES:

1. For Pier 2 Removal and Repairs, see Sheet S-49.
2. Existing reinforcement shall be cleaned and incorporated into the new construction. Cost included with Concrete Removal.
3. See General Notes on Sheet S-2 for limits of Concrete Sealer application.
4. Bars indicated thus 1 x 2-#8 etc. indicates 1 line of bars with 2 lengths per line.

MODEL: Default
FILE NAME: P:\10-IL\14411-IDOT - Sacramento and Paulina over I-290\Work\CADD\Paulina - Contract 62K64\CADD_Sheets\Structural\D162K64-0160098-050-Pier2_Cap Mod.dgn
10/9/2025 4:39:46 PM

COLLINS ENGINEERS INC.

USER NAME =	DESIGNED - MR	REVISED -	
	CHECKED - EKM	REVISED -	
P.LOT SCALE =	DRAWN - DR	REVISED -	
P.LOT DATE =	CHECKED - EKM	REVISED -	

STATE OF ILLINOIS
DEPARTMENT OF TRANSPORTATION

PIER 2 CAP CONCRETE EXTENSION
STRUCTURE NO. 016-0098
SHEET S-50 OF S-56 SHEETS

F.A.I. RTE.	SECTION	COUNTY	TOTAL SHEETS	SHEET NO.
290	2019-191-B-R	COOK	265	216
		CONTRACT NO. 62K64		
		ILLINOIS	FED. AID PROJECT	

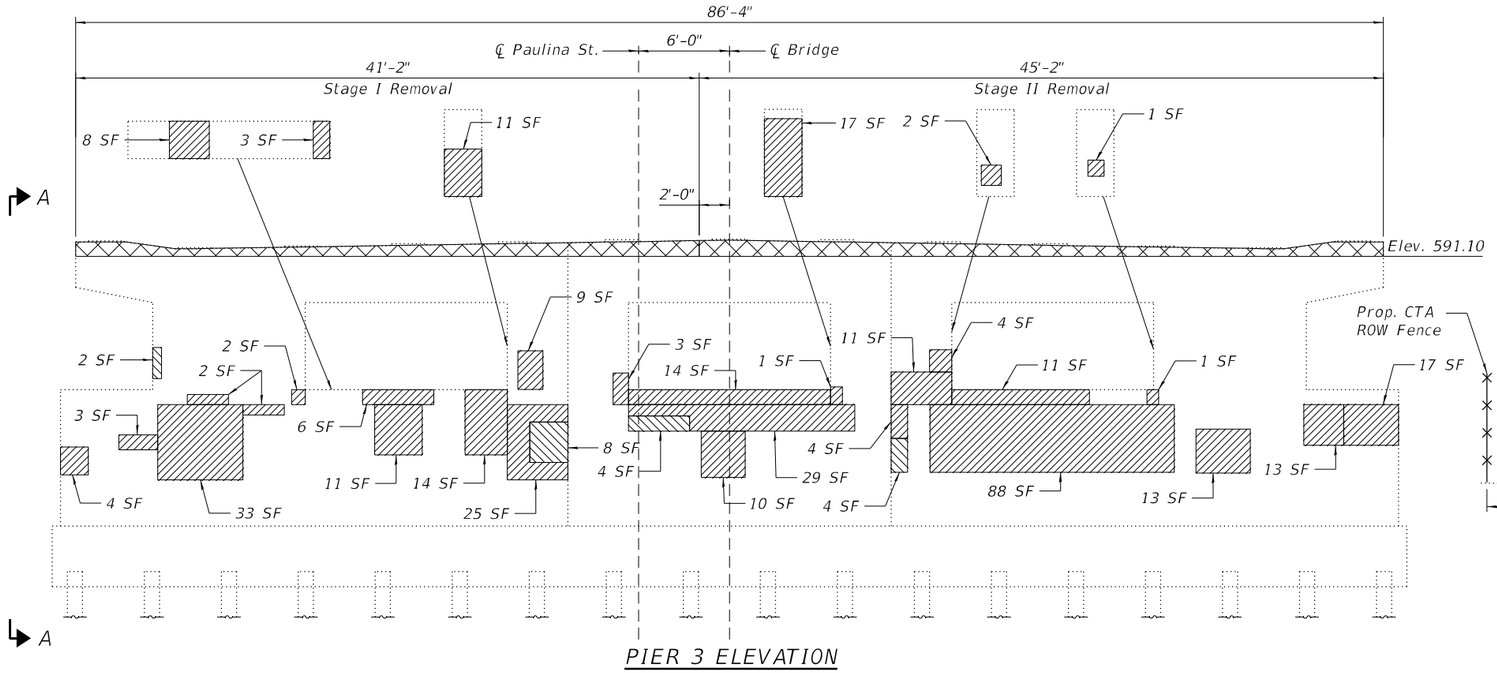

PIER 3 ELEVATION

(Looking South)

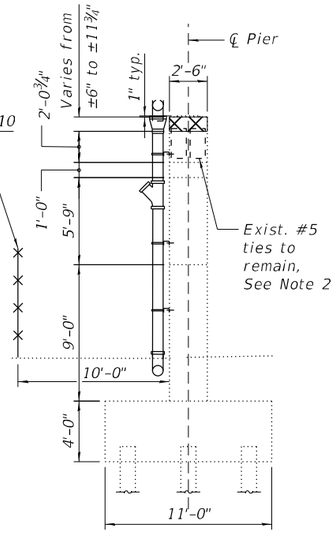

SECTION A-A

NOTES:

1. Repair areas are estimated based on inspection completed in 2023 and increased by 10% to account for future deterioration. Actual repair areas and locations shall be determined by the Engineer at the time of construction and shown on the as-built plans.
2. Existing reinforcement shall be cleaned and incorporated into the new construction. Any reinforcement bars to remain that are damaged during concrete removal operations shall be repaired or replaced using an approved bar splicer or anchorage system. Cost included with "Concrete Removal".
3. Repairs are to be performed after removal of existing superstructure elements and associated bearings.
4. For Pier 3 Cap Concrete Extension, see Sheet S-52.
5. A nominal amount of Graffiti Removal has been included; however, an exact quantity and location of Graffiti Removal shall be per the Engineer in the field.
6. Proposed CTA ROW Fence to be installed on the CTA side of the pier. The length and location shall be coordinated with CTA prior to installation. See Schedule of Quantities and Highway Standard 664001-02 for details.

BILL OF MATERIAL

Item	Unit	Total
Concrete Removal	Cu. Yd.	6.3
Graffiti Removal	Sq. Yd.	8
Structural Repair of Concrete (Depth Equal to or Less Than 5")	Sq. Ft.	441
Structural Repair of Concrete (Depth Greater Than 5")	Sq. Ft.	33

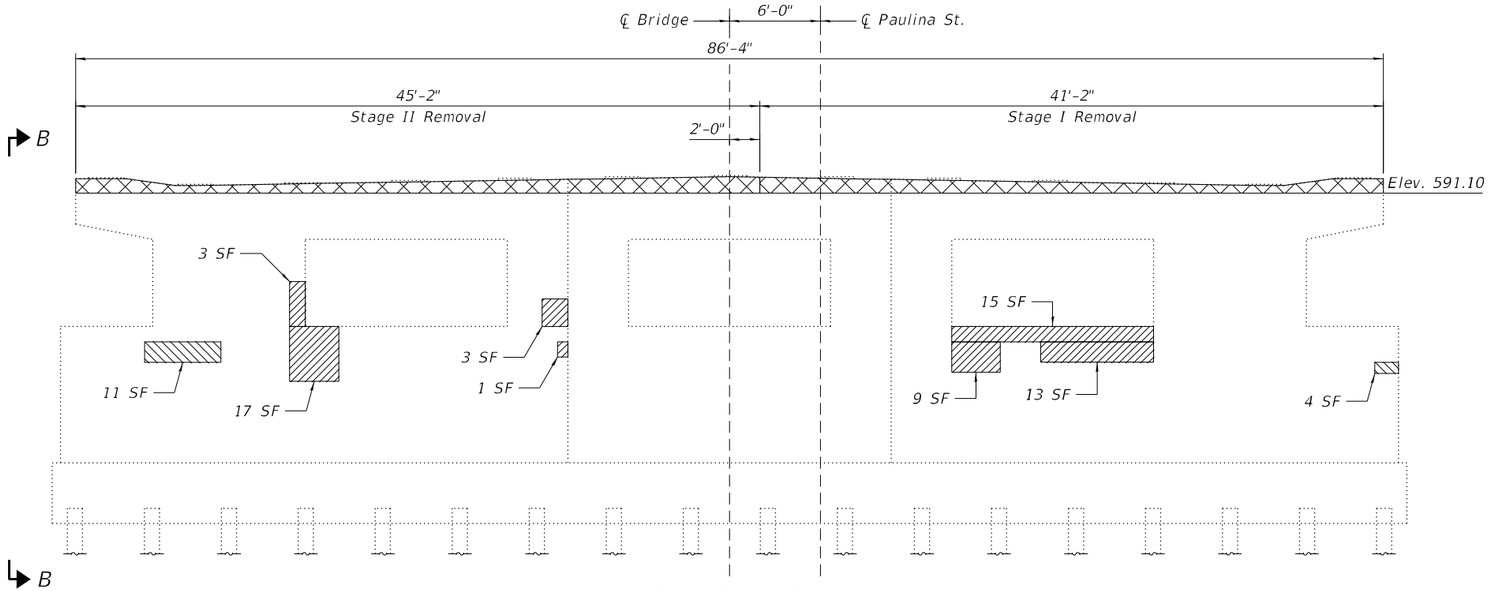

PIER 3 ELEVATION

(Looking North)

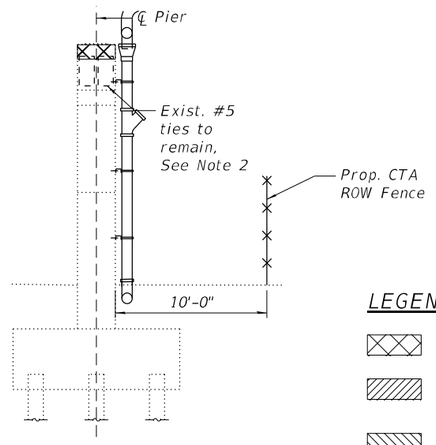

SECTION B-B

LEGEND

- Concrete Removal
- Structural Repair of Concrete (Depth Equal to or Less Than 5")
- Structural Repair of Concrete (Depth Greater Than 5")

MODEL: Default
FILE NAME: P:\10cl\14411-IDOT - Sacramento and Paulina over I-290\Work\CADD\Paulina - Contract 62K64\CADD_Sheets\Structural\D162K64-0160098-051-Pier3_Repairs.dgn
10/9/2025 4:39:55 PM

COLLINS ENGINEERS INC.

USER NAME =		DESIGNED - MR	REVISED -	STATE OF ILLINOIS DEPARTMENT OF TRANSPORTATION	PIER 3 REPAIRS STRUCTURE NO. 016-0098
		CHECKED - EKM	REVISED -		
PLOT SCALE =		DRAWN - DR	REVISED -		
PLOT DATE =		CHECKED - EKM	REVISED -		SHEET S-51 OF S-56 SHEETS

F.A.I. RTE.	SECTION	COUNTY	TOTAL SHEETS	SHEET NO.
290	2019-191-B-R	COOK	265	217
		CONTRACT NO. 62K64		
		ILLINOIS	FED. AID PROJECT	

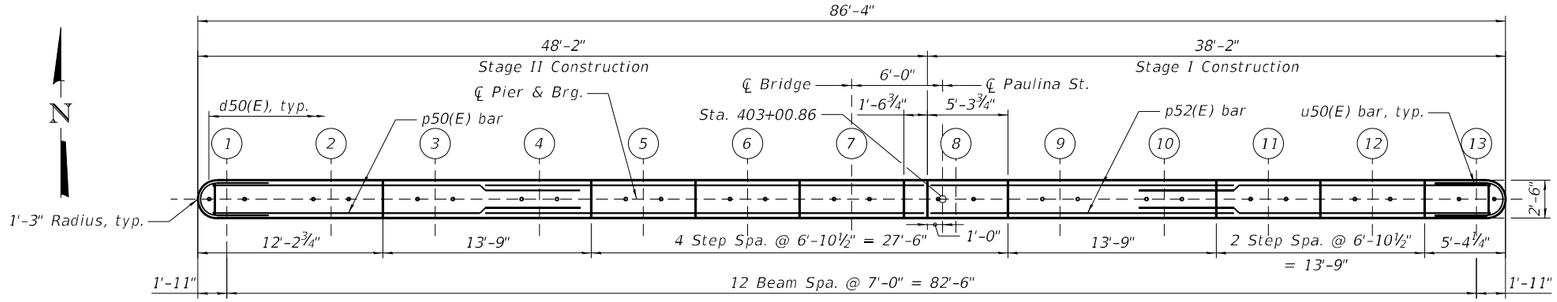

PIER 3 CAP PLAN

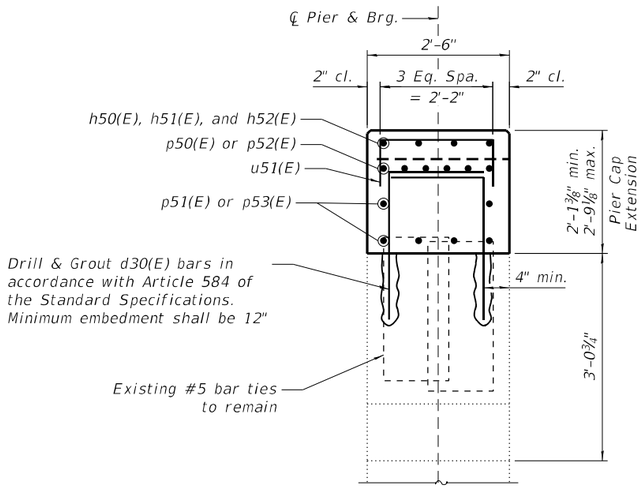

SECTION A-A

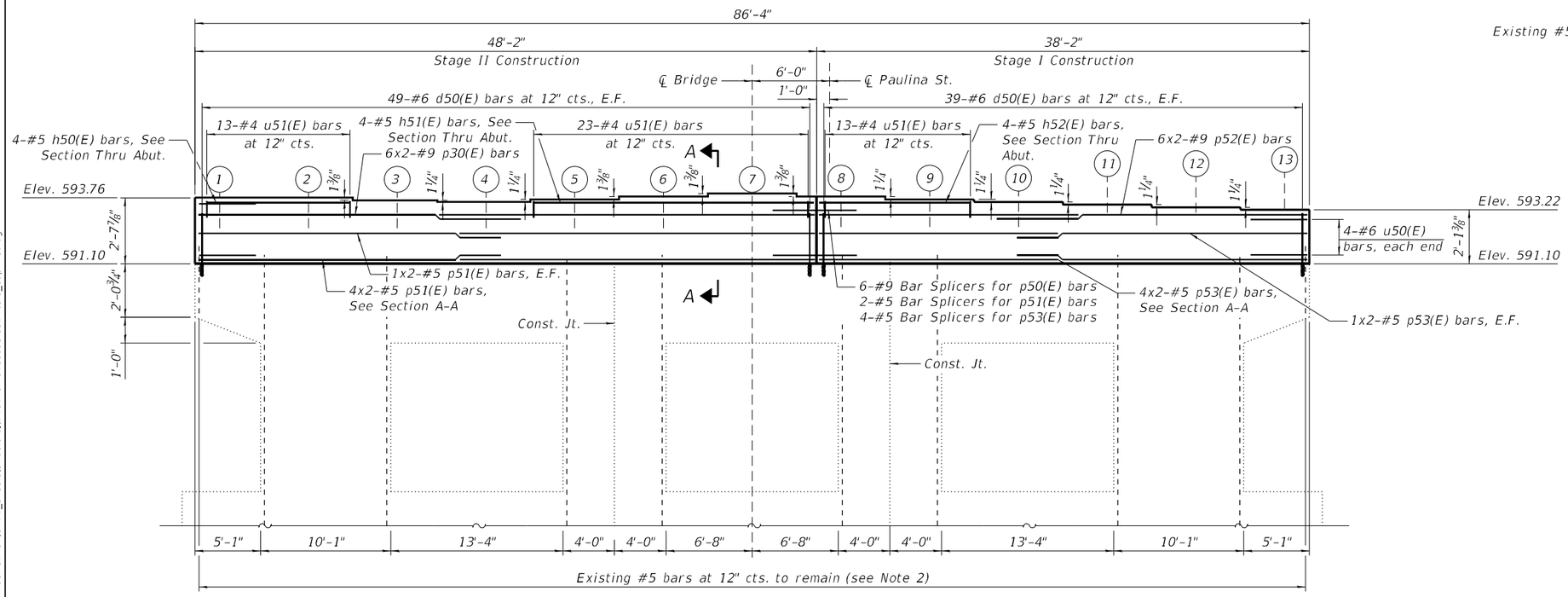

PIER 3 ELEVATION

(Looking North)

MINIMUM BAR LAP

#5 bar = 3'-7"
#9 bar = 7'-1"

BILL OF MATERIAL

Bar	No.	Size	Length	Shape
d50(E)	176	#6	4'-9"	⌐
h50(E)	4	#4	11'-2"	——
h51(E)	4	#5	21'-10"	——
h52(E)	4	#5	11'-10"	——
p50(E)	12	#9	27'-5"	——
p51(E)	10	#5	25'-7"	——
p52(E)	12	#9	22'-5"	——
p53(E)	10	#5	20'-7"	——
u50(E)	8	#6	10'-3"	⊐
u51(E)	49	#6	4'-10"	⊓
Concrete Structures			Cu. Yd.	20.1
Reinforcement Bars, Epoxy Coated			Pound	4,450
Concrete Sealer			Sq. Ft.	1,308

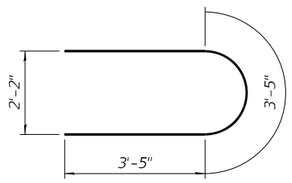

BAR u50(E)

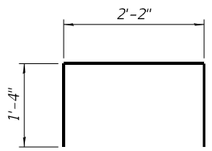

BAR u51(E)

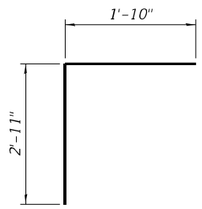

BAR d50(E)

BEARING SEAT ELEVATIONS

Beam No.	Seat Elev.
Beam 1	593.76
Beam 2	593.76
Beam 3	593.64
Beam 4	593.54
Beam 5	593.64
Beam 6	593.75
Beam 7	593.86
Beam 8	593.75
Beam 9	593.64
Beam 10	593.54
Beam 11	593.43
Beam 12	593.33
Beam 13	593.22

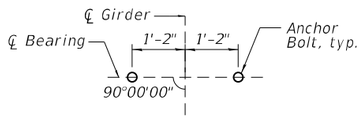

ANCHOR BOLT PLAN

NOTES:

1. For Pier 3 Removal and Repairs, see Sheet S-51.
2. Existing reinforcement shall be cleaned and incorporated into the new construction. Cost included with Concrete Removal.
3. See General Notes on Sheet S-2 for limits of Concrete Sealer application.
4. Bars indicated thus 1 x 2-#8 etc. indicates 1 line of bars with 2 lengths per line.

MODEL: Default
FILE NAME: P:\10-EL\14411-IDOT - Sacramento and Paulina over I-290\Work\CADD\Paulina - Contract 62K64\CADD_Sheets\Structural\D162K64-016009-052-Pier3_Cap Mod.dgn
10/9/2025 4:40:03 PM

COLLINS ENGINEERS INC.

USER NAME =		DESIGNED - MR	REVISED -	
		CHECKED - EKM	REVISED -	
PLOT SCALE =		DRAWN - DR	REVISED -	
PLOT DATE =		CHECKED - EKM	REVISED -	

STATE OF ILLINOIS
DEPARTMENT OF TRANSPORTATION

PIER 3 CAP CONCRETE EXTENSION
STRUCTURE NO. 016-0098
SHEET S-52 OF S-56 SHEETS

F.A.I. RTE.	SECTION	COUNTY	TOTAL SHEETS	SHEET NO.
290	2019-191-B-R	COOK	265	218
		CONTRACT NO. 62K64		
	ILLINOIS	FED. AID PROJECT		

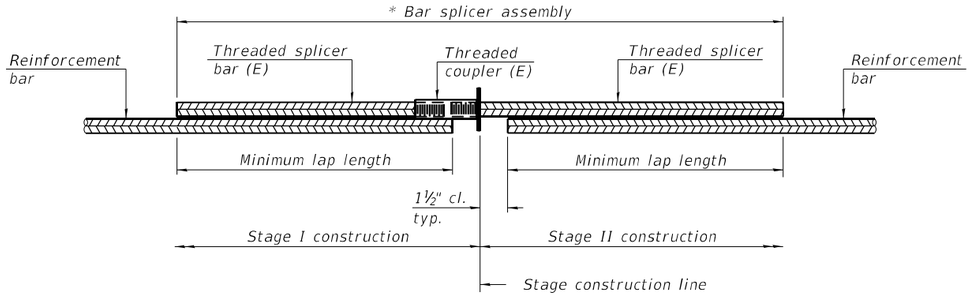

STANDARD BAR SPLICER ASSEMBLY PLAN

Only bar splicer assemblies as presented on the approved QPL list may be used.

Threaded splicer bar length = min. lap length + 1½" + thread length

* Epoxy not required on Bar Splicer Assembly components used in conjunction with black bars.

Location	Bar size	No. assemblies required	Minimum lap length
Deck	#5	1,182	3'-10"
Concrete Diaphragm	#4	2	2'-8"
	#6	9	4'-0"
S. Approach	#5	71	3'-0"
	#6	92	4'-2"
	#8	61	6'-11"
N. Approach	#5	71	3'-0"
	#6	92	4'-2"
	#8	61	6'-11"
S. Abutment	#4	2	2'-11"
	#5	2	3'-7"
	#6	4	4'-4"
N. Abutment	#4	2	2'-11"
	#5	2	3'-7"
	#6	4	4'-4"
Pier 1	#5	6	3'-7"
	#9	6	7'-1"
Pier 2	#5	6	3'-7"
	#9	6	7'-1"
Pier 3	#5	6	3'-7"
	#9	6	7'-1"

Total = 1,693

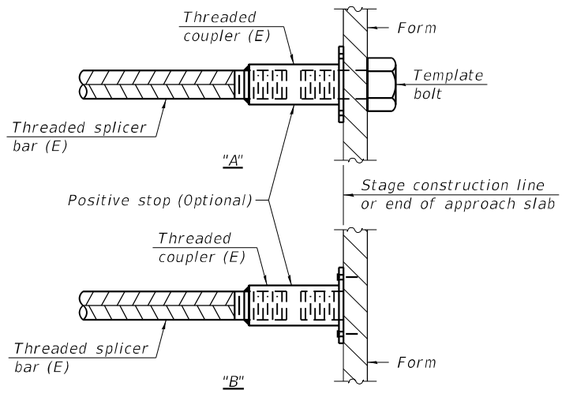

INSTALLATION AND SETTING METHODS

"A" : Set bar splicer assembly by means of a template bolt.
"B" : Set bar splicer assembly by nailing to wood forms or cementing to steel forms.
(E) : Indicates epoxy coating.

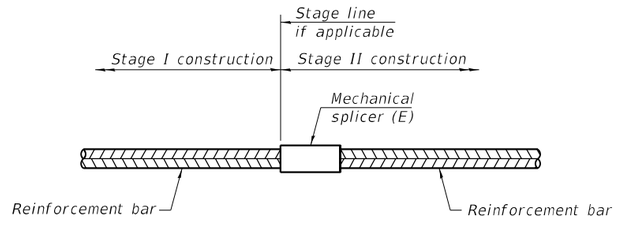

STANDARD MECHANICAL SPLICER

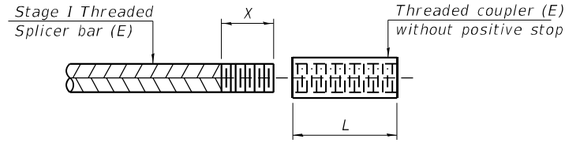

THREADING OF ASSEMBLIES

The threaded length "X" shall be no more than L/2. The bar should be tightened until 0-1 thread(s) is/are exposed.

Notes:

Splicer bars shall be deformed with threaded ends and have a minimum 60 ksi yield strength.

All reinforcement shall be lapped and tied to the splicer bars.

Bar splicer assemblies shall be epoxy coated according to the requirements for reinforcement bars. See Section 508 of the Standard Specifications.

See approved list of bar splicer assemblies and mechanical splicers for alternatives.

BSD-1

4-4-2025

MODEL: Default
FILE NAME: P:\10-IL\11411-IDOT - Sacramento and Paulina over I-290\Work\CADD\Paulina - Contract 62K64\CADD_Sheets\Structural\D162K64-0160098-053-BarSplicerAssembly.dgn
10/9/2025 4:40:13 PM

COLLINS ENGINEERS INC.

USER NAME =	DESIGNED - MR	REVISED -	
	CHECKED - EKM	REVISED -	
PLOT SCALE =	DRAWN - DR	REVISED -	
PLOT DATE =	CHECKED - EKM	REVISED -	

STATE OF ILLINOIS
DEPARTMENT OF TRANSPORTATION

BAR SPLICER ASSEMBLY DETAILS
STRUCTURE NO. 016-0098

SHEET S-53 OF S-56 SHEETS

F.A.I. RTE.	SECTION	COUNTY	TOTAL SHEETS	SHEET NO.
290	2019-191-B-R	COOK	265	219
		CONTRACT NO. 62K64		
	ILLINOIS FED. AID PROJECT			

Wang Engineering
wangeng@wangeng.com
1145 N Main Street
Lombard, IL 60148
Telephone: (630) 953-9928
Fax:

BORING LOG PAU-01

WEI Job No.: KE235325

Client: Collins Engineers
Project: Paulina Street and Sacramento Blvd over Interstate 290
Location: Chicago, Cook County, IL

Datum: NAVD88
Elevation: 595.26 ft
North: 1898199.16 ft
East: 1165040.73 ft
Station:
Offset:

Profile	Elevation (ft)	SOIL AND ROCK DESCRIPTION	Depth (ft)	Sample Type / recovery	Sample No.	SPT (blw/6 in) RQD (%)	Qu (tsf)	Moisture Content (%)
	595.26	12.5-inch thick ASPHALT						
	594.9	3-inch thick, brown SANDY GRAVEL						
	594.0	5.5-inch thick CONCRETE --PAVEMENT--						
		Stiff to very stiff, brown, gray and black SILTY CLAY LOAM to SILTY CLAY, trace gravel --FILL-- --RDR 2--	5		1	12 5 5	2.50 P	13
					2	3 4 4	2.00 P	17
					3	2 2 4	2.05 B	19
			10		4	2 3 3	1.69 B	19
	584.8	Soft to medium stiff, gray CLAY to SILTY CLAY, trace gravel --RDR 1--			5	1 2 2	0.33 B	23
			15		6	0 0 1	0.25 B	27
					7	0 0 0	0.25 B	20
			20		8	0 0 0	0.25 P	28
			25		9	0 0 0	0.33 B	28
	553.5	Stiff to very stiff, gray SILTY CLAY, trace gravel --RDR 2--						
			30		10	0 0 0	0.41 B	22
			35		11	0 0 2	0.49 B	26
			40		12	0 0 3	0.57 B	20
			45		13	3 5 7	1.80 B	17
			50		14	3 5 7	1.56 B	20

GENERAL NOTES

Begin Drilling: 05-22-2024 Complete Drilling: 05-22-2024
Drilling Contractor: Wang Testing Services Drill Rig: 20CME55T[81%]
Driller: RH&JD Logger: F. Bozga Checked by: J. Bensen
Drilling Method: 2.25" ID HSA to 10', mud rotary thereafter; backfilled upon completion

WATER LEVEL DATA

While Drilling: Dry to 10'
At Completion of Drilling: MUD
Time After Drilling: NA
Depth to Water: NA

The stratification lines represent the approximate boundary between soil types; the actual transition may be gradual.

WANGENGINC KE235325.GPJ WANGENG.GDT 6/25/24

Wang Engineering
wangeng@wangeng.com
1145 N Main Street
Lombard, IL 60148
Telephone: (630) 953-9928
Fax:

BORING LOG PAU-01

WEI Job No.: KE235325

Client: Collins Engineers
Project: Paulina Street and Sacramento Blvd over Interstate 290
Location: Chicago, Cook County, IL

Datum: NAVD88
Elevation: 595.26 ft
North: 1898199.16 ft
East: 1165040.73 ft
Station:
Offset:

Profile	Elevation (ft)	SOIL AND ROCK DESCRIPTION	Depth (ft)	Sample Type / recovery	Sample No.	SPT (blw/6 in) RQD (%)	Qu (tsf)	Moisture Content (%)
	538.5	Hard, gray SILTY CLAY LOAM to SILTY LOAM, trace gravel --RDR 2--	55		15	5 10 11	2.87 B	18
			60		16	5 10 16	7.79 B	13
		--rig chatter; possible cobbles--	65		17	15 22 50/2"	8.53 B	13
			70		18	26 48 49	6.56 S	8
	523.5	Very dense, gray SILTY LOAM, trace gravel; wet --RDR 2--	75		19	36 37 38	NP	18
	518.5	--rig chatter; possible cobbles-- Very dense, gray, fine to medium SAND; wet --RDR 3-4--	80		20	21 43 40	NP	13
	513.5	Very dense, gray SILTY LOAM; saturated --RDR 2--	85		21	36 50/4"	NP	19
			90		22	42 47 50/5"	NP	19
			95		23	50/5"	NP	23
	497.3	Possible BEDROCK --RDR 5--			24	50/1"	NR	
	495.8	--slow auger advancement--	100					
		Boring terminated at 99.50 ft						

GENERAL NOTES

Begin Drilling: 05-22-2024 Complete Drilling: 05-22-2024
Drilling Contractor: Wang Testing Services Drill Rig: 20CME55T[81%]
Driller: RH&JD Logger: F. Bozga Checked by: J. Bensen
Drilling Method: 2.25" ID HSA to 10', mud rotary thereafter; backfilled upon completion

WATER LEVEL DATA

While Drilling: Dry to 10'
At Completion of Drilling: MUD
Time After Drilling: NA
Depth to Water: NA

The stratification lines represent the approximate boundary between soil types; the actual transition may be gradual.

WANGENGINC KE235325.GPJ WANGENG.GDT 6/25/24

Boring Location:
Sta. 404+30.45
Offset 97.41' Lt.

Note:
Station and Offset measured along ℄ of Paulina St.

MODEL: Default
FILE NAME: P:\10-IL11411-IDOT - Sacramento and Paulina over I-290\Work\CADD\Paulina - Contract 62K64\CADD_Sheets\StructuralID162K64-016009-054-SoilBoringLogs-1.dgn

COLLINS ENGINEERS INC.

USER NAME =		DESIGNED - MR	REVISED -	STATE OF ILLINOIS DEPARTMENT OF TRANSPORTATION	SOIL BORING LOGS I STRUCTURE NO. 016-0098
		CHECKED - EKM	REVISED -		
PLOT SCALE =		DRAWN - DR	REVISED -		
PLOT DATE =		CHECKED - EKM	REVISED -		SHEET S-54 OF S-56 SHEETS

F.A.I. RTE.	SECTION	COUNTY	TOTAL SHEETS	SHEET NO.
290	2019-191-B-R	COOK	265	220
		CONTRACT NO. 62K64		
	ILLINOIS FED. AID PROJECT			

10/9/2025 4:40:21 PM

Wang Engineering
wangeng@wangeng.com
1145 N Main Street
Lombard, IL 60148
Telephone: (630) 953-9928
Fax:

BORING LOG PAU-02

WEI Job No.: KE235325

Client: Collins Engineers
Project: Paulina Street and Sacramento Blvd over Interstate 290
Location: Chicago, Cook County, IL

Datum: NAVD88
Elevation: 592.63 ft
North: 1897805.11 ft
East: 1165213.66 ft
Station:
Offset:

Profile	Elevation (ft)	SOIL AND ROCK DESCRIPTION	Depth (ft)	Sample Type	Sample No.	SPT (blw/6 in) RQD (%)	Qu (tsf)	Moisture Content (%)
	592.5	2-inch thick ASPHALT						
	591.5	12-inch thick CONCRETE --PAVEMENT--						
		Loose, brown and white, fine SAND, trace gravel; damp --FILL--			1	4 5 4	NP	4
	589.4	Hard, brown SILTY CLAY LOAM, little to some gravel; moist	5		2	13 3 2	> 4.50 P	14
	587.1	--1 inch asphalt on bottom of sample-- --FILL--			3	2 3 4	2.62 B	21
		Stiff to very stiff, brown and gray SILTY CLAY, trace gravel; moist --FILL-- --RDR 2--	10		4	3 3 4	1.15 B	21
	582.1	Very soft to medium stiff, gray CLAY to SILTY CLAY, trace gravel; moist --RDR 2--			5	2 2 3	0.41 B	21
			15		6	0 2 2	0.16 B	28
					7	0 0 1	0.25 B	20
			20		8	0 0 1	0.33 B	28
					9	0 0 0	0.16 B	20
			25		10	0 0 0	0.16 B	27
	550.9	Very stiff to hard, gray SILTY CLAY, trace gravel; moist --RDR 2--			11	0 0 0	0.25 B	27
			30		12	0 1 1	0.41 B	26
			35		13	0 2 3	0.41 B	24
			40		14	2 3 4	0.98 B	24
			45		15	5 6 7	2.95 B	23
			50		16	6 7 13	4.02 B	17

GENERAL NOTES

Begin Drilling: 06-05-2024 Complete Drilling: 06-05-2024
Drilling Contractor: Wang Testing Services Drill Rig: 20CME55T[81%]
Driller: KS&GT Logger: A. Scifers Checked by: J. Bensen
Drilling Method: 2.25" ID HSA to 10', mud rotary thereafter; backfilled upon completion

WATER LEVEL DATA

While Drilling: Dry to 10'
At Completion of Drilling: MUD
Time After Drilling: NA
Depth to Water: NA

The stratification lines represent the approximate boundary between soil types; the actual transition may be gradual.

WANGENGINC KE235325.GPJ WANGENG.GDT 6/25/24

Wang Engineering
wangeng@wangeng.com
1145 N Main Street
Lombard, IL 60148
Telephone: (630) 953-9928
Fax:

BORING LOG PAU-02

WEI Job No.: KE235325

Client: Collins Engineers
Project: Paulina Street and Sacramento Blvd over Interstate 290
Location: Chicago, Cook County, IL

Datum: NAVD88
Elevation: 592.63 ft
North: 1897805.11 ft
East: 1165213.66 ft
Station:
Offset:

Profile	Elevation (ft)	SOIL AND ROCK DESCRIPTION	Depth (ft)	Sample Type	Sample No.	SPT (blw/6 in) RQD (%)	Qu (tsf)	Moisture Content (%)
	539.0	Medium dense to dense, gray SILTY LOAM, trace gravel; moist --RDR 2--	55		17	13 14 24	NP	23
	533.5	Very stiff to hard, gray SILTY CLAY LOAM to SILTY LOAM, little gravel; moist --RDR 2-3-- --slow drilling from 58.5' to 63.5'--	60		18	10 6 11	2.79 B	13
			65		19	44 50/5"	> 4.50 P	11
	525.9	--slow drilling and some chatter from 63.5' to 68.5'-- Very dense, gray SANDY LOAM, trace gravel; moist --RDR 4--			20	37 50/4"	NP	16
	523.3	Boring terminated at 69.33 ft	70					
			75					

GENERAL NOTES

Begin Drilling: 06-05-2024 Complete Drilling: 06-05-2024
Drilling Contractor: Wang Testing Services Drill Rig: 20CME55T[81%]
Driller: KS&GT Logger: A. Scifers Checked by: J. Bensen
Drilling Method: 2.25" ID HSA to 10', mud rotary thereafter; backfilled upon completion

WATER LEVEL DATA

While Drilling: Dry to 10'
At Completion of Drilling: MUD
Time After Drilling: NA
Depth to Water: NA

The stratification lines represent the approximate boundary between soil types; the actual transition may be gradual.

WANGENGINC KE235325.GPJ WANGENG.GDT 6/25/24

Boring Location:
Sta. 400+32.00
Offset 65.11' Rt.

Note:
Station and Offset measured along ℄ of Paulina St.

MODEL: Default
FILE NAME: P:\10+L\14411-IDOT - Sacramento and Paulina over I-290\Work\CADD\Paulina - Contract 62K64\CADD_Sheets\Structural\D162K64-0160098-055-SoilBoringLogs-2.dgn
10/9/2025 4:40:38 PM

COLLINS ENGINEERS INC.

USER NAME =	DESIGNED - MR	REVISED -	STATE OF ILLINOIS DEPARTMENT OF TRANSPORTATION	SOIL BORING LOGS II STRUCTURE NO. 016-0098
	CHECKED - EKM	REVISED -		
PLOT SCALE =	DRAWN - DR	REVISED -		
PLOT DATE =	CHECKED - EKM	REVISED -		SHEET S-55 OF S-56 SHEETS

F.A.I. RTE.	SECTION	COUNTY	TOTAL SHEETS	SHEET NO.
290	2019-191-B-R	COOK	265	221
		CONTRACT NO. 62K64		
		ILLINOIS	FED. AID PROJECT	

Wang Engineering
wangeng@wangeng.com
1145 N Main Street
Lombard, IL 60148
Telephone: (630) 953-9928
Fax:

BORING LOG PAU-03

WEI Job No.: KE235325

Client: Collins Engineers
Project: Paulina Street and Sacramento Blvd over Interstate 290
Location: Chicago, Cook County, IL

Datum: NAVD88
Elevation: 602.83 ft
North: 1897806.69 ft
East: 1165077.27 ft
Station:
Offset:

Profile	Elevation (ft)	SOIL AND ROCK DESCRIPTION	Depth (ft)	Sample Type / recovery	Sample No.	SPT (blw/6 in) RQD (%)	Qu (tsf)	Moisture Content (%)
	602.8	3-inch thick ASPHALT						
	601.8	9-inch thick CONCRETE --PAVEMENT--						
	601.6	3-inch thick GRAVEL --BASE COURSE--			1	2 2 3	0.90 B	17
		Medium stiff to stiff, black, brown, and gray SILTY CLAY, trace gravel; moist --FILL-- moved 2' north due to unknown concrete structure, possilble storm sewer about 3 ft bgs--	5		2	3 3 3	0.50 P	21
					3	5 6 7	1.50 P	19
			10		4	5 5 6	NA	17
	592.3	Stiff, gray SILTY CLAY, trace gravel; moist --RDR 2-- --<1-inch thick sand seam--			5	2 3 3	1.48 B	20
	589.8	Very soft to soft, gray CLAY to SILTY CLAY, trace gravel; moist --RDR 2--	15		6	2 2 1	0.33 B	25
					7	0 1 2	0.33 B	27
			20		8	0 1 1	0.33 B	27
					9	0 0 0	0.25 B	28
			25		10	0 1 1	0.16 B	27
	566.1	Loose, gray SILT; moist to wet --RDR 2--			11	0 0 1	0.25 B	25
	563.9	Very stiff, gray SILTY CLAY to CLAY, trace gravel; moist --RDR 2--	30		12	0 0 1	0.25 B	26
			35		13	0 1 2	0.41 B	26
			40		14	5 4 3	NP	23
			45		15	6 4 6	2.05 B	22
			50		16	5 7 9	3.03 B	23

GENERAL NOTES

Begin Drilling: 06-04-2024 Complete Drilling: 06-05-2024
Drilling Contractor: Wang Testing Services Drill Rig: 20CME55T[81%]
Driller: KS&GT Logger: A. Scifers Checked by: J. Bensen
Drilling Method: 2.25" ID HSA to 10', mud rotary thereafter; backfilled upon completion

WATER LEVEL DATA

While Drilling: Dry to 10'
At Completion of Drilling: MUD
Time After Drilling: NA
Depth to Water: NA

The stratification lines represent the approximate boundary between soil types; the actual transition may be gradual.

WANGENGINC KE235325.GPJ WANGENG.GDT 6/25/24

Wang Engineering
wangeng@wangeng.com
1145 N Main Street
Lombard, IL 60148
Telephone: (630) 953-9928
Fax:

BORING LOG PAU-03

WEI Job No.: KE235325

Client: Collins Engineers
Project: Paulina Street and Sacramento Blvd over Interstate 290
Location: Chicago, Cook County, IL

Datum: NAVD88
Elevation: 602.83 ft
North: 1897806.69 ft
East: 1165077.27 ft
Station:
Offset:

Profile	Elevation (ft)	SOIL AND ROCK DESCRIPTION	Depth (ft)	Sample Type / recovery	Sample No.	SPT (blw/6 in) RQD (%)	Qu (tsf)	Moisture Content (%)
	548.1	Medium dense, gray SILT; moist to wet --RDR 2--	55		17	6 11 21	2.46 B	21
	543.2	Very stiff, gray SILTY CLAY LOAM to SILTY LOAM, tracc gravel; moist --RDR 3-- --slow drilling from 58.5' to 63.5'--	60		18	9 10 11	NP	26
			65		19	24 38 50/5"	3.61 S	11
	536.1	--slow drilling from 63.5' to 68.5'-- Very dense, gray SILTY LOAM, little gravel; moist --RDR 3--	70		20	50/6"	NP	18
	531.1	--slow drilling and moderate chatter from 68.5' to 73.5'-- Very stiff, gray SILTY CLAY LOAM to SILTY LOAM, little gravel; moist --RDR 3-4--	75		21	38 50/4"	2.13 S	9
	526.1	--slow drilling from 73.5' to 78.5'-- Very dense, gray, fine SAND, trace gravel; wet --RDR 3--	80		22	39 50 50/5"	NP	16
	521.1	Very dense, gray SILTY LOAM, trace gravel; moist --RDR 2--	85		23	34 50/6"	NP	21
			90		24	38 50/6"	NP	18
					25	50/1"	NR	
	508.3	Strong, light gray and dark gray, good quality, DOLOSTONE; closely spaced, slightly to moderately weathered, horizontal and oblique joints, with 0.05-0.2 inch opening, slightly rough to rough walls, and >0.2 inch thick clay infill. --Run 1: 94.5 to 104.5 feet-- --Recovery: 96%--	95					
			100		1			90%

GENERAL NOTES

Begin Drilling: 06-04-2024 Complete Drilling: 06-05-2024
Drilling Contractor: Wang Testing Services Drill Rig: 20CME55T[81%]
Driller: KS&GT Logger: A. Scifers Checked by: J. Bensen
Drilling Method: 2.25" ID HSA to 10', mud rotary thereafter; backfilled upon completion

WATER LEVEL DATA

While Drilling: Dry to 10'
At Completion of Drilling: MUD
Time After Drilling: NA
Depth to Water: NA

The stratification lines represent the approximate boundary between soil types; the actual transition may be gradual.

WANGENGINC KE235325.GPJ WANGENG.GDT 6/25/24

Wang Engineering
wangeng@wangeng.com
1145 N Main Street
Lombard, IL 60148
Telephone: (630) 953-9928
Fax:

BORING LOG PAU-03

WEI Job No.: KE235325

Client: Collins Engineers
Project: Paulina Street and Sacramento Blvd over Interstate 290
Location: Chicago, Cook County, IL

Datum: NAVD88
Elevation: 602.83 ft
North: 1897806.69 ft
East: 1165077.27 ft
Station:
Offset:

Profile	Elevation (ft)	SOIL AND ROCK DESCRIPTION	Depth (ft)	Sample Type / recovery	Sample No.	SPT (blw/6 in) RQD (%)	Qu (tsf)	Moisture Content (%)
		--RQD: 90%--						
	498.3	Boring terminated at 104.50 ft	105					
			110					
			115					
			120					
			125					

GENERAL NOTES

Begin Drilling: 06-04-2024 Complete Drilling: 06-05-2024
Drilling Contractor: Wang Testing Services Drill Rig: 20CME55T[81%]
Driller: KS&GT Logger: A. Scifers Checked by: J. Bensen
Drilling Method: 2.25" ID HSA to 10', mud rotary thereafter; backfilled upon completion

WATER LEVEL DATA

While Drilling: Dry to 10'
At Completion of Drilling: MUD
Time After Drilling: NA
Depth to Water: NA

The stratification lines represent the approximate boundary between soil types; the actual transition may be gradual.

WANGENGINC KE235325.GPJ WANGENG.GDT 6/25/24

Boring Location:
Sta. 400+37.16
Offset 71.19' Lt.

Note:
Station and Offset measured along ℄ of Paulina St.

MODEL: Default
FILE NAME: P:\10cl\14411-IDOT - Sacramento and Paulina over I-290\Work\CADD\Paulina - Contract 62K64\CADD_Sheets\Structural\D162K64-0160098-056-SoilBoringLogs-3.dgn
10/9/2025 4:40:51 PM

COLLINS ENGINEERS INC.

USER NAME =	DESIGNED - MR	REVISED -	
	CHECKED - EKM	REVISED -	
PLOT SCALE =	DRAWN - DR	REVISED -	
PLOT DATE =	CHECKED - EKM	REVISED -	

STATE OF ILLINOIS
DEPARTMENT OF TRANSPORTATION

SOIL BORING LOGS III
STRUCTURE NO. 016-0098
SHEET S-56 OF S-56 SHEETS

F.A.I. RTE.	SECTION	COUNTY	TOTAL SHEETS	SHEET NO.
290	2019-191-B-R	COOK	265	222
		CONTRACT NO. 62K64		
		ILLINOIS	FED. AID PROJECT	

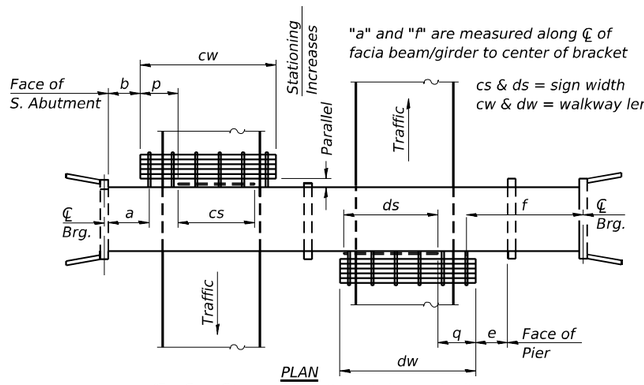

(For Sign Skew ≤ 15°, all brackets constant)

WALKWAY AND HANDRAIL SKETCH

(Road plan beneath structure varies.)

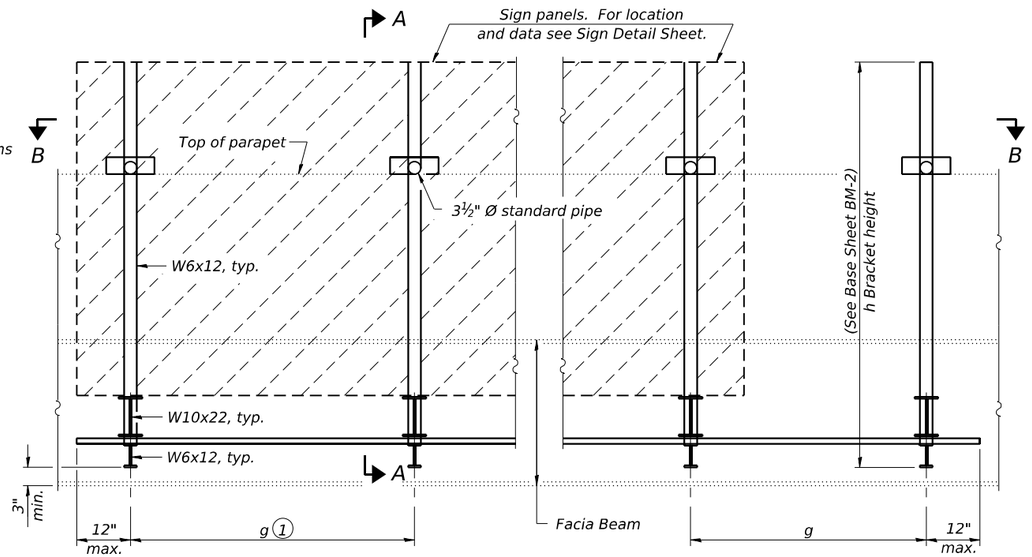

TYPICAL FRONT ELEVATION

(With lights, safety chain and handrail omitted for clarity.)

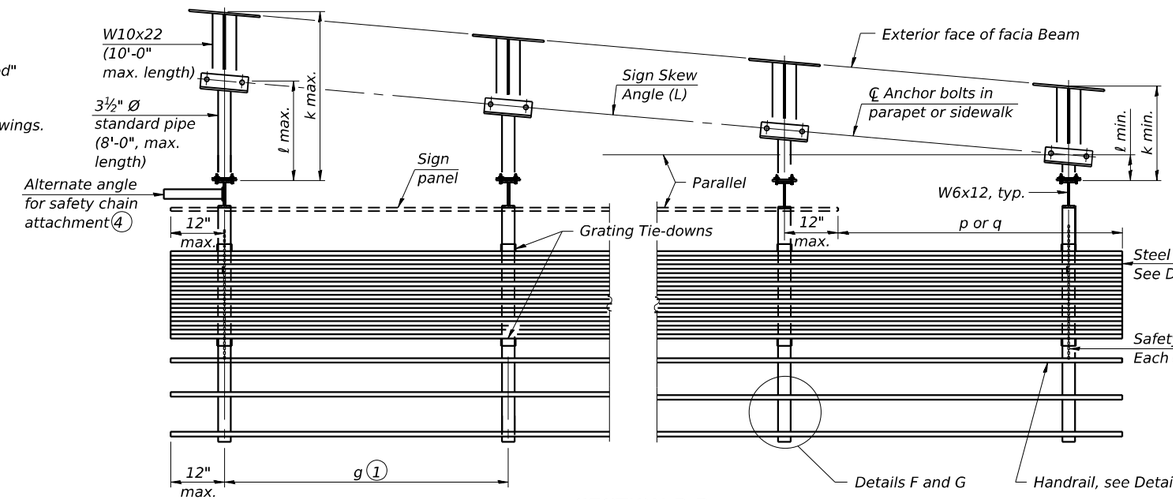

SECTION B-B

(Shown: Left Sign Skew≥15°)

Sign Panel Number	Structure Number	Sign Skew Angle (L) or (R)	Bridge Station	Bridge Structure Number	Contract Route Designation	a	b	cs	cw	ds	dw	e	f	g	No. of Brackets (Total)	p	q	Total Grating/ Hndrl. Lengths (cw + dw)
1	1B016I290R028.6-000	0°0'	402+31.73	016-0098	F.A.U. 2856	10'-10"	-	14'-6"	-	-	-	-	-	4'-6"	4	-	-	-
2	1B016I290R028.6-000	0°0'	402+31.73	016-0098	F.A.U. 2856	29'-4"	-	25'-0"	-	-	-	-	-	6'-0"	5	-	-	-

Dimensions a, b, e, f & g may vary as approved by the Engineer, see (1).
When cw < cs and/or dw < ds, use alternate brackets without walkway supports where applicable, see (3).

GENERAL NOTES

SPECIFICATIONS:

DESIGN: AASHTO Standard Specifications for Structural Supports for (2) Highway Signs, Luminaires and Traffic Signals. ("AASHTO Specifications")

CONSTRUCTION: Current (at time of letting) Illinois Department of Transportation Standard Specifications for Road and Bridge Construction, Supplemental Specifications and Special Provisions. ("Standard Specifications")

LOADING: 90 M.P.H. WIND VELOCITY

WALKWAY LOADING: Dead load plus 500 lbs. concentrated live load.

MINIMUM CLEARANCE: 3" greater than bridge members at all locations. (All Obstructions)

WELDING: All welds to be continuous unless otherwise shown. All welding to be done in accordance with current AWS D1.1 Structural Welding Code (Steel) and the Standard Specificiations.

MATERIALS: All Structural Steel Pipe shall be ASTM A53 Grade B with a minimum yield of 35,000 p.s.i., or A500 Grade B or C with a minimum yield of 46,000 p.s.i. If A500 pipe is substituted for A53, then the outside diameter shall be as detailed and wall thickness greater than or equal to A53. All Structural Steel Plates and Shapes shall conform to AASHTO M270 Gr. 36, Gr. 50 (M183, M223 Gr. 50,).

HIGH STRENGTH BOLTS: All bolts, washers, nuts and locknuts shall satisfy the requirements of ASTM designation A307 unless noted as "H.S." which shall require AASHTO M164 (A325), ASTM A449, or approved alternate. All fasteners shall be hot dip galvanized per AASHTO M232 unless otherwise specified.

GALVANIZING: All Steel Grating, Plates, Shapes and Pipe shall be Hot Dip Galvanized after fabrication in accordance with AASHTO M111. Painting is not permitted.

ANCHOR RODS: All-threaded rod shall conform to ASTM F1554 Grade 105, ¾" Ø x 12" long, each with one plate washer and locknut and be hot dip galvanized per AASHTO M232. They shall be either cast into the concrete or epoxy grouted in accordance with Section 584 of the Standard Specifications. Minimum embedment in concrete shall be 9".

Notes:

1. *Existing sign panels shall be removed, stored during construction and attached to new beams and new parapet using new brackets. See Roadway Plans for additional information.*
2. *Walkways, light fixtures, handrails and all related hardware are not required; shop drawings shall be adjusted accordingly.*
3. *Refer to Special Provisions "Overhead Sign Structure - Bridge Mounted" for limits of payment.*
4. *The contractor shall verify all dimensions before submitting shop drawings.*

(1) *Bracket spacing g ≤ 6'-0", max. Spacing shall be uniform if possible but may vary ±6" to miss existing obstruction (rail post, light poles, web stiffeners, splice plates, etc.). Adjust bracket lengths accordingly on skewed structures.*

(2) *Any design modifications shall be based on the current version of applicable specifications and submitted for the Engineer's approval.*

*(3) *Unit price includes grating, handrail, brackets, supports, anchor bolts, fasteners, fabrication, delivery, erection, field drilling and other necessary items. Limits of payment are based on grating length (cw, dw) unless otherwise specified. For Safety Chain Details and Details D, F and G, see Base Sheet BM-4.*

(4) *If walkway bracket at safety chain location is behind sign, add angle to bracket. See detail on Base Sheet BM-4.*

TOTAL BILL OF MATERIAL

*(3) OVERHEAD SIGN STRUCTURE-BRIDGE MOUNTED	Foot	44
REMOVE OVERHEAD SIGN STRUCTURE-BRIDGE MOUNTED	EACH	2

* See Notes 2 and 3 on this sheet.

MODEL: Default
FILE NAME: P:\10nl\14411-IDOT - Sacramento and Paulina over I-290\Work\CADD\Paulina - Contract 62K64\CADD_Sheets\StructureBM-1.dgn
10/9/2025 4:41:05 PM

COLLINS ENGINEERS INC.

USER NAME =	DESIGNED - KFS	REVISED -	
	CHECKED - EKM	REVISED -	
PLOT SCALE =	DRAWN - KFS	REVISED -	
PLOT DATE =	CHECKED - EKM	REVISED -	

STATE OF ILLINOIS
DEPARTMENT OF TRANSPORTATION

BRIDGE MOUNT SIGN STRUCTURES
GENERAL PLAN AND ELEVATION

SHEET SA-1 OF SA-4 SHEETS

F.A.I. RTE.	SECTION	COUNTY	TOTAL SHEETS	SHEET NO.
290	2019-191-B-R	COOK	265	223
		CONTRACT NO. 62K64		
		ILLINOIS	FED. AID PROJECT	

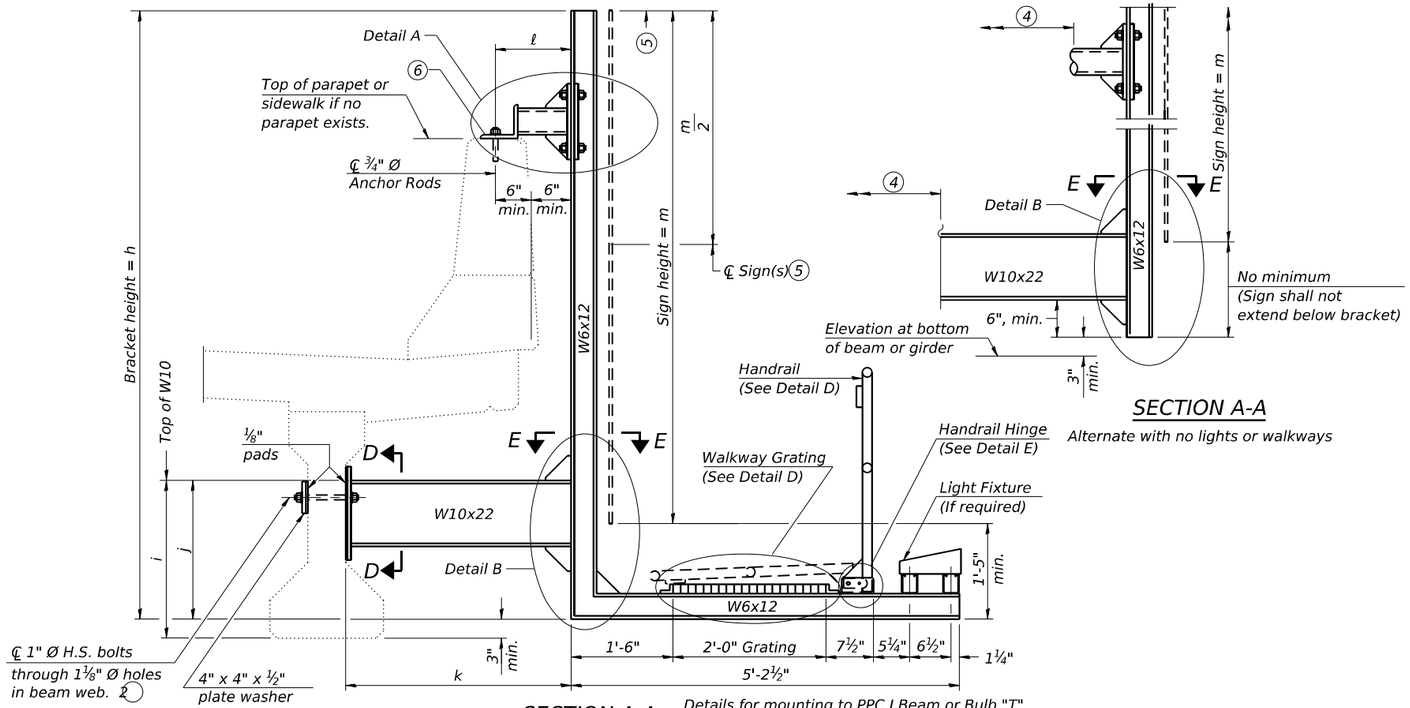

SECTION A-A

Details for mounting to PPC I Beam or Bulb "T" & Details for mounting to parapet w/o rail

SECTION A-A

Alternate with no lights or walkways

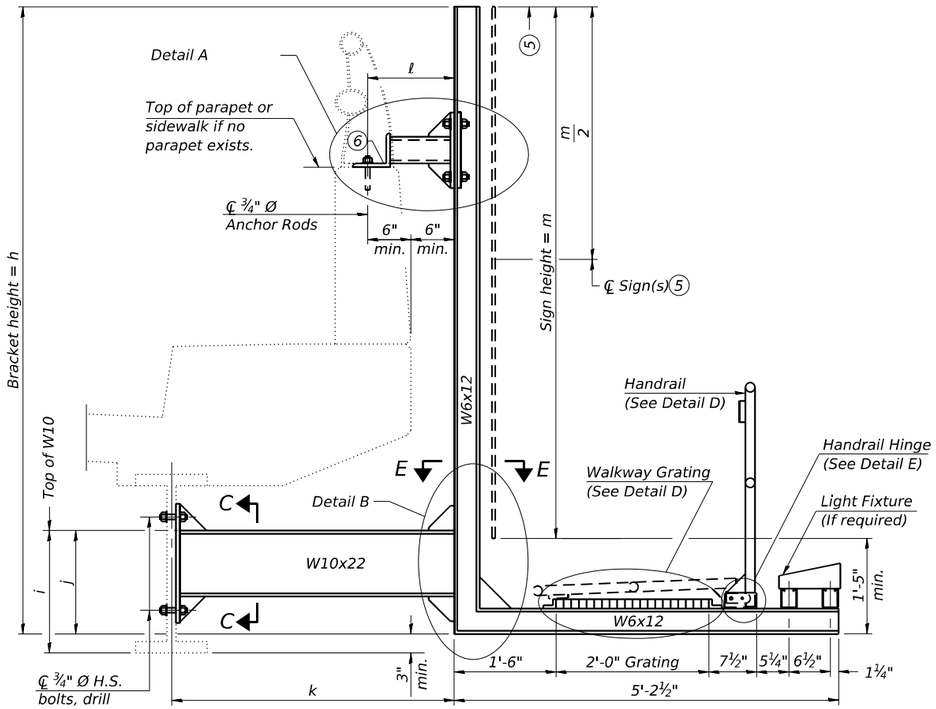

SECTION A-A

Details for mounting to steel beam or girder & Details for mounting with existing parapet mounted rail

Notes:

Installations not within dimensional limits shown require special analysis for all components and must be submitted to the Bureau of Bridges and Structures for approval.

Contractor shall field check all pertinent existing bridge dimensions shown on plans before submitting shop drawings.

All holes in bridge beams or girders should be located in the middle half of the member. There shall be no holes drilled in the lower quarter of the member's depth. (For R.C. girder, depth = bottom of deck to bottom of the girder.) Proposed exceptions must be approved by the Bureau of Bridges and Structures.

The Engineer may adjust dimension "j" to meet the above condition and to keep the sign level.

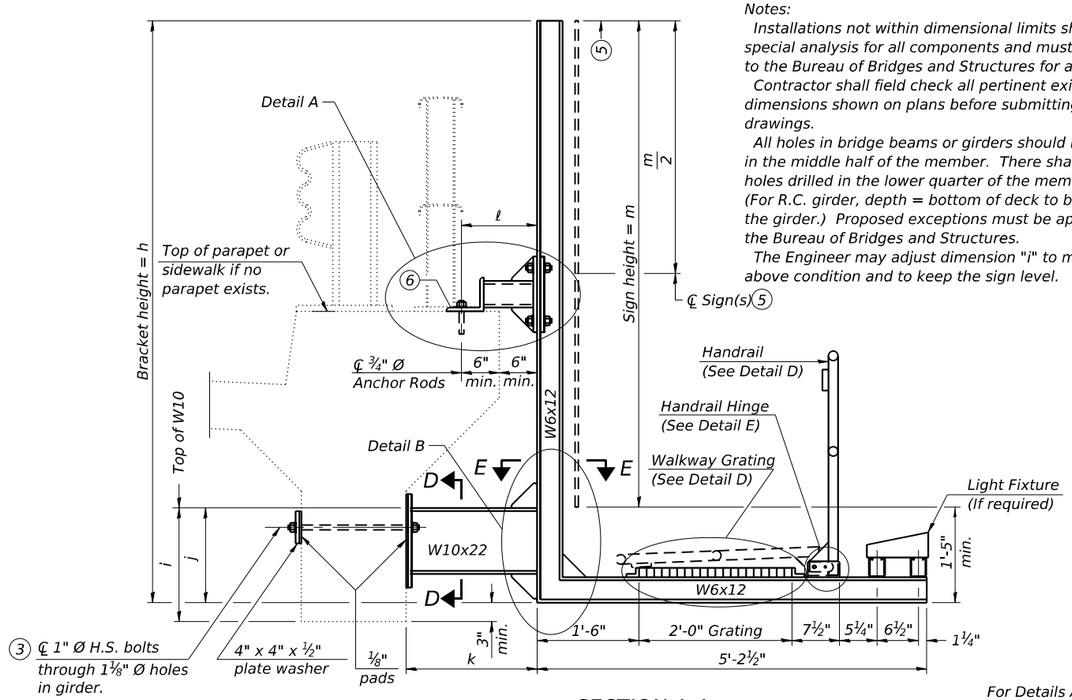

SECTION A-A

Details for mounting to integral reinforced concrete girder & Details for mounting on safety curb with surface-mount bridge rail

1. Holes in new steel members may be drilled in the fabrication shop or in the field. Field drill existing members.

2. For new PPC I beams, holes shall be formed during casting. For existing PPC I beams, prestressing strand locations shall be determined and spaced to miss strands by 6", min. Minimize spalling during field drilling of existing beams.

3. For new construction, form holes. For existing RC beams, locate primary reinforcement and space holes to miss by 6", min. Minimize spalling and concrete fracturing/damage during field drilling of existing concrete. Spalls over ¼" deep or beyond the coverage of the 4x4 plate washer shall be repaired with epoxy mortar before installing washer.

4. For attachment details of 3½" pipe and W10x22, see other sections as applicable.

5. Sign shall not extend more than 6" above top of bracket, and this dimension may vary to keep sign level if bridge is on grade or vertical curve. Multiple signs of various heights shall share a common horizontal centerline and use equal bracket heights. If no sign is attached to a W6x12 vertical (bracket only supporting walkway), dimension h shall be the same as an adjacent bracket with a sign attached, unless Engineer specifically directs shorter brackets due to locational restraints on future uses. (See Detail A for minimum bracket height.)

6. For bridge mounted sign structures installed on new bridges with railing, during design, bracket spacing must be coordinated with railing post spacing and the Contractor must install upper brackets prior to railing installation. For bridge mounted sign structures installed on existing bridges with railing, during design, brackets spacing must be coordinated with railing post spacing and the Contractor must temporarily remove sections of railing to facilitate upper bracket installation. If it is determined during design that existing railings can't be removed, alternate upper connection details must be developed for the contract plans and approved by the Bureau of Bridges and Structures.

Sign Panel Number	Structure Number	Station	h	i	j	k max. (10'-0" max.)	ℓ max. (8'-0" max.)	m (15'-0" max.)
1	1B016I290R028.6-000	402+31.73	9'-5"	1'-7"	1'-4"	3'-6"	1'-1"	8'-0"
2	1B016I290R028.6-000	402+31.73	12'-5"	1'-7"	1'-4"	3'-6"	1'-1"	11'-0"

For Details A & B, Sections C-C, D-D and E-E, see Base Sheet BM-3.
For Details D & E, see Base Sheet BM-4.

BM-2 5-15-2023

COLLINS ENGINEERS INC

USER NAME =	DESIGNED - KFS	REVISED -	
	CHECKED - EKM	REVISED -	
PLOT SCALE =	DRAWN - KFS	REVISED -	
PLOT DATE =	CHECKED - EKM	REVISED -	

STATE OF ILLINOIS
DEPARTMENT OF TRANSPORTATION

BRIDGE MOUNT SIGN STRUCTURES
WALKWAY AND CONNECTION DETAILS
SHEET SA-2 OF SA-4 SHEETS

F.A.I. RTE.	SECTION	COUNTY	TOTAL SHEETS	SHEET NO.
290	2019-191-B-R	COOK	265	224
		CONTRACT NO. 62K64		
		ILLINOIS	FED. AID PROJECT	

MODEL: Default
FILE NAME: P:\10eIL\14411-IDOT - Sacramento and Paulina over I-290\Work\CADD\Paulina - Contract 62K64\CADD_Sheets\Structural\D162K64-0160098-058-SignStructureBH-2.dgn
10/9/2025 4:41:17 PM

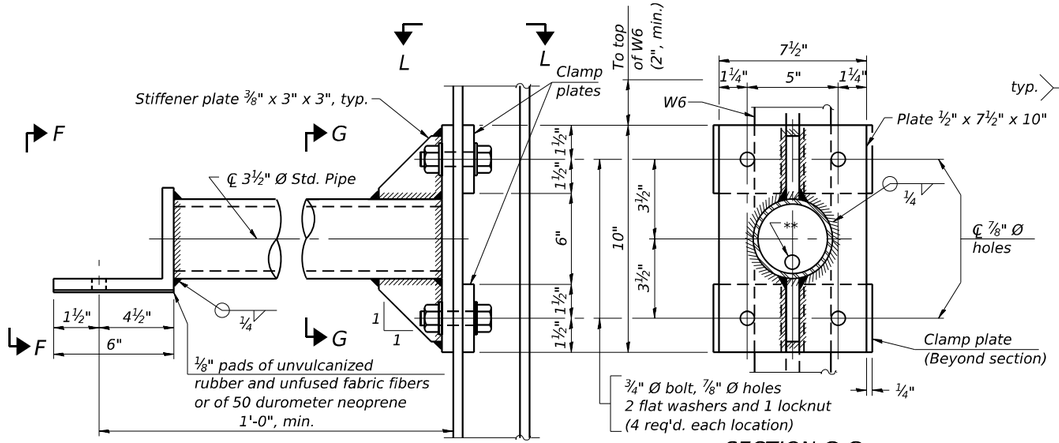

DETAIL A

SECTION G-G

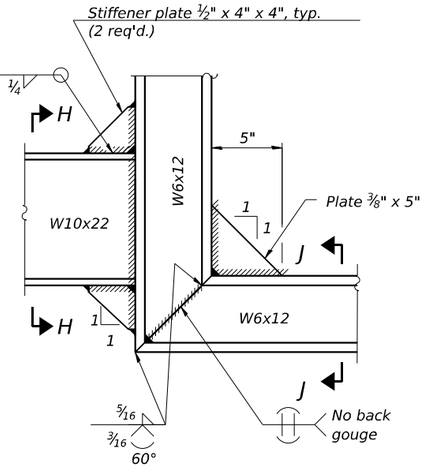

DETAIL B - WELDED W10x22 TO W6x12 CONNECTION

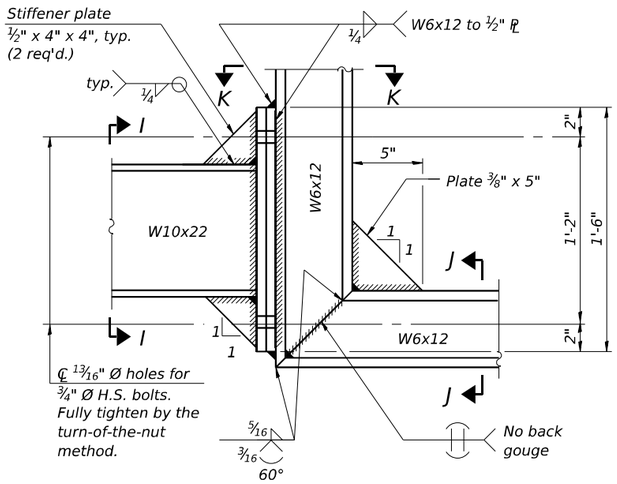

DETAIL B - ALTERNATE BOLTED W10x22 TO W6x12 CONNECTION

Alternate may be substituted by contractor to facilitate construction or galvanizing, especially on long struts for skewed bridges.

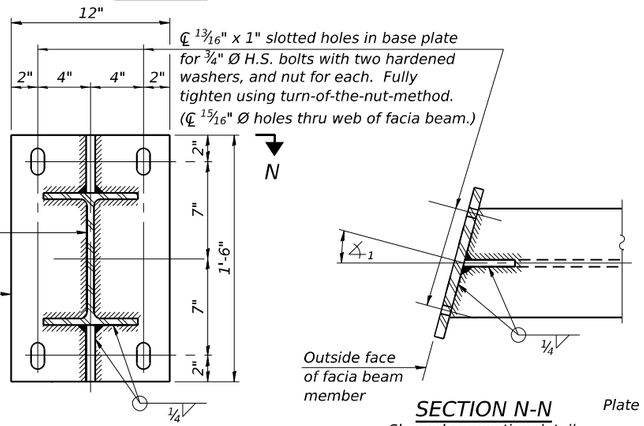

SECTION C-C

Steel beam or girder connection plate details

SECTION N-N

Skewed connection detail for W10x22 to facia beam.

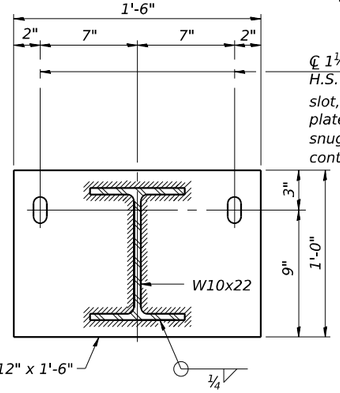

SECTION D-D

Concrete beam or girder connection plate details.

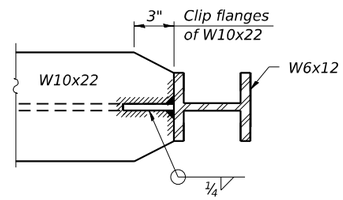

SECTION E-E

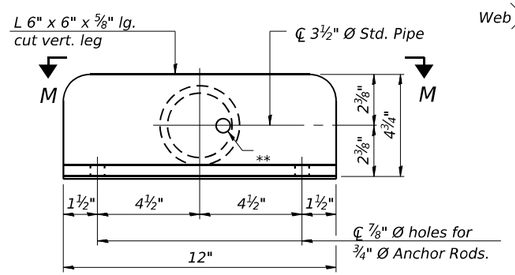

VIEW F-F

** 13/16" Ø holes for galvanizing. After galvanizing, install ⅞" Ø A307 hot-dip galvanized bolt to close hole in angle. (No bolt required in ½" plate.)

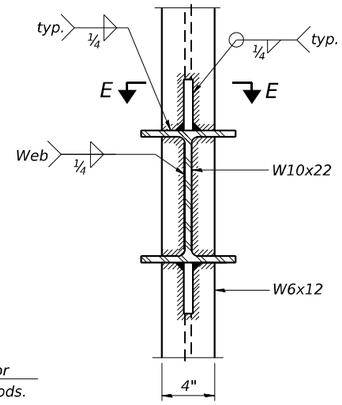

SECTION H-H

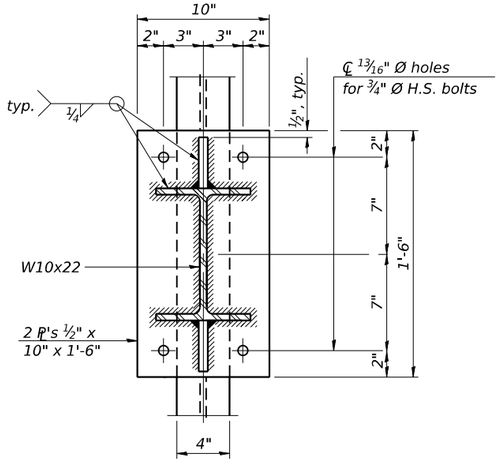

SECTION I-I

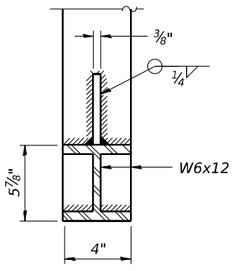

SECTION J-J

Note: For constant slab overhang at facia beam, $\measuredangle_1 = \measuredangle_2$ = sign angle. For flared beams or other special cases where $\measuredangle_1 \neq \measuredangle_{2'}$, $\measuredangle_1$ = sign angle.

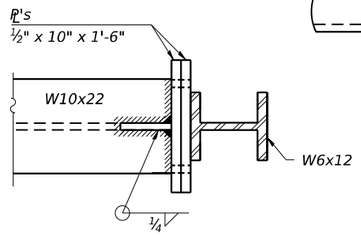

SECTION K-K

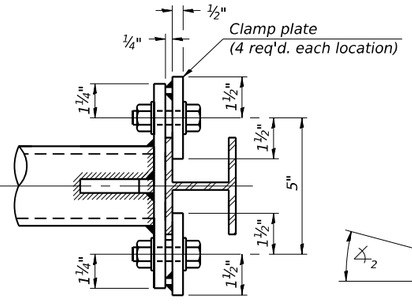

SECTION L-L

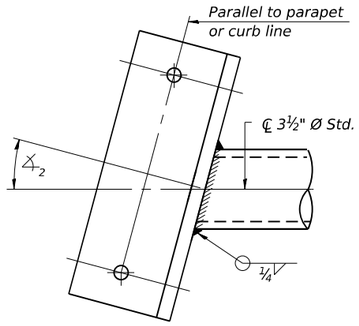

SECTION M-M

Skewed connection detail for 3½" Ø pipe to parapet.

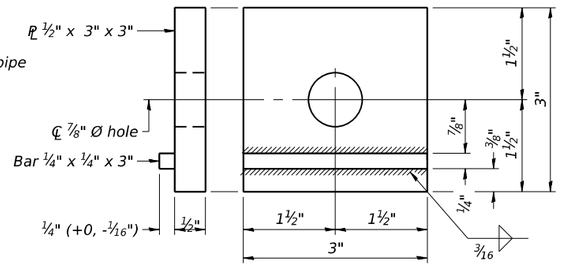

CLAMP PLATE DETAILS

BM-3

5-15-2023

COLLINS ENGINEERS INC.	USER NAME =	DESIGNED - KFS	REVISED -	STATE OF ILLINOIS DEPARTMENT OF TRANSPORTATION	BRIDGE MOUNT SIGN STRUCTURES CONNECTION DETAILS
		CHECKED - EKM	REVISED -		
	PLOT SCALE =	DRAWN - KFS	REVISED -		SHEET SA-3 OF SA-4 SHEETS
	PLOT DATE =	CHECKED - EKM	REVISED -		

F.A.I. RTE.	SECTION	COUNTY	TOTAL SHEETS	SHEET NO.
290	2019-191-B-R	COOK	265	225
			CONTRACT NO. 62K64	
		ILLINOIS	FED. AID PROJECT	

MODEL: Default
FILE NAME: P:\10-IL\11411-IDOT - Sacramento and Paulina over I-290\Work\CADD\Paulina - Contract 62K64\CADD_Sheets\StructuralD162K64-0160098-059-SignStructureBH-3.dgn

10/9/2025 4:41:28 PM

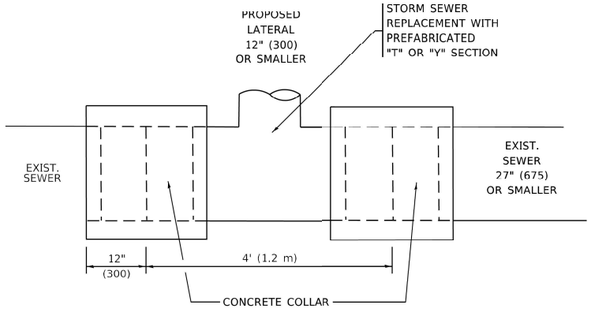

DETAIL "A"

LATERAL CONNECTION TO EXISTING SEWER
OF 27" (675) OR SMALLER

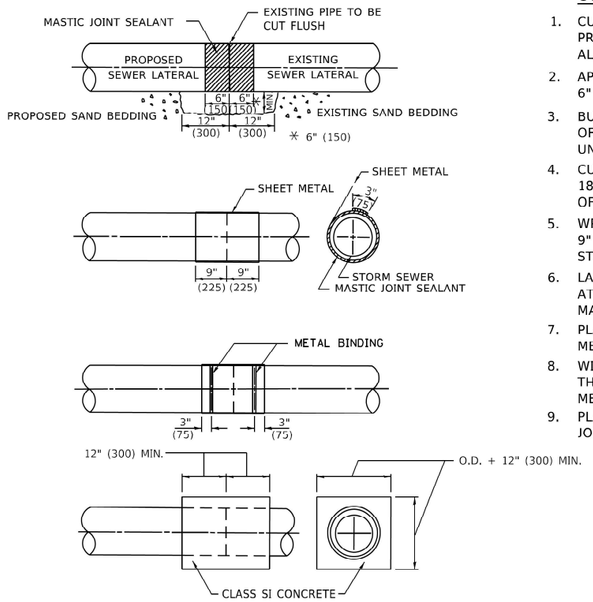

DETAIL "B"

CLASS SI CONCRETE COLLAR

CONSTRUCTION SEQUENCE

1. CUT THE EXISTING END OF THE PIPE SO AS TO PRESENT A FLUSH BUTT JOINT. BRUSH AND CLEAN ALL PIPES.
2. APPLY THE MASTIC JOINT SEALANT TO THE FIRST 6" (150) OF EACH PIPE.
3. BUTT THE PIPES TOGETHER LEAVING A MINIMUM OF 12' x 6' (300 x 150) DEEP EXCAVATION UNDER AND AROUND EACH PIPE END.
4. CUT A PIECE OF SHEET METAL GAGE NO. 19 1.1 (0.0418) 18" (450) WIDE BY THE OUTSIDE CIRCUMFERANCE OF THE PIPE PLUS 3" (75) LONG.
5. WRAP THE SHEET METAL AROUND THE PIPES, 9" (225) ON EACH SIDE OF THE JOINT, STARTING AT THE TOP OF THE PIPE.
6. LAP THE SHEET METAL AT LEAST 3" (75) AT THE TOP OF THE PIPE AND PLACE THE MASTIC JOINT SEALANT BETWEEN THE LAP.
7. PLACE TWO METAL BANDS AROUND THE SHEET METAL AND TIGHTEN.
8. WIPE OFF ANY EXCESS MASTIC JOINT SEALANT THAT OOZES OUT FROM BETWEEN THE SHEET METAL AND THE PIPES.
9. PLACE CLASS SI CONCRETE AROUND THE JOINT.

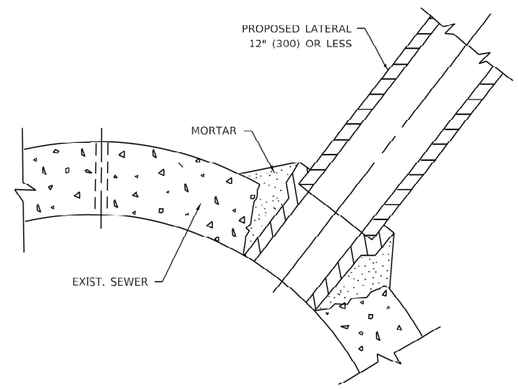

DETAIL "C"

PROPOSED LATERAL
CONNECTION TO EXISTING SEWER
OF 30" (750) OR LARGER

NOTES:

MATERIAL

MATERIAL USED FOR THE TEE OR WYE SECTION SHALL BE COMPATIBLE WITH THE EXISTING STORM SEWER OR THE PROPOSED STORM SEWER.

CONSTRUCTION METHODS

I. THIS WORK SHALL BE CONSTRUCTED IN CONFORMANCE WITH THE APPLICABLE PORTIONS OF SECTION 550 OF THE STANDARD SPECIFICATIONS.

II. CONNECTION TO AN EXISTING STORM SEWER SHALL BE BY EITHER OF THE FOLLOWING METHODS:
- A) PROPOSED STORM SEWER CONNECTION TO EXISTING SEWER OF 27" (675) OR SMALLER SEE DETAIL "A" AND "B".
- B) PROPOSED STORM SEWER CONNECTION TO EXISTING SEWER OF 30" (750) OR LARGER SEE DETAIL "C".

IF THE EXISTING SEWER PIPE IS CRACKED, BROKEN OR OTHERWISE DAMAGED BY THE CONTRACTOR IN MAKING THE CIRCULAR OPENING, THE CONTRACTOR SHALL REPLACE THAT SECTION OF PIPE WITH PIPE EQUAL AND SIMILAR IN ALL RESPECTS TO THE PIPE IN THE EXISTING SEWER, IN A CAREFUL WORKMANLIKE MANNER, WITHOUT EXTRA COMPENSATION.

GENERAL

1. CARE MUST BE TAKEN TO PREVENT DEBRIS FROM ENTERING THE SEWER. ALL DEBRIS WHICH ENTERS THE SEWER MUST BE REMOVED. THE SEWER MUST BE LEFT CLEAN AND UNOBSTRUCTED UPON COMPLETION OF THE CONTRACT.
2. CARE MUST BE TAKEN TO PREVENT ANY PART OF THE NEW PIPE CONNECTION FROM PROJECTING INTO THE EXISTING SEWER.

BASIS OF PAYMENT

1. TEE OR WYE CONNECTIONS SHALL BE PAID FOR AT THE CONTRACT UNIT PRICE EACH FOR STORM SEWER TEE OR WYE OF THE TYPE AND SIZE SPECIFIED IN THE PLANS, THIS PRICE SHALL INCLUDE ALL EXCAVATION OF THE TRENCH, REMOVAL OF THE EXISTING STORM SEWER, FURNISHING AND INSTALLING THE SPECIFIED TEE OR WYE SECTION, FURNISHING AND INSTALLING THE REQUIRED CONCRETE COLLAR, AND ALL OTHER MATERIAL NECESSARY TO COMPLETE THIS WORK AS SHOWN AND SPECIFIED.
2. REMOVAL AND REINSTALLATION OF EXISTING STORM SEWER ADJACENT TO THE PROPOSED TEE OR WYE SECTION, FOR THE PURPOSE OF FACILITATING THE INSTALLATION OF THE TEE OR WYE SECTION, WILL NOT BE PAID FOR SEPARATELY BUT SHALL BE INCLUDED IN THE UNIT PRICE BID FOR THE WORK.
3. TRENCH BACKFILL, EXCAVATION IN ROCK AND REMOVAL AND REPLACEMENT OF UNSUITABLE MATERIAL BELOW PLAN BEDDING GRADE WILL BE PAID FOR SEPARATELY.
4. CONCRETE COLLAR FOR CONNECTING A PROPOSED STORM SEWER TO AN EXISTING STORM SEWER WILL NOT BE PAID PAID FOR SEPARATELY BUT SHALL BE INCLUDED IN THE COST OF THE PROPOSED STORM SEWER.

* ALL DIMENSIONS ARE IN INCHES (MILLIMETERS) UNLESS OTHERWISE SHOWN.

MODEL: Default
FILE NAME: pw:\\dot-pw.bentley.com:PWIDOT\Documents\IDOT Offices\District 1\Projects\Dist5\d22x34\CADData\CADsheets\sk007.dgn

USER NAME = Lawrence.DeManche	DESIGNED - M. DE YONG	REVISED - R. SHAH 09-09-94	
	DRAWN -	REVISED - R. SHAH 10-25-94	
PLOT SCALE = 100.0000 ' / in.	CHECKED -	REVISED - R. SHAH 06-12-96	
PLOT DATE = 11/18/2022	DATE - 07-25-90	REVISED - K. SMITH 11-18-22	

STATE OF ILLINOIS
DEPARTMENT OF TRANSPORTATION

DETAIL OF STORM SEWER
CONNECTION TO EXISTING SEWER

SCALE: NONE | SHEET 1 OF 1 SHEETS | STA. | TO STA.

F.A.I RTE.	SECTION	COUNTY	TOTAL SHEETS	SHEET NO.
290	2019-191-B-R	COOK	265	226
	BD500–01 (BD–07)	CONTRACT NO. 62K64		
	ILLINOIS	FED. AID PROJECT		

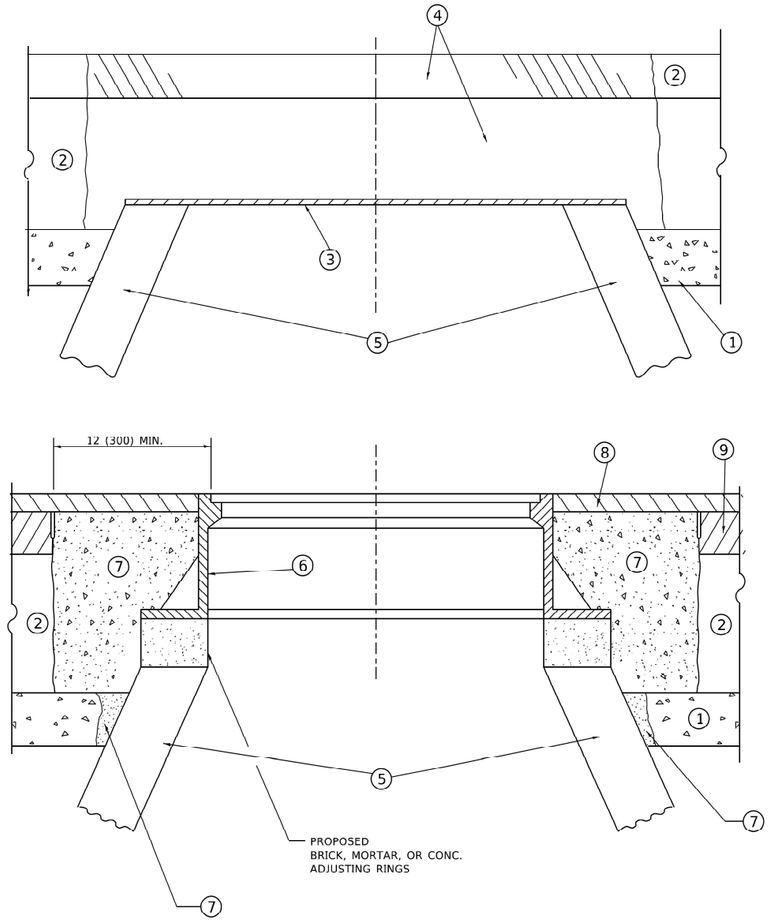

DETAILS FOR FRAMES AND LIDS ADJUSTMENT WITH MILLING

NOTES

1. EXISTING BROKEN FRAMES AND LIDS SHALL BE REMOVED AND DISPOSED OF BY THE CONTRACTOR AND SHALL BE REPLACED AS DIRECTED BY THE ENGINEER. REPLACEMENT FRAMES AND LIDS WILL BE PAID FOR IN ACCORDANCE WITH ARTICLE 109.04 OF THE STANDARD SPECIFICATIONS UNLESS A SEPARATE PAY ITEM HAS BEEN PROVIDED.
2. IF THE EXISTING LIDS ARE OPEN, THE FRAME WILL BE ADJUSTED TO THE ELEVATION OF THE MILLED PAVEMENT SURFACE PRIOR TO THE MILLING OPERATION. THE FRAME WILL NOT BE REMOVED AND COVERED BY THE METAL PLATE.
3. CITY OF CHICAGO CASTINGS ARE THE PROPERTY OF THE CITY AND THE CONTRACTOR SHALL NOTIFY THE CITY FOR REMOVAL AND DISPOSITION OF THE CASTINGS.
4. THE METAL PLATE USED TO COVER THE STRUCTURE SHALL REMAIN THE PROPERTY OF THE CONTRACTOR.
5. THE CONTRACTOR SHALL REMOVE ALL TRAFFIC CONTROL DEVICES BY THE END OF EACH WORK SHIFT.

CONSTRUCTION PROCEDURES

STAGE 1 (BEFORE PAVEMENT MILLING)

A) REMOVE A MINIMUM OF 12 (300) OF THE PAVEMENT FROM AROUND THE STRUCTURE.

B) REMOVE THE EXISTING FRAME AND LID FROM THE STRUCTURE.

C) COVER THE STRUCTURE OPENING WITH A 36 (900) DIAMETER METAL PLATE.

D) BACKFILL WITH CRUSHED STONE AND HMA SURFACE MIX APPROVED BY THE ENGINEER. (MIN. 3 (80) HMA TO REMAIN AFTER MILLING).

STAGE 2 (AFTER PAVEMENT MILLING)

A) REMOVE THE HMA SURFACE MIX AND CRUSHED STONE.

B) INSTALL THE FRAME AND LID; ADJUST THE FRAME TO ITS FINAL SURFACE ELEVATION.

C) THE SURROUNDING SPACE SHALL BE FILLED WITH CLASS PP-2* CONCRETE TO THE ELEVATION OF THE SURFACE OF THE EXISTING BASE COURSE OR THE BINDER COURSE.

*UNLESS OTHERWISE SPECIFIED IN THE PLANS.

THE PROCEDURE EXPLAINED ABOVE SHALL CONFORM TO THE APPLICABLE PORTIONS OF SECTIONS 353, 406, 602, AND 603 OF THE STANDARD SPECIFICATIONS EXCEPT THAT "THE CONTRACTOR SHALL ADJUST THE STRUCTURES TO THE FINISHED PAVEMENT ELEVATION NO MORE THAN 5 CALENDAR DAYS PRIOR TO PLACEMENT OF THE FINAL LIFT OF SURFACE UNLESS APPROVED BY THE ENGINEER."

LEGEND

1. SUB-BASE GRANULAR MATERIAL
2. EXISTING PAVEMENT
3. 36 (900) DIAMETER METAL PLATE
4. PROPOSED CRUSHED STONE AND HMA SURFACE MIX
5. EXISTING STRUCTURE
6. FRAME AND LID (SEE NOTES)
7. CLASS PP-2* CONCRETE
8. PROPOSED HMA SURFACE COURSE
9. PROPOSED HMA BINDER COURSE

LOCATION OF STRUCTURES

THE CONTRACTOR WILL BE REQUIRED TO KEEP A RECORD OF THE LOCATIONS OF THE BURIED STRUCTURES ACCORDING TO THE STATION AND DISTANCE LEFT OR RIGHT OF THE CENTERLINE OF PAVEMENT. UPON COMPLETION OF THE WORK, THE CONTRACTOR WILL DELIVER THE RECORD TO THE ENGINEER.

BASIS OF PAYMENT

1. REMOVING FRAMES AND LIDS ON DRAINAGE AND UTILITY STRUCTURES IN THE PAVEMENT PRIOR TO MILLING, AND ADJUSTING TO FINAL GRADE PRIOR TO PLACING THE SURFACE COURSE, WILL BE PAID FOR AT THE CONTRACT UNIT PRICE EACH FOR "FRAMES AND LIDS TO BE ADJUSTED (SPECIAL)."
2. THIS WORK WILL NOT BE PAID FOR WHEN DRAINAGE AND UTILITY STRUCTURES ARE SPECIFIED FOR PAYMENT AS STRUCTURE RECONSTRUCTION.
3. NEW FRAMES AND LIDS, WHEN SPECIFIED, WILL BE PAID FOR SEPARATELY.
4. WHEN STRUCTURES ARE TO BE ADJUSTED OR RECONSTRUCTED, THE LOWERING AND RAISING OF THE FRAMES AND LIDS WILL NOT BE PAID FOR SEPARATELY BUT WILL BE INCLUDED IN THE COST OF THE CORRESPONDING PAY ITEM.

ALL DIMENSIONS ARE IN INCHES (MILLIMETERS) UNLESS OTHERWISE SHOWN

MODEL: Default
FILE NAME: W:\distsd\22x34\bd08.dgn

USER NAME = Lawrence.DeManche	DESIGNED - R. SHAH	REVISED - R. BORO 03-09-11	
	DRAWN -	REVISED - R. BORO 12-06-11	
PLOT SCALE = 100.0000 ' / in.	CHECKED -	REVISED - K. SMITH 11-18-22	
PLOT DATE = 9/15/2023	DATE - 10-25-94	REVISED - K. SMITH 09-13-23	

STATE OF ILLINOIS
DEPARTMENT OF TRANSPORTATION

DETAILS FOR FRAMES AND LIDS ADJUSTMENT WITH MILLING

SCALE: NONE | SHEET 1 OF 1 SHEETS | STA. | TO STA.

F.A.I RTE.	SECTION	COUNTY	TOTAL SHEETS	SHEET NO.
290	2019-191-B-R	COOK	265	227
	BD600-03 (BD-08)	CONTRACT NO. 62K64		
	ILLINOIS	FED. AID PROJECT		

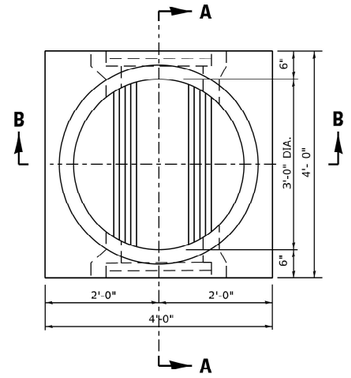

PLAN

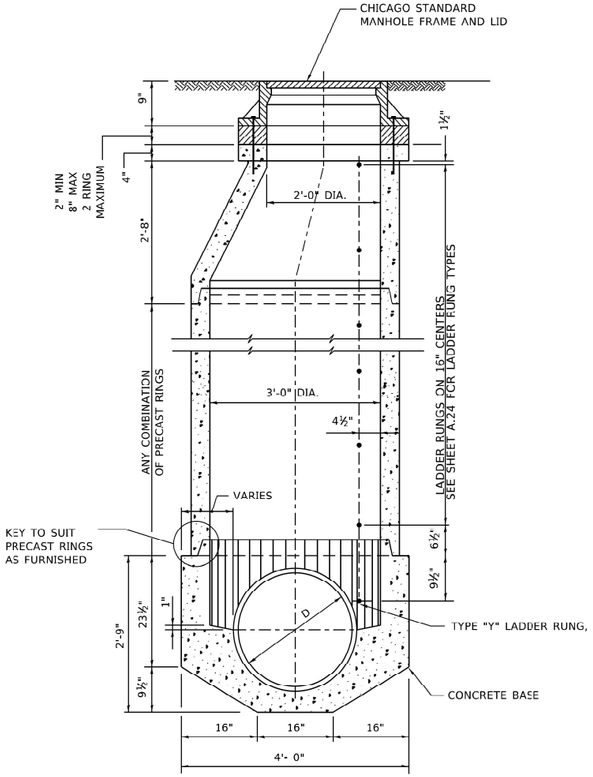

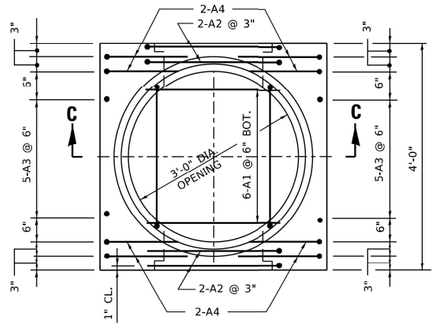

PLAN
PRECAST BASE

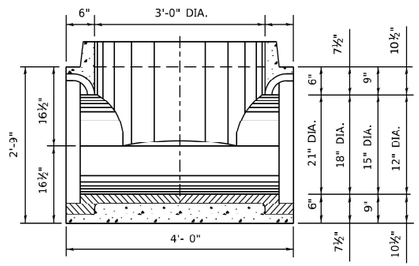

SECTION A–A

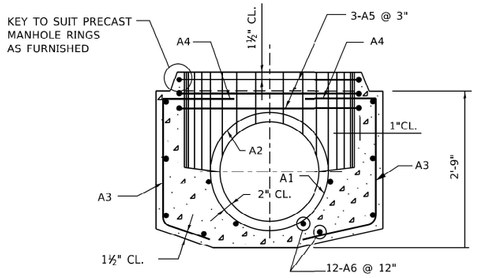

SECTION B–B

SECTION C–C

NOTE:
6" MINIMUM GRANULAR EMBEDMENT
UNDER ALL PRECAST MANHOLE BASES

SCHEDULE OF REINFORCEMENT

STRUCTURE		REINFORCEMENT BAR						BENDING DIMENSIONS											
		MARK	SIZE NO.	TYPE	LENGTH	NO. REQD.	WEIGHT - LBS EACH	WEIGHT - LBS TOTAL	A	B	C	D	E	F	G	H	J	K	O	R
BASES FOR TYPE "A" MANHOLES (PRECAST)	21" DIA.	21A1	6	9	3'-1"	6	4.63	28		3'-1"						11¼"			2'-1"	12¾"
		21A2	6	T3	8'-8"	4	13.02	52										2'-0"	2'-1½"	
		21A3	5	12	3'-3"	10	3.39	34			22"	17"				14½"		8¾"		
		21A4	5	12	4'-6"	8	4.69	30		15"	22"	17"				14½"		8¾"		
		21A5	5	T3	11'-11"	3	12.43	37										20"	3'-3¼"	
		21A6	4	STR	3'-8"	12	2.45	30												
		TOTAL						219												
	18" DIA.	18A1	6	9	2'-8½"	6	4.07	24		2'-8½"							9¾"		22"	11¼"
		18A2	6	T3	7'-10½"	4	11.83	47										2'-0"	22½"	
		18A3	5	12	3'-3"	10	3.39	34			22"	17"					14½"	8¾"		
		18A4	5	12	4'-6"	8	4.69	38		15"	22"	17"					14½"	8¾"		
		18A5	5	T3	11'-11"	3	12.43	37										2'-0"	3'-3¼"	
		18A6	4	STR	3-8"	12	2.45	30												
		TOTAL						202												
	15" DIA.	15A1	6	9	2'-3½"	6	3.44	21		23½"						8¼"			19"	9¾"
		15A2	6	T3	7'-1"	4	10.64	42										2'-0"	19½"	
		15A3	5	12	3'-3"	10	3.39	34			22"	17"						8¾"		
		15A4	5	12	4'-6"	8	4.69	38		15"	22"	17"				14½"		8¾"		
		15A5	5	T3	11'-11"	3	12.43	37								14½"		20"	3'-3¼"	
		15A6	4	STR	3'-8"	12	2.45	30												
		TOTAL						202												
	12" DIA.	12A1	6	9	1'-11"	6	2.88	17		23"						6¾"			16"	8¼"
		12A2	6	T3	6'-1"	4	9.14	37										2'-0"	16½"	
		12A3	5	12	3'-3"	10	3.39	34			22"	17"				14½"		8¾"		
		12A4	5	12	4'-6"	8	4.69	38			22"	17"				14½"		8¾"		
		12A5	5	T3	11'-11"	3	12.43	37										20"	3'-3¼"	
		12A6	4	STR.	3'-8"	12	2.45	30												
		TOTAL						193												

MODEL: Default
FILE NAME: pw:\\Vdot-pw.bentley.com:PWIDOT\Documents\IDOT Offices\District 1\Projects\Dist51d22x34\CADData\CADsheets\sb09.dgn

USER NAME = Lawrence.DeManche	DESIGNED -	REVISED - K. SMITH 09-22-90	**STATE OF ILLINOIS** **DEPARTMENT OF TRANSPORTATION**
	DRAWN -	REVISED - K. SMITH 11-18-22	
PLOT SCALE = 100.0000 ' / in.	CHECKED -	REVISED -	
PLOT DATE = 11/18/2022	DATE - 06-18-82	REVISED -	

CITY OF CHICAGO DRAINAGE DETAILS
TYPE "A" PRECAST MANHOLE FOR SEWERS 21" DIA. AND SMALLER

SCALE: NONE | SHEET 1 OF 1 SHEETS | STA. | TO STA.

F.A.I RTE.	SECTION	COUNTY	TOTAL SHEETS	SHEET NO.
290	2019-191-B-R	COOK	265	228
	BD600–12 (BD–09)	CONTRACT NO. 62K64		
	ILLINOIS FED. AID PROJECT			

NUMBER OF PRECAST RINGS REQUIRED FOR MANHOLES OF VARIOUS HEIGHTS

TOTAL HEIGHT "H"	9" FRAME +2'-8" CORBEL =3'-5"	PRECAST RINGS 4'-0"	2'-8"	1'-4"	8"	4"	BRICK AND/OR MORTAR	TOTAL HEIGHT "H"	9" FRAME +2'-8" CORBEL =3'-5"	PRECAST RINGS 4'-0"	2'-8"	1'-4"	8"	4"	BRICK AND/OR MORTAR	TOTAL HEIGHT "H"	9" FRAME +2'-8" CORBEL =3'-5"	PRECAST RINGS 4'-0"	2'-8"	1'-4"	8"	4"	BRICK AND/OR MORTAR
5'-0"	3'-5"			1			3"	12'-0"	3'-5"	2				1	3"	19'-0"	3'-5"	3	1		1		3"
1"	"			1			4"	1"	"	2				1	4"	1"	"	3	1		1		4"
2"	"			1		1	1"	2"	"	2			1		1"	2"	"	3	1		1	1	1"
3"	"			1		1	2"	3"	"	2			1		2"	3"	"	3	1		1	1	2"
4"	"			1		1	3"	4"	"	2			1		3"	4"	"	3	1		1	1	3"
5"	"			1		1	4"	5"	"	2			1		4"	5"	"	3	1		1	1	4"
6"	"			1			1"	6"	"	2			1	1	1"	6"	"	4					1"
7"	"			1			2"	7"	"	2			1	1	2"	7"	"	4					2"
8"	"			1			3"	8"	"	2			1	1	3"	8"	"	4					3"
9"	"			1			4"	9"	"	2			1	1	4"	9"	"	4					4"
10"	"			1		1	1"	10"	"	2				1	1"	10"	"	4				1	1"
11"	"			1		1	2"	11"	"	2				1	2"	11"	"	4				1	2"
6'-0"	3'-5"			1		1	3"	13'-0"	3'-5"	2			1		3"	20'-0"	3'-5"	4				1	3"
1"	"			1		1	4"	1"	"	2			1		4"	1"	"	4				1	4"
2"	"		1		1		1"	2"	"	2			1	1	1"	2"	"	4			1		1"
3"	"		1		1		2"	3"	"	2			1	1	2"	3"	"	4			1		2"
4"	"		1		1		3"	4"	"	2			1	1	3"	4"	"	4			1		3"
5"	"		1		1		4"	5"	"	2			1	1	4"	5"	"	4			1		4"
6"	"		1		1	1	1"	6"	"	2			1	1	1"	6"	"	4			1	1	1"
7"	"		1		1	1	2"	7"	"	2			1	1	2"	7"	"	4			1	1	2"
8"	"		1		1	1	3"	8"	"	2			1	1	3"	8"	"	4			1	1	3"
9"	"		1		1	1	4"	9"	"	2			1	1	4"	9"	"	4			1	1	4"
10"	"		1		1		1"	10"	"	2			1	1	1"	10"	"	4		1			1"
11"	"		1		1		2"	11"	"	2			1	1	2"	11"	"	4		1			2"
7'-0"	3'-5"		1		1		3"	14'-0"	3'-5"	2			1	1	3"	21'-0"	3'-5"	4		1			3"
1"	"		1		1		4"	1"	"	2			1	1	4"	1"	"	4		1			4"
2"	"		1		1	1	1"	2"	"	2	1				1"	2"	"	4		1		1	1"
3"	"		1		1	1	2"	3"	"	2	1				2"	3"	"	4		1		1	2"
4"	"		1		1	1	3"	4"	"	2	1				3"	4"	"	4		1		1	3"
5"	"		1		1	1	4"	5"	"	2	1				4"	5"	"	4		1		1	4"
6"	"	1					1"	6"	"	2	1			1	1"	6"	"	4		1	1		1"
7"	"	1					2"	7"	"	2	1			1	2"	7"	"	4		1	1		2"
8"	"	1					3"	8"	"	2	1			1	3"	8"	"	4		1	1		3"
9"	"	1					4"	9"	"	2	1			1	4"	9"	"	4		1	1		4"
10"	"	1				1	1"	10"	"	2	1		1		1"	10"	"	4		1	1	1	1"
11"	"	1				1	2"	11"	"	2	1		1		2"	11"	"	4		1	1	1	2"
8'-0"	3'-5"	1				1	3"	15' 0"	3' 5"	2	1		1		3"	22' 0"	3' 5"	4		1	1	1	3"
1"	"	1				1	4"	1"	"	2	1		1		4"	1"	"	4		1	1	1	4"
2"	"	1					1"	2"	"	2	1		1	1	1"	2"	"	4	1				1"
3"	"	1					2"	3"	"	2	1		1	1	2"	3"	"	4	1				2"
4"	"	1					3"	4"	"	2	1		1	1	3"	4"	"	4	1				3"
5"	"	1					4"	5"	"	2	1		1	1	4"	5"	"	4	1				4"
6"	"	1				1	1"	6"	"	3					1"	6"	"	4	1			1	1"
7"	"	1				1	2"	7"	"	3					2"	7"	"	4	1			1	2"
8"	"	1				1	3"	8"	"	3					3"	8"	"	4	1			1	3"
9"	"	1				1	4"	9"	"	3					4"	9"	"	4	1			1	4"
10"	"	1		1			1"	10"	"	3				1	1"	10"	"	4	1		1		1"
11"	"	1		1			2"	11"	"	3				1	2"	11"	"	4	1		1		2"
9'-0"	3'-5"	1		1			3"	16'-0"	3'-5"	3				1	3"	23'-0"	3'-5"	4	1		1		3"
1"	"	1		1			4"	1"	"	3				1	4"	1"	"	4	1		1		4"
2"	"	1		1		1	1"	2"	"	3			1		1"	2"	"	4	1		1	1	1"
3"	"	1		1		1	2"	3"	"	3			1		2"	3"	"	4	1		1	1	2"
4"	"	1		1		1	3"	4"	"	3			1		3"	4"	"	4	1		1	1	3"
5"	"	1		1		1	4"	5"	"	3			1		4"	5"	"	4	1		1	1	4"
6"	"	1		1			1"	6"	"	3			1	1	1"	6"	"	5					1"
7"	"	1		1			2"	7"	"	3			1	1	2"	7"	"	5					2"
8"	"	1		1			3"	8"	"	3			1	1	3"	8"	"	5					3"
9"	"	1		1			4"	9"	"	3			1	1	4"	9"	"	5					4"
10"	"	2					1"	10"	"	3	1			1	1"	10"	"	5		1	1		1"
11"	"	2					2"	11"	"	3	1			1	2"	11"	"	5		1	1		2"
7'-0"	3'-5"	1	1		1		3"	18'-0"	3'-5"	3			1	1	3"	25'-0"	3'-5"	5		1			3"
1"	"	1	1		1		4"	1"	"	3			1	1	4"	1"	"	5		1			4"
2"	"	1	1		1	1	1"	2"	"	3	1				1"	2"	"	5		1		1	1"
3"	"	1	1		1	1	2"	3"	"	3	1				2"	3"	"	5		1		1	2"
4"	"	1	1		1	1	3"	4"	"	3	1				3"	4"	"	5		1		1	3"
5"	"	1	1		1	1	4"	5"	"	3	1				4"	5"	"	5		1		1	4"
6"	"	2					1"	6"	"	3	1			1	1"	6"	"	5		1	1		1"
7"	"	2					2"	7"	"	3	1			1	2"	7"	"	5		1	1		2"
8"	"	2					3"	8"	"	3	1			1	3"	8"	"	5		1	1		3"
9"	"	2					4"	9"	"	3	1			1	4"	9"	"	5		1	1		4"
10"	"	2				1	1"	10"	"	3	1		1		1"	10"	"	5		1	1	1	1"
11"	"	2				1	2"	11"	"	3	1		1		2"	11"	"	5		1	1	1	2"

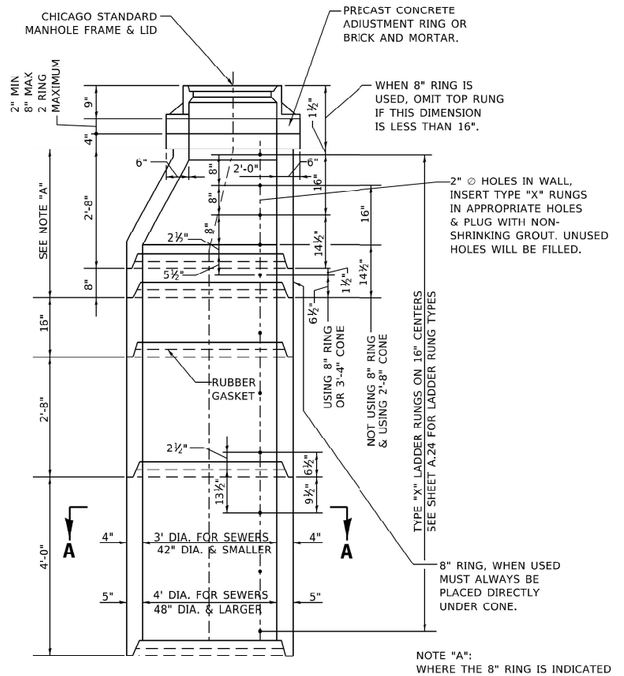

NOTE "A":
WHERE THE 8" RING IS INDICATED A SEPARATE ONE PIECE CONE 3'-4" IN HEIGHT MAY BE USED AS AN ALTERNATE.

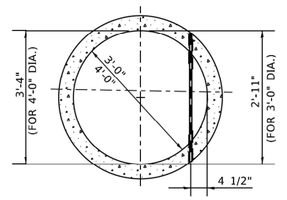

1" ∅ LADDER RUNG,TYPE "X", LENGTH 2'-11" OR 3'-4" INSERTED INTO 2" ∅ HOLE IN WALL & PLUGGED BY MANUFACTURER WITH NON-SHRINKING GROUT.

SECTION A–A

DETAIL OF PRECAST RINGS

NOTES:

PRECAST CONCRETE RINGS MUST CONFORM TO A.S.T.M. DESIGNATION C76 FOR "REINFORCED CONCRETE CULVERT STORM DRAIN, AND SEWER PIPE." WALL B.

STANDARD LENGTHS OF RINGS ARE: 4'-0", 2'-8". 1'-4", 0'-8" AND 0'-4" COLLAR.

ALL REINFORCEMENT STEEL REQUIRED FOR PRECAST RINGS MUST BE INCLUDED IN THE PRICE BID FOR ALL MANHOLE ITEMS.

ALL PIPE AND FITTINGS 24 INCHES IN DIAMETER AND LARGER MUST BE CLASS III, IV AND V.

REINFORCED CONCRETE PIPE AS SPECIFIED IN THE SPECIFICATIONS FOR "REINFORCED CONCRETE CULVERT STORM DRAIN, AND SEWER PIPE." A.S.T.M. DESIGNATION C76, TABLE III, IV AND V, WALL B OR WALL C WITH CIRCULAR OR ELLIPTICAL REINFORCEMENT

MODEL: Default
FILE NAME: pw:\\dot-pw.bentley.com:PWIDOT\Documents\IDOT Offices\District 1\Projects\Std 22x34\CAD\Data\CAD\sheets\sd09.dgn

USER NAME = Lawrence.DeManche	DESIGNED -	REVISED -	K. SMITH 09-22-90
	DRAWN -	REVISED -	K. SMITH 11-18-22
PLOT SCALE = 100.0000 ' / in.	CHECKED -	REVISED -	
PLOT DATE = 11/18/2022	DATE - 06-18-82	REVISED -	

STATE OF ILLINOIS
DEPARTMENT OF TRANSPORTATION

CITY OF CHICAGO DRAINAGE DETAILS
TYPE "A" MANHOLE PRECAST RISERS, AND RINGS 24" AND LARGER

SCALE: NONE | SHEET 1 OF 1 SHEETS | STA. | TO STA.

F.A.I RTE.	SECTION	COUNTY	TOTAL SHEETS	SHEET NO.
290	2019-191-B-R	COOK	265	229
	BD600–12 (BD–09)	CONTRACT NO. 62K64		
	ILLINOIS FED. AID PROJECT			

STRUCTURE		REINFORCEMENT BAR						BENDING DIMENSIONS											
	MARK	SIZE NO.	TYPE	LENGTH	NO. REQD.	WEIGHT - LBS EACH	TOTAL	A	B	C	D	E	F	G	H	J	K	O	R
BASES FOR TYPE "A" MANHOLES (Precast) 36" DIA.	36A1	6	T3	12'-7"	6	18.90	113										2'-0"	3'-4½"	
	36A2	5	9	6'-0"	4	6.26	25		6'-0"						2'-2"			3'-0"	20"
	36A3	5	12	4'-6"	4	4.69	19			2'-9"	21"				18"		10⅛"		
	36A4	5	12	5'-0"	5	5.22	26		7"	3'-0"	17"				14½"		8⅞"		
	36A5	5	12	5'-9"	5	6.00	30		15"	2'-9"	21"				18"		10⅛"		
	36A6	5	T3	11'-11"	3	12.43	37										20"	3'-3½"	
	36A7	5	12	5'-8"	5	5.91	30		15"	3'-0"	17"				14½"		8¼"		
	36A8	4	STR.	4'-0"	10	3.12	56												
	TOTAL						336												
30" DIA.	30A1	6	T3	11'-1"	6	16.65	100										2'-0"	2'-10½"	
	30A2	5	9	4'-4"	4	4.52	18		4'-4"						18"			2'-10"	17"
	30A3	5	12	4'-0"	4	4.17	17			2'-3"	21"				18"		10⅞"		
	30A4	5	12	3'-10"	5	4.00	20			2'-7"	15"				12⅞"		7⅞"		
	30A5	5	12	5'-3"	5	5.48	27		15"	2'-3"	21"				18"		10⅞"		
	30A6	5	T3	11'-11"	3	12.43	37										20"	3'-3½"	
	30A7	5	12	5'-1"	5	5.30	26		15"	2'-7"	15"				12⅝"		7⅞"		
	30A8	4	STR	4'-8"	15	3.12	47												
	TOTAL						292												
24" DIA.	24A1	6	9	3'-5"	6	5.13	31		3'-5"						13"			2'-3½"	14½"
	24A2	6	T3	9'-4"	7	14.02	98										22"	2'-4½"	
	24A3	5	12	3'-6"	10	3.65	37			2'-1"	17"				14½"		8⅞"		
	24A4	5	12	4'-9"	10	4.96	50		15"	2'-1"	17"				14½"		8⅞"		
	24A5	5	T3	11'-11"	3	12.43	37										20"	3'-3½"	
	24A6	4	STR.	4'-8"	12	3.12	37												
	TOTAL						290												

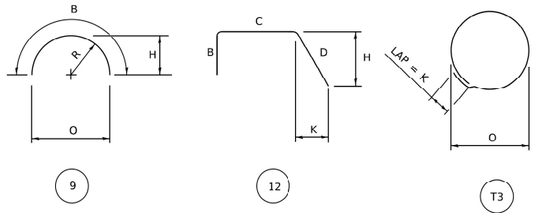

NOTES:
ALL DIMENSIONS ARE OUT TO OUT OF BAR.
BENDING RADII "R" TO OUTSIDE OF BAR.
NUMBERS IN CIRCLES DENOTE BAR TYPE.

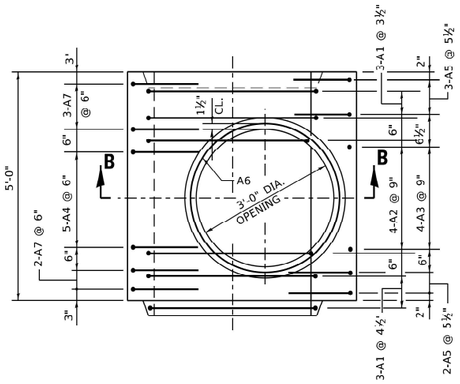

PLAN

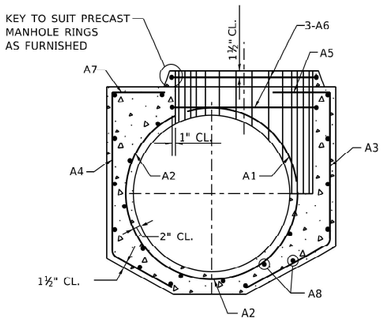

SECTION B–B

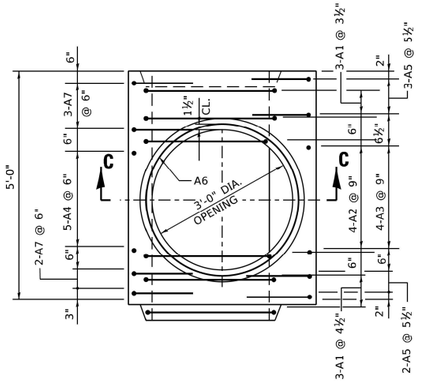

PLAN

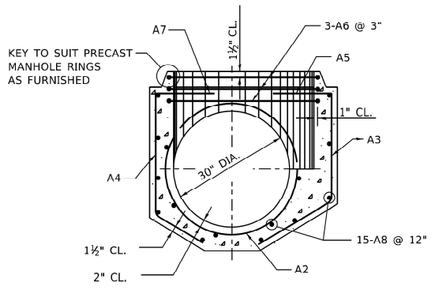

SECTION C–C

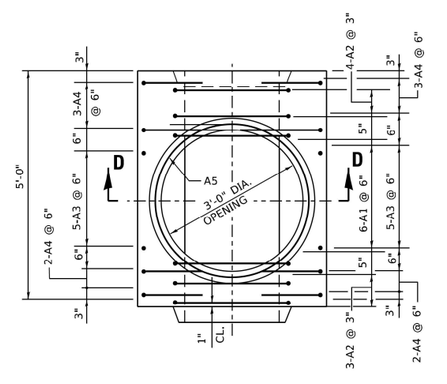

PLAN

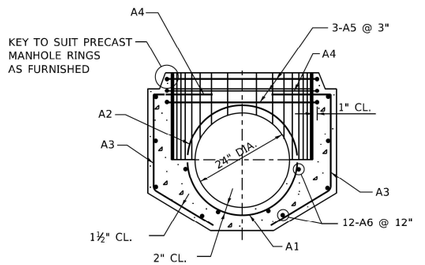

SECTION D–D

PLACING OF CONCRETE- CONCRETE MUST BE PLACED IN ACCORDANCE WITH THE METHOD OUTLINED IN THE CITY OF CHICAGO STANDARD SPECIFICATIONS.
CONSTRUCTION JOINTS - JOINTS NOT INDICATED ON THE DRAWINGS MUST BE SO MADE AND LOCATED AS NOT TO IMPAIR THE STRENGTH OF THE STRUCTURE AND MUST BE APPROVED BY THE COMMISSIONER. JOINTS MUST BE CONSTRUCTED IN ACCORDANCE WITH THE METHOD OUTLINED IN THE SPECIFICATIONS.

CONCRETE PROTECTION FOR REINFORCEMENT- ALL REINFORCING STEEL MUST HAVE CLEAR CONCRETE COVERING AS FOLLOWS (UNLESS OTHERWISE NOTED) :
3" AT EXTERIOR SURFACES WHERE CONCRETE IS DEPOSITED AGAINST THE GROUND;
2.5" AT SURFACES WHERE CONCRETE IS FORMED BUT SUBSEQUENTLY WILL BE IN CONTACT WITH SEWAGE; 2" AT ALL OTHER SURFACES.

REINFORCING STEEL- ALL REINFORCING BARS MUST BE ACCURATELY PLACED AND SECURELY SUPPORTED BY BAR SUPPORTS, SPACERS OR HIGH CHAIRS.
ALL LAPS IN REINFORCING STEEL MUST BE BASED UPON THE 1989, ACI BUILDING CODE.
UNLESS OTHERWISE NOTED. HOOKS AND BENDS ON BARS MUST CONFORM TO RECOMMENDED DETAILS AS GIVEN IN THE "MANUAL OF STANDARD PRACTICE", C.R.S.I. 1990.

THE FOLLOWING ABBREVIATIONS ARE USED TO INDICATE THE LOCATION OF REINFORCING BARS:

T.	DENOTES	TOP	N.F.	DENOTES	NEAR FACE
BOT.	DENOTES	BOTTOM	F.F.	DENOTES	FAR FACE
I.F.	DENOTES	INSIDE FACE	E.F.	DENOTES	EACH FACE
O.F.	DENOTES	OUTSIDE FACE	E.W.	DENOTES	EACH WAY

PLACING BAR SUPPORTS- ALL REINFORCING BARS MUST BE SUPPORTED, ANCHORED AND TIED AND MUST CONFORM TO THE "RECOMMENDED PRACTICE FOR PLACING REINFORCING BARS", 1986, PREPARED BY THE CONCRETE REINFORCING STEEL INSTITUTE.

MANHOLE BASE FOR SEWERS 36" DIA.

MANHOLE BASE FOR 30" DIA. SEWERS

MANHOLE BASE FOR 24" DIA. SEWERS

MODEL: Default
FILE NAME: pw:\\Idot-pw.bentley.com:PWIDOT\Documents\IDOT Offices\District 1\Projects\Dist1022x34\CADData\CADSheets\bd09.dgn

USER NAME = Lawrence.DeManche	DESIGNED -	REVISED - K. SMITH 09-22-90	STATE OF ILLINOIS DEPARTMENT OF TRANSPORTATION	CITY OF CHICAGO DRAINAGE DETAILS
	DRAWN -	REVISED - K. SMITH 11-18-22		REINFORCEMENT FOR TYPE "A" PRECAST BASES AND RINGS 24" TO 36"
PLOT SCALE = 100.0000 ' / in.	CHECKED -	REVISED -		SCALE: NONE | SHEET 1 OF 1 SHEETS | STA. TO STA.
PLOT DATE = 11/18/2022	DATE - 06-18-82	REVISED -		

F.A. I RTE.	SECTION	COUNTY	TOTAL SHEETS	SHEET NO.
290	2019-191-B-R	COOK	265	230
	BD600–12 (BD–09)	CONTRACT NO. 62K64		
	ILLINOIS | FED. AID PROJECT			

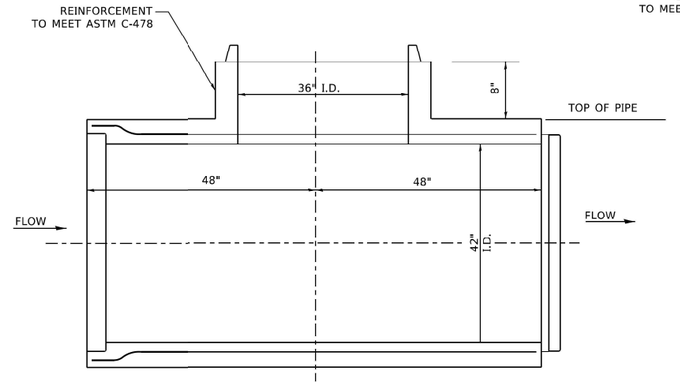

ELEVATION

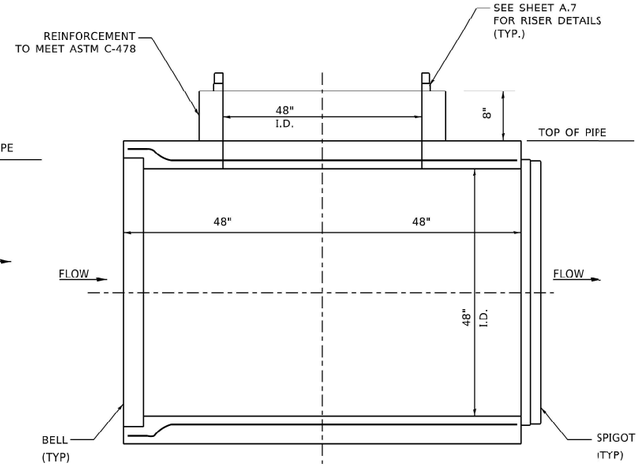

ELEVATION

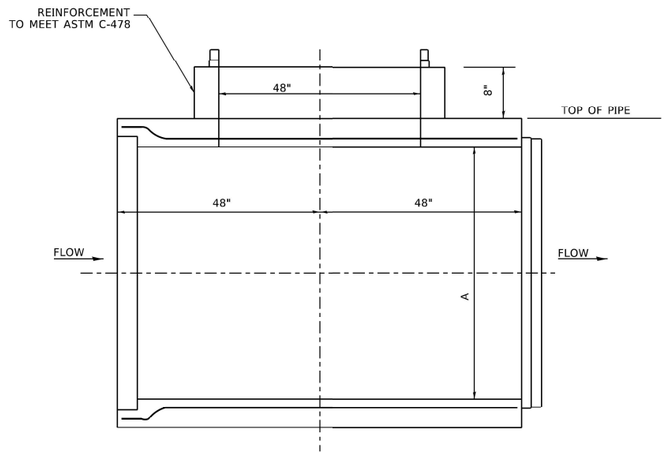

ELEVATION

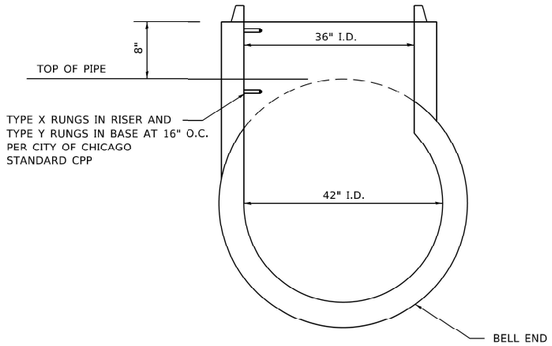

STANDARD (LEFT) RISER

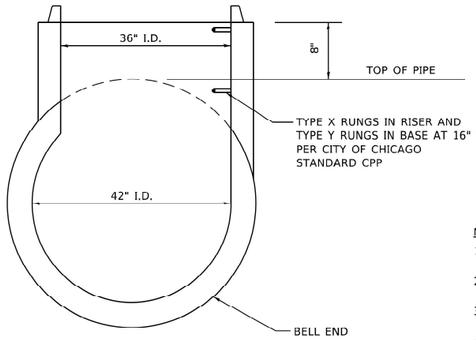

OPTIONAL (RIGHT) RISER

42" x 36" RCP BASE TEE

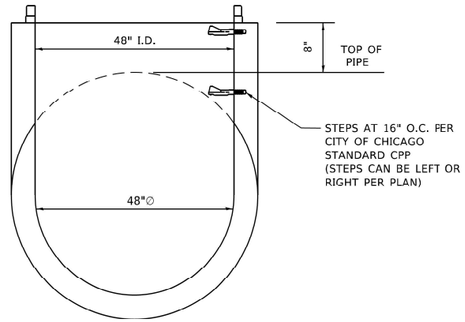

48" x 48" RCP BASE TEE

NOTES:

1. FOR LADDER DETAILS, SEE DETAIL SHEET A.24
2. FOR RISER DETAILS, SEE DETAIL SHEET A.7
3. ALL BASE TEES SHALL BE ASTM C76 CLASS V.
4. THE BASE TEE MUST BE COMPATIBLE WITH THE ADJOINING PIPE, AND GASKET JOINTS COMPLYING WITH ASTM C-76 AND C-443, RESPECTIVELY.
5. ALL PIPE AND FITTINGS 24 INCHES IN DIAMETER AND LARGER MUST BE CLASS III, IV AND V REINFORCED CONCRETE PIPE AS SPECIFIED IN THE SPECIFICATIONS FOR "REINFORCED CONCRETE CULVERT STORM DRAIN, AND SEWER PIPE." A.S.T.M. DESIGNATION C76, TABLE III, IV AND V, WALL B OR WALL C WITH CIRCULAR OR ELLIPTICAL REINFORCEMENT.

DIMENSIONS OF PRECAST MANHOLE BASE			
A	B	C	RUNGS
120"	142"	11"	6
108"	128"	10"	6
96"	114"	9"	5
84"	101¼"	8¾"	4
78"	94½"	8¼"	4
72"	87½"	7¾"	4
66"	80½"	7¼"	3
60"	73½"	6¾"	3
54"	66½"	6¼"	3
48"	59½"	5¾"	3
42"	52½"	5¼"	3

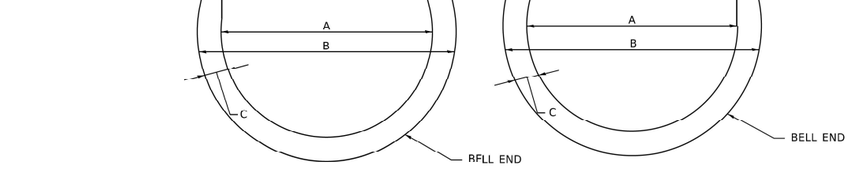

STANDARD (LEFT) RISER **OPTIONAL (RIGHT) RISER**

≥ 54" x 48" RCP BASE TEE

MODEL: Default
FILE NAME: pw:\\dot-pw.bentley.com:PWIDOT Documents\IDOT Offices\District 1\Projects\DistStd22x34(CAD)Data\CADsheets\bd09.dgn

USER NAME = Lawrence.DeManche	DESIGNED -	REVISED -	K. SMITH 09-22-90
	DRAWN -	REVISED -	K. SMITH 11-18-22
PLOT SCALE = 100.0000 ' / in.	CHECKED -	REVISED -	
PLOT DATE = 11/18/2022	DATE - 06-18-82	REVISED -	

STATE OF ILLINOIS
DEPARTMENT OF TRANSPORTATION

CITY OF CHICAGO DRAINAGE DETAILS
TYPE "A" BASE TEE MANHOLE BASES 42" AND LARGER

SCALE: NONE | SHEET 1 OF 1 SHEETS | STA. | TO STA.

F.A.I RTE.	SECTION	COUNTY	TOTAL SHEETS	SHEET NO.
290	2019-191-B-R	COOK	265	231
	BD600–12 (BD–09)	CONTRACT NO. 62K64		
	ILLINOIS	FED. AID PROJECT		

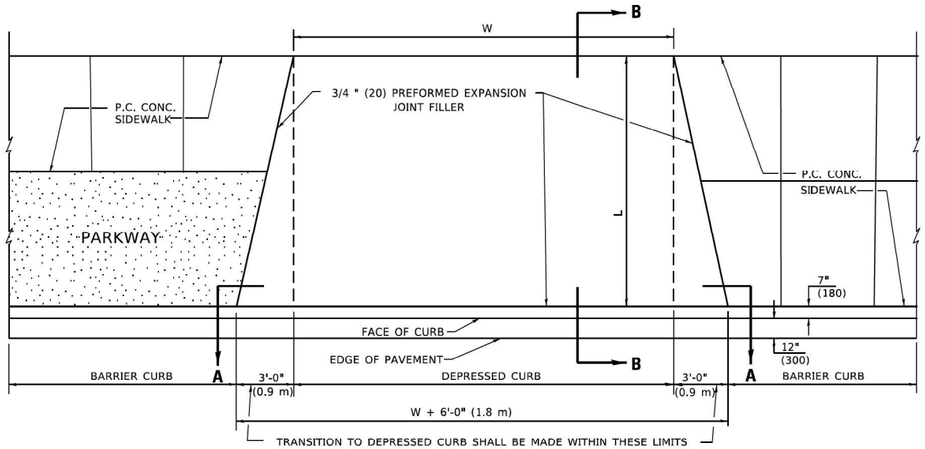

PLAN VIEW

NOTES:

1. EXPANSION JOINTS SHALL BE CONSTRUCTED AS SHOWN ON THE DETAILS FOR P.C.C. SIDEWALK.
2. THE CURB BETWEEN ADJACENT DRIVEWAYS SHALL BE FULL HEIGHT FOR A DISTANCE OF AT LEAST FOUR 4 FEET (1.2 METERS).
3. P.C. CONCRETE DRIVEWAYS SHALL BE CONSTRUCTED AT LOCATIONS SHOWN ON THE PLANS OR AS DIRECTED BY THE ENGINEER.

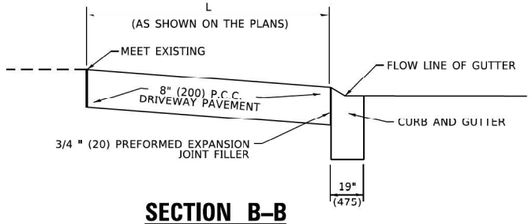

SECTION B–B

BASIS OF PAVEMENT

1. 3/4 " (20) PREFORMED EXPANSION JOINTS WILL NOT BE PAID FOR SEPARATELY BUT SHALL BE INCLUDED IN P.C.C. DRIVEWAY PAVEMENT 8" (200).
2. COMBINATION CONC. CURB AND GUTTER SHALL BE MEASURED STRAIGHT ACROSS THE DRIVEWAY. NO ADDITIONAL COMPENSATION WILL BE ALLOWED FOR THE TRANSITION CURB AND GUTTER.

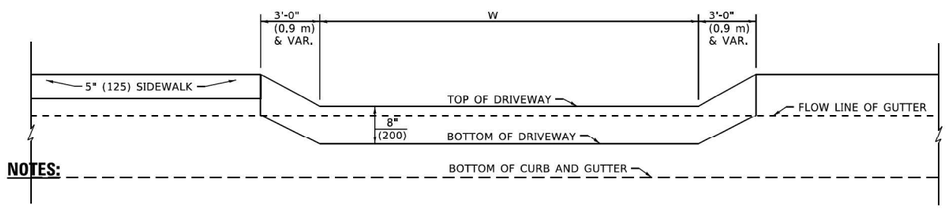

NOTES:

SECTION A–A

P.C.C. DRIVEWAY PAVEMENT DETAIL

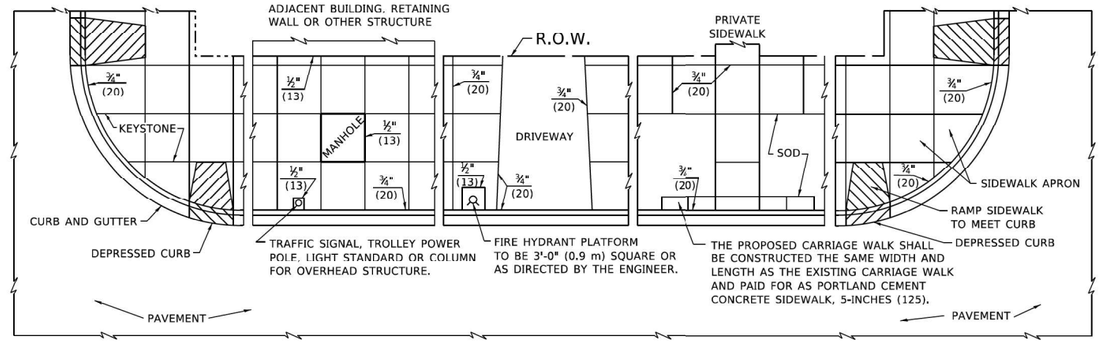

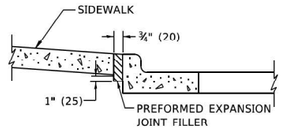

SLOPE FOR SIDEWALK
1" (25) IN 3'-0" (0.9 m) IN CHICAGO

NOTES:

1. ONE-HALF INCH THICK EXPANSION JOINTS SHALL BE PLACED BETWEEN THE SIDEWALK AND ALL STRYCTURES SUCH AS LIGHT STANDARDS, TRAFFIC LIGHT STANDARDS, MANHOLES, WHICH EXTEND THROUGH THE SIDEWALK.
2. 3/4" (20) THICK EXPANSION JOINTS SHALL BE PLACED AT INTERVALS OF NOT MORE THAN 100 FEET (30 METERS) IN THE SIDEWALK. WHERE THE SIDEWALK IS CONSTRUCTED ADJACENT TO PAVEMENT OR CURB HAVING EXPANSION JOINTS, THE EXPANSION JOINTS IN THE SIDEWALK SHALL BE PLACED OPPOSITE THE EXISTING EXPANSION JOINTS AS NEARLY AS PRACTICABLE. EXPANSION JOINTS SHALL ALSO BE PLACED WHERE THE SIDEWALK ABUTS EXISTING SIDEWALKS, BETWEEN DRIVEWAY PAVEMENT AND SIDEWALK, AND BETWEEN SIDEWALK AND CURBS WHERE THE SIDEWALK ABUTS THE CURB.

PORTLAND CEMENT CONCRETE SIDEWALK DETAILS

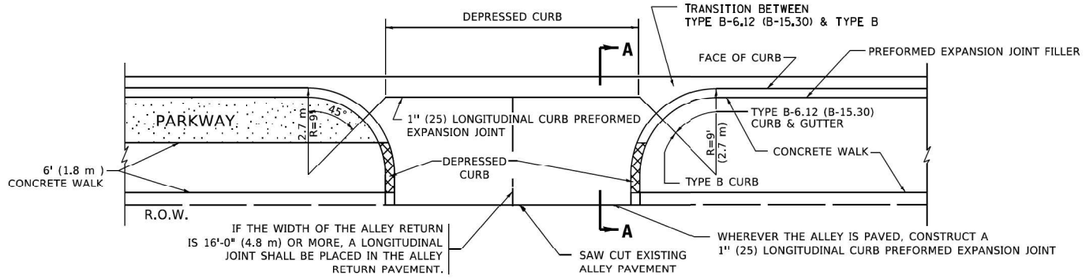

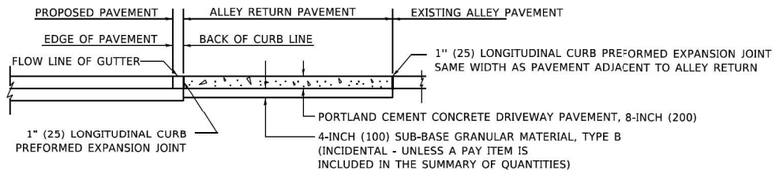

SECTION A–A

BASIS OF PAVEMENT

1. SUB-BASE GRANULAR MATERIAL TYPE B SHALL BE PAID FOR SEPERATELY.
2. NO EXTRA COMPENSATION SHALL BE ALLOWED FOR THE GUTTER FLARE.

ALLEY RETURN DETAIL

ALL DIMENSIONS ARE IN INCHES (MILLIMETERS) UNLESS OTHERWISE SHOWN

MODEL: Default
FILE NAME: pw:\\dot-pw.bentley.com:PWIDOT\Documents\IDOT Offices\District 1\Projects\Dist Std 22-24\CADData\CADsheetstbd17.dgn

USER NAME = Lawrence.DeManche	DESIGNED - M. DE YONG	REVISED - K. SMITH 11-18-22	
	DRAWN -	REVISED -	
PLOT SCALE = 100.0000 ' / in.	CHECKED -	REVISED -	
PLOT DATE = 11/18/2022	DATE - 06-13-90	REVISED -	

STATE OF ILLINOIS
DEPARTMENT OF TRANSPORTATION

CITY OF CHICAGO
DETAILS FOR P.C. CONCRETE DRIVEWAY, ALLEY RETURN AND SIDEWALK

SCALE: NONE | SHEET 1 OF 1 SHEETS | STA. | TO STA.

F.A.I RTE.	SECTION	COUNTY	TOTAL SHEETS	SHEET NO.
290	2019-191-B-R	COOK	265	232
	BD400–03 (BD–17)	CONTRACT NO. 62K64		
	ILLINOIS FED. AID PROJECT			

METHOD OF MEASUREMENT

REFER TO SECTION 442 OF THE STANDARD SPECIFICATIONS FOR ROAD AND BRIDGE CONSTRUCTION AND THE RECURRING SPECIAL PROVISION "PATCHING WITH HOT-MIX ASPHALT OVERLAY REMOVAL."

BASIS OF PAYMENT

1. REFER TO SECTION 442 OF THE STANDARD SPECIFICATIONS FOR ROAD AND BRIDGE CONSTRUCTION AND THE RECURRING SPECIAL PROVISION "PATCHING WITH HOT-MIX ASPHALT OVERLAY REMOVAL."
2. SAW CUT/SCORING OF EXISTING HMA OVERLAY IS INCLUDED IN THE COST OF PAVEMENT PATCHING.
3. SAW CUT/SCORING OF EXISTING PAVEMENT IS INCLUDED IN THE COST OF PAVEMENT PATCHING.

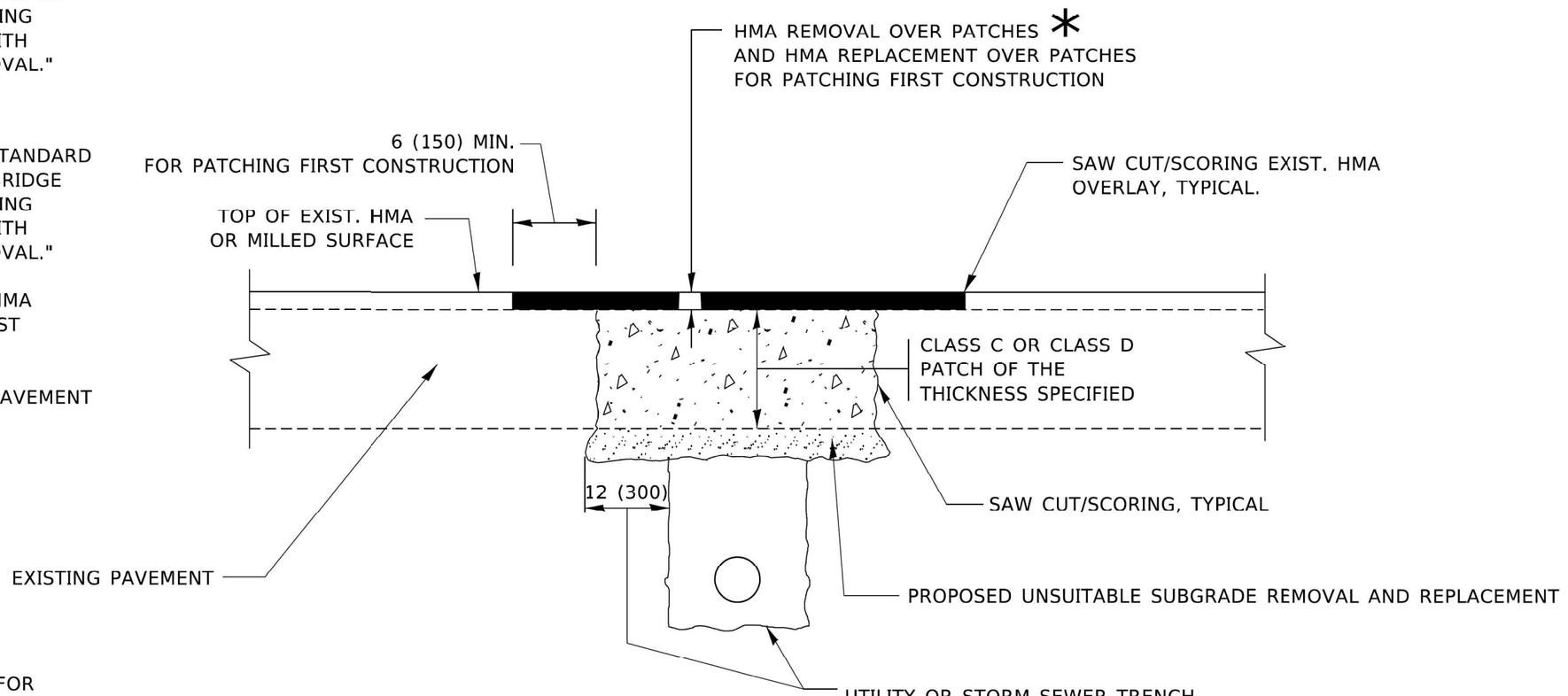

* SEE TYPICAL SECTIONS FOR THICKNESS AND MATERIALS

SEQUENCE OF CONSTRUCTION (PATCHING FIRST)

1. REMOVE THE EXISTING HMA MATERIAL OVER THE AREA TO BE PATCHED.
2. REMOVE AND REPLACE WITH CLASS C OR D PATCH.
3. REPLACE HMA MATERIAL OVER THE AREA TO BE PATCHED.

SEQUENCE OF CONSTRUCTION (MILLING FIRST)

1. MILL HMA FIRST IF THERE IS AT LEAST 4½ INCHES OR MORE OF HMA MATERIAL ON TOP OF THE EXISTING PAVEMENT OR IF THE PAVEMENT IS FULL DEPTH HMA. A MINIMUM OF 2 INCHES OF HMA MATERIAL SHALL BE IN PLACE AFTER MILLING.
2. REMOVE AND REPLACE WITH FULL DEPTH CLASS D PATCHES TO TOP OF MILLED SURFACE.

ALL DIMENSIONS ARE IN INCHES (MILLIMETERS) UNLESS OTHERWISE SHOWN.

MODEL: Default
FILE NAME: pw:\\dot-pw.bentley.com:PWIDOT\Documents\IDOT Offices\District 1\Projects\DistStd22x34\CADData\CADsheets\bd22.dgn

USER NAME = Lawrence.DeManche	DESIGNED - R. SHAH	REVISED - R. BORO 01-01-07	
	DRAWN -	REVISED - R. BORO 09-04-07	
PLOT SCALE = 100.0000 ' / in.	CHECKED -	REVISED - K. ENG 10-27-08	
PLOT DATE = 11/18/2022	DATE - 10-25-94	REVISED - K. SMITH 11-18-22	

STATE OF ILLINOIS
DEPARTMENT OF TRANSPORTATION

PAVEMENT PATCHING FOR HMA SURFACED PAVEMENT

SCALE: NONE | SHEET 1 OF 1 SHEETS | STA. | TO STA.

F.A. I RTE.	SECTION	COUNTY	TOTAL SHEETS	SHEET NO.
290	2019-191-B-R	COOK	265	233
	BD400–04 (BD–22)	CONTRACT NO. 62K64		
	ILLINOIS FED. AID PROJECT			

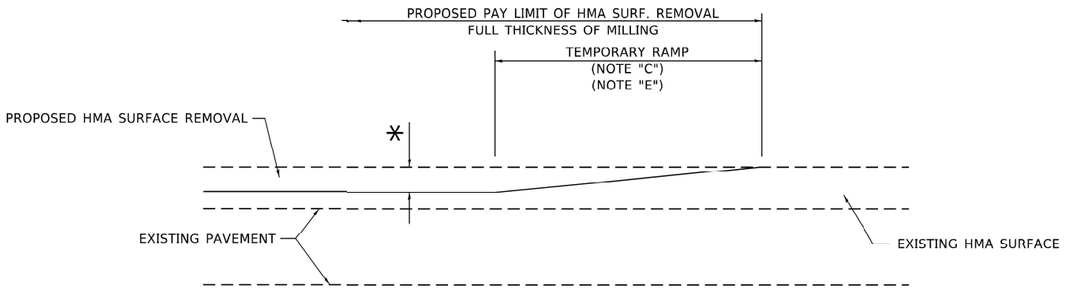

MILLED TEMPORARY RAMP

(FOR BUTT JOINT AND HMA TAPER SEE DETAIL BELOW)

OPTION 1

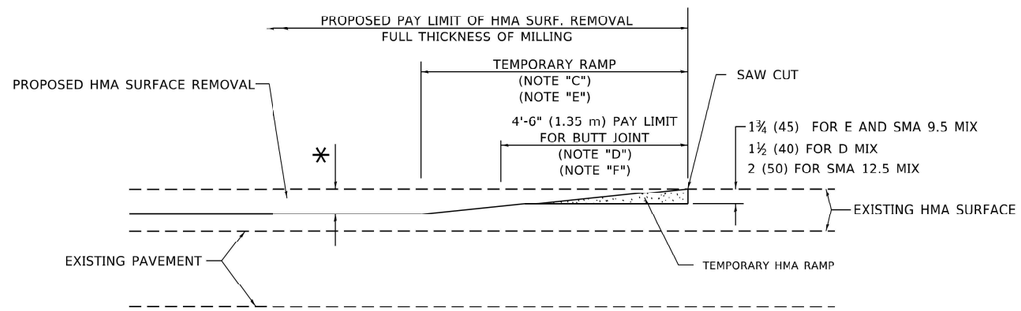

HMA CONSTRUCTED TEMPORARY RAMP

(FOR BUTT JOINT AND HMA TAPER SEE DETAIL BELOW)

OPTION 2

TYPICAL TEMPORARY RAMP

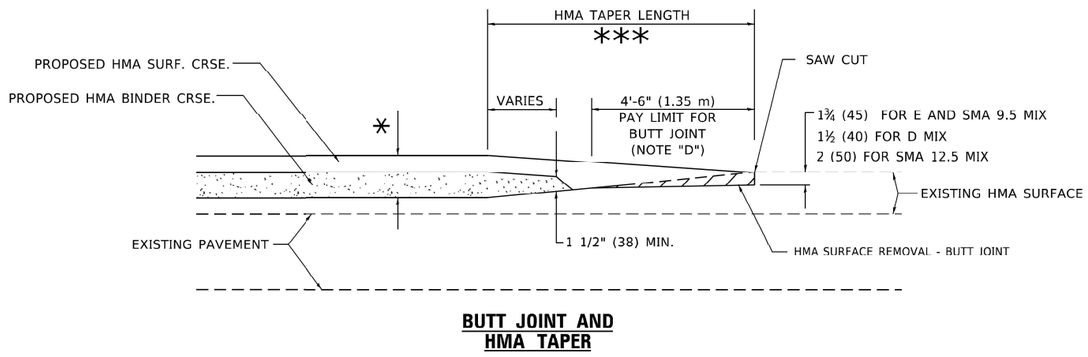

BUTT JOINT AND HMA TAPER

TYPICAL BUTT JOINT AND HMA TAPER FOR MILLING AND RESURFACING

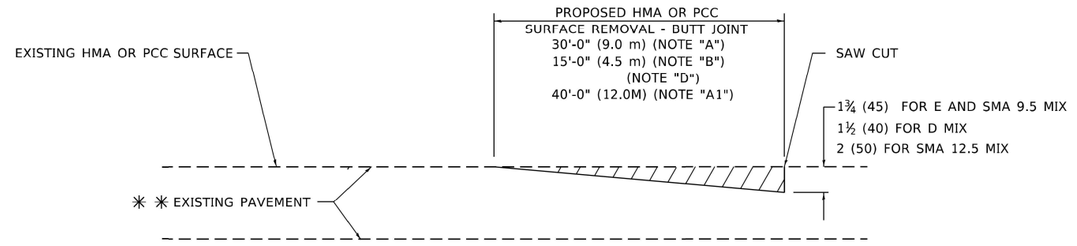

BUTT JOINT DETAIL

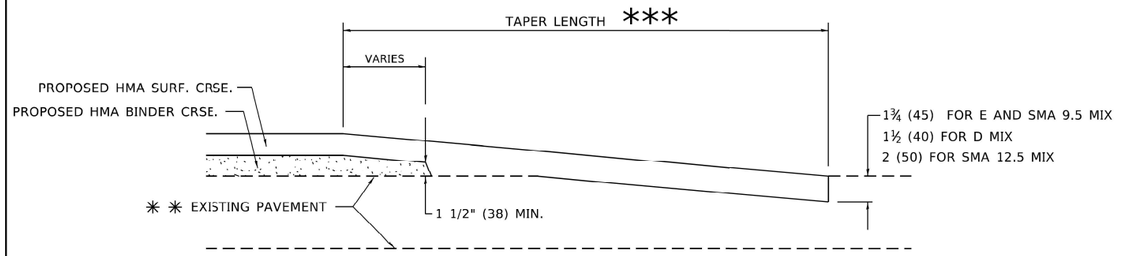

HMA TAPER DETAIL

TYPICAL BUTT JOINT AND HMA TAPER FOR RESURFACING ONLY

** PC CONCRETE, HMA OR HMA RESURFACED PAVEMENT.

GENERAL NOTES

A. MAINLINE ARTERIAL ROADWAYS AND MAJOR SIDE ROADS.

A1. INTERSTATES

B. MINOR SIDE ROADS.

C. THE TEMP. RAMP SHALL BE CONSTRUCTED IMMEDIATELY UPON REMOVAL OF THE EXISTING HMA SURFACE.

D. THE BUTT JOINT SHALL BE CONSTRUCTED IMMEDIATELY PRIOR TO PLACING THE PROPOSED HMA COURSES.

E. TAPER THE TEMP. RAMP AT A RATE OF 3' - 4" (1.02m) PER 1 INCH (25 mm) OF MILLING THICKNESS.
* SEE TYPICAL SECTIONS FOR MILLING THICKNESS.

F. SEE ARTICLE 406.08 AND 406.14 OF THE STANDARD SPECIFICATIONS FOR "HMA AND/OR PCC SURFACE REMOVAL, BUTT JOINT".

*** 20'-0" (6.: m) PER 1 (25) RESURFACING (NOTE "A")
10'-0" (3.0 m) PER 1 (25) RESURFACING (NOTE "B")

BASIS OF PAYMENT

1. THE BUTT JOINT WILL BE PAID FOR AT THE CONTRACT UNIT PRICE PER SQUARE YARD (SQUARE METER) FOR "HOT-MIX ASPHALT SURFACE REMOVAL - BUTT JOINT" OR FOR "PORTLAND CEMENT CONCRETE SURFACE REMOVAL- BUTT JOINT".

2. THE TEMPORARY RAMP AND SAW CUT SHALL BE INCLUDED IN THE UNIT COST FOR HMA OR PCC SURFACE REMOVAL-BUTT JOINT.

ALL DIMENSIONS ARE IN INCHES (MILLIMETERS) UNLESS OTHERWISE SHOWN.

MODEL: Default
FILE NAME: pw:\\dot-pw.bentley.com:PWIDOT\Documents\IDOT Offices\District 1\Projects\Dist5\d22x34\CADData\CADsheets\sd32.dgn

USER NAME = Lawrence.DeManche	DESIGNED - M. DE YONG	REVISED - A. ABBAS 03-21-97	
	DRAWN -	REVISED - M. GOMEZ 04-26-01	
PLOT SCALE = 100.0000 ' / in.	CHECKED -	REVISED - R. BORO 01-01-07	
PLOT DATE = 11/18/2022	DATE - 06-13-90	REVISED - K. SMITH 11-18-22	

STATE OF ILLINOIS
DEPARTMENT OF TRANSPORTATION

BUTT JOINT AND HMA TAPER DETAILS

SCALE: NONE | SHEET 1 OF 1 SHEETS | STA. | TO STA.

F.A.I RTE.	SECTION	COUNTY	TOTAL SHEETS	SHEET NO.
290	2019-191-B-R	COOK	265	234
	BD400-05 BD-32	CONTRACT NO. 62K64		
	ILLINOIS FED. AID PROJECT			

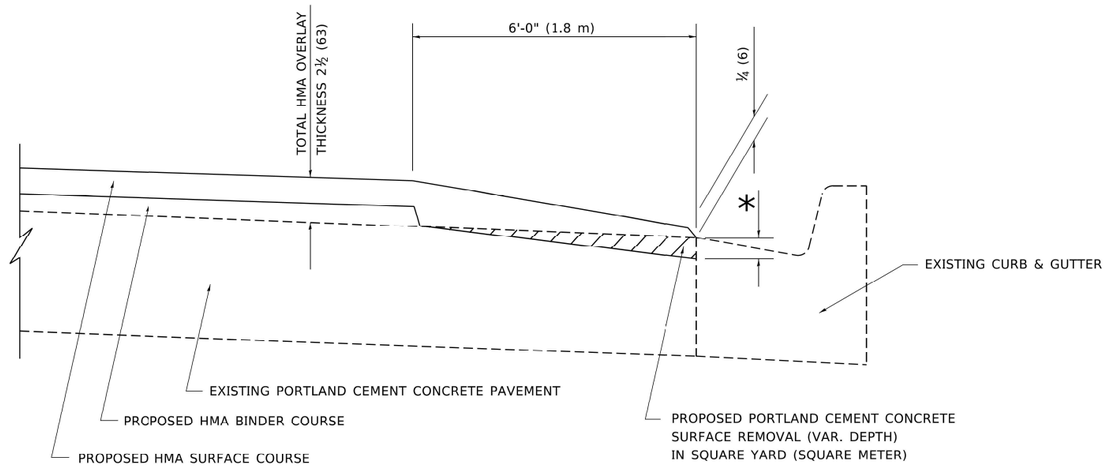

HMA TAPER AT
EDGE OF PCC PAVEMENT

HMA SURFACE COURSE		HMA BINDER COURSE	
MIX	THICKNESS	THICKNESS	* MILLING AT GUTTER FLAG
D	1½ (38)	1 (25)	1¼ (33)
E OR SMA 9.5	1¾ (44)	¾ (19)	1½ (38)

ALL DIMENSIONS ARE IN INCHES (MILLIMETERS) UNLESS OTHERWISE SHOWN.

MODEL: Default
FILE NAME: pw:\\dot-pw.bentley.com:PWIDOT\Documents\IDOT Offices\District 1\Projects\DistStd22x34(CAD)data\CADsheets\bd33.dgn

USER NAME = Shawn.Ley	DESIGNED - R. SHAH	REVISED - E. GOMEZ 12-21-00	
	DRAWN - JIS	REVISED - R. BORO 01-01-07	
PLOT SCALE = 50.0000 ' / in.	CHECKED - A. ABBAS	REVISED - JP CHANG 07-08-16	
PLOT DATE = 1/23/2023	DATE - 09-10-94	REVISED - K. SMITH 11-18-22	

STATE OF ILLINOIS
DEPARTMENT OF TRANSPORTATION

HMA TAPER AT
EDGE OF P.C.C. PAVEMENT

SCALE: NONE | SHEET 1 OF 1 SHEETS | STA. | TO STA.

F.A.I RTE.	SECTION	COUNTY	TOTAL SHEETS	SHEET NO.
290	2019-191-B-R	COOK	265	235
	BD400-06 BD-33	CONTRACT NO. 62K64		
	ILLINOIS FED. AID PROJECT			

bd33.dgn 1/23/2023 6:38:32 AM User=Shawn.Ley

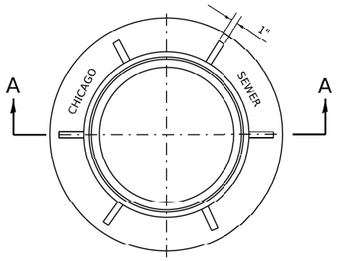

PLAN

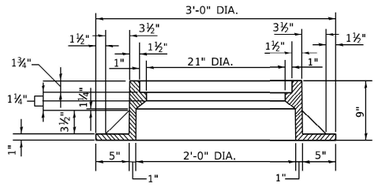

SECTION A–A

NOTE: METAL PLATES MUST BE FURNISHED FOR PERFORATED LIDS ON MANHOLES.

HEAVYWEIGHT MANHOLE FRAME

MATERIAL: CAST IRON

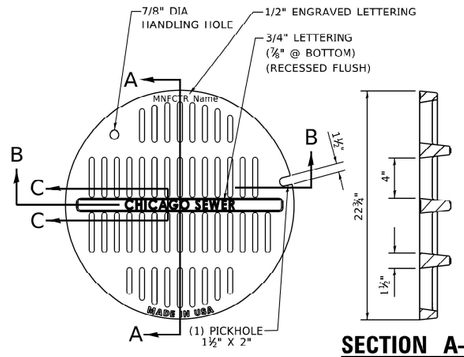

SECTION A–A

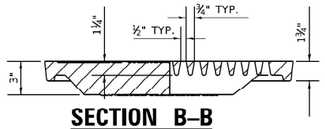

SECTION B–B

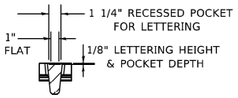

SECTION C–C

MATERIALS
GRATE-GRAY IRON
ASTM A48 CL35B

DESIGN LOAD
HEAVY DUTY

COATING
UNDIPPED

OPEN AREA
85.6 SQ. IN.

STANDARD CB / MH LID

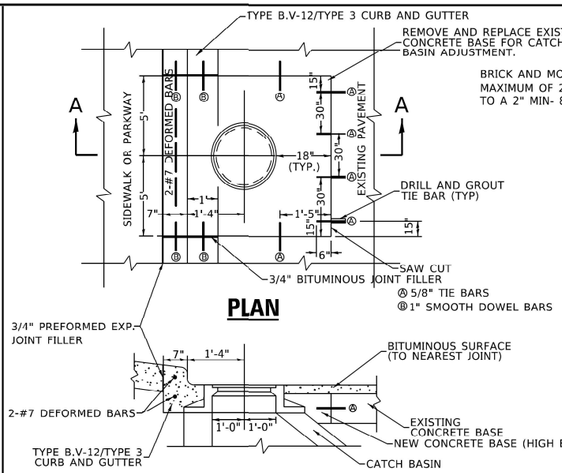

PLAN

SECTION A–A

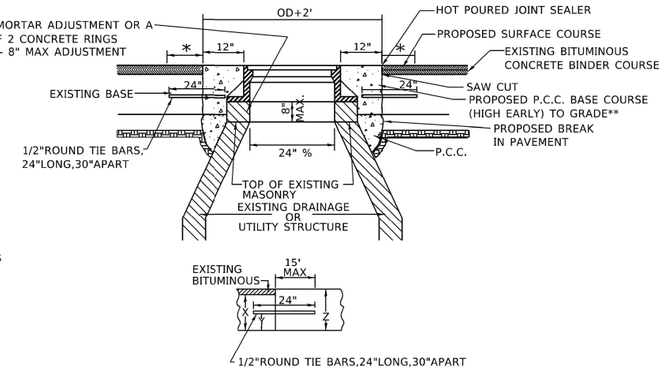

SEE CONSTRUCTION DETAILS (FOR MISCELLANEOUS STRUCTURES)
X = THICKNESS OF PAVEMENT
Y = ONE HALF THE THICKNESS OF CONCRETE PAVEMENT OR CONCRETE BASE.
Z = 10" OR THICKNESS OF PROPOSED PAVEMENT - WHICHEVER IS GREATER

NOTES:

IF THE ADJUSTMENT EXCEEDS AN 8" HEIGHT, THE CONE MUST BE REMOVED AND THE BARREL SECTION MUST BE ADJUSTED.

THE CONTRACTOR IS REQUIRED TO REPLACE ANY BROKEN FRAMES AND LIDS OF SEWER STRUCTURES WITH STANDARD FRAMES AND LIDS OF THE DWM. IN ADJUSTMENT OR RECONSTRUCTION OF SEWER STRUCTURES, ANY NON-STANDARD FRAMES AND LIDS MUST BE REPLACED WITH STANDARD FRAMES AND LIDS. IN ADJUSTMENT OR RECONSTRUCTION OF INLETS, ANY NON-STANDARD INLETS (GUTTER BOXES) MUST BE REPLACED WITH DWM STANDARD INLETS.

THE FRAMES AND LIDS OF SEWER STRUCTURES TO BE ABANDONED, REMOVED, OR FILLED MUST BE SALVAGED AND THE DWM NOTIFIED FOR PICK UP.

MANHOLES, CATCH BASINS AND INLETS MUST BE PROTECTED FROM THE ENTRY OF ASPHALT/DEBRIS INTO THE SEWER SYSTEM DURING CONSTRUCTION. THE CONTRACTOR MUST MARK LOCATIONS OF ALL SEWER STRUCTURES ON THE SIDEWALK BEFORE STARTING PAVEMENT REMOVAL/REPLACEMENT. ADJUSTMENT OF FRAMES AND LIDS OF SEWER STRUCTURES MUST BE COMPLETED PRIOR TO STREET RESURFACING.

∗ REFER TO CDOT FOR ASPHAULT RESTORATION EWQUIRE MENRS & CRACK SEAL.

∗∗ON NON-MORATORIUM STREETS, FULL DEPTH, PCC BASE COURSE MAY BE UTILIZED. ON MORATORIUM STREETS, PAVEMENT RESTORATION SHALL ADORE TO CDOT REQUIREDMWNTS.

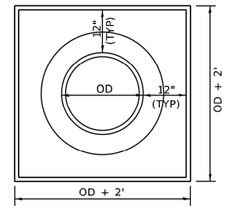

PLAN VIEW
(BASE TO GRADE)

DETAIL OF FRAME ADJUSTMENT

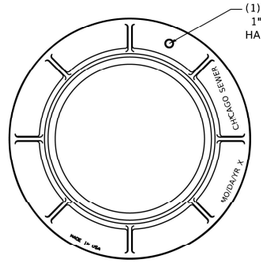

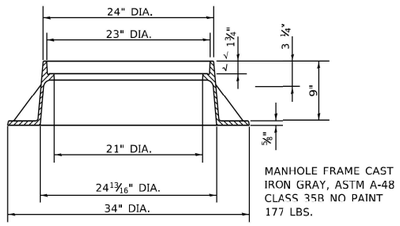

LIGHTWEIGHT MANHOLE FRAME

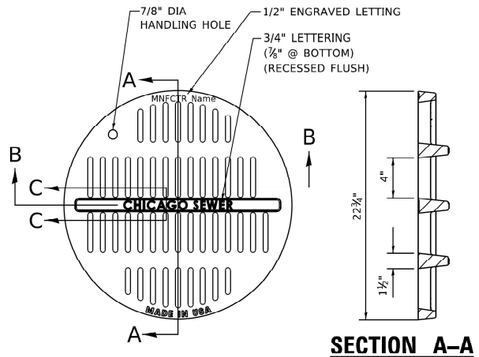

SECTION A–A

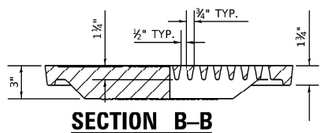

SECTION B–B

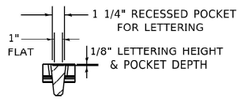

SECTION C–C

ADA COMPLIANT CATCH BASIN / MANHOLE LID

NOTE:
NOT TO BE USED WITHOUT
PRIOR APPROVAL OF CDWM

MATERIALS
GRATE-GRAY IRON
ASTM A48 CL35B

DESIGN LOAD
HEAVY DUTY

COATING
UNDIPPED

OPEN AREA
85.6 SQ. IN.

SOLID LID FOR MANHOLES

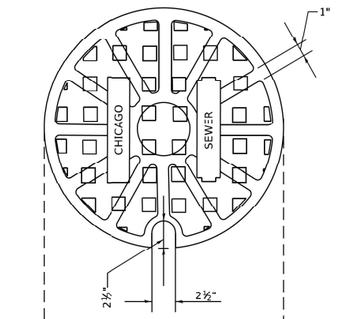

PLAN

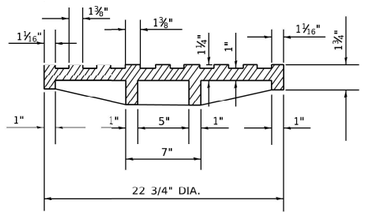

SECTION

USER NAME = Lawrence.DeManche	DESIGNED - M. GOMEZ	REVISED - K. SMITH 11-18-22	
	DRAWN -	REVISED -	
PLOT SCALE = 100.0000 ' / in.	CHECKED -	REVISED -	
PLOT DATE = 11/18/2022	DATE - 01-25-01	REVISED -	

STATE OF ILLINOIS
DEPARTMENT OF TRANSPORTATION

CITY OF CHICAGO
MANHOLE LIDS AND FRAMES

SCALE: NONE | SHEET 1 OF 1 SHEETS | STA. | TO STA.

F.A.I RTE.	SECTION	COUNTY	TOTAL SHEETS	SHEET NO.
290	2019-191-B-R	COOK	265	236
	BD600–13 (BD–47)	CONTRACT NO. 62K64		
	ILLINOIS	FED. AID PROJECT		

MODEL: Default
FILE NAME: pw:\\fdot-pw.bentley.com:PWIDOT Documents\IDOT Offices\District 1\Projects\Districts\Std22x34in\D\Data\CADsheets\bd447.dgn

STANDARD DRAINAGE STRUCTURES FOR PUBLIC STREETS

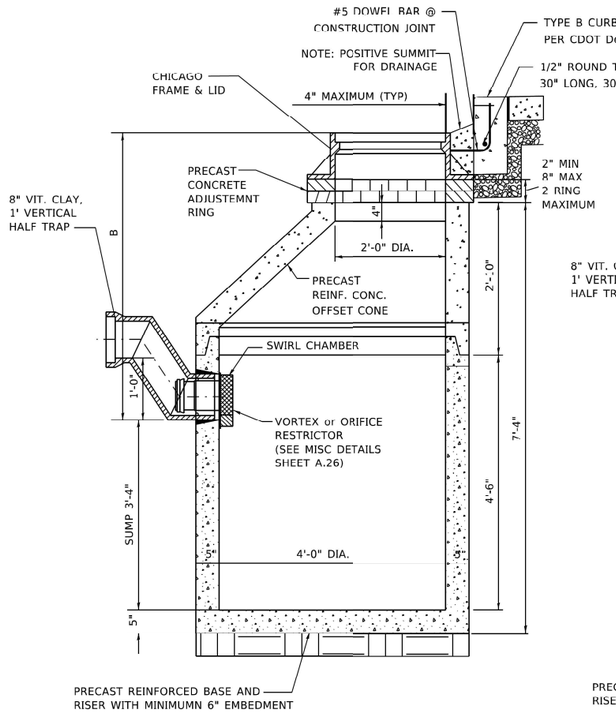

STANDARD CATCH BASIN–4' DIA.

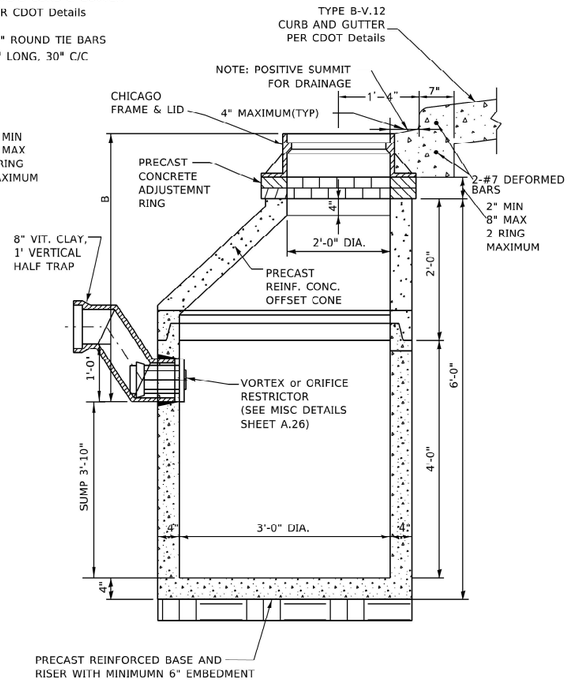

STANDARD CATCH BASIN–3' DIA.

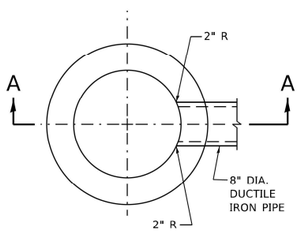

PLAN

(FRAME & LID NOT SHOWN)

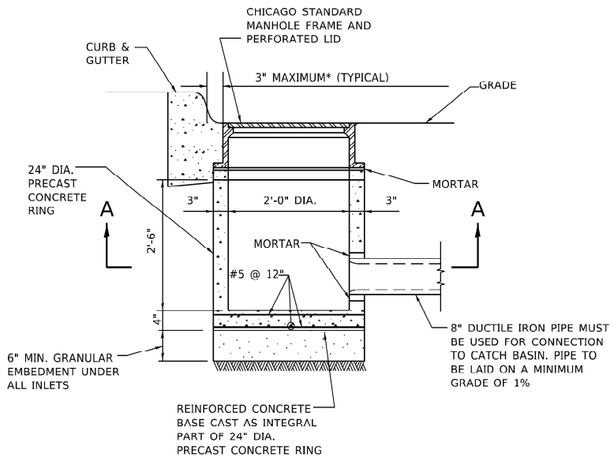

STANDARD INLET–2' DIA.

STANDARD DRAINAGE STRUCTURES FOR PUBLIC ALLEYS

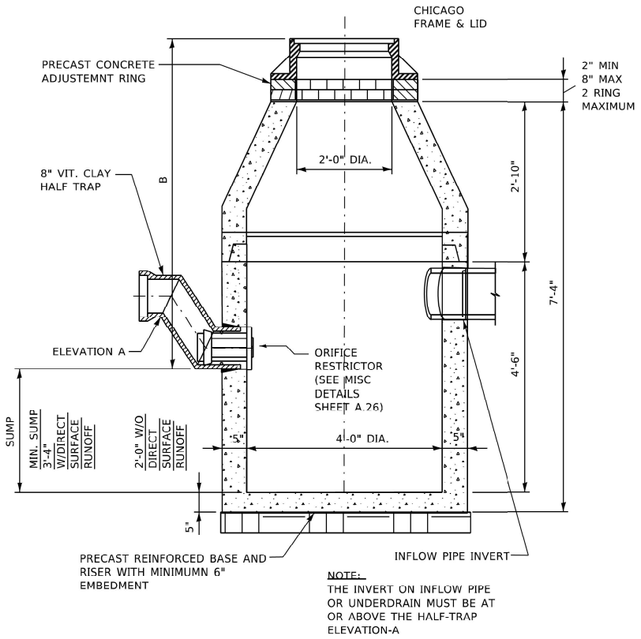

NOTE:
THE INVERT ON INFLOW PIPE OR UNDERDRAIN MUST BE AT OR ABOVE THE HALF-TRAP ELEVATION-A

CATCH BASIN–ORIFICE RESTRICTOR

N.T.S.

GENERAL NOTES:

1. CATCH BASIN TO CATCH BASIN CONNECTIONS ARE ALLOWED IN PRIVATE SITES & ALLEYS. ONLY THE DOWNSTREAM CATCH BASIN IS REQUIRED TO HAVE A HALF-TRAP.

2. IF B < 4 FEET, THEN USE A FLAT TOP SLAB CATCH BASIN AS NECESSARY.

3. FOR TRENCH BACKFILL, REFER TO IDOT SSRBC, ARTICLE 1003.04.

4. FOR GRANULAR EMBEDMENT, USE CA-11, CRUSHED GRAVEL, CRUSHED STONE, OR CRUSHED CONCRETE.

5. FOR STABILIZATION STONE, 12" OF CA-1 STONE IS ONLY REQUIRED WHEN UNSTABLE MATERIAL IS ENCOUNTERED AT TRENCH BOTTOM.

6. INLETS AND 3' DIAMETER CATCH BASINS ARE TO BE USED ONLY WITH PRIOR APPROVAL OF THE DEPT OF WATER MANAGEMENT- ENGINEERING SERVICES, SEWER SECTION, AND THE DEPT. OF BUILDINGS STORMWATER REVIEWER.

7. IF COVER OVER VCP IS LESS THAN 3', USE 45 DEGREE DIP BENDS WITH 1 FOOT DROP AS HALF TRAPS AS NEEDED FOR IEPA CLEARANCE REQUIREMENTS

MODEL: Default
FILE NAME: pw:\\Illdot-pw.bentley.com:PWIDOT\Documents\IDOT Offices\District 1\Project\1Dist\Std22x34\CADD\stra\CADsheets\std47.dgn

USER NAME = Lawrence.DeManche	DESIGNED - M. GOMEZ	REVISED - K. SMITH 11-18-22	**STATE OF ILLINOIS DEPARTMENT OF TRANSPORTATION**	**CITY OF CHICAGO DRAINAGE STRUCTURE DETAILS**	
	DRAWN -	REVISED -			
PLOT SCALE = 100.0000 ' / in.	CHECKED -	REVISED -		SCALE: NONE	SHEET 1 OF 1 SHEETS STA. TO STA.
PLOT DATE = 11/18/2022	DATE - 01-25-01	REVISED -			

F.A.I RTE.	SECTION	COUNTY	TOTAL SHEETS	SHEET NO.
290	2019-191-B-R	COOK	265	237
	BD600–13 (BD–47)	CONTRACT NO. 62K64		
	ILLINOIS	FED. AID PROJECT		

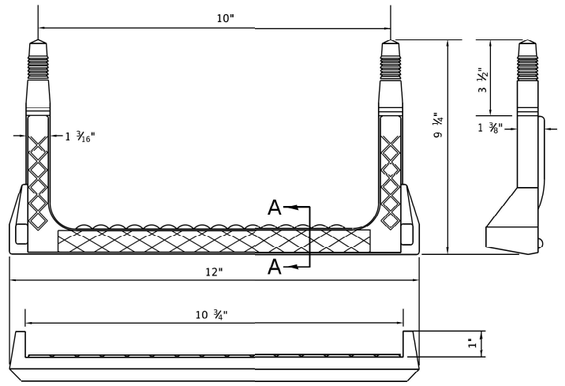

COPOLYMER POLYPROPYLENE PLASTIC

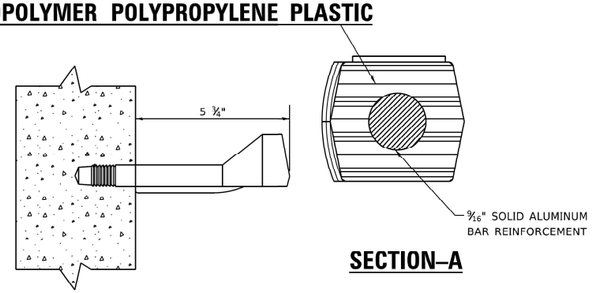

SECTION–A

RECTANGULAR STEP LADDER RUNG

FOR USE ONLY IN 48" DIAMETER
AND LARGER MANHOLES.

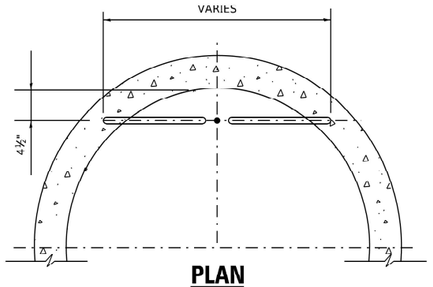

PLAN

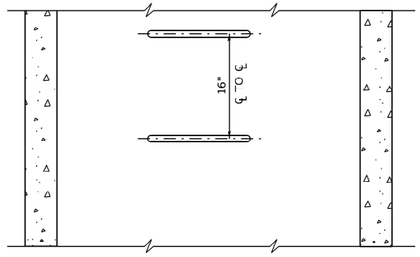

ELEVATION TYPE X RISER

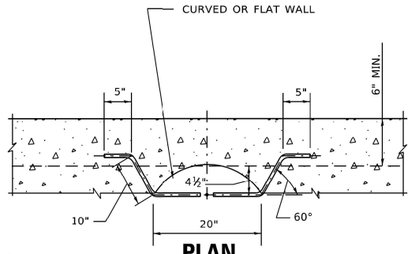

PLAN

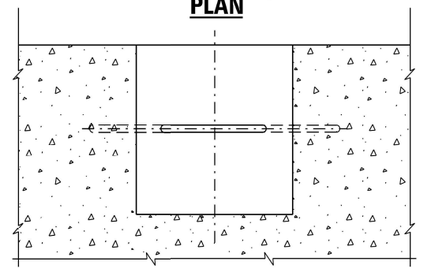

ELEVATION TYPE Y BASE

NOTES:

1. VERTICAL SPACING = 16" O.C., ON VERTICAL WALL ONLY.
2. STEPS SHALL MEET THE REQUIREMENTS OF ASTM C478 IN ADDITION TO A HORIZONTAL PULL-OUT LOAD OF 1000 LBS. WHEN INSTALLED.
3. ALL STEPS SHALL BE VERTICALLY ALIGNED IN A STRAIGHT LINE.
4. MINIMUM CONCRETE STRENGTH MUST BE 3000 PSI
5. HOLES- PREFORMED/DRILLED
   A. HOLES MUST BE PARALLEL
   B. HOLES MUST BE 10" CENTERED, 1" DIAMETER
   C. MINIMUM DEPTH- 3 1/2" TO 3 3/4"

MODEL: Default
FILE NAME: pw:\\dot-pw.bentley.com:PWIDOT\Documents\IDOT Offices\District 1\Projects\Dist\Std22x34\CADData\CADSheets\std47.dgn

USER NAME = Lawrence.DeManche	DESIGNED - M. GOMEZ	REVISED - K. SMITH 11-18-22	
	DRAWN -	REVISED -	
PLOT SCALE = 100.0000 ' / in.	CHECKED -	REVISED -	
PLOT DATE = 11/18/2022	DATE - 01-25-01	REVISED -	

STATE OF ILLINOIS
DEPARTMENT OF TRANSPORTATION

CITY OF CHICAGO
LADDER RUNGS

SCALE: NONE | SHEET 1 OF 1 SHEETS | STA. | TO STA.

F.A. RTE.	SECTION	COUNTY	TOTAL SHEETS	SHEET NO.
290	2019-191-B-R	COOK	265	238
	BD600–13 (BD–47)	CONTRACT NO. 62K64		
	ILLINOIS FED. AID PROJECT			

DRAINAGE STRUCTURES
RESTRICTORS

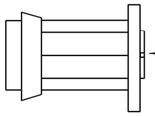

INSERT THE RESTRICTOR INTO THE HALF-TRAP. UPON TIGHTENING OF THE CENTER NUT ON THE FACE OF THE RESTRICTOR, THE RUBBER O-RINGS WILL EXPAND INSIDE THE HALF TRAP, PROVIDING A WATER- TIGHT SEAL.
PULL ON RESTRICTOR TO VERIFY THAT A TIGHT FIT IS MADE.

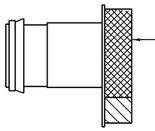

PULL ON RESTRICTOR TO VERIFY THAT A TIGHT FIT IS MADE.

INSERT THE RESTRICTOR WITH THE OPENING DOWN. UPON TIGHTENING OF THE 2 BOLTS ON THE FACE OF THE RESTRICTOR, THE RUBBER O-RINGS WILL PROVIDE A WATER-TIGHT SEAL.

GENERAL NOTES:

1. CATCH BASIN TO CATCH BASIN CONNECTIONS ARE ALLOWED IN PRIVATE SITES & ALLEYS. ONLY THE DOWNSTREAM CATCH BASIN IS REQUIRED TO HAVE A HALF-TRAP.

2. IF B < 4 FEET, THEN USE A DUCTILE IRON PIPE HALF TRAP AND FLAT TOP SLAB CATCH BASIN AS NECESSARY.

3. INLETS AND 3' DIAMETER CATCH BASINS ARE TO BE USED ONLY WITH PRIOR APPROVAL OF DWM FIELD INSPECTOR.

RESTRICTOR NOTES:

THE DWM'S RAIN BLOCKER RESTRICTOR PROGRAM MUST BE MAINTAINED WITH ANY ROADWAY IMPROVEMENT.

THE DESIGN OF ANY ROADWAY IMPROVEMENT MUST CONSIDER LIMITING THE NUMBER OF CATCH BASINS TO THE EXTENT PRACTICAL. THE NUMBER OF EXISTING STRUCTURES SHOULD NOT BE INCREASED.

THE RESTRICTORS CAN BE OBTAINED FROM DWM CENTRAL DISTRICT AT 3901 S. ASHLAND AVE. THE CONTRACTOR SHOULD ARRANGE FOR PICK UP BY CONTACTING 312-747-8736 (7AM TO 3PM, M-F). CONTRACTOR MUST CALL 48 HOURS IN ADVANCE OF PICK UP DATE AND TIME.

FLOW RESTRICTORS MUST BE INSTALLED IN ALL CATCH BASINS OUTSIDE OF THE CENTRAL BUSINESS DISTRICT(LIMITS: NORTH AVE, CERMAK AVE, HALSTED AVE, LAKE MICHIGAN). RESTRICTORS MUST NOT BE INSTALLED IN CATCH BASINS IN CLOSE PROXIMITY TO VIADUCT AREAS, BUS STOPS, OR EMERGENCY ENTRANCES. THE DWM MUST APPROVE THE NON-INSTALLATION OR REMOVAL OF ANY RESTRICTOR. REQUIREMENTS FOR RESTRICTOR INSTALLATION ARE AS FOLLOWS:

*ARTERIAL STREETS: 3-INCH ORIFICE RESTRICTOR
*BUS ROUTES: 3-INCH ORIFICE RESTRICTOR
*RESIDENTIAL STREETS: 3-INCH VORTEX RESTRICTOR
*ALLEYS: 3-INCH ORIFICE RESTRICTOR IN THE LAST CB.
*CLOSED LIDS ARE REQUIRED ON ALL MANHOLES EXCEPT AT INTERSECTIONS WHERE A PERFORATED LID SHALL BE USED.

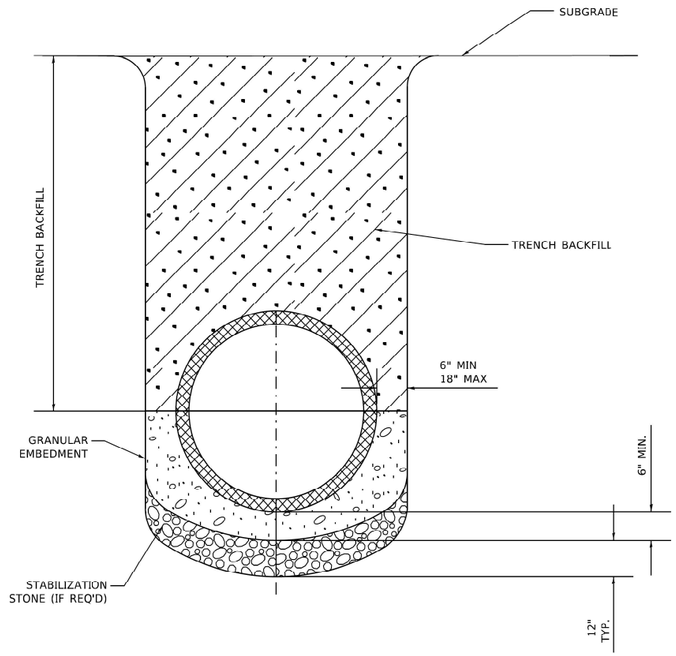

NOTE:
1. FOR TRENCH BACKFILL, REFER TO IDOT SSRBC, ARTICLE 1003.04.

2. FOR GRANULAR EMBEDMENT, USE CA-11, CRUSHED GRAVEL, CRUSHED STONE, OR CRUSHED CONCRETE.

3. FOR STABILIZATION STONE, 12" OF CA-1 STONE IS ONLY REQUIRED WHEN UNSTABLE MATERIAL IS ENCOUNTERED AT TRENCH BOTTOM.

4. AGGREGATE PLACED FOR TEMPORARY SURFACE RESTORATION WILL NOT BE PAID SEPARATELY AND SHALL BE INCIDENTAL TO THE CONTRACT.

SEWER TRENCH DETAIL

NOTE:
PLUG TO BE COATED WITH MORTAR AND DRIVEN INTO PLACE WITH A WOODEN MALLET AND THEN SEALED WITH MORTAR.

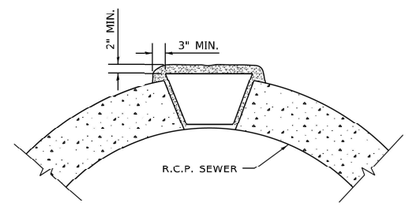

LIFTING HOLE PLUG DETAIL
FOR CONCRETE PIPE

NOTE:
1. ALL PLUG MATERIALS MUST COMPLY WITH 1042.16 OF THE IDOT SSRBC.

2. LIFT HOLES ON COMBINED SEWERS ARE PROHIBITED WHEN THE WATER TABLE IS WITHIN 2 FEET OF THE PIPE INVERT, OR IF THE PIPE IS FULLY SUBMERGED UNDER NORMAL CONDITIONS.

MODEL: Default
FILE NAME: pw:\\dot-pw.bentley.com:PWIDOT Documents\IDOT Offices\District 1\Projects\Das\Std 22x34\CAD\Data\CADsheets\bd47.dgn

USER NAME = Lawrence.DeManche	DESIGNED - M. GOMEZ	REVISED - K. SMITH 11-18-22	
	DRAWN -	REVISED -	
PLOT SCALE = 100.0000 ' / in.	CHECKED -	REVISED -	
PLOT DATE = 11/18/2022	DATE - 01-25-01	REVISED -	

STATE OF ILLINOIS
DEPARTMENT OF TRANSPORTATION

CITY OF CHICAGO
MISCELLANEOUS DETAILS

SCALE: NONE | SHEET 1 OF 1 SHEETS | STA. | TO STA.

F.A.I RTE.	SECTION	COUNTY	TOTAL SHEETS	SHEET NO.
290	2019-191-B-R	COOK	265	239
	BD600-13 (BD-47)	CONTRACT NO. 62K64		
	ILLINOIS FED. AID PROJECT			

STRAIGHT DETECTABLE WARNING UNITS

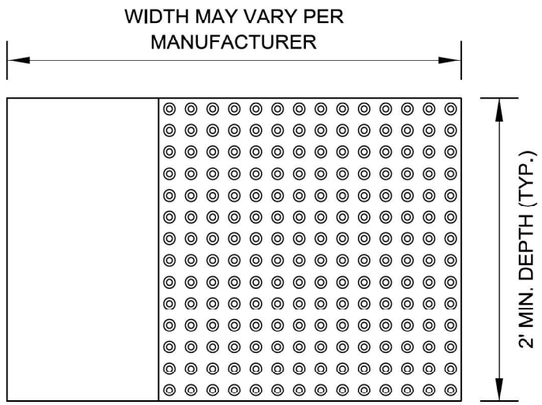

RADIAL DETECTABLE WARNING UNITS

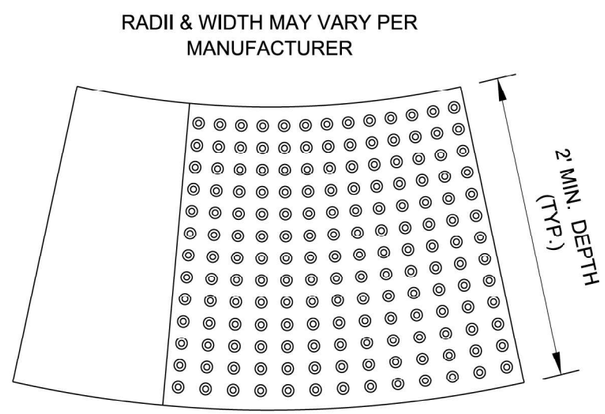

DETECTABLE WARNING UNIT SIZES

- VERIFY ALL DIMENSIONS WITH THE PRODUCT MANUFACTURER.
- IF USING RADIAL UNITS, VERIFY THAT THE CURB RADIUS MATCHES AVAILABLE UNIT RADII WITH THE PRODUCT MANUFACTURER.

GENERAL NOTE:
THE ROWS OF DOMES IN THE DETECTABLE WARNING MATERIAL MUST BE ALIGNED WITH THE PATH OF WHEELCHAIR TRAVEL WHICH IS REQUIRED TO BE PERPENDICULAR TO THE GRADE BREAK AT THE BOTTOM OF THE RAMP TO PERMIT TRACKING BETWEEN DOME ROWS. ON BLENDED TRANSITIONS OR FLUSH TRANSITIONS, WHERE RADIAL UNITS ARE SITUATED ABOUT THE CURB RADIUS, DOME ORIENTATION IS NOT SIGNIFICANT.

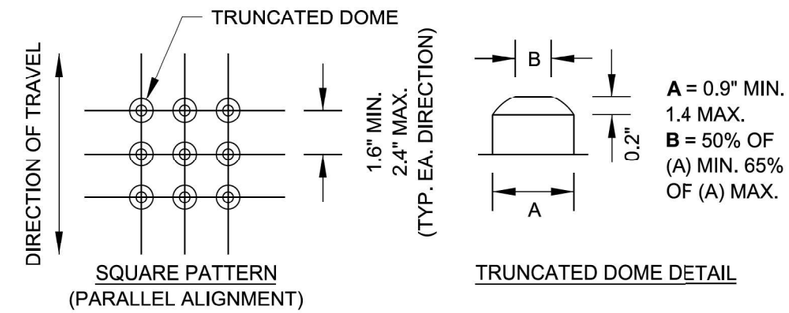

SQUARE PATTERN
(PARALLEL ALIGNMENT)

TRUNCATED DOME DETAIL

UNIT PATTERN & DOME DETAIL

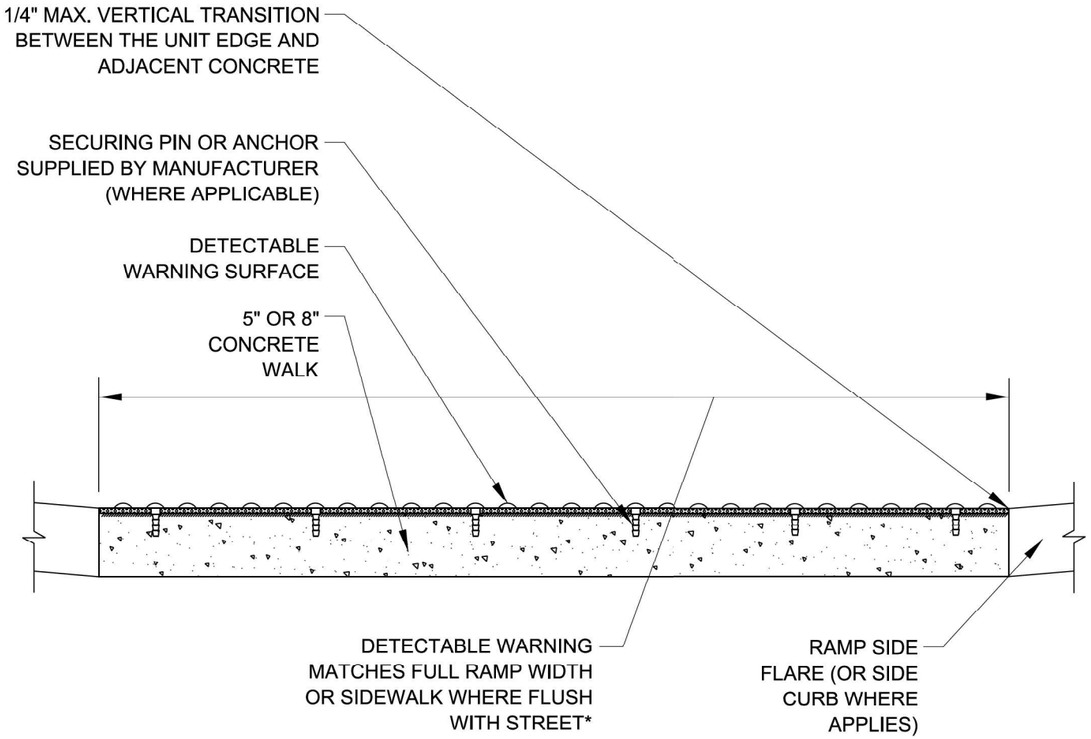

*A BORDER OF 2 INCHES OR LESS AROUND THE DETECTABLE WARNING SURFACE IS ACCEPTABLE IF REQUIRED FOR PROPER INSTALLATION OF THE DETECTABLE WARNING SURFACE PRODUCT

DETECTABLE WARNING UNIT SECTION

MODEL: Default
FILE NAME: pw:\\plantroom.dot.illinois.gov:PWIDOT\Documents\IDOT Offices\District 1\Projects\Dis:Std22x34\CADData\CADsheets\bd58.dgn

USER NAME = footemj	DESIGNED -	REVISED -	STATE OF ILLINOIS DEPARTMENT OF TRANSPORTATION
	DRAWN -	REVISED -	
PLOT SCALE = 50.0000 ' / in.	CHECKED -	REVISED -	
PLOT DATE = 10/8/2019	DATE - 06-20-2017	REVISED -	

CITY OF CHICAGO
DETECTABLE WARNINGS

SCALE: NONE | SHEET 1 OF 1 SHEETS | STA. | TO STA.

F.A.I RTE.	SECTION	COUNTY	TOTAL SHEETS	SHEET NO.
290	2019-191-B-R	COOK	265	240
	BD 58	CONTRACT NO. 62K64		
		ILLINOIS	FED. AID PROJECT	

bd58.dgn 10/8/2019 11:11:28 AM User=footemj

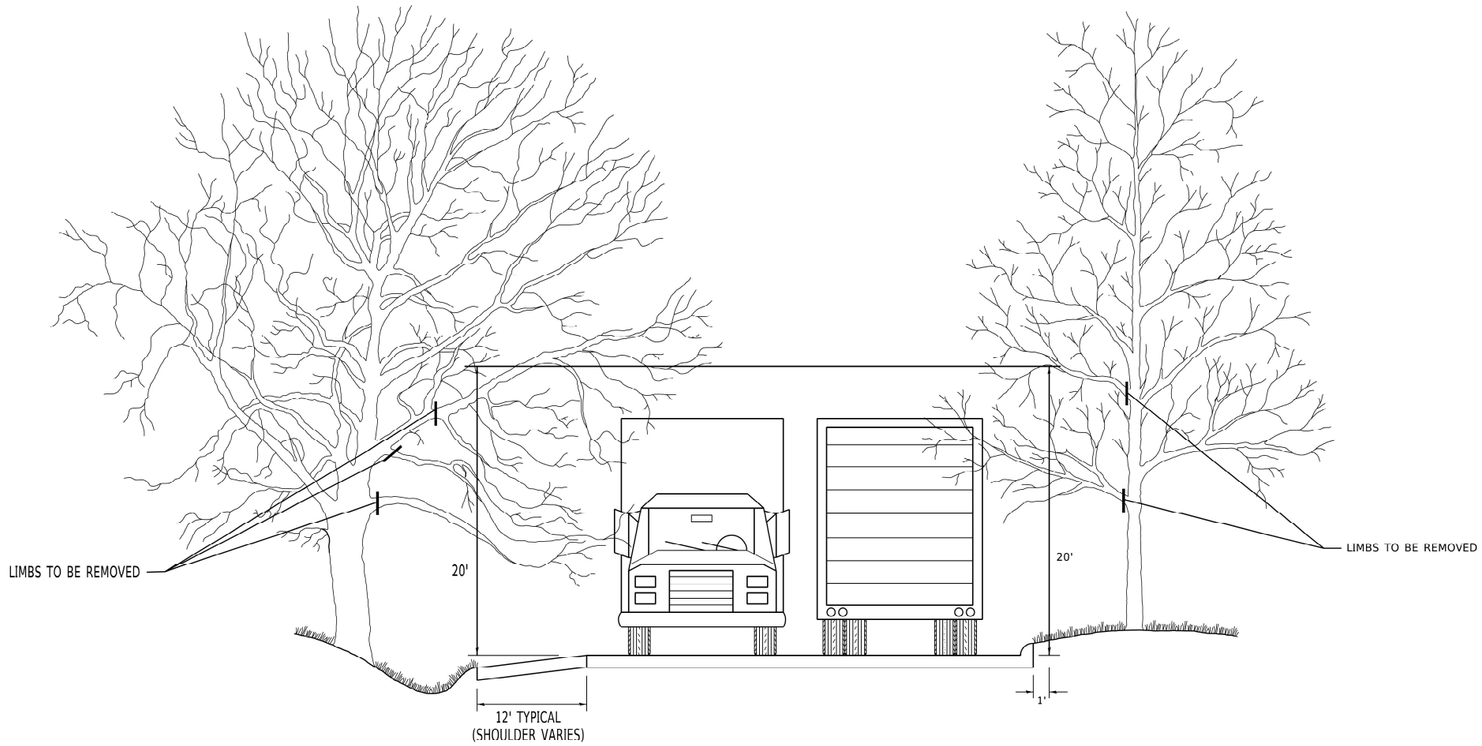

MODEL: Default
FILE NAME: pw:\\planroom.dot.illinois.gov:PWIDOTDocuments\IDOT Offices\District 1\Projects\Dist1Std22x34\CADData\CADsheets\bm20.dgn

USER NAME = footemj	DESIGNED -	REVISED - R. BORO 10-31-06	
	DRAWN -	REVISED -	
PLOT SCALE = 50.0000 ' / in.	CHECKED -	REVISED -	
PLOT DATE = 3/11/2019	DATE -	REVISED -	

STATE OF ILLINOIS
DEPARTMENT OF TRANSPORTATION

PRUNING FOR SAFETY AND EQUIPMENT CLEARANCE

SCALE: NONE | SHEET 1 OF 1 SHEETS | STA. | TO STA.

F.A.I RTE.	SECTION	COUNTY	TOTAL SHEETS	SHEET NO.
290	2019-191-B-R	COOK	265	241
	BM–20	CONTRACT NO. 62K64		
	ILLINOIS FED. AID PROJECT			

Bm20.dgn 3/11/2019 2:15:32 PM User=footemj

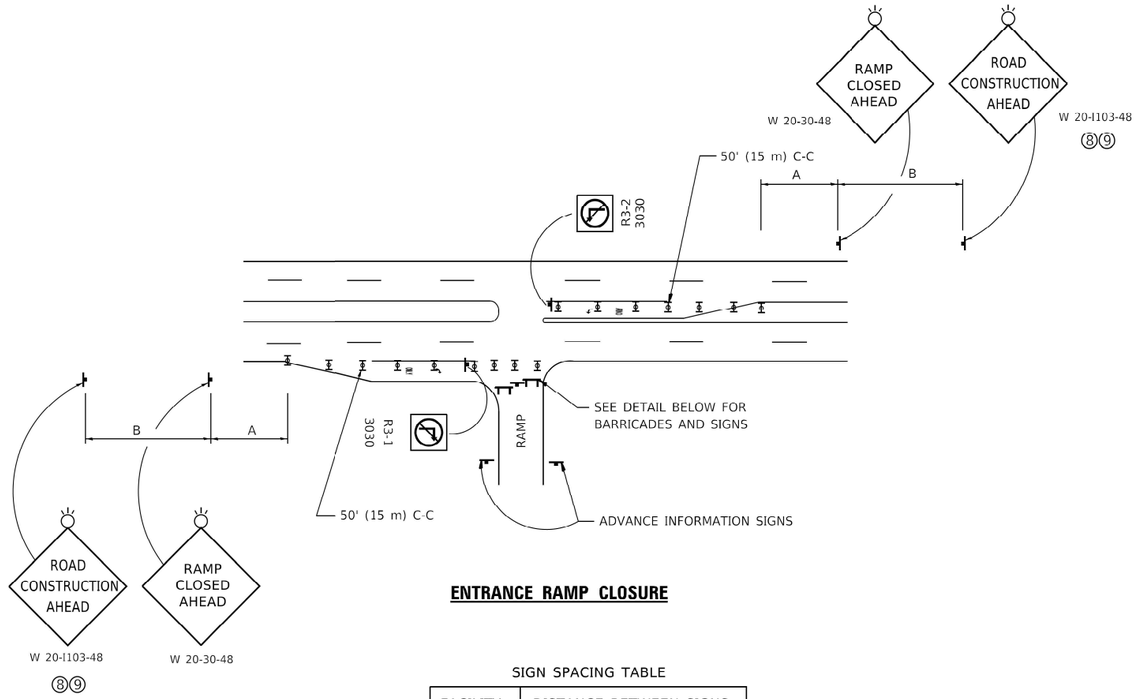

ENTRANCE RAMP CLOSURE

SIGN SPACING TABLE

FACILITY	DISTANCE BETWEEN SIGNS	
	A	B
EXPRESSWAY >24 HOURS	1000' (300 m)	1500' (450 m)
EXPRESSWAY ≤24 HOURS	500' (150 m)	500' (150 m)
ARTERIAL 55 MPH	500' (150 m)	500' (150 m)
ARTERIAL 50-45 MPH	350' (100 m)	350' (100 m)
ARTERIAL <45 MPH	200' (60 m)	200' (60 m)

DISTANCES MAY BE SHORTENED DEPENDING UPON THE PROXIMITY OF ADJACENT RAMPS OR INTERSECTIONS.

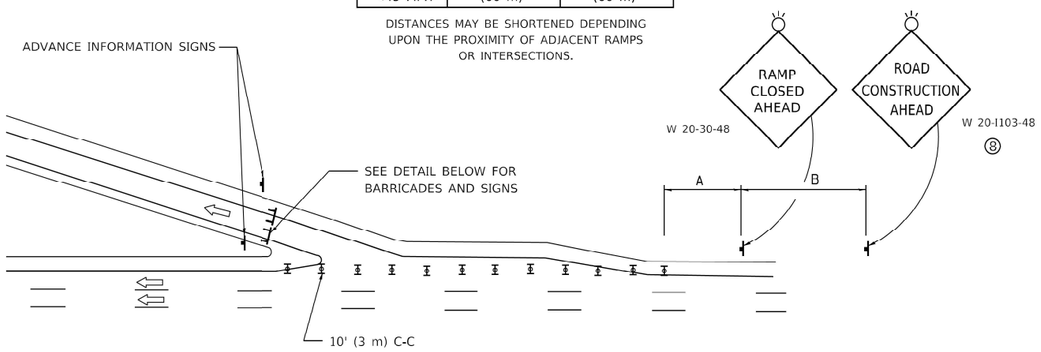

EXIT RAMP CLOSURE

SYMBOLS

TYPE II BARRICADE OR DRUM

TYPE III BARRICADE WITH 2 FLASHING LIGHTS

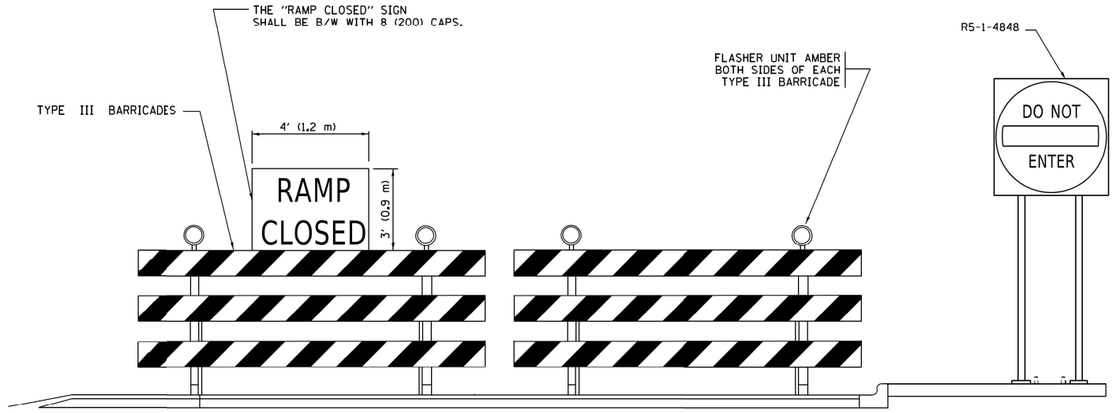

DETAIL FOR REQUIRED BARRICADES & SIGNS

RAMP CLOSURE ADVANCE WARNING SIGN

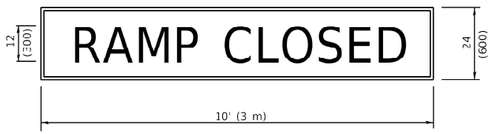

BLACK LEGEND ON ORANGE BACKGROUND MOUNTED DIAGONALLY
E MOD FONT
1 (25) BORDER
THESE SIGNS ARE REQUIRED ON ALL THE EXIT GUIDE SIGNS FOR EXIT RAMPS THAT WILL BE CLOSED FOR MORE THAN FOUR (4) CONSECUTIVE DAYS

RAMP CLOSURE ADVANCE INFORMATION SIGN

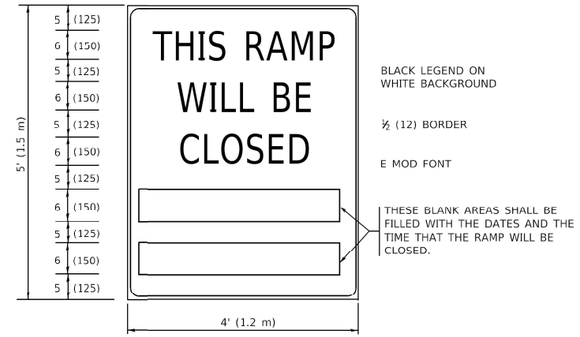

BLACK LEGEND ON WHITE BACKGROUND

½ (12) BORDER

E MOD FONT

THESE BLANK AREAS SHALL BE FILLED WITH THE DATES AND THE TIME THAT THE RAMP WILL BE CLOSED.

THESE SIGNS ARE REQUIRED ON BOTH SIDES OF THE RAMP, MINIMUM OF 1 WEEK IN ADVANCE OF THE CLOSURE.

THESE SIGNS SHALL BE FABRICATED AND PAID FOR ACCORDING TO THE TEMPORARY INFORMATION SIGNING SPECIAL PROVISION

GENERAL NOTES:

1. CONES MAY BE SUBSTITUTED FOR DRUMS OR TYPE II BARRICADES DURING DAY OPERATIONS. CONES SHALL BE A MINIMUM OF 28 (700) HIGH.
2. VERTICAL BARRICADES SHALL NOT BE USED FOR RAMP CLOSURES.
3. A FLAGGER SHALL BE POSITIONED AT EACH CLOSED RAMP THAT IS OPEN TO CONSTRUCTION VEHICLES, PRECEEDED BY A W20-7 FLAGGER WARNING SIGN.
4. ALL ROUTE MARKERS AND TRAILBLAZER ASSEMBLIES WHICH DIRECT MOTORISTS TO A CLOSED ENTRANCE RAMP SHALL BE COVERED WHEN THE RAMP IS CLOSED FOR MORE THAN FOUR (4) DAYS.
5. THE SIGNING AND BARRICADING WHICH IS REQUIRED BY THIS DETAIL SHALL BE INCLUDED IN THE COST OF TRAFFIC CONTROL AND PROTECTION (EXPRESSWAYS).
6. AUTHORIZATION FROM THE DISTRICT'S BUREAU OF TRAFFIC IS REQUIRED FOR ALL RAMP CLOSURES.
7. THE RAMP CLOSURE ADVANCE INFORMATION SIGNS SHALL BE ERECTED IF THE CLOSURE TIME EXCEEDS TWENTY-FOUR (24) HOURS. ADDITIONAL ADVANCE WARNING SIGNS ON EXIT GUIDE SIGNING WILL BE REQUIRED FOR EXIT RAMP CLOSURES THAT EXCEED FOUR (4) DAYS IN LENGTH
8. ROAD CONSTRUCTION AHEAD SIGNS MAY BE OMITTED WHEN THIS DETAIL IS USED IN CONJUNCTION WITH OTHER TRAFFIC CONTROL THAT ALREADY INCLUDES A ROAD CONSTRUCTION AHEAD SIGN.
9. ARTERIAL ROAD CONSTRUCTION AHEAD SIGNS SHALL BE INSTALLED ON THE LEFT SIDE OF TRAFFIC IF THE MEDIAN IS MORE THAN 10 FT WIDE.

ALL DIMENSIONS ARE IN INCHES (MILLIMETERS) UNLESS OTHERWISE SHOWN.

MODEL: Default
FILE NAME: pw:\\dot-pw.bentley.com:PWIDOT\Documents\IDOT Offices\District 1\Projects\Dist5\022x34\ICADData\CADSheets\tc08.dgn

USER NAME = Lawrence.DeManche	DESIGNED - D.W.S.	REVISED - S.P.B._12-09	**STATE OF ILLINOIS DEPARTMENT OF TRANSPORTATION**	**ENTRANCE_AND_EXIT_RAMP CLOSURE_DETAILS**		
	DRAWN -	REVISED - M.D._06-13				
PLOT SCALE = 100.0000 ' / in.	CHECKED -	REVISED - M.D._01-18				
PLOT DATE = 5/3/2024	DATE - 02-83	REVISED - D.S._05-24		SCALE: NONE	SHEET 1 OF 1 SHEETS	STA. TO STA.

F.A.I RTE.	SECTION	COUNTY	TOTAL SHEETS	SHEET NO.
290	2019-191-B-R	COOK	265	242
	TC-08	CONTRACT NO. 62K64		
	ILLINOIS FED. AID PROJECT			

SINGLE LANE WEAVE

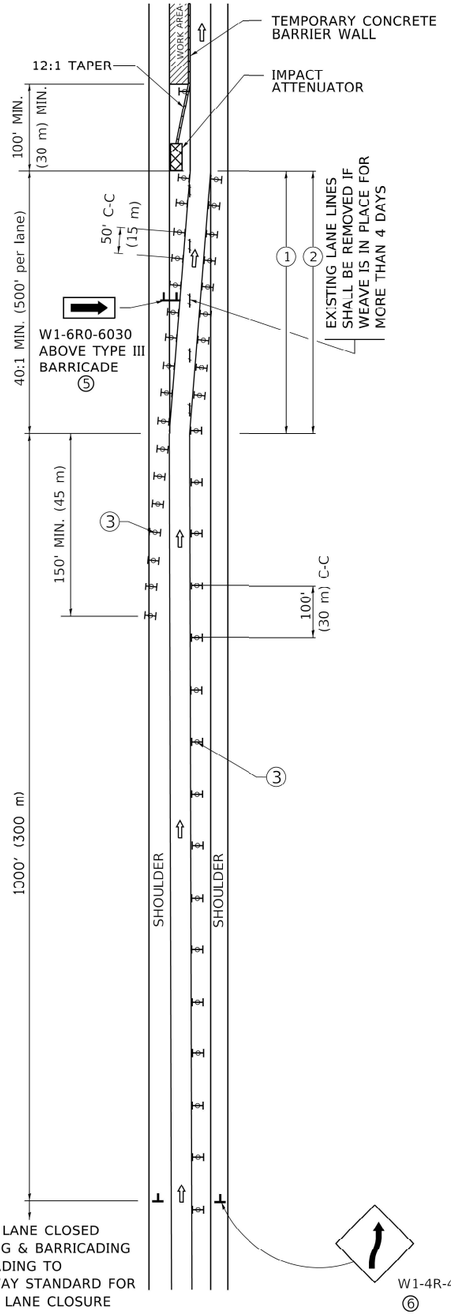

MULTI–LANE WEAVE

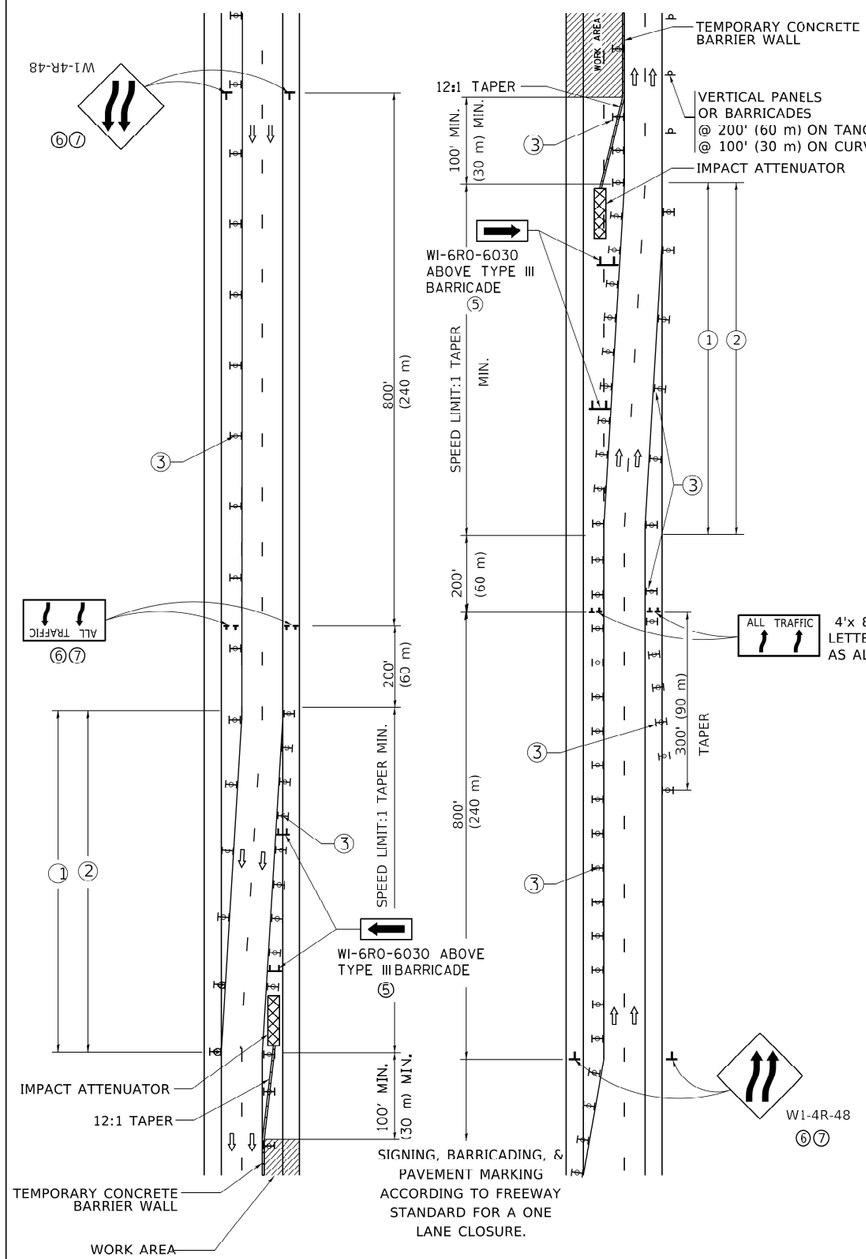

GENERAL NOTES:

① EXISTING CONFLICTING PAVEMENT MARKING LINES SHALL BE REMOVED. PAVEMENT MARKING REMOVAL SHALL NOT BE REQUIRED FOR SINGLE LANE WEAVES UNDER 4 DAYS IN DURATION.

② CONTINOUS REFLECTIVE TEMPORARY PAVEMENT MARKING TAPE SHALL BE PLACED THROUGHOUT THE TAPER AND FOR 300' (90 m) ALONG SIDE THE WORK AREA WHERE THE CLOSURE TIME IS GREATER THAN FOURTEEN DAYS. THE LEFT EDGE LINE SHALL BE YELLOW AND THE RIGHT EDGE LINE SHALL BE WHITE. FOR MULTI-LANE WEAVES LANE LINES SHALL BE 5 INCH, 10'-30' (3 m-9 m) SKIP DASH, WHITE.

③ PLASTIC DRUMS WITH STEADY BURN LIGHTS AT 50' (15 m) C-C SPACING IN TAPERS AND 100' (30 m) C-C SPACING IN TANGENTS.

④ ALL SIGNS SHALL BE POST MOUNTED IF THE CLOSURE TIME EXCEEDS FOUR DAYS.

⑤ TYPE III BARRICADES MAY BE OMMITTED FOR SINGLE-LANE WEAVES UNDER 24-HOURS IN DURATION. W1-6 SIGNS WILL STILL BE REQUIRED. IF THE WIDTH OF OFFSET IS LESS THAN 6' THEN THE TYPE III BARRICADE WITH ATTACHED ARROW SIGN PANEL CAN BE ELIMINATED IN THE TAPER AREAS.

⑥ WHEN THE LENGTH OF THE SHIFTED SEGMENT (DISTANCE BETWEEN WEAVE POINTS) IS LESS THAN 1500', DOUBLE REVERSE CURVE SIGNS (W24-1) SHOULD BE USED INSTEAD OF THE REVERSE CURVE (W1-4) SIGNS. ARROWS ON THE 4'X8' "ALL TRAFFIC" SIGNS SHALL BE THE SAME SHAPE.

⑦ THE NUMBER OF ARROWS ON THESE SIGNS SHALL MATCH THE NUMBER OF LANES OPEN TO TRAFFIC.

SYMBOLS

- DIRECTION OF TRAFFIC
- WORK AREA
- SIGN ON PORTABLE OR PERMANENT SUPPORT
- TYPE II BARRICADE OR DRUM WITH MONO-DIRECTIONAL STEADY BURNING LIGHT
- TEMPORARY CONCRETE BARRIER WALL
- IMPACT ATTENUATOR



ALL DIMENSIONS ARE IN INCHES (MILLIMETERS) UNLESS OTHERWISE SHOWN

USER NAME = footemj	DESIGNED - D.W.S.	REVISED - J.A.F. 02-06	
	DRAWN -	REVISED - S.P.B. 01-07	
PLOT SCALE = 50.0000 ' / in.	CHECKED -	REVISED - S.P.B. 12-09	
PLOT DATE = 3/4/2019	DATE - 02-87	REVISED - M.D. 06-13	

STATE OF ILLINOIS
DEPARTMENT OF TRANSPORTATION

TRAFFIC CONTROL DETAILS FOR FREEWAY SINGLE & MULTI–LANE WEAVE

SCALE: NONE | SHEET 1 OF 1 SHEETS | STA. | TO STA.

F.A.I RTE.	SECTION	COUNTY	TOTAL SHEETS	SHEET NO.
290	2019-191-B-R	COOK	265	243
	TC-09	CONTRACT NO. 62K64		
	ILLINOIS	FED. AID PROJECT		

MODEL: Default
FILE NAME: pw:\\IL084EBIDINTEG.illinois.gov:PWIDOT\Documents\IDOT Offices\District 1\Projects\Std Std2-2x34\CADData\CADs-sets\tc09.dgn

tc09.dgn 3/4/2019 10:24:46 AM User=footemj

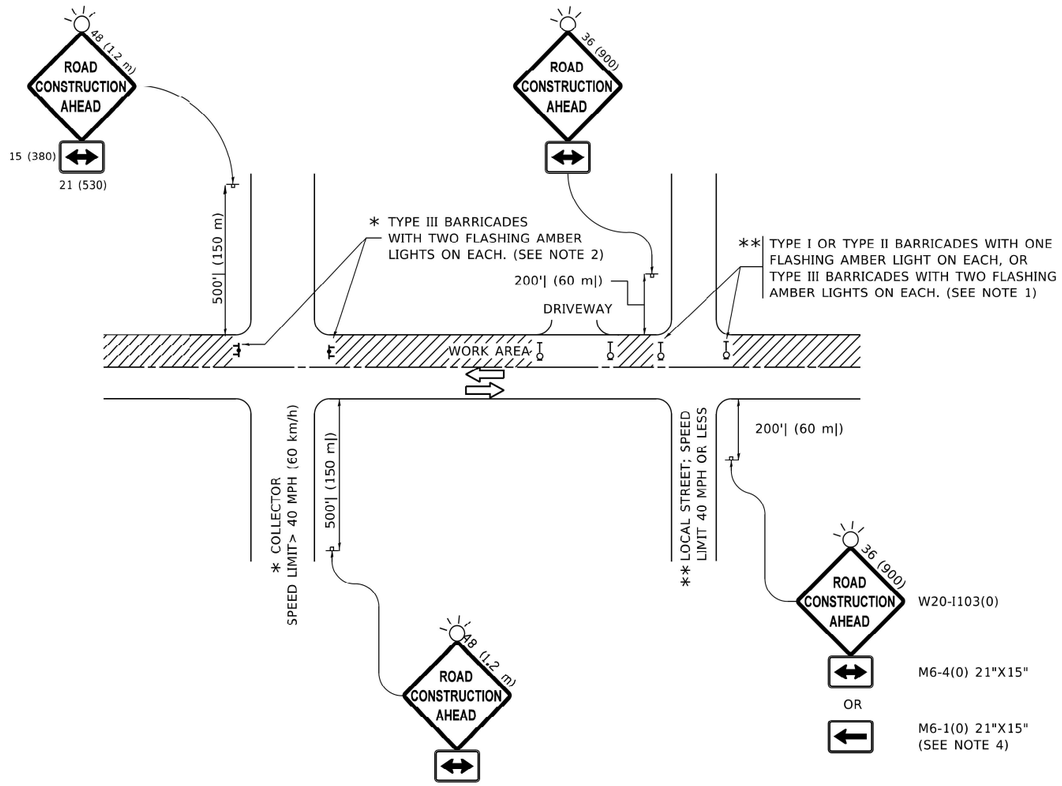

NOTES:

1. SIDE ROAD WITH A SPEED LIMIT OF 40 MPH (60 km/h) OR LESS AS SHOWN ON THE DRAWING AND AS DIRECTED BY THE ENGINEER:

   a) ONE "ROAD CONSTRUCTION AHEAD" SIGN 36 x 36 (900x900) WITH A FLASHER MOUNTED ON IT APPROXIMATELY 200' (60 m) IN ADVANCE OF THE MAIN ROUTE.

   b) THE CLOSED PORTION OF THE MAIN ROUTE SHALL BE PROTECTED BY BLOCKING WITH TYPE I, TYPE II OR TYPE III BARRICADES, 1/3 OF THE CROSS SECTION OF THE CLOSED PORTION.

2. SIDE ROAD WITH A SPEED LIMIT GREATER THAN 40 MPH (60 km/h) AS SHOWN ON THE DRAWING AND AS DIRECTED BY THE ENGINEER:

   a) ONE "ROAD CONSTRUCTION AHEAD" SIGN 48 x 48 (1.2 m x 1.2 m) WITH A FLASHER MOUNTED ON IT APPROXIMATELY 500' (150 m) IN ADVANCE OF THE MAIN ROUTE.

   b) THE CLOSED PORTION OF THE MAIN ROUTE SHALL BE PROTECTED BY BLOCKING WITH TYPE III BARRICADES, 1/2 OF THE CROSS SECTION OF THE CLOSED PORTION.

3. CONES MAY BE SUBSTITUTED FOR BARRICADES OR DRUMS AT HALF THE SPACING DURING DAY OPERATIONS. CONES SHALL BE A MINIMUM OF 28 (710) IN HEIGHT.

4. WHEN THE SIDE ROAD LIES BETWEEN THE BEGINNING OF THE MAINLINE SIGNING AND THE WORK ZONE, A SINGLE HEADED ARROW (M6-1) SHALL BE USED IN LIEU OF THE DOUBLE HEADED ARROW (M6-4).

5. WHEN WORK IS BEING PERFORMED ON A SIDE ROAD OR DRIVEWAY, FOLLOW THE APPLICABLE STANDARD(S). THE DIRECTIONAL ARROW (M6-1 OR M6-4) SHALL BE COVERED OR REMOVED WHEN NO LONGER CONSISTENT WITH THE TRAFFIC CONTROL SET-UP.

6. ADVANCE WARNING SIGNS ARE TO BE OMITTED ON DRIVEWAYS UNLESS OTHERWISE SPECIFIED IN THE PLANS OR BY THE ENGINEER.

7. THE TRAFFIC CONTROL AND PROTECTION FOR SIDE ROADS, INTERSECTIONS, AND DRIVEWAYS SHALL BE INCLUDED IN THE COST OF SPECIFIED TRAFFIC CONTROL STANDARDS OR ITEMS.

All dimensions are in inches (millimeters) unless otherwise shown.

MODEL: Default
FILE NAME: pw:\\ildot-pw.bentley.com:PWIDOT\Documents\IDOT Offices\District 1\Projects\DistStd22x34\CADData\CADsheets\lc10.dgn

USER NAME = Lawrence.DeManche	DESIGNED - L.H.A.	REVISED - T. RAMMACHER 01-06-00	STATE OF ILLINOIS DEPARTMENT OF TRANSPORTATION
	DRAWN -	REVISED - A. SCHUETZE 07-01-13	
PLOT SCALE = 100.0000 ' / in.	CHECKED -	REVISED - A. SCHUETZE 09-15-16	
PLOT DATE = 5/3/2024	DATE - 06-89	REVISED - D. SENDERAK 05-03-24	

TRAFFIC CONTROL AND PROTECTION FOR SIDE ROADS, INTERSECTIONS, AND DRIVEWAYS

SCALE: NONE | SHEET 1 OF 1 SHEETS | STA. TO STA.

F.A.I RTE.	SECTION	COUNTY	TOTAL SHEETS	SHEET NO.
290	2019-191-B-R	COOK	265	244
	TC-10	CONTRACT NO. 62K64		
		ILLINOIS FED. AID PROJECT		

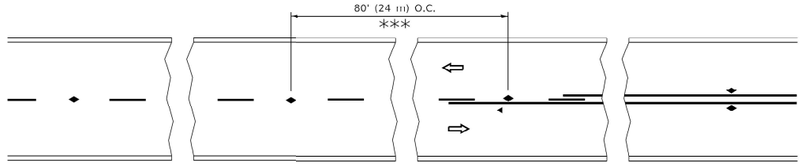

*** REDUCE TO 40' (12 m) O.C. ON CURVES WITH POSTED OR ADVISORY SPEED 45 M.P.H. (70 km/h) OR LESS.

TWO–LANE/TWO–WAY

SEE FIGURE 3B-14 MUTCD

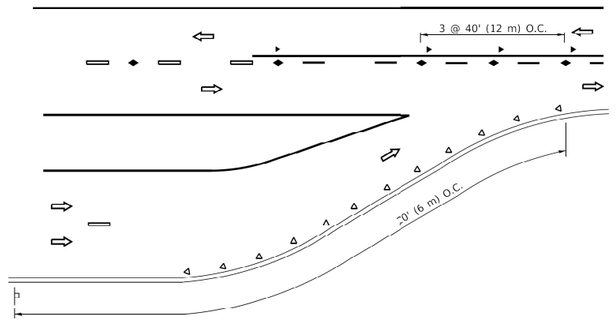

LANE REDUCTION TRANSITION

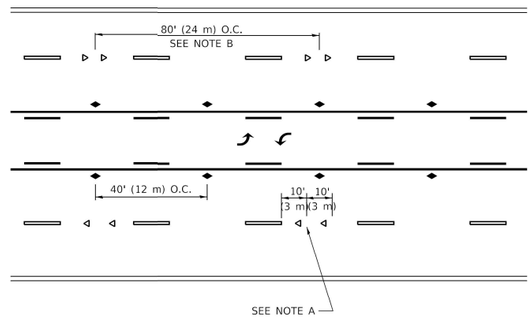

TWO–WAY LEFT TURN

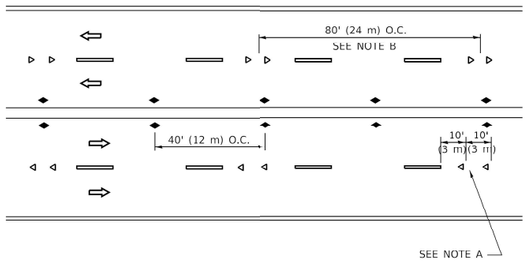

MULTI–LANE/UNDIVIDED

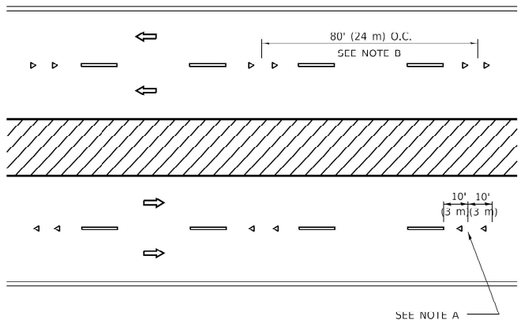

MULTI–LANE/DIVIDED

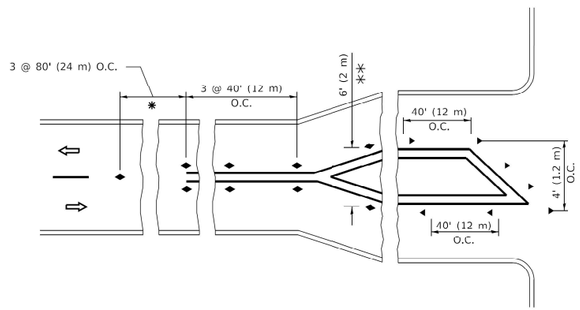

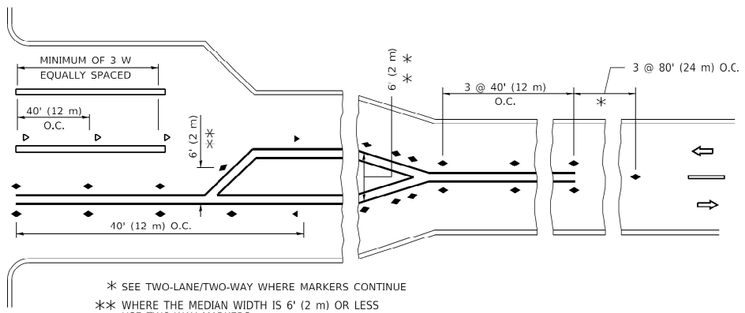

* SEE TWO-LANE/TWO-WAY WHERE MARKERS CONTINUE

** WHERE THE MEDIAN WIDTH IS 6' (2 m) OR LESS USE TWO-WAY MARKERS.

TURN LANES

GENERAL NOTES

1. MARKERS USED WITH DASHED LINES SHALL BE CENTERED IN THE GAP BETWEEN SEGMENTS.
2. MARKERS USED ADJACENT TO SOLID LINES SHALL BE OFFSET 2 TO 3 (50 TO 75) TOWARD TRAFFIC AS SHOWN.
3. MARKERS THROUGH TANGENTS LESS THAN 500' (150 m) IN LENGTH BETWEEN CURVES SHALL BE INSTALLED AT THE LESSER OF THE TWO CURVE SPACINGS.
4. MARKERS ARE TO BE USED ADJACENT TO BOTH SOLID WHITE LINES IN DUAL LEFT TURN LANES

SYMBOLS

- YELLOW STRIPE
- WHITE STRIPE
- ONE-WAY AMBER MARKER
- ONE-WAY CRYSTAL MARKER (W/O)
- TWO-WAY AMBER MARKER

LANE MARKER NOTES

A. USE DOUBLE LANE LINE MARKERS SPACED AS SHOWN.

B. REDUCE TO 40' (12 m) O.C. ON CURVES WHERE ADVISORY SPEEDS ARE 10 M.P.H (20 km/h) LOWER THAN POSTED SPEEDS.

DESIGN NOTES

1. DOUBLE LANE LINE MARKERS SHALL BE USED UNLESS SPECIFIED OTHERWISE.
2. EXCEPT AS SHOWN ON THE LANE REDUCTION TRANSITION AND FREEWAY EXIT RAMP DETAIL, MARKERS ARE NOT TO BE SPECIFIED ON RIGHT EDGE LINES.
3. THE EXACT MARKER LIMITS, SPACING, AND COLOR SHALL BE INCLUDED IN THE PLANS WHEN STANDARD SPECIFICATIONS ARE NOT BEING USED.
4. MARKERS SHOULD NOT BE USED ALONGSIDE CURBS EXCEPT FOR EXTREMELY SHORT SECTIONS OF CURBS WHERE NOT MORE THAN TWO MARKERS WOULD BE INVOLVED.

All dimensions are in inches (millimeters) unless otherwise shown.

MODEL: Default
FILE NAME: pw:\\IL084EBIDINTEG.illinois.gov:PWIDOT\Documents\IDOT Offices\District 1\Projects\DistStd2x3\ACADdata\CADs\sets\tc11.dgn

USER NAME = footemj	DESIGNED -	REVISED - T. RAMMACHER 03-12-99	
	DRAWN -	REVISED - T. RAMMACHER 01-06-00	
PLOT SCALE = 50.0000 ' / in.	CHECKED -	REVISED - C. JUCIUS 09-09-09	
PLOT DATE = 3/4/2019	DATE -	REVISED - C. JUCIUS 07-01-13	

STATE OF ILLINOIS
DEPARTMENT OF TRANSPORTATION

TYPICAL APPLICATIONS
RAISED REFLECTIVE PAVEMENT MARKERS (SNOW–PLOW RESISTANT)

SCALE: NONE | SHEET 1 OF 1 SHEETS | STA. | TO STA.

F.A. RTE.	SECTION	COUNTY	TOTAL SHEETS	SHEET NO.
290	2019-191-B-R	COOK	265	245
	TC-11	CONTRACT NO. 62K64		
	ILLINOIS FED. AID PROJECT			

tc11.dgn 3/4/2019 10:29:08 AM User=footemj

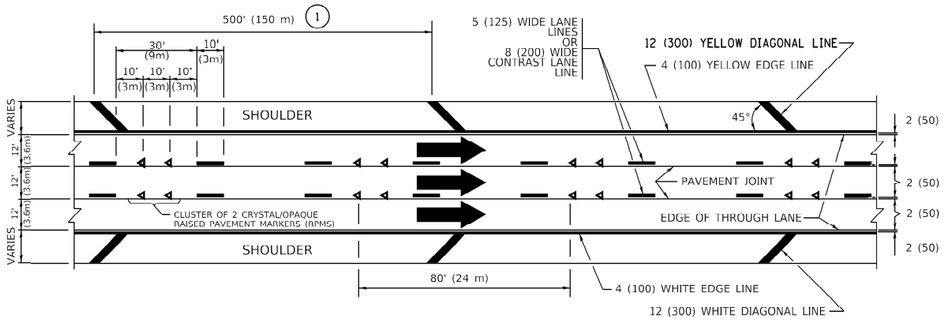

TYPICAL EDGE LINES & LANE LINES

PAVEMENT MARKING MATERIALS

1. THERMOPLASTIC PAVEMENT MARKING LINE SHALL BE USED FOR ALL EDGE LINES, GORE LINES, AND DIAGONAL LINES ON HMA PAVEMENTS.
2. POLYUREA OR MODIFIED URETHANE PAVEMENT MARKING LINE SHALL BE USED FOR ALL EDGE LINES, GORE LINES, AND DIAGONAL LINES ON PCC PAVEMENTS.
3. PREFORMED PLASTIC PAVEMENT MARKING LINE TYPE D, INLAID OR GROOVE IN, SHALL BE USED FOR ALL LANE LINES ON HMA PAVEMENTS.
4. CONTRAST PREFORMED PLASTIC PAVEMENT MARKING LINE TYPE B, GROOVE IN, SHALL BE USED FOR ALL LANE LINES ON PCC PAVEMENT.

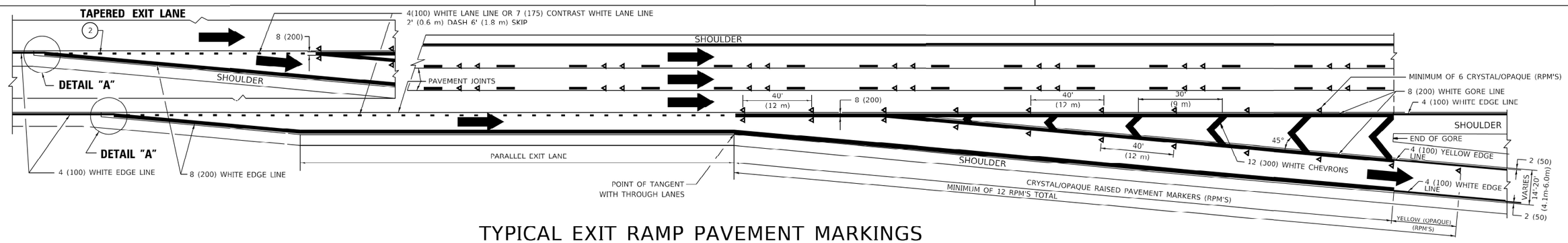

TYPICAL EXIT RAMP PAVEMENT MARKINGS

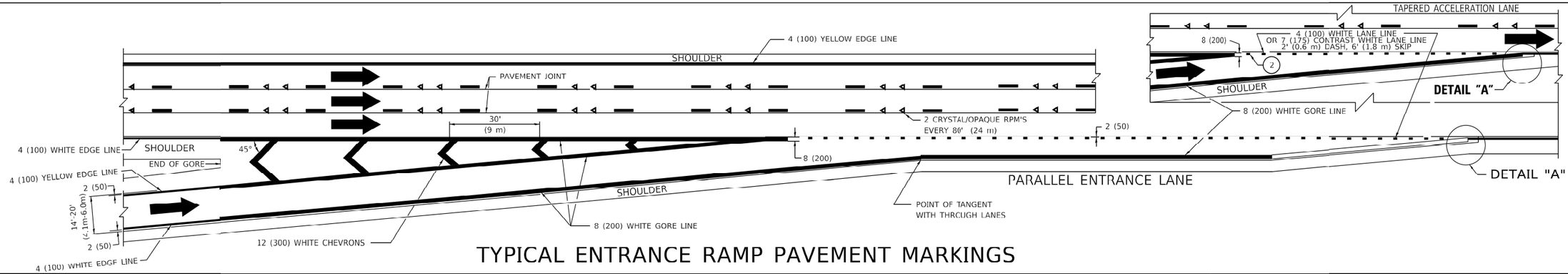

TYPICAL ENTRANCE RAMP PAVEMENT MARKINGS

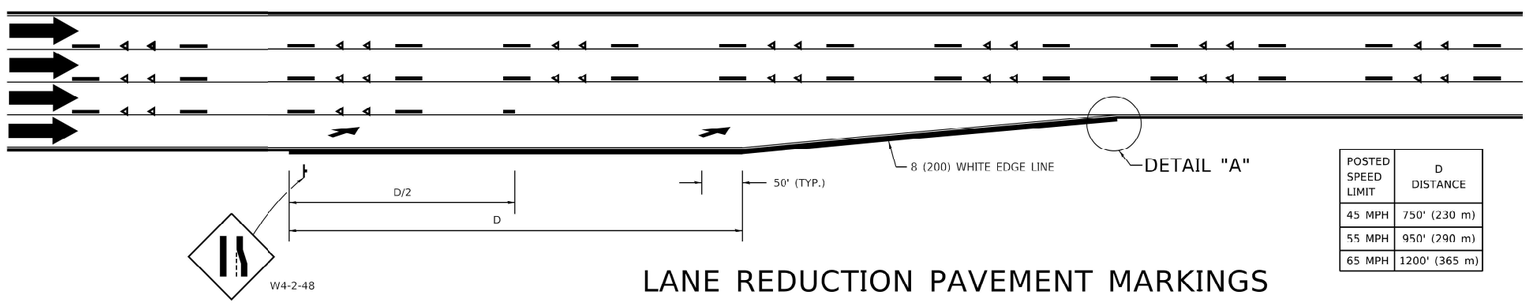

POSTED SPEED LIMIT	D DISTANCE
45 MPH	750' (230 m)
55 MPH	950' (290 m)
65 MPH	1200' (365 m)

LANE REDUCTION PAVEMENT MARKINGS

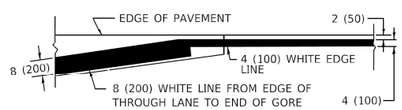

DETAIL "A"

NOTES:

1. THE DIAGONAL LINES SHALL BE SPACED AT 40' (12 m) C-C ACROSS ALL STRUCTURES WHICH ARE 500' (150 m) OR LESS IN LENGTH. THE DIAGONAL LINES ARE NOT REQUIRED ON SHOULDERS WHICH ARE 6' (1.8 m) OR LESS IN WIDTH.
2. 4" (2' DASH, 6' SKIP) MARKING ON TAPERED ENTRANCE AND EXIT RAMP SHALL BE OMITTED ON TANGENT SECTIONS.

USER NAME = Lawrence.DeManche	DESIGNED - D.W.S.	REVISED - S.P.B. 01-10	
	DRAWN -	REVISED - M.D. 05-13	
PLOT SCALE = 100.0000 ' / in.	CHECKED -	REVISED - M.D. 09-17	
PLOT DATE = 11/18/2022	DATE - 01-90	REVISED - K. SMITH 11-18-22	

STATE OF ILLINOIS
DEPARTMENT OF TRANSPORTATION

MULTI-LANE FREEWAY
PAVEMENT MARKING DETAILS

SCALE: NONE | SHEET 1 OF 2 SHEETS | STA. | TO STA.

F.A.I RTE.	SECTION	COUNTY	TOTAL SHEETS	SHEET NO.
290	2019-191-B-R	COOK	265	246
	TC-12	CONTRACT NO. 62K64		
		ILLINOIS FED. AID PROJECT		

MODEL: Default
FILE NAME: pw:\\dot-pw.bentley.com:PWDOT\Documents\DOT Offices\District 1\Projects\Dist5\d22x334\C3D\Data\CADsheets\tc12.dgn

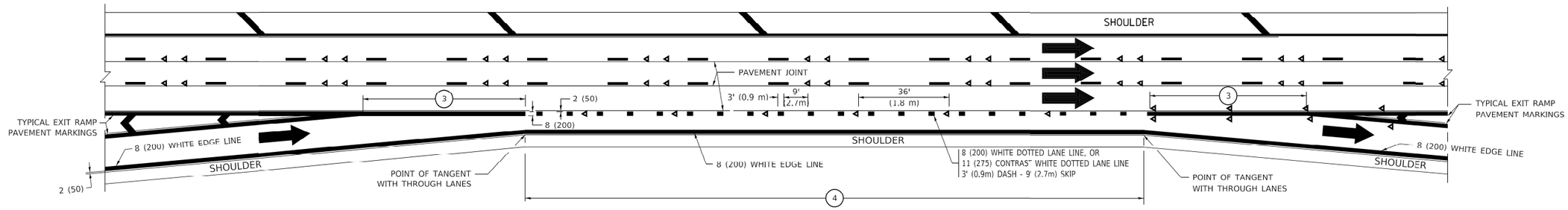

AUXILIARY LANE MARKINGS

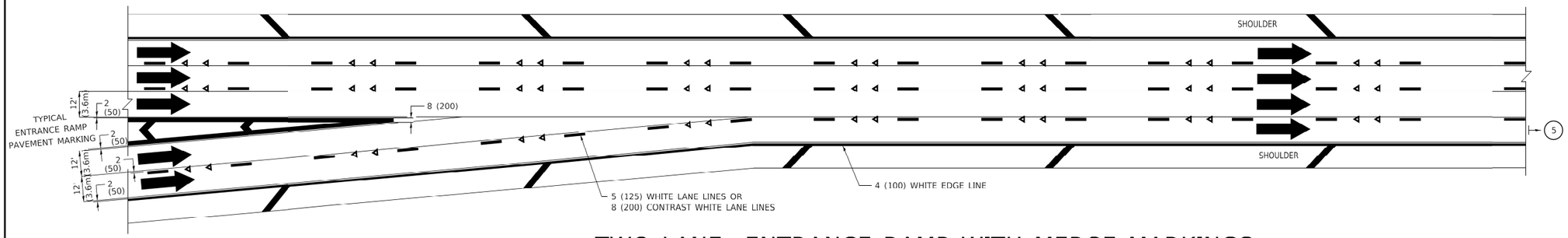

TWO LANE ENTRANCE RAMP WITH MERGE MARKINGS

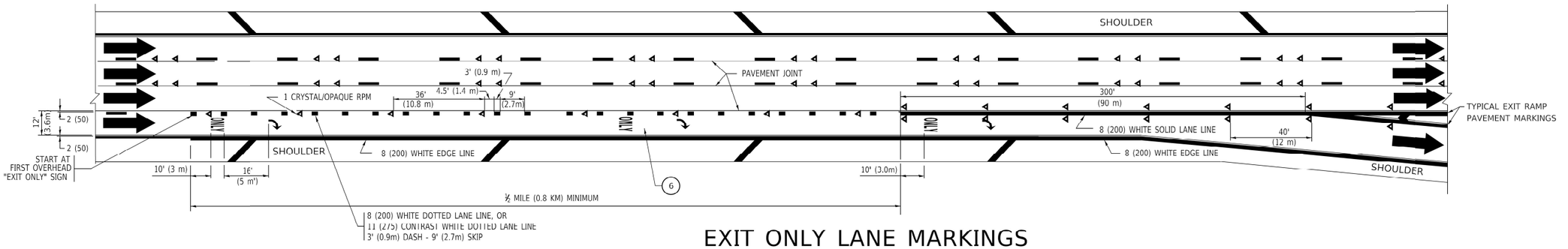

EXIT ONLY LANE MARKINGS

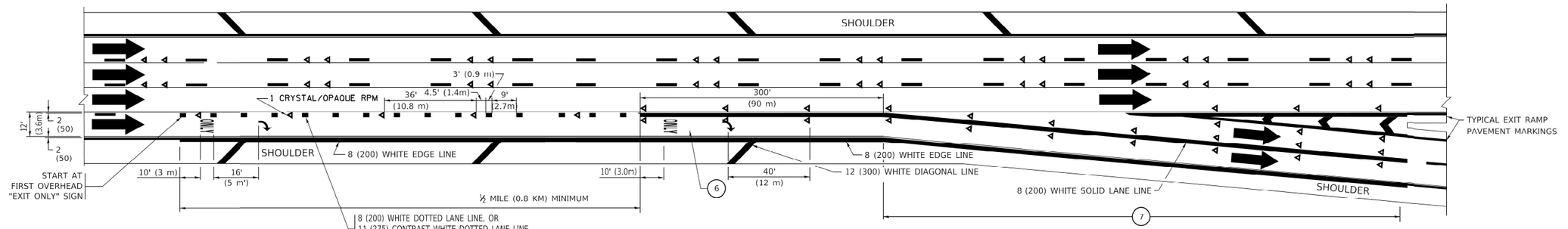

EXIT ONLY WITH OPTION LANE MARKINGS

NOTES:

3. OMIT WHEN LENGTH OF AUXILIARY LANE IS LESS THAN 500' (150 m).
4. 8-INCH WIDE DOTTED LANE LINE MARKINGS SHALL BE USED WHEN THE LENGTH OF THE AUXILIARY LANE IS 2 MILES OR LESS.
5. FOR TWO-LANE ENTRANCE RAMP, IF RIGHT LANE ENDS, USE TYPICAL ENTRANCE RAMP PAVEMENT MARKINGS.
6. ONLY AND ARROWS EQUALLY SPACED, 500' (150 m) MAXIMUM SPACING. FULL SIZE LETTERS AND ARROW SHALL BE USED..
7. CONTINUE 8" SOLID LANE LINE THROUGH EXIT TO END OF PAVED GORE.

USER NAME = footemj	DESIGNED - D.W.S.	REVISED - J.A.F. 02-06	
	DRAWN -	REVISED - S.P.B. 01-07	
PLOT SCALE = 50.0000 ' / in.	CHECKED -	REVISED - S.P.B. 01-10	
PLOT DATE = 3/4/2019	DATE - 01-90	REVISED - M.D. 09-17	

STATE OF ILLINOIS
DEPARTMENT OF TRANSPORTATION

MULTI–LANE FREEWAY
PAVEMENT MARKING DETAILS

SCALE: NONE | SHEET 1 OF 2 SHEETS | STA. | TO STA.

F.A.I RTE.	SECTION	COUNTY	TOTAL SHEETS	SHEET NO.
290	2019-191-B-R	COOK	265	247
	TC–12	CONTRACT NO. 62K64		
	ILLINOIS FED. AID PROJECT			

MODEL: Default
FILE NAME: pw:\\IL084EBI01NTEG.illinois.gov:PWIDOT\Documents\IDOT Offices\District 1\Projects\Dist\Std2x3\CADData\CADs-sheets\tc12-sign

tc12.dgn 3/4/2019 10:32:33 AM User=footemj

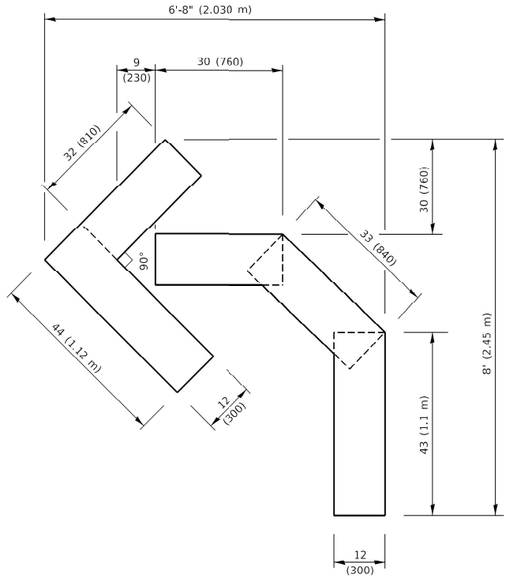

QUANTITY

4 (100) LINE = 45.5 ft. (13.9 m)
15.2 sq. ft. (1.41 sq. m)

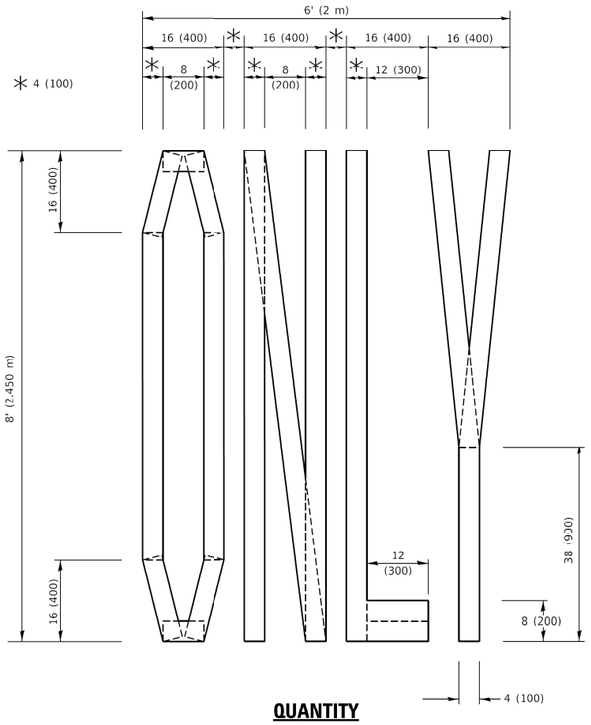

QUANTITY

4 (100) LINE = 64.1 ft. (19.5 m)
21.4 sq. ft. (1.99 sq. m)

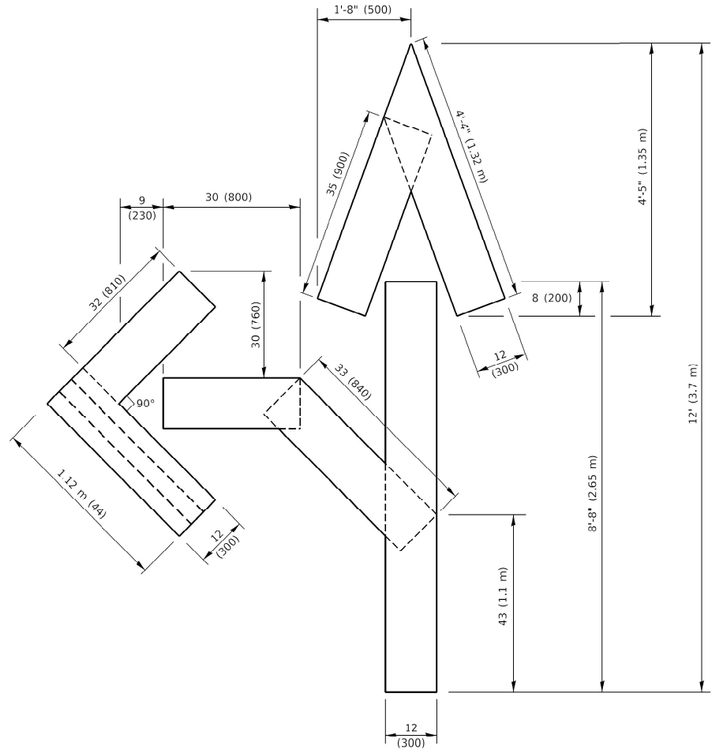

QUANTITY

4 (100) LINE = 82.5 ft. (25.1 m)
27.5 sq. ft. (2.53 sq. m)

NOTE:

ALL QUANTITIES OF PLACEMENT ARE REPRESENTED IN LINEAR FEET OF 4" LINES TO MATCH THE 4" TEMPORARY TAPE PAY ITEM AND REPRESENTS THE TOTAL QUANTITY OF 4" TAPE REQUIRED.

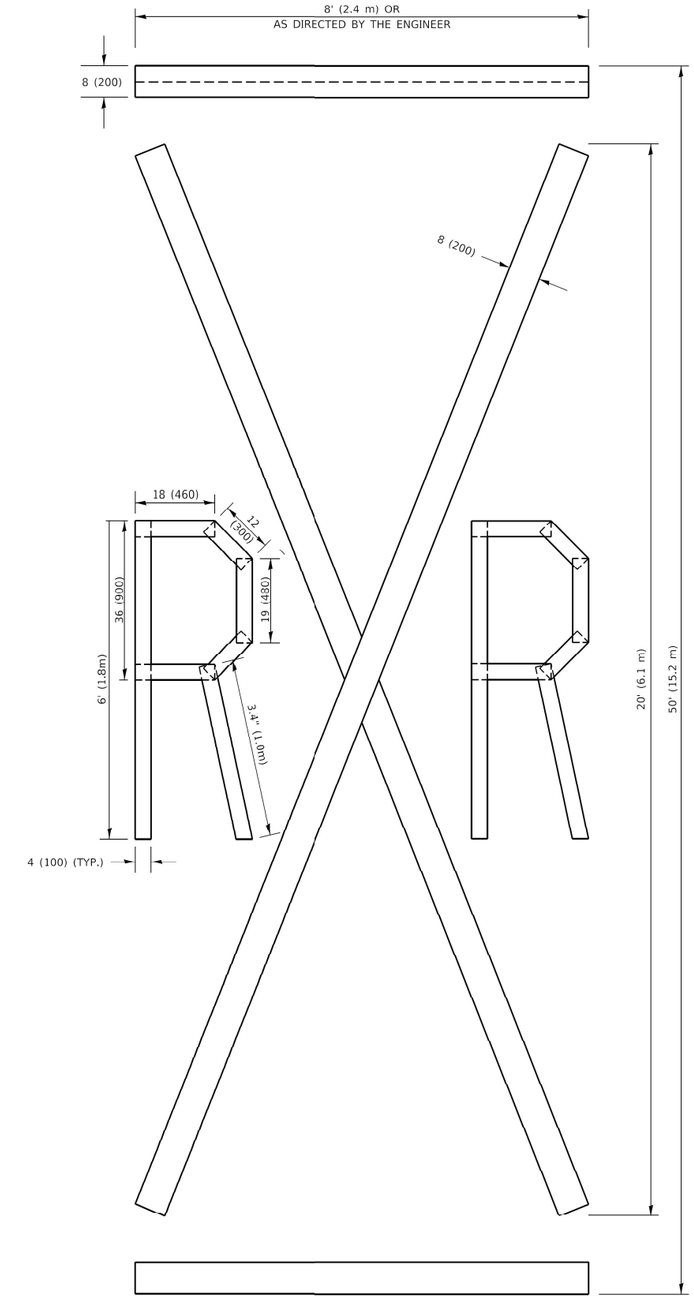

QUANTITY

4 (100) LINE = 225.9 ft. (68.9 m)
75.3 sq. ft. (6.99 sq. m)

All dimensions are in inches (millimeters) unless otherwise shown.

USER NAME = footemj	DESIGNED -		REVISED - T. RAMMACHER 03-02-98
	DRAWN -		REVISED - E. GOMEZ 08-28-00
PLOT SCALE = 50.0068 ' / in.	CHECKED -		REVISED - E. GOMEZ 08-28-00
PLOT DATE = 3/4/2019	DATE -	09-18-94	REVISED - A. SCHUETZE 09-15-16

STATE OF ILLINOIS
DEPARTMENT OF TRANSPORTATION

SHORT TERM PAVEMENT MARKING LETTERS AND SYMBOLS

SCALE: NONE | SHEET 1 OF 1 SHEETS | STA. | TO STA.

F.A. I RTE.	SECTION	COUNTY	TOTAL SHEETS	SHEET NO.
290	2019-191-B-R	COOK	265	248
	TC-16	CONTRACT NO. 62K64		
	ILLINOIS FED. AID PROJECT			

MODEL: Default
FILE NAME: pw:\\IL084:EIBIDINTEG.illinois.gov:PWIDOTDocuments\IDOT Offices\District 1\Projects\Dist1Std22x34\CADData\CADSheets\tc16.dgn

c16.dgn 3/4/2019 10:37:35 AM User=footemj

PARTIAL RAMP CLOSURE DETAILS

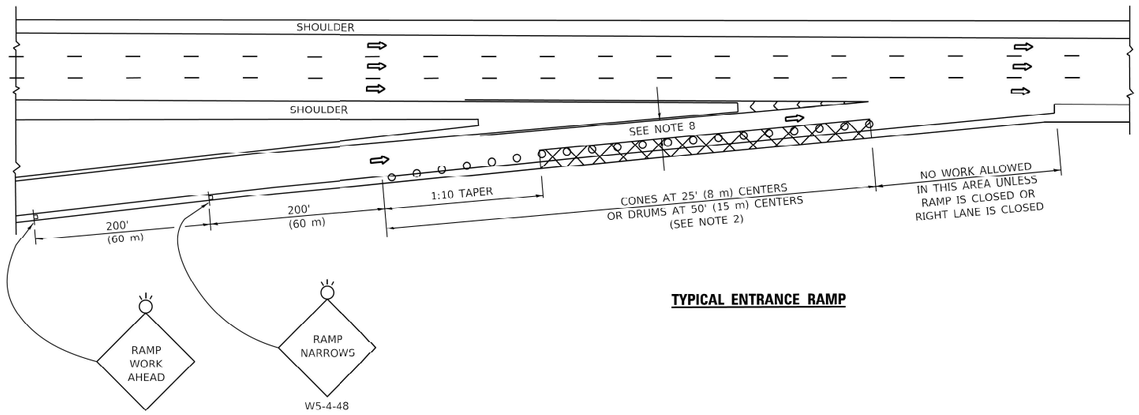

TYPICAL ENTRANCE RAMP

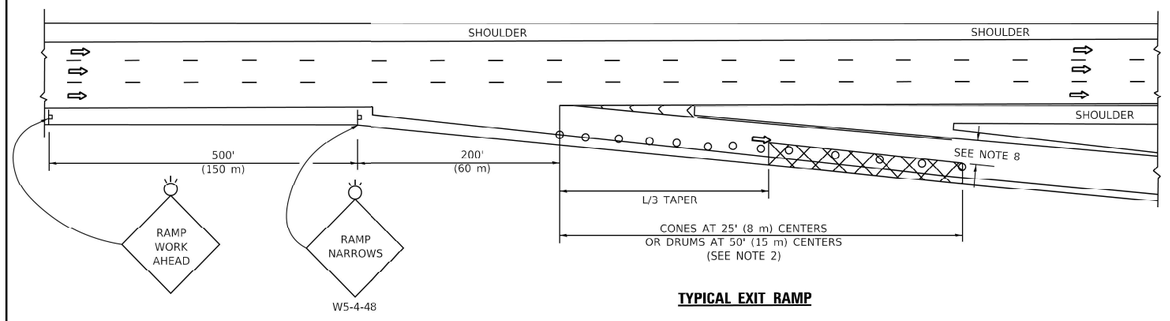

TYPICAL EXIT RAMP

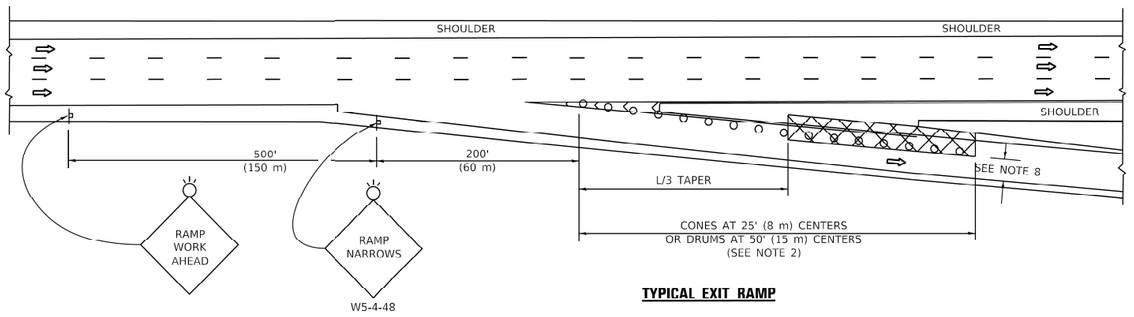

TYPICAL EXIT RAMP

SYMBOLS

- ACTIVE WORK AREA
- SIGN ON PORTABLE OR PERMANENT SUPPORT
- FLAGGER WITH CONTROL SIGN
- TYPE II BARRICADE OR DRUM
- CONE, DRUM OR BARRICADE
- IMPACT ATTENUATOR OF TYPE AND TEST LEVEL SPECIFIED

SHOULDER CLOSURE DETAILS

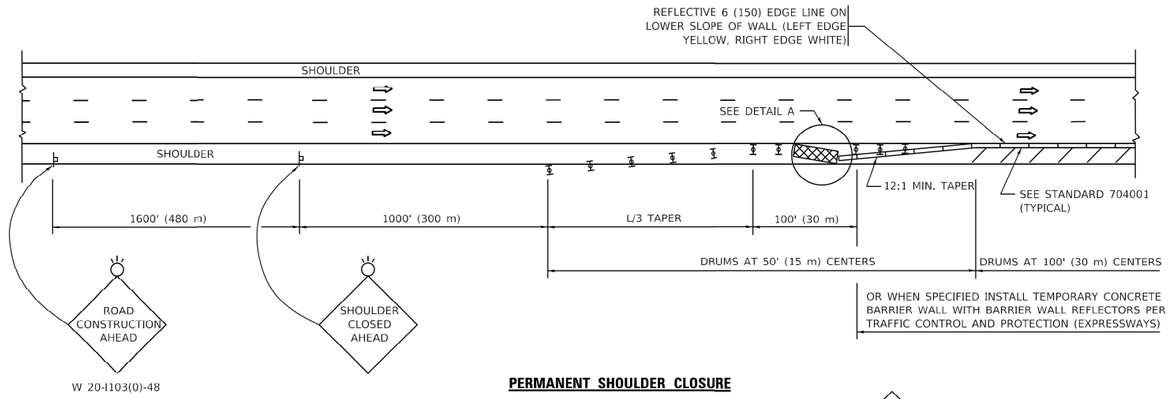

PERMANENT SHOULDER CLOSURE

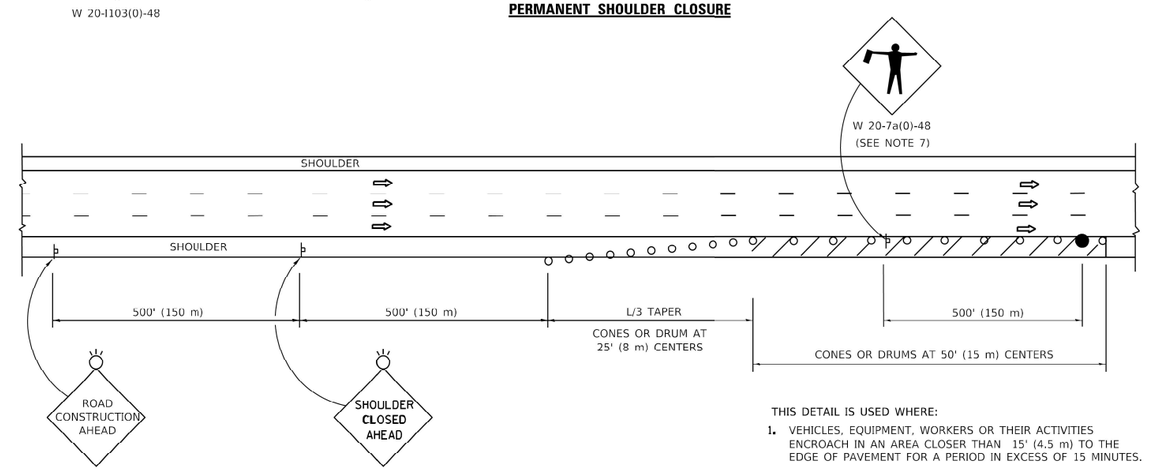

TEMPORARY SHOULDER CLOSURE

THIS DETAIL IS USED WHERE:

1. VEHICLES, EQUIPMENT, WORKERS OR THEIR ACTIVITIES ENCROACH IN AN AREA CLOSER THAN 15' (4.5 m) TO THE EDGE OF PAVEMENT FOR A PERIOD IN EXCESS OF 15 MINUTES.

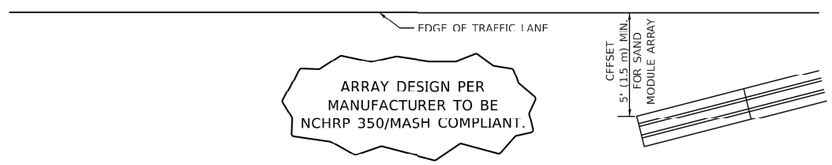

DETAIL "A"
IMPACT ATTENTUATOR, TEMPORARY
(SEE NOTE 5)

GENERAL NOTES:

1. THE "L" DISTANCE EQUALS:

SPEED LIMIT	FORMULAS	
45 mph (80 km/h) OR GREATER:	METRIC	ENGLISH
	L=0.65(W)(S)	L=(W)(S)

W = WIDTH OF OFFSET IN FEET (METERS)
S = NORMAL POSTED SPEED MPH (KM/H)

2. TYPE II BARRICADES OR DRUMS ARE REQUIRED FOR ALL NIGHTTIME CLOSURES. TYPE II BARRICADES OR DRUMS WITH MONODIRECTIONAL STEADY BURN LIGHTS ARE REQUIRED FOR DELINEATING OBSTICLES, EXCAVATIONS, OR HAZARDS EXCEEDING 100 FT (30m) IN LENGTH AT NIGHT.
3. ALL SIGNS SHALL BE POST MOUNTED IF THE CLOSURE TIME EXCEEDS FOUR DAYS.
4. FLASHING LIGHTS SHALL BE USED DURING THE HOURS OF DARKNESS AND SHALL BE INSTALLED ABOVE THE FIRST TWO SETS OF SIGNS.
5. THE IMPACT ATTENTUATOR, TEMPORARY IS NOT REQUIRED WHEN THE TEMPORARY CONCRETE BARRIER WALL IS PROTECTED BY OR IS TIED INTO THE EXISTING GUARDRAIL. IF OFFSET IS LESS THAN 5 FEET USE NARROW USE TYPE DEVICE TO MEET NCHRP350/MASH.
6. AUTHORIZATION FROM THE DISTRICT'S BUREAU OF TRAFFIC IS REQUIRED FOR ALL FREEWAY CLOSURES.
7. THE FLAGGER AND FLAGGER SIGN ARE REQUIRED AT THE ABOVE WORK SITES WHEN:
   a. FOUR OR MORE WORK VEHICLES ENTER THE TRAFFIC LANES IN A ONE HOUR PERIOD.
   b. THE WORK AVTIVITY REQUIRES FREQUENT ENCROACHMENT INTO THE LANE OPEN TO TRAFFIC.

   THE FLAGGER SHALL BE STATIONED APPROXIMATELY 100' (30 m) TO 200' (60 m) IN ADVANCE OF THE WORKERS.
8. 12' MIN. WIDTH TANGENT SECTION
   16' MIN. WIDTH CURVE SECTION.
9. TEMPORARY SHOULDER AND NON-SYSTEM INTERCHANGE PARTIAL RAMP CLOSURES ARE ALLOWED WEEKDAYS BETWEEN 9:00 A.M. AND 3:00 P.M. AND BETWEEN 7:00 P.M. AND 5:00 A.M. OR AS APPROVED BY THE EXPRESSWAY TRAFFIC OPERATIONS ENGINEER. PERMANENT SHOULDER AND PARTIAL RAMP CLOSURES WILL ONLY BE PERMITTED IF CALLED FOR IN THE PLANS OR AS APPROVED BY THE EXPRESSWAY OPERATIONS ENGINEER.

ALL DIMENSIONS ARE IN INCHES (MILLIMETERS) UNLESS OTHERWISE SHOWN.

MODEL: Default
FILE NAME: pw:\\Illdot-pw.bentley.com:PWIDOT\Documents\IDOT Offices\District 1\Projects\DistStd22x34\CADData\CADsheetsltc17.dgn

USER NAME = Lawrence.DeManche	DESIGNED -	REVISED - M.D. 06-13	**STATE OF ILLINOIS**	**TRAFFIC CONTROL DETAILS FOR FREEWAY**	F.A.I RTE. 290
	DRAWN - D.W.S.	REVISED - M.D. 01-18	**DEPARTMENT OF TRANSPORTATION**	**SHOULDER CLOSURES AND PARTIAL RAMP CLOSURES**	SECTION 2019-191-B-R
PLOT SCALE = 100.0000 ' / in.	CHECKED -	REVISED - M.D. 10-20			COUNTY COOK
PLOT DATE = 5/3/2024	DATE - 11-96	REVISED - D.S. 05-24		SCALE: NONE SHEET 1 OF 1 SHEETS STA. TO STA.	TOTAL SHEETS 265 SHEET NO. 249
				TC-17	CONTRACT NO. 62K64
					ILLINOIS FED. AID PROJECT

SIGNING FOR FLAGGING OPERATIONS AT WORK ZONE OPENINGS

WORK ZONE EXIT OPENING

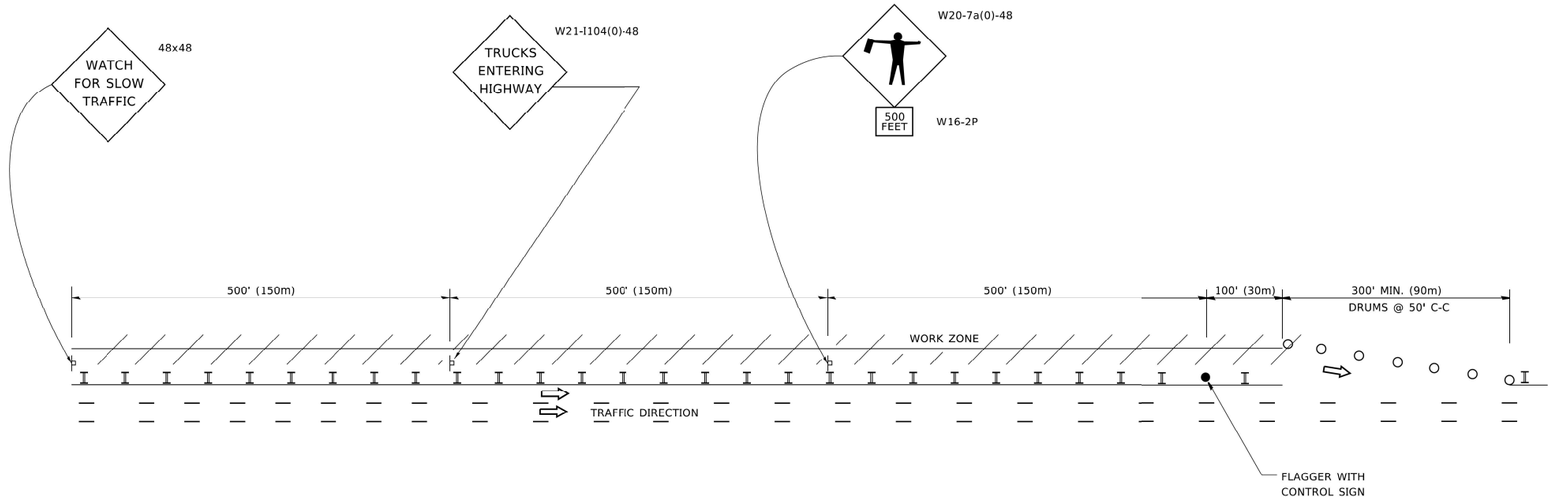

WORK ZONE ENTRY OPENING

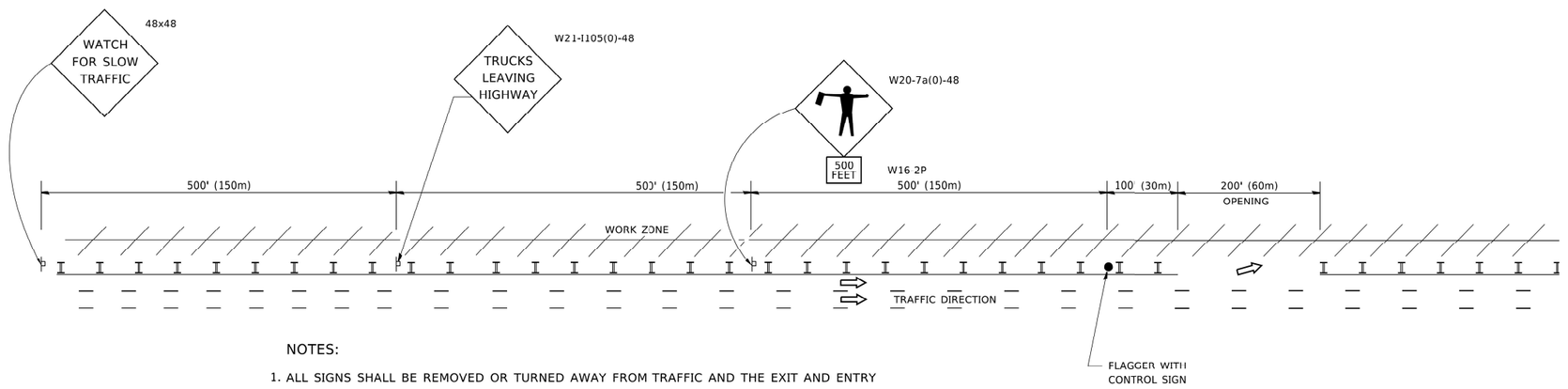

NOTES:

1. ALL SIGNS SHALL BE REMOVED OR TURNED AWAY FROM TRAFFIC AND THE EXIT AND ENTRY OPENINGS SHALL BE CLOSED WHEN THE FLAGGING OPERATION CEASES. NON OPERATING EQUIPMENT SHALL COMPLY WITH ARTICLE 701.11

2. WORK ZONE OPENINGS SHALL BE A MINIMUM OF ONE HALF MILE APART AND A MINIMUM OF ONE QUARTER MILE FROM ALL ENTRANCE AND EXIT RAMPS.

3. EXITING THE WORK ZONE AT ANY PLACE OTHER THAN AT A WORK ZONE EXIT OPENING WILL BE PROHIBITED.

4. ALL VEHICLES SHALL ENTER THE WORK ZONE AT ENTRY OPENINGS, USING THEIR TURN SIGNALS TO WARN MOTORISTS

5. FLAGGERS SHALL NOT STOP TRAFFIC OR DIRECT TRAFFIC INTO AN ADJACENT LANE.

ALL DIMENSIONS ARE IN INCHES (MILLIMETERS) UNLESS OTHERWISE SHOWN

USER NAME = footemj	DESIGNED -	REVISED - J.A.F. 02-06	**STATE OF ILLINOIS DEPARTMENT OF TRANSPORTATION**
	DRAWN -	REVISED - S.P.B. 01-07	
PLOT SCALE = 50.0000 ' / in.	CHECKED -	REVISED - S.P.B. 12-09	
PLOT DATE = 3/4/2019	DATE -	REVISED - M.D.06-13	

FREEWAY /EXPRESSWAY SIGNING FOR FLAGGING OPERATIONS AT WORK ZONE OPENINGS ON FREEWAYS /EXPRESSWAYS

SCALE: NONE | SHEET 1 OF 1 SHEETS | STA. | TO STA.

F.A.I RTE.	SECTION	COUNTY	TOTAL SHEETS	SHEET NO.
290	2019-191-B-R	COOK	265	250
	TC-18	CONTRACT NO. 62K64		
	ILLINOIS FED. AID PROJECT			

MODEL: Default
FILE NAME: pw:\\IL084EBI01INTEG.illinois.gov:PWIDOT\Documents\IDOT Offices\District 1\Projects\Dist\Std2x3\CADData\CADs-sheets\tc18.dgn

tc18.dgn 3/4/2019 10:44:51 AM User=footemj

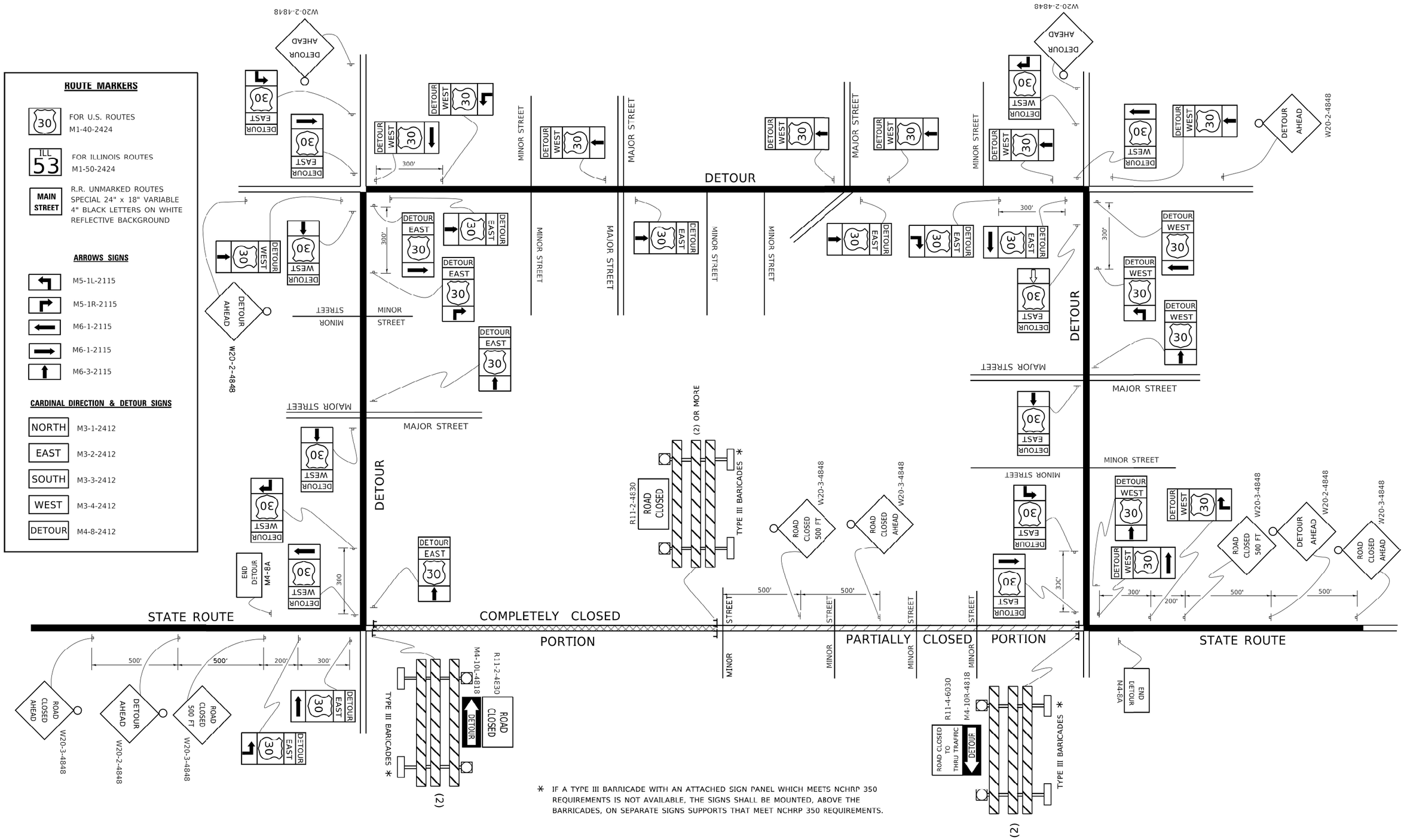

* IF A TYPE III BARRICADE WITH AN ATTACHED SIGN PANEL WHICH MEETS NCHRP 350 REQUIREMENTS IS NOT AVAILABLE, THE SIGNS SHALL BE MOUNTED, ABOVE THE BARRICADES, ON SEPARATE SIGNS SUPPORTS THAT MEET NCHRP 350 REQUIREMENTS.

MODEL: Default
FILE NAME: pw:\\IL084EBIDINTEG.illinois.gov:PWIDOT\Documents\IDOT Offices\District 1\Projects\DistStd2x34\CADData\CADsheets\tc21.dgn

USER NAME = footemj	DESIGNED -	REVISED - 10-18-02	STATE OF ILLINOIS DEPARTMENT OF TRANSPORTATION
	DRAWN -	REVISED - R. BORO 09-14-09	
PLOT SCALE = 50.0000 ' / in.	CHECKED -	REVISED -	
PLOT DATE = 3/4/2019	DATE -	REVISED -	

DETOUR SIGNING FOR CLOSING STATE HIGHWAYS

SCALE: NONE | SHEET 1 OF 1 SHEETS | STA. TO STA.

F.A.I RTE.	SECTION	COUNTY	TOTAL SHEETS	SHEET NO.
290	2019-191-B-R	COOK	265	251
	TC-21	CONTRACT NO. 62K64		
		ILLINOIS FED. AID PROJECT		

tc21.dgn 3/4/2019 10:46:33 AM User=footemj

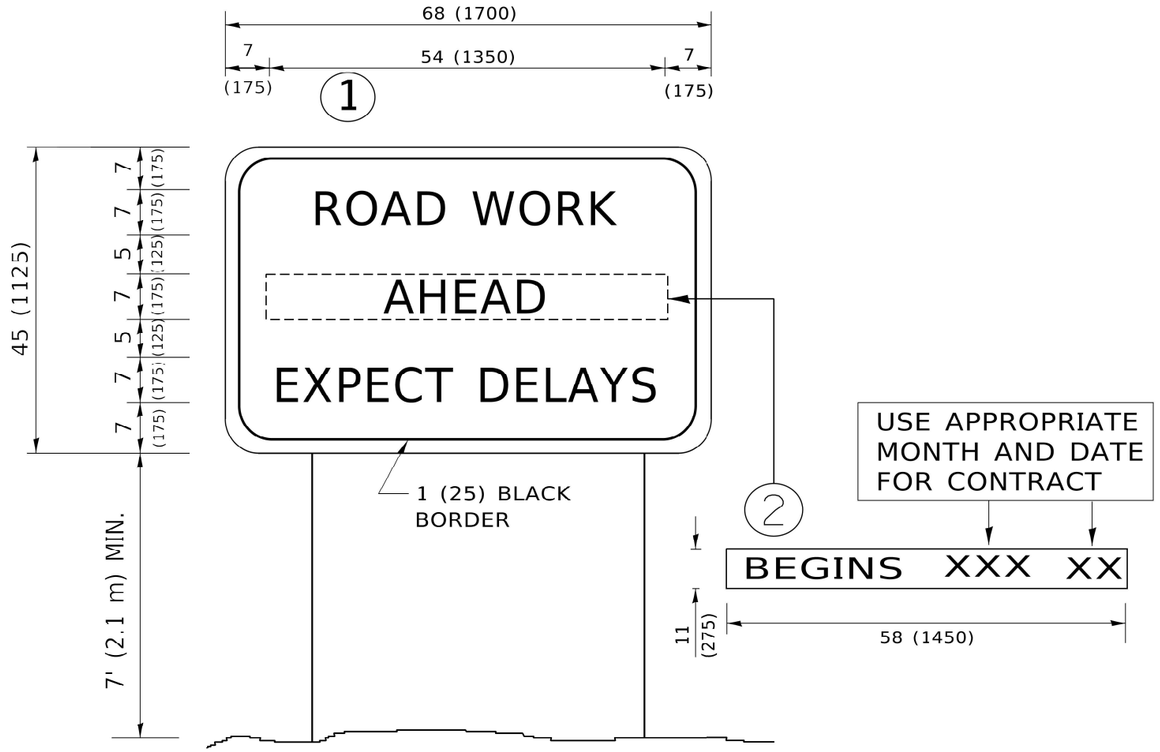

NOTES:

1. USE BLACK LETTERING ON ORANGE BACKGROUND.
2. ERECT SIGNS IN ADVANCE OF THE LOCATION FOR THE "ROAD CONSTRUCTION AHEAD" SIGN AT LOCATIONS AS DIRECTED BY THE ENGINEER.
3. ERECT SIGN (1) WITH INSTALLED PANEL (2) ONE WEEK PRIOR TO THE START OF CONSTRUCTION.
4. REMOVE PANEL (2) SOON AFTER THE START OF CONSTRUCTION.
5. SEE SPECIAL PROVISION FOR "TEMPORARY INFORMATION SIGNING" FOR ADDITIONAL INFORMATION.
6. ONE SIGN ASSEMBLY EQUALS 25.70 SQ. FT. (2.3 SQ. M.)
7. SHALL BE PAID FOR AS TEMPORARY INFORMATION SIGNING.

ALL DIMENSIONS ARE IN INCHES (MILLIMETERS) UNLESS OTHERWISE SHOWN.

MODEL: Default
FILE NAME: pw:\\IL084EBIDINTEG.illinois.gov:PWIDOTDocuments\IDOT Offices\District 1\Projects\Dist51022x34\CADData\CADSsheets\tc22.dgn

USER NAME = footemj	DESIGNED -	REVISED - R. MIRS 09-15-97	
	DRAWN -	REVISED - R. MIRS 12-11-97	
PLOT SCALE = 50.0000 ' / in.	CHECKED -	REVISED - T. RAMMACHER 02-02-99	
PLOT DATE = 3/4/2019	DATE -	REVISED - C. JUCIUS 01-31-07	

STATE OF ILLINOIS
DEPARTMENT OF TRANSPORTATION

ARTERIAL ROAD INFORMATION SIGN

SCALE: NONE | SHEET 1 OF 1 SHEETS | STA. | TO STA.

F.A.I RTE.	SECTION	COUNTY	TOTAL SHEETS	SHEET NO.
290	2019-191-B-R	COOK	265	252
	TC-22	CONTRACT NO. 62K64		
	ILLINOIS FED. AID PROJECT			

tc22.dgn 3/4/2019 10:48:10 AM User=footemj

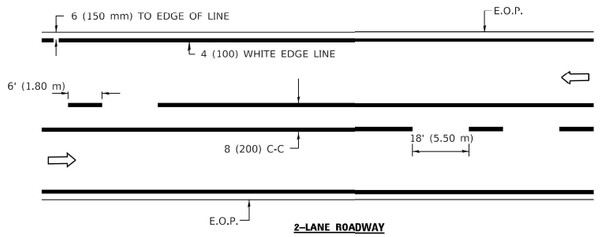

2–LANE ROADWAY

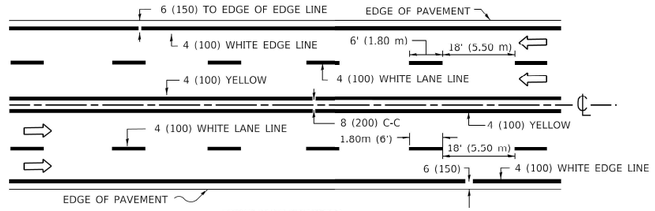

MULTI–LANE UNDIVIDED

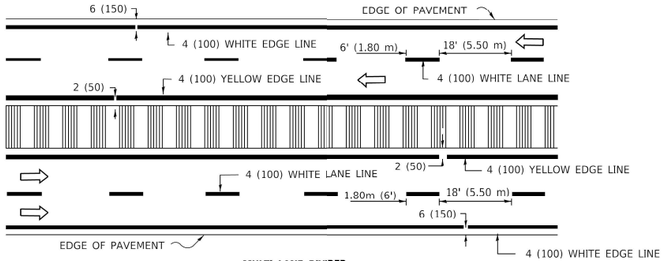

MULTI–LANE DIVIDED

WITH MOUNTABLE MEDIAN

NOTE: MEDIANS WITH BARRIER CURB DO NOT REQUIRE AN EDGE LINE

TYPICAL LANE AND EDGE LINE MARKING

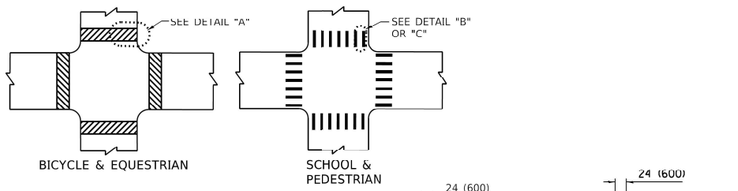

TYPICAL CROSSWALK MARKING

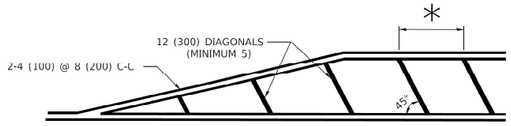

* FOR MEDIAN LENGTHS WHERE DIAGONAL SPACING CANNOT BE ATTAINED, USE 5 (FIVE) EQUALLY SPACED DIAGONAL LINES.

* DIAGONAL LINE SPACING: 20' (6.1 m) C-C

PAINTED MEDIANS

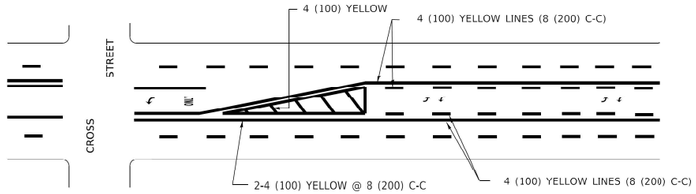

A MINIMUM OF TWO PAIRS OF TURN ARROWS SHALL BE USED, WHITE IN COLOR. ADDITIONAL PAIRS SHALL BE PLACED AT 200' (60 m) TO 300' (90 m) INTERVALS.

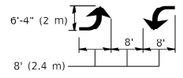

MEDIAN WITH TWO–WAY LEFT TURN LANE

TYPICAL PAINTED MEDIAN MARKING

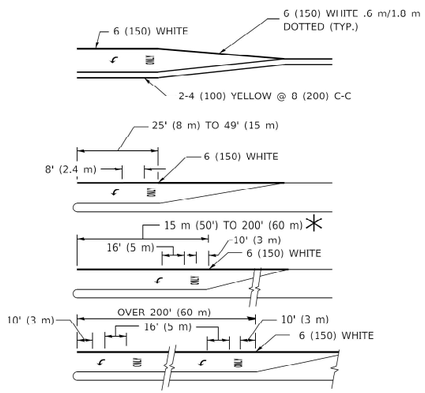

FULL SIZE LETTERS 8' (2.4 m) AND ARROWS SHALL BE USED.
↰ AREA = 15.8 SQ. FT. (1.47 m²) ONLY AREA = 22.9 SQ. FT. (2.13 m²)

* TURN LANES IN EXCESS OF 400' (120 m) IN LENGTH MAY HAVE AN ADDITIONAL SET OF ARROW - "ONLY" INSTALLED MIDWAY BETWEEN THE OTHER TWO SETS OF ARROW - "ONLY".

TYPICAL LEFT (OR RIGHT) TURN LANE

TYPICAL TURN LANE MARKING

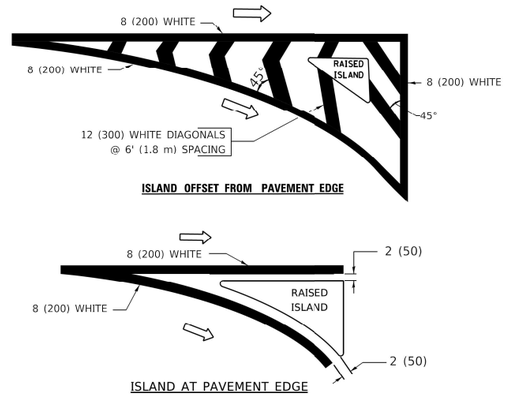

TYPICAL ISLAND MARKING

TYPE OF MARKING	WIDTH OF LINE	PATTERN	COLOR	SPACING / REMARKS
CENTERLINE ON 2 LANE PAVEMENT	4 (100)	SKIP-DASH	YELLOW	6' (1.80 m) LINE WITH 18' (5.50 m) SPACE
CENTERLINE ON MULTI-LANE UNDIVIDED PAVEMENT	2 @ 4 (100)	SOLID	YELLOW	8 (200) C-C
NO PASSING ZONE LINES: FOR ONE DIRECTION FOR BOTH DIRECTIONS	 4 (100) 2 @ 4 (100)	 SOLID SOLID	 YELLOW YELLOW	8 (200) C-C
LANE LINES	4 (100) 5 (125) ON FREEWAYS	SKIP-DASH SKIP-DASH	WHITE WHITE	6' (1.80 m) LINE WITH 18' (5.50 m) SPACE
DOTTED LINES (EXTENSIONS OF CENTER, LANE OR TURN LANE MARKINGS)	SAME AS LINE BEING EXTENDED	SKIP-DASH	SAME AS LINE BEING EXTENDED	2' (600) LINE WITH 6' (1.8) SPACE
EDGE LINES	4 (100)	SOLID	YELLOW-LEFT WHITE-RIGHT	OUTLINE MOUNTABLE MEDIANS IN YELLOW; EDGE LINES ARE NOT USED NEXT TO BARRIER CURB
TURN LANE MARKINGS	6 (150) LINE; FULL SIZE LETTERS & SYMBOLS (8' (2.4 m))	SOLID	WHITE	SEE TYPICAL TURN LANE MARKING DETAIL
TWO WAY LEFT TURN MARKING	2 @ 4 (100) EACH DIRECTION 8' (2.4 m) LEFT ARROW	SKIP-DASH AND SOLID IN PAIRS	YELLOW WHITE	6' (1.8 m) LINE WITH 18' (5.50 m) SPACE FOR SKIP-DASH; 8 (200) C-C BETWEEN SOLID LINE AND SKIP-DASH LINE SEE TYPICAL TWO-WAY LEFT TURN MARKING DETAIL
CROSSWALK LINES A. DIAGONALS (BIKE & EQUESTRIAN) B. LONGITUDINAL BARS (SCHOOL & PEDESTRIAN)	 12 (300) @ 45° 24 (600) @ 90°	 SOLID SOLID	 WHITE WHITE	 2' (600) APART 2' (600) APART SEE TYPICAL CROSSWALK MARKING DETAILS.
STOP LINES	24 (600)	SOLID	WHITE	PLACE 4' (1.2 m) IN ADVANCE OF AND PARALLEL TO CROSSWALK, IF PRESENT. OTHERWISE, PLACE AT DESIRED STOPPING POINT. PARALLEL TO CROSSROAD CENTERLINE, WHERE POSSIBLE
PAINTED MEDIANS	2 @ 4 (100) WITH 12 (300) DIAGONALS @ 45°	SOLID	YELLOW: TWO WAY TRAFFIC WHITE: ONE WAY TRAFFIC	8 (200) C-C FOR THE DOUBLE LINE SEE TYPICAL PAINTED MEDIAN MARKING.
GORE MARKING AND CHANNELIZING LINES	8 (200) WITH 12 (300) DIAGONALS @ 45°	SOLID	WHITE	DIAGONALS: 20' (6.1 m) (LESS THAN 30 MPH (50 km/h))
RAILROAD CROSSING	24 (600) TRANSVERSE LINES; "RR" IS 6' (1.8 m) LETTERS; 16 (400) LINE FOR "X"	SOLID	WHITE	SEE STATE STANDARD 780001 AREA OF: "R"=3.6 SQ. FT. (0.33m²) EACH "X"=54.0 SQ. FT. (5.0 m²)

FOR FURTHER DETAILS ON PAVEMENT MARKING REFER TO STREET MARKING STANDARDS, PRINTED BY CITY OF CHICAGO, DEPARTMENT OF TRANSPORTATION, BUREAU OF TRAFFIC.

ALL DIMENSIONS ARE IN INCHES (MILLIMETERS) UNLESS OTHERWISE SHOWN.

MODEL: Default
FILE NAME: pw:\\IL084EBI0INTEG.illinois.gov:PWIDOT\Documents\IDOT Offices\District 1\Projects\Dist1d22x34\CADData\CADs-sheets\tc24-.dgn

USER NAME = footemj	DESIGNED -	REVISED -T. RAMMACHER 12-07-00	
	DRAWN -	REVISED - K. ENG 02-28-12	
PLOT SCALE = 50.0000 ' / in.	CHECKED -	REVISED -	
PLOT DATE = 3/4/2019	DATE -	REVISED -	

STATE OF ILLINOIS
DEPARTMENT OF TRANSPORTATION

CITY OF CHICAGO
TYPICAL PAVEMENT MARKINGS

SCALE: NONE | SHEET 1 OF 3 SHEETS | STA. | TO STA.

F.A.I RTE.	SECTION	COUNTY	TOTAL SHEETS	SHEET NO.
290	2019-191-B-R	COOK	265	253
	TC–24	CONTRACT NO. 62K64		
		ILLINOIS	FED. AID PROJECT	

tc24.dgn 3/4/2019 10:54:53 AM User=footemj

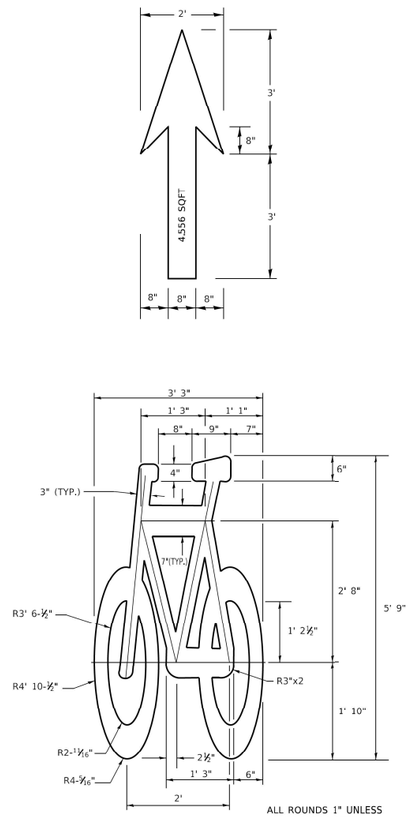

ALL ROUNDS 1" UNLESS OTHERWISE NOTED.

BICYCLE LANE SYMBOL

NOTE:

1. FOR BIKE LANE SYMBOLS ONLY, USE PRE-FORMED THERMOPLASTIC WITH A MINIMUM THICKNESS OF 90 MILS, MINIMUM SKID RESISTANCE VALUE OF 60 BPN, & A MINIMUM INDEX OF REFRACTION OF 1.50.
2. THE RESIDENT ENGINEER SHALL CONTACT MR. BEN GOMBERG AT 312-744-8093 AT LEAST ONE CALENDAR WEEK PRIOR TO INSTALLING BIKE LANE SYMBOLS.

TYPICAL BIKE LANE SYMBOLS
DRAWING #28

DRAWING #29

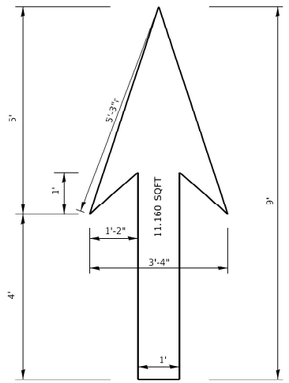

DRAWING #30

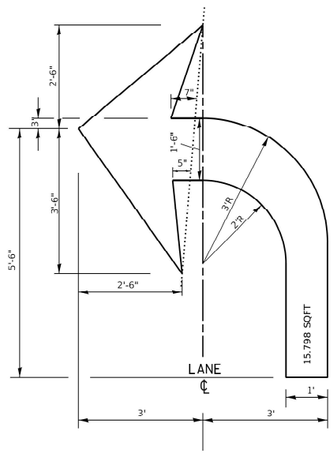

DRAWING #31

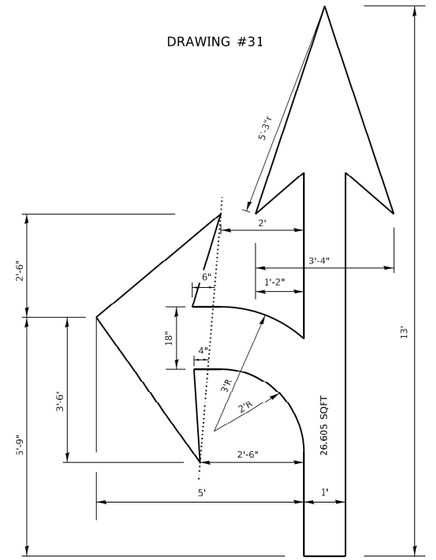

DRAWING #32

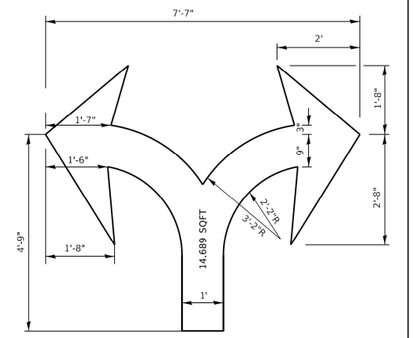

DRAWING #33

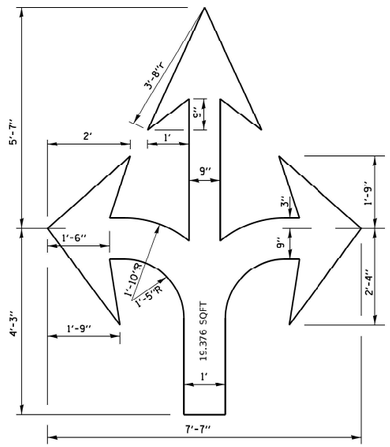

DRAWING #34

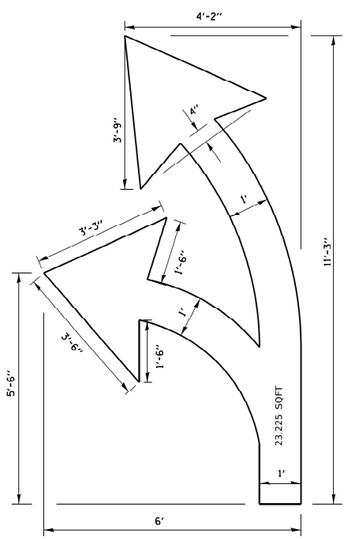

DRAWING #35

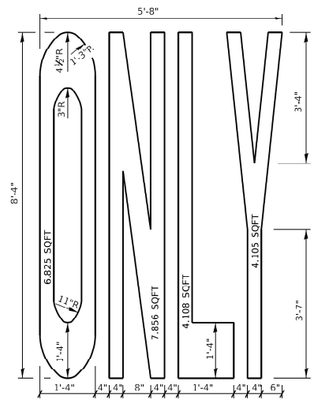

NOTE:

ALL MARKINGS SHALL BE SOLID WHITE UNLESS OTHERWISE NOTED IN THE PLANS

MODEL: Default
FILE NAME: pw:\\IL084EBIDINTEG.illinois.gov:PWIDOT\Documents\IDOT Offices\District 1\Projects\DistStd2x34\CADData\CADsheets\tc24.dgn

USER NAME = footemj	DESIGNED -	REVISED - T. RAMMACHER 12-07-00	STATE OF ILLINOIS DEPARTMENT OF TRANSPORTATION
	DRAWN -	REVISED -	
PLOT SCALE = 50.0000 ' / in.	CHECKED -	REVISED -	
PLOT DATE = 3/4/2019	DATE -	REVISED -	

CITY OF CHICAGO
TYPICAL PAVEMENT MARKINGS

SCALE: NONE | SHEET 2 OF 3 SHEETS | STA. TO STA.

F.A.I RTE.	SECTION	COUNTY	TOTAL SHEETS	SHEET NO.
290	2019-191-B-R	COOK	265	254
	TC-24	CONTRACT NO. 62K64		
		ILLINOIS FED. AID PROJECT		

tc24.dgn 3/4/2019 10:55:28 AM User=footemj

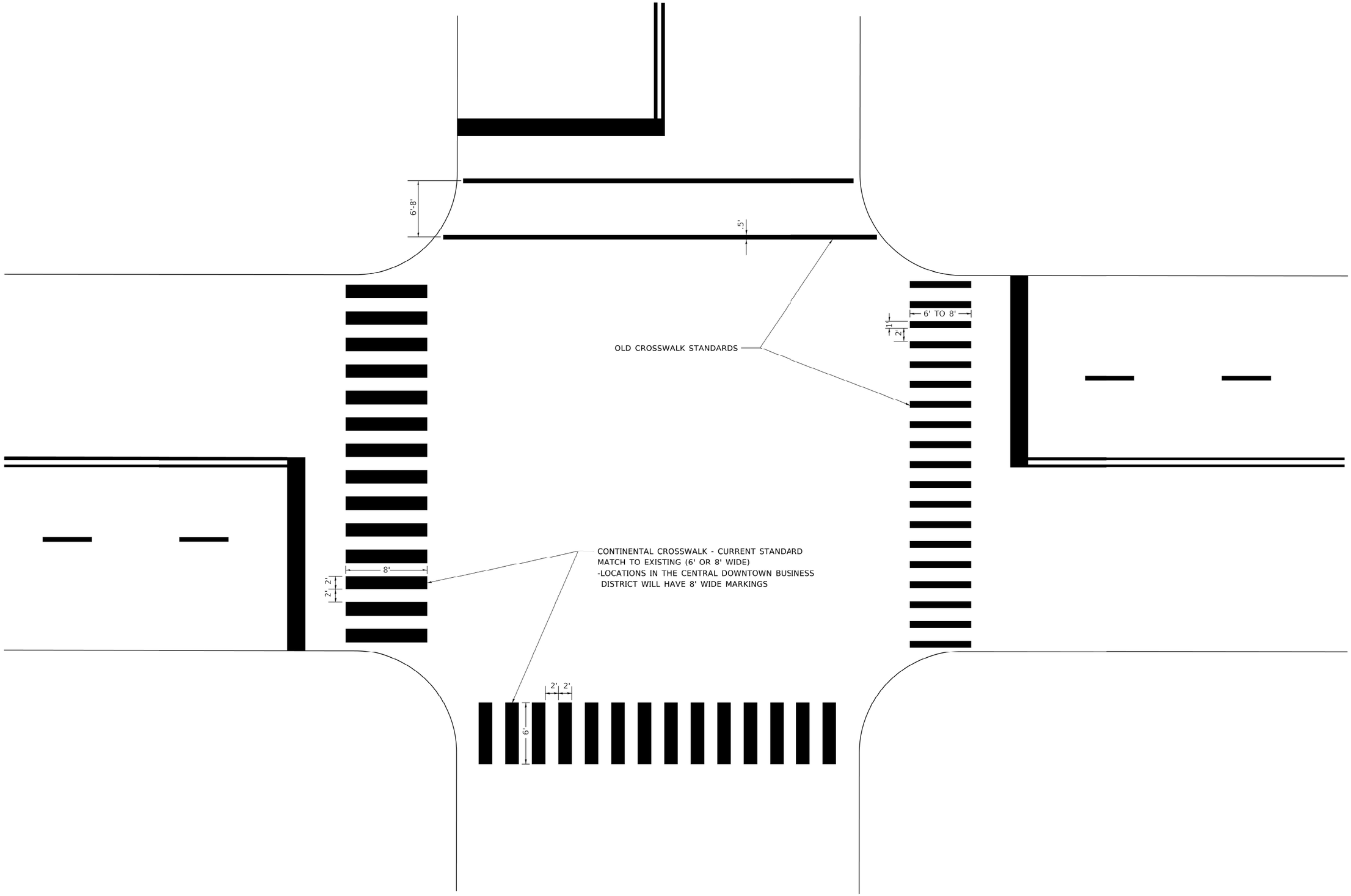

MODEL: Default
FILE NAME: pw:\\0108418\DINTEG.illinois.gov:PWIDOT\Documents\IDOT Offices\District 1\Projects\Dist5\d22x34\CADdata\CADs\sheets\tc24-.dgn

USER NAME = footemj	DESIGNED -	REVISED - T. RAMMACHER 12-07-00	
	DRAWN -	REVISED -	
PLOT SCALE = 50.0000 ' / in.	CHECKED -	REVISED -	
PLOT DATE = 3/4/2019	DATE -	REVISED -	

STATE OF ILLINOIS
DEPARTMENT OF TRANSPORTATION

CITY OF CHICAGO
TYPICAL PAVEMENT MARKINGS

SCALE: NONE | SHEET 3 OF 3 SHEETS | STA. | TO STA.

F.A.I RTE.	SECTION	COUNTY	TOTAL SHEETS	SHEET NO.
290	2019-191-B-R	COOK	265	255
	TC-24	CONTRACT NO. 62K64		
	ILLINOIS	FED. AID PROJECT		

tc24.dgn 3/4/2019 10:56:02 AM User=footemj

NOTES:

TYPICAL CROSSWALK CONSISTS OF 24 INCH BARS, WITH THE OUTER EDGE AS A PROJECTION OF 1 FT INSIDE THE PROPERTY LINE AND THE OTHER AS DEFINED BY SIDEWALK WIDTH.

WHERE CROSSWALK LOCATIONS ARE DEFINED BY SPECIFIC CURB RAMP SITUATIONS, THE BELOW TYPICAL LAYOUT MAY NOT APPLY. SEE CURB RAMP LAYOUTS IN APPENDIX B FOR ADDITIONAL CROSSWALK DETAILS.

FOR CROSSWALKS AT INTERSECTIONS WHERE PROPERTY LINES ARE NOT AT 90 DEGREES, ALIGN THE PROPERTY LINES (SEE DASHED LINE BELOW) TO LOCATE INNER CROSSWALK LINE.

SEE SECTION 4.2.9 AND SHEET A-7-1 FOR GUIDELINES REGARDING THE LAYOUT OF CONTINENTAL AND LADDER MARKINGS

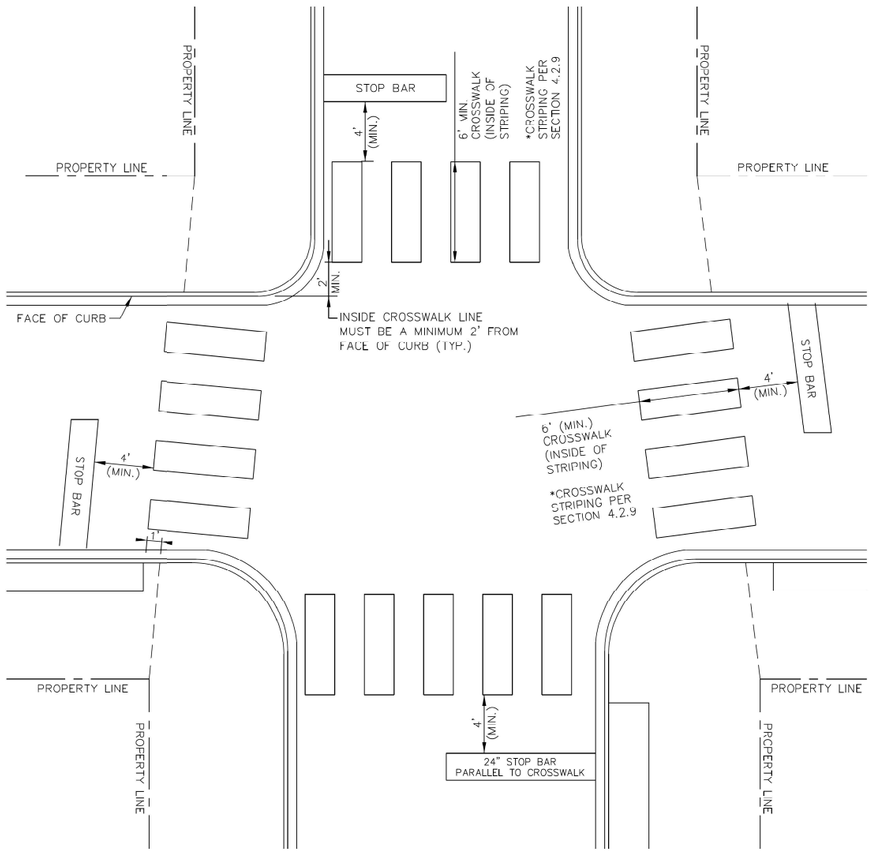

CDOT Chicago Department of Transportation	DATE	REVISION	CITY OF CHICAGO		
	01/01/2014	REVISION 1	INTERSECTION CROSSWALK LAYOUT		
	05/15/2023	REVISION 2			
			DATE	SHEET	DRAWN BY
			01/10/07	A-1-3	CDOT

TYPE BV.12 CURB & GUTTER

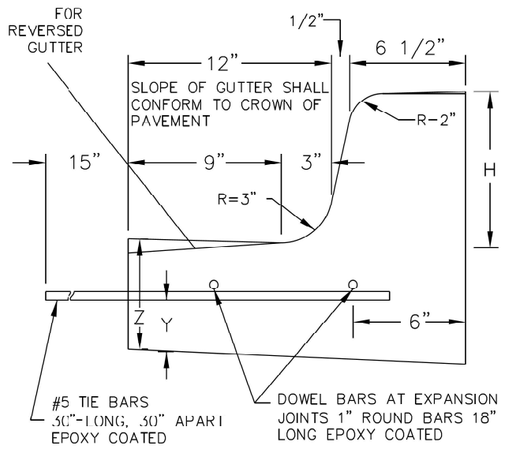

TYPE B BARRIER CURB

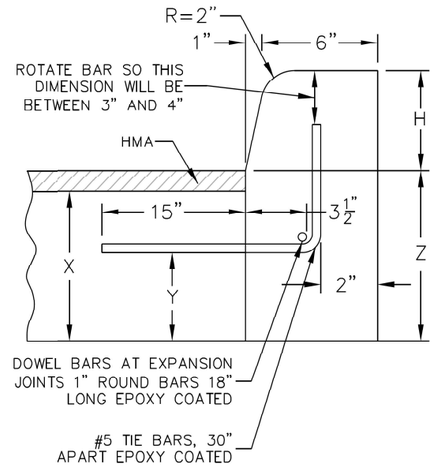

JOINTS IN CONCRETE CURB, COMBINATION CONCRETE CURB & GUTTER

TRANSVERSE JOINTS OF A TYPE SIMILAR TO THAT USED IN THE ADJACENT PAVEMENT SHALL BE INSTALLED IN THE CURB, GUTTER AND COMBINED CURB & GUTTER IN PROLONGATION WITH THE JOINTS IN THE PAVEMENT. THE DETAILS OF THE TRANSVERSE JOINTS IN THE CURB, GUTTER AND COMBINED CURB & CUTTER SHALL BE APPROVED BY THE COMMISSIONER. WHEN CURB, GUTTER OR COMBINED CURB & GUTTER IS CONSTRUCTED ADJACENT TO A FLEXIBLE BASE PAVEMENT, 1" THICK EXPANSION JOINTS COMPOSED OF BITUMINOUS PREFORMED JOINT FILLER SHALL BE INSTALLED IN THE CURB AND/OR GUTTER AT POINTS OF CURVATURE AND AT CONSTRUCTION JOINTS PER A-2-3B. CONTRACTION JOINTS SHALL ALSO BE PLACED BETWEEN THESE EXPANSION JOINTS AT DISTANCES NOT EXCEEDING 20 FEET. ALL TIE BARS SHALL BE DEFORMED. ALL DOWEL BARS SHALL BE SMOOTH.

NOTE:

1. AT LOCATIONS REQUIRING DEPRESSED CURBS SEE THE ADA STANDARDS FOR CONSTRUCTION DETAILS.
2. H = VARIABLE 3" TO 9"
   X = THICKNESS OF PAVEMENT
   Y = ONE HALF THE THICKNESS OF CONCRETE PAVEMENT OR CONCRETE BASE
   Z = 10" OR THICKNESS OF PAVEMENT – WHICHEVER IS GREATER

CDOT Chicago Department of Transportation	DATE	REVISION	CITY OF CHICAGO		
	01/01/2014	REVISION 1	CONCRETE CURB & GUTTER DETAIL		
	05/15/2023	REVISION 2			
			DATE	SHEET	DRAWN BY
			12/12/06	A-2-6	CDOT

FILE NAME = P:\10-IL\14111-IDOT - Sacramento and Paulina over I-290\Work\CADD\Paulina - Contract 62K64\CADD_Sheets\Civil\10162K64-sht-standards-CDOT.dgn

COLLINS ENGINEERS INC.

USER NAME = omartinez	DESIGNED -	REVISED -
	DRAWN -	REVISED -
PLOT SCALE = 40.0000 ' / in.	CHECKED -	REVISED -
PLOT DATE = 9/8/2025	DATE -	REVISED -

STATE OF ILLINOIS
DEPARTMENT OF TRANSPORTATION

CHICAGO DEPARTMENT OF TRANSPORTATION
STANDARD DRAWINGS

SCALE: NTS | SHEET NO. 1 OF 14 SHEETS | STA. | TO STA.

F.A.I. RTE.	SECTION	COUNTY	TOTAL SHEETS	SHEET NO.
290	2019-191-B-R	COOK	265	256
		CONTRACT NO. 62K64		
FED. ROAD DIST. NO.	ILLINOIS	FED. AID PROJECT		

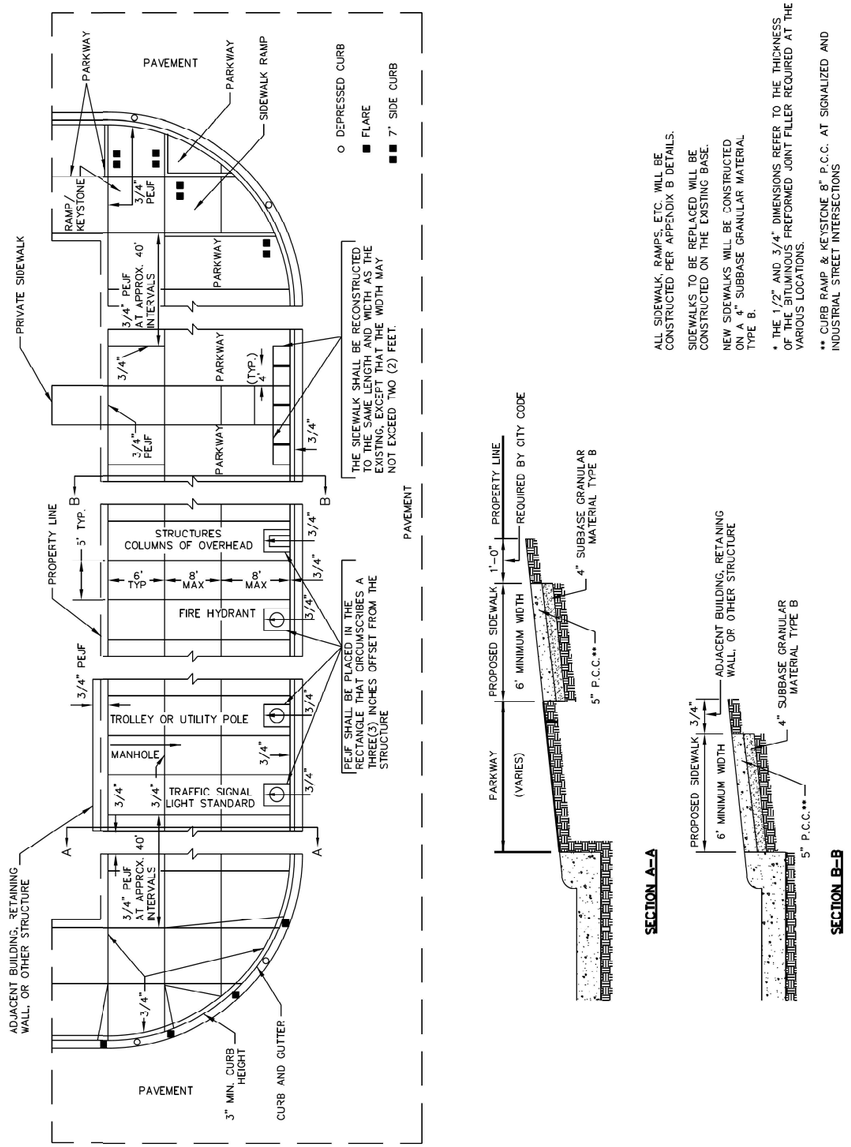

ALL SIDEWALK, RAMPS, ETC. WILL BE CONSTRUCTED PER APPENDIX B DETAILS.

SIDEWALKS TO BE REPLACED WILL BE CONSTRUCTED ON THE EXISTING BASE.

NEW SIDEWALKS WILL BE CONSTRUCTED ON A 4" SUBBASE GRANULAR MATERIAL TYPE B.

* THE 1/2" AND 3/4" DIMENSIONS REFER TO THE THICKNESS OF THE BITUMINOUS PREFORMED JOINT FILLER REQUIRED AT THE VARIOUS LOCATIONS.

** CURB RAMP & KEYSTONE 8" P.C.C. AT SIGNALIZED AND INDUSTRIAL STREET INTERSECTIONS

CDOT Chicago Department of Transportation	DATE	REVISION	CITY OF CHICAGO		
	01/01/2014	REVISION 1	PORTLAND CEMENT CONCRETE SIDEWALK CONSTRUCTION		
	05/15/2023	REVISION 2			
			DATE	SHEET	DRAWN BY
			12/22/06	A-3-1	CDOT

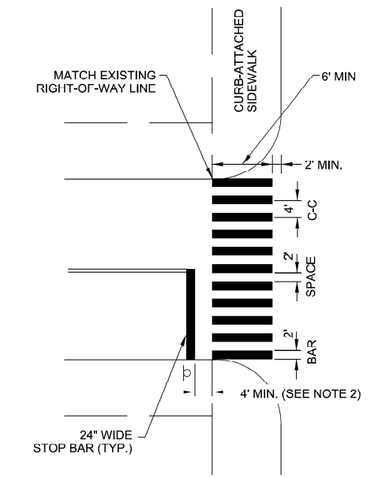

DETAIL A
CONTINENTAL CROSSWALK
CURB-ATTACHED SIDEWALK

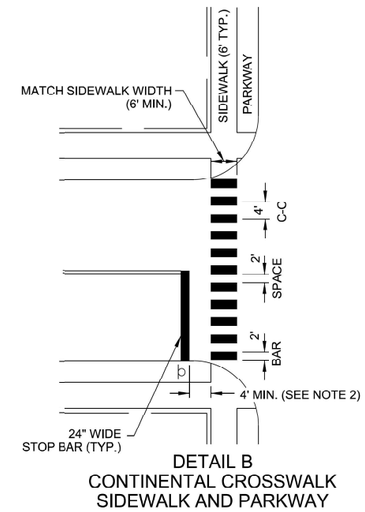

DETAIL B
CONTINENTAL CROSSWALK
SIDEWALK AND PARKWAY

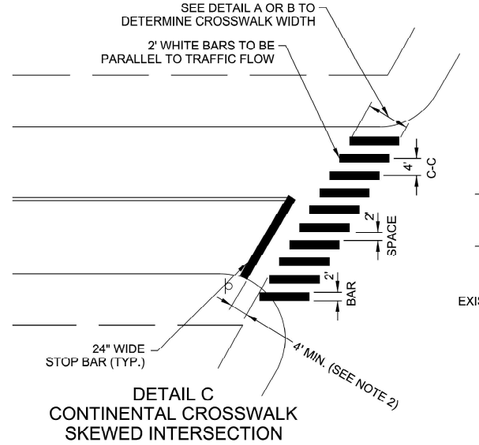

DETAIL C
CONTINENTAL CROSSWALK
SKEWED INTERSECTION

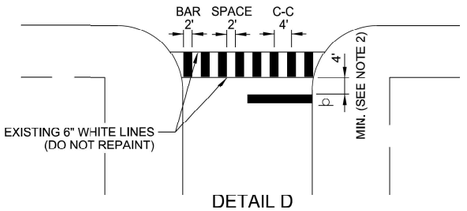

DETAIL D
LADDER CROSSWALK

PAGE 1 OF 2

CDOT Chicago Department of Transportation	DATE	REVISION	CITY OF CHICAGO		
	01/01/2014	REVISION 1	CROSSWALK MARKING DETAIL		
	05/15/2023	REVISION 2			
			DATE	SHEET	DRAWN BY
			06/25/12	A-7-1A	CDOT

FILE NAME = P:\10-LL\14111-IDOT - Sacramento and Paulina over I-290\Work\CADD\Paulina - Contract 62K64\CADD_Sheets\Civil\0162K64-ill-standards-CDOT.dgn

COLLINS ENGINEERS INC.

USER NAME = omartinez	DESIGNED -	REVISED -
	DRAWN -	REVISED -
PLOT SCALE = 40.0000 ' / in.	CHECKED -	REVISED -
PLOT DATE = 9/8/2025	DATE -	REVISED -

STATE OF ILLINOIS
DEPARTMENT OF TRANSPORTATION

CHICAGO DEPARTMENT OF TRANSPORTATION
STANDARD DRAWINGS

SCALE: NTS | SHEET NO. 2 OF 14 SHEETS | STA. | TO STA.

F.A.I. RTE.	SECTION	COUNTY	TOTAL SHEETS	SHEET NO.
290	2019-191-B-R	COOK	265	257
		CONTRACT NO. 62K64		
FED. ROAD DIST. NO.	ILLINOIS	FED. AID PROJECT		

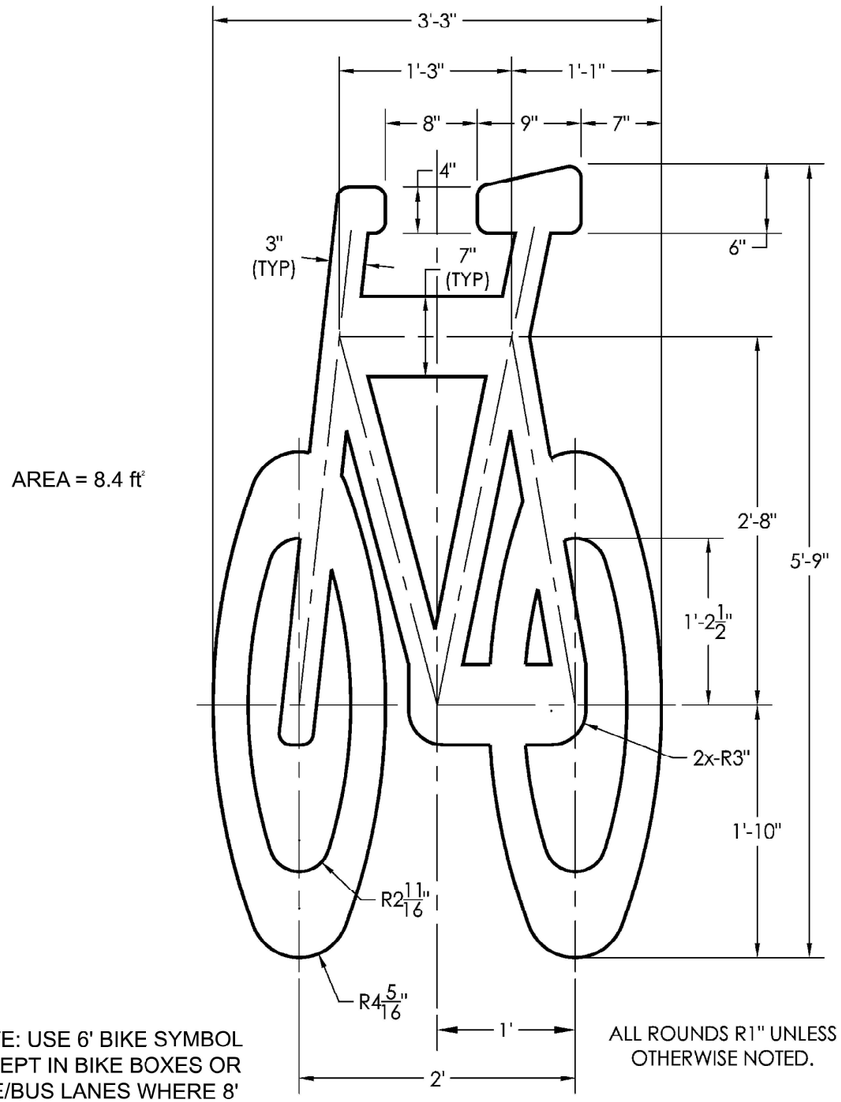

AREA = 8.4 ft²

NOTE: USE 6' BIKE SYMBOL EXCEPT IN BIKE BOXES OR BIKE/BUS LANES WHERE 8' BIKE SYMBOL SHALL BE USED

ALL ROUNDS R1" UNLESS OTHERWISE NOTED.

CDOT Chicago Department of Transportation	DATE	REVISION	CITY OF CHICAGO		
	01/01/2014	REVISION 1	6' BIKE SYMBOL		
	05/15/2023	REVISION 2			
	02/03/2025	REVISION 3	DATE	SHEET	DRAWN BY
			06/25/12	A-7-2	CDOT

AREA = 4.6 ft²

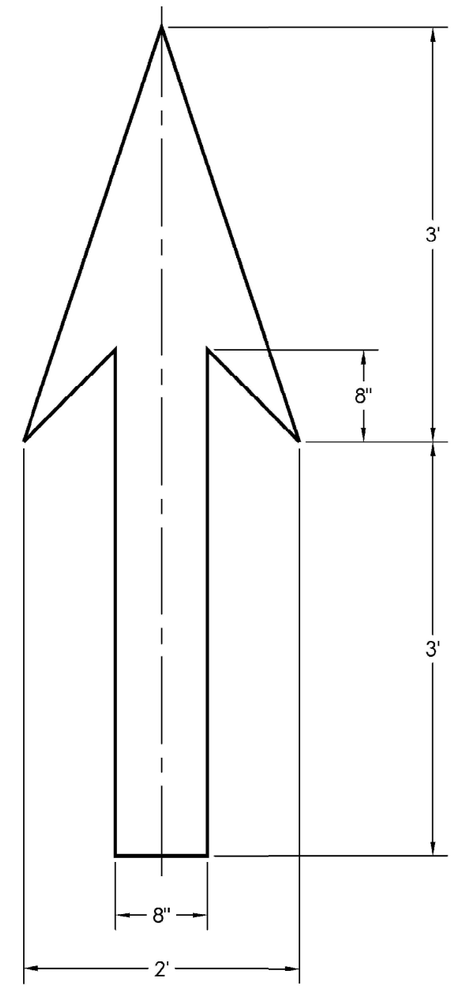

CDOT Chicago Department of Transportation	DATE	REVISION	CITY OF CHICAGO		
	01/01/2014	REVISION 1	BIKE ARROW		
	05/15/2023	REVISION 2			
			DATE	SHEET	DRAWN BY
			06/25/12	A-7-4	CDOT

FILE NAME = P:\10-ILL14411-IDOT - Sacramento and Paulina over I-290\Work\CADD\Paulina - Contract 62K64\CADD_Sheets\Civil\D16\2K64-sht-standards<CDOT.dgn

COLLINS ENGINEERS INC.

USER NAME = omartinez	DESIGNED -	REVISED -
	DRAWN -	REVISED -
PLOT SCALE = 40.0000 ' / in.	CHECKED -	REVISED -
PLOT DATE = 9/8/2025	DATE -	REVISED -

STATE OF ILLINOIS
DEPARTMENT OF TRANSPORTATION

CHICAGO DEPARTMENT OF TRANSPORTATION
STANDARD DRAWINGS

SCALE: NTS | SHEET NO. 3 OF 14 SHEETS | STA. | TO STA.

F.A.I. RTE.	SECTION	COUNTY	TOTAL SHEETS	SHEET NO.
290	2019-191-B-R	COOK	265	258
		CONTRACT NO. 62K64		
FED. ROAD DIST. NO.	ILLINOIS	FED. AID PROJECT		

Bike Lane Symbol & Arrow Spacing

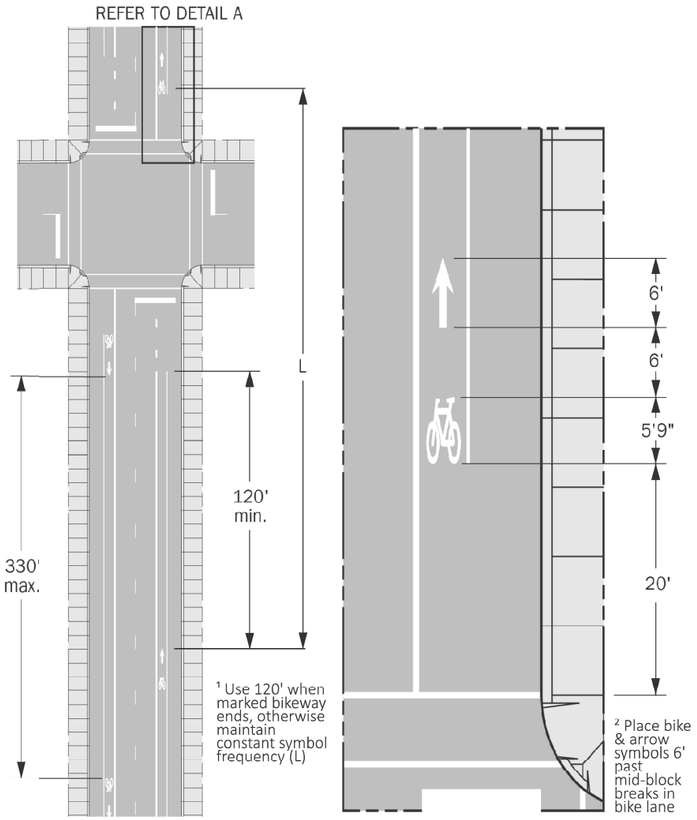

CDOT Chicago Department of Transportation	DATE	REVISION	CITY OF CHICAGO		
	01/01/2014	REVISION 1	BIKE AND ARROW SYMBOL SPACING		
	05/15/2023	REVISION 2			
			DATE	SHEET	DRAWN BY
			09/02/05	A-7-8	CDOT

NOTES:

CURB RAMP LAYOUT B-1-2 IS PREFERRED WHEREVER POSSIBLE. WHERE RAMPS ARE LOCATED IN THE CORNER RADIUS, LAYOUT B-1-3 SHALL BE USED

CURB RAMP PLACEMENT SHALL BE COORDINATED AS REQUIRED TO ALLOW FOR A 4' MINIMUM WIDTH SIDEWALK AROUND EACH CORNER OF INTERSECTION. SIDEWALK NOT TO BE OBSTRUCTED BY CURB RAMPS OR OTHER BARRIERS AND SHALL HAVE A CROSS SLOPE OF 1:64 MAXIMUM

THE BLENDED TRANSITION LAYOUT B-1-7 (AND SIMILAR) MAY BE USED WHERE TWO RAMPS ARE NOT POSSIBLE DUE TO GEOMETRIC CONSTRAINTS, SUCH AS LIMITED SIDEWALK WIDTH OR GRADE ELEVATIONS. THE BLENDED TRANSITION SHALL NOT BE USED IF ACCESS TO AN EXISTING FACILITY WOULD BE REDUCED

THE SHARED PERPENDICULAR RAMP AT CORNER LAYOUT B-1-10 IS NOT PREFERRED AND MAY ONLY BE USED WITH PERMISSION FROM THE COMMISSIONER

SEE SHEET B-3-3 FOR TRANSITION PANEL GUIDELINES

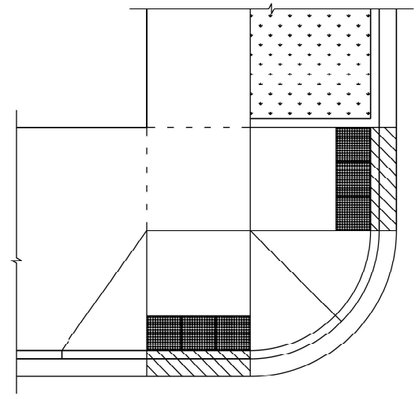

SHEET B-1-2: 2 PERPENDICULAR RAMPS

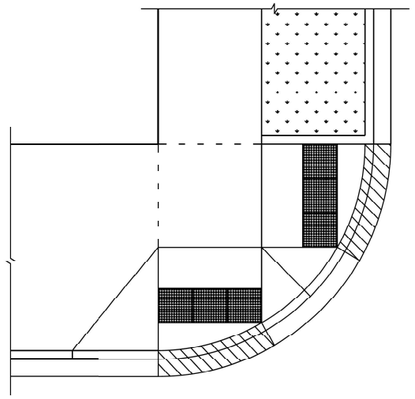

SHEET B-1-3: 2 RAMPS IN RADIUS

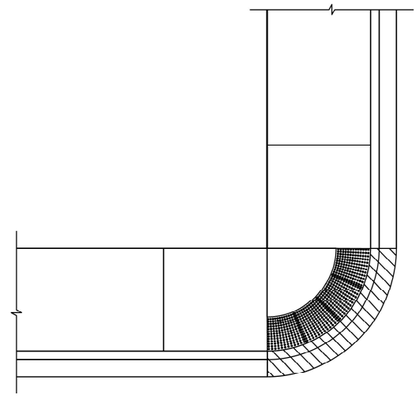

SHEET B-1-7: BLENDED TRANSITION

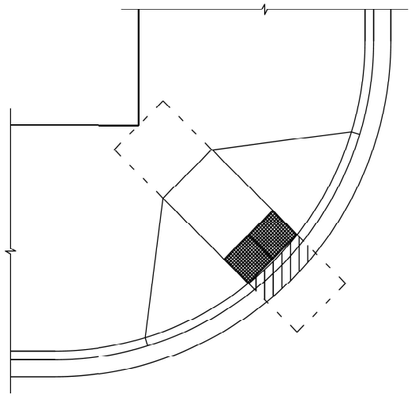

SHEET B-1-10: SHARED PERPENDICULAR RAMP AT CORNER

CDOT Chicago Department of Transportation	DATE	REVISION	CITY OF CHICAGO TYPICAL CORNER RAMP LAYOUTS **SHEET B-1-1**
	02/20/07	REVISION 1	
	11/15/07	REVISION 2	
	11/14/08	REVISION 3	
	11/02/09	REVISION 4	
	08/10/12	REVISION 5	
	02/01/25	REVISION 6	

SCALE: NOT TO SCALE
DATE: 10/23/2006

DRAWN BY: CDOT
CHECKED BY: TRANSYSTEMS

FILE NAME = P:\10-IL14111-ID01 - Sacramento and Paulina over I-290\Work\CADD\Paulina - Contract 62K64\CADD_Sheets\Civil\D162K64-sht-standards-CDOT.dgn

COLLINS ENGINEERS INC.			
USER NAME = omartinez	DESIGNED -	REVISED -	
	DRAWN -	REVISED -	
PLOT SCALE = 40.0000 ' / in.	CHECKED -	REVISED -	
PLOT DATE = 9/8/2025	DATE -	REVISED -	

STATE OF ILLINOIS
DEPARTMENT OF TRANSPORTATION

CHICAGO DEPARTMENT OF TRANSPORTATION
STANDARD DRAWINGS

SCALE: NTS | SHEET NO. 4 OF 14 SHEETS | STA. | TO STA.

F.A.I. RTE.	SECTION	COUNTY	TOTAL SHEETS	SHEET NO.
290	2019-191-B-R	COOK	265	259
		CONTRACT NO. 62K64		
FED. ROAD DIST. NO.	ILLINOIS	FED. AID PROJECT		

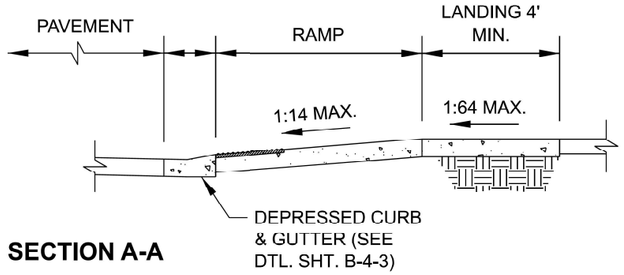

SECTION A-A

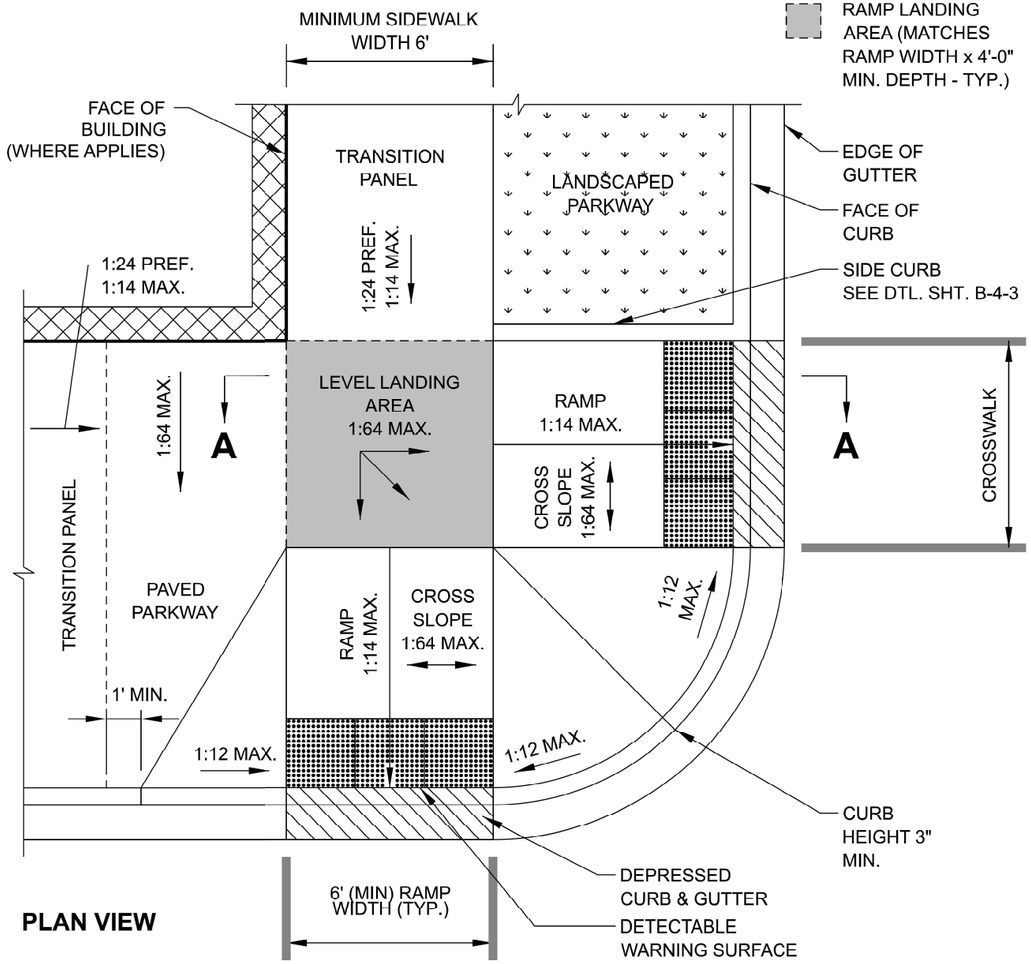

PLAN VIEW

DATE	REVISION
02/20/07	REVISION 1
11/15/07	REVISION 2
11/14/08	REVISION 3
11/02/09	REVISION 4
08/10/12	REVISION 5
02/01/25	REVISION 6

CDOT Chicago Department of Transportation

CITY OF CHICAGO
2 PERPENDICULAR RAMPS AT CORNER
SHEET B-1-2

SCALE: NOT TO SCALE
DATE: 10/23/2006

DRAWN BY: CDOT
CHECKED BY: TRANSYSTEMS

* WHERE RAMP AND SIDE FLARE SLOPES ARE NOT NECESSARY TO CONNECT STREET AND SIDEWALK, THE DETECTABLE WARNING TILES MUST FIT BACK OF CURB (SIMILAR TO SHEETS B-1-7 THRU B-1-9) FOR SIDE FLARES REFER TO NOTE 10 ON B-3-2

** REFER TO DTL. SHT. B-1-5 WHERE TILE SETBACK EXCEEDS 5'-0"

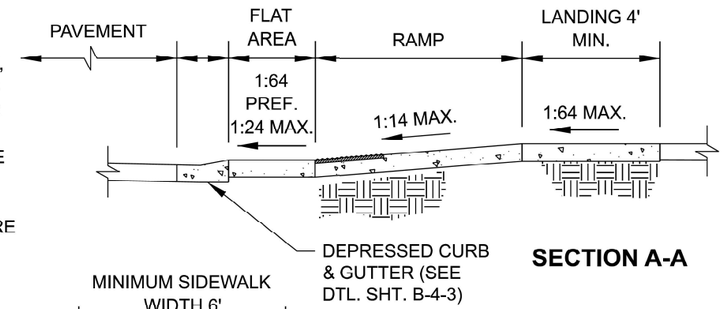

SECTION A-A

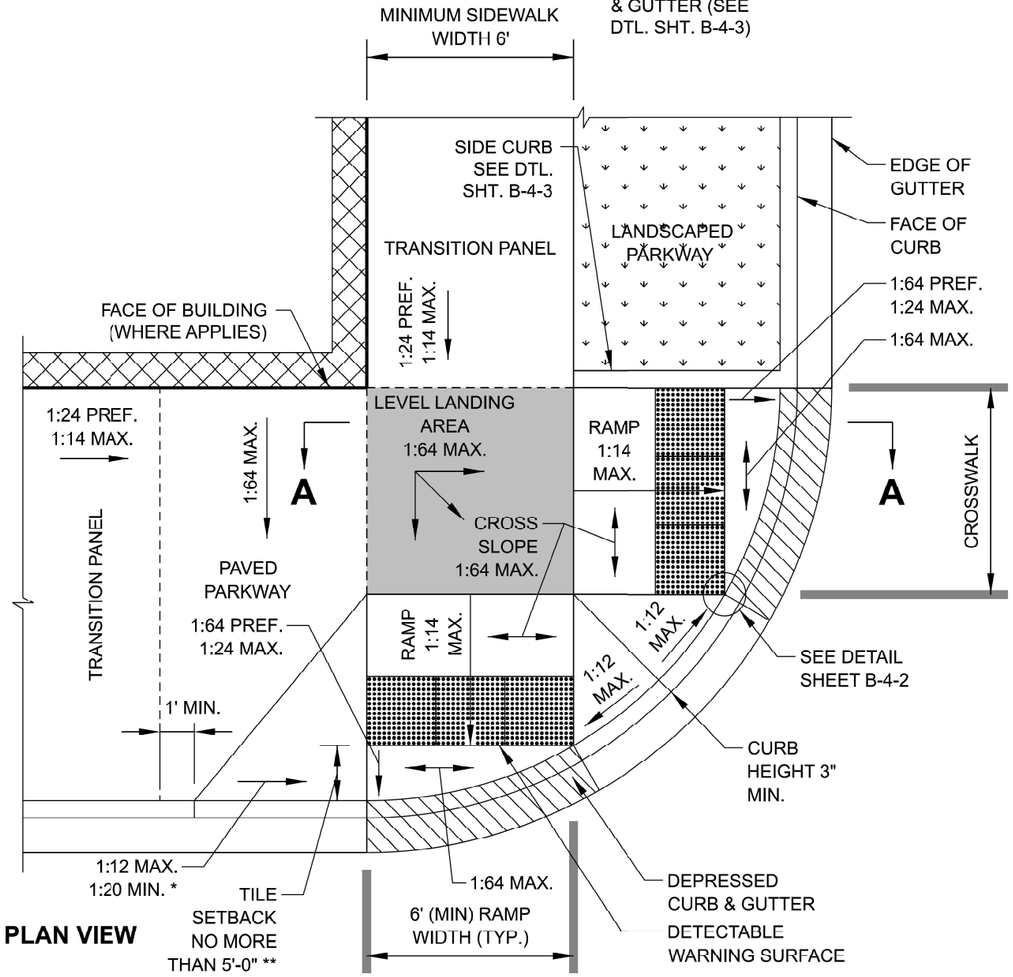

PLAN VIEW

DATE	REVISION
02/20/07	REVISION 1
11/15/07	REVISION 2
11/14/08	REVISION 3
11/02/09	REVISION 4
08/10/12	REVISION 5
02/01/25	REVISION 6

CDOT Chicago Department of Transportation

CITY OF CHICAGO
2 PERPENDICULAR RAMPS AT CORNER
WITH RAMPS IN CURB RADIUS
SHEET B-1-3

SCALE: NOT TO SCALE
DATE: 10/23/2006

DRAWN BY: CDOT
CHECKED BY: TRANSYSTEMS

FILE NAME = P:\10-IL14411-IDOT - Sacramento and Paulina over I-290\Work\CADD\Paulina - Contract 62K64\CADD_Sheets\CivilD16\62K64-sht-standards-CDOT.dgn

COLLINS ENGINEERS INC.

USER NAME = omartinez	DESIGNED -	REVISED -
	DRAWN -	REVISED -
PLOT SCALE = 40.0000 ' / in.	CHECKED -	REVISED -
PLOT DATE = 9/8/2025	DATE -	REVISED -

STATE OF ILLINOIS
DEPARTMENT OF TRANSPORTATION

CHICAGO DEPARTMENT OF TRANSPORTATION
STANDARD DRAWINGS

SCALE: NTS | SHEET NO. 5 OF 14 SHEETS | STA. | TO STA.

F.A.I. RTE.	SECTION	COUNTY	TOTAL SHEETS	SHEET NO.
290	2019-191-B-R	COOK	265	260
		CONTRACT NO. 62K64		
FED. ROAD DIST. NO.	ILLINOIS	FED. AID PROJECT		

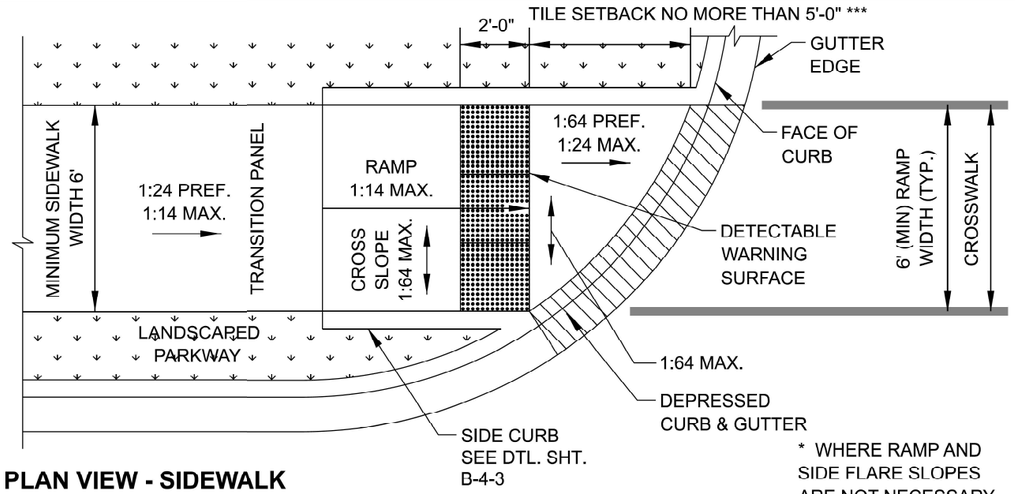

PLAN VIEW - SIDEWALK THROUGH PARKWAY

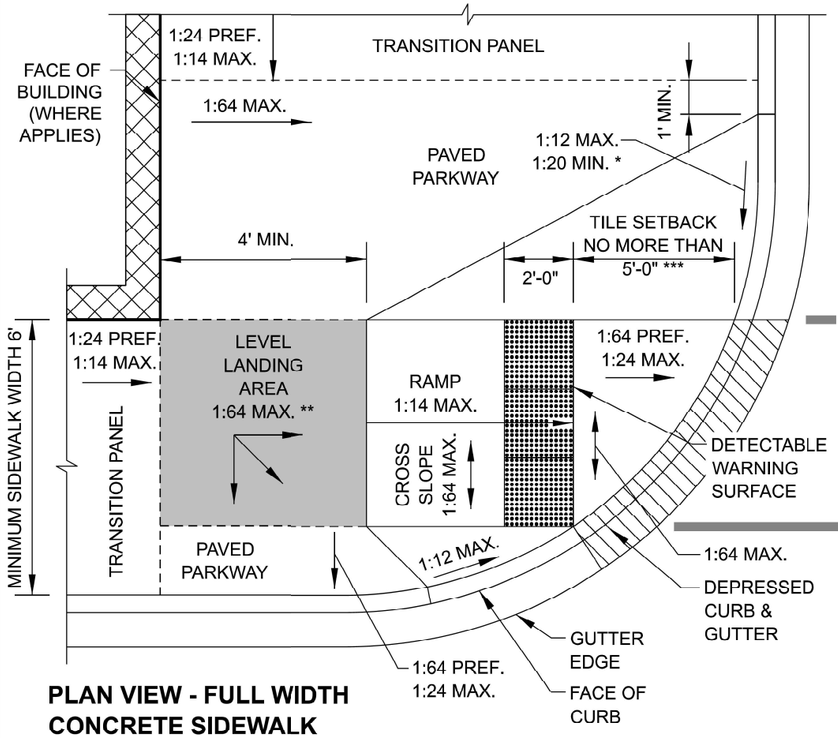

PLAN VIEW - FULL WIDTH CONCRETE SIDEWALK

* WHERE RAMP AND SIDE FLARE SLOPES ARE NOT NECESSARY TO CONNECT STREET AND SIDEWALK, THE DETECTABLE WARNING TILES MUST FIT BACK OF CURB (SIMILAR TO SHEETS B-1-7 THRU B-1-9) FOR SIDE FLARES REFER TO NOTE 10 ON B-3-2

** LEVEL LANDING AREA REQUIRED WHERE SIDEWALKS INTERSECT AT TOP OF RAMP

*** REFER TO DTL. SHT. B-1-5 WHERE TILE SETBACK EXCEEDS 5'-0"

CDOT Chicago Department of Transportation

DATE	REVISION
02/20/07	REVISION 1
11/15/07	REVISION 2
11/14/08	REVISION 3
11/02/09	REVISION 4
08/10/12	REVISION 5
02/01/25	REVISION 6

CITY OF CHICAGO
PERPENDICULAR RAMP AT CORNER
IN CURB RADIUS WITH SINGLE CROSSING

SCALE: NOT TO SCALE
DATE: 10/23/2006

SHEET B-1-4

DRAWN BY: CDOT
CHECKED BY: TRANSYSTEMS

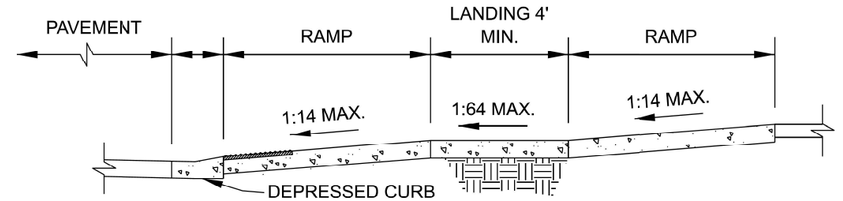

SECTION A-A

NOTE:
DO NOT USE THIS DESIGN IF ACCESS TO EXISTING FACILITIES IS REDUCED (DO NOT RAMP IN FRONT OF ENTRIES, STAIRS, GATES, ETC.)

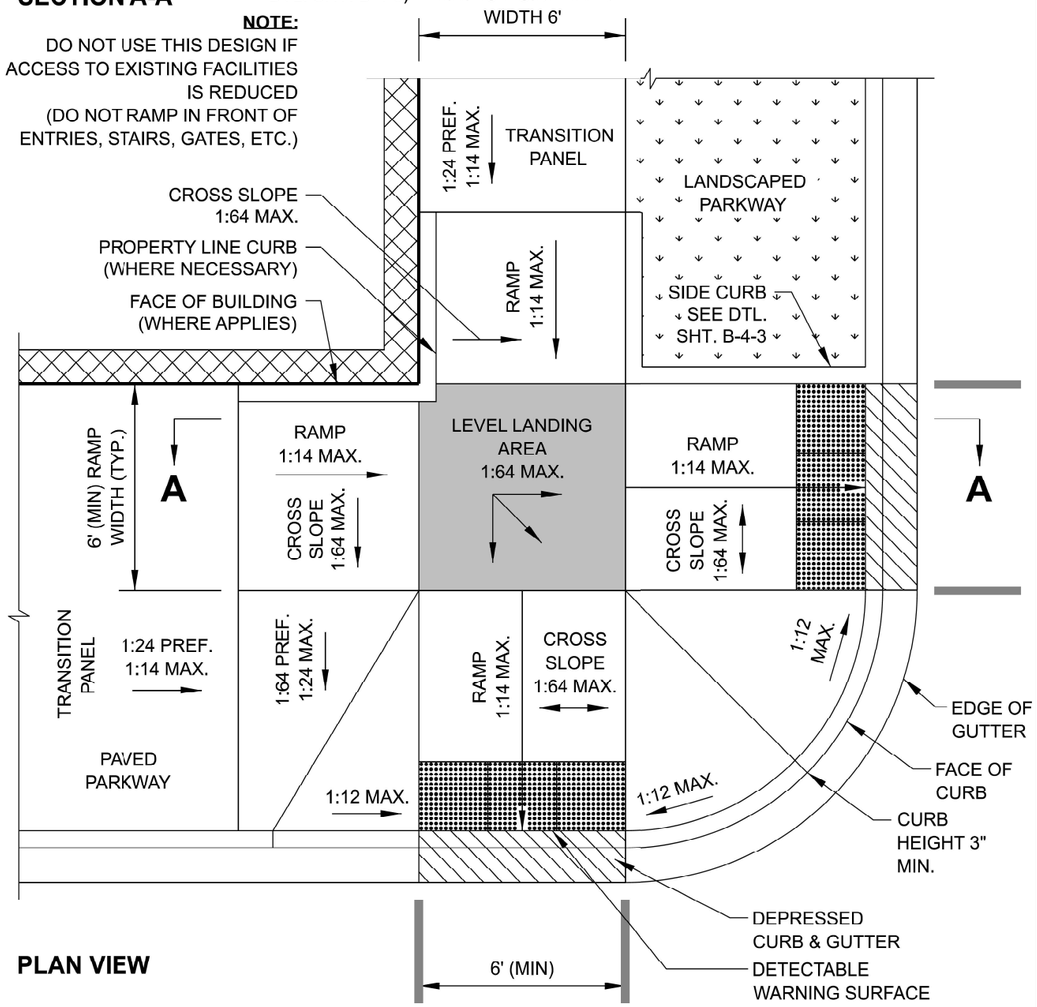

PLAN VIEW

CDOT Chicago Department of Transportation

DATE	REVISION
02/20/07	REVISION 1
11/15/07	REVISION 2
11/14/08	REVISION 3
11/02/09	REVISION 4
08/10/12	REVISION 5
02/01/25	REVISION 6

CITY OF CHICAGO
COMBINATION RAMP AT CORNER
(PARALLEL AND PERPENDICULAR RAMPS)

SCALE: NOT TO SCALE
DATE: 10/23/2006

SHEET B-1-6

DRAWN BY: CDOT
CHECKED BY: TRANSYSTEMS

FILE NAME = P:\10-IL\14411-IDOT - Sacramento and Paulina over I-290\Work\CADD\Paulina - Contract 62K64\CADD_Sheets\Civil\b0162K64-bft-standards-CDOT.dgn

COLLINS ENGINEERS INC.

USER NAME = omartinez	DESIGNED -	REVISED -
	DRAWN -	REVISED -
PLOT SCALE = 40.0000 ' / in.	CHECKED -	REVISED -
PLOT DATE = 9/8/2025	DATE -	REVISED -

STATE OF ILLINOIS
DEPARTMENT OF TRANSPORTATION

CHICAGO DEPARTMENT OF TRANSPORTATION
STANDARD DRAWINGS

SCALE: NTS | SHEET NO. 6 OF 14 SHEETS | STA. | TO STA.

F.A.I. RTE.	SECTION	COUNTY	TOTAL SHEETS	SHEET NO.
290	2019-191-B-R	COOK	265	261
		CONTRACT NO. 62K64		
FED. ROAD DIST. NO.	ILLINOIS	FED. AID PROJECT		

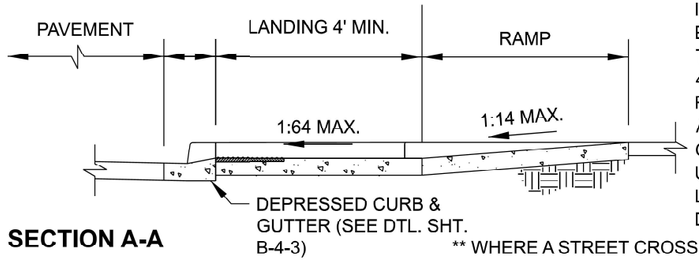

SECTION A-A

* THE LEVEL LANDING AREA INCLUDES THE ENTIRE SPACE BEHIND THE BACK OF THE CURB TO THE BOTTOM OF EACH RAMP; THE 4'x4' AREA DASHED IS THE MINIMUM REQUIRED MANEUVERING AREA AT A LANDING (FIT BEHIND THE BACK OF CURB) FOR A PEDESTRIAN USING A WHEELCHAIR. THE LEVEL LANDING MAY INCLUDE DETECTABLE WARNING

** WHERE A STREET CROSSING IS ONLY PROVIDED IN ONE DIRECTION, USE B-1-8, NOT THIS STANDARD

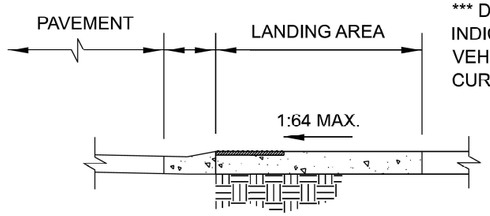

SECTION B-B

*** DETECTABLE WARNING SURFACE SHALL BE PLACED TO INDICATE THE BOUNDARY BETWEEN PEDESTRIAN AND VEHICULAR ROUTES WHERE THERE IS A FLUSH INSTEAD OF A CURBED CONNECTION

NOTE:
DO NOT USE THIS DESIGN IF ACCESS TO EXISTING FACILITIES IS REDUCED (DO NOT RAMP IN FRONT OF ENTRIES, STAIRS, GATES, ETC.)

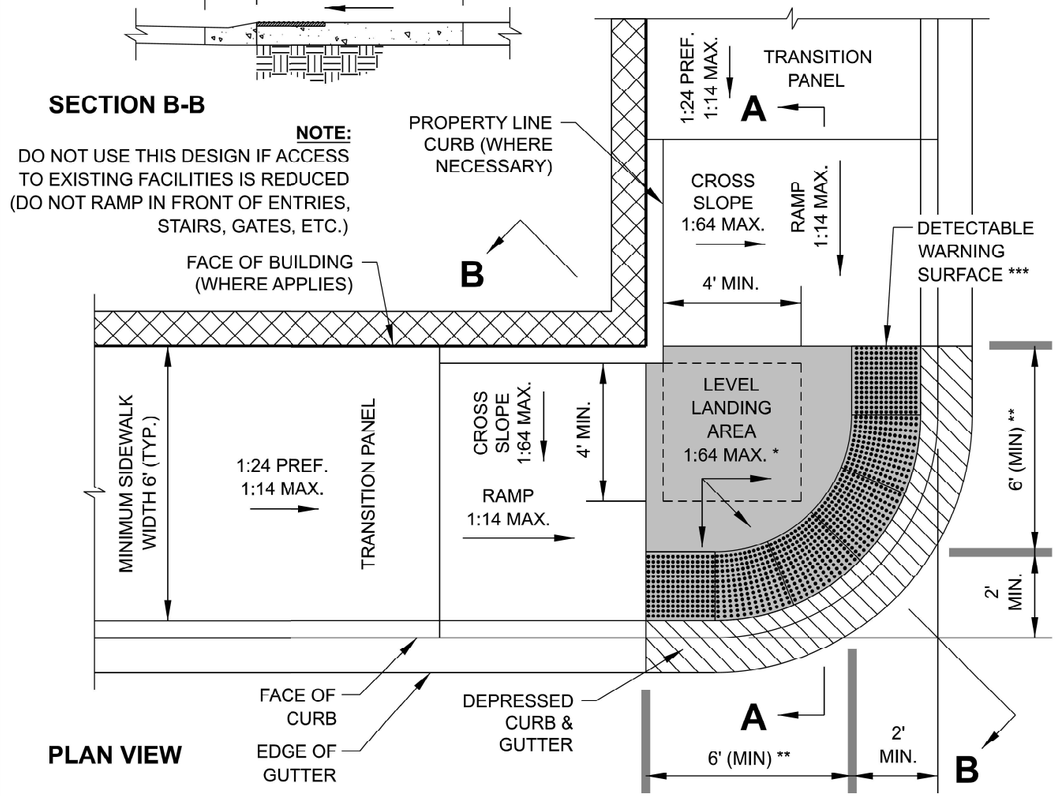

PLAN VIEW

DATE	REVISION
02/20/07	REVISION 1
11/15/07	REVISION 2
11/14/08	REVISION 3
11/02/09	REVISION 4
08/10/12	REVISION 5
02/01/25	REVISION 6

CDOT Chicago Department of Transportation

CITY OF CHICAGO
BLENDED TRANSITION AT CORNER
SHEET B-1-7

SCALE: NOT TO SCALE
DATE: 10/23/2006

DRAWN BY: CDOT
CHECKED BY: TRANSYSTEMS

SLOPE CONVERSION CHART

% SLOPE	SLOPE RATIO	INCHES PER FOOT	DECIMAL FEET PER FOOT
16.67%	1:6	2"	0.167'
10%	1:10	1 1/4"	0.104'
8.33%	1:12	1"	0.083'
7.14%	1:14	7/8"	0.073'
5%	1:20	5/8"	0.052'
4.17%	1:24	1/2"	0.042'
2%	1:50	1/4"	0.021'
1.56%	1:64	3/16"	0.016'

DATE	REVISION
02/20/07	REVISION 1
11/15/07	REVISION 2
11/14/08	REVISION 3
11/02/09	REVISION 4
08/10/12	REVISION 5

CDOT Chicago Department of Transportation

CITY OF CHICAGO
CONVERSION CHARTS
SHEET B-3-1

SCALE: NOT TO SCALE
DATE: 10/23/2006

DRAWN BY: CDOT
CHECKED BY: TRANSYSTEMS

FILE NAME = P:\10-IL\14111-IDOT - Sacramento and Paulina over I-290\Work\CADD\Paulina - Contract 62K64\CADD_Sheets\Civil\10162K64-sht-standards-CDOT.dgn

COLLINS ENGINEERS INC.

USER NAME = omartinez	DESIGNED -	REVISED -	
	DRAWN -	REVISED -	
PLOT SCALE = 40.0000 ' / in.	CHECKED -	REVISED -	
PLOT DATE = 9/8/2025	DATE -	REVISED -	

STATE OF ILLINOIS
DEPARTMENT OF TRANSPORTATION

CHICAGO DEPARTMENT OF TRANSPORTATION
STANDARD DRAWINGS

SCALE: NTS | SHEET NO. 7 OF 14 SHEETS | STA. | TO STA.

F.A.I. RTE.	SECTION	COUNTY	TOTAL SHEETS	SHEET NO.
290	2019-191-B-R	COOK	265	262
		CONTRACT NO. 62K64		
FED. ROAD DIST. NO.	ILLINOIS	FED. AID PROJECT		

GENERAL NOTES:

1. THE DETECTABLE WARNING TILES INSTALLED SHALL BE CHOSEN FROM THE CHICAGO DEPARTMENT OF TRANSPORTATION LIST OF APPROVED DETECTABLE WARNING PRODUCTS (SEE THE CITY OF CHICAGO APPROVED DETECTABLE WARNING PRODUCT LIST). IT IS NOT ACCEPTABLE TO INSTALL TWO DIFFERENT DETECTABLE WARNING PRODUCTS ADJACENT TO ONE ANOTHER AT ANY LOCATION. IN THE CENTRAL BUSINESS DISTRICT, GRANITE OR OTHER SPECIALTY PAVING MATERIALS MAY BE SUBMITTED TO THE COMMISSIONER FOR APPROVAL

2. THE DETECTABLE WARNING MUST BE INSTALLED A MAXIMUM OF 8" FROM FACE TO CURB (SEE DETAIL SHEET B-4-2)

3. THE DETECTABLE WARNING MUST COVER FULL WIDTH OF RAMP EXCLUDING SIDE FLARES FOR A MINIMUM UNOBSTRUCTED DEPTH OF 24". THE DETECTABLE WARNING LOCATED ON THE SURFACES OF RAMPS ARE TYPICALLY ORIENTED PERPENDICULAR TO THE RUN OF THE RAMP UNLESS SPECIAL CIRCUMSTANCES OCCUR (SEE DETAIL SHEET B-1-5). THE DETECTABLE WARNING MUST BE PROVIDED FOR A MINIMUM DEPTH OF 24" FOR THE ENTIRE LENGTH OF THE SIDEWALK WHERE THE SIDEWALK IS FLUSH WITH THE STREET (DEPRESSED CURB OR FLUSH TRANSITION). IF IT IS NECESSARY TO CUT UNIT(S) IN THE PROVISION OF A COMPLIANT RAMP OR SIDEWALK WITH 24" MINIMUM DEPTH OF DETECTABLE WARNING, THE UNITS SHALL BE CUT IN A NEAT AND WORKMANLIKE MANNER PER MANUFACTURER'S REQUIREMENTS WITH A MINIMUM OF THREE PINS OR ANCHOR POINTS (AS APPLICABLE). THE UNITS SHALL BE ARRANGED SO THAT THE CUT TILES ARE LARGE ENOUGH TO BE PROPERLY AND ADEQUATELY SECURED. CUT UNITS SHALL NOT BE USED UNLESS ALL OTHER DESIGN OPTIONS HAVE BEEN EXHAUSTED. THE USE OF SALVAGE PIECES FROM UNITS THAT ARE CUT WILL NOT BE PERMITTED WITHOUT WRITTEN APPROVAL OF THE COMMISSIONER. CUT UNIT SALVAGE PIECES NOT APPROVED FOR USE MUST BE REMOVED FROM THE SITE AND DISPOSED PROPERLY

4. WHERE APPLICABLE, A COMBINATION OF STRAIGHT AND RADIAL DETECTABLE WARNING UNITS MAY BE USED ON COMPOUND AND LARGE RADII. CONTRACTOR MUST MAKE THIS DETERMINATION AND VERIFY IN FIELD

5. PRIOR TO PLACING CONCRETE FOR DEPRESSED CURBS, RAMPS, OR SIDEWALKS THE CONTRACTOR SHALL VERIFY THAT LAYOUT OR DESIGN COMPLIES WITH THE REQUIREMENTS OF THE CDOT ADA STANDARDS

6. RAMP WIDTH MUST BE A MINIMUM OF 6'-0" AND IN INCREMENTS OF 1'-0", EXCEPT WHEN USING THE PERPENDICULAR RAMP AT CORNER (OR OTHER SPECIAL CDOT APPROVED CONDITIONS), WHICH HAS A MINIMUM WIDTH OF 4'-0"

7. THE MAXIMUM ALLOWABLE RAMP RUNNING SLOPE IS 1:14, MEASURED AT ANY PORTION OF THE RAMP. IF POSSIBLE, A MORE GRADUAL SLOPE SHALL BE USED. GRADE BREAKS AT THE TOP AND BOTTOM OF RAMPS SHALL BE PERPENDICULAR TO THE DIRECTION OF RAMP RUN

8. THE MAXIMUM ALLOWABLE RAMP CROSS SLOPE IS 1:64, MEASURED AT ANY PORTION OF THE RAMP

9. THE MAXIMUM ALLOWABLE RAMP LANDING SLOPE IS 1:64, MEASURED AT ANY LOCATION AND IN ANY DIRECTION ON THE LANDING. THE RAMP LANDING WIDTH SHALL MATCH THE FULL WIDTH OF THE RAMP FOR A MINIMUM UNOBSTRUCTED DEPTH OF 4'-0". RAMP LANDINGS SHALL BE PROVIDED AT THE TOP AND/OR BOTTOM OF RAMPS WHERE TURNING IS REQUIRED

10. RAMP SIDE FLARES SHALL BE INSTALLED AT ANY LOCATION WHERE THE SURFACE ADJACENT TO THE RAMP SURFACE IS INTENDED FOR PEDESTRIAN USE. TRIPPING HAZARDS, INCLUDING STEPS, DROP-OFFS, OR CURBS SHALL NOT BE LOCATED WITHIN THE LIMITS OF THE SIDEWALK. RAMPS SIDE FLARES ARE NOT REQUIRED WHERE THE SURFACE ADJACENT TO THE RAMP SURFACE IS LANDSCAPE OR IS OCCUPIED BY A BARRIER THAT BLOCKS PEDESTRIAN ACCESS. EXCEPTION TO THIS RULE MAY BE SUBMITTED TO THE COMMISSIONER FOR APPROVAL

11. UTILITIES, SUCH AS LIGHT POLES, TRAFFIC POLES AND HYDRANTS, MAY BE LOCATED IN THE FLARE OF THE RAMP BUT ARE NOT ALLOWED ON THE RAMP SURFACE OR LANDING AREAS. EXISTING UTILITY STRUCTURE LIDS MAY REMAIN WITHIN THE FLARE OR ON THE SURFACE OF THE RAMP IF THE EQUIPMENT OF GENERAL NOTE #19 ARE MET

12. ALL LOCATIONS WITH TYPE B CURB (EXCEPT ALLEY APRONS) SHALL BE CONSTRUCTED AS CURB AND GUTTER TYPE BV.12 THROUGH THE LIMITS OF THE CORNER AND THE CURB RAMPS

CDOT Chicago Department of Transportation

DATE	REVISION
02/20/07	REVISION 1
11/15/07	REVISION 2
11/14/08	REVISION 3
11/02/09	REVISION 4
08/10/12	REVISION 5
02/01/25	REVISION 6

CITY OF CHICAGO
GENERAL NOTES
SHEET B-3-2

SCALE: NOT TO SCALE
DATE: 10/23/2006

DRAWN BY: CDOT
CHECKED BY: TRANSYSTEMS

GENERAL NOTES (CONTINUED):

13. ALTERATIONS SHALL NOT DECREASE THE ACCESSIBILITY TO EXISTING FACILITIES, SIDEWALKS LEADING TO EXISTING FACILITIES OR DOOR OR GATE ACCESS POINTS TO FACILITIES. THE ELEVATION AT THE EXISTING PROPERTY LINE OR FACILITY ACCESS POINT SHALL BE MAINTAINED. ANY ALTERATIONS ADJACENT TO OR AFFECTING A FACILITY ACCESS POINT SHALL RESULT IN IMPROVED ACCESS OR AT A MINIMUM A REPLICATION OF EXISTING CONDITIONS, INCLUDING SIDEWALK SLOPES AND SURFACE CONDITIONS. FACILITIES INCLUDE, BUT ARE NOT LIMITED TO PRIVATE BUSINESSES, PUBLIC BUILDINGS, RESIDENCES, BUS STOPS, PUBLIC BENCHES, AND PARKING PAY STATION

14. IF RUNNING SLOPE OF SIDEWALK AND ALLEY ARE LESS THAN 1:50, A RAMP IS NOT REQUIRED. IF SIDEWALK AND DRIVEWAY ARE AT THE SAME GRADE, A RAMP IS NOT REQUIRED BUT DETECTABLE WARNING TILES ARE STILL REQUIRED IF THE DRIVEWAY HAS TRAFFIC CONTROL DEVICES (I.E. TRAFFIC SIGNALS)

15. MAINLINE SIDEWALK RUNNING SLOPES SHALL NOT EXCEED 1:24 OR THE GENERAL GRADE ESTABLISHED FOR THE ADJACENT STREET, WHICH EVER IS HIGHER

16. THERE SHALL BE NO VERTICAL LEVEL DIFFERENCES BETWEEN SURFACES GREATER THAN 1/4" ON THE MAINLINE SIDEWALK. THERE SHALL BE NO HORIZONTAL GAPS OR OPENINGS GREATER THAN 1/2" ON THE MAINLINE SIDEWALK

17. THE CLEAR WIDTH OF USEABLE SIDEWALK SHALL NOT BE LESS THAN 4'-0". OBSTRUCTIONS INCLUDE, BUT ARE NOT LIMITED TO SIDEWALK BENCHES, FIRE HYDRANTS, SIGNAL OR LIGHT POLES, PARKING PAY STATION, NEWSPAPER DISPENSERS, TRASH RECEPTACLES, AND UTILITY PEDESTALS

18. CURB RAMPS AND LANDING (KEYSTONE) TO BE CONSTRUCTED WITH 8" THICK CONCRETE AT ALL TRAFFIC SIGNALIZED INTERSECTIONS AND INDUSTRIAL STREET INTERSECTIONS. AT ALL OTHER LOCATIONS, 5" THICK CONCRETE TO BE USED

19. DEPRESSED CURB, RAMP, OR SIDEWALK DESIGNS OR LAYOUTS SHALL MAINTAIN OR IMPROVE EXISTING DRAINAGE AND THE EXISTING INTERSECTION GEOMETRY SHALL NOT BE MODIFIED WITHOUT CDOT APPROVAL

20. ALL CONSTRUCTION DOCUMENTS MUST BE STAMPED BY A LICENSED ARCHITECT/LANDSCAPE ARCHITECT/ENGINEER TO CERTIFY THAT THEY ARE IN ACCORDANCE WITH THE AMERICANS WITH DISABILITIES ACT (ADA) AND ALL CODES AND BUILDING ORDINANCES OF THE CITY OF CHICAGO AND STATE OF ILLINOIS

21. NO DEVIATIONS FROM THESE STANDARDS ARE ALLOWED WITHOUT WRITTREN APPROVAL FROM THE COMMISSIONER

CDOT Chicago Department of Transportation

DATE	REVISION
11/15/07	REVISION 2
11/14/08	REVISION 3
11/02/09	REVISION 4
08/10/12	REVISION 5
01/01/14	REVISION 6
02/01/25	REVISION 7

CITY OF CHICAGO
GENERAL NOTES (CONTINUED)
SHEET B-3-3

SCALE: NOT TO SCALE
DATE: 10/23/2006

DRAWN BY: CDOT
CHECKED BY: TRANSYSTEMS

FILE NAME = P:\10-IL\14111-IDOT - Sacramento and Paulina over I-290\Work\CADD\Paulina - Contract 62K64\CADD_Sheets\Civil\1016ZK64-bft-standards-CDOT.dgn

COLLINS ENGINEERS INC.

USER NAME = omartinez	DESIGNED -	REVISED -	
	DRAWN -	REVISED -	
PLOT SCALE = 40.0000 ' / in.	CHECKED -	REVISED -	
PLOT DATE = 9/8/2025	DATE -	REVISED -	

STATE OF ILLINOIS
DEPARTMENT OF TRANSPORTATION

CHICAGO DEPARTMENT OF TRANSPORTATION
STANDARD DRAWINGS

SCALE: NTS | SHEET NO. 8 OF 14 SHEETS | STA. | TO STA.

F.A.I. RTE.	SECTION	COUNTY	TOTAL SHEETS	SHEET NO.
290	2019-191-B-R	COOK	265	263
		CONTRACT NO. 62K64		
FED. ROAD DIST. NO.	ILLINOIS	FED. AID PROJECT		

ADA COMPLIANCE AND TRANSITION GUIDELINES

POLICY STATEMENT: ANY ALTERATION OF THE PUBLIC WAY MUST BE RESTORED IN AN ADA COMPLIANT MANNER

I. STREET/ALLEY RECONSTRUCTION

FOR ANY PROJECT WHERE, WITHIN THE PROJECT LIMITS, A CROSSWALK IS ENCOUNTERED OR WHERE THE PROJECT LIMITS TERMINATE WITHIN 4' OR LESS OF A CROSSWALK, THOSE CROSSWALKS AND THE ASSOCIATED CURB RAMPS MUST BE IMPROVED TO CURRENT ADA STANDARDS IF THEY ARE NOT COMPLIANT (SEE APPENDIX A)

WHEN A PROJECT CALLS FOR ONLY AN INTERSECTION TO BE REPAVED, THE INTERSECTION LIMITS AS DEFINED BY THE AREA OUTLINED BY OUTERMOST CROSSWALK LINES AND ADJACENT CURB FACES AND ALL ADJOINING CROSSWALKS AND CURB RAMPS MUST BE IMPROVED TO CURRENT ADA STANDARDS IF THEY ARE NOT COMPLIANT (SEE APPENDIX A)

WHEN WORK IS LIMITED TO A SINGLE CORNER OF AN INTERSECTION, THE ADJACENT PAVEMENT MUST BE RESTORED (SEE APPENDIX A)

FOR ANY CONSTRUCTION WHERE, WITHIN THE PROJECT LIMITS, AN ALLEY APRON IS ENCOUNTERED, THE ASSOCIATED CURB RAMPS, ALLEY APRON, AND SIDEWALKS MUST BE IMPROVED TO CURRENT ADA STANDARDS IF THEY ARE NOT COMPLIANT (SEE APPENDIX A)

II. SIDEWALK INSTALLATION / REPAIRS / RECONSTRUCTION

THE LIMITS OF ANY MAINLINE SIDEWALK REPLACEMENT, GREATER THAN TEN FEET (10') IN LENGTH, THAT ABUT AN EXISTING RAMP, KEYSTONE, TRANSITION PANEL, AND/OR LANDING AREA (THIS TOTAL LENGTH INCLUDES THE PRIOR ELEMENTS), SHALL BE EXTENDED TO INCLUDE THE AFFECTED RAMPS AND THESE RAMPS SHALL BE RECONSTRUCTED TO CURRENT ADA STANDARDS. IN ADDITION, ALL NEWLY PLACED SIDEWALK TEN FEET (10') OR MORE IN LENGTH SHALL BE CONSTRUCTED IN ACCORDANCE WITH ALL CURRENT APPLICABLE STANDARDS WHICH INCLUDE PROVIDING A MINIMUM FOUR FEET (4') WIDTH ACCESSIBLE PATHWAY WITH A CROSS SLOPE NOT TO EXCEED 1:64 (SEE APPENDIX A)

III. GUIDELINES FOR TRANSITIONING TO EXISTING NON-COMPLIANT CONDITION

NEW SIDEWALK PLACEMENTS GREATER THAN TEN FEET IN CONTIGUOUS LENGTH:

THE LIMITS OF ANY MAINLINE SIDEWALK REPLACEMENT, GREATER THAN TEN FEET (10') IN LENGTH, MUST BE EXTENDED FOR A MINIMUM FIVE ADDITIONAL FEET (5') EITHER SIDE IN ORDER TO PROVIDE A TRANSITION TO MATCH THE EXISTING SIDEWALK, IF THE ADJACENT SIDEWALK IS NOT ALREADY COMPLIANT (SEE APPENDIX A). THE LENGTH OF TRANSITION SHALL BE LENGTHENED AS NECESSARY TO ENSURE THAT THE RUNNING SLOPE OF THE TRANSITION DOES NOT EXCEED A SLOPE OF 1:24 (PREFERRED) OR 1:14 (MAXIMUM) AT ANY POINT

NEW SIDEWALK REPLACEMENTS TEN FEET OR LESS IN CONTIGUOUS LENGTH (REPAIRS):

IT IS ACCEPTABLE PRACTICE TO MATCH ADJACENT SIDEWALKS AT THE EXISTING SLOPE

CURB RAMP REPLACEMENTS:

WHEN REPLACING AN ADA RAMP, THE SIDEWALK REPLACEMENT MUST EXTEND BEYOND THE LIMITS OF THE LANDING AREA AND/OR THE "KEYSTONE" A MINIMUM OF AN ADDITIONAL FIVE FEET (5') ON EITHER SIDE IN ORDER TO PROVIDE A TRANSITION TO MATCH THE EXISTING SIDEWALK, IF THE ADJACENT SIDEWALK IS NOT ALREADY COMPLIANT (SEE APPENDIX A). THE TRANSITION SHALL BE LENGTHENED AS NECESSARY TO ENSURE THAT THE RUNNING SLOPE OF THE TRANSITION PANEL DOES NOT EXCEED A SLOPE OF 1:24 (PREFERRED) OR 1:14 (MAXIMUM) AT ANY POINT

NO EXCEPTIONS TO THE ABOVE WILL BE ALLOWED WITHOUT WRITTEN APPROVAL FROM THE COMMISSIONER

DATE	REVISION
11/15/07	REVISION 2
11/14/08	REVISION 3
11/02/09	REVISION 4
08/10/12	REVISION 5
01/01/14	REVISION 6
02/01/25	REVISION 7

CDOT Chicago Department of Transportation

CITY OF CHICAGO
ADA COMPLIANCE AND TRANSITION GUIDELINES
SHEET B-3-4

SCALE: NOT TO SCALE
DATE: 10/23/2006

DRAWN BY: CDOT
CHECKED BY: TRANSYSTEMS

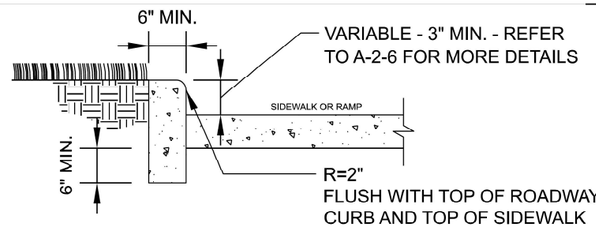

SIDE CURB - SECTION

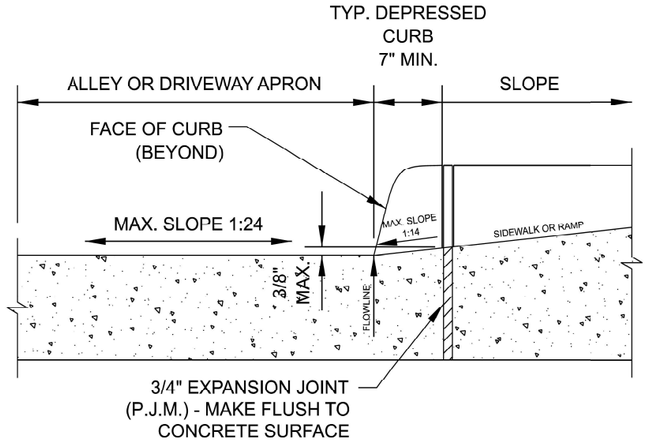

DEPRESSED CURB & GUTTER
AT ALLEY/DRIVEWAY APRON (TYPE B CURB)

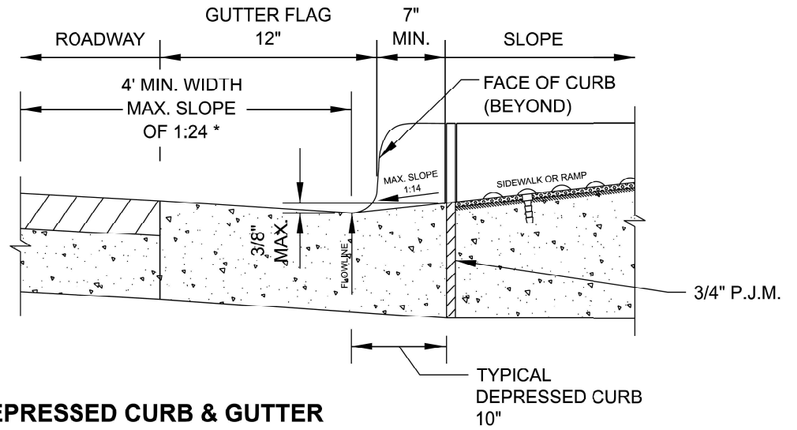

DEPRESSED CURB & GUTTER
AT BOTTOM OF TYPICAL CURB RAMP

NOTES FOR CURB & GUTTER DETAILS THIS SHEET:

A. CROSS SLOPE AT DEPRESSED CURB & GUTTER NOT TO EXCEED 1:64

B. REFER TO *REGULATIONS FOR OPENINGS, CONSTRUCTION AND REPAIR IN THE PUBLIC WAY (CDOT)* FOR ADDITIONAL REQUIREMENTS FOR CURB AND GUTTER INSTALLATION

C. 'P.J.M.' THIS SHEET REFERS TO PREFORMED JOINT MATERIAL

DATE	REVISION
02/20/07	REVISION 1
11/15/07	REVISION 2
11/14/08	REVISION 3
11/02/09	REVISION 4
08/10/12	REVISION 5
02/01/25	REVISION 6

CDOT Chicago Department of Transportation

CITY OF CHICAGO
CURB & GUTTER DETAILS
SHEET B-4-3

SCALE: NOT TO SCALE
DATE: 10/23/2006

DRAWN BY: CDOT
CHECKED BY: TRANSYSTEMS

FILE NAME = P:\10-LL14111-IDOT - Sacramento and Paulina over I-290\Work\CADD\Paulina - Contract 62K64\CADD_Sheets\Civil\D0162K64-ill-standards-CDOT.dgn

COLLINS ENGINEERS INC.

USER NAME = omartinez	DESIGNED -	REVISED -
	DRAWN -	REVISED -
PLOT SCALE = 40.0000 ' / in.	CHECKED -	REVISED -
PLOT DATE = 9/8/2025	DATE -	REVISED -

STATE OF ILLINOIS
DEPARTMENT OF TRANSPORTATION

CHICAGO DEPARTMENT OF TRANSPORTATION
STANDARD DRAWINGS

SCALE: NTS | SHEET NO. 9 OF 14 SHEETS | STA. | TO STA.

F.A.I. RTE.	SECTION	COUNTY	TOTAL SHEETS	SHEET NO.
290	2019-191-B-R	COOK	265	264
		CONTRACT NO. 62K64		
FED. ROAD DIST. NO.	ILLINOIS	FED. AID PROJECT		

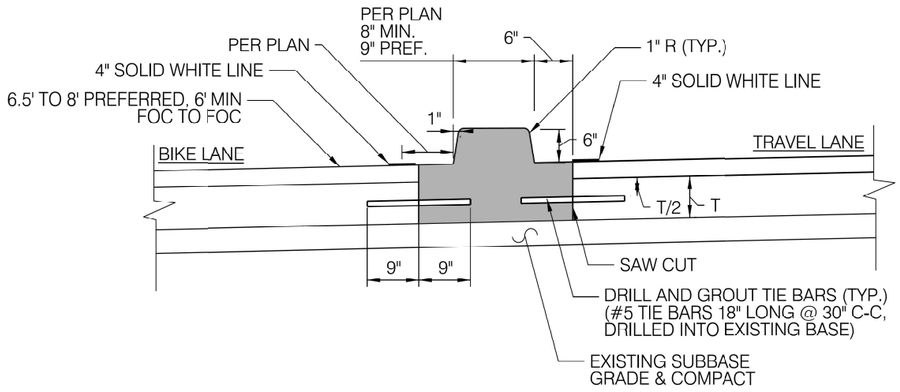

DETAILS FOR CONCRETE BIKE LANE MEDIAN, MONOLITHIC

NOTES

1. INTENDED FOR USE WHEN AVAILABLE BUFFER SPACE IS LESS THAN 2'. IF AVAILABLE WIDTH IS GREATER THAN 2', USE EITHER TAPERED OR STANDARD MEDIAN CONFIGURATION.

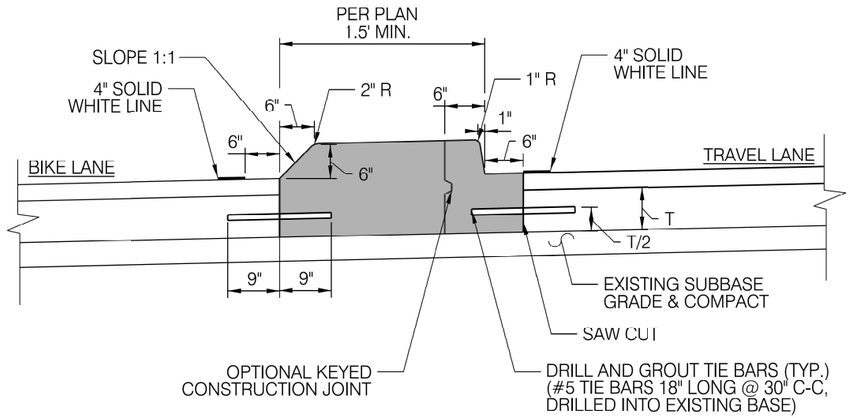

DETAILS FOR CONCRETE BIKE LANE MEDIAN, TAPERED

NOTES

1. INTENDED FOR USE WHEN AVAILABLE BUFFER SPACE IS GREATER THAN 2' AND AVAILABLE BIKE LANE SPACE IS LESS THAN 6.5' FOC-FOC. IF AVAILABLE BIKE LANE SPACE IS GREATER THAN 6.5' AND AVAILABLE BUFFER SPACE IS GREATER THAN 2', USE STANDARD MEDIAN CONFIGURATION (SEE CS-5-9).

DATE	REVISION	CITY OF CHICAGO		
3/6/2025	ANNUAL	PROTECTED BIKE LANES CAST-IN-PLACE CONCRETE CONSTRAINED MEDIAN DETAILS		
		DATE	SHEET	DRAWN BY
		12/1/2023	CS-5-10	CDOT

CDOT Chicago Department of Transportation

FILE NAME = P:\10-IL11411-IDOT - Sacramento and Paulina over I-290\Work\CADD\Paulina - Contract 62K64\CADD_Sheets\Civil\D162K64-sht-standards-CDOT.dgn

COLLINS ENGINEERS INC.

USER NAME = omartinez	DESIGNED -	REVISED -
	DRAWN -	REVISED -
PLOT SCALE = 40.0000 ' / in.	CHECKED -	REVISED -
PLOT DATE = 9/8/2025	DATE -	REVISED -

STATE OF ILLINOIS
DEPARTMENT OF TRANSPORTATION

CHICAGO DEPARTMENT OF TRANSPORTATION
STANDARD DRAWINGS

SCALE: NTS | SHEET NO. 10 OF 14 SHEETS | STA. | TO STA.

F.A.I. RTE.	SECTION	COUNTY	TOTAL SHEETS	SHEET NO.
290	2019-191-B-R	COOK	265	265
		CONTRACT NO. 62K64		
FED. ROAD DIST. NO.	ILLINOIS	FED. AID PROJECT		