F.A.P. RTE.	SECTION	COUNTY	TOTAL SHEETS	SHEET NO.
341	95-B	COOK	125	1
FED. AID PROJECT	ILLINOIS	CONTRACT NO. 62D34		

STATE OF ILLINOIS

01-16-2026 LETTING ITEM 020

DEPARTMENT OF TRANSPORTATION

PRIMERA ENGINEERS LTD.
ROBERT J. DEMING, P.E.
DATE: 03/14/2025
SIGNATURE AND SEAL APPLY TO DRAWINGS: 1 - 30, 34 - 40, 107 - 124
EXPIRES: 11/30/2027

PRIMERA ENGINEERS LTD.
CHANDANI BHAGAT, P.E., S.E.
DATE: 03/14/2025
SIGNATURE AND SEAL APPLY TO DRAWINGS: 75 - 106
EXPIRES: 11/30/2026

ATLAS ENGINEERING GROUP LTD.
BEHZAD AMINI, P.E.
DATE: 03/14/2025
SIGNATURE AND SEAL APPLY TO DRAWINGS: 41 - 60
EXPIRES: 11/30/2027

AMES ENGINEER, INC.
BRENDA D. LOWERY, P.E.
DATE: 03/14/2025
SIGNATURE AND SEAL APPLY TO DRAWINGS: 61 - 68
EXPIRES: 11/30/2027

CIORBA GROUP, INC.
LUKE MATTSON, P.E.
DATE: 03/14/2025
SIGNATURE AND SEAL APPLY TO DRAWINGS: 31 - 33
EXPIRES: 11/30/2027

PRIMERA ENGINEERS LTD.
JILL M. DEICHMAN
DATE: 03/14/2025
SIGNATURE AND SEAL APPLY TO DRAWINGS: 69 - 74
EXPIRES: 11/30/2026

FOR INDEX OF SHEETS, SEE SHEET NO. 2

PROJECT IS LOCATED IN THE VILLAGE OF NILES IN COOK COUNTY

TOUHY AVE TRAFFIC DATA:
FUNCTIONAL CLASSIFICATION
FAP 341 (TOUHY AVE) – PRINCIPAL ARTERIAL
2023 ADT = 24400
POSTED SPEED LIMIT = 35 MPH
DESIGN SPEED LIMIT = 35 MPH

PROPOSED HIGHWAY PLANS

FAP 341 (TOUHY AVENUE) AT NORTH BRANCH CHICAGO RIVER
SECTION 95-B
BRIDGE REPLACEMENT, TRAFFIC SIGNAL MODERNIZATION AND ADA IMPROVEMENTS

(S.N. 016-1352)
COOK COUNTY

C-91-001-17

BEGIN IMPROVEMENT
STA 497+63.80

BRIDGE IMPROVEMENT
STA 500+00
EX SN 016-0363
PR SN 016-1352

R13E

NILES TOWNSHIP

T41N

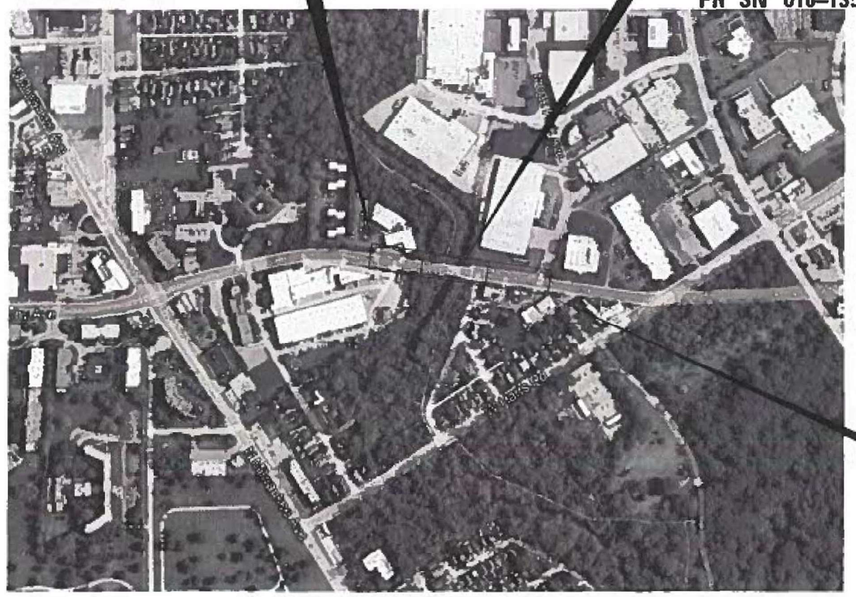

END IMPROVEMENT
STA 502+49.80

SECTION 30

GROSS LENGTH = 430 FT. = 0.081 MILE
NET LENGTH = 430 FT. = 0.081 MILE

N

LOCATION MAP
NOT TO SCALE

D-91-001-17

LOCATION OF SECTION INDICATED THUS: –

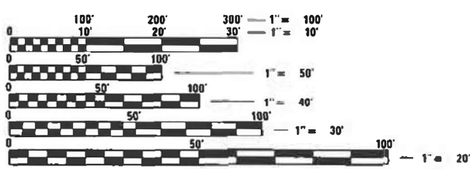

FULL SIZE PLANS HAVE BEEN PREPARED USING STANDARD ENGINEERING SCALES. REDUCED SIZED PLANS WILL NOT CONFORM TO STANDARD SCALES. IN MAKING MEASUREMENTS ON REDUCED PLANS, THE ABOVE SCALES MAY BE USED.

J.U.L.I.E.
JOINT UTILITY LOCATION INFORMATION FOR EXCAVATORS
1-800-892-0123
OR 811

PROJECT MANAGER — PRAVEEN KAINI, PE
(847) 705-4237

STATE OF ILLINOIS
DEPARTMENT OF TRANSPORTATION

SUBMITTED October 14 20 25
REGIONAL ENGINEER
December 5 20 25
ENGINEER OF DESIGN AND ENVIRONMENT
December 5 20 25
DIRECTOR OF HIGHWAYS PROJECT IMPLEMENTATION

PRINTED BY THE AUTHORITY OF THE STATE OF ILLINOIS

CONTRACT NO. 62D34

Primera
AEG ATLAS ENGINEERING GROUP, LTD.
AMES Engineering, Inc. CONSULTING ENGINEERS
CiorbaGroup

REV-SEP

INDEX OF SHEETS

HIGHWAY STANDARDS

000001-09	STANDARD SYMBOLS, ABBREVIATIONS AND PATTERNS
001006	DECIMAL OF AN INCH AND OF A FOOT
280001-07	TEMPORARY EROSION CONTROL SYSTEMS
353001-05	PCC BASE COURSE WITH HMA BINDER AND SURFACE COURSES
420401-13	PAVEMENT CONNECTOR (PCC) FOR BRIDGE APPROACH SLAB
420701-03	PAVEMENT WELDED WIRE REINFORCEMENT
424001-12	PERPENDICULAR CURB RAMPS FOR SIDEWALKS
424016-06	MID-BLOCK CURB RAMPS FOR SIDEWALKS
424021-07	DEPRESSED CORNER FOR SIDEWALKS
515001-04	NAME PLATE FOR BRIDGES
542001-06	CONCRETE END SECTIONS FOR PIPE CULVERTS 15" THRU 84" DIA.
542301-03	PRECAST REINFORCED CONCRETE FLARED END SECTION
601001-05	PIPE UNDERDRAINS
601101-02	CONCRETE HEADWALL FOR PIPE UNDERDRAIN
602001-02	CATCH BASIN, TYPE A
602011-02	CATCH BASIN, TYPE C
604001-05	FRAME AND LIDS, TYPE 1
602402-03	PRECAST MANHOLE, TYPE A, 5' (1.52 M) DIAMETER
602411-09	PRECAST MANHOLE, TYPE A, 7' (2.13 M) DIAMETER
602421-09	PRECAST MANHOLE, TYPE A, 9' (2.74 M) DIAMETER
602601-06	PRECAST REINFORCED CONCRETE FLAT SLAB TOP
602701-02	MANHOLE STEPS
630301-09	SHOULDER WIDENING FOR TYPE 1 (SPECIAL) GUARDRAIL TERMINALS
631031-18	TRAFFIC BARRIER TERMINAL, TYPE 6
701001-02	OFF-RD OPERATIONS, 2L, 2W, MORE THAN 15' AWAY
701006-05	OFF-RD OPERATIONS, 2L, 2W, 15' TO 24" FROM PAVEMENT EDGE
701101-05	OFF-RD OPERATIONS, MULTILANE, 15' TO 24" FROM PAVEMENT EDGE
701106-02	OFF-RD OPERATIONS, MULTILANE, MORE THAN 15' AWAY
701301-04	LANE CLOSURE, 2L, 2W, SHORT TIME OPERATIONS
701311-03	LANE CLOSURE 2L, 2W MOVING OPERATIONS - DAY ONLY
701427-05	LANE CLOSURE, MULTILANE, INTERMITTENT OR MOVING OPER., FOR SPEEDS ≤ 40 MPH
701602-10	URBAN LANE CLOSURE, MULTILANE, 2W WITH BIDRECTIONAL LEFT TURN LANE
701606-10	URBAN SINGLE LANE CLOSURE, MULTILANE, 2W WITH MOUNTABLE MEDIAN
701611-01	URBAN HALF ROAD CLOSURE, MULTILANE, 2W WITH MOUNTABLE MEDIAN
701701-10	URBAN LANE CLOSURE, MULTILANE INTERSECTION
701801-06	SIDEWALK, CORNER OR CROSSWALK CLOSURE
701901-11	TRAFFIC CONTROL DEVICES
704001-08	TEMPORARY CONCRETE BARRIER
720001-01	SIGN PANEL MOUNTING DETAILS
720006-04	SIGN PANEL ERECTION DETAILS
720011-01	METAL POSTS FOR SIGNS, MARKERS & DELINEATORS
725001-01	OBJECT AND TERMINAL MARKERS
728001-01	TELESCOPING STEEL SIGN SUPPORT
729001-01	APPLICATIONS OF TYPES A AND B METAL POSTS (FOR SIGNS & MARKERS)
731001-01	BASE FOR TELESCOPING STEEL SIGN SUPPORT
780001-05	TYPICAL PAVEMENT MARKINGS
781001-04	TYPICAL APPLICATIONS RAISED REFLECTIVE PAVEMENT MARKERS
782006-01	GUARDRAIL AND BARRIER WALL REFLECTOR MOUNTING DETAILS
812001-01	RACEWAYS EMBEDDED IN STRUCTURE
873001-02	TRAFFIC SIGNAL GROUNDING & BONDING
876001-04	PEDESTRIAN PUSH BUTTON POST
878001-11	CONCRETE FOUNDATION DETAIL
880006-01	TRAFFIC SIGNAL MOUNTING DETAILS

DISTRICT ONE STANDARD DETAILS

BD-01	DRIVEWAY DETAILS
BD-02	DRIVEWAY DETAILS
BD-07	STORM SEWER CONNECTION TO EXISTING SEWER

DISTRICT ONE STANDARD DETAILS CONTINUED

BD-34	DEPRESSED CURB & GUTTER AND SHOULDER TREATMENT AT TBT TY, 1 SPL.
BE-300	LIGHT POLE FOUNDATION
TC-10	TRAFFIC CONTROL AND PROTECTION FOR SIDE ROADS, INTERSECTIONS, AND DRIVEWAYS
TC-11	RAISED REFLECTIVE PAVEMENT MARKERS (SNOW PLOW RESISTANT)
TC-13	DISTRICT ONE TYPICAL MARKINGS
TC-14	TRAFFIC CONTROL AND PROTECTION AT LEFT TURN BAYS (TO REMAIN OPEN TO TRAFFIC)
TC-22	ARTERIAL INFORMATION SIGN
TC-26	DRIVEWAY ENTRANCE SIGNING
TS-05	STANDARD TRAFFIC SIGNAL DESIGN DETAILS

GENERAL NOTES

1. ALL CONSTRUCTION WORK SHALL BE PERFORMED IN ACCORDANCE WITH THE APPLICABLE SECTIONS OF THE ILLINOIS DEPARTMENT OF TRANSPORTATION "STANDARD SPECIFICATIONS FOR ROAD AND BRIDGE CONSTRUCTION" ADOPTED JANUARY 1, 2022, SUPPLEMENTAL SPECIFICATIONS AND RECURRING SPECIAL PROVISIONS DATED JANUARY 1, 2025 AND SPECIAL PROVISIONS OF THE BUREAU OF DESIGN AND ENVIRONMENT.

2. THE CONTRACTOR SHALL CONTACT J.U.L.I.E. AT LEAST 48 HOURS PRIOR TO EXCAVATION TO DETERMINE WHICH UTILITIES ARE IN THE AREA.

3. THE CONTRACTOR SHALL BE RESPONSIBLE FOR COLLECTING AND MAINTAINING AN ELECTRONIC LOG OF ALL STAKEOUT SURVEY THAT IS PERFORMED ON THE JOB, EITHER BY HIM/HER OR ANY SUB-CONTRACTOR PERFORMING THE STAKEOUT. UPON REQUEST, ALL LOGS SHALL BE SUBMITTED TO THE DEPARTMENT. NO ADDITIONAL COMPENSATION WILL BE ALLOWED FOR THIS WORK, BUT SHALL BE CONSIDERED INCIDENTAL TO THE CONTRACT.

4. THE CONTRACTOR SHALL REFER TO THE SPECIAL PROVISION FOR STRUCTURAL ASSESSMENT REPORTS FOR CONTRACTOR'S MEANS AND METHODS WHEN FORMULATING A WORK PLAN THAT INVOLVES LOADS ON THE DECK.

5. THE CONTRACTOR IS TO REFER TO THE SPECIAL PROVISION FOR SAW CUTTING CONTRACTION JOINTS IN P.C.C. SIDEWALKS. NO TOOLED JOINTS WILL BE ALLOWED.

6. IT SHALL BE THE CONTRACTORS RESPONSIBILITY TO VERIFY ALL DIMENSIONS AND CONDITIONS EXISTING IN THE FIELD PRIOR TO CONSTRUCTION AND ORDERING OF MATERIALS.

7. THE THICKNESS OF HMA SHOWN ON THE PLANS IS THE NOMINAL THICKNESS, DEVIATIONS FROM THE NOMINAL THICKNESS WILL BE PERMITTED WHEN SUCH DEVIATIONS OCCUR DUE TO IRREGULARITIES IN THE EXISTING SURFACE OR BASE ON WHICH THE HMA IS PLACED.

8. SEEDING WILL NOT BE PERMITTED AT ANY TIME WHEN THE GROUND IS FROZEN, WET, OR IN AN UNTILLABLE CONDITION, LOCATIONS TO BE SEEDED WILL BE DETERMINED BY THE ENGINEER.

9. THE CONTRACTOR SHALL CONTACT THE ROADSIDE DEVELOPMENT UNIT AT (847) 705-4171 AT LEAST 2 WEEKS PRIOR TO ANY FORESTRY WORK TO IDENTIFY AND MARK TREES TO SAVE WITHIN TREE REMOVAL AREAS.

10. BEFORE BEGINNING ANY WORK, THE CONTRACTOR SHALL RETAIN AND RECORD FOR FUTURE REFERENCE, ALL EXISTING PAVEMENT MARKING LINES AND RAISED REFLECTIVE PAVEMENT MARKERS THAT CONFLICT WITH TEMPORARY MARKINGS, IN ORDER THAT THESE LOCATIONS CAN BE RE-ESTABLISHED FOR PROPOSED STRIPING AT THE COMPLETION OF THIS CONTRACT. EXACT LOCATIONS OF ALL PROPOSED PAVEMENT MARKINGS SHALL BE DIRECTED BY THE RESIDENT ENGINEER.

11. THE CONTRACTOR WILL NOT BE ABLE TO SET UP A YARD OR FIELD OFFICE ON STATE PROPERTY WITHOUT WRITTEN PERMISSION FROM THE DEPARTMENT.

12. ALL DAMAGE TO EXISTING MARKINGS OR RAISED REFLECTIVE PAVEMENT MARKERS OUTSIDE THE REMOVAL LINE SHOWN ON THE PLANS SHALL BE REPLACED AT NO ADDITIONAL COST TO THE DEPARTMENT.

13. THE CONTRACTOR SHALL MAINTAIN ALL ROADWAYS OPEN TO TRAFFIC AS SHOWN ON THE MAINTENANCE OF TRAFFIC PLANS.

14. THE CONTRACTOR SHALL USE CARE NEAR ANY AND ALL EXISTING ITEMS THAT WILL NOT BE REMOVED. ANY DAMAGE DONE TO EXISTING ITEMS BY THE CONTRACTOR SHALL BE REPAIRED OR REPLACED TO THE SATISFACTION OF THE ENGINEER AT THE CONTRACTOR'S OWN EXPENSE. THIS INCLUDES FOREST PRESERVE TREES WITHIN OR ADJACENT TO CONSTRUCTION LIMITS.

15. DO NOT SCALE PLANS FOR CONSTRUCTION DIMENSIONS.

16. DURING CONSTRUCTION OPERATIONS, IF ANY LOOSE MATERIAL IS DEPOSITED IN THE FLOW LINE OF DRAINAGE STRUCTURES SUCH THAT THE NATURAL FLOW OF WATER IS OBSTRUCTED, THE MATERIAL SHALL BE REMOVED AT THE CLOSE OF EACH WORKDAY. AT THE CONCLUSION OF CONSTRUCTION OPERATIONS, ALL UTILITY STRUCTURES SHALL BE FREE FROM DUST AND DEBRIS. THE WORK SPECIFIED ABOVE WILL NOT BE PAID SEPARATELY BUT SHALL BE INCLUDED IN THE COST OF CONTRACT.

17. PERMANENT PAVEMENT MARKINGS SHALL BE AS SPECIFIED IN THE PLANS AND SHALL BE PLACED IN ACCORDANCE WITH THE 'DISTRICT ONE TYPICAL PAVEMENT MARKING' DETAILS. (TC-13, DISTRICT ONE TYPICAL PAVEMENT MARKINGS).

18. THE SUBGRADE STABILITY SHALL BE VERIFIED BY PROOF ROLLING WITH A FULL LOADED TANDEM AXLE TRUCK.

19. BACKFILLING STORM SEWER CONSTRUCTED UNDER THE ROADWAY SPECIFIED UNDER ART. 550.071b. c) OF THE SSRBC WILL NOT BE ALLOWED.

20. THIS PROJECT REQUIRES A US ARMY CORPS OF ENGINEERS (USACE) 404 PERMIT THAT WILL BE SECURED BY THE DEPARTMENT. AS A CONDITION OF THIS PERMIT, THE CONTRACTOR WILL NEED TO SUBMIT AN IN-STREAM WORK PLAN TO THE DEPARTMENT FOR APPROVAL. GUIDELINES ON ACCEPTABLE IN-STREAM WORK TECHNIQUES CAN BE FOUND ON THE USACE WEBSITE. THE USACE DEFINES AND DETERMINES IN-STREAM WORK. THE COST OF ALL MATERIALS AND LABOR NECESSARY TO COMPLY WITH THE ABOVE PROVISIONS TO PREPARE AND IMPLEMENT AN IN-STREAM WORK PLAN WILL NOT BE PAID FOR SEPARATELY, BUT SHALL BE CONSIDERED AS INCLUDED IN THE UNIT BID PRICES OF THE CONTRACT AND NO ADDITIONAL COMPENSATION WILL BE ALLOWED.

21. PERMIT 1-T-22-0021 ISSUED TO US GEOLOGICAL SURVEY FOR STREAM GAGE EQUIPMENT RELOCATION FROM THIS LOCATION TO HARTS ROAD.

22. THE AGGREGATE GRADATION FOR THE LOWER 9 INCHES OF AGGREGATE SUBGRADE IMPROVEMENT 12" SHALL BE CS 1 OR RR 1.

23. THE CONTRACTOR SHALL CONTACT THE ARTERIAL TRAFFIC CONTROL SUPERVISOR, KALPANA.KANNAN-HOSADURGA@ILLINOIS.GOV, A MINIMUM OF 72 HOURS PRIOR TO START OF WORK.

24. THE RESIDENT ENGINEER SHALL CONTACT THE AREA TRAFFIC FIELD ENGINEER FADI SULTAN AT FADI.SULTAN@ILLINOIS.GOV A MINIMUM OF TWO (2) WEEKS PRIOR TO PLACING THE PERMANENT PAVEMENT MARKINGS.

25. THE CONTRACTOR SHALL COORDINATE WITH IDNR AND ACOE TO PLACE APPROPRIATE ADVANCE WARNING SIGNAGE ALONG THE RIVER FOR BOATERS PASSING THROUGH THE BRIDGE WORKZONE. SIGN DETAILS AND LOCATION SHALL BE APPROVED BY THE ENGINEER. TWO SIGNS ARE ANTICIPATED TO BE UTILIZED AND PAYMENT FOR ADDITIONAL SIGNAGE ARE INCLUDED AND SHALL BE PAID FOR UNDER TEMPORARY INFORMATION SIGNING.

26. CONTRACTOR SHALL CONTACT PACE BUS A MINIMUM OF TWO (2) WEEKS PRIOR TO BEGINNING CONSTRUCTION.

27. AGGREGATE SUBGRADE IMPROVEMENT (CU YD) HAVE BEEN PROVIDED FOR USE AT THE LOCATIONS INDICATED FOR SOILS THAT TEND TO BE UNSTABLE AND/OR UNSUITABLE. THE ACTUAL NEED FOR REMOVAL AND REPLACEMENT WITH ABOVE ITEM WILL BE DETERMINED IN THE FIELD AT THE TIME OF CONSTRUCTION BY THE GEOTECHNICAL ENGINEER. ALL POTENTIALLY UNSTABLE SOILS SHOULD BE TESTED WITH A STATIC OR DYNAMIC CONE PENETROMETER AND TREATED IN ACCORDANCE WITH ARTICLE 301.04 OF THE SSRBC AND IDOT SUBGRADE STABILITY MANUAL. IF UNSTABLE AND/OR UNSUITABLE SOILS ARE NOT ENCOUNTERED, THEN THE QUANTITY SHALL BE DEDUCTED AND NO ADDITIONAL COMPENSATION WILL BE DUE TO THE CONTRACTOR.

28. ANY AGGREGATE SUBGRADE IMPROVEMENT CONTAMINATED AND/OR DAMAGED BY THE CONTRACTOR'S VEHICLES AND/OR EQUIPMENTS IS TO BE REMOVED AND REPLACED AS DIRECT BY THE ENGINEER AT CONTRACTOR EXPENSE

29. PIPE UNDERDRAINS SHALL BE INSTALLED ACCORDING TO SECTION 601 OF THE SSRBC AND STANDARD 601001-05. TOP OF PIPE UNDERDRAINS SHALL BE PLACED MINIMUM 6"BELOW THE AGGREGATE SUBGRADE IMPROVEMENT LAYER. THE COST OF MAKING PIPE UNDERDRAINS CONNECTIONS TO DRAINAGE STRUCTURES SHALL BE INCLUDED IN THE COST OF THE PIPE UNDERDRAINS.

30. THE DEPARTMENT HAS NOT OBTAINED ANY PERMITS FOR OFFSITE BORROW, WASTE, USE (BWU) AREAS. PRIOR TO WORKING IN BWU AREAS, IF THE CONTRACTOR CHOOSES TO USE ACTIVITIES REQUIRING PERMITS IT IS THE CONTRACTOR'S RESPONSIBILITY TO SECURE THE PROPER PERMITS. IN ADDITION TO THE BORROW REVIEW (BDE 2289) and USE/WASTE REVIEW (BDE 2290) SUBMITTALS, THE CONTRACTOR SHALL SUBMIT AN EROSION AND SEDIMENT CONTROL (ESC) PLAN FOR EVERY BWU SITE TO THE DEPARTMENT FOR ACCEPTANCE. GUIDELINES FOR ACCEPTABLE BWU PRACTICES CAN BE FOUND IN SECTION II.G.1 AND 2 OF THE SWPPP. THE COST OF ALL MATERIALS AND LABOR NECESSARY TO COMPLY WITH THE ABOVE PROVISIONS TO PREPARE AND IMPLEMENT ESC PLANS WILL NOT BE PAID FOR SEPARATELY, BUT SHALL BE CONSIDERED AS INCLUDED IN THE UNIT BID PRICES OF THE CONTRACT AND NO ADDITIONAL COMPENSATION WILL BE ALLOWED.

31. THE RESIDENT ENGINEER WILL CONTACT THE FOREST PRESERVE DISTRICT OF COOK COUNTY PRIOR TO THE START OF CONSTRUCTION TO INFORM THEM OF THE INITIATION OF CONSTRUCTION ACTIVITIES NEAR THEIR PROPERTIES AT MICHAEL.SCHECHTMAN@COOKCOUNTYIL.GOV AND PAMELA.SIELSKI@COOKCOUNTYIL.GOV.

32. THE RESIDENT ENGINEER SHALL REPORT BI-WEEKLY PROGRESS AND ANTICIPATED TRAIL CLOSURES TO THE FOREST PRESERVE PROJECT MANAGER.

33. THE CONTRACTOR SHALL NOT INSTALL A YARD, FIELD OFFICE, OR STORE EQUIPMENT ON FOREST PRESERVE PROPERTY.

34. THE CONTRACTOR SHALL PROVIDE INFORMATIONAL TRAIL CONSTRUCTION SIGNAGE IN ADVANCE OF TOUHY AVENUE AT HARTS ROAD AND HOWARD STREET TO BE PAID FOR AS TEMPORARY INFORMATION SIGNING.

COMMITMENTS:

NONE

CODE NO.	ITEM	UNIT	TOTAL QUANTITY	CONSTRUCTION CODE BRIDGE 0013 100% STATE TOUHY AVE SN 016-0363	CONSTRUCTION CODE BRIDGE 0013 100% LOCAL TOUHY AVE SN 016-0363	CONSTRUCTION CODE TRAFFIC SIGNAL 0021 100% LOCAL TOUHY AVE SN 016-0363	CONSTRUCTION CODE LIGHTING 0021 100% LOCAL TOUHY AVE SN 016-0363
20200100	EARTH EXCAVATION	CU YD	715.3	715.3			
20201200	REMOVAL AND DISPOSAL OF UNSUITABLE MATERIAL	CU YD	100.0	100.0			
20300100	CHANNEL EXCAVATION	CU YD	1,413.0	1,413.0			
20800150	TRENCH BACKFILL	CU YD	427.8	315.8	112		
21001000	GEOTECHNICAL FABRIC FOR GROUND STABILIZATION	SQ YD	100	100			
21101505	TOPSOIL EXCAVATION AND PLACEMENT	CU YD	100.0	100.0			
21101615	TOPSOIL FURNISH AND PLACE, 4"	SQ YD	308	308			
25000210	SEEDING, CLASS 2A	ACRE	0.25	0.25			
25100125	MULCH, METHOD 3	ACRE	0.25	0.25			
28000250	TEMPORARY EROSION CONTROL SEEDING	POUND	10	10			
28000400	PERIMETER EROSION BARRIER	FOOT	471	471			
28000510	INLET FILTERS	EACH	20	20			
28100107	STONE RIPRAP, CLASS A4	SQ YD	1,012	1,012			
28100125	STONE RIPRAP, CLASS B3	SQ YD	257	257			
28200200	FILTER FABRIC	SQ YD	1,269	1,269			
30300001	AGGREGATE SUBGRADE IMPROVEMENT	CU YD	100	100			
30300112	AGGREGATE SUBGRADE IMPROVEMENT 12"	SQ YD	403	403			
35101600	AGGREGATE BASE COURSE, TYPE B 4"	SQ YD	701	701			
35300500	PORTLAND CEMENT CONCRETE BASE COURSE 10"	SQ YD	403	403			
40201000	AGGREGATE FOR TEMPORARY ACCESS	TON	5	5			
40600290	BITUMINOUS MATERIALS (TACK COAT)	POUND	420	420			
40600370	LONGITUDINAL JOINT SEALANT	FOOT	1,079	1,079			
40603085	HOT-MIX ASPHALT BINDER COURSE, IL-19.0, N70	TON	51	51			
40605026	POLYMERIZED HOT-MIX ASPHALT SURFACE COURSE, STONE MATRIX ASPHALT, 9.5, MIX "F", N80	TON	112	112			
42000060	WELDED WIRE REINFORCEMENT	SQ YD	274	274			
42000080	PAVEMENT CONNECTOR (PCC) FOR BRIDGE APPROACH SLAB	SQ YD	274	274			
42300400	PORTLAND CEMENT CONCRETE DRIVEWAY PAVEMENT, 8 INCH	SQ YD	31	31			
42400200	PORTLAND CEMENT CONCRETE SIDEWALK 5 INCH	SQ FT	701	701			
42400800	DETECTABLE WARNINGS	SQ FT	112	112			
44000100	PAVEMENT REMOVAL	SQ YD	340	340			
44000156	HOT-MIX ASPHALT SURFACE REMOVAL, 1 3/4"	SQ YD	732	732			
44000200	DRIVEWAY PAVEMENT REMOVAL	SQ YD	28	28			
44000500	COMBINATION CURB AND GUTTER REMOVAL	FOOT	683	683			
44000600	SIDEWALK REMOVAL	SQ FT	5,086	5,086			
48101620	AGGREGATE SHOULDERS, TYPE B 10"	SQ YD	27	27			

	CODE NO.	ITEM	UNIT	TOTAL QUANTITY	CONSTRUCTION CODE ROADWAY 0013 80% FED 20% STATE TOUHY AVE SN 016-0363	CONSTRUCTION CODE BRIDGE 0013 100% LOCAL TOUHY AVE SN 016-0363	CONSTRUCTION CODE TRAFFIC SIGNAL 0021 100% LOCAL TOUHY AVE SN 016-0363	CONSTRUCTION CODE LIGHTING 0021 100% LOCAL TOUHY AVE SN 016-0363
	50100100	REMOVAL OF EXISTING STRUCTURES	EACH	1	1			
	50104400	CONCRETE HEADWALL REMOVAL	EACH	1	1			
	50200100	STRUCTURE EXCAVATION	CU YD	522.0	522			
	50300225	CONCRETE STRUCTURES	CU YD	150.6	150.6			
	50300255	CONCRETE SUPERSTRUCTURE	CU YD	429.4	429.4			
	50300260	BRIDGE DECK GROOVING	SQ YD	928	928			
	50300300	PROTECTIVE COAT	SQ YD	1,489	1,489			
	50301350	CONCRETE SUPERSTRUCTURE (APPROACH SLAB)	CU YD	222.7	222.7			
	50401205	PRECAST CONCRETE CAPS	EACH	8	8			
	50500105	FURNISHING AND ERECTING STRUCTURAL STEEL	L SUM	1	1			
	50500505	STUD SHEAR CONNECTORS	EACH	3,300	3,300			
	50800205	REINFORCEMENT BARS, EPOXY COATED	POUND	181,350	181,350			
	50800515	BAR SPLICERS	EACH	652	652			
*	51200961	FURNISHING METAL SHELL PILES 16" X 0.312"	FOOT	1,200	1,200			
*	51202305	DRIVING PILES	FOOT	1,200	1,200			
*	51203200	TEST PILE METAL SHELLS	EACH	2	2			
*	51204650	PILE SHOES	EACH	22	22			
*	51500100	NAME PLATES	EACH	1	1			
*	52100520	ANCHOR BOLTS, 1"	EACH	44	44			
	52200010	TEMPORARY SHEET PILING	SQ FT	982	982			
	53016001	DECK SLAB REPAIR (FULL DEPTH, TYPE I)	SQ YD	2	2			
	53016000	DECK SLAB REPAIR (PARTIAL)	SQ YD	2	2			
	54213660	PRECAST REINFORCED CONCRETE FLARED END SECTIONS 15"	EACH	1	1			
	54213687	PRECAST REINFORCED CONCRETE FLARED END SECTIONS 42"	EACH	1	1			
	54213693	PRECAST REINFORCED CONCRETE FLARED END SECTIONS 48"	EACH	1	1			
	550A0050	STORM SEWERS, CLASS A, TYPE 1 12"	FOOT	324	324			
	550A0070	STORM SEWERS, CLASS A, TYPE 1 15"	FOOT	12	12			
	550A0180	STORM SEWERS, CLASS A, TYPE 1 42"	FOOT	87	87			
	550A0340	STORM SEWERS, CLASS A, TYPE 2 12"	FOOT	40	40			
	550A0410	STORM SEWERS, CLASS A, TYPE 2 24"	FOOT	5	5			
	55100300	STORM SEWER REMOVAL 8"	FOOT	106	106			
	55100500	STORM SEWER REMOVAL 12"	FOOT	48	48			
	55100900	STORM SEWER REMOVAL 18"	FOOT	25	25			
	55101800	STORM SEWER REMOVAL 42"	FOOT	85	85			
	55101900	STORM SEWER REMOVAL 48"	FOOT	35	35			

* SPECIALTY ITEM

CODE NO.	ITEM	UNIT	TOTAL QUANTITY	CONSTRUCTION CODE ROADWAY 0013 100% STATE TOUHY AVE SN 016-0363	CONSTRUCTION CODE BRIDGE 0013 100% LOCAL TOUHY AVE SN 016-0363	CONSTRUCTION CODE TRAFFIC SIGNAL 0021 100% LOCAL TOUHY AVE SN 016-0363	CONSTRUCTION CODE LIGHTING 0021 100% LOCAL TOUHY AVE SN 016-0363
56100900	WATER MAIN 12"	FOOT	47		47		
58600101	GRANULAR BACKFILL FOR STRUCTURES	CU YD	266	266			
59100100	GEOCOMPOSITE WALL DRAIN	SQ YD	150	150			
60100060	CONCRETE HEADWALLS FOR PIPE DRAINS	EACH	4	4			
60108204	PIPE UNDERDRAINS, TYPE 2, 4"	FOOT	205	205			
60146304	PIPE UNDERDRAINS FOR STRUCTURES 4"	FOOT	248	248			
60200105	CATCH BASINS, TYPE A, 4'-DIAMETER, TYPE 1 FRAME, OPEN LID	EACH	7	7			
60206905	CATCH BASINS, TYPE C, TYPE 1 FRAME, OPEN LID	EACH	4	4			
60221000	MANHOLES, TYPE A, 5'-DIAMETER, TYPE 1 FRAME, OPEN LID	EACH	1	1			
60224446	MANHOLES, TYPE A, 7'-DIAMETER, TYPE 1 FRAME, CLOSED LID	EACH	2	2			
60224469	MANHOLES, TYPE A, 9'-DIAMETER, TYPE 1 FRAME, CLOSED LID	EACH	2	2			
60255700	MANHOLES TO BE ADJUSTED WITH NEW TYPE 1 FRAME, OPEN LID	EACH	2	2			
60500040	REMOVING MANHOLES	EACH	2	2			
60500050	REMOVING CATCH BASINS	EACH	1	1			
60500060	REMOVING INLETS	EACH	3	3			
60600605	CONCRETE CURB, TYPE B	FOOT	29	29			
60603800	COMBINATION CONCRETE CURB AND GUTTER, TYPE B-6.12	FOOT	519	519			
63100085	TRAFFIC BARRIER TERMINAL, TYPE 6	EACH	1	1			
63100167	TRAFFIC BARRIER TERMINAL, TYPE 1 (SPECIAL) TANGENT	EACH	1	1			
63200310	GUARDRAIL REMOVAL	FOOT	182	182			
* 66900200	NON-SPECIAL WASTE DISPOSAL	CU YD	1,450	1,450			
* 66900530	SOIL DISPOSAL ANALYSIS	EACH	4	4			
* 66901001	REGULATED SUBSTANCES PRE-CONSTRUCTION PLAN	L SUM	1	1			
* 66901003	REGULATED SUBSTANCES FINAL CONSTRUCTION REPORT	L SUM	1	1			
* 66901006	REGULATED SUBSTANCES MONITORING	CAL DA	20	20			
67100100	MOBILIZATION	L SUM	1	1			
70107025	CHANGEABLE MESSAGE SIGN	CAL DA	180	180			
70300100	SHORT TERM PAVEMENT MARKING	FOOT	500	500			
70300150	SHORT TERM PAVEMENT MARKING REMOVAL	SQ FT	3,743	3,743			
70303100	TEMPORARY PAVEMENT MARKING LETTERS AND SYMBOLS - MODIFIED URETHANE	SQ FT	50	50			
70303120	TEMPORARY PAVEMENT MARKING - LINE 4" - MODIFIED URETHANE	FOOT	1,000	1,000			
70303130	TEMPORARY PAVEMENT MARKING - LINE 6" - MODIFIED URETHANE	FOOT	500	500			
70303160	TEMPORARY PAVEMENT MARKING - LINE 12"- MODIFIED URETHANE	FOOT	100	100			
70303210	TEMPORARY PAVEMENT MARKING - LINE 24"- MODIFIED URETHANE	FOOT	50	50			
70307100	TEMPORARY PAVEMENT MARKING LETTERS AND SYMBOLS - TYPE IV TAPE	SQ FT	50	50			

* SPECIALTY ITEM

CODE NO.	ITEM	UNIT	TOTAL QUANTITY	CONSTRUCTION CODE ROADWAY 0013 100% STATE TOUHY AVE SN 016-0363	CONSTRUCTION CODE BRIDGE 0013 100% LOCAL TOUHY AVE SN 016-0363	CONSTRUCTION CODE TRAFFIC SIGNAL 0021 100% LOCAL TOUHY AVE SN 016-0363	CONSTRUCTION CODE LIGHTING 0021 100% LOCAL TOUHY AVE SN 016-0363
70307120	TEMPORARY PAVEMENT MARKING - LINE 4" - TYPE IV TAPE	FOOT	6,291	6,291			
70307130	TEMPORARY PAVEMENT MARKING - LINE 6" - TYPE IV TAPE	FOOT	1,730	1,730			
70307160	TEMPORARY PAVEMENT MARKING - LINE 12"- TYPE IV TAPE	FOOT	420	420			
70307210	TEMPORARY PAVEMENT MARKING - LINE 24"- TYPE IV TAPE	FOOT	72	72			
70400100	TEMPORARY CONCRETE BARRIER	FOOT	482	482			
70400200	RELOCATE TEMPORARY CONCRETE BARRIER	FOOT	335	335			
70600255	IMPACT ATTENUATORS, TEMPORARY (FULLY REDIRECTIVE, NARROW), TEST LEVEL 2	EACH	2	2			
70600322	IMPACT ATTENUATORS, RELOCATE (FULLY REDIRECTIVE, NARROW), TEST LEVEL 2	EACH	2	2			
* 72000100	SIGN PANEL - TYPE 1	SQ FT	77	51		26	
* 72400100	REMOVE SIGN PANEL ASSEMBLY - TYPE A	EACH	1	1			
* 72400205	REMOVE AND RELOCATE SIGN PANEL ASSEMBLY - TYPE A	EACH	1	1			
* 72400310	REMOVE SIGN PANEL - TYPE 1	SQ FT	23	23			
* 72400710	RELOCATE SIGN PANEL - TYPE 1	SQ FT	26	26			
* 72501000	TERMINAL MARKER - DIRECT APPLIED	EACH	1	1			
* 72800100	TELESCOPING STEEL SIGN SUPPORT	FOOT	15	15			
* 72900100	METAL POST - TYPE A	FOOT	112	112			
* 73100100	BASE FOR TELESCOPING STEEL SIGN SUPPORT	EACH	1	1			
* 78000100	THERMOPLASTIC PAVEMENT MARKING - LETTERS AND SYMBOLS	SQ FT	136	136			
* 78000200	THERMOPLASTIC PAVEMENT MARKING - LINE 4"	FOOT	3,891	3,891			
* 78000400	THERMOPLASTIC PAVEMENT MARKING - LINE 6"	FOOT	353	353			
* 78000600	THERMOPLASTIC PAVEMENT MARKING - LINE 12"	FOOT	449	449			
* 78000650	THERMOPLASTIC PAVEMENT MARKING - LINE 24"	FOOT	47	47			
* 78004635	PREFORMED PLASTIC PAVEMENT MARKING, TYPE D - STANDARD - LINE 7"	FOOT	98	98			
* 78009004	MODIFIED URETHANE PAVEMENT MARKING - LINE 4"	FOOT	1,179	1,179			
* 78009006	MODIFIED URETHANE PAVEMENT MARKING - LINE 6"	FOOT	30	30			
* 78009012	MODIFIED URETHANE PAVEMENT MARKING - LINE 12"	FOOT	51	51			
* 78009024	MODIFIED URETHANE PAVEMENT MARKING - LINE 24"	FOOT	20	20			
* 78011040	GROOVING FOR RECESSED PAVEMENT MARKING 8"	FOOT	98	98			
* 78100100	RAISED REFLECTIVE PAVEMENT MARKER	EACH	113	113			
78100200	TEMPORARY RAISED REFLECTIVE PAVEMENT MARKER	EACH	120	120			
* 78200005	GUARDRAIL REFLECTORS, TYPE A	EACH	4	4			
78300200	RAISED REFLECTIVE PAVEMENT MARKER REMOVAL	EACH	85	85			
78300202	PAVEMENT MARKING REMOVAL - WATER BLASTING	SQ FT	3,243	3,243			
* 81028200	UNDERGROUND CONDUIT, GALVANIZED STEEL, 2" DIA.	FOOT	1,596			1,596	
* 81028220	UNDERGROUND CONDUIT, GALVANIZED STEEL, 3" DIA.	FOOT	70			70	

* SPECIALTY ITEM

CODE NO.	ITEM	UNIT	TOTAL QUANTITY	CONSTRUCTION CODE ROADWAY 0013 80% FED 20% STATE TOUHY AVE SN 016-0363	CONSTRUCTION CODE BRIDGE 0013 100% LOCAL TOUHY AVE SN 016-0363	CONSTRUCTION CODE TRAFFIC SIGNAL 0021 100% LOCAL TOUHY AVE SN 016-0363	CONSTRUCTION CODE LIGHTING 0021 100% LOCAL TOUHY AVE SN 016-0363
81028240	UNDERGROUND CONDUIT, GALVANIZED STEEL, 4" DIA.	FOOT	259			222	37
81200230	CONDUIT EMBEDDED IN STRUCTURE, 2" DIA., PVC	FOOT	247				247
81300550	JUNCTION BOX, STAINLESS STEEL, ATTACHED TO STRUCTURE, 12" X 12" X 6"	EACH	4				4
81400100	HANDHOLE	EACH	5			5	
81400200	HEAVY-DUTY HANDHOLE	EACH	2			2	
81400300	DOUBLE HANDHOLE	EACH	1			1	
81603600	UNIT DUCT, 600V, 6-1C NO.8, 1/C NO.8 GROUND, (XLP-TYPE USE), 1 1/2" DIA. POLYETHYLENE	FOOT	783				783
81702120	ELECTRIC CABLE IN CONDUIT, 600V (XLP-TYPE USE) 1/C NO. 8	FOOT	2,065				2,065
81800240	AERIAL CABLE, 2-1/C NO. 8 WITH MESSENGER WIRE	FOOT	1,025				1,025
81800450	AERIAL CABLE, 4-1/C NO. 8 WITH MESSENGER WIRE	FOOT	1,025				1,025
83057355	LIGHT POLE, WOOD, 60 FOOT, CLASS 4, WITH 15FT MAST ARM	EACH	4				4
83600200	LIGHT POLE FOUNDATION, 24" DIAMETER	FOOT	40				40
83800205	BREAKAWAY DEVICE, TRANSFORMER BASE, 15 INCH BOLT CIRCLE	EACH	4				4
84100110	REMOVAL OF TEMPORARY LIGHTING UNIT	EACH	4				4
84400105	RELOCATE EXISTING LIGHTING UNIT	EACH	4				4
85000200	MAINTENANCE OF EXISTING TRAFFIC SIGNAL INSTALLATION	EACH	2			2	
86400100	TRANSCEIVER - FIBER OPTIC	EACH	1			1	
87300925	ELECTRIC CABLE IN CONDUIT, TRACER, NO. 14 1C	FOOT	2,385			2,385	
87301215	ELECTRIC CABLE IN CONDUIT, SIGNAL NO. 14 2C	FOOT	636			636	
87301225	ELECTRIC CABLE IN CONDUIT, SIGNAL NO. 14 3C	FOOT	926			926	
87301245	ELECTRIC CABLE IN CONDUIT, SIGNAL NO. 14 5C	FOOT	1,432			1,432	
87301255	ELECTRIC CABLE IN CONDUIT, SIGNAL NO. 14 7C	FOOT	384			384	
87301305	ELECTRIC CABLE IN CONDUIT, LEAD-IN, NO. 14 1 PAIR	FOOT	1,552			1,552	
87301805	ELECTRIC CABLE IN CONDUIT, SERVICE, NO. 6 2 C	FOOT	76			76	
87301900	ELECTRIC CABLE IN CONDUIT, EQUIPMENT GROUNDING CONDUCTOR, NO. 6 1C	FOOT	445			445	
87502500	TRAFFIC SIGNAL POST, GALVANIZED STEEL 16 FT.	EACH	2			2	
87700170	STEEL MAST ARM ASSEMBLY AND POLE, 26 FT.	EACH	2			2	
87700280	STEEL MAST ARM ASSEMBLY AND POLE, 48 FT.	EACH	1			1	
87800100	CONCRETE FOUNDATION, TYPE A	FOOT	12			12	
87800150	CONCRETE FOUNDATION, TYPE C	FOOT	4			4	
87800400	CONCRETE FOUNDATION, TYPE E 30-INCH DIAMETER	FOOT	20			20	
87800415	CONCRETE FOUNDATION, TYPE E 36-INCH DIAMETER	FOOT	13			13	
87900200	DRILL EXISTING HANDHOLE	EACH	2			2	
88030020	SIGNAL HEAD, LED, 1-FACE, 3-SECTION, MAST-ARM MOUNTED	EACH	6			6	
88030050	SIGNAL HEAD, LED, 1-FACE, 3-SECTION, BRACKET MOUNTED	EACH	5			5	

	CODE NO.	ITEM	UNIT	TOTAL QUANTITY	CONSTRUCTION CODE ROADWAY 0013 100% STATE TOUHY AVE SN 016-0363	CONSTRUCTION CODE BRIDGE 0013 100% LOCAL TOUHY AVE SN 016-0363	CONSTRUCTION CODE TRAFFIC SIGNAL 0021 100% LOCAL TOUHY AVE SN 016-0363	CONSTRUCTION CODE LIGHTING 0021 100% LOCAL TOUHY AVE SN 016-0363
*	88030100	SIGNAL HEAD, LED, 1-FACE, 5-SECTION, BRACKET MOUNTED	EACH	1			1	
*	88030110	SIGNAL HEAD, LED, 1-FACE, 5-SECTION, MAST-ARM MOUNTED	EACH	1			1	
*	88102717	PEDESTRIAN SIGNAL HEAD, LED, 1-FACE, BRACKET MOUNTED WITH COUNTDOWN TIMER	EACH	4			4	
*	88200410	TRAFFIC SIGNAL BACKPLATE, LOUVERED, FORMED PLASTIC	EACH	7			7	
*	88500100	INDUCTIVE LOOP DETECTOR	EACH	6			6	
*	88600100	DETECTOR LOOP, TYPE I	FOOT	281			281	
*	88700200	LIGHT DETECTOR	EACH	2			2	
*	88700300	LIGHT DETECTOR AMPLIFIER	EACH	1			1	
*	89000100	TEMPORARY TRAFFIC SIGNAL INSTALLATION	EACH	1			1	
*	89502300	REMOVE ELECTRIC CABLE FROM CONDUIT	FOOT	4,770			4,770	
*	89502375	REMOVE EXISTING TRAFFIC SIGNAL EQUIPMENT	EACH	1			1	
*	89502380	REMOVE EXISTING HANDHOLE	EACH	6			6	
	89502385	REMOVE EXISTING CONCRETE FOUNDATION	EACH	7			7	
*	X0324085	EMERGENCY VEHICLE PRIORITY SYSTEM LINE SENSOR CABLE, NO. 20 3/C	FOOT	262			262	
*	X0324599	ROD AND CLEAN EXISTING CONDUIT	FOOT	564			564	
*	X0326654	ORNAMENTAL LIGHT UNIT, COMPLETE	EACH	8				8
	X0350810	BOLLARD REMOVAL	EACH	2	2			
	X0327999	ANTI-GRAFFITI COATING	SQ FT	1,298		1,298		
*	X1400150	SERVICE INSTALLATION, GROUND MOUNTED, METERED	EACH	1			1	
*	X1400367	PEDESTRIAN SIGNAL POST, 10 FT.	EACH	2			2	
	X2010400	STUMP REMOVAL ONLY	UNIT	1	1			
	X2010516	SELECTIVE CLEARING	UNIT	1.00	1.00			
	X2511630	EROSION CONTROL BLANKET (SPECIAL)	SQ YD	446	446			
	X4240114	TEMPORARY SIDEWALK	SQ FT	2,542	2,542			
	X4240116	TEMPORARY SIDEWALK RAMP	EACH	2	2			
	X5021512	COFFERDAM (TYPE 1) (IN-STREAM/WETLAND WORK)	EACH	1	1			
	X5030282	FORM LINER TEXTURED SURFACE (SPECIAL)	SQ FT	652		652		
	X5030290	STAINING CONCRETE STRUCTURES	SQ FT	652		652		
*	X5091730	BRIDGE FENCE RAILING (SPECIAL)	FOOT	231	231			
	X5230176	DRAINAGE SCUPPERS, DS-12	EACH	9	9			
	X5427602	REMOVE EXISTING FLARED END SECTION	EACH	1	1			
	X5509900	ABANDON AND FILL EXISTING STORM SEWER	FOOT	233	233			
	X5610662	WATER MAIN TO BE ABANDONED, 12"	FOOT	311		311		
	X5610712	WATER MAIN REMOVAL, 12"	FOOT	10		10		
	X5630712	CONNECTION TO EXISTING WATER MAIN 12"	EACH	2		2		

* SPECIALTY ITEM

Primera
550 W. JACKSON BLVD. SUITE 600 . CHICAGO IL 60661 . P:312-605-8910 F:312-605-8415

USER NAME = rvandermus	DESIGNED -	REVISED -
	DRAWN - RMV	REVISED -
PLOT SCALE = 2.0000 ' / in.	CHECKED - MPV	REVISED -
PLOT DATE = 10/14/2025	DATE -	REVISED -

STATE OF ILLINOIS
DEPARTMENT OF TRANSPORTATION

SUMMARY OF QUANTITIES
TOUHY AVENUE OVER NORTH BRANCH CHICAGO RIVER

SCALE: | SHEET 8 OF 124 SHEETS | STA. TO STA.

F.A.P. RTE.	SECTION	COUNTY	TOTAL SHEETS	SHEET NO.
341	95-B	COOK	124	8
		CONTRACT NO. 62D34		
		ILLINOIS	FED. AID PROJECT	

REV-SEP

	CODE NO.	ITEM	UNIT	TOTAL QUANTITY	CONSTRUCTION CODE ROADWAY 0013 100% STATE TOUHY AVE SN 016-0363	CONSTRUCTION CODE BRIDGE 0013 100% LOCAL TOUHY AVE SN 016-0363	CONSTRUCTION CODE TRAFFIC SIGNAL 0021 100% LOCAL TOUHY AVE SN 016-0363	CONSTRUCTION CODE LIGHTING 0021 100% LOCAL TOUHY AVE SN 016-0363
	X6020399	CONNECTION TO EXISTING MANHOLE	EACH	3	3			
	X6640104	FENCE REMOVAL	FOOT	62	62			
	X6700407	ENGINEER'S FIELD OFFICE, TYPE A (D1)	CAL MO	24	24			
	X7010216	TRAFFIC CONTROL AND PROTECTION, (SPECIAL)	L SUM	1	1			
	X7200061	TEMPORARY INFORMATION SIGNING	SQ FT	128	128			
	X7830050	RAISED REFLECTIVE PAVEMENT MARKER, REFLECTOR REMOVAL	EACH	40	40			
*	X7830052	RAISED REFLECTIVE PAVEMENT MARKER, REFLECTOR REPLACEMENT	EACH	40	40			
*	X8000003	MAINTENANCE OF LIGHTING SYSTEM	CAL MO	24				24
*	X8211007	TEMPORARY LUMINAIRE, LED, ROADWAY, OUTPUT DESIGNATION G	EACH	4				4
*	X8302161	TEMPORARY WOOD POLE, 60 FT., CLASS 4	EACH	4				4
*	X8570233	FULL-ACTUATED CONTROLLER AND TYPE SUPER P CABINET (SPECIAL)	EACH	1			1	
*	X8620200	UNINTERRUPTABLE POWER SUPPLY (SPECIAL)	EACH	1			1	
*	X8710024	FIBER OPTIC CABLE IN CONDUIT, NO. 62.5/125, MM12F SM24F	FOOT	2,385			2,385	
*	X8760200	ACCESSIBLE PEDESTRIAN SIGNALS	EACH	4			4	
*	X8780012	CONCRETE FOUNDATION, TYPE A 12-INCH DIAMETER	FOOT	8			8	
*	X8809005	LED SIGNAL FACE, LENS COVER	EACH	13			13	
*	X8900104	TEMPORARY TRAFFIC SIGNAL TIMING	EACH	1			1	
	X6026615	GATE VALVE 12" WITH VAULT, 5' DIAMETER	EACH	1		1		
	X5612012	WATER MAIN, DUCTILE IRON PIPE, CLASS 52, 12" DIRECTIONALLY DRILLED	FOOT	248		248		
	Z0013798	CONSTRUCTION LAYOUT	L SUM	1	1			
	Z0015500	DEBRIS REMOVAL	L SUM	1	1			
	Z0023201	SEDIMENT CONTROL, SILT CURTAIN	EACH	2	2			
*	Z0033046	RE-OPTIMIZE TRAFFIC SIGNAL SYSTEM LEVEL 2	EACH	1			1	
	Z0056626	STORM SEWER (WATER MAIN REQUIREMENTS) 48 INCH	FOOT	72	72			
	Z0056654	STORM SEWERS, TYPE 1, WATER MAIN QUALITY PIPE, 24"	FOOT	42	42			
	Z0034100	MASONRY WALL CONSTRUCTION	SQ FT	933		933		
Ø	Z0076604	TRAINEES - TRAINING PROGRAM GRADUATE	HOUR	500	500			

* SPECIALTY ITEM

Ø 0042

MODEL: Default
FILE NAME: pw:\\prr-mera-pw.bentley.com:primera-pw-01\Documents\01 Projects\2020\20200425.00 - IDOT Phase II Various Design\20200425.05 WO5 Touhy over N. Branch of Chicago River\Drawings\Current Drawings\Current Drawing Files\CADD Sheets\Roadway\P109010-sht-SOQ-07

Primera
550 W. JACKSON BLVD. SUITE 600 . CHICAGO IL 60661 . P:312-605-0910 F:312-605-0415

USER NAME = rvandermus	DESIGNED -	REVISED -
	DRAWN - RMV	REVISED -
PLOT SCALE = 2.0000 ' / in.	CHECKED - MPV	REVISED -
PLOT DATE = 10/14/2025	DATE -	REVISED -

STATE OF ILLINOIS
DEPARTMENT OF TRANSPORTATION

SUMMARY OF QUANTITIES
TOUHY AVENUE OVER NORTH BRANCH CHICAGO RIVER

SCALE: | SHEET 9 OF 124 SHEETS | STA. TO STA.

F.A.P. RTE.	SECTION	COUNTY	TOTAL SHEETS	SHEET NO.
341	95-B	COOK	124	9
		CONTRACT NO. 62D34		
		ILLINOIS FED. AID PROJECT		

REV-SEP

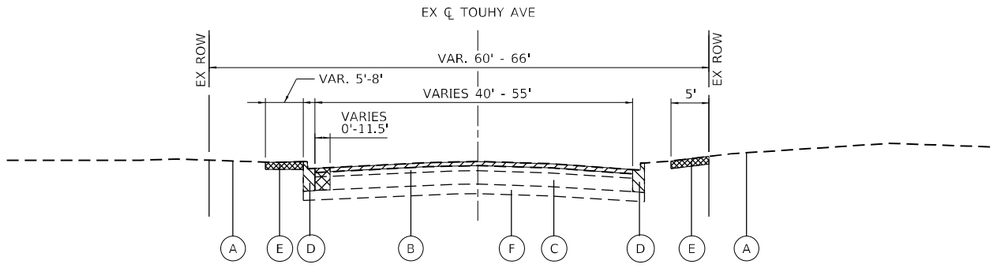

EXISTING TYPICAL SECTION

TOUHY AVENUE
STA 497+63.80 - STA 499+32.15

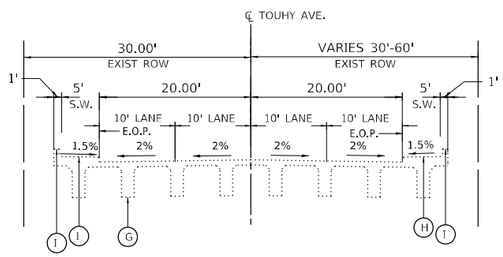

EXISTING TOUHY AVE OVER NORTH BRANCH CHICAGO RIVER (LOOKING EAST)

STA 499+32.15 TO STA 500+68.49

EXISTING LEGEND

- (A) EXISTING GROUND
- (B) EXISTING HMA PAVEMENT, 3.5"-5.5" ±
- (C) EXISTING PCC BASE COURSE, 9"-10.25" ±
- (D) EXISTING COMBINATION CONCRETE CURB AND GUTTER
- (E) EXISTING PCC SIDEWALK
- (F) EXISTING SUBBASE GRANULAR MATERIAL
- (G) EXISTING CONC. BRIDGE STRUCTURE TO BE REMOVED
- (H) EXISTING CONC. SIDEWALK, 5' WIDE
- (I) EXISTING PARAPET RAIL, 1'-7" HIGH

LEGEND

- PAVEMENT REMOVAL
- SIDEWALK REMOVAL
- COMBINATION CONCRETE CURB AND GUTTER REMOVAL
- HMA SURFACE REMOVAL

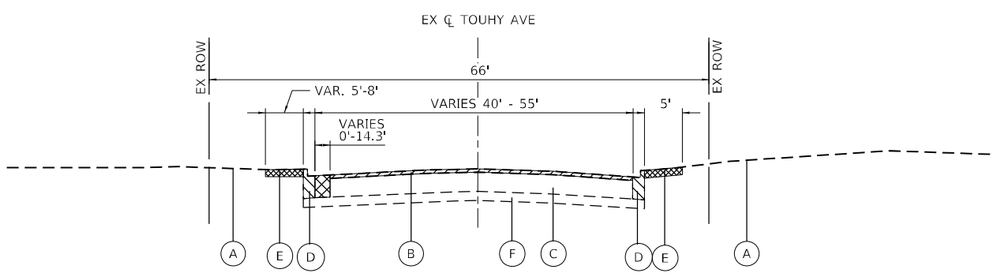

EXISTING TYPICAL SECTION

TOUHY AVENUE
STA 500+68.49 - STA 502+49.80

Primera
551 W. JACKSON BLVD, SUITE 600 , CHICAGO IL 60661 , P:312-600-0910 F:312-600-0915

USER NAME = rvandermus	DESIGNED -	REVISED -
	DRAWN - RMV	REVISED -
PLOT SCALE = 40.0000 ' / in.	CHECKED - MPV	REVISED -
PLOT DATE = 10/14/2025	DATE -	REVISED -

STATE OF ILLINOIS
DEPARTMENT OF TRANSPORTATION

EXISTING TYPICAL SECTIONS
TOUHY AVENUE OVER NORTH BRANCH CHICAGO RIVER

SCALE: | SHEET 10 OF 124 SHEETS | STA. TO STA.

F.A.P. RTE.	SECTION	COUNTY	TOTAL SHEETS	SHEET NO.
341	95-B	COOK	124	10
		CONTRACT NO. 62D34		
	ILLINOIS	FED. AID PROJECT		

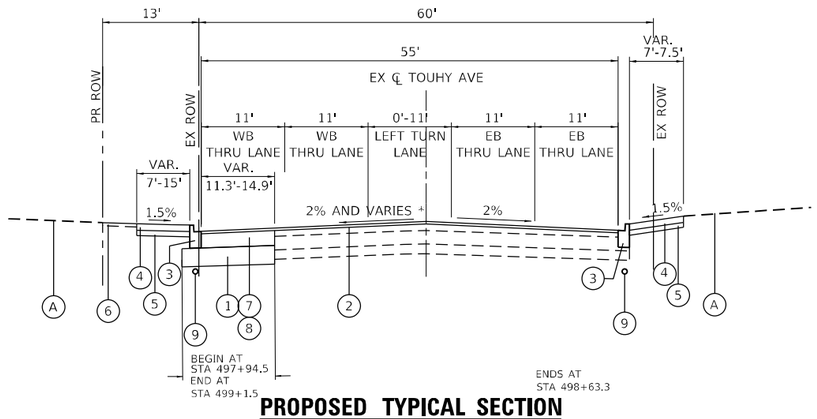

PROPOSED TYPICAL SECTION

TOUHY AVENUE
STA 498+63.3 - STA 499+23.1
BRIDGE OMITTED FROM STA 499+23.1 TO STA 500+76.9
(SEE STRUCTURAL PLANS)

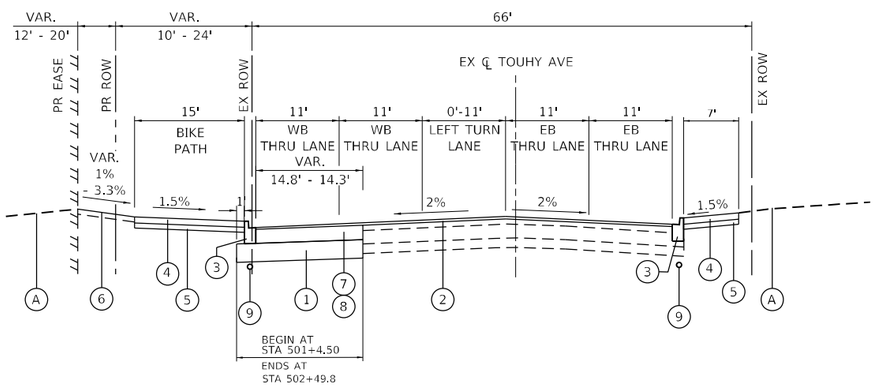

PROPOSED TYPICAL SECTION

TOUHY AVENUE
STA 500+76.9 - STA 502+00.0
BRIDGE OMITTED FROM STA 499+23.1 TO STA 500+76.9
(SEE STRUCTURAL PLANS)

EXISTING LEGEND

- (A) EXISTING GROUND
- (B) EXISTING HMA PAVEMENT, 6" ±
- (C) EXISTING PCC BASE COURSE, 9" ±
- (D) EXISTING AGGREGATE SHOULDER
- (E) EXISTING COMBINATION CONCRETE CURB AND GUTTER
- (F) EXISTING PCC SIDEWALK
- (G) EXISTING SUBBASE GRANULAR MATERIAL

PROPOSED LEGEND

- (1) AGGREGATE SUBGRADE IMPROVEMENT 12" (SQ YD)
- (2) POLYMERIZED HOT-MIX ASPHALT SURFACE COURSE, SMA, MIX "F", 9.5, N80, 1-3/4"
- (3) COMBINATION CONCRETE CURB AND GUTTER, TYPE B-6.12
- (4) PORTLAND CEMENT CONCRETE SIDEWALK 5" (8" THRU COMMERCIAL DRIVEWAYS)
- (5) AGGREGATE BASE COURSE, TYPE B 4"
- (6) SEEDING, CLASS 2A / TOPSOIL FURNISH AND PLACE, 4"
- (7) HMA BINDER COURSE, IL-19.0, N70, 2 1/4"
- (8) PORTLAND CONCRETE CEMENT BASE COURSE 10"
- (9) PIPE UNDERDRAINS, TYPE 2, 4"

NOTE: LONGITUDINAL JOINT SEALANT SHALL BE PLACED UNDER THE P HMA SC SMA 9.5 MIX F N80

MIXTURE TYPE	AIR VOIDS	QUALITY MANAGEMENT PROGRAM (QMP)
HOT-MIX ASPHALT PAVEMENT (TOUHY AVE)		
POLYMERIZED HOT-MIX ASPHALT SURFACE COURSE, STONE MATRIX ASPHALT, MIX "F", 9.5, N80; 1 3/4"	3.5% @ 80 Gyr.	QC/QA
HOT-MIX ASPHALT BINDER COURSE, IL-19.0, N70; 2 1/4"	4% @ 70 Gyr.	QC/QA
TEMPORARY SIDEWALK		
HOT-MIX ASPHALT BINDER COURSE, IL-19.0, N70; 4"	4% @ 70 Gyr.	QC/QA
QMP DESIGNATION: QUALITY CONTROL/QUALITY ASSURANCE (QC/QA), QUALITY CONTROL FOR PERFORMANCE (QCP)		

THE UNIT WEIGHT USED TO CALCULATE ALL HMA SURFACE MIXTURE QUANTITIES IS 112 LBS/SQ YD/IN.

The "AC Type" for Polymerized HMA Mixes SHALL BE "SBS/SBR PG 76 -22" AND
FOR NON-POLYMERIZED HMA THE "AC TYPE" shall be "PG 64 -22" UNLESS modified by RECLAIMED
MATERIALS SPECIFICATIONS.

EXIST. CURVE EXTOUHY_3
PI STA. = 492+57.17
Δ = 22° 01' 29" (RT)
D = 5° 33' 15"
R = 1,031.60'
T = 200.75'
L = 396.55'
E = 19.35'
e = ____
T.R. = ____
S.E. RUN = ____
P.C. STA. = 490+56.41
P.T. STA. = 494+52.96

EXIST. CURVE EXTOUHY_6
PI STA. = 508+96.48
Δ = 2° 53' 46" (LT)
D = 1° 12' 41"
R = 4,729.37'
T = 119.55'
L = 239.04'
E = 1.51'
e = ____
T.R. = ____
S.E. RUN = ____
P.C. STA. = 507+76.93
P.T. STA. = 510+15.98

BENCHMARKS

BENCHMARK#1
SQUARE ON SE CORNER OF TCB AT TOUHY & RIVERSIDE DRIVE. NORTH SIDE OF TOUHY AVE.
EL. 619.326

BENCHMARK #2
"X" ON EASTERLY BOLT ON FIRE HYDRANT AT 6849-6859 WEST TOUHY AVE.(NILES PUBLIC SERVICES FACILITY)
EL. 620.512

ALIGNMENT COORDINATES - TOUHY AVENUE			
PT. NO.	STATION	NORTHING	EASTING
100	STA 495+00	1947600.982	1129895.379
101	STA 500+00	1947532.687	1130390.707
102	STA 505+00	1947464.403	1130886.008

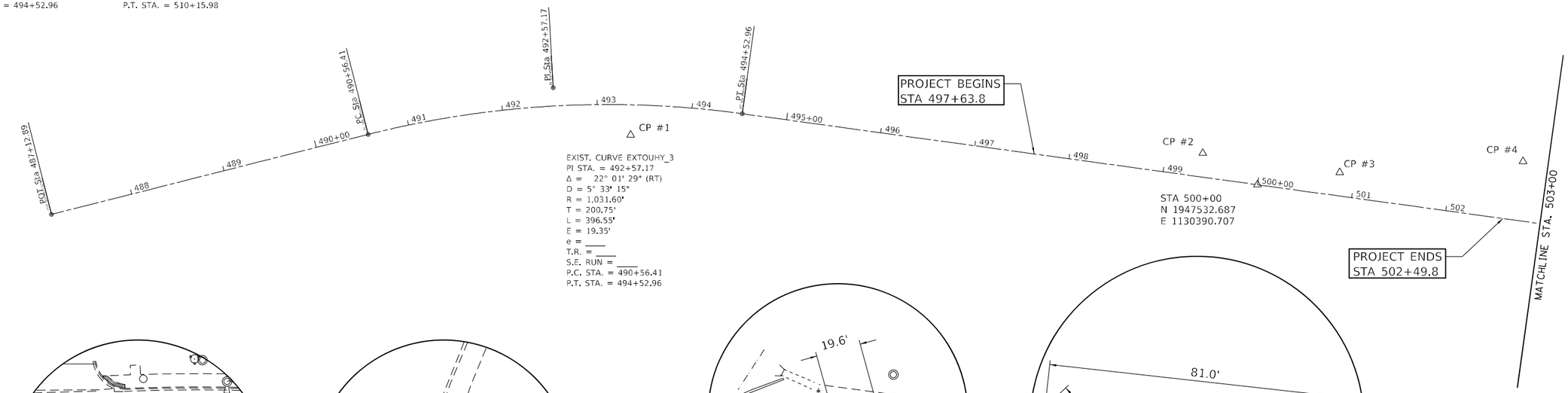

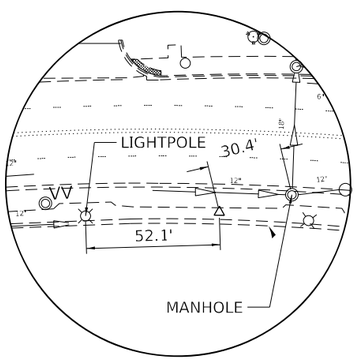

CP #1
N 1947565.952
E 1130333.264
STA 493+35.97 31.74 RT

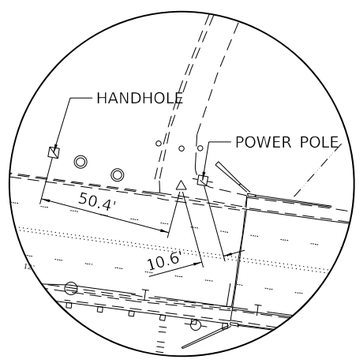

CP #2
N 1947565.955
E 1130333.277
STA 499+38.55 25.26 LT

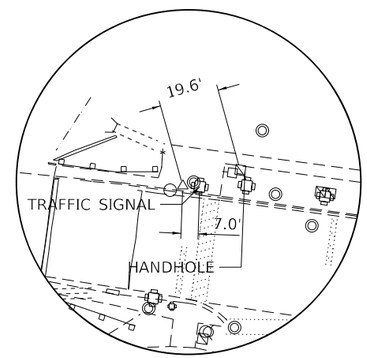

CP #3
N 1947545.573
E 1130477.264
STA 500+84.00 24.62 LT

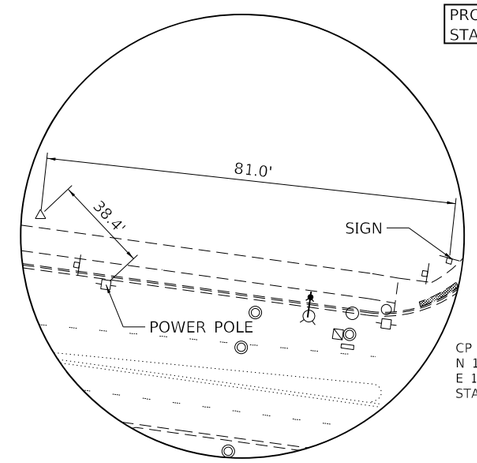

CP #4
N 1947557.253
E 1130670.098
STA 502+73.65 62.54 LT

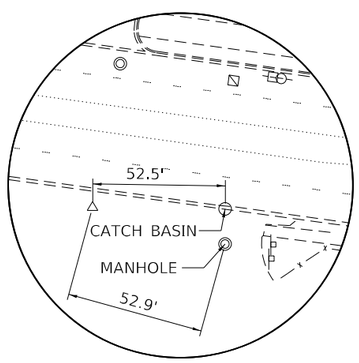

CP #5
N 1947423.547
E 1130983.800
STA 506+02.44 26.95 RT

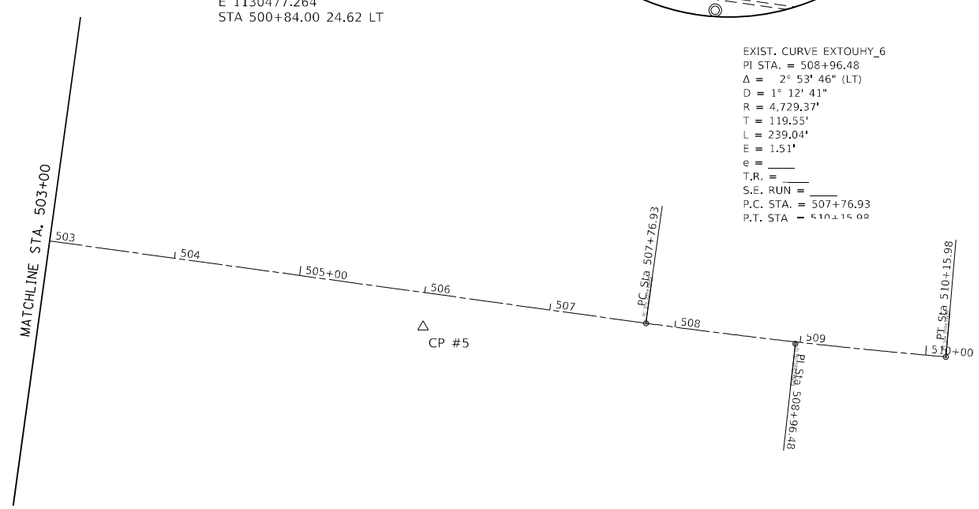

0 100 200 300
SCALE IN FEET

MODEL: Default
FILE NAME: pw:\\primre-s-pw.bentley.com:primers-pw-01\Documents\01 Projects\2020\2020425.00 - IDOT Phase II Various Design\2020425.05 \VOS Touhy over N. Branch of Chicago River\Drawings\Current Drawing Files\CADD_Sheets\Roadway\P109010-dh-sh.dgn

Primera
550 W. JACKSON BLVD. SUITE 600 , CHICAGO IL 60661 , P:312-855-0910 F:312-855-0915

USER NAME = rvandermus	DESIGNED -	REVISED -	
	DRAWN - RMV	REVISED -	
PLOT SCALE = 120.0000 ' / in.	CHECKED - MPV	REVISED -	
PLOT DATE = 10/14/2025	DATE -	REVISED -	

STATE OF ILLINOIS
DEPARTMENT OF TRANSPORTATION

ALIGNMENT TIES & BENCHMARKS
TOUHY AVENUE OVER NORTH BRANCH CHICAGO RIVER

SCALE: SHEET 12 OF 124 SHEETS STA. TO STA.

F.A.P. RTE.	SECTION	COUNTY	TOTAL SHEETS	SHEET NO.
341	95-B	COOK	124	12
		CONTRACT NO. 62D34		
	ILLINOIS	FED. AID PROJECT		

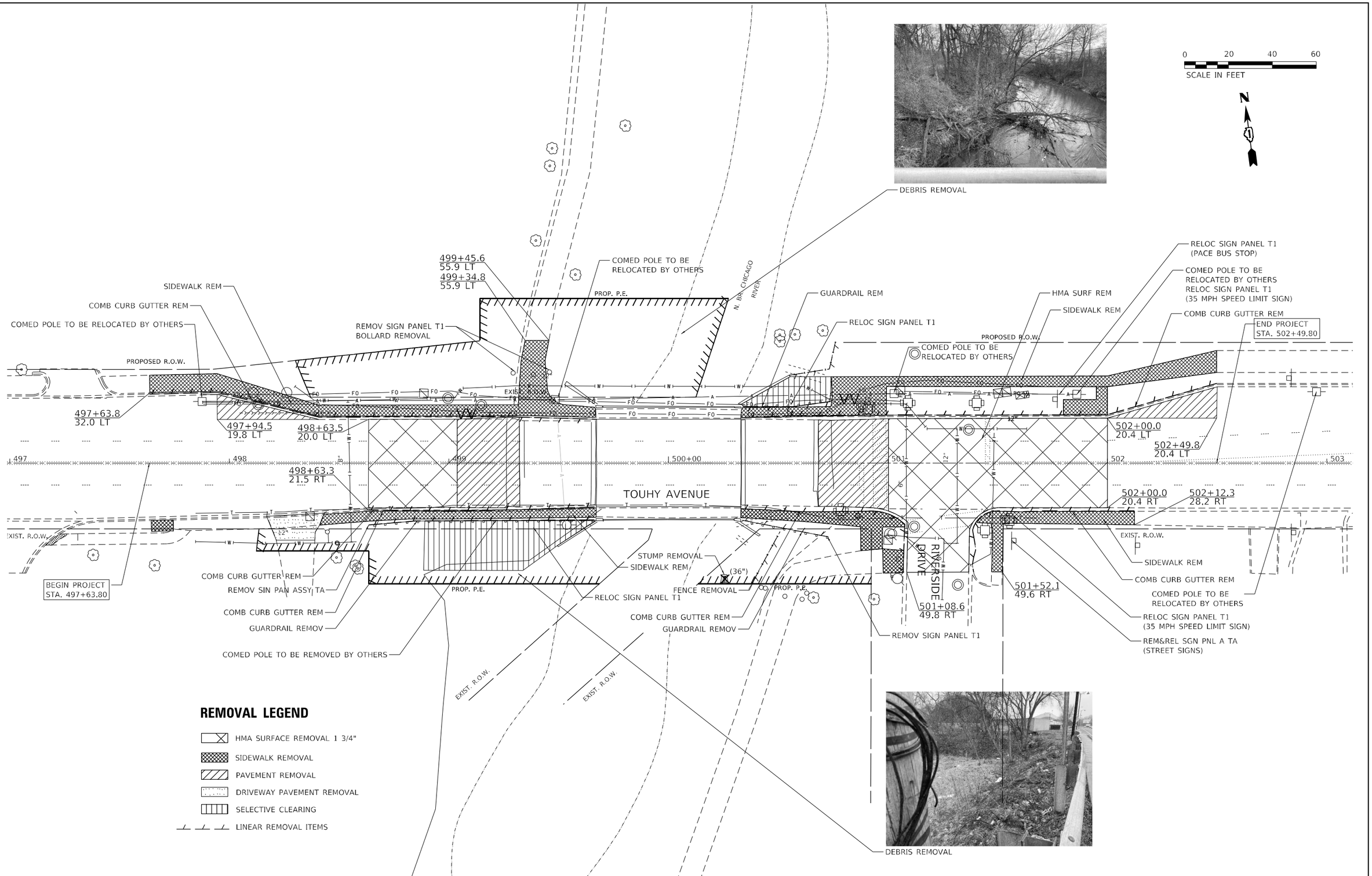

MODEL: Default
FILE NAME: pw:\\primera-pw.bentley.com:primera-pw-01\Documents\01 Projects\2020\20425.00 - IDOT Phase II Various Design\20204425_05 NOS Touhy over N. Branch of Chicago River\Drawings\Current Drawing Files\CADD Sheets\Roadway\P109010-sht-Removal-01

Primera
550 W. JACKSON BLVD, SUITE 600 , CHICAGO IL 60661 , P:312-435-0910 F:312-435-0415

USER NAME = rvandermus	DESIGNED -	REVISED -	
	DRAWN - RMV	REVISED -	
PLOT SCALE = 40.0000 ' / in.	CHECKED - MPV	REVISED -	
PLOT DATE = 10/14/2025	DATE -	REVISED -	

STATE OF ILLINOIS
DEPARTMENT OF TRANSPORTATION

REMOVAL PLAN
TOUHY AVENUE OVER NORTH BRANCH CHICAGO RIVER

SCALE: | SHEET 13 OF 124 SHEETS | STA. TO STA.

F.A.P. RTE.	SECTION	COUNTY	TOTAL SHEETS	SHEET NO.
341	95-B	COOK	124	13
		CONTRACT NO. 62D34		
		ILLINOIS	FED. AID PROJECT	

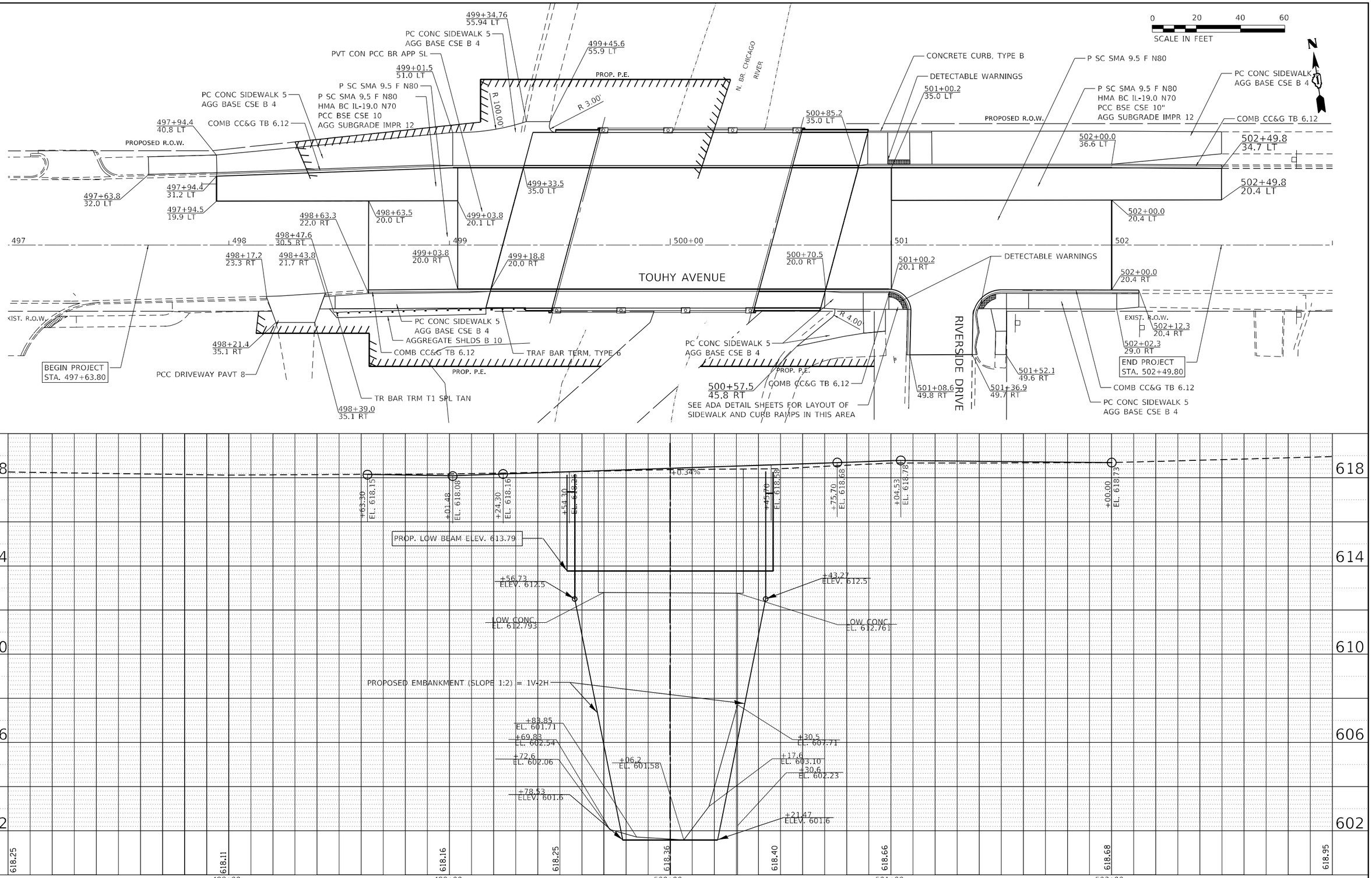

PLAN
SURVEYED
PLOTTED
ALIGNMENT CHECKED
R.O. WAY CHECKED
CADD FILE NAME
NOTE BOOK NO.
BY
DATE

PROFILE
SURVEYED
PLOTTED
GRADES CHECKED
B.M. NOTED
STRUCTURE NOTATNS CHKD
NOTE BOOK NO.
BY
DATE

MODEL: Default
FILE NAME: \\primer-dgn\bentley\projects\01 Projects\2020\02200425.00 - IDOT Phase II Various Design\02200425.05_W05 Touhy over N. Branch of Chicago River\Drawings\Current Drawing Files\CADD_Sheets\Roadway\P109010-alt-Plan&Profile-01

Primera
550 W. JACKSON BLVD, SUITE 600 , CHICAGO IL 60661 , P:312-855-0910 F:312-855-0415

USER NAME = rvandermus	DESIGNED -	REVISED -
	DRAWN - RMV	REVISED -
PLOT SCALE = 40.0000 ' / in.	CHECKED - MPV	REVISED -
PLOT DATE = 10/14/2025	DATE -	REVISED -

STATE OF ILLINOIS
DEPARTMENT OF TRANSPORTATION

PLAN & PROFILE
TOUHY AVENUE OVER NORTH BRANCH CHICAGO RIVER

SCALE: SHEET 14 OF 124 SHEETS STA. TO STA.

F.A.P. RTE.	SECTION	COUNTY	TOTAL SHEETS	SHEET NO.
341	95-B	COOK	124	14
		CONTRACT NO. 62D34		
	ILLINOIS	FED. AID PROJECT		

MAINTENANCE OF TRAFFIC GENERAL NOTES

1. THE TRAFFIC CONTROL PLAN SHALL SERVE AS A GUIDE FOR SAFE DIVERSION OF TRAFFIC DURING EXECUTION OF THIS CONTRACT. HOWEVER, THE CONTRACTOR MAY IMPROVE OR MODIFY THE TRAFFIC CONTROL PLANS TO MEET CONSTRUCTION NEEDS BUT NOT AT THE EXPENSE OF PUBLIC SAFETY OR CONVENIENCE. ANY CHANGES TO THE TRAFFIC CONTROL PLAN SHALL BE SUBMITTED TO THE ENGINEER FOR APPROVAL.

2. THE CONTRACTOR SHALL CONTACT THE DISTRICT ONE TRAFFIC CONTROL SUPERVISOR AT KALPANA.KANNAN-HOSADURGA@ILLINOIS.GOV A MINIMUM OF 72 HOURS IN ADVANCE OF BEGINNING WORK.

3. ALL OF THE TRAFFIC CONTROL DEVICES SHALL BE IN PLACE BEFORE CONSTRUCTION IS STARTED. ALL TEMPORARY PAVEMENT MARKINGS & TRAFFIC CONTROL DEVICES SHALL BE IN PLACE AT THE BEGINNING OF EACH STAGE AND SHALL BE MAINTAINED FOR THE DURATION OF THAT STAGE UNLESS OTHERWISE DIRECTED BY THE ENGINEER.

4. THE CONTRACTOR SHALL BE REQUIRED TO MAINTAIN ACCESS TO DRIVEWAYS. THIS WORK WILL BE INCLUDED IN THE COST OF AGGREGATE FOR TEMPORARY ACCESS.

5. THE CONTRACTOR SHALL MAINTAIN TRAFFIC IN ACCORDANCE WITH THE PLANS, SPECIAL PROVISIONS, STATE STANDARDS AND AS DIRECTED BY THE ENGINEER.

6. THE CONTRACTOR SHALL INFORM THE ENGINEER OF ANY CHANGES IN STAGING AT LEAST TWO WEEKS IN ADVANCE.

7. TEMPORARY SIGNING, AS SHOWN, SHALL CONFORM TO THE APPLICABLE STANDARDS INCLUDED IN THE SPECIAL PROVISIONS AND CONTRACT PLANS OR AS DIRECTED BY THE ENGINEER.

8. ALL STATE ROUTE MARKERS SHALL BE MAINTAINED AT ALL TIMES THROUGHOUT ALL STAGES OF CONSTRUCTION.

9. EXISTING TRAFFIC CONTROL DEVICES WITHIN THE LIMITS OF CONSTRUCTION ARE TO BE PROTECTED FROM DAMAGE BY THE CONTRACTOR. ANY DAMAGED SIGNS CAUSED BY THIS WORK SHALL BE REPLACED BY THE CONTRACTOR AT NO ADDITIONAL COST.

10. TRAFFIC CONTROL DEPICTED ON THE MAINTENANCE OF TRAFFIC PLANS IS THE MINIMUM REQUIREMENT. OTHER WORK OR SIGNING MAY BE REQUIRED BY THE ENGINEER.

11. THE TYPE III BARRICADES ARE TO BE PLACED IN ACCORDANCE WITH STANDARD 701901 UNLESS AUTHORIZED BY THE ENGINEER TO USE AN ALTERNATIVE ARRANGEMENT.

12. TYPE 1, TYPE II OR DRUM BARRICADES WITH TWO-WAY FLASHING LIGHTS SHALL BE REQUIRED AT ALL OPEN TRENCHES, EXCAVATIONS, OPEN OR EXPOSED SEWER STRUCTURES, TRANSVERSE PAVEMENT JOINTS, MATERIALS OR EQUIPMENT WITHIN THE RIGHT-OF-WAY (NUMBER AND SPACING DEPENDS ON THE CONDITIONS); AND AT LOCATIONS DESIGNATED BY THE ENGINEER OR LOCAL LAW ENFORCEMENT AGENCIES.

13. ARROW BOARDS WILL BE REQUIRED WHEN IMPLEMENTING ALL LANE CLOSURES.

14. ANY SAW CUTTING OF THE EXISTING PAVEMENT FOR STAGE CONSTRUCTION SHALL BE INCLUDED IN THE CONTRACT UNIT PRICE PER SQUARE YARD FOR "PAVEMENT REMOVAL".

15. TRAFFIC CONDITIONS, ACCIDENTS, AND OTHER UNFORESEEN EMERGENCY CONDITIONS MAY REQUIRE THE ENGINEER TO RESTRICT, MODIFY, OR REMOVE LANE CLOSURES OR CHANNELIZATION SHOWN IN THE PLANS. THE CONTRACTOR SHALL MAKE THE NECESSARY ADJUSTMENTS AS DIRECTED BY THE ENGINEER WITHOUT DELAY. THE CONTRACTOR SHALL RESPOND TO ANY REQUEST MADE BY THE ENGINEER FOR CORRECTION WITHIN TWO HOURS FROM THE TIME OF NOTIFICATION.

16. WHEN ARTIFICIAL LIGHTING IS USED IN NIGHT OPERATIONS THE CONTRACTOR SHALL EXERCISE THE UTMOST PRECAUTIONS IN PREVENTING ADVERSE VISIBILITY TO THE MOTORING PUBLIC AND ADJOINING RESIDENTIAL AREAS.

17. A DETECTABLE PEDESTRIAN CHANNELIZATION BARRICADE WITH A "SIDEWAK CLOSED" SIGN AFFIXED, SHALL BE PLACED ON ALL SIDEWALKS CLOSED DUE TO CONSTRUCTION ACTIVITIES AS SHOWN IN STANDARDS 701801 & 701901.

18. ALL EXISTING PAVEMENT MARKINGS IN CONFLICT WITH THE TEMPORARY PAVEMENT MARKING FOR STAGING SHALL BE REMOVED. THIS WORK SHALL BE PAID FOR AS "PAVEMENT MARKING REMOVAL-WATER BLASTING".

19. FOR TRAFFIC STAGING, PAVEMENT MARKING TAPE, TYPE IV SHALL BE USED FOR STAGE 1 AND STAGE 2.

20. CHANGEABLE MESSAGE SIGNS SHALL BE INSTALLED TWO WEEKS PRIOR TO ALL TRAFFIC STAGE CHANGES ON EACH APPROACH OF THE EFFECTED ROADWAY TO WARN MOTORISTS OF THE UPCOMING EVENT. THE SIGNS SHALL BE REVISED TWO WEEKS THEREAFTER WITH MESSAGES WARNING TRAFFIC OF POTENTIAL TRAFFIC DELAYS, QUEUING, AND/OR WITH MESSAGES NOTIFYING TRAFFIC TO USE ALTERNATE ROUTES. THE SIGN LOCATIONS AND MESSAGES SHALL BE DETERMINED BY THE ENGINEER.

21. TEMPORARY PAVEMENT MARKINGS SHOWN IN THE MAINTENANCE OF TRAFFIC PLANS SHALL BE TEMPORARY PAVEMENT MARKING TAPE, TYPE IV, UNLESS THE CONSTRUCTION STAGING WILL EXTEND OVER THE WINTER PERIOD THEN TEMPORARY PAVEMENT MARKING MODIFIED URETHANE SHALL BE USED.

22. CONTRACTOR SHALL MAINTAIN ACCESS TO LOCAL BUSINESS. THIS WORK SHALL BE INCLUDED IN THE COST OF TRAFFIC CONTROL AND PROTECTION (SPECIAL).

SIGN DETAIL A (STAGE 1 AND 2):

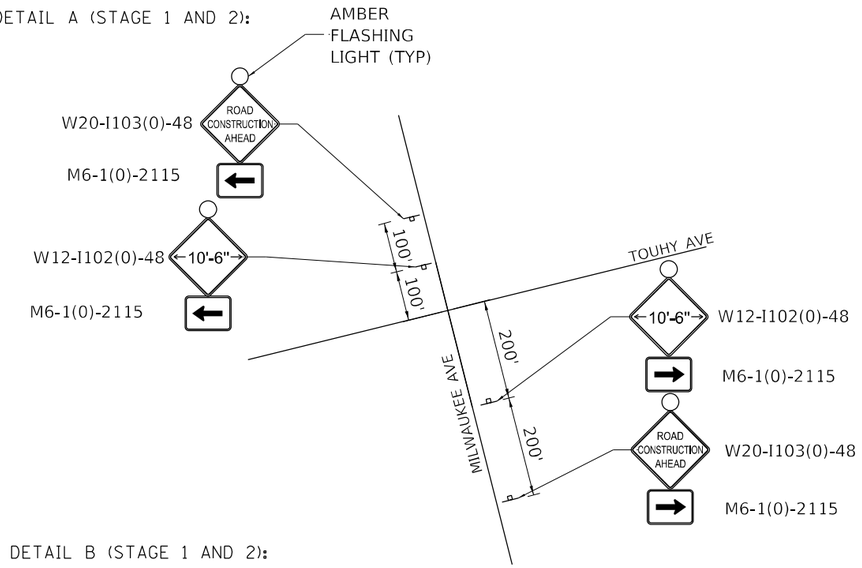

SIGN DETAIL B (STAGE 1 AND 2):

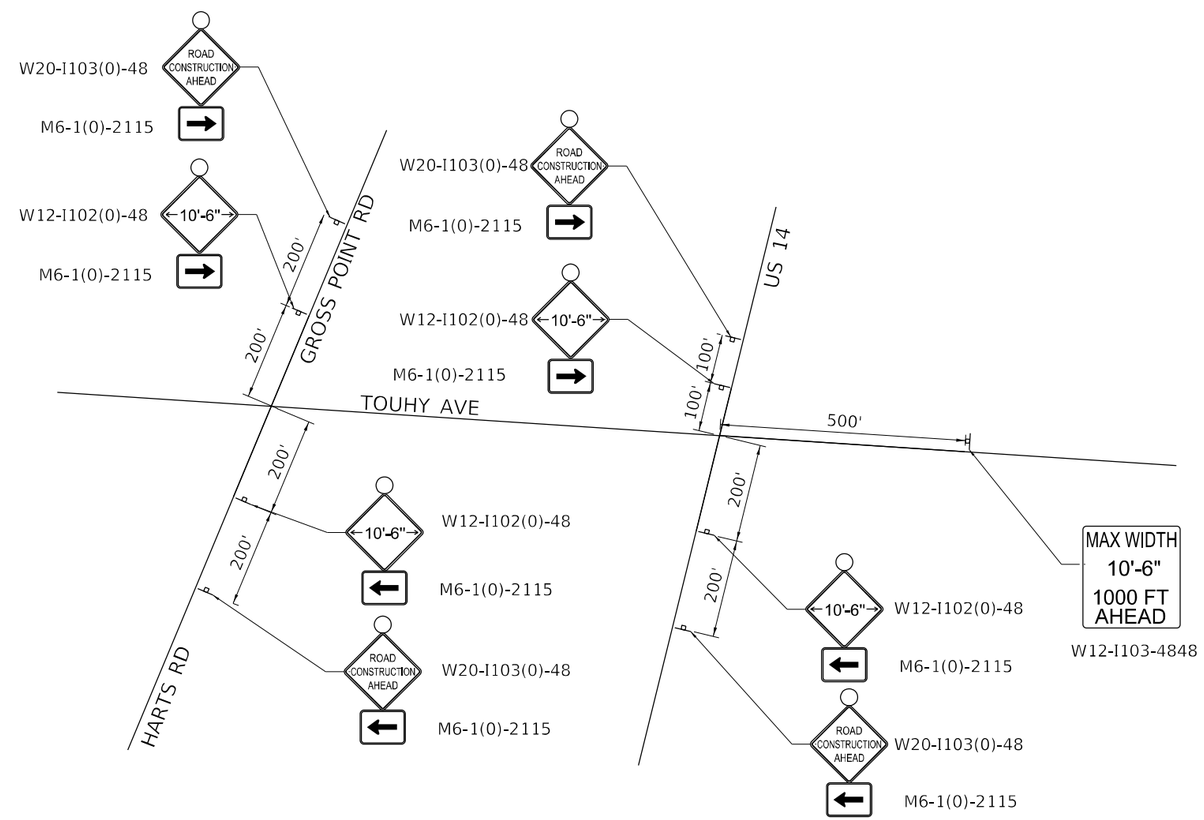

TEMPORARY INFORMATION SIGNING DETAIL (STAGE 1 AND 2):

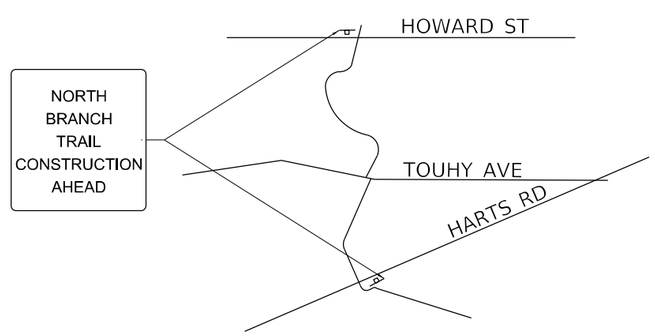

MODEL: Default
FILE NAME: pw:\\primera-pw.bentley.com:primera-pw-01\Documents\01 Projects\2020\20200425.00 - IDOT Phase II Various Design\20200425.05_VOS Touhy over N. Branch of Chicago River\Drawings\Current Drawing Files\CADD Sheets\Roadway\P109010-dht-maintenanceNote

Primera
550 W. JACKSON BLVD, SUITE 600 , CHICAGO IL 60661 , P:312-855-0910 F:312-855-0915

USER NAME = rvandermus	DESIGNED -	REVISED -	
	DRAWN - RMV	REVISED -	
PLOT SCALE = 2.0000 ' / in.	CHECKED - MPV	REVISED -	
PLOT DATE = 10/14/2025	DATE -	REVISED -	

STATE OF ILLINOIS
DEPARTMENT OF TRANSPORTATION

MAINTENANCE OF TRAFFIC NOTES
TOUHY AVENUE OVER NORTH BRANCH CHICAGO RIVER

SCALE: | SHEET 15 OF 124 SHEETS | STA. | TO STA.

F.A.P. RTE.	SECTION	COUNTY	TOTAL SHEETS	SHEET NO.
341	95-B	COOK	124	15
		CONTRACT NO. 62D34		
	ILLINOIS	FED. AID PROJECT		

SUGGESTED MAINTENANCE OF TRAFFIC

STAGE 1 - TOUHY AVENUE

CONSTRUCTION:

1. CONSTRUCT TEMPORARY SIDEWALK AND TEMPORARY CROSSING FOR NORTH BRANCH TRAIL.
2. CONSTRUCT CURB AND GUTTER, BASE COURSE, SIDEWALK, AND DRAINAGE STRUCTURES IN THE NORTH PORTION OF TOUHY AVENUE. CONSTRUCT MULTI-USE PATH ALONG THE NORTH SIDE OF TOUHY AVENUE. INSTALL TEMPORARY SIGNALS ON WEST SIDE OF BRIDGE FOR NORTH BRANCH TRAIL BIKE AND PED CROSSING.

SUGGESTED MAINTENANCE OF TRAFFIC:

1. INSTALL LANE CLOSURE IN ACCORDANCE TO THE PLANS.
2. COVER AND REMOVE PERMANENT SIGNS AS NEEDED FOR STAGE 1 CONSTRUCTION.
3. REMOVE ALL CONFLICTING RAISED REFLECTIVE PAVEMENT MARKERS WITHIN THE PROJECT LIMITS.
4. REMOVE ALL CONFLICTING PAVEMENT MARKINGS ALONG TOUHY AVENUE AND INSTALL TEMPORARY PAVEMENT MARKINGS AND TRAFFIC CONTROL FOR LANE DROPS ACCORDING TO HIGHWAY STANDARDS 701311, 701427, 701606, 701611, AND 701701.
5. INSTALL ALL TEMPORARY PAVEMENT MARKING AND TEMPORARY TRAFFIC CONTROL DEVICES FOR STAGE 1 CONSTRUCTION, SHIFT TRAFFIC.

STAGE 2 - TOUHY AVENUE

CONSTRUCTION:

1. CONSTRUCT TEMPORARY CROSSING FOR NORTH BRANCH TRAIL ACROSS RIVERSIDE DRIVE.
2. CONSTRUCT CURB AND GUTTER, BASE COURSE, SIDEWALK, AND DRAINAGE STRUCTURES IN THE SOUTH PORTION OF TOUHY AVENUE.

SUGGESTED MAINTENANCE OF TRAFFIC:

1. INSTALL LANE CLOSURE IN ACCORDANCE TO THE PLANS.
2. COVER AND REMOVE PERMANENT SIGNS AS NEEDED FOR STAGE 2 CONSTRUCTION.
3. REMOVE ALL CONFLICTING RAISED REFLECTIVE PAVEMENT MARKERS WITHIN THE PROJECT LIMITS.
4. REMOVE ALL CONFLICTING PAVEMENT MARKINGS ALONG TOUHY AVENUE AND INSTALL TEMPORARY PAVEMENT MARKINGS AND TRAFFIC CONTROL FOR LANE DROPS ACCORDING TO HIGHWAY STANDARDS 701311, 701427, 701606, 701611, AND 701701.
5. INSTALL ALL TEMPORARY PAVEMENT MARKING AND TEMPORARY TRAFFIC CONTROL DEVICES FOR STAGE 2 CONSTRUCTION, SHIFT TRAFFIC.

STAGE 3 - TOUHY AVENUE AND RIVERSIDE DRIVE

CONSTRUCTION:

1. CONSTRUCT CURB AND GUTTER, BASE COURSE, SIDEWALK, AND DRAINAGE STRUCTURES IN THE SOUTHEAST PORTION OF TOUHY AVENUE AND RIVERSIDE DRIVE.
2. REMOVE ALL TEMPORARY TRAFFIC CONTROL. INSTALL PERMANENT PAVEMENT MARKINGS, RAISED PAVEMENT MARKERS, AND SIGNING.

SUGGESTED MAINTENANCE OF TRAFFIC:

1. REMOVE ALL CONFLICTING PAVEMENT MARKINGS ALONG TOUHY AVENUE AND RIVERSIDE DRIVE AND INSTALL TEMPORARY PAVEMENT MARKINGS AND TRAFFIC CONTROL FOR LANE CLOSURES UTILIZING HIGHWAY STANDARDS 701301, 701311, 701427, 701602, 701606, 701701, AND 701801.
2. INSTALL ALL TEMPORARY PAVEMENT MARKING AND TEMPORARY TRAFFIC CONTROL DEVICES FOR STAGE 3 CONSTRUCTION, SHIFT TRAFFIC.

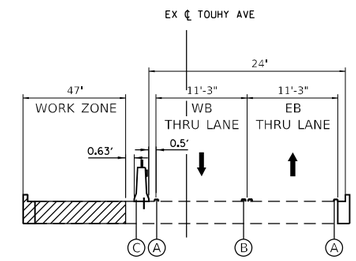

TOUHY AVE MOT TYPICAL SECTIONS CONSTRUCTION STAGE 1

(LOOKING EAST)

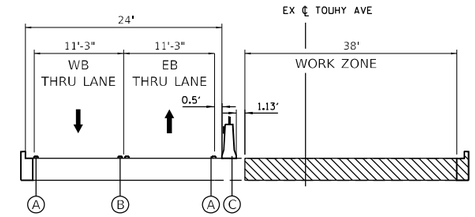

TOUHY AVE MOT TYPICAL SECTIONS CONSTRUCTION STAGE 2

(LOOKING EAST)

(A) 4" WHITE SOLID LINE TYPE IV TAPE TEMP. PVMT. MARKING

(B) 4" YELLOW SOLID DOUBLE LINE AT 11" C-C SPACING TYPE IV TAPE PVMT. MARKING WITH AMBER TEMP. RAISED REFLECTIVE PAVEMENT MARKERS @ 40' C-C SPACING

(C) TEMPORARY CONCRETE BARRIER WALL WITH DOUBLE-SIDED CRYSTAL TYPE C REFLECTORS PER STANDARD 704001 AND 782006 (RESTRAINED ON BRIDGE PER DETAIL R-27)

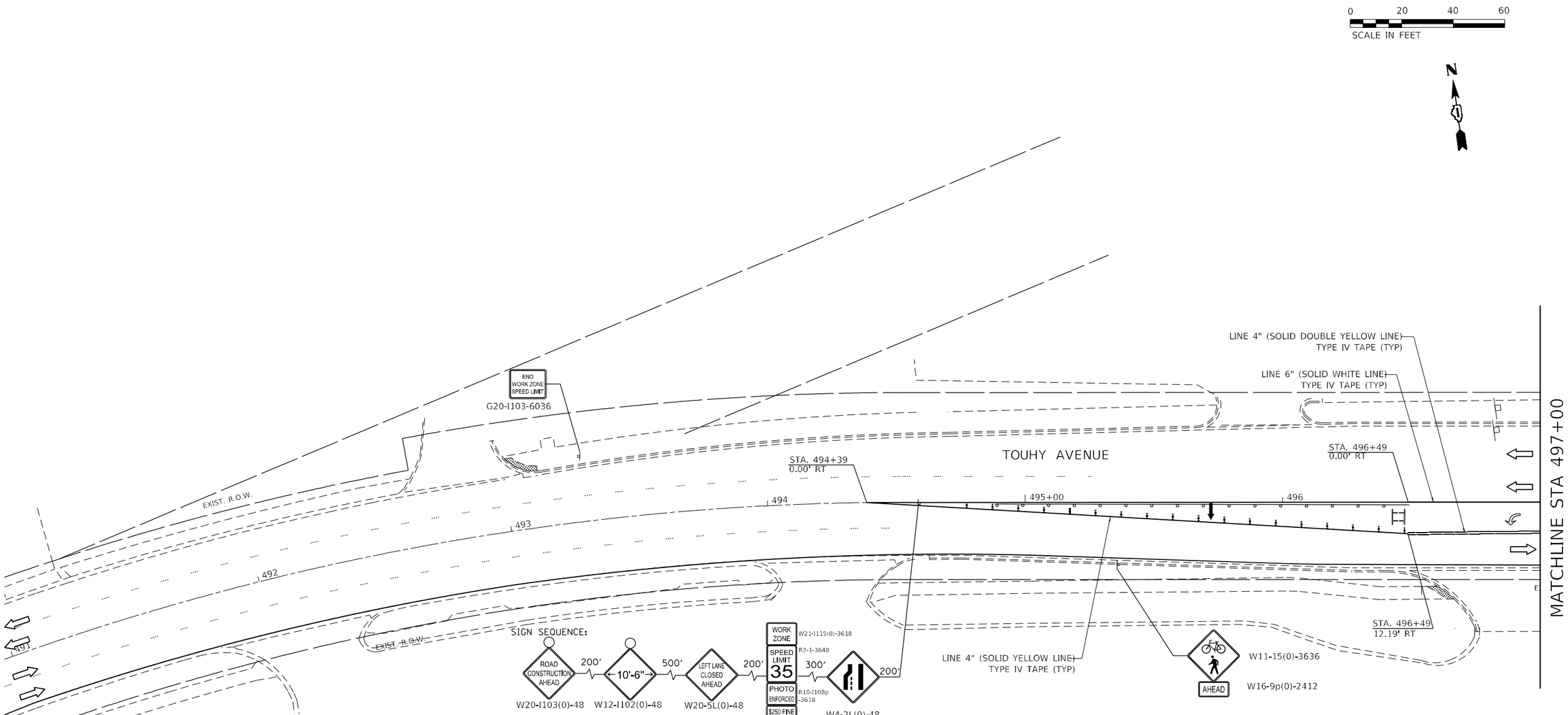

MAINTENANCE OF TRAFFIC LEGEND

- WORK ZONE
- TEMPORARY SIDEWALK
- DIRECTION OF TRAFFIC
- TYPE III BARRICADE
- MAINTENANCE OF TRAFFIC SIGN
- FLASHING ARROW BOARD
- DRUMS PLACED AT 50' C-C IN TANGENTS, 20' C-C IN TAPERS, AND 10' IN RADII
- DIRECTION INDICATOR BARRICADE WITH STEADY BURN MONODIRECTIONAL LIGHT, PLACED AT 20' C-C
- TEMPORARY CONCRETE BARRIER WITH DOUBLE SIDED TYPE C CRYSTAL REFLECTORS, PER STDS 704001 AND 782006 (RESTRAINED ON GIRDER PER DETAIL R-27)
- ATTENUATORS (IMP ATTN TEMP FRN TL2)
- DETECTABLE PEDESTRIAN CHANNELIZING BARRICADE

MAINTENANCE OF TRAFFIC NOTES

1. FOR PAVEMENT MARKING DETAILS, SEE IDOT DISTRICT 1 DETAIL TC-13.
2. SIGNS W20-I103(0)-48 AND W12-I102(0)-48 IN SIGN SEQUENCE SHOULD BE PLACED WEST OF MILWAUKEE AVE FOR EASTBOUND TRAFFIC.
3. TEMPORARY ADA CURB RAMPS AND SIDEWALK SHALL BE REMOVED AND RESTORED IN STAGE 2.
4. PER STANDARD 701801 INSTALL "SIDEWALK CLOSED USED OTHER SIDE" (R11-I102-2430) SIGN ON NW CORNER OF TOUHY AVE AND HARTS ROAD INTERSECTION IN STAGE 1.
5. PER STANDARD 701801 INSTALL "SIDEWALK CLOSED USED OTHER SIDE" (R11-I102-2430) SIGN ON NW CORNER OF TOUHY AVE AND MILWAUKEE AVE INTERSECTION IN STAGE 2.

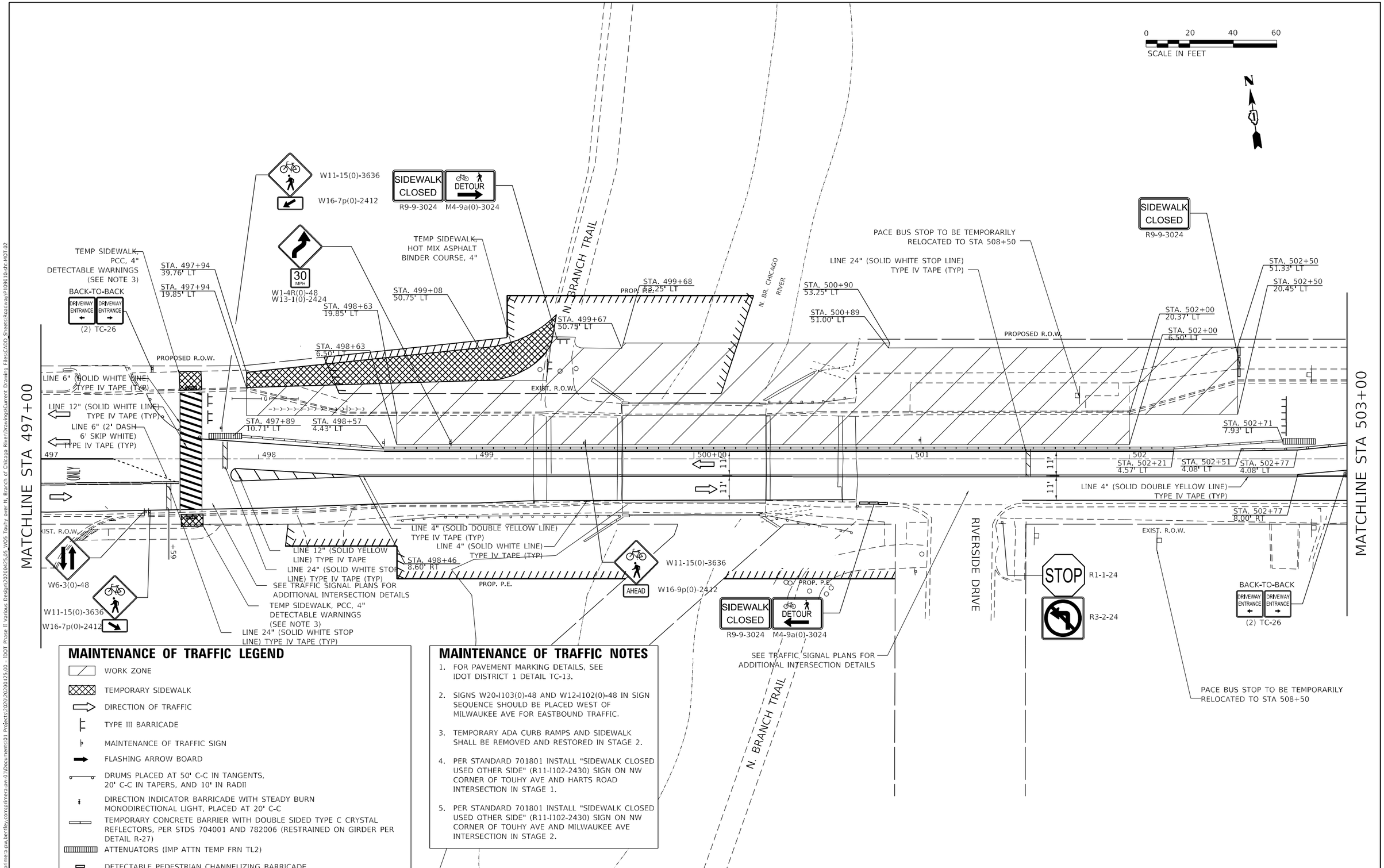

MAINTENANCE OF TRAFFIC LEGEND

- WORK ZONE
- TEMPORARY SIDEWALK
- DIRECTION OF TRAFFIC
- TYPE III BARRICADE
- MAINTENANCE OF TRAFFIC SIGN
- FLASHING ARROW BOARD
- DRUMS PLACED AT 50' C-C IN TANGENTS, 20' C-C IN TAPERS, AND 10' IN RADII
- DIRECTION INDICATOR BARRICADE WITH STEADY BURN MONODIRECTIONAL LIGHT, PLACED AT 20' C-C
- TEMPORARY CONCRETE BARRIER WITH DOUBLE SIDED TYPE C CRYSTAL REFLECTORS, PER STDS 704001 AND 782006 (RESTRAINED ON GIRDER PER DETAIL R-27)
- ATTENUATORS (IMP ATTN TEMP FRN TL2)
- DETECTABLE PEDESTRIAN CHANNELIZING BARRICADE

MAINTENANCE OF TRAFFIC NOTES

1. FOR PAVEMENT MARKING DETAILS, SEE IDOT DISTRICT 1 DETAIL TC-13.
2. SIGNS W20-I103(0)-48 AND W12-I102(0)-48 IN SIGN SEQUENCE SHOULD BE PLACED WEST OF MILWAUKEE AVE FOR EASTBOUND TRAFFIC.
3. TEMPORARY ADA CURB RAMPS AND SIDEWALK SHALL BE REMOVED AND RESTORED IN STAGE 2.
4. PER STANDARD 701801 INSTALL "SIDEWALK CLOSED USED OTHER SIDE" (R11-I102-2430) SIGN ON NW CORNER OF TOUHY AVE AND HARTS ROAD INTERSECTION IN STAGE 1.
5. PER STANDARD 701801 INSTALL "SIDEWALK CLOSED USED OTHER SIDE" (R11-I102-2430) SIGN ON NW CORNER OF TOUHY AVE AND MILWAUKEE AVE INTERSECTION IN STAGE 2.

Primera
550 W. JACKSON BLVD. SUITE 600 , CHICAGO IL 60661 , P:312-435-0910 F:312-435-0415

USER NAME = rvandermus	DESIGNED -	REVISED -
	DRAWN - RMV	REVISED -
PLOT SCALE = 40.0000 ' / in.	CHECKED - MPV	REVISED -
PLOT DATE = 10/14/2025	DATE -	REVISED -

STATE OF ILLINOIS
DEPARTMENT OF TRANSPORTATION

MOT STAGE 1
TOUHY AVENUE OVER NORTH BRANCH CHICAGO RIVER

SCALE: | SHEET 18 OF 124 SHEETS | STA. | TO STA.

F.A.P. RTE.	SECTION	COUNTY	TOTAL SHEETS	SHEET NO.
341	95-B	COOK	124	18
		CONTRACT NO. 62D34		
		ILLINOIS	FED. AID PROJECT	

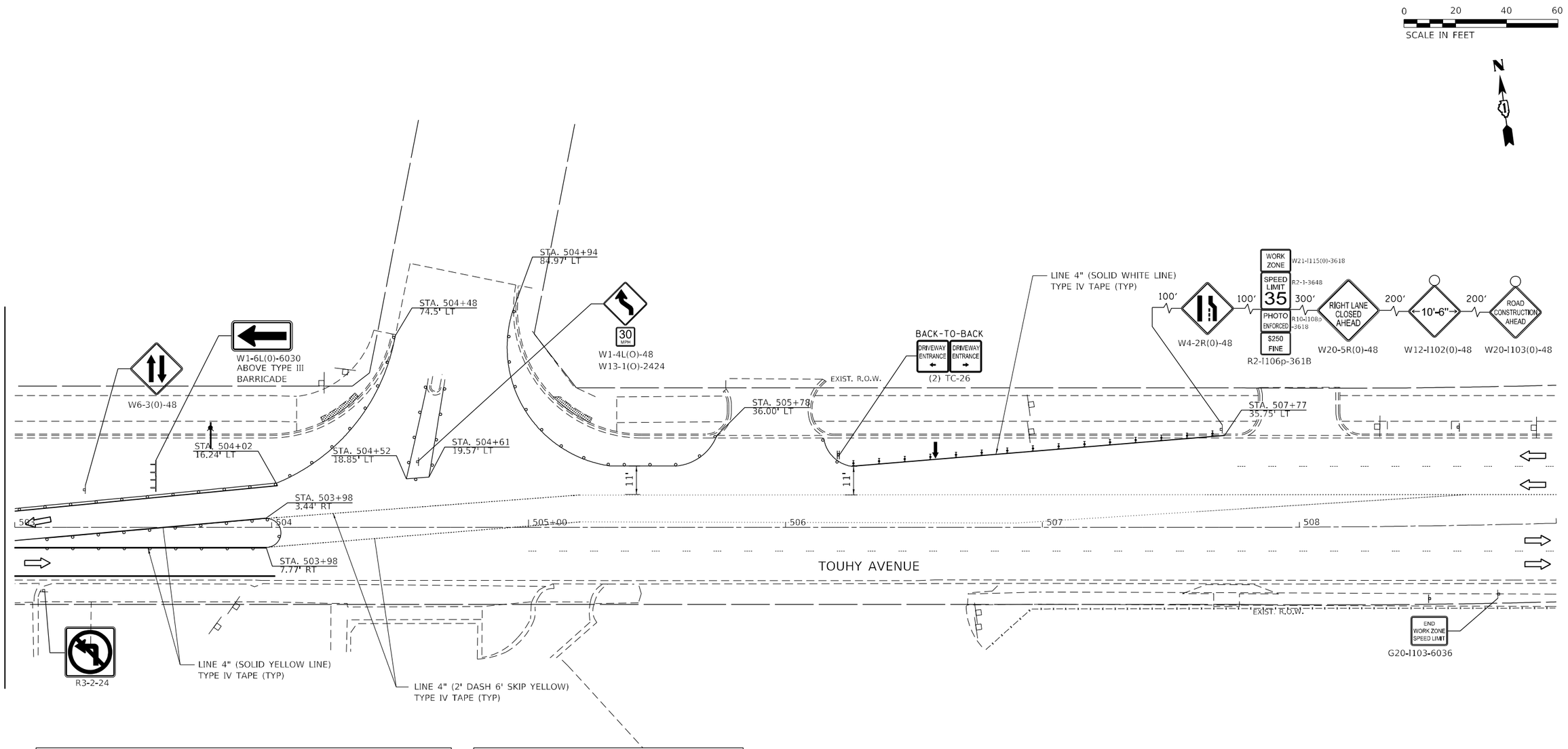

MAINTENANCE OF TRAFFIC LEGEND

- WORK ZONE
- TEMPORARY SIDEWALK
- DIRECTION OF TRAFFIC
- TYPE III BARRICADE
- MAINTENANCE OF TRAFFIC SIGN
- FLASHING ARROW BOARD
- DRUMS PLACED AT 50' C-C IN TANGENTS, 20' C-C IN TAPERS, AND 10' IN RADII
- DIRECTION INDICATOR BARRICADE WITH STEADY BURN MONODIRECTIONAL LIGHT, PLACED AT 20' C-C
- TEMPORARY CONCRETE BARRIER WITH DOUBLE SIDED TYPE C CRYSTAL REFLECTORS, PER STDS 704001 AND 782006 (RESTRAINED ON GIRDER PER DETAIL R-27)
- ATTENUATORS (IMP ATTN TEMP FRN TL2)
- DETECTABLE PEDESTRIAN CHANNELIZING BARRICADE

MAINTENANCE OF TRAFFIC NOTES

1. FOR PAVEMENT MARKING DETAILS, SEE IDOT DISTRICT 1 DETAIL TC-13.
2. SIGNS W20-I103(0)-48 AND W12-I102(0)-48 IN SIGN SEQUENCE SHOULD BE PLACED WEST OF MILWAUKEE AVE FOR EASTBOUND TRAFFIC.
3. TEMPORARY ADA CURB RAMPS AND SIDEWALK SHALL BE REMOVED AND RESTORED IN STAGE 2.
4. PER STANDARD 701801 INSTALL "SIDEWALK CLOSED USED OTHER SIDE" (R11-I102-2430) SIGN ON NW CORNER OF TOUHY AVE AND HARTS ROAD INTERSECTION IN STAGE 1.
5. PER STANDARD 701801 INSTALL "SIDEWALK CLOSED USED OTHER SIDE" (R11-I102-2430) SIGN ON NW CORNER OF TOUHY AVE AND MILWAUKEE AVE INTERSECTION IN STAGE 2.

Primera
550 W. JACKSON BLVD, SUITE 600 , CHICAGO IL 60661 , P:312-855-0910 F:312-855-0915

USER NAME = rvandermus	DESIGNED -	REVISED -	
	DRAWN - RMV	REVISED -	
PLOT SCALE = 40.0000 ' / in.	CHECKED - MPV	REVISED -	
PLOT DATE = 10/14/2025	DATE -	REVISED -	

STATE OF ILLINOIS
DEPARTMENT OF TRANSPORTATION

MOT STAGE 1
TOUHY AVENUE OVER NORTH BRANCH CHICAGO RIVER

SCALE: | SHEET 19 OF 124 SHEETS | STA. TO STA.

F.A.P. RTE.	SECTION	COUNTY	TOTAL SHEETS	SHEET NO.
341	95-B	COOK	124	19

CONTRACT NO. 62D34

ILLINOIS | FED. AID PROJECT

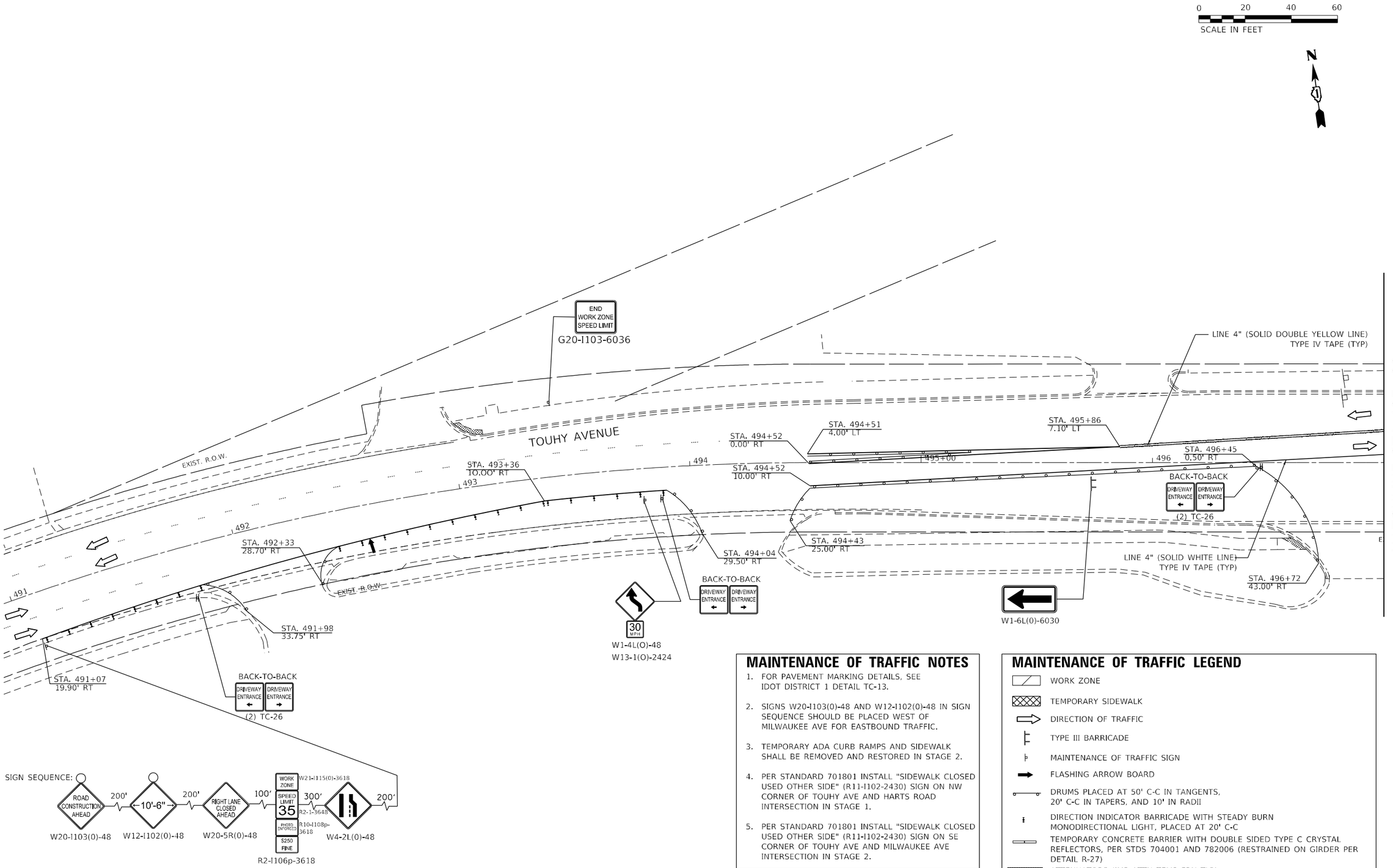

MAINTENANCE OF TRAFFIC NOTES

1. FOR PAVEMENT MARKING DETAILS, SEE IDOT DISTRICT 1 DETAIL TC-13.
2. SIGNS W20-I103(0)-48 AND W12-I102(0)-48 IN SIGN SEQUENCE SHOULD BE PLACED WEST OF MILWAUKEE AVE FOR EASTBOUND TRAFFIC.
3. TEMPORARY ADA CURB RAMPS AND SIDEWALK SHALL BE REMOVED AND RESTORED IN STAGE 2.
4. PER STANDARD 701801 INSTALL "SIDEWALK CLOSED USED OTHER SIDE" (R11-I102-2430) SIGN ON NW CORNER OF TOUHY AVE AND HARTS ROAD INTERSECTION IN STAGE 1.
5. PER STANDARD 701801 INSTALL "SIDEWALK CLOSED USED OTHER SIDE" (R11-I102-2430) SIGN ON SE CORNER OF TOUHY AVE AND MILWAUKEE AVE INTERSECTION IN STAGE 2.

MAINTENANCE OF TRAFFIC LEGEND

- WORK ZONE
- TEMPORARY SIDEWALK
- DIRECTION OF TRAFFIC
- TYPE III BARRICADE
- MAINTENANCE OF TRAFFIC SIGN
- FLASHING ARROW BOARD
- DRUMS PLACED AT 50' C-C IN TANGENTS, 20' C-C IN TAPERS, AND 10' IN RADII
- DIRECTION INDICATOR BARRICADE WITH STEADY BURN MONODIRECTIONAL LIGHT, PLACED AT 20' C-C
- TEMPORARY CONCRETE BARRIER WITH DOUBLE SIDED TYPE C CRYSTAL REFLECTORS, PER STDS 704001 AND 782006 (RESTRAINED ON GIRDER PER DETAIL R-27)
- ATTENUATORS (IMP ATTN TEMP FRN TL2)
- DETECTABLE PEDESTRIAN CHANNELIZING BARRICADE

Primera
550 W. JACKSON BLVD. SUITE 600 , CHICAGO IL 60661 , P:312-655-0910 F:312-655-0475

USER NAME = rvandermus	DESIGNED -	REVISED -	
	DRAWN - RMV	REVISED -	
PLOT SCALE = 40.0000 ' / in.	CHECKED - MPV	REVISED -	
PLOT DATE = 10/14/2025	DATE -	REVISED -	

STATE OF ILLINOIS
DEPARTMENT OF TRANSPORTATION

MOT STAGE 2
TOUHY AVENUE OVER NORTH BRANCH CHICAGO RIVER

SCALE: | SHEET 20 OF 124 SHEETS | STA. TO STA.

F.A.P. RTE.	SECTION	COUNTY	TOTAL SHEETS	SHEET NO.
341	95-B	COOK	124	20
		CONTRACT NO. 62D34		
	ILLINOIS	FED. AID PROJECT		

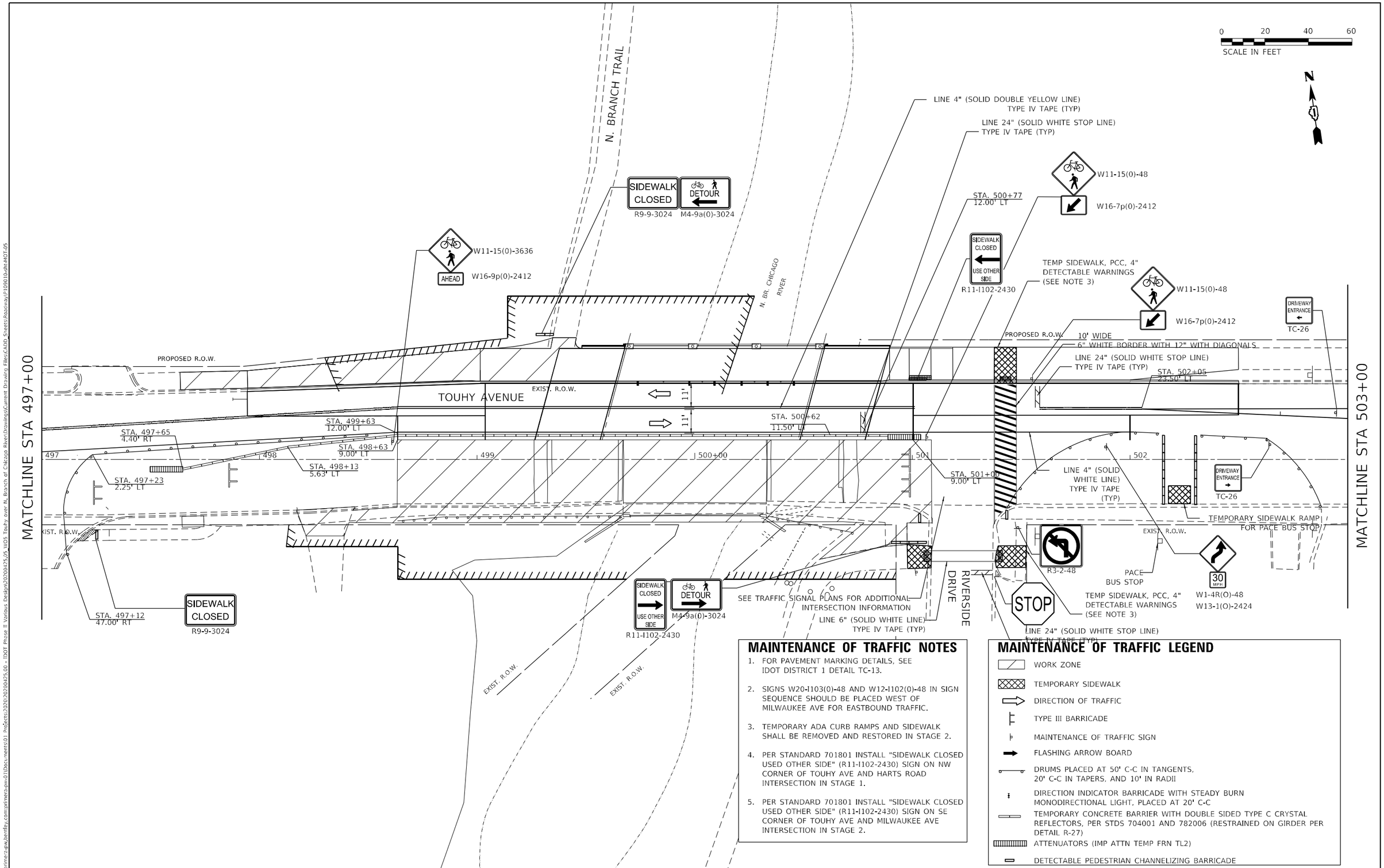

MAINTENANCE OF TRAFFIC NOTES

1. FOR PAVEMENT MARKING DETAILS, SEE IDOT DISTRICT 1 DETAIL TC-13.
2. SIGNS W20-I103(0)-48 AND W12-I102(0)-48 IN SIGN SEQUENCE SHOULD BE PLACED WEST OF MILWAUKEE AVE FOR EASTBOUND TRAFFIC.
3. TEMPORARY ADA CURB RAMPS AND SIDEWALK SHALL BE REMOVED AND RESTORED IN STAGE 2.
4. PER STANDARD 701801 INSTALL "SIDEWALK CLOSED USED OTHER SIDE" (R11-I102-2430) SIGN ON NW CORNER OF TOUHY AVE AND HARTS ROAD INTERSECTION IN STAGE 1.
5. PER STANDARD 701801 INSTALL "SIDEWALK CLOSED USED OTHER SIDE" (R11-I102-2430) SIGN ON SE CORNER OF TOUHY AVE AND MILWAUKEE AVE INTERSECTION IN STAGE 2.

MAINTENANCE OF TRAFFIC LEGEND

- WORK ZONE
- TEMPORARY SIDEWALK
- DIRECTION OF TRAFFIC
- TYPE III BARRICADE
- MAINTENANCE OF TRAFFIC SIGN
- FLASHING ARROW BOARD
- DRUMS PLACED AT 50' C-C IN TANGENTS, 20' C-C IN TAPERS, AND 10' IN RADII
- DIRECTION INDICATOR BARRICADE WITH STEADY BURN MONODIRECTIONAL LIGHT, PLACED AT 20' C-C
- TEMPORARY CONCRETE BARRIER WITH DOUBLE SIDED TYPE C CRYSTAL REFLECTORS, PER STDS 704001 AND 782006 (RESTRAINED ON GIRDER PER DETAIL R-27)
- ATTENUATORS (IMP ATTN TEMP FRN TL2)
- DETECTABLE PEDESTRIAN CHANNELIZING BARRICADE

Primera
550 W. JACKSON BLVD, SUITE 600 , CHICAGO IL 60661 , P:312-435-0910 F:312-435-0415

USER NAME = rvandermus	DESIGNED -	REVISED -	
	DRAWN - RMV	REVISED -	
PLOT SCALE = 40.0000 ' / in.	CHECKED - MPV	REVISED -	
PLOT DATE = 10/14/2025	DATE -	REVISED -	

STATE OF ILLINOIS
DEPARTMENT OF TRANSPORTATION

MOT STAGE 2
TOUHY AVENUE OVER NORTH BRANCH CHICAGO RIVER

SCALE: SHEET 21 OF 124 SHEETS STA. TO STA.

F.A.P. RTE.	SECTION	COUNTY	TOTAL SHEETS	SHEET NO.
341	95-B	COOK	124	21
		CONTRACT NO. 62D34		
	ILLINOIS	FED. AID PROJECT		

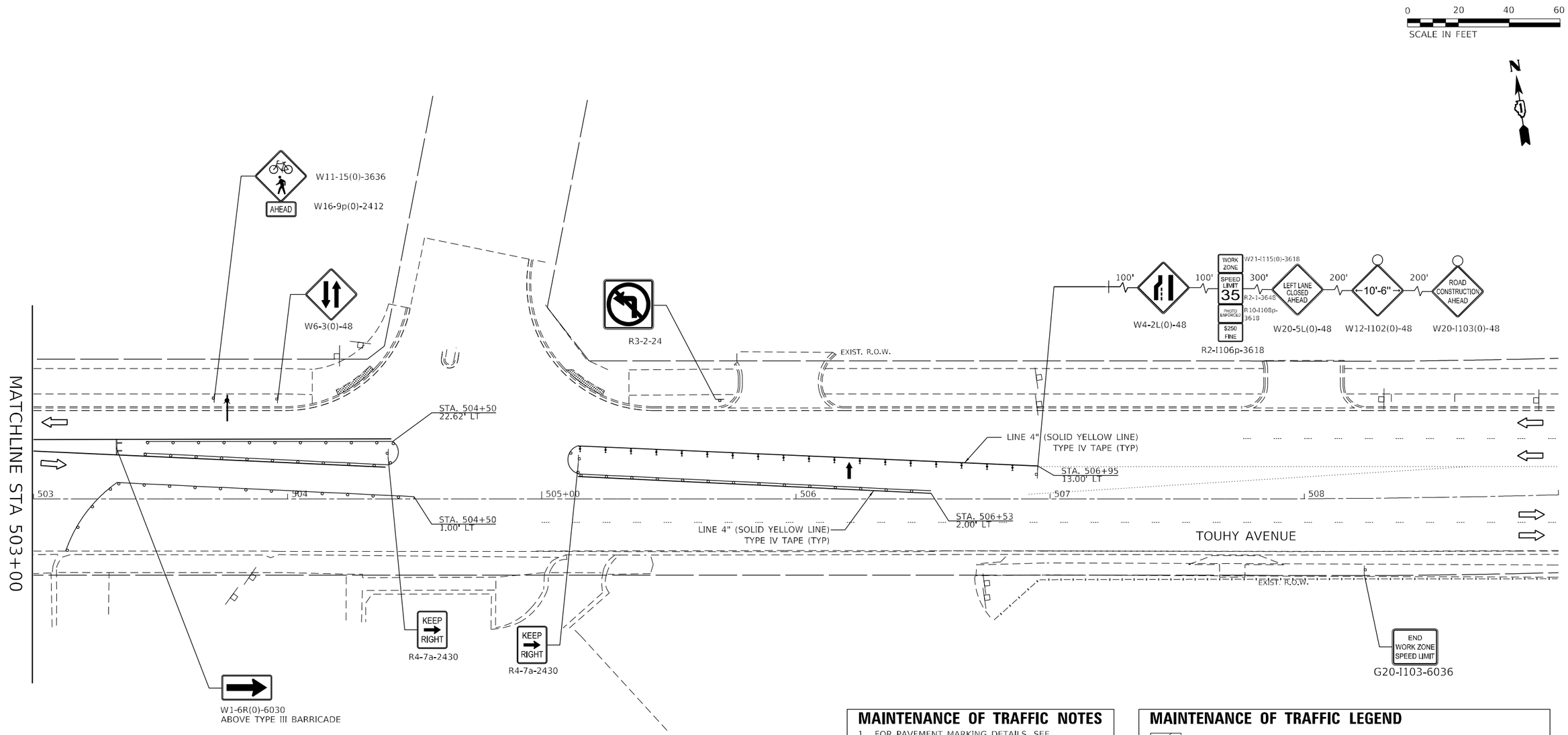

MAINTENANCE OF TRAFFIC NOTES

1. FOR PAVEMENT MARKING DETAILS, SEE IDOT DISTRICT 1 DETAIL TC-13.
2. SIGNS W20-I103(0)-48 AND W12-I102(0)-48 IN SIGN SEQUENCE SHOULD BE PLACED WEST OF MILWAUKEE AVE FOR EASTBOUND TRAFFIC.
3. TEMPORARY ADA CURB RAMPS AND SIDEWALK SHALL BE REMOVED AND RESTORED IN STAGE 2.
4. PER STANDARD 701801 INSTALL "SIDEWALK CLOSED USED OTHER SIDE" (R11-I102-2430) SIGN ON NW CORNER OF TOUHY AVE AND HARTS ROAD INTERSECTION IN STAGE 1.
5. PER STANDARD 701801 INSTALL "SIDEWALK CLOSED USED OTHER SIDE" (R11-I102-2430) SIGN ON SE CORNER OF TOUHY AVE AND MILWAUKEE AVE INTERSECTION IN STAGE 2.

MAINTENANCE OF TRAFFIC LEGEND

- WORK ZONE
- TEMPORARY SIDEWALK
- DIRECTION OF TRAFFIC
- TYPE III BARRICADE
- MAINTENANCE OF TRAFFIC SIGN
- FLASHING ARROW BOARD
- DRUMS PLACED AT 50' C-C IN TANGENTS, 20' C-C IN TAPERS, AND 10' IN RADII
- DIRECTION INDICATOR BARRICADE WITH STEADY BURN MONODIRECTIONAL LIGHT, PLACED AT 20' C-C
- TEMPORARY CONCRETE BARRIER WITH DOUBLE SIDED TYPE C CRYSTAL REFLECTORS, PER STDS 704001 AND 782006 (RESTRAINED ON GIRDER PER DETAIL R-27)
- ATTENUATORS (IMP ATTN TEMP FRN TL2)
- DETECTABLE PEDESTRIAN CHANNELIZING BARRICADE

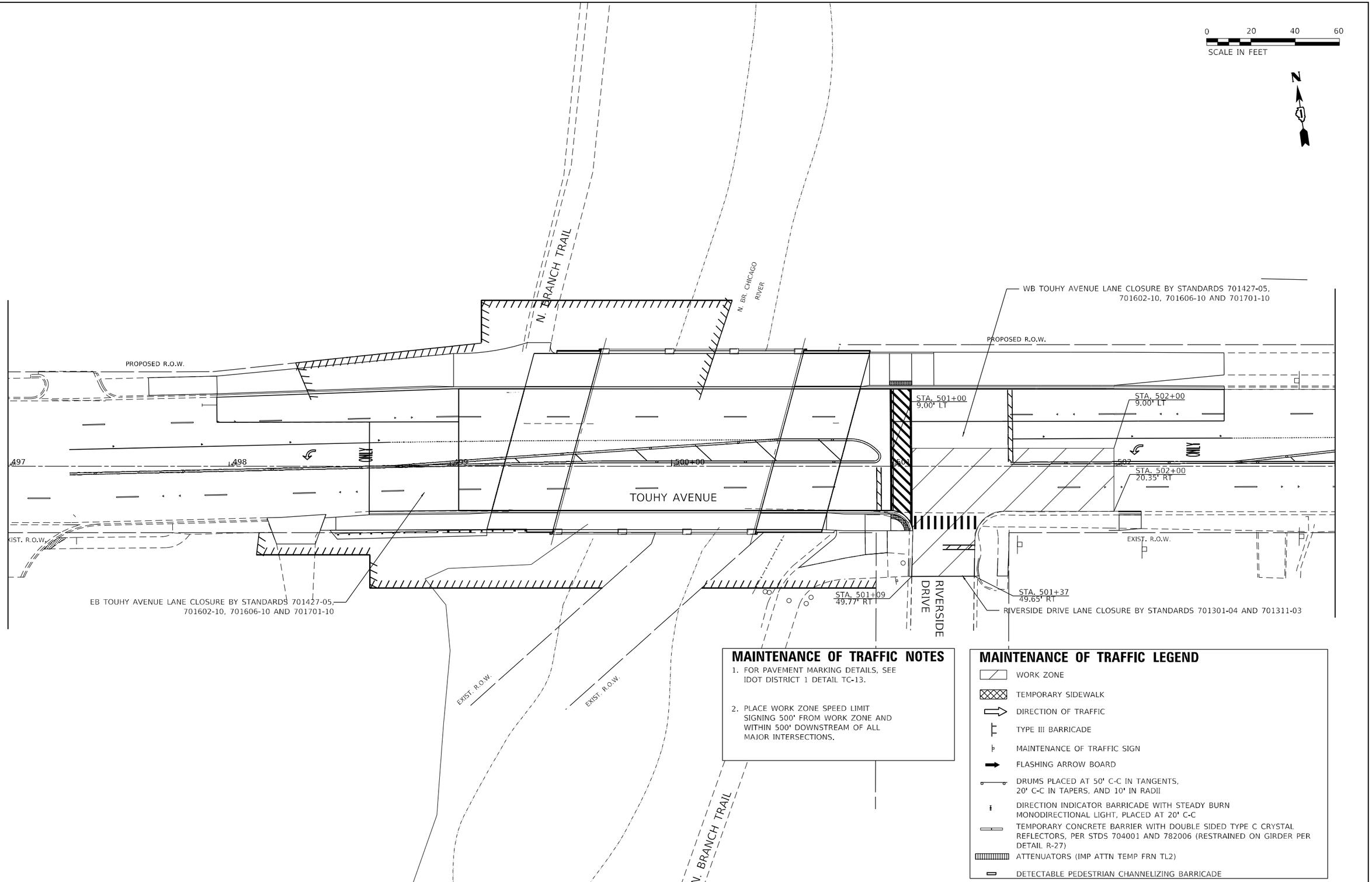

MAINTENANCE OF TRAFFIC NOTES

1. FOR PAVEMENT MARKING DETAILS, SEE IDOT DISTRICT 1 DETAIL TC-13.
2. PLACE WORK ZONE SPEED LIMIT SIGNING 500' FROM WORK ZONE AND WITHIN 500' DOWNSTREAM OF ALL MAJOR INTERSECTIONS.

MAINTENANCE OF TRAFFIC LEGEND

- WORK ZONE
- TEMPORARY SIDEWALK
- DIRECTION OF TRAFFIC
- TYPE III BARRICADE
- MAINTENANCE OF TRAFFIC SIGN
- FLASHING ARROW BOARD
- DRUMS PLACED AT 50' C-C IN TANGENTS, 20' C-C IN TAPERS, AND 10' IN RADII
- DIRECTION INDICATOR BARRICADE WITH STEADY BURN MONODIRECTIONAL LIGHT, PLACED AT 20' C-C
- TEMPORARY CONCRETE BARRIER WITH DOUBLE SIDED TYPE C CRYSTAL REFLECTORS, PER STDS 704001 AND 782006 (RESTRAINED ON GIRDER PER DETAIL R-27)
- ATTENUATORS (IMP ATTN TEMP FRN TL2)
- DETECTABLE PEDESTRIAN CHANNELIZING BARRICADE

MODEL: Default
FILE NAME: pw:\\primera-pw.bentley.com:primera-pw-01\Documents\01 Projects\2020\20200425.00 - IDOT Phase II Various Design\20200425.05_MOS Touhy over N. Branch of Chicago River\Drawings\Current Drawing Files\CADD_Sheets\Roadway\P190910-sht-MOT-07

Primera
550 W. JACKSON BLVD, SUITE 600 , CHICAGO IL 60661 , P:312-435-0910 F:312-435-0415

USER NAME = rvandermus	DESIGNED -	REVISED -	
	DRAWN - RMV	REVISED -	
PLOT SCALE = 40.0000 ' / in.	CHECKED - MPV	REVISED -	
PLOT DATE = 10/14/2025	DATE -	REVISED -	

STATE OF ILLINOIS
DEPARTMENT OF TRANSPORTATION

MOT STAGE 3
TOUHY AVENUE OVER NORTH BRANCH CHICAGO RIVER

SCALE: | SHEET 23 OF 124 SHEETS | STA. TO STA.

F.A.P. RTE.	SECTION	COUNTY	TOTAL SHEETS	SHEET NO.
341	95-B	COOK	124	23
		CONTRACT NO. 62D34		
	ILLINOIS	FED. AID PROJECT		

EROSION AND SEDIMENT CONTROL NOTES

1. ALL CONTROL MEASURES NECESSARY MUST MEET THE MINIMUM REQUIREMENTS AS DESCRIBED IN THE LATEST EROSION AND SEDIMENT CONTROL FIELD GUIDE FOR CONSTRUCTION INSPECTION BY THE ILLINOIS DEPARTMENT OF TRANSPORTATION. ADDITIONAL DETAILS AND BMPs ARE ALSO AVAILABLE AND CAN BE UTILIZED AS SHOWN IN THE ILLINOIS URBAN MANUAL, REVISED TO LATEST VERSION AS AMENDED. ALL ESC MEASURES WILL BE MAINTAINED IN ACCORDANCE WITH THE IDOT EROSION AND SEDIMENT CONTROL FIELD GUIDE FOR CONSTRUCTION INSPECTION AND IDOT'S BEST MANAGEMENT PRACTICES - MAINTENANCE GUIDE: (HTTP://WWW.IDOT.ILLINOIS.GOV/TRANSPORTATION-SYSTEM/ENVIRONMENT/EROSION-AND-SEIMENT-CONTROL).

2. ALL THE SOIL EROSION AND SEDIMENT CONTROL FEATURES MUST BE CONSTRUCTED PRIOR TO THE COMMENCEMENT OF UPLAND DISTURBANCE. SOIL DISTURBANCE MUST BE PHASED OR ENACTED IN SUCH A MANNER AS TO MINIMIZE EROSION. SOIL AND THE USE OF TEMPORARY AND/OR PERMANENT MEASURES.

3. IT IS THE RESPONSIBILITY OF THE CONTRACTOR TO ENSURE THAT SEDIMENT TRANSPORT OFF THE SITE IS REDUCED BY A COMBINATION OF MINIMIZATION OF EROSION AT THE SOURCE AND THE INSTALLATION OF SPECIFIC MEASURES TO CONTROL OR REDUCE THE TRANSPORT OF SEDIMENT. A COPY OF THE EROSION AND SEDIMENT CONTROL SCHEDULE BEING IMPLEMENTED BY THE CONTRACTOR MUST BE APPROVED BY THE ENGINEER, AND WILL BE ON THE CONSTRUCTION SITE AT ALL TIMES.

4. ALL RUNOFF ORIGINATING ON DISTURBED AREAS ASSOCIATED WITH THIS PROJECT WILL PASS THROUGH ONE OR MORE MEASURES THAT WILL MINIMIZE THE OFF-SITE SEDIMENT IMPACTS OF THE CONSTRUCTION ACTIVITIES.

5. DISTURBED AREAS ARE TO BE PROTECTED FROM EROSION IN A TIMELY MANNER. UPON COMPLETION OF GRADING OR CONSTRUCTION ACTIVITY, THE AREA WILL BE STABILIZED (USING PERMANENT MEASURES WHEN POSSIBLE) WITHIN ONE (1) CALENDAR DAY PER SWPPP SECTION II.B.

6. THE CONTRACTOR MUST CLEAN UP, GRADE THE WORK AREA AS THE PROJECT PROGRESSES AND INSTALL EROSION PROTECTION TO ELIMINATE THE CONCENTRATION OF RUNOFF, OR MUST INSTALL APPROPRIATE SEDIMENT CONTROL DEVICES TO TRAP SEDIMENT. PAVEMENT MUST BE CLEANED DAILY OR AS NECESSARY TO REMOVE EARTHEN MATERIAL TO THE SATISFACTION OF THE ENGINEER OR AUTHORIZED IDOT PERSONNEL.

7. STABILIZATION OF CUT OR FILLS LOPES WITH TEMPORARY OR PERMANENT EROSION CONTROL MEASURES IS REQUIRED WHENEVER THE CUT OF FILL ACTIVITY REACHES 10-FT VERTICALLY OR THE FINISHED SLOPE EQUALS 30-FT, WHICHEVER IS MORE RESTRICTIVE. ONCE THE STABILIZATION MEASURES ARE INSTALLED, THE PLACEMENT OF FILL EXCAVATION ACTIVITIES ARE ALLOWED TO PROCEED.

8. THE CONTRACTOR WILL ASSUME RESPONSIBILITY FOR MAINTENANCE OF ALL SOIL EROSION CONTROL DURING CONSTRUCTION. THE CONTRACTOR SHALL DESIGNATE ONE OF THEIR EMPLOYEES TO BE RESPONSIBLE FOR IMPLEMENTATION OF THE EROSION AND SEDIMENT CONTROL PLAN ON ALL DISTURBED AREAS THROUGHOUT THE PROJECT.

9. THE CONTRACTOR'S REPRESENTATIVE HAS TO BE KNOWLEDGEABLE ABOUT INSTALLATION AND MAINTENANCE OF THE REQUIRED MEASURES AND HAVE TAKEN AN ILLINOIS DEPARTMENT OF TRANSPORTATION OR APPROVED EQUAL EROSION AND SEDIMENT CONTROL COURSE. THIS PERSON SHALL HAVE THE AUTHORITY TO CARRY OUT THE IMPLEMENTATION OF ANY INSTRUCTION CONCERNING THE EROSION AND SEDIMENT CONTROL PLAN PROVIDED BY THE ENGINEER. THIS INDIVIDUAL AND THE ENGINEER MUST MAKE INSPECTIONS OF A MINIMUM OF ONCE EVERY SEVEN DAYS OF THE FOLLOWING:

   A. DISTURBED AREAS OF THE PROJECT SITE THAT HAVE NOT BEEN FULLY STABILIZED.
   B. STRUCTURAL CONTROL MEASURES (SUCH AS PERIMETER EROSION BARRIER, ETC.)
   C. LOCATIONS WHERE VEHICLES ENTER OR EXIT THE PROJECT SITE.
   D. AN ADDITIONAL INSPECTION OF THE ITEMS LISTED ABOVE MUST BE MADE WITHIN 24-HOURS AFTER A 24-HOUR RAINFALL OR EQUIVALENT SNOWFALL EVENT GREATER THAN 0.5-INCH. DURING WINTER MONTHS, ALL MEASURES MUST BE CHECKED BY THE CONTRACTOR AFTER EACH SIGNIFICANT SNOWMELT.

10. ALL EROSION AND SEDIMENT CONTROL MEASURES SHALL BE MAINTAINED DURING THE CONSTRUCTION SEASON, AS WELL AS OVER THE WINTER SHUTDOWN PERIOD AND OTHER DAYS WHEN THE PROJECT IS CLOSED DOWN FOR A LONGER DURATION. ANY CONTROL MEASURES FILLED MORE THAN 75% MUST BE CLEANED AND RESET AND THESE SPOILS REMOVED TO AN APPROVED SITE.

11. SALVAGED TOPSOIL SHALL BE PLACED ON WELL DRAINED LAND AWAY FROM INTERMITTENT AND ACTIVE DRAINAGE PATHS WITH THE APPROPRIATE RUNOFF CONTROL AND SEDIMENT CONTROL MEASURES INSTALLED AROUND THE STORAGE SITE. IMMEDIATELY AFTER THE FINAL SHAPING OF THE STOCKPILE, THE TOPSOIL WILL BE STABILIZED IN ACCORDANCE WITH THE METHOD APPROVED BY IDOT. THE CONTRACTOR WILL PROVIDE ADEQUATE QUANTITY OF SILT FENCE TO CONTROL THE PERIMETER OF THE STOCKPILE.

12. EXCAVATION TO BE USED FOR EMBANKEMENTS SHALL NOT BE STOCKPILED UNLESS PERIMETER CONTROLS ARE UTILIZED. WHEN THIS MATERIAL IS STOCKPILED FOR THE CONVENIENCE OF THE CONTRACOR, THE COST OF THE CONTROLS WILL BE BORNE BUY THE CONTRACOR. IF THE MATERIAL IS SOTKCPILED AT THE DIRECTION OF THE ENGINEER, THE DEPARTMENT WILL ASSUME THE COST OF INSTALLING AND MAINTAINING THE CONTROLS.

13. TOPSOIL PLACEMENT:
    TOPSOIL WILL BE PLACED ON FINAL SLOPES WHICH WILL NOT BE DISTURBED BY FUTURE CONSTRUCTION. TOPSOIL WILL NOT BE PLACED ON SURFACES WHICH WILL BE PAVED IN THE FUTURE NOR ON TEMPORARY STEEP SLOPES.

14. IN AREAS WHERE A PERMANENT VEGETATIVE COVER IS PRACTICABLE AND INCLUDED IN THE CONTRACT DOCUMENTS, A SPEICAL EFFORT SHOULD BE MADE TO ESTABLISH A COVER AS SOON AS A DISTURBED AREA IS BROUGHT TO FINAL GRADE. UNDER NO CIRCUMSTANCES SHALL THE CONTRACTOR PROLONG FINAL GRADING AND SHAPING SO THAT THE ENTIRE PROJECT CAN BE PERMANENTLY SEEDED AT ONE TIME.

15. THE CONTRACTOR'S REPRESENTATIVE AND THE ENGINEER MUST KEEP A WRITTEN REPORT SUMMARIZING THE REQUIRED INSPECTIONS. THE REPORTS MUST BEKEPT AT THE SITE DURING CONSTRUCTION. THE REPORT MUST ALSO BE RETAINED FOR THREE YEARS FROM THE DFATE TEH SITE IS FINALLY STABILIZED.

16. ANY SEDIMENT LADEN DEWATERING DISCHARGE MUST BE DIRECTED TO AN APPROVED SEDIMENT TRAPPING CONTROL MEASURE PRIOR TO RELEASE FROM THE PROJECT SITE.

17. NO WORK IS ALLOWED BEYOND THE PERMITTED AREA. ANY WORK WITHIN A CREEK OR DITCH CAPABLE OF CONVEYING WATER MUST BE CONDUCTED IN THE DRY. PROVISIONS MUST BE MADE TO BYPASS PUMP OR DEWATER ANY AREAS IN WHICH WORK WILL BE CONDUCTED. IN HIGH FLOW CHANNELS WHERE DEWATERING IS NOT POSSIBLE OR PRACTICAL, SILT FENCE OF SEDIMENT CURTAINS MAY BE INSTALLED PARALLEL TO THE STREAM BANK. IN NO CASE WILL THE CURTAINS BE INSTALLED PERPENDICULAR TO THE FLOW. DEWATERING MUST BE DISCHARGED TO A STABLE, NON-ERODIBLE SURFACE AND IN-STREAM WORK BARRIERS MUST BE COMPOSED OF NON-ERODIBLE MATERIAL.

18. THE CONTRACTOR MUST COOPERATE WITH THE ENGINEER AND THEIR REPRESENTATIVE WHO WILL MAKE SITE VISITS TO REVIEW THE COMPLIANCE OF THE PLANS IN THE FIELD AND AUDIT IF NECESSARY. THE CONTRACTOR MUST PREPARE THE LOGS AND RECORDS WHEN REQUIRED AND SUBMIT TO IDOT AND OR APPROPRIATE AGENCIES.

19. THE INSTALLATION, MAINTENANCE, REMOVAL AND RESTORATION OF THE AREA DISTURBED BY THE PLACEMENT OF THE PERIMETER EROSION BARRIER ARE INCLUDED IN THE CONTRACT UNIT PRICE FOR PERIMETER EROSION BARRIER. AFTER ALL PERIMETER EROSION BARRIER IS REMOVED, THE AREAS DAMAGED BY THE PERIMETER EROSION CONTROL BARRIER MUST BE RESTORED TO THEIR ORIGINAL CONDITION.

20. STABILIZATION MEASURES SHALL BE INITIATED IMMEDIATELY WHERE CONSTRUCTION ACTIVITIES HAVE TEMPORARILY OR PERMANENTLY CEASED, BUT IN NO CASE MORE THAN ONE (1) DAY AFTER THE CONSTRUCTION ACTIVITY IN THAT PORTION OF THE SITE HAS TEMPORARILY OR PERMANENTLY CEASED ON ALL DISTURBED PORTIONS OF THE SITE WHERE CONSTRUCTION WILL NOT OCCUR FOR A PERIOD OF FOURTEEN (14) OR MORE CALENDAR DAYS.

21. TEMPORARY OR PERMANENT STABILIZATION SHALL BE INITIATED IMMEDIATELY UPON COMPLETION OF DISTURBANCE OR IF THE WORK AREA IS TO BE LEFT UNDISTURBED FOR 14 DAYS OR MORE.

22. EROSION CONTROL ITEMS ARE CONSIDERED TO BE A HIGH PRIORITY ON THIS CONTRACT. THE CONTRACTOR IS RESPONSIBLE FOR INSTALLATION OF ANY ADDITIONAL EROSION CONTROL MEASURES NECESSARY TO PREVENT EROSION AND SEDIMENTATION AS DETERMINED BY THE ENGINEER.

23. THE US ARMY CORPS OF ENGINEERS MUST BE NOTIFIED 10 DAYS PRIOR TO THE PRE-CONSTRUCTION CONFERENCE, ONE WEEK PRIOR TO THE COMMENCEMENT OF LAND DISTURBING ACTIVITIES AND ONE WEEK PRIOR TO THE FINAL INSPECTION.

24. THE CONTRACTOR IS REQUIRED TO PROVIDE WASHOUT FACILITIES TO COMPLY WITH EROSION CONTROL PERMITS.

25. PROPER DRAINAGE SHALL BE MAINTAINED IN THE IMPROVEMENT AREA DURING CONSTRUCTION.

26. WORK IN THE WATERWAY SHOULD BE TIMED TO TAKE PLACE DURING LOW OR NO-FLOW CONDITIONS. LOW FLOW CONDITIONS ARE FLOW AT OR BELOW THE NORMAL WATER ELEVATION.

27. THE PLAN WILL BE DESIGNED TO ALLOW FOR THE CONVEYANCE OF THE 2-YEAR PEAK FLOW PAST THE WORK AREA WITHOUT OVERTOPPING THE COFFERDAM. THE CORPS HAS THE DISCRETION TO REDUCE THIS REQUIREMENT IF DOCUMENTED BY THE APPLICANT TO BE INFEASIBLE OR UNNECESSARY.

28. WATER SHALL BE ISOLATED FROM THE IN-STREAM WORK AREA USING A COFFERDAM CONSTRUCTED OF NON- ERODIBLE MATERIALS (STEEL SHEETS, AQUA BARRIERS, RIP RAP AND GEOTEXTILE LINER, ETC.). EARTHEN COFFERDAMS ARE NOT PERMISSIBLE.

29. THE COFFERDAM MUST BE CONSTRUCTED FROM THE UPLAND AREA AND NO EQUIPMENT MAY ENTER FLOWING WATER AT ANY TIME. IF THE INSTALLATION OF THE COFFERDAM CANNOT BE COMPLETED FROM SHORE AND ACCESS IS NEEDED TO REACH THE AREA TO BE COFFERED, OTHER MEASURES, SUCH AS THE CONSTRUCTION OF A CAUSEWAY, WILL BE NECESSARY TO ENSURE THAT EQUIPMENT DOES NOT ENTER THE WATER. ONCE THE COFFERDAM IS IN PLACE AND THE ISOLATED AREA IS DEWATERED, EQUIPMENT MAY ENTER THE COFFERED AREA TO PERFORM THE REQUIRED WORK.

30. IF BYPASS PUMPING IS NECESSARY, THE INTAKE HOSE SHALL BE PLACED ON A STABLE SURFACE OR FLOATED TO PREVENT SEDIMENT FROM ENTERING THE HOSE. THE BYPASS DISCHARGE SHALL BE PLACED ON A NON- ERODIBLE, ENERGY DISSIPATING SURFACE PRIOR TO REJOINING THE STREAM FLOW AND SHALL NOT CAUSE EROSION. FILTERING OF BYPASS WATER IS NOT NECESSARY UNLESS THE BYPASS WATER HAS BECOME SEDIMENT-LADEN AS A RESULT OF THE CURRENT CONSTRUCTION ACTIVITIES.

31. DURING DEWATERING OF THE COFFERED WORK AREA, ALL SEDIMENT-LADEN WATER MUST BE FILTERED TO REMOVE SEDIMENT. POSSIBLE OPTIONS FOR SEDIMENT REMOVAL INCLUDE BAFFLE SYSTEMS, ANIONIC POLYMERS SYSTEMS, DEWATERING BAGS, OR OTHER APPROPRIATE METHODS. WATER SHALL HAVE SEDIMENT REMOVED PRIOR TO BEING RE-INTRODUCED TO THE DOWNSTREAM WATERWAY. A STABILIZED CONVEYANCE FROM THE DEWATERING DEVICE TO THE WATERWAY MUST BE IDENTIFIED IN THE PLAN. DISCHARGE WATER IS CONSIDERED CLEAN IF IT DOES NOT RESULT IN A VISUALLY IDENTIFIABLE DEGRADATION OF WATER CLARITY.

32. PRIOR TO INSTALLATION OR REMOVAL OF A COFFERDAM, A SILT CURTAIN MAY BE INSTALLED TO CONTAIN TURBID WATER AND ALLOW SUSPENDED SOLIDS RESULTING FROM THE INSTALLATION OF THE COFFERDAM TO SETTLE OUT. REFER TO ILLINOIS URBAN MANUAL STANDARD DRAWINGS IUM-617A AND IUM-617B FOR ADDITIONAL SILT CURTAIN DETAILS.

33. THE AREA FROM THE TOE TO THE TOP OF THE SIDE SLOPE SHALL BE TEMPORARILY STABILIZED DURING CONSTRUCTION TO REDUCE THE POTENTIAL FOR EROSION. ALL AREAS DISTURBED DUE TO CONSTRUCTION ACTIVITIES SHALL BE RESTORED TO PROPOSED CONDITIONS AND FULLY STABILIZED PRIOR TO ACCEPTING FLOWS.

EROSION AND SEDIMENT CONTROL STRATEGY:

1. ERECT PERIMETER EROSION BARRIERS, INLET PROTECTIONS, IN-STREAM WORK PROTECTIONS, AND TEMPORARY FENCES AS SHOWN ON PLANS.
2. ESTABLISH STABILIZED CONSTRUCTION ENTRANCES AND TRUCK WASHOUT AREAS.
3. CLEAR AND GRUB, REMOVE EXISTING TREES AND BUSHES.
4. INSPECT AND MAINTAIN ALL EROSION AND SEDIMENT CONTROL MEASURES FOR THE DURATION OF CONSTRUCTION.
5. TEMPORARY STABILIATION OF EACH STAGE SHOULD BE COMPLETED BEFORE WORK IS MOVED TO SUBSEQUENT STAGES.
6. STABILIZE DISTURBED AREAS WITH TEMPORARY EROSION CONTROL MEASURES. USE THE PERMANENT SEEDING WITH EROSION CONTROL BLANKET FOR PERMANENT STABILIZATION AS SHOWN ON THE PLANS.
7. WHEN THE PERMANENT STABILIZATION IS ESTABLISHED, REMOVE ALL REMAINING TEMPORARY EROSION CONTROL MEASURES.

HIGHWAY STANDARDS

STD. NO.	TITLE
280001	TEMPORARY EROSION CONTROL SYSTEMS

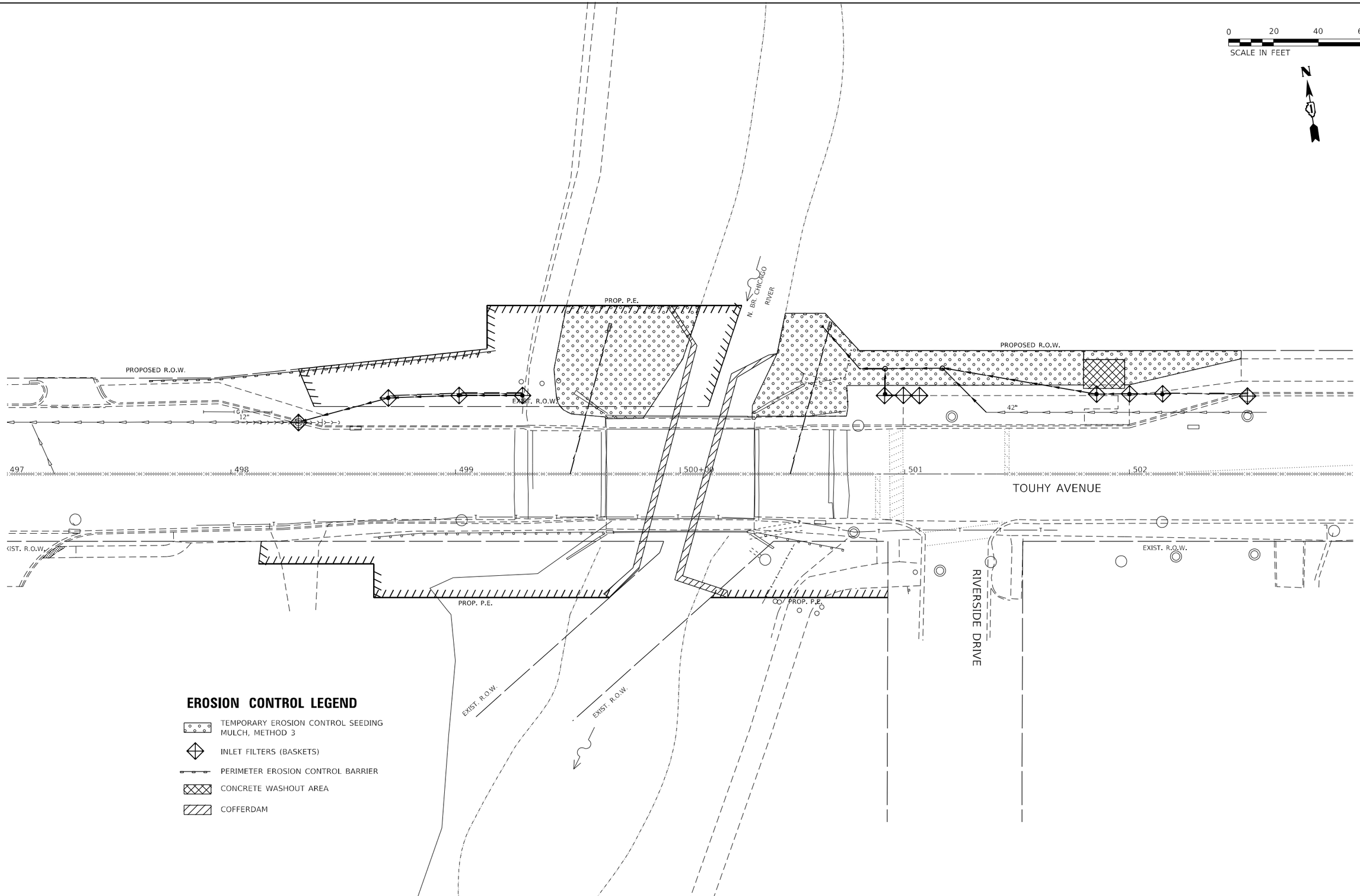

MODEL: Default
FILE NAME: pw:\\primer-s-pw.bentley.com:primera-pw-01\Documents01 Projects\2020\20200425.00 - IDOT Phase II Various Design\20200425.05 WOS Touhy over N. Branch of Chicago River\Drawings\Current Drawing Files\CADD Sheets\Roadway\P190010-dht-erps-01

Primera
550 W. JACKSON BLVD. SUITE 600 , CHICAGO IL 60661 , P:312-855-0910 F:312-855-0415

USER NAME = rvandermus	DESIGNED -	REVISED -	
	DRAWN - RMV	REVISED -	
PLOT SCALE = 40.0000 ' / in.	CHECKED - MPV	REVISED -	
PLOT DATE = 10/14/2025	DATE -	REVISED -	

STATE OF ILLINOIS
DEPARTMENT OF TRANSPORTATION

EROSION CONTROL PLAN STAGE 1
TOUHY AVENUE OVER NORTH BRANCH CHICAGO RIVER

SCALE: | SHEET 25 OF 124 SHEETS | STA. TO STA.

F.A.P. RTE.	SECTION	COUNTY	TOTAL SHEETS	SHEET NO.
341	95-B	COOK	124	25
		CONTRACT NO. 62D34		
	ILLINOIS	FED. AID PROJECT		

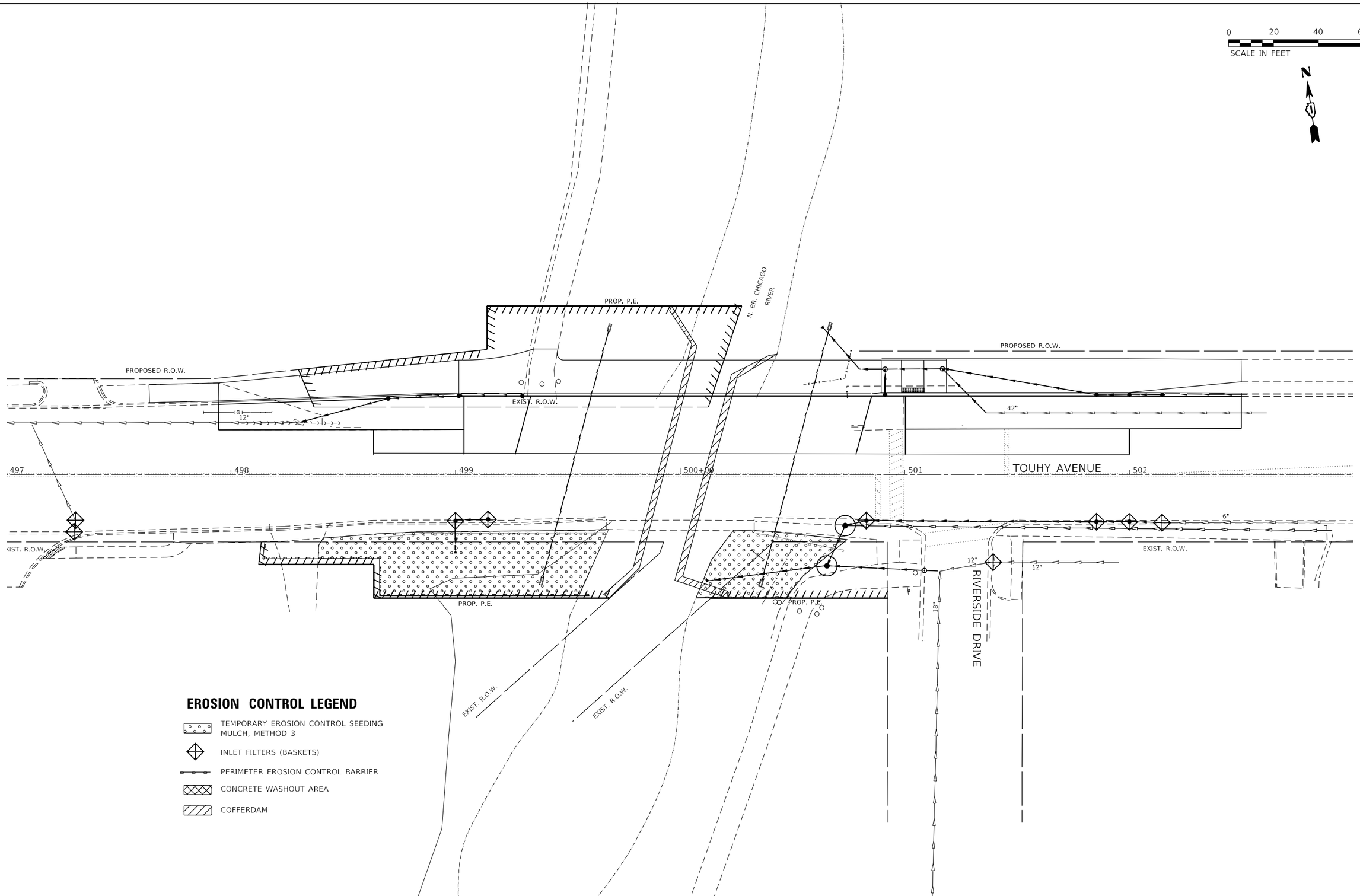

MODEL: Default
FILE NAME: pw:\\primera-pw.bentley.com:primera-pw-01\Documents\01 Projects\2020\20200425.00 - IDOT Phase II Various Designs\20200425_05 WOS Touhy over N. Branch of Chicago River\Drawings\Current Drawing Files\CADD_Sheets\Roadway\P190910-cbt-eros-02

Primera
551 W. JACKSON BLVD, SUITE 600 , CHICAGO IL 60661 , P:312-855-0910 F:312-855-0915

USER NAME = rvandermus	DESIGNED -	REVISED -	
	DRAWN - RMV	REVISED -	
PLOT SCALE = 40.0000 ' / in.	CHECKED - MPV	REVISED -	
PLOT DATE = 10/14/2025	DATE -	REVISED -	

STATE OF ILLINOIS
DEPARTMENT OF TRANSPORTATION

EROSION CONTROL PLAN STAGE 2
TOUHY AVENUE OVER NORTH BRANCH CHICAGO RIVER

SCALE: | SHEET 26 OF 124 SHEETS | STA. TO STA.

F.A.P. RTE.	SECTION	COUNTY	TOTAL SHEETS	SHEET NO.
341	95-B	COOK	124	26
		CONTRACT NO. 62D34		
		ILLINOIS	FED. AID PROJECT	

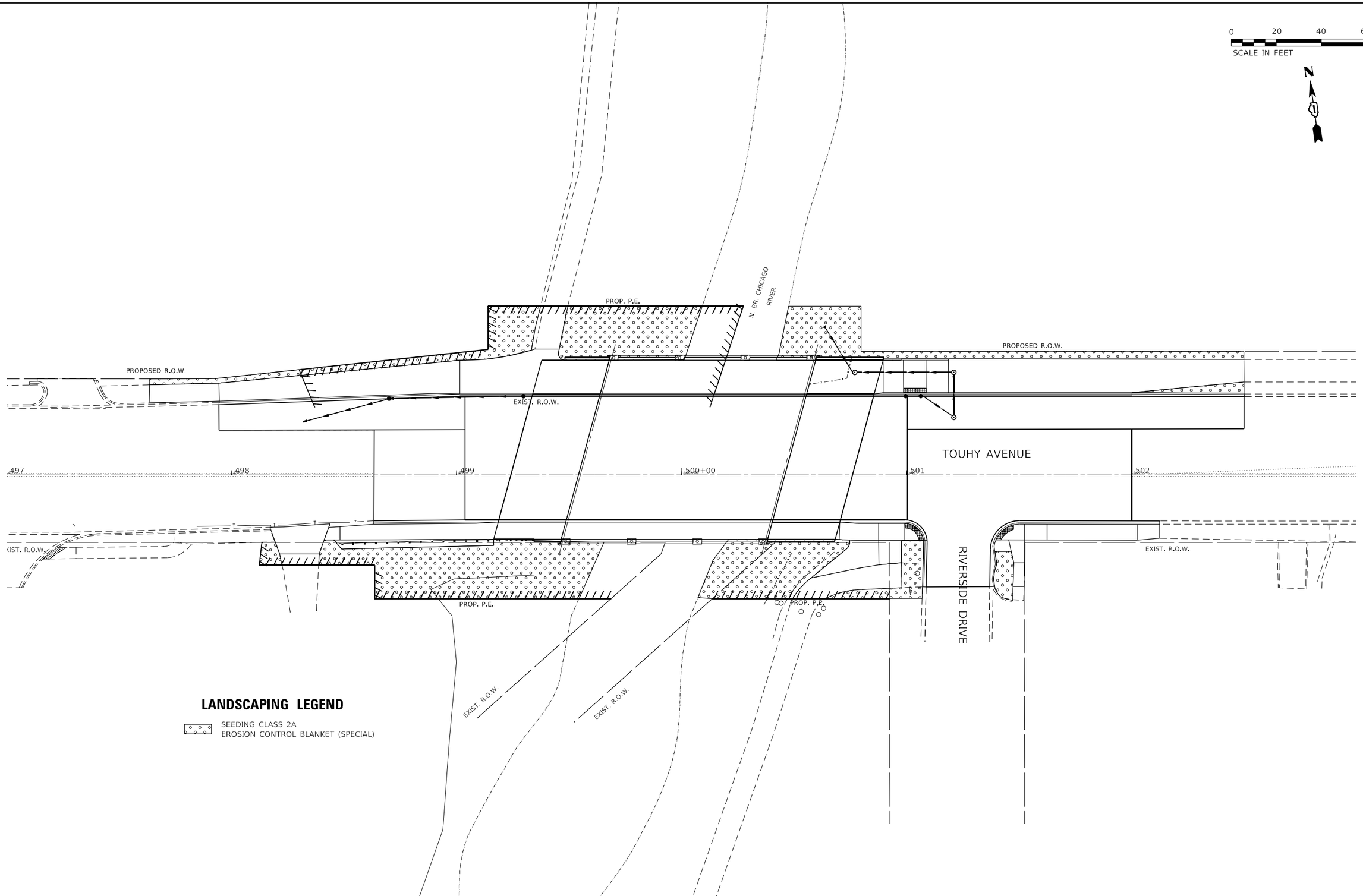

MODEL: Default
FILE NAME: pw:\\primera-pw.bentley.com:primera-pw\01\Documents\01 Projects\2020\2020425.00 - IDOT Phase II Various Designs\2020425.05 NOS Touhy over N. Branch of Chicago River\Drawings\Current Drawing Files\CADD Sheets\Roadway\P190010-sht-landscaping-01

Primera
551 W. JACKSON BLVD, SUITE 600 , CHICAGO IL 60661 , P:312-855-0910 F:312-855-0415

USER NAME = rvandermus	DESIGNED -	REVISED -	
	DRAWN - RMV	REVISED -	
PLOT SCALE = 40.0000 ' / in.	CHECKED - MPV	REVISED -	
PLOT DATE = 10/14/2025	DATE -	REVISED -	

STATE OF ILLINOIS
DEPARTMENT OF TRANSPORTATION

LANDSCAPING PLAN
TOUHY AVENUE OVER NORTH BRANCH CHICAGO RIVER

SCALE: | SHEET 27 OF 124 SHEETS | STA. | TO STA.

F.A.P. RTE.	SECTION	COUNTY	TOTAL SHEETS	SHEET NO.
341	95-B	COOK	124	27
		CONTRACT NO. 62D34		
		ILLINOIS	FED. AID PROJECT	

0 20 40 60
SCALE IN FEET

N

PROP. P.E.

PROPOSED R.O.W.

EXIST. R.O.W.

42" STORM SEWER REMOVAL - 69 FT

42" STORM SEWER REMOVAL - 16 FT

8" STORM SEWER REMOVAL - 106 FT

12" STORM SEWER REMOVAL - 22 FT

12" STORM SEWER REMOVAL - 18 FT

ABANDON AND FILL EXISTING SEWER 70 FT X5509900

INLET REMOVED IN CONTRACT 61H59

TOUHY AVE.

497 498 499 500+00 501 502 503

ABANDON AND FILL EXISTING SEWER 171 FT X5509900

12" STORM SEWER REMOVAL - 8 FT

18" STORM SEWER REMOVAL - 25 FT

48" STORM SEWER REMOVAL - 35 FT

12" STORM SEWER REMOVAL - 7 FT

DRAINAGE REMOVAL LEGEND

— x — x — STORM SEWER REMOVAL

ABANDON AND FILL STORM SEWER

R STRUCTURE REMOVAL

ADJ STRUCTURE ADJUSTMENT

MODEL: Default
FILE NAME: pw:\\primera-pw.bentley.com:primera-pw\Documents\01 Projects\2020\2020425.00 - IDOT Phase II Various Designs\20200425.05 WOS Touhy over N. Branch of Chicago River\Drawings\Current Drawing Files\CADD Sheets\Roadway\P190010-sht-drainage-removals

Primera
551 W. JACKSON BLVD, SUITE 600 , CHICAGO IL 60661 , P:312-435-0910 F:312-435-0415

USER NAME = rvandermus	DESIGNED - PRIMERA - DRAINAGE	REVISED -	
	DRAWN - RMV	REVISED -	
PLOT SCALE = 40.0000 ' / in.	CHECKED - MPV	REVISED -	
PLOT DATE = 10/14/2025	DATE -	REVISED -	

STATE OF ILLINOIS
DEPARTMENT OF TRANSPORTATION

DRAINAGE REMOVAL PLAN
TOUHY AVENUE OVER NORTH BRANCH CHICAGO RIVER

SCALE: SHEET 28 OF 124 SHEETS STA. TO STA.

F.A.P. RTE.	SECTION	COUNTY	TOTAL SHEETS	SHEET NO.
341	95-B	COOK	124	28
		CONTRACT NO. 62D34		
		ILLINOIS	FED. AID PROJECT	

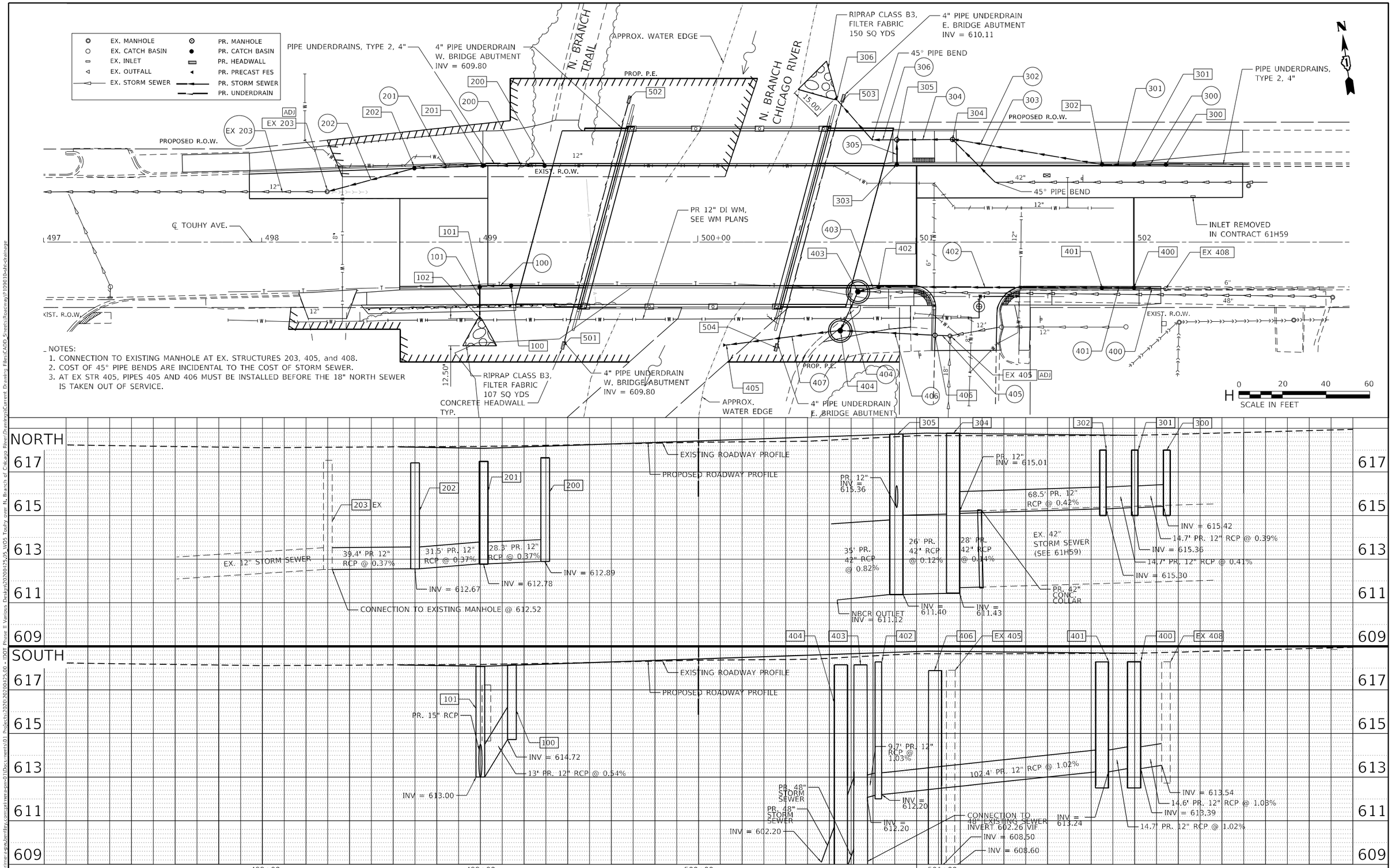

NOTES:
1. CONNECTION TO EXISTING MANHOLE AT EX. STRUCTURES 203, 405, and 408.
2. COST OF 45° PIPE BENDS ARE INCIDENTAL TO THE COST OF STORM SEWER.
3. AT EX STR 405, PIPES 405 AND 406 MUST BE INSTALLED BEFORE THE 18" NORTH SEWER IS TAKEN OUT OF SERVICE.

PLAN — NOTE BOOK NO. — SURVEYED — PLOTTED — ALIGNMENT CHECKED — R/ OF WAY CHECKED — CADD FILE NAME — BY — DATE

PROFILE — NOTE BOOK NO. — SURVEYED — PLOTTED — GRADES CHECKED — R/W NOTED — STRUCTURE NOTATIONS CHKD — BY — DATE

MODEL: Default
FILE NAME: pw:\\primera-eqiprv.bentley.com:primera-eqiprv-01\Documents\01 Projects\2020\20200425.00 - IDOT Phase II Various Design\20200425.05_VO5 Touhy over N. Branch of Chicago River\Drawings\Current Drawing Files\CADD_Sheets\Roadway\P109010-alt-drainage

Primera
551 W. JACKSON BLVD, SUITE 600 , CHICAGO IL 60661 , P:312-669-0910 F:312-669-0915

USER NAME = rvandermus	DESIGNED -	REVISED -
	CHECKED -	REVISED -
PLOT SCALE = 40.0000 ' / in.	DRAWN -	REVISED -
PLOT DATE = 10/14/2025	CHECKED -	REVISED -

STATE OF ILLINOIS
DEPARTMENT OF TRANSPORTATION

DRAINAGE PLAN AND PROFILE
TOUHY AVENUE OVER NORTH BRANCH CHICAGO RIVER

SCALE: | SHEET 29 OF SHEETS | STA. TO STA.

F.A. RTE.	SECTION	COUNTY	TOTAL SHEETS	SHEET NO.
341	95-B	COOK		29
		CONTRACT NO. 62D34		
		ILLINOIS	FED. AID PROJECT	

NOTES:
1. TYPE 1 LID SHALL BE ADA COMPLIANT

DRAINAGE STRUCTURE SCHEDULE

STR NO.	STATION	OFFSET	STRUCTURE TYPE	FRAME & GRATE	RIM ELEVATION	STORM SEWER INVERTS				PIPE UNDERDRAIN INVERTS			
						NORTH	WEST	EAST	SOUTH	NORTH	WEST	EAST	SOUTH
100	499+14	20' RT	CB TY A, 4'-DIA	TY 1F, OL	618.14		614.72						
101	499+03	20' RT	CB TY A, 4'-DIA	TY 1F, OL	617.23			614.00	613.00		615.73		
102	499+03	35' RT	PRC FES, 15"			612.94							
200	499+30	36' LT	CB TY A, 4'-DIA	TY 1F, OL	617.64		612.89				614.93		
201	499+1.48	34' LT	CB TY A, 4'-DIA	TY 1F, OL	617.48		612.78	612.78					
202	498+70	34' LT	CB TY A, 4'-DIA	TY 1F, OL	617.41		612.67	612.67	612.99			614.70	
EX 203	498+30	23' LT	EX STRUCTURE	EX	617.53		612.52	612.52(NE)					
300	502+15	36.5' LT	CB TY C, 2'-DIA	TY 1F, OL	618.00		615.52					615.52	
301	502+00	36.5' LT	CB TY C, 2'-DIA	TY 1F, OL	618.00		615.36	615.36					
302	501+85.3	36.5' LT	CB TY C, 2'-DIA	TY 1F, OL	618.00		615.30(NW)	615.30					
303	500+91.3	36.5' LT	CB TY C, 2'-DIA	TY 1F, OL	618.00	615.48							
304	501+16.6	47' LT	MH TY A, 7'-DIA	TY 1F, OL	618.77		611.43	615.01	EX 42"(SW)				
305	500+91	47' LT	MH TY A, 7'-DIA	TY 1F, CL	618.77		611.40	611.40	615.36				
306	500+64	65' LT	PRC FES, 42"					611.12(SE)					
400	502+00	22' RT	CB TY A, 4'-DIA	TY 1F, OL	618.29		613.39	EX STRUCTURE					
401	501+85.3	22' RT	CB TY A, 4'-DIA	TY 1F, OL	618.29		613.24	613.24					
402	500+83	20.5' RT	CB TY C, 2'-DIA	TY 1F, OL	618.29		612.20	612.20(SE)					
403	500+73.5	22.75' RT	MH TY A, 9'-DIA	TY 1F, CL	618.97	614.96(NE)		602.26-VIF	602.26(SW)				
404	500+65	41' RT	MH TY A, 9'-DIA	TY 1F, CL	618.15	602.20(NE)	602.20	606.78					
EX 405	501+16	43' RT	EX STRUCTURE	EX	617.90		608.60		608.00				
406	501+09	45' RT	MH TY A, 5'-DIA	TY 1F, OL	617.91		607.90	607.90					
407	500+12	47' RT	PRC FES, 48"					602.10					
EX 408	502+15	22' RT	EX STRUCTURE	EX	618.29		613.54	EXISTING					
501	499+38	47' RT	CONCRETE HEADWALL FOR PIPE DRAINS							609.80			
502	499+68	65' LT	CONCRETE HEADWALL FOR PIPE DRAINS										609.80
503	500+66	64' RT	CONCRETE HEADWALL FOR PIPE DRAINS							610.11			
504	500+36	48' RT	CONCRETE HEADWALL FOR PIPE DRAINS										610.11

DRAINAGE PIPE SCHEDULE

PIPE NO.	FROM STR	TO STR	CLASS	TYPE	DIA (IN)	LENGTH	SLOPE	TBF (CY)
100	100	101	A	1	12	13	0.54%	1.3
101	101	102	A	1	15	12	0.54%	1.2
200	200	201	A	1	12	29	0.37%	10.2
201	201	202	A	1	12	32	0.37%	11.3
202	202	EX 203	A	2	12	40	0.37%	15.4
300	300	301	A	1	12	15	0.39%	1.7
301	301	302	A	1	12	15	0.41%	1.7
302	EX 42" PIPE	302	A	1	12	69	0.42%	10.3
303	302	303	A	1	42	28	0.14%	18.0
304	304	301	A	1	42	26	0.13%	17.3
305	304	301	A	1	12	12	1.03%	1.2
306	304	301	A	1	42	35	0.82%	11.2
400	EX 408	400	A	1	12	15	1.03%	5.5
401	400	401	A	1	12	15	1.02%	6.0
402	401	402	A	1	12	102	1.02%	51.6
403	402	403	A	1	12	10	1.03%	5.7
404	403	404	WMQP		48	20	1.02%	65.1
405	EX 405	406	A	2	24	5	2.00%	6.4
406	406	404	WMQP	1	24	42	2.00%	58.6
407	404	407	WMQP		48	52	0.19%	16.1

LONGITUDINAL UNDERDRAIN SCHEDULE

STA 1	STA 2	LT/RT	UP STRM STR	DN STRM STR	LENGTH
499+30	498+70	LT	200	202	59
502+53	502+15	LT		300	37

DRAINAGE REMOVAL SCHEDULE

LOCATION		REMOVING INLETS (EA)	REMOVING CATCH BASINS (EA)	REMOVE EXISTING FLARED END SECTION (EA)	REMOVING MANHOLES (EA)	CONCRETE HEADWALL REMOVAL (EA)
STATION	OFFSET					
498+56	20' LT	1				
499+03	21' RT		1			
500+31	33' RT			1		
500+38	38' RT				1	
500+54	44' LT					1
500+62	22' RT	1				
500+79	22' LT	1				
501+21	26' LT				1	

PIPE REMOVAL SCHEDULE

STA 1	STA 2	PAY ITEM DESCRIPTION	LENGTH
502+26	501+21	STORM SEWER REMOVAL, 8"	106
500+79	500+74	STORM SEWER REMOVAL, 12"	18
500+38	500+42	STORM SEWER REMOVAL, 12"	7
498+54	498+30	STORM SEWER REMOVAL, 12"	22
498+95	499+03	STORM SEWER REMOVAL, 12"	8
500+74	500+38	STORM SEWER REMOVAL, 18"	25
501+36	501+21	STORM SEWER REMOVAL, 42"	16
501+21	500+45	STORM SEWER REMOVAL, 42"	69
500+74	500+35	STORM SEWER REMOVAL, 48"	35

DRAINAGE ADJUSTMENT TABLE

STR NO.	STATION	OFFSET	MANHOLES TO BE ADJUSTED WITH NEW TYPE 1 FRAME, OPEN LID
EX 203	498+30	23' LT	1
EX 405	501+16	43' RT	1

PIPE ABANDON SCHEDULE

STA 1	STA 2	ABANDON AND FILL EXISITING STORM SEWER (LF)
501+16	501+16	70
498+95	497+31	163

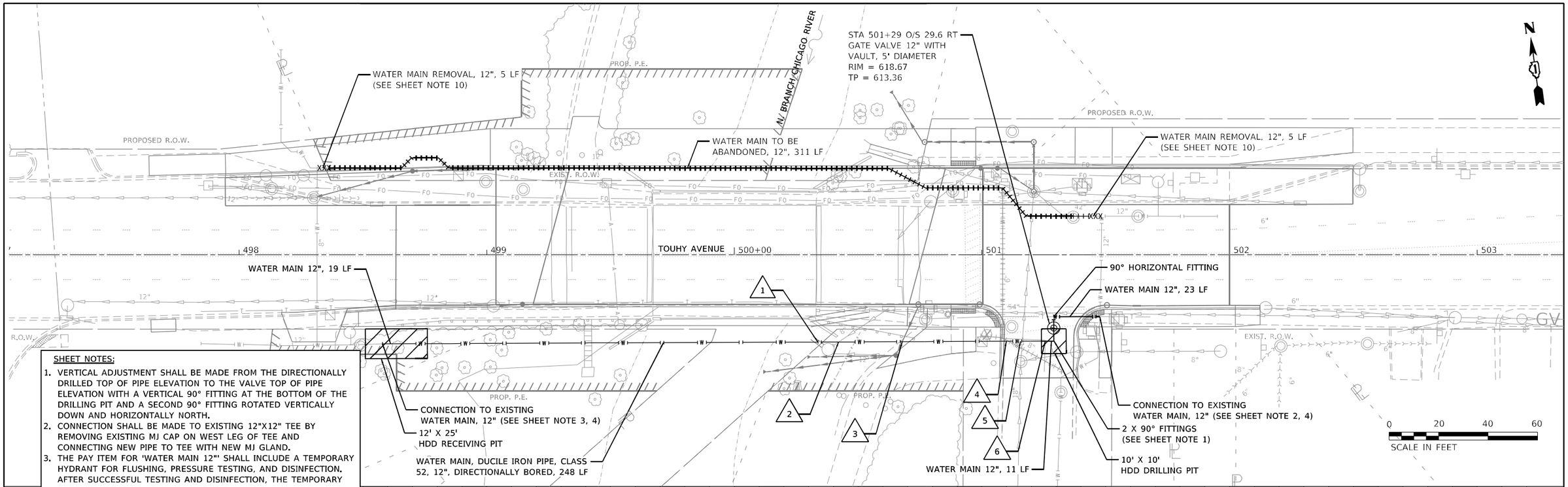

SHEET NOTES:

1. VERTICAL ADJUSTMENT SHALL BE MADE FROM THE DIRECTIONALLY DRILLED TOP OF PIPE ELEVATION TO THE VALVE TOP OF PIPE ELEVATION WITH A VERTICAL 90° FITTING AT THE BOTTOM OF THE DRILLING PIT AND A SECOND 90° FITTING ROTATED VERTICALLY DOWN AND HORIZONTALLY NORTH.
2. CONNECTION SHALL BE MADE TO EXISTING 12"X12" TEE BY REMOVING EXISTING MJ CAP ON WEST LEG OF TEE AND CONNECTING NEW PIPE TO TEE WITH NEW MJ GLAND.
3. THE PAY ITEM FOR 'WATER MAIN 12"' SHALL INCLUDE A TEMPORARY HYDRANT FOR FLUSHING, PRESSURE TESTING, AND DISINFECTION. AFTER SUCCESSFUL TESTING AND DISINFECTION, THE TEMPORARY HYDRANT SHALL BE REMOVED AND THE FINAL CONNECTION SHALL BE MADE.
4. TO MINIMIZE SHUTDOWN TIMES, THE EXISTING WATER MAIN SHALL BE EXPOSED AND ALL NECESSARY APPURTENANCES FOR THE CONNECTION WORK SHALL BE LOCATED ON SITE PRIOR TO THE WATER MAIN SHUT DOWN AND CUTTING OF THE PIPE.
5. HORIZONTAL DIRECTIONALLY DRILLED WATER MAIN PIPE LIMITS SHALL BE MEASURED FROM THE FRONT EDGE OF THE DRILLING AND RECEIVING PITS.
6. ADDITIONAL OR ALTERNATIVE DRILLING SETUPS SHALL BE APPROVED BY THE VILLAGE'S REPRESENTATIVE. COST OF ADDITIONAL DRILLING SETUPS SHALL BE CONSIDERED INCLUDED IN THE COST OF THE PAY ITEM HORIZONTAL DIRECTIONALLY DRILLED WATER MAIN PIPE.
7. FITTINGS HAVE BEEN CALLED OUT ON THE PLAN SHEETS FOR INFORMATIONAL PURPOSES. ADJUSTMENTS SHALL BE DETERMINED DURING CONSTRUCTION AND SHALL BE CONSIDERED INCLUDED IN THE COST OF ASSOCIATED PAY ITEMS. THE COST OF FITTINGS (TEES, BENDS, REDUCERS, COUPLING, CAPS) SHALL BE CONSIDERED INCLUDED IN THE COST OF ASSOCIATED PAY ITEMS.
8. TOP OF PIPE WATER MAIN ELEVATIONS AT EXISTING CONNECTIONS AND CROSSINGS ARE BASED UPON THE BEST INFORMATION AVAILABLE. ELEVATION VERIFICATION AND PROPOSED WATER MAIN ADJUSTMENTS SHALL BE DETERMINED DURING CONSTRUCTION AND SHALL BE CONSIDERED INCLUDED IN THE COST OF ASSOCIATED PAY ITEMS.
9. REFER TO THRUST RESTRAINT TABLE ON THE 'WATER MAIN DETAILS' SHEET FOR RESTRAINED JOINT REQUIREMENTS AT FITTINGS, VALVES, AND DEAD ENDS.
10. PER THE SPECIAL PROVISION FOR 'WATER MAIN REMOVAL', EXISTING WATER MAIN TO REMAIN IN SERVICE SHALL FIRST BE CUT AND CAPPED. THIS CUTTING AND CAPPING SHALL BE INCLUDED IN THE COST OF 'WATER MAIN REMOVAL, 12"'.

WATER MAIN CROSSING TABLE

CROSSED UTILITY					PROPOSED WATER MAIN		
CROSSING	STATION	UTILITY	DIAMETER (IN)	TP / BP	DIAMETER (IN)	TP / BP	CLEARANCE (FT)
1	500+33	EX STORM CULVERT	18	606.00, BP	12	591.69, TP	14.31
2	500+42	EX STORM SEWER	8	613.36, BP	12	591.92, TP	21.44
3	500+68	PR STORM SEWER	48	612.41, BP	12	593.09, TP	19.08
4	501+10	ABANDONED EX WATER MAIN	6	612.70, BP	12	597.21, TP	15.49
5	501+15	EX STORM SEWER	18	608.09, BP	12	598.08, TP	10.01
6	501+25	ABANDONED EX WATER MAIN	6	612.42, BP	12	599.52, TP	12.90

MODEL: $MODELNAME$
FILE NAME: N:\PROJ\002140201\CADD\Shtutilities\0021402-01-AWM01.dgn

CiorbaGroup
8725 W. Higgins Rd, Ste 600, Chicago, IL 60631
P 773.775.4009 | www.ciorba.com

USER NAME = WaterResources	DESIGNED - LAM	REVISED -
	DRAWN - CLB	REVISED -
PLOT SCALE = 40.0000 ' / in.	CHECKED - LAM	REVISED -
PLOT DATE = 1/14/2025	DATE -	REVISED -

STATE OF ILLINOIS
DEPARTMENT OF TRANSPORTATION

PROPOSED WATER MAIN PLAN AND PROFILE
TOUHY AVENUE OVER NORTH BRANCH CHICAGO RIVER

SCALE: 1" = 20' | SHEET 1 OF 1 SHEETS | STA. 497+00 TO STA. 503+00

F.A.U. RTE.	SECTION	COUNTY	TOTAL SHEETS	SHEET NO.
341	95-B	COOK	124	31
		CONTRACT NO. 62D34		
		ILLINOIS	FED. AID PROJECT	

DESIGNED	- TJP
DRAWN	- RJR
CHECKED	- DJR

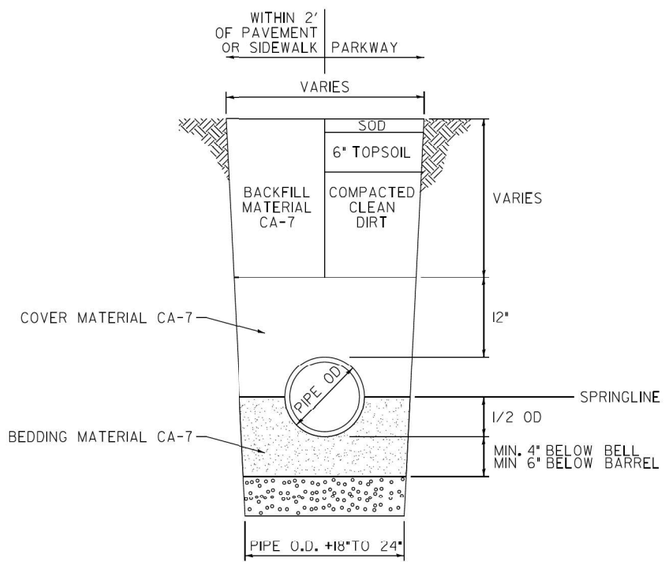

PIPE TRENCH DETAIL

NOTE: BACKFILL WITH FA-6 SAND FULL DEPTH WITHIN COOK COUNTY R.O.W.

NOTES:

ALL TRENCH EXCVATIONS SHALL MEET OSHA REQUIREMENTS.

IF APPROVED BY THE VILLAGE FOR USE BETWEEN APRIL 16 AND OCTOBER 31 ONLY, A ONE (1) INCH THICK STEEL PLATE SHALL BE PROVIDED AND MAINTAINED BY THE CONTRACTOR UNTIL THE SURFACE RESTORATION IS COMPLETE. THE PLATE SHALL BE PROTECTED FROM SLIDING AND PROVDED WITH BITUMINOUS RAMPS IF REQUIRED BY VILLAGE.

REFER TO PAVEMENT PATCH DETAIL FOR PAVEMENT RESTORATION

USER NAME = RJR	PIPE TRENCH DETAIL	TOTAL SHEETS	SHEET NO.
PLOT SCALE = NTS			
PLOT DATE = SEPT 2015	VILLAGE OF NILES	01	01

DESIGNED	- TJP
DRAWN	- RJR
CHECKED	- TCO

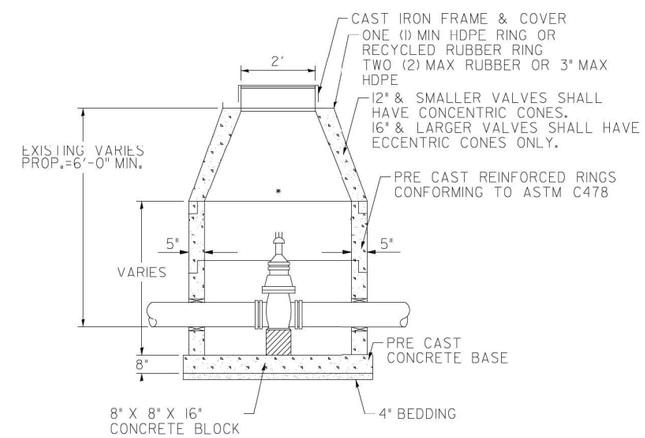

* FOR 8"&6" VALVE-48" DIA
FOR 16"&12" VALVE-60" DIA

VALVE IN VAULT DETAIL

NTS

USER NAME = RJR	VALVE IN VAULT DETAIL		
PLOT SCALE = NTS			
PLOT DATE = DEC 2021		01	01

THRUST RESTRAINT TABLE

TYPE	12"
Horizontal Bend, 11.25°	2
Horizontal Bend, 22.5°	4
Horizontal Bend, 45°	8
Horizontal Bend, 90°	18
Vertical Up Bend, 11.25°	2
Vertical Up Bend, 22.5°	4
Vertical Up Bend, 45°	8
Vertical Up Bend, 90°	18
Vertical Down Bend, 11.25°	5
Vertical Down Bend, 22.5°	9
Vertical Down Bend, 45°	17
Vertical Down Bend, 90°	41
Tee 12" Equal	20
Tee 12"R x 10"B	-
Tee 12"R x 8"B	-
Tee 12"R x 6"B	-
Reducer 12" x 8"	11
Dead End and Valves	21

Notes:
1. Lengths in feet per DIPRA thrust restraint design (Soil = Clay 1, Lay Condition = 4, Pressure = 58 psi, SF = 1.5).
2. Bend lengths required on both sides of fitting.
3. Tee lengths required on tee branch.
4. Reducer lengths required on larger pipe.

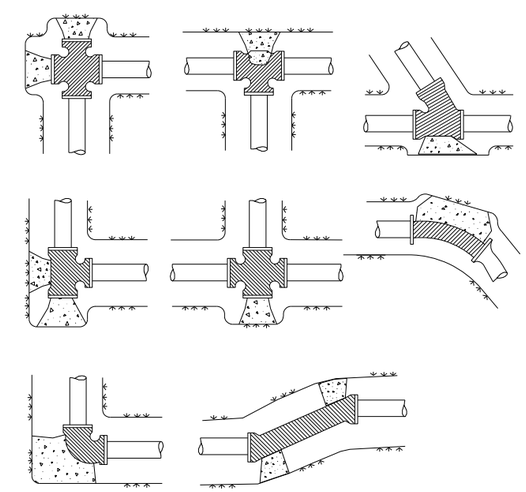

NOTE:

1. ALL BENDS OF 10 °AND LARGER SHALL BE BLOCKED WITH AT LEAST 10" THICK POURED IN PLACE CONCRETE BLOCKS AGAINST UNDISTURBED VERTICAL EARTH FACE.
2. ALL CONCRETE TO BE MIN. 3,000 PSI.
3. IN ADDITION TO THE ABOVE THRUST BLOCKING: ALL MECHANICAL JOINTS, (BENDS OVER 10, TEES, CROSSES, VALVES AND FIRE HYDRANTS) SHALL HAVE A "MEGALUG" RESTRAINT, OR AS APPROVED BY VILLAGE ENGINEERING. BOLTS SHALL BE "COR-TEN".

THRUST BLOCK DETAIL

NOT TO SCALE

MODEL: $MODELNAME$
FILE NAME: N:\PROJ\6021402.01\CADD\ShtDetails\6021402.01-DETO1.dgn

CiorbaGroup
8725 W. Higgins Rd, Ste 600, Chicago, IL 60631
P 773.775.4009 | www.ciorba.com

USER NAME = WaterResources	DESIGNED - LAM	REVISED -
	DRAWN - CLB	REVISED -
PLOT SCALE = 2.0000 ' / in.	CHECKED - LAM	REVISED -
PLOT DATE = 1/14/2025	DATE -	REVISED -

STATE OF ILLINOIS
DEPARTMENT OF TRANSPORTATION

WATER MAIN DETAILS
TOUHY AVENUE OVER NORTH BRANCH CHICAGO RIVER

SCALE: N.T.S. | SHEET 1 OF 2 SHEETS | STA. - TO STA. -

F.A.U. RTE.	SECTION	COUNTY	TOTAL SHEETS	SHEET NO.
341	95-B	COOK	124	32
		CONTRACT NO. 62D34		
	ILLINOIS	FED. AID PROJECT		

PROPOSED SEWER LINE WITH 18" MINIMUM VERTICAL SEPARATION ABOVE EXISTING WATER MAIN

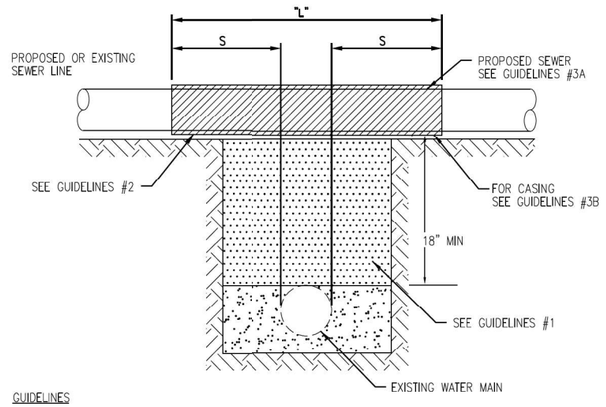

GUIDELINES

1. IF SELECT GRANULAR BACKFILL EXISTS: REMOVE WITHIN WIDTH OF PROPOSED SEWER TRENCH AND REPLACE WITH SELECT EXCAVATED MATERIAL (CLASS IV) AND COMPACT
2. OMIT SELECT GRANULAR EMBEDMENT AND GRANULAR BACKFILL TO ONE (1) FOOT OVER TOP OF SEWER AND USE SELECT EXCAVATED MATERIAL (CLASS IV) AND COMPACT THE LENGTH OF "L" FEET.
3. A) CONSTRUCT "L" FEET OF PROPOSED SEWER OF WATER MAIN MATERIAL AND PRESSURE TEST, OR;

   B) USE "L" FEET OF WATER MAIN MATERIAL FOR CASING OF PROPOSED SEWER AND SEAL ENDS OF CASING.

NOTE: "S" THE LENGTH NECESSARY TO PROVIDE 10 FEET OF SEPARATION AS MEASURED PERPENDICULAR TO THE EXISTING WATER MAIN

*BASED ON STANDARD SPECIFICATIONS FOR WATER AND SEWER MAIN CONSTRUCTION IN ILLINOIS.

PROPOSED SEWER LINE BELOW EXISTING WATER MAIN WITH LESS THAN 18" MINIMUM VERTICAL SEPARATION

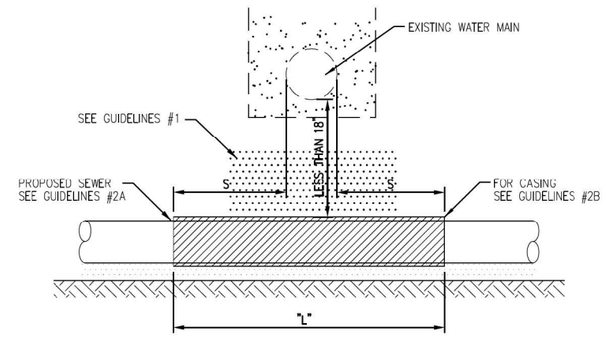

GUIDELINES

1. OMIT SELECT GRANULAR EMBEDMENT AND GRANULAR BACKFILL TO ONE (1) FOOT OVER TOP OF SEWER AND USE SELECT EXCAVATED MATERIAL (CLASS IV) AND COMPACT FOR "S" FEET ON EACH SIDE OF WATER MAIN.
2. A) CONSTRUCT "L" FEET OF PROPOSED SEWER OF WATER MAIN MATERIAL AND PRESSURE TEST, OR;

   B) USE "L" FEET OF WATER MAIN MATERIAL FOR CASING OF PROPOSED SEWER AND SEAL ENDS OF CASING.
3. PROVIDE ADEQUATE SUPPORT FOR EXISTING WATER MAIN TO PREVENT DAMAGE DUE TO SETTLEMENT OF SEWER TRENCH

NOTE: "S" THE LENGTH NECESSARY TO PROVIDE 10 FEET OF SEPARATION AS MEASURED PERPENDICULAR TO THE EXISTING WATER MAIN

*BASED ON STANDARD SPECIFICATIONS FOR WATER AND SEWER MAIN CONSTRUCTION IN ILLINOIS.

PROPOSED WATER MAIN ABOVE EXISTING SEWER LINE WITH LESS THAN 18" VERTICAL SEPARATION

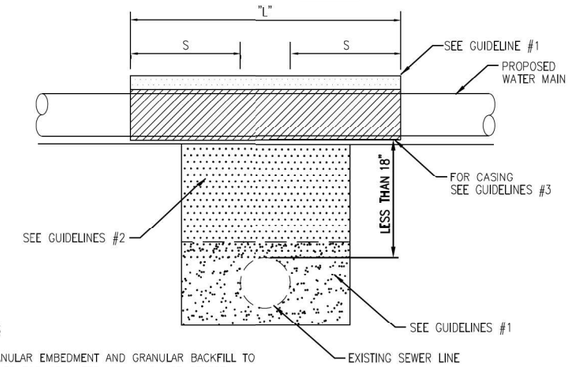

GUIDELINES

1. OMIT SELECT GRANULAR EMBEDMENT AND GRANULAR BACKFILL TO ONE (1) FOOT OVER TOP OF WATER MAIN AND USE SELECT EXCAVATED MATERIAL (CLASS IV) AND COMPACT THE LENGTH OF "L".
2. IF SELECT GRANULAR BACKFILL EXISTS, REMOVE WITHIN WIDTH OF EXISTING SEWER LINE TRENCH AND REPLACE WITH SELECT EXCAVATED MATERIAL (CLASS IV) AND COMPACT.
3. USE "L" FEET OF WATER MAIN MATERIAL FOR CASING OF PROPOSED WATER MAIN AND SEAL ENDS OF CASING.
4. POINT LOADS SHALL NOT BE ALLOWED BETWEEN WATER MAIN CASING AND SEWER

NOTE: "S" THE LENGTH NECESSARY TO PROVIDE 10 FEET OF SEPARATION AS MEASURED PERPENDICULAR TO THE EXISTING SEWER LINE.

*BASED ON STANDARD SPECIFICATIONS FOR WATER AND SEWER MAIN CONSTRUCTION IN ILLINOIS.

PROPOSED SEWER LINE BELOW EXISTING WATER MAIN WITH 18" MINIMUM VERTICAL SEPARATION

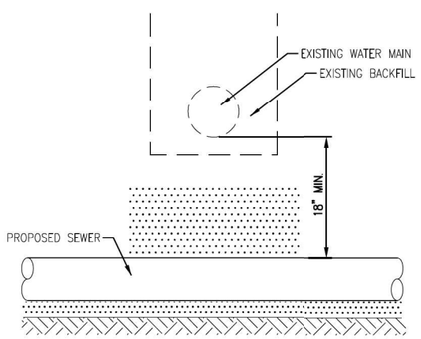

GUIDELINES

1. PROVIDE ADEQUATE SUPPORT FOR EXISTING WATER MAIN TO PREVENT DAMAGE DUE TO SETTLEMENT OF SEWER TRENCH.

*BASED ON STANDARD SPECIFICATIONS FOR WATER AND SEWER MAIN CONSTRUCTION IN ILLINOIS.

PLACEMENT OF WATER MAIN BELOW EXISTING OR PROPOSED SEWER LINE WITH LESS THAN 18" MINIMUM VERTICAL SEPARATION. **NOT ALLOWED.**

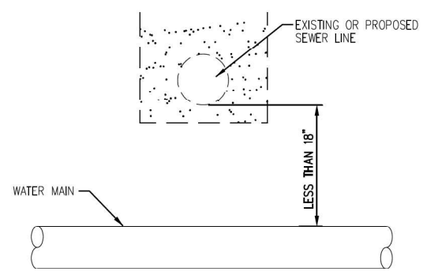

NOT ALLOWED*
MUST MAINTAIN 18" VERTICAL SEPARATION

*BASED ON STANDARD SPECIFICATIONS FOR WATER AND SEWER MAIN CONSTRUCTION IN ILLINOIS.

PROPOSED WATER MAIN BELOW EXISTING SEWER LINE WITH 18" MINIMUM VERTICAL SEPARATION

NOTE: "S" THE LENGTH NECESSARY TO PROVIDE 10 FEET OF SEPARATION AS MEASURED PERPENDICULAR TO THE EXISTING SEWER LINE

*BASED ON STANDARD SPECIFICATIONS FOR WATER AND SEWER MAIN CONSTRUCTION IN ILLINOIS.

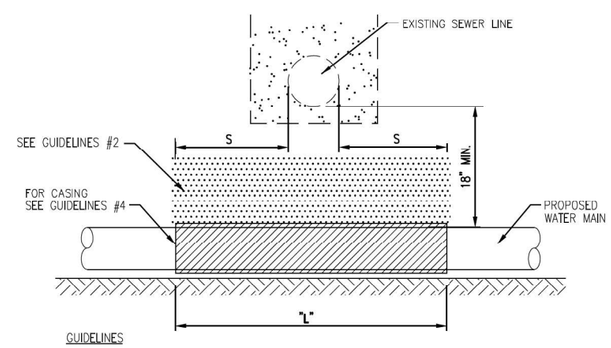

GUIDELINES

1. OMIT SELECT GRANULAR EMBEDMENT AND GRANULAR BACKFILL TO ONE (1) FOOT OVER TOP OF WATER MAIN AND USE SELECT EXCAVATED MATERIAL (CLASS IV) AND COMPACT THE LENGTH OF "L".
2. IF SELECT GRANULAR BACKFILL EXISTS, REMOVE WITHIN WIDTH OF EXISTING SEWER LINE TRENCH AND REPLACE WITH SELECT EXCAVATED MATERIAL (CLASS IV) AND COMPACT.
3. PROVIDE ADEQUATE SUPPORT FOR EXISTING SEWER LINE TO PREVENT DAMAGE DUE TO SETTLEMENT.
4. USE "L" FEET OF WATER MAIN MATERIAL FOR CASING OF PROPOSED WATER MAIN AND SEAL ENDS OF CASING.

PER IEPA, WHEN **PROPOSED** SEWER (OR WATER) IS LOCATED 10 FEET OR MORE FROM EXISTING WATER (OR SEWER), NO SPECIAL CONSTRUCTION REQUIRED

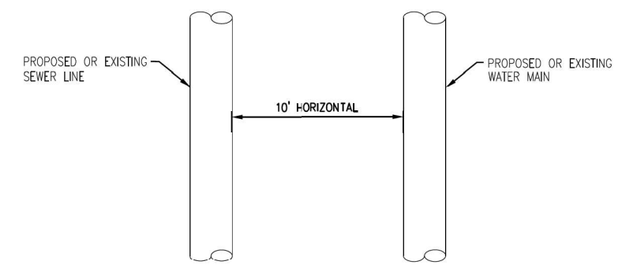

PLAN VIEW

PER IEPA, WHEN **PROPOSED** SEWER (OR WATER) IS LOCATED **LESS THAN 10 FEET** FROM EXISTING WATER (OR SEWER), DETAILS BELOW SHALL APPLY

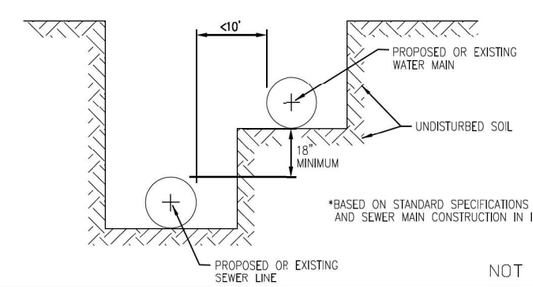

*BASED ON STANDARD SPECIFICATIONS FOR WATER AND SEWER MAIN CONSTRUCTION IN ILLINOIS.

NOT TO SCALE

TECHNICAL GUIDANCE MANUAL

WATER AND SEWER SEPARATION REQUIREMENTS (PER IEPA)

7/1/15

STD. DWG. NO. 41

PAGE NO. 42

MODEL: $MODELNAME$
FILE NAME: N:\PROJ\0021402.01\CADD\SHTDetails\0021402.01-DET02.dgn

CiorbaGroup
8725 W. Higgins Rd, Ste 600, Chicago, IL 60631
P 773.775.4009 | www.ciorba.com

USER NAME = WaterResources	DESIGNED - LAM	REVISED -	
	DRAWN - CLB	REVISED -	
PLOT SCALE = 2.0000 ' / in.	CHECKED - LAM	REVISED -	
PLOT DATE = 1/14/2025	DATE -	REVISED -	

STATE OF ILLINOIS
DEPARTMENT OF TRANSPORTATION

WATER MAIN DETAILS
TOUHY AVENUE OVER NORTH BRANCH CHICAGO RIVER

SCALE: N.T.S. | SHEET 2 OF 2 SHEETS | STA. - TO STA. -

F.A.U. RTE.	SECTION	COUNTY	TOTAL SHEETS	SHEET NO.
341	95-B	COOK	124	33
		CONTRACT NO. 62D34		
		ILLINOIS	FED. AID PROJECT	

STATE OF ILLINOIS

DEPARTMENT OF TRANSPORTATION

DIVISION OF HIGHWAYS

PLAT OF HIGHWAYS

PARCEL NUMBER	OWNER	SHEET NUMBER	PROPERTY ACQUIRED BY
0X60002PE	FOREST PRESERVE DISTRICT OF COOK COUNTY	2	
0X60003PE	FOREST PRESERVE DISTRICT OF COOK COUNTY	2	
0X60005PE	FOREST PRESERVE DISTRICT OF COOK COUNTY	2	
~~0X60004~~	~~[illegible]~~	~~2~~	

PARCEL 0X60004 WAS DELETED AND NOT ACQUIRED

ROUTE: TOUHY AVENUE
SECTION:
COUNTY: COOK
LIMITS: AT NORTH BRANCH CHICAGO RIVER
JOB NO.: R-90-005-14

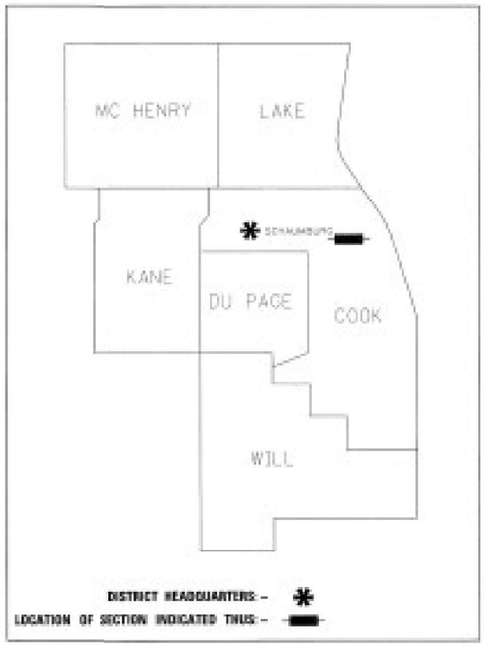

PRINTED BY THE AUTHORITY OF THE STATE OF ILLINOIS

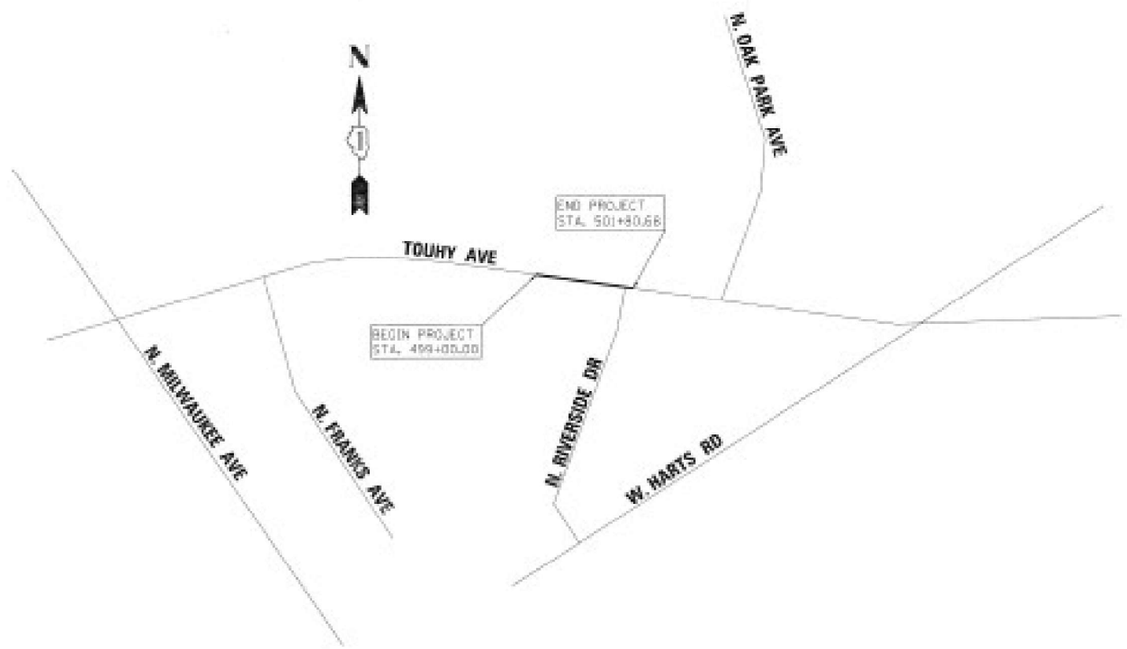

LOCATION MAP

GROSS LENGTH = 280.68 FT. = 0.053 MILES

NET LENGTH = 280.68 FT. = 0.053 MILES

IDOT USE ONLY

MODEL: Default
FILE NAME: pw:\\primera-pw.bentley.com:primera-pw-01\Documents\01 Projects\2020\2020425.00 - IDOT Phase II Various Design\2020425.05 \VOS Touhy over N. Branch of Chicago River\Drawings\Current Drawing Files\CADD Sheets\Roadway\P109010-dh-sparcel01

Primera
550 W. JACKSON BLVD, SUITE 600 , CHICAGO IL 60661 , P:312-435-0910 F:312-435-0415

USER NAME = rvandermus	DESIGNED -	REVISED -	
	DRAWN - RMV	REVISED -	
PLOT SCALE = 2.0000 ' / in.	CHECKED - MPV	REVISED -	
PLOT DATE = 10/13/2025	DATE -	REVISED -	

STATE OF ILLINOIS
DEPARTMENT OF TRANSPORTATION

R.O.W. PLAT
TOUHY AVENUE OVER NORTH BRANCH CHICAGO RIVER

SCALE: | SHEET A-33 OF 124 SHEETS | STA. TO STA.

F.A.P. RTE.	SECTION	COUNTY	TOTAL SHEETS	SHEET NO.
341	95-B	COOK	124	A-33
		CONTRACT NO. 62D34		
	ILLINOIS	FED. AID PROJECT		

PART OF THE SOUTHEAST QUARTER OF SECTION 30, TOWNSHIP 41 NORTH, RANGE 13 EAST OF THE THIRD PRINCIPAL MERIDIAN, IN COOK COUNTY, ILLINOIS.

PROJECT COORDINATES				
ILLINOIS STATE PLANE, EAST ZONE, NAD83 (2011) OK60001PE COORDINATE TABLE				
PT#	STATION	OFFSET	NORTH	EAST
6017	500+92.50	30.00' RT.	1,947,490.541	1,130,479.216
6018	500+92.43	55.00' RT.	1,947,465.782	1,130,475.756
6019	500+13.65	55.00' RT.	1,947,476.482	1,130,397.697
6020	500+41.60	30.00' RT.	1,947,497.454	1,130,428.788

PROJECT COORDINATES				
ILLINOIS STATE PLANE, EAST ZONE, NAD83 (2011) OK60002PE COORDINATE TABLE				
PT#	STATION	OFFSET	NORTH	EAST
6014	500+12.53	30.00' LT.	1,947,560.845	1,130,408.138
6013	498+36.18	30.00' LT.	1,947,584.796	1,130,233.420
6012	498+29.08	46.70' LT.	1,947,602.305	1,130,228.658
6011	499+14.10	55.90' LT.	1,947,599.873	1,130,314.136
6010	499+14.10	75.00' LT.	1,947,618.796	1,130,316.730
6016	500+26.29	75.00' LT.	1,947,603.560	1,130,427.880
6015	500+23.73	63.84' LT.	1,947,592.851	1,130,423.831

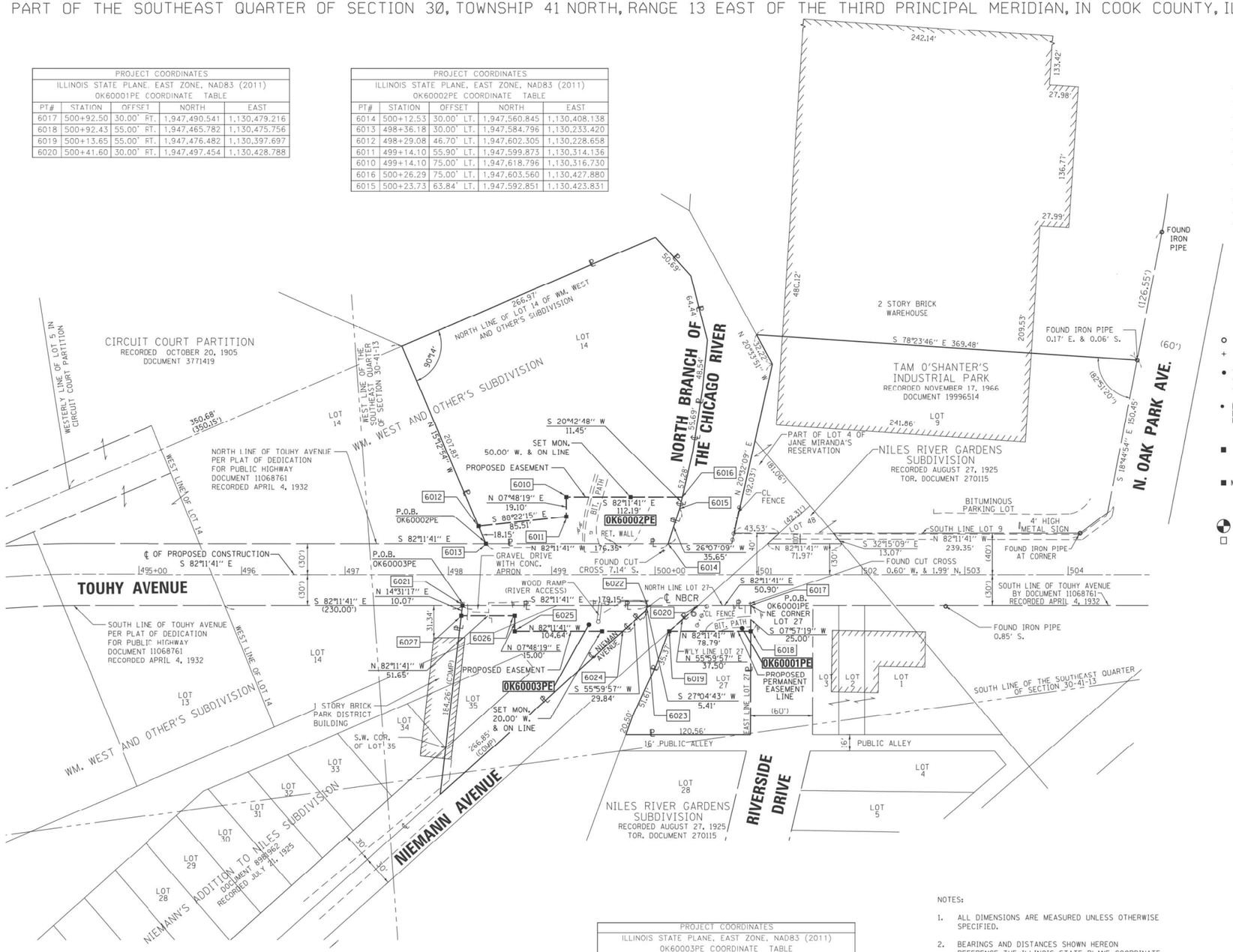

LEGEND

SECTION CORNER

QUARTER SECTION CORNER

SECTION / QUARTER SECTION LINE
PLATTED LOT LINES
PROPERTY (DEED) LINE
APPARENT PROPERTY LINE
EXISTING CENTERLINE
PROPOSED CENTERLINE
EXISTING RIGHT OF WAY LINE
PROPOSED RIGHT OF WAY LINE
EXISTING EASEMENT
PROPOSED EASEMENT
EXISTING ACCESS CONTROL LINE
PROPOSED ACCESS CONTROL LINE
MEASURED DIMENSION
COMPUTED DIMENSION
RECORDED DIMENSION
EXISTING BUILDING

GRAPHIC SCALE FEET
SCALE: 1"=50'

- IRON PIPE OR ROD FOUND
- CUT CROSS FOUND OR SET
- 'MAG' NAIL SET
- 5 / 8" REBAR SET
- T1 T2 T3 — THESE STAKES REFERENCE FOUND OR SET MONUMENTATION. SET 5/8 INCH IRON ROD FLUSH WITH GROUND TO TIE FOUND IRON STAKE IDENTIFIED BY COLORED PLASTIC CAP BEARING SURVEYORS REGISTRATION NUMBER.
- BT1 BT2 BT3 — THESE STAKES, IN CULTIVATED AREAS, REFERENCE FOUND OR SET MONUMENTATION. BURIED 5/8 INCH IRON ROD 20 INCHES BELOW GROUND TO TIE FOUND IRON STAKE. IDENTIFIED BY COLORED PLASTIC CAP BEARING SURVEYORS REGISTRATION NUMBER.
- STAKING OF PROPOSED RIGHT OF WAY. SET DIVISION OF HIGHWAYS SURVEY MARKER TO MONUMENT THE POSITION SHOWN. IDENTIFIED BY INSCRIPTION DATA AND SURVEYORS REGISTRATION NUMBER.
- M — STAKING OF PROPOSED RIGHT OF WAY IN CULTIVATED AREAS. BURIED 5/8 INCH METAL ROD 20 INCHES BELOW GROUND TO MARK FUTURE SURVEY MARKER POSITION IDENTIFIED BY COLORED PLASTIC CAP BEARING SURVEYORS REGISTRATION NUMBER.
- PERMANENT SURVEY MARKER, I.D.O.T. STANDARD 2135 (TO BE SET BY OTHERS)
- RIGHT OF WAY STAKING PROPOSED TO BE SET

STATE OF ILLINOIS)
)SS
COUNTY OF COOK)

THIS IS TO CERTIFY THAT WE, ENVIRONMENTAL DESIGN INTERNATIONAL, INC. AN ILLINOIS PROFESSIONAL DESIGN FIRM LAND SURVEYING CORPORATION, NUMBER 184-001224, HAVE SURVEYED THE PLAT OF HIGHWAYS SHOWN HEREON IN SECTION 30, TOWNSHIP 41 NORTH, RANGE 13 EAST OF THE THIRD PRINCIPAL MERIDIAN, COOK COUNTY, THAT THE SURVEY IS TRUE AND COMPLETE AS SHOWN TO THE BEST OF MY KNOWLEDGE AND BELIEF, THAT THE PLAT CORRECTLY REPRESENTS SAID SURVEY, THAT ALL MONUMENTS FOUND AND ESTABLISHED ARE OF PERMANENT QUALITY AND OCCUPY THE POSITIONS SHOWN THEREON AND THAT THE MONUMENTS ARE SUFFICIENT TO ENABLE THE SURVEY TO BE RETRACED. MADE FOR THE DEPARTMENT OF TRANSPORTATION, STATE OF ILLINOIS.

DATED AT CHICAGO, ILLINOIS THIS 26TH DAY OF APRIL, A.D 2021.

WILLIAM J. FLEMING, PLS
ILLINOIS PROFESSIONAL LAND SURVEYOR NO. 035.003226
LICENSE EXPIRATION DATE: 11/30/2022

THIS PROFESSIONAL SERVICE CONFORMS TO THE CURRENT ILLINOIS MINIMUM STANDARDS FOR A BOUNDARY SURVEY.

STATE OF ILLINOIS WILLIAM J. FLEMING 35-3226 PROFESSIONAL LAND SURVEYOR

EDI JOB NO. 1173.023.29

Environmental Design International inc.
Civil, Survey, Environmental and Construction Inspection Services
33 W. MONROE STREET, SUITE 1825, CHICAGO, IL 60603
Ph. (312) 345-1400 Fax (312)345-0529
www.envdesigni.com MBE/WBE/DBE
Excellence, Dedication, Innovation

PARCEL NUMBER	TOTAL HOLDINGS ACRES	PART TAKEN ACRES	AREA IN EXISTING R.O.W. ACRES	REMAINDER AREA ACRES	EASEMENT AREA		PARCEL INDEX NUMBER
					ACRES	SQUARE FEET	
0K60001PE	0.266	N/A	N/A	0.266	0.037	N/A	10-31-203-022
0K60002PE	1.391	N/A	N/A	1.391	0.149	N/A	10-30-317-037
0K60003PE	0.384	N/A	N/A	0.384	0.080	N/A	10-30-324-004 10-31-103-028

PROJECT COORDINATES				
ILLINOIS STATE PLANE, EAST ZONE, NAD83 (2011) 0K60003PE COORDINATE TABLE				
PT#	STATION	OFFSET	NORTH	EAST
6021	498+13.53	30.00' RT.	1,947,528.428	1,130,202.827
6022	499+92.67	30.00' RT.	1,947,504.098	1,130,380.314
6023	499+90.89	35.11' RT.	1,947,499.282	1,130,377.852
6024	499+68.64	55.00' RT.	1,947,482.594	1,130,353.111
6025	498+64.00	55.00' RT.	1,947,496.805	1,130,249.439
6026	498+64.00	40.00' RT.	1,947,511.666	1,130,251.476
6027	498+12.35	40.00' RT.	1,947,518.681	1,130,200.302

NOTES:

1. ALL DIMENSIONS ARE MEASURED UNLESS OTHERWISE SPECIFIED.
2. BEARINGS AND DISTANCES SHOWN HEREON REFERENCE THE ILLINOIS STATE PLANE COORDINATE SYSTEM, EAST ZONE, NORTH AMERICAN DATUM OF 1983 (2011 ADJUSTMENT), "GRID".
3. ALL MEASURED AND CALCULATED DISTANCES ARE "GRID" NOT "GROUND". TO OBTAIN GROUND DISTANCES, DIVIDED GRID DISTANCES SHOWN BY THE COMBINATION FACTOR OF 0.9999994
4. AREAS SHOWN ON THIS PLAT ARE GROUND.

REVISION DATE: / / REVISION MADE BY:

IDOT USE ONLY

PLAT OF HIGHWAYS
STATE OF ILLINOIS
DEPARTMENT OF TRANSPORTATION
TOUHY AVENUE

LIMITS: AT NORTH BRANCH CHICAGO RIVER COUNTY: COOK
SECTION: JOB NO.: R-90-005-14
STA. 499+00.00 TO STA. 501+80.68
SCALE: 1" = 50' SHEET 2 OF 2 SHEETS

BUREAU OF LAND ACQUISITION
201 WEST CENTER COURT
SCHAUMBURG, ILLINOIS 60196

MODEL: Default
FILE NAME: pw:\\primre-a-pw.bentley.com:primera-pw-01\Documents\01 Projects\2020\20200425.00 - IDOT Phase II Various Design\20200425.00 VOS Touhy over N. Branch of Chicago River\Drawings\Current Drawing Files\CADD Sheets\Roadway\P190010-dh-parcel.dgn

Primera
551 W. JACKSON BLVD, SUITE 600 , CHICAGO IL 60661 , P:312-655-0910 F:312-655-0415

USER NAME = mmathews	DESIGNED -	REVISED -	
	DRAWN - RMV	REVISED -	
PLOT SCALE = 2.0000 ' / in.	CHECKED - MPV	REVISED -	
PLOT DATE = 3/14/2025	DATE -	REVISED -	

STATE OF ILLINOIS
DEPARTMENT OF TRANSPORTATION

R.O.W. PLAT
TOUHY AVENUE OVER NORTH BRANCH CHICAGO RIVER

SCALE: SHEET 34 OF 124 SHEETS STA. TO STA.

F.A.P. RTE.	SECTION	COUNTY	TOTAL SHEETS	SHEET NO.
341	95-B	COOK	124	34
		CONTRACT NO. 62D34		
		ILLINOIS FED. AID PROJECT		

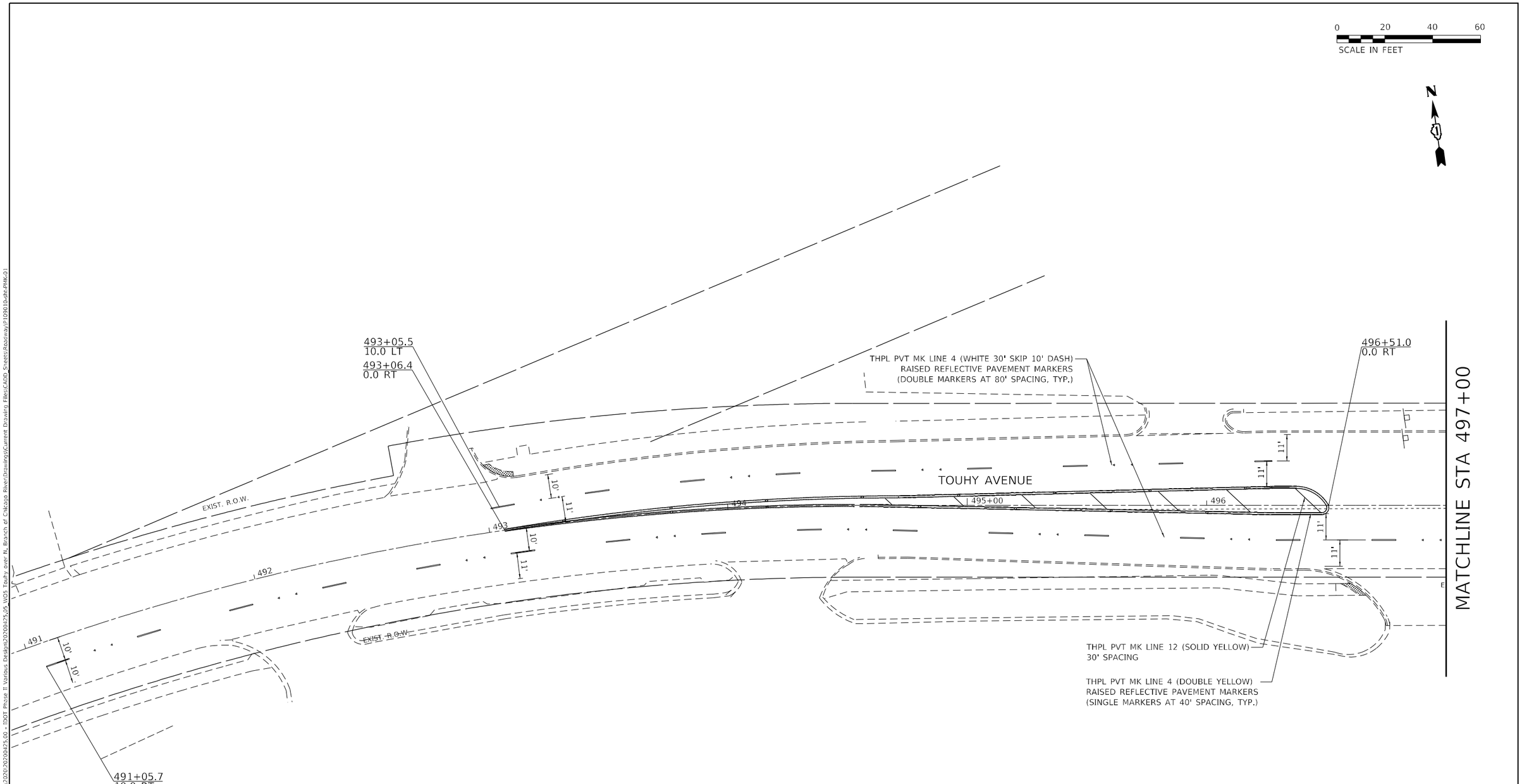

MODEL: Default
FILE NAME: pw:\\primera-pw.bentley.com:primera-pw-01\Documents\01 Projects\2020\20200425.00 - IDOT Phase II Various Design\20200425.05 WOS Touhy over N. Branch of Chicago River\Drawings\Current Drawing Files\CADD Sheets\Roadway\P190910-sht-PMK-01

Primera
550 W. JACKSON BLVD, SUITE 600 , CHICAGO IL 60661 , P:312-435-0910 F:312-435-0415

USER NAME = rvandermus	DESIGNED -	REVISED -	
	DRAWN - RMV	REVISED -	
PLOT SCALE = 40.0000 ' / in.	CHECKED - MPV	REVISED -	
PLOT DATE = 10/14/2025	DATE -	REVISED -	

STATE OF ILLINOIS
DEPARTMENT OF TRANSPORTATION

PAVEMENT MARKING PLAN
TOUHY AVENUE OVER NORTH BRANCH CHICAGO RIVER

SCALE: | SHEET 35 OF 124 SHEETS | STA. | TO STA.

F.A.P. RTE.	SECTION	COUNTY	TOTAL SHEETS	SHEET NO.
341	95-B	COOK	124	35
		CONTRACT NO. 62D34		
	ILLINOIS	FED. AID PROJECT		

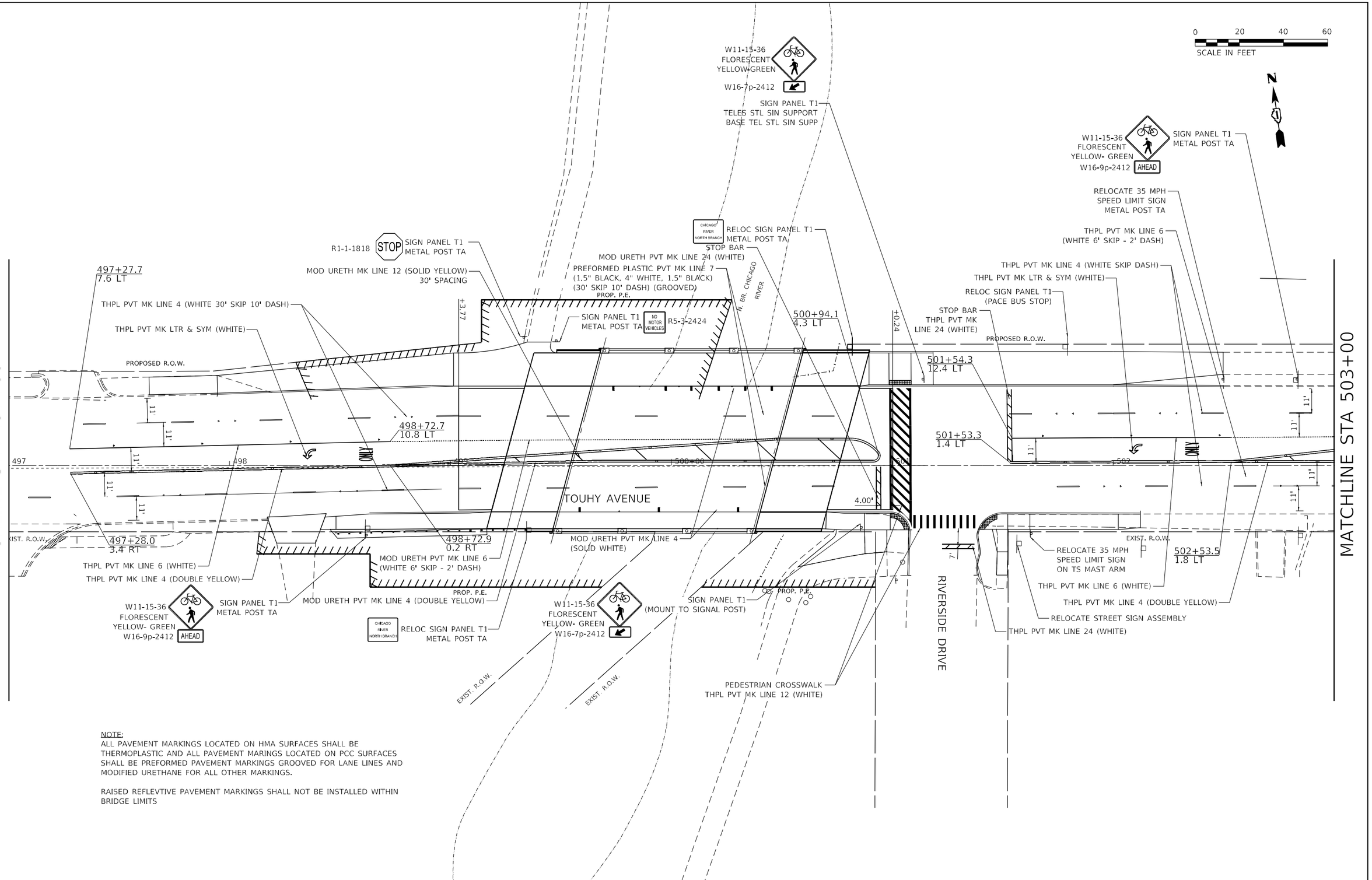

NOTE:
ALL PAVEMENT MARKINGS LOCATED ON HMA SURFACES SHALL BE THERMOPLASTIC AND ALL PAVEMENT MARINGS LOCATED ON PCC SURFACES SHALL BE PREFORMED PAVEMENT MARKINGS GROOVED FOR LANE LINES AND MODIFIED URETHANE FOR ALL OTHER MARKINGS.

RAISED REFLEVTIVE PAVEMENT MARKINGS SHALL NOT BE INSTALLED WITHIN BRIDGE LIMITS

MODEL: Default
FILE NAME: pw:\\primera-pw.bentley.com:primera-pw-01\Documents\01 Projects\2020\2020425.00 - IDOT Phase II Various Design\2020425_05 WOS Touhy over N. Branch of Chicago River\Drawings\Current Drawing Files\CADD Sheets\Roadway\P190110-sht-PMK-02

Primera
550 W. JACKSON BLVD, SUITE 600 , CHICAGO IL 60661 , P:312-435-0910 F:312-435-0415

USER NAME = rvandermus	DESIGNED -	REVISED -	
	DRAWN - RMV	REVISED -	
PLOT SCALE = 40.0000 ' / in.	CHECKED - MPV	REVISED -	
PLOT DATE = 10/14/2025	DATE -	REVISED -	

STATE OF ILLINOIS
DEPARTMENT OF TRANSPORTATION

PAVEMENT MARKING PLAN
TOUHY AVENUE OVER NORTH BRANCH CHICAGO RIVER

SCALE: | SHEET 36 OF 124 SHEETS | STA. | TO STA.

F.A.P. RTE.	SECTION	COUNTY	TOTAL SHEETS	SHEET NO.
341	95-B	COOK	124	36
		CONTRACT NO. 62D34		
		ILLINOIS	FED. AID PROJECT	

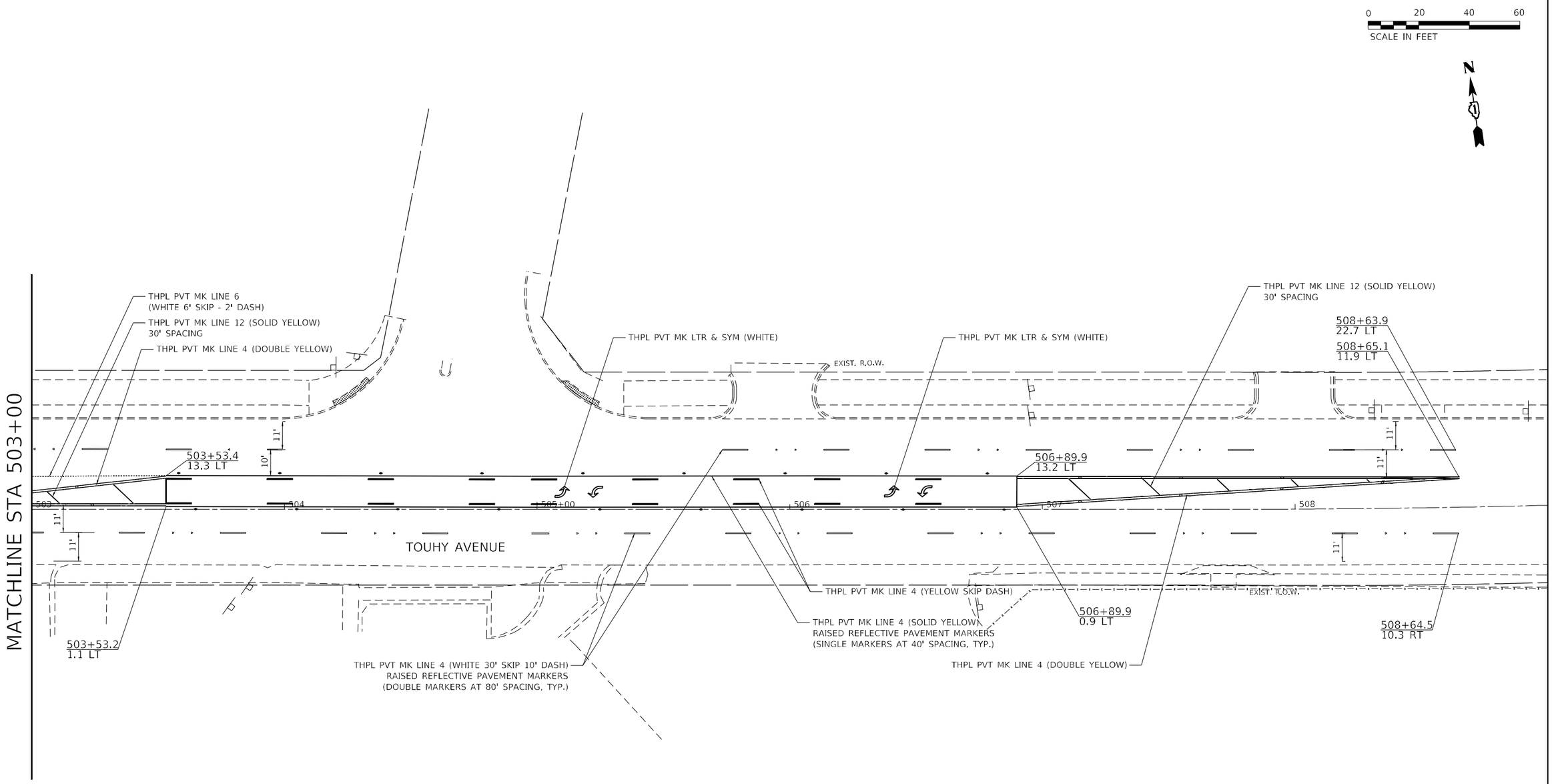

MODEL: Default
FILE NAME: pw:\\primer-s-pw.bentley.com:primera-pw-01\Docs.mentis\01 Projects\2020\20200425.00 - IDOT Phase II Various Design\20200425.05 WOS Touhy over N. Branch of Chicago River\Drawings\Current Drawing Files\CADD_Sheets\Roadway\P109010-sht-PMK-03

Primera
550 W. JACKSON BLVD, SUITE 600 , CHICAGO IL 60661 , P:312-855-0910 F:312-855-0415

USER NAME = rvandermus	DESIGNED -	REVISED -	
	DRAWN - RMV	REVISED -	
PLOT SCALE = 40.0000 ' / in.	CHECKED - MPV	REVISED -	
PLOT DATE = 10/14/2025	DATE -	REVISED -	

STATE OF ILLINOIS
DEPARTMENT OF TRANSPORTATION

PAVEMENT MARKING PLAN
TOUHY AVENUE OVER NORTH BRANCH CHICAGO RIVER

SCALE: | SHEET 37 OF 124 SHEETS | STA. TO STA.

F.A.P. RTE.	SECTION	COUNTY	TOTAL SHEETS	SHEET NO.
341	95-B	COOK	124	37
		CONTRACT NO. 62D34		
	ILLINOIS	FED. AID PROJECT		

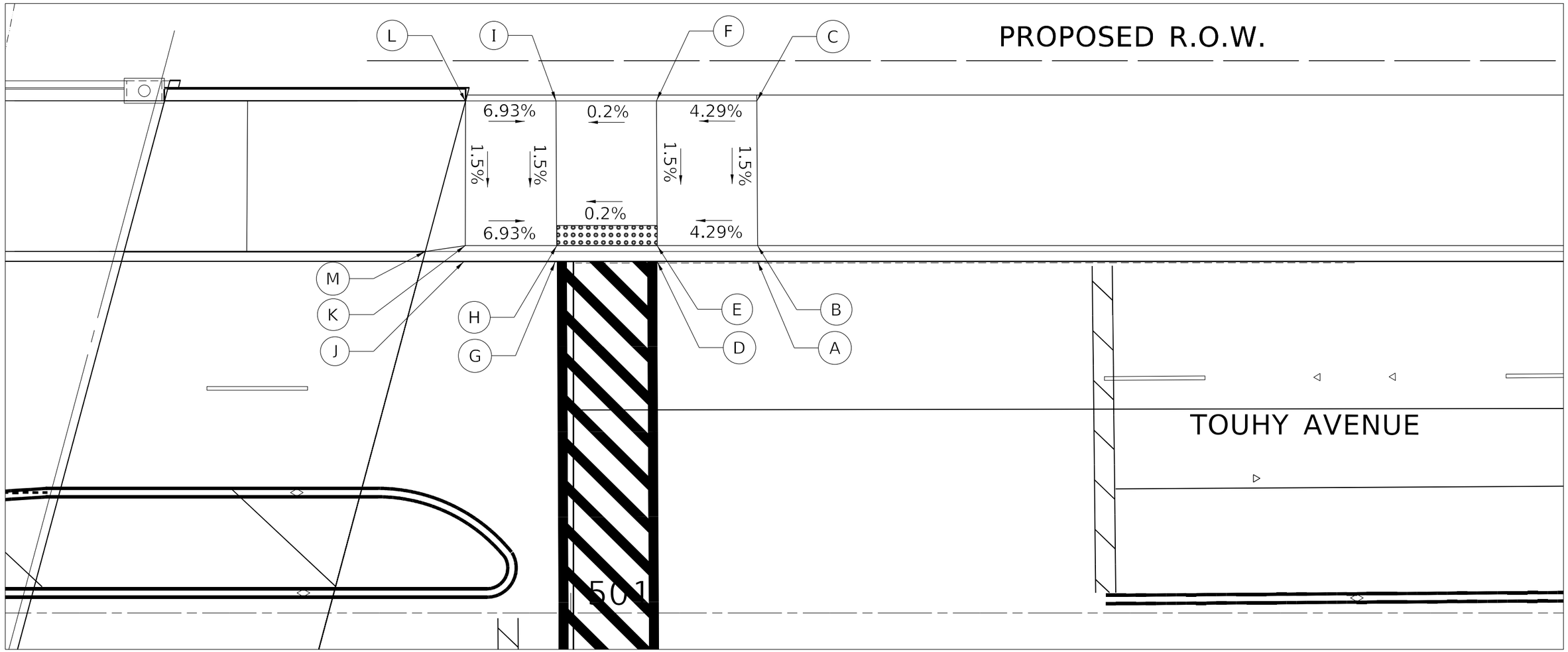

	STATION	OFFSET	ELEVATION
A	501+18.60	35' LT	618.06
B	501+18.60	36.58' LT	618.50
C	501+18.60	51' LT	618.73
D	501+08.60	35' LT	618.08
E	501+08.60	36.58' LT	618.07
F	501+08.60	51' LT	618.30
G	500+98.60	35' LT	618.06
H	500+98.60	36.58' LT	618.05
I	500+98.60	51' LT	618.28
J	500+89.50	35' LT	618.03
K	500+89.50	36.58' LT	618.68
L	500+89.50	51' LT	618.90
M	500+85.50	36' LT	618.66

N

N.T.S.

MODEL: Default
FILE NAME: pw:\\primera-pw.bentley.com:primera-pw-01\Documents\01 Projects\2020\20200425.00 - IDOT Phase II Various Design\20200425_05_W05 Touhy over N. Branch of Chicago River\Drawings\Current Drawing Files\CADD_Sheets\Roadway\P19901D-sht-ADA-01.dgn

Primera
150 W. JACKSON BLVD, SUITE 600 , CHICAGO IL 60661 , P:312-496-2910 F:312-496-0415

USER NAME = rvandermus	DESIGNED -	REVISED -
	DRAWN - RMV	REVISED -
PLOT SCALE = 10.0031 ' / in.	CHECKED - MPV	REVISED -
PLOT DATE = 10/13/2025	DATE -	REVISED -

STATE OF ILLINOIS
DEPARTMENT OF TRANSPORTATION

TOUHY AVENUE OVER NORTH BRANCH CHICAGO RIVER

SCALE: | SHEET 38 OF 124 SHEETS | STA. | TO STA.

F.A.P. RTE.	SECTION	COUNTY	TOTAL SHEETS	SHEET NO.
341	95-B	COOK	124	38
		CONTRACT NO. 62D34		
	ILLINOIS	FED. AID PROJECT		

	STATION	OFFSET	ELEVATION
A	501+62.33	20.33' RT	618.31
B	501+62.33	21.92' RT	618.75
C	501+62.33	28.92' RT	618.85
D	501+52.33	20.32' RT	618.32
E	501+52.33	21.9' RT	618.36
F	501+52.33	28.9' RT	618.43
G	501+47.50	20.6' RT	618.32
H	501+47.50	22.2' RT	618.32
I	501+37.85	29.1' RT	618.24
J	501+39.60	29.1' RT	618.24
K	501+45.33	29.1' RT	618.32
L	501+47.54	39.1' RT	618.68
M	501+47.24	49.6' RT	(619.01)
N	501+52.07	49.6' RT	(619.05)

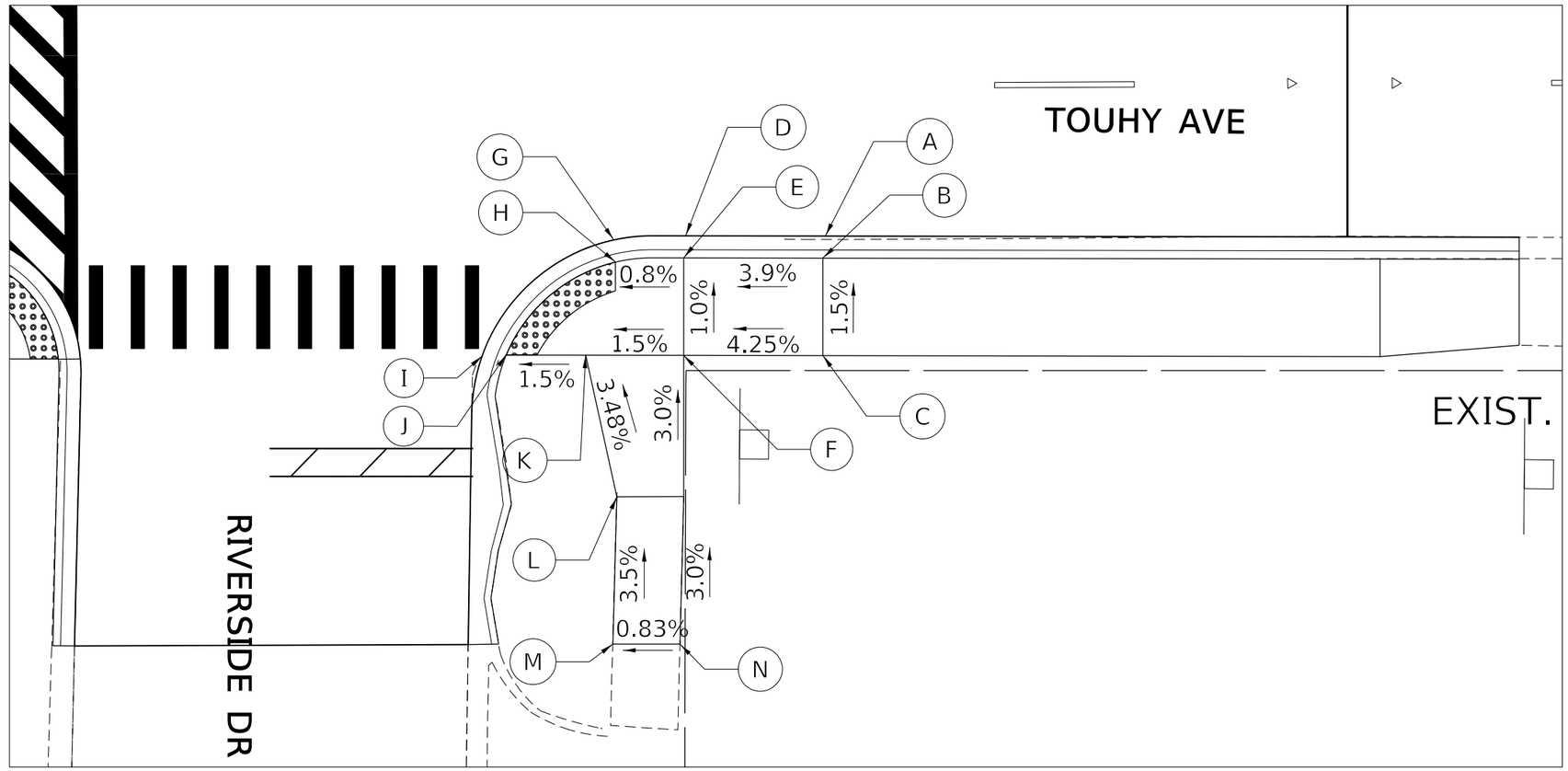

N

N.T.S.

TEMPORARY ADA RAMPS MOT STAGE 2:

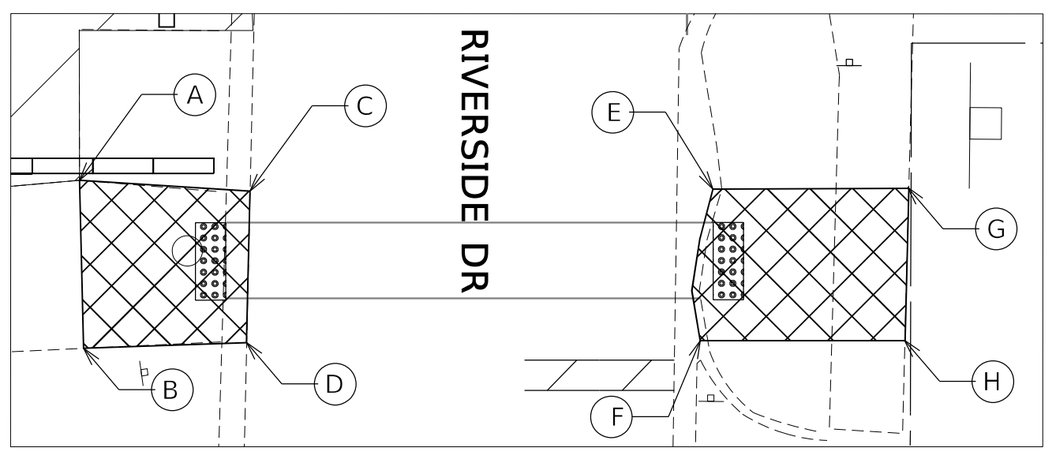

	STATION	OFFSET	ELEVATION
A	500+97.56	39.0' R	(618.88)
B	500+97.84	50.2' R	(619.07)
C	501+08.83	39.8' R	(618.31)
D	501+08.60	49.8' R	(618.33)

	STATION	OFFSET	ELEVATION
E	501+39.38	39.6' R	(618.51)
F	501+38.55	49.6' R	(618.48)
G	501+52.33	39.6' R	(618.90)
H	501+52.07	49.6' R	(619.05)

MODEL: Default
FILE NAME: pw:\\primera-pw.bentley.com:primera-pw\01 Projects\2020\2020025.00 - IDOT Phase II Various Design\2020025.05_WO5 Touhy over N. Branch of Chicago River\Drawings\Current Drawing Files\CADD_Sheets\Roadway\P19901D-sht-ADA-02.dgn

Primera
150 W. JACKSON BLVD, SUITE 600 , CHICAGO IL 60661 , P:312-496-0910 F:312-496-0915

USER NAME = rvandermus	DESIGNED -	REVISED -	
	DRAWN - RMV	REVISED -	
PLOT SCALE = 10.0031 ' / in.	CHECKED - MPV	REVISED -	
PLOT DATE = 10/13/2025	DATE -	REVISED -	

STATE OF ILLINOIS
DEPARTMENT OF TRANSPORTATION

ADA RAMPS
TOUHY AVENUE OVER NORTH BRANCH CHICAGO RIVER

SCALE: | SHEET 39 OF 124 SHEETS | STA. TO STA.

F.A.P. RTE.	SECTION	COUNTY	TOTAL SHEETS	SHEET NO.
341	95-B	COOK	124	39
		CONTRACT NO. 62D34		
	ILLINOIS	FED. AID PROJECT		

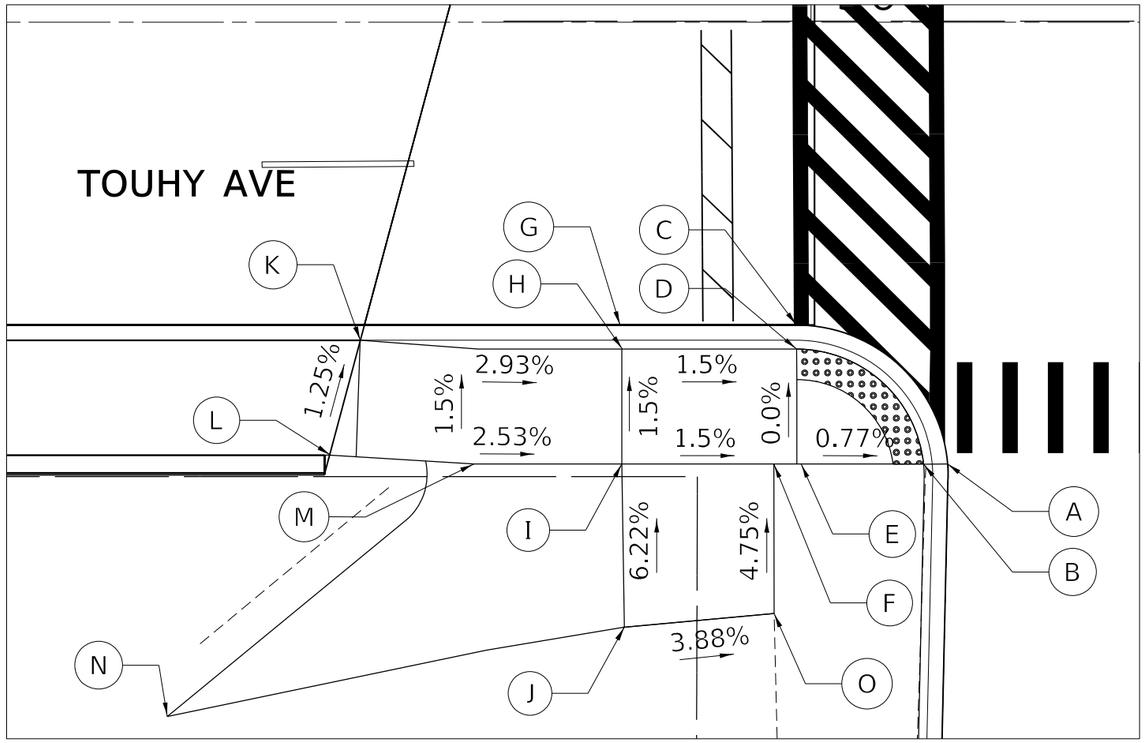

	STATION	OFFSET	ELEVATION
A	501+09.00	29.2' RT	618.29
B	501+07.44	29.2' RT	618.28
C	500+99.00	20.0' RT	618.36
D	500+99.00	21.58' RT	618.35
E	500+99.00	29.2' RT	618.35
F	500+97.60	29.2' RT	618.37
G	500+87.50	20.0' RT	618.32
H	500+87.50	21.58' RT	618.41
I	500+87.50	29.2' RT	618.52
J	500+87.50	40.0' RT	(619.19)
K	500+70.00	21.0' RT	618.92
L	500+68.28	28.6' RT	619.01
M	500+74.50	29.0' RT	618.85
N	500+57.50	45.85' RT	(619.64)
O	500+97.60	39.0' RT	(618.84)

N

N.T.S

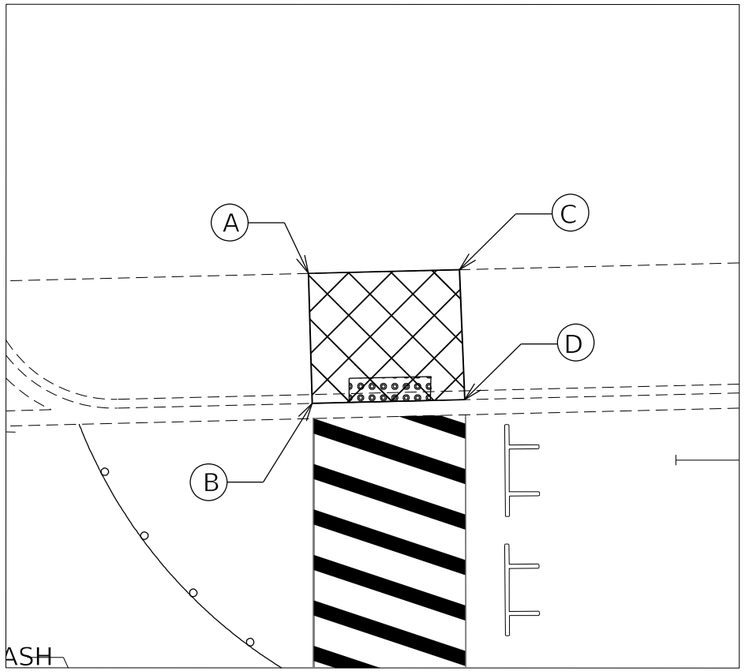

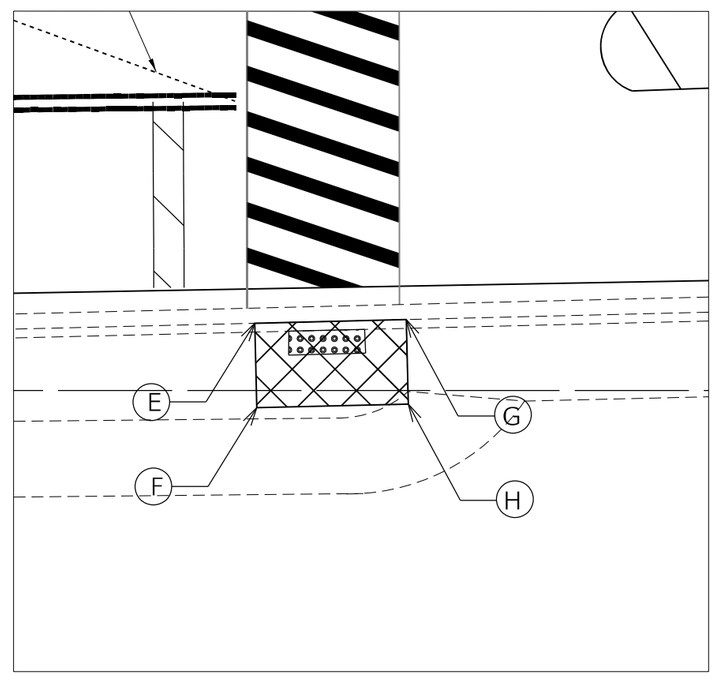

TEMPORARY ADA RAMPS MOT STAGE 1:

	STATION	OFFSET	ELEVATION
A	497+63.54	40' R	(618.00)
B	497+63.78	31.4' R	(617.50)
C	497+73.51	40.3' R	(617.95)
D	497+73.86	31.7' R	(617.55)
E	497+64.40	25.6' R	(618.05)
F	497+64.53	31.1' R	(618.55)
G	497+74.40	25.3' R	(618.00)
H	497+74.54	30.9' R	(618.50)

MODEL: Default
FILE NAME: pw:\\primera-pw.bentley.com:primera-pw\Documents\01 Projects\2020\20200425.09 - IDOT Phase II Various Design\20200425.09_W05 Touhy over N. Branch of Chicago River\Drawings\Current Drawing Files\CADD_Sheets\Roadway\P19901D-sht-ADA-03.dgn

Primera
150 W. JACKSON BLVD. SUITE 600 , CHICAGO IL 60661 , P:312-896-0910 F:312-896-0915

USER NAME = rvandermus	DESIGNED -	REVISED -	
	DRAWN - RMV	REVISED -	
PLOT SCALE = 10.0031 ' / in.	CHECKED - MPV	REVISED -	
PLOT DATE = 10/13/2025	DATE -	REVISED -	

STATE OF ILLINOIS
DEPARTMENT OF TRANSPORTATION

ADA RAMPS
TOUHY AVENUE OVER NORTH BRANCH CHICAGO RIVER

SCALE: | SHEET 40 OF 124 SHEETS | STA. TO STA.

F.A.P. RTE.	SECTION	COUNTY	TOTAL SHEETS	SHEET NO.
341	95-B	COOK	124	40
		CONTRACT NO. 62D34		
		ILLINOIS	FED. AID PROJECT	

TRAFFIC SIGNAL LEGEND

(NOT TO SCALE)

ITEM	EXISTING	PROPOSED
CONTROLLER CABINET		
COMMUNICATION CABINET	CC	CC
MASTER CONTROLLER	MC	MC
MASTER MASTER CONTROLLER	MMC	MMC
UNINTERRUPTABLE POWER SUPPLY		
SERVICE INSTALLATION -(P) POLE MOUNTED	P	P
SERVICE INSTALLATION -(G) GROUND MOUNTED -(GM) GROUND MOUNTED METERED	G GM	G GM
TELEPHONE CONNECTION	T	T
STEEL MAST ARM ASSEMBLY AND POLE		
ALUMINUM MAST ARM ASSEMBLY AND POLE		
STEEL COMBINATION MAST ARM ASSEMBLY AND POLE WITH LUMINAIRE		
SIGNAL POST -(BM) BARREL MOUNTED - TEMPORARY		BM
WOOD POLE		
GUY WIRE		
SIGNAL HEAD		
SIGNAL HEAD WITH BACKPLATE		
SIGNAL HEAD OPTICALLY PROGRAMMED	P P	P P
FLASHER INSTALLATION -(FS) SOLAR POWERED	F FS F FS	F FS F FS
PEDESTRIAN SIGNAL HEAD		
PEDESTRIAN PUSH BUTTON -(APS) ACCESSIBLE PEDESTRIAN PUSH BUTTON	APS	APS
RADAR DETECTION SENSOR	R	R
VIDEO DETECTION CAMERA	V	V
RADAR/VIDEO DETECTION ZONE		
PAN, TILT, ZOOM (PTZ) CAMERA	PTZ	PTZ
EMERGENCY VEHICLE LIGHT DETECTOR		
CONFIMATION BEACON		
WIRELESS INTERCONNECT		
WIRELESS INTERCONNECT RADIO REPEATER	ERR	RR

ITEM	EXISTING	PROPOSED
HANDHOLE -SQUARE -ROUND		
HEAVY DUTY HANDHOLE -SQUARE -ROUND	H H	H H
DOUBLE HANDHOLE		
JUNCTION BOX		
RAILROAD CANTILEVER MAST ARM		
RAILROAD FLASHING SIGNAL		
RAILROAD CROSSING GATE		
RAILROAD CROSSBUCK		
RAILROAD CONTROLLER CABINET		
UNDERGROUND CONDUIT (UC), GALVANIZED STEEL		
TEMPORARY SPAN WIRE, TETHER WIRE, AND CABLE		
SYSTEM ITEM	S	SP
INTERSECTION ITEM	I	IP
REMOVE ITEM		R
RELOCATE ITEM		RL
ABANDON ITEM		A
CONTROLLER CABINET AND FOUNDATION TO BE REMOVED		RCF
MAST ARM POLE AND FOUNDATION TO BE REMOVED		RMF
SIGNAL POST AND FOUNDATION TO BE REMOVED		RPF
DETECTOR LOOP, TYPE I		
PREFORMED DETECTOR LOOP	P P	P P
SAMPLING (SYSTEM) DETECTOR	S S	S S
INTERSECTION AND SAMPLING (SYSTEM) DETECTOR	IS IS	IS IS
QUEUE AND SAMPLING (SYSTEM) DETECTOR	QS QS	QS QS
WIRELESS DETECTOR SENSOR	W	W
WIRELESS ACCESS POINT		

ITEM	EXISTING	PROPOSED
SIGNAL HEAD -(P) PROGRAMMABLE SIGNAL HEAD	R Y G Y G P	R Y G Y G P
SIGNAL HEAD WITH BACKPLATE -(P) PROGRAMMABLE SIGNAL HEAD -(RB) RETROREFLECTIVE BACKPLATE	R Y G Y G P RB	R Y G Y G P RB
PEDESTRIAN SIGNAL HEAD AT RAILROAD INTERSECTIONS		
PEDESTRIAN SIGNAL HEAD WITH COUNTDOWN TIMER	C D	C D
ILLUMINATED SIGN "NO LEFT TURN"/"NO RIGHT TURN"		
NUMBER OF CONDUCTORS, ELECTRIC CABLE NO. 14, UNLESS NOTED OTHERWISE. ALL DETECTOR LOOP CABLE TO BE SHIELDED	5	5
GROUND CABLE IN CONDUIT, NO. 6 SOLID COPPER (GREEN)	1#6	1#6
ELECTRIC CABLE IN CONDUIT, TRACER NO. 14 1/C	1	1
COAXIAL CABLE	C	C
VENDOR CABLE	V	V
COPPER INTERCONNECT CABLE, NO. 18, 3 PAIR TWISTED, SHIELDED	6#18	6#18
FIBER OPTIC CABLE -NO. 62.5/125, MM12F -NO. 62.5/125, MM12F SM12F -NO. 62.5/125, MM12F SM24F	12F 24F 36F	12F 24F 36F
GROUND ROD -(C) CONTROLLER -(M) MAST ARM -(P) POST -(S) SERVICE	C M P S	C M P S

MODE.: Default
FILE NAME: pw:\\IL084EBIDINTEG.illinois.gov:PWIDOT\Documents\IDOT Offices\District 1\Projects\DistStd22x34\CADData\CADsheets\ts05.dgn

AEG ATLAS ENGINEERING GROUP, LTD.	USER NAME = footemj	DESIGNED - IP	REVISED -
		DRAWN - IP	REVISED -
	PLOT SCALE = 50.0000 ' / in.	CHECKED - LP	REVISED -
	PLOT DATE = 3/4/2019	DATE - 9/29/2016	REVISED -

STATE OF ILLINOIS
DEPARTMENT OF TRANSPORTATION

DISTRICT ONE
STANDARD TRAFFIC SIGNAL DESIGN DETAILS

SCALE: NONE | SHEET 1 OF 7 SHEETS | STA. TO STA.

F.A.U. RTE.	SECTION	COUNTY	TOTAL SHEETS	SHEET NO.
341	95-B	COOK	124	41
	TS–05	CONTRACT NO. 62D34		
		ILLINOIS	FED. AID PROJECT	

LOOP DETECTOR NOTES

1. EACH PAIR OF LOOP WIRES SHALL BE PLACED IN A SEPARATE EMPTY COILABLE NONMETALLIC CONDUIT FROM THE EDGE OF PAVEMENT TO THE HANDHOLE. SPACING BETWEEN THE HOLES DRILLED IN THE PAVEMENT SHALL NOT BE LESS THAN 6" (150 mm). EMPTY COILABLE NONMETALLIC CONDUIT SHALL BE INCLUDED IN THE COST OF THE LOOP WIRE.

2. THE NUMBER OF LOOP TURNS SHALL BE AS RECOMMENDED BY THE AMPLIFIER MANUFACTURER. ALL ADJACENT SIDES OF THE LOOPS SHALL BE INSTALLED IN SUCH A WAY THAT THE CURRENT FLOW IS IN THE SAME DIRECTION TO REINFORCE ITS MAGNETIC FIELDS FOR SMALL VEHICLE DETECTION.

3. EACH LOOP LEAD-IN SHALL BE IDENTIFIED AND PERMANENTLY TAGGED IN THE HANDHOLE. EACH LEAD-IN CABLE TAG SHALL INDICATE THE LOCATION OF THE LOOP, LOOP ROTATION (CLOCKWISE/COUNTERCLOCKWISE), LOOP LEAD-IN DIRECTION (IN OR OUT), LOOP CABLE NUMBER AND LOCATION IN CABINET, AND NUMBER OF TURNS IN THE DETECTOR LOOPS IN WATER PROOF INK AS INDICATED ON THE DISTRICT 1 STANDARD TRAFFIC SIGNAL DESIGN DETAIL. THE CONTRACTOR SHALL MARK LOOP LOCATIONS ON RECORD DRAWINGS AND PRESENT TO THE ENGINEER AFTER FINAL INSPECTION. LOOPS SHALL BE MARKED BY LANE AND LOOP NUMBER. SEE DETAIL BELOW.

4. ALL LOOP CABLE SHALL BE FASTENED WITH PLASTIC TIE WRAP TO THE HANDHOLE HOOKS.

5. IN ASPHALT PAVEMENT, LOOPS SHOULD BE PLACED IN THE BINDER AND DIVEHOLES MARKED AT THE CURB WITH A SAW-CUT. THE SAW-CUT SHALL BE CUT IN ACCORDANCE WITH LOCAL AND E.P.A. DUST CONTROL REQUIREMENTS. DETECTOR LOOP(S) SHALL NOT BE INSTALLED IN WET CONDITIONS AND THE SAW-CUTS MUST BE FREE OF DEBRIS AND RESIDUE SUCH AS DUST AND WATER WHICH IS TO BE ACHIEVED BY THE USE OF COMPRESSED AIR, WIRE BRUSHING AND HEAT DRYING ACCORDING TO SEALANT MANUFACTURER REQUIREMENTS. THE DETECTOR WIRE SHALL BE HELD IN PLACE BY THE USE OF FORM WEDGES. WEDGES SHALL BE SPACED NO MORE THAN 18" (450 mm) APART.

6. LOOP SPLICES SHALL BE SOLDERED USING A SOLDERING IRON. BLOW TORCHES OR OTHER DEVICES WHICH OXIDIZE COPPER CABLE SHALL NOT BE ALLOWED FOR SOLDERING OPERATIONS. SEE DETAIL BELOW RIGHT.

7. PREFORMED DETECTOR LOOPS SHALL BE USED, AS SHOWN ON THE PLANS, WHERE NEW CONCRETE PAVEMENT IS PROPOSED. THE INSTALLATION OF PREFORMED LOOPS SHALL BE IN ACCORDANCE WITH THE DISTRICT 1 SPECIFICATIONS OR AS DIRECTED BY THE ENGINEER.

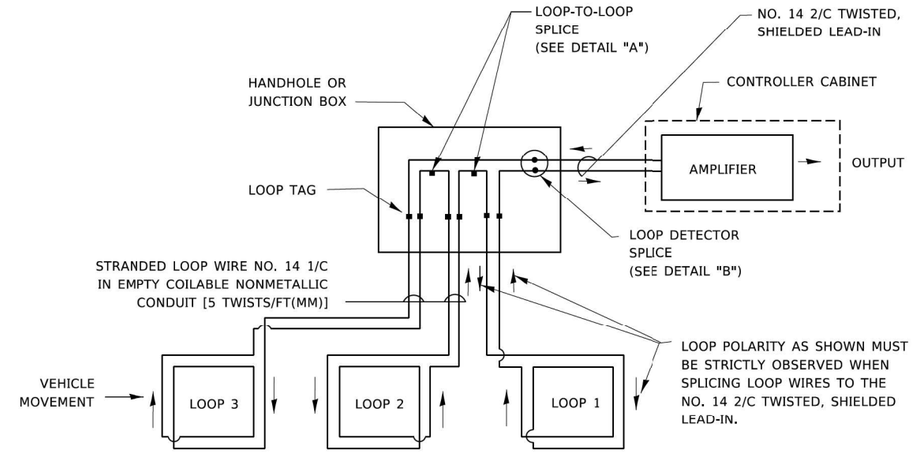

DETECTOR LOOP WIRING SCHEMATIC

- LOOPS SHALL BE SPLICED IN SERIES. SAW-CUTS SHALL BE A MINIMUM WIDTH OF 5/16" (8 mm).
- SAW-CUT DEPTHS SHALL BE 3" (75 mm). IF IN CONCRETE,
- THE SAW-CUT DEPTH SHALL BE TO THE TOP OF THE REINFORCEMENT.
- LOOP CORNERS SHALL BE DRILLED WITH A 2" (50 mm) DIAMETER CORE.

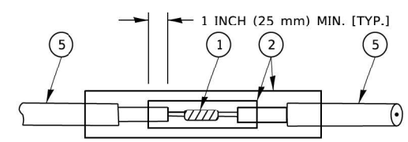

DETAIL "A"
LOOP-TO-LOOP SPLICE

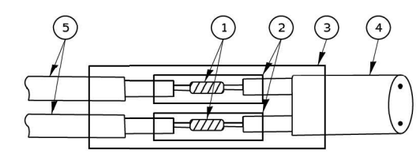

DETAIL "B"
LOOP-TO-CONTROLLER SPLICE

TYPE I LOOP

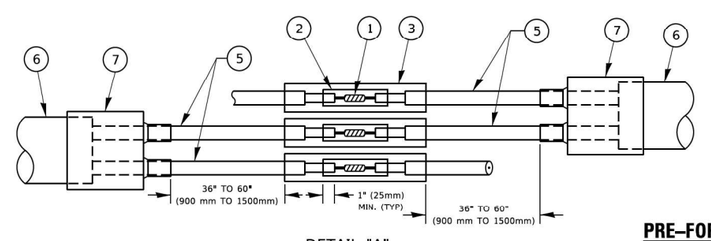

DETAIL "A"
LOOP-TO-LOOP SPLICE

PRE-FORMED LOOP

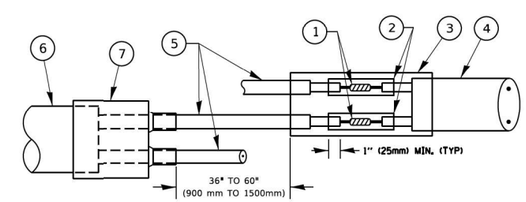

DETAIL "B"
LOOP-TO-CONTROLLER SPLICE

LOOP LEAD-IN CABLE TAG

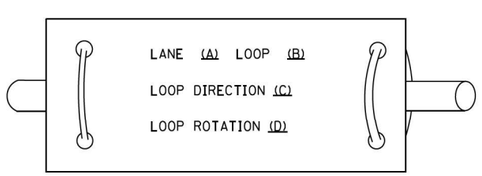

A. LANE 1 IS THE LANE CLOSEST TO THE CENTERLINE OF THE ROADWAY
B. LOOP #1 IS THE LOOP IN THE LANE CLOSEST TO THE INTERSECTION.
C. LABEL LOOP CABLE "IN" OR LOOP CABLE "OUT".
D. LABEL LOOP CABLE CLOCKWISE OR LOOP CABLE COUNTERCLOCKWISE.

LOOP DETECTOR SPLICE

1. WESTERN UNION SPLICE SOLDERED WITH ROSIN CORE FLUX. ALL EXPOSED SURFACES OF THE SOLDER SHALL BE SMOOTH. THE WESTERN UNION SPLICES SHALL BE STAGGERED.
2. WCSMW 30/100 HEAT SHRINK TUBE, MINIMUM LENGTH 3" (75 mm), UNDERWATER GRADE.
3. WCS 200/750 HEAT SHRINK TUBE, MINIMUM LENGHT 6" (150 mm), UNDERWATER GRADE.
4. NO. 14 2/C TWISTED, SHIELDED CABLE.
5. LOOP CONDUCTOR WITH FLEXIBLE PLASTIC TUBE. PRE-FORMED LOOP
6. XL POLYOLEFIN 2 CONDUCTOR
7. BREAKOUT SEALS. TYCO CBR-2 OR APPROVED EQUAL

TRAFFIC SIGNAL MAST ARM AND SIGNAL POST

MAST ARM MOUNTED SIGNALS IN EXISTING, PROPOSED OR FUTURE SIDEWALK/BICYCLE PATH AREA. INTERSECTION SHOWN WITH PEDESTRIAN SIGNALS AND PEDESTRIAN PUSHBUTTON DETECTORS.

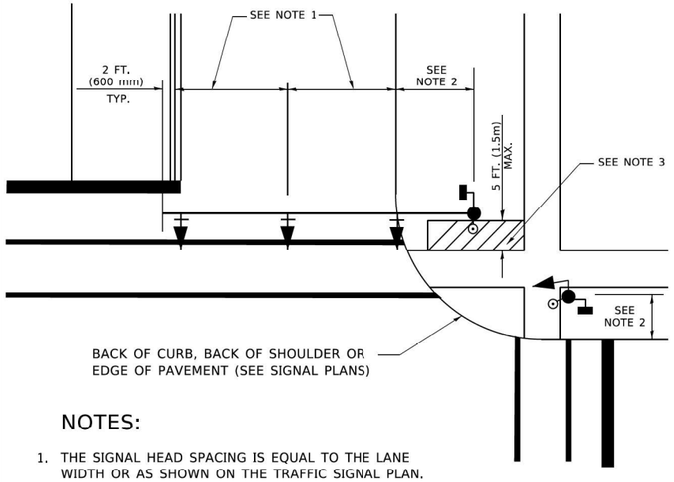

NOTES:

1. THE SIGNAL HEAD SPACING IS EQUAL TO THE LANE WIDTH OR AS SHOWN ON THE TRAFFIC SIGNAL PLAN.
2. REFER TO THE TRAFFIC SIGNAL EQUIPMENT OFFSET TABLE.
3. PROVIDE A LEVEL ALL-WEATHER SURFACE (CONCRETE SIDEWALK, ASPHALT BICYCLE PATH SURFACE OR MATCHING MATERIAL TO THE ADJACENT SURFACE) UP TO THE MAST ARM SHAFT OR THE SIGNAL POST.
4. THE FACE OF THE PEDESTRIAN PUSHBUTTON SHALL BE PARALLEL TO THE CROSSWALK TO BE USED.
5. THE LOCATIONS AND INSTALLATION OF PEDESTRIAN SIGNAL HEADS AND PEDESTRIAN PUSHBUTTONS SHALL MEET THE REQUIREMENTS OF THE MUTCD AND INFORMATION FOUND IN THE "AMERICANS WITH DISABILITIES ACT ACCESSIBILITY GUIDELINES FOR BUILDINGS AND FACILITIES."

PEDESTRIAN SIGNAL POST AND PEDESTRIAN PUSH BUTTON POST

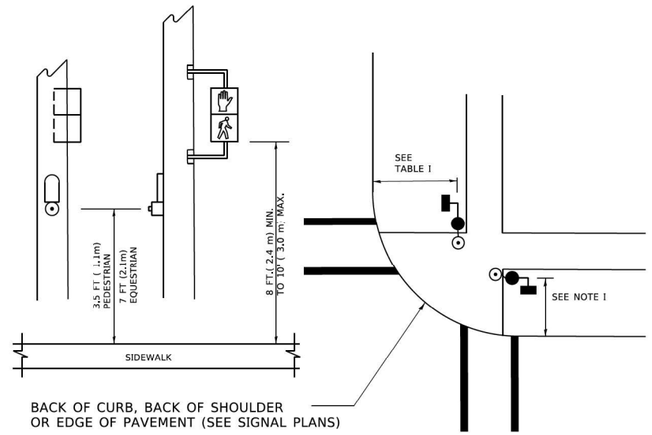

NOTES:

1. REFER TO THE TRAFFIC SIGNAL EQUIPMENT OFFSET TABLE.
2. PROVIDE A LEVEL ALL-WEATHER SURFACE (CONCRETE SIDEWALK, ASPHALT BICYCLE PATH SURFACE OR MATCHING MATERIAL TO THE ADJACENT SURFACE) UP TO THE PEDESTRIAN SIGNAL POST OR THE PEDESTRIAN PUSH BUTTON POST.
3. THE FACE OF THE PEDESTRIAN PUSHBUTTON SHALL BE PARALLEL TO THE CROSSWALK TO BE USED.
4. THE LOCATIONS AND INSTALLATION OF PEDESTRIAN SIGNAL HEADS AND PEDESTRIAN PUSHBUTTONS SHALL MEET THE REQUIREMENTS OF THE MUTCD AND INFORMATION FOUND IN THE "AMERICANS WITH DISABILITIES ACT ACCESSIBILITY GUIDELINES FOR BUILDINGS AND FACILITIES."

RECOMMENDED PUSHBUTTON LOCATIONS

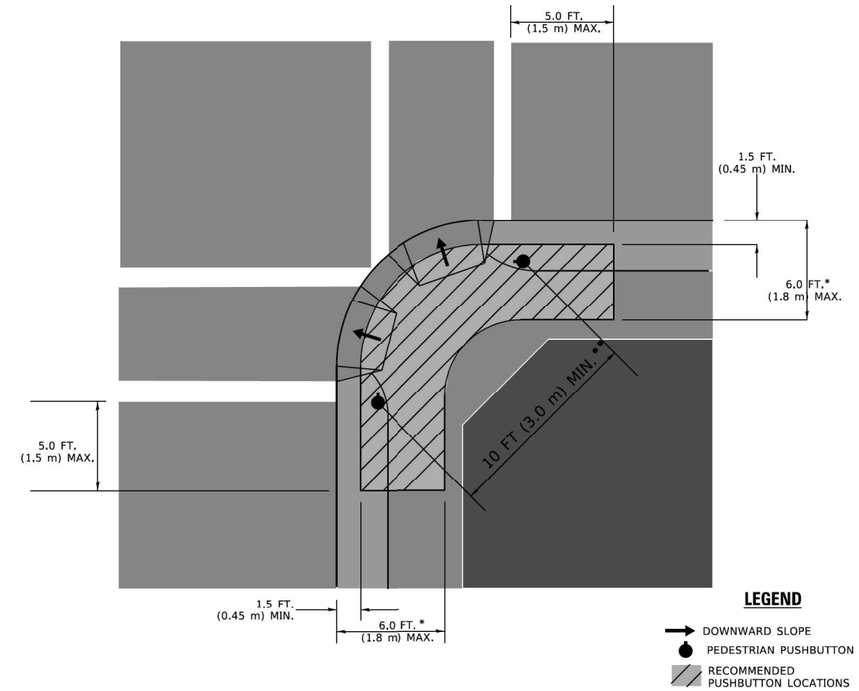

* WHERE THERE ARE CONSTRAINTS THAT MAKE IT IMPRACTICAL TO PLACE THE PEDESTRIAN PUSHBUTTON BETWEEN 1.5 FT (0.45 m) AND 6 FT (1.8 m) FROM THE EDGE OF THE CURB, SHOULDER, OR PAVEMENT, IT SHOULD NOT BE FURTHER THAN 10 FT (3 m) FROM THE EDGE OF CURB, SHOULDER, OR PAVEMENT.

** WHERE THERE ARE CONSTRAINTS ON A PARTICULAR CORNER THAT MAKE IT IMPRACTICAL TO PROVIDE THE 10 FT (3 m) SEPERATION BETWEEN THE TWO PEDESTRIAN PUSHBUTTONS, THE PUSHBUTTONS MAY BE PLACED CLOSER TOGETHER OR ON THE SAME POLE.

NOTES:

1. PEDESTRIAN SIGNAL HEADS SHALL BE MOUNTED WITH THE BOTTOM OF THE SIGNAL HOUSING INCLUDING BRACKETS NOT LESS THAN 8 FT (2.4 m) OR MORE THAN 10 FT (3 m) ABOVE SIDEWALK LEVEL, AND SHALL BE POSITIONED AND ADJUSTED TO PROVIDE MAXIMUM VISIBILITY AT THE BEGINNING OF THE CONTROLLED CROSSWALK.
2. THE BOTTOM OF THE SIGNAL HOUSING (INCLUDING BRACKETS) OF A VEHICULAR SIGNAL FACE THAT IS NOT LOCATED OVER A HIGHWAY SHALL BE AT LEAST 8 FT (2.4 m) BUT NOT MORE THAN 19 FT (5.8 m) ABOVE THE SIDEWALK OR, IF THERE IS NO SIDEWALK, ABOVE THE PAVEMENT GRADE AT THE CENTER OF THE ROADWAY.
3. THE BOTTOM OF THE SIGNAL HOUSING AND ANY RELATED ATTACHMENTS TO A SIGNAL FACE LOCATED OVER ANY PORTION OF A HIGHWAY SHALL BE ACCORDING TO CURRENT STATE STANDARDS 877001, 877002, 877006, 877011 AND 877012 WITH A MINIMUM OF 16 FT (5.0 m) AND A MAXIMUM OF 18 FT. (5.5 m) FROM THE HIGHEST POINT OF PAVEMENT.
4. THE BOTTOM OF THE TEMPORARY SPAN WIRE MOUNTED SIGNAL HOUSING AND ANY RELATED ATTACHMENTS TO A SIGNAL FACE LOCATED OVER ANY PORTION OF A HIGHWAY SHALL BE ACCORDING TO CURRENT STATE STANDARD 880001 WITH A MINIMUM OF 17 FT (5.18 m) FROM THE HIGHEST POINT OF PAVEMENT.
5. THE TOP OF THE SIGNAL HOUSING OF A SIGNAL FACE LOCATED OVER ANY PORTION OF A HIGHWAY SHALL NOT BE MORE THAN 25.6 FT (7.8 m) ABOVE THE PAVEMENT.

TRAFFIC SIGNAL EQUIPMENT OFFSET

TRAFFIC SIGNAL EQUIPMENT	COMBINATION CONCRETE CURB AND GUTTER (MINIMUM DISTANCE FROM BACK OF CURB TO CENTERLINE OF FOUNDATION)	SHOULDER/NON-CURBED AREA (MINIMUM DISTANCE FROM EDGE OF PAVEMENT TO CENTERLINE OF FOUNDATION)
TRAFFIC SIGNAL MAST ARM POLE	6 FT (1.8m)	SHOULDER WIDTH + 2 FT (0.6m), MINIMUM 10 FT (3.0m)
TRAFFIC SIGNAL POST	4 FT (1.2m)	SHOULDER WIDTH + 2 FT (0.6m), MINIMUM 10 FT (3.0m)
PEDESTRIAN SIGNAL POST	4 FT (1.2m)	SHOULDER WIDTH + 2 FT (0.6m), MINIMUM 10 FT (3.0m)
PEDESTRIAN PUSHBUTTON POST	4 FT (1.2m)	SHOULDER WIDTH + 2 FT (0.6m), MINIMUM 10 FT (3.0m)
TEMPORARY WOOD POLE	6 FT (1.8m)	SHOULDER WIDTH + 2 FT (0.6m), MINIMUM 10 FT (3.0m)
CONTROLLER CABINET	6 FT (1.8m) MINIMUM DISTANCE SEE NOTE 2	SHOULDER WIDTH + 6 FT (1.8m), MINIMUM 16 FT (4.9m) SEE NOTE 3.
SERVICE INSTALLATION, GROUND MOUNT	6 FT (1.8m) MINIMUM DISTANCE SEE NOTE 2	SHOULDER WIDTH + 6 FT (1.8m), MINIMUM 16 FT (4.9m) SEE NOTE 3.

NOTES:

1. CONTACT THE "AREA TRAFFIC SIGNAL MAINTENANCE AND OPERATIONS ENGINEER" FOR ASSISTANCE IN LOCATING THE TRAFFIC SIGNAL EQUIPMENT WHEN THERE ARE CONFLICTS WITH DITCHES OR THE MINIMUM OFFSET DISTANCES CANNOT BE MET.
2. MINIMUM DISTANCE FROM THE BACK OF CURB TO THE ROADWAY SIDE OF THE FOUNDATION.
3. MINIMUM DISTANCE FROM THE EDGE OF PAVEMENT TOTHE ROADWAY SIDE OF THE FOUNDATION.
4. ANY CHANGES TO THE OFFSETS OF THE FOUNDATIONS, FROM THE MINIMUM DISTANCES LISTED IN THE "TRAFFIC SIGNAL EQUIPMENT OFFSET" CHART AND THE TRAFFIC SIGNAL INSTALLATION PLAN, COULD EFFECT THE PLACEMENT OF THE SIGNAL HEADS, PEDESTRIAN SIGNAL HEADS AND THE PEDESTRIAN PUSHBUTTONS. THE SIGNAL HEAD PLACEMENT ON THE MAST ARMS SHALL REMAIN AS PER THE TRAFFIC SIGNAL INSTALLATION PLAN AND THE "TRAFFIC SIGNAL MAST ARM AND SIGNAL POST" DETAIL ABOVE. THE PROPOSED MAST ARM LENGTHS MAY NEED TO BE REVISED TO MEET THE ABOVE REQUIREMENTS. THE PEDESTRIAN SIGNAL HEADS AND PEDESTRIAN PUSHBUTTONS MUST MEET THE REQUIREMENTS UNDER THE DETAILS ON THIS SHEET.

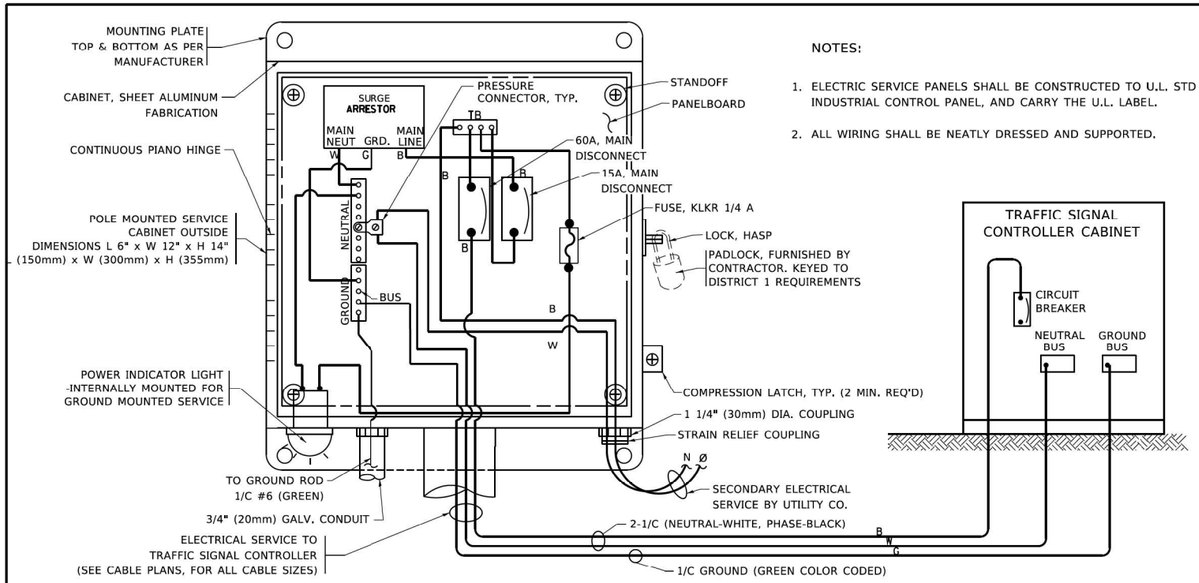

NOTES:

1. ELECTRIC SERVICE PANELS SHALL BE CONSTRUCTED TO U.L. STD 508, INDUSTRIAL CONTROL PANEL, AND CARRY THE U.L. LABEL.
2. ALL WIRING SHALL BE NEATLY DRESSED AND SUPPORTED.

ELECTRICAL SERVICE – PANEL DIAGRAM (TYPICAL FOR POLE AND GROUND MOUNTED SERVICE)

SERVICE INSTALLATION POLE MOUNT (SHOWN)

(NOT TO SCALE)

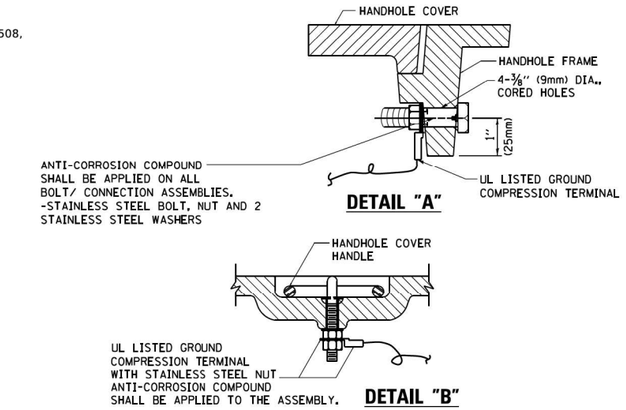

NOTES:

GROUNDING SYSTEM

1. THE GROUNDING SYSTEM SHALL CONSIST OF AN INSULATED CONDUCTOR TYPE XLP, NO. 6 A.W.G., STRANDED COPPER TO BE INSTALLED IN RACEWAYS. THE GROUNDING CABLE SHALL BE INSTALLED IN A CONTINUOUS MANNER AS SHOWN ON THE CABLE PLAN PROVIDED. ALL GROUNDING CONDUCTORS SHALL BE BONDED TO METAL ENCLOSURE (HANDHOLE, POST, MAST ARM, CONTROLLER, ETC,). GROUND ROD SHALL BE 3/4" DIA. x 10'-0" (20mm x 3.0m) LONG, COPPER CLAD. ONE GROUND ROD SHALL BE INSTALLED AT ALL POST FOUNDATIONS, POLE FOUNDATIONS, CONTROLLER CABINET FOUNDATION AND ELECTRICAL SERVICE INSTALLATION AS INDICATED ON THE CABLE PLAN. IF THERE ARE ANY SPECIAL CONDITIONS SUCH AS SUB-SURFACE CONDITIONS OR INSTALLATION PROBLEMS, THE RESIDENT ENGINEER SHALL BE NOTIFIED OR CONTACT THE BUREAU OF TRAFFIC, ILLINOIS DEPARTMENT OF TRANSPORTATION DISTRICT ONE AT (847) 705-4139.
2. THE NEUTRAL CONDUCTOR AND THE GROUND CONDUCTOR SHALL BE CONNECTED IN THE SERVICE INSTALLATION. AT NO OTHER POINT IN THE TRAFFIC SIGNAL SYSTEM SHALL THE NEUTRAL AND GROUND CONDUCTORS BE CONNECTED.
3. ALL EQUIPMENT GROUNDING CONDUCTORS SHALL TERMINATE AT THE GROUND BUS IN THE CONTROLLER CABINET.
4. THE CONTRACTOR SHALL PROVIDE A GROUND CABLE WITH CONNECTORS BETWEEN THE HANDHOLE COVER AND HANDHOLE FRAME.

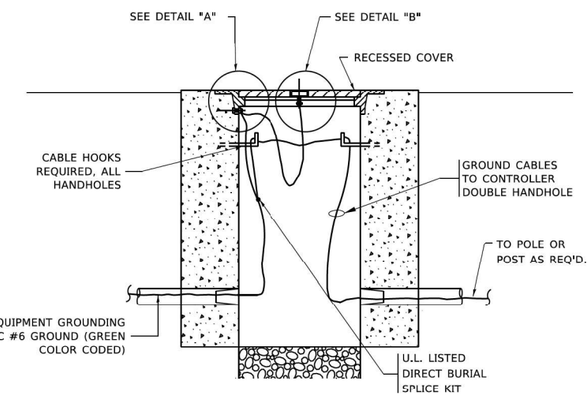

HANDHOLE COVER & FRAME – GROUNDING DETAIL

(NOT TO SCALE)

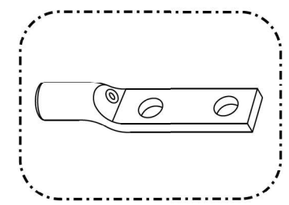

HEAVY-DUTY COMPRESSION TERMINAL (BURNDY TYPE YGHA OR APPROVED EQUAL)

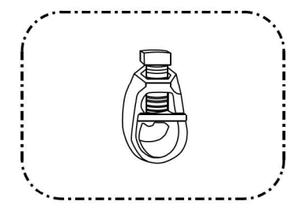

¾" (20mm) HEAVY-DUTY GROUND ROD CLAMP (BURNDY TYPE GRC OR APPROVED EQUAL)

NOTES:

- ALL CLAMPS SHALL BE BRONZE OR COPPER, UL APPROVED.
- GROUND CABLE SHALL BE LOOPED OVER HOOKS IN THE HANDHOLES
  6.5' (2.0m) SLACK SHALL BE PROVIDED IN SINGLE HANDHOLES
  13' (4.0m) OF SLACK SHALL BE PROVIDED IN DOUBLE HANDHOLES.
  5' (1.4m) OF SLACK SHALL BE PROVIDED BETWEEN FRAME AND COVER.

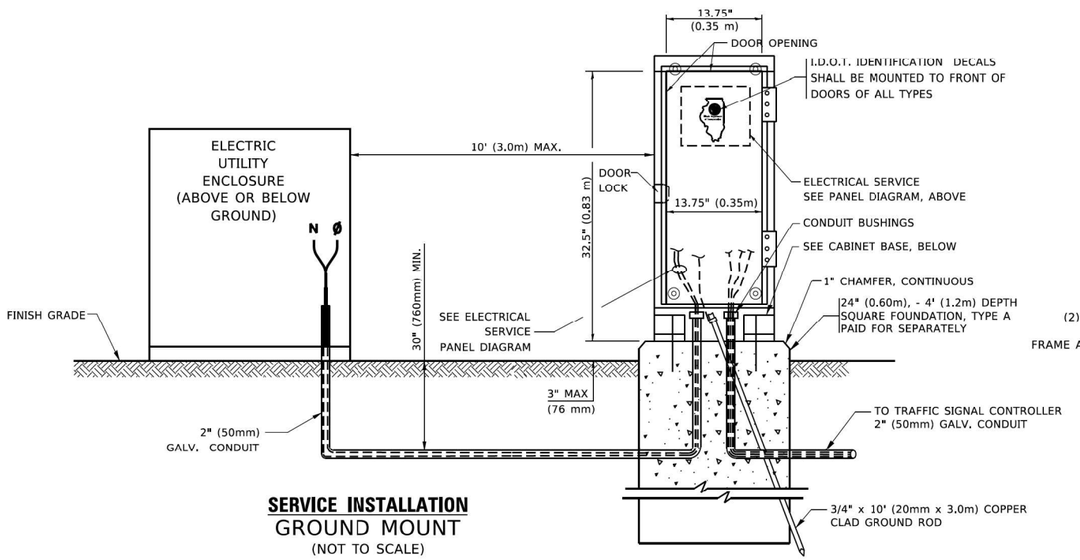

SERVICE INSTALLATION

GROUND MOUNT

(NOT TO SCALE)

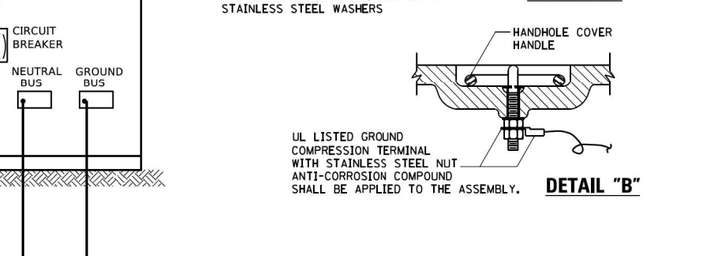

EXISTING HANDHOLE COVER & FRAME – GROUNDING DETAIL

(NOT TO SCALE)

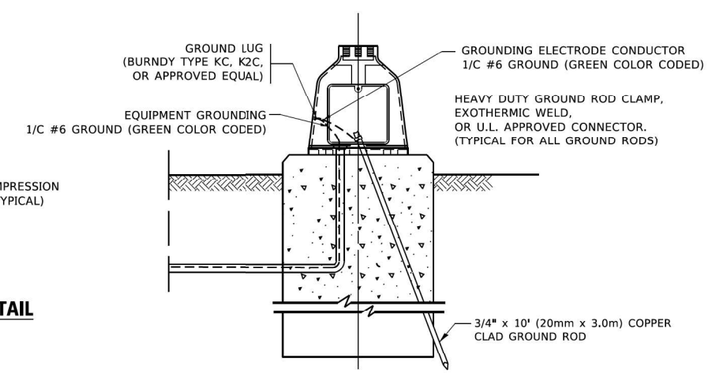

MAST ARM POLE /POST–GROUNDING DETAIL

(NOT TO SCALE)

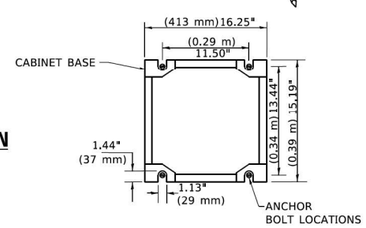

CABINET – BASE BOLT PATTERN

(NOT TO SCALE)

MODE.: Default
FILE NAME: pw:\\LDB4EBIDINTEG.illinois.gov:PWIDOT\Documents\IDOT Offices\District 1\Projects\DistStd22x34\CADData\CADsheets\ts05.dgn

AEG ATLAS ENGINEERING GROUP, LTD.	USER NAME = footemj	DESIGNED -	REVISED -	STATE OF ILLINOIS DEPARTMENT OF TRANSPORTATION	DISTRICT ONE STANDARD TRAFFIC SIGNAL DESIGN DETAILS	F.A.U. RTE.	SECTION	COUNTY	TOTAL SHEETS / SHEET NO.
		DRAWN -	REVISED -			341	95-B	COOK	124 / 44
	PLOT SCALE = 50.0000 ' / in.	CHECKED -	REVISED -			TS-05		CONTRACT NO. 62D34	
	PLOT DATE = 3/4/2019	DATE -	REVISED -		SCALE: NONE / SHEET 4 OF 7 SHEETS / STA. TO STA.			ILLINOIS / FED. AID PROJECT	

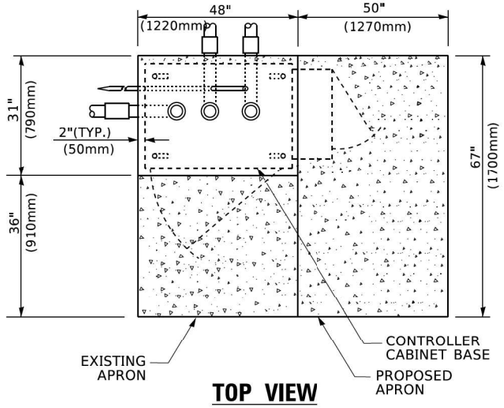

TOP VIEW

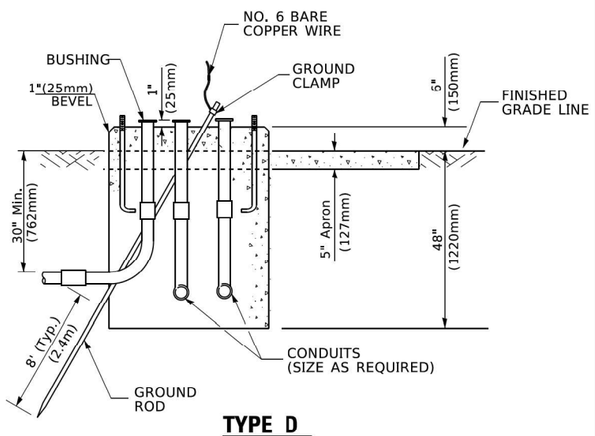

TYPE D
FOR GROUND MOUNTED CONTROLLER CABINET AND UPS BATTERY CABINET

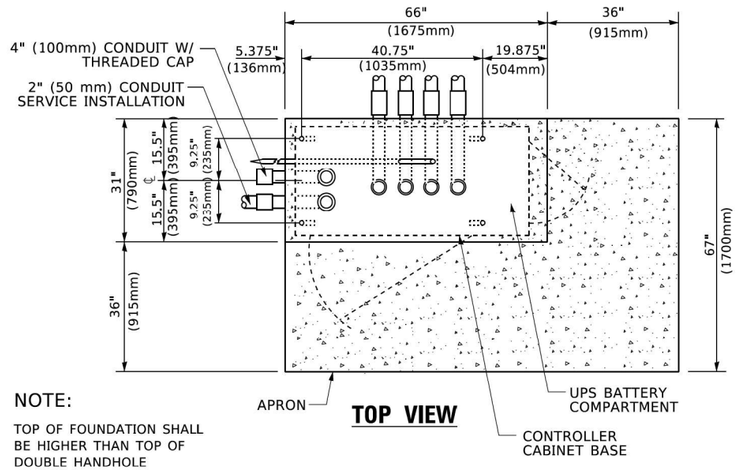

NOTE:

TOP OF FOUNDATION SHALL BE HIGHER THAN TOP OF DOUBLE HANDHOLE

TOP VIEW

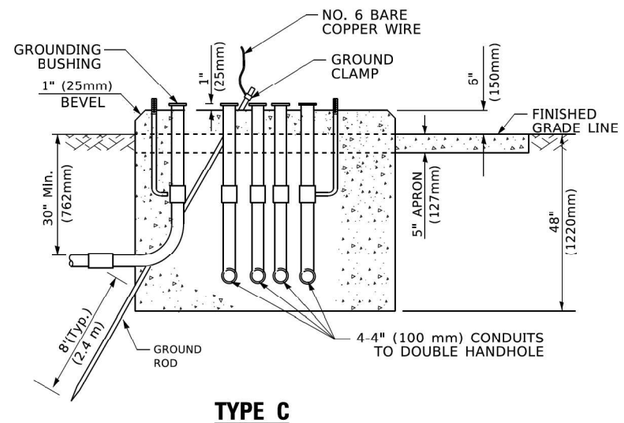

TYPE C
FOR GROUND MOUNTED SUPER P (TYPE IV) AND SUPER R (TYPE V) CONTROLLER CABINETS

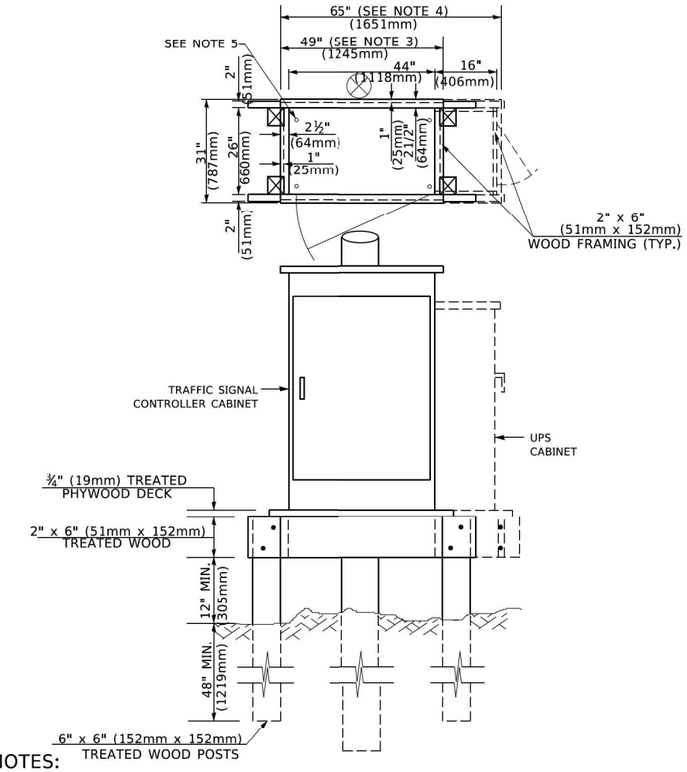

NOTES:

1. BASED ON CONTROLLER CABINET TYPE IV WITH BASE DIMENSIONS OF 26" x 44" (660mm x 1118mm). ADJUST PLATFORM SIZE TO FIT CABINET BASE DIMENSIONS BEING SUPPLIED
2. BASED ON UNINTERRUPTIBLE POWER SUPPLY CABINET WITH BASE DIMENSIONS OF 16" x 25" (406mm x 635mm). ADJUST PLATFORM SIZE TO FIT CABINET BASE DIMENSIONS BEING SUPPLIED.
3. PLATFORM SIZE FOR CONTROLLER CABINET TYPE IV.
4. PLATFORM SIZE FOR CONTROLLER CABINET TYPE IV AND UNINTERRUPTIBLE POWER SUPPLY CABINET.
5. DRILLED HOLES THROUGH THE PLATFORM BASE TO MATCH THE CONTROLLER CABINET BOLT TEMPLATE. FASTEN THE CONTROLLER CABINET TO THE PLATFORM WITH CARRIAGE BOLTS, WASHERS AND NUTS.
6. FASTEN ALL SUPPORT WOOD FRAMING TO THE WOOD POSTS WITH 2 LAG SCREWS FOR EACH CONNECTION..

TEMPORARY SIGNAL CONTROLLER WOOD SUPPORT PLATFORM

CABLE SLACK LENGTH	FEET	METER
HANDHOLE	6.5	2.0
DOUBLE HANDHOLE	13.0	4.0
SIGNAL POST	2.0	0.6
MAST ARM	2.0	0.6
CONTROLLER CABINET	1.5	0.5
FIBER OPTIC AT CABINET	13.0	4.0
ELECTRIC SERVICE AT (CABINET OR SERVICE LOCATION)	1.5	0.5
GROUND CABLE (SIGNAL POST, MAST ARM, CABINET)	1.5	0.5
GROUND CABLE (BETWEEN FRAME AND COVER)	5.0	1.6

CABLE SLACK

VERTICAL CABLE LENGTH	FEET	METER
MAST ARM POLE (MAST ARM MOUNTED SIGNAL HEAD) (L = MAST ARM LENGTH - DISTANCE TO SIGNAL HEAD FROM END OF ARM)	20.0+L	6.0+L
BRACKET MOUNTED (MAST ARM POLE OR SIGNAL POLE)	13.0	4.0
PEDESTRIAN PUSH BUTTON	6.0	2.0
SERVICE INSTALLATION POLE MOUNT TO SERVICE DROP	13.5	4.1
SERVICE INSTALLATION POLE MOUNT TO GROUND	13.5	4.1
SERVICE INSTALLATION GROUND MOUNT	6.0	2.0
FOUNDATION (SIGNAL POST, MAST ARM POLE, CONTROLLER CABINET, SERVICE-GROUND MOUNT)	3.0	1.0

VERTICAL CABLE LENGTH

FOUNDATION	DEPTH
TYPE A - Signal Post	4'-0" (1.2m)
TYPE C - CONTROLLER W/ UPS	4'-0" (1.2m)
TYPE D - CONTROLLER	4'-0" (1.2m)
SERVICE INSTALLATION, GROUND MOUNT, TYPE A - SQUARE	4'-0" (1.2m)

DEPTH OF FOUNDATION

Mast Arm Length	① Foundation Depth	Foundation Diameter	Spiral Diameter	Quantity of Rebars	Size of Rebars
Less than 30' (9.1 m)	10'-0" (3.0 m)	30" (750mm)	24" (600mm)	8	6(19)
Greater than or equal to 30' (9.1 m) and less than 40' (12.2 m)	13'-6" (4.1 m)	30" (750mm)	24" (600mm)	8	6(19)
	11'-0" (3.4 m)	36" (900mm)	30" (750mm)	12	7(22)
Greater than or equal to 40' (12.2 m) and less than 50' (15.2 m)	13'-0" (4.0 m)	36" (900mm)	30" (750mm)	12	7(22)
Greater than or equal to 50' (15.2 m) and up to 55' (16.8 m)	15'-0" (4.6 m)	36" (900mm)	30" (750mm)	12	7(22)
Greater than or equal to 56' (16.8 m) and less than 65' (19.8 m)	21'-0" (6.4 m)	42" (1060mm)	36" (900mm)	16	8(25)
Greater than or equal to 65' (19.8 m) and up to 75' (22.9 m)	25'-0" (7.6 m)	42" (1060mm)	36" (900mm)	16	8(25)

NOTES:

1. These foundation depths are for sites which have cohesive soils (clayey silt, sandy clay, etc.) along the length of the shaft, with an average Unconfined Compressive Strength (Qu) > 1.0 tsf (100 kpa). This strength shall be verified by boring data prior to construction or with testing by the Engineer during foundation drilling. The Bureau of Bridges & structures should be contacted for a revised design if other conditions are encountered.
2. Combination mast arm assemblies under 55 feet (16.8 m) shall use 36" (900 mm) diameter foundations.
3. Combination mast arm assemblies under 56 feet (16.8 m) through 75 feet (22.9 m) shall use 42" (1060 mm) diameter foundations
4. For mast arm assemblies with dual arms refer to state standard 878001..

DEPTH OF MAST ARM FOUNDATIONS, TYPE E

MODE: Default
FILE NAME: pw:\\IL084EBIDINTEG.illinois.gov:PWIDOT\Documents\IDOT Offices\District 1\Projects\DistStd22x34\CADData\CADsheets\ts05.dgn

AEG ATLAS ENGINEERING GROUP, LTD.

USER NAME = footemj	DESIGNED -	REVISED -	
	DRAWN -	REVISED -	
PLOT SCALE = 50.0000 ' / in.	CHECKED -	REVISED -	
PLOT DATE = 3/4/2019	DATE -	REVISED -	

STATE OF ILLINOIS
DEPARTMENT OF TRANSPORTATION

DISTRICT ONE
STANDARD TRAFFIC SIGNAL DESIGN DETAILS

SCALE: NONE | SHEET 5 OF 7 SHEETS | STA. | TO STA.

F.A.U. RTE.	SECTION	COUNTY	TOTAL SHEETS	SHEET NO.
341	95-B	COOK	124	45
	TS-05	CONTRACT NO. 62D34		
		ILLINOIS FED. AID PROJECT		

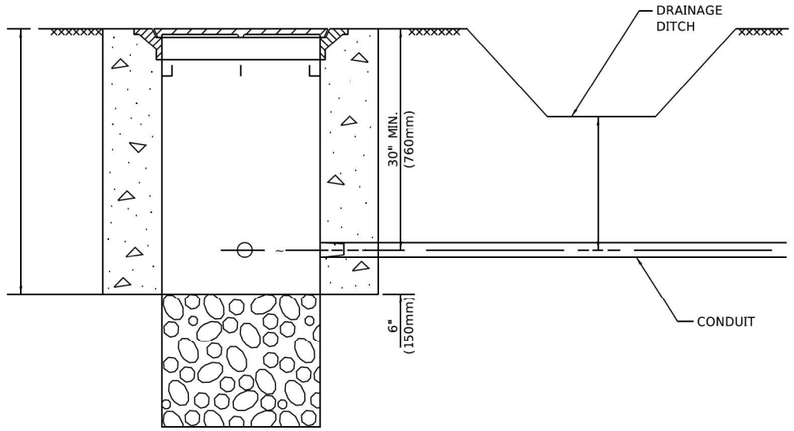

NOTES:

1. CONDUIT DEPTH SHALL BE A MINIMUM OF 30" (760mm) BELOW THE BOTTOM OF THE DRAINAGE DITCH OR ANY SLOPING GROUND
2. THE MINIMUM CONDUIT DEPTH APPLIES TO ALL CONDUIT PLACED UNDER ROADWAY PAVEMENT, MULTI-USE PATHS, SIDEWALKS AND SOIL SURFACES.
3. THE MINIMUM CONDUIT DEPTH APPLIES TO ALL HANDHOLES, HEAVY DUTY HANDHOLES AND DOUBLE HANDHOLES.

HANDHOLE WITH MINIMUM CONDUIT DEPTH

(NOT TO SCALE)

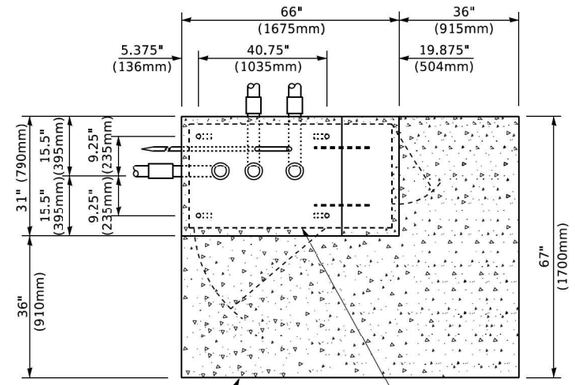

TOP VIEW

(NOT TO SCALE)

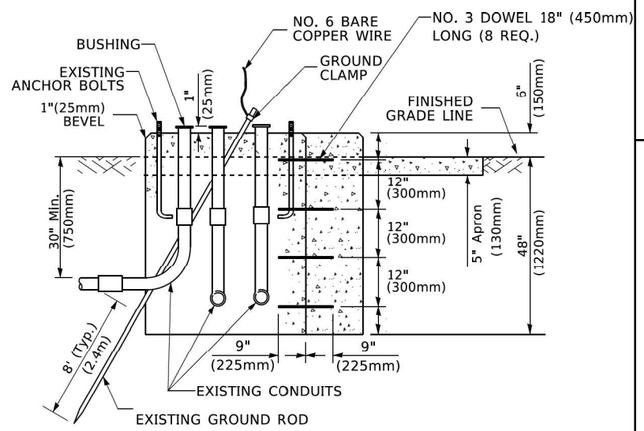

MODIFY EXISTING TYPE "D" FOUNDATION TO TYPE "C" FOUNDATION

(NOT TO SCALE)

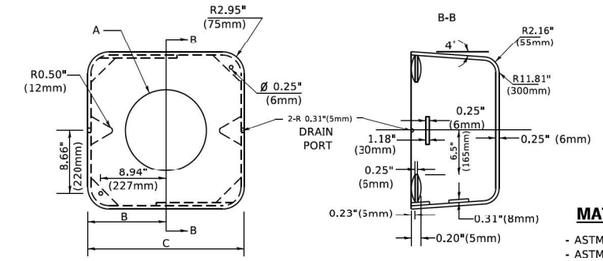

MATERIAL

- ASTM A36 STEEL
- ASTM A-123 HOT DIPPED GALVANIZED

A	B	C	HEIGHT	WEIGHT
VARIES	9.5"(241mm)	19"(483mm)	7" (178mm) - 12" (300mm)	53 lbs (24kg)
VARIES	10.75"(273mm)	21.5"(546mm)	7" (178mm) - 12" (300mm)	68 lbs (31 kg)
VARIES	13.0"(330mm)	26"(660mm)	7" (178mm) - 12" (300mm)	81 lbs (37 kg)
VARIES	18.5"(470mm)	37"(940mm)	7" (178mm) - 12" (300mm)	126 lbs (57 kg)

SHROUD

NOTES:

1. DIMENSION "A" IS EQUAL TO THE DIAMETER OF THE MAST ARM POLE AT THE TOP OF THE SHROUD. THE SHROUD SHALL BE TIGHT TO THE MAST ARM POLE.
2. THE SUPPLIER SHALL VERIFIED THE ABOVE DIMENSIONS BASED ON MAST ARM REQUIREMENTS.
3. THE HEIGHT OF THE SHROUD SHALL COVER THE ANCHOR BOLTS, NUTS AND MAST ARM POLE BASE.

NOTE:

SUPPORT EXISTING CABINET AND CONTROL EQUIPMENT ABOVE FOUNDATION TO KEEP TRAFFIC SIGNAL FUNCTIONING WHILE FOUNDATION MODIFICATION WORK IS PROCEEDING.

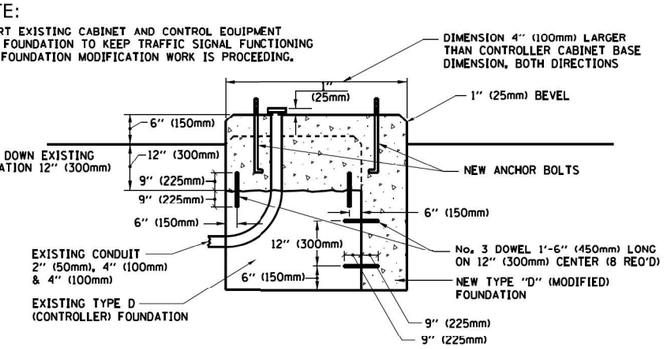

MODIFY EXISTING TYPE "D" FOUNDATION

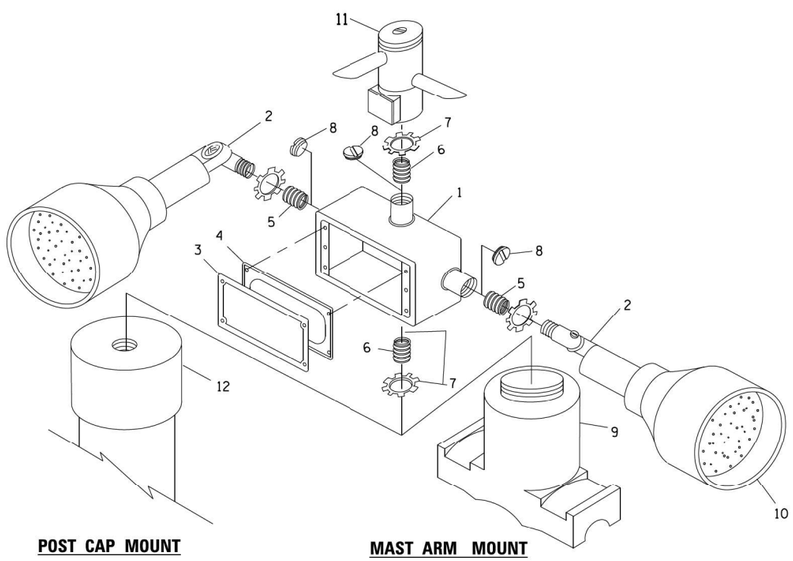

POST CAP MOUNT

MAST ARM MOUNT

EMERGENCY VEHICLE DETECTOR WITH CONFIRMATION BEACON MOUNTING DETAIL

ITEM NO.	IDENTIFICATION
1	OUTLET BOX- GALV. 21 CU.IN. (0.000344 CU-M)
2	LAMP HOLDER AND COVER
3	OUTLET BOX COVER
4	RUBBER COVER GASKET
5	REDUCING BUSHING
6	¾"(19 mm) CLOSE NIPPLE
7	¾"(19 mm) LOCKNUT
8	¾"(19 mm) HOLE PLUG
9	SADDLE BRACKET - GALV.
10	6 WATT PAR 38 LED FLOOD LAMP
11	DETECTOR UNIT
12	POST CAP [18 FT. (5.4 m) POST MIN.]

NOTES:

1. ALL ELECTRICAL ITEMS, EXCEPT ITEMS #2 AND #11 SHALL BE ALUMINUM OR GALVANIZED
2. ITEM #1- OZ/GEDNEY FSX-1-50 OR EQUIVALENT
   ITEM #2- MULBERRY CON-O-SHADE LAMP SHIELD OR EQUIVALENT
   ITEM #9- "BAND-IT" SADDLE BRACKET OR EQUIVALENT
3. WHEN POST MOUNTING IS SPECIFIED, ITEM #9 SHALL NOT BE REQUIRED. THE DETECTION UNIT SHALL BE MOUNTED DIRECTLY ON TOP OF THE CAP BY DRILLING AND TAPPING A 3/4 "(19 mm) HOLE WITH PIPE THREADS. THE POST CAP SHALL EITHER BE SCREWED TO THE TOP OF THE POST OR A MINIMUM OF 3 TIGHTENING SCREWS SHALL BE REQUIRED ON EACH CAP.

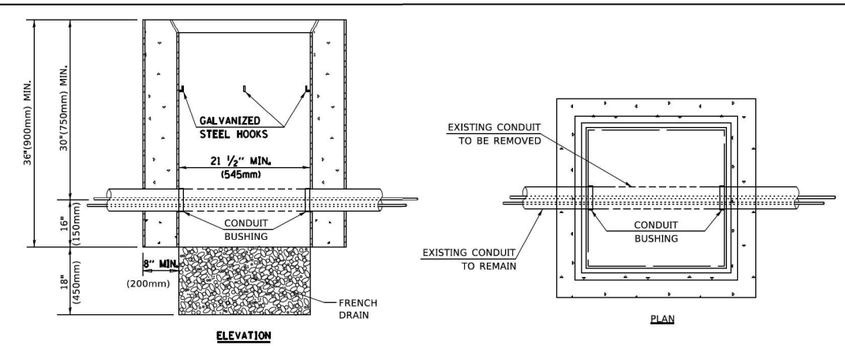

NOTES:

1. HANDHOLE CONSTRUCTED PER STATE STANDARD 814001.
2. REMOVAL OF THE EXISTING CONDUIT FROM THE HANDHOLE AND THE INSTALLATION OF THE CONDUIT BUSHINGS SHALL BE INCLUDED WITH THE COST OF THE HANDHOLE.

HANDHOLE TO INTERCEPT EXISTING CONDUIT

MODE: Default
FILE NAME: pw:\\IL084EBIDINTEG.illinois.gov:PWIDOT\Documents\IDOT Offices\District 1\Projects\DistStd22x34\CADdata\CADsheets\ts05.dgn

AEG ATLAS ENGINEERING GROUP, LTD.	USER NAME = footemj	DESIGNED -	REVISED -
		DRAWN -	REVISED -
	PLOT SCALE = 50.0000 ' / in.	CHECKED -	REVISED -
	PLOT DATE = 3/4/2019	DATE -	REVISED -

STATE OF ILLINOIS
DEPARTMENT OF TRANSPORTATION

DISTRICT ONE
STANDARD TRAFFIC SIGNAL DESIGN DETAILS

SCALE: NONE | SHEET 6 OF 7 SHEETS | STA. TO STA.

F.A.U. RTE.	SECTION	COUNTY	TOTAL SHEETS	SHEET NO.
341	95-B	COOK	124	46
	TS-05	CONTRACT NO. 62D34		
		ILLINOIS FED. AID PROJECT		

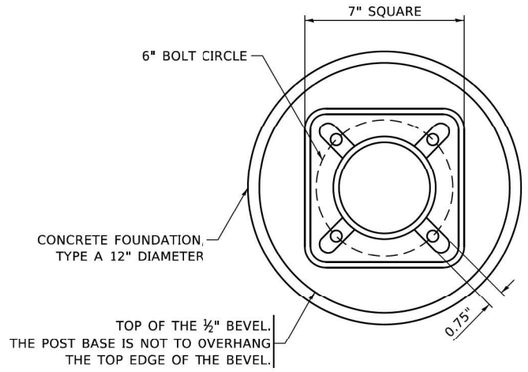

BOLT PATTERN

NOTE:

1. IF THE PEDESTRIAN SIGNAL POST FOUNDATION IS INSTALLED WITHIN OR BEHIND A BARRIER CURB, THE TOP OF THE FOUNDATION SHALL BE INSTALLED FLUSH WITH THE TOP OF THE BARRIER CURB.

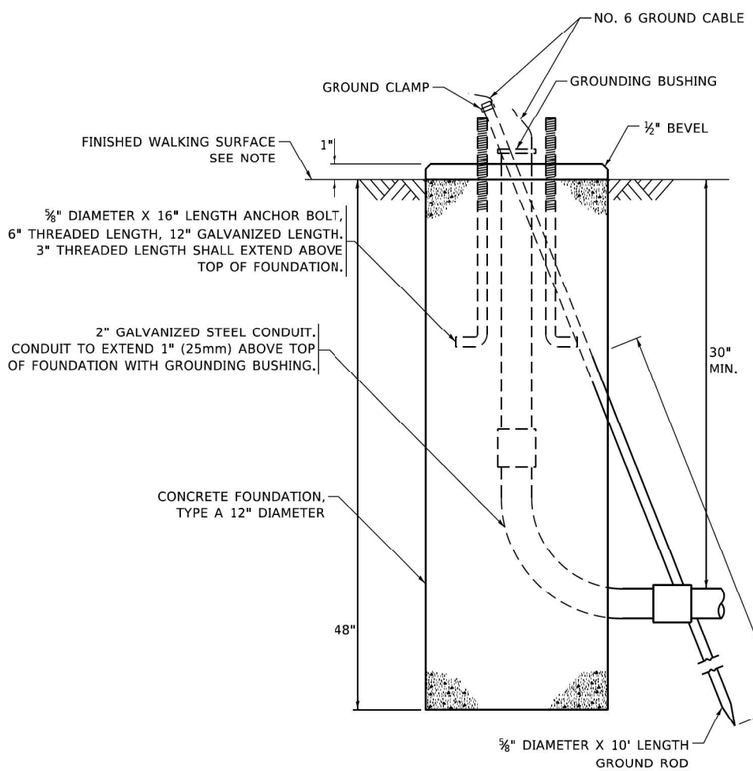

CONCRETE FOUNDATION, TYPE A 12–INCH DIAMETER

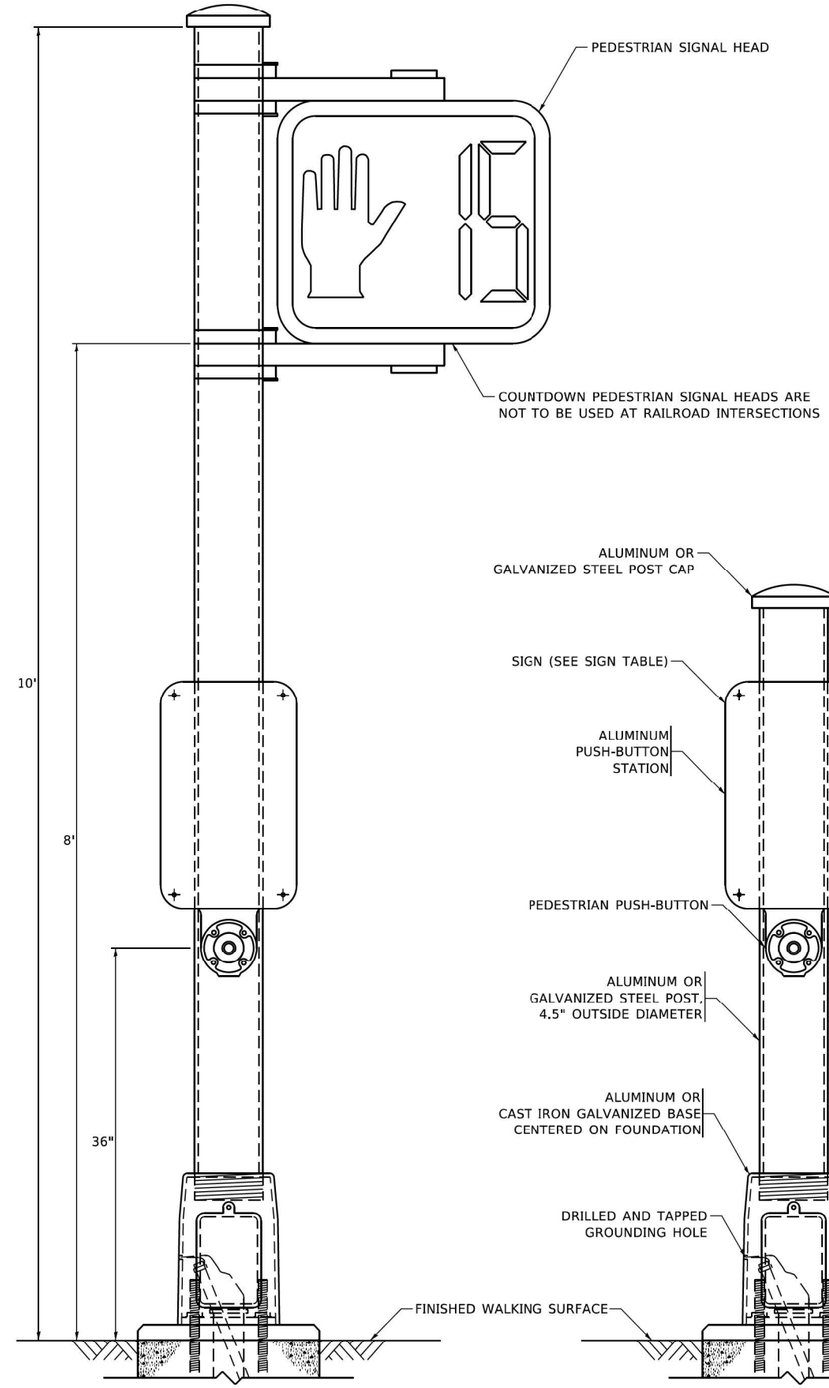

PEDESTRIAN SIGNAL POST, 10 FT.

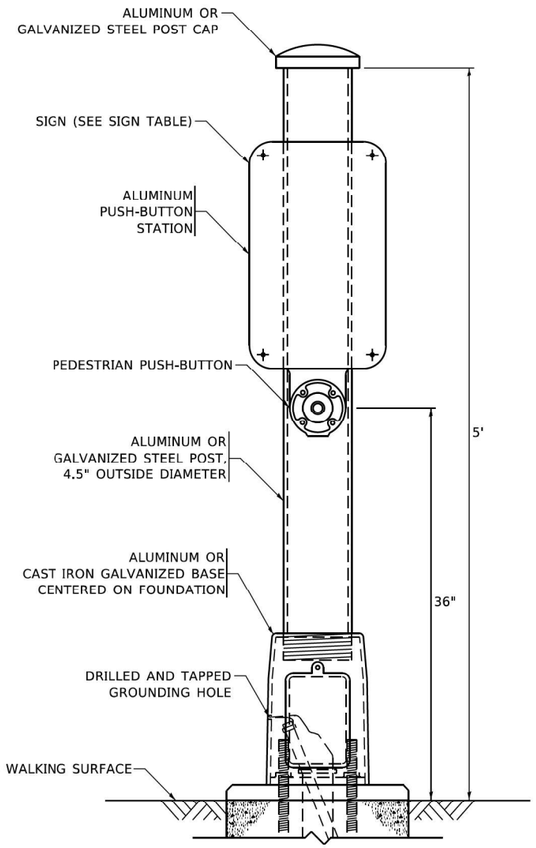

PEDESTRIAN SIGNAL POST, 5 FT.

R10–3b

R10–3d

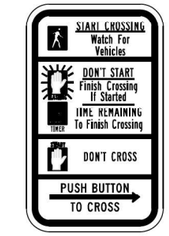

R10–3e

SIGN TABLE

SIGN	DIMENSIONS
R10-3b (RAILROAD ONLY)	9" X 12"
R10-3d (RAILROAD ONLY)	9" X 12"
R10-3e	9" X 12"

NOTES:

1. THE SIGN PANELS SHALL BE TYPE AP SHEETING.
2. THE ARROW ON SIGNS FOR PUSH-BUTTONS SERVING TWO DIRECTIONS ON THE SAME PHASE SHALL BE BI-DIRECTIONAL.
3. THE SIGN FOR DUAL-CALL PUSH-BUTTONS SHALL HAVE NO ARROW.

MODEL: Default
FILE NAME: pw:\\atlanroom.dot.illinois.gov:PWIDOT\Documents\IDOT Offices\District 1\Projects\DistStd22x34\CADData\CADsheets\ts05.dgn

AEG ATLAS ENGINEERING GROUP, LTD.	USER NAME = gaglianobt	DESIGNED - IP	REVISED - 10-15-2020	STATE OF ILLINOIS DEPARTMENT OF TRANSPORTATION	DISTRICT ONE STANDARD TRAFFIC SIGNAL DESIGN DETAILS
		DRAWN - IP	REVISED -		
	PLOT SCALE = 100.0000 ' / in.	CHECKED - LP	REVISED -		
	PLOT DATE = 11/23/2020	DATE - 10-15-2018	REVISED -		SCALE: NONE SHEET 7 OF 7 SHEETS STA. TO STA.

F.A.U. RTE.	SECTION	COUNTY	TOTAL SHEETS	SHEET NO.
341	95-B	COOK	124	47
TS–05		CONTRACT NO. 62D34		
		ILLINOIS FED. AID PROJECT		

REMOVAL AND RELOCATION NOTES:

THE FOLLOWING ITEMS SHALL BE REMOVED BY THE CONTRACTOR AND SHALL BE DISPOSED OF BY THEM OUTSIDE THE RIGHT-OF-WAY AT THEIR EXPENSE. THE SALVAGE VALUE OF THE REMOVED EQUIPMENT SHALL BE REFLECTED IN THE CONTRACT BID PRICE.

1	EACH	CONTROLLER AND CABINET (COMPLETE)
2	EACH	ALUMINUM MAST ARM ASSEMBLY AND POST
4	EACH	TRAFFIC SIGNAL POST
9	EACH	3-SECTION SIGNAL HEAD
2	EACH	PEDESTRIAN SIGNAL HEAD
2	EACH	PEDESTRIAN PUSH-BUTTON
1	EACH	SERVICE INSTALLATION
2	EACH	TRAFFIC SIGNAL BACKPLATE

THE FOLLOWING ITEMS SHALL BE REMOVED BY THE CONTRACTOR AND SHALL REMAIN THE PROPERTY OF THE AGENCY LISTED BELOW. THE CONTRACTOR SHALL SAFELY STORE AND ARRANGE FOR THE PICK UP OF ALL THE EQUIPMENT TO BE RETURNED TO THE LISTED AGENCY.

VILLAGE OF NILES
DEPARTMENT OF PUBLIC WORKS

2	EACH	CONFIRMATION BEACON
2	EACH	LIGHT DETECTOR
1	EACH	LIGHT DETECTOR AMPLIFIER

NOTES:

1. FINAL DETECTION CAMERA POSITIONS TO BE DETERMINED BY THE CONTRACTOR/VENDOR TO ENSURE CORRECT ZONE COVERAGE, INCLUDING FAR-OUT DETECTION IS WORKING PROPERLY.
2. UTILITY RELOCATION DESIGN IS NOT YET FINALIZED. TEMPORARY TRAFFIC SIGNAL WOOD POLE LOCATIONS MAY BE ADJUSTED IN THE FIELD AFTER PROPOSED POWER POLE AND POWER LINE RELOCATION TO ENSURE NO CONFLICTS.

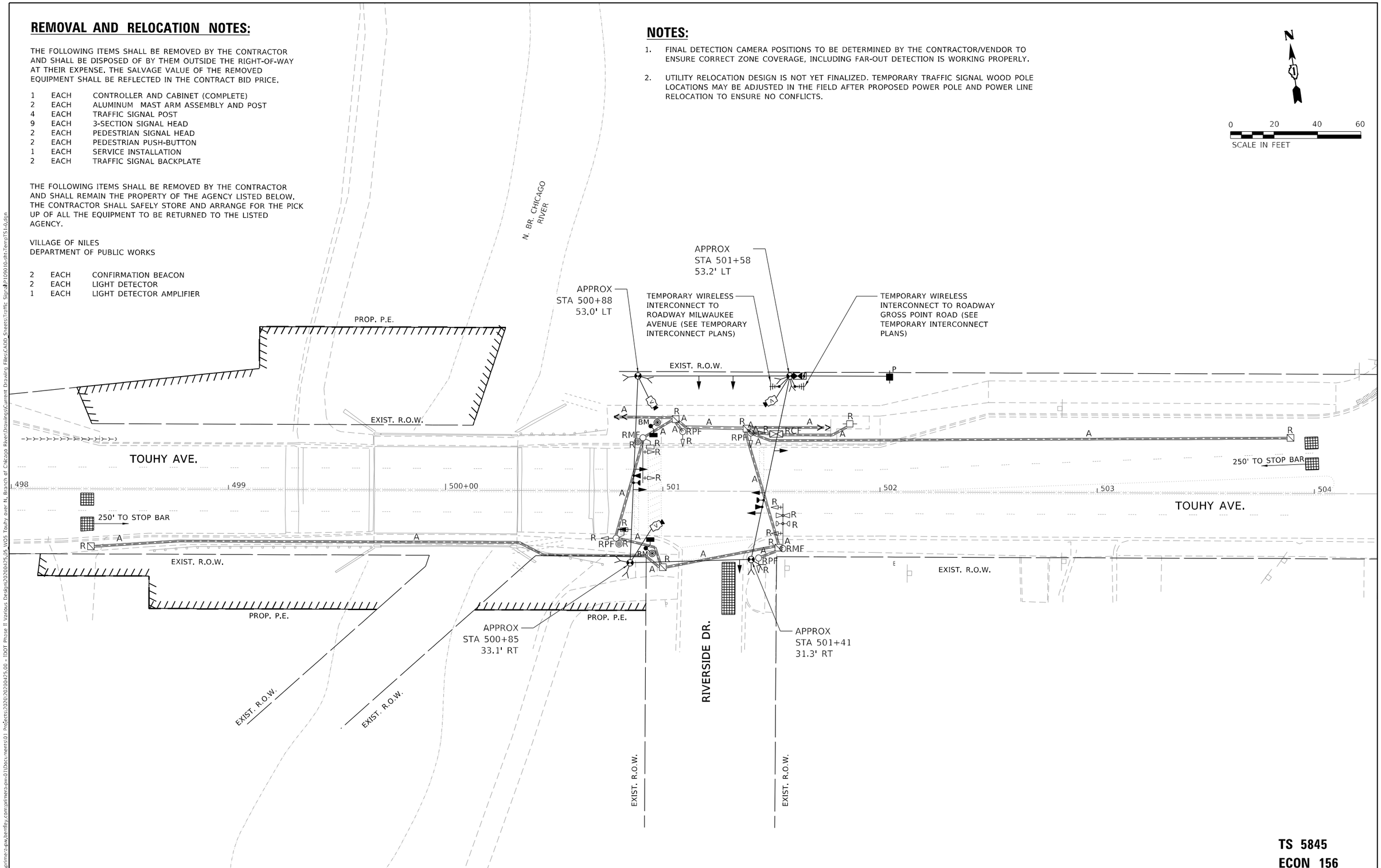

TS 5845
ECON 156

AEG ATLAS ENGINEERING GROUP, LTD.	USER NAME = cpujari	DESIGNED -	REVISED -	STATE OF ILLINOIS DEPARTMENT OF TRANSPORTATION
		DRAWN -	REVISED -	
	PLOT SCALE = 40.0000 ' / in.	CHECKED -	REVISED -	
	PLOT DATE = 3/3/2025	DATE -	REVISED -	

TEMPORARY TRAFFIC SIGNAL INSTALLATION PLAN AND REMOVE EXISTING TRAFFIC SIGNAL EQUIPMENT PLANS–PRESTAGE TOUHY AVE. OVER N. BRANCH OF CHICAGO RIVER

SCALE: 1" = 20' | SHEET 1 OF 11 SHEETS | STA. TO STA.

F.A.U. RTE.	SECTION	COUNTY	TOTAL SHEETS	SHEET NO.
341	95-B	COOK	124	48

CONTRACT NO. 62D34

ILLINOIS | FED. AID PROJECT

MODEL: Default
FILE NAME: pw:\\prime-s-pw.bentley.com:prime-s-pw-01\Documents\01 Projects\2020\20200425.00 - IDOT Phase II Various Design\20200425.05 WOS Touhy over N. Branch of Chicago River\Drawings\Current Drawing Files\CADD Sheets\Traffic Signal\09010c-th-TempTS1-0.dgn

NOTES:

1. FINAL DETECTION CAMERA POSITIONS TO BE DETERMINED BY THE CONTRACTOR/VENDOR TO ENSURE CORRECT ZONE COVERAGE, INCLUDING FAR-OUT DETECTION IS WORKING PROPERLY.
2. UTILITY RELOCATION DESIGN IS NOT YET FINALIZED. TEMPORARY TRAFFIC SIGNAL WOOD POLE LOCATIONS MAY BE ADJUSTED IN THE FIELD AFTER PROPOSED POWER POLE AND POWER LINE RELOCATION TO ENSURE NO CONFLICTS.
3. NO LEFT-TURN MOVEMENT ALLOWED AT INTERSECTION OF TOUHY AVENUE AND RIVERSIDE DRIVE. ONLY RIGHT-IN AND RIGHT-OUT. SEE MAINTENANCE OF TRAFFIC PLANS FOR DETAILS.
4. THE CONTRACTOR SHALL BAG AND DEACTIVATE THE EXISTING TRAFFIC SIGNAL SECTIONS AND ALL THE PEDESTRIAN SIGNAL HEADS DURING STAGE I OF TRAFFIC AT THE INTERSECTION OF TOUHY AVENUE AND THE RIVERSIDE DRIVE.

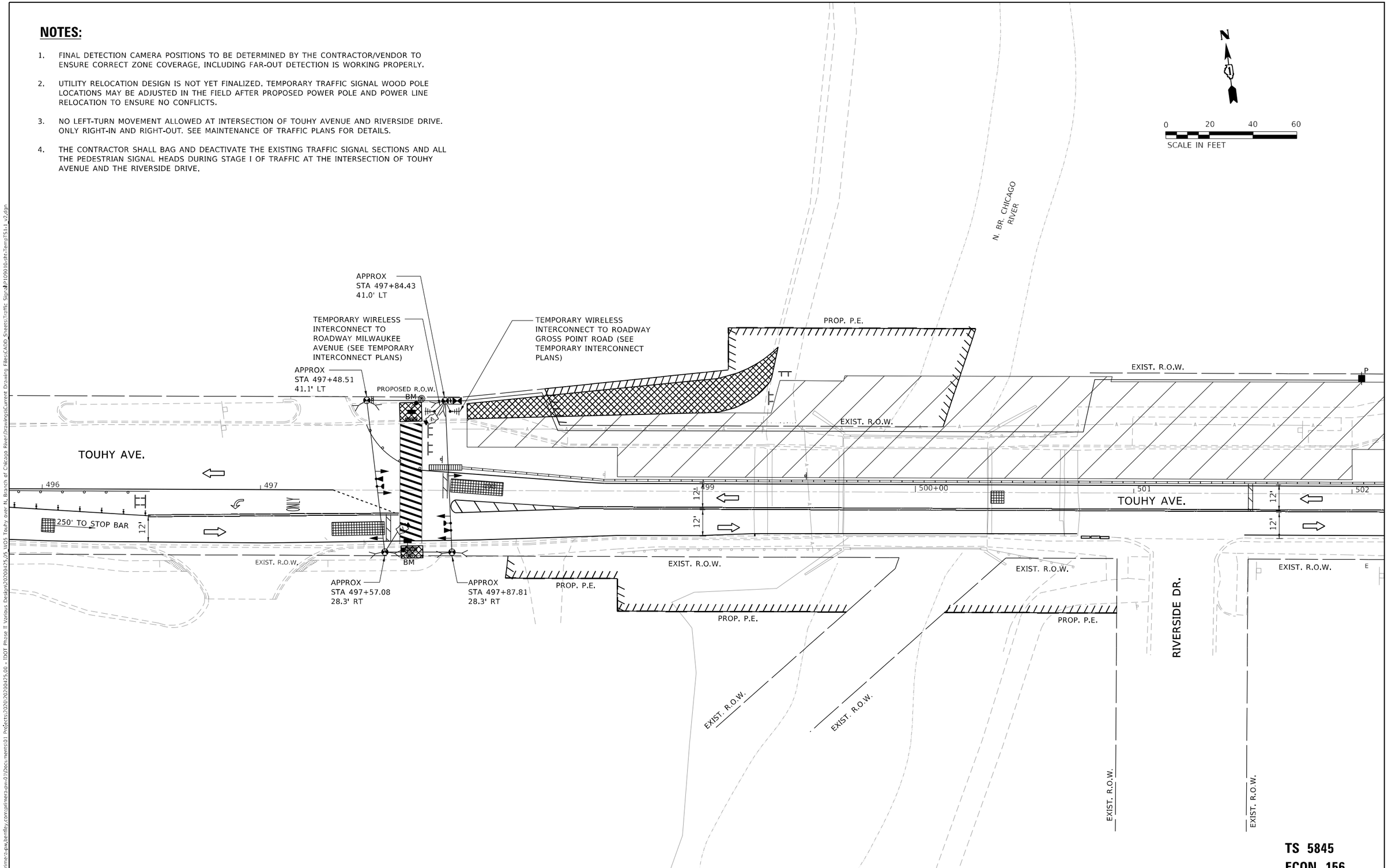

TS 5845
ECON 156

AEG ATLAS ENGINEERING GROUP, LTD.	USER NAME = cpujari	DESIGNED -	REVISED -	STATE OF ILLINOIS DEPARTMENT OF TRANSPORTATION	STAGE 1 – TEMPORARY TRAFFIC SIGNAL INSTALLATION PLAN TOUHY AVE. OVER N. BRANCH OF CHICAGO RIVER	F.A.U. RTE.	SECTION	COUNTY	TOTAL SHEETS / SHEET NO.
		DRAWN -	REVISED -			341	95-B	COOK	124 / 49
	PLOT SCALE = 40.0000 ' / in.	CHECKED -	REVISED -					CONTRACT NO. 62D34	
	PLOT DATE = 3/3/2025	DATE -	REVISED -		SCALE: 1" = 20' SHEET 2 OF 11 SHEETS STA. TO STA.			ILLINOIS FED. AID PROJECT	

MODEL: Default
FILE NAME: pw:\\prime-s-pw.bentley.com:pw-01\Documents\01 Projects\2020\20200475.00 - IDOT Phase II Various Designs\20200475.05 WOS Touhy over N. Branch of Chicago River\Drawings\Current Drawing Files\CADD Sheets\Traffic Signal\210910-dh-TempTS1-1_v2.dgn

TEMPORARY CONTROLLER SEQUENCE

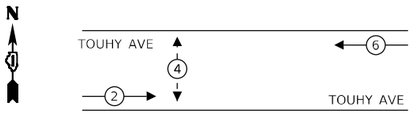

LEGEND:

- PROTECTED PHASE
- PROTECTED/PERMITTED PHASE
- PEDESTRIAN PHASE
- OL OVERLAP

TEMPORARY EMERGENCY VEHICLE PREEMPTION SEQUENCE

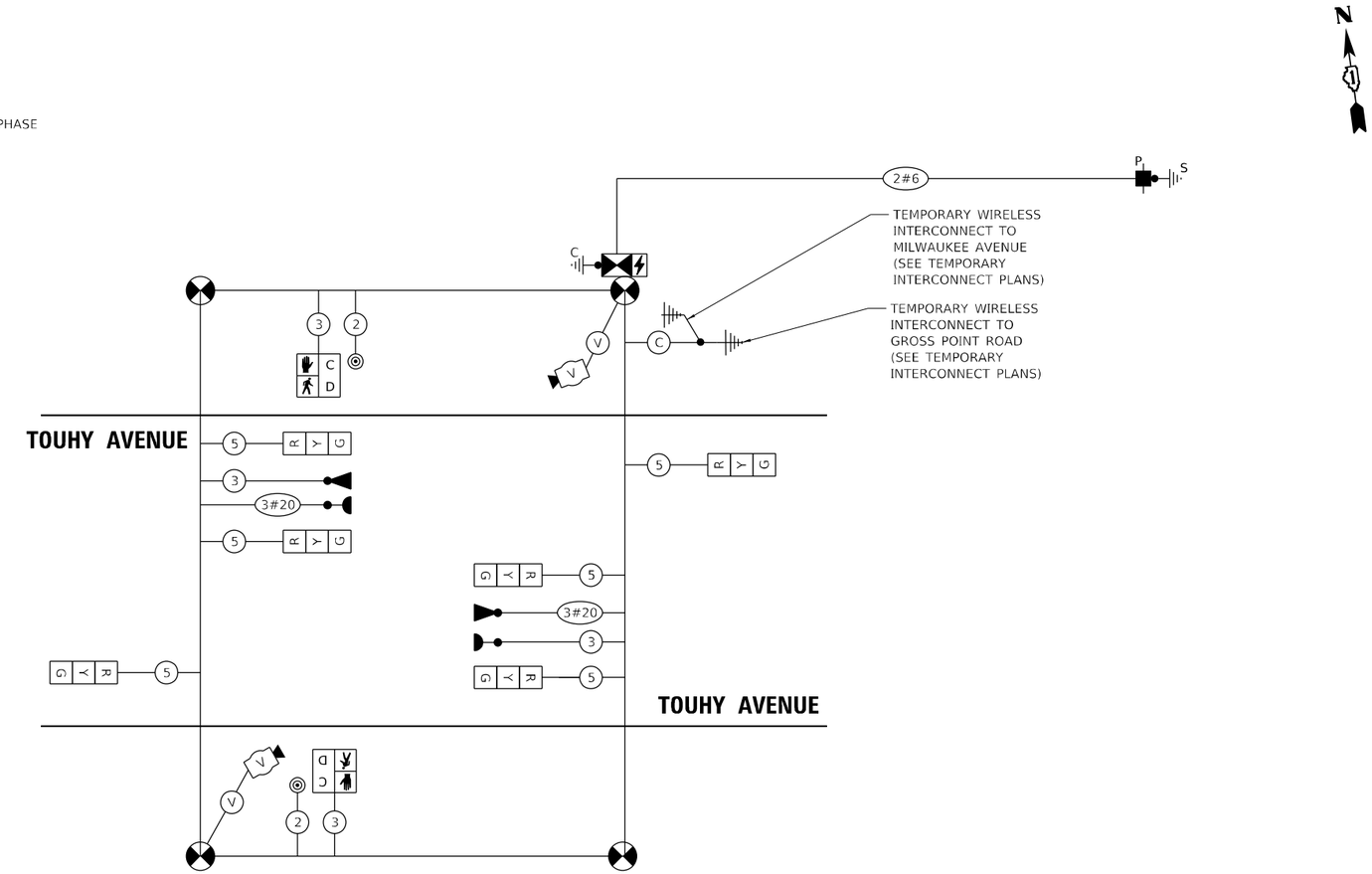

TEMPORARY CABLE PLAN

NOT TO SCALE

TRAFFIC SIGNAL ELECTRICAL SERVICE REQUIREMENTS

TYPE		QUANTITY	LED WATTAGE	TOTAL WATTAGE
SIGNAL HEAD	3-SECTION	6	11	66.0
	4-SECTION	-	14	-
	5-SECTION	-	13	-
PROGRAMMABLE SIGNALS		-		
	3-SECTION	-	22	-
	4-SECTION	-	32	-
	5-SECTION	-	28	-
PED. SIGNAL		2	15	30.0
CONTROLLER		1	150	150.0
MASTER CONTROLLER		-	100	-
UPS		1	25	25.0
DETECTION	RADAR	-	20	-
	VIDEO	2	20	40.0
BLANK-OUT SIGN		-	25	-
NETWORK SWITCH II OR III		-	35	-
CELLULAR MODEM		-	15	-
TOTAL UPS SIZING				
UPS CHARGING		1	225	225.0
BATTERY HEATER MAT		1	180	180.0
CABINET HEATER		1	200	200.0
FLASHER		-	15	-
LED STREET NAME SIGN		-	120	-
LUMINAIRE		-	240	-
			TOTAL =	916.0

ENERGY COSTS TO:

VILLAGE OF NILES
DEPARTMENT OF PUBLIC WORKS
6849 WEST TOUHY AVENUE
NILES, IL 60714

ENERGY SUPPLY: CONTACT: AXL DAVIS
PHONE: (773) 231-2969
COMPANY: COMMONWEALTH EDISON
ACCOUNT NUMBER:

TS 5845
ECON 156

MODEL: Default
FILE NAME: pw:\\primera-pw.atlasfile.com:primera-pw-01\Documents01 Projects\2020\20200425.00 - IDOT Phase II Various Designs\20200425.05_WOS Touhy over N. Branch of Chicago River\Current Drawing Files\CADD Sheets\Traffic Signal\191090-dh-Temp Cable Stage 1

AEG ATLAS ENGINEERING GROUP, LTD.	USER NAME = cpujari	DESIGNED - SCA	REVISED -	STATE OF ILLINOIS DEPARTMENT OF TRANSPORTATION	STAGE I – TEMP CABLE PLAN, PHASE DESIGNATION DIAGRAM AND EMERGENCY VEHICLE PREEMPTION SEQUENCE TOUHY AVE OVER NORTH BRANCH OF CHICAGO RIVER
		DRAWN - SDR	REVISED -		
	PLOT SCALE = 40.0000 ' / in.	CHECKED - SCH	REVISED -		
	PLOT DATE = 3/3/2025	DATE -	REVISED -		SCALE: 1" = 20' SHEET 3 OF 11 SHEETS STA. TO STA.

F.A.B. RTE.	SECTION	COUNTY	TOTAL SHEETS	SHEET NO.
341	95-B	COOK	124	50
		CONTRACT NO. 62D34		
	ILLINOIS	FED. AID PROJECT		

NOTES:

1. FINAL DETECTION CAMERA POSITIONS TO BE DETERMINED BY THE CONTRACTOR/VENDOR TO ENSURE CORRECT ZONE COVERAGE, INCLUDING FAR-OUT DETECTION IS WORKING PROPERLY.
2. UTILITY RELOCATION DESIGN IS NOT YET FINALIZED. TEMPORARY TRAFFIC SIGNAL WOOD POLE LOCATIONS MAY BE ADJUSTED IN THE FIELD AFTER PROPOSED POWER POLE AND POWER LINE RELOCATION TO ENSURE NO CONFLICTS.

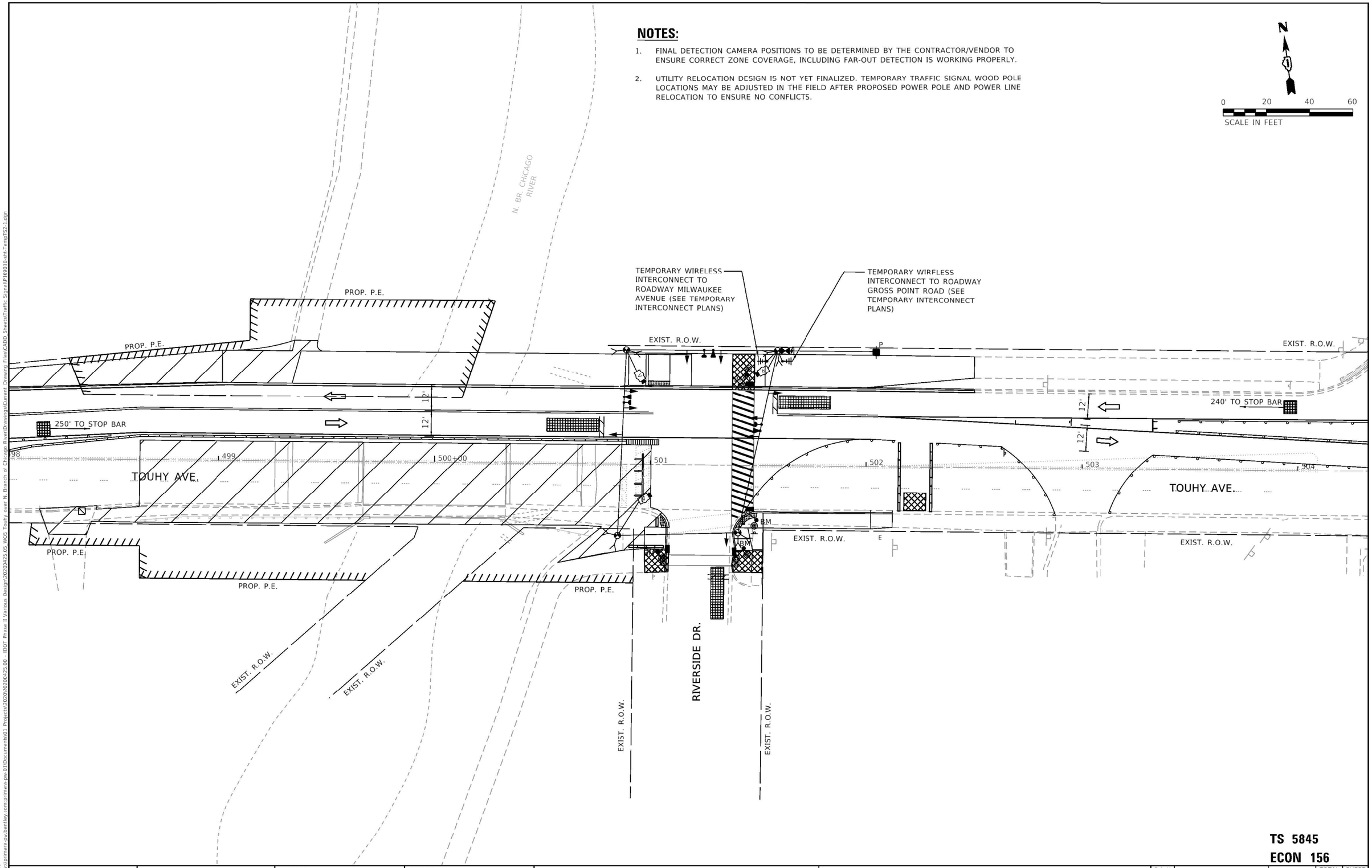

TS 5845
ECON 156

MODEL: Default
FILE NAME: pw:\\jarmerz-pw.bentley.com:primera-pw 01\Documents\01 Projects\2020\02004425.00 IDOT Phase II Various Design\20200425.05 W05 Touhy over N. Branch of Chicago River\Drawings\Current Drawing Files\CADD Sheets\Traffic Signal\P60910-sht-TempTS2-1.dgn

AEG ATLAS ENGINEERING GROUP, LTD.

USER NAME = cpujari	DESIGNED -	REVISED -
	DRAWN -	REVISED -
PLOT SCALE = 40.0000 ' / in.	CHECKED -	REVISED -
PLOT DATE = 3/3/2025	DATE -	REVISED -

STATE OF ILLINOIS
DEPARTMENT OF TRANSPORTATION

STAGE 2 – TEMPORARY TRAFFIC SIGNAL INSTALLATION PLAN
TOUHY AVE. OVER N. BRANCH OF CHICAGO RIVER

SCALE: 1" = 20' | SHEET 4 OF 11 SHEETS | STA. TO STA.

F.A.U. RTE.	SECTION	COUNTY	TOTAL SHEETS	SHEET NO.
341	95-B	COOK	124	51
		CONTRACT NO. 62D34		
		ILLINOIS	FED. AID PROJECT	

TEMPORARY CONTROLLER SEQUENCE

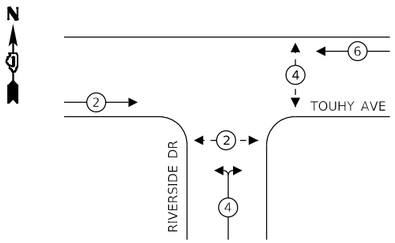

LEGEND:

- PROTECTED PHASE
- PROTECTED/PERMITTED PHASE
- PEDESTRIAN PHASE
- OL OVERLAP

TEMPORARY EMERGENCY VEHICLE PREEMPTION SEQUENCE

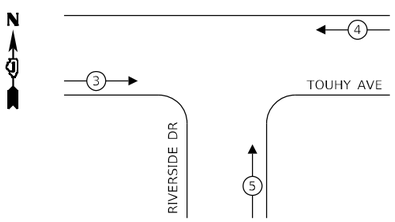

TRAFFIC SIGNAL ELECTRICAL SERVICE REQUIREMENTS

TYPE		QUANTITY	LED WATTAGE	TOTAL WATTAGE
SIGNAL HEAD	3-SECTION	9	11	99.0
	4-SECTION	-	14	-
	5-SECTION	-	13	-
PROGRAMMABLE SIGNALS		-		
	3-SECTION	-	22	-
	4-SECTION	-	32	-
	5-SECTION	-	28	-
PED. SIGNAL		4	15	60.0
CONTROLLER		1	150	150.0
MASTER CONTROLLER		-	100	-
UPS		1	25	25.0
DETECTION	RADAR	-	20	-
	VIDEO	3	20	60.0
BLANK-OUT SIGN		-	25	-
NETWORK SWITCH II OR III		-	35	-
CELLULAR MODEM		-	15	-
TOTAL UPS SIZING				
UPS CHARGING		1	225	225.0
BATTERY HEATER MAT		1	180	180.0
CABINET HEATER		1	200	200.0
FLASHER		-	15	-
LED STREET NAME SIGN		-	120	-
LUMINAIRE		-	240	-
			TOTAL =	999.0

ENERGY COSTS TO:

VILLAGE OF NILES
DEPARTMENT OF PUBLIC WORKS
6849 WEST TOUHY AVENUE
NILES, IL 60714

ENERGY SUPPLY: CONTACT: AXL DAVIS
PHONE: (773) 231-2969
COMPANY: COMMONWEALTH EDISON
ACCOUNT NUMBER:

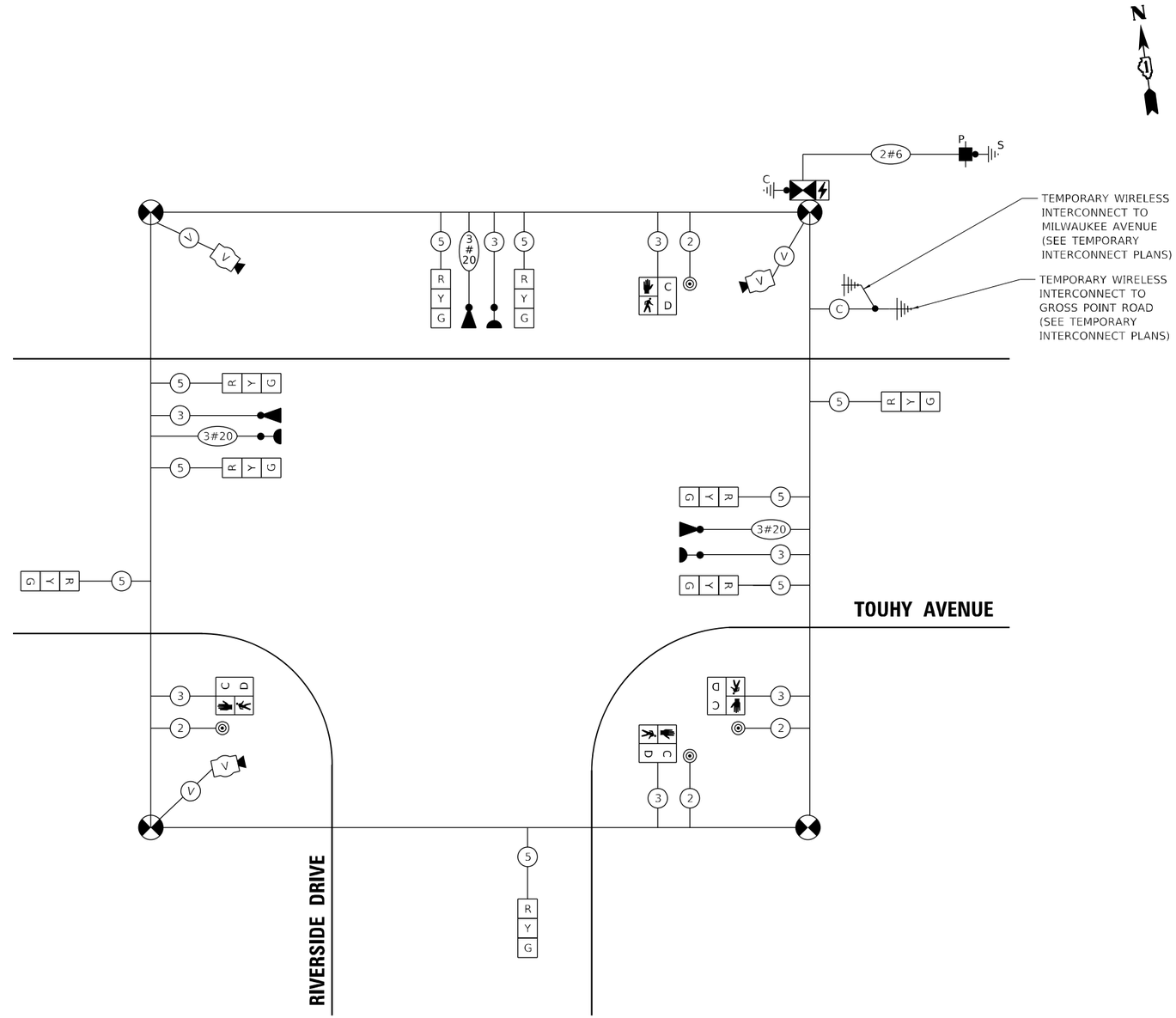

TEMPORARY CABLE PLAN

NOT TO SCALE

TS 5845
ECON 156

MODEL: Default
FILE NAME: pw:\\prime-a-aw.bentley.com:primera-pw-01\Documents\01 Projects\2020\20200425.00 - IDOT Phase II Various Design\20200425.05 VOS Touhy over N. Branch of Chicago River\Current Drawing Files\CADD Sheets\Traffic Signal\01090 16-th-Temp Cable Stage II

AEG ATLAS ENGINEERING GROUP, LTD.

USER NAME = cpujari	DESIGNED - SCA	REVISED -	
	DRAWN - SDR	REVISED -	
PLOT SCALE = 40.0000 ' / in.	CHECKED - SCH	REVISED -	
PLOT DATE = 3/3/2025	DATE -	REVISED -	

STATE OF ILLINOIS
DEPARTMENT OF TRANSPORTATION

STAGE II – TEMP CABLE PLAN, PHASE DESIGNATION DIAGRAM AND EMERGENCY VEHICLE PREEMPTION SEQUENCE
TOUHY AVE OVER NORTH BRANCH OF CHICAGO RIVER

SCALE: 1" = 20' | SHEET 5 OF 11 SHEETS | STA. TO STA.

F.A.P. RTE.	SECTION	COUNTY	TOTAL SHEETS	SHEET NO.
341	95-B	COOK	124	52
		CONTRACT NO. 62D34		
		ILLINOIS	FED. AID PROJECT	

NOTES:

1. FINAL DETECTION CAMERA POSITIONS TO BE DETERMINED BY THE CONTRACTOR/VENDOR TO ENSURE CORRECT ZONE COVERAGE, INCLUDING FAR-OUT DETECTION IS WORKING PROPERLY.
2. UTILITY RELOCATION DESIGN IS NOT YET FINALIZED. TEMPORARY TRAFFIC SIGNAL WOOD POLE LOCATIONS MAY BE ADJUSTED IN THE FIELD AFTER PROPOSED POWER POLE AND POWER LINE RELOCATION TO ENSURE NO CONFLICTS.

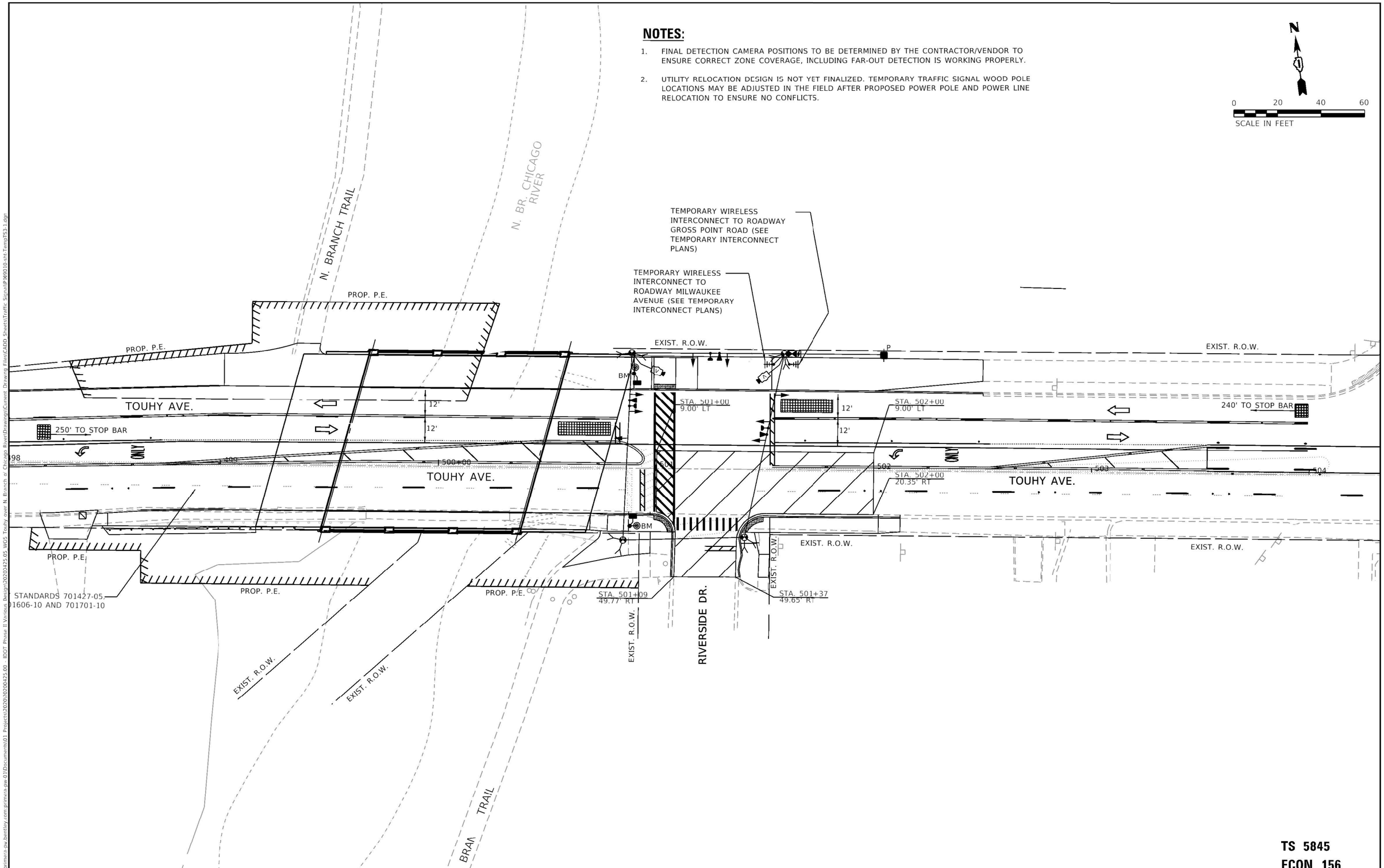

TS 5845
ECON 156

MODEL: Default
FILE NAME: pw:\\primera-pw.bentley.com:primera-pw:01\Documents\01 Projects\2020\0200425.00 IDOT Phase II Various Design\20200425.05 W05 Touhy over N. Branch of Chicago River\Current Drawing Files\CADD Sheets\Traffic Signal\P16910-sht-TempTS3-1.dgn

AEG ATLAS ENGINEERING GROUP, LTD.	USER NAME = cpujari	DESIGNED -	REVISED -	STATE OF ILLINOIS DEPARTMENT OF TRANSPORTATION	STAGE 3 – TEMPORARY TRAFFIC SIGNAL INSTALLATION PLAN TOUHY AVE. OVER N. BRANCH OF CHICAGO RIVER	F.A.U. RTE.	SECTION	COUNTY	TOTAL SHEETS / SHEET NO.
		DRAWN -	REVISED -			341	95-B	COOK	124 / 53
	PLOT SCALE = 40.0000 ' / in.	CHECKED -	REVISED -					CONTRACT NO. 62D34	
	PLOT DATE = 3/3/2025	DATE -	REVISED -		SCALE: 1" = 20' SHEET 4 OF 11 SHEETS STA. TO STA.			ILLINOIS FED. AID PROJECT	

TEMPORARY CONTROLLER SEQUENCE

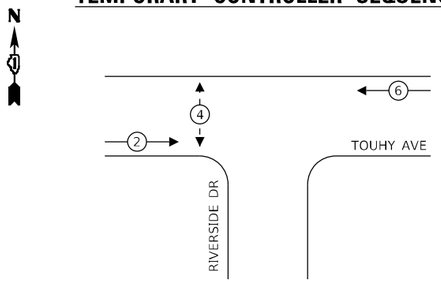

LEGEND:

- PROTECTED PHASE
- PROTECTED/PERMITTED PHASE
- PEDESTRIAN PHASE
- OL OVERLAP

TEMPORARY EMERGENCY VEHICLE PREEMPTION SEQUENCE

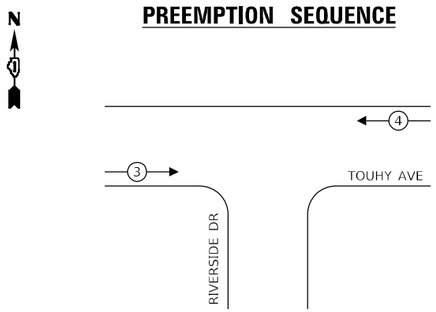

TRAFFIC SIGNAL ELECTRICAL SERVICE REQUIREMENTS

TYPE		QUANTITY	LED WATTAGE	TOTAL WATTAGE
SIGNAL HEAD	3-SECTION	6	11	66.0
	4-SECTION	-	14	-
	5-SECTION	-	13	-
PROGRAMMABLE SIGNALS		-		
	3-SECTION	-	22	-
	4-SECTION	-	32	-
	5-SECTION	-	28	-
PED. SIGNAL		2	15	30.0
CONTROLLER		1	150	150.0
MASTER CONTROLLER		-	100	-
UPS		1	25	25.0
DETECTION	RADAR	-	20	-
	VIDEO	2	20	40.0
BLANK-OUT SIGN		-	25	-
NETWORK SWITCH II OR III		-	35	-
CELLULAR MODEM		-	15	-
TOTAL UPS SIZING				
UPS CHARGING		1	225	225.0
BATTERY HEATER MAT		1	180	180.0
CABINET HEATER		1	200	200.0
FLASHER		-	15	-
LED STREET NAME SIGN		-	120	-
LUMINAIRE		-	240	-
			TOTAL =	916.0

ENERGY COSTS TO:

VILLAGE OF NILES
DEPARTMENT OF PUBLIC WORKS
6849 WEST TOUHY AVENUE
NILES, IL 60714

ENERGY SUPPLY: CONTACT: AXL DAVIS
PHONE: (773) 231-2969
COMPANY: COMMONWEALTH EDISON
ACCOUNT NUMBER:

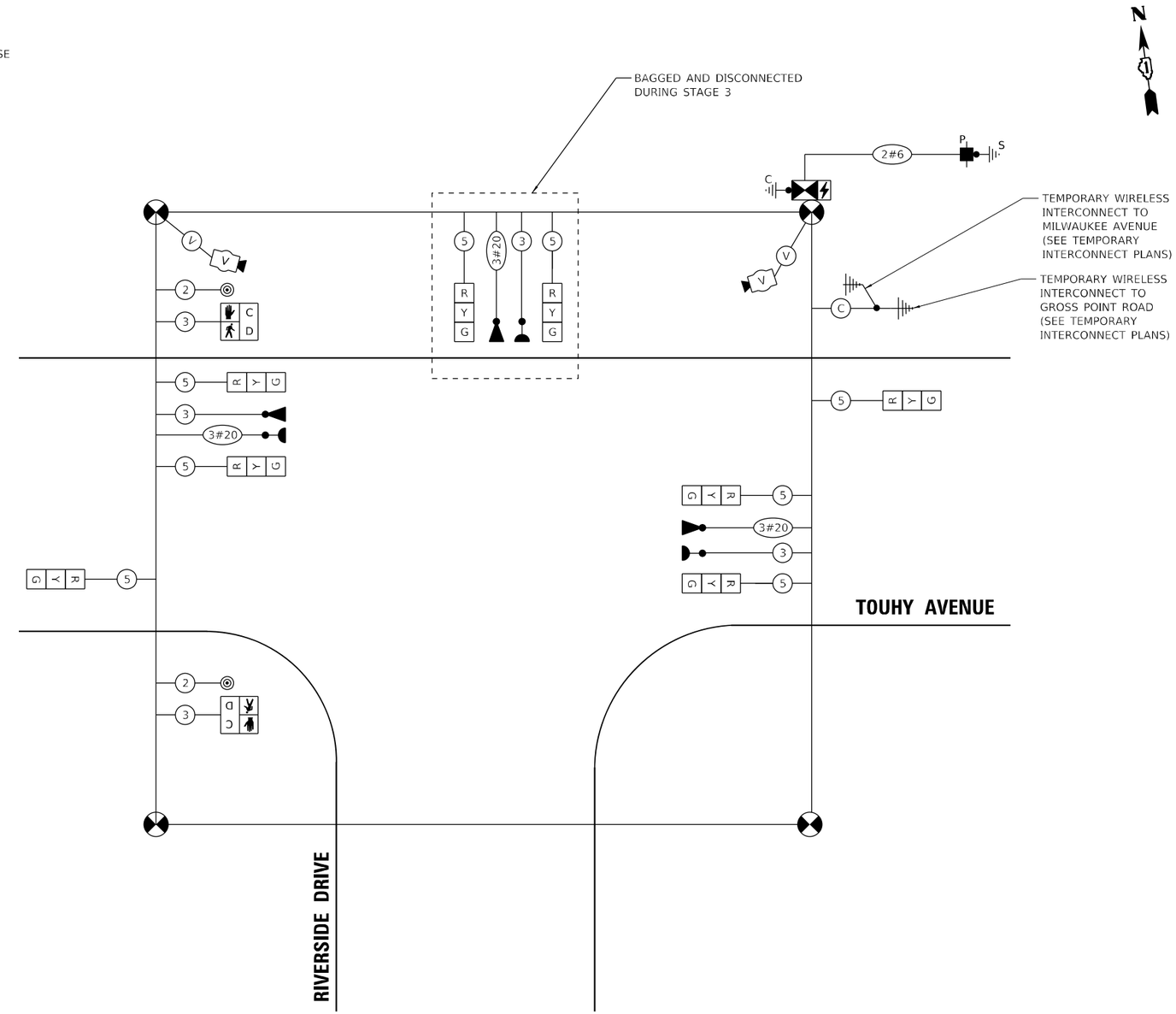

TEMPORARY CABLE PLAN

NOT TO SCALE

TS 5845
ECON 156

MODEL: Default
FILE NAME: pw:\\prime-a-aw.bentley.com:primera-pw-01\Documents\01 Projects\2020\20200425.00 - IDOT Phase II Various Design\20200425.05 VDS Touhy over N. Branch of Chicago River\Drawings\Current Drawing Files\CADD Sheets\Traffic Signal\10910-dh-Temp Cable Stage II

AEG ATLAS ENGINEERING GROUP, LTD.	USER NAME = cpujari	DESIGNED - SCA	REVISED -	STATE OF ILLINOIS DEPARTMENT OF TRANSPORTATION	STAGE III – TEMP CABLE PLAN, PHASE DESIGNATION DIAGRAM AND EMERGENCY VEHICLE PREEMPTION SEQUENCE TOUHY AVE OVER NORTH BRANCH OF CHICAGO RIVER
		DRAWN - SDR	REVISED -		
	PLOT SCALE = 40.0000 ' / in.	CHECKED - SCH	REVISED -		
	PLOT DATE = 3/3/2025	DATE -	REVISED -		SCALE: 1" = 20' SHEET 5 OF 11 SHEETS STA. TO STA.

F.A.P. RTE.	SECTION	COUNTY	TOTAL SHEETS	SHEET NO.
341	95-B	COOK	124	54
		CONTRACT NO. 62D34		
		ILLINOIS FED. AID PROJECT		

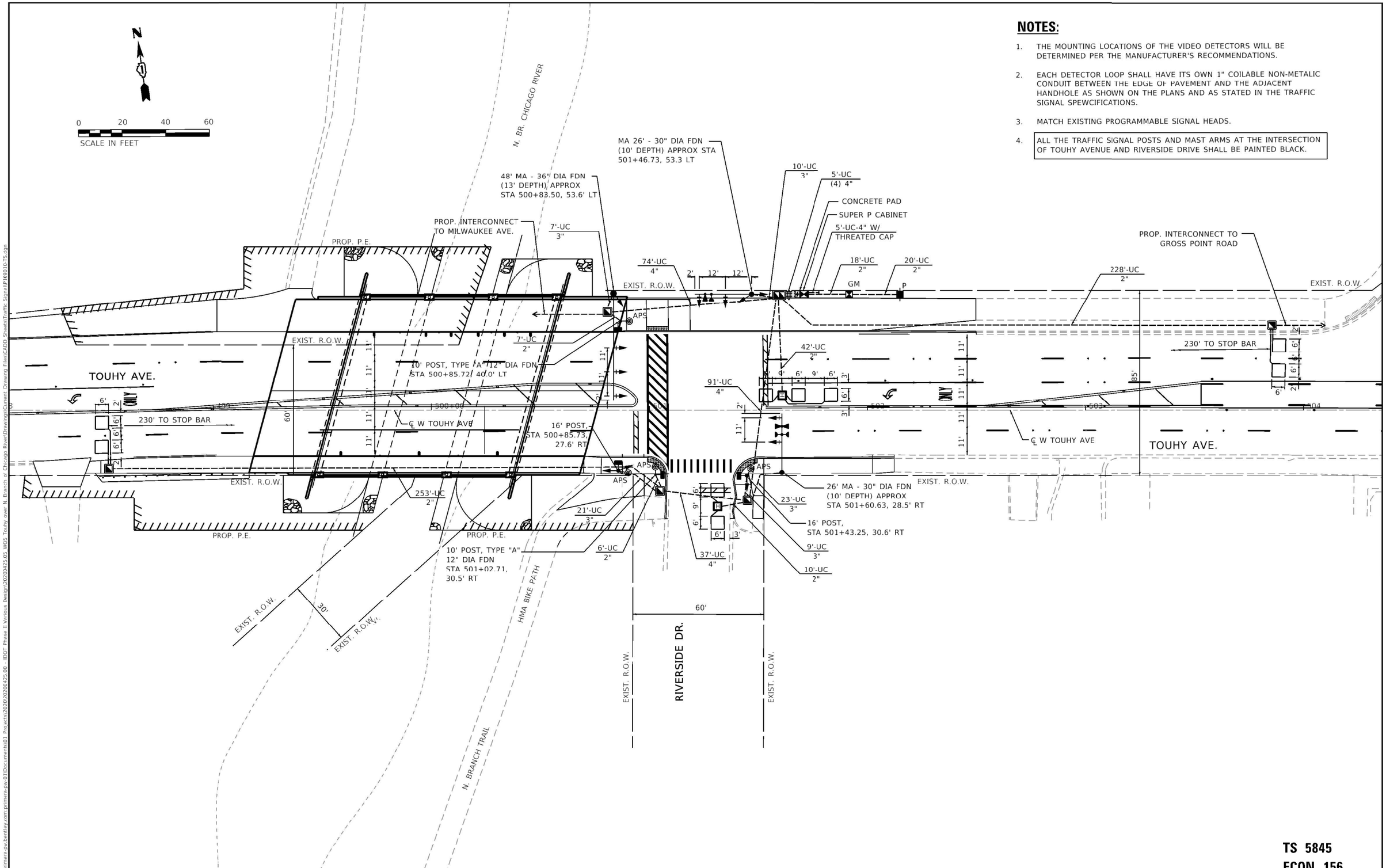

NOTES:

1. THE MOUNTING LOCATIONS OF THE VIDEO DETECTORS WILL BE DETERMINED PER THE MANUFACTURER'S RECOMMENDATIONS.
2. EACH DETECTOR LOOP SHALL HAVE ITS OWN 1" COILABLE NON-METALIC CONDUIT BETWEEN THE EDGE OF PAVEMENT AND THE ADJACENT HANDHOLE AS SHOWN ON THE PLANS AND AS STATED IN THE TRAFFIC SIGNAL SPEWCIFICATIONS.
3. MATCH EXISTING PROGRAMMABLE SIGNAL HEADS.
4. ALL THE TRAFFIC SIGNAL POSTS AND MAST ARMS AT THE INTERSECTION OF TOUHY AVENUE AND RIVERSIDE DRIVE SHALL BE PAINTED BLACK.

TS 5845

ECON 156

MODEL: Default
FILE NAME: pw:\\primera-pw.bentley.com:primera-pw-01\Documents\01 Projects\2020\20200425.00 - IDOT Phase II Various Design\20200425.05 WO5 Touhy over N. Branch of Chicago River\Drawings\Current Drawing Files\CADD Sheets\Traffic Signal\P109010-TS.dgn

AEG ATLAS ENGINEERING GROUP, LTD.	USER NAME = cpujari	DESIGNED -	REVISED -	STATE OF ILLINOIS DEPARTMENT OF TRANSPORTATION	TRAFFIC SIGNAL INSTALLATION PLAN TOUHY AVE. OVER N. BRANCH OF CHICAGO RIVER	F.A.U. RTE. 341	SECTION 95-B	COUNTY COOK
		DRAWN -	REVISED -					TOTAL SHEETS 124
	PLOT SCALE = 40.0000 ' / in.	CHECKED -	REVISED -					SHEET NO. 55
	PLOT DATE = 3/3/2025	DATE -	REVISED -		SCALE: 1" = 20' SHEET 6 OF 11 SHEETS STA. TO STA.	CONTRACT NO. 62D34	ILLINOIS FED. AID PROJECT	

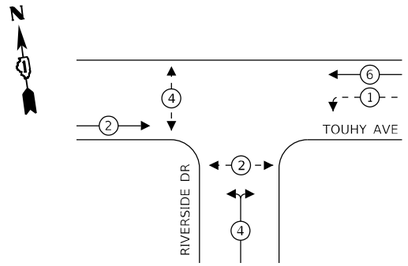

TEMPORARY CONTROLLER SEQUENCE

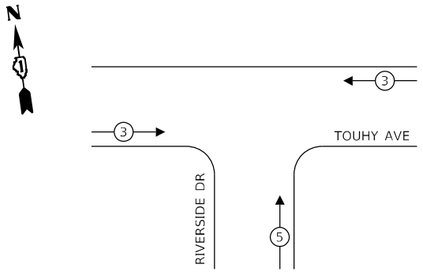

TEMPORARY EMERGENCY VEHICLE PREEMPTION SEQUENCE

LEGEND:

- PROTECTED PHASE
- PROTECTED/PERMITTED PHASE
- PEDESTRIAN PHASE
- OL OVERLAP

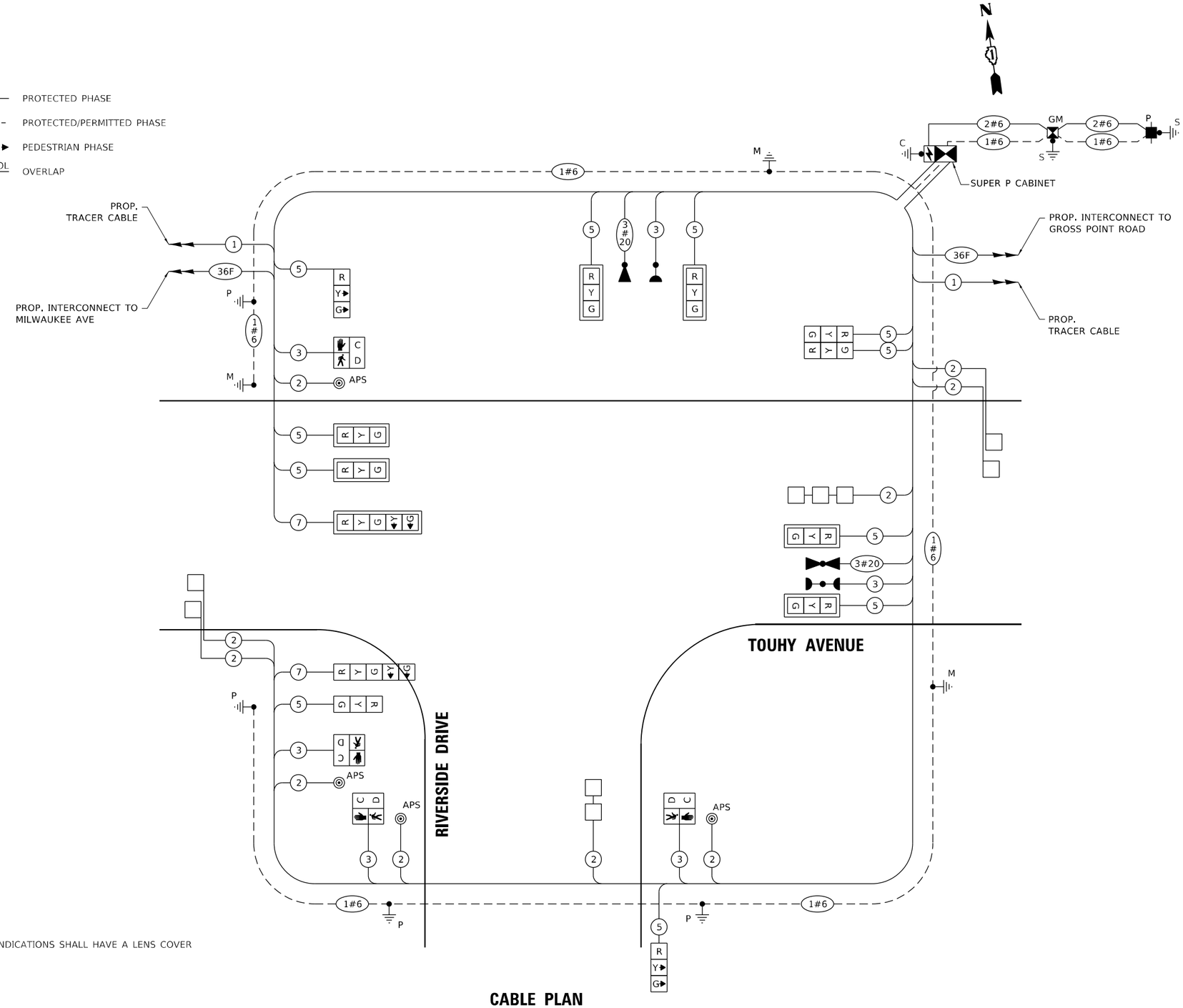

CABLE PLAN

NOT TO SCALE

TRAFFIC SIGNAL ELECTRICAL SERVICE REQUIREMENTS

TYPE		QUANTITY	LED WATTAGE	TOTAL WATTAGE
SIGNAL HEAD	3-SECTION	11	11	121.0
	4-SECTION	-	14	-
	5-SECTION	2	13	26.0
PROGRAMMABLE SIGNALS		-		
	3-SECTION	-	22	-
	4-SECTION	-	32	-
	5-SECTION	2	28	56.0
PED. SIGNAL		4	15	60.0
CONTROLLER		1	150	150.0
MASTER CONTROLLER		-	100	-
UPS		1	25	25.0
DETECTION	RADAR	-	20	-
	VIDEO	-	20	-
BLANK-OUT SIGN		-	25	-
NETWORK SWITCH II OR III		-	35	-
CELLULAR MODEM		-	15	-
TOTAL UPS SIZING				
UPS CHARGING		1	225	225.0
BATTERY HEATER MAT		1	180	180.0
CABINET HEATER		1	200	200.0
FLASHER		-	15	-
LED STREET NAME SIGN		-	120	-
LUMINAIRE		-	240	-
			TOTAL =	1043.0

ENERGY COSTS TO:

VILLAGE OF NILES
DEPARTMENT OF PUBLIC WORKS
6849 WEST TOUHY AVENUE
NILES, IL 60714

ENERGY SUPPLY: CONTACT: AXL DAVIS
PHONE: (773) 231-2969
COMPANY: COMMONWEALTH EDISON
ACCOUNT NUMBER: 88808-13333

NOTE:

ALL RED INDICATIONS SHALL HAVE A LENS COVER

TS 5845

ECON 156

MODEL: Default
FILE NAME: pw:\\prime-a-aw.bentley.com:primera-pw-01\Documents\01 Projects\2020\20200425.00 - IDOT Phase II Various Design\20200425.05 VOS Touhy over N. Branch of Chicago River\Current Drawing Files\CADD Sheets\Traffic Signal\01090-16-IH-Cable Plan.dgn

AEG ATLAS ENGINEERING GROUP, LTD.	USER NAME = cpujari	DESIGNED - SCA	REVISED -	STATE OF ILLINOIS DEPARTMENT OF TRANSPORTATION	CABLE PLAN, PHASE DESIGNATION DIAGRAM AND EMERGENCY VEHICLE PREEMPTION SEQUENCE TOUHY AVE OVER NORTH BRANCH OF CHICAGO RIVER
		DRAWN - SDR	REVISED -		
	PLOT SCALE = 40.0000 ' / in.	CHECKED - SCH	REVISED -		
	PLOT DATE = 3/3/2025	DATE -	REVISED -		SCALE: 1" = 20' SHEET 7 OF 11 SHEETS STA. TO STA.

F.A.U. RTE.	SECTION	COUNTY	TOTAL SHEETS	SHEET NO.
341	95-B	COOK	124	56
		CONTRACT NO. 62D34		
		ILLINOIS FED. AID PROJECT		

SIGN PANEL – TYPE 1

ALL DIMENSIONS ARE IN INCHES UNLESS NOTED OTHERWISE

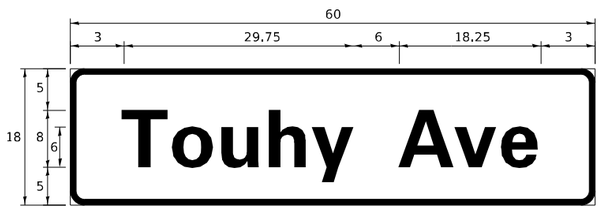

DESIGN SERIES	AREA (SQ FT)	SIGN PANEL TYPE	SHEETING TYPE	QTY REQUIRED
D	7.5	2	ZZ	1

SIGN PANEL – TYPE 1

ALL DIMENSIONS ARE IN INCHES UNLESS NOTED OTHERWISE

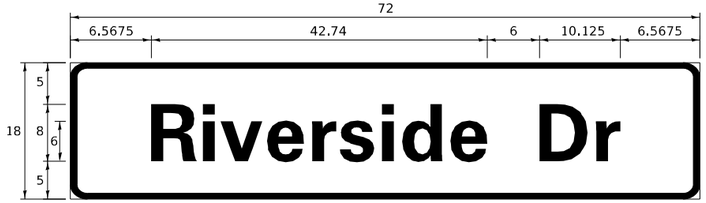

DESIGN SERIES	AREA (SQ FT)	SIGN PANEL TYPE	SHEETING TYPE	QTY REQUIRED
D	9.0	1	ZZ	2

NOTE: FOR ADDITIONAL DESIGN AND INSTALLATION INFORMATION PLEASE SEE DISTRICT ONE MAST ARM MOUNTED STREET NAME SIGNS DETAIL.

SCHEDULE OF QUANTITIES

	ITEM DESCRIPTION	UNIT	TOTAL
	SIGN PANEL - TYPE 1	SQ FT	26
	UNDERGROUND CONDUIT, GALVANIZED STEEL, 2" DIA	FOOT	578
	UNDERGROUND CONDUIT, GALVANIZED STEEL, 3" DIA	FOOT	70
	UNDERGROUND CONDUIT, GALVANIZED STEEL, 4" DIA	FOOT	222
	HANDHOLE	EACH	5
	HEAVY-DUTY HANDHOLE	EACH	2
	DOUBLE HANDHOLE	EACH	1
	ELECTRIC CABLE IN CONDUIT, SIGNAL NO. 14 2C	FOOT	636
	ELECTRIC CABLE IN CONDUIT, SIGNAL NO. 14 3C	FOOT	926
	ELECTRIC CABLE IN CONDUIT, SIGNAL NO. 14 5C	FOOT	1432
	ELECTRIC CABLE IN CONDUIT, SIGNAL NO.14 7C	FOOT	384
	ELECTRIC CABLE IN CONDUIT, LEAD-IN, NO.14 1 PAIR	FOOT	1552
	ELECTRIC CABLE IN CONDUIT, SERVICE, NO.6 2C	FOOT	76
	ELECTRIC CABLE IN CONDUIT, EQUIPMENT GROUNDING CONDUCTOR, NO. 6 1C	FOOT	445
	TRAFFIC SIGNAL POST, GALVANIZED STEEL 16 FT	EACH	2
	STEEL MAST ARM ASSEMBLY AND POLE, 26 FT	EACH	2
	STEEL MAST ARM ASSEMBLY AND POLE, 48 FT	EACH	1
	CONCRETE FOUNDATION, TYPE A	FOOT	12
	CONCRETE FOUNDATION, TYPE C	FOOT	4
	CONCRETE FOUNDATION, TYPE E 30-INCH DIAMETER	FOOT	20
	CONCRETE FOUNDATION, TYPE E 36-INCH DIAMETER	FOOT	13
	SIGNAL HEAD, LED, 1 FACE, 3-SECTION MAST ARM MOUNTED	EACH	6
	SIGNAL HEAD, LED, 1 FACE, 3-SECTION BRACKET MOUNTED	EACH	5
	SIGNAL HEAD, LED, 1 FACE, 5-SECTION MAST ARM MOUNTED	EACH	1
	SIGNAL HEAD, LED, 1 FACE, 5-SECTION BRACKET MOUNTED	EACH	1
	PEDESTRIAN SIGNAL HEAD, LED, 1-FACE, BRACKET MOUNTED WITH COUNTDOWN TIMER	EACH	4
	TRAFFIC SIGNAL BACKPLATE, LOUVERED, FORMED PLASTIC	EACH	7
	INDUCTOR LOOP DETECTOR	EACH	6
	DETECTOR LOOP, TYPE I	FOOT	281
*	LIGHT DETECTOR	EACH	2
*	LIGHT DETECTOR AMPLIFIER	EACH	1
	TEMPORARY TRAFFIC SIGNAL INSTALLATION	EACH	1
	REMOVE EXISTING TRAFFIC SIGNAL EQUIPMENT	EACH	1
	REMOVE EXISTING HANDHOLE	EACH	6
	REMOVE EXISTING CONCRETE FOUNDATION	EACH	7
*	EMERGENCY VEHICLE PRIORITY SYSTEM LINE SENSOR CABLE, NO. 20 3/C	FOOT	262
	FULL ACTUATED CONTROLLER AND TYPE SUPER P CABINET (SPECIAL)	EACH	1
	SERVICE INSTALLATION, GROUND MOUNTED, METERED	EACH	1
	PEDESTRIAN SIGNAL POST, 10 FT	EACH	2
	UNINTERRUPTABLE POWER SUPPLY, SPECIAL	EACH	1
	ACCESSIBLE PEDESTRIAN SIGNALS	EACH	4
	CONCRETE FOUNDATION, TYPE A 12-INCH DIAMETER	FOOT	8
	LED SIGNAL FACE, LENS COVER	EACH	13
	TEMPORARY TRAFFIC SIGNAL TIMING	EACH	1

* 100% COST TO THE VILLAGE OF NILES

TS 5845
ECON 156

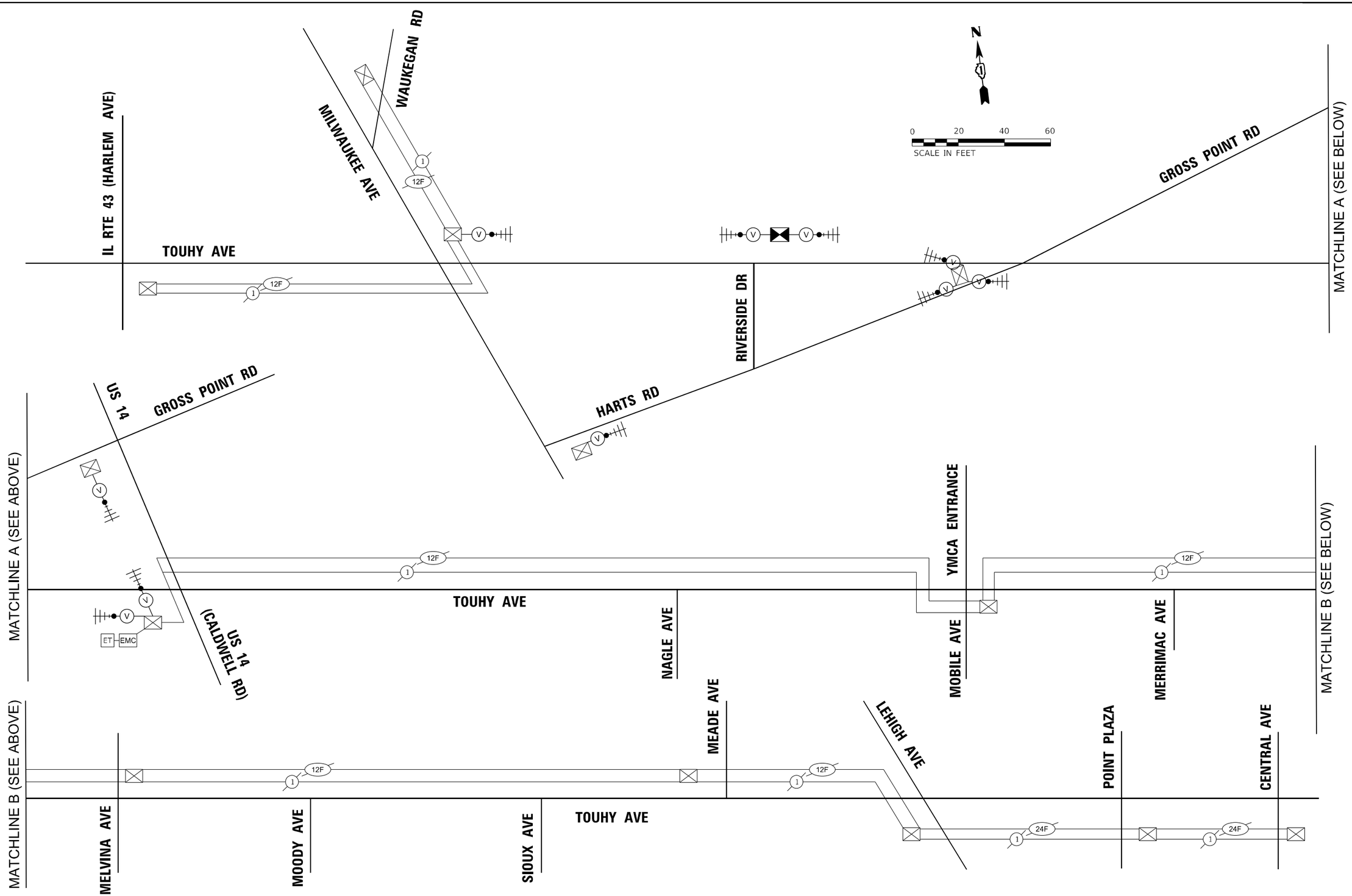

ECON 156

AEG ATLAS ENGINEERING GROUP, LTD.	USER NAME = cpujari	DESIGNED -	REVISED -	STATE OF ILLINOIS DEPARTMENT OF TRANSPORTATION	TEMPORARY INTERCONNECT SCHEMATIC TOUHY AVE OVER NORTH BRANCH OF CHICAGO RIVER	F.A.U. RTE.	SECTION	COUNTY	TOTAL SHEETS / SHEET NO.
		DRAWN -	REVISED -			341	95-B	COOK	124 / 58
	PLOT SCALE = 40.0000 ' / in.	CHECKED -	REVISED -					CONTRACT NO. 62D34	
	PLOT DATE = 3/3/2025	DATE -	REVISED -		SCALE: 1" = 20' / SHEET 9 OF 11 SHEETS / STA. TO STA.		ILLINOIS	FED. AID PROJECT	

MODEL: Default
FILE NAME: pw:\\primec-pw.bentley.com:primecs-pw-31\Documents\01 Projects\2020\2020425.00 - IDOT Phase II Various Designs\2020425.05 \VOS Touhy over N. Branch of Chicago River\Drawings\Current Drawing Files\CADD Sheets\Traffic Signal\01960-Temp Schematic.dgn

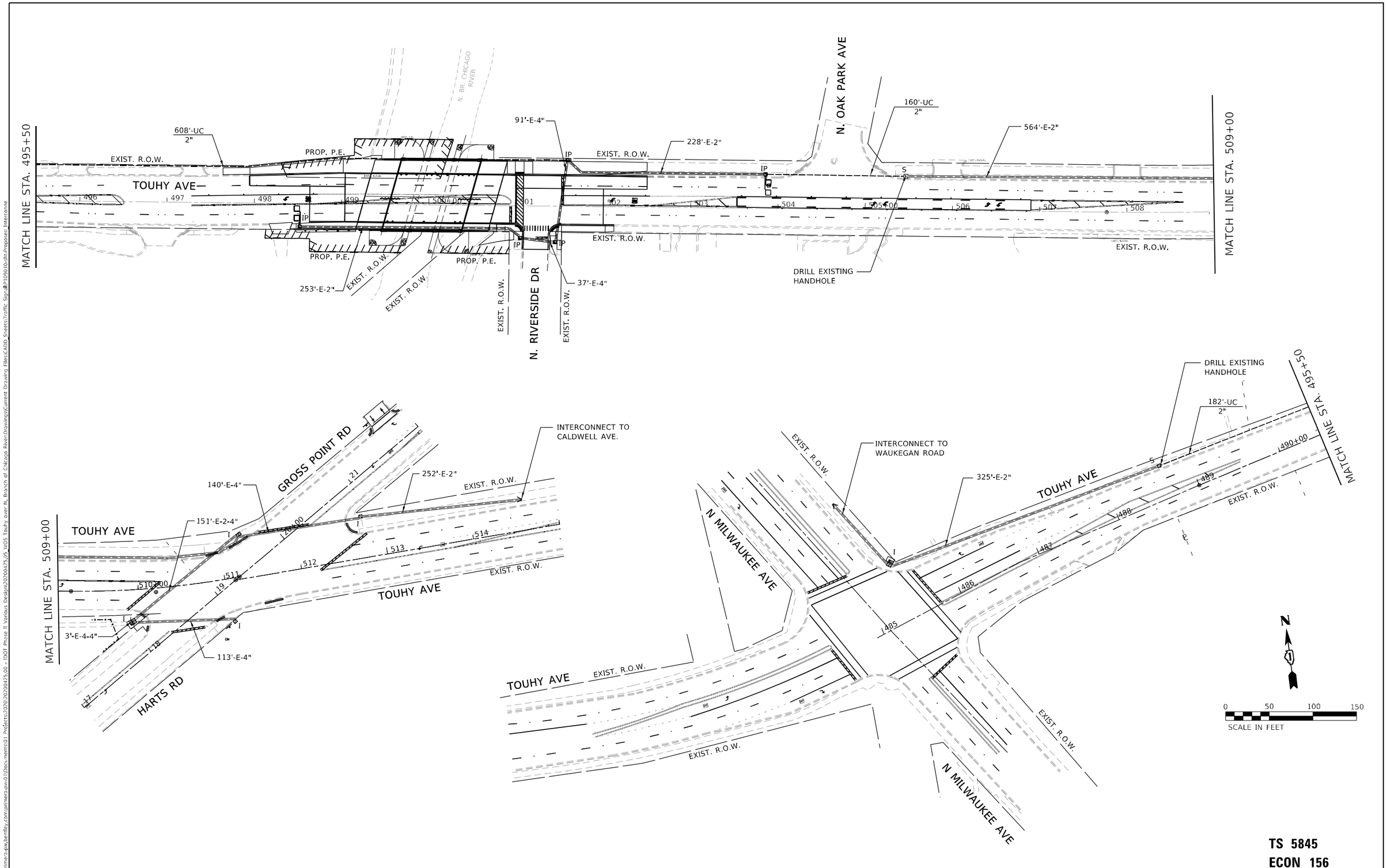

TS 5845
ECON 156

AEG ATLAS ENGINEERING GROUP, LTD.	USER NAME = cpujari	DESIGNED - SCA	REVISED -	STATE OF ILLINOIS DEPARTMENT OF TRANSPORTATION	PROPOSED INTERCONNECT PLAN TOUHY AVENUE AND N. RIVERSIDE DR	F.A.U. RTE.	SECTION	COUNTY	TOTAL SHEETS / SHEET NO.
		DRAWN - SDR	REVISED -			341	95-B	COOK	124 / 59
	PLOT SCALE = 100.0000 ' / in.	CHECKED - SCH	REVISED -					CONTRACT NO. 62D34	
	PLOT DATE = 3/3/2025	DATE -	REVISED -		SCALE: 1" = 50' / SHEET 10 OF 11 SHEETS / STA. TO STA.		ILLINOIS	FED. AID PROJECT	

MODEL: Default
FILE NAME: pw:\\prime-a-pw.bentley.com:primera-pw-01\Documents\01 Projects\2020\20200425.00 - IDOT Phase II Various Designs\20200425.05 \VO5 Touhy over N. Branch of Chicago River\Drawings\Current Drawing Files\CADD_Sheets\Traffic Sign\191090 16-IH-Proposed Interconne

SCHEDULE OF QUANTITIES

	ITEM DESCRIPTION	UNITS	TOTAL QTY
	UNDERGROUND CONDUIT, GALVANIZED STEEL, 2" DIA.	FOOT	1,018
	MAINTENANCE OF EXISTING TRAFFIC SIGNAL INSTALLATION	EACH	2
	TRANSCEIVER - FIBER OPTIC	EACH	1
	ELECTRIC CABLE IN CONDUIT, TRACER, NO. 14 1C	FOOT	2,385
	DRILL EXISTING HANDHOLE	EACH	2
	REMOVE ELECTRIC CABLE FROM CONDUIT	FOOT	4,770
*	ROD AND CLEAN EXISTING CONDUIT	FOOT	564
	FIBER OPTIC CABLE IN CONDUIT, NO. 62.5/125, MM12F SM24F	FOOT	2,385
	RE-OPTIMIZE TRAFFIC SIGNAL SYSTEM LEVEL 2	EACH	1

* NOMINAL QUANTITY TO BE USED AS NEEDED AND AS APPROVED BY THE ENGINEER

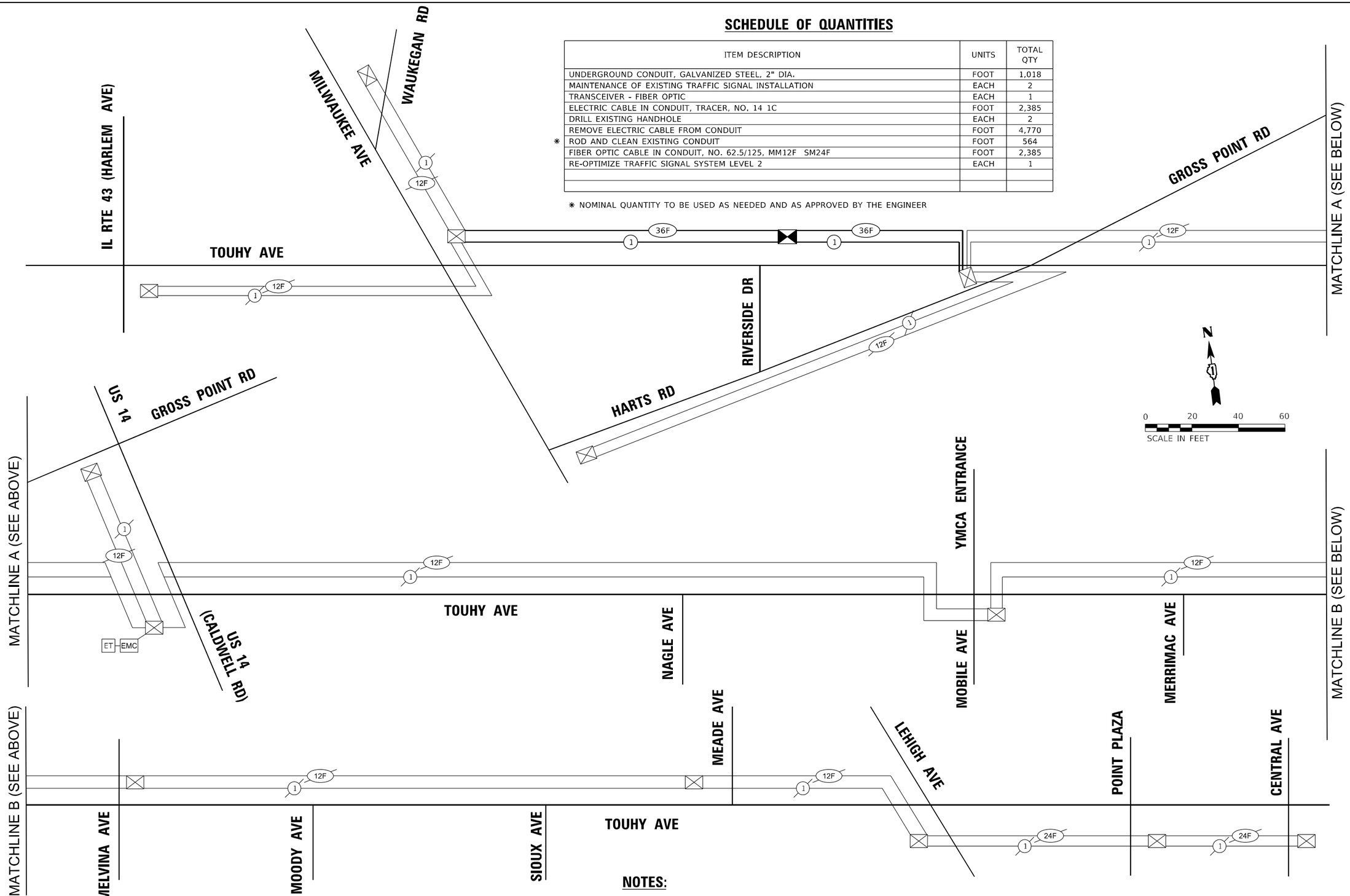

NOTES:

1. THE SCAT CONSULTANT WILL DETERMINE THE LOCATION OF THE SYSTEM DETECTORS.

TS 5845
ECON 156

AEG ATLAS ENGINEERING GROUP, LTD.	USER NAME = cpujari	DESIGNED -	REVISED -
		DRAWN -	REVISED -
	PLOT SCALE = 40.0000 ' / in.	CHECKED -	REVISED -
	PLOT DATE = 3/3/2025	DATE -	REVISED -

STATE OF ILLINOIS
DEPARTMENT OF TRANSPORTATION

PROPOSED INTERCONNECT SCHEMATIC AND SCHEDULE OF QUANTITIES
TOUHY AVE OVER NORTH BRANCH OF CHICAGO RIVER

SCALE: 1" = 20' | SHEET 11 OF 11 SHEETS | STA. TO STA.

F.A.U. RTE.	SECTION	COUNTY	TOTAL SHEETS	SHEET NO.
341	95-B	COOK	124	60
		CONTRACT NO. 62D34		
		ILLINOIS	FED. AID PROJECT	

MODEL: Default
FILE NAME: pw:\\primera-pw.bentley.com:primera-pw-01\Documents\01 Projects\2020\2020425.00 - IDOT Phase II Various Design\2020425.05 \VOS Touhy over N. Branch of Chicago River\Drawings\Current Drawing Files\CADD_Sheets\Traffic Signal\010910-Proposed_Schematic.dgn

GENERAL NOTES:

1. THIS PROJECT INCLUDES THE INSTALLATION OF PROPOSED LIGHTING ON THE PROPOSED BRIDGE OVER NORTH BRANCH OF CHICAGO RIVER. IT INCLUDES INSTALLATION OF TEMPORARY LIGHTING TO BE USED DURING ALL STAGES OF CONSTRUCTION WHICH SHALL ALSO REMAIN IN USE UNTIL THE PROPOSED LIGHTING IS FULLY INSTALLED AND OPERATIONAL.

2. THE PROPOSED LIGHTING ON NEW BRIDGE SHALL BE OWNED AND MAINTAINED BY THE VILLAGE OF NILES. THEIR ADDRESS AND PHONE NUMBER ARE: VILLAGE OF NILES MUNICIPAL BUILDING 1000 CIVIC CENTER DR. NILES, IL. 60714 AND 847-588-8000 RESPECTIVELY.

3. THE QUANTITIES OF RACEWAY INDICATED ON THESE PLANS ARE APPROXIMATIONS ONLY. THE CONTRACTOR SHALL FIELD VERIFY ALL LENGTHS AND SHALL INSTALL RACEWAYS IN COMPLETE COMPLIANCE WITH THE SPECIFIED REQUIREMENTS.

4. THE CONTRACTOR SHALL NOTIFY J.U.L.I.E. TO LOCATE AND MARK/STAKE ALL UNDERGROUND UTILITIES. MEADE ELECTRIC CO. DISTRICT 1 ELECTRICAL MAINTENANCE CONTRACTOR SHALL LOCATE IDOT ELECTRICAL EQUIPMENT. THEIR PHONE NO. IS 773-287-7672.

5. LIGHTING SYSTEM INSTALLATION SHALL CONFORM TO THE LATEST IDOT STANDARDS, NEC AND LOCAL CODES.

6. ALL ELECTRICAL EQUIPMENT AND PRODUCTS SHALL BE UL LISTED AND LABELED.

7. THE CONTRACTOR SHALL TAKE CARE WHEN INSTALLING UNIT DUCT TO AVOID CONFLICTS WITH EXISTING UNDERGROUND UTILITIES AND TREES ROOTS. THE CONTRACTOR SHALL BE RESPONSIBLE FOR ANY DAMAGE AS DETERMINED BY THE ENGINEER.

8. THE CONTRACTOR SHALL TAKE CARE WHEN INSTALLING LIGHT POLE FOUNDATIONS TO AVOID CONFLICTS WITH UNDERGROUND UTILITIES. WHEN CONFLICTS ARE ENCOUNTERED. THE CONTRACTOR SHALL SUGGEST TO RELOCATE THE FOUNDATIONS. THE NEW LOCATION SHALL BE APPROVED BY THE ENGINEER PRIOR TO INSTALLATION.

9. GROUND RODS SHALL BE INSTALLED AT EACH OF THE RELOCATED LIGHTING UNITS.

BILL OF MATERIALS

DESCRIPTION	UNIT	QUANTITY
UNDERGROUND CONDUIT, GALVANIZED STEEL, 4" DIA.	FOOT	37
CONDUIT EMBEDDED IN STRUCTURE, 2" DIA., PVC	FOOT	247
JUNCTION BOX, STAINLESS STEEL, ATTACHED TO STRUCTURE, 12"X12"X6"	EACH	4
UNIT DUCT, 600V, 6-1C NO. 8, 1/C NO.8 GROUND, (XLP-TYPE USE), 1 1/2" DIA. POLYETHYLENE	FOOT	783
ELECTRIC CABLE IN CONDUIT, 600V (XLP-TYPE USE) 1/C NO. 8	FOOT	2065
AERIAL CABLE, 2-1/C NO. 8 WITH MESSENGER WIRE	FOOT	1025
AERIAL CABLE, 4-1/C NO. 8 WITH MESSENGER WIRE	FOOT	1025
LIGHT POLE, WOOD, 60 FOOT, CLASS 4, WITH 15FT MAST ARM	EACH	4
LIGHT POLE FOUNDATION, 24" DIAMETER	FOOT	40
BREAKAWAY DEVICE, TRANSFORMER BASE, 15 INCH BOLT CIRCLE	EACH	4
REMOVAL OF TEMPORARY LIGHTING UNIT	EACH	4
RELOCATE EXISTING LIGHTING UNIT	EACH	4
ORNAMENTAL LIGHT UNIT, COMPLETE	EACH	8
TEMPORARY WOOD POLE, 60 FT., CLASS 4	EACH	4
TEMPORARY LUMINAIRE, LED, ROADWAY, OUTPUT DESIGNATION G	EACH	4
MAINTENANCE OF LIGHTING SYSTEM	CAL MO	12

LEGEND

- PROPOSED DECORATIVE LIGHTING UNIT, 36.4W LED
- (E) EXISTING LIGHTING UNIT TO REMAIN
- (RR) EXISTING LIGHTING UNIT TO BE REMOVED AND RELOCATED
- (T) TEMPORARY LIGHTING UNIT, 50 FT. MH, 15 FT. MAST ARM WITH LED LUMINAIRE, MCIII (MINIMUM LUMENS 16,046)
- (RL) RELOCATED LIGHTING UNIT WITH NEW BREAKWAY DEVICE
- JUNCTION BOX, STAINLESS STEEL, ATTACHED TO STRUCTURE, 12" X 12" X6"
- UNIT DUCT, 600V, 6-1C NO. 8, 1/C NO.8 GROUND, (XLP-TYPE USE), 1½" DIA. POLYETHYLENE
- CONDUIT EMBEDDED IN PARAPET WALL WITH ELECTRIC CABLE
- RIGID GALVANIZED STEEL CONDUIT WITH UNIT DUCT
- A AERIAL CABLE, 4-1/C NO. 8 WITH MESSENGER WIRE
- A/C AERIAL CABLE, 2-1/C NO. 8 WITH MESSENGER WIRE
- GROUND ROD
- TEMPORARY WOOD POLE, 60 FT., CLASS 4

LT–01

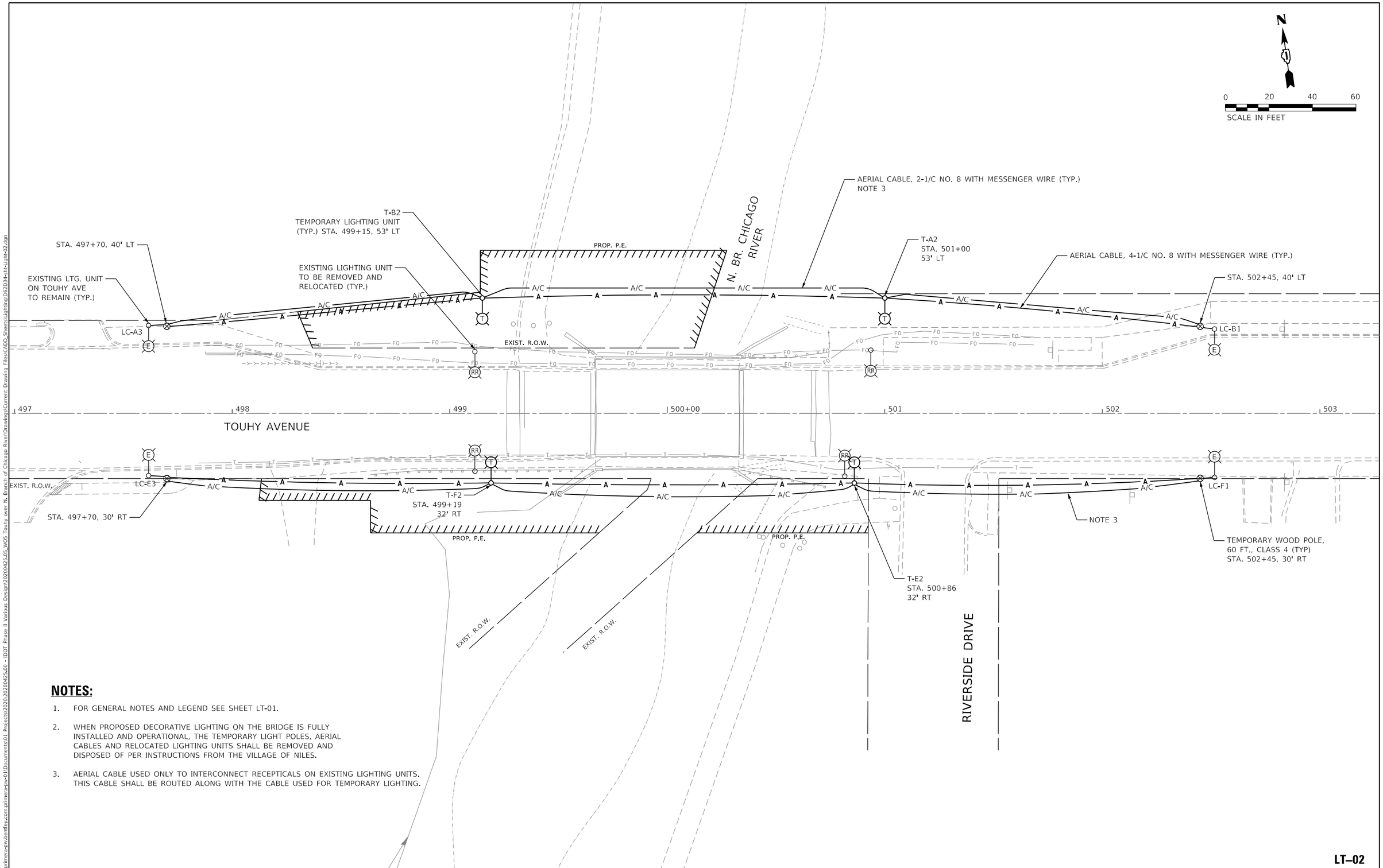

NOTES:

1. FOR GENERAL NOTES AND LEGEND SEE SHEET LT-01.
2. WHEN PROPOSED DECORATIVE LIGHTING ON THE BRIDGE IS FULLY INSTALLED AND OPERATIONAL, THE TEMPORARY LIGHT POLES, AERIAL CABLES AND RELOCATED LIGHTING UNITS SHALL BE REMOVED AND DISPOSED OF PER INSTRUCTIONS FROM THE VILLAGE OF NILES.
3. AERIAL CABLE USED ONLY TO INTERCONNECT RECEPTICALS ON EXISTING LIGHTING UNITS. THIS CABLE SHALL BE ROUTED ALONG WITH THE CABLE USED FOR TEMPORARY LIGHTING.

LT–02

MODEL: Default
FILE NAME: pw:\\primera-pw.bentley.com:primera-pw\01Documents\01 Projects\2020\20200425.00 - IDOT Phase II Various Design\20200425.05_W05 Touhy over N. Branch of Chicago River\Drawings\Current Drawing Files\CADD_Sheets\Lighting\062D34-lrt-Light-02.dgn

AMES Engineering, Inc. CONSULTING ENGINEERS 6330 Belmont Road, Suite 4B Downers Grove, IL 60516	USER NAME = Srahman	DESIGNED - MB	REVISED -	**STATE OF ILLINOIS DEPARTMENT OF TRANSPORTATION**	**REMOVAL AND TEMPORARY LIGHTING PLAN TOUHY AVENUE OVER NORTH BRANCH CHICAGO RIVER**	F.A.U. RTE.	SECTION	COUNTY	TOTAL SHEETS	SHEET NO.
		DRAWN - MD / SR	REVISED -			341	95-B	COOK	124	62
	PLOT SCALE = 40.0000 ' / in.	CHECKED - BL	REVISED -					CONTRACT NO. 62D34		
	PLOT DATE = 2/27/2025	DATE - 03-14-2025	REVISED -		SCALE: 1"=20' SHEET 1 OF 1 SHEETS STA. TO STA.		ILLINOIS	FED. AID PROJECT		

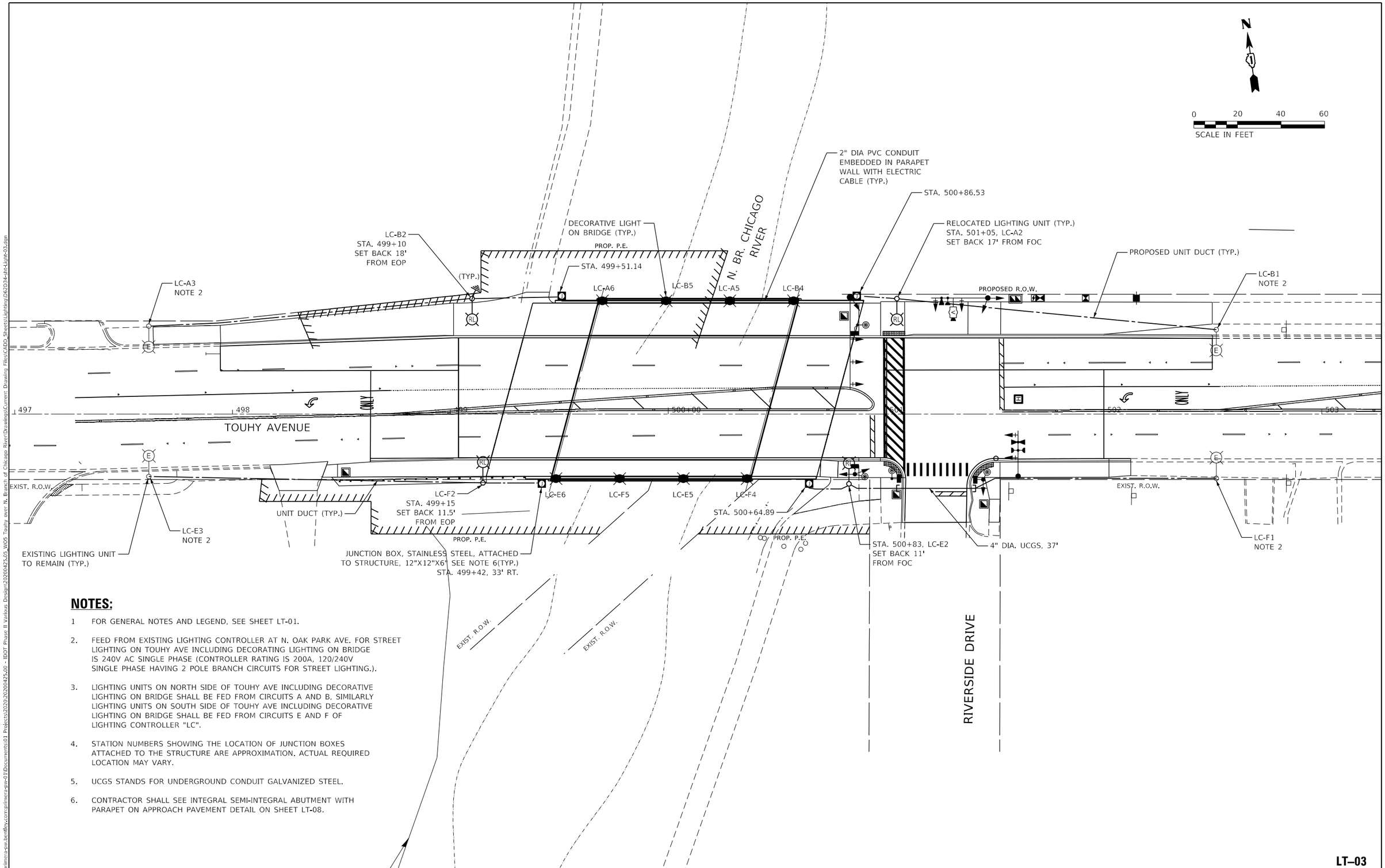

NOTES:

1. FOR GENERAL NOTES AND LEGEND, SEE SHEET LT-01.
2. FEED FROM EXISTING LIGHTING CONTROLLER AT N. OAK PARK AVE. FOR STREET LIGHTING ON TOUHY AVE INCLUDING DECORATING LIGHTING ON BRIDGE IS 240V AC SINGLE PHASE (CONTROLLER RATING IS 200A, 120/240V SINGLE PHASE HAVING 2 POLE BRANCH CIRCUITS FOR STREET LIGHTING.).
3. LIGHTING UNITS ON NORTH SIDE OF TOUHY AVE INCLUDING DECORATIVE LIGHTING ON BRIDGE SHALL BE FED FROM CIRCUITS A AND B, SIMILARLY LIGHTING UNITS ON SOUTH SIDE OF TOUHY AVE INCLUDING DECORATIVE LIGHTING ON BRIDGE SHALL BE FED FROM CIRCUITS E AND F OF LIGHTING CONTROLLER "LC".
4. STATION NUMBERS SHOWING THE LOCATION OF JUNCTION BOXES ATTACHED TO THE STRUCTURE ARE APPROXIMATION. ACTUAL REQUIRED LOCATION MAY VARY.
5. UCGS STANDS FOR UNDERGROUND CONDUIT GALVANIZED STEEL.
6. CONTRACTOR SHALL SEE INTEGRAL SEMI-INTEGRAL ABUTMENT WITH PARAPET ON APPROACH PAVEMENT DETAIL ON SHEET LT-08.

LT–03

MODEL: Default
FILE NAME: pw:\\primera-pw.bentley.com:primera-pw-01\Documents\01 Projects\2020\20200425.00 - IDOT Phase II Various Design\20200425.05_W05 Touhy over N. Branch of Chicago River\Drawings\Current Drawing Files\CADD_Sheets\Lighting\062D34-sht-Light-03.dgn

AMES Engineering, Inc. CONSULTING ENGINEERS 6330 Belmont Road, Suite 4B Downers Grove, IL 60516	USER NAME = Srahman	DESIGNED - MB	REVISED -	**STATE OF ILLINOIS DEPARTMENT OF TRANSPORTATION**	**DECORATIVE LIGHTING PLAN TOUHY AVENUE OVER NORTH BRANCH CHICAGO RIVER**	F.A.U. RTE.	SECTION	COUNTY	TOTAL SHEETS	SHEET NO.
		DRAWN - MD / SR	REVISED -			341	95-B	COOK	124	63
	PLOT SCALE = 40.0000 ' / in.	CHECKED - BL	REVISED -					CONTRACT NO. 62D34		
	PLOT DATE = 2/27/2025	DATE - 03-14-2025	REVISED -		SCALE: 1"=20' SHEET 1 OF 1 SHEETS STA. TO STA.		ILLINOIS	FED. AID PROJECT		

LEGEND

- LUMINAIRE, LED, 240V, 0.80A, 173W, 1 PHASE, ON RED AND BLACK WIRE
- LUMINAIRE, LED, 240V, 0.80A, 173W, 1 PHASE, ON ORANGE AND BROWN WIRE
- LUMINAIRE FOR DECORATIVE LIGHTING, 240V, 0.20A, 36.4W ON RED AND BLACK WIRE
- LUMINAIRE FOR DECORATIVE LIGHTING, 240V, 0.20A, 36.4W ON ORANGE AND BROWN WIRE
- UNIT DUCT, 6-1C NO. 8, 1/C NO. 8 GROUND (XLP-TYPE USE) 1½" DIA. POLYETHYLENE

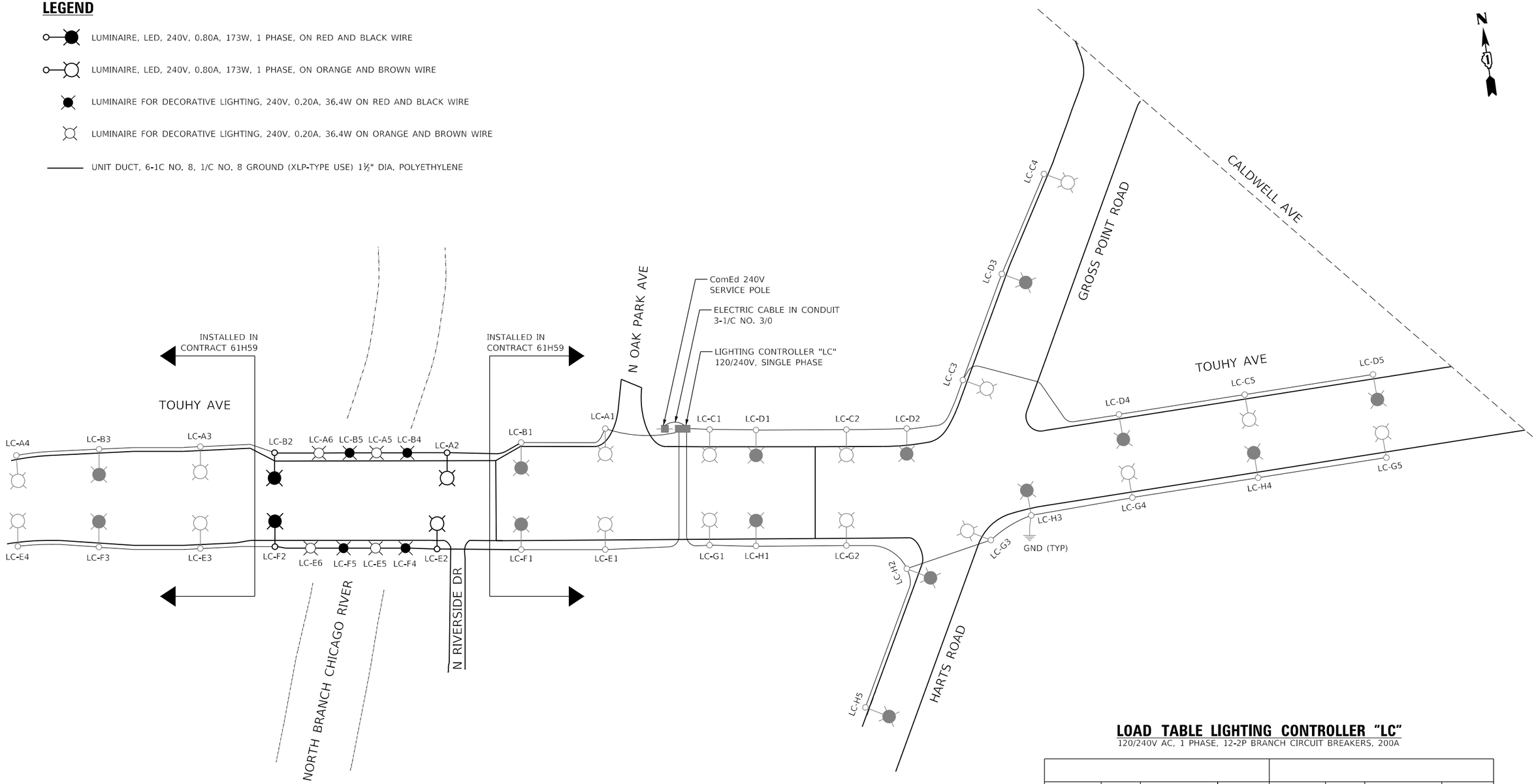

LOAD TABLE LIGHTING CONTROLLER "LC"

120/240V AC, 1 PHASE, 12-2P BRANCH CIRCUIT BREAKERS, 200A

CIRCUIT	TOTAL LUM.	TOTAL CURRENT IN AMPS	TOTAL WATTAGE	CIRCUIT	TOTAL LUM.	TOTAL CURRENT IN AMPS	TOTAL WATTAGE
A	6	3.60	764.80	B	5	2.80	591.80
C	5	4.00	865	D	5	4.00	865
E	6	3.60	764.80	F	5	2.80	591.80
G	5	4.00	865	H	5	4.00	865
TOTAL	22	15.20	3259.60	TOTAL	20	13.60	2913.60

TOTAL LOAD IN WATTS 6173.20
TOTAL LOAD IN AMPS 28.80

NOTES:

1. FOR GENERAL NOTES SEE SHEET LT-01.

LT–04

MODEL: Default
FILE NAME: pw:\\primer-pw.bentley.com:primer-pw-01\Documents-01 Projects\2020\20200425\00 - IDOT Phase II Various Design\20200425_05_WO5 Touhy over N. Branch of Chicago River\Drawings\Current Drawing Files\CADD_Sheets\Lighting\062D34-sht-Light-04.dgn

AMES Engineering, Inc.
CONSULTING ENGINEERS
6330 Belmont Road, Suite 4B
Downers Grove, IL 60516

USER NAME = Srahman	DESIGNED - MB	REVISED -	
	DRAWN - MD / SR	REVISED -	
PLOT SCALE = 100.0000 ' / in.	CHECKED - BL	REVISED -	
PLOT DATE = 2/27/2025	DATE - 03-14-2025	REVISED -	

STATE OF ILLINOIS
DEPARTMENT OF TRANSPORTATION

SINGLE LINE DIAGRAM
TOUHY AVENUE OVER NORTH BRANCH CHICAGO RIVER

SCALE: N.T.S. | SHEET 1 OF 1 SHEETS | STA. TO STA.

F.A.U. RTE.	SECTION	COUNTY	TOTAL SHEETS	SHEET NO.
341	95-B	COOK	124	64
		CONTRACT NO. 62D34		
		ILLINOIS FED. AID PROJECT		

NOTES:

1. BEGA LUMINAIRE #77 208 LED
2. BEGA POLE # 1308 GP

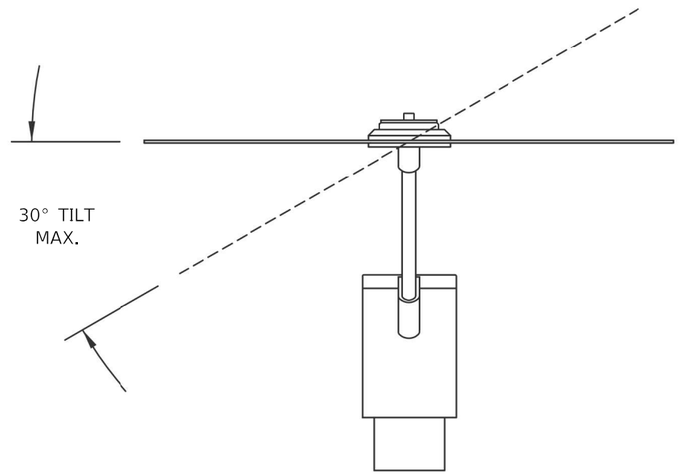

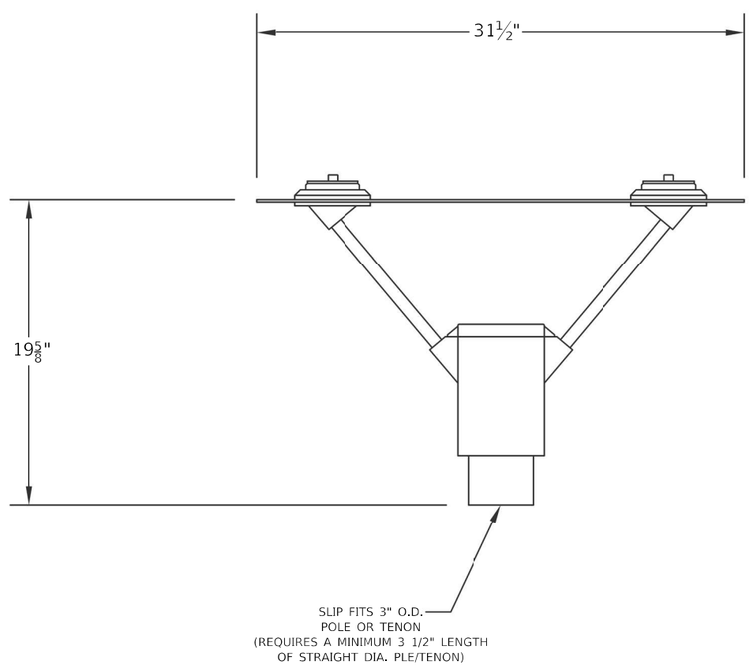

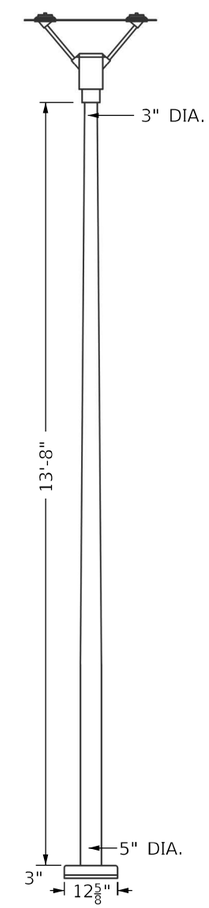

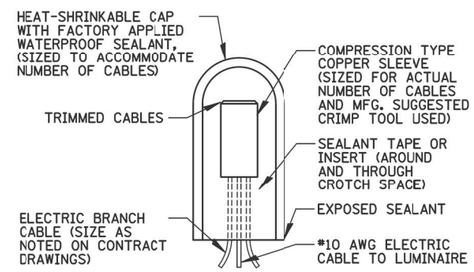

SPLICING ELECTRIC CABLE

N.T.S.

PHASE CONDUCTOR
GROUND CONDUCTOR
NEUTRAL CONDUCTOR

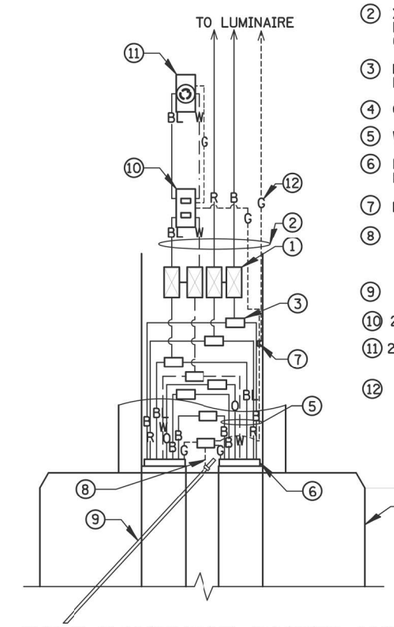

1. 5A FUSE FOR LUMINAIRES AND 2A FUSE FOR FESTOON RECEPTACLE (NEUTRAL SHALL BE BE NON-FUSED) 2-POLE BREAKAWAY FUSE HOLDER & INSULATING BOOTS
2. XLP-TYPE USE POLE WIRES (#10 TO LUMINAIRE & #12 TO RECEPTACLE) COLOR TO MATCH BRANCH WIRING
3. MULTIPLE COMPRESSION FITTINGS (SPLICE), TYP.
4. CONCRETE FOUNDATION
5. WIRES AS SHOWN ON PLANS
6. PROPOSED LIGHTING DUCT PULLED THROUGH PVC RACEWAY
7. POLE GROUND LUG ⅜" - 16 LUG
8. NOT USED
9. NOT USED
10. 20A-120V GFCI SWITCH IN POLE BASI
11. 20A-120V TWISTLOCK RECEPTACLE
12. WIRE COLOR
    R=RED
    B=BLACK
    BL=BLUE
    O=ORANGE
    W=WHITE
    G=GREEN
    BR=BROWN

POLE HANDHOLE POWER WIRING DIAGRAM

N.T.S.

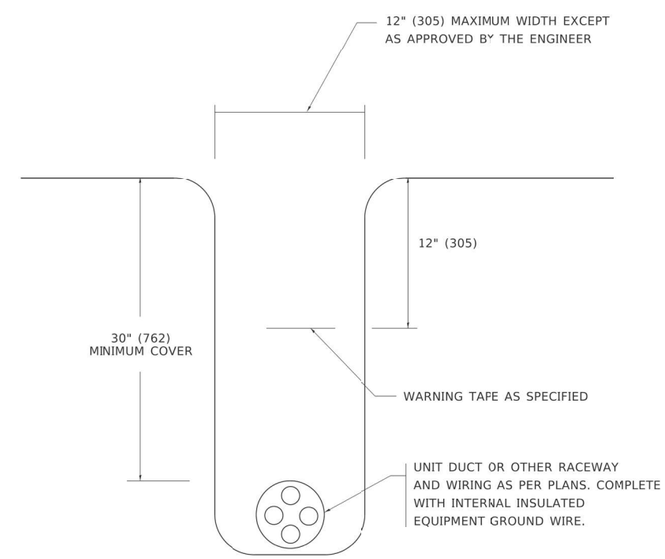

TYPICAL WIRING IN TRENCH DETAIL

N.T.S.

LT–05

MODEL: Default
FILE NAME: pw:\\primeeus-pw.bentley.com:primeeuswo01\Documents\01 Projects\2020\2020425.00 - IDOT Phase II Various Design\2020425.05_WO5 Touhy over N. Branch of Chicago River\Drawings\Current Drawing Files\CADD_Sheets\Lighting\062764-sht-Light-05.dgn

AMES Engineering, Inc. CONSULTING ENGINEERS 6330 Belmont Road, Suite 4B Downers Grove, IL 60516	USER NAME = Srahman	DESIGNED - MB	REVISED -	STATE OF ILLINOIS DEPARTMENT OF TRANSPORTATION	LIGHTING DETAILS TOUHY AVENUE OVER NORTH BRANCH CHICAGO RIVER	F.A.U. RTE.	SECTION	COUNTY	TOTAL SHEETS / SHEET NO.
		DRAWN - MD / SR	REVISED -			341	95-B	COOK	124 / 65
	PLOT SCALE = 0.0833 ' / in.	CHECKED - BL	REVISED -					CONTRACT NO. 62D34	
	PLOT DATE = 2/27/2025	DATE - 03-14-2025	REVISED -		SCALE: N.T.S. SHEET OF SHEETS STA. TO STA.		ILLINOIS	FED. AID PROJECT	

LIGHT POLE FOUNDATION DEPTH TABLE
30 FT. (9.144 m) TO 35 FT. (10.668 m) MOUNTING HEIGHT

SOIL CONDITIONS	DESIGN DEPTH "D" OF FOUNDATION	
	SINGLE ARM POLE	TWIN ARM POLE
SOFT CLAY Qu = 0.375 TON/SQ. FT.	11'-0" (3.35 m)	12'-8" (3.85 m)
MEDIUM CLAY Qu = 0.75 TON/SQ.FT	9'-0" (2.74 m)	14'-10" (4.52 m)
STIFF CLAY Qu = 1.50 TON/SQ. FT.	7'-6" (2.29 m)	3'-7" (2.61 m)
LOOSE SAND Ø = 34°	9'-6" (2.90 m)	10'-7" (3.22 m)
MEDIUM SAND Ø = 37.5°	9'-0" (2.74 m)	9'-10" (2.99 m)
DENSE SAND Ø = 40°	8'-3" (2.51 m)	3'-7" (2.91 m)

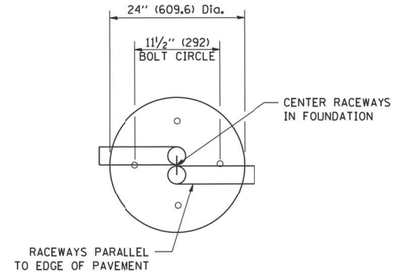

TOP VIEW

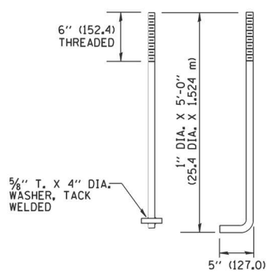

ANCHOR BOLT DETAIL

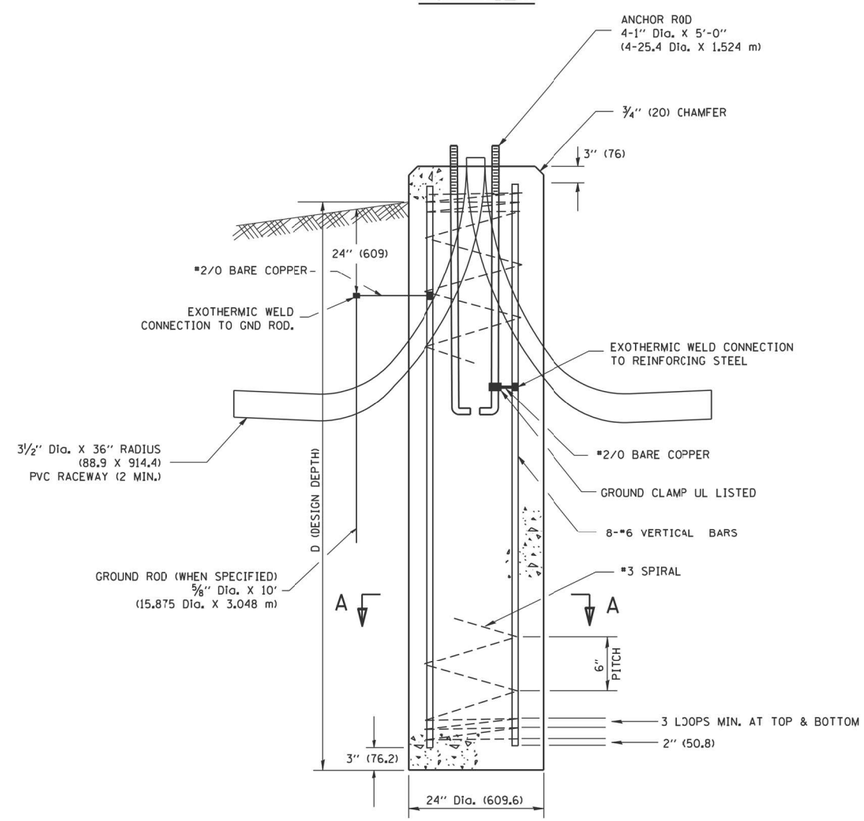

FOUNDATION DETAIL

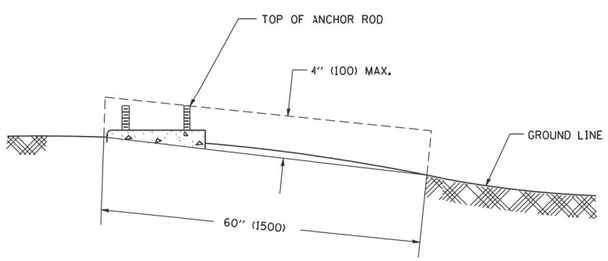

FOUNDATION EXTENSION DETAIL

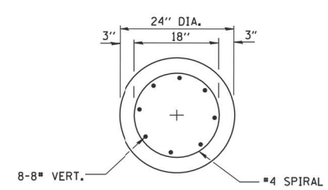

SECTION A-A

NOTES

1. ALL DIMENSIONS ARE IN INCHES (MILLIMETERS) UNLESS OTHERWISE SHOWN.
2. THE ANCHOR RODS AND RACEWAYS SHALL BE PROPERLY SECURED IN PLACE BEFORE THE CONCRETE IN PLACED.
3. THE FOUNDATION SHALL NOT PROTRUDE MORE THAN 4 IN. (100 mm) ABOVE THE FINISHED GRADE WITHIN A 60 IN. (1.5 m) CHORD ACROSS THE FOUNDATION, WITH ANCHOR RODS INCLUDED. IN ACCORDANCE WITH AASHTO GUIDELINES. IF THE FOUNDATION HEIGHT, INCLUDING ANCHOR RODS, EXTENDS BEYOND THESE SPECIFIED LIMITS, THE FOUNDATION SHALL BE REPLACED AT THE CONTRACTOR'S EXPENSE. SEE FOUNDATION EXTENSION DETAIL.
4. THE HOLE FOR THE FOUNDATION SHALL BE MADE BY DRILLING WITH AN AUGER, OF THE SAME DIAMETER AS THE FOUNDATION. IF SOIL CONDITIONS REQUIRE THE USE OF A LINER TO FORM THE HOLE, THE LINER SHALL BE WITHDRAWN AS THE CONCRETE IS DEPOSITED.
5. THE TOP OF THE FOUNDATION SHALL BE CONSTRUCTED LEVEL. A LINER OR FORM SHALL BE USED TO PRODUCE A UNIFORM SMOOTH SIDE TO THE TOP OF THE FOUNDATION. FOUNDATION TOP SHALL BE CHAMFERED ¾-IN. (20 mm).
6. THE CONCRETE SHALL BE CLASS SI. CONCRETE SHALL CURE ACCORDING TO ARTICLE 1020.13 BEFORE LIGHT POLES ARE INSTALLED.
7. THE ANCHOR ROD SHALL BE A HOOK ROD TYPE. COLD BENDING OF THE ANCHOR ROD WILL NOT BE ALLOWED. THE RADIUS OF THE HOOK BEND SHALL NOT BE LESS THAN 4 TIMES THE NOMINAL DIAMETER OF THE ANCHOR ROD. A TACK WELDED ANCHOR ROD MAY BE SUBSTITUTED WITH THE APPROVAL OF THE ENGINEER.
8. THE ANCHOR RODS SHALL BE ACCORDING TO ASTM F1554 GRADE 725 (GRADE 105). NUTS SHALL BE HEXAGON NUTS ACCORDING TO ASTM A 194 2H OR ASTM A 563 DH, AND WASHERS SHALL BE ACCORDING TO ASTM F 436.
9. ANCHOR RODS, NUTS AND WASHERS SHALL BE COMPLETELY GALVANIZED BY EITHER THE HOT-DIPPED PROCESS CONFORMING WITH AASHTO M 232, THE MECHANICAL PLATING METHOD CONFORMING TO AASHTO M 298, CLASS 50 WITH A MAXIMUM COATING THICKNESS OF 150 UM(6 MILS) OR THE ELECTROLYTIC PROCESS ACCORDING TO ASTM F 1136.
10. THE ANCHOR RODS SHALL BE THREADED A MINIMUM OF 6 INCHES (150 mm) WITH A MINIMUM OF 3 INCHES (75 mm) OF THREADED ANCHOR ROD EMBEDDED IN THE FOUNDATION.
11. ANCHOR RODS SHALL PROJECT 2¾" (69.9 mm) ABOVE THE TOP OF THE FOUNDATION. IF BREAKAWAY COUPLINGS ARE SPECIFIED, THE CONTRACTOR SHALL CAREFULLY COORDINATE THE ANCHOR ROD PROJECTION WITH THE INSTALLATION REQUIREMENTS OF THE BREAKAWAY COUPLINGS.
12. THE CONTRACTOR SHALL USE A #3 SPIRAL AT 6" (152.4 mm) PITCH OR MAY SUBSTITUTE #3 TIES AT 12" (304.8 mm) O.C. WITH THE APPROVAL OF THE ENGINEER.
13. THE CABLE TRENCHES AND FOUNDATION SHALL BE BACK FILLED AND COMPACTED AS SPECIFIED BEFORE THE LIGHT POLE IS ERECTED.
14. THE RACEWAYS SHALL PROJECT 1" (25.4 mm) ABOVE THE TOP OF THE FOUNDATION.

LT–06

AMES Engineering, Inc.
CONSULTING ENGINEERS
6330 Belmont Road, Suite 4B
Downers Grove, IL 60515

USER NAME = gaglianobt	DESIGNED -	REVISED -
	DRAWN -	REVISED -
PLOT SCALE = 50.0000 ' / IN.	CHECKED -	REVISED -
PLOT DATE = 1/4/2008	DATE -	REVISED -

STATE OF ILLINOIS
DEPARTMENT OF TRANSPORTATION

LIGHT POLE FOUNDATION
30' (9.144 m) TO 35' (10.668 m) M.H. 11 1/2" (292 mm) BOLT CIRCLE

SCALE: NONE | SHEET NO. 1 OF 1 SHEETS | STA. | TO STA.

F.A.U. RTE.	SECTION	COUNTY	TOTAL SHEETS	SHEET NO.
341	95-B	COOK	123	66
BE–300		CONTRACT NO. 62D34		
FED. ROAD DIST. NO. 1	ILLINOIS	FED. AID PROJECT		

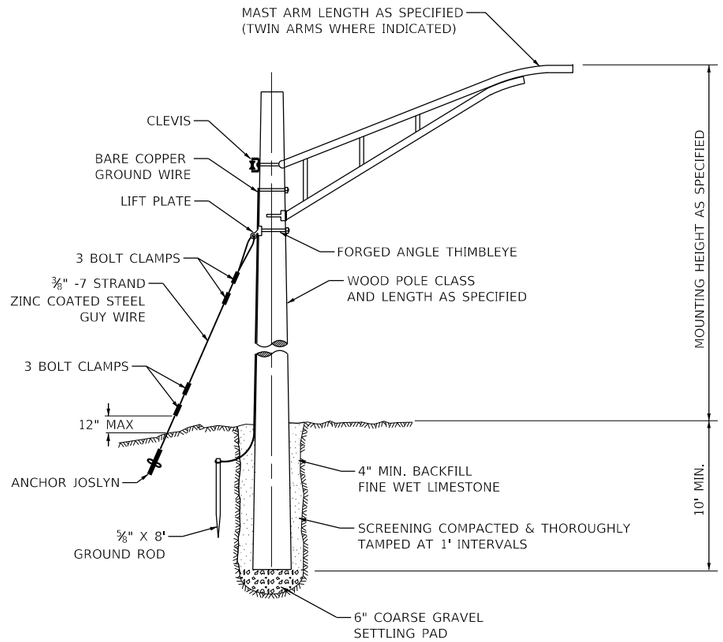

TEMPORARY LIGHT POLE DETAIL

N.T.S.

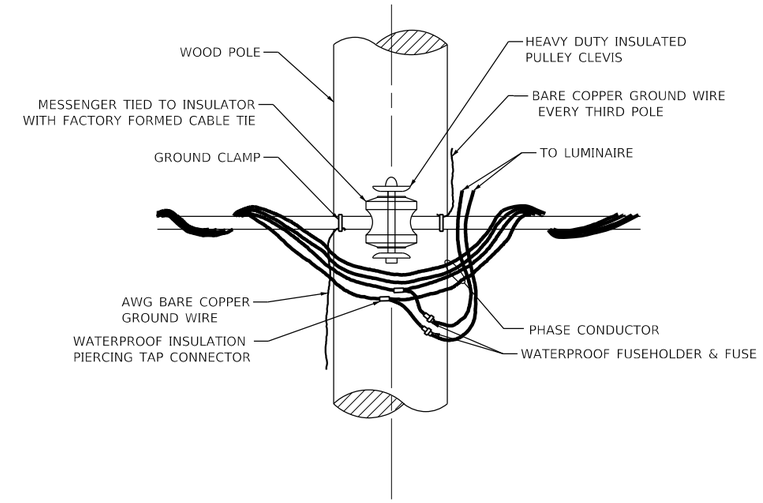

TEMPORARY LIGHT POLE ATTACHMENT DETAIL

N.T.S.

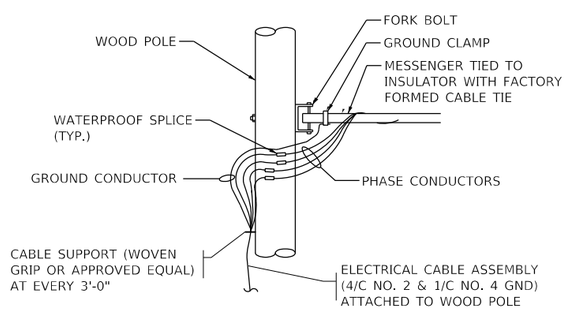

AERIAL CABLE CONNECTION DETAIL

N.T.S.

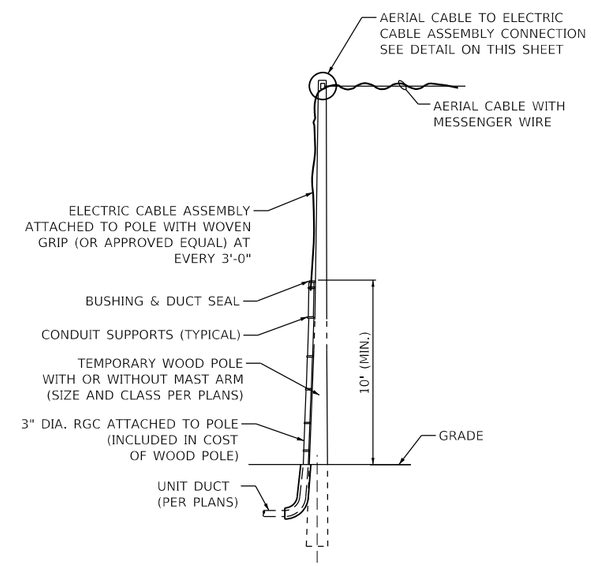

AERIAL CABLE TO UNDERGROUND DUCT TRANSITION DETAIL

N.T.S.

NOTE:

1. COST OF SPLICES AND MOUNTING HARDWARE SHALL BE INCLUDED IN THE UNIT PRICE FOR AERIAL CABLE.

LT–07

MODEL: Default
FILE NAME: pw:\\primera-pw.bentley.com:primera-pw-010\Documents\01 Projects\2020\2020042520 - IDOT Phase II Various Design\2020042505_V05 Touhy over N. Branch of Chicago River\Drawings\Current Drawing Files\CADD_Sheets\Lighting\062D64-lnt-Light-07.dgn

AMES Engineering, Inc. CONSULTING ENGINEERS 6330 Belmont Road, Suite 4B Downers Grove, IL 60516	USER NAME = Srahman	DESIGNED - MB	REVISED -	STATE OF ILLINOIS DEPARTMENT OF TRANSPORTATION	LIGHTING DETAILS TOUHY AVENUE OVER NORTH BRANCH CHICAGO RIVER	F.A.U. RTE.	SECTION	COUNTY	TOTAL SHEETS	SHEET NO.
		DRAWN - MD / SR	REVISED -			341	95-B	COOK	124	67
	PLOT SCALE = 200.0000 ' / in.	CHECKED - BL	REVISED -					CONTRACT NO. 62D34		
	PLOT DATE = 2/27/2025	DATE - 03-14-2025	REVISED -		SCALE: NONE SHEET 1 OF 1 SHEETS STA. TO STA.		ILLINOIS	FED. AID PROJECT		

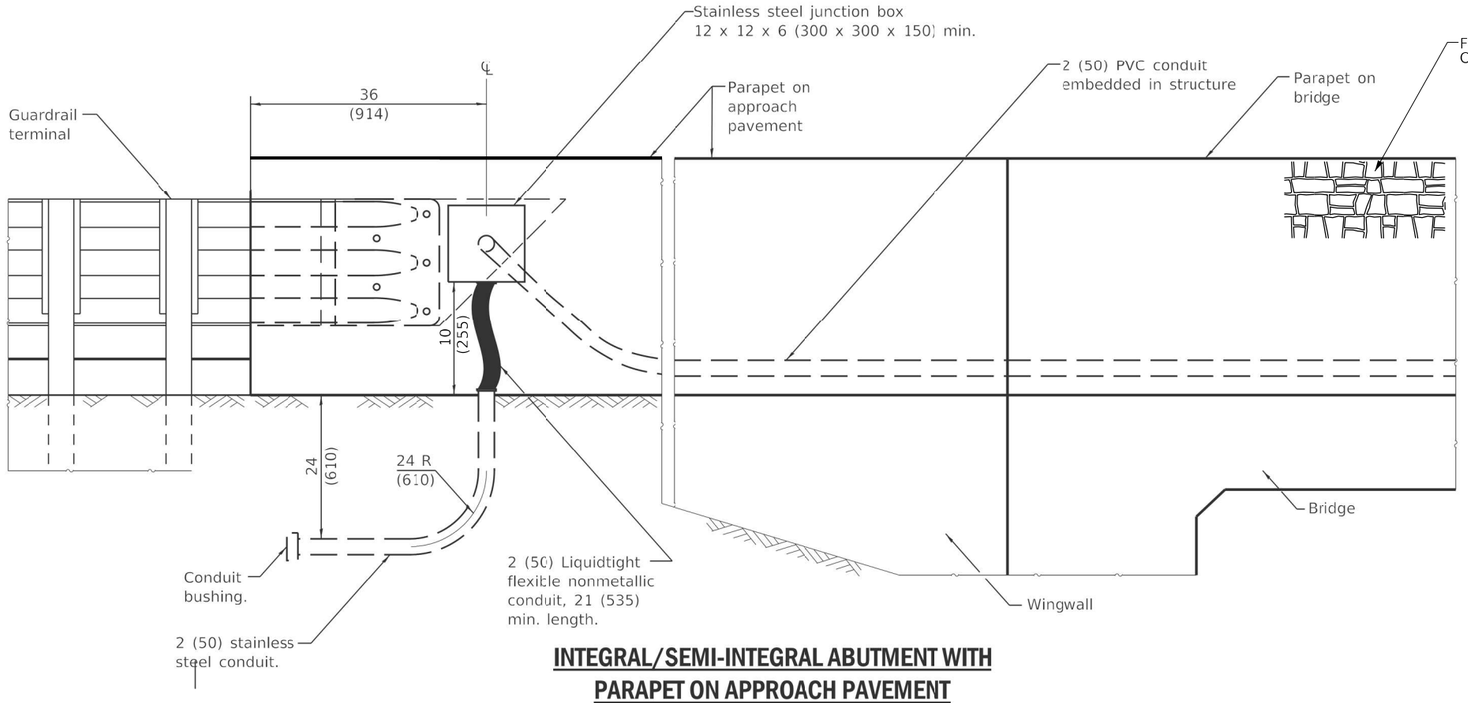

INTEGRAL/SEMI-INTEGRAL ABUTMENT WITH PARAPET ON APPROACH PAVEMENT

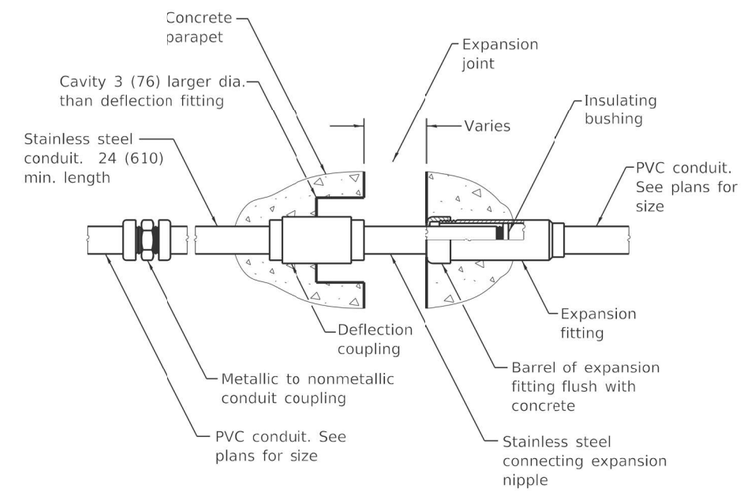

COMBINATION EXPANSION/ DEFLECTION FITTING

GENERAL NOTES

The barrel in the expansion fitting shall be fully embedded in the concrete on one side of the expansion joint. One half the length of the deflection fitting shall be embedded in the concrete on the other side of the expansion joint.

The Contractor shall install combination expansion deflection fittings at all bridge expansion joints.

With the approval of the Engineer, the Contractor may substitute two 12 x 12 x 6 (300 x 300 x 150) min. stainless steel junction boxes attached to back of wall and connected with liquidtight flexible nonmetallic conduit for all expansion joints.

See Standard 631031 for details of steel connector plate for constant slope parapet.

All dimensions are in inches (millimeters) unless otherwise shown.

LT–08

MODEL: Default
FILE NAME: pw:\\primera-pw.bentley.com:primera-pw-01\Documents\01 Projects\2020\20200425.00 - IDOT Phase II Various Designs\20200425.05_WO5 Touhy over N. Branch of Chicago River\Drawings\Current Drawing Files\CADD_Sheets\Lighting\062D64-sht-Light-08.dgn

AMES Engineering, Inc. CONSULTING ENGINEERS 6330 Belmont Road, Suite 4B Downers Grove, IL 60516	USER NAME = Srahman	DESIGNED - MB	REVISED -	STATE OF ILLINOIS DEPARTMENT OF TRANSPORTATION	RACEWAYS EMBEDDED IN STRUCTURE TOUHY AVENUE OVER NORTH BRANCH CHICAGO RIVER	F.A.U. RTE.	SECTION	COUNTY	TOTAL SHEETS	SHEET NO.
		DRAWN - MD / SR	REVISED -			341	95-B	COOK	124	68
	PLOT SCALE = 0.0833 ' / in.	CHECKED - BL	REVISED -					CONTRACT NO. 62D34		
	PLOT DATE = 2/27/2025	DATE - 03-14-2025	REVISED -		SCALE: NONE SHEET 1 OF 1 SHEETS STA. TO STA.		ILLINOIS	FED. AID PROJECT		

GENERAL NOTES:

1. OPENINGS BETWEEN RAILS AND INTERMEDIATE VERTICAL MEMBERS SHALL BE INSTALLED NO MORE THAN 19 INCHES APART.

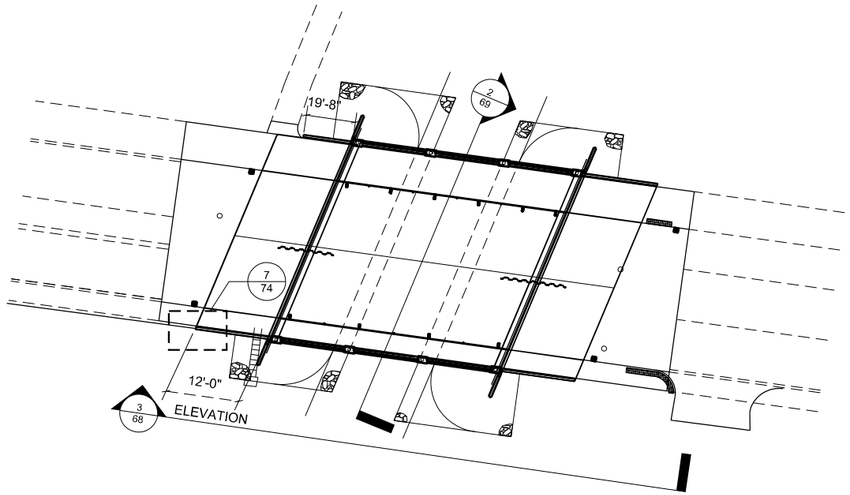

1 BRIDGE PLAN
SCALE: N.T.S.

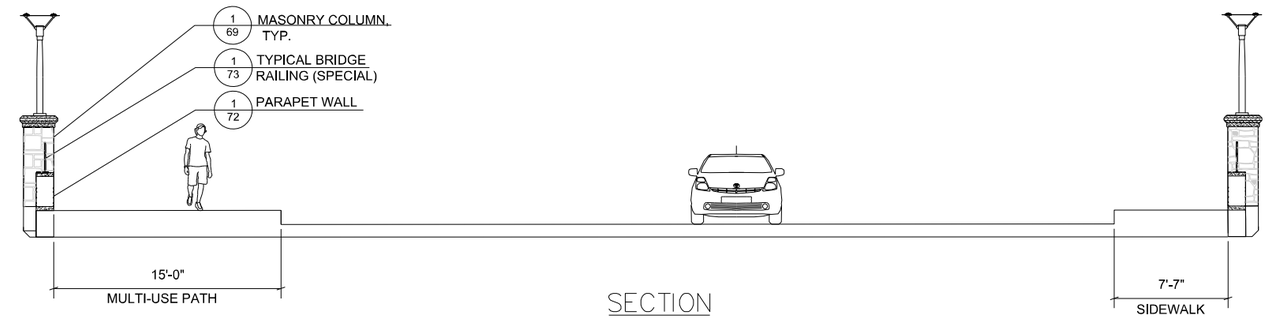

2 BRIDGE CROSS SECTION
SCALE: 1"=5'-0"

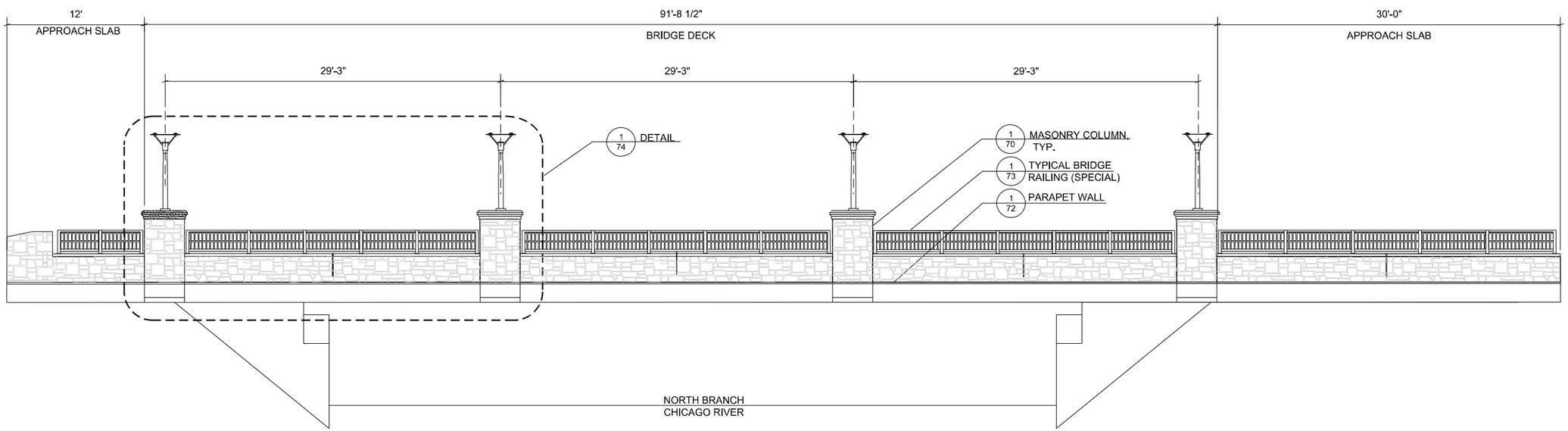

3 BRIDGE OUTSIDE ELEVATION
SCALE: 1"=5'-0"

MODEL: 00
FILE NAME: pw:\\primera-pw.bentley.com:pwnera-pw-01\Documents\01 Projects\2020\20200425.00 - IDOT Phase II Various Designs\20200425_VO5 Touhy over N. Branch of Chicago River\Drawings\Current Drawing Files\CADD Sheets\Architectural\SHT 1 6.dgn

Primera
550 W. JACKSON BLVD. SUITE 600 , CHICAGO IL 60661 , P:312-605-0910 F:312-605-0915

USER NAME = rvandermus	DESIGNED - JR	REVISED -	
	DRAWN - PY/AUS	REVISED -	
PLOT SCALE = 2.000000 / in.	CHECKED - JD	REVISED -	
PLOT DATE = 10/13/2025	DATE -	REVISED -	

STATE OF ILLINOIS
DEPARTMENT OF TRANSPORTATION

NOTES, SECTIONS AND ELEVATIONS
TOUHY AVENUE OVER NORTH BRANCH CHICAGO RIVER

SCALE: AS NOTED | SHEET 69 OF 124 SHEETS | STA. TO STA.

F.A.P. RTE.	SECTION	COUNTY	TOTAL SHEETS	SHEET NO.
341	95-B	COOK	124	69
		CONTRACT NO. 62D34		
		ILLINOIS	FED. AID PROJECT	

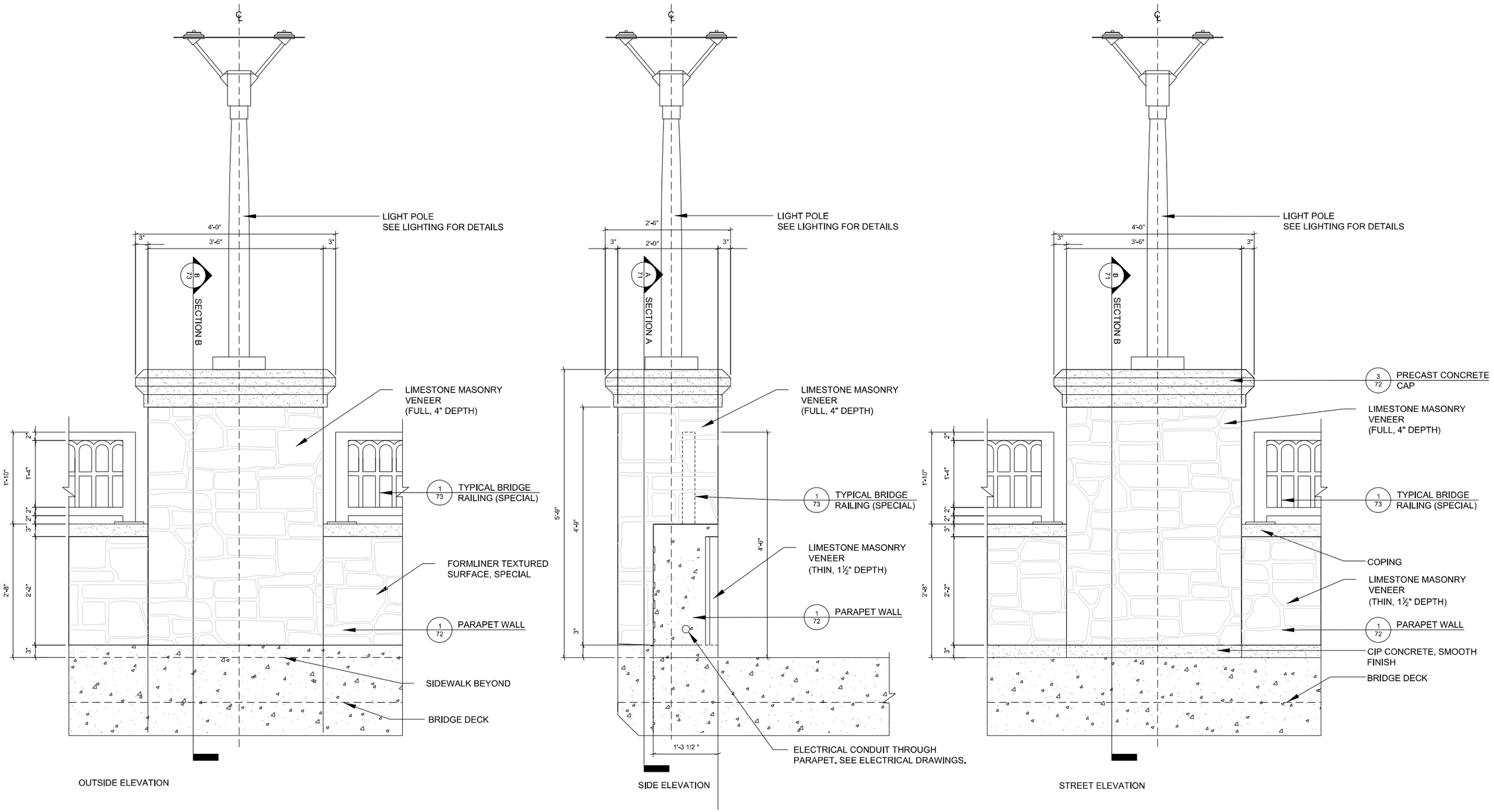

1 MASONRY COLUMN - ELEVATIONS

Scale: 1" = 1'-0"

MODEL: layout1
FILE NAME: J:\Projects\2020\62D34_Streets\Drawings\Garrett_Drawing Files\CADD_Streets\Architectural\SHT 2_6.dgn

Primera
550 W. JACKSON BLVD. SUITE 600 , CHICAGO IL 60661 , P:312-655-0910 F:312-655-0415

USER NAME = rvandermus	DESIGNED - JR	REVISED -	
	DRAWN - PY	REVISED -	
PLOT SCALE = 2.000000 / in.	CHECKED - JD	REVISED -	
PLOT DATE = 10/13/2025	DATE -	REVISED -	

STATE OF ILLINOIS
DEPARTMENT OF TRANSPORTATION

MASONRY COLUMN - ELEVATIONS
TOUHY AVENUE OVER NORTH BRANCH CHICAGO RIVER

SCALE: AS NOTED | SHEET 70 OF 124 SHEETS | STA. TO STA.

F.A.P. RTE.	SECTION	COUNTY	TOTAL SHEETS	SHEET NO.
341	95-B	COOK	124	70
		CONTRACT NO. 62D34		
	ILLINOIS	FED. AID PROJECT		

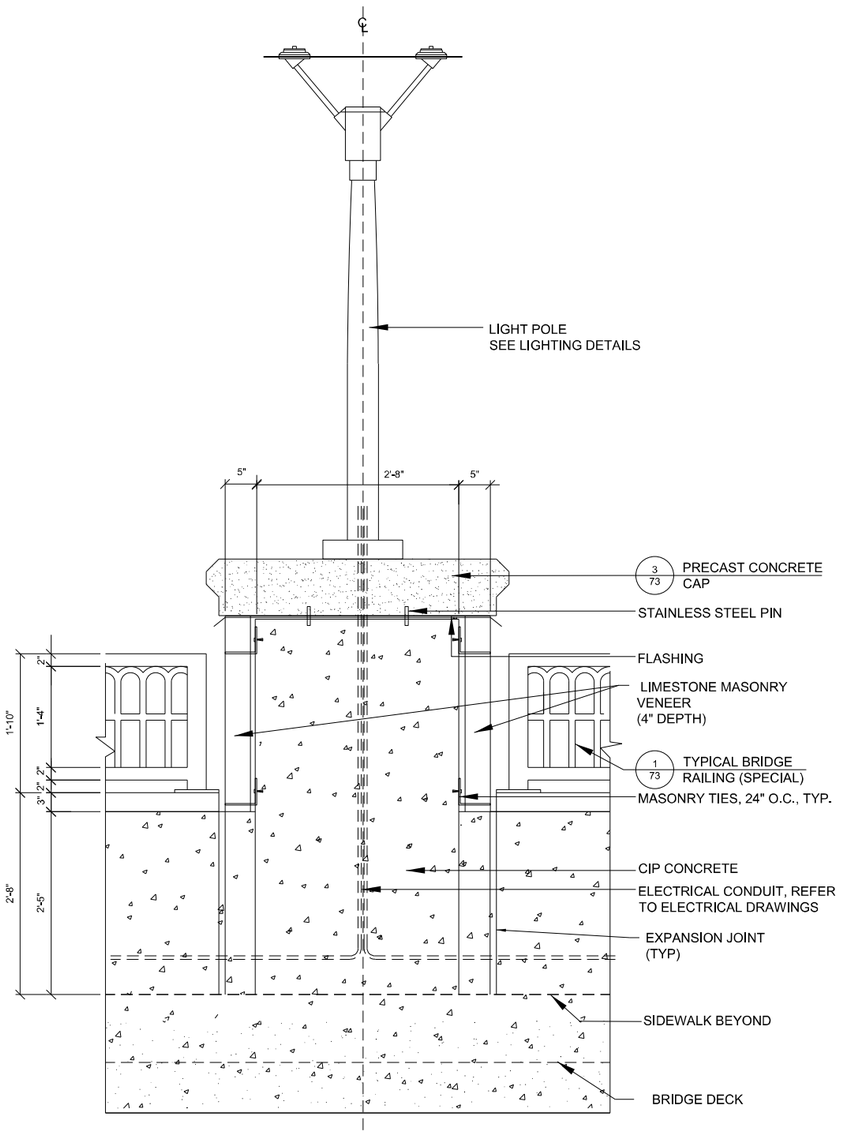

SECTION A

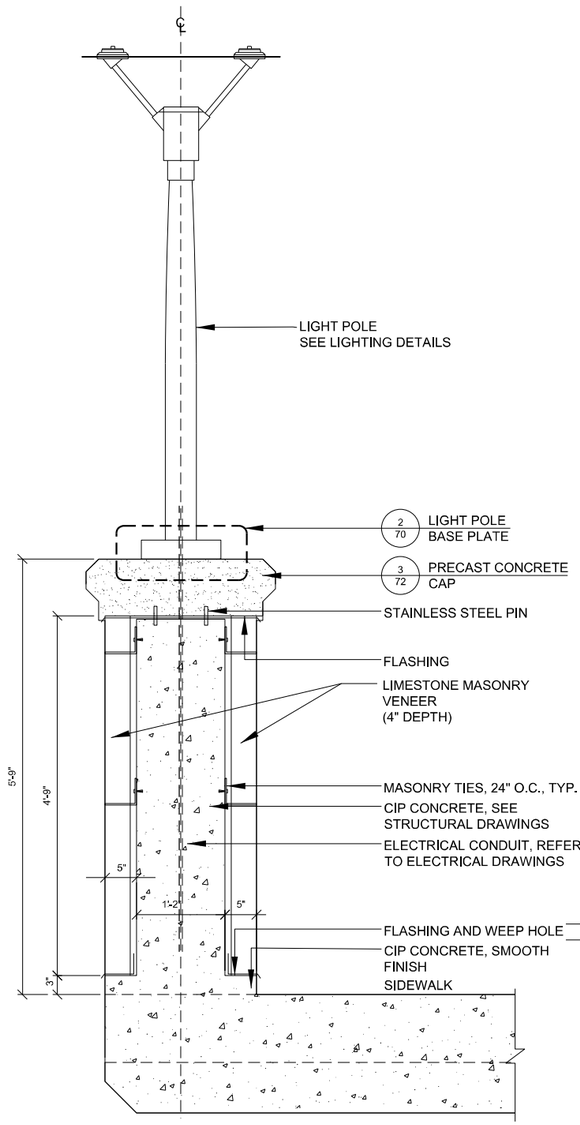

SECTION B

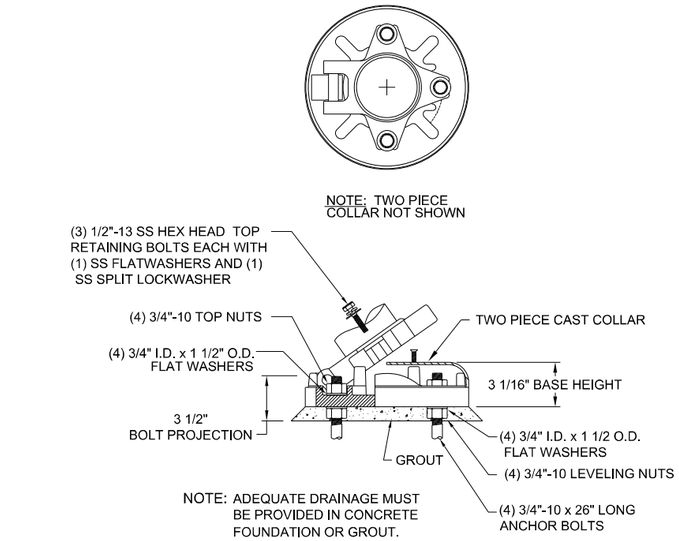

2 LIGHT POLE BASE PLATE

Scale: N.T.S.

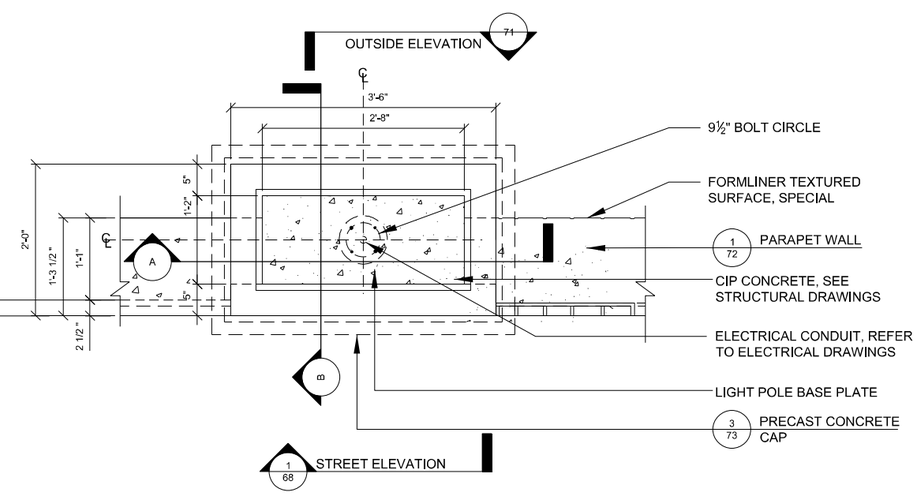

PLAN

1 MASONRY COLUMN - PLAN AND SECTIONS

Scale: 1" = 1'-0"

Primera
550 W. JACKSON BLVD. SUITE 600 , CHICAGO IL 60661 , P:312-855-0910 F:312-855-0415

USER NAME = rvandermus	DESIGNED - JR	REVISED -	
	DRAWN - PY	REVISED -	
PLOT SCALE = 2.000000 / in.	CHECKED - JD	REVISED -	
PLOT DATE = 10/13/2025	DATE -	REVISED -	

STATE OF ILLINOIS
DEPARTMENT OF TRANSPORTATION

MASONRY COLUMN - PLAN AND SECTION
TOUHY AVENUE OVER NORTH BRANCH CHICAGO RIVER

SCALE: AS NOTED | SHEET 71 OF 124 SHEETS | STA. TO STA.

F.A.P. RTE.	SECTION	COUNTY	TOTAL SHEETS	SHEET NO.
341	95-B	COOK	124	71
		CONTRACT NO. 62D34		
	ILLINOIS	FED. AID PROJECT		

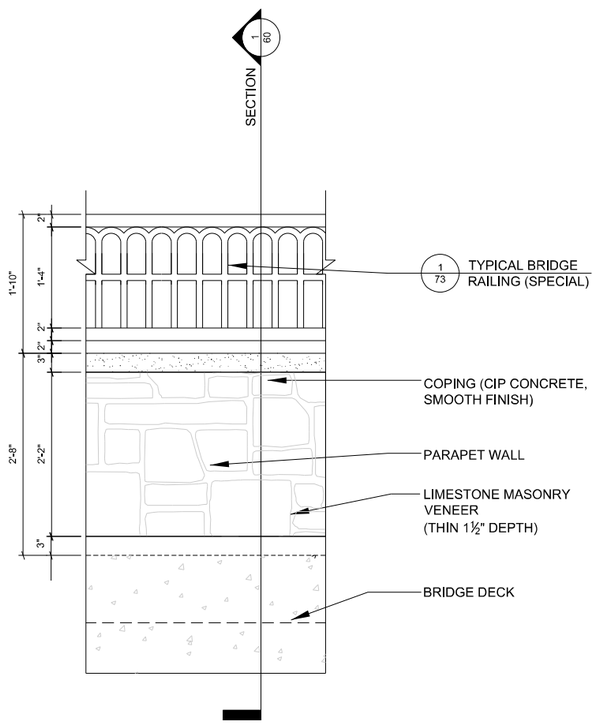

OUTSIDE ELEVATION

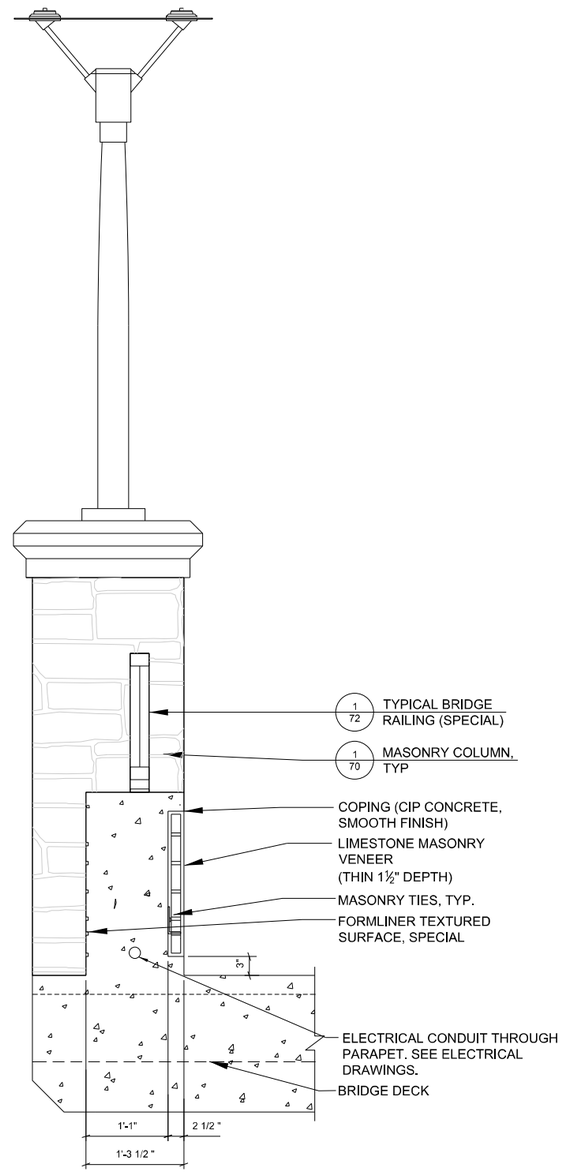

SECTION

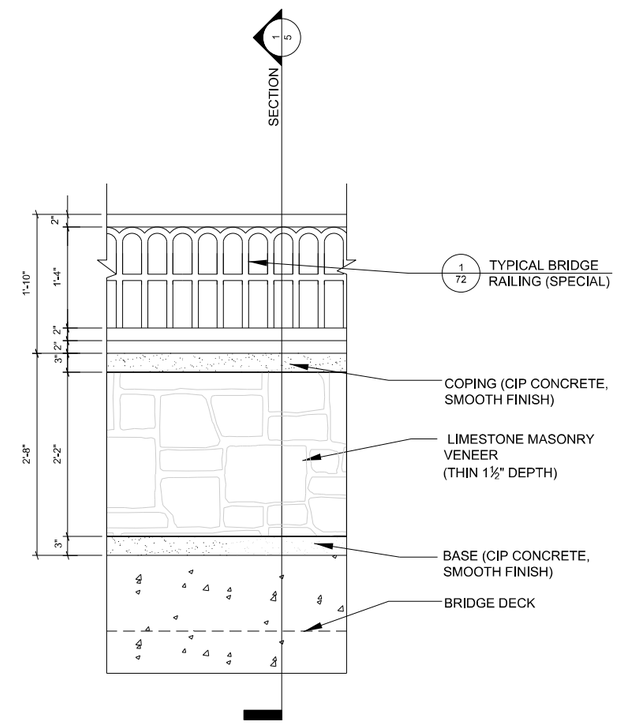

STREET ELEVATION

1 PARAPET WALL

Scale: 1" = 1'-0"

MODEL: Layout1
FILE NAME: pw:\\primre-a-pw.bentley.com:primera-pw-01\Documents\01 Projects\2020\20200425.00 - IDOT Phase II Various Designs\20200425.05 VOS Touhy over N. Branch of Chicago River\Drawings\Current Drawing Files\CADD Sheets\Architectural\SHT 4 6.dgn

Primera
550 W. JACKSON BLVD, SUITE 600 , CHICAGO IL 60661 , P:312-855-0910 F:312-855-0915

USER NAME = rvandermus	DESIGNED - JR	REVISED -	
	DRAWN - PY	REVISED -	
PLOT SCALE = 2.000000 / in.	CHECKED - JD	REVISED -	
PLOT DATE = 10/13/2025	DATE -	REVISED -	

STATE OF ILLINOIS
DEPARTMENT OF TRANSPORTATION

PARAPET WALL - DETAILS
TOUHY AVENUE OVER NORTH BRANCH CHICAGO RIVER

SCALE: AS NOTED | SHEET 72 OF 124 SHEETS | STA. TO STA.

F.A.P. RTE.	SECTION	COUNTY	TOTAL SHEETS	SHEET NO.
341	95-B	COOK	124	72
		CONTRACT NO. 62D34		
		ILLINOIS	FED. AID PROJECT	

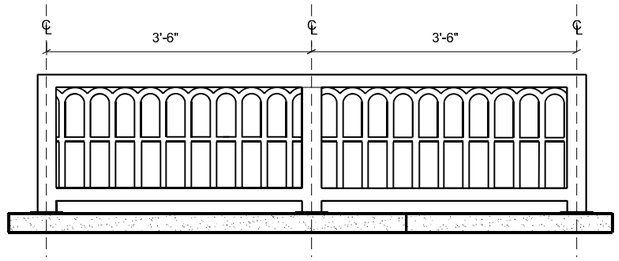

GUARDRAIL PARAPET RAILING ELEVATION

Scale: N.T.S

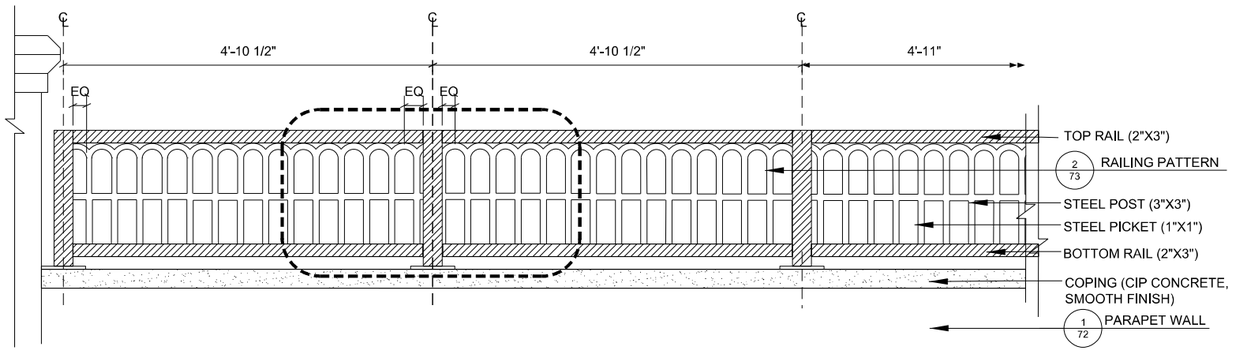

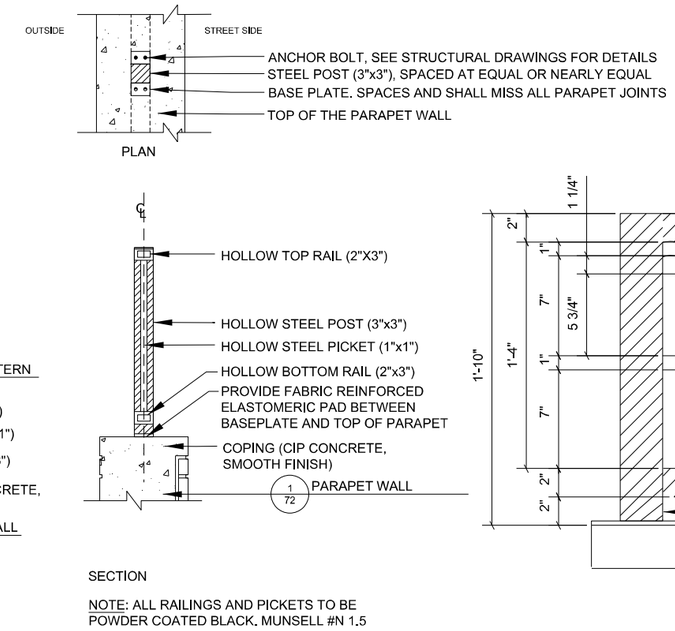

NOTE: ALL RAILINGS AND PICKETS TO BE POWDER COATED BLACK. MUNSELL #N 1.5

1 TYPICAL BRIDGE RAILING (SPECIAL)-ELEVATION AND SECTION

Scale: 1" = 1'-0"

2 RAILING PATTERN

Scale: 1 1/2" = 1'-0"

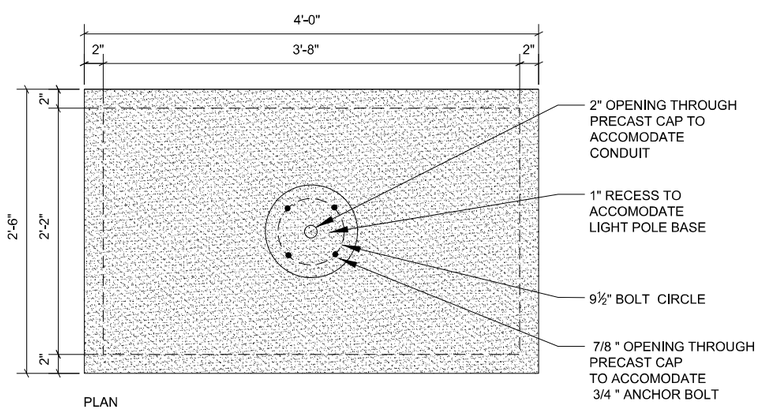

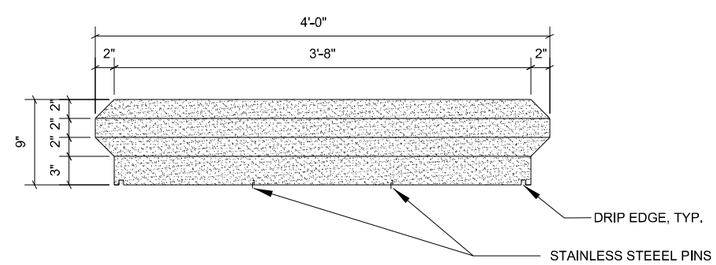

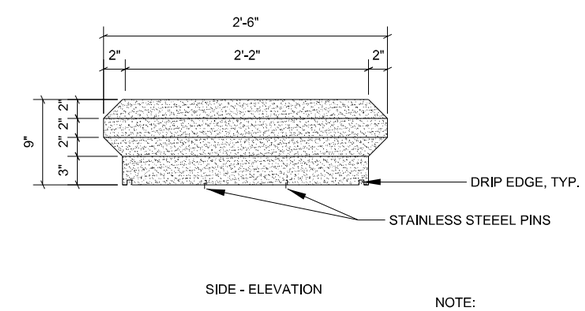

NOTE:
THE CAP SHALL BE CONSTRUCTED IN ACCORDANCE WITH ARTICLE 1042.15 OF THE STANDARD SPECIFICATIONS.

3 PRECAST CONCRETE CAP- PLAN AND ELEVATIONS

Scale: 1 1/2" = 1'-0"

MODEL: Layout1
FILE NAME: pw:\\primera-pw.bentley.com:primera-pw-01\Documents\01 Projects\2020\20200475.00 - IDOT Phase II Various Designs\20200475.05 VOS Touhy over N. Branch of Chicago River\Drawings\Current Drawing Files\CADD Sheets\Architectural\SHT 5_6.dgn

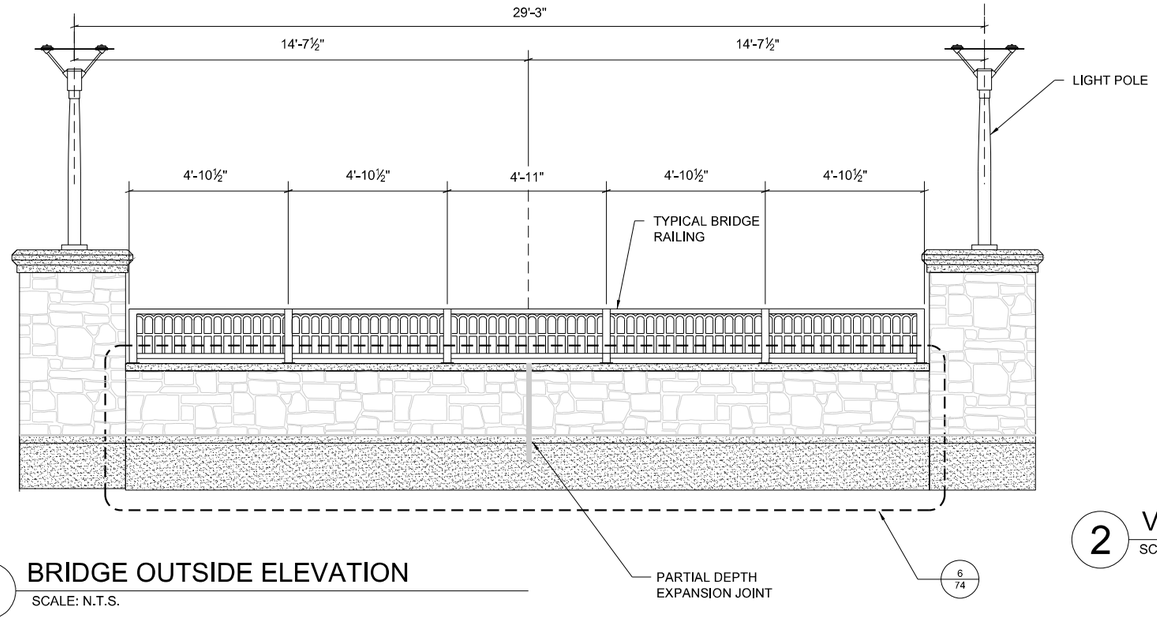

1 BRIDGE OUTSIDE ELEVATION
SCALE: N.T.S.

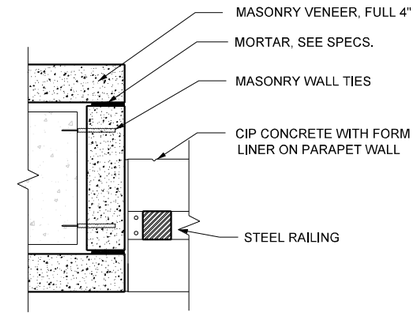

PLAN

2 VENEER COLUMN CONNECTION DETAIL
SCALE: N.T.S.

SHEET NOTES:

1. PROVIDE ANCHORS TO SUIT DESIGN REQUIREMENTS FOR MATERIAL AND INSTALLATION REQUIREMENTS.
2. PROVIDE MORTAR TO SUIT DESIGN REQUIREMENTS FOR MATERIAL AND INSTALLATION REQUIREMENTS.
3. CONTRACTOR TO PROVIDE 24"x24" SAMPLE OF THIN MASONRY VENEER TO ENGINEER FOR APPROVAL PRIOR TO CONSTRUCTION.
4. FORMLINER DEPTH: 1.50" MAX.
5. ROCK SIZES: 7" TO 17½" LENGTH x 4" TO 11½" HEIGHT.
6. MORTAR JOINT: 1½"
7. COLOR TO BE SELECTED BY ENGINEER. CONTRACTOR TO SEND COLOR SAMPLES TO ENGINEER PRIOR TO CONSTRUCTION.

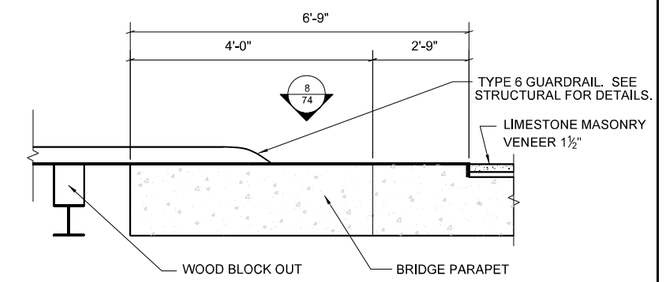

PLAN

7 GUARDRAIL AT PARAPET DETAIL
SCALE: N.T.S.

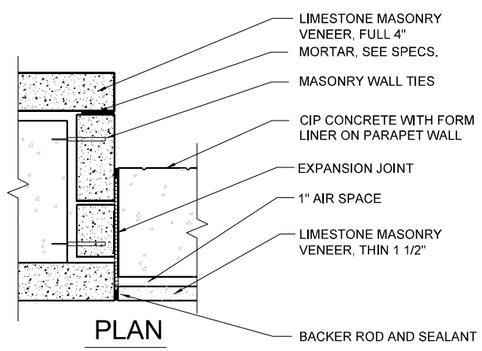

PLAN

3 VENEER PARAPET CONNECTION DETAIL
SCALE: N.T.S.

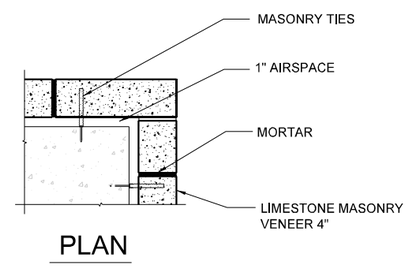

PLAN

4 VENEER CORNER DETAIL OUTSIDE CORNER
SCALE: N.T.S.

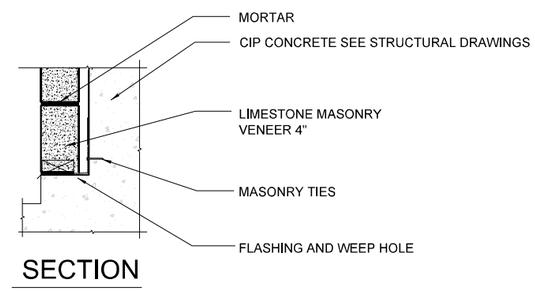

SECTION

5 VENEER BASE DETAIL
SCALE: N.T.S.

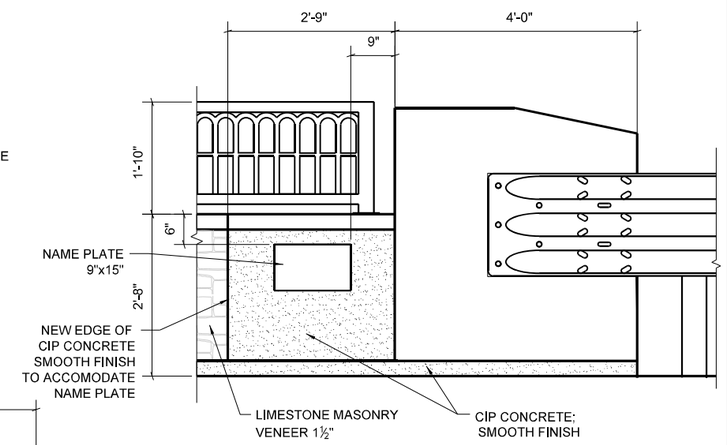

ELEVATION

8 GUARDRAIL AT PARAPET DETAIL
SCALE: N.T.S.

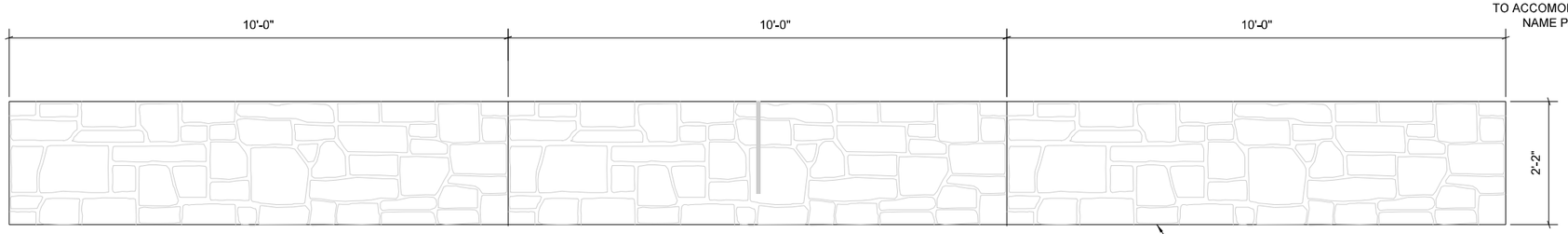

6 FORMLINER DETAIL - BRIDGE OUTSIDE ELEVATION
SCALE: N.T.S.

MODEL: 00
FILE NAME: pw:\\primera-pw.bentley.com:primera-pw-01\Documents\01 Projects\2020\2020425.00 - IDOT Phase II Various Design\2020425.05 \VOS Touhy over N. Branch of Chicago River\Current Drawing Files\CADD Sheets\Architectural\SHT 6_6.dgn

Primera
550 W. JACKSON BLVD. SUITE 600 , CHICAGO IL 60661 , P:312-855-0910 F:312-855-0415

USER NAME = rvandermus	DESIGNED - JR	REVISED -	
	DRAWN - PY	REVISED -	
PLOT SCALE = 2.000000 / in.	CHECKED - JD	REVISED -	
PLOT DATE = 10/13/2025	DATE -	REVISED -	

STATE OF ILLINOIS
DEPARTMENT OF TRANSPORTATION

FORMLINER AND MASONRY VENEER - DETAILS
TOUHY AVENUE OVER NORTH BRANCH CHICAGO RIVER

SCALE: AS NOTED | SHEET 74 OF 124 SHEETS | STA. TO STA.

F.A.P. RTE.	SECTION	COUNTY	TOTAL SHEETS	SHEET NO.
341	95-B	COOK	124	74
		CONTRACT NO. 62D34		
		ILLINOIS	FED. AID PROJECT	

Benchmark: BM #2, X-cut on E. Bolt on F.H. at #6849-#6859 W. Touhy Ave, Sta. 494+62.04, 43.0' RT, Elev = 620.51.

Datum: NAVD88

Existing Structure: S.N. 016-0363 was originally built in 1925 as Route 3A, Section 1202-15D. The existing structure is a single-span concrete T-Beam superstructure supported by closed abutments on reinforced concrete spread footings. The structure is 66'-6" back-to-back abutments and 52'-6" out-to-out deck. The structure is to be completely replaced. One lane of traffic in each direction shall be maintained at all times by utilizing stage construction.

The contractor shall salvage the aluminum railing and posts from existing bridge SN016-0363.

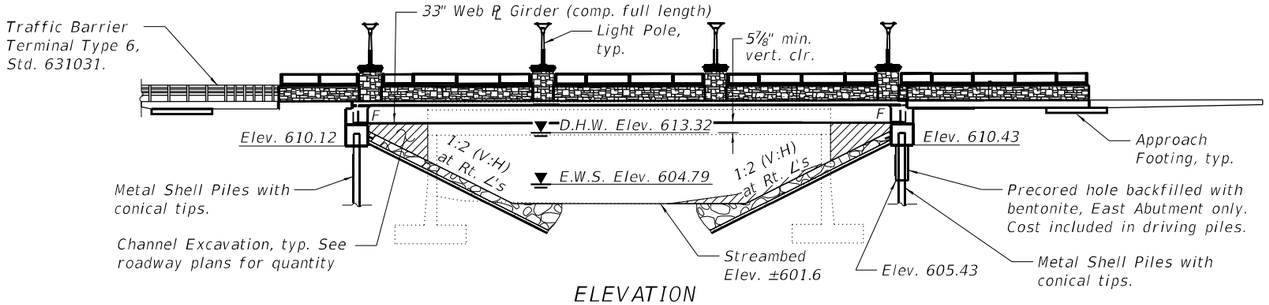

ELEVATION

* Drainage scuppers near abutment shall be attached to an extended downspout.

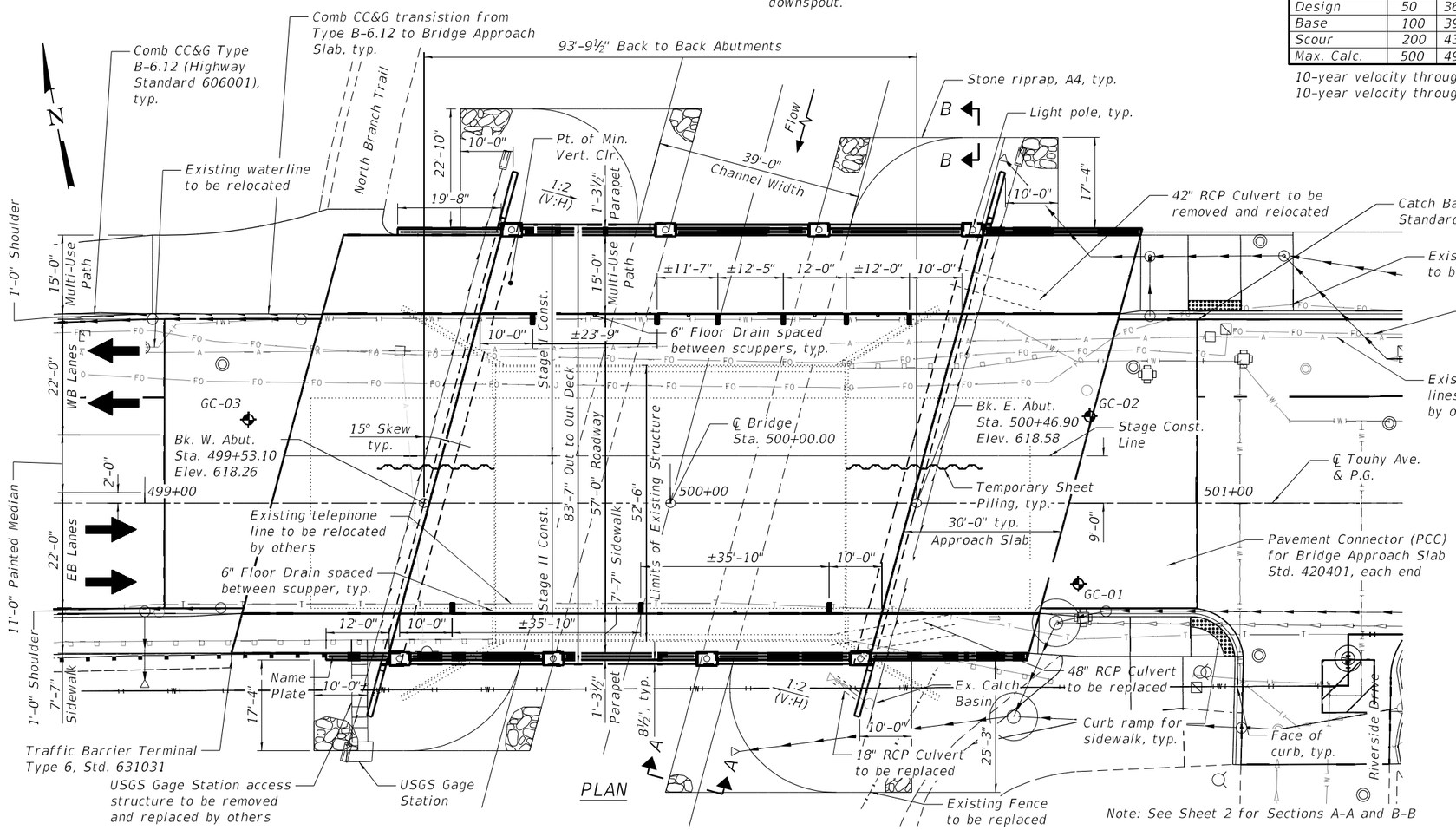

PLAN

Note: See Sheet 2 for Sections A-A and B-B

DESIGN SPECIFICATIONS

2020 AASHTO LRFD Bridge Design Specifications, 9th Edition

DESIGN STRESSES

FIELD UNITS

f'c = 4,000 psi (Superstructure)
f'c = 3,500 psi (Substructure)
fy = 60,000 psi (Reinforcement)
fy = 50,000 psi (M270 Grade 50W)

LOADING HL-93

Allow 50#/sq. ft. for future wearing surface.

SEISMIC DATA

Seismic Performance Zone (SPZ) = 1
Design Spectral Acceleration at 1.0 sec. (SD1) = 0.059
Design Spectral Acceleration at 0.2 sec. (SDS) = 0.106
Soil Site Class = C

DESIGN SCOUR ELEVATION TABLE

Event / Limit State	Design Scour Elevations (ft.)		
	W. Abut.	E. Abut.	Item 113
Q100	610.12	610.43	8
Q200	610.12	610.43	
Design	610.12	610.43	
Check	610.12	610.43	

WATERWAY INFORMATION

Drainage Area = 100 sq. mile Low Grade Elev. 618.16 (Ex.) @ Sta. 499+00.0
618.01 (Pr.) @ Sta. 499+20.0

Flood	Freq. Yr.	Q C.F.S.	Opening Ft²		Nat. H.W.E.	Head - Ft.		Headwater El.	
			Exist.	Prop.		Exist.	Prop.	Exist.	Prop.
	10	2850	619.0	658.0	612.3	0.1	0.1	612.4	612.4
Design	50	3650	663.0	741.0	613.3	0.3	0.2	613.6	613.5
Base	100	3940	663.0	766.0	613.6	0.4	0.2	614.0	613.8
Scour	200	4350	663.0	795.0	614.2	0.6	0.5	614.8	614.7
Max. Calc.	500	4900	663.0	795.0	614.8	0.9	0.7	615.7	615.5

10-year velocity through existing bridge = 4.7 ft/s
10-year velocity through proposed bridge = 4.3 ft/s

LEGEND

- Proposed water main
- Proposed storm sewer
- Proposed guardrail
- Existing guardrail
- Existing aerial electric line
- Existing telephone line
- Existing fiber optic line
- Existing storm sewer line
- Existing waterline
- Existing fence
- Existing traffic signal
- Existing manhole
- Existing fire hydrant
- Existing handhole
- Existing telephone pole
- Existing power pole
- Soil Boring

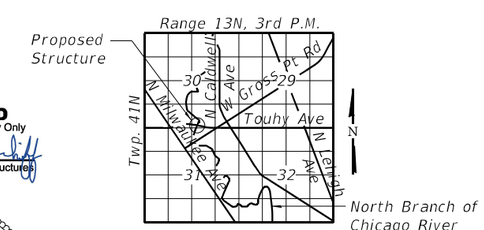

LOCATION SKETCH

APPROVED
For Structural Adequacy Only
Engineer of Bridges & Structures

STATE OF ILLINOIS
CHANDANI BHAGAT
081-008090
CHICAGO, ILLINOIS
LICENSED STRUCTURAL ENGINEER

3/14/2025
Chandani Bhagat Date
Licensed Structural Engineer
State of Illinois 081-008090
Expires 11/30/2026

GENERAL PLAN & ELEVATION
TOUHY AVENUE OVER
NORTH BRANCH OF CHICAGO RIVER
F.A.P. 341 - SEC. 95-B
COOK COUNTY
STATION 500+00.00
STRUCTURE NO. 016-1352

Primera
100 S. WACKER DRIVE SUITE 700, CHICAGO IL 60606, P:312-435-0910 F:312-606-0415

USER NAME =	DESIGNED - KJA	REVISED -	
	CHECKED - CPB	REVISED -	
PLOT SCALE =	DRAWN - NP/JM	REVISED -	
PLOT DATE =	CHECKED - KJA	REVISED -	

STATE OF ILLINOIS
DEPARTMENT OF TRANSPORTATION

GENERAL PLAN & ELEVATION
STRUCTURE NO. 016-1352
SHEET 1 OF 28 SHEETS

F.A.P. RTE.	SECTION	COUNTY	TOTAL SHEETS	SHEET NO.
341	95-B	COOK	124	75
		CONTRACT NO. 62D34		
		ILLINOIS	FED. AID PROJECT	

MODEL: Default
FILE NAME: pw:\\primera-pw.bentley.com:primera-pw01\Documents\01 Projects\2020\20200425.00 - IDOT Phase II Various Design\20200425.05_WO5 Touhy over N. Branch of Chicago River\Drawings\Current Drawing Files\CADD_Sheets\Structural\Touhy Ave_SHT01_GP&E.dgn
10/13/2025 2:40:49 PM

GENERAL NOTES

1) Calculated weight of Structural Steel = 292,940 lbs (Grade 50W)
2,100 lbs (Grade 36)

2) Fasteners shall be ASTM F 3125 Grade A325 Type 1, mechanically galvanized bolts in painted or metalized areas and ASTM F3125 Grade A325 Type 3 weathering steel bolts in unpainted areas.

3) All structural steel shall be AASHTO M270 Grade 50W (except bearings which shall be AASHTO M270 Grade 36 or AASHTO M270 Grade 50).

4) Structural steel shall be painted for a distance equal to the depth of the embedment into the concrete cap plus 18 inches. Painted areas shall be primed in the shop with a Department-approved zinc rich primer. Field painting will not be required.

5) No field welding is permitted except as specified in the contract documents.

6) Reinforcement bars designated (E) shall be epoxy coated.

7) If the Contractor elects to use cantilever forming brackets on the exterior beams or girders, the brackets shall be placed at the same locations as required for the hardwood blocks in Article 503.06(b) of the Standard Specifications. If additional cantilever forming brackets are required, hardwood blocking shall be wedged between the exterior and first interior beam at each of these additional bracket locations.

8) Layout of the slope protection system may be varied to suit ground conditions in the field as directed by the Engineer.

9) Excavation behind existing abutment walls shall be performed to balance front and back soil pressure before removing the existing superstructure. The Contractor shall sawcut the upper portion of the existing abutment at the stage removal line before Stage I removal to ensure the remaining portion will not be prematurely damaged.

10) The contractor shall salvage the aluminum railing and posts from existing structure SN016-0363. The aluminum posts shall be disassembled from the railings. The non-cut railings, posts, and attachments shall be transported and unloaded by the contractor to District Bridge Yard at 1101 Biesterfield Rd, Elk Grove, Illinois. Contact Steve Mastny at 847-956-1501 to schedule delivery. Cost included with Removal of Existing Structures.

11) Removal of the existing structure pay item includes all components of the existing structure including but not limited to approach slabs, deck, superstructure, and substructures.

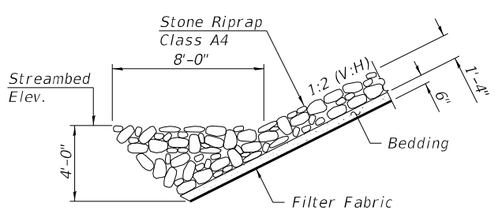

SECTION A-A

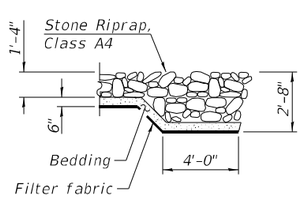

SECTION B-B

TOTAL BILL OF MATERIAL

ITEM	UNIT	SUPER	SUB	TOTAL
Stone Riprap, Class A4	Sq. Yd.	-	1,012	1,012
Filter Fabric	Sq. Yd.	-	1,012	1,012
Removal of Existing Structures	Each	-	-	1
Structure Excavation	Cu. Yd.	-	522	522
Concrete Structures	Cu. Yd.	52.0	98.6	150.6
Concrete Superstructure	Cu. Yd.	429.4	-	429.4
Bridge Deck Grooving	Sq. Yd.	928	-	928
Protective Coat	Sq. Yd.	1,489	-	1,489
Concrete Superstructure (Approach Slab)	Cu. Yd.	222.7	-	222.7
Precast Concrete Caps	Each	8	-	8
Furnishing and Erecting Structural Steel	L. Sum	1	-	1
Stud Shear Connectors	Each	3,300	-	3,300
Reinforcement Bars, Epoxy Coated	Pound	163,130	18,220	181,350
Bar Splicers	Each	632	20	652
Furnishing Metal Shell Piles 16" x 0.312"	Foot	-	1,200	1,200
Driving Piles	Foot	-	1,200	1,200
Test Pile Metal Shells	Each	-	2	2
Pile Shoes	Each	-	22	22
Name Plates	Each	1	-	1
Anchor Bolts, 1"	Each	44	-	44
Temporary Sheet Piling	Sq. Ft.	-	982.4	982.4
Granular Backfill for Structures	Cu. Yd.	-	266	266
Geocomposite Wall Drain	Sq. Yd.	-	150	150
Pipe Underdrains for Structures 4"	Foot	-	248	248
Limestone Masonry Veneer	Sq. Ft.	933	-	933
Anti-Graffiti Coating	Sq. Ft.	1,298	-	1,298
Form Liner Textured Surface, Special	Sq. Ft.	652	-	652
Staining Concrete Structures	Sq. Ft.	652	-	652
Bridge Fence Railing (Special)	Foot	231	-	231
Drainage Scuppers, DS-12	Each	9	-	9

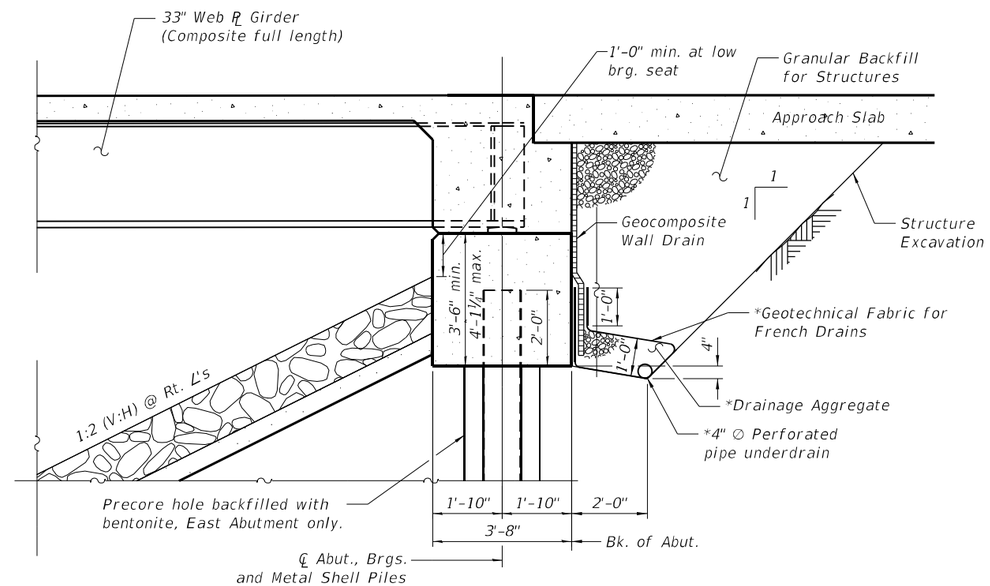

SECTION THRU ABUTMENT

(Horiz. dim. @ Rt. ∠'s)

INDEX OF SHEETS

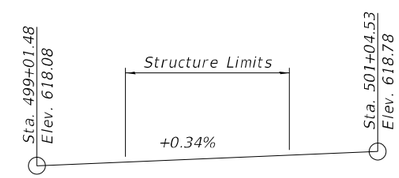

TOUHY AVENUE PROFILE GRADE

(Along ℄ Touhy Avenue)

STATION 500+00.00
BUILT 202_ BY
STATE OF ILLINOIS
F.A.P. 341 SEC. 95-B
LOADING HL-93
STRUCTURE NO. 016-1352

NAME PLATE

Note:
All drainage system components associated with Pipe Underdrains for Structures shall extend 2'-0" from the end of each wingwall except an outlet pipe shall extend until intersecting with the side slopes. The pipes shall drain into the concrete headwalls. (See article 601.05 of the Standard Specifications and Highway Standards 601101).
Bolt pattern and size in drain pipe flange to match upper flange.
All bolts, nuts and washers shall be stainless steel in accordance with Standard Specifications Article 1006.29(D).

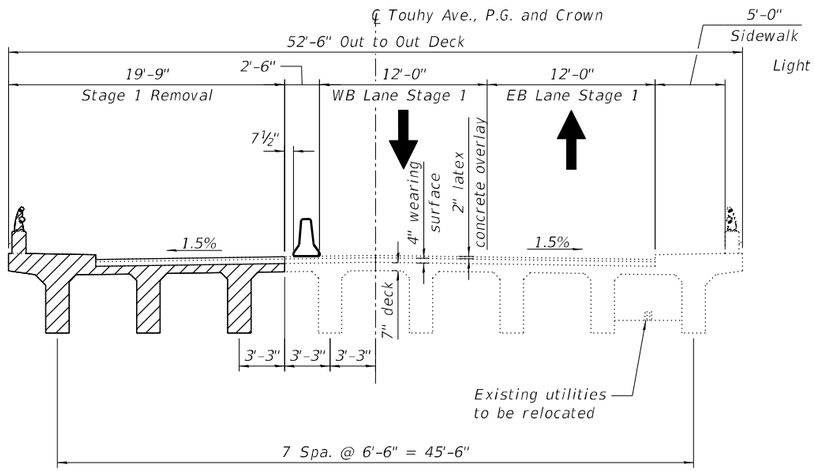

STAGE 1 REMOVAL

(Looking East)

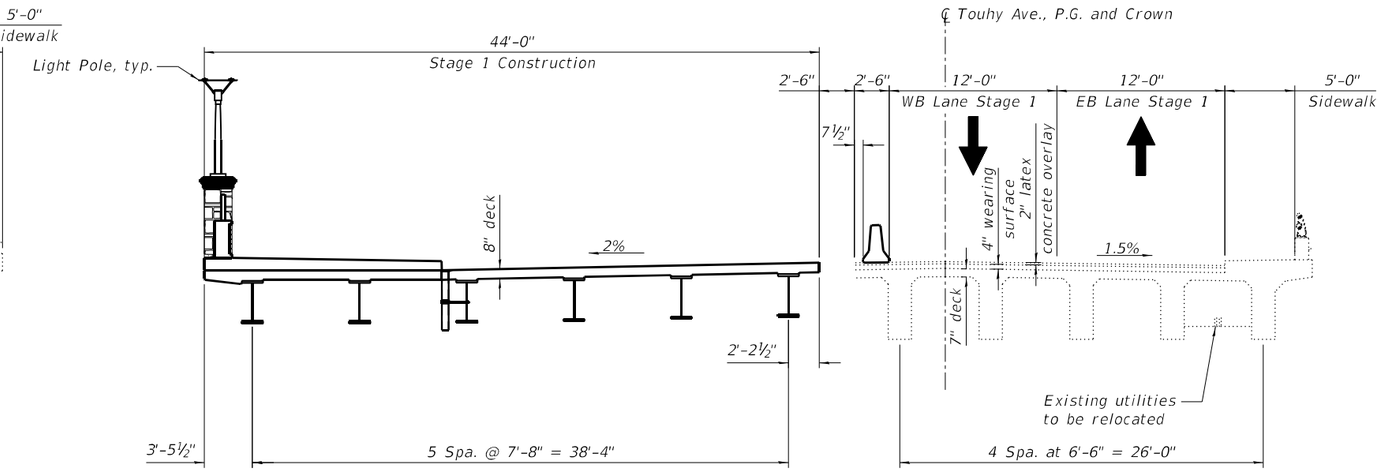

STAGE 1 CONSTRUCTION

(Looking East)

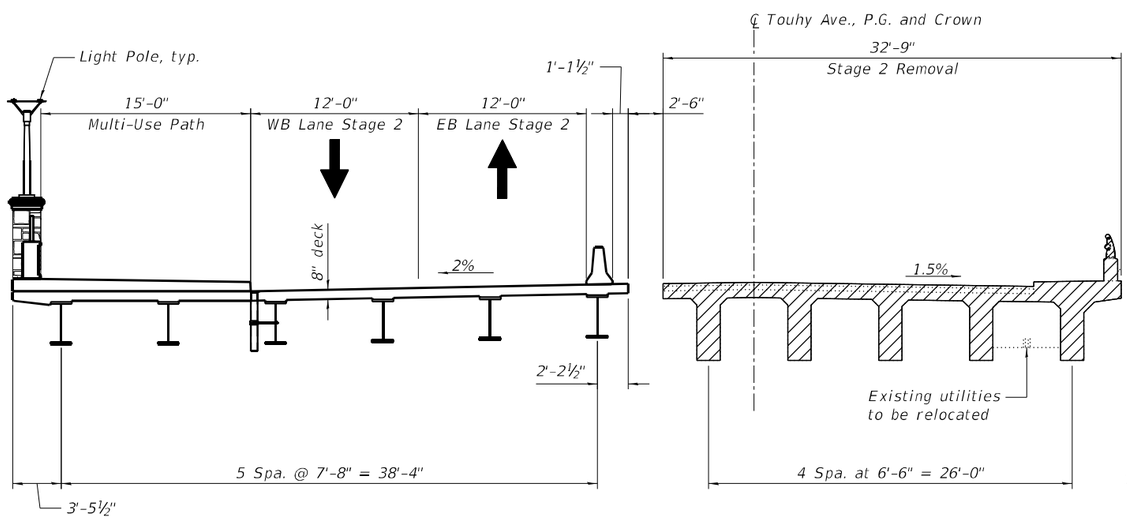

STAGE 2 REMOVAL

(Looking East)

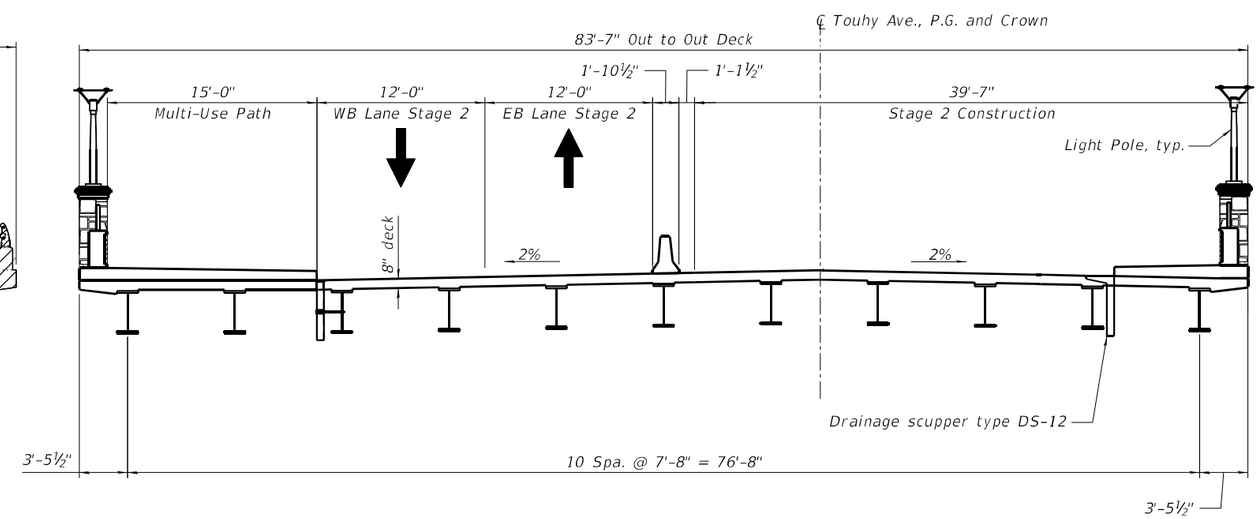

STAGE 2 CONSTRUCTION

(Looking East)

LEGEND

- Removal of Existing Structure
- Direction of Traffic
- Temporary Concrete Barrier

NOTE:
Quantity of Temporary Concrete Barrier included in Roadway plans.
For scupper locations, see sheet 1.
For details of Temporary Concrete Barrier, see sheet 5.

Primera
100 S. WACKER DRIVE SUITE 700 , CHICAGO IL 60606 , P:312-606-0919 F:312-606-0415

USER NAME =	DESIGNED - KJA	REVISED -	
	CHECKED - CPB	REVISED -	
PLOT SCALE =	DRAWN - NP/JM	REVISED -	
PLOT DATE =	CHECKED - KJA	REVISED -	

STATE OF ILLINOIS
DEPARTMENT OF TRANSPORTATION

STAGE CONSTRUCTION & REMOVAL PLAN
STRUCTURE NO. 016-1352

SHEET 3 OF 28 SHEETS

F.A.P. RTE.	SECTION	COUNTY	TOTAL SHEETS	SHEET NO.
341	95-B	COOK	124	77
		CONTRACT NO. 62D34		
		ILLINOIS	FED. AID PROJECT	

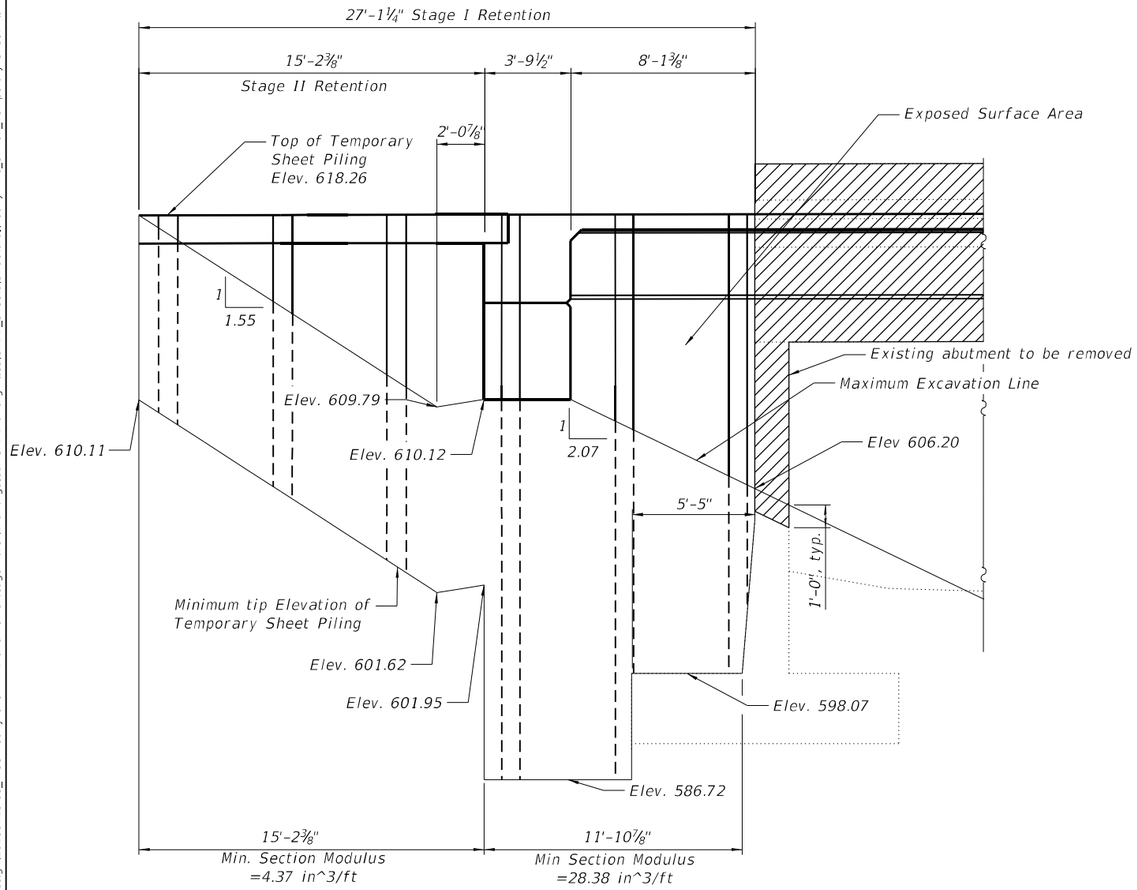

TEMPORARY SHEET PILING

(West Abutment, Looking North)

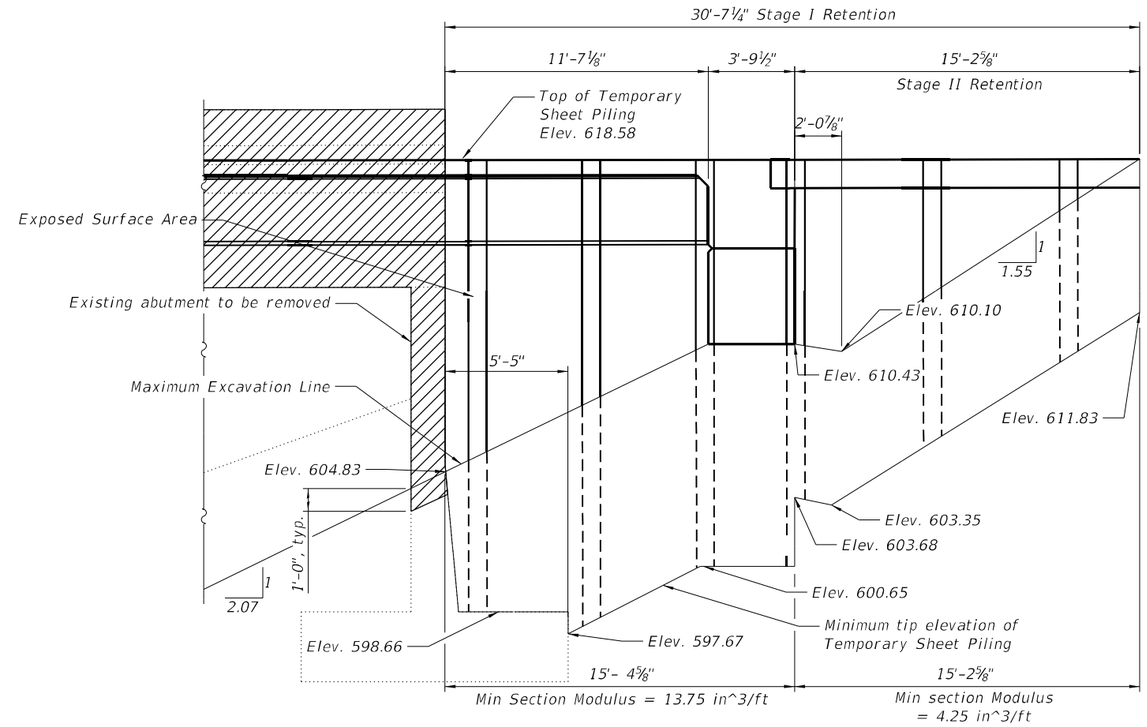

TEMPORARY SHEET PILING

(East Abutment, Looking North)

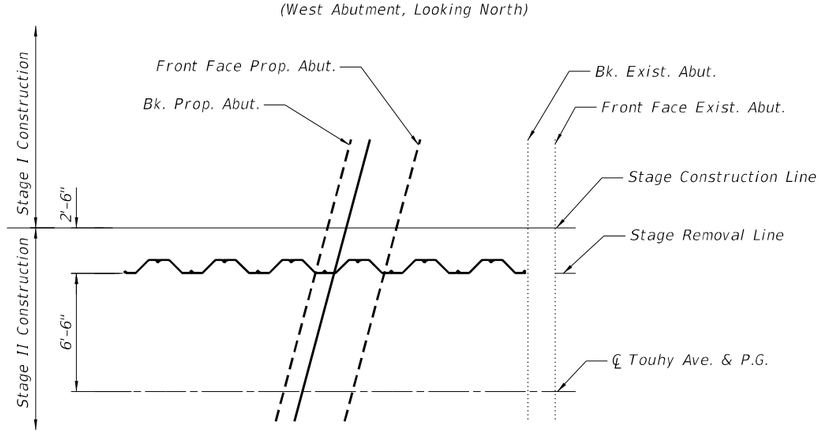

WEST ABUTMENT PLAN

N

BILL OF MATERIAL

ITEM	UNIT	TOTAL
Temporary Sheet Piling	Sq Ft	982.4

Notes:

If the Contractor chooses to alter the temporary cantilevered sheet piling design requirements shown on the plans, a design submittal including plan details and calculations will be required for review and acceptance by the Engineer.

The Contractor shall connect the first sheet to the existing abutment wall to ensure stability of sheets driven to the top of the existing footing. This connection shall be reviewed and accepted by the Engineer and included in the cost for Temporary Sheet Piling.

Existing structure details are taken from existing plans.

LEGEND

Removal of Existing Structure

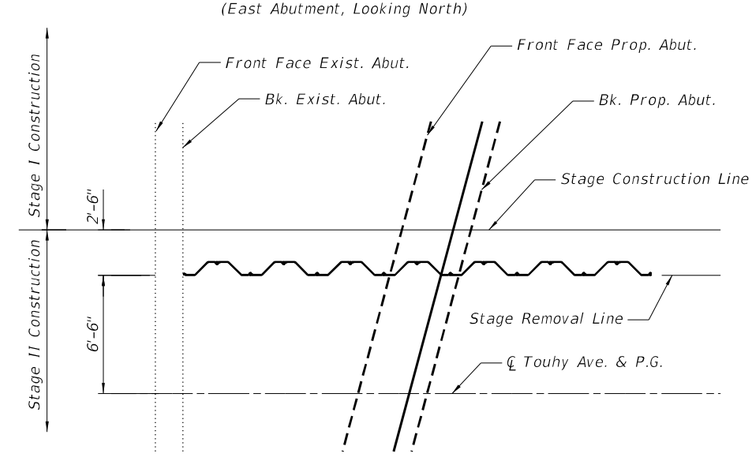

EAST ABUTMENT PLAN

Primera
100 S. WACKER DRIVE SUITE 700 , CHICAGO IL 60606 , P:312-606-0919 F:312-606-0415

USER NAME =	DESIGNED - KJA	REVISED -	
	CHECKED - CPB	REVISED -	
PLOT SCALE =	DRAWN - NP/JM	REVISED -	
PLOT DATE =	CHECKED - KJA	REVISED -	

STATE OF ILLINOIS
DEPARTMENT OF TRANSPORTATION

TEMPORARY SHEET PILING
STRUCTURE NO. 016–1352

SHEET 4 OF 28 SHEETS

F.A.P. RTE.	SECTION	COUNTY	TOTAL SHEETS	SHEET NO.
341	95-B	COOK	124	78
		CONTRACT NO. 62D34		
		ILLINOIS	FED. AID PROJECT	

MODEL: Default
FILE NAME: pw:\\primera-pw.bentley.com:primera-pw-01\Documents\01 Projects\2020\20200425.00 - IDOT Phase II Various Design\20200425.05_WO5 Touhy over IL Branch of Chicago River\Drawings\Current Drawing Files\CADD_Sheets\Structural\Touhy Ave_SHT04_Temporary Sheet Pil
10/13/2025 2:41:01 PM

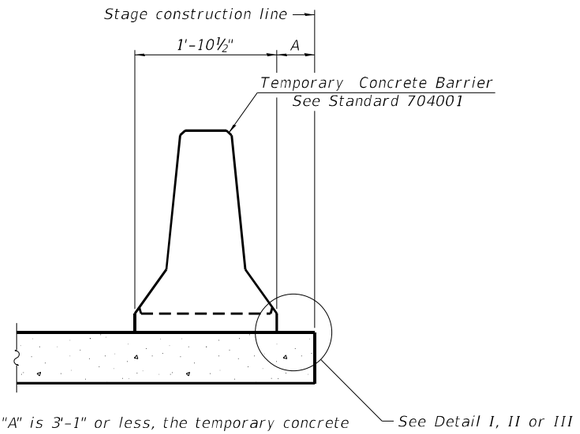

When "A" is 3'-1" or less, the temporary concrete barrier shall be restrained to the new slab according to Detail I, II or III. No restraint is required when "A" is greater than 3'-1".

NEW SLAB OR NEW DECK BEAM

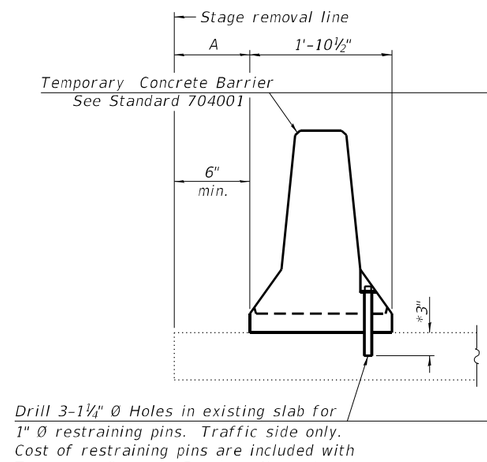

Drill 3-1¼" Ø Holes in existing slab for 1" Ø restraining pins. Traffic side only. Cost of restraining pins are included with Temporary Concrete Barrier. No restraint is required when "A" is greater than 3'-1".

EXISTING SLAB

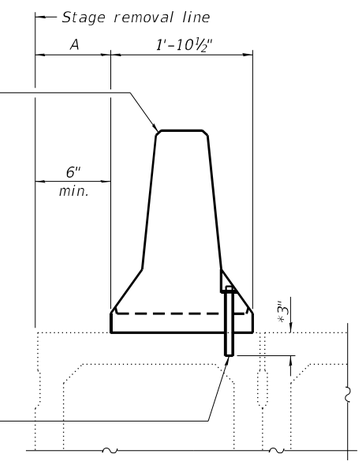

* When hot-mix asphalt wearing surface is present, embedment shall be 3" plus the wearing surface depth.

EXISTING DECK BEAM

SECTIONS THRU SLAB OR DECK BEAM

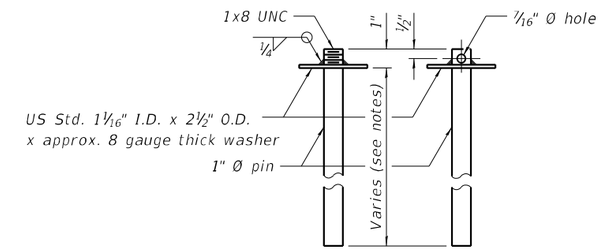

RESTRAINING PIN

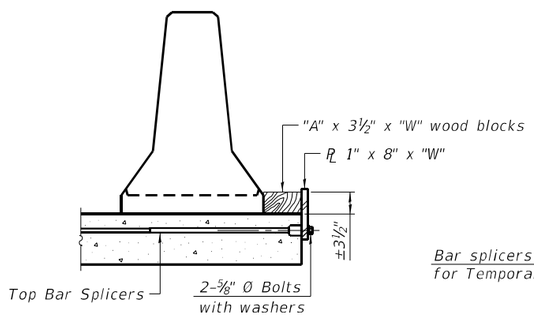

DETAIL I

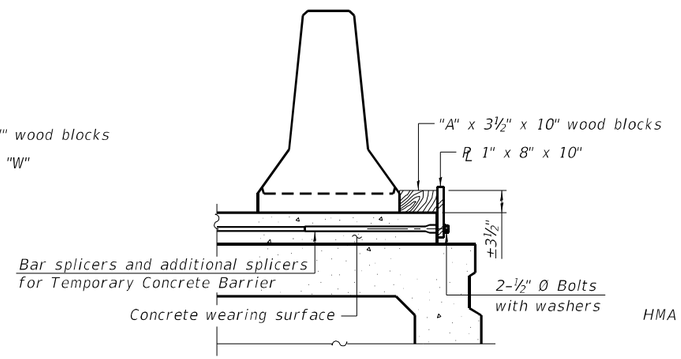

DETAIL II

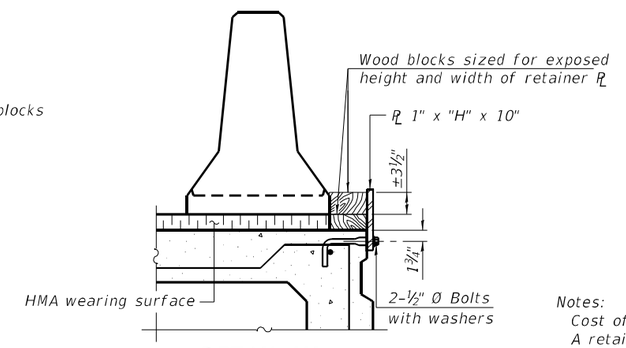

DETAIL III

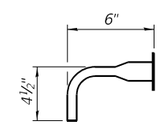

BAR SPLICER FOR #4 BAR - DETAIL III

Notes:

Cost of retainer assembly is included with Temporary Concrete Barrier.

A retainer assembly shall be located at the approximate ℄ of each temporary concrete barrier.

The retainer plate shall not be removed until the concrete on the adjacent stage is ready to be poured. For Detail III applications the retainer plate shall not be removed until just prior to placing the adjacent beam.

When the 'A' dimension is less than 1½", the wood block shall be omitted and the barrier shall be placed in direct contact with the steel retainer plate. For deck beam applications the minimum required 'A' distance is 6" to accommodate the shear key clamping device.

Detail I - Installation for a new bridge deck or bridge slab.

Detail II - Installation for a new deck beam with an initial concrete wearing surface. Additional bar splicers shall be provided at 6'-0" centers and paired with the bar splicers of the concrete wearing surface reinforcement to accommodate the installation of the retainer assemblies. The cost of the additional bar splicers is included with the concrete wearing surface.

Detail III - Installation for a new deck beam with no initial wearing surface or with an initial hot-mix asphalt (HMA) wearing surface present. The deck beam directly beneath the temporary concrete barrier shall be fabricated with bar splicer inserts in the side of the beam, as detailed, to accommodate the installation of the retainer assemblies. A pair of bar splicers, 6" apart, shall be placed at 6'-0" centers along the length of the beam. The cost of the bar splicers is included with the deck beam.

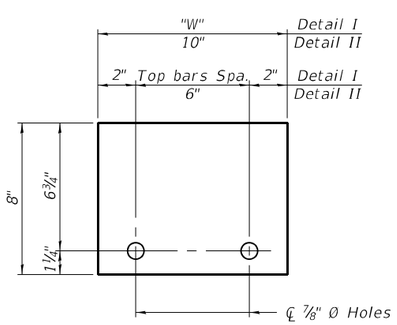

STEEL RETAINER PL 1" x 8" x "W"

(Detail I and II)

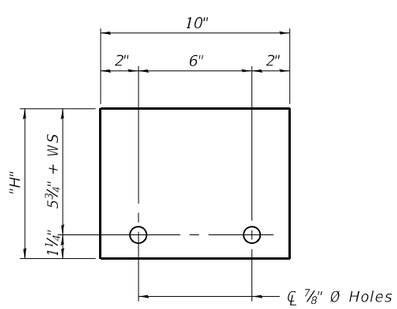

STEEL RETAINER PL 1" x "H" x 10"

(Detail III)

RAILING CRITERIA

NCHRP 350 Test Level	3
Railing Weight (plf)	440

R-27

10-12-2021

USER NAME =	DESIGNED - KJA	REVISED -	
	CHECKED - CPB	REVISED -	
PLOT SCALE =	DRAWN - NP/JM	REVISED -	
PLOT DATE =	CHECKED - KJA	REVISED -	

Primera
100 S. WACKER DRIVE SUITE 700 . CHICAGO IL 60606 . P:312-435-0919 F:312-496-0415

STATE OF ILLINOIS
DEPARTMENT OF TRANSPORTATION

TEMPORARY CONCRETE BARRIER
STRUCTURE NO. 016-1352

SHEET 5 OF 28 SHEETS

F.A.P. RTE.	SECTION	COUNTY	TOTAL SHEETS	SHEET NO.
341	95-B	COOK	124	79
		CONTRACT NO. 62D34		
		ILLINOIS	FED. AID PROJECT	

MODEL: Default
FILE NAME: pw:\\primera-pw.bentley.com:primera-pw-01\Documents\01 Projects\2020\20200425.00 - IDOT Phase II Various Design\20200425.05_WO5 Touhy over N. Branch of Chicago River\Drawings\Current Drawing Files\CADD_Sheets\Structural\Touhy Ave_SHT05_Temporary Concrete
10/13/2025 2:41:03 PM

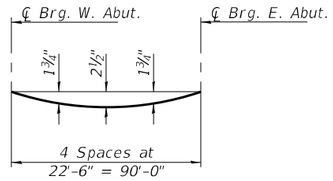

TYPICAL GIRDER DEAD LOAD DEFLECTION DIAGRAM

(Includes weight of concrete)

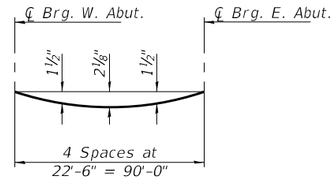

GIRDER 6 DEAD LOAD DEFLECTION DIAGRAM

(Includes weight of concrete)

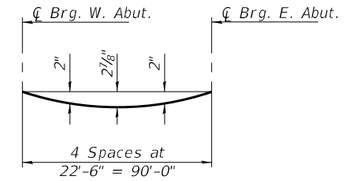

GIRDER 7 DEAD LOAD DEFLECTION DIAGRAM

(Includes weight of concrete)

Note:
The above deflections are not to be used in the field if the engineer is working from the grade elevations adjusted for dead load deflections as shown on sheets 7-9.

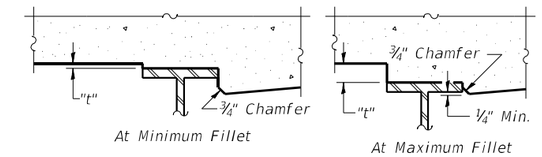

To determine "t": After all structural steel has been erected, elevations of the top flanges of the beams shall be taken at intervals shown below. These elevations subtracted from the "Theoretical Grade Elevations Adjusted for Dead Load Deflection" shown on sheets 7-9, minus slab thickness, equals the fillet heights "t" above top flange of beams.

FILLET HEIGHTS

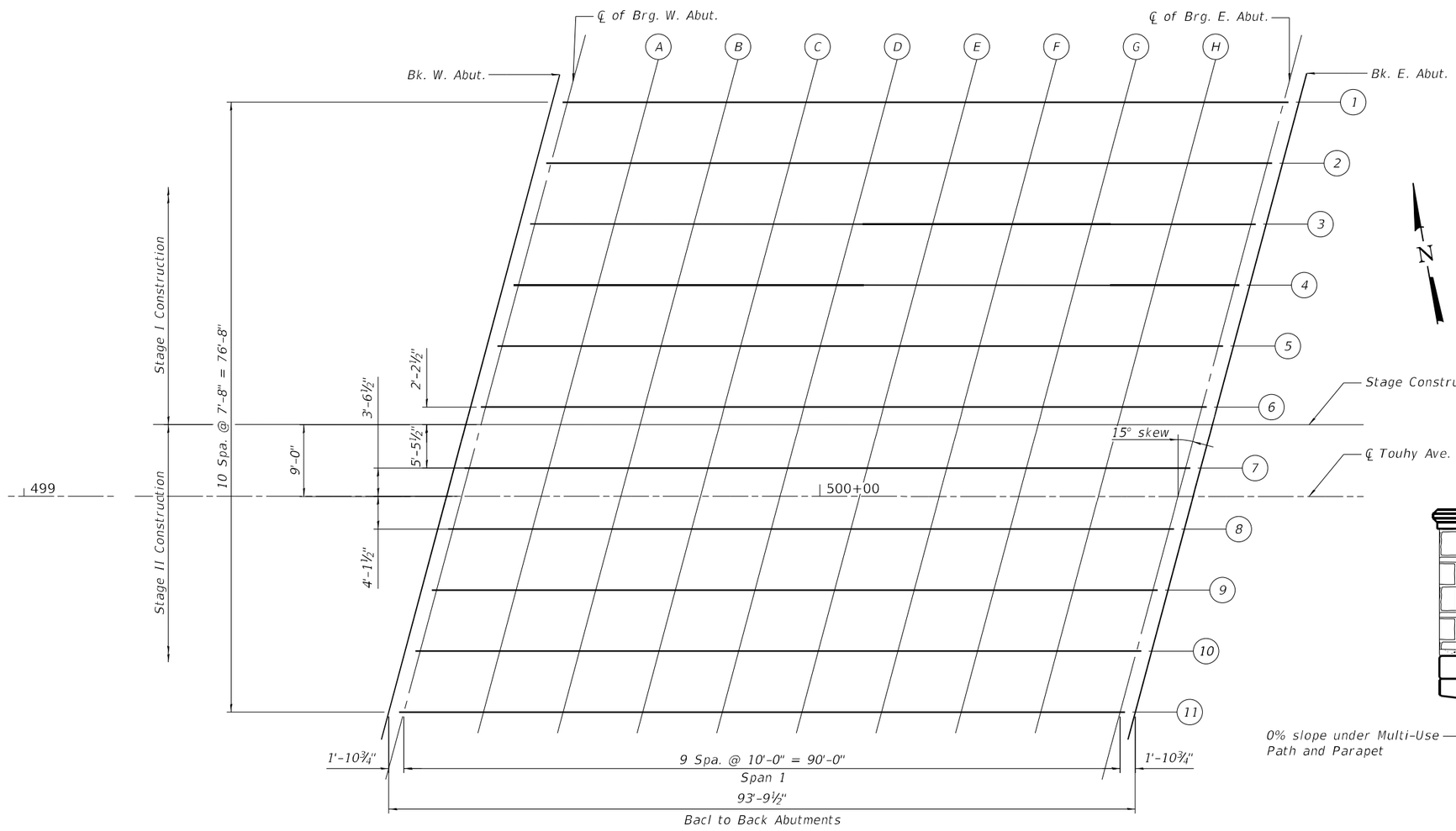

Plan

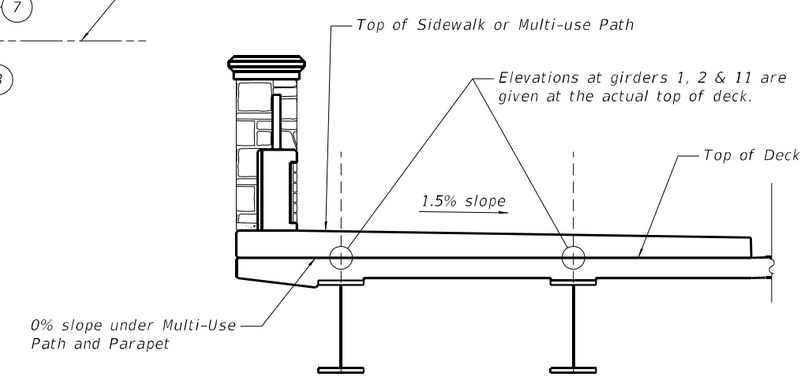

LOCATIONS OF ELEVATIONS AT GIRDERS 1, 2 & 11

MODEL: Default
FILE NAME: pw:\\primera-pw.bentley.com:primera-pw-01\Documents\01 Projects\2020\20200425.00 - IDOT Phase II Various Design\20200425.05_WO5 Touhy over N. Branch of Chicago River\Drawings\Current Drawing Files\CADD_Sheets\Structural\Touhy Ave_SHT06_Top of Deck Plan.dg

Primera
100 S. WACKER DRIVE SUITE 700 , CHICAGO IL 60606 , P:312-606-0910 F:312-606-0415

USER NAME =	DESIGNED - KJA	REVISED -	
	CHECKED - CPB	REVISED -	
PLOT SCALE =	DRAWN - NP/JM	REVISED -	
PLOT DATE =	CHECKED - KJA	REVISED -	

STATE OF ILLINOIS
DEPARTMENT OF TRANSPORTATION

TOP OF DECK PLAN
STRUCTURE NO. 016-1352

SHEET 6 OF 28 SHEETS

F.A.P. RTE.	SECTION	COUNTY	TOTAL SHEETS	SHEET NO.
341	95-B	COOK	124	80
		CONTRACT NO. 62D34		
		ILLINOIS	FED. AID PROJECT	

10/13/2025 2:41:06 PM

BEAM 1

Location	Station	Offset	Theoretical Grade Elevations	Theoretical Grade Elevations Adjusted For Dead Load Deflection
Bk. W. Abut.	499+66.37	-49.54	617.58	617.58
℄ Brg W. Abut.	499+68.27	-49.54	617.59	617.59
A	499+78.27	-49.54	617.62	617.70
B	499+88.27	-49.54	617.66	617.80
C	499+98.27	-49.54	617.69	617.89
D	500+08.27	-49.54	617.73	617.95
E	500+18.27	-49.54	617.76	617.98
F	500+28.27	-49.54	617.80	617.99
G	500+38.27	-49.54	617.83	617.97
H	500+48.27	-49.54	617.86	617.94
℄ Brg E. Abut.	500+58.27	-49.54	617.90	617.90
Bk. E. Abut.	500+60.17	-49.54	617.91	617.91

BEAM 2

Location	Station	Offset	Theoretical Grade Elevations	Theoretical Grade Elevations Adjusted For Dead Load Deflection
Bk. W. Abut.	499+64.32	-41.88	617.58	617.58
℄ Brg W. Abut.	499+66.22	-41.88	617.58	617.58
A	499+76.22	-41.88	617.62	617.69
B	499+86.22	-41.88	617.65	617.79
C	499+96.22	-41.88	617.69	617.87
D	500+06.22	-41.88	617.72	617.93
E	500+16.22	-41.88	617.75	617.96
F	500+26.22	-41.88	617.79	617.97
G	500+36.22	-41.88	617.82	617.96
H	500+46.22	-41.88	617.86	617.93
℄ Brg E. Abut.	500+56.22	-41.88	617.89	617.89
Bk. E. Abut.	500+58.12	-41.88	617.90	617.90

BEAM 3

Location	Station	Offset	Theoretical Grade Elevations	Theoretical Grade Elevations Adjusted For Dead Load Deflection
Bk. W. Abut.	499+62.27	-34.21	617.60	617.60
℄ Brg W. Abut.	499+64.16	-34.21	617.61	617.61
A	499+74.16	-34.21	617.65	617.72
B	499+84.16	-34.21	617.68	617.82
C	499+94.16	-34.21	617.71	617.90
D	500+04.16	-34.21	617.75	617.96
E	500+14.16	-34.21	617.78	617.99
F	500+24.16	-34.21	617.82	618.00
G	500+34.16	-34.21	617.85	617.99
H	500+44.16	-34.21	617.89	617.96
℄ Brg E. Abut.	500+54.16	-34.21	617.92	617.92
Bk. E. Abut.	500+56.06	-34.21	617.93	617.93

BEAM 4

Location	Station	Offset	Theoretical Grade Elevations	Theoretical Grade Elevations Adjusted For Dead Load Deflection
Bk. W. Abut.	499+60.21	-26.54	617.75	617.75
℄ Brg W. Abut.	499+62.11	-26.54	617.76	617.76
A	499+72.11	-26.54	617.79	617.87
B	499+82.11	-26.54	617.83	617.96
C	499+92.11	-26.54	617.86	618.04
D	500+02.11	-26.54	617.89	618.10
E	500+12.11	-26.54	617.93	618.14
F	500+22.11	-26.54	617.96	618.15
G	500+32.11	-26.54	618.00	618.14
H	500+42.11	-26.54	618.03	618.11
℄ Brg E. Abut.	500+52.11	-26.54	618.07	618.07
Bk. E. Abut.	500+54.01	-26.54	618.07	618.07

BEAM 5

Location	Station	Offset	Theoretical Grade Elevations	Theoretical Grade Elevations Adjusted For Dead Load Deflection
Bk. W. Abut.	499+58.16	-18.88	617.90	617.90
℄ Brg W. Abut.	499+60.06	-18.88	617.90	617.90
A	499+70.06	-18.88	617.94	618.01
B	499+80.06	-18.88	617.97	618.11
C	499+90.06	-18.88	618.01	618.19
D	500+00.06	-18.88	618.04	618.25
E	500+10.06	-18.88	618.08	618.28
F	500+20.06	-18.88	618.11	618.29
G	500+30.06	-18.88	618.14	618.28
H	500+40.06	-18.88	618.18	618.25
℄ Brg E. Abut.	500+50.06	-18.88	618.21	618.21
Bk. E. Abut.	500+51.95	-18.88	618.22	618.22

BEAM 6

Location	Station	Offset	Theoretical Grade Elevations	Theoretical Grade Elevations Adjusted For Dead Load Deflection
Bk. W. Abut.	499+56.10	-11.21	618.04	618.04
℄ Brg W. Abut.	499+58.00	-11.21	618.05	618.05
A	499+68.00	-11.21	618.08	618.15
B	499+78.00	-11.21	618.12	618.24
C	499+88.00	-11.21	618.15	618.31
D	499+98.00	-11.21	618.19	618.37
E	500+08.00	-11.21	618.22	618.40
F	500+18.00	-11.21	618.26	618.41
G	500+28.00	-11.21	618.29	618.41
H	500+38.00	-11.21	618.32	618.39
℄ Brg E. Abut.	500+48.00	-11.21	618.36	618.36
Bk. E. Abut.	500+49.90	-11.21	618.37	618.37

STAGE CONSTRUCTION LINE*

Location	Station	Offset	Theoretical Grade Elevations	Theoretical Grade Elevations Adjusted For Dead Load Deflection
Bk. W. Abut.	499+55.51	-9.00	618.09	618.09
℄ Brg W. Abut.	499+57.41	-9.00	618.09	618.09
A	499+67.41	-9.00	618.13	618.19
B	499+77.41	-9.00	618.16	618.28
C	499+87.41	-9.00	618.20	618.35
D	499+97.41	-9.00	618.23	618.41
E	500+07.41	-9.00	618.26	618.44
F	500+17.41	-9.00	618.30	618.46
G	500+27.41	-9.00	618.33	618.45
H	500+37.41	-9.00	618.37	618.43
℄ Brg E. Abut.	500+47.41	-9.00	618.40	618.40
Bk. E. Abut.	500+49.31	-9.00	618.41	618.41

* Theoretical Grade Elevations Adjusted for Dead Load Deflections computed using Dead Load Deflections from Beam 6.

BEAM 7

Location	Station	Offset	Theoretical Grade Elevations	Theoretical Grade Elevations Adjusted For Dead Load Deflection
Bk. W. Abut.	499+54.05	-3.54	618.19	618.19
℄ Brg W. Abut.	499+55.95	-3.54	618.20	618.20
A	499+65.95	-3.54	618.23	618.32
B	499+75.95	-3.54	618.26	618.42
C	499+85.95	-3.54	618.30	618.51
D	499+95.95	-3.54	618.33	618.57
E	500+05.95	-3.54	618.37	618.61
F	500+15.95	-3.54	618.40	618.61
G	500+25.95	-3.54	618.44	618.59
H	500+35.95	-3.54	618.47	618.56
℄ Brg E. Abut.	500+45.95	-3.54	618.51	618.51
Bk. E. Abut.	500+47.84	-3.54	618.51	618.51

℄ TOUHY AVE. & P.G.

Location	Station	Offset	Theoretical Grade Elevations	Theoretical Grade Elevations Adjusted For Dead Load Deflection
Bk. W. Abut.	499+53.10	0.00	618.26	618.26
℄ Brg W. Abut.	499+55.00	0.00	618.26	618.26
A	499+65.00	0.00	618.30	618.38
B	499+75.00	0.00	618.33	618.48
C	499+85.00	0.00	618.37	618.56
D	499+95.00	0.00	618.40	618.62
E	500+05.00	0.00	618.44	618.66
F	500+15.00	0.00	618.47	618.67
G	500+25.00	0.00	618.50	618.65
H	500+35.00	0.00	618.54	618.62
℄ Brg E. Abut.	500+45.00	0.00	618.57	618.57
Bk. E. Abut.	500+46.90	0.00	618.58	618.58

BEAM 8

Location	Station	Offset	Theoretical Grade Elevations	Theoretical Grade Elevations Adjusted For Dead Load Deflection
Bk. W. Abut.	499+51.99	4.13	618.17	618.17
℄ Brg W. Abut.	499+53.89	4.13	618.18	618.18
A	499+63.89	4.13	618.21	618.28
B	499+73.89	4.13	618.25	618.38
C	499+83.89	4.13	618.28	618.46
D	499+93.89	4.13	618.31	618.52
E	500+03.89	4.13	618.35	618.55
F	500+13.89	4.13	618.38	618.56
G	500+23.89	4.13	618.42	618.55
H	500+33.89	4.13	618.45	618.52
℄ Brg E. Abut.	500+43.89	4.13	618.49	618.49
Bk. E. Abut.	500+45.79	4.13	618.49	618.49

BEAM 9

Location	Station	Offset	Theoretical Grade Elevations	Theoretical Grade Elevations Adjusted For Dead Load Deflection
Bk. W. Abut.	499+49.94	11.79	618.01	618.01
℄ Brg W. Abut.	499+51.84	11.79	618.02	618.02
A	499+61.84	11.79	618.05	618.12
B	499+71.84	11.79	618.09	618.22
C	499+81.84	11.79	618.12	618.30
D	499+91.84	11.79	618.15	618.36
E	500+01.84	11.79	618.19	618.39
F	500+11.84	11.79	618.22	618.40
G	500+21.84	11.79	618.26	618.39
H	500+31.84	11.79	618.29	618.36
℄ Brg E. Abut.	500+41.84	11.79	618.33	618.33
Bk. E. Abut.	500+43.74	11.79	618.33	618.33

BEAM 10

Location	Station	Offset	Theoretical Grade Elevations	Theoretical Grade Elevations Adjusted For Dead Load Deflection
Bk. W. Abut.	499+47.89	19.46	617.85	617.85
℄ Brg W. Abut.	499+49.78	19.46	617.86	617.86
A	499+59.78	19.46	617.89	617.96
B	499+69.78	19.46	617.93	618.06
C	499+79.78	19.46	617.96	618.14
D	499+89.78	19.46	617.99	618.20
E	499+99.78	19.46	618.03	618.23
F	500+09.78	19.46	618.06	618.24
G	500+19.78	19.46	618.10	618.23
H	500+29.78	19.46	618.13	618.20
℄ Brg E. Abut.	500+39.78	19.46	618.17	618.17
Bk. E. Abut.	500+41.68	19.46	618.17	618.17

BEAM 11

Location	Station	Offset	Theoretical Grade Elevations	Theoretical Grade Elevations Adjusted For Dead Load Deflection
Bk. W. Abut.	499+45.83	27.13	617.69	617.69
℄ Brg W. Abut.	499+47.73	27.13	617.70	617.70
A	499+57.73	27.13	617.73	617.81
B	499+67.73	27.13	617.77	617.91
C	499+77.73	27.13	617.80	617.99
D	499+87.73	27.13	617.83	618.05
E	499+97.73	27.13	617.87	618.08
F	500+07.73	27.13	617.90	618.09
G	500+17.73	27.13	617.94	618.08
H	500+27.73	27.13	617.97	618.05
℄ Brg E. Abut.	500+37.73	27.13	618.01	618.01
Bk. E. Abut.	500+39.63	27.13	618.01	618.01

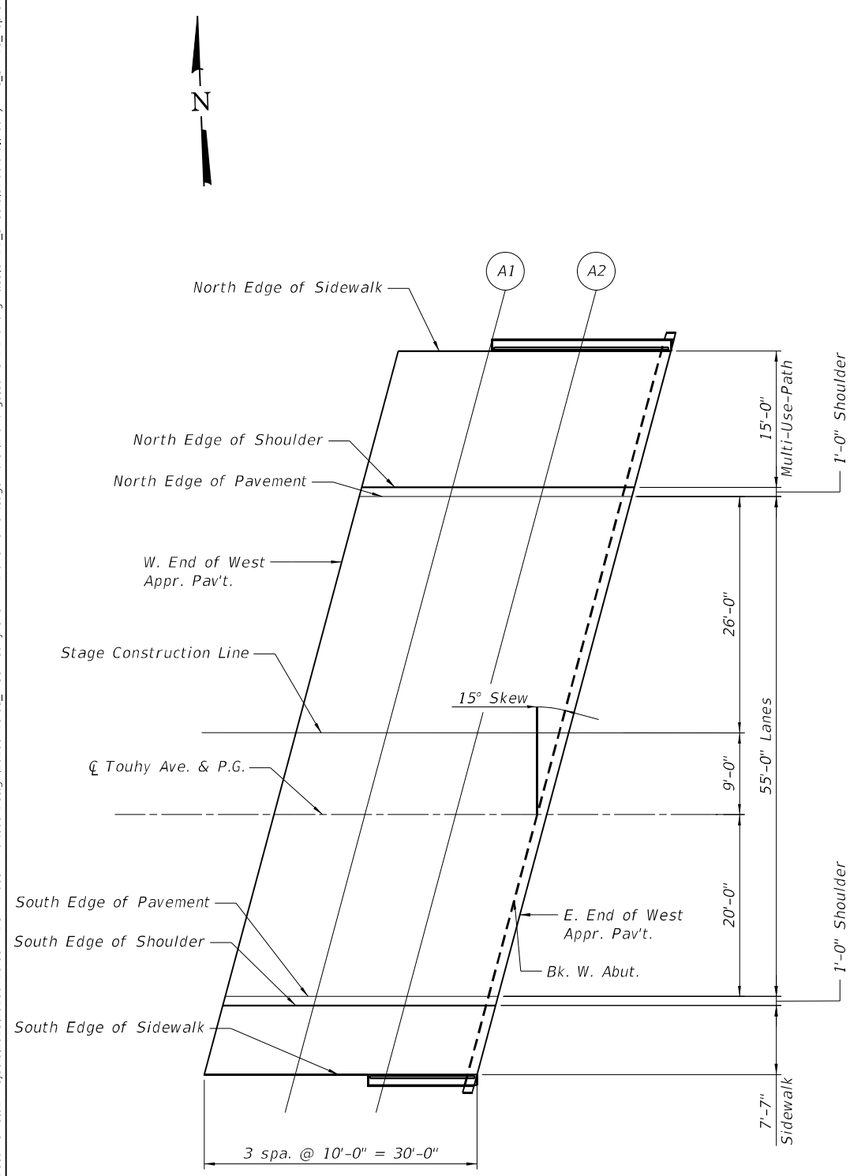

PLAN

NORTH EDGE OF SIDEWALK

Location	Station	Offset	Theoretical Grade Elevations
W. End of West Appr. Pav't.	499+37.80	-51.00	617.48
A1	499+47.80	-51.00	617.52
A2	499+57.80	-51.00	617.55
E. End of West Appr. Pav't.	499+67.80	-51.00	617.59

NORTH EDGE OF SHOULDER

Location	Station	Offset	Theoretical Grade Elevations
W. End of West Appr. Pav't.	499+33.78	-36.00	617.47
A1	499+43.78	-36.00	617.51
A2	499+53.78	-36.00	617.54
E. End of West Appr. Pav't.	499+63.78	-36.00	617.57

NORTH EDGE OF PAVEMENT

Location	Station	Offset	Theoretical Grade Elevations
W. End of West Appr. Pav't.	499+33.51	-35.00	617.49
A1	499+43.51	-35.00	617.52
A2	499+53.51	-35.00	617.56
E. End of West Appr. Pav't.	499+63.51	-35.00	617.59

STAGE CONSTRUCTION LINE

Location	Station	Offset	Theoretical Grade Elevations
W. End of West Appr. Pav't.	499+26.55	-9.00	617.99
A1	499+36.55	-9.00	618.02
A2	499+46.55	-9.00	618.05
E. End of West Appr. Pav't.	499+56.55	-9.00	618.09

℄ TOUHY & PGL

Location	Station	Offset	Theoretical Grade Elevations
W. End of West Appr. Pav't.	499+24.14	0.00	618.16
A1	499+34.14	0.00	618.19
A2	499+44.14	0.00	618.23
E. End of West Appr. Pav't.	499+54.14	0.00	618.26

SOUTH EGDE OF PAVEMENT

Location	Station	Offset	Theoretical Grade Elevations
W. End of West Appr. Pav't.	499+18.78	20.00	617.74
A1	499+28.78	20.00	617.77
A2	499+38.78	20.00	617.81
E. End of West Appr. Pav't.	499+48.78	20.00	617.84

SOUTH EDGE OF SHOULDER

Location	Station	Offset	Theoretical Grade Elevations
W. End of West Appr. Pav't.	499+18.51	21.00	617.72
A1	499+28.51	21.00	617.75
A2	499+38.51	21.00	617.79
E. End of West Appr. Pav't.	499+48.51	21.00	617.82

SOUTH EDGE OF SIDEWALK

Location	Station	Offset	Theoretical Grade Elevations
W. End of West Appr. Pav't.	499+16.48	28.58	617.56
A1	499+26.48	28.58	617.59
A2	499+36.48	28.58	617.63
E. End of West Appr. Pav't.	499+46.48	28.58	617.66

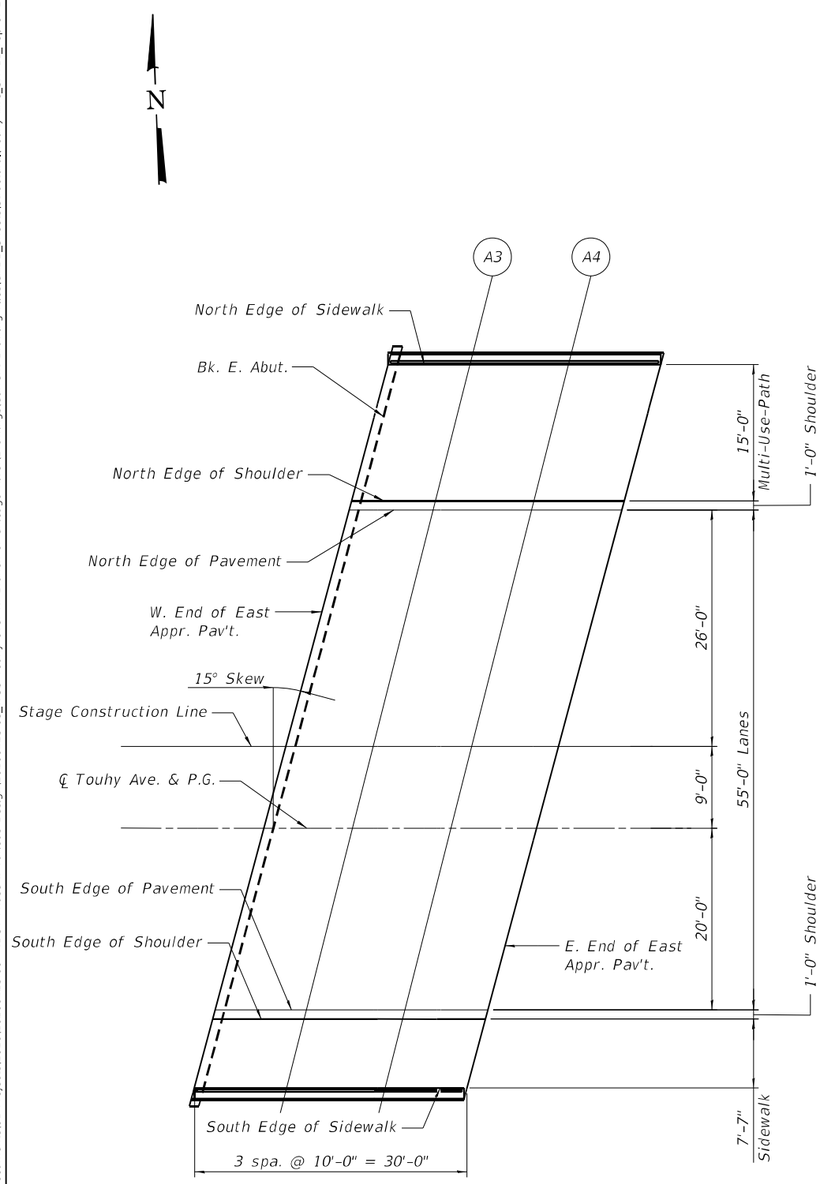

PLAN

NORTH EDGE OF SIDEWALK

Location	Station	Offset	Theoretical Grade Elevations
W. End of East Appr. Pav't.	500+59.53	-51.00	617.90
A3	500+69.53	-51.00	617.94
A4	500+79.53	-51.00	617.97
E. End of East Appr. Pav't.	500+89.53	-51.00	618.01

NORTH EDGE OF SHOULDER

Location	Station	Offset	Theoretical Grade Elevations
W. End of East Appr. Pav't.	500+55.51	-36.00	617.89
A3	500+65.51	-36.00	617.92
A4	500+75.51	-36.00	617.96
E. End of East Appr. Pav't.	500+85.51	-36.00	617.99

NORTH EDGE OF PAVEMENT

Location	Station	Offset	Theoretical Grade Elevations
W. End of East Appr. Pav't.	500+55.24	-35.00	617.91
A3	500+65.24	-35.00	617.94
A4	500+75.24	-35.00	617.98
E. End of East Appr. Pav't.	500+85.24	-35.00	618.01

STAGE CONSTRUCTION LINE

Location	Station	Offset	Theoretical Grade Elevations
W. End of East Appr. Pav't.	500+48.28	-9.00	618.40
A3	500+58.28	-9.00	618.44
A4	500+68.28	-9.00	618.47
E. End of East Appr. Pav't.	500+78.28	-9.00	618.51

℄ TOUHY & PGL

Location	Station	Offset	Theoretical Grade Elevations
W. End of East Appr. Pav't.	500+45.86	0.00	618.58
A3	500+55.86	0.00	618.61
A4	500+65.86	0.00	618.64
E. End of East Appr. Pav't.	500+75.86	0.00	618.68

SOUTH EDGE OF PAVEMENT

Location	Station	Offset	Theoretical Grade Elevations
W. End of East Appr. Pav't.	500+40.51	20.00	618.16
A3	500+50.51	20.00	618.19
A4	500+60.51	20.00	618.23
E. End of East Appr. Pav't.	500+70.51	20.00	618.26

SOUTH EDGE OF SHOULDER

Location	Station	Offset	Theoretical Grade Elevations
W. End of East Appr. Pav't.	500+40.24	21.00	618.14
A3	500+50.24	21.00	618.17
A4	500+60.24	21.00	618.21
E. End of East Appr. Pav't.	500+70.24	21.00	618.24

SOUTH EDGE OF SIDEWALK

Location	Station	Offset	Theoretical Grade Elevations
W. End of East Appr. Pav't.	500+38.21	28.58	617.98
A3	500+48.21	28.58	618.01
A4	500+58.21	28.58	618.05
E. End of East Appr. Pav't.	500+68.21	28.58	618.08

Primera
100 S. WACKER DRIVE SUITE 700 , CHICAGO IL 60606 , P:312-655-0910 F:312-696-0415

USER NAME =	DESIGNED - KJA	REVISED -	
	CHECKED - CPB	REVISED -	
PLOT SCALE =	DRAWN - NP/JM	REVISED -	
PLOT DATE =	CHECKED - KJA	REVISED -	

STATE OF ILLINOIS
DEPARTMENT OF TRANSPORTATION

TOP OF EAST APPROACH SLAB ELEVATIONS
STRUCTURE NO. 016-1352

SHEET 11 OF 28 SHEETS

F.A.P. RTE.	SECTION	COUNTY	TOTAL SHEETS	SHEET NO.
341	95-B	COOK	124	85
		CONTRACT NO. 62D34		
	ILLINOIS	FED. AID PROJECT		

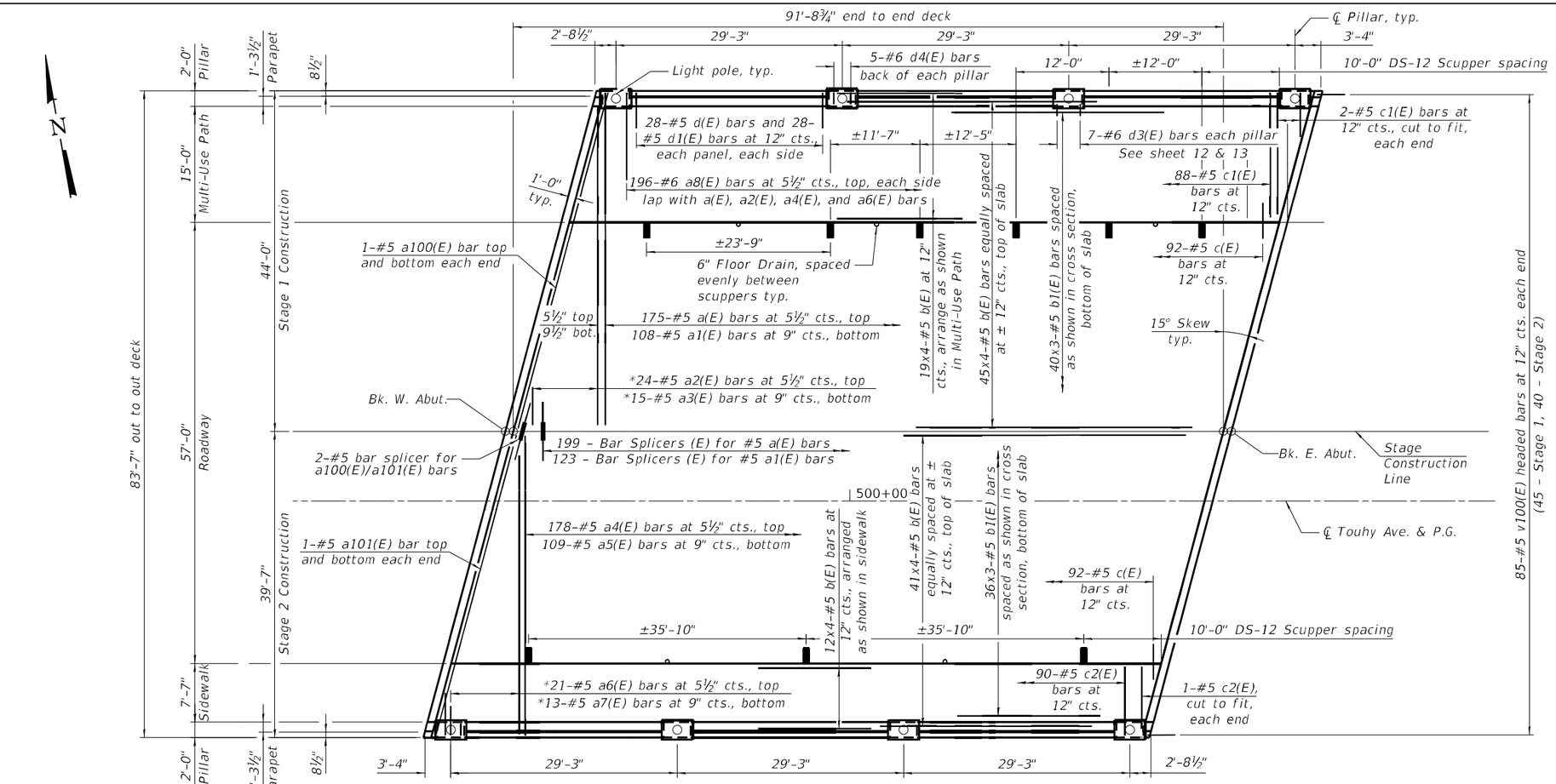

PLAN

Notes:
See sheet 14 for superstructure details and bill of materials.
Bars indicated thus 20 x 3-#5 etc. indicates 20 lines of bars with 3 lengths per line.
See sheet 14 for add'l reinforcement at scupper.

MINIMUM BAR LAP

#5 bar = 3'-6"

* Order a(E), a1(E), a4(E), and a5(E) bars full length. Cut to fit skew and use remainder of bars in opposite end. See Field Cutting Diagram on sheet 14.

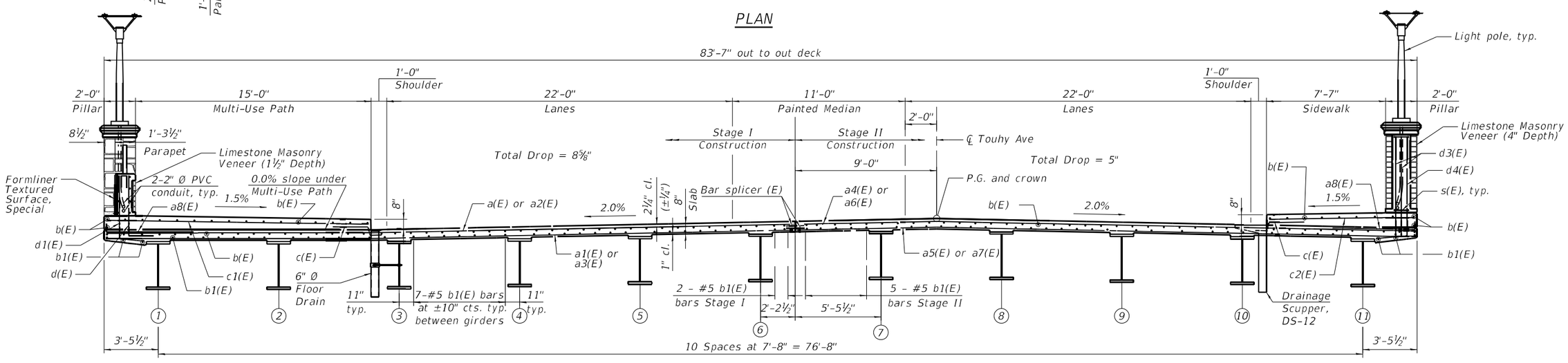

CROSS SECTION

(Looking East)

MODEL: Default
FILE NAME: pw:\\primera-pw.bentley.com:primera-pw-01\Documents\61 Projects\20200200425.00 - IDOT Phase II Various Design\20200425_05_W05 Touhy over IL Branch of Chicago River\Drawings\Current Drawing Files\CADD_Sheets\Structural\Touhy Ave_SHT12_Superstructure Plan

10/13/2025 2:41:24 PM

Primera
100 S. WACKER DRIVE SUITE 700 , CHICAGO IL 60606 , P:312-606-0910 F:312-606-0415

USER NAME =	DESIGNED - KJA	REVISED -	
	CHECKED - CPB	REVISED -	
PLOT SCALE =	DRAWN - NP/JM	REVISED -	
PLOT DATE =	CHECKED - KJA	REVISED -	

STATE OF ILLINOIS
DEPARTMENT OF TRANSPORTATION

SUPERSTRUCTURE PLAN & CROSS SECTION
STRUCTURE NO. 016-1352

SHEET 12 OF 28 SHEETS

F.A.P. RTE.	SECTION	COUNTY	TOTAL SHEETS	SHEET NO.
341	95-B	COOK	124	86
		CONTRACT NO. 62D34		
		ILLINOIS	FED. AID PROJECT	

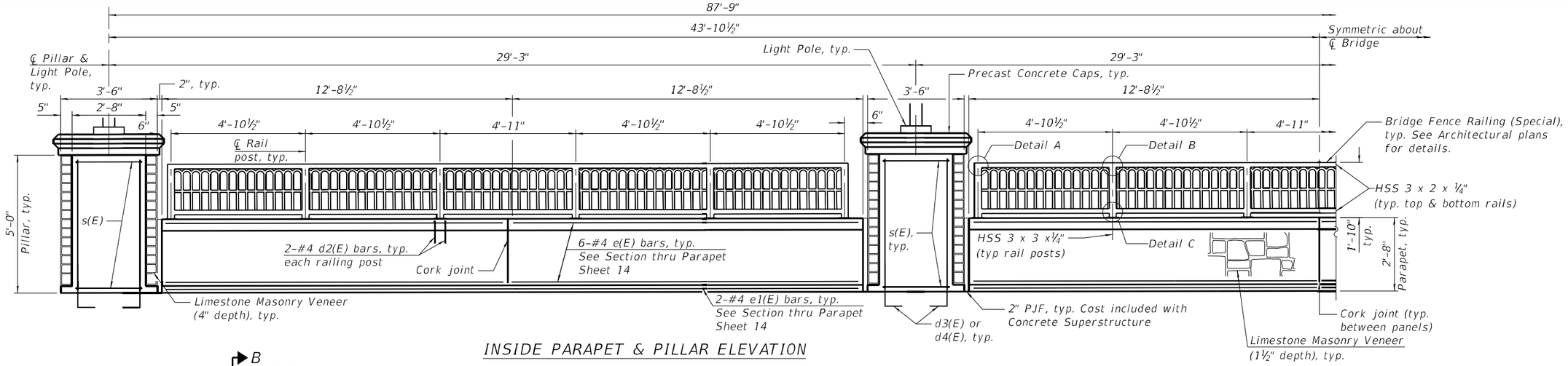

INSIDE PARAPET & PILLAR ELEVATION

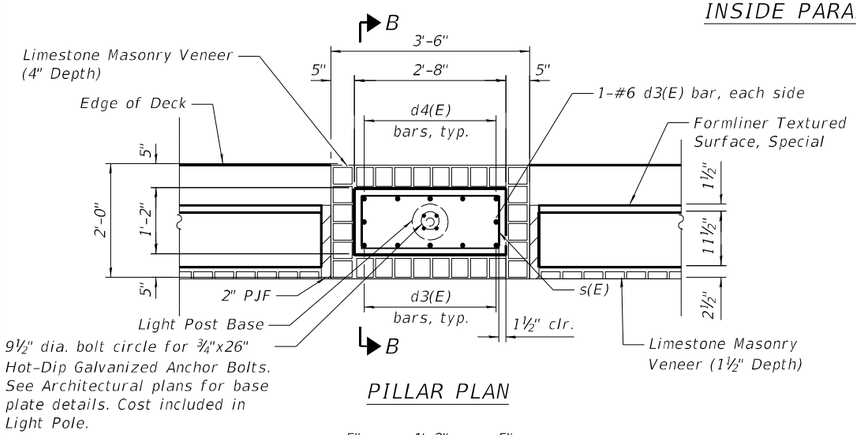

PILLAR PLAN

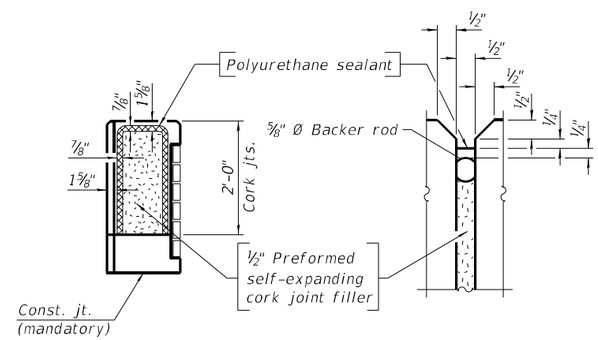

PARAPET JOINT DETAILS

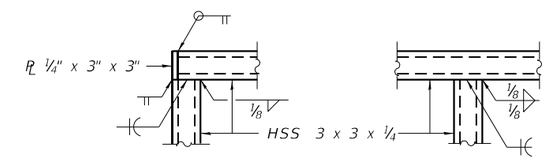

DETAIL A

DETAIL B

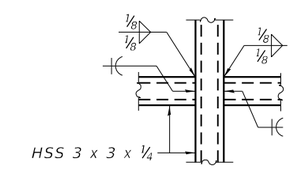

DETAIL C

Note:

The Polyurethane Sealant shall be according to Article 1050.04 of the Std. Spec. and the color shall be gray.

The Anti-Graffiti Coating shall be applied after the masonry veneer has been installed. The Anti-Graffiti Coating shall be applied to the exposed areas of concrete and masonry on the front and top of the parapet and the front, top, and sides of the pillar.

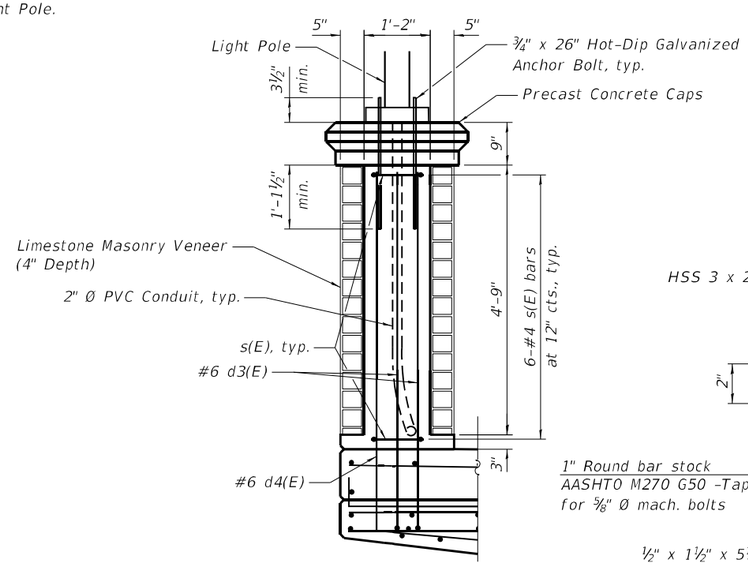

SECTION B-B

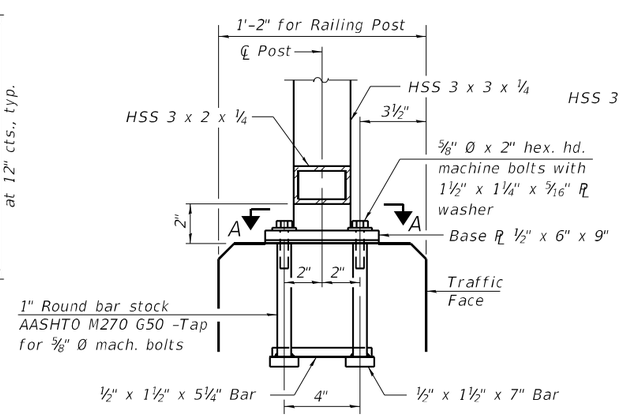

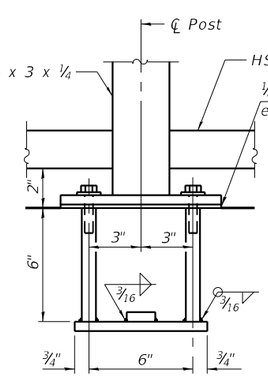

ANCHOR BOLT DETAILS

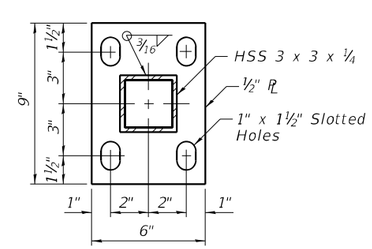

SECTION A-A

Notes:

In lieu of the cast-in-place anchor device shown, the Contractor has the option of drilling and setting ⅝" Ø anchor rods according to Article 509.06 of the Standard Specifications. Embedment shall be according to the manufacturer's specifications.

Place reinforcement bars to miss anchor rod locations.

CVN testing is not required for HSS tubing used in the Bridge Fence Railing (Special).

All heavy hex nuts shall be according to ASTM A 563 grade DH.

All fully threaded anchor rods shall be ASTM F1554 grade 105, hot-dip galvanized.

The post base plate shall be fastned to the parapet snug tight and given an additional ⅛" turn.

All steel rail elements shall be galvanized according to Article 509.05 of the Standard Specifications and powder coated per the Bridge Fence Railing (Special) special provision. Surface preparation for powder coating shall be according to ASTM D7803.

Primera
100 S. WACKER DRIVE SUITE 700 , CHICAGO IL 60606 , P:312-655-0919 F:312-696-0415

USER NAME =	DESIGNED - KJA	REVISED -	
	CHECKED - CPB	REVISED -	
PLOT SCALE =	DRAWN - NP/JM	REVISED -	
PLOT DATE =	CHECKED - KJA	REVISED -	

STATE OF ILLINOIS
DEPARTMENT OF TRANSPORTATION

PARAPET ELEVATION & DETAILS
STRUCTURE NO. 016-1352

SHEET 13 OF 28 SHEETS

F.A.P. RTE.	SECTION	COUNTY	TOTAL SHEETS	SHEET NO.
341	95-B	COOK	124	87
		CONTRACT NO. 62D34		
		ILLINOIS	FED. AID PROJECT	

10/13/2025 2:41:28 PM

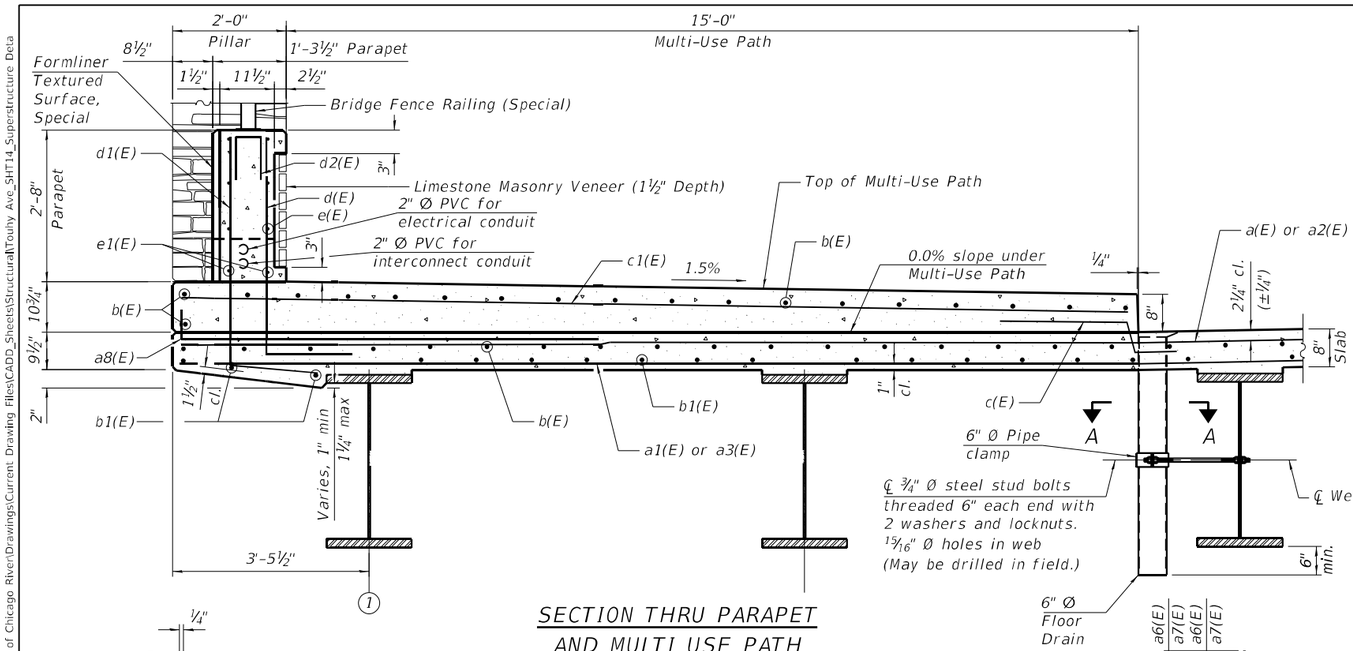

SECTION THRU PARAPET AND MULTI USE PATH

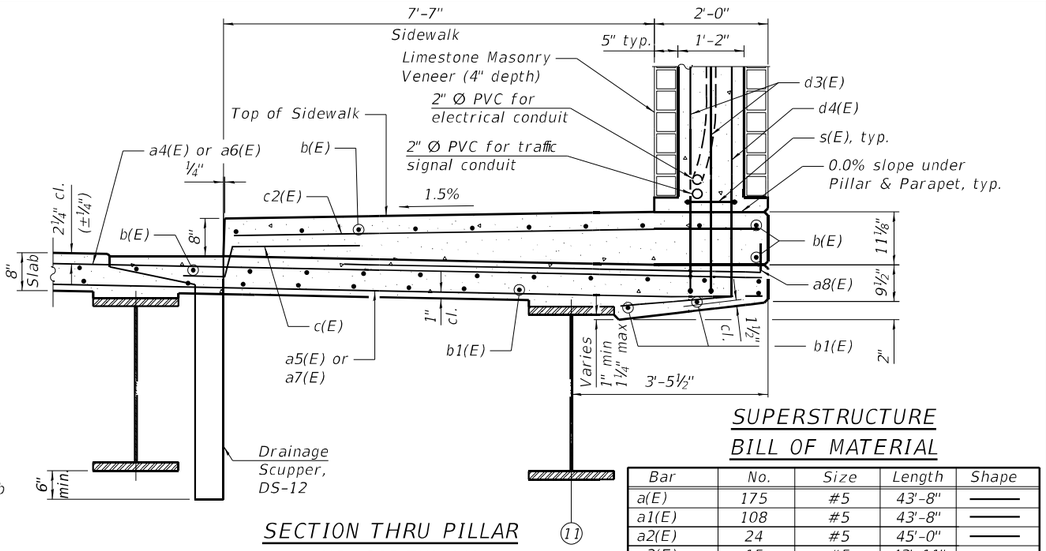

SECTION THRU PILLAR AND SIDEWALK

SUPERSTRUCTURE BILL OF MATERIAL

Bar	No.	Size	Length	Shape
a(E)	175	#5	43'-8"	
a1(E)	108	#5	43'-8"	
a2(E)	24	#5	45'-0"	
a3(E)	15	#5	43'-11"	
a4(E)	178	#5	39'-3"	
a5(E)	109	#5	39'-3"	
a6(E)	21	#5	40'-7"	
a7(E)	13	#5	39'-6"	
a8(E)	392	#6	8'-4"	
a9(E)	72	#5	2'-0"	
a100(E)	4	#5	45'-3"	
a101(E)	4	#5	40'-8"	
b(E)	468	#5	25'-6"	
b1(E)	228	#5	34'-0"	
c(E)	184	#5	2'-4"	
c1(E)	92	#5	16'-8"	
c2(E)	92	#5	9'-3"	
d(E)	168	#5	4'-10"	
d1(E)	168	#5	5'-5"	
d2(E)	72	#4	2'-3"	
d3(E)	56	#6	7'-3"	
d4(E)	40	#6	8'-3"	
e(E)	72	#4	12'-3"	
e1(E)	12	#4	25'-1"	
m10(E)	8	#6	40'-8"	
m11(E)	8	#6	45'-3"	
m12(E)	12	#6	3'-3"	
m13(E)	60	#6	7'-7"	
m14(E)	6	#6	5'-4"	
m15(E)	6	#6	2'-0"	
s(E)	48	#4	7'-5"	
s10(E)	76	#5	7'-2"	
s11(E)	76	#5	10'-8"	
v100(E)	174	#5	3'-1"	
Concrete Superstructure			Cu. Yd.	375.9
Bridge Deck Grooving			Sq. Yd.	561
Protective Coat			Sq. Yd.	900
Precast Concrete Caps			Each	8
Reinforcement Bars, Epoxy Coated			Pound	64,610
Limestone Masonry Veneer			Sq. Ft.	749
Anti-Graffiti Coating			Sq. Ft.	943
Form Liner Textured Surface, Special			Sq. Ft.	407
Staining Concrete Structures			Sq. Ft.	407
Bridge Fence Railing (Special)			Foot	147

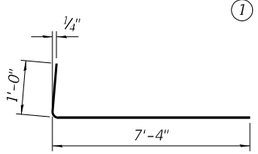

BAR a8(E)

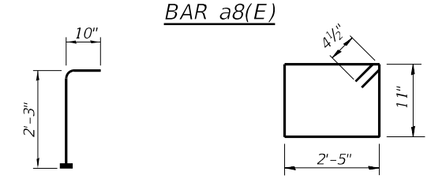

BAR v100(E) (Headed)

BAR s(E)

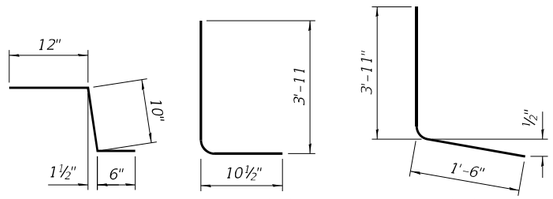

BAR c(E)

BAR d(E)

BAR d1(E)

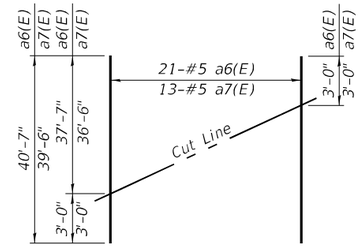

FIELD CUTTING DIAGRAM FOR a6(E) & a7(E)

Order a6E) and a7(E) bars full length. Cut as shown and use remainder of bars in opposite end of deck.

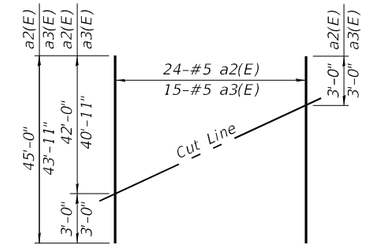

FIELD CUTTING DIAGRAM FOR a2(E) & a3(E)

Order a2(E) and a3(E) bars full length. Cut as shown and use remainder of bars in opposite end of deck.

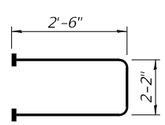

BAR s10(E) (Headed)

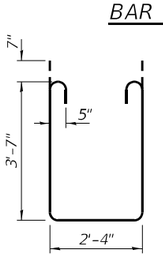

BAR s11(E)

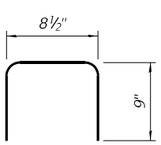

BAR d2(E)

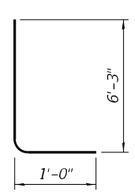

BAR d3(E)

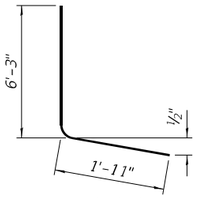

BAR d4(E)

Notes:

Bars indicated thus 1 x 2-#4 etc. indicates 1 line of bars with 2 lengths per line.

Fiberglass pipe shall conform to ASTM D2996, with short-time rupture strength hoop tensile stress of 30,000 p.s.i. minimum.

The exterior surfaces of the floor drains shall be painted according to Article 506 with the finish coat as specified. The exterior surfaces of the drains shall be cleaned according to the Society of Protective Coating's Spec SSPC-SP1 prior to painting.

The top portion of aluminum floor drains shall be coated to minimize reaction with wet concrete.

The clamping device and inserts shall be galvanized according to AASHTO M 232. Cost of clamping device included with Floor Drains.

Headed bars shall conform to ASTM A970 with threaded attachment; Class HA; and reinforcement bars conforming to ASTM A706. Cost included with Reinforcement Bars, Epoxy Coated.

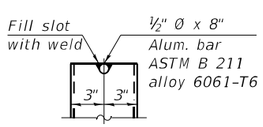

ALUMINUM TUBE

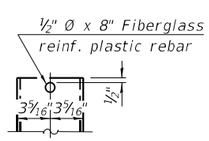

FIBERGLASS PIPE

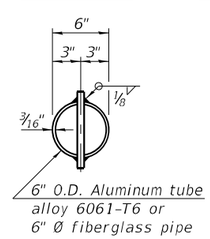

TOP PLAN (Showing aluminum tube)

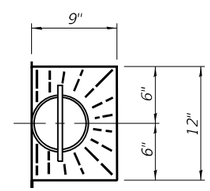

TOP PLAN

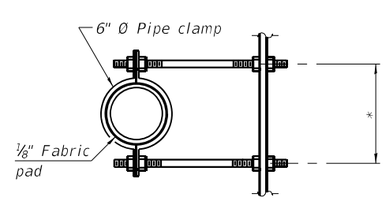

SECTION A-A

*Dimension as required by pipe clamp

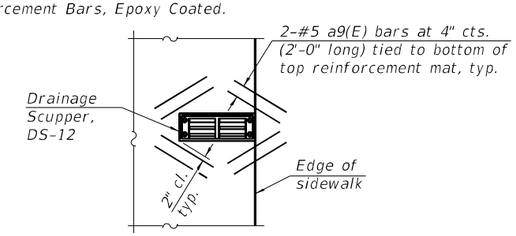

DRAINAGE SCUPPER DETAIL

Note:

Cut longitudinal reinforcement to clear drainage scuppers.

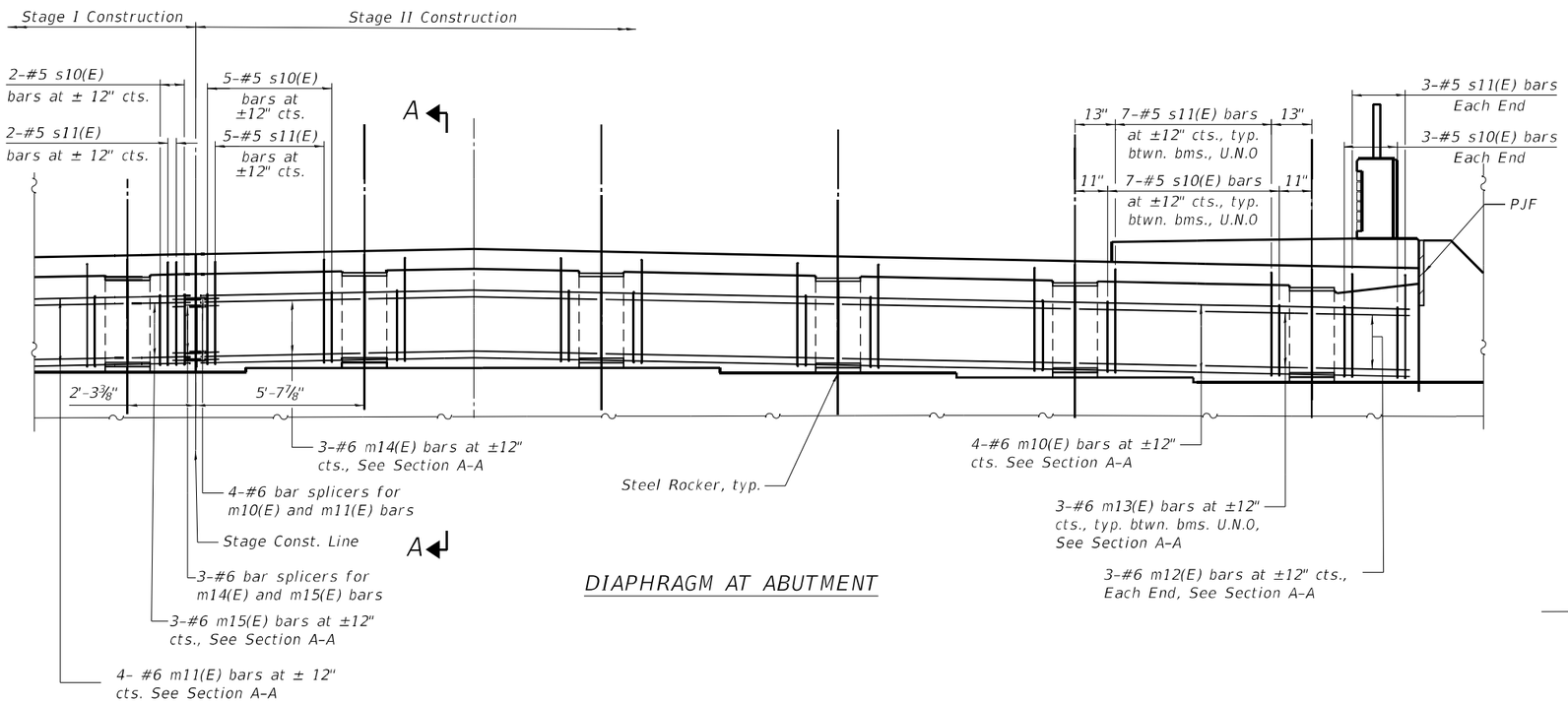

DIAPHRAGM AT ABUTMENT

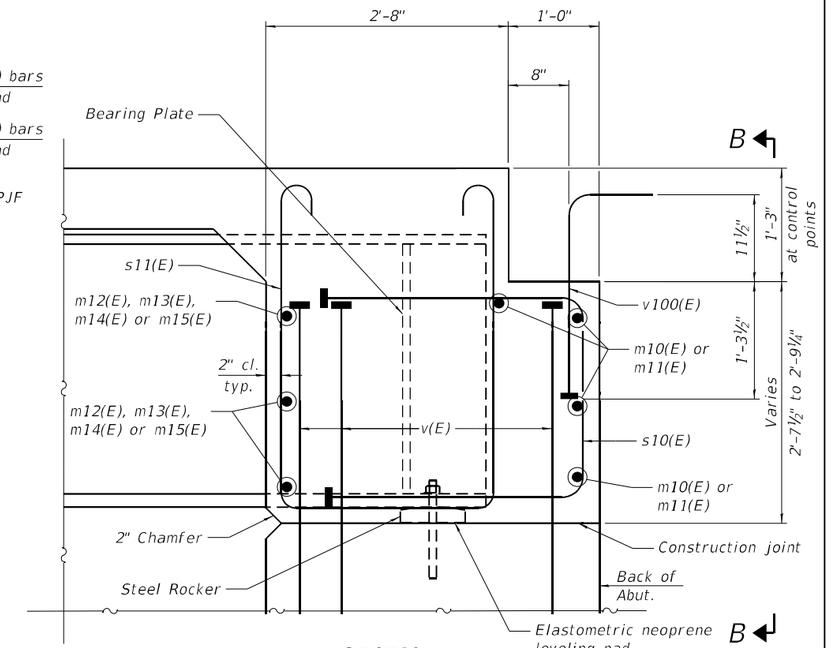

SECTION A-A
(at Rt. ℄'s)

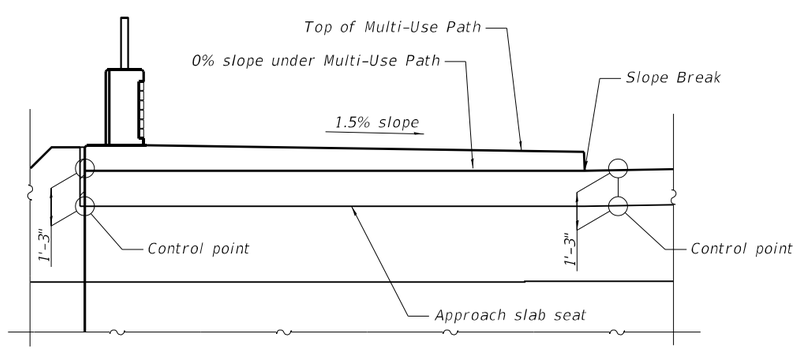

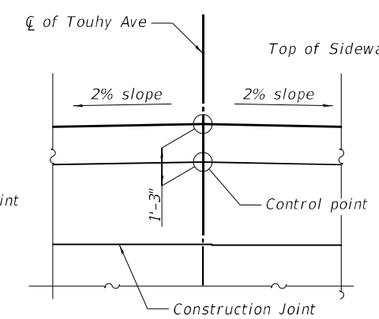

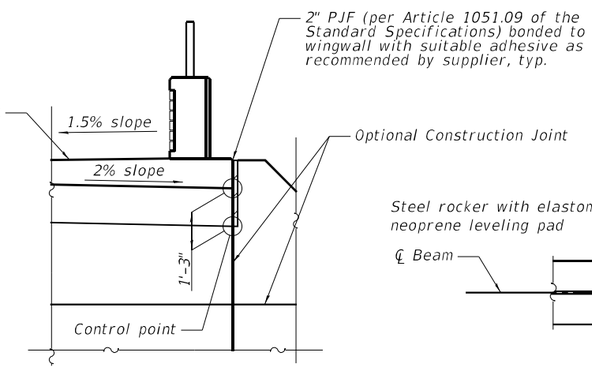

VIEW B-B

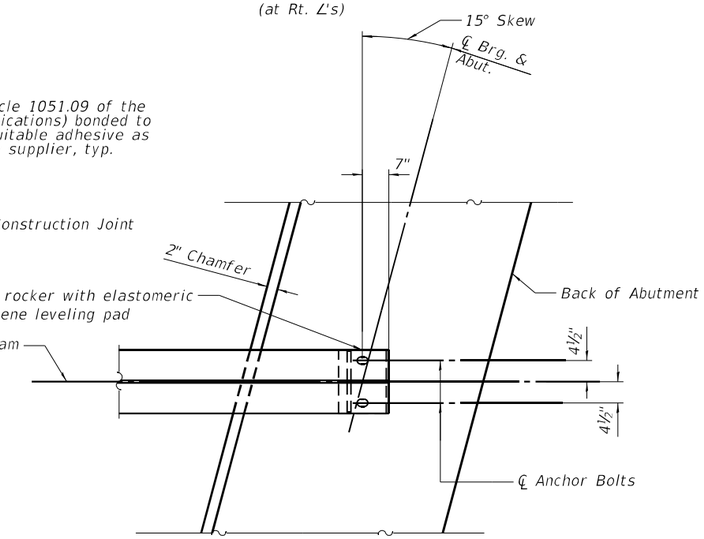

PLAN AT ABUTMENT
(Showing bottom flange of beam)

Notes:
See sheet 14 for superstructure details and Bill of Material.
The s10(E) and s11(E) bars shall be placed parallel to the beams. Spacing for these bars shall be at right angles to the beams.
The approach slab seat shall have a constant slope determined from the control points shown.
See sheets 21 and 22 for number and spacing of v(E) bars.
See sheet 12 for number and spacing of v100(E) bars.

Primera
100 S. WACKER DRIVE SUITE 700 , CHICAGO IL 60606 , P:312-655-0919 F:312-696-0415

USER NAME =	DESIGNED - KJA	REVISED -	
	CHECKED - CPB	REVISED -	
PLOT SCALE =	DRAWN - NP/JM	REVISED -	
PLOT DATE =	CHECKED - KJA	REVISED -	

STATE OF ILLINOIS
DEPARTMENT OF TRANSPORTATION

DIAPHRAGM DETAILS
STRUCTURE NO. 016-1352

SHEET 15 OF 28 SHEETS

F.A.P. RTE.	SECTION	COUNTY	TOTAL SHEETS	SHEET NO.
341	95-B	COOK	124	89
		CONTRACT NO. 62D34		
	ILLINOIS	FED. AID PROJECT		

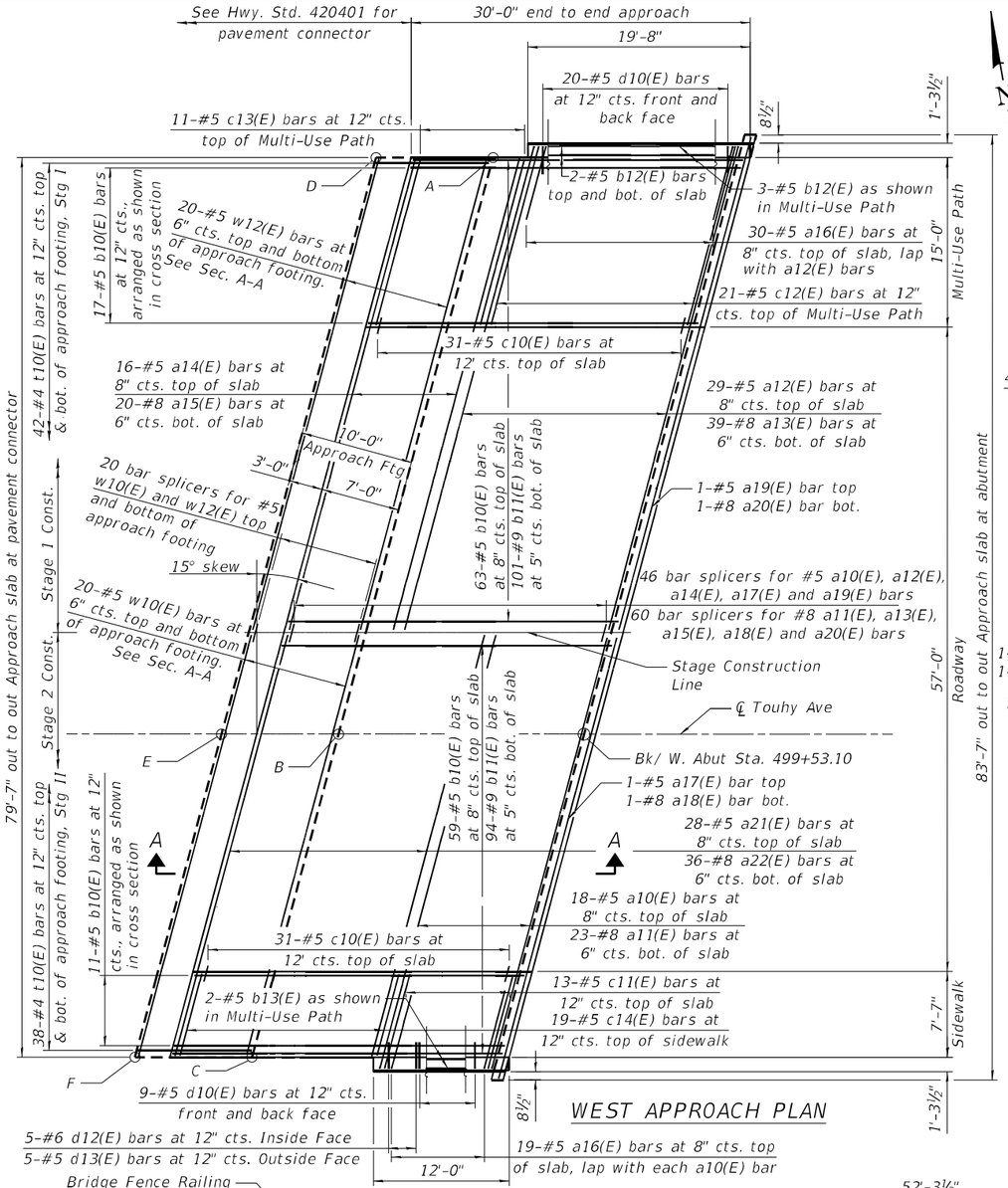

WEST APPROACH PLAN

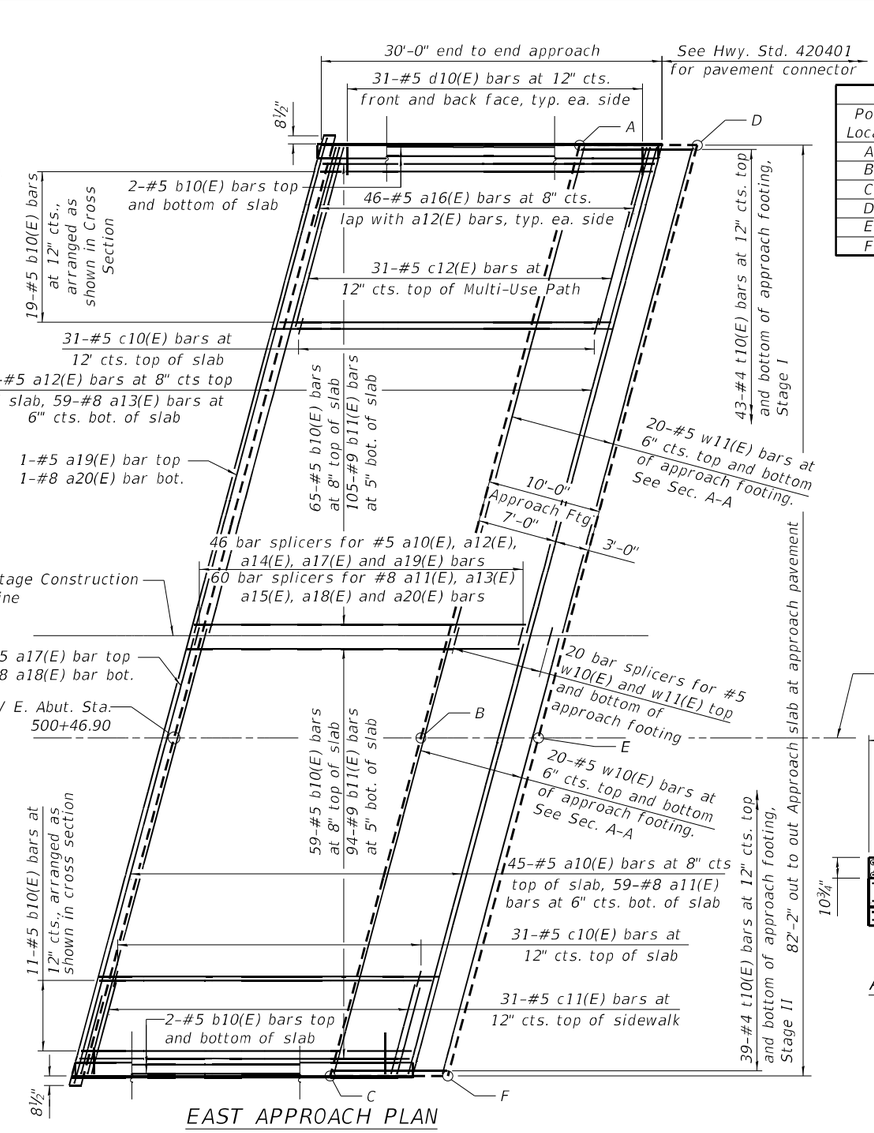

EAST APPROACH PLAN

TOP AND BOTTOM ELEVATIONS FOR APPROACH FOOTING

West Approach			East Approach		
Point/ Location	Top	Bottom	Point/ Location	Top	Bottom
A	616.26	615.43	A	616.73	615.90
B	616.93	616.10	B	617.40	616.57
C	616.31	615.47	C	616.78	615.95
D	616.22	615.39	D	616.77	615.93
E	616.90	616.06	E	617.44	616.61
F	616.27	616.44	F	616.81	615.98

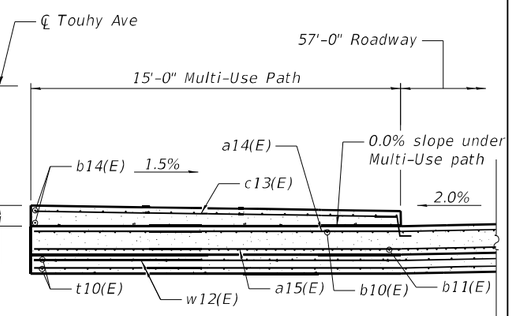

AT NORTHWEST APPROACH FOOTING

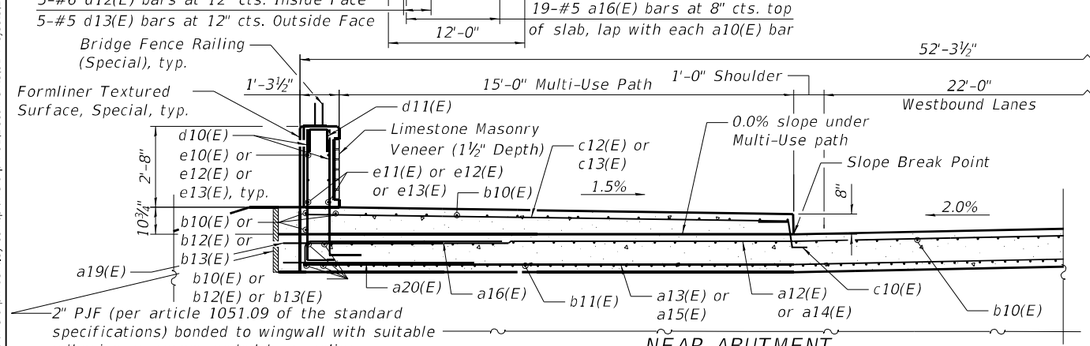

NEAR ABUTMENT

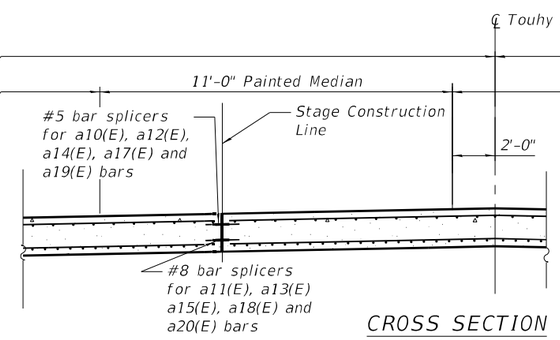

CROSS SECTION
(Looking East)

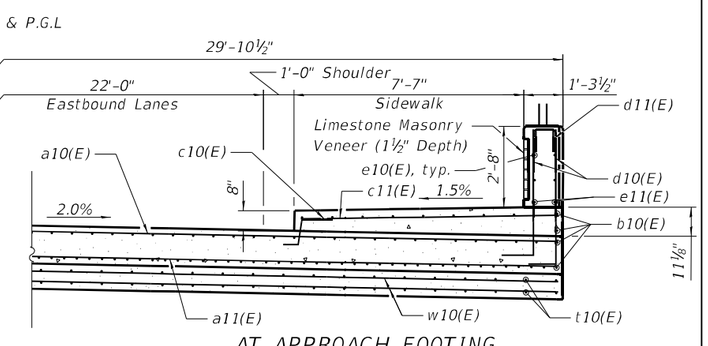

AT APPROACH FOOTING

Primera 100 S. WACKER DRIVE SUITE 700 , CHICAGO IL 60606 , P:312-435-0919 F:312-496-0415	USER NAME =	DESIGNED - KJA	REVISED -	STATE OF ILLINOIS DEPARTMENT OF TRANSPORTATION
		CHECKED - CPB	REVISED -	
	PLOT SCALE =	DRAWN - NP/JM	REVISED -	
	PLOT DATE =	CHECKED - KJA	REVISED -	

APPROACH SLAB PLAN & SECTION
STRUCTURE NO. 016-1352

SHEET 16 OF 28 SHEETS

F.A.P. RTE.	SECTION	COUNTY	TOTAL SHEETS	SHEET NO.
341	95-B	COOK	124	90
		CONTRACT NO. 62D34		
		ILLINOIS	FED. AID PROJECT	

MODEL: Default
FILE NAME: pw:\\primera-pw.bentley.com:primera-pw-01\Documents\01 Projects\2020\20200425.00 - IDOT Phase II Various Design\20200425.05_WO5 Touhy Ave_SHT16_Approach Slab Plan
IL Branch of Chicago River\Drawings\Current Drawing Files\CADD_Sheets\Structural\Touhy Ave over
10/13/2025 2:41:38 PM

Notes:

The joint opening shall be adjusted for temperature per Article 520.04 of the Standard Specifications. However, since this detail is for jointless structures, the length of bridge used to calculate the adjustment shall be equal to half the total bridge length plus the length of the bridge approach slab.

Parapet concrete shall be paid for as Concrete Superstructure.

Approach slab shall be paid for as Concrete Superstructure (Approach Slab).

Approach footing concrete shall be paid for as Concrete Structures.

The approach footing maximum applied service bearing pressure (Qmax) = 2.0 ksf.

Cost of excavation for approach footing included with Concrete Structures.

For Granular Backfill for Structures and drainage treatment details, see sheet 2.

For Parapet Joint, see Sheet 13.

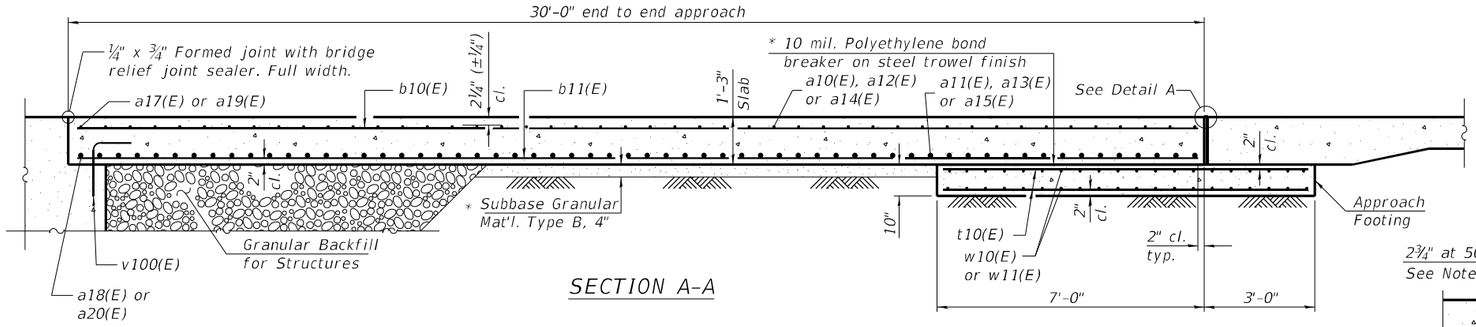

SECTION A-A

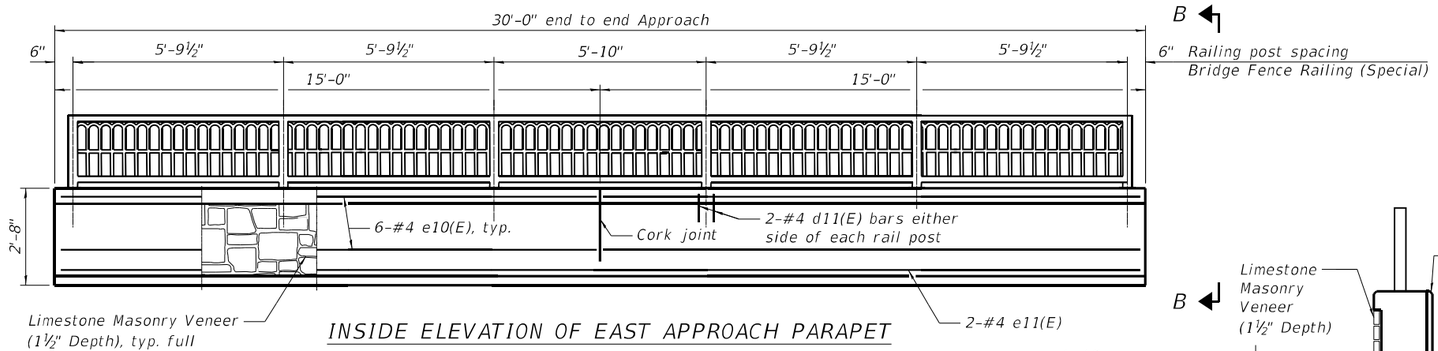

INSIDE ELEVATION OF EAST APPROACH PARAPET

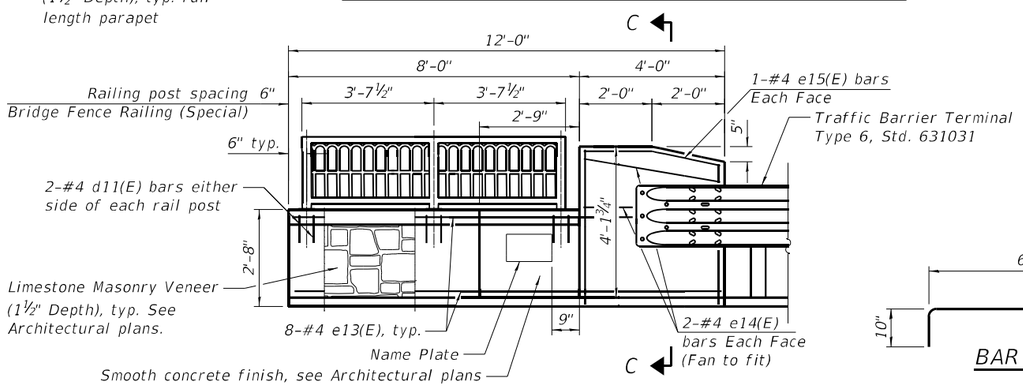

INSIDE ELEVATION OF WEST APPROACH SOUTH PARAPET

(Looking South)

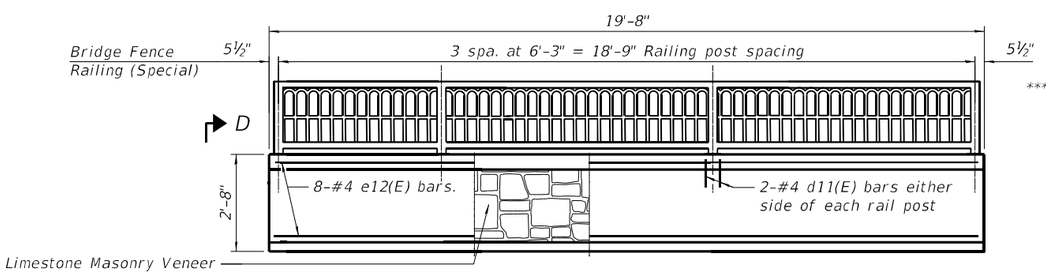

D INSIDE ELEVATION OF WEST APPROACH NORTH PARAPET

(Looking North)

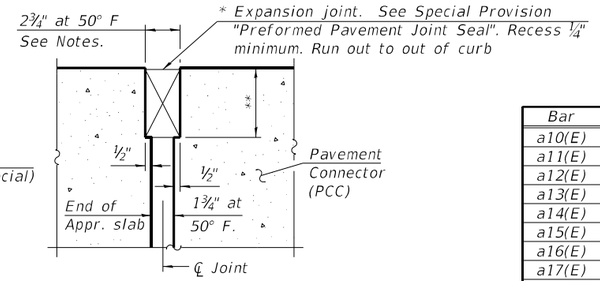

DETAIL A

(at Rt. ∠'s)

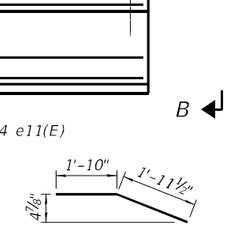

BAR e15(E)

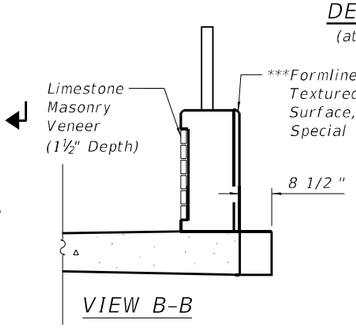

VIEW B-B

* Cost included with Concrete Superstructure (Approach Slab).

** Per manufacturer recommendations

***Omit Formliner Textured Surface, Special at Junction Boxes. See Lighting Plans for Junction Box locations.

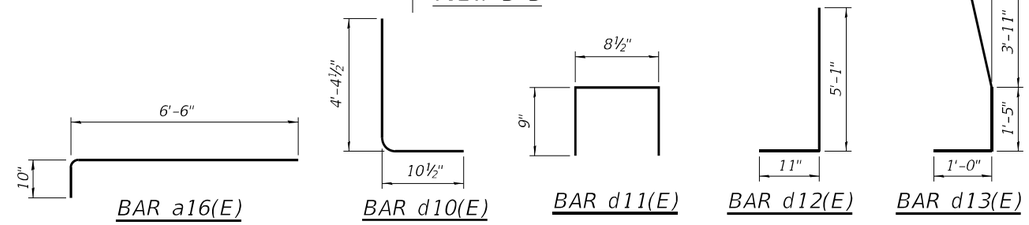

BAR a16(E) BAR d10(E) BAR d11(E) BAR d12(E) BAR d13(E)

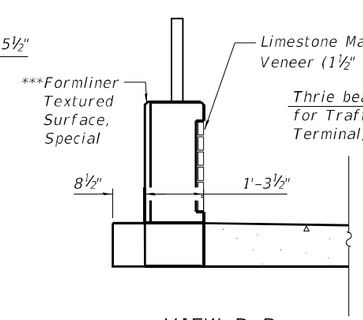

VIEW D-D

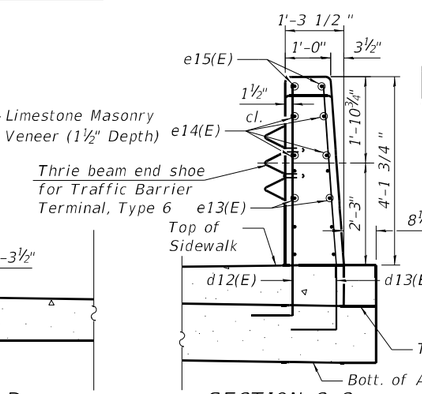

SECTION C-C

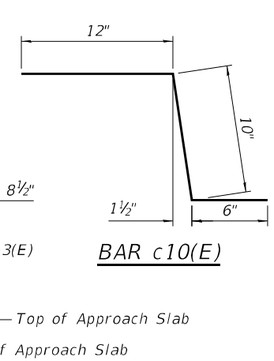

BAR c10(E)

TWO APPROACHES BILL OF MATERIAL

Bar	No.	Size	Length	Shape
a10(E)	63	#5	39'-11"	
a11(E)	82	#8	39'-11"	
a12(E)	74	#5	44'-6"	
a13(E)	98	#8	44'-6"	
a14(E)	16	#5	43'-2"	
a15(E)	20	#8	43'-2"	
a16(E)	141	#5	7'-4"	
a17(E)	2	#5	40'-8"	
a18(E)	2	#8	40'-8"	
a19(E)	2	#5	45'-3"	
a20(E)	2	#8	45'-3"	
a21(E)	28	#5	38'-1"	
a22(E)	36	#8	38'-1"	
b10(E)	312	#5	29'-8"	
b11(E)	394	#9	29'-8"	
b12(E)	7	#5	19'-4"	
b13(E)	7	#5	11'-8"	
c10(E)	124	#5	2'-4"	
c11(E)	44	#5	8'-7"	
c12(E)	52	#5	16'-0"	
c13(E)	11	#5	14'-8"	
c14(E)	19	#5	19'-0"	
d10(E)	182	#5	5'-3"	
d11(E)	38	#4	2'-3"	
d12(E)	5	#6	6'-0"	
d13(E)	5	#5	6'-4"	
e10(E)	24	#4	14'-8"	
e11(E)	4	#4	29'-8"	
e12(E)	8	#4	19'-4"	
e13(E)	8	#4	11'-8"	
e14(E)	4	#4	3'-9"	
e15(E)	2	#4	3'-10"	
t10(E)	324	#4	10'-1"	
w10(E)	80	#5	39'-11"	
w11(E)	40	#5	43'-2"	
w12(E)	40	#5	45'-2"	
Structure Excavation		Cu. Yd.	236	
Concrete Structure		Cu. Yd.	52.0	
Concrete Superstructure		Cu. Yd.	53.5	
Concrete Superstructure, Approach Slab		Cu. Yd.	222.7	
Bridge Deck Grooving		Sq. Yd.	367	
Protective Coat		Sq. Yd.	589	
Reinforcement Bars, Epoxy Coated		Pound	98,520	
Limestone Masonry Veneer		Sq. Ft.	184	
Anti-Graffiti Coating		Sq. Ft.	355	
Form Liner Textured Surface, Special		Sq. Ft.	245	
Staining Concrete Structures		Sq. Ft.	245	
Bridge Fence Railing (Special)		Foot	84	

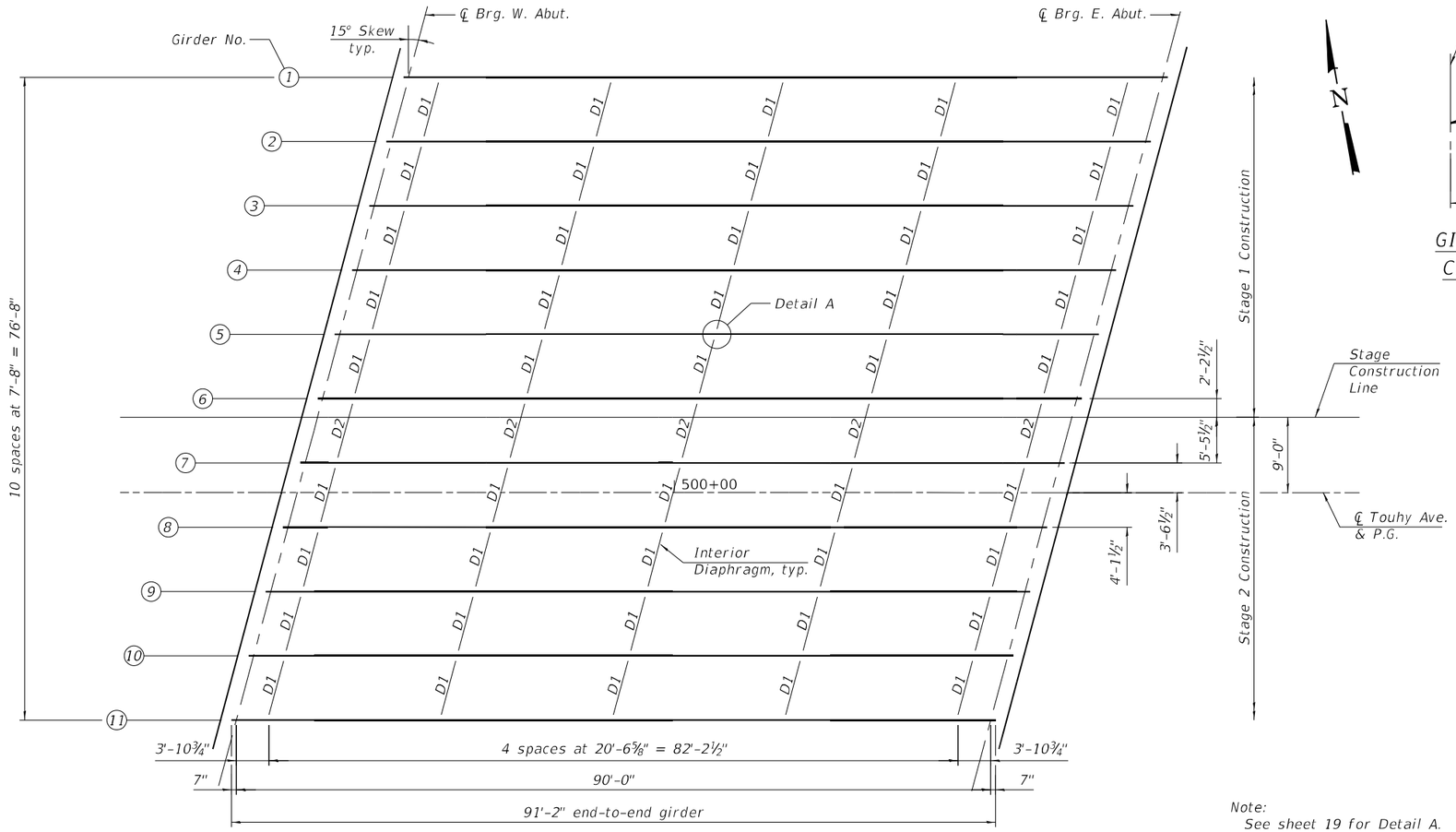

FRAMING PLAN

Note:
See sheet 19 for Detail A.

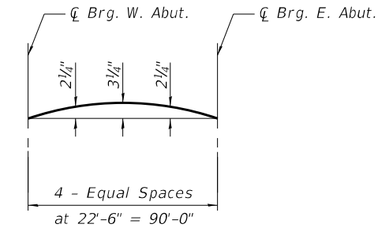

GIRDERS 1-5, 8-11 CAMBER DIAGRAM

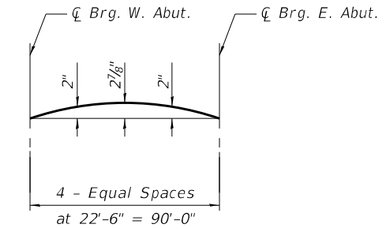

GIRDER 6 CAMBER DIAGRAM

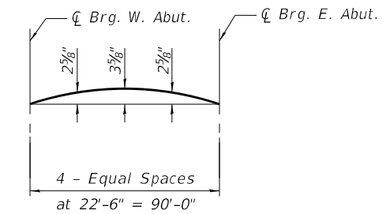

GIRDER 7 CAMBER DIAGRAM

*TOP OF WEB ELEVATIONS

Location	℄ Brg. W. Abut.	℄ Brg. E. Abut.
Girder 1	616.72	617.03
Girder 2	616.71	617.02
Girder 3	616.74	617.05
Girder 4	616.89	617.20
Girder 5	617.03	617.34
Girder 6	617.18	617.49
Girder 7	617.33	617.64
Girder 8	617.31	617.62
Girder 9	617.15	617.46
Girder 10	616.99	617.30
Girder 11	616.83	617.14

*For fabrication only

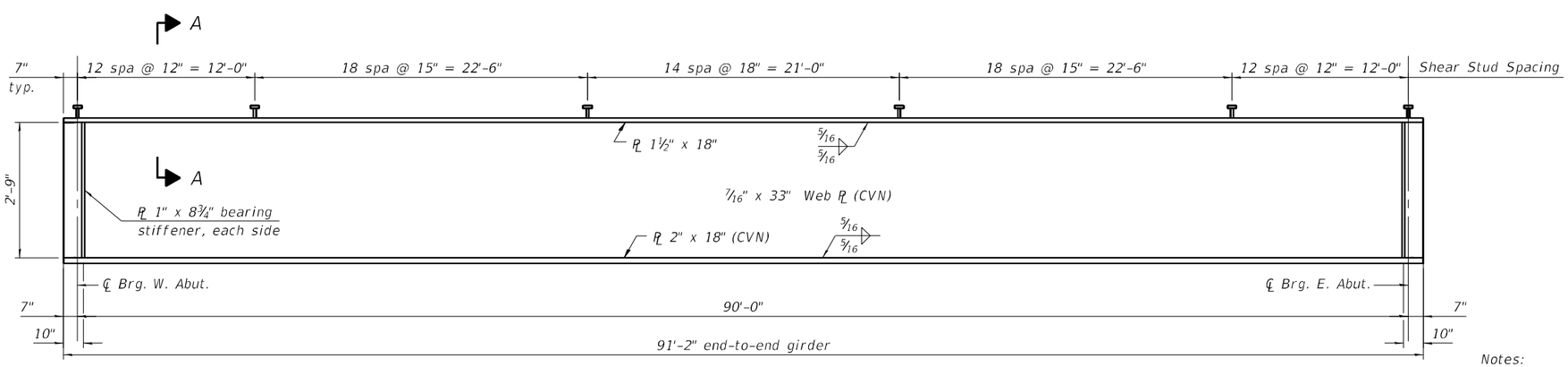

GIRDER ELEVATION

"CVN" denotes Charpy-V-Notch impact energy requirements, zone 2.

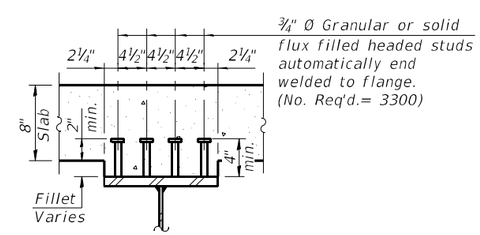

SECTION A-A

Notes:
1) All girders and bearing stiffeners shall be AASHTO M270, Grade 50W.
2) All diaphragms shall be installed as steel is erected and secured with erection pins and bolts except as otherwise noted.

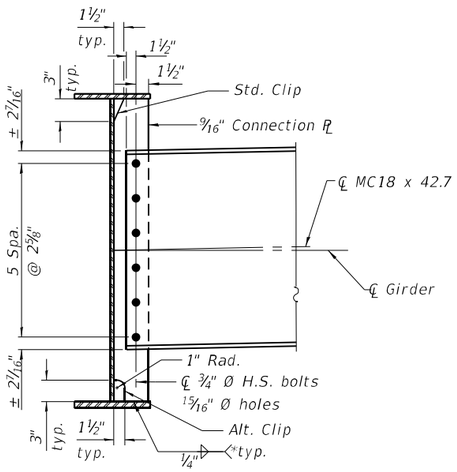

INTERIOR DIAPHRAGM D1

(45 required)

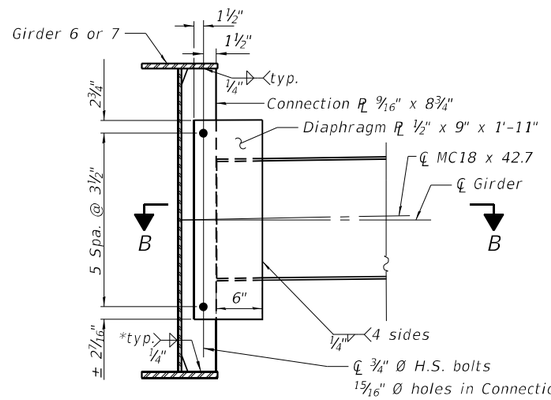

15/16" Ø holes in Connection PL and Diaphragm PL Girder 6 side & 13/16" x 1⅞" slots in Diaphragm PL on Girder 7 side (see note 3)

INTERIOR DIAPHRAGM D2

(5 required)

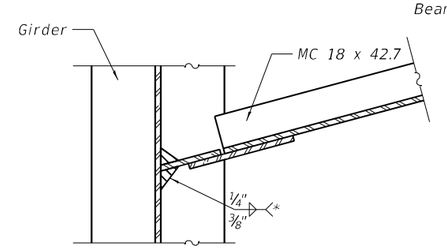

SECTION B-B

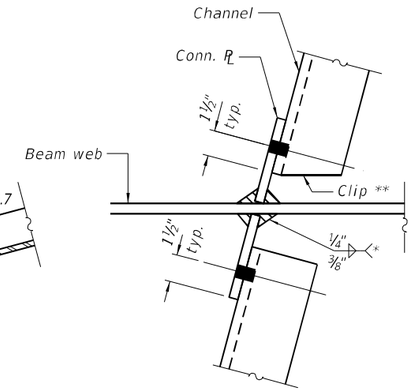

DETAIL A

** Clip channel as necessary for ease of installation of diaphragms on skews.

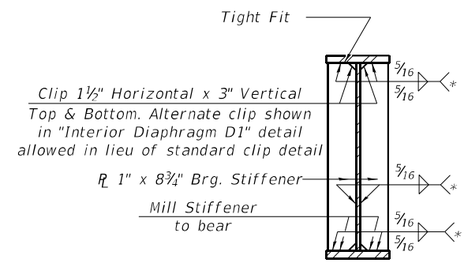

SECTION AT ABUTMENT

* Terminate ¼" (±⅛") from the end of plate intersects.

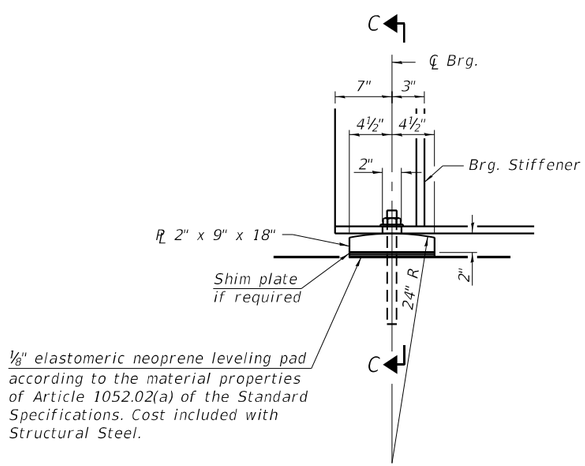

⅛" elastomeric neoprene leveling pad according to the material properties of Article 1052.02(a) of the Standard Specifications. Cost included with Structural Steel.

ELEVATION AT ABUTMENT

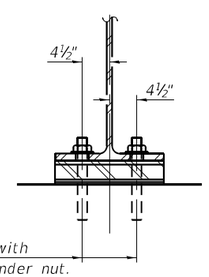

℄ 1" Ø x 12" anchor bolts with
2¼"x 2¼"x 5/16" PL washer under nut.
1⅜"x 2" slotted hole in flange.
1½" Ø holes in bearing plate.

SECTION C-C

FIXED BEARING

22 Required

BEARING SHIM PLATES

Location	Thickness
West Abutment Beam 1	⅛"
West Abutment Beam 3	⅜"
West Abutment Beam 7	¼"
East Abutment Beam 1	⅛"
East Abutment Beam 3	⅜"
East Abutment Beam 7	¼"

BILL OF MATERIAL

Item	Unit	Total
Anchor Bolts, 1"	Each	44

Notes:

1) Two hardened washers required for each set of oversized holes.

2) Alternative channels of equal depth and larger weight are permitted to facilitate material acquisition. Alternate channels, if utilized, shall be provided at no additional cost to the Department.

3) Bolts in slots shall be finger tight until second stage pour is complete. Position slots so bolts start at one end with no concrete load and finish near opposite end under deck load, allowing maximum displacement without stressing main members.

4) Anchor bolts shall be according to Article 521.06 of the Standard Specifications. Beams shall be braced for stability during erection and remain braced until deck is poured and cured.

5) Anchor bolts at all supports shall be installed as each member is erected unless an equivalent temporary means of lateral restraint is used.

INTERIOR GIRDER MOMENT TABLE		
		0.5 Sp. 1
Is	(in^4)	20040
Ic(n)	(in^4)	45650
Ic(3n)	(in^4)	33514
Ic(cr)	(in^4)	-
Ss	(in^3)	1223.4
Sc(n)	(in^3)	1531.4
Sc(3n)	(in^3)	1426.1
Sc(cr)	(in^3)	-
DC1	(k/')	1.108
MDC1	('k)	1122
DC2	(k/')	0.973
MDC2	('k)	985
DW	(k/')	0.285
MDW	('k)	289
LLDF		0.833
M_{LL+IM}	('k)	1488
f_l (Strength I)	(ksi)	0
$Mu + \frac{1}{3} f_l S_{xc}$	('k)	5940.7
Øf Mn	('k)	6833.3
fs DC1	(ksi)	11.00
fs DC2	(ksi)	8.29
fs DW	(ksi)	2.43
fs (LL+IM)	(ksi)	12.87
f_l (Service II)	(ksi)	0
$fs + \frac{f_l}{2}$ (Service II)	(ksi)	38.45
0.95Rh Fyf	(ksi)	47.50
$fs + \frac{1}{3} f_l$ (Total)(Strength I)	(ksi)	-
Øf Fn	(ksi)	-
Vf	(k)	30.3

GIRDER REACTION TABLE			
		Abut.	
		Interior	Exterior
LLDF		0.833	-
OCF		1.054	-
R_{DC1}	(k)	50.9	51.6
R_{DC2}	(k)	43.8	43.8
R_{DW}	(k)	12.8	12.8
R_{LL}	(k)	84.7	17.9
R_{IM}	(k)	17.7	-
RTotal	(k)	209.9	126.1

Is, Ss: Non-composite moment of inertia and section modulus of the steel section used for computing fs(Total-Strength I, and Service II) due to non-composite dead loads ($in.^4$ and $in.^3$).

Ic(n), Sc(n): Composite moment of inertia and section modulus of the steel and deck based upon the modular ratio, "n", used for computing fs(Total-Strength I, and Service II) in uncracked sections due to short-term composite live loads ($in.^4$ and $in.^3$).

Ic(3n), Sc(3n): Composite moment of inertia and section modulus of the steel and deck based upon 3 times the modular ratio, "3n", used for computing fs(Total-Strength I, and Service II) in uncracked sections, due to long-term composite (superimposed) dead loads ($in.^4$ and $in.^3$).

Ic(cr), Sc(cr): Composite moment of inertia and section modulus of the steel and longitudinal deck reinforcement, used for computing fs (Total-Strength I and Service II) in cracked sections, due to both short-term composite live loads and long-term composite (superimposed) dead loads ($in.^4$ and $in.^3$).

DC1: Un-factored non-composite dead load (kips/ft.).

MDC1: Un-factored moment due to non-composite dead load (kip-ft.).

DC2: Un-factored long-term composite (superimposed excluding future wearing surface) dead load (kips/ft.).

MDC2: Un-factored moment due to long-term composite (superimposed excluding future wearing surface) dead load (kip-ft.).

DW: Un-factored long-term composite (superimposed future wearing surface only) dead load (kips/ft.).

MDW: Un-factored moment due to long-term composite (superimposed future wearing surface only) dead load (kip-ft.).

M_{LL+IM}: Un-factored live load moment plus dynamic load allowance (impact) (kip-ft.).

Mu (Strength I): Factored design moment (kip-ft.).
1.25 (MDC1 + MDC2) + 1.5 MDW + 1.75 M_{LL+IM}

Øf Mn: Compact composite positive moment capacity computed according to Article 6.10.7.1 or non-slender negative moment capacity according to Article A6.1.1 or A6.1.2 (kip-ft).

fs DC1: Un-factored stress at edge of flange for controlling steel flange due to vertical non-composite dead loads as calculated below (ksi).
MDC1/ Snc

fs DC2: Un-factored stress at edge of flange for controlling steel flange due to vertical composite dead loads as calculated below (ksi).
MDC2/ Sc(3n) or MDC2/ Sc(cr) as applicable.

fs DW: Un-factored stress at edge of flange for controlling steel flange due to vertical composite future wearing surface loads as calculated below (ksi).
MDW/ Sc(3n) or MDW/ Sc(cr) as applicable.

fs (LL+IM): Un-factored stress at edge of flange for controlling steel flange due to vertical composite live load plus impact loads as calculated below (ksi).
M_{LL+IM} / Sc(n) or M_{LL+IM} / Sc(cr) as applicable.

fs (Service II): Sum of stresses as computed below (ksi).
fsDC1 + fsDC2 + fsDW + 1.3 fs($_{LL+IM}$)

0.95RhFyf: Composite stress capacity for Service II loading according to Article 6.10.4.2 (ksi).

fs (Total)(Strength I): Sum of stresses as computed below on non-compact section (ksi).
1.25 (fsDC1 + fsDC2) + 1.5 fsDW + 1.75 fs($_{LL+IM}$)

Øf Fn: Non-Compact composite positive or negative stress capacity for Strength I loading according to Article 6.10.7 or 6.10.8 (ksi).

Vf: Maximum factored shear range in span computed according to Article 6.10.10.

OCF: Obtuse Correction Factor

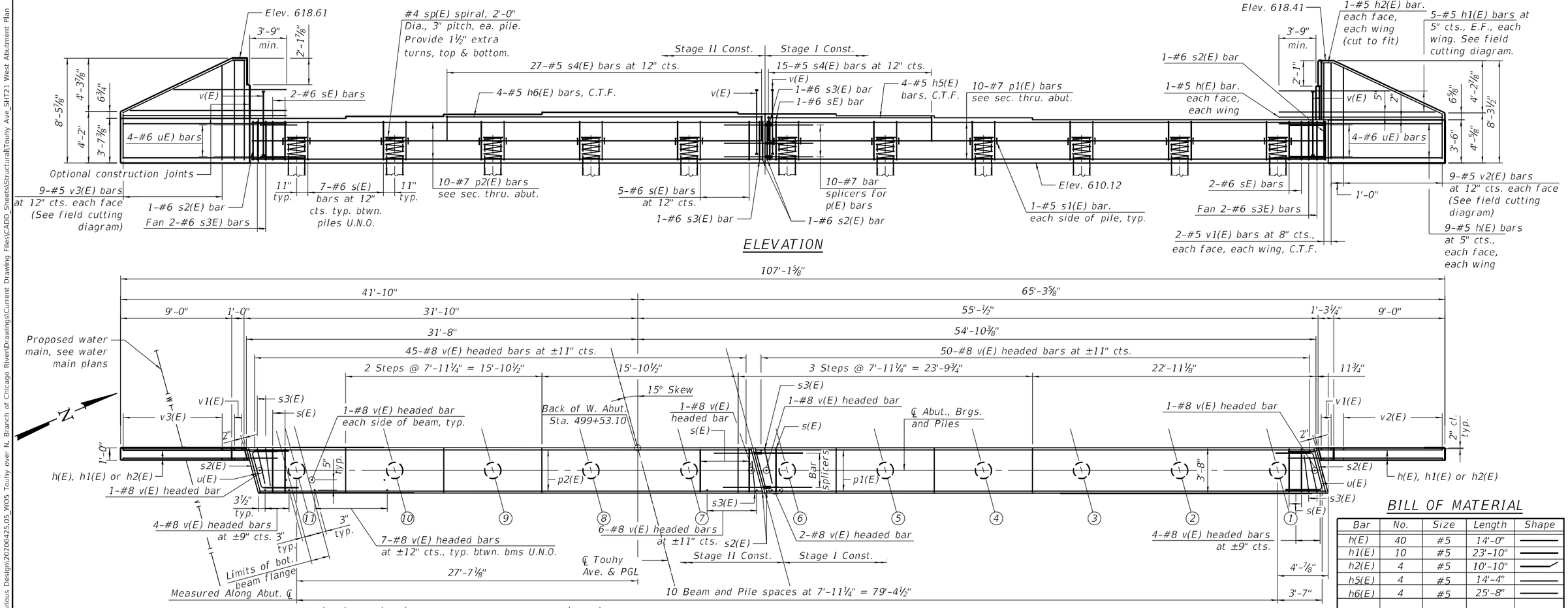

ELEVATION

PLAN

BILL OF MATERIAL

Bar	No.	Size	Length	Shape
h(E)	40	#5	14'-0"	
h1(E)	10	#5	23'-10"	
h2(E)	4	#5	10'-10"	
h5(E)	4	#5	14'-4"	
h6(E)	4	#5	25'-8"	
p1(E)	10	#7	45'-3"	
p2(E)	10	#7	40'-8"	
* sp(E)	11	#4	2'-0"	
s(E)	73	#6	14'-4"	
s1(E)	22	#5	4'-4"	
s2(E)	4	#6	14'-6"	
s3(E)	6	#6	9'-0"	
s4(E)	42	#5	9'-8"	
u(E)	8	#6	11'-11"	
v(E)	200	#8	5'-9"	
v1(E)	8	#5	8'-1"	
v2(E)	9	#5	11'-3"	
v3(E)	9	#5	11'-6"	
Structure Excavation			Cu. Yd.	131
Concrete Structures			Cu. Yd.	49.3
Reinforcement Bars, Epoxy Coated			Pound	9,110
Furnishing Metal Shell Piles 16" X 0.312"			Foot	600
Driving Piles			Foot	600
Pile Shoes			Each	11
Test Pile Metal Shells			Each	1
Granular Backfill for Structures			Cu. Yd.	133

PILE DATA

*Length is height of spiral.

Type: MS 16" x 0.312" With Conical Tips
Nominal Required Bearing: 654 kips
Factored Resistance Available: 360 kips
Est. Length: 60'
No. Production Piles: 10
No. Test Piles: 1

Notes:
Pour steps monolithically with cap.
Headed bars shall conform to ASTM A970 with threaded attachment; Class HA; and reinforcement bars conforming to ASTM A706. Cost included with Reinforcement Bars, Epoxy Coated.
For details of piles see sheet 24.

Girder #	Elevation	Step Ht.
1	613.62	
2	613.62	0
3	613.62	0
4	613.79	2"
5	613.94	1¾"
6	614.09	1¾"
7	614.21	1½"
8	614.21	0
9	614.05	1⅞"
10	613.89	1⅞"
11	613.73	1⅞"

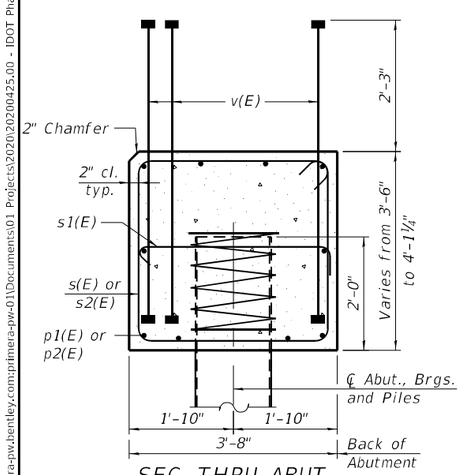

SEC. THRU ABUT.

Dimensions at right angles to abutment.

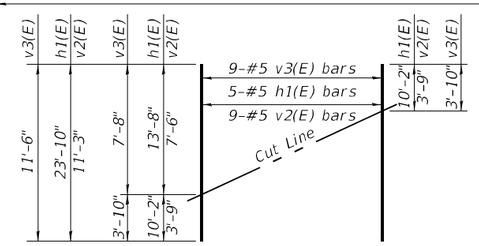

FIELD CUTTING DIAGRAM

Order h1(E), v2(E), v3(E) full length. Cut as shown.

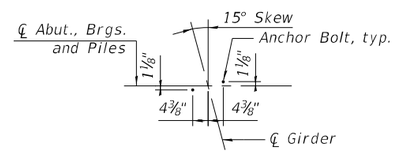

BEARING ANCHOR BOLT DETAILS

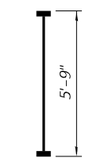

BAR v(E)

(Headed)

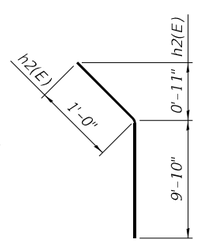

BAR h2(E)

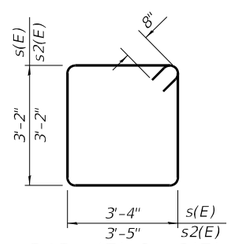

BAR s(E) & s2(E)

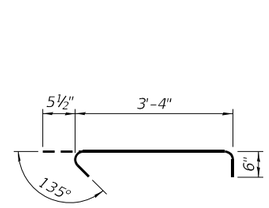

BAR s1(E)

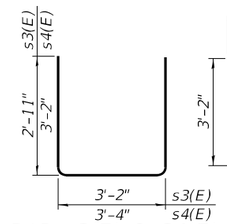

BAR s3(E) & S4(E)

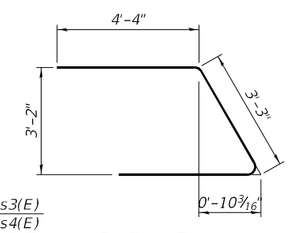

BAR u(E)

USER NAME =	DESIGNED - OR	REVISED -
	CHECKED - SP	REVISED -
PLOT SCALE =	DRAWN - OR	REVISED -
PLOT DATE =	CHECKED - SP	REVISED -

TYLin

STATE OF ILLINOIS
DEPARTMENT OF TRANSPORTATION

WEST ABUTMENT PLAN & ELEVATION
STRUCTURE NO. 016-1352

SHEET 21 OF 28 SHEETS

F.A.P. RTE.	SECTION	COUNTY	TOTAL SHEETS	SHEET NO.
341	95-B	COOK	124	95
		CONTRACT NO. 62D34		
		ILLINOIS	FED. AID PROJECT	

MODEL: Default
FILE NAME: pw:\\primera-pw.bentley.com:primera-pw-01\Documents\01 Projects\2020\20200425.00 - IDOT Phase II Various Design\20200425_W05 Touhy over N. Branch of Chicago River\Drawings\Current Drawing Files\CADD_Sheets\Structural\Touhy Ave_SHT21 West Abutment Plan
10/13/2025 2:41:54 PM

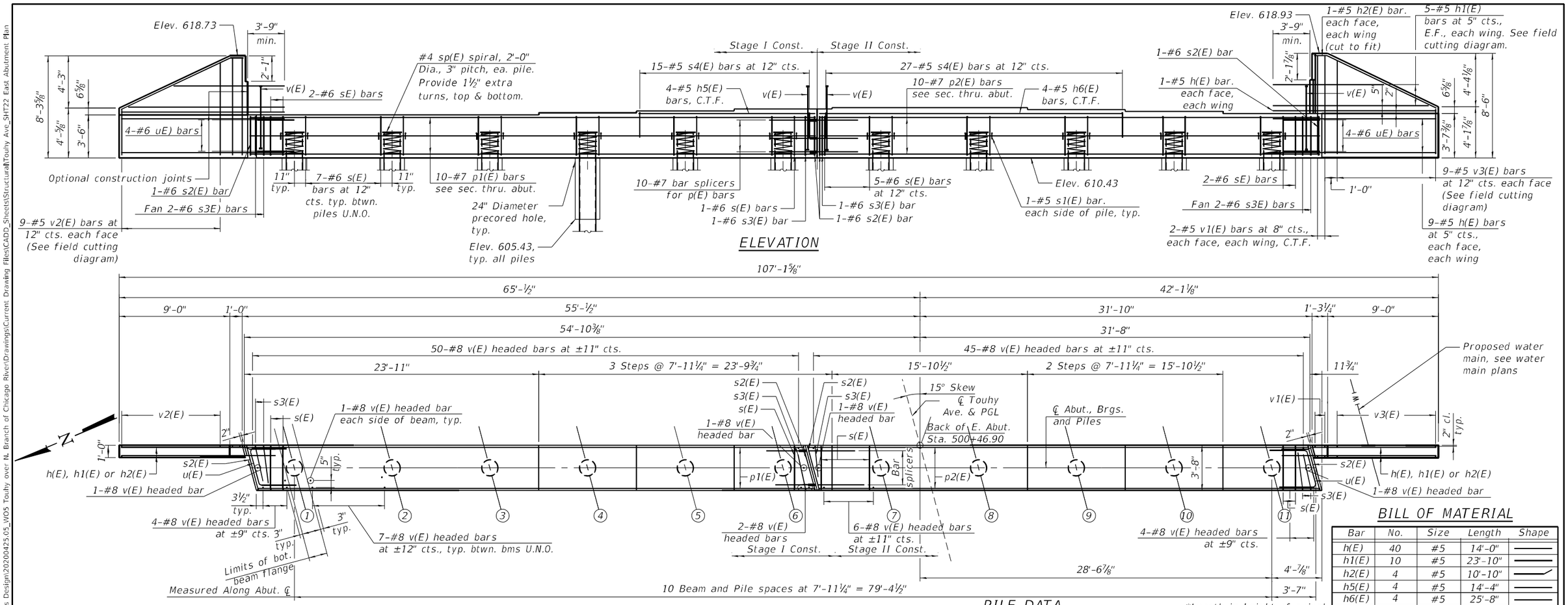

ELEVATION

PLAN

BILL OF MATERIAL

Bar	No.	Size	Length	Shape
h(E)	40	#5	14'-0"	
h1(E)	10	#5	23'-10"	
h2(E)	4	#5	10'-10"	
h5(E)	4	#5	14'-4"	
h6(E)	4	#5	25'-8"	
p1(E)	10	#7	45'-3"	
p2(E)	10	#7	40'-8"	
* sp(E)	11	#4	2'-0"	
s(E)	73	#6	14'-4"	
s1(E)	22	#5	4'-4"	
s2(E)	4	#6	14'-6"	
s3(E)	6	#6	9'-0"	
s4(E)	42	#5	9'-8"	
u(E)	8	#6	11'-11"	
v(E)	200	#8	5'-9"	
v1(E)	8	#5	8'-1"	
v2(E)	9	#5	11'-3"	
v3(E)	9	#5	11'-6"	
Structure Excavation			Cu. Yd.	155
Concrete Structures			Cu. Yd.	49.3
Reinforcement Bars, Epoxy Coated			Pound	9,110
Furnishing Metal Shell Piles 16" X 0.312"			Foot	600
Driving Piles			Foot	600
Pile Shoes			Each	11
Test Pile Metal Shells			Each	1
Granular Backfill for Structures			Cu. Yd.	133

*Length is height of spiral.

PILE DATA

Type: MS 16" x 0.312" With Conical Tips
Nominal Required Bearing: 654 kips
Factored Resistance Available: 360 kips
Est. Length: 60'
No. Production Piles: 10
No. Test Piles: 1

Notes:

Pour steps monolithically with cap.

Headed bars shall conform to ASTM A970 with threaded attachment; Class HA; and reinforcement bars conforming to ASTM A706. Cost included with Reinforcement Bars, Epoxy Coated.

For details of piles see sheet 24.

Piles shall be driven through 24" diameter precored holes extending to elevation 605.43 according to Article 512.09(c) of the Standard Specifications except that the void space outside of the pile shall be filled with bentonite according to the manufacturer's recommendations to achieve a Qu of 1.5 tsf. Cost included in Driving Piles.

Girder #	Elevation	Step Ht.
1	613.93	
2	613.93	0
3	613.93	0
4	614.10	2"
5	614.25	1¾"
6	614.40	1¾"
7	614.52	1½"
8	614.52	0
9	614.36	1⅞"
10	614.20	1⅞"
11	614.04	1⅞"

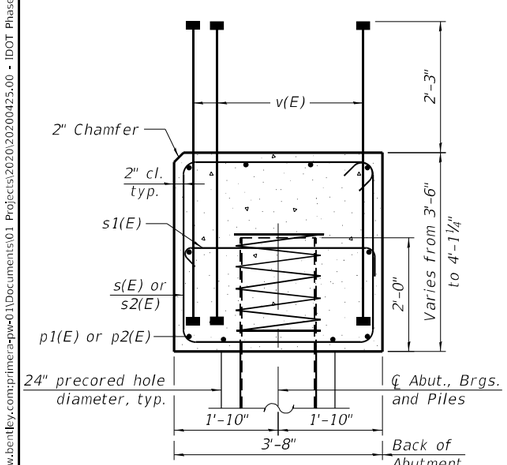

SEC. THRU ABUT.

Dimensions at right angles to abutment.

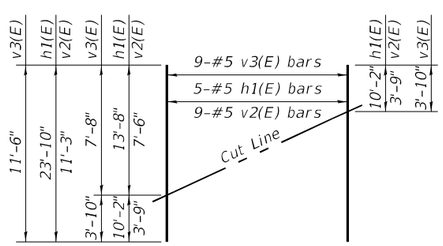

FIELD CUTTING DIAGRAM

Order h1(E), v2(E), v3(E) full length. Cut as shown.

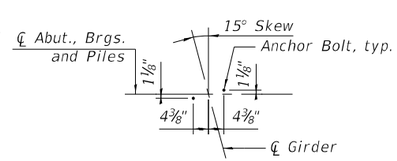

BEARING ANCHOR BOLT DETAILS

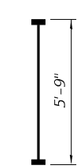

BAR v(E)

(Headed)

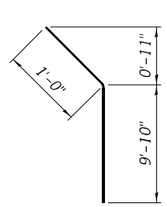

BAR h2(E)

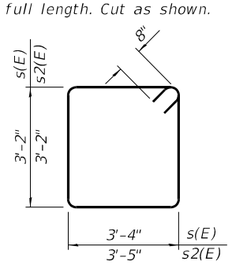

BAR s(E) & s2(E)

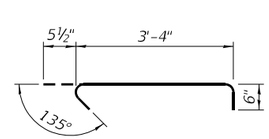

BAR s1(E)

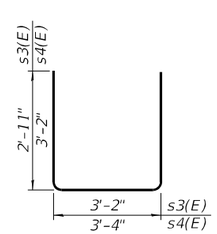

BAR s3(E) & s4(E)

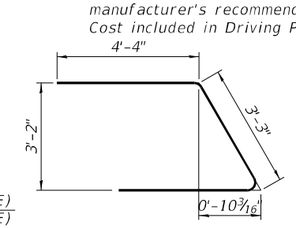

BAR u(E)

TYLin

USER NAME =	DESIGNED - OR	REVISED -
	CHECKED - SP	REVISED -
PLOT SCALE =	DRAWN - OR	REVISED -
PLOT DATE =	CHECKED - SP	REVISED -

STATE OF ILLINOIS
DEPARTMENT OF TRANSPORTATION

EAST ABUTMENT PLAN & ELEVATION
STRUCTURE NO. 016-1352

SHEET 22 OF 28 SHEETS

F.A.P. RTE.	SECTION	COUNTY	TOTAL SHEETS	SHEET NO.
341	95-B	COOK	124	96

CONTRACT NO. 62D34

ILLINOIS FED. AID PROJECT

MODEL: Default
FILE NAME: pw:\\primera-pw.bentley.com:primera-pw-01\Documents\01 Projects\2020\20200425.00 - IDOT Phase II Various Design\20200425.05_VOS Touhy over IL Branch of Chicago River\Drawings\Current Drawing Files\CADD_Sheets\Structural\Touhy Ave_SHT22 East Abutment Plan
10/13/2025 2:41:58 PM

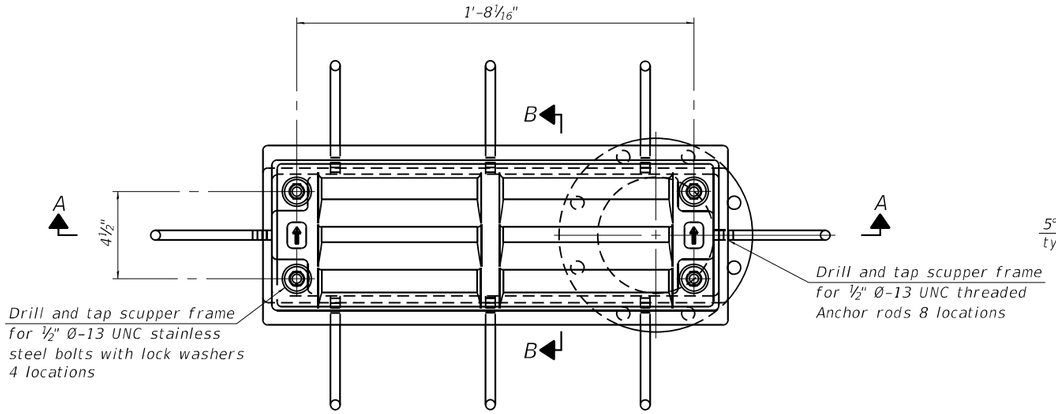

PLAN

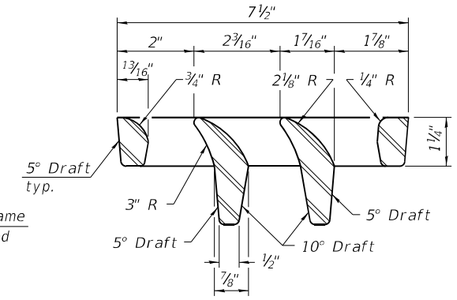

VANE GRATE DETAIL

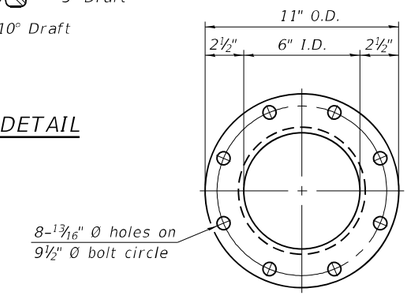

Notes:

All cast iron parts shall be gray iron conforming to the requirements of AASHTO M105, Class 35B and AASHTO M306.

Bolts, anchor rods, nuts and washers shall be according to ASTM A307 and shall be galvanized according to AASHTO M232. As an alternate stainless steel may be used.

Stainless steel hardware shall be according to Article 1006.29(d) of the Standard Specifications.

Structural steel weldments of equal sections and of the same configuration may be substituted for the cast iron scupper frames and downspouts; however, the scupper grates shall remain cast iron. Fillet or full penetration welds shall be used for the weldments. Details shall be submitted to the Engineer for approval.

Structural steel scupper frames and downspouts, when utilized, shall be galvanized according to AASHTO M111.

As an alternate, fiberglass may be used for downspouts according to ASTM D2996 with a short-time rupture strength hoop tensile stress of 30,000 psi min. in lieu of the cast iron or structural steel.

Exterior surfaces of downspouts and exterior exposed surfaces of the scupper frame below deck shall be treated as specified on sheet of .

The Contractor shall take appropriate measures to assure that Protective Coat is not applied to the scupper.

Cost of the grate, frame, downspout, anchor rods, nuts and washers including complete installation of the scupper shall be paid for at the contract unit price for Drainage Scupper, DS-12.

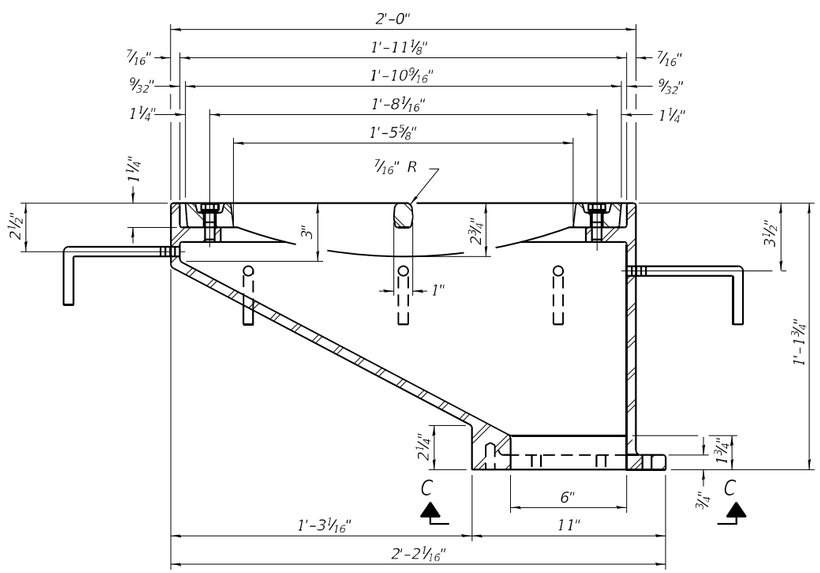

SECTION A-A

See sheet 14 of 28 for scupper location relative to curb.

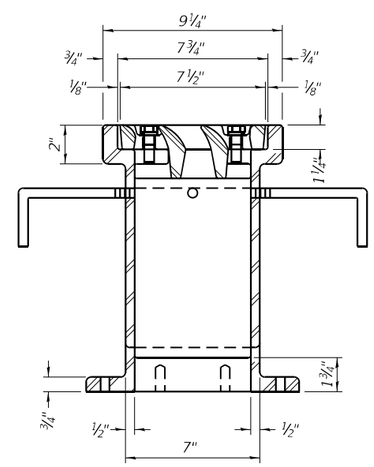

SECTION B-B

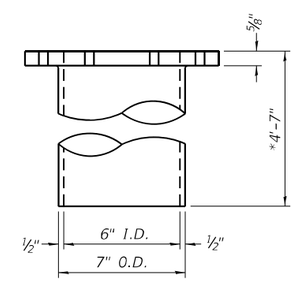

DOWNSPOUT

* See sheet 2 for extended downspout details for scuppers adjacent to the abutment.

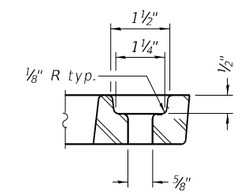

GRATE BOLT HOLE DETAIL

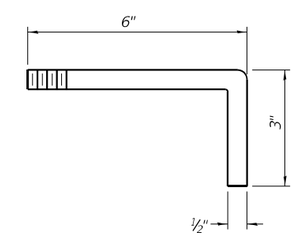

ANCHOR ROD DETAIL

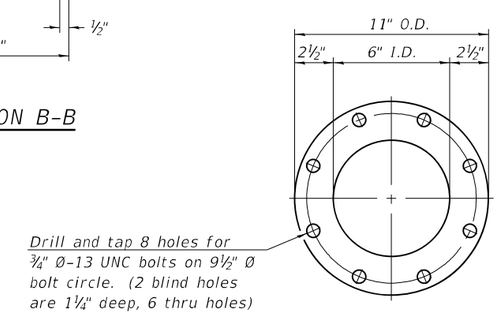

VIEW C-C

BILL OF MATERIAL

ITEM	UNIT	QUANTITY
Drainage Scupper, DS-12	Each	10

DS-12 1-1-2020

USER NAME =	DESIGNED - KJA	REVISED -	STATE OF ILLINOIS DEPARTMENT OF TRANSPORTATION
	CHECKED - CPB	REVISED -	
PLOT SCALE =	DRAWN - NP/JM	REVISED -	
PLOT DATE =	CHECKED - KJA	REVISED -	

DRAINAGE SCUPPER DS-12
STRUCTURE NO. 016-1352

SHEET 23 OF 28 SHEETS

F.A.P. RTE.	SECTION	COUNTY	TOTAL SHEETS	SHEET NO.
341	95-B	COOK	124	97
		CONTRACT NO. 62D34		
		ILLINOIS	FED. AID PROJECT	

Primera
100 S. WACKER DRIVE SUITE 700, CHICAGO IL 60606, P:312-606-0919 F:312-606-0415

MODEL: Default
FILE NAME: pw:\\primera-pw.bentley.com:primera-pw01\Documents\01 Projects\2020\20200423.00 - IDOT Phase II Various Design\20200423.05_WO5 Touhy over N. Branch of Chicago River\Drawings\Current Drawing Files\CADD_Sheets\Structural\Touhy Ave_SHT23 DS-12 Drainage Scup
10/13/2025 2:42:01 PM

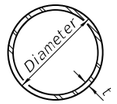

METAL SHELL PILE TABLE

Designation and outside diameter	Wall thickness t	Weight per foot (Lbs./ft.)	Inside volume (yd.³/ft.)
PP12	0.250"	31.37	0.0267
PP14	0.250"	36.71	0.0368
PP14	0.312"	45.61	0.0361
PP16	0.312"	52.32	0.0478
PP16	0.375"	62.64	0.0470

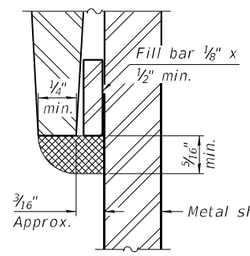

DETAIL A

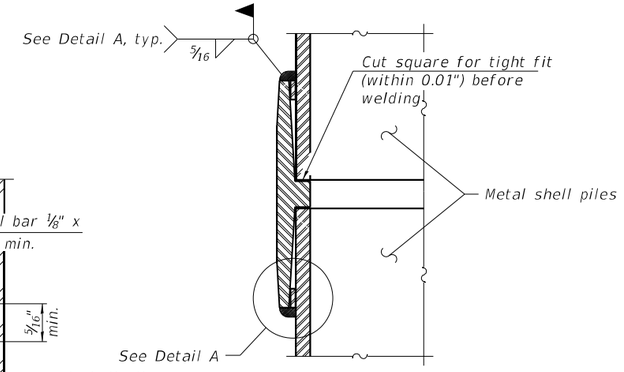

WELDED COMMERCIAL SPLICE

Notes:
The 1/8" x 1/2" min. fill bar may be constructed of 2 bars with a 1/8" max. gap between them.
Pile segments shall be driven to solid contact with splicer before welding.

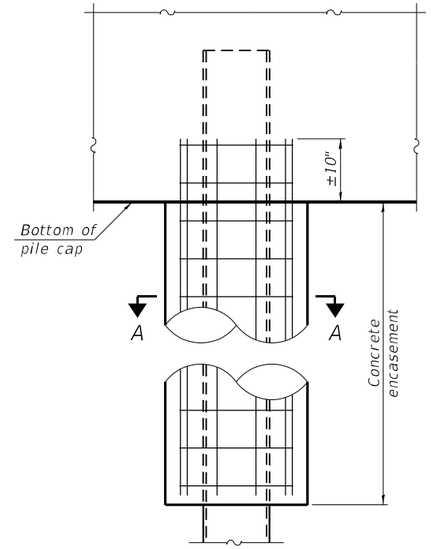

ELEVATION

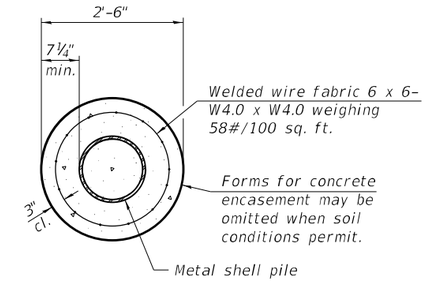

SECTION A-A

INDIVIDUAL PILE CONCRETE ENCASEMENT

(When specified)

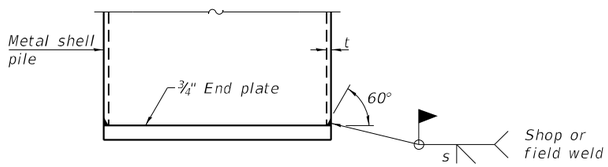

s = t - 1/16"

END PLATE ATTACHMENT

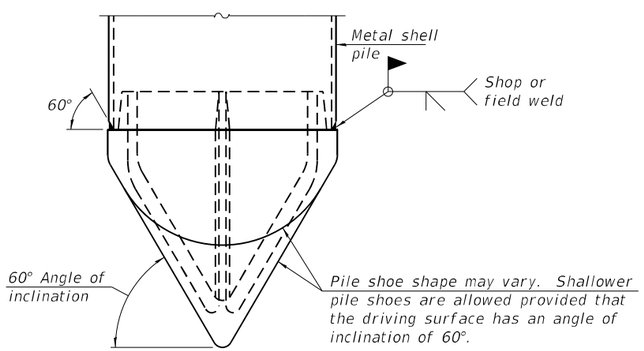

PILE SHOE ATTACHMENT

(When called for on the plans, the Contractor shall furnish metal shell pile shoes consisting of a single piece conical pile point as shown. The pile shoes shall be cast in one piece steel according to either ASTM A 148 Grade 80-50 or AASHTO M 103 Grade 65-35 and shall provide full bearing over the full circumference of the metal shell pile. The pile shoe shall have tapered leads to assure proper alignment and fitting and shall be secured to the pile with a circumferential weld).

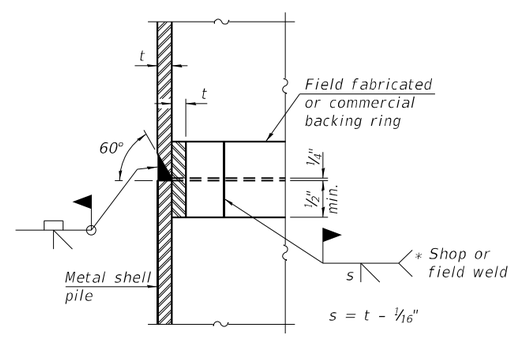

s = t - 1/16"

COMPLETE PENETRATION WELD SPLICE

* Field fabricated backing ring may be made from pile shell by removing segment to allow reducing circumference and vertically rejoin with partial joint penetration weld.

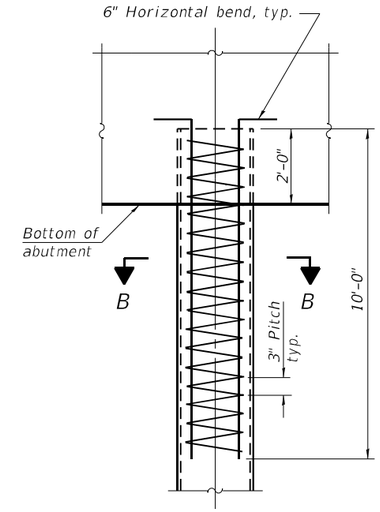

ELEVATION

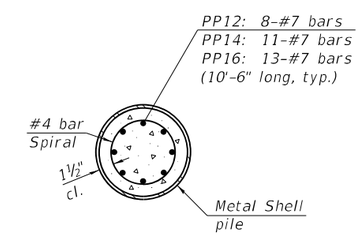

SECTION B-B

REINFORCEMENT AT ABUTMENTS

(Omit when concrete encasement is specified)

Note:
The metal shell piles shall be according to Article 1006.05 of the Standard Specifications.

F-MS 1-1-2020

USER NAME =	DESIGNED - KJA	REVISED -	
	CHECKED - CPB	REVISED -	
PLOT SCALE =	DRAWN - NP/JM	REVISED -	
PLOT DATE =	CHECKED - KJA	REVISED -	

STATE OF ILLINOIS
DEPARTMENT OF TRANSPORTATION

METAL SHELL PILE DETAILS
STRUCTURE NO. 016-1352
SHEET 24 OF 28 SHEETS

F.A.P. RTE.	SECTION	COUNTY	TOTAL SHEETS	SHEET NO.
341	95-B	COOK	124	98
		CONTRACT NO. 62D34		
		ILLINOIS	FED. AID PROJECT	

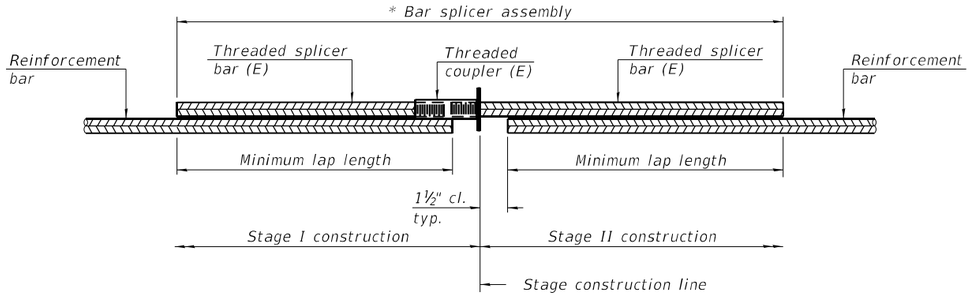

STANDARD BAR SPLICER ASSEMBLY PLAN

(All components shall be provided from one supplier)

Threaded splicer bar length = min. lap length + 1½" + thread length

* Epoxy not required on Bar Splicer Assembly components used in conjunction with black bars.

Location	Bar size	No. assemblies required	Minimum lap length
Top of Deck	#5	201	3'-0"
Bottom of Deck	#5	125	3'-0"
Diaphragm	#6	14	4'-0"
Top of Approach	#5	92	3'-4"
Bottom of Approach	#8	120	5'-4"
Approach Footing	#5	80	3'-0"
West Abutment	#7	10	4'-5"
East Abutment	#7	10	4'-5"

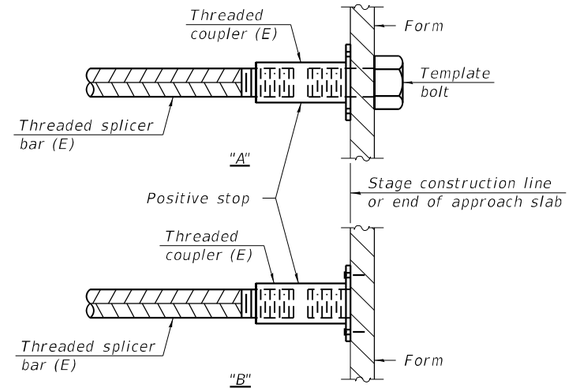

INSTALLATION AND SETTING METHODS

"A" : Set bar splicer assembly by means of a template bolt.
"B" : Set bar splicer assembly by nailing to wood forms or cementing to steel forms.
(E) : Indicates epoxy coating.

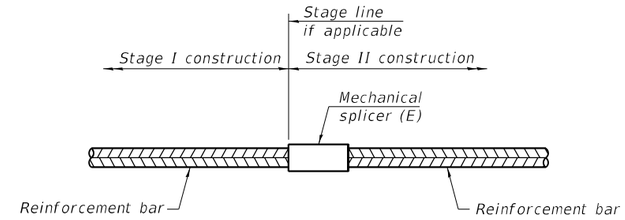

STANDARD MECHANICAL SPLICER

Location	Bar size	No. assemblies required

Notes:
Splicer bars shall be deformed with threaded ends and have a minimum 60 ksi yield strength.
All reinforcement shall be lapped and tied to the splicer bars.
Bar splicer assemblies shall be epoxy coated according to the requirements for reinforcement bars. See Section 508 of the Standard Specifications.
See approved list of bar splicer assemblies and mechanical splicers for alternatives.

BSD-1 1-1-2020

Primera
100 S. WACKER DRIVE SUITE 700 , CHICAGO IL 60606 , P:312-655-0919 F:312-496-0415

USER NAME =	DESIGNED - KJA	REVISED -	
	CHECKED - CPB	REVISED -	
PLOT SCALE =	DRAWN - NP/JM	REVISED -	
PLOT DATE =	CHECKED - KJA	REVISED -	

STATE OF ILLINOIS
DEPARTMENT OF TRANSPORTATION

BAR SPLICER DETAILS
STRUCTURE NO. 016-1352

SHEET 25 OF 28 SHEETS

F.A.P. RTE.	SECTION	COUNTY	TOTAL SHEETS	SHEET NO.
341	95-B	COOK	124	99

CONTRACT NO. 62D34

ILLINOIS FED. AID PROJECT

SOIL BORING LOG

gonzalez COMPANIES, LLC

Page 1 of 2

Date 12/20/21

ROUTE Touhy Avenue **DESCRIPTION** Touhy Avenue over North Branch of Chicago River **LOGGED BY** Gonzalez (NRK)

SECTION 99-5HB-4 **LOCATION** 1/3 mile west of US Highway 14, **SEC.** 30, **TWP.** 14N, **RNG.** 13E, 3rd **PM**, **Latitude** 42.012232, **Longitude** -87.7953038

COUNTY Cook **DRILLING METHOD** Hollow Stem Auger (8" O.D., 3.25" I.D.) **HAMMER TYPE** Auto 140 lb HE 105

STRUCT. NO. 016-0363 (EX), 016-1352 (PR)
Station

BORING NO. GC-01
Station 500+77
Offset 15.0 ft RT
Ground Surface Elev. 618.3 ft

Surface Water Elev. ft
Stream Bed Elev. ft

Groundwater Elev.:
First Encounter Dry ft
Upon Completion Dry ft
After Hrs. ft

Description	Elev.	DEPTH (ft)	BLOWS (/6")	UCS Qu (tsf)	MOIST (%)
ASPHALT - 5"	617.9				
CONCRETE - 8"	617.2				
Stiff, brown, dry, CLAY (FILL)			5		
			6 8	5.8 S	18
			6		
		-5	6 9	5.1 S	18
	612.8				
Stiff, brown, dry, SILTY CLAY (FILL)			4		
			6 8	6.9 B	18
	610.3				
Stiff, brown to gray, moist, CLAY with coarse sand and gravel, A-6(15) LL=39 PL=19 %Fines=78			3		
		-10	5 7	4.2 B	19
			4		
			4 7	2.8 B	20
			3		
		-15	4 6	2.6 B	19
			4		
			4 6	2.5 B	20
	599.3		3		
Medium dense, gray, wet, fine to coarse SAND, some gravel	598.3	-20	5 8	2.2 B	16
Medium stiff to stiff, gray, moist to dry, CLAY			3		
			4 5	2.6 B	23
			7		
		-25	4 5	2.5 B	25
			2		
			2 4	1.3 B	22
			3		
		-30	4 5	1.7 B	14
			4 5 7	2.9 B	18
		-40	5 7	3.5 P	15

The Unconfined Compressive Strength (UCS) Failure Mode is indicated by (B-Bulge, S-Shear, P-Penetrometer)
The SPT (N value) is the sum of the last two blow values in each sampling zone (AASHTO T206)

BBS, form 137 (Rev. 8-99)

SOIL BORING LOG

gonzalez COMPANIES, LLC

Page 2 of 2

Date 12/20/21

ROUTE Touhy Avenue **DESCRIPTION** Touhy Avenue over North Branch of Chicago River **LOGGED BY** Gonzalez (NRK)

SECTION 99-5HB-4 **LOCATION** 1/3 mile west of US Highway 14, **SEC.** 30, **TWP.** 14N, **RNG.** 13E, 3rd **PM**, **Latitude** 42.012232, **Longitude** -87.7953038

COUNTY Cook **DRILLING METHOD** Hollow Stem Auger (8" O.D., 3.25" I.D.) **HAMMER TYPE** Auto 140 lb HE 105

STRUCT. NO. 016-0363 (EX), 016-1352 (PR)
Station

BORING NO. GC-01
Station 500+77
Offset 15.0 ft RT
Ground Surface Elev. 618.3 ft

Surface Water Elev. ft
Stream Bed Elev. ft

Groundwater Elev.:
First Encounter Dry ft
Upon Completion Dry ft
After Hrs. ft

Description	Elev.	DEPTH (ft)	BLOWS (/6")	UCS Qu (tsf)	MOIST (%)
Medium stiff to stiff, gray, moist to dry, CLAY *(continued)*			6		
		-45	7 9	3.7 B	16
			3		
		-50	4 6	2.5 B	17
			4 5 6	2.0 B	20
		-55	3		
		-60	5 6	1.5 B	27
Hard, gray, dry, CLAY LOAM, A-6(6)			13		
		-65	13 16	4.5 P	12
			12		
LL=27 PL=16 %Fines=73		-70	24 32	4.5 P	10
		-75	10 14 26	6.6 S	12
Boring terminated at 75 feet.	543.3				

The Unconfined Compressive Strength (UCS) Failure Mode is indicated by (B-Bulge, S-Shear, P-Penetrometer)
The SPT (N value) is the sum of the last two blow values in each sampling zone (AASHTO T206)

BBS, form 137 (Rev. 8-99)

SOIL BORING LOG

gonzalez COMPANIES, LLC

Page 1 of 2

Date 12/16/21

ROUTE Touhy Avenue **DESCRIPTION** Touhy Avenue over North Branch of Chicago River **LOGGED BY** Gonzalez (NRK)

SECTION 99-5HB-4 **LOCATION** 1/3 mile west of US Highway 14, **SEC.** 30, **TWP.** 14N, **RNG.** 13E, 3rd **PM**, **Latitude** 42.0123178, **Longitude** -87.7952791

COUNTY Cook **DRILLING METHOD** Hollow Stem Auger (8" O.D., 3.25" I.D.) **HAMMER TYPE** Auto 140 lb HE 105

STRUCT. NO. 016-0363 (EX), 016-1352 (PR)
Station

BORING NO. GC-02
Station 500+79
Offset 16.0 ft LT
Ground Surface Elev. 618.3 ft

Surface Water Elev. ft
Stream Bed Elev. ft

Groundwater Elev.:
First Encounter Dry ft
Upon Completion Dry ft
After Hrs. ft

Description	Elev.	DEPTH (ft)	BLOWS (/6")	UCS Qu (tsf)	MOIST (%)
ASPHALT - 5"	617.9				
CONCRETE - 8"	617.2		2		
Stiff, brown, dry, SILTY CLAY LOAM (FILL)			3 3	2.3 P	20
			4		
		-5	5 6	1.8 S	16
	612.8				
Stiff, brown, dry, CLAY with sand			4		
			7 9	6.1 B	17
			3		
		-10	4 6	4.7 B	20
	607.8				
Stiff, gray, moist, CLAY, A-6(14)			2		
			4 5	2.6 B	19
			3		
		-15	3 5	2.9 B	19
LL=37 PL=20 %Fines=84			3		
			4 7	2.8 B	20
			6		
		-20	8 9		19
Stiff, gray, moist, CLAY, A-6(14) *(continued)*			2		
			4 6	3.1 B	20
			2		
	593.3	-25	3 4	1.7 B	24
Medium stiff to stiff, gray, moist CLAY with fine to coarse sand, A-6(9)			2		
			3 4	1.0 B	15
			2		
		-30	4 5	1.7 B	14
LL=32 PL=19 %Fines=80			3		
		-35	4 7	2.5 B	17
			3		
		-40	5 8	3.2 B	17

The Unconfined Compressive Strength (UCS) Failure Mode is indicated by (B-Bulge, S-Shear, P-Penetrometer)
The SPT (N value) is the sum of the last two blow values in each sampling zone (AASHTO T206)

BBS, form 137 (Rev. 8-99)

SOIL BORING LOG

gonzalez COMPANIES, LLC

Date 12/16/21

ROUTE Touhy Avenue DESCRIPTION Touhy Avenue over North Branch of Chicago River LOGGED BY Gonzalez (NRK)

SECTION 99-5HB-4 LOCATION 1/3 mile west of US Highway 14, SEC. 30, TWP. 14N, RNG. 13E, 3rd PM, Latitude 42.0123178, Longitude -87.7952791

COUNTY Cook DRILLING METHOD Hollow Stem Auger (8" O.D., 3.25" I.D.) HAMMER TYPE Auto 140 lb HE 105

STRUCT. NO. 016-0363 (EX), 016-1352 (PR)
Station
BORING NO. GC-02
Station 500+79
Offset 16.0 ft LT
Ground Surface Elev. 618.3 ft

Surface Water Elev. ft
Stream Bed Elev. ft
Groundwater Elev.:
First Encounter Dry ft
Upon Completion Dry ft
After Hrs. ft

Description	Elev.	DEPTH (ft)	BLOWS (/6")	UCS Qu (tsf)	MOIST (%)
Medium stiff to stiff, gray, moist CLAY with fine to coarse sand, A-6(9) *(continued)*			3		
			5	5.3	15
		-45	9	B	
			4		
			5	2.5	15
		-50	7	B	
			3		
			4	1.3	23
		-55	6	B	
			3		
			5	3.2	24
	558.3	-60	6	B	
Very stiff, gray, dry to moist, CLAY LOAM			15		
			16	4.5	17
		-65	18	P	
			11		
			9	7.5	11
		-70	8	S	
			15		
			16	11.2	11
	543.3	-75	23	S	
Boring terminated at 75 feet.		-80			

The Unconfined Compressive Strength (UCS) Failure Mode is indicated by (B-Bulge, S-Shear, P-Penetrometer)
The SPT (N value) is the sum of the last two blow values in each sampling zone (AASHTO T206)

BBS, form 137 (Rev. 8-99)

SOIL BORING LOG

gonzalez COMPANIES, LLC

Date 12/17/21

ROUTE Touhy Avenue DESCRIPTION Touhy Avenue over North Branch of Chicago River LOGGED BY Gonzalez (NRK)

SECTION 99-5HB-4 LOCATION 1/3 mile west of US Highway 14, SEC. 30, TWP. 14N, RNG. 13E, 3rd PM, Latitude 42.0123788, Longitude -87.7958626

COUNTY Cook DRILLING METHOD Hollow Stem Auger (8" O.D., 3.25" I.D.) HAMMER TYPE Auto 140 lb HE 105

STRUCT. NO. 016-0363 (EX), 016-1352 (PR)
Station
BORING NO. GC-03
Station 499+19
Offset 16.0 ft LT
Ground Surface Elev. 617.7 ft

Surface Water Elev. ft
Stream Bed Elev. ft
Groundwater Elev.:
First Encounter 601.7 ft ▼
Upon Completion 600.7 ft ▽
After Hrs. ft

Description	Elev.	DEPTH (ft)	BLOWS (/6")	UCS Qu (tsf)	MOIST (%)
ASPHALT - 3"	617.5				
CONCRETE - 10"	616.6				
Stiff, dark brown, moist, SILTY SAND (FILL)			5		
			6		
			5		
	614.7				
Stiff, gray and brown, moist CLAY with sand (FILL)			1		
			3	3.0	22
		-5	5	P	
	612.2				
Medium stiff, dark brown and gray, moist, CLAY LOAM (FILL)			2		
			2	1.6	11
			3	B	
	609.7				
Medium stiff, gray, moist, SANDY CLAY (FILL)			0		
			2	1.3	23
		-10	4	S	
	607.2				
Medium stiff, dark gray, moist, SILTY LOAM			1		
			2	0.4	26
			2	B	
	604.7				
Soft to medium stiff, dark gray, moist to wet, CLAY with varying amounts of sand			0		
			1	0.4	22
		-15	2	B	
	602.2				
Loose, gray, fine to coarse, wet, SAND with gravel	601.4		1		
Stiff, gray, moist, CLAY ▽			3	1.2	21
			4	B	
			2		
			3	2.2	21
	597.7	-20	6	B	
Medium stiff, gray, moist, CLAY, A-7(6)			2		
			2	1.4	28
			3	B	
			2		
LL=45 PL=19 %Fines=99			2	1.2	25
		-25	4	B	
			1		
	590.7		4	0.9	23
Stiff, gray, moist, SILTY CLAY			4	B	
	589.7				
Stiff, gray, dry, CLAY			3		
			4	1.3	15
		-30	6	B	
			4		
			5	2.5	17
		-35	9	B	
			5		
			8	2.8	14
		-40	11	B	

The Unconfined Compressive Strength (UCS) Failure Mode is indicated by (B-Bulge, S-Shear, P-Penetrometer)
The SPT (N value) is the sum of the last two blow values in each sampling zone (AASHTO T206)

BBS, form 137 (Rev. 8-99)

SOIL BORING LOG

gonzalez COMPANIES, LLC

Date 12/17/21

ROUTE Touhy Avenue DESCRIPTION Touhy Avenue over North Branch of Chicago River LOGGED BY Gonzalez (NRK)

SECTION 99-5HB-4 LOCATION 1/3 mile west of US Highway 14, SEC. 30, TWP. 14N, RNG. 13E, 3rd PM, Latitude 42.0123788, Longitude -87.7958626

COUNTY Cook DRILLING METHOD Hollow Stem Auger (8" O.D., 3.25" I.D.) HAMMER TYPE Auto 140 lb HE 105

STRUCT. NO. 016-0363 (EX), 016-1352 (PR)
Station
BORING NO. GC-03
Station 499+19
Offset 16.0 ft LT
Ground Surface Elev. 617.7 ft

Surface Water Elev. ft
Stream Bed Elev. ft
Groundwater Elev.:
First Encounter 601.7 ft ▼
Upon Completion 600.7 ft ▽
After Hrs. ft

Description	Elev.	DEPTH (ft)	BLOWS (/6")	UCS Qu (tsf)	MOIST (%)
Stiff, gray, dry, CLAY *(continued)*			6		
			9	3.4	15
		-45	12	B	
			4		
			5	2.9	18
		-50	9	B	
	565.7				
Stiff, gray, moist, CLAY			4		
			5	2.3	27
		-55	7	B	
	560.7				
Very stiff, gray, dry to moist, SILTY CLAY, A-6(19)			4		
LL=28 PL=16 %Fines=88			5	1.2	18
		-60	7	B	
Very stiff, gray, dry to moist, SILTY CLAY, A-6(19) *(continued)*			22		
			20	3.7	14
		-65	16	S	
			13		
			20	7.4	12
		-70	27	S	
	545.7				
Hard, gray, moist, CLAY			17		
			23	2.5	16
		-75	50/3"	P	
some large gravel, some fine to coarse sand			33		
			42		9
	537.7	-80	38		

Boring terminated at 80 feet.

The Unconfined Compressive Strength (UCS) Failure Mode is indicated by (B-Bulge, S-Shear, P-Penetrometer)
The SPT (N value) is the sum of the last two blow values in each sampling zone (AASHTO T206)

BBS, form 137 (Rev. 8-99)

SOIL BORING LOG

gonzalez COMPANIES, LLC

Date 12/21/21

ROUTE Touhy Avenue **DESCRIPTION** Touhy Avenue over North Branch of Chicago River **LOGGED BY** Gonzalez (NRK)

SECTION 99-5HB-4 **LOCATION** 1/3 mile west of US Highway 14, **SEC.** 30, **TWP.** 14N, **RNG.** 13E, 3rd **PM**, **Latitude** 42.012274, **Longitude** -87.796275

COUNTY Cook **DRILLING METHOD** Hollow Stem Auger (8" O.D., 3.25" I.D.) **HAMMER TYPE** Auto 140 lb HE 105

STRUCT. NO. 016-0363 (EX), 016-1352 (PR)
Station

BORING NO. GC-04
Station 498+18
Offset 48.0 ft RT
Ground Surface Elev. 617.8 ft

Surface Water Elev. ft
Stream Bed Elev. ft

Groundwater Elev.:
First Encounter 599.8 ft ▼
Upon Completion 591.3 ft ▽
After Hrs. ft

Description	Elev.	DEPTH (ft)	BLOWS (/6")	UCS Qu (tsf)	MOIST (%)
FILL: Brown clay with gravel, concrete			50/5"		12
trace glass			2		
			3		14
		-5	12		
	612.3				
FILL: Concrete, brick, stone			7		
			4		
			13		
	609.8				
FILL: Brown clay with gravel and brick			6		
			5		19
		-10	3		
			1		
	605.8		2		26
Soft, brown, moist, CLAY			3		
			0		
	603.6				
Soft, gray, moist, SILTY LOAM			2	0.6	22
		-15	2	B	
	602.6				
Stiff, brown, dry to moist, SILTY LOAM, A-4(2) LL=23 PL=17 %Fines=69			8		
			7	2.9	12
			11	B	
			8		
			4	1.2	12
	597.8	-20	8	B	

Description	Elev.	DEPTH (ft)	BLOWS (/6")	UCS Qu (tsf)	MOIST (%)
Medium stiff to stiff, brown, moist, CLAY			1		
			2	2.5	27
			4	B	
			3		
			4	2.2	25
		-25	5	B	
	592.3				
Stiff to very stiff, gray, moist to dry CLAY, A-6(8) ▽			3		
			4	0.3	18
			4	B	
			3		
			4	0.7	19
		-30	4	B	
			4		
			5	1.9	19
LL=29 PL=17 %Fines=80		-35	7	B	
			4		
			5	2.7	16
		-40	10	B	

The Unconfined Compressive Strength (UCS) Failure Mode is indicated by (B-Bulge, S-Shear, P-Penetrometer)
The SPT (N value) is the sum of the last two blow values in each sampling zone (AASHTO T206)

BBS, form 137 (Rev. 8-99)

SOIL BORING LOG

gonzalez COMPANIES, LLC

Date 12/21/21

ROUTE Touhy Avenue **DESCRIPTION** Touhy Avenue over North Branch of Chicago River **LOGGED BY** Gonzalez (NRK)

SECTION 99-5HB-4 **LOCATION** 1/3 mile west of US Highway 14, **SEC.** 30, **TWP.** 14N, **RNG.** 13E, 3rd **PM**, **Latitude** 42.012274, **Longitude** -87.796275

COUNTY Cook **DRILLING METHOD** Hollow Stem Auger (8" O.D., 3.25" I.D.) **HAMMER TYPE** Auto 140 lb HE 105

STRUCT. NO. 016-0363 (EX), 016-1352 (PR)
Station

BORING NO. GC-04
Station 498+18
Offset 48.0 ft RT
Ground Surface Elev. 617.8 ft

Surface Water Elev. ft
Stream Bed Elev. ft

Groundwater Elev.:
First Encounter 599.8 ft ▼
Upon Completion 591.3 ft ▽
After Hrs. ft

Description	Elev.	DEPTH (ft)	BLOWS (/6")	UCS Qu (tsf)	MOIST (%)
Stiff to very stiff, gray, moist to dry CLAY, A-6(8) *(continued)*			5		
			7	4.4	17
		-45	12	B	
	570.8				
Stiff, gray, moist, CLAY			3		
			5	1.7	22
		-50	7	B	
	565.8				
Very stiff, gray, dry, SILTY CLAY LOAM, A-4(6) LL=27 PL=18 %Fines=88			13		
			10	2.6	14
		-55	11	B	
	558.8		3		
Stiff, gray, moist to dry, LOAM			4	1.2	13
		-60	6	B	

Description	Elev.	DEPTH (ft)	BLOWS (/6")	UCS Qu (tsf)	MOIST (%)
Stiff, gray, moist to dry, LOAM *(continued)*					
	554.8				
Medium dense, gray, moist, fine to coarse SAND with gravel			6		
			7		
		-65	20		
	550.8				
Hard, gray, dry, SILTY CLAY LOAM			16		
			20	6.9	12
		-70	32	S	
	544.1		50/3"		8
Boring terminated at 73.75 feet.		-75			
		-80			

The Unconfined Compressive Strength (UCS) Failure Mode is indicated by (B-Bulge, S-Shear, P-Penetrometer)
The SPT (N value) is the sum of the last two blow values in each sampling zone (AASHTO T206)

BBS, form 137 (Rev. 8-99)

MODEL: Default
FILE NAME: pw:\\primera-pw.bentley.com:primera-pw-01\Documents\01 Projects\20202000425.00 - IDOT Phase II Various Design\20200425.05_WO5 Touhy over N. Branch of Chicago River\Drawings\Current Drawing Files\CADD_Sheets\Structural\Touhy Ave_SHT28 Boring Logs III

10/13/2025 2:42:22 PM

Primera
100 S. WACKER DRIVE SUITE 700 , CHICAGO IL 60606 , P:312-655-0910 F:312-496-0415

USER NAME =	DESIGNED - KJA	REVISED -
	CHECKED - CPB	REVISED -
PLOT SCALE =	DRAWN - NP/JM	REVISED -
PLOT DATE =	CHECKED - KJA	REVISED -

STATE OF ILLINOIS
DEPARTMENT OF TRANSPORTATION

BORING LOGS III
STRUCTURE NO. 016–1352

SHEET 28 OF 28 SHEETS

F.A.P. RTE.	SECTION	COUNTY	TOTAL SHEETS	SHEET NO.
341	95-B	COOK	124	102
		CONTRACT NO. 62D34		
	ILLINOIS	FED. AID PROJECT		

DEPARTMENT OF HIGHWAYS
COOK COUNTY

FOR INFORMATION ONLY

3n 25 9 S
SEC. 1202-15D

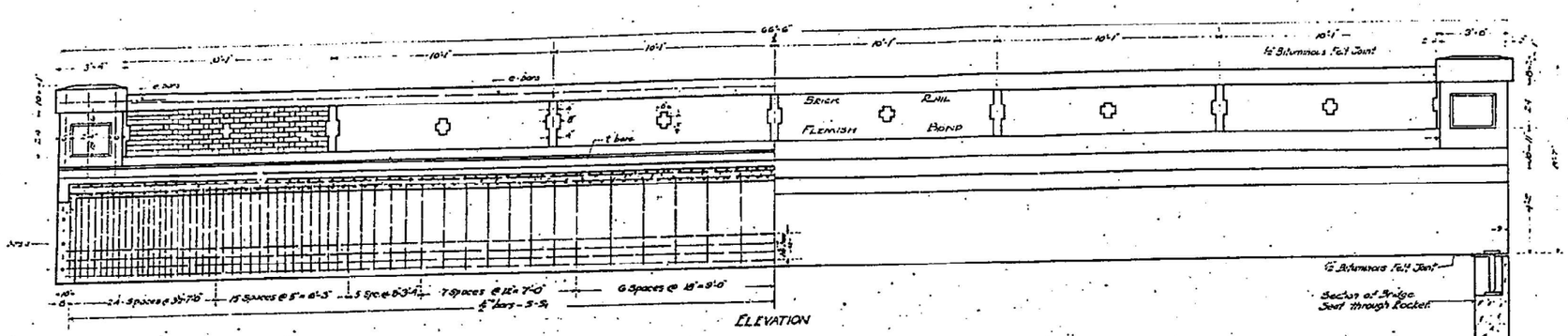

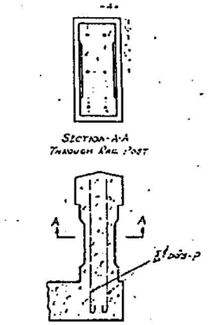

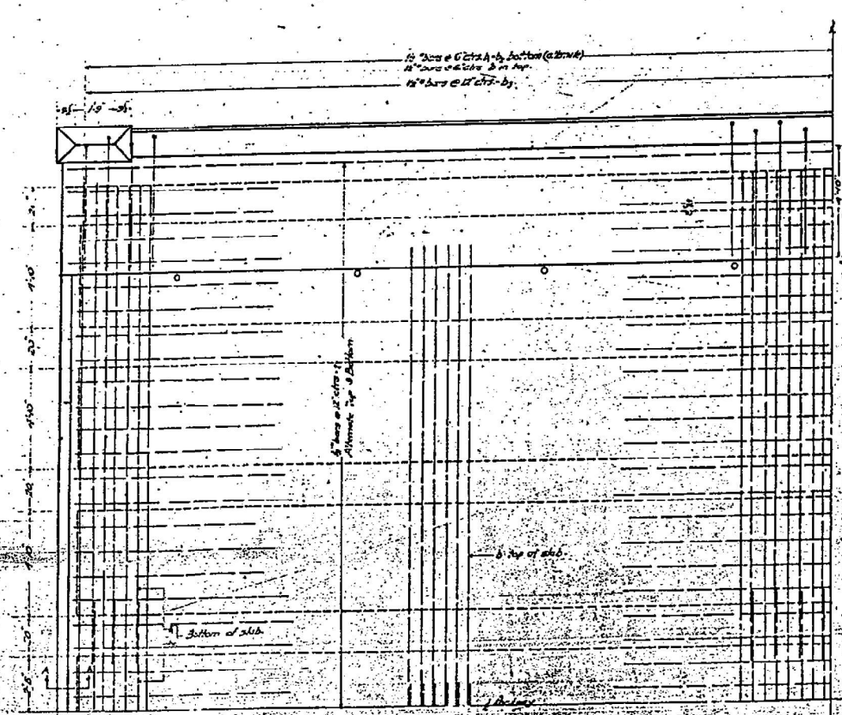

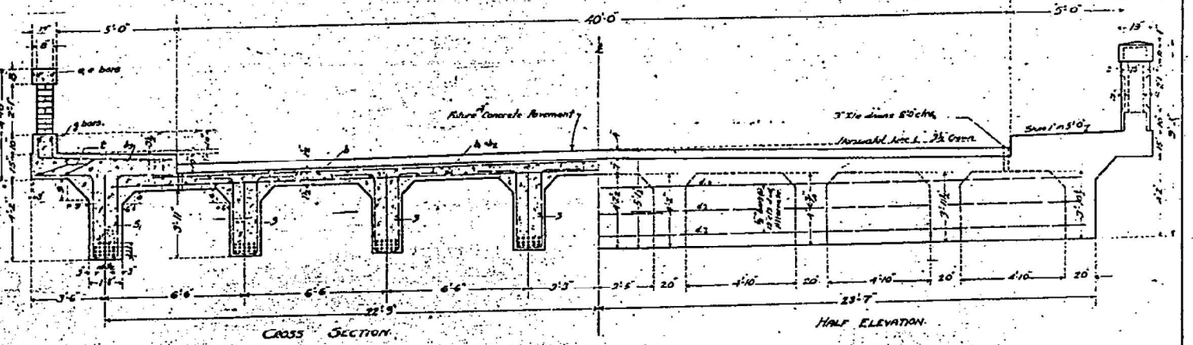

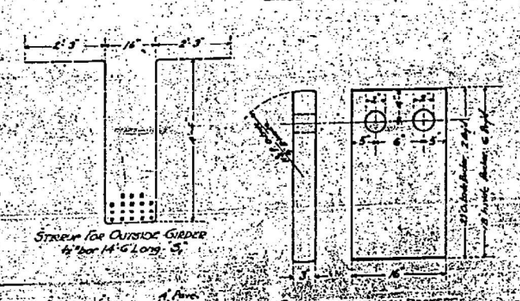

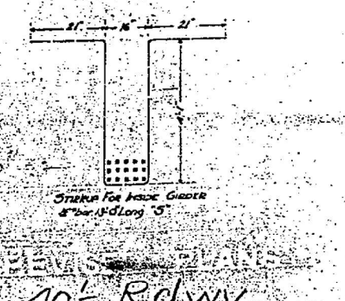

BILL OF MATERIAL			
Bars	No	Size	Length
a	126	1½" ⌀	66'-0"
b	318	½" ⌀	22'-0"
b_1	159	½" ⌀	21'-0"
b_2	159	½" ⌀	27'-6"
b_3	132	½" ⌀	6'-0"
c	12	½" ⌀	21'-6"
c_1	4	½" ⌀	5'-0"
d	6	½" ⌀	21'-0"
d_1	6	½" ⌀	27'-6"
g	12	½" ⌀	22'-6"
p	24	¾" ⌀	5'-6"
s	690	½" ⌀	13'-0"
s_1	230	½" ⌀	19'-6"
t	174	½" ⌀	23'-6"
Reinforcing Steel Lbs. 72,204			
8 Cast Iron Rockers Lbs. 1925			
16 Steel Plates Lbs. 1002			
Concrete Cu. Yds. 254.9			
Brick, Cu. Yds. 5.8			

Steel Rocker Plates
Outside: 16" × 11" × ½" 4 req'd.
Inside: 16" × 8" × ½" 12
Surface adjacent to rockers to be planed smooth.

Do not Scale this Plan

Sketch Showing Spacing of Piles in Fastwork Bents

APPROVED George A. Quinlan
CHIEF ENGINEER OF HIGHWAYS
FOREMAN E. L. Stark
DRAWN H.A.P.
CHECKED

40' Rdwy

July 1 1 27

PLANS FOR
NILES BRIDGE
SEC. 1202-15D

N-1

Primera
100 S. WACKER DRIVE SUITE 700 , CHICAGO IL 60606 , P:312-655-0910 F:312-696-0415

USER NAME =	DESIGNED - KJA	REVISED -
	CHECKED - CPB	REVISED -
PLOT SCALE =	DRAWN - NP/JM	REVISED -
PLOT DATE =	CHECKED - KJA	REVISED -

STATE OF ILLINOIS
DEPARTMENT OF TRANSPORTATION

EXISTING PLANS I
STRUCTURE NO. 016-1352
SHEET OF SHEETS

F.A.P. RTE.	SECTION	COUNTY	TOTAL SHEETS	SHEET NO.
341	95-B	COOK	124	103
		CONTRACT NO. 62D34		
		ILLINOIS	FED. AID PROJECT	

MODEL: Default
FILE NAME: pw:\\primera-pw.bentley.com:primera-pw-01\Documents\01 Projects\2020\2020425.00 - IDOT Phase II Various Design\20200425.05_VOS Touhy over IL Branch of Chicago River\Drawings\Current Drawing Files\CADD_Sheets\Structural\Touhy Ave_SHT29 Existing Plans I
11/10/2025 9:49:24 AM

DEPARTMENT OF HIGHWAYS
COOK COUNTY
REINFORCED CONCRETE SUBSTRUCTURE

FOR INFORMATION ONLY

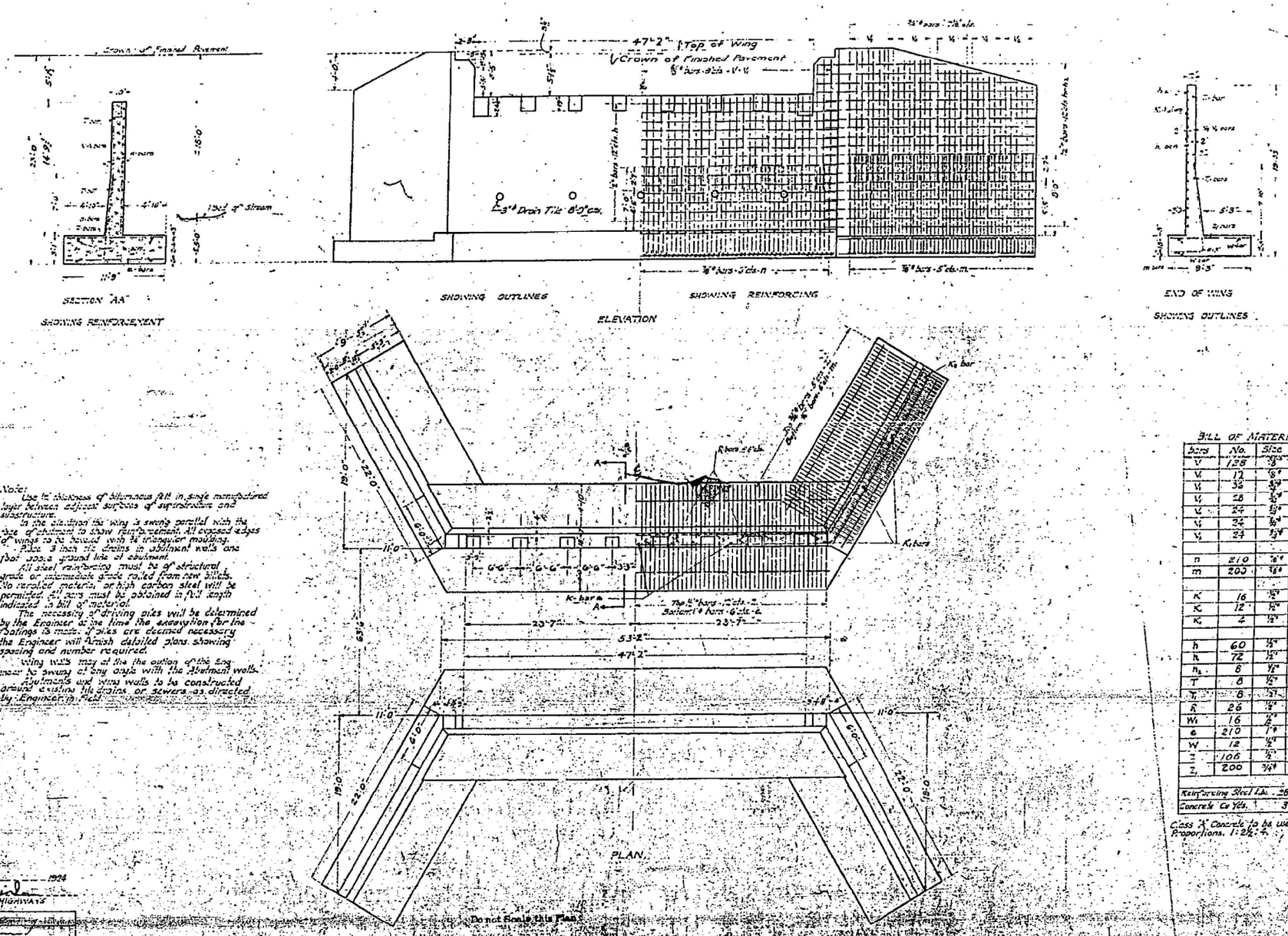

Note:
Use the thickness of bituminous felt in single manufactured layer between adjacent surfaces of superstructure and substructure.
In the section the wing is swung parallel with the face of abutment to show reinforcement. All exposed edges of wings to be beveled with 3/4" triangular moulding.
Place 3 inch tile drains in abutment walls one foot above ground line of abutment.
All steel reinforcing must be of structural grade or intermediate grade rolled from new billets. No varnished material or high carbon steel will be permitted. All bars must be obtained in full length indicated in bill of material.
The necessity of driving piles will be determined by the Engineer at the time the excavation for the footings is made. If piles are deemed necessary the Engineer will furnish detailed plans showing spacing and number required.
Wing walls may at the option of the Engineer be swung at any angle with the abutment walls.
Abutments and wing walls to be constructed around existing tile drains or sewers as directed by Engineer in Field.

BILL OF MATERIAL

Bars	No.	Size	Length
V	128	3/8"	10'-3"
V	12	3/8"	14'-3"
V_1	36	3/8"	13'-0"
V_1	28	3/8"	14'-0"
V_2	24	3/8"	12'-0"
V_2	24	3/8"	12'-0"
V_2	24	3/8"	11'-0"
n	210	3/8"	10'-6"
m	200	3/8"	13'-6"
K	16	1/2"	14'-9"
K_1	12	1/2"	10'-6"
K_2	4	1/2"	13'-6"
h	60	1/2"	27'-0"
h	72	1/2"	24'-0"
h_1	6	1/2"	14'-0"
T	8	1/2"	27'-0"
T_1	8	1/2"	21'-0"
R	26	1/2"	6'-0"
W_1	16	1/2"	27'-0"
e	210	1/2"	11'-3"
W	12	1/2"	22'-0"
Z	106	1/2"	11'-3"
Z_1	200	3/4"	8'-9"
Reinforcing Steel Lbs.			28676
Concrete Cu Yds.			311.8

Class "A" Concrete to be used throughout.
Proportions, 1:2½:4

APPROVED _____ 1924
_____ SUPT. OF HIGHWAYS

DRAWN
CHECKED

Do not Scale this Plan

PLANS FOR
NILES BRIDGE
SECTION 1202-TSD

N-2

MODEL: Default
FILE NAME: pw:\\primera-pw.bentley.com:primera-pw-01\Documents\01 Projects\2020\2020425.00 - IDOT Phase II Various Design\2020425.05_VO5 Touhy over IL Branch of Chicago River\Drawings\Current Drawing Files\CADD_Sheets\Structural\Touhy Ave_SHT30 Existing Plans II

11/10/2025 9:50:12 AM

Primera
100 S. WACKER DRIVE SUITE 700 , CHICAGO IL 60606 , P:312-606-0910 F:312-606-0415

USER NAME =	DESIGNED - KJA	REVISED -	
	CHECKED - CPB	REVISED -	
PLOT SCALE =	DRAWN - NP/JM	REVISED -	
PLOT DATE =	CHECKED - KJA	REVISED -	

STATE OF ILLINOIS
DEPARTMENT OF TRANSPORTATION

EXISTING PLANS II
STRUCTURE NO. 016–1352

SHEET OF SHEETS

F.A.P. RTE.	SECTION	COUNTY	TOTAL SHEETS	SHEET NO.
341	95-B	COOK	124	104
		CONTRACT NO. 62D34		
		ILLINOIS	FED. AID PROJECT	

SECTION	COUNTY	TOTAL SHEETS	SHEET NO.
C.H.S.O4E	COOK	16	3
STA.	TO STA.		

B-1969-8-BR

FOR INFORMATION ONLY

NOTE:
AFTER THE ASPHALT HAS BEEN REMOVED FROM THE APPROACH PAVEMENT AND IF, IN THE OPENION OF THE ENGINEER, THE CONCRETE PAVEMENT IS IN NEED OF REPAIR, THE CONTRACTOR WILL BE REQUIRED TO REMOVE AND REPLACE THE P.C. PAVEMENT AT LOCATIONS DESIGNATED BY THE ENGINEER AND IN ACCORDANCE WITH THE DETAILS SHOWN ON SHEET NO.9

NOTES:
BURIED ENDS FOR PROPOSED GUARD RAIL AT N.W. AND S.E. CORNERS OF STRUCTURE WILL NOT BE REQUIRED.
ALL CONCRETE POSTS TO BE LEFT IN PLACE.
PROPOSED P.C. CONCRETE OVERLAY SIDEWALK 4-1/2"
See Details On Sheet No.4.
PROPOSED ALUMINUM RAILING, TYPE L
See Details On Sheet No.5.

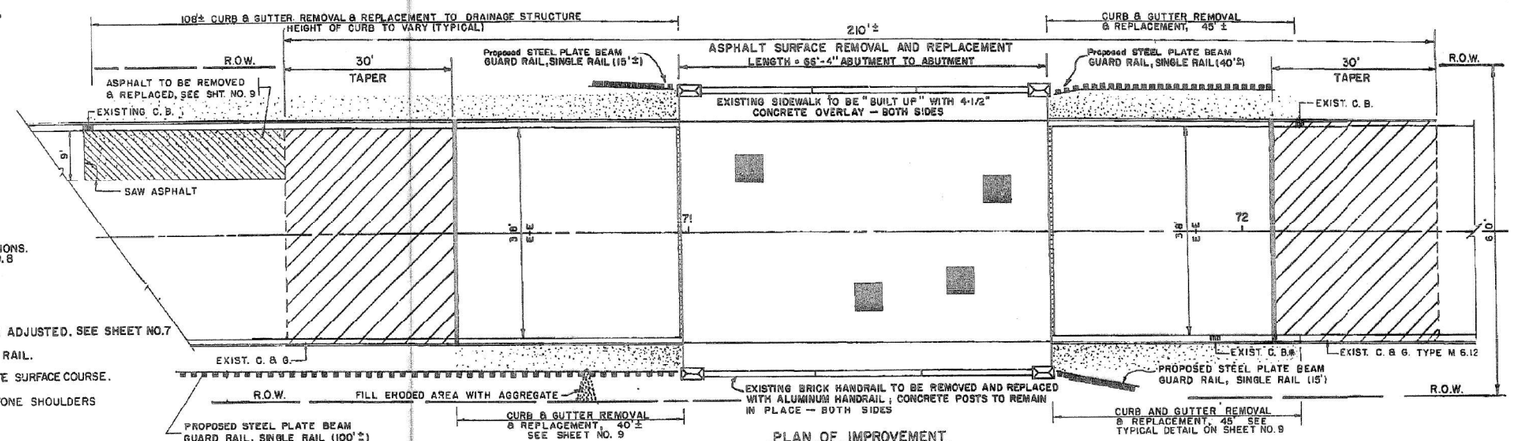

PLAN OF IMPROVEMENT
SCALE 1" = 10'

NOTE: Approx. 40' Of Existing Steel Beam Guard Rail Located At N.E. Corner To Be Removed — To Be Paid For As: Steel Plate Beam Guard Rail Removal. Approx. 100' Of Wood Posts And Cable Rail Located At S.W. Corner To Be Removed — Incidental.

* ANY NECESSARY ADJUSTMENT OF CATCH BAS. WILL BE CONSIDERED AS INCIDENTAL

LEGEND

- PROPOSED ASPHALT TAPER
- DECK SLAB REPAIR AT VARIOUS LOCATIONS. SEE STANDARD DETAIL-SHEET NO. 8
- APPROACH JOINT TO BE ADJUSTED. SEE DETAIL ON SHEET NO. 7
- SAWING ASPHALT SURFACE.
- EXISTING EXPANSION JOINT TO BE ADJUSTED. SEE SHEET NO. 7
- PROPOSED STEEL PLATE BEAM GUARD RAIL.
- PROPOSED 1-1/2" OF BITUMINOUS CONCRETE SURFACE COURSE.
- PROPOSED GRAVEL OR CRUSHED STONE SHOULDERS

TOUHY AVENUE OVER CHICAGO RIVER

SUMMARY OF WORK TO BE PERFORMED ON STRUCTURE:
1. Remove Asphalt, Patch Deck, Seal And Resurface With 1-1/2" Of I-11.
2. Adjust Roadway Joints Over Abutments By Constructing Concrete Dams.
3. Repair Sidewalk Where Needed And Construct Concrete Overlay On Said Sidewalk.
4. Remove Brick Handrails And Replace With Parapet Wall And Aluminum Type Handrail.
5. Adjust Existing 3" Drains By Inserting 2-15/16" (O.D.) Aluminum Drains into Existing Drains. See Sheet No.6
6. Remove And Replace A Portion Of The Abutment Located At The North Corner Of The East Abutment. See Sheet No. 6
7. Repair Existing Cracks With Pneumatic Concrete Located In West Abutment.

SUMMARY OF WORK TO BE PERFORMED ON APPROACH PAVEMENTS:
1. Remove Asphalt, Prime And Resurface With I-11.
2. Adjust Existing Premolded Joints By Constructing Concrete Dams.
3. Remove Existing Wood Posts And Cable Rail And Construct Steel Plate Beam Guard Rail.
4. Remove and Replace Combination Concrete Curb and Gutter on Both Approach Pavement
5. Reconstruct Approach Shoulders

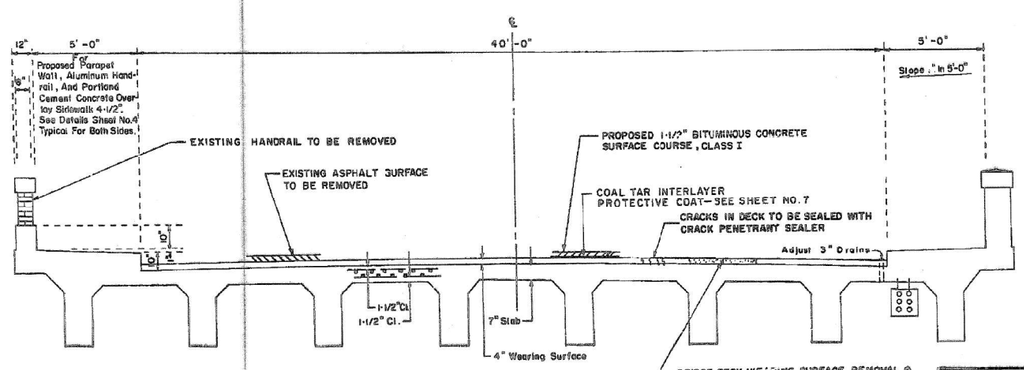

TYPICAL CROSS SECTION

Repair Cracks, Remove Unsound And Loose Concrete, And Replace With Pneumatic Concrete. To Be Paid For Per Square Foot For "REPAIR CONCRETE STRUCTURES"

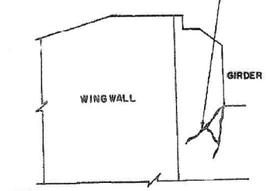

NOTE:
Similar Work Shall Be Done At The North Corner Of The Same Abutment.

REPAIR AT SOUTH CORNER OF WEST ABUTMENT

REVISIONS	
NAME	DATE
R.U.R.	6/30/69

ILLINOIS DIVISION OF HIGHWAYS
DETAILS OF REPAIRS FOR
TOUHY AVENUE BRIDGE
(Built As: C.H.S. RTE. 3A SECTION (202-150)
SCALE: HORIZ. VERT.
DRAWN BY: D.E.B.
DATE
CHECKED BY: W.W.L.

N-3

MODEL: Default
FILE NAME: pw:\\primera-pw.bentley.com:primera-pw-01\Documents\01 Projects\20200200425.00 - IDOT Phase II Various Design\20200425.05_WOS Touhy over N. Branch of Chicago River\Drawings\Current Drawing Files\CADD_Sheets\Structural\Touhy Ave_SHT31 Existing Plans III

Primera
100 S. WACKER DRIVE SUITE 700, CHICAGO IL 60606, P:312-655-0910 F:312-606-0415

USER NAME =	DESIGNED - KJA	REVISED -
	CHECKED - CPB	REVISED -
PLOT SCALE =	DRAWN - NP/JM	REVISED -
PLOT DATE =	CHECKED - KJA	REVISED -

STATE OF ILLINOIS
DEPARTMENT OF TRANSPORTATION

EXISTING PLANS III
STRUCTURE NO. 016-1352
SHEET OF SHEETS

F.A.P. RTE.	SECTION	COUNTY	TOTAL SHEETS	SHEET NO.
341	95-B	COOK	124	105
		CONTRACT NO. 62D34		
		ILLINOIS	FED. AID PROJECT	

11/10/2025 9:50:47 AM

ROUTE NO.	SECTION	COUNTY	TOTAL SHEETS	SHEET NO.
341	1202 I	COOK	14	6
FEDERAL AID PROJ. NO.		ILLINOIS	PROJECT	

FOR INFORMATION ONLY

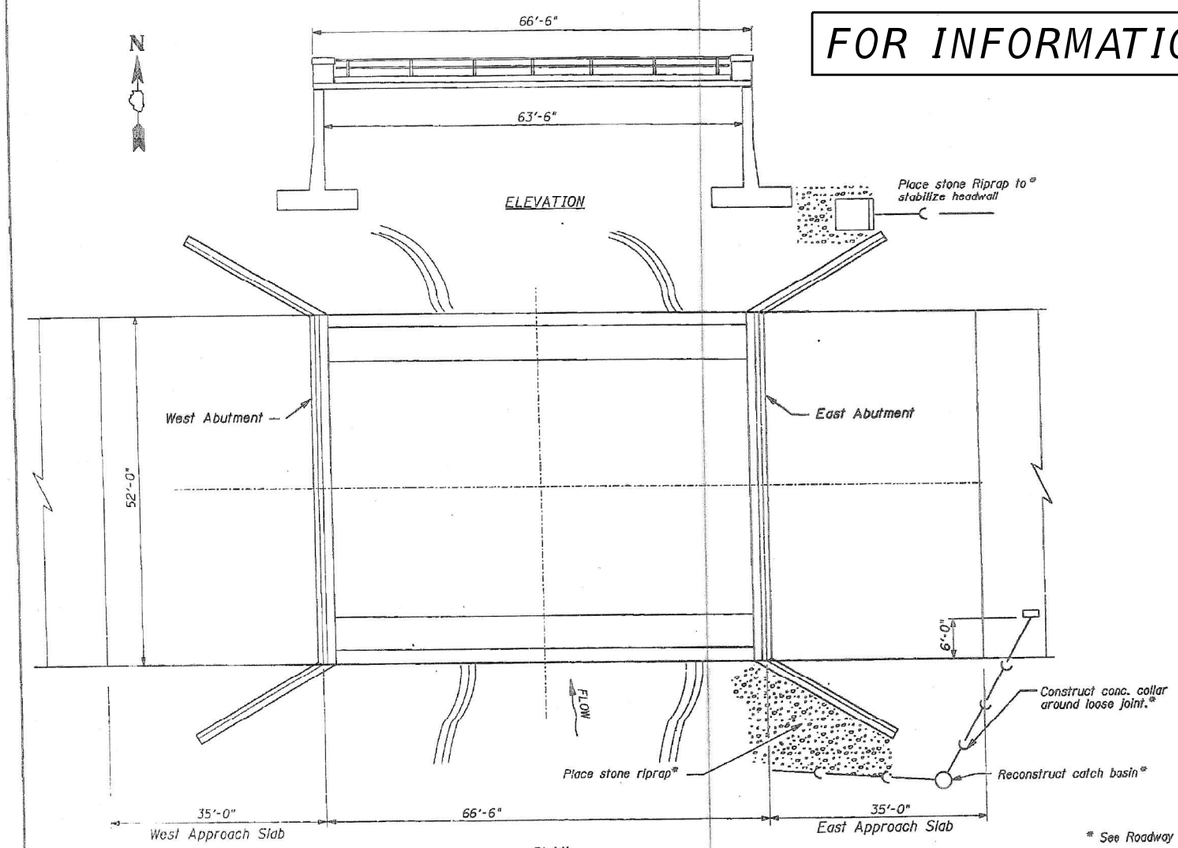

* See Roadway Plans

GENERAL NOTES

The applicable portions of the Illinois Department of Transportation Standard Specifications for Road and Bridge construction adopted Jan. 1, 1997 and "Supplemental Specification and Recurring Special Provision" thereto adopted Jan. 1, 1997 shall apply to this.

Plan dimensions and details relative to existing structure have been taken from existing plans and are subject to nominal construction variations. It shall be the contractor's responsibility to verify such dimensions and details in the field and make necessary approved adjustments prior to construction or ordering of materials. Such variations shall not be cause for additional compensation for a change in the scope of the work. However, the contractor will be paid for the quantity actually furnished at the unit price bid for the work.

For details of stage construction see Roadway Plans.

Cost of labor required for bridge sidewalk curb repair shall be included in Concrete Superstructure.

All bearings shall be cleaned by Method 3. The aluminum epoxy mastic/acrylic system shall be used for painting of the existing bearings. The color of the final finish coat for all steel surfaces shall be gray, Munsell No. 5B 7/1

TOTAL BILL OF MATERIAL

DESCRIPTION	UNIT	QUANTITY
BITU. CONC. SURFACE REMOVAL (DECK)	SQ YD	311
BRIDGE DECK LATEX CONCRETE OVERLAY	SQ YD	311
CONC. BRIDGE DECK SCARIFICATION ½"	SQ YD	311
DECK SLAB REPAIR (PARTIAL DEPTH)	SQ YD	54
DECK SLAB REPAIR (FULL DEPTH TYPE II)	SQ YD	60
PREFORMED JOINT SEAL (2½")	FOOT	108
CLEAN & PAINT BEARING	L SUM	1
FORMED CONC. REPAIR (DEPTH ≤5")	SQ FT	1975
EPOXY CRACK SEALING	FOOT	44
CONCRETE REMOVAL	CU YD	16.2
CONCRETE SUPERSTRUCTURE	CU YD	16.2
FURNISHING & ERECTING STRUCTURAL STEEL	LBS	7150
FLOOR DRAINS	EACH	10
REINF. BAR EPOXY COATED	LBS	3064
BRIDGE DECK GROOVING	SQ YD	296
POWER TOOL CLEANING REQUIRE CONTAINMENT AND DISPOSAL	L.S.	1

MAJOR ITEMS OF WORK

1-Remove bituminous wearing surface from the deck
2-Repair concrete deck (Partial and full Depth).
3-Scarify entire deck

4-Place overlay on deck
5-Remove and replace both expansion joint.
6-Reconstruct relief joints both ends of structure.
7-Repair sidewalk curb bridge.

8-Repair both faces and bottom of Tee Beams
9-Repair Substructure as shown.
10-Clean and paint rocker bearings @ east abutment.
11-Plug existing drain pipes and provide new floor drains

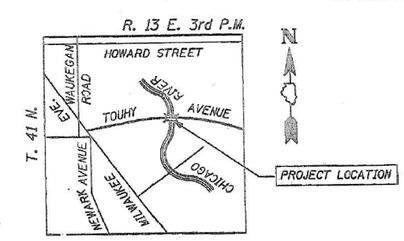

LOCATION SKETCH

STATE OF ILLINOIS
JAYANGKUR WAYCOOK
NUMBER 3241
STRUCTURAL ENGINEER
Exp. 11-30-98

STRUCTURE NO. 016-0363

GENERAL PLAN AND ELEVATION

REVISIONS		
NO.	DATE	REMARKS
1		
2		
3		
4		
5		
6		
7		
8		
9		
10		

STATE OF ILLINOIS
DEPARTMENT OF TRANSPORTATION
DIVISION OF HIGHWAYS

TOUHY AVE OVER N.B. CHICAGO RIVER

CHASTAIN & ASSOCIATES, LLP
CONSULTING ENGINEERS
6600 W. NORTH AVENUE
SUITE 204
CHICAGO, ILLINOIS 60631
(312) 324-7400
FAX: 312-324-0095

DRAWN BY EP DATE
CHECKED BY DATE
AGE NUMBER
PROJECT No. 3824-29
SHEET No. 1 of 4

N-4

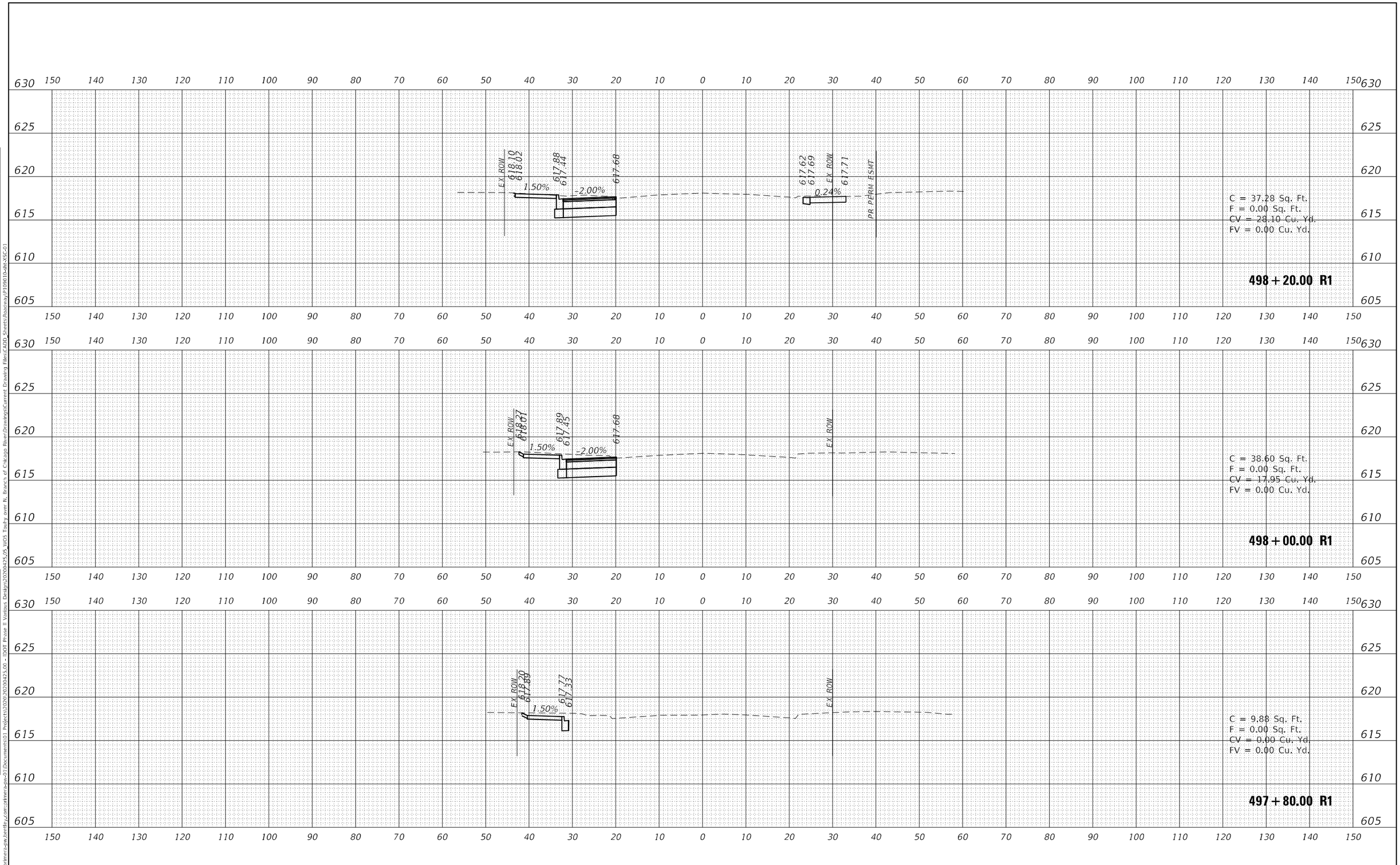

FINAL SURVEY	BY	DATE
SURVEYED		
PLOTTED		
TEMPLATE		
AREAS		
AREAS CHECKED		
NOTE BOOK NO.		

ORIGINAL SURVEY	BY	DATE
SURVEYED		
PLOTTED		
TEMPLATE		
AREAS		
AREAS CHECKED		
NOTE BOOK NO.		

MODEL: Default
FILE NAME: pw:\\primera-aiw.bentley.com:primera-aiw-01\Documents\01 Projects\2020\20200425.00 - IDOT Phase II Various Design\20200425_05 WOS Touhy over N. Branch of Chicago River\Drawings\Current Drawing Files\CADD Sheets\Roadway\P190010-sht-2GC-01

Primera
550 W. JACKSON BLVD, SUITE 600 , CHICAGO IL 60661 , P:312-496-0970 F:312-496-0415

USER NAME = rvandermus	DESIGNED - JMR	REVISED -
	DRAWN - RMV	REVISED -
PLOT SCALE = 20.0012 ' / in.	CHECKED - MPV	REVISED -
PLOT DATE = 10/13/2025	DATE -	REVISED -

STATE OF ILLINOIS
DEPARTMENT OF TRANSPORTATION

CROSS SECTIONS
TOUHY AVENUE OVER NORTH BRANCH CHICAGO RIVER

SCALE: | SHEET 107 OF 124 SHEETS | STA. 497+80.00 R1 TO STA. 498+20.00 R1

F.A.U. RTE.	SECTION	COUNTY	TOTAL SHEETS	SHEET NO.
341	95-B	COOK	124	107

CONTRACT NO. 62D34

ILLINOIS | FED. AID PROJECT

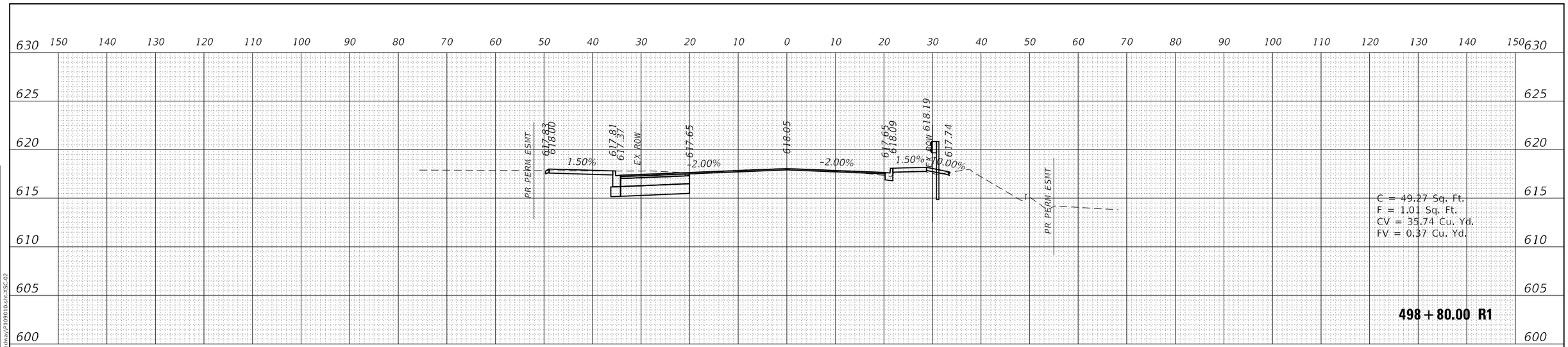

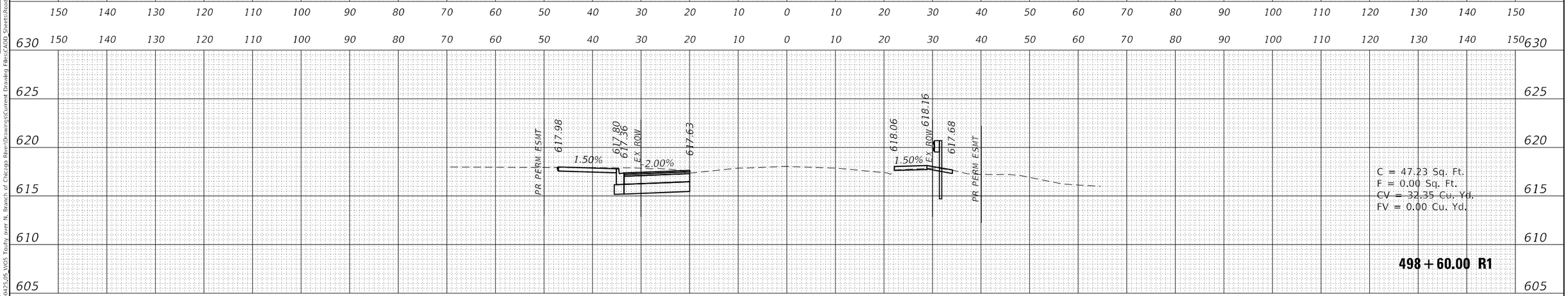

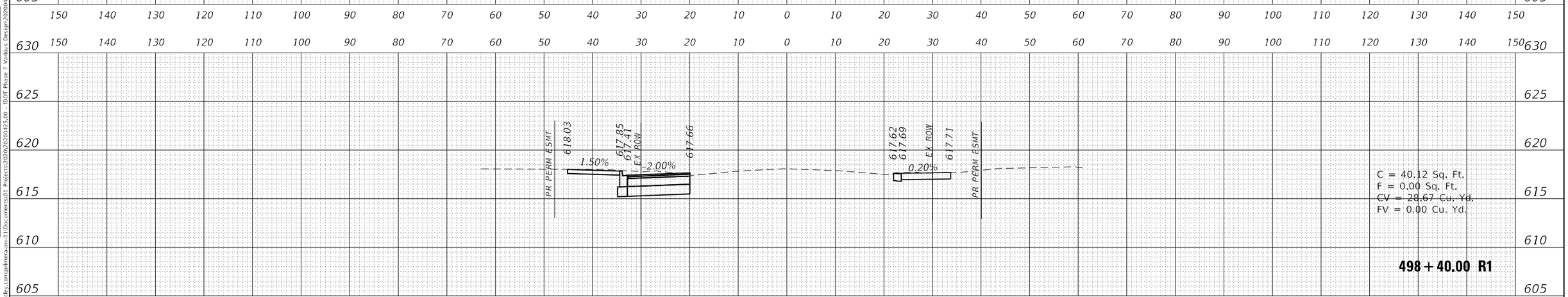

FINAL SURVEY	BY	DATE
SURVEYED		
PLOTTED		
TEMPLATE		
AREAS		
AREAS CHECKED		
NOTE BOOK NO.		

ORIGINAL SURVEY	BY	DATE
SURVEYED		
PLOTTED		
TEMPLATE		
AREAS		
AREAS CHECKED		
NOTE BOOK NO.		

MODEL: Default
FILE NAME: pw:\\primera-pw.bentley.com:primera-pw-01\Documents\01 Projects\2020\20200425.00 - IDOT Phase I Various Design\20200425_05 VO5 Touhy over N. Branch of Chicago River\Drawings\Current Drawing Files\CADD Sheets\Roadway\P190010-sht-XSC-02

Primera
550 W. JACKSON BLVD, SUITE 600 , CHICAGO IL 60661 , P:312-406-8010 F:312-406-8015

USER NAME = rvandermus	DESIGNED - JMR	REVISED -	
	DRAWN - RMV	REVISED -	
PLOT SCALE = 20.0012 ' / in.	CHECKED - MPV	REVISED -	
PLOT DATE = 10/13/2025	DATE -	REVISED -	

STATE OF ILLINOIS
DEPARTMENT OF TRANSPORTATION

CROSS SECTIONS
TOUHY AVENUE OVER NORTH BRANCH CHICAGO RIVER

SCALE: | SHEET 108 OF 124 SHEETS | STA. 498+40.00 R1 TO STA. 498+80.00 R1

F.A.U. RTE.	SECTION	COUNTY	TOTAL SHEETS	SHEET NO.
341	95-B	COOK	124	108
		CONTRACT NO. 62D34		
		ILLINOIS	FED. AID PROJECT	

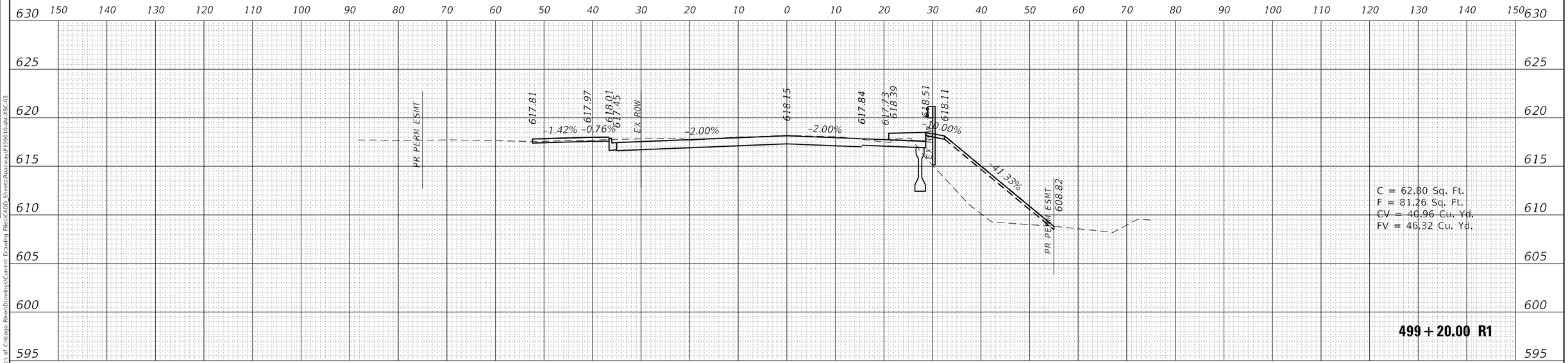

FINAL SURVEY	BY	DATE
SURVEYED		
PLOTTED		
TEMPLATE		
AREAS		
AREAS CHECKED		
NOTE BOOK NO.		

ORIGINAL SURVEY	BY	DATE
SURVEYED		
PLOTTED		
TEMPLATE		
AREAS		
AREAS CHECKED		
NOTE BOOK NO.		

MODEL: Default
FILE NAME: pw:\\primera-pw.bentley.com:primera-pw-01\Documents\01 Projects\2020\20200425.00 - IDOT Phase II Various Design\20200425_05 WO5 Touhy over N. Branch of Chicago River\Drawings\Current Drawing Files\CADD Sheets\Roadway\P190010-dht-XSC-03

Primera
550 W. JACKSON BLVD. SUITE 600 , CHICAGO IL 60661 , P:312-606-8910 F:312-606-8415

USER NAME = rvandermas	DESIGNED - JMR	REVISED -	
	DRAWN - RMV	REVISED -	
PLOT SCALE = 20.0012 ' / in.	CHECKED - MPV	REVISED -	
PLOT DATE = 10/13/2025	DATE -	REVISED -	

STATE OF ILLINOIS
DEPARTMENT OF TRANSPORTATION

CROSS SECTIONS
TOUHY AVENUE OVER NORTH BRANCH CHICAGO RIVER

SCALE: | SHEET 109 OF 124 SHEETS | STA. 499+00.00 R1 TO STA. 499+20.00 R1

F.A.U. RTE.	SECTION	COUNTY	TOTAL SHEETS	SHEET NO.
341	95-B	COOK	124	109

CONTRACT NO. 62D34

ILLINOIS | FED. AID PROJECT

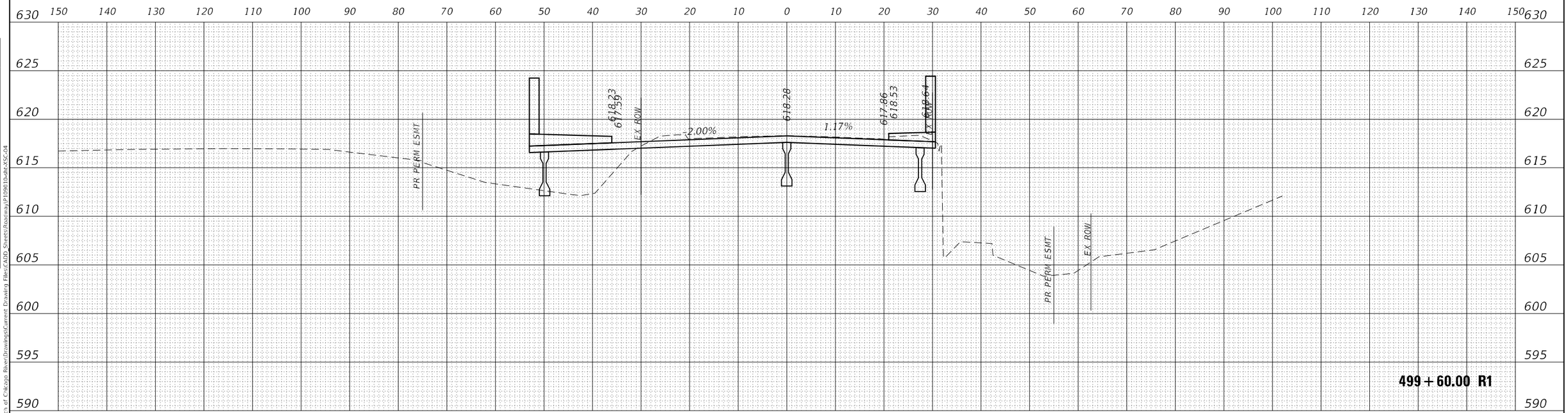

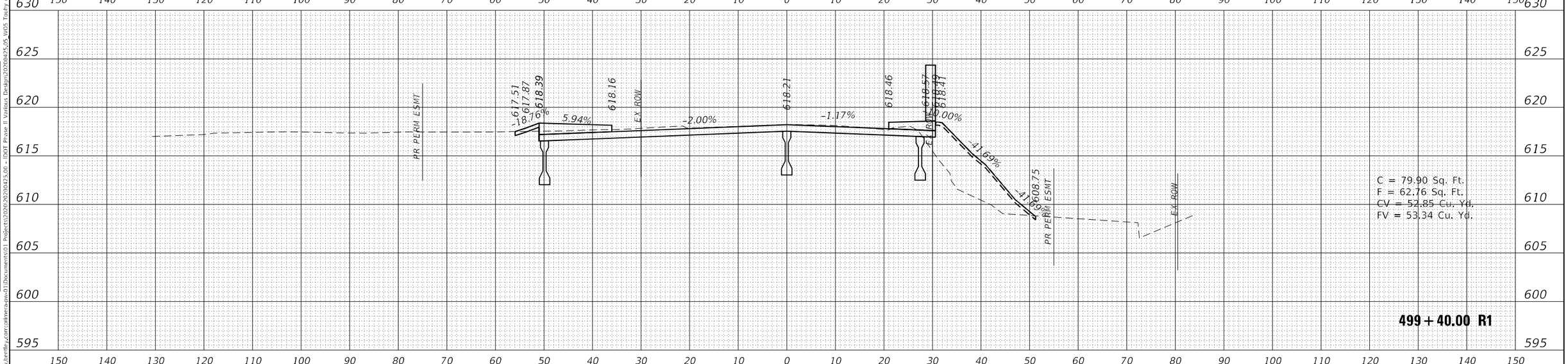

FINAL SURVEY	BY	DATE
SURVEYED		
PLOTTED		
TEMPLATE		
AREAS		
AREAS CHECKED		
NOTE BOOK NO.		

ORIGINAL SURVEY	BY	DATE
SURVEYED		
PLOTTED		
TEMPLATE		
AREAS		
AREAS CHECKED		
NOTE BOOK NO.		

MODEL: Default
FILE NAME: pw:\\primera-pw.bentley.com:primera-pw-01\Documents\01 Projects\2020\20200425.00 - IDOT Phase II Various Design\20200425.05 WO5 Touhy over N. Branch of Chicago River\Drawings\Current Drawing Files\CADD Sheets\Roadway\P109010-sht-2-SC-04

Primera
550 W. JACKSON BLVD. SUITE 600 , CHICAGO IL 60661 , P:312-606-8910 F:312-606-8415

USER NAME = rvandermas	DESIGNED - JMR	REVISED -	
	DRAWN - RMV	REVISED -	
PLOT SCALE = 20.0012 ' / in.	CHECKED - MPV	REVISED -	
PLOT DATE = 10/13/2025	DATE -	REVISED -	

STATE OF ILLINOIS
DEPARTMENT OF TRANSPORTATION

CROSS SECTIONS
TOUHY AVENUE OVER NORTH BRANCH CHICAGO RIVER

SCALE: | SHEET 110 OF 124 SHEETS | STA. 499+40.00 R1 TO STA. 499+60.00 R1

F.A.U. RTE.	SECTION	COUNTY	TOTAL SHEETS	SHEET NO.
341	95-B	COOK	124	110

CONTRACT NO. 62D34

ILLINOIS | FED. AID PROJECT

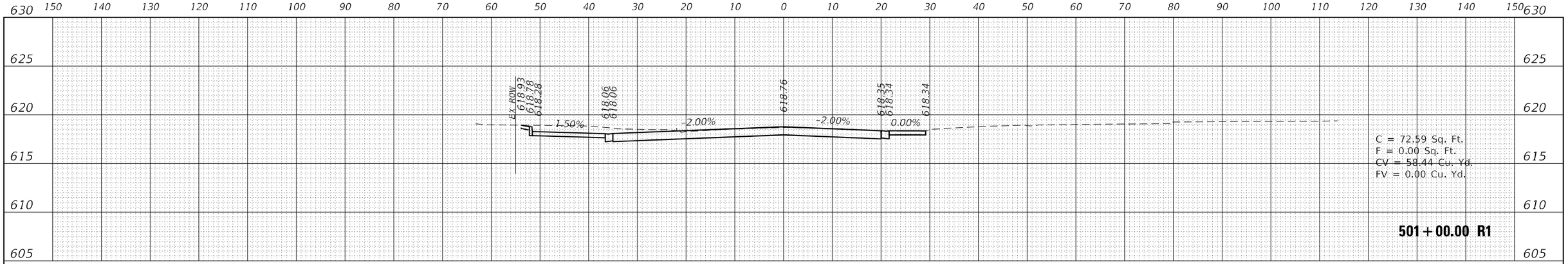

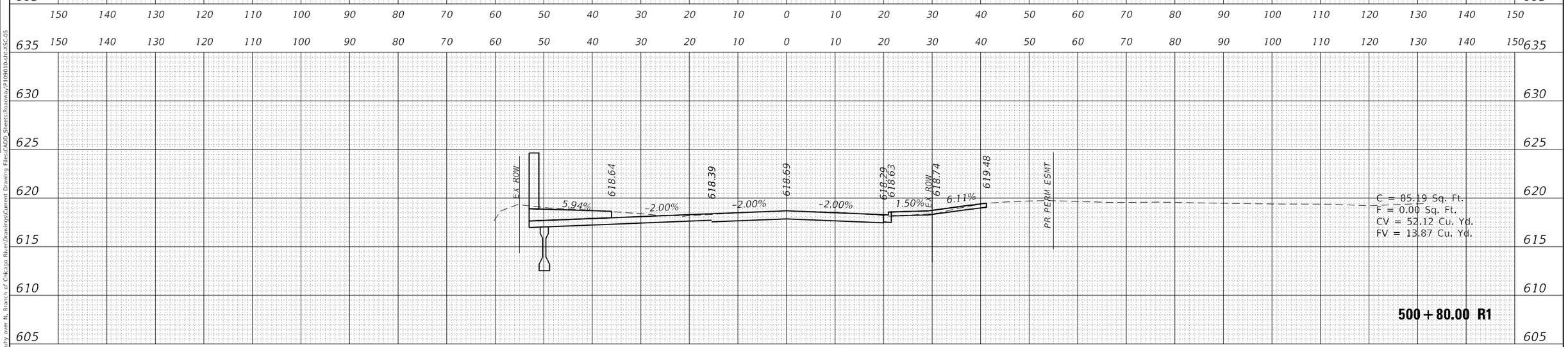

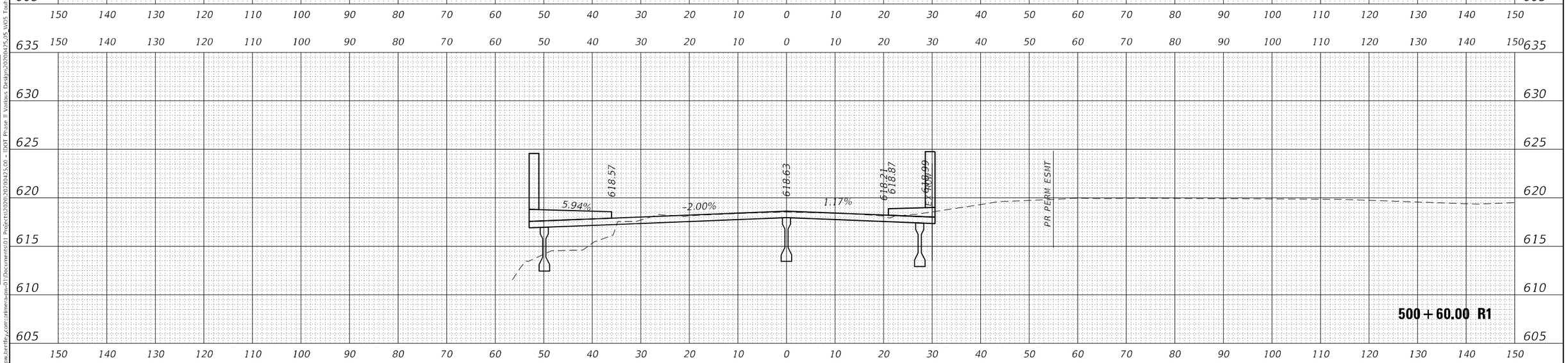

FINAL SURVEY	BY	DATE
SURVEYED		
PLOTTED		
TEMPLATE		
AREAS		
AREAS CHECKED		
NOTE BOOK		
NO.		

ORIGINAL SURVEY	BY	DATE
SURVEYED		
PLOTTED		
TEMPLATE		
AREAS		
AREAS CHECKED		
NOTE BOOK		
NO.		

MODEL: Default
FILE NAME: pw:\\primera-aiw.bentley.com:primera-pw-01\Documents\01 Projects\2020\20200425.00 - IDOT Phase II Various Design\20200425.05 WOS Touhy over N. Branch of Chicago River\Drawings\Current Drawing Files\CADD Sheets\Roadway\P190010-dlt-XSC-05

Primera
550 W. JACKSON BLVD, SUITE 600 , CHICAGO IL 60661 , P:312-496-0910 F:312-496-0415

USER NAME = rvandermus	DESIGNED - JMR	REVISED -	
	DRAWN - RMV	REVISED -	
PLOT SCALE = 20.0012 ' / in.	CHECKED - MPV	REVISED -	
PLOT DATE = 10/13/2025	DATE -	REVISED -	

STATE OF ILLINOIS
DEPARTMENT OF TRANSPORTATION

CROSS SECTIONS
TOUHY AVENUE OVER NORTH BRANCH CHICAGO RIVER

SCALE: | SHEET 111 OF 124 SHEETS | STA. 500+60.00 R1 TO STA. 501+00.00 R1

F.A.U. RTE.	SECTION	COUNTY	TOTAL SHEETS	SHEET NO.
341	95-B	COOK	124	111

CONTRACT NO. 62D34

ILLINOIS | FED. AID PROJECT

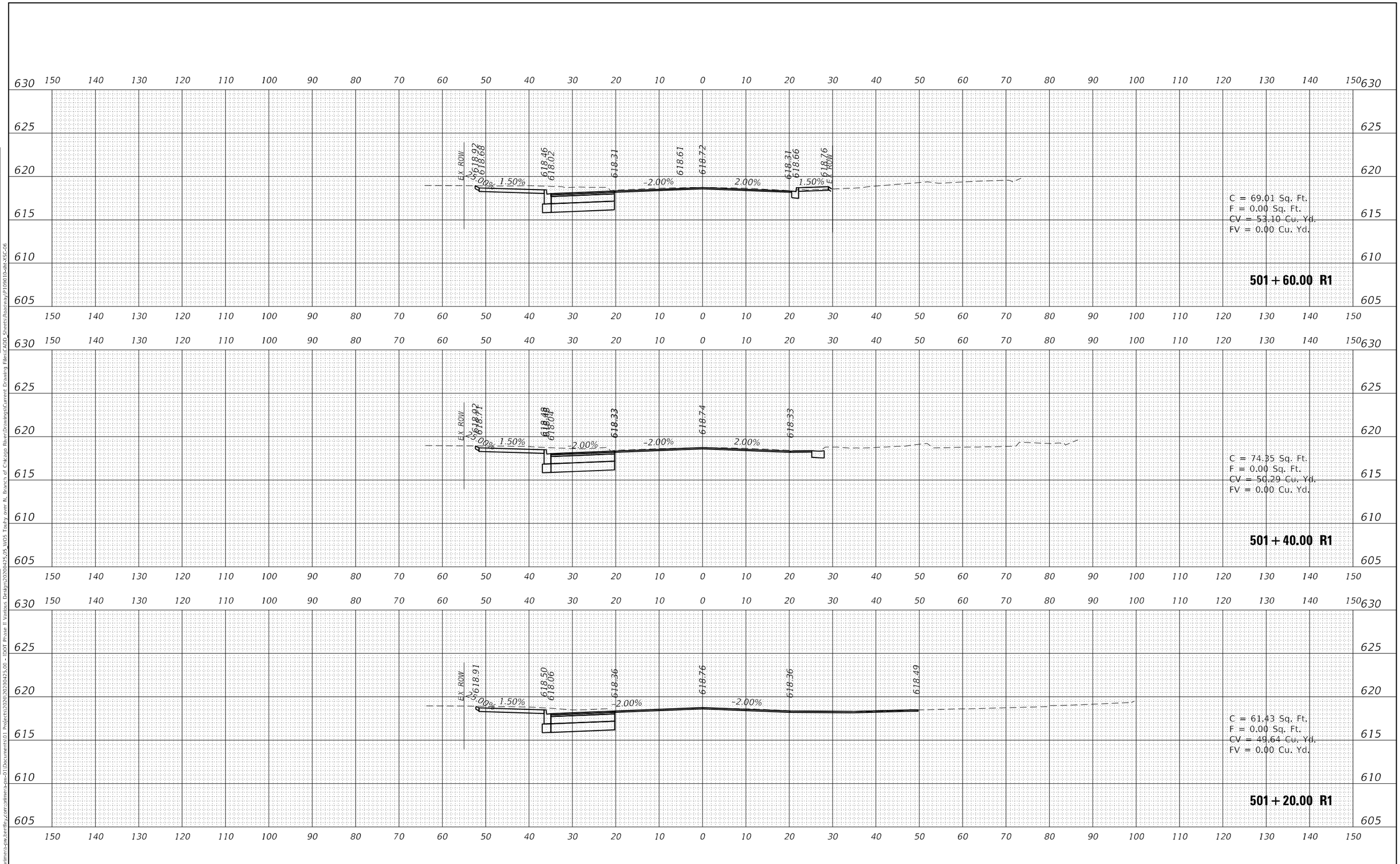

FINAL SURVEY		BY	DATE
NOTE BOOK	SURVEYED		
	PLOTTED		
	TEMPLATE		
	AREAS		
	AREAS CHECKED		

ORIGINAL SURVEY		BY	DATE
NOTE BOOK	SURVEYED		
	PLOTTED		
	TEMPLATE		
	AREAS		
	AREAS CHECKED		

MODEL: Default
FILE NAME: pw:\\primera-pw.bentley.com:pzimera-pw-01\Documents\01 Projects\2020\20200425.00 - IDOT Phase II Various Design\20200425_05_V05 Touhy over N. Branch of Chicago River\Drawings\Current Drawing Files\CADD Sheets\Roadway\P190010-sht-2-SC-06

Primera
550 W. JACKSON BLVD, SUITE 600 , CHICAGO IL 60661 , P:312-496-0910 F:312-496-0415

USER NAME = rvandermas	DESIGNED - JMR	REVISED -
	DRAWN - RMV	REVISED -
PLOT SCALE = 20.0012 ' / in.	CHECKED - MPV	REVISED -
PLOT DATE = 10/13/2025	DATE -	REVISED -

STATE OF ILLINOIS
DEPARTMENT OF TRANSPORTATION

CROSS SECTIONS
TOUHY AVENUE OVER NORTH BRANCH CHICAGO

SCALE: | SHEET 112 OF 124 SHEETS | STA. 501+20.00 R1 TO STA. 501+60.00 R1

F.A.U. RTE.	SECTION	COUNTY	TOTAL SHEETS	SHEET NO.
341	95-B	COOK	124	112
		CONTRACT NO. 62D34		
	ILLINOIS	FED. AID PROJECT		

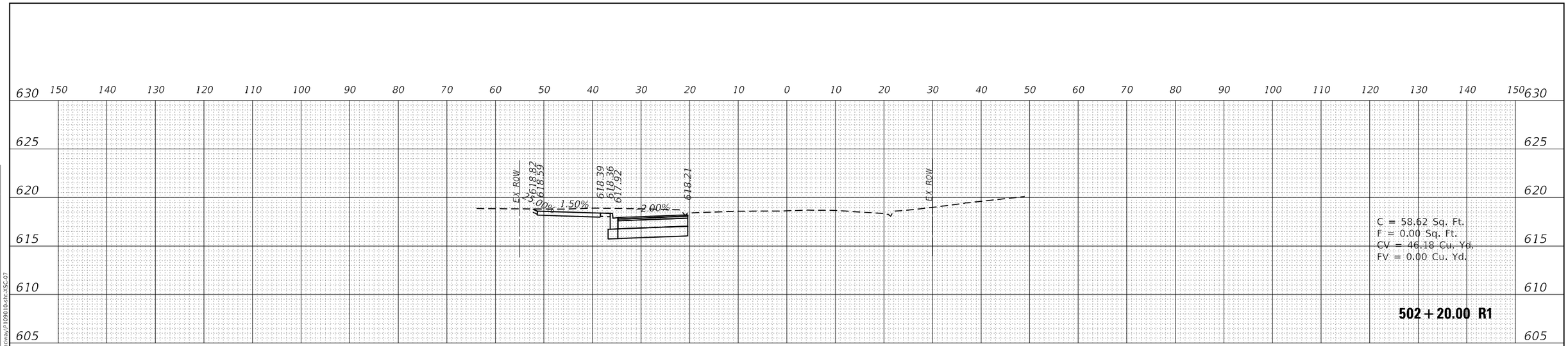

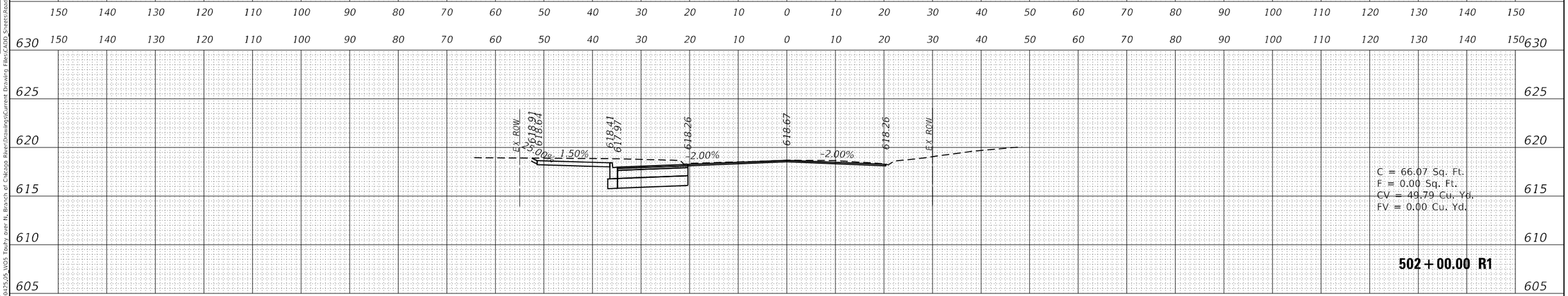

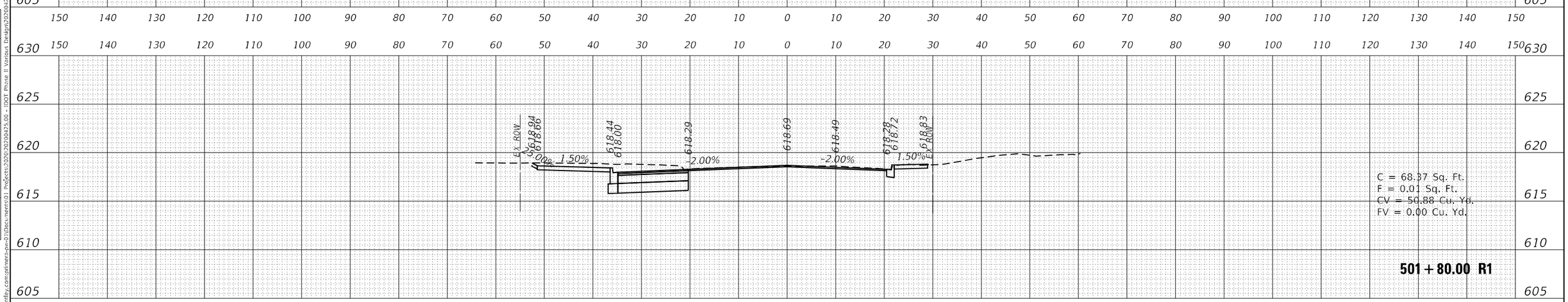

FINAL SURVEY	BY	DATE
SURVEYED		
PLOTTED		
TEMPLATE		
AREAS		
AREAS CHECKED		
NOTE BOOK NO.		

ORIGINAL SURVEY	BY	DATE
SURVEYED		
PLOTTED		
TEMPLATE		
AREAS		
AREAS CHECKED		
NOTE BOOK NO.		

MODEL: Default
FILE NAME: pw:\\primera-pw.bentley.com:primera-pw01\Documents\01 Projects\2020\2020425.00 - IDOT Phase II Various Design\2020425_05 VOS Touhy over N. Branch of Chicago River\Drawings\Current Drawing Files\CAD_Sheets\Roadway\P109010-dht-XSC-07

Primera
550 W. JACKSON BLVD, SUITE 600 , CHICAGO IL 60661 , P:312-408-0200 F:312-408-0415

USER NAME = rvandermus	DESIGNED - JMR	REVISED -
	DRAWN - RMV	REVISED -
PLOT SCALE = 20.0000 ' / in.	CHECKED - MPV	REVISED -
PLOT DATE = 10/13/2025	DATE -	REVISED -

STATE OF ILLINOIS
DEPARTMENT OF TRANSPORTATION

CROSS SECTIONS
TOUHY AVENUE OVER NORTH BRANCH CHICAGO RIVER

SCALE: | SHEET 113 OF 124 SHEETS | STA. 501+80.00 R1 TO STA. 502+20.00 R1

F.A.U. RTE.	SECTION	COUNTY	TOTAL SHEETS	SHEET NO.
341	95-B	COOK	124	113
		CONTRACT NO. 62D34		
		ILLINOIS	FED. AID PROJECT	

FINAL SURVEY		BY	DATE
	SURVEYED		
	PLOTTED		
NOTE BOOK	TEMPLATE		
	AREAS		
NO.	AREAS CHECKED		

ORIGINAL SURVEY		BY	DATE
	SURVEYED		
	PLOTTED		
NOTE BOOK	TEMPLATE		
	AREAS		
NO.	AREAS CHECKED		

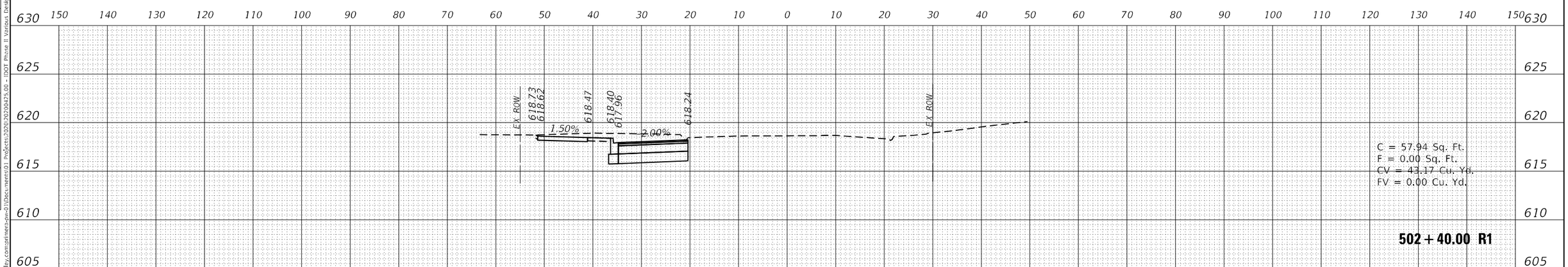

MODEL: Default
FILE NAME: pw:\\primera-pw.bentley.com:primera-pw-01\Documents\01 Projects\2020\2020425.00 - IDOT Phase II Various Design\2020425_05 WO5 Touhy over N. Branch of Chicago River\Drawings\Current Drawing Files\CADD_Sheets\Roadway\P109010-sht-XSC-08

Primera
550 W. JACKSON BLVD, SUITE 600 , CHICAGO IL 60661 , P:312-408-8990 F:312-408-8919

USER NAME = rvandermus	DESIGNED - JMR	REVISED -
	DRAWN - RMV	REVISED -
PLOT SCALE = 20.0000 ' / in.	CHECKED - MPV	REVISED -
PLOT DATE = 10/13/2025	DATE -	REVISED -

STATE OF ILLINOIS
DEPARTMENT OF TRANSPORTATION

CROSS SECTIONS
TOUHY AVENUE OVER NORTH BRANCH CHICAGO RIVER

SCALE: | SHEET 114 OF 124 SHEETS | STA. 502+40.00 R1 TO STA. 502+40.00 R1

F.A.U. RTE.	SECTION	COUNTY	TOTAL SHEETS	SHEET NO.
341	95-B	COOK	124	114
		CONTRACT NO. 62D34		
	ILLINOIS	FED. AID PROJECT		

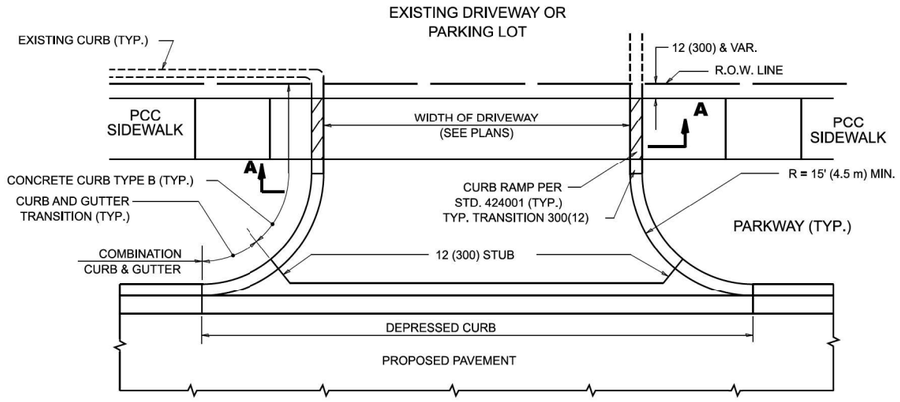

WITH CONCRETE CURB, TYPE B

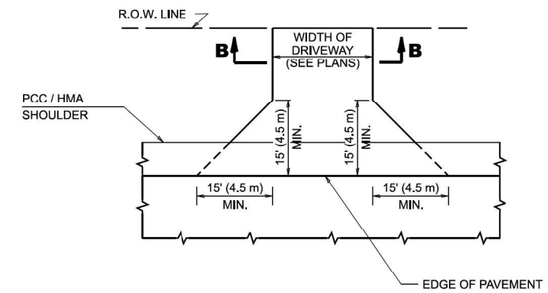

ADJACENT TO PCC / HMA SHOULDER

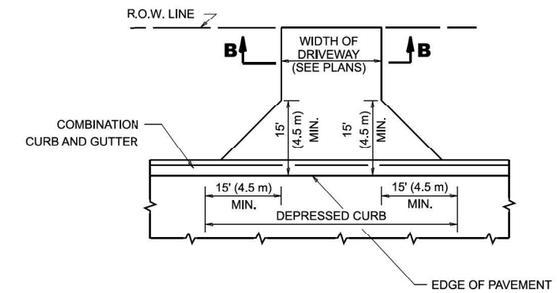

ADJACENT TO CURB AND GUTTER

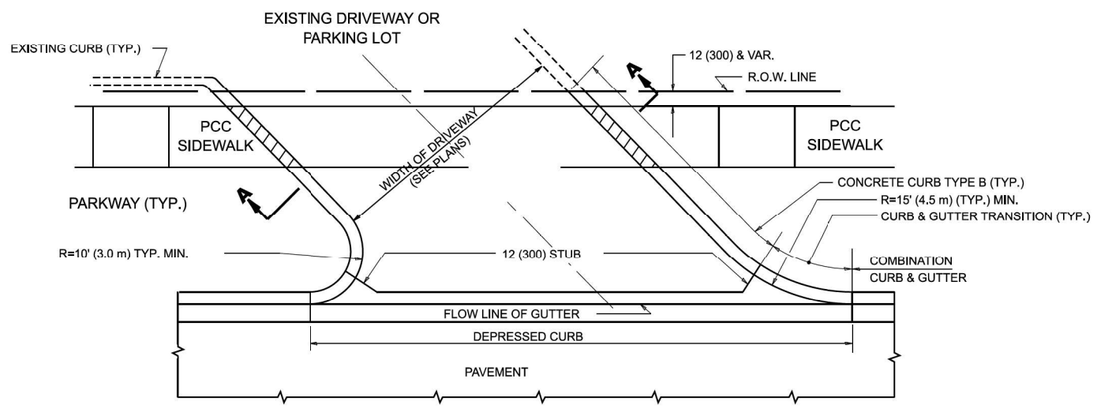

WITH CONCRETE CURB, TYPE B

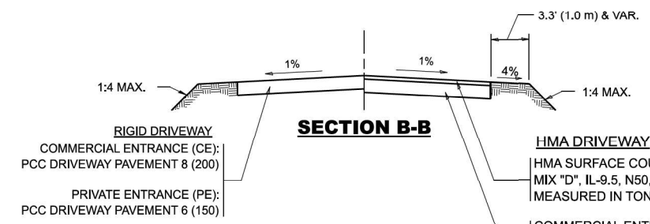

SECTION B-B

RIGID DRIVEWAY
COMMERCIAL ENTRANCE (CE):
PCC DRIVEWAY PAVEMENT 8 (200)
PRIVATE ENTRANCE (PE):
PCC DRIVEWAY PAVEMENT 6 (150)

HMA DRIVEWAY
HMA SURFACE COURSE,
MIX "D", IL-9.5, N50, 2 (50)
MEASURED IN TONS (METRIC TONS)
COMMERCIAL ENTRANCE (CE):
HMA BASE COURSE., 8 (200)
MEASURED IN SQ. YD. (m^2).
PRIVATE ENTRANCE (PE):
HMA BASE COURSE., 6 (150)
MEASURED IN SQ. YD. (m^2).

RURAL FIELD ENTRANCE (FE)
HMA SURFACE COURSE,
MIX "D", IL-95, N50, 2 (50)
MEASURED IN TONS (METRIC TONS)

AGGREGATE BASE COURSE., TYPE B, 8 (200)
MEASURED IN SQ. YD. (m^2).

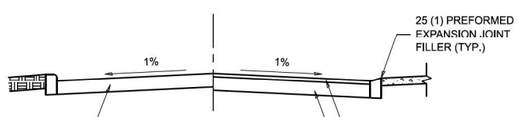

SECTION A-A

RIGID DRIVEWAY
COMMERCIAL ENTRANCE (CE):
PCC DRIVEWAY PAVEMENT 8 (200)
MEASURED IN SQ. YD. (m^2)
PRIVATE ENTRANCE (PE):
PCC DRIVEWAY PAVEMENT 6 (150
MEASURED IN SQ. YD. (m^2)

HMA DRIVEWAY
HMA SURFACE COURSE,
MIX "D", IL-9.5, N50, 2 (50)
MEASURED IN TONS (METRIC TONS)
COMMERCIAL ENTRANCE (CE):
HMA BASE COURSE, 8 (200)
MEASURED IN SQ. YD. (m^2).
PRIVATE ENTRANCE (PE):
HMA BASE COURSE, 6 (150)
MEASURED IN SQ. YD. (m^2).

GENERAL NOTES

1. DRIVEWAY SLOPES, LOCATIONS, & GEOMETRIC LAYOUT SHALL BE IN ACCORDANCE WITH THE LATEST EDITION OF THE "HANDBOOK FOR POLICY ON PERMITS FOR ACCESS DRIVEWAYS TO STATE HIGHWAYS". FOR FURTHER LAYOUT REQUIREMENTS, REFER TO ILLUSTRATIONS IN THE PERMIT HANDBOOK. DRIVEWAYS SHALL BE REPLACED IN KIND, UNLESS OTHERWISE NOTED ON THE PLANS.

2. COMMERCIAL DRIVEWAYS SHALL BE CONSTRUCTED WITH CONCRETE CURB, TYPE B RETURNS EXCEPT WHEN THE SIDEWALK EDGE IS 4 FEET (1.2 METERS) OR LESS FROM THE BACK OF CURB, CONSTRUCT A FLARE DRIVEWAY WITHOUT CURB.

ALL DIMENSIONS ARE IN INCHES (MILLIMETERS)
UNLESS OTHERWISE NOTED.

MODEL: Plan Single [Sheet]
FILE NAME: Z:_IDOTCAD_ORD Folder Master_Master Files\IDOTCAD_CONNECT\Configuration\Organization-Civil\IDOT_Standards\Dgnlib\Sheet Seeds\Civil_Named_Boundary_SheetSeeds.dgnlb

Primera
550 W. JACKSON BLVD. SUITE 600 . CHICAGO IL 60661 . P:312-655-0910 F:312-106-0415

USER NAME = eric.l.thomas	DESIGNED - R. SHAH	REVISED - R. BORO 06-11-08	STATE OF ILLINOIS DEPARTMENT OF TRANSPORTATION
	DRAWN -	REVISED - R. BORO 09-06-11	
PLOT SCALE = 0.08333317 ' / in.	CHECKED -	REVISED - K. SMITH 08-28-19	
PLOT DATE = 8/30/2023	DATE - 11-04-95	REVISED - K. SMITH 11-18-22	

DRIVEWAY DETAILS - DISTANCE BETWEEN R.O.W. AND FACE OF CURB & EDGE OF SHOULDER >15'(4.5m)

SCALE: NONE | SHEET 1 OF 1 SHEETS | STA. TO STA.

F.A.U. RTE.	SECTION	COUNTY	TOTAL SHEETS	SHEET NO.
341	95-B	COOK	124	115

BD400-01 (BD-01) CONTRACT NO. 62D34
ILLINOIS FED. AID PROJECT

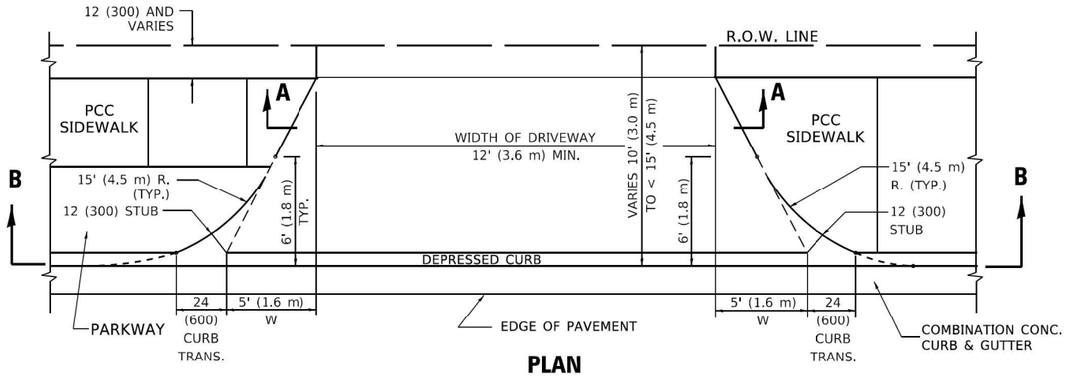

PLAN

10' (3.0 m) TO < 15' (4.5 m)

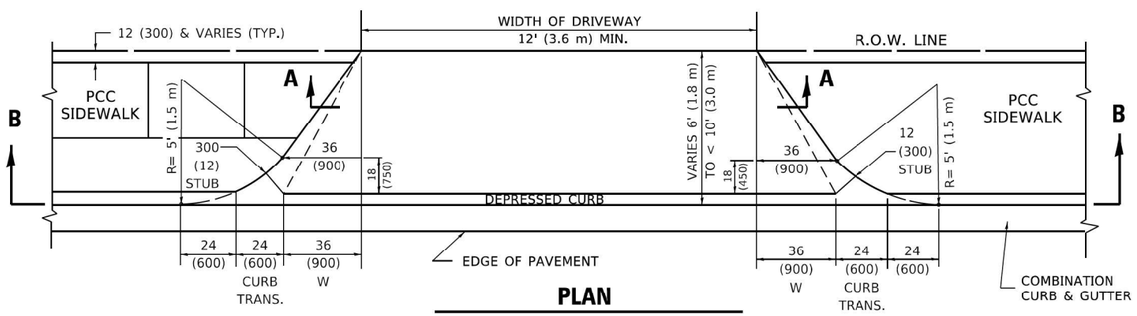

PLAN

6' (1.8 m) TO < 10' (3.0 m)

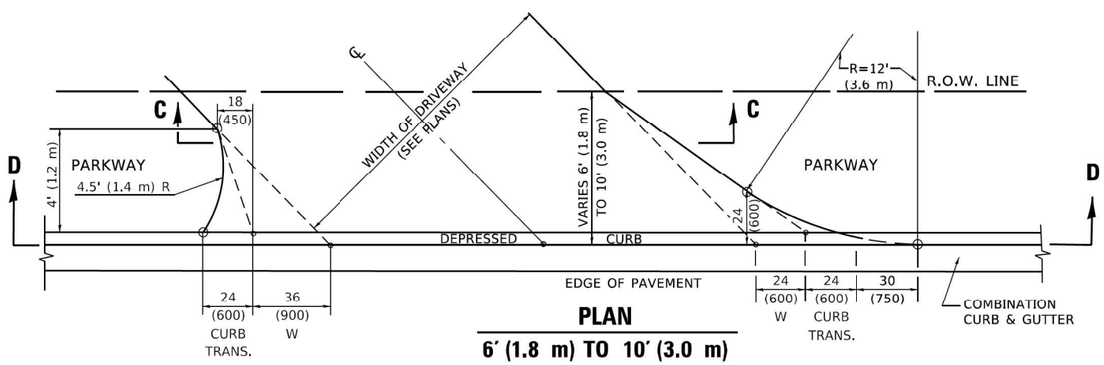

PLAN

6' (1.8 m) TO 10' (3.0 m)

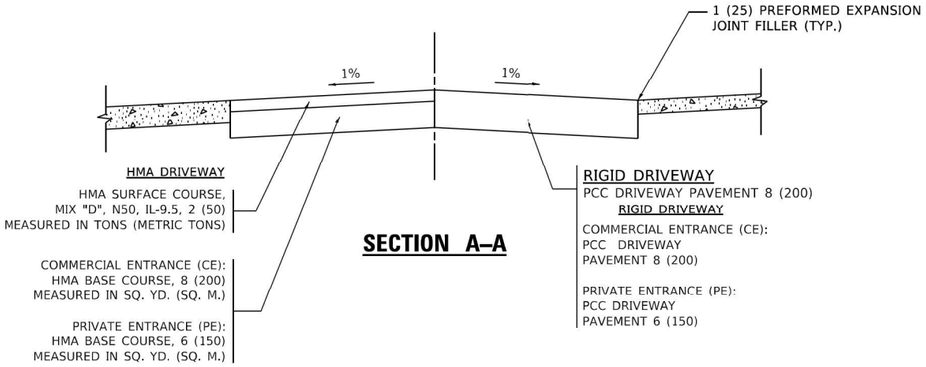

SECTION A–A

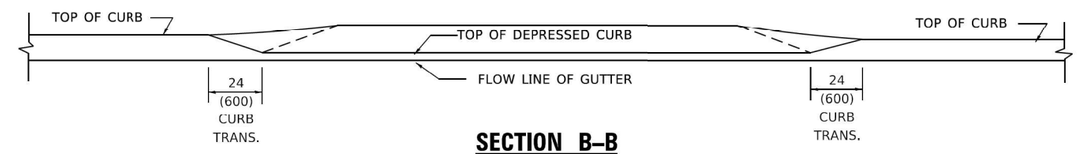

SECTION B–B

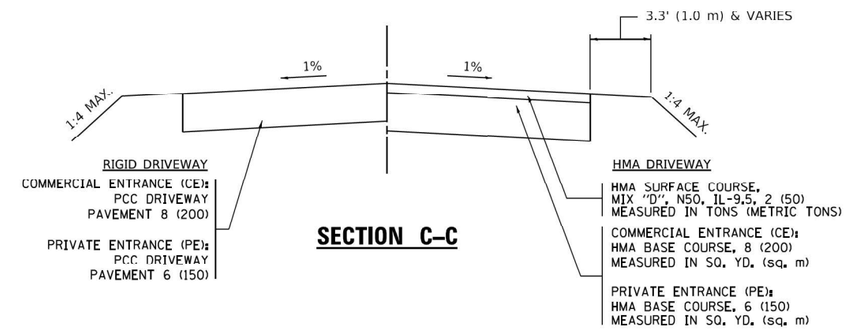

SECTION C–C

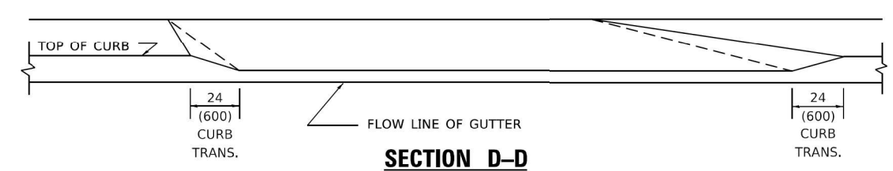

SECTION D–D

GENERAL NOTES

1. DRIVEWAY SLOPES, LOCATIONS, & GEOMETRIC LAYOUT SHALL BE IN ACCORDANCE WITH THE LATEST EDITION OF THE "HANDBOOK FOR POLICY ON PERMITS FOR ACCESS DRIVEWAYS TO STATE HIGHWAYS". FOR FURTHER LAYOUT REQUIREMENTS, REFER TO ILLUSTRATION 10 IN THE PERMIT HANDBOOK. WHERE SIDEWALKS EXIST, DRIVEWAYS SHALL BE REPLACED WITH RIGID PAVEMENT. WHERE NO SIDEWALKS EXIST. DRIVEWAYS SHALL BE REPLACED IN KIND. SIDEWALK CROSS SLOPE THRU DRIVEWAY AREA TO BE A MAXIMUM OF 1:50.
2. WHEN THE DISTANCE BETWEEN R.O.W. AND THE BACK OF CURB IS EQUAL TO OR LESS THAN 8' (2.4 m), THE PCC SIDEWALK SHALL EXTEND TO THE BACK OF CURB.
3. "W" VARIES FROM 36 (900) TO 5' (1.5 m) PROPORTIONAL TO THE LENGTH (L), FROM 6' (1.8 m) TO 10' (3 m).

ALL DIMENSIONS ARE IN INCHES (MILLIMETERS) UNLESS OTHERWISE NOTED.

Primera
550 W. JACKSON BLVD. SUITE 600 . CHICAGO IL 60661 . P:312-855-0910 F:312-506-0415

USER NAME = Lawrence.DeManche	DESIGNED - R. SHAH	REVISED - R. BORO 01-01-07	STATE OF ILLINOIS DEPARTMENT OF TRANSPORTATION	DRIVEWAY DETAILS DISTANCE BETWEEN ROW AND FACE OF CURB < 15' (4.5m)
	DRAWN -	REVISED - R. BORO 09-06-11		
PLOT SCALE = 100.0000 ' / in.	CHECKED -	REVISED - K. SMITH 08-27-19		
PLOT DATE = 11/18/2022	DATE - 11-06-95	REVISED - K. SMITH 11-18-22		SCALE: NONE · SHEET 1 OF 1 SHEETS · STA. · TO STA.

F.A.U. RTE.	SECTION	COUNTY	TOTAL SHEETS	SHEET NO.
341	95-B	COOK	124	116
BD400–02 (BD–02)		CONTRACT NO. 62D34		
		ILLINOIS	FED. AID PROJECT	

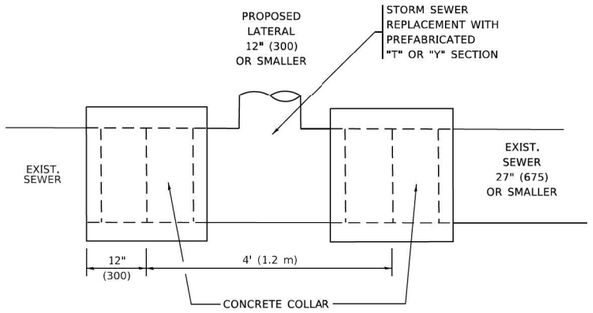

DETAIL "A"

LATERAL CONNECTION TO EXISTING SEWER
OF 27" (675) OR SMALLER

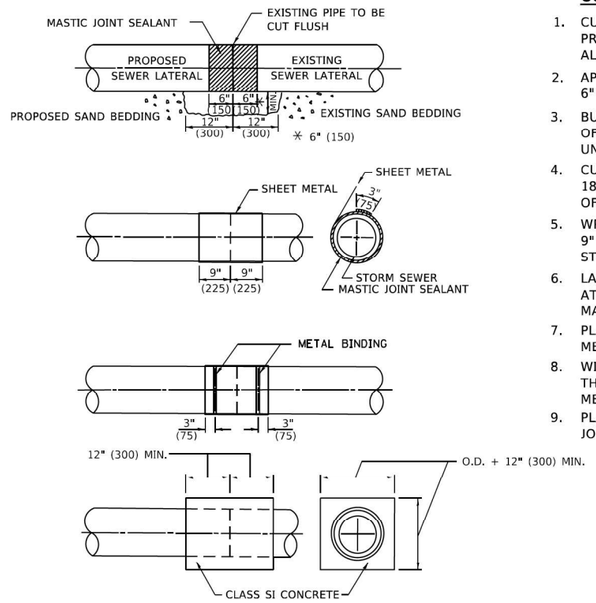

DETAIL "B"

CLASS SI CONCRETE COLLAR

CONSTRUCTION SEQUENCE

1. CUT THE EXISTING END OF THE PIPE SO AS TO PRESENT A FLUSH BUTT JOINT. BRUSH AND CLEAN ALL PIPES.
2. APPLY THE MASTIC JOINT SEALANT TO THE FIRST 6" (150) OF EACH PIPE.
3. BUTT THE PIPES TOGETHER LEAVING A MINIMUM OF 12' x 6' (300 x 150) DEEP EXCAVATION UNDER AND AROUND EACH PIPE END.
4. CUT A PIECE OF SHEET METAL GAGE NO. 19 1.1 (0.0418) 18" (450) WIDE BY THE OUTSIDE CIRCUMFERANCE OF THE PIPE PLUS 3" (75) LONG.
5. WRAP THE SHEET METAL AROUND THE PIPES, 9" (225) ON EACH SIDE OF THE JOINT, STARTING AT THE TOP OF THE PIPE.
6. LAP THE SHEET METAL AT LEAST 3" (75) AT THE TOP OF THE PIPE AND PLACE THE MASTIC JOINT SEALANT BETWEEN THE LAP.
7. PLACE TWO METAL BANDS AROUND THE SHEET METAL AND TIGHTEN.
8. WIPE OFF ANY EXCESS MASTIC JOINT SEALANT THAT OOZES OUT FROM BETWEEN THE SHEET METAL AND THE PIPES.
9. PLACE CLASS SI CONCRETE AROUND THE JOINT.

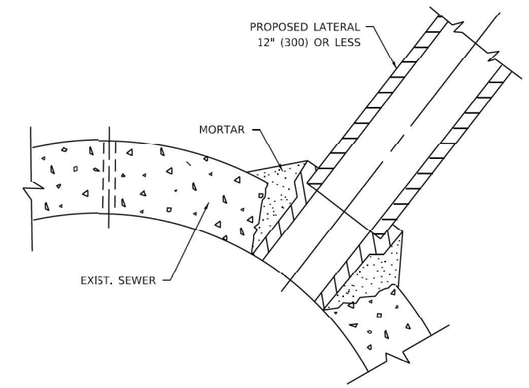

DETAIL "C"

PROPOSED LATERAL
CONNECTION TO EXISTING SEWER
OF 30" (750) OR LARGER

NOTES:

MATERIAL

MATERIAL USED FOR THE TEE OR WYE SECTION SHALL BE COMPATIBLE WITH THE EXISTING STORM SEWER OR THE PROPOSED STORM SEWER.

CONSTRUCTION METHODS

I. THIS WORK SHALL BE CONSTRUCTED IN CONFORMANCE WITH THE APPLICABLE PORTIONS OF SECTION 550 OF THE STANDARD SPECIFICATIONS.

II. CONNECTION TO AN EXISTING STORM SEWER SHALL BE BY EITHER OF THE FOLLOWING METHODS:
A) PROPOSED STORM SEWER CONNECTION TO EXISTING SEWER OF 27" (675) OR SMALLER SEE DETAIL "A" AND "B".
B) PROPOSED STORM SEWER CONNECTION TO EXISTING SEWER OF 30" (750) OR LARGER SEE DETAIL "C".

IF THE EXISTING SEWER PIPE IS CRACKED, BROKEN OR OTHERWISE DAMAGED BY THE CONTRACTOR IN MAKING THE CIRCULAR OPENING, THE CONTRACTOR SHALL REPLACE THAT SECTION OF PIPE WITH PIPE EQUAL AND SIMILAR IN ALL RESPECTS TO THE PIPE IN THE EXISTING SEWER, IN A CAREFUL WORKMANLIKE MANNER, WITHOUT EXTRA COMPENSATION.

GENERAL

1. CARE MUST BE TAKEN TO PREVENT DEBRIS FROM ENTERING THE SEWER. ALL DEBRIS WHICH ENTERS THE SEWER MUST BE REMOVED. THE SEWER MUST BE LEFT CLEAN AND UNOBSTRUCTED UPON COMPLETION OF THE CONTRACT.
2. CARE MUST BE TAKEN TO PREVENT ANY PART OF THE NEW PIPE CONNECTION FROM PROJECTING INTO THE EXISTING SEWER.

BASIS OF PAYMENT

1. TEE OR WYE CONNECTIONS SHALL BE PAID FOR AT THE CONTRACT UNIT PRICE EACH FOR STORM SEWER TEE OR WYE OF THE TYPE AND SIZE SPECIFIED IN THE PLANS. THIS PRICE SHALL INCLUDE ALL EXCAVATION OF THE TRENCH, REMOVAL OF THE EXISTING STORM SEWER, FURNISHING AND INSTALLING THE SPECIFIED TEE OR WYE SECTION, FURNISHING AND INSTALLING THE REQUIRED CONCRETE COLLAR, AND ALL OTHER MATERIAL NECESSARY TO COMPLETE THIS WORK AS SHOWN AND SPECIFIED.
2. REMOVAL AND REINSTALLATION OF EXISTING STORM SEWER ADJACENT TO THE PROPOSED TEE OR WYE SECTION, FOR THE PURPOSE OF FACILITATING THE INSTALLATION OF THE TEE OR WYE SECTION, WILL NOT BE PAID FOR SEPARATELY BUT SHALL BE INCLUDED IN THE UNIT PRICE BID FOR THE WORK.
3. TRENCH BACKFILL, EXCAVATION IN ROCK AND REMOVAL AND REPLACEMENT OF UNSUITABLE MATERIAL BELOW PLAN BEDDING GRADE WILL BE PAID FOR SEPARATELY.
4. CONCRETE COLLAR FOR CONNECTING A PROPOSED STORM SEWER TO AN EXISTING STORM SEWER WILL NOT BE PAID PAID FOR SEPARATELY BUT SHALL BE INCLUDED IN THE COST OF THE PROPOSED STORM SEWER.

* ALL DIMENSIONS ARE IN INCHES (MILLIMETERS) UNLESS OTHERWISE SHOWN.

Primera
550 W. JACKSON BLVD. SUITE 600 . CHICAGO IL 60661 . P:312-655-0910 F:312-106-0415

USER NAME = Lawrence.DeManche	DESIGNED - M. DE YONG	REVISED - R. SHAH 09-09-94	
	DRAWN -	REVISED - R. SHAH 10-25-94	
PLOT SCALE = 100.0000 ' / in.	CHECKED -	REVISED - R. SHAH 06-12-96	
PLOT DATE = 11/18/2022	DATE - 07-25-90	REVISED - K. SMITH 11-18-22	

STATE OF ILLINOIS
DEPARTMENT OF TRANSPORTATION

DETAIL OF STORM SEWER
CONNECTION TO EXISTING SEWER

SCALE: NONE | SHEET 1 OF 1 SHEETS | STA. TO STA.

F.A.U. RTE.	SECTION	COUNTY	TOTAL SHEETS	SHEET NO.
341	95-B	COOK	124	117
BD500-01 (BD-07)		CONTRACT NO. 62D34		
		ILLINOIS	FED. AID PROJECT	

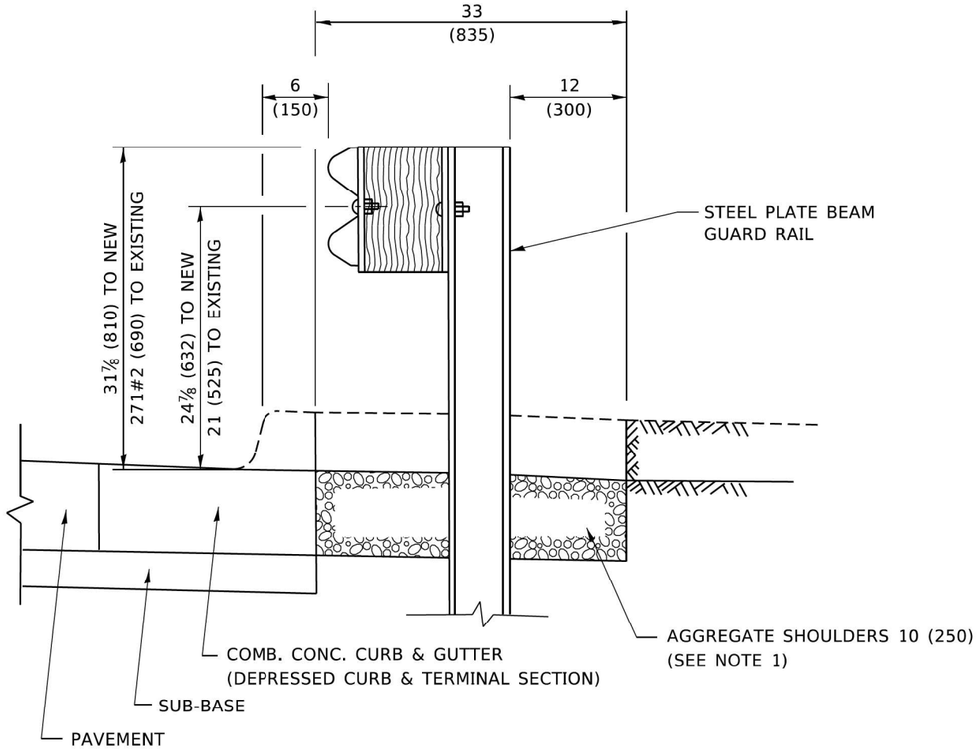

SECTION A–A

NOTES:

1. THE AGGREGATE SHOULDER, 10 (250) OR HMA SHOULDER, 6 (150) (IF REQUIRED) SHALL EXTEND UNDER THE TRAFFIC BARRIER TERMINAL.
2. "EXISTING" GUARDRAIL REFERS TO CONNECTING TERMINAL SECTION TO GUARD RAILING PRIOR TO THE MIDWEST GUARDRAIL SYSTEM.
3. THE CONTRACTOR SHALL VERIFY THE TYPE/HEIGHT OF GUARDRAIL IN-PLACE BEFORE ORDERING THE NEW TERMINAL SECTION. COST INCLUDED WITH THE COST OF THE TERMINAL. THE EXISTING GUARDRAIL HEIGHT SHALL TRANSISTION TO MATCH THE NEW TERMINAL END SECTION AND SHALL BE PAID FOR AS VERTICAL ADJUSTMENT OF EXISTING GUADRAIL.

DETAILS FOR STEEL PLATE BEAM GUARD RAIL ADJACENT TO CURB AND GUTTER [FOR ROADWAY SPEED 35 MPH (60 kmh) TO 45 MPH (70 kmh)]

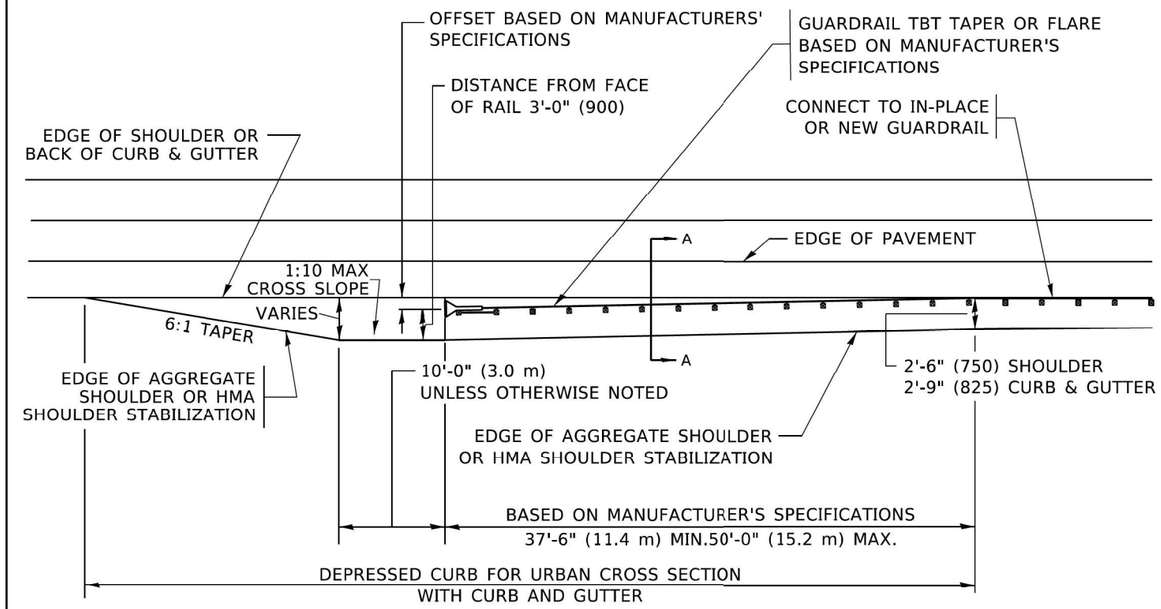

DEPRESSED CURB AND GUTTER AND SHOULDER TREATMENT AT TBT TY. 1 SPL.

AGGREGATE SHOULDER, 10 (250) WILL BE PAID ACCORDING TO SECTION 481.

HMA SHOULDERS 6 (150) (IF REQUIRED) WILL BE PAID ACCORDING TO SECTION 482.

COMB. CONC. C&G, STEEL PLATE BEAM GUARD RAIL AND TRAFFIC BARRIER TERMINAL, OF THE TYPE SPECIFIED WILL BE PAID FOR SEPARATELY.

TBT = TRAFFIC BARRIER TERMINAL

ALL DIMENSIONS ARE IN INCHES (MILLIMETERS) UNLESS OTHERWISE SHOWN.

Primera
550 W. JACKSON BLVD. SUITE 900 . CHICAGO IL 60661 . P:312-855-0910 F:312-106-0475

USER NAME = Lawrence.DeManche	DESIGNED - M. DE YONG	REVISED - R. BORO 09-14-2009	STATE OF ILLINOIS DEPARTMENT OF TRANSPORTATION
	DRAWN -	REVISED - R. BORO 08-06-2012	
PLOT SCALE = 100.0000 ' / in.	CHECKED -	REVISED - R. BORO 05-08-2015	
PLOT DATE = 11/18/2022	DATE - 09-22-90	REVISED - K. SMITH 11-18-22	

DETAILS FOR DEPRESSED CURB & GUTTER AND SHOULDER TREATMENT AT TBT TY. 1 SPL.

SCALE: NONE | SHEET 1 OF 1 SHEETS | STA. TO STA.

F.A.U. RTE.	SECTION	COUNTY	TOTAL SHEETS	SHEET NO.
341	95-B	COOK	124	118
BD600–10 (BD–34)		CONTRACT NO. 62D34		
		ILLINOIS FED. AID PROJECT		

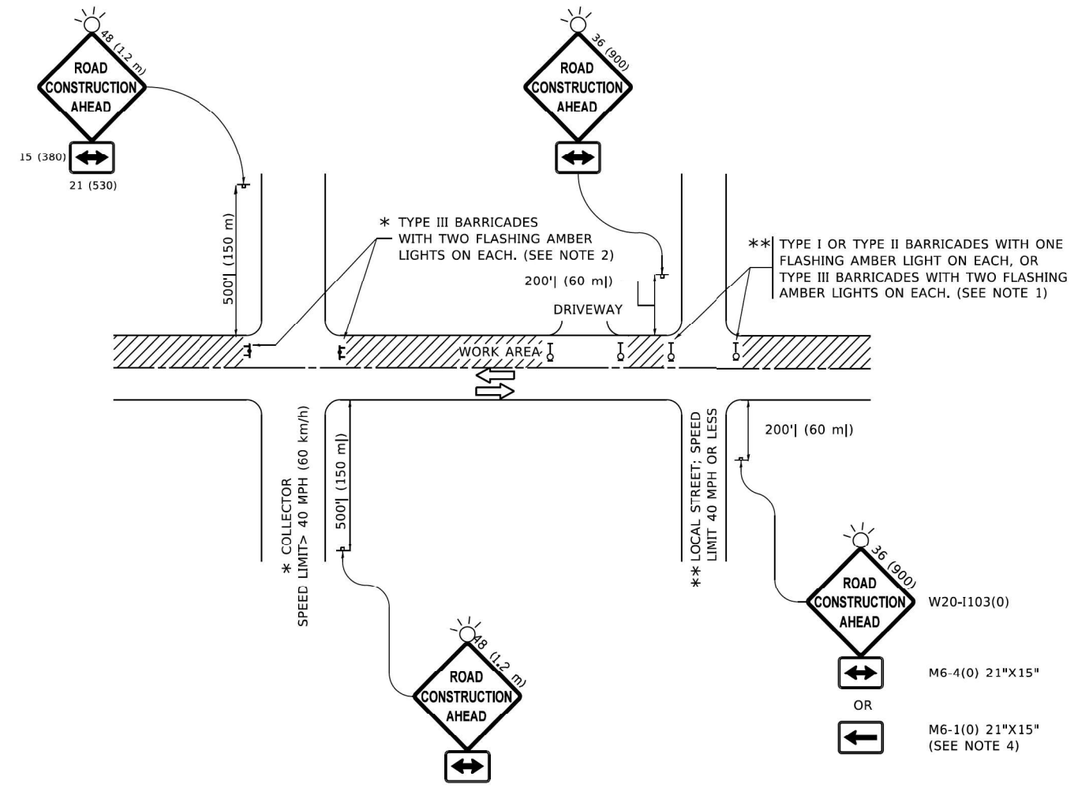

NOTES:

1. SIDE ROAD WITH A SPEED LIMIT OF 40 MPH (60 km/h) OR LESS AS SHOWN ON THE DRAWING AND AS DIRECTED BY THE ENGINEER:

   a) ONE "ROAD CONSTRUCTION AHEAD" SIGN 36 x 36 (900x900) WITH A FLASHER MOUNTED ON IT APPROXIMATELY 200' (60 m) IN ADVANCE OF THE MAIN ROUTE.

   b) THE CLOSED PORTION OF THE MAIN ROUTE SHALL BE PROTECTED BY BLOCKING WITH TYPE I, TYPE II OR TYPE III BARRICADES, 1/3 OF THE CROSS SECTION OF THE CLOSED PORTION.

2. SIDE ROAD WITH A SPEED LIMIT GREATER THAN 40 MPH (60 km/h) AS SHOWN ON THE DRAWING AND AS DIRECTED BY THE ENGINEER:

   a) ONE "ROAD CONSTRUCTION AHEAD" SIGN 48 x 48 (1.2 m x 1.2 m) WITH A FLASHER MOUNTED ON IT APPROXIMATELY 500' (150 m) IN ADVANCE OF THE MAIN ROUTE.

   b) THE CLOSED PORTION OF THE MAIN ROUTE SHALL BE PROTECTED BY BLOCKING WITH TYPE III BARRICADES, 1/2 OF THE CROSS SECTION OF THE CLOSED PORTION.

3. CONES MAY BE SUBSTITUTED FOR BARRICADES OR DRUMS AT HALF THE SPACING DURING DAY OPERATIONS. CONES SHALL BE A MINIMUM OF 28 (710) IN HEIGHT.

4. WHEN THE SIDE ROAD LIES BETWEEN THE BEGINNING OF THE MAINLINE SIGNING AND THE WORK ZONE, A SINGLE HEADED ARROW (M6-1) SHALL BE USED IN LIEU OF THE DOUBLE HEADED ARROW (M6-4).

5. WHEN WORK IS BEING PERFORMED ON A SIDE ROAD OR DRIVEWAY, FOLLOW THE APPLICABLE STANDARD(S). THE DIRECTIONAL ARROW (M6-1 OR M6-4) SHALL BE COVERED OR REMOVED WHEN NO LONGER CONSISTENT WITH THE TRAFFIC CONTROL SET-UP.

6. ADVANCE WARNING SIGNS ARE TO BE OMITTED ON DRIVEWAYS UNLESS OTHERWISE SPECIFIED IN THE PLANS OR BY THE ENGINEER.

7. THE TRAFFIC CONTROL AND PROTECTION FOR SIDE ROADS, INTERSECTIONS, AND DRIVEWAYS SHALL BE INCLUDED IN THE COST OF SPECIFIED TRAFFIC CONTROL STANDARDS OR ITEMS.

All dimensions are in inches (millimeters) unless otherwise shown.

MODEL: Default
FILE NAME: pw:\\ildot-pw.bentley.com:PWIDOT\Documents\IDOT Offices\District 1\Projects\Dist5\22x34\CADData\CADsheets\tc10.dgn

Primera
550 W. JACKSON BLVD. SUITE 900 . CHICAGO IL 60661 . P:312-655-0700 F:312-206-0415

USER NAME = Lawrence.DeManche	DESIGNED - L.H.A.	REVISED - T. RAMMACHER 01-06-00	
	DRAWN -	REVISED - A. SCHUETZE 07-01-13	
PLOT SCALE = 100.0000 ' / in.	CHECKED -	REVISED - A. SCHUETZE 09-15-16	
PLOT DATE = 5/3/2024	DATE - 06-89	REVISED - D. SENDERAK 05-03-24	

STATE OF ILLINOIS
DEPARTMENT OF TRANSPORTATION

TRAFFIC CONTROL AND PROTECTION FOR SIDE ROADS, INTERSECTIONS, AND DRIVEWAYS

SCALE: NONE | SHEET 1 OF 1 SHEETS | STA. TO STA.

F.A.U. RTE.	SECTION	COUNTY	TOTAL SHEETS	SHEET NO.
341	95-B	COOK	124	119
	TC-10	CONTRACT NO. 62D34		
		ILLINOIS	FED. AID PROJECT	

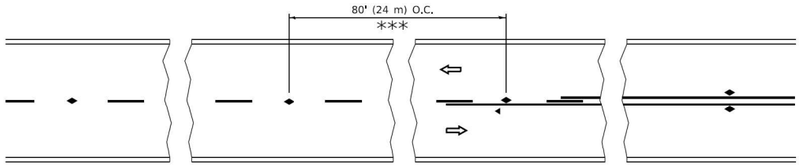

*** REDUCE TO 40' (12 m) O.C. ON CURVES WITH POSTED OR ADVISORY SPEED 45 M.P.H. (70 km/h) OR LESS.

TWO–LANE/TWO–WAY

SEE FIGURE 3B-14 MUTCD

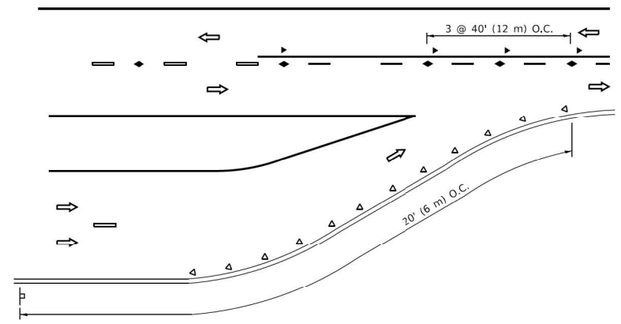

LANE REDUCTION TRANSITION

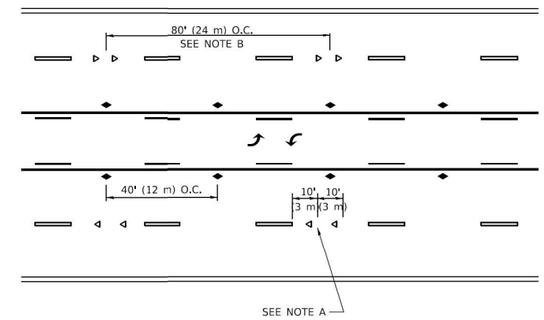

TWO–WAY LEFT TURN

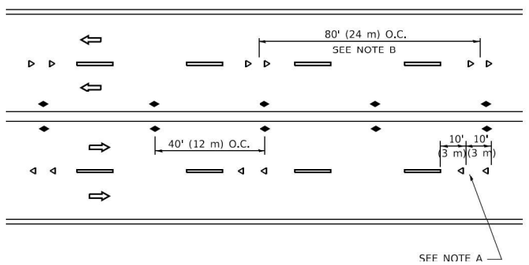

MULTI–LANE/UNDIVIDED

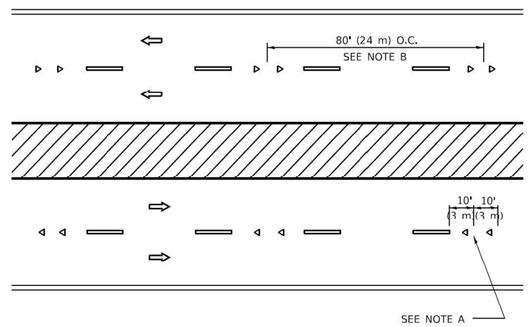

MULTI–LANE/DIVIDED

GENERAL NOTES

1. MARKERS USED WITH DASHED LINES SHALL BE CENTERED IN THE GAP BETWEEN SEGMENTS.
2. MARKERS USED ADJACENT TO SOLID LINES SHALL BE OFFSET 2 TO 3 (50 TO 75) TOWARD TRAFFIC AS SHOWN.
3. MARKERS THROUGH TANGENTS LESS THAN 500' (150 m) IN LENGTH BETWEEN CURVES SHALL BE INSTALLED AT THE LESSER OF THE TWO CURVE SPACINGS.
4. MARKERS ARE TO BE USED ADJACENT TO BOTH SOLID WHITE LINES IN DUAL LEFT TURN LANES

SYMBOLS

- YELLOW STRIPE
- WHITE STRIPE
- ONE-WAY AMBER MARKER
- ONE-WAY CRYSTAL MARKER (W/O)
- TWO-WAY AMBER MARKER

LANE MARKER NOTES

A. USE DOUBLE LANE LINE MARKERS SPACED AS SHOWN.

B. REDUCE TO 40' (12 m) O.C. ON CURVES WHERE ADVISORY SPEEDS ARE 10 M.P.H (20 km/h) LOWER THAN POSTED SPEEDS.

DESIGN NOTES

1. DOUBLE LANE LINE MARKERS SHALL BE USED UNLESS SPECIFIED OTHERWISE.
2. EXCEPT AS SHOWN ON THE LANE REDUCTION TRANSITION AND FREEWAY EXIT RAMP DETAIL, MARKERS ARE NOT TO BE SPECIFIED ON RIGHT EDGE LINES.
3. THE EXACT MARKER LIMITS, SPACING, AND COLOR SHALL BE INCLUDED IN THE PLANS WHEN STANDARD SPECIFICATIONS ARE NOT BEING USED.
4. MARKERS SHOULD NOT BE USED ALONGSIDE CURBS EXCEPT FOR EXTREMELY SHORT SECTIONS OF CURBS WHERE NOT MORE THAN TWO MARKERS WOULD BE INVOLVED.

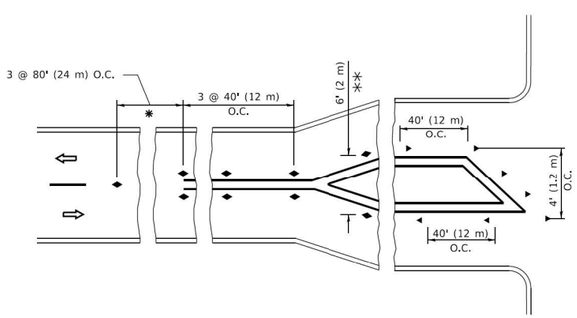

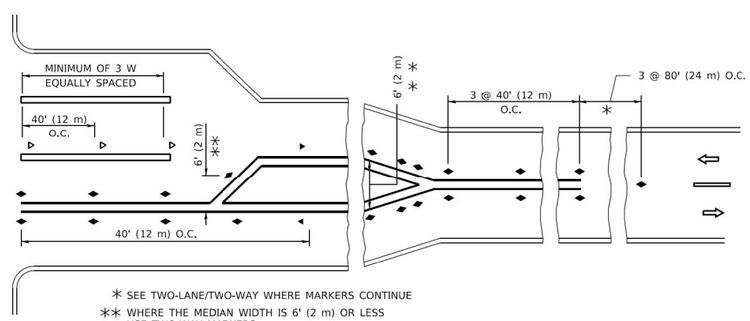

* SEE TWO-LANE/TWO-WAY WHERE MARKERS CONTINUE

** WHERE THE MEDIAN WIDTH IS 6' (2 m) OR LESS USE TWO-WAY MARKERS.

TURN LANES

All dimensions are in inches (millimeters) unless otherwise shown.

MODE.: Default
FILE NAME: pw:\\L084EBIDINTEG.illinois.gov:PWIDOT\Documents\IDOT Offices\District 1\Projects\DistStd22x34\CADdata\CADsheets\tc11.dgn

Primera
550 W. JACKSON BLVD. SUITE 600 CHICAGO IL 60661 P:312-605-0916 F:312-596-0415

USER NAME = footemj	DESIGNED -	REVISED - T. RAMMACHER 03-12-99	STATE OF ILLINOIS DEPARTMENT OF TRANSPORTATION
	DRAWN -	REVISED - T. RAMMACHER 01-06-00	
PLOT SCALE = 50.0000 ' / in.	CHECKED -	REVISED - C. JUCIUS 09-09-09	
PLOT DATE = 3/4/2019	DATE -	REVISED - C. JUCIUS 07-01-13	

TYPICAL APPLICATIONS
RAISED REFLECTIVE PAVEMENT MARKERS (SNOW–PLOW RESISTANT)

SCALE: NONE | SHEET 1 OF 1 SHEETS | STA. TO STA.

F.A.U. RTE.	SECTION	COUNTY	TOTAL SHEETS	SHEET NO.
341	95-B	COOK	124	120
	TC-11	CONTRACT NO. 62D34		
		ILLINOIS	FED. AID PROJECT	

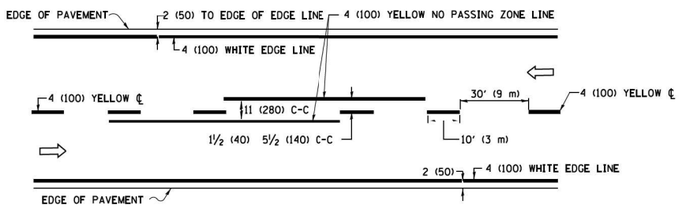

2–LANE ROADWAY

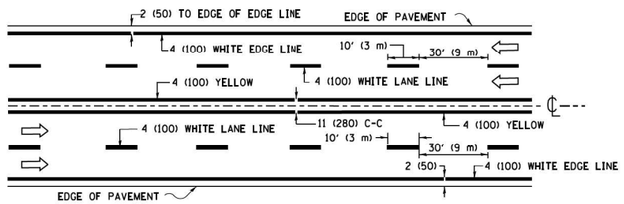

MULTI–LANE UNDIVIDED

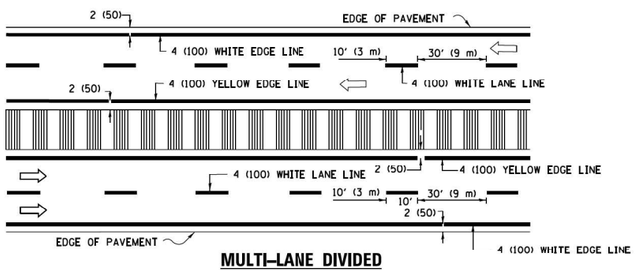

MULTI–LANE DIVIDED

WITH MEDIAN

TYPICAL LANE AND EDGE LINE MARKING

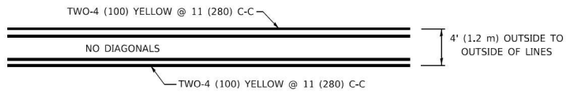

4' (1.2 m) WIDE MEDIANS ONLY

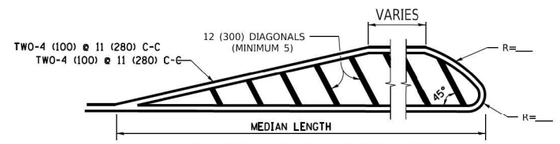

FOR MEDIAN LENGTHS WHERE DIAGONAL SPACING CANNOT BE ATTAINED, USE 5 (FIVE) EQUALLY SPACED DIAGONAL LINES.

DIAGONAL LINE SPACING: 50' (15 m) C-C (LESS THAN 30MPH (50 km/h))
75' (25 m) C-C 30MPH (50 km/h) TO 45MPH (70 km/h))
150' (45 m) C-C (MORE THAN 45MPH (70 km/h))

MEDIANS OVER 4' (1.2 m) WIDE

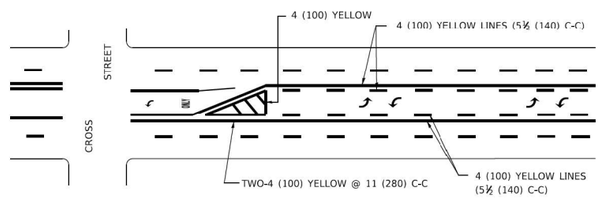

A MINIMUM OF TWO PAIRS OF TURN ARROWS SHALL BE USED, WHITE IN COLOR. ADDITIONAL PAIRS SHALL BE PLACED AT 200' (60 m) TO 300' (90 m) INTERVALS.

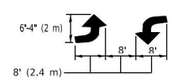

MEDIAN WITH TWO–WAY LEFT TURN LANE

TYPICAL PAINTED MEDIAN MARKING

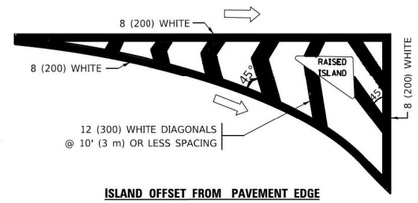

ISLAND OFFSET FROM PAVEMENT EDGE

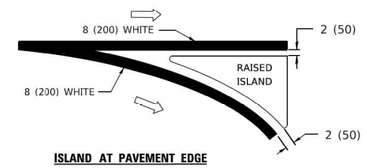

ISLAND AT PAVEMENT EDGE

TYPICAL ISLAND MARKING

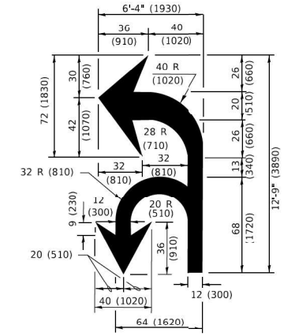

COMBINATION LEFT AND U–TURN

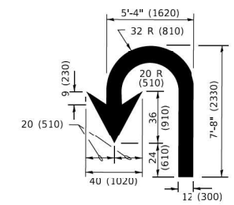

U–TURN

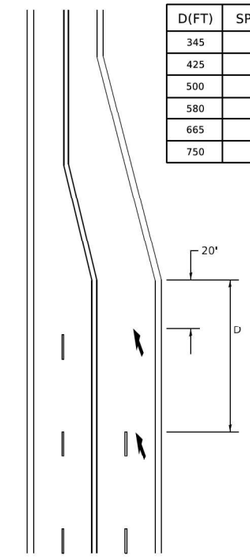

D(FT)	SPEED LIMIT
345	30
425	35
500	40
580	45
665	50
750	55

LANE REDUCTION TRANSITION

* LANE REDUCTION ARROWS REQUIRED AT SPEEDS OF 45 MPH OR GREATER OR WHEN SPECIFIED IN PLANS.

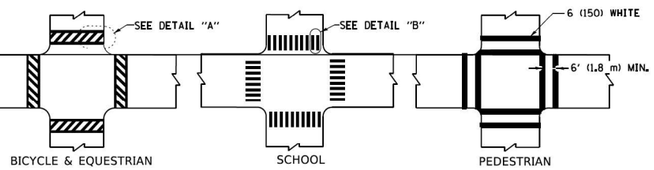

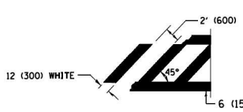

DETAIL "A"

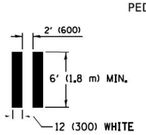

DETAIL "B"

TYPICAL CROSSWALK MARKING

* MARKINGS SHALL BE INSTALLED PARALLEL TO THE CENTERLINE OF THE ROAD WHICH IT CROSSES

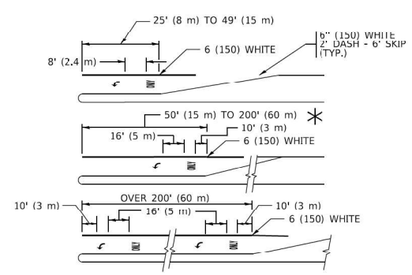

FULL SIZE LETTERS 8' (2.4 m) AND ARROWS SHALL BE USED.
AREA = 15.6 SQ. FT. (1.5 m²) ONLY AREA = 20.8 SQ. FT. (1.9 m²)

* TURN LANES IN EXCESS OF 400' (120 m) IN LENGTH MAY HAVE AN ADDITIONAL SET OF ARROW - "ONLY" INSTALLED MIDWAY BETWEEN THE OTHER TWO SETS OF ARROW - "ONLY".

TYPICAL LEFT (OR RIGHT) TURN LANE

TYPICAL TURN LANE MARKING

TYPE OF MARKING	WIDTH OF LINE	PATTERN	COLOR	SPACING / REMARKS
CENTERLINE ON 2 LANE PAVEMENT	4 (100)	SKIP-DASH	YELLOW	10' (3 m) LINE WITH 30' (9 m) SPACE
CENTERLINE ON MULTI-LANE UNDIVIDED PAVEMENT	2 @ 4 (100)	SOLID	YELLOW	11 (280) C-C
NO PASSING ZONE LINES: FOR ONE DIRECTION FOR BOTH DIRECTIONS	4 (100) 2 @ 4 (100)	SOLID SOLID	YELLOW YELLOW	5½ (140) C-C FROM SKIP-DASH CENTERLINE 11 (280) C-C OMIT SKIP-DASH CENTERLINE BETWEEN
LANE LINES	4 (100) 5 (125) ON FREEWAYS	SKIP-DASH SKIP-DASH	WHITE WHITE	10' (3 m) LINE WITH 30' (9 m) SPACE
DOTTED LINES (EXTENSIONS OF CENTER, LANE OR TURN LANE MARKINGS)	SAME AS LINE BEING EXTENDED	SKIP-DASH	SAME AS LINE BEING EXTENDED	2' (600) LINE WITH 6' (1.8 m) SPACE
EDGE LINES	4 (100)	SOLID	YELLOW-LEFT WHITE-RIGHT	OUTLINE MEDIANS IN YELLOW
TURN LANE MARKINGS	6 (150) LINE: FULL SIZE LETTERS & SYMBOLS (8' (2.4m))	SOLID	WHITE	SEE TYPICAL TURN LANE MARKING DETAIL
TWO WAY LEFT TURN MARKING	2 @ 4 (100) EACH DIRECTION 8' (2.4m) LEFT ARROW	SKIP-DASH AND SOLID IN PAIRS	YELLOW WHITE	10' (3 m) LINE WITH 30' (9 m) SPACE FOR SKIP-DASH; 5½ (140) C-C BETWEEN SOLID LINE AND SKIP-DASH LINE SEE TYPICAL TWO-WAY LEFT TURN MARKING DETAIL
CROSSWALK LINES (PEDESTRIAN) A. DIAGONALS (BIKE & EQUESTRIAN) B. LONGITUDINAL BARS (SCHOOL)	2 @ 6 (150) 12 (300) @ 45° 12 (300) @ 90°	SOLID SOLID SOLID	WHITE WHITE WHITE	NOT LESS THAN 6' (1.8 m) APART 2' (600) APART 2' (600) APART SEE TYPICAL CROSSWALK MARKING DETAILS.
STOP LINES	24 (600)	SOLID	WHITE	PLACE 4' (1.2 m) IN ADVANCE OF AND PARALLEL TO CROSSWALK, IF PRESENT. OTHERWISE, PLACE AT DESIRED STOPPING POINT. PARALLEL TO CROSSROAD CENTERLINE, WHERE POSSIBLE
PAINTED MEDIANS	2 @ 4 (100) WITH 12 (300) DIAGONALS @ 45° NO DIAGONALS USED FOR 4' (1.2 m) WIDE MEDIANS	SOLID	YELLOW: TWO WAY TRAFFIC WHITE: ONE WAY TRAFFIC	11 (280) C-C FOR THE DOUBLE LINE SEE TYPICAL PAINTED MEDIAN MARKING.
GORE MARKING AND CHANNELIZING LINES	8 (200) WITH 12 (300) DIAGONALS @ 45°	SOLID	WHITE	DIAGONALS: 15' (4.5 m) C-C (LESS THAN 30MPH (50 km/h)) 20' (6 m) C-C 30MPH (50 km/h) TO 45MPH (70 km/h)) 30' (9 m) C-C (OVER 45MPH (70 km/h))
RAILROAD CROSSING	24 (600) TRANSVERSE LINES; "RR" IS 6' (1.8 m) LETTERS; 16 (400) LINE FOR "X"	SOLID	WHITE	SEE STATE STANDARD 780001 AREA OF: "R"=3.6 SQ. FT. (0.33 m²) EACH "X"=54.0 SQ. FT. (5.0 m²)
SHOULDER DIAGONALS (REQUIRED FOR SHOULDERS ≥ 8')	12 (300) @ 45°	SOLID	WHITE - RIGHT YELLOW - LEFT	50' (15 m) C-C (LESS THAN 30MPH (50 km/h)) 75' (25 m) C-C (30 MPH (50 km/h) TO 45MPH (70 km/h)) 150' (45 m) C-C (OVER 45MPH (70 km/h))
U TURN ARROW	SEE DETAIL	SOLID	WHITE	16.3 SF
2 ARROW COMBINATION LEFT AND U TURN	SEE DETAIL	SOLID	WHITE	30.4 SF

FOR FURTHER DETAILS ON PAVEMENT MARKING REFER TO STANDARD SPECIFICATIONS FOR ROAD AND BRIDGE CONSTRUCTION AND STATE STANDARD 780001.

All dimensions are in inches (millimeters) unless otherwise shown.

MODE: Default
FILE NAME: pw:\\IL084EBIDINTEG.illinois.gov:PWIDOT\Documents\IDOT Offices\District 1\Projects\DistStd22x34\CADData\CADsheets\tc13.dgn

Primera
550 W. JACKSON BLVD. SUITE 600 . CHICAGO IL 60661 . P:312-466-0916 F:312-106-0415

USER NAME = footemj	DESIGNED - EVERS	REVISED - C. JUCIUS 09-09-09	
	DRAWN -	REVISED - C. JUCIUS 07-01-13	
PLOT SCALE = 50.0000 ' / in.	CHECKED -	REVISED - C. JUCIUS 12-21-15	
PLOT DATE = 3/4/2019	DATE - 03-19-90	REVISED - C. JUCIUS 04-12-16	

STATE OF ILLINOIS
DEPARTMENT OF TRANSPORTATION

DISTRICT ONE
TYPICAL PAVEMENT MARKINGS

SCALE: NONE | SHEET 1 OF 2 SHEETS | STA. TO STA.

F.A.U. RTE.	SECTION	COUNTY	TOTAL SHEETS	SHEET NO.
341	95-B	COOK	124	121

TC–13 | CONTRACT NO. 62D34
ILLINOIS | FED. AID PROJECT

TURN BAY ENTRANCE AT START OF LANE CLOSURE TAPER

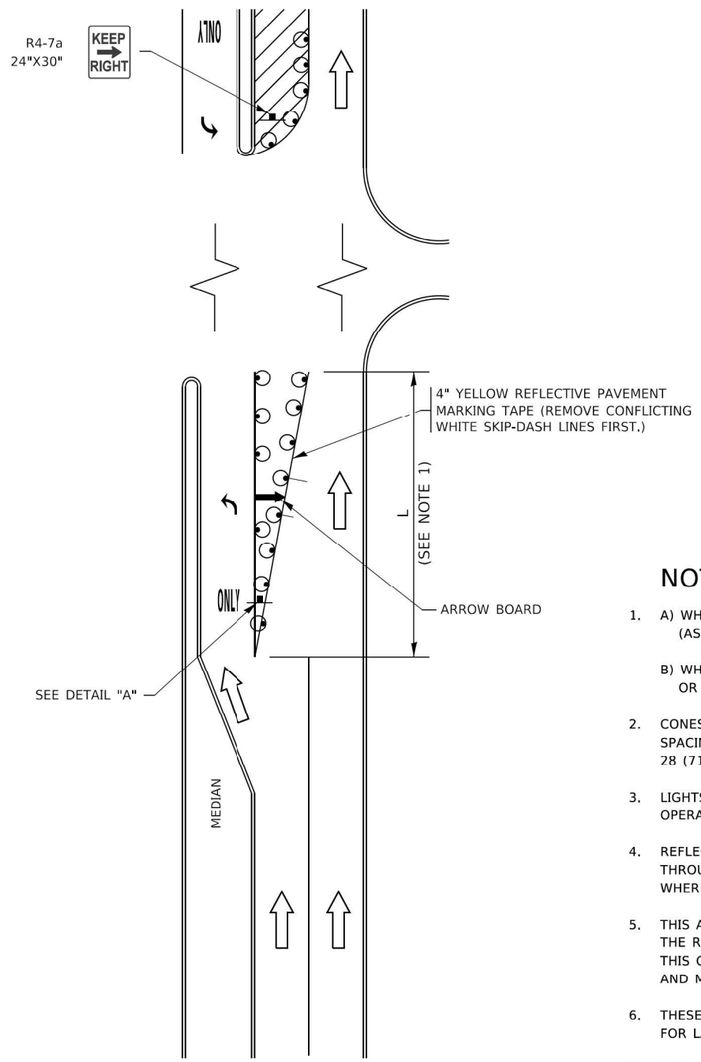

FIGURE 1

LEGEND

- WORK AREA
- LANE OPEN TO TRAFFIC
- ARROW BOARD
- TYPE I OR II BARRICADE OR DRUM WITH STEADY BURN LIGHT
- DRUM WITH STEADY BURN LIGHT
- SIGN ASSEMBLY
- TYPE I OR II CHECK BARRICADE WITH FLASHING LIGHT

NOTES:

1. A) WHEN "L" IS ≤ THE STORAGE LENGTH OF THE TURN LANE (AS SHOWN IN FIG. 1), USE FIGURE 1.

   B) WHEN "L" IS > THE STORAGE LENGTH OF THE TURN LANE OR THE TURN LANE IS WITHIN THE LANE CLOSURE, USE FIGURE 2.

2. CONES MAY BE SUBSTITUTED FOR BARRICADES OR DRUMS AT HALF THE SPACING DURING DAY OPERATIONS. CONES SHALL BE A MINIMUM OF 28 (710) IN HEIGHT.

3. LIGHTS WILL NOT BE REQUIRED ON BARRICADES OR DRUMS FOR DAY OPERATIONS. ALL LIGHTS SHALL BE MONODIRECTIONAL.

4. REFLECTIVE TEMPORARY PAVEMENT MARKINGS SHALL BE PLACED THROUGHOUT THE BARRICADED AREAS OF EACH TURN BAY AS SHOWN WHERE THE CLOSURE TIME IS GREATER THAN FOURTEEN (14) DAYS.

5. THIS APPLICATION ALSO APPLIES WHEN WORK IS BEING PERFORMED IN THE RIGHT LANE(S) AND THE RIGHT TURN BAY IS TO REMAIN OPEN. UNDER THIS CONDITION, "RIGHT TURN LANE" R3-I100R 24 x 24 (600 x 600) AND M6-2R 21 x 15 (530 x 380) SHALL BE USED.

6. THESE CONTROLS SHALL SUPPLEMENT MAINLINE TRAFFIC CONTROL FOR LANE CLOSURES.

7. THE SIGNS SHALL BE MOUNTED ABOVE THE BARRICADES/DRUMS ON SEPARATE SIGN SUPPORTS THAT MEET NCHRP 350 OR MASH PREQUIREMENTS.

8. TRAFFIC CONTROL AND PROTECTION AT TURN BAYS (TO REMAIN OPEN TO TRAFFIC) SHALL BE INCLUDED IN THE COST OF SPECIFIED TRAFFIC CONTROL STANDARDS OR ITEMS.

TURN BAY ENTRANCE WITHIN A LANE CLOSURE

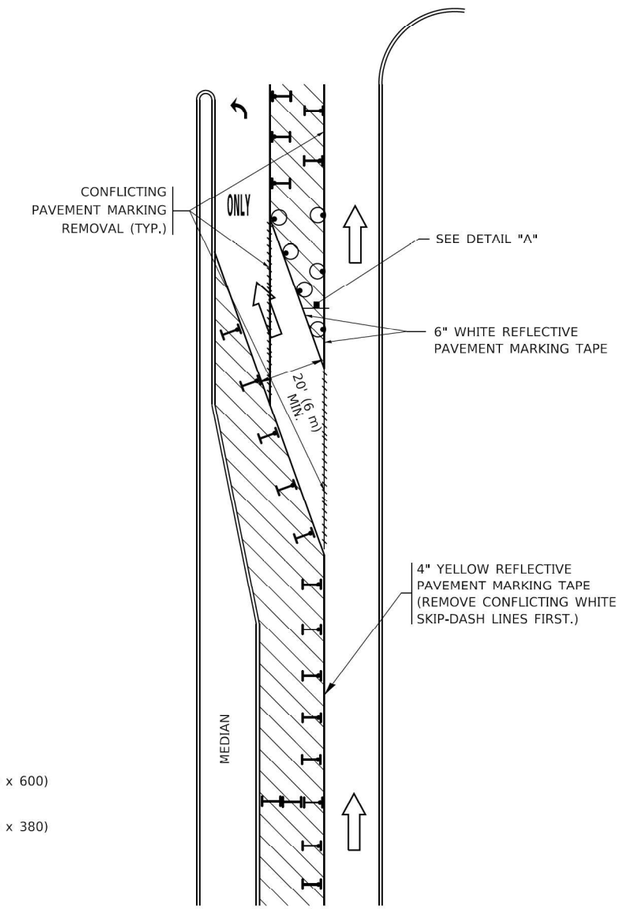

FIGURE 2

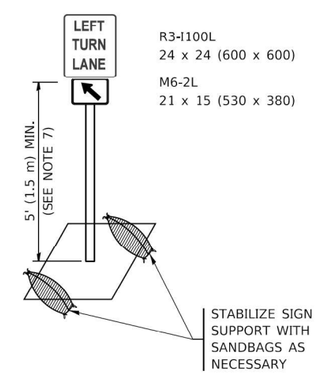

DETAIL A

All dimensions are in inches (millimeters) unless otherwise shown.

MODE: Default
FILE NAME: pw:\\IL084EBIDINTEG.illinois.gov:PWIDOT\Documents\IDOT Offices\District 1\Projects\DistStd22x34\CADData\CADsheets\tc14.dgn

Primera
150 W. JACKSON BLVD. SUITE 400 CHICAGO IL 60661 P:312-663-0910 F:312-106-0413

USER NAME = footemj	DESIGNED - T. RAMMACHER 09-08-94	REVISED - R. BORO 09-14-09	STATE OF ILLINOIS DEPARTMENT OF TRANSPORTATION	TRAFFIC CONTROL AND PROTECTION AT TURN BAYS (TO REMAIN OPEN TO TRAFFIC)	F.A.U. RTE. 341 / SECTION 95-B / COUNTY COOK / TOTAL SHEETS 124 / SHEET NO. 122
	DRAWN - A. HOUSEH 11-07-95	REVISED - A. SCHUETZE 07-01-13			TC-14 / CONTRACT NO. 62D34
PLOT SCALE = 50.0000 ' / in.	CHECKED - A. HOUSEH 10-12-96	REVISED - A. SCHUETZE 09-15-16			
PLOT DATE = 3/4/2019	DATE - T. RAMMACHER 01-06-00	REVISED -		SCALE: NONE / SHEET 1 OF 1 SHEETS / STA. TO STA.	ILLINOIS / FED. AID PROJECT

tc14.dgn 3/4/2019 10:36:01 AM User:footemj

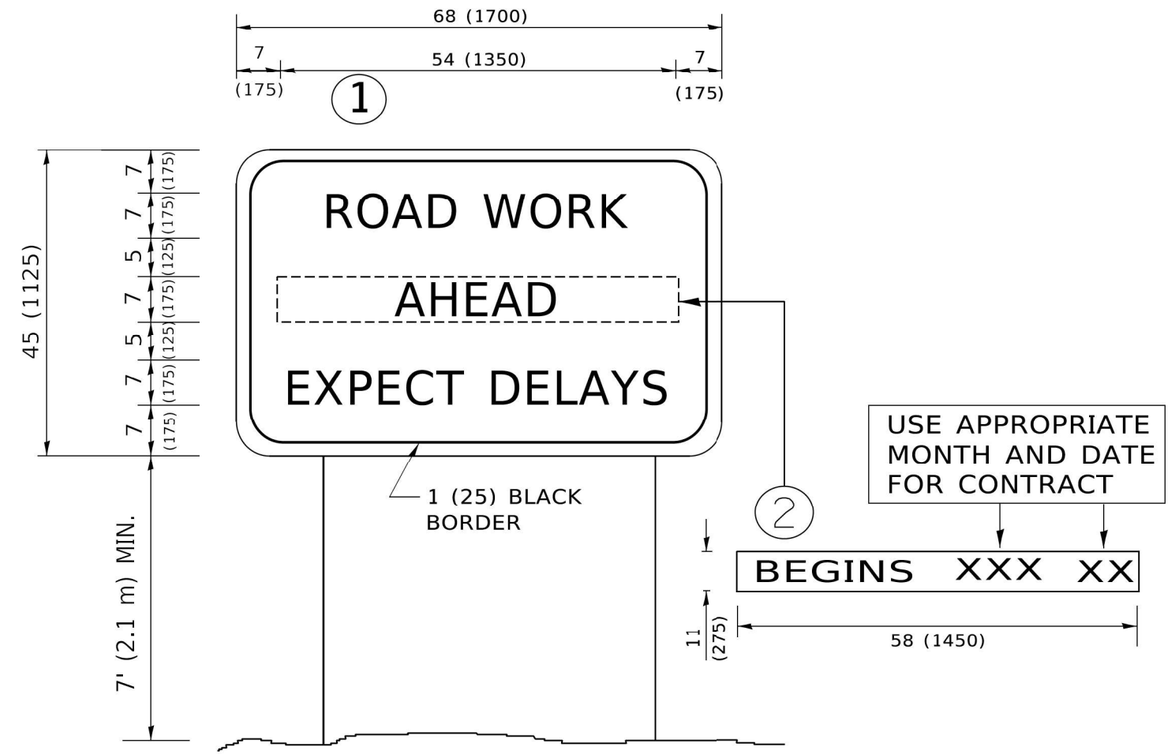

NOTES:

1. USE BLACK LETTERING ON ORANGE BACKGROUND.
2. ERECT SIGNS IN ADVANCE OF THE LOCATION FOR THE "ROAD CONSTRUCTION AHEAD" SIGN AT LOCATIONS AS DIRECTED BY THE ENGINEER.
3. ERECT SIGN (1) WITH INSTALLED PANEL (2) ONE WEEK PRIOR TO THE START OF CONSTRUCTION.
4. REMOVE PANEL (2) SOON AFTER THE START OF CONSTRUCTION.
5. SEE SPECIAL PROVISION FOR "TEMPORARY INFORMATION SIGNING" FOR ADDITIONAL INFORMATION.
6. ONE SIGN ASSEMBLY EQUALS 25.70 SQ. FT. (2.3 SQ. M.)
7. SHALL BE PAID FOR AS TEMPORARY INFORMATION SIGNING.

ALL DIMENSIONS ARE IN INCHES (MILLIMETERS) UNLESS OTHERWISE SHOWN.

MODE: : Default
FILE NAME: pw:\\IL084EBIDINTEG.illinois.gov:PWIDOT\Documents\IDOT Offices\District 1\Projects\Dist5\d22x34\CADdata\CADsheets\tc22.dgn

Primera
550 W. JACKSON BLVD. SUITE 600 . CHICAGO IL 60661 . P:312-663-0910 F:312-106-0415

USER NAME = footemj	DESIGNED -	REVISED - R. MIRS 09-15-97	STATE OF ILLINOIS DEPARTMENT OF TRANSPORTATION	ARTERIAL ROAD INFORMATION SIGN
	DRAWN -	REVISED - R. MIRS 12-11-97		
PLOT SCALE = 50.0000 ' / in.	CHECKED -	REVISED -T. RAMMACHER 02-02-99		
PLOT DATE = 3/4/2019	DATE -	REVISED - C. JUCIUS 01-31-07		SCALE: NONE SHEET 1 OF 1 SHEETS STA. TO STA.

F.A.U. RTE.	SECTION	COUNTY	TOTAL SHEETS	SHEET NO.
341	95-B	COOK	124	123
TC-22		CONTRACT NO. 62D34		
		ILLINOIS	FED. AID PROJECT	

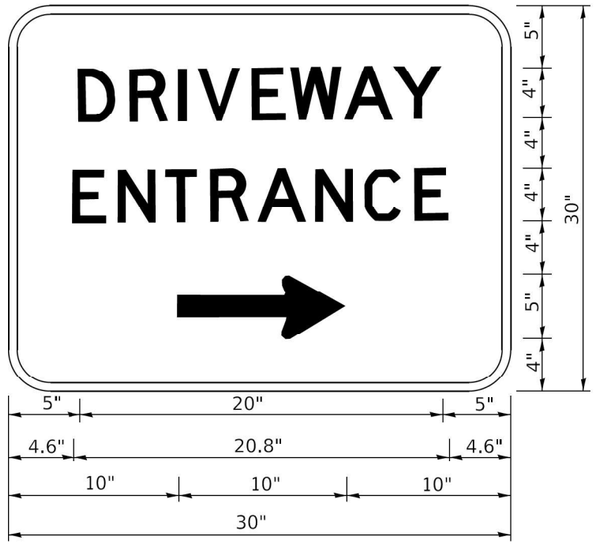

3.0" RADIUS, 0.5" BORDER, WHITE ON GREEN; REFLECTORIZED
"DRIVEWAY" D; "ENTRANCE" D; STANDARD ARROW CUSTOM 12.0" x 5.0"

NOTES:

1. HALF OF THE SIGNS WILL REQUIRE A LEFT HAND FACING ARROW.
2. TWO SIGNS SHALL BE USED AT EACH COMMERCIAL ENTRANCE PLACED BACK-TO-BACK: ONE WITH A RIGHT HAND ARROW (SHOWN) SHALL BE PLACED ON THE NEAR RIGHT SIDE THE DRIVEWAY AND ONE WITH A LEFT HAND ARROW SHALL BE PLACED ON THE FAR LEFT SIDE OF THE DRIVEWAY.
3. SIGNS TO BE PAID FOR AS ITEM "TEMPORARY INFORMATION SIGNING".