LIGHT POLE MOUNTING HEIGHT	BOLT CIRCLE DIAMETER	STEEL FOUNDATION		CONCRETE FOUNDATION		
		SHAFT DIAMETER	SHAFT DEPTH	SHAFT DIAMETER	SHAFT DEPTH	ANCHOR ROD LENGTH*
≤ 30'	11½"	8⅝"	6'-0"	24"	5'-0"	4'-9"
31'-35'	11½"	8⅝"	6'-0"	24"	5'-6"	5'-3"
36'-40'	15"	8⅝"	6'-0" **	24"	6'-0"	5'-9"
41'-45'	15"	8⅝"	6'-0" **	24"	6'-6"	6'-3"
46'-50'	15"	8⅝"	8'-0"	24"	7'-0"	6'-9"

* Length does not include 4 hook
** 8⅝"x 8'-0" for Twin luminaires

Notes:

All foundations are designed to be located on slopes not exceeding 2:1 where soils have an uncon ned compressive strength of at least 1.0 TSF. The contractor shall verify the soil strength during drilling for concrete foundations or by monitoring installation resistance on steel foundations and notify the engineer if other conditions are encountered.

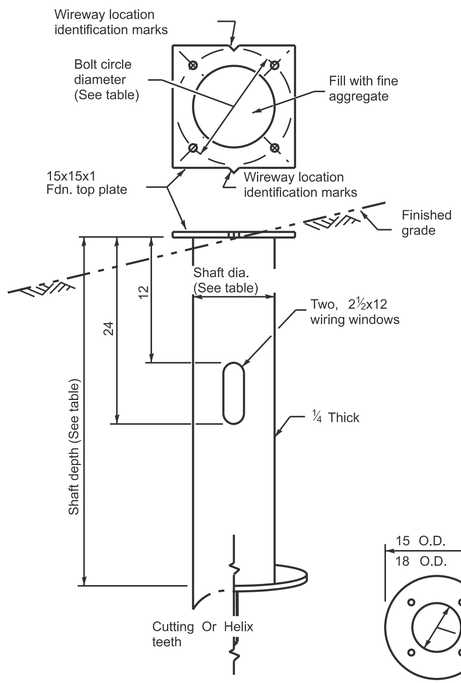

STEEL FOUNDATION

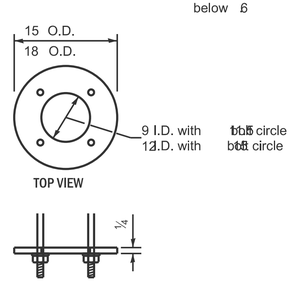

RING PLATE DETAIL

(When rock is encountered and foundation is shallower)

Notes:

Wireway may be on front, back, or side of foundation as required by the trenching. Place door of transformer base on wireway side to minimize the number of unit duct bends.

Top of schedule 40 PVC 5 I.D. PVC wiring window, shall be ush with the top of foundation for drainage.

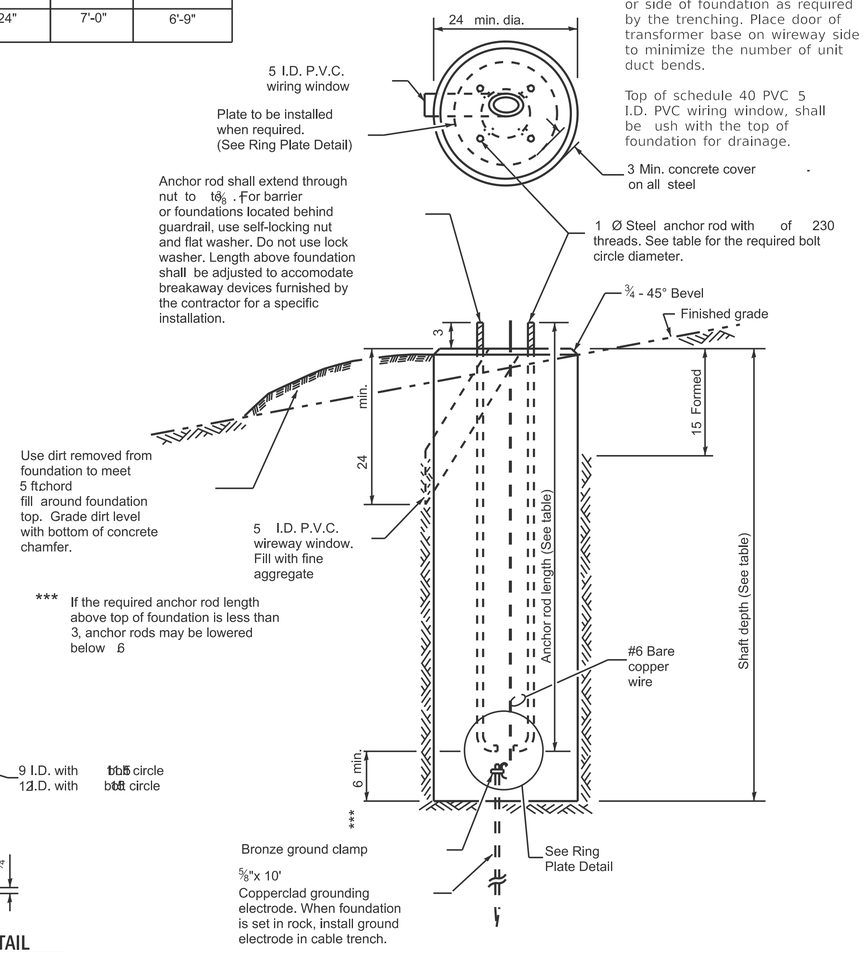

*** If the required anchor rod length above top of foundation is less than 3, anchor rods may be lowered below 6

CONCRETE FOUNDATION

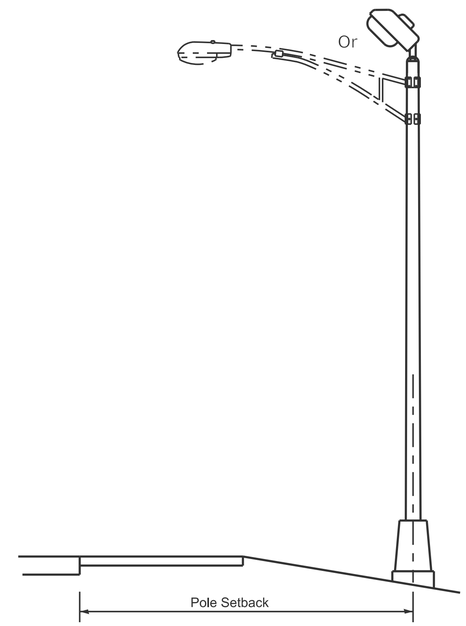

Pole Foundation Setback:

For horizontal mounted luminaires, setback shall be a minimum of 20' from edge of pavement.

For vertical mount luminaires, setback shall be a minimum of 30' from edge of pavement. Poles shall be located 5' behind guardrail or other protective barriers, or as directed by the Engineer.

800–LGT836.DGN

LIGHT POLE FOUNDATION