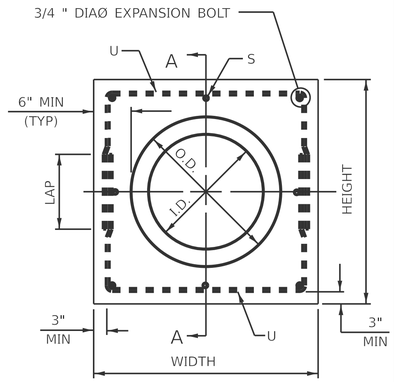

PIPE CULVERT EXTENSION COLLAR

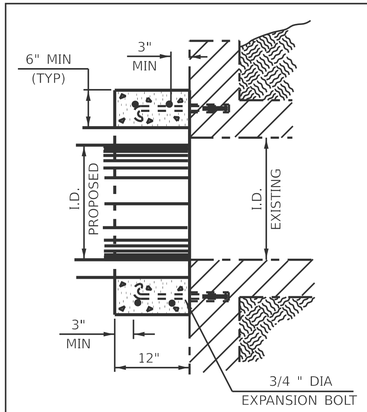

SECTION TYPE A
(BOX END EXTENSION)

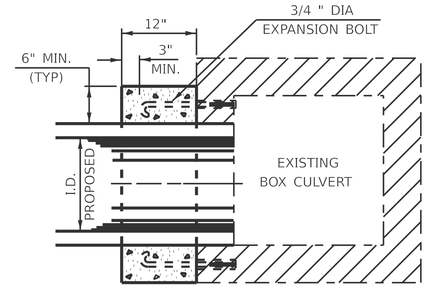

SECTION TYPE B
(PIPE IN SIDE EXTENSION)

SECTION A – A

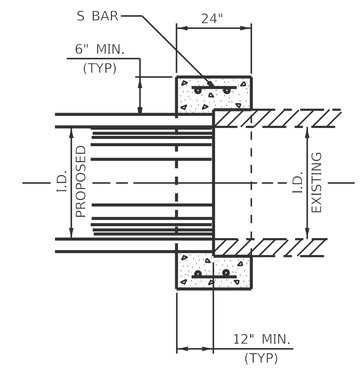

SECTION TYPE C
(PIPE END TO PIPE END EXTENSION
NO EXPANSION BOLTS REQUIRED)

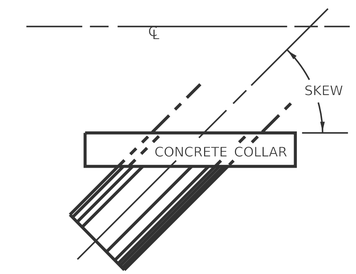

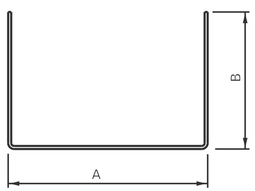

#4 U – BAR

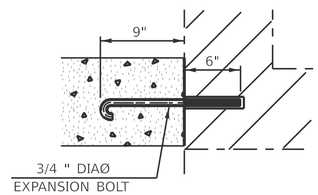

EXPANSION BOLT DETAIL

NOTES:

1. EXPANSION BOLTS SHALL CONSIST OF SELF DRILLING EXPANSION SHIELDS AND ¾" DIAØ HOOKED BOLTS. HOOKED BOLTS SHALL EXTEND A MINIMUM OF 9" INTO NEW CONCRETE. MINIMUM CERTIFIED PROOF LOAD - 4,080 LBS.

2. USE MINIMUM OF 1 (ONE) EXPANSION BOLT AT EACH CORNER.

BOX CULVERT POURED IN PLACE EXTENSION

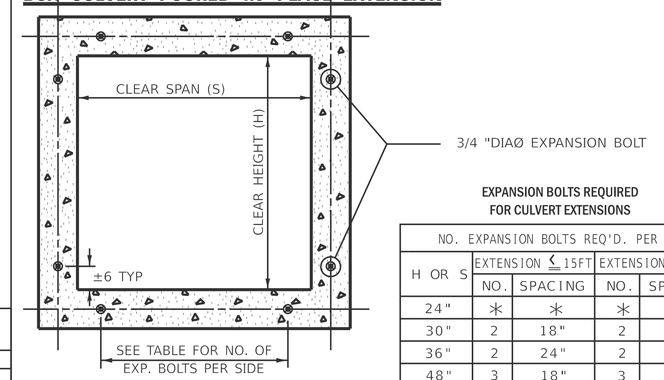

SECTION THRU BARREL

EXPANSION BOLTS REQUIRED FOR CULVERT EXTENSIONS

NO. EXPANSION BOLTS REQ'D. PER SIDE				
H OR S	EXTENSION ≤ 15FT		EXTENSION > 15FT	
	NO.	SPACING	NO.	SPACING
24"	*	*	*	*
30"	2	18"	2	18"
36"	2	24"	2	24"
48"	3	18"	3	18"
60"	4	16"	3	24"
72"	5	15"	4	20"
84"	5	18"	4	24"
96"	6	17"	5	21"
108"	6	19"	5	24"
120"	7	18"	6	21"
132"	8	17"	6	24"
144"	8	19"	7	22"

NOTE: NUMBER OF EXPANSION BOLTS IN TABLE BASED ON NON-SKEWED CULVERTS.

* USE MINIMUM 1 (ONE) EXPANSION BOLT IN EACH CORNER.

STATION	SECTION TYPE	SKEW	EXISTING CULVERT	PROPOSED CULVERT		COLLAR		REINFORCEMENT BARS									EXPANSION BOLTS 3/4 "	CLASS SI CONCRETE COLLAR
								S BAR			U BAR					LB		
			SIZE	I.D.	O.D.	HEIGHT	WIDTH	NO.	SIZE	LENGTH	NO.	SIZE	A	B	LAP	LENGTH	EACH	YD^3