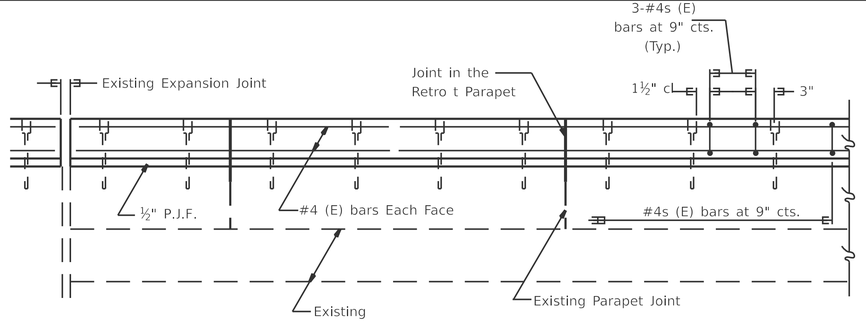

INSIDE ELEVATION OF PARAPET

PRECAST ALTERNATE

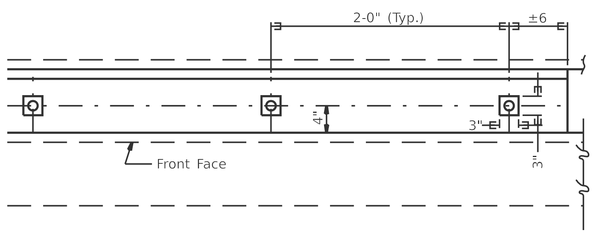

TOP VIEW

(Showing spacing of¾" } H.S. Threaded Rods)

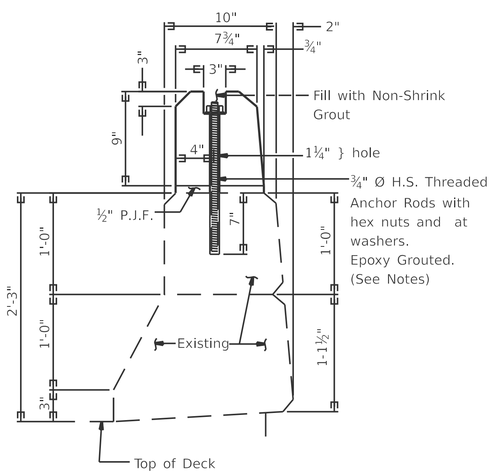

PRECAST

(Showing Attachment)

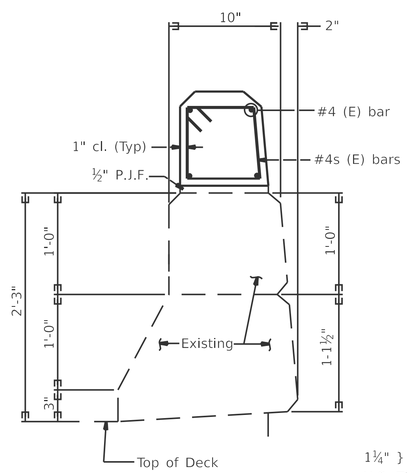

PRECAST

(Showing Reinforcement)

INSIDE ELEVATION OF PARAPET

CAST-IN-PLACE ALTERNATE

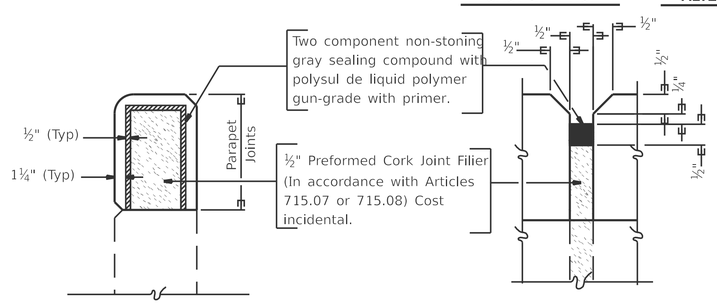

PARAPET JOINT DETAIL

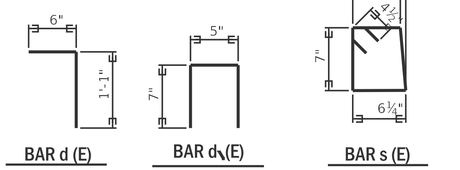

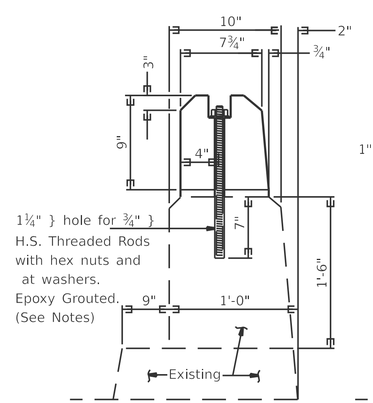

PRECAST

(Showing Attachment)

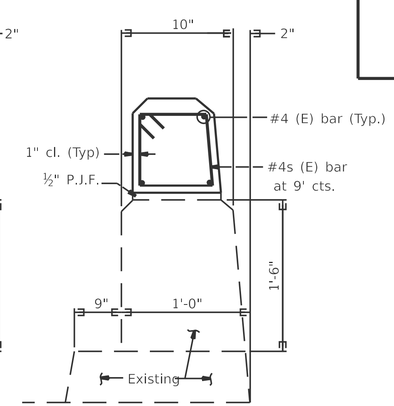

PRECAST

(Showing Reinforcement)

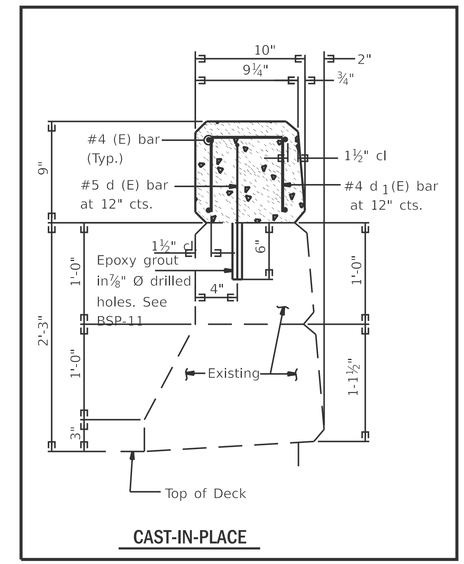

CAST-IN-PLACE

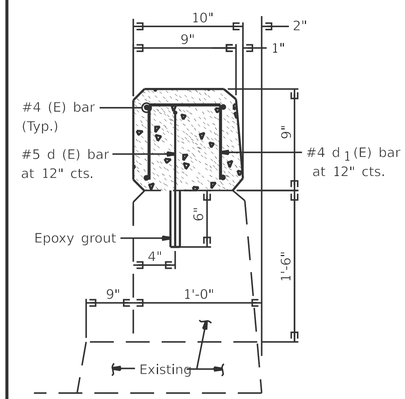

CAST-IN-PLACE

GENERAL NOTES

Class X Concrete shall be used throughout.
All exposed edges shall be chamfered ¾"
Class X Concrete, Reinforcement Bars (E), Threaded Anchor Rods, ½" P.J.F. and all other accessories needed for installation and erection will be paid for at the unit price per lineal foot for Retro t Concrete Parapet.
The Contractor shall use the capsule or the adhesive cartridge type anchor rods that have been previously tested and given a prior approval by the Department. The Contractor shall install these anchor rods in pre-drilled holes in accordance with the manufacturer's recommendations and procedures.
The capsule or the adhesive cartridge shall be a sealed glass capsule or a sealed glass adhesive cartridge containing premeasured amount of adhesive chemical. The threaded rod stud with nut & washers shall conform to ASTM A-307.

The existing ¾" Ø and 1" Ø welded studs shall be burned, sawed or chipped o ush with the top of the existing parapet.
Holes for the dowel rods shall miss existing parapet joints.
The precast sections may be cast in units of 3', 5', 7' ....etc. length as desired. Where they overlap the joints in the parapet, the precast units shall be saw cut to line up with the joints in the parapet. The sawcut faces of the units shall be given a coat of boiled linseed oil mixture (Protective Coat).

BILL OF MATERIALS

ITEM	UNIT	QUANTITY
Retro t Concrete Parapet	Lin. Ft.	

PARAPET RETROFIT
FOR ALUM. HANDRAIL