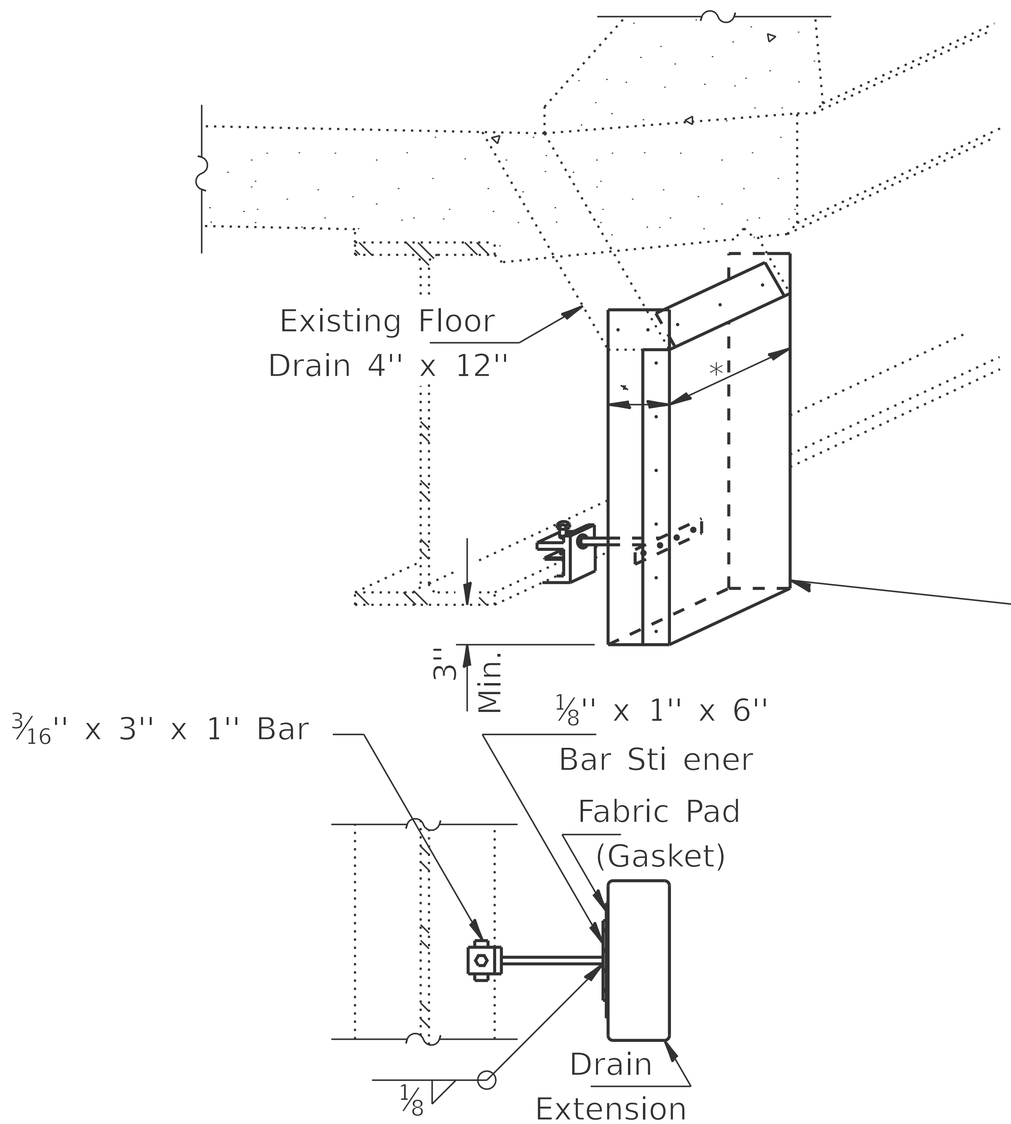

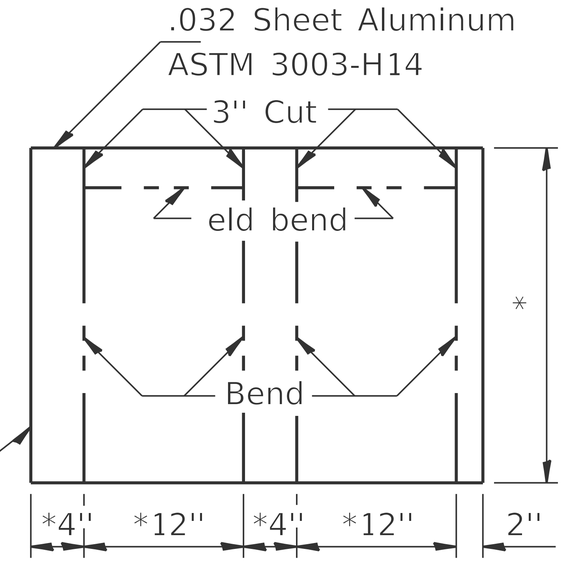

Drain Extension

Drill and pop rivet 2'' from each corner and on 4'' cts. along top edge into existing drains on 8'' cts. at side seam.

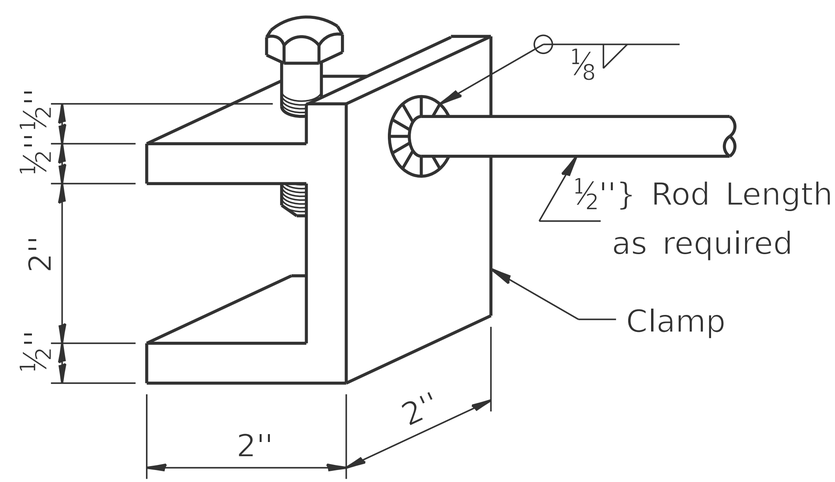

STEEL CLAMP

Notes:

Pop rivet the 1/8'' x 1'' bar to Drain Extension. Weld or securely attach rod to both the clamp and bar sti ener. Use 3/16'' stainless steel pop rivets of su cient length.

Clamp shown in approximate dimensions. Similar commerically available may be substituted.

* Field measure cut to t existing drain.

An aluminum extrusion drain extension of similar dimensions may be substituted.

DRAIN EXTENSION DETAILS