11/07/2025 LETTING ITEM 120

85779

F.A.U.	SECTION	COUNTY	TOTAL SHEETS	SHEET NO.
5563	19-00137-00-BR	WHITESIDE	60	1
	WHA* 1286J24	CONTRACT 85779		
	ILLINOIS			

INDEX OF SHEETS

STANDARDS

000001-08	STANDARD SYMBOLS, ABBREVIATIONS & PATTERNS
001001-02	AREAS OF REINFORCEMENT BARS
280001-07	TEMPORAY EROSION CONTROL SYSTEMS
515001-04	NAME PLATE FOR BRIDGES
542301-03	PRECAST REINFORCED CONCRETE FLARED END SECTION
601101-02	CONCRETE HEADWALL FOR PIPE UNDERDRAINS
602402-03	PRECAST MANHOLE TYPE A 5' DIAMETER
602701-02	MANHOLE STEPS
604001-05	FRAME AND LIDS TYPE 1
606001-08	CONCRETE CURB TYPE B AND COMBINATION CONCRETE CURB AND GUTTER
606306-04	CORRUGATED PC CONCRETE MEDIANS
701001-02	OFF-ROAD OPERATIONS, 2L, 2W, MORE THAN 15' (4.5 m) AWAY
701006-05	OFF-ROAD OPERATIONS, 2L, 2W, 15' (4.5 m) TO 24" (600 mm) FROM PAVEMENT EDGE
701801-06	SIDEWALK, CORNER OR CROSSWALK CLOSURE
701901-10	TRAFFIC CONTROL DEVICES
720001-01	SIGN PANEL MOUNTING DETAILS
720006-04	SIGN PANEL ERECTION DETAILS
720011-01	METAL POST FOR SIGNS, MARKERS & DELINEATORS
725001-01	OBJECT AND TERMINAL MARKERS
728001-01	TELESCOPING STEEL SIGN SUPPORT
729001-01	APPLICATIONS OF TYPES A & B METAL POSTS (FOR SIGNS & MARKERS
780001-05	TYPICAL PAVEMENT MARKINGS
D2 - 40.1	TYPICAL APPLICATION FOR ROAD CLOSURE

FOR LIST OF UTILITIES SEE SHEET NO 2

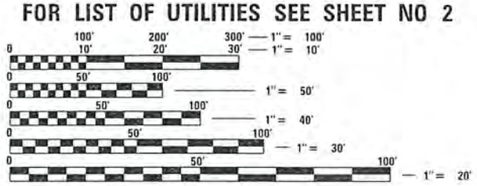

FULL SIZE PLANS HAVE BEEN PREPARED USING STANDARD ENGINEERING SCALES. REDUCED SIZED PLANS WILL NOT CONFORM TO STANDARD SCALES. IN MAKING MEASUREMENTS ON REDUCED PLANS, THE ABOVE SCALES MAY BE USED.

J.U.L.I.E.
JOINT UTILITY LOCATION INFORMATION FOR EXCAVATION
1-800-892-0123
OR 811

PROJECT ENGINEER – BKC
PROJECT MANAGER – BKC

CONTRACT NO. 85779

Know what's **below.**
Call before you dig.

STATE OF ILLINOIS
DEPARTMENT OF TRANSPORTATION

PLANS FOR PROPOSED FEDERAL AID PROJECT BRIDGE RECONSTRUCTION URBAN – BRIDGE (FY–25)

CITY OF ROCK FALLS
WHITESIDE COUNTY
F.A.U. 5563 (E. ELEVENTH ST.) OVER ILLINOIS MISSISSIPPI FEEDER CANAL
SECTION NO. 19–00137–00–BR
PROJECT NO. AHB1(441)
JOB NO. C–92–018–22

RANGE 7 EAST OF THE 4TH PM

CONSTRUCTION BEGINS
STATION 16+75.00

PROPOSED STRUCTURE: S.N. 098-6010
THREE SPAN (33.5'-37.5'-27.75') CONTINUOUS CAST IN PLACE CONCRETE SLAB BRIDGE WITH CLOSED ABUTMENTS AND PILE BENT PIERS. SUBSTRUCTURES ARE SUPPORTED BY PILE FOUNDATIONS.

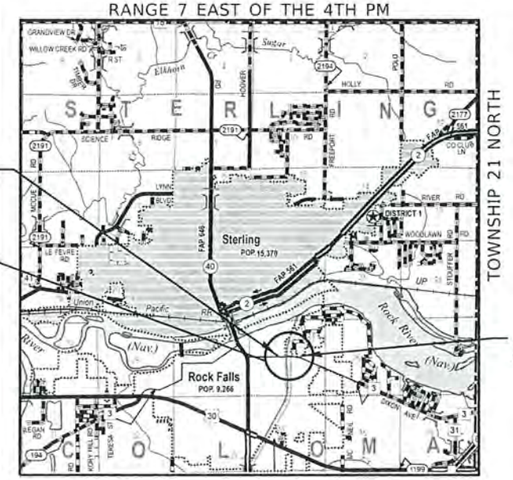

CONSTRUCTION ENDS
STATION 23+50

LOCATION MAP SCALE
0 1 2 4 MILES

GROSS LENGTH = 675 FT. = 0.128 MILE
NET LENGTH = 675 FT. = 0.128 MILE

LOCATION OF SECTION INDICATED THUS: –

STATE OF ILLINOIS
GREGORY B. GERARDY
#062-073829
LICENSED PROFESSIONAL ENGINEER
DIXON, IL

DATE: 8/14/2025
EXPIRES 11/30/25

CITY OF ROCK FALLS

APPROVED 8-14-25 2025
CITY OF ROCK FALL MAYOR

PASSED August 25, 2025 2025
DISTRICT 2 LOCAL ROADS & STREETS ENGINEER

RELEASING FOR BID BASED ON LIMITED REVIEW 08/25/2025 2025
DEPUTY DIRECTOR OF HIGHWAYS, REGION 2 ENGINEER

FUNCTIONAL CLASSIFICATION
COLLECTOR (URBAN)
DESIGN SPEED 30 MPH
2025 ADT = 1300
URBAN & BICYCLE GUIDELINES

WILLETT HOFMANN & ASSOCIATES INC
ENGINEERING ARCHITECTURE LAND SURVEYING
809 EAST 2ND STREET, DIXON, IL 61021-0367
T: 815-284-3381 DESIGN FIRM: #184-000918

GENERAL NOTES

THE STANDARD SPECIFICATIONS FOR ROAD AND BRIDGE CONSTRUCTION, ADOPTED JANUARY 1, 2022 BY THE ILLINOIS DEPARTMENT OF TRANSPORTATION SHALL GOVERN THE CONSTRUCTION OF THE IMPROVEMENTS.

IN THESE CONTRACT DOCUMENTS MENTION IS MADE OF THE "ENGINEER", WHICH SHALL MEAN WILLETT, HOFMANN & ASSOCIATES, INC. OR THEIR DULY AUTHORIZED AGENT.

THE PROPOSED IMPROVEMENTS MUST BE CONSTRUCTED IN ACCORDANCE WITH THE ENGINEERING PLANS AS APPROVED BY THE CITY. THE CONSTRUCTION DETAILS, AS PRESENTED ON THESE PLANS MUST BE FOLLOWED BY THE CONTRACTOR; IMPROVEMENT REPRESENTATIONS AS SHOWN ARE AS ACCURATE AS POSSIBLE FROM THE INFORMATION AVAILABLE. HOWEVER, SOME FIELD REVISIONS MAY BE REQUIRED TO ACCOMMODATE UNFORESEEN CIRCUMSTANCES. THE ENGINEER SHALL BE ADVISED OF ANY NECESSARY REVISIONS WITH SUFFICIENT LEAD TIME ALLOWED TO PROPERLY CONSIDER AND ACT UPON SAID REQUESTS. PROPER CONSTRUCTION TECHNIQUES MUST BE FOLLOWED IN CONSTRUCTING THOSE IMPROVEMENTS AS DETAILED IN THIS ENGINEERING PLAN. EXTREME CAUTION MUST BE EXERCISED REGARDING THE COMPACTION OF ALL UTILITY TRENCHES.

THE CONTRACTOR SHALL CAREFULLY PRESERVE ALL PROPERTY MARKS, SECTION OR SUBSECTION MONUMENTS ENCOUNTERED, UNTIL AN OWNER OR AUTHORIZED SURVEYOR OR AGENT HAS WITNESSED OR OTHERWISE REFERENCED THEIR LOCATION. ANY PROPERTY MARKS, SECTION OR SUBSECTION MONUMENTS UNLESS REFERENCED, DAMAGED BY THE CONTRACTOR SHALL BE REPLACED AT THE EXPENSE OF THE CONTRACTOR.

THE CONTRACTOR SHALL COOPERATE WITH THE CITY AND ADJACENT LANDOWNERS WITH REGARDS TO ACCESS TO PRIVATE PROPERTY, AS WELL AS THE U.S. POSTAL SERVICE FOR MAIL DELIVERY. ACCESS TO BUSINESSES TO REMAIN OPEN AT ALL TIMES.

THE LOCATION AND ELEVATION OF UNDERGROUND UTILITIES AS SHOWN ON THE PLANS ARE NOT TO BE TAKEN AS EXACT. THE CONTRACTOR SHALL VERIFY AND LOCATE ALL EXISTING UTILITIES ON OR ADJACENT TO THE SITE. PRIOR TO BEGINNING CONSTRUCTION ACTIVITIES, CONTACT J.U.L.I.E. AT 1-800-892-0123 AND THE CITY FOR EXACT FIELD LOCATION OF UTILITIES. THE CONTRACTOR SHALL USE SPECIAL CARE WHEN CONDUCTING CONSTRUCTION OPERATIONS NEAR THEM TO PREVENT DAMAGE. DAMAGE, AND THE COST TO REPAIR SAID DAMAGE, SHALL BE THE SOLE RESPONSIBILITY OF THE CONTRACTOR.

CONTRACTOR SHALL CLEAN UP ALL EXCESS MATERIALS AND DEBRIS CAUSED AS A RESULT OF WORK UNDER THIS CONTRACT AT THE COMPLETION OF THE PROJECT AT NO ADDITIONAL COST.

CONTRACTOR SHALL BE RESPONSIBLE FOR ANY AND ALL DAMAGE RESULTING FROM THE PERFORMANCE OF THE WORK UNDER THIS CONTRACT.

CONTRACTOR SHALL SUBMIT A SCHEDULE FOR THEIR SEQUENCE OF OPERATIONS TO BE APPROVED BY THE ENGINEER PRIOR TO THE START OF CONSTRUCTION. SEQUENCE WILL INCLUDE PLANS TO KEEP BUSINESSES ACCESSIBLE AT ALL TIMES.

COPIES OF ALL DELIVERY TICKETS FOR MATERIALS USED IN THE PROJECT SHALL BE SUBMITTED TO THE ENGINEER OR CITY PRIOR TO PAYMENT FOR THE WORK.

FINAL INSPECTION OF THE WORK PERFORMED UNDER THIS CONTRACT WILL BE DONE BY THE ENGINEER AND CITY PRIOR TO FINAL ACCEPTANCE. DEFECTS SHALL BE CORRECTED BY THE CONTRACTOR WITHOUT COST TO THE CITY PRIOR TO ISSUANCE OF THE FINAL PAYMENT. ALL WORK PERFORMED UNDER THIS CONTRACT SHALL BE GUARANTEED WITH REGARD TO WORKMANSHIP AND MATERIALS FOR A PERIOD OF ONE YEAR AFTER THE DATE OF ACCEPTANCE. DEFECTS WHICH ARISE DURING THE GUARANTEE PERIOD SHALL BE REPAIRED OR REPLACED BY THE CONTRACTOR AT NO EXPENSE TO THE CITY WITHIN 30 DAYS OF RECEIVING NOTIFICATION OF THE DEFECT.

THE CONTRACTOR SHALL CHECK WITH THE CITY PRIOR TO ADJUSTING ANY WATER VALVE BOXES. DOMESTIC WATER SERVICE VALVES MAY BE ADJUSTED BY ILLINOIS AMERICAN WATER CO. CONTINGENCY QUANTITIES HAVE BEEN INCLUDED IN THE PLANS FOR VALVE BOXES TO BE ADJUSTED, HOWEVER, ANY WATER VALVE BOXES ADJUSTED BY OTHERS WILL NOT BE PAID FOR UNDER THE CONTRACT UNIT PRICE FOR VALVE BOXES TO BE ADJUSTED.

ALL TREES LESS THAN 6" IN DIAMETER WITHIN THE CONSTRUCTION LIMITS SHOWN ON THE PLANS TO BE REMOVED WILL NOT BE PAID FOR UNDER THE BID ITEM OF "TREE REMOVAL" BUT RATHER THE COST OF REMOVING THESE TREES SHALL BE CONSIDERED INCLUDED IN THE CONTRACT UNIT PRICE BID PER CUBIC YARD FOR EARTH EXCAVATION.

EXISTING SIGNS AND TRAFFIC SIGNS THAT ARE WITHIN THE CONSTRUCTION LIMITS SHALL BE REMOVED AND RESET BY THE CONTRACTOR. THE COST OF REMOVING AND RESETTING SHALL BE CONSIDERED INCIDENTAL TO THE CONTRACT.

ALL HONEYCOMBING AND/OR POROUS AREAS IN BACK OF CURB WILL BE CORRECTED AS DIRECTED BY THE ENGINEER. SLUMP NOT TO EXCEED 3". REQUIRED AIR, 5% - 8%. NO WATER MAY BE ADDED AT JOBSITE TO EXCEED THE DESIGN SLUMP. ALL TIE BARS, DOWEL BARS AND REINFORCING STEEL SHALL BE EPOXY COATED.

THE CONTRACTOR SHALL BE RESPONSIBLE FOR LOCATING AND PROTECTING UTILITY PROPERTY DURING CONSTRUCTION OPERATIONS AS OUTLINED IN ARTICLE 107.39 OF THE STANDARD SPECIFICATIONS. A MINIMUM OF 48 HOURS ADVANCE NOTICE IS REQUIRED FOR NON-EMERGENCY WORK. THE JULIE NUMBER IS 800-892-0123. THE FOLLOWING LISTED UTILITIES LOCATED WITHIN THE PROJECT LIMITS OR IMMEDIATELY ADJACENT TO THE PROJECT CONSTRUCTION LIMITS ARE MEMBERS OF JULIE:

COMCAST
THOMAS MUNAR
THOMAS_MUNAR@CABLE.COMCAST.COM
688 INDUSTRIAL DRIVE
ELMHURST, IL 61026
224-229-5862

AT&T (DISTRIBUTION)
JEREMY SCHNACK
PH: (309)-912-0811
EMAIL: JS2371@ATT.COM

NICOR GAS
KAREY JOHNSON
KAREJOHN@SOUTHERNCO.COM
1844 FERRY RD.
NAPERVILLE, IL 60563
630-388-2923

COMMERCIAL BROADBAND SOLUTION
MAPLE WIRELESS
RYAN COATES
RCOATES@MAPLEWIRELESS.COM

CITY OF ROCK FALLS (ELECTRIC)
LARRY HANRARAN
LHANRAHAN@ROCKFALLS61071.COM
1109 INDUSTRIAL PARK ROAD
ROCK FALLS, IL 61071
(O) 815-622-1145

CITY OF ROCK FALLS (WATER)
TED PADILLA
TPADILLA@ROCKFALLS61071.COM
603 W. TENTH STREET
ROCK FALLS, IL 61071
(O) 815-622-1125

CITY OF ROCK FALLS (SEWER)
TED PADILLA
TPADILLA@ROCKFALLS61071.COM
603 W. TENTH STREET
ROCK FALLS, IL 61071
(O) 815-622-1102

IDOT IS NOT A MEMBER OF JULIE. IF YOU ARE NEAR ANY OVERHEAD LIGHTING, INTERSECTION LIGHTING OR TRAFFIC SIGNALS, CONTACT THE IDOT TRAFFIC OFFICE AT 815-284-5469 AT LEAST 48 HOURS PRIOR TO WORK.

COMMITMENTS:

1. ALL TREE REMOVAL MUST OCCUR OUTSIDE THE NORTHERN LONG EARED BAT AND THE INDIANA BAT MATERNITY ROOSTING SEASON. TREE REMOVAL MUST BE BETWEEN THE DATES OF OCTOBER 1 AND MARCH 31.
2. EROSION CONTROL BLANKET TO BE USED SHOULD BE PLASTIC FREE AND WILDLIFE FRIENDLY TO PREVENT ENTANGLEMENT OF NATIVE WILDLIFE. IN CASE OF PLASTIC EROSION CONTROL BLANKET, IT SHOULD BE REMOVED ONCE VEGETATION IS ESTABLISHED. SEE SPECIAL PROVISIONS.
3. IN CASE OF TEMPORARY OR PERMANENT LIGHTING,

   ALL LIGHTING SHOULD BE FULLY SHIELDED FIXTURES THAT EMIT NO LIGHT UPWARD.

   ONLY "WARM-WHITE"OR FILTERED LEDS (CCT < 3,000 K; S/P RATIO < 1.2) SHOULD BE USED TO MINIMIZE BLUE EMISSION.

   ONLY LIGHT THE EXACT SPACE WITH THE AMOUNT (LUMENS) NEEDED TO MEET FACILITY SAFETY REQUIREMENT.

   IF LEDS ARE TO BE USED, AVOID THE TEMPTATION TO OVER-LIGHT BASED ON THE HIGHER LUMINOUS EFFICIENCY OF LEDS.
4. NO BRIDGE SCUPPERS SHALL EMPTY DIRECTLY ONTO THE TRAIL, NOR CAUSE PIPE DRAINAGE TO RUN ACROSS THE TRAIL SURFACE.
5. THE DRAINAGE IN THE SW QUADRANT ALONG THE TRAIL IS DRAINED UNDER THE HENNEPIN CANAL TRAIL BY PIPE AND SHALL NOT BE PERMITTED TO FLOW OVER TOP OF TRAIL.
6. RESTORE AND SEED LANDSCAPE ANY IDNR AREAS IMPACTED BY CONSTRUCTION. SIMILAR TO THOSE SHOWN FOR NEW TRAIL CONSTRUCTION.
7. ALL EXISTING TRAILS SHALL BE PROTECTED, IF IMPACTED THE CONTRATOR SHALL RESTORE WITH LIKE MATERIAL.
8. NO CONCRETE WASHOUT MAY OCCUR ON IDNR LANDS OR DISCHARGE TO IDNR WATERWAY.
9. THE MULTI-USE RECREATIONAL PATH MUST BE OPEN ON IDNR PROPERTY BY THE FIRST FULL WEEKEND IN OCTOBER FOR THE HENNEPIN 100.

HMA MIX CHART

	PAVEMENT		
MIXTURE DESIGN	SURFACE	MULTI - USE PATH	BINDER
PG:	SBS 64-28 OR SBS 70-28	PG 64-22	PG 64-22
DESIGN AIR VOIDS	4.0 @ N50	4.0 @ N50	4.0 @ N50
MIXTURE COMPOSITION (GRADATION MIXTUTE)	IL 9.5	IL 9.5FG	IL 19.0
FRICTION AGGREGATE	C	C	N/A
MIX UNIT WEIGHT	112LBS/SY/IN	112LBS/SY/IN	112LBS/SY/IN
QMP	QCQA FOR MIX, 1030-02 - NUCLEAR FOR DENSITY	QCQA FOR MIX, 1030-02 - NUCLEAR FOR DENSITY	QCQA FOR MIX, 1030-02 - NUCLEAR FOR DENSITY

PROJECT CONTROL

BENCHMARKS			
BENCHMARK	STATION	ELEVATION	DESCRIPTION
400	30' RT 17+70	640.51	RR SPK W PF E OF ENT TO FENCED IN ELECTRICAL AREA, S SIDE OF 11TH ST
401	21' LT 19+53	645.73	FD CHIS "□" E ON NW WINGWALL OF STR
402	21' LT 22+37	644.63	"O" IN OPEN ON FH E OF GRAVEL LANE TO LIFT STATION N. SIDE 11TH ST

HORIZONTAL CONTROL					
POINT #	STATION	NORTHING	EASTING	ELEVATION	DESCRIPTION
1	21.40' RT 16+77.08	1859434.34	2429054.55	639.30	112821 CAP: ±3' S of BC ± 40' W & ENT TO POWER FNC AREA
2	16.53' RT 19+40.51	1859326.46	2429294.93	644.40	112821 CAP: ±13' W OF W END OF STR ±16' S OF ℄
3	17.81' LT 20+90.77	1859273.50	2429445.50	644.77	112821 CAP: ±44' E OF E END OF STR ±18' N OF ℄
4	19.63' RT 23+59.27	1859204.71	2429498.14	641.50	112821 CAP: ± 30' E OF E END OF STR ± 19' S OF ℄

REVISION	DATE	BY	REMARKS

DESIGNED KM
DRAWN DJB
REVIEWED DCB
APPROVED BKC

WHITESIDE COUNTY
F.A.U. 5563 (E. ELEVENTH ST.) OVER
ILLINOIS-MISSISSIPPI FEEDER CANAL. STATION 20+00

WILLETT HOFMANN & ASSOCIATES INC
ENGINEERING ARCHITECTURE AND SURVEYING
809 EAST 2ND STREET, DIXON, IL 61021-0367
T: 815-284-3381 DESIGN FIRM: #184-000918

GENERAL NOTES, COMMITMENTS, AND PROJECT CONTROL
E 11TH STREET
SHEET 1 OF 1 SHEET

F.A.U.	SECTION	COUNTY	TOTAL SHEETS	SHEET NO.
5563	19-00137-00-BR	WHITESIDE	60	2
	WHA* 1286J24	CONTRACT 85779		
	ILLINOIS			

	PAY CODE	PAY ITEM CONSTRUCTION TYPE CODE: 0010	UNIT	TOTAL QUANTITY
*	20100110	TREE REMOVAL (6 TO 15 UNITS DIAMETER)	UNIT	177
*	20100210	TREE REMOVAL (OVER 15 UNITS DIAMETER)	UNIT	265
	20200100	EARTH EXCAVATION	CU YD	1,823
	20201200	REMOVAL AND DISPOSAL OF UNSUITABLE MATERIAL	CU YD	121
	20800150	TRENCH BACKFILL	CU YD	34
	21101505	TOPSOIL EXCAVATION AND PLACEMENT	CU YD	359
	28000250	TEMPORARY EROSION CONTROL SEEDING	POUND	65
	28000305	TEMPORARY DITCH CHECKS	FOOT	28
	28000500	INLET AND PIPE PROTECTION	EACH	8
	30300011	AGGREGATE SUBGRADE IMPROVEMENT	TON	2,077
	35101400	AGGREGATE BASE COURSE, TYPE B	TON	356
	40600275	BITUMINOUS MATERIALS (PRIME COAT)	POUND	6,707
	40600290	BITUMINOUS MATERIALS (TACK COAT)	POUND	556
	40600370	LONGITUDINAL JOINT SEALANT	FOOT	577
	40603080	HOT-MIX ASPHALT BINDER COURSE, IL-19.0, N50	TON	415

PAY CODE	PAY ITEM CONSTRUCTION TYPE CODE: 0010	UNIT	TOTAL QUANTITY
40604000	HOT-MIX ASPHALT SURFACE COURSE, IL-9.5FG, MIX "C", N50	TON	87
40604150	POLYMERIZED HOT-MIX ASPHALT SURFACE COURSE, IL-9.5, MIX "C", N50	TON	316
42000100	PORTLAND CEMENT CONCRETE PAVEMENT 6"	SQ YD	290
42001300	PROTECTIVE COAT	SQ YD	892
42400800	DETECTABLE WARNINGS	SQ FT	56
44000100	PAVEMENT REMOVAL	SQ YD	2,873
44000200	DRIVEWAY PAVEMENT REMOVAL	SQ YD	138
44000500	COMBINATION CURB AND GUTTER REMOVAL	FOOT	1,205
50100100	REMOVAL OF EXISTING STRUCTURES	EACH	1
50105220	PIPE CULVERT REMOVAL	FOOT	157
50200100	STRUCTURE EXCAVATION	CU YD	436
50300225	CONCRETE STRUCTURES	CU YD	74.8
50300255	CONCRETE SUPERSTRUCTURE	CU YD	252.6
50300260	BRIDGE DECK GROOVING	SQ YD	375
50300280	CONCRETE ENCASEMENT	CU YD	44.9

* DENOTES A SPECIALTY ITEM

REVISION	DATE	BY	REMARKS

DESIGNED KM
DRAWN DJB
REVIEWED DCB
APPROVED BKC

WHITESIDE COUNTY
F.A.U. 5563 (E. ELEVENTH ST.) OVER
ILLINOIS-MISSISSIPPI FEEDER CANAL. STATION 20+00

WILLETT HOFMANN & ASSOCIATES INC
ENGINEERING ARCHITECTURE LAND SURVEYING
889 EAST 2ND STREET, DIXON, IL 61021-0367
T: 815-284-3331 DESIGN FIRM: #184-000318

SUMMARY OF QUANTITIES

SHEET NO. 1 OF 3 SHEETS

F.A.U.	SECTION	COUNTY	TOTAL SHEETS	SHEET NO.
5563	19-00137-00-BR	WHITESIDE	60	3
	WHA* 1286J24	CONTRACT 85779		
	ILLINOIS			

PAY CODE	PAY ITEM CONSTRUCTION TYPE CODE: 0010	UNIT	TOTAL QUANTITY
50300300	PROTECTIVE COAT	SQ YD	421
50800205	REINFORCEMENT BARS, EPOXY COATED	POUND	80,150
* 50900211	STEEL RAILING, TYPE IL-OH	FOOT	204
51200957	FURNISHING METAL SHELL PILES 12" X 0.250"	FOOT	581
51202305	DRIVING PILES	FOOT	581
51203200	TEST PILE METAL SHELLS	EACH	2
51500100	NAME PLATES	EACH	1
52200500	MECHANICALLY STABILIZED EARTH RETAINING WALL	SQ FT	615
52318802	DRAINAGE SYSTEM FOR STRUCTURES	L SUM	1
54213657	PRECAST REINFORCED CONCRETE FLARED END SECTIONS 12"	EACH	2
54213663	PRECAST REINFORCED CONCRETE FLARED END SECTIONS 18"	EACH	4
542C0217	PIPE CULVERTS, CLASS C, TYPE 1 12"	FOOT	36
542C0223	PIPE CULVERTS, CLASS C, TYPE 1 18"	FOOT	52
542C1063	PIPE CULVERTS, CLASS C, TYPE 2 18"	FOOT	64
550A0340	STORM SEWERS, CLASS A, TYPE 2 12"	FOOT	28

PAY CODE	PAY ITEM CONSTRUCTION TYPE CODE: 0010	UNIT	TOTAL QUANTITY
58600101	GRANULAR BACKFILL FOR STRUCTURES	CU YD	234
59100100	GEOCOMPOSITE WALL DRAIN	SQ YD	102
60100060	CONCRETE HEADWALLS FOR PIPE DRAINS	EACH	4
60146304	PIPE UNDERDRAINS FOR STRUCTURES 4"	FOOT	165
60221000	MANHOLES, TYPE A, 5'-DIAMETER, TYPE 1 FRAME, OPEN LID	EACH	1
60255500	MANHOLES TO BE ADJUSTED	EACH	2
60260100	INLETS TO BE ADJUSTED	EACH	1
60266600	VALVE BOXES TO BE ADJUSTED	EACH	3
60500060	REMOVING INLETS	EACH	2
60604400	COMBINATION CONCRETE CURB AND GUTTER, TYPE B-6.18	FOOT	1282
60624600	CORRUGATED MEDIAN	SQ FT	76
67100100	MOBILIZATION	L SUM	1
72400100	REMOVE SIGN PANEL ASSEMBLY - TYPE A	EACH	2
* 72501000	TERMINAL MARKER - DIRECT APPLIED	EACH	4
* 78001110	PAINT PAVEMENT MARKING - LINE 4"	FOOT	170

* DENOTES A SPECIALTY ITEM

REVISION	DATE	BY	REMARKS

DESIGNED KM
DRAWN DJB
REVIEWED DCB
APPROVED BKC

WHITESIDE COUNTY
F.A.U. 5563 (E. ELEVENTH ST.) OVER
ILLINOIS-MISSISSIPPI FEEDER CANAL. STATION 20+00

WILLETT HOFMANN & ASSOCIATES INC
ENGINEERING ARCHITECTURE AND SURVEYING
899 EAST 2ND STREET, DIXON, IL 61021-0367
T. 815-284-3331 DESIGN FIRM: #184-000918

SUMMARY OF QUANTITIES

SHEET NO. 2 OF 3 SHEETS

F.A.U.	SECTION	COUNTY	TOTAL SHEETS	SHEET NO.
5563	19-00137-00-BR	WHITESIDE	60	4
	WHA* 1286J24	CONTRACT 85779		
	ILLINOIS			

	PAY CODE	PAY ITEM CONSTRUCTION TYPE CODE: 0010	UNIT	TOTAL QUANTITY
	Z0013798	CONSTRUCTION LAYOUT	L SUM	1
	X0320090	PARK BENCH REMOVAL AND RELCOATION	EACH	1
	X0350805	FOLD DOWN BOLLARDS	EACH	1
	X2300024	SWING GATE REMOVAL	EACH	2
*	X2500930	SEEDING, CLASS 1B (MODIFIED)	ACRE	0.44
*	X2510001	WOODLAND SEEDING (SPECIAL)	SQ FT	11812
*	X2511630	EROSION CONTROL BLANKET (SPECIAL)	SQ YD	3159
	X2600040	STONE BOULDERS (SPECIAL)	EACH	4
	X2800400	PERIMETER EROSION BARRIER (SPECIAL)	FOOT	1857
	X2810108	STONE RIPRAP, CLASS A4 (SPECIAL)	SQ YD	251
	X5080525	BAR SPLICERS (SPECIAL)	EACH	76
	X6024240	INLETS (SPECIAL)	EACH	2
	X7010216	TRAFFIC CONTROL AND PROTECTION, (SPECIAL)	L SUM	1

	PAY CODE	PAY ITEM CONSTRUCTION TYPE CODE: 0042	UNIT	TOTAL QUANTITY
#	Z0076600	TRAINEES	HOUR	500
#	Z0076604	TRAINEES TRAINING PROGRAM GRADUATE	HOUR	500

0042

* DENOTES A SPECIALTY ITEM

REVISION	DATE	BY	REMARKS

DESIGNED KM
DRAWN DJB
REVIEWED DCB
APPROVED BKC

WHITESIDE COUNTY
F.A.U. 5563 (E. ELEVENTH ST.) OVER
ILLINOIS-MISSISSIPPI FEEDER CANAL. STATION 20+00

WILLETT HOFMANN & ASSOCIATES INC
ENGINEERING ARCHITECTURE LAND SURVEYING
849 EAST 2ND STREET, DIXON, IL 61021-0367
T. 815-284-3351 DESIGN FIRM: #184-000918

SUMMARY OF QUANTITIES

SHEET NO. 3 OF 3 SHEETS

F.A.U.	SECTION	COUNTY	TOTAL SHEETS	SHEET NO.
5563	19-00137-00-BR	WHITESIDE	60	5
	WHA* 1286J24	CONTRACT 85779		
	ILLINOIS			

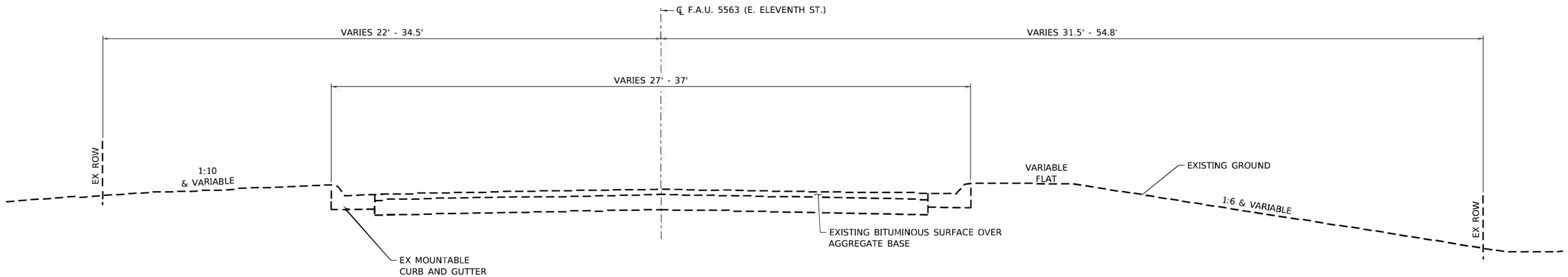

EXISTING TYPICAL SECTION
F.A.U. 5563 (E. ELEVENTH ST.)

STA. 16+75 TO 19+46.50
STA. 20+53.50 TO 23+50

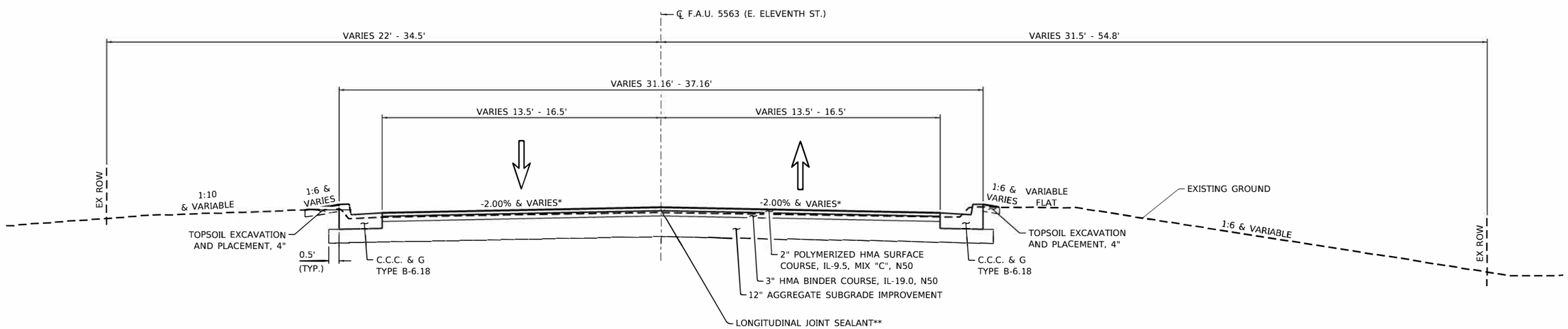

PROPOSED TYPICAL SECTION
F.A.U. 5563 (E. ELEVENTH ST.)

STA. 16+75 TO 19+17.50
STA. 20+83.50 TO 23+50

* CROSS SLOPE TRANSITION FROM -1.56% TO -2.00% OVER A DISTANCE OF 30 FEET BEYOND THE END OF THE APPROACH SLAB ON BOTH SIDES OF THE BRIDGE. REFER TO CROSS SECTIONS FOR DETAILS

** LONGITUDINAL JOINT SEALANT APPLIED UNDER SURFACE LIFT

REVISION	DATE	BY	REMARKS

DESIGNED	KM
DRAWN	DJB
REVIEWED	DCB
APPROVED	BKC

WHITESIDE COUNTY
F.A.U. 5563 (E. ELEVENTH ST.) OVER
ILLINOIS-MISSISSIPPI FEEDER CANAL. STATION 20+00

WILLETT HOFMANN & ASSOCIATES INC
ENGINEERING ARCHITECTURE AND SURVEYING
809 EAST 2ND STREET, DIXON, IL 61021-0367
T: 815-284-3381 DESIGN FIRM: #184-000918

TYPICAL SECTIONS
E 11TH STREET

SHEET 1 OF 2 SHEETS

F.A.U.	SECTION	COUNTY	TOTAL SHEETS	SHEET NO.
5563	19-00137-00-BR	WHITESIDE	60	6
	WHA* 1286J24	CONTRACT 85779		
	ILLINOIS			

85779

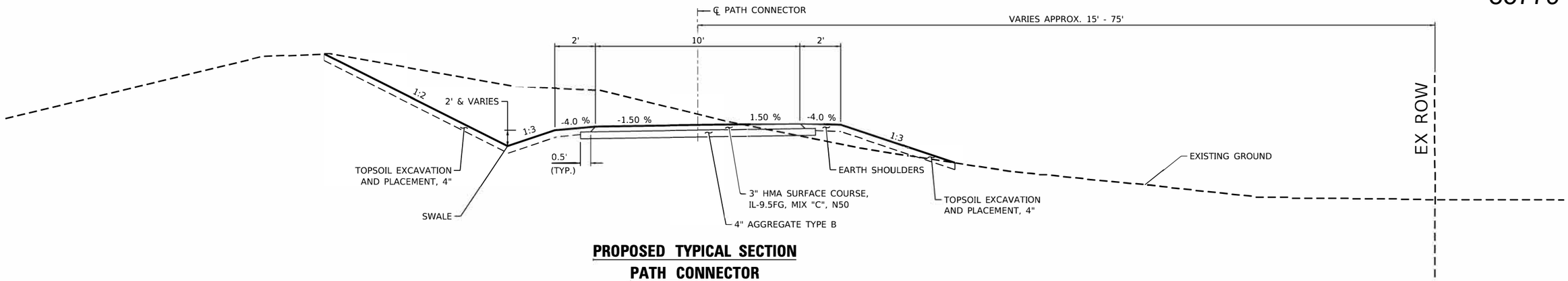

PROPOSED TYPICAL SECTION
PATH CONNECTOR

STA. 497+98.74 TO 500+00.00

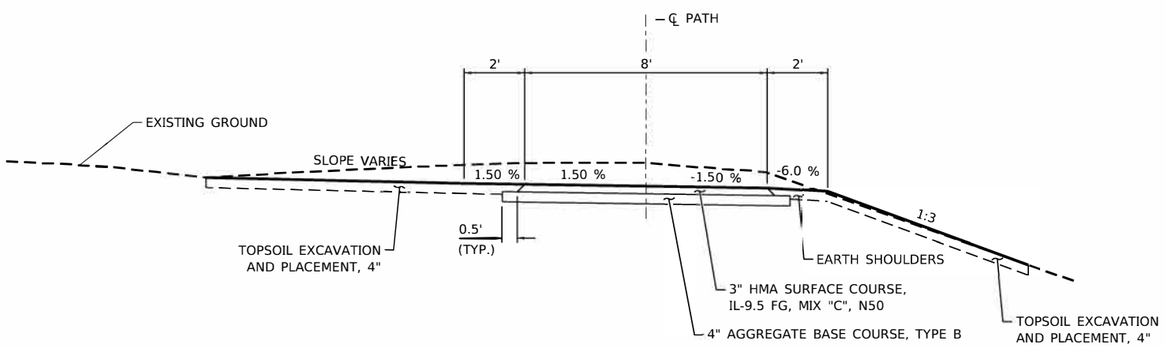

PROPOSED TYPICAL SECTION
PATH

STA. 97+20.00 TO 99+63.00
STA. 100+37.00 TO 102+35.00

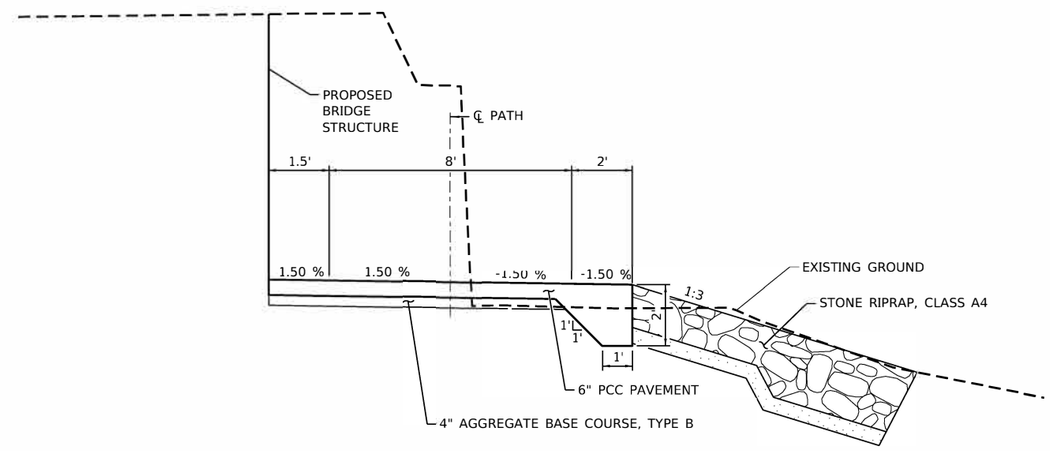

PROPOSED TYPICAL SECTION
PATH

STA. 99+63.00 TO 100+37.00

REVISION	DATE	BY	REMARKS

DESIGNED	KM
DRAWN	DJB
REVIEWED	DCB
APPROVED	BKC

WHITESIDE COUNTY
F.A.U. 5563 (E. ELEVENTH ST.) OVER
ILLINOIS-MISSISSIPPI FEEDER CANAL. STATION 20+00

WILLETT HOFMANN & ASSOCIATES INC
ENGINEERING ARCHITECTURE AND SURVEYING
809 EAST 2ND STREET, DIXON, IL 61021-0367
T: 815-284-3381 DESIGN FIRM: #184-000918

TYPICAL SECTIONS
PATH AND PATH CONNECTOR

SHEET 2 OF 2 SHEETS

F.A.U.	SECTION	COUNTY	TOTAL SHEETS	SHEET NO.
5563	19-00137-00-BR	WHITESIDE	60	7
	WHA* 1286J24	CONTRACT 85779		
	ILLINOIS			

PRINT_ORGANIZER_BW.pltcfg 8/14/2025 1:35:54 PM = PLOTTED
FILE = S:\PROJECTS\2024\1286J24_RF\DESIGN\CAD_SHEETS\1286J24_Typical Sections.dgn

SCHEDULE OF QUANTITIES

EARTHWORK SUMMARY

LOCATION	[A] EARTH EXCAVATION 20200100 (Cu Yd)	[B] [0.75 * A] EARTH EXCAVATION ADJUSTED FOR SHRINKAGE 25% (Cu Yd)	[C] EMBANKMENT (Cu Yd)	[D] [B-C] EARTH BALANCE WASTE (+) OR FURNISHED EXCAVATION (-) (Cu Yd)
E 11TH ST	807	605	787	-182
PATH CONNECTOR	321	241	6	235
PATH	695	521	0	521
TOTALS	1,823	1,367	794	574

TREE REMOVAL (6 TO 15 UNITS DIAMETER)

STATION	UNIT	REMARKS
E 11TH ST.		
STA. 20+45, 53' LT	8	
STA. 20+60, 49' LT	12	
STA. 20+75, 54' LT	10	
STA. 20+81, 55' LT	8	
STA. 20+92, 54' LT	10	
STA. 20+98, 30' RT	8	
STA. 21+13, 33' RT	6	
PATH CONNECTOR		
STA. 498+70, 11' RT	12	
STA. 498+76, 03' RT	12	
STA. 498+87, 05' RT	9	
STA. 498+89, 20' RT	10	
STA. 498+98, 08' LT	8	
STA. 499+02, 22' LT	10	
STA. 499+03, 20' RT	6	
STA. 499+05, 16' RT	14	
STA. 499+06, 11' LT	10	
STA. 499+15, 15' RT	8	
STA. 499+28, 13' LT	6	
STA. 499+40, 16' LT	10	
PROJECT TOTAL	177	

* 20100110

TREE REMOVAL (OVER 15 UNITS DIAMETER)

STATION	UNIT	REMARKS
E 11TH ST.		
STA. 20+44, 56' LT	16	
STA. 20+49, 60' LT	18	
PATH CONNECTOR		
STA. 498+62, 17' LT	16	
STA. 498+72, 10' LT	24	
STA. 498+72, 09' LT	26	
STA. 498+81, 11' RT	16	
STA. 499+06, 24' LT	20	
STA. 499+16, 08' RT	28	
STA. 499+23, 12' RT	18	
STA. 499+55, 15' RT	15	
STA. 499+56, 23' LT	18	
STA. 499+64, 06' RT	16	
STA. 499+75, 10' LT	34	
PROJECT TOTAL	265	

* 20100210

REMOVAL AND DISPOSAL OF UNSUITABLE MATERIAL

STATION	CU YD	REMARKS
E 11TH ST.		
ENTIRE PROJECT	121	
PROJECT TOTAL	121	

20201200

TRENCH BACKFILL

STATION	CU YD	REMARKS
E 11TH ST.		
21' LT TO 21' RT STA. 18+37	9	PR 18" PIPE CULVERT
18' LT TO 18' RT STA. 21+43	16	PR 18" PIPE CULVERT
63' LT STA. 21+82 - 58' LT 22+11	5	PR 12" STORM SEWER
PATH		
LT STA. 97+20 - STA. 98+10	4	PR 12" PIPE CULVERT
PROJECT TOTAL	34	

20800150

TOPSOIL EXCAVATION AND PLACEMENT

STATION	CU YD	REMARKS
E 11TH ST.		
LT STA. 16+75 - STA. 17+48	7	4" THICKNESS
LT STA. 18+25 - STA. 19+47	23	4" THICKNESS
RT STA. 16+75 - STA. 17+16	10	4" THICKNESS
RT STA. 17+30 - STA. 18+57	20	4" THICKNESS
RT STA. 18+74 - STA. 19+47	8	4" THICKNESS
LT STA. 20+42 - STA. 21+97	50	4" THICKNESS
RT STA. 20+40 - STA. 21+63	46	4" THICKNESS
LT STA. 22+18 - STA. 23+50	23	4" THICKNESS
RT STA. 21+91 - STA. 23+50	23	4" THICKNESS
PATH CONNECTOR		
RT STA. 498+30 - 499+94	31	4" THICKNESS
LT STA. 498+30 - 499+94	36	4" THICKNESS
PATH		
LT STA. 97+20 - STA. 98+10	8	4" THICKNESS
LT STA. 98+65 - STA. 99+81	19	4" THICKNESS
LT STA. 100+20 - STA. 102+35	23	4" THICKNESS
RT STA. 97+20 - STA. 99+67	20	4" THICKNESS
RT STA. 100+33 - STA. 102+35	12	4" THICKNESS
PROJECT TOTAL	359	

21101505

TEMPORARY EROSION CONTROL SEEDING

STATION	POUND	REMARKS
E 11TH ST.		
ENTIRE PROJECT	65	100 LBS / ACRE
PROJECT TOTAL	65	

28000250

TEMPORARY DITCH CHECKS

STATION	FOOT	REMARKS
E 11TH ST.		
LT STA. 20+71	10	
PATH CONNECTOR		
LT STA. 498+50	6	
LT STA. 499+00	6	
LT STA. 499+50	6	
PROJECT TOTAL	28	

28000305

INLET AND PIPE PROTECTION

STATION	EACH	REMARKS
E 11TH ST.		
LT STA 18+39	1	PIPE CULVERT
LT STA 21+46	1	PIPE CULVERT
RT STA. 21+63	1	EX. INLET
LT STA. 21+82	1	PR. INLET
RT STA 22+01	1	EX PIPE CULVERT
LT STA 22+11	1	PR. INLET
LT STA 22+18	1	PR. OPEN LID MANHOLE
PATH CONNECTOR		
LT STA. 499+73	1	PIPE CULVERT
PROJECT TOTAL	8	

28000500

AGGREGATE SUBGRADE IMPROVEMENT

STATION	TON	REMARKS
E 11TH ST.		
STA. 16+75 - STA. 19+47.5	681	12" AGGREGATE DEPTH
STA. 20+46.75 - STA. 23+50	1,147	12" AGG DEPTH (CER 21+78 & CEL 21+75)
ENTIRE PROJECT	249	REMOVABLE OF UNSUITABLE AREAS
PROJECT TOTAL	2,077	

30300011

AGGREGATE BASE COURSE, TYPE B

STATION	TON	REMARKS
E 11TH ST.		
CER 17+25	28	8" AGGREGATE DEPTH
CEL 17+86	128	8" AGGREGATE DEPTH
PATH CONNECTOR		
STA. 498+17 - 499+94	59	4" AGGREGATE DEPTH
PATH		
STA. 97+20 - STA. 102+35	142	4" AGGREGATE DEPTH
PROJECT TOTAL	356	

35101400

* DENOTES A SPECIALTY ITEM

REVISION	DATE	BY	REMARKS

DESIGNED KM
DRAWN DJB
REVIEWED DCB
APPROVED BKC

WHITESIDE COUNTY
F.A.U. 5563 (E. ELEVENTH ST.) OVER
ILLINOIS-MISSISSIPPI FEEDER CANAL. STATION 20+00

WILLETT HOFMANN & ASSOCIATES INC
ENGINEERING ARCHITECTURE LAND SURVEYING
809 EAST 2ND STREET, DIXON, IL 61021-0367
T: 815-284-3381 DESIGN FIRM: #184-000918

SCHEDULE OF QUANTITIES

SHEET NO. 1 OF 4 SHEETS

F.A.U.	SECTION	COUNTY	TOTAL SHEETS	SHEET NO.
5563	19-00137-00-BR	WHITESIDE	60	8
	WHA* 1286J24	CONTRACT 85779		
	ILLINOIS			

SCHEDULE OF QUANTITIES

BITUMINOUS MATERIALS (PRIME COAT)

STATION	POUND	REMARKS
E 11TH ST.		
STA. 16+75 - STA. 19+47.5	2,242	0.25 LBS/SFT
STA. 20+46.75 - STA. 23+50	3,308	0.25 LBS/SFT (INCLUDES CER 21+78 & CEL 21+75)
PATH CONNECTOR		
STA. 498+18 - STA. 499+94	474	0.25 LBS/SFT
PATH		
STA. 97+20 - STA. 99-00	413	0.25 LBS/SFT
STA. 101+00 - STA. 102+35	270	0.25 LBS/SFT
PROJECT TOTAL	6,707	

40600275

BITUMINOUS MATERIALS (TACK COAT)

STATION	POUND	REMARKS
E 11TH ST.		
STA. 16+75 - STA. 19+47.5	225	0.025 LBS/SFT
STA. 20+46.75 - STA. 23+50	331	0.025 LBS/SFT (CER 21+78 & CEL 21+75)
PROJECT TOTAL	556	

40600290

LONGITUDINAL JOINT SEALANT

STATION	FOOT	REMARKS
E 11TH ST.		
STA. 16+75 TO STA. 19+47.5	273	
STA. 20+46.75 TO STA. 23+50	304	
PROJECT TOTAL	577	

40600370

HOT-MIX ASPHALT BINDER COURSE, IL-19.0, N50

STATION	TON	REMARKS
E 11TH ST.		
STA. 16+75 - STA. 19+47.5	168	3" THICKNESS
STA. 20+46.75 - STA. 23+50	247	3" THICKNESS (CER 21+78 & CEL 21+96)
PROJECT TOTAL	415	

40603080

HOT-MIX ASPHALT SURFACE COURSE, IL-9.5FG, MIX "C", N50

STATION	TON	REMARKS
PATH CONNECTOR		
STA. 498+18 - STA. 499+94	36	3" THICKNESS
PATH		
STA. 97+20 - STA. 99+00	30	3" THICKNESS
STA. 101+00 - STA. 102+35	21	3" THICKNESS
PROJECT TOTAL	87	

40604000

POLYMERIZED HOT-MIX ASPHALT SURFACE COURSE, IL-9.5, MIX "C", N50

STATION	TON	REMARKS
E 11TH ST.		
STA. 16+75 - STA. 19+47.5	112	2" THICKNESS
STA. 20+46.75 - STA. 23+50	165	2" THICKNESS (CER 21+78 & CEL 21+96)
CER 17+25	7	3" THICKNESS
CEL 17+86	32	3" THICKNESS
PROJECT TOTAL	316	

40604150

PORTLAND CEMENT CONCRETE PAVEMENT 6"

STATION	SQ YD	REMARKS
PATH CONNECTOR		
STA. 498+17 TO STA 498+27	23	
PATH		
STA. 99+00 - STA. 101+00	267	
PROJECT TOTAL	290	

42000100

PROTECTIVE COAT

STATION	SQ YD	REMARKS
E 11TH ST.		
RT STA. 16+75 - STA 19+47.5	76	B-6.18 CCC&G
LT STA. 16+75 - STA 19+47.5	76	B-6.18 CCC&G
RT STA. 20+46.75 - STA 21+63	41	B-6.18 CCC&G
LT STA. 20+46.75 - STA 21+97	56	B-6.18 CCC&G
RT STA. 21+91 - STA. 23+50	47	B-6.18 CCC&G
LT STA. 22+25 - STA. 23+50	62	B-6.18 CCC&G
PATH CONNECTOR		
STA. 498+17 TO STA 498+27	267	ENTRANCE PCC PAVMENT
PATH		
STA. 99+00 - STA. 101+00	267	MULTI-USE PATH PPC PAVEMENT
PROJECT TOTAL	892	

42001300

DETECTABLE WARNINGS

STATION	SQ FT	REMARKS
PATH CONNECTOR		
STA. 498+17	56	
PROJECT TOTAL	56	

42400800

PAVEMENT REMOVAL

STATION	SQ YD	REMARKS
E 11TH ST.		
STA. 16+75 - STA 19+53	987	
STA. 20+47 - STA 23+47	1,297	
PATH CONNECTORS		
LT STA. 19+00 - STA. 19+47	55	
RT STA. 19+00 - STA. 19+48	76	
PATH		
STA. 97+20 - STA. 102+35	458	
PROJECT TOTAL	2,873	

44000100

DRIVEWAY PAVEMENT REMOVAL

STATION	SQ YD	REMARKS
E 11TH ST.		
CER 17+25	35	
CEL 17+86	103	
PROJECT TOTAL	138	

44000200

COMBINATION CURB AND GUTTER REMOVAL

STATION	FOOT	REMARKS
E 11TH ST.		
RT STA. 16+75 - STA 19+53	278	
LT STA. 16+75 - STA 19+53	278	
RT STA. 20+47 - STA 21+63	142	
LT STA. 20+47 - STA 21+86	164	
RT STA. 21+91 - STA. 23+50	189	
LT STA. 22+09 - STA. 23+50	154	
PROJECT TOTAL	1,205	

44000500

REVISION	DATE	BY	REMARKS

DESIGNED KM
DRAWN DJB
REVIEWED DCB
APPROVED BKC

WHITESIDE COUNTY
F.A.U. 5563 (E. ELEVENTH ST.) OVER
ILLINOIS-MISSISSIPPI FEEDER CANAL. STATION 20+00

WILLETT HOFMANN & ASSOCIATES INC
ENGINEERING ARCHITECTURE LAND SURVEYING
809 EAST 2ND STREET, DIXON, IL 61021-0367
T: 815-284-3381 DESIGN FIRM: #184-000918

SCHEDULE OF QUANTITIES

SHEET NO. 2 OF 4 SHEETS

F.A.U.	SECTION	COUNTY	TOTAL SHEETS	SHEET NO.
5563	19-00137-00-BR	WHITESIDE	60	9
	WHA* 1286J24	CONTRACT 85779		
	ILLINOIS			

FILE = S:\PROJECTS\2024\1286J24_RF\DESIGN\CAD_SHEETS\1286J24_Schedule of Quantities.dgn

PRINT_ORGANIZER_BW.pltcfg 8/14/2025 1:36:04 PM = PLOTTED

SCHEDULE OF QUANTITIES

PIPE CULVERT REMOVAL

STATION	FOOT	REMARKS
E 11TH ST.		
47' LT STA 18+35 TO 29' RT STA. 18+39	76	
38' LT STA 21+37 TO 43' RT STA. 21+33	81	
PROJECT TOTAL	157	

50105220

PRECAST REINFORCED CONCRETE FLARED END SECTIONS 12"

STATION	EACH	REMARKS
PATH		
19' LT STA. 98+56	1	
10' RT STA. 98+50	1	
PROJECT TOTAL	2	

54213657

PRECAST REINFORCED CONCRETE FLARED END SECTIONS 18"

STATION	EACH	REMARKS
E 11TH ST.		
27' LT STA. 18+37	1	
25' RT STA. 18+37	1	
32' LT STA. 21+43	1	
32' RT STA. 21+43	1	
PROJECT TOTAL	4	

54213663

PIPE CULVERTS, CLASS C, TYPE 1 12"

STATION	FOOT	REMARKS
E 11TH ST.		
19' LT STA. 98+56 TO 10' RT STA. 98+50	36	REINFORCED CONCRETE PIPE
PROJECT TOTAL	36	

542C0217

PIPE CULVERTS, CLASS C, TYPE 1 18"

STATION	FOOT	REMARKS
E 11TH ST.		
27' LT TO 25' RT STA.18+37	52	REINFORCED CONCRETE PIPE
PROJECT TOTAL	52	

542C0223

PIPE CULVERTS, CLASS C, TYPE 2 18"

STATION	FOOT	REMARKS
E 11TH ST.		
32' LT TO 32' RT STA. 21+43	64	REINFORCED CONCRETE PIPE
PROJECT TOTAL	64	

542C1063

STORM SEWERS, CLASS A, TYPE 2 12"

STATION	FOOT	REMARKS
E 11TH ST.		
63' LT STA. 21+82 - 58' LT 22+11	24	
57' LT STA. 22+11 to STA. 21+14	4	
PROJECT TOTAL	28	

550A0340

CONCRETE HEADWALLS FOR PIPE DRAINS

STATION	EACH	REMARKS
PATH		
STA. 99+70	2	1 LT & 1 RT
STA. 100+30	2	1 LT & 1 RT
PROJECT TOTAL	4	

60100060

MANHOLES, TYPE A, 5'-DIAMETER, TYPE 1 FRAME, OPEN LID

STATION	EACH	REMARKS
E 11TH ST.		
56' LT, STA. 22+18	1	
PROJECT TOTAL	1	

60221000

MANHOLES TO BE ADJUSTED

STATION	EACH	REMARKS
E 11TH ST.		
7' LT, STA. 21+75	1	
23' RT, STA. 21+93	1	
PROJECT TOTAL	2	

60255500

INLETS TO BE ADJUSTED

STATION	EACH	REMARKS
E 11TH ST.		
36' RT, STA. 21+63	1	
PROJECT TOTAL	1	

60260100

VALVE BOXES TO BE ADJUSTED

STATION	EACH	REMARKS
E 11TH ST.		
6' LT, STA. 22+23	1	
12' LT, STA. 22+34	1	
16' LT, STA. 22+39	1	
PROJECT TOTAL	3	

60266600

REMOVING INLETS

STATION	EACH	REMARKS
E 11TH ST.		
63' LT, STA. 21+86	1	
56' LT, STA. 22+18	1	
PROJECT TOTAL	2	

60500060

COMBINATION CONCRETE CURB AND GUTTER, TYPE B-6.18

STATION	FOOT	REMARKS
E 11TH ST.		
RT STA. 16+75 - STA 19+47.5	273	
LT STA. 16+75 - STA 19+47.5	273	
RT STA. 20+46.75 - STA 21+63	147	
LT STA. 20+46.75 - STA 21+97	199	
RT STA. 21+91 - STA. 23+50	169	
LT STA. 22+25 - STA. 23+50	221	
PROJECT TOTAL	1,282	

60604400

CORRUGATED MEDIAN

STATION	SQ FT	REMARKS
E 11TH ST.		
CEL 17+86	76	
PROJECT TOTAL	76	

60624600

REVISION	DATE	BY	REMARKS

DESIGNED KM
DRAWN DJB
REVIEWED DCB
APPROVED BKC

WHITESIDE COUNTY
F.A.U. 5563 (E. ELEVENTH ST.) OVER
ILLINOIS-MISSISSIPPI FEEDER CANAL. STATION 20+00

WILLETT HOFMANN & ASSOCIATES INC
ENGINEERING ARCHITECTURE AND SURVEYING
809 EAST 2ND STREET, DIXON, IL 61021-0367
T: 815-284-3381 DESIGN FIRM: #184-000918

SCHEDULE OF QUANTITIES

SHEET NO. 3 OF 4 SHEETS

F.A.U.	SECTION	COUNTY	TOTAL SHEETS	SHEET NO.
5563	19-00137-00-BR	WHITESIDE	60	10
	WHA* 1286J24	CONTRACT 85779		
	ILLINOIS			

SCHEDULE OF QUANTITIES

REMOVE SIGN PANEL ASSEMBLY - TYPE A

STATION	EACH	REMARKS
E 11TH ST.		
33' RT STA. 16+00	1	
31' LT STA. 21+28	1	
PROJECT TOTAL	2	

72400100

TERMINAL MARKER - DIRECT APPLIED

STATION	EACH	REMARKS
E 11TH ST.		
18' RT & LT STA. 19+45	2	APPLIED ON END OF BRIDGE RAIL
18' RT & LT STA. 20+49	2	APPLIED ON END OF BRIDGE RAIL
PROJECT TOTAL	4	

72501000

PAINT PAVEMENT MARKING - LINE 4"

STATION	FOOT	REMARKS
E 11TH ST.		
STA. 16+75 - STA 23+50	170	30' SKIP - 10' DASH YELLOW CENTERLINE
PROJECT TOTAL	170	

* 78001110

PARK BENCH REMOVAL AND RELOCATION

STATION	EACH	REMARKS
PATH CONNECTOR		
8' LT, STA. 99+00 TO STA. 98+00	1	MOVED FROM LT STA. 99+00 TO LT STA. 98+00
PROJECT TOTAL	1	

X0320090

FOLD DOWN BOLLARDS

STATION	EACH	REMARKS
E 11TH ST.		
STA. 498+28	1	
PROJECT TOTAL	1	

* X0350805

SWING GATE REMOVAL

STATION	EACH	REMARKS
E 11TH ST.		
44' LT, STA. 19+20	1	
44' RT, STA. 19+20	1	
PROJECT TOTAL	2	

X2300024

SEEDING, CLASS 1B (MODIFIED)

STATION	ACRE	REMARKS
E 11TH ST.		
LT STA. 16+75 - STA. 17+48	0.02	
LT STA. 18+25 - STA. 19+47	0.05	
RT STA. 16+75 - STA. 17+16	0.02	
RT STA. 17+30 - STA. 18+57	0.04	
RT STA. 18+74 - STA. 19+47	0.02	
LT STA. 20+42 - STA. 21+97	0.10	
RT STA. 20+40 - STA. 21+63	0.09	
LT STA. 22+18 - STA. 23+50	0.05	
RT STA. 21+91 - STA. 23+50	0.05	
PROJECT TOTAL	0.44	

* X2500930

WOODLAND SEEDING (SPECIAL)

STATION	SQ FT	REMARKS
PATH CONNECTOR		
RT STA. 498+30 - 499+94	2,436	
LT STA. 498+30 - 499+94	2,886	
PATH		
LT STA. 97+20 - STA. 98+10	631	
LT STA. 98+65 - STA. 99+81	1,504	
LT STA. 100+20 - STA. 102+35	1,857	
RT STA. 97+20 - STA. 99+67	1,572	
RT STA. 100+33 - STA. 102+35	926	
PROJECT TOTAL	11,812	

* X2510001

EROSION CONTROL BLANKET (SPECIAL)

STATION	SQ YD	REMARKS
E 11TH ST.		
LT STA. 16+75 - STA. 17+48	59	SEEDING, CLASS 1B (MODIFIED)
LT STA. 18+25 - STA. 19+47	206	SEEDING, CLASS 1B (MODIFIED)
RT STA. 16+75 - STA. 17+16	82	SEEDING, CLASS 1B (MODIFIED)
RT STA. 17+30 - STA. 18+57	173	SEEDING, CLASS 1B (MODIFIED)
RT STA. 18+74 - STA. 19+47	66	SEEDING, CLASS 1B (MODIFIED)
LT STA. 20+42 - STA. 21+97	448	SEEDING, CLASS 1B (MODIFIED)
RT STA. 20+40 - STA. 21+63	408	SEEDING, CLASS 1B (MODIFIED)
LT STA. 22+18 - STA. 23+50	202	SEEDING, CLASS 1B (MODIFIED)
RT STA. 21+91 - STA. 23+50	199	SEEDING, CLASS 1B (MODIFIED)
PATH CONNECTOR		
RT STA. 498+30 - 499+94	271	WOODLAND SEEDING (SPECIAL)
LT STA. 498+30 - 499+94	321	WOODLAND SEEDING (SPECIAL)
PATH		
LT STA. 97+20 - STA. 98+10	71	WOODLAND SEEDING (SPECIAL)
LT STA. 98+65 - STA. 99+81	168	WOODLAND SEEDING (SPECIAL)
LT STA. 100+20 - STA. 102+35	207	WOODLAND SEEDING (SPECIAL)
RT STA. 97+20 - STA. 99+67	175	WOODLAND SEEDING (SPECIAL)
RT STA. 100+33 - STA. 102+35	103	WOODLAND SEEDING (SPECIAL)
PROJECT TOTAL	3,159	

* X2511630

* DENOTES A SPECIALTY ITEM

STONE BOULDERS (SPECIAL)

STATION	EACH	REMARKS
PATH CONNECTOR		
7' LT, STA. 498+28	2	
7' RT, STA. 498+28	2	
PROJECT TOTAL	4	

X2600040

PERIMETER EROSION BARRIER (SPECIAL)

STATION	FOOT	REMARKS
E 11TH ST.		
LT STA. 16+75 - STA. 17+45	72	
LT STA. 18+25 - STA. 19+26	126	
RT STA. 16+75 - STA. 17+16	50	
RT STA. 17+30 - STA. 18+51	120	
LT STA. 20+42 - STA. 21+76	173	
RT STA. 20+40 - STA. 21+63	152	
LT STA. 22+18 - STA. 23+50	207	
RT STA. 21+91 - STA. 23+50	171	
PATH CONNECTOR		
RT STA. 498+30 - 499+60	146	
PATH		
LT STA. 100+52 - STA. 102+35	189	
RT STA. 97+20 - STA. 99+67	249	
RT STA. 100+33 - STA. 102+35	202	
PROJECT TOTAL	1,857	

* X2800400

STONE RIPRAP, CLASS A4 (SPECIAL)

STATION	SQ YD	REMARKS
E 11TH ST.		
RT STA 17+83	19	
PROJECT TOTAL	19	

X2810108

INLETS (SPECIAL)

STATION	EACH	REMARKS
E 11TH ST.		
62' LT, STA. 21+78	1	
58' LT, STA. 22+11	1	
PROJECT TOTAL	2	

X6024240

REVISION	DATE	BY	REMARKS

DESIGNED	KM
DRAWN	DJB
REVIEWED	DCB
APPROVED	BKC

WHITESIDE COUNTY
F.A.U. 5563 (E. ELEVENTH ST.) OVER
ILLINOIS-MISSISSIPPI FEEDER CANAL. STATION 20+00

WILLETT HOFMANN & ASSOCIATES INC
ENGINEERING ARCHITECTURE AND SURVEYING
809 EAST 2ND STREET, DIXON, IL 61021-0367
T: 815-284-3381 DESIGN FIRM: #184-000918

SCHEDULE OF QUANTITIES

SHEET NO. 4 OF 4 SHEETS

F.A.U.	SECTION	COUNTY	TOTAL SHEETS	SHEET NO.
5563	19-00137-00-BR	WHITESIDE	60	11
	WHA* 1286J24	CONTRACT 85779		
	ILLINOIS			

85779

LEGEND

- XX" DIA TREE TO REMAIN
- XX" DIA TREE TO BE REMOVED

NOTE:
SEE PLAN AND PROFILE - PATH CONNECTOR SHEET FOR TREE REMOVALS ALONG THE PATH.

NOTE:
CORRUGATED MEDIANS SHALL BE CONSTRUCTED PER IDOT HIGHWAY STANDARD 606306 TO THE DIMENSIONS SHOWN.

CORRUGATED MEDIAN DETAIL
NOT TO SCALE

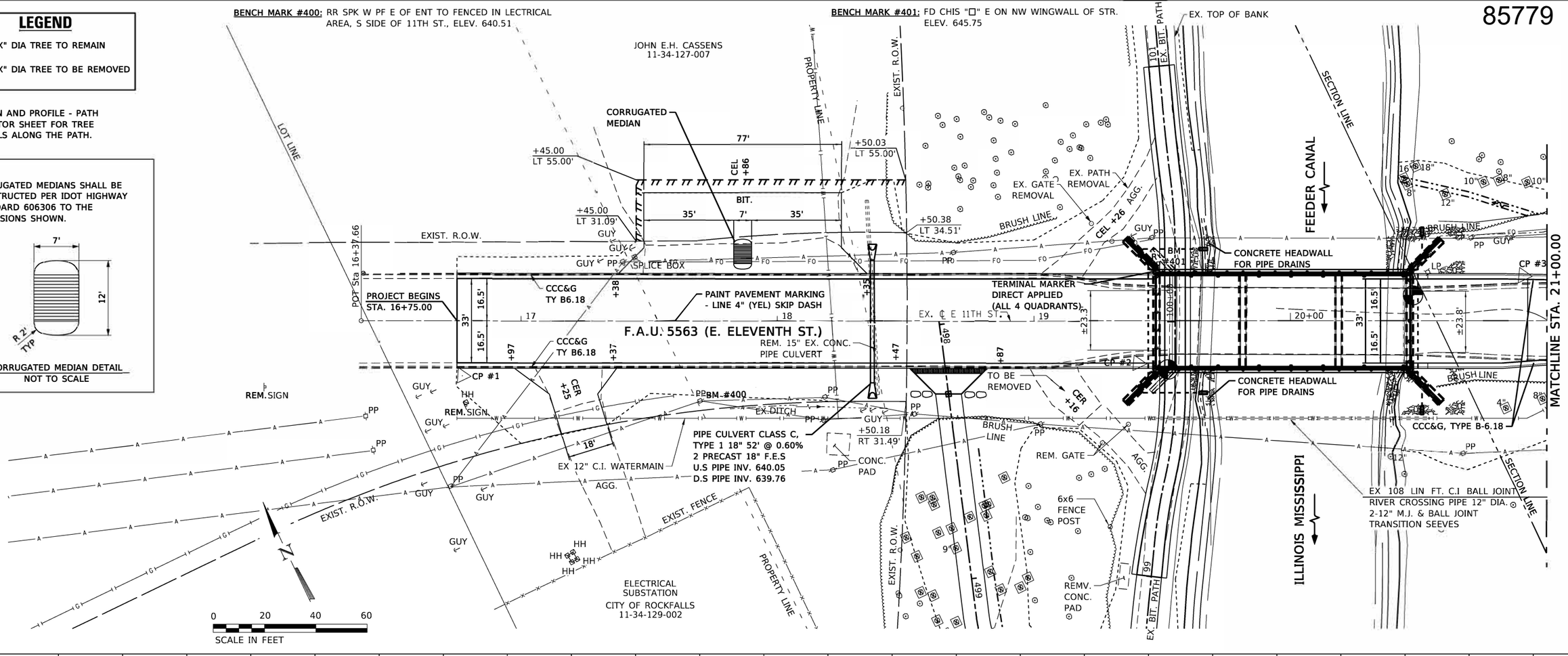

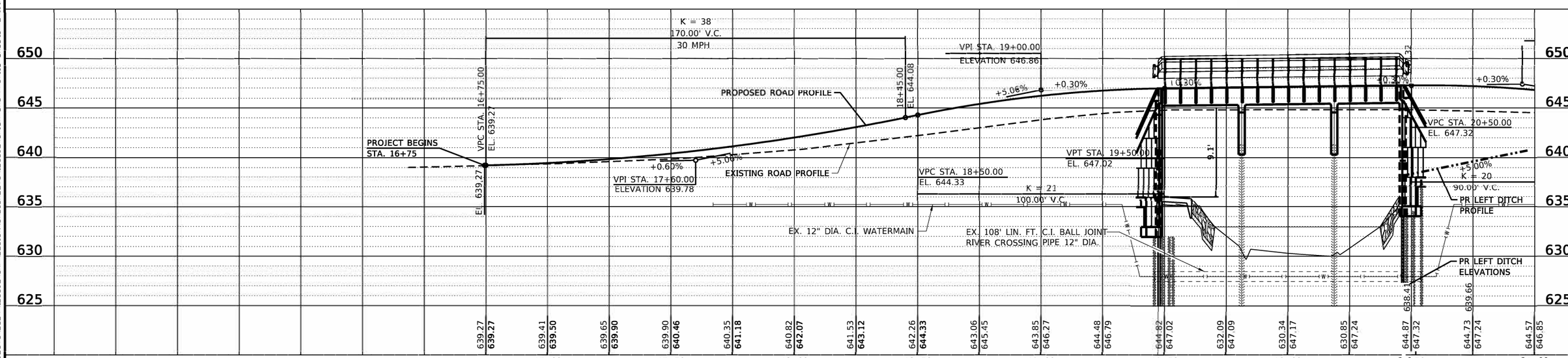

REVISION	DATE	BY	REMARKS

DESIGNED	KM
DRAWN	DJB
REVIEWED	DCB
APPROVED	BKC

WHITESIDE COUNTY
F.A.U. 5563 (E. ELEVENTH ST.) OVER
ILLINOIS-MISSISSIPPI FEEDER CANAL. STATION 20+00

WILLETT HOFMANN & ASSOCIATES INC
ENGINEERING ARCHITECTURE AND SURVEYING
809 EAST 2ND STREET, DIXON, IL 61021-0367
T: 815-284-3811 DESIGN FIRM: #184-000795

PLAN AND PROFILE - E 11TH STREET

SCALE: 1" = 20'-0" | SHEET NO. 1 OF 2 SHEETS | STA. 16+37.66 TO STA. 21+00.00

F.A.U.	SECTION	COUNTY	TOTAL SHEETS	SHEET NO.
5563	19-00137-00-BR	WHITESIDE	60	12
	WHA* 1286J24	CONTRACT 85779		
	ILLINOIS			

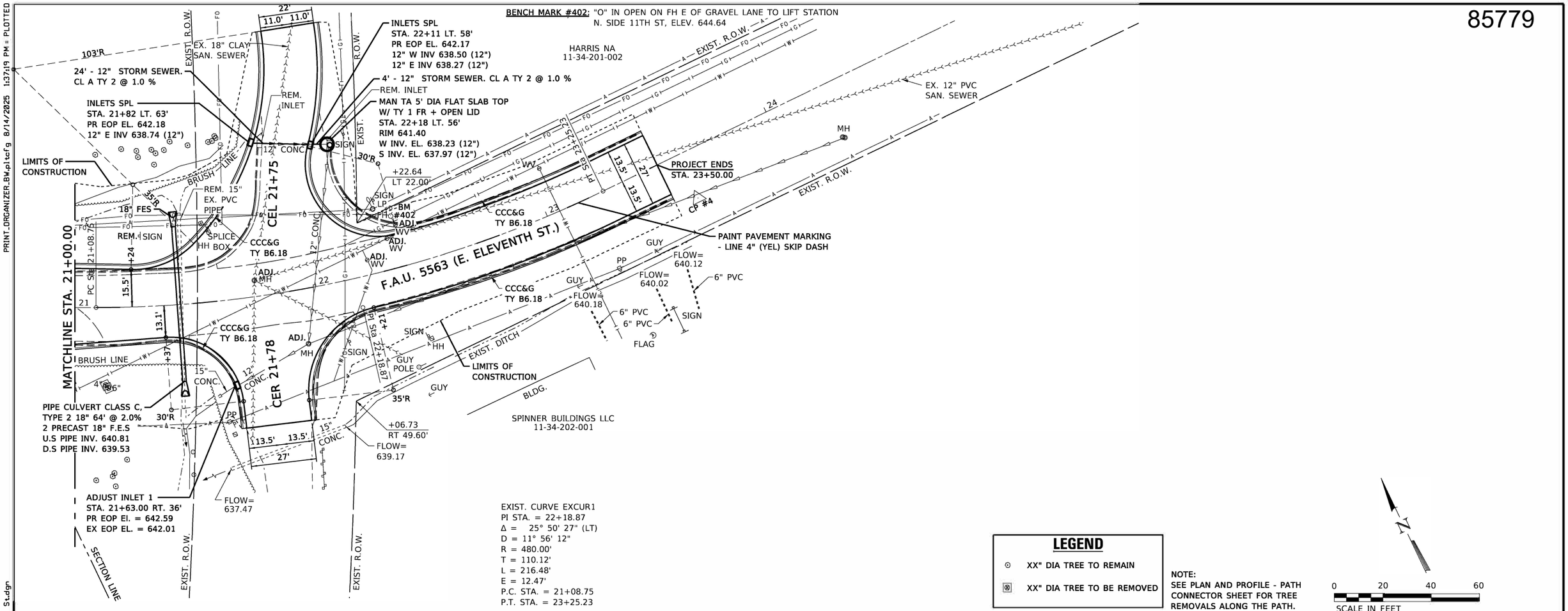

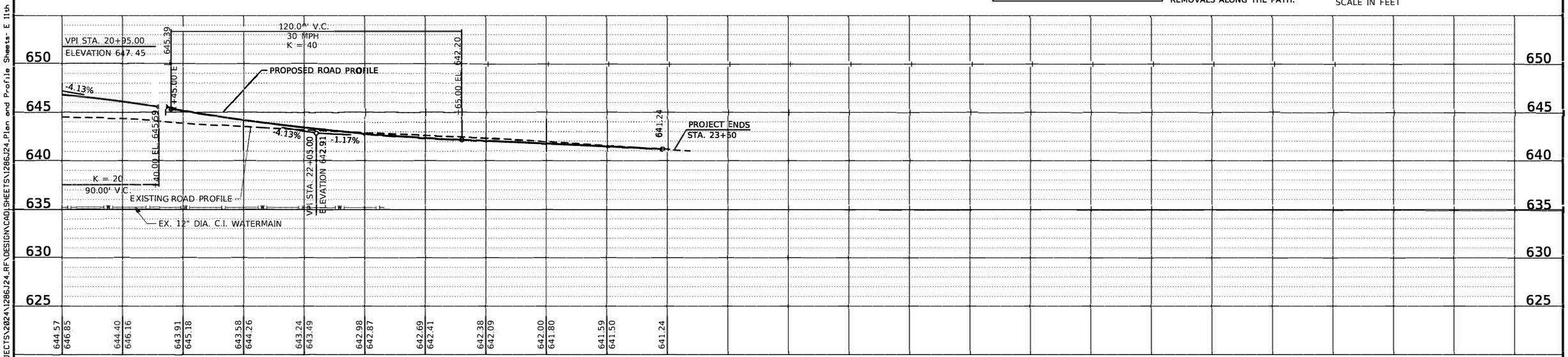

REVISION	DATE	BY	REMARKS

DESIGNED	KM
DRAWN	DJB
REVIEWED	DCB
APPROVED	BKC

WHITESIDE COUNTY
F.A.U. 5563 (E. ELEVENTH ST.) OVER
ILLINOIS-MISSISSIPPI FEEDER CANAL. STATION 20+00

WILLETT HOFMANN & ASSOCIATES INC
ENGINEERING ARCHITECTURE AND SURVEYING
809 EAST 2ND STREET, DIXON, IL 61021-0367
T: 815-284-3381 DESIGN FIRM: #184.000918

PLAN AND PROFILE - E 11TH STREET

SCALE: 1" = 20'-0" | SHEET NO. 2 OF 2 SHEETS | STA. 21+00.00 TO STA. 23+25.23

F.A.U.	SECTION	COUNTY	TOTAL SHEETS	SHEET NO.
5563	19-00137-00-BR	WHITESIDE	60	13
	WHA* 12 86J24	CONTRACT 85779		
	ILLINOIS			

FILE = S:\PROJECTS\2024\1286J24_RF\DESIGN\CAD\SHEETS\1286J24_Plan and Profile Sheets- E 11th St.dgn
PRINT_ORGANIZER_BW.pltcfg 8/14/2025 1:37:19 PM = PLOTTED

85779

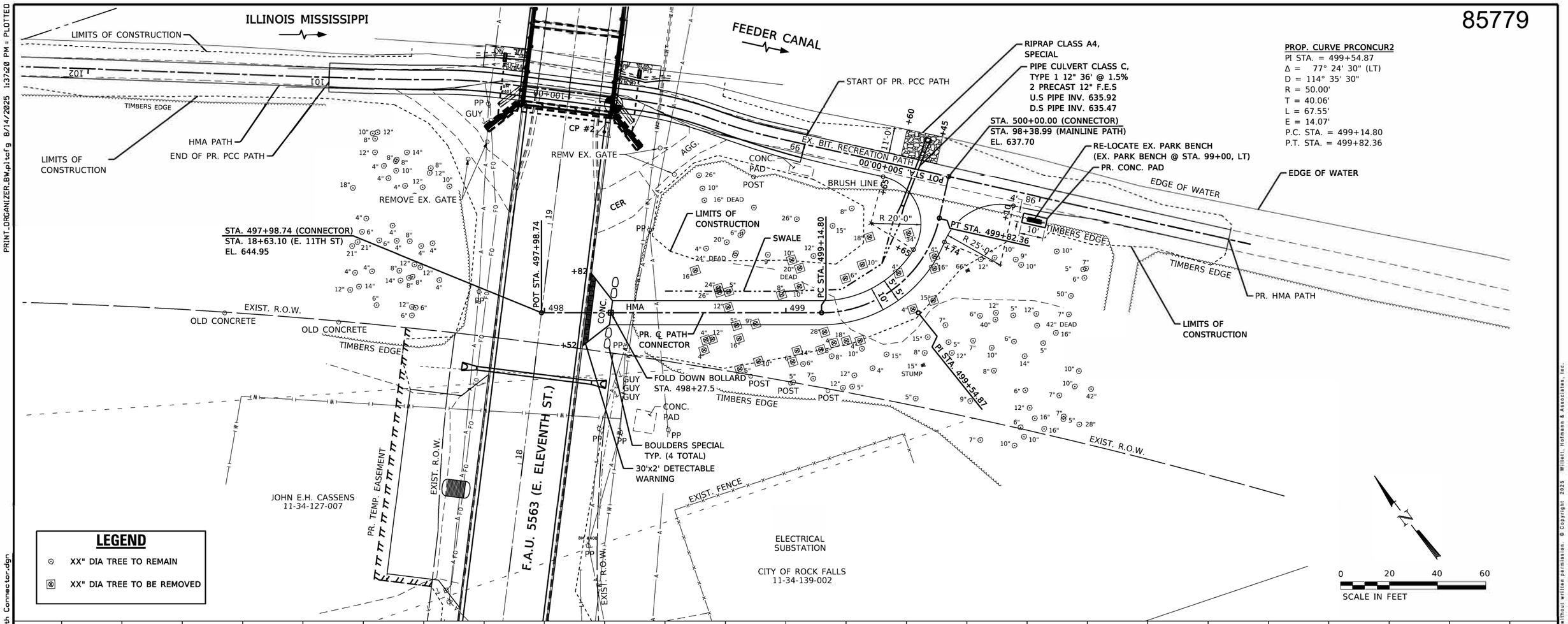

PROP. CURVE PRCONCUR2
PI STA. = 499+54.87
Δ = 77° 24' 30" (LT)
D = 114° 35' 30"
R = 50.00'
T = 40.06'
L = 67.55'
E = 14.07'
P.C. STA. = 499+14.80
P.T. STA. = 499+82.36

LEGEND

- XX" DIA TREE TO REMAIN
- XX" DIA TREE TO BE REMOVED

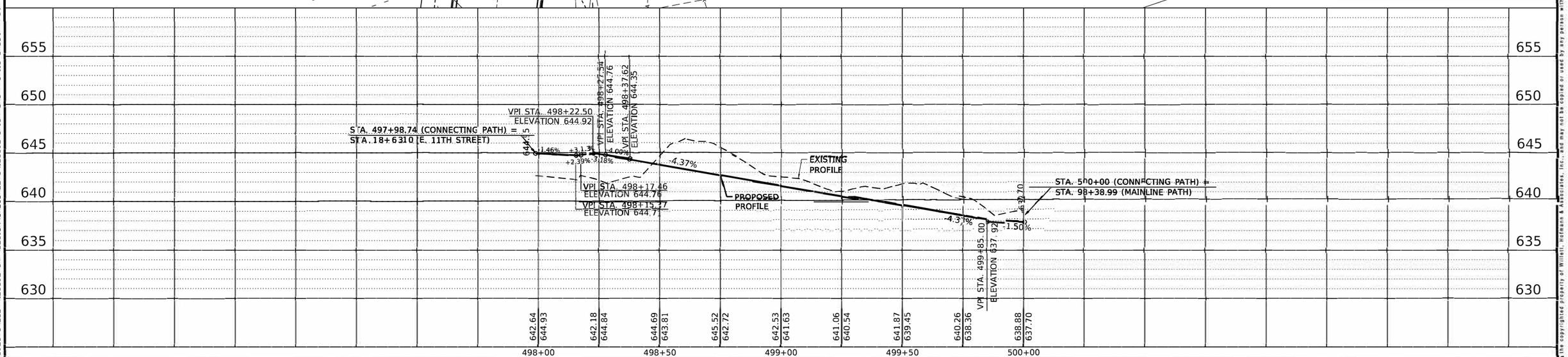

REVISION	DATE	BY	REMARKS

DESIGNED	KM
DRAWN	DJB
REVIEWED	DCB
APPROVED	BKC

WHITESIDE COUNTY
F.A.U. 5563 (E. ELEVENTH ST.) OVER
ILLINOIS-MISSISSIPPI FEEDER CANAL. STATION 20+00

WILLETT HOFMANN & ASSOCIATES INC
ENGINEERING ARCHITECTURE AND SURVEYING
809 EAST 2ND STREET, DIXON, IL 61021-0367
T: 815-2843381 DESIGN FIRM: #184-000918

PLAN AND PROFILE - PATH CONNECTOR

SCALE: 1" = 20' 0" | SHEET NO. 1 OF 1 SHEETS | STA. 497+98.74 TO STA. 500+00.00

F.A.U.	SECTION	COUNTY	TOTAL SHEETS	SHEET NO.
5563	19-00137-00-BR	WHITESIDE	60	14
	WHA* 1286J24	CONTRACT 85779		
	ILLINOIS			

85779

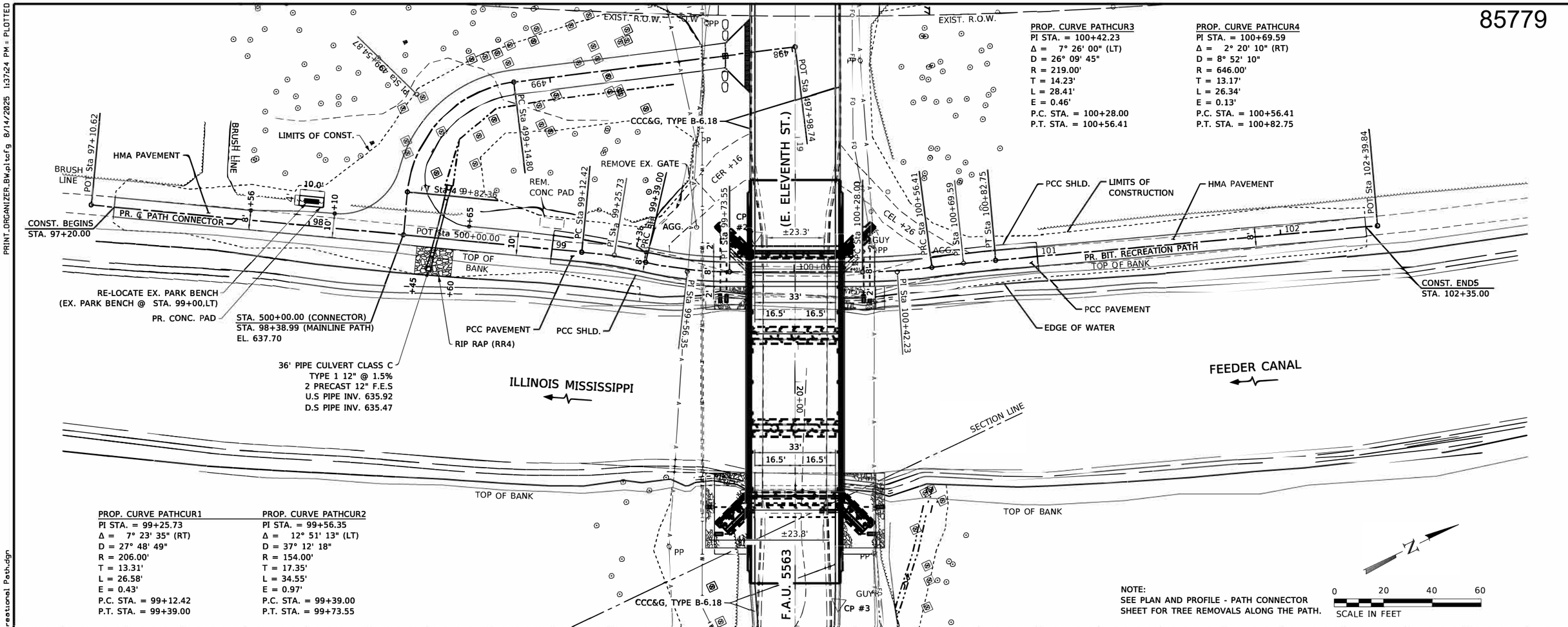

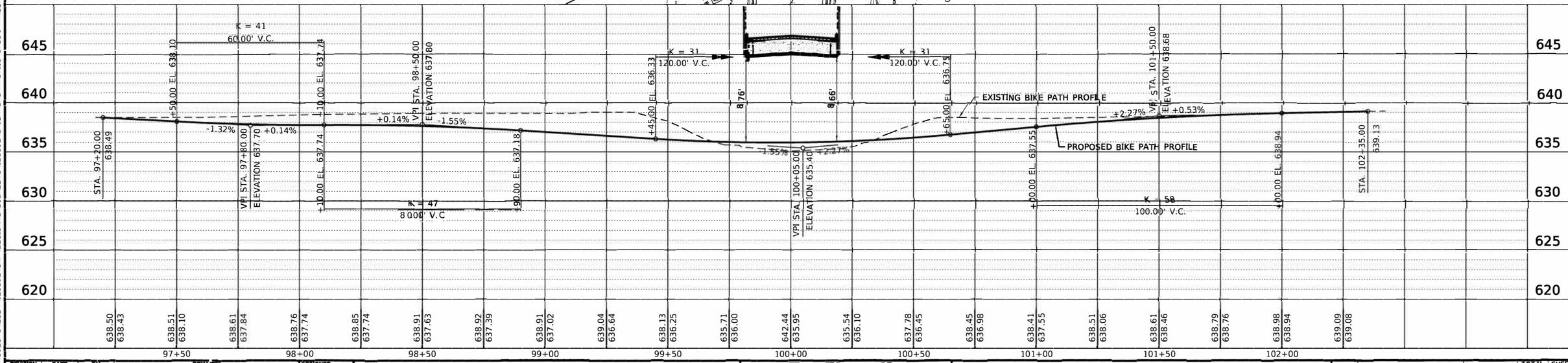

REVISION	DATE	BY	REMARKS

DESIGNED	KM
DRAWN	DJB
REVIEWED	DCB
APPROVED	BKC

WHITESIDE COUNTY
F.A.U. 5563 (E. ELEVENTH ST.) OVER
ILLINOIS-MISSISSIPPI FEEDER CANAL. STATION 20+00

WILLETT HOFMANN & ASSOCIATES INC
ENGINEERING ARCHITECTURE AND SURVEYING
809 EAST 2ND STREET, DIXON, IL 61021-0367
T: 815-284-3831 DESIGN FIRM: #184.000598

PLAN AND PROFILE - MULTI PURPOSE PATH

SCALE: 1" = 20'-0" | SHEET NO. 1 OF 1 SHEETS | STA. 97+09.29 TO STA. 102+50.64

F.A.U.	SECTION	COUNTY	TOTAL SHEETS	SHEET NO.
5563	19-00137-00-BR	WHITESIDE	60	15
	WHA* 1286J24	CONTRACT 85779		
	ILLINOIS			

FILE = S:\PROJECTS\2024\1286J24_RF\DESIGN\CAD_SHEETS\1286J24_Plan and Profile Sheet - Recreational Path.dgn
PRINT_ORGANIZER_BW.pltcfg 8/14/2025 11:37:24 PM = PLOTTED

85779

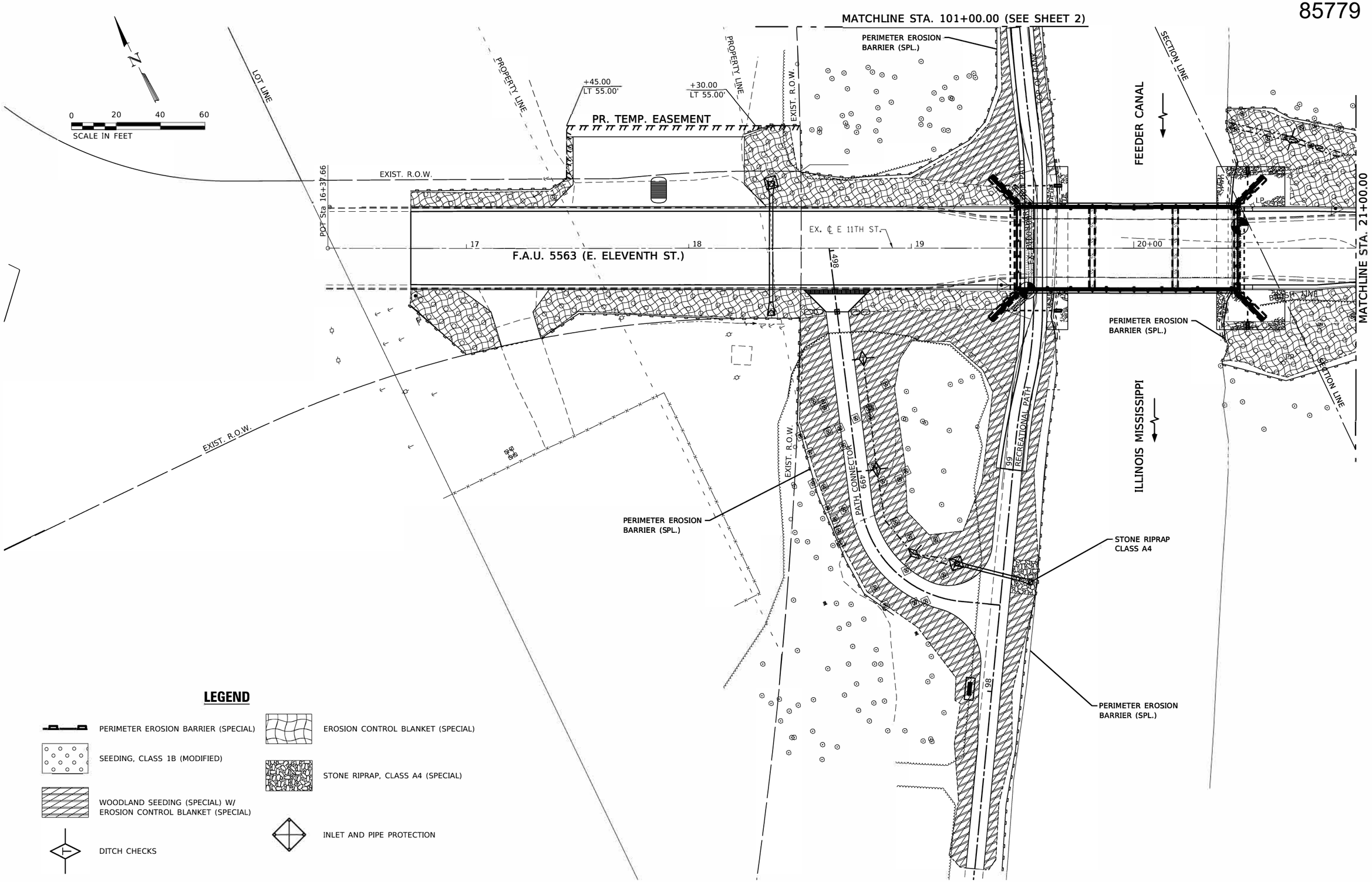

LEGEND

- PERIMETER EROSION BARRIER (SPECIAL)
- SEEDING, CLASS 1B (MODIFIED)
- WOODLAND SEEDING (SPECIAL) W/ EROSION CONTROL BLANKET (SPECIAL)
- DITCH CHECKS
- EROSION CONTROL BLANKET (SPECIAL)
- STONE RIPRAP, CLASS A4 (SPECIAL)
- INLET AND PIPE PROTECTION

REVISION	DATE	BY	REMARKS

DESIGNED	KM
DRAWN	DJB
REVIEWED	DCB
APPROVED	BKC

WHITESIDE COUNTY
F.A.U. 5563 (E. ELEVENTH ST.) OVER
ILLINOIS-MISSISSIPPI FEEDER CANAL. STATION 20+00

WILLETT HOFMANN & ASSOCIATES INC
ENGINEERING ARCHITECTURE AND SURVEYING
849 EAST 2ND STREET, DIXON, IL 61021-0367
T: 815-284-3848 DESIGN FIRM #184-000576

EROSION CONTROL SHEETS

SCALE: 1" = 20'-0" | SHEET NO. 1 OF 2 SHEETS | STA. 21+00.00 TO STA. 23+25.23

F.A.U.	SECTION	COUNTY	TOTAL SHEETS	SHEET NO.
5563	19-00137-00-BR	WHITESIDE	60	16
	WHA= 1286J24	CONTRACT 85779		
	ILLINOIS			

FILE = S:\PROJECTS\2024\1286J24_RF\DESIGN\CAD_SHEETS\1286J24_Erosion Control Sheets.dgn

PRINT_ORGANIZER_BW.pltcfg 8/14/2025 1:37:27 PM = PLOTTED

85779

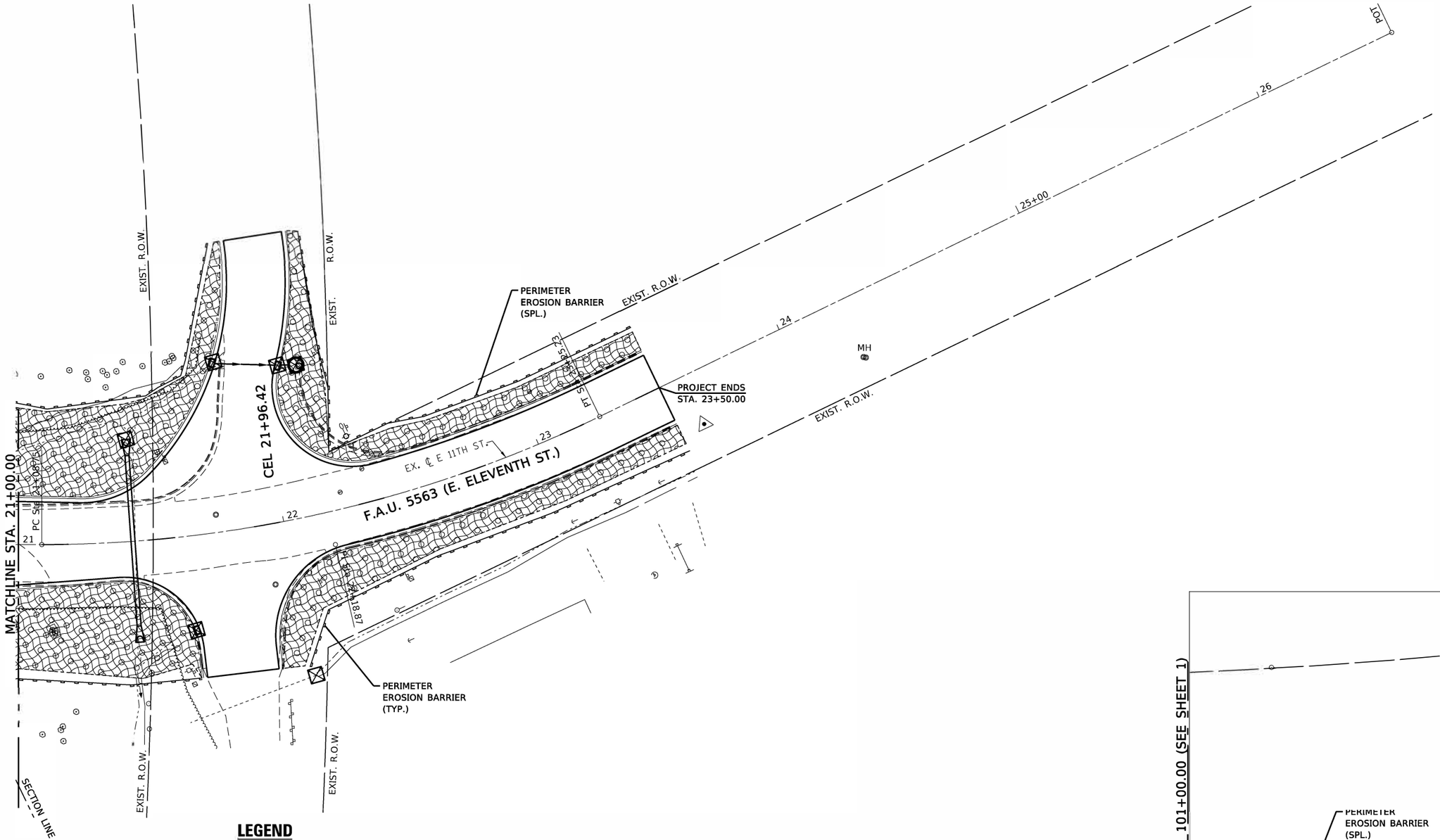

LEGEND

- PERIMETER EROSION BARRIER (SPECIAL)
- SEEDING, CLASS 1B (MODIFIED)
- EROSION CONTROL BLANKET (SPECIAL)
- INLET AND PIPE PROTECTION

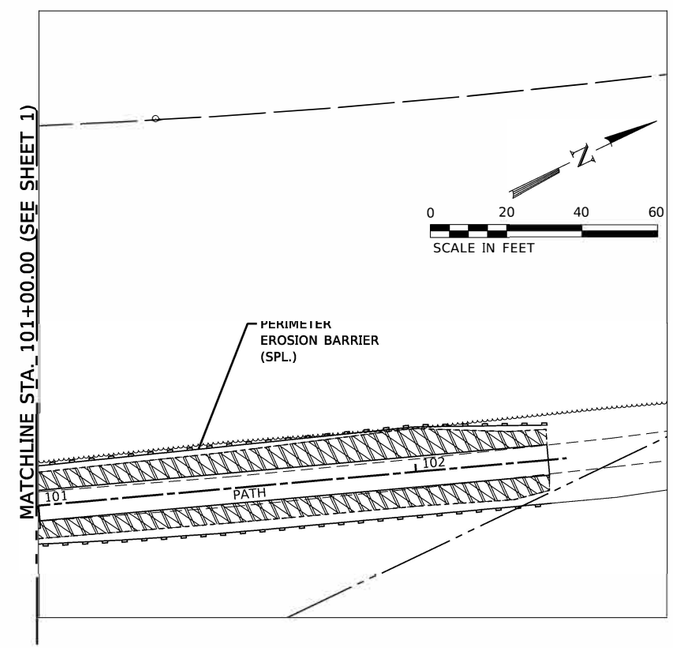

REVISION	DATE	BY	REMARKS

DESIGNED	KM
DRAWN	DJB
REVIEWED	DCB
APPROVED	BKC

WHITESIDE COUNTY
F.A.U. 5563 (E. ELEVENTH ST.) OVER
ILLINOIS-MISSISSIPPI FEEDER CANAL. STATION 20+00

WILLETT HOFMANN & ASSOCIATES INC
ENGINEERING ARCHITECTURE LAND SURVEYING
809 EAST 2ND STREET, DIXON, IL 61021-0367
T: 815-284-3338 DESIGN FIRM: #184-000918

EROSION CONTROL SHEETS

SCALE: 1" = 20'-0"	SHEET NO. 2 OF 2 SHEETS	STA. 21+00.00 TO STA. 23+25.23

F.A.U.	SECTION	COUNTY	TOTAL SHEETS	SHEET NO.
5563	19-00137-00-BR	WHITESIDE	60	17
	WHA# 1286J24	CONTRACT 85779		
	ILLINOIS			

85779

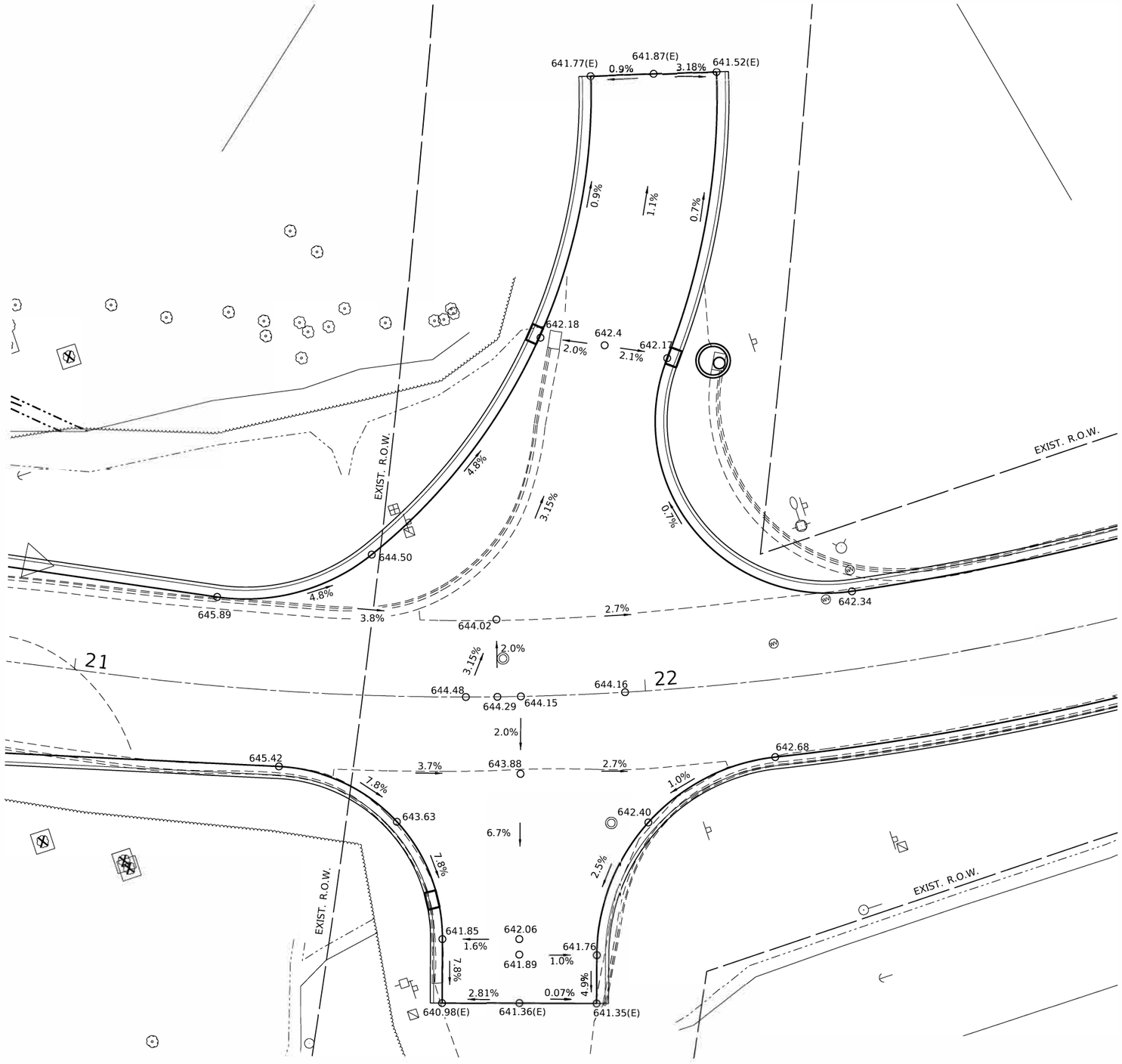

REVISION	DATE	BY	REMARKS

DESIGNED	KM
DRAWN	DJB
REVIEWED	DCB
APPROVED	BKC

WHITESIDE COUNTY
F.A.U. 5563 (E. ELEVENTH ST.) OVER
ILLINOIS-MISSISSIPPI FEEDER CANAL. STATION 20+00

WILLETT HOFMANN & ASSOCIATES INC
ENGINEERING ARCHITECTURE LAND SURVEYING
809 EAST 2ND STREET, DIXON, IL 61021-0367
T: 815-284-3381 DESIGN FIRM: #184-000918

INTERSECTION DETAIL SHEET

SCALE: 1" = 10'-0"	SHEET NO. 1 OF 1 SHEETS	STA. 21+08.75 TO STA. 22+18.87

F.A.U.	SECTION	COUNTY	TOTAL SHEETS	SHEET NO.
5563	19-00137-00-BR	WHITESIDE	60	18
	WHA* 1286J24	CONTRACT 85779		
	ILLINOIS			

FILE = S:\PROJECTS\2024\1286J24_RF\DESIGN\CAD_SHEETS\1286J24_Intersection Details.dgn

PRINT_ORGANIZER_BW.pltcfg 8/14/2025 1:37:30 PM = PLOTTED

BM: # 400 Railroad spike in power pole E of Entrance to electrical panels, S. side of 11th St., Elev. 640.51

Existing Structure (No. 098-6010): Originally constructed in 1963, concrete slab structure on pile supported abutments and piers with concrete encasement. See Special Provision for "Removal of Existing Structure". No skew.

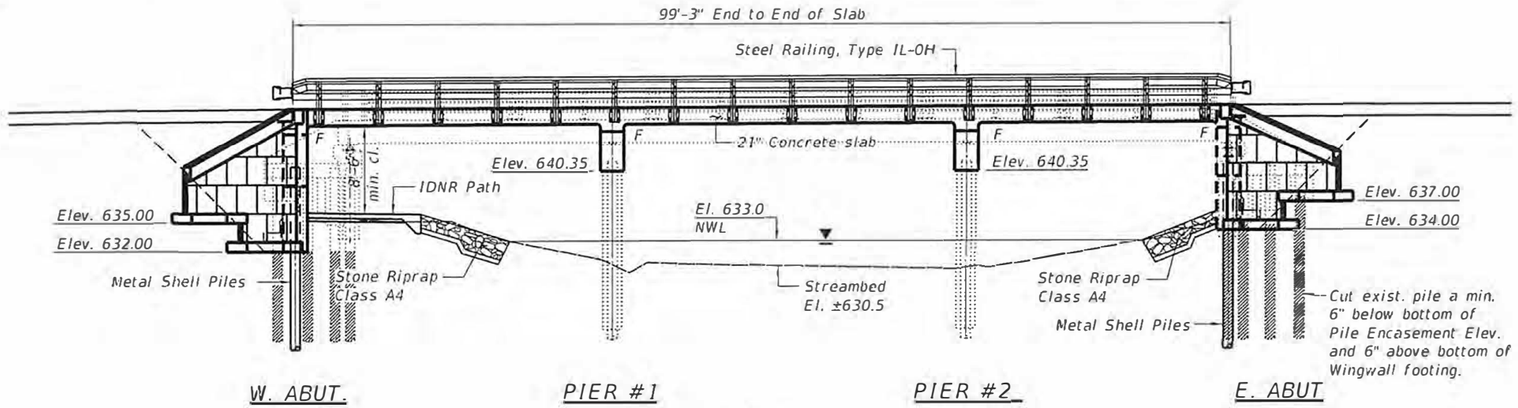

ELEVATION

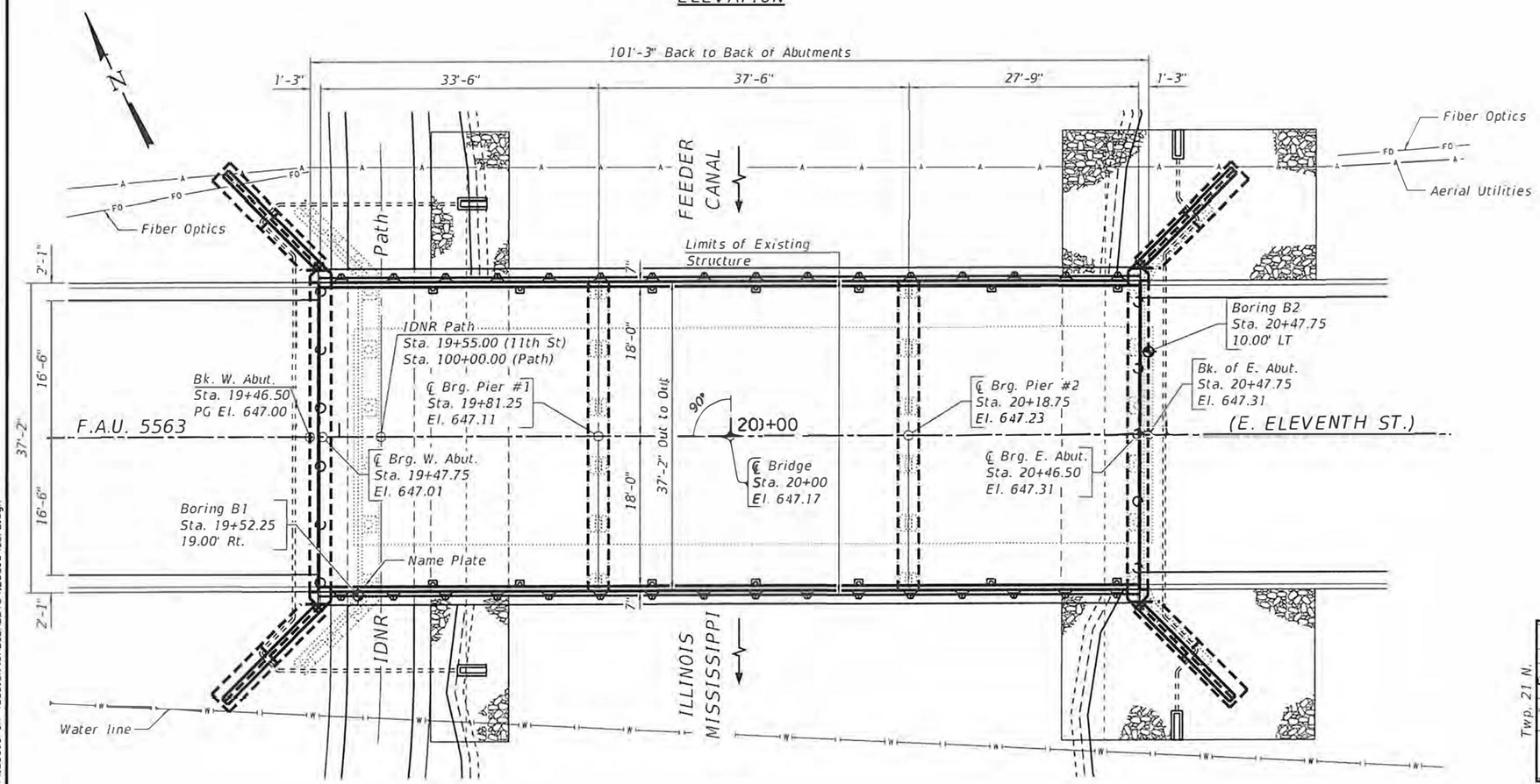

PLAN

STA. 20+00
BUILT 2026 BY
CITY OF ROCK FALLS
F.A.U. RT. 5563
Sec. 19-00137-00-BR
LOADING HL-93
STR. NO. 098-6010

NAME PLATE

See Std. 515001

INDEX OF SHEETS

LOADING HL-93

Allow 15#/sq. ft. for future wearing surface.

DESIGN SPECIFICATIONS

Design in accordance with 2020 AASHTO LRFD Bridge Design Specifications, 9th Edition

DESIGN STRESSES

FIELD UNITS

f'c = 4,000 psi (Superstructure)
f'c = 3,500 psi (Substructure)
fy = 60,000 psi (Reinforcement)

SEISMIC DATA

Seismic Performance Zone (SPZ) = 1
Design Spectral Acceleration at 1.0 sec. (SD1) = 0.084 g
Design Spectral Acceleration at 0.2 sec. (SDS) = 0.136 g
Soil Site Class = D

STATE OF ILLINOIS
BRIAN K. CONVERSE
081-005213
DIXON, IL.
LICENSED STRUCTURAL ENGINEER

DATE: 08/14/2025

EXPIRES 11/30/26

"I certify that to the best of my knowledge, information and belief, this bridge design is structurally adequate for the design loading shown on the plans, the design is an economical one complies with requirements of the current 'AASHTO Standard Specifications for Highway Bridges'."

LOCATION SKETCH

GENERAL PLAN AND ELEVATION
F.A.U. 5563 (E. ELEVENTH ST.) OVER
ILLINOIS MISSISSIPPI FEEDER CANAL
SECTION NO. 19-00137-00-BR
WHITESIDE COUNTY
STATION 20+00
STRUCTURE NO. 098-6010

REVISION	DATE	BY	REMARKS

DESIGNED	BKC
DRAWN	FDL
REVIEWED	EEL
APPROVED	BKC

WHITESIDE COUNTY
F.A.U. 5563 (E. ELEVENTH ST.) OVER
ILLINOIS-MISSISSIPPI FEEDER CANAL, STATION 20+00

WILLETT HOFMANN & ASSOCIATES INC
PROFESSIONAL ENGINEERS ARCHITECTURE LAND SURVEYING
808 EAST 2ND STREET, DIXON, IL 61021 815-284-3387
E-815-284-3387 DESIGN FIRM: 184-000488

STRUCTURAL SHEET NO. 1 OF 25 SHEETS

F.A.U.	SECTION	COUNTY	TOTAL SHEETS	SHEET NO.
5563	19-00137-00-BR	WHITESIDE	60	19
	WHA* 1286J24	CONTRACT 85779		
	ILLINOIS			

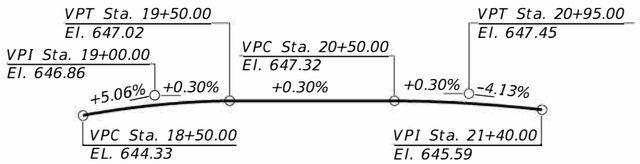

PROFILE GRADE
(Along ℄ Roadway)

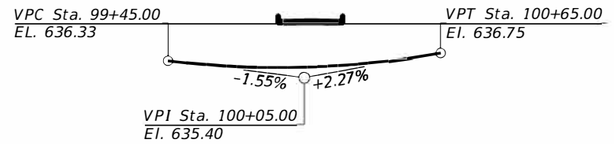

PROFILE GRADE
(Along ℄ Multi-Use Path)

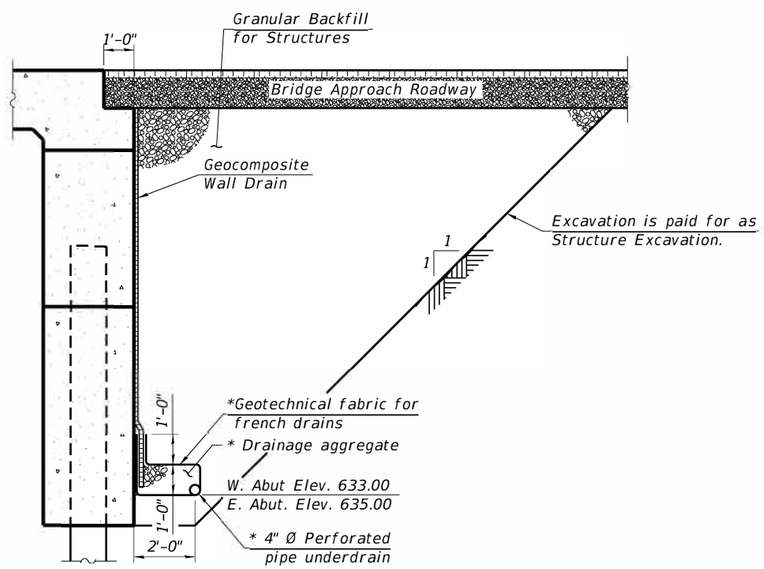

SECTION THRU INTEGRAL ABUTMENT
(Horiz. dim. at Rt. ∠'s)
(Section B-B on Structural Sheet 3 of 25)

* Included in the cost of Pipe Underdrains for Structures.
(See Special Provisions)

Note:
All drainage system components shall extend to 2'-0" from the end of each wingwall except an outlet pipe shall extend until intersecting with the side slopes. The pipes shall drain into concrete headwalls. (See Article 601.05 of the Standard Specifications and Highway Standard 601101).

TOTAL BILL OF MATERIAL 85779

	ITEM	UNIT	SUPER	SUB	TOTAL
**	Removal of Existing Structures	Each	—	—	1
	Structure Excavation	Cu. Yd.	—	436	436
	Concrete Structures	Cu. Yd.	—	74.8	74.8
	Concrete Superstructure	Cu. Yd.	252.6	—	252.6
	Bridge Deck Grooving	Sq. Yd.	375	—	375
	Concrete Encasement	Cu. Yd.	—	44.9	44.9
	Protective Coat	Sq. Yd.	421	—	421
	Reinforcement Bars, Epoxy Coated	Pound	63,050	17,100	80,150
	Steel Railing, Type IL-OH	Foot	204	—	204
	Furnishing Metal Shell Piles 12" X 0.250"	Foot	—	581	581
	Driving Piles	Foot	—	581	581
	Test Pile Metal Shells	Each	—	2	2
	Name Plates	Each	1	—	1
**	Mechanically Stabilized Earth Retaining Wall	Sq. Ft.	—	615	615
	Drainage System for Structures	L Sum	—	1	1
**	Granular Backfill for Structures	Cu Yd	—	234	234
	Geocomposite Wall Drain	Sq Yd	—	102	102
	Pipe Underdrains for Structures 4"	Foot	—	165	165
**	Stone Riprap, Class A4 (Special)	Sq Yd	—	232	232
**	Bar Splicers (Special)	Each	—	76	76

**See Special Provisions

GENERAL NOTES:

Reinforcement bars designated (E) shall be epoxy coated.

Excavation behind existing abutment walls shall be performed to balance front and back soil pressure before removing the existing superstructure.

Backfill shall be placed behind the abutment after the superstructure has been poured and falsework removed. See Article 502.10 of the Standard Specifications.

The Contractor shall make allowance for the deflection of forms, shrinkage and settlement of falsework, in addition to allowance for dead load deflection. Forms for deck slab shall be removed prior to placement of bridge approach slab.

Dewatering to construct Abutments and Wingwall shall be included in the Contract Unit Price Per Cubic Yard of Concrete Structures.

Granular Backfill behind the abutments shall be compacted according to Article 205.06 of the Standard Specifications.

Layout of the slope protection system may be varied to suit ground conditions in the field as directed by the Engineer.

Plan dimensions and details relative to the existing structure have been taken from existing plans are subject to nominal construction variations. The Contactor shall field verify existing dimensions and details affecting new construction and make necessary approved adjustments prior to construction or ordering of materials. Such variations shall not be cause for additional compensation for a change in scope of the work, however, the Contractor will be paid for the quantity actually furnished at the unit price bid for the work.

Existing reinforcement shall be cleaned, straightened, and incorporated into the new construction. Cost included with Removal of Existing Structures.

Existing Name Plate shall be cleaned and relocated next to new Name Plate. Cost included with Name Plates.

WATERWAY INFORMATION

Drainage Area = N/A*			Low Grade Elev. 647.00 @ Sta. 19+46.50						
Flood	Freq. Yr.	Q C.F.S.	Opening Ft²		Nat. H.W.E.	Head - Ft.		Headwater El.	
			Exist.	Prop.		Exist.	Prop.	Exist.	Prop.
Design	—	38	1,149.0	1,150.1	633.8	-	-	-	-

* Controlled Waterway

BRIDGE DESIGN SCOUR ELEVATION TABLE

Event/Limit State	Design Scour Elevations (ft)				
	W Abut	Pier 1	Pier 2	E Abut	Item 113
(Design)	632.00	629.50	629.50	634.00	8

GENERAL DATA
F.A.U. 5563 (E. ELEVENTH ST.) OVER ILLINOIS MISSISSIPPI FEEDER CANAL
SECTION NO. 19-00137-00-BR
WHITESIDE COUNTY
STATION 20+00
STRUCTURE NO. 098-6010

REVISION	DATE	BY	REMARKS

DESIGNED BKC
DRAWN FDL
REVIEWED EEL
APPROVED BKC

WHITESIDE COUNTY
F.A.U. 5563 (E. ELEVENTH ST.) OVER
ILLINOIS-MISSISSIPPI FEEDER CANAL. STATION 20+00

WILLETT HOFMANN & ASSOCIATES INC
ENGINEERING ARCHITECTURE AND SURVEYING
849 EAST 2ND STREET, DIXON, IL 61021-0367
T: 815-284-3.38.1 DESIGN FIRM #184 0.00.918

STRUCTURAL SHEET NO. 2 OF 25 SHEETS

F.A.U.	SECTION	COUNTY	TOTAL SHEETS	SHEET NO.
5563	19-00137-00-BR	WHITESIDE	60	20
	WHA* 1286J24	CONTRACT 85779		
	ILLINOIS			

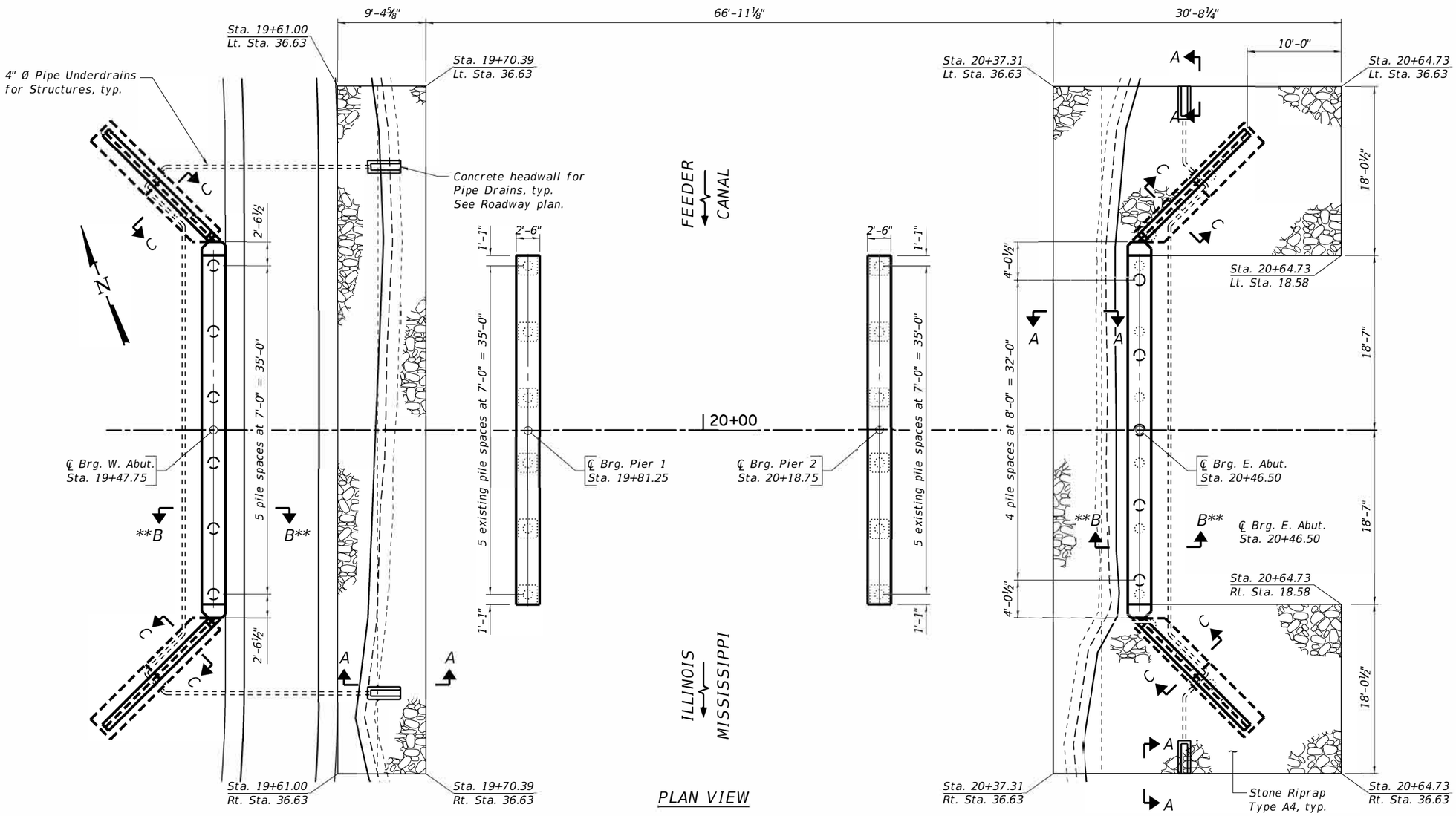

PLAN VIEW

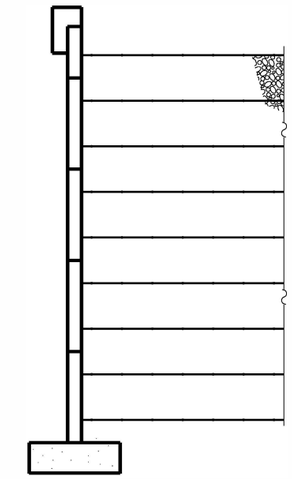

SECTION C-C

Footing elevations varies.
See Abutment sheets.

NOTE:

**Section B-B, see "Section thru Integral Abutment" on Structural Sheet 2 of 25

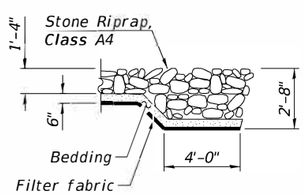

SECTION A-A

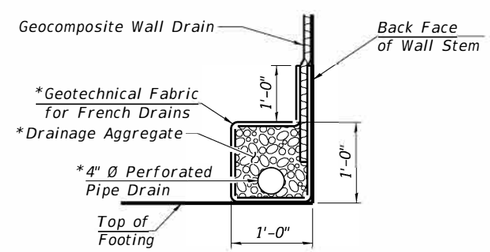

PIPE UNDERDRAIN DETAIL

*Included in the Cost for "Pipe Underdrains for Structures." (Behind Abutment Wall)

BILL OF MATERIAL

Item	Unit	Quantity
Pipe Underdrain For Structures	Foot	165
Stone Riprap, Class A4 (Special)	Sq. Yd.	232

REVISION	DATE	BY	REMARKS

DESIGNED BKC
DRAWN FDL
REVIEWED EEL
APPROVED BKC

WHITESIDE COUNTY
F.A.U. 5563 (E. ELEVENTH ST.) OVER
ILLINOIS-MISSISSIPPI FEEDER CANAL. STATION 20+00

WILLETT HOFMANN & ASSOCIATES INC
ENGINEERING ARCHITECTURE AND SURVEYING
849 EAST 2ND STREET, DIXON, IL 61021-0367
T: 815 288338 1 DE 3 SFI R: 1 # 18 4000918

RIPRAP AND PILE LAYOUT
STRUCTURE NO. 098-6010

STRUCTURAL SHEET NO. 3 OF 25 SHEETS

F.A.U.	SECTION	COUNTY	TOTAL SHEETS	SHEET NO.
5563	19-00137-00-BR	WHITESIDE	60	21
	WHA* 1286J24	CONTRACT 85779		
	ILLINOIS			

PRINT_ORGANIZER_BW.pltcfg 8/15/2025 10:30:08 AM = PLOTTED
FILE = S:\PROJECTS\2024\1286J24_RF\DESIGN\CAD_SHEETS\1286J24_Riprap and Pile Layout.dgn

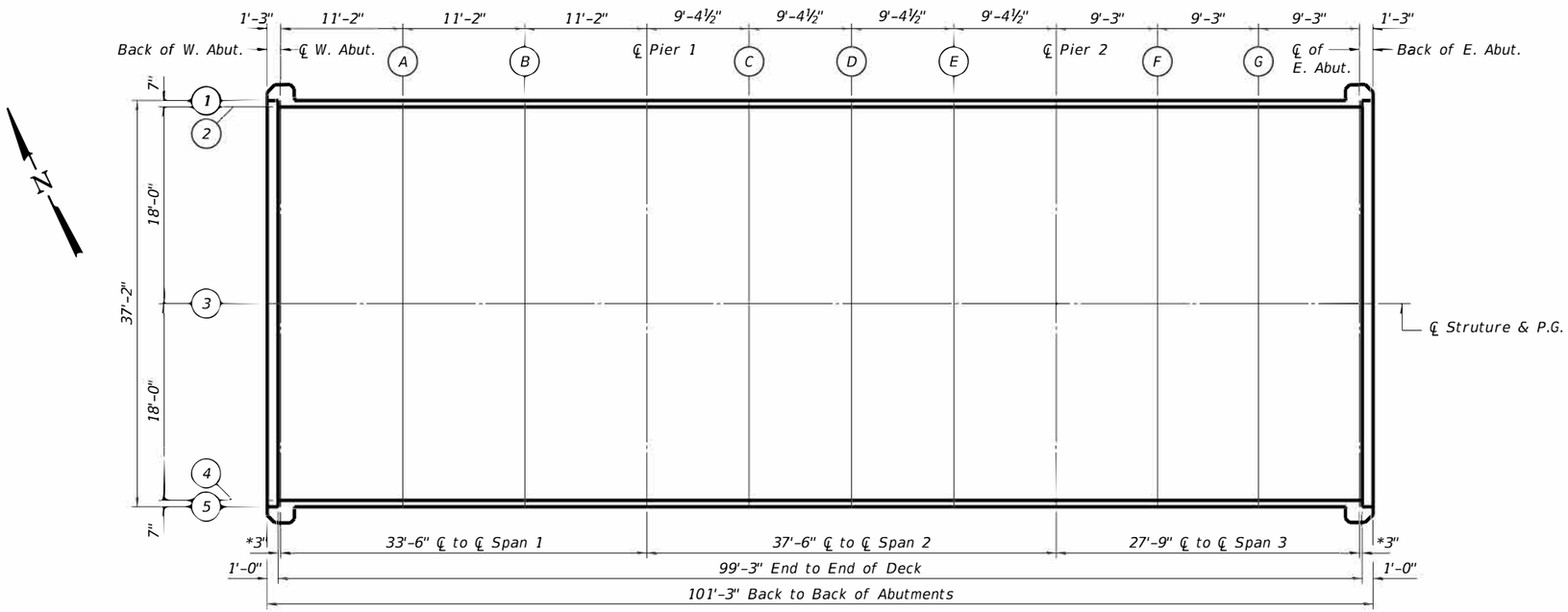

PLAN VIEW

* From ℄ Brg. to End of Deck.

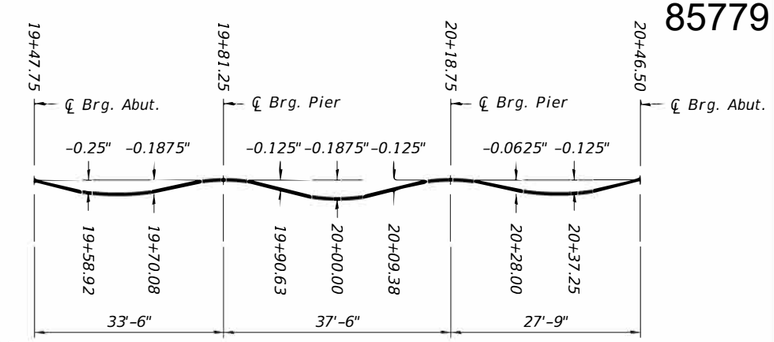

DEAD LOAD DEFLECTION DIAGRAM

(Includes weight of concrete only.)

Note:
The above deflections are not to be used in the field if the engineer is working from the grade elevations adjusted for dead load deflections as shown below.

NORTH EDGE OF DECK (1)

Location	Station	Lt. Offset	Theoretical Grade Elevations	Theoretical Grade Elevations Adjusted For Dead Load Deflection
End of Deck W. Abut.	19+47.50	18.58'	646.72	646.72
℄ Brg. W. Abut.	19+47.75	18.58'	646.72	646.72
A	19+58.92	18.58'	646.75	646.77
B	19+70.08	18.58'	646.79	646.80
℄ Pier 1	19+81.25	18.58'	646.82	646.82
C	19+90.63	18.58'	646.85	646.86
D	20+00.00	18.58'	646.88	646.89
E	20+09.38	18.58'	646.90	646.92
℄ Pier 2	20+18.75	18.58'	646.93	646.93
F	20+28.00	18.58'	646.96	646.97
G	20+37.25	18.58'	646.99	647.00
℄ Brg. E. Abut.	20+46.50	18.58'	647.02	647.02
End of Deck E. Abut.	20+46.75	18.58'	647.02	647.02

CENTERLINE OF ROADWAY & P.G. (3)

Location	Station	Offset	Theoretical Grade Elevations	Theoretical Grade Elevations Adjusted For Dead Load Deflection
End of Deck W. Abut.	19+47.50	0.00'	647.01	647.01
℄ Brg. W. Abut.	19+47.75	0.00'	647.01	647.01
A	19+58.92	0.00'	647.05	647.07
B	19+70.08	0.00'	647.08	647.10
℄ Pier 1	19+81.25	0.00'	647.11	647.11
C	19+90.63	0.00'	647.14	647.15
D	20+00.00	0.00'	647.17	647.19
E	20+09.38	0.00'	647.20	647.21
℄ Pier 2	20+18.75	0.00'	647.23	647.23
F	20+28.00	0.00'	647.25	647.26
G	20+37.25	0.00'	647.28	647.29
℄ Brg. E. Abut.	20+46.50	0.00'	647.31	647.31
End of Deck E. Abut.	20+46.75	0.00'	647.31	647.31

SOUTH EDGE OF DECK (5)

Location	Station	Rt. Offset	Theoretical Grade Elevations	Theoretical Grade Elevations Adjusted For Dead Load Deflection
End of Deck W. Abut.	19+47.50	18.58'	646.72	646.72
℄ Brg. W. Abut.	19+47.75	18.58'	646.72	646.72
A	19+58.92	18.58'	646.75	646.77
B	19+70.08	18.58'	646.79	646.80
℄ Pier 1	19+81.25	18.58'	646.82	646.82
C	19+90.63	18.58'	646.85	646.86
D	20+00.00	18.58'	646.88	646.89
E	20+09.38	18.58'	646.90	646.92
℄ Pier 2	20+18.75	18.58'	646.93	646.93
F	20+28.00	18.58'	646.96	646.97
G	20+37.25	18.58'	646.99	647.00
℄ Brg. E. Abut.	20+46.50	18.58'	647.02	647.02
End of Deck E. Abut.	20+46.75	18.58'	647.02	647.02

NORTH CURB LINE (2)

Location	Station	Lt. Offset	Theoretical Grade Elevations	Theoretical Grade Elevations Adjusted For Dead Load Deflection
End of Deck W. Abut.	19+47.50	18.00'	646.73	646.73
℄ Brg. W. Abut.	19+47.75	18.00'	646.73	646.73
A	19+58.92	18.00'	646.77	646.79
B	19+70.08	18.00'	646.80	646.82
℄ Pier 1	19+81.25	18.00'	646.84	646.84
C	19+90.63	18.00'	646.86	646.87
D	20+00.00	18.00'	646.89	646.91
E	20+09.38	18.00'	646.92	646.93
℄ Pier 2	20+18.75	18.00'	646.95	646.95
F	20+28.00	18.00'	646.98	646.98
G	20+37.25	18.00'	647.00	647.01
℄ Brg. E. Abut.	20+46.50	18.00'	647.03	647.03
End of Deck E. Abut.	20+46.75	18.00'	647.03	647.03

SOUTH CURB LINE (4)

Location	Station	Rt. Offset	Theoretical Grade Elevations	Theoretical Grade Elevations Adjusted For Dead Load Deflection
End of Deck W. Abut.	19+47.50	18.00'	646.73	646.73
℄ Brg. W. Abut.	19+47.75	18.00'	646.73	646.73
A	19+58.92	18.00'	646.77	646.79
B	19+70.08	18.00'	646.80	646.82
℄ Pier 1	19+81.25	18.00'	646.84	646.84
C	19+90.63	18.00'	646.86	646.87
D	20+00.00	18.00'	646.89	646.91
E	20+09.38	18.00'	646.92	646.93
℄ Pier 2	20+18.75	18.00'	646.95	646.95
F	20+28.00	18.00'	646.98	646.98
G	20+37.25	18.00'	647.00	647.01
℄ Brg. E. Abut.	20+46.50	18.00'	647.03	647.03
End of Deck E. Abut.	20+46.75	18.00'	647.03	647.03

REVISION	DATE	BY	REMARKS

DESIGNED BKC
DRAWN FDL
REVIEWED EEL
APPROVED BKC

WHITESIDE COUNTY
F.A.U. 5563 (E. ELEVENTH ST.) OVER
ILLINOIS-MISSISSIPPI FEEDER CANAL. STATION 20+00

WILLETT HOFMANN & ASSOCIATES INC
ENGINEERING ARCHITECTURE LAND SURVEYING
809 EAST 2ND STREET, DIXON, IL 61021-0367
T: 815-284-3381 DESIGN FIRM: #184-000918

TOP OF SLAB ELEVATIONS
STRUCTURE NO. 098-6010

STRUCTURAL SHEET NO. 4 OF 25 SHEETS

F.A.U.	SECTION	COUNTY	TOTAL SHEETS	SHEET NO.
5563	19-00137-00-BR	WHITESIDE	60	22
	WHA* 1286J24	CONTRACT 85779		
	ILLINOIS			

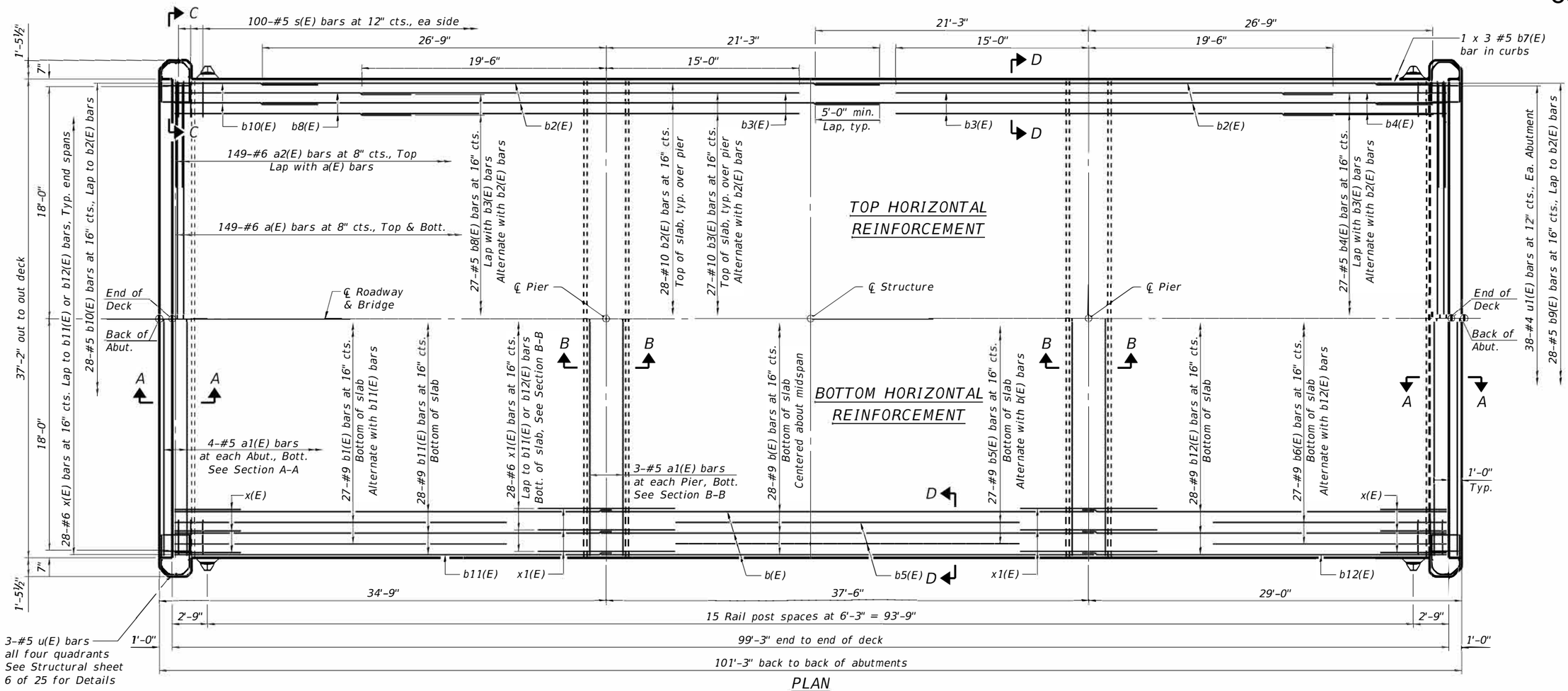

PLAN

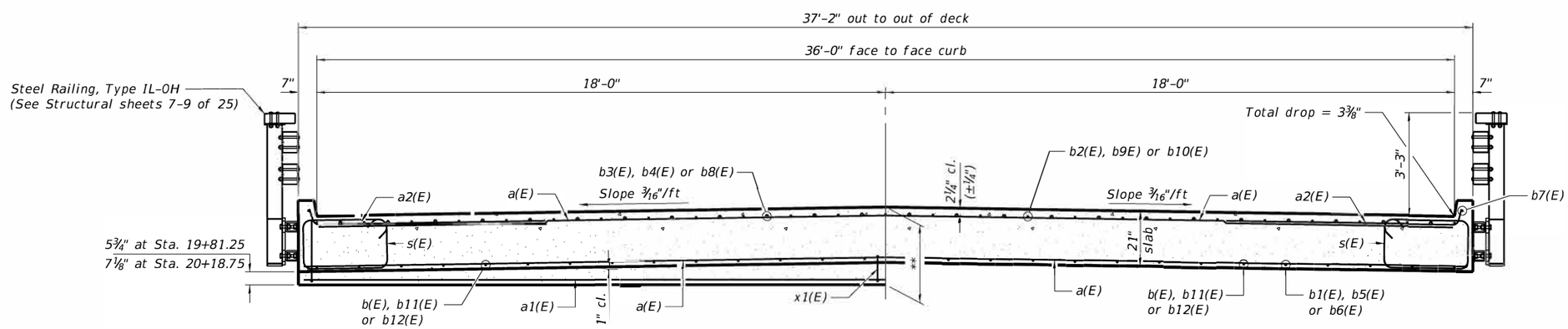

NEAR PIER — NEAR MIDSPAN

CROSS SECTION

(Looking East)

**Varies 2'-6⅛" at Sta. 19+81.25 to 2'-7½" at Sta. 20+18.75

MIN. BAR LAP	
#5	1'-0"
#6	1'-6"
#9	2'-0"
#10	5'-0"

*Unless noted otherwise

NOTE:
For Sections A-A, B-B, C-C & D-D see Structural Sheet 6 of 25

REVISION	DATE	BY	REMARKS

DESIGNED BKC
DRAWN FDL
REVIEWED EEL
APPROVED BKC

WHITESIDE COUNTY
F.A.U. 5563 (E. ELEVENTH ST.) OVER
ILLINOIS-MISSISSIPPI FEEDER CANAL. STATION 20+00

WILLETT HOFMANN & ASSOCIATES INC
ENGINEERING ARCHITECTURE LAND SURVEYING
809 EAST 2ND STREET, DIXON, IL 61021-0367
T: 815-284-3381 DESIGN FIRM: #184 0 00 918

SUPERSTRUCTURE
STRUCTURE NO. 098-6010
STRUCTURAL SHEET NO. 5 OF 25 SHEETS

F.A.U.	SECTION	COUNTY	TOTAL SHEETS	SHEET NO.
5563	19-00137-00-BR	WHITESIDE	60	23
	WHA* 1286J24	CONTRACT 85779		
	ILLINOIS			

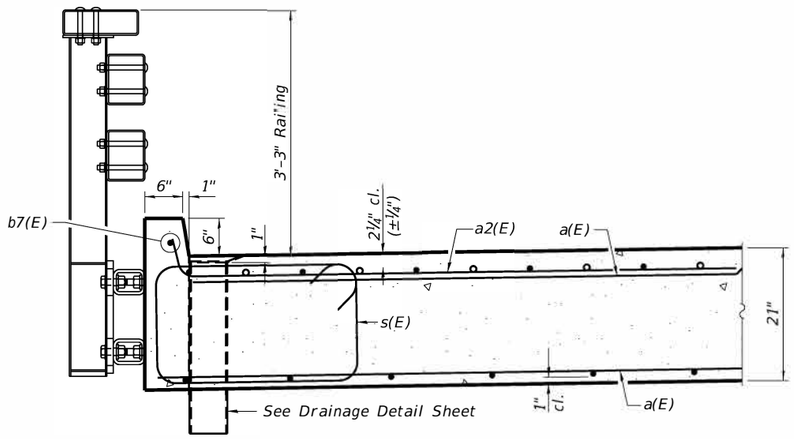

SECTION D-D

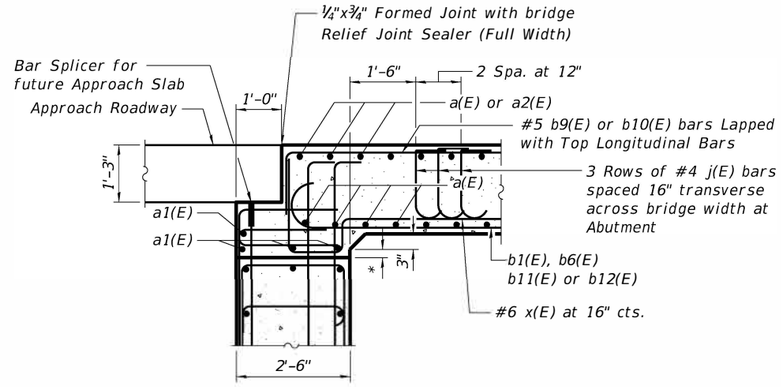

SECTION A-A

*The hauch varies from 2⅛" to 5½" at the abutments

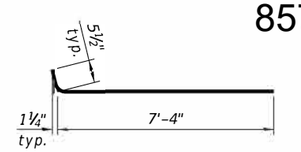

BAR a2(E)

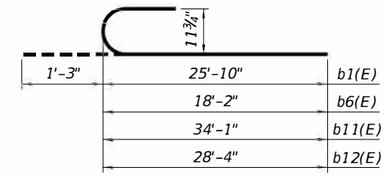

BAR b1(E), b6(E) b11(E) or b12(E)

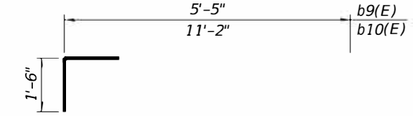

BAR b9(E) or b10(E)

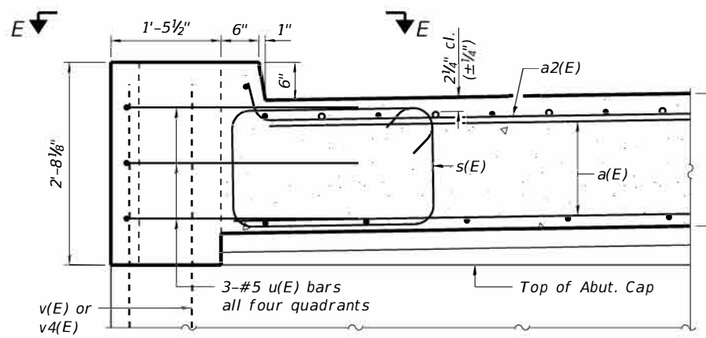

SECTION C-C

See Abutment sheet for v(E) or v4(E) bars

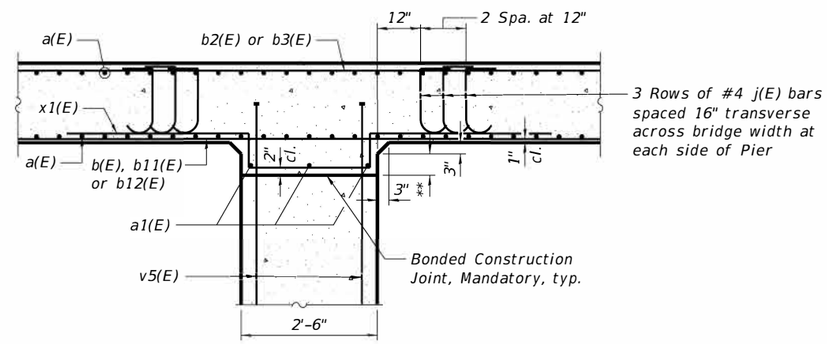

SECTION B-B

**Varies 2¾" to 6⅛" at Sta. 19+81.25 and 4⅛" to 7½" at Sta. 20+18.75

See Pier sheet for v5(E) bars

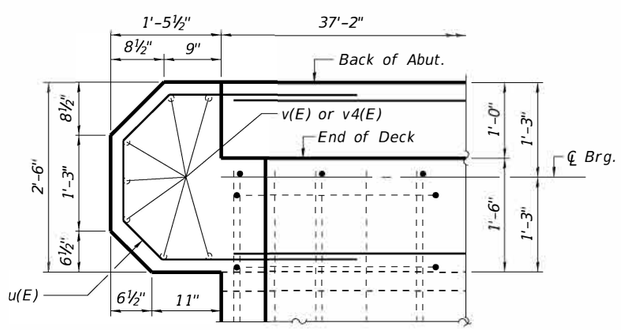

SECTION E-E

See Abutment sheet for v(E) or v4(E) bars

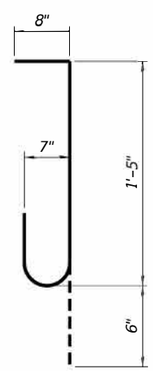

BAR j(E)

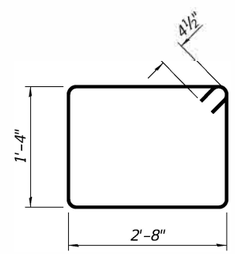

BAR s(E)

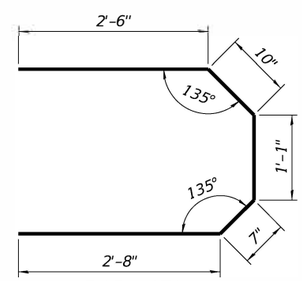

BAR u(E)

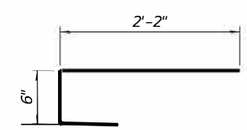

BAR u1(E)

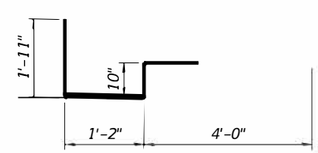

BAR x(E)

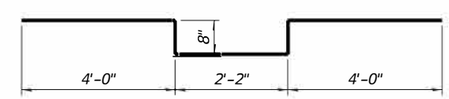

BAR x1(E)

SUPERSTRUCTURE BILL OF MATERIAL

Bar	No.	Size	Length	Shape
a(E)	298	#6	36'-10"	
a1(E)	14	#5	36'-10"	
a2(E)	298	#6	7'-10"	
b(E)	28	#9	38'-10"	
b1(E)	27	#9	27'-1"	
b2(E)	56	#10	48'-0"	
b3(E)	54	#10	34'-6"	
b4(E)	27	#5	12'-8"	
b5(E)	27	#9	26'-9"	
b6(E)	27	#9	19'-5"	
b7(E)	6	#5	35'-10"	
b8(E)	27	#5	18'-5"	
b9(E)	28	#5	6'-11"	
b10(E)	28	#5	12'-8"	
b11(E)	28	#9	35'-4"	
b12(E)	28	#9	29'-7"	
j(E)	504	#4	2'-7"	
s(E)	200	#5	8'-9"	
u(E)	12	#5	7'-8"	
u1(E)	76	#4	4'-10"	
x(E)	56	#6	7'-11"	
x1(E)	56	#6	11'-6"	
Concrete Superstructure		Cu. Yds.	252.6	
Bridge Deck Grooving		Sq. Yds.	375	
Protective Coat		Sq. Yds.	421	
Reinforcement Bars, Epoxy Coated		Pound	63,050	
Steel Railing, Type IL-OH		Foot	204	

Bars indicated thus 1 x 2-#4 etc. indicates 1 line of bars with 2 lengths per line.

REVISION	DATE	BY	REMARKS

DESIGNED BKC
DRAWN FDL
REVIEWED EEL
APPROVED BKC

WHITESIDE COUNTY
F.A.U. 5563 (E. ELEVENTH ST.) OVER
ILLINOIS-MISSISSIPPI FEEDER CANAL. STATION 20+00

WILLETT HOFMANN & ASSOCIATES INC
ENGINEERING ARCHITECTURE LAND SURVEYING
809 EAST 2ND STREET, DIXON, IL 61021-0367
T: 815-284-3381 DESIGN FIRM: #184-000918

SUPERSTRUCTURE DETAILS
STRUCTURE NO. 098-6010

STRUCTURAL SHEET NO. 6 OF 25 SHEETS

F.A.U.	SECTION	COUNTY	TOTAL SHEETS	SHEET NO.
5563	19-00137-00-BR	WHITESIDE	60	24
	WHA* 1286J24	CONTRACT 85779		
	ILLINOIS			

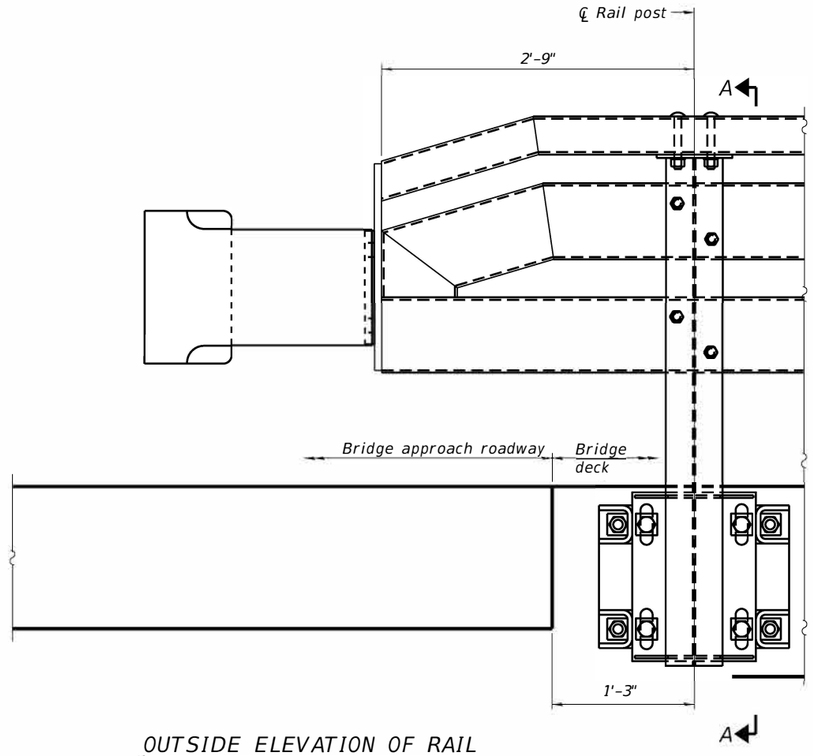

OUTSIDE ELEVATION OF RAIL

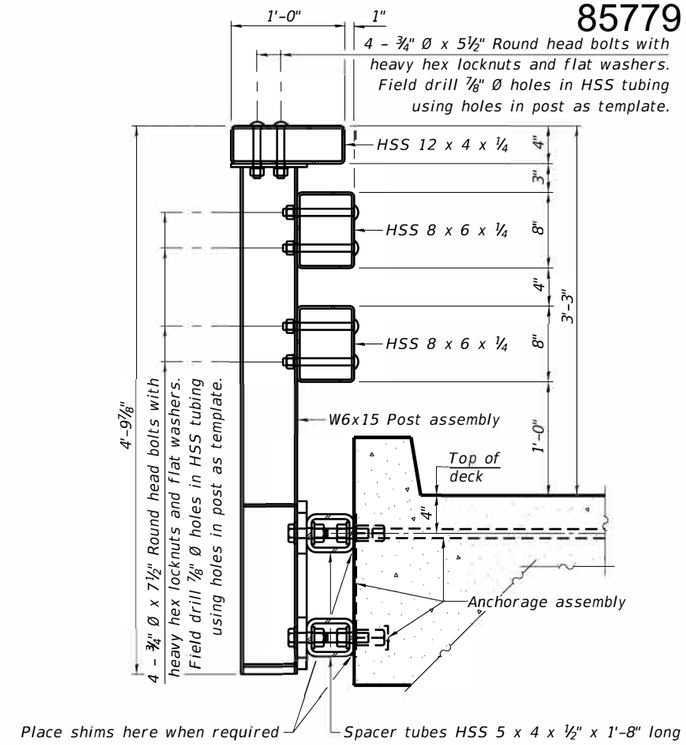

SECTION A-A

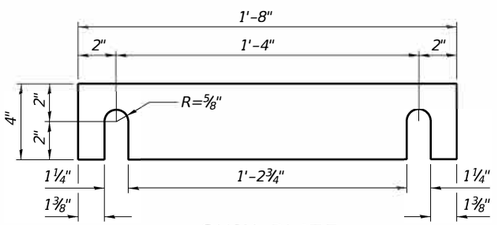

SHIM PLATE

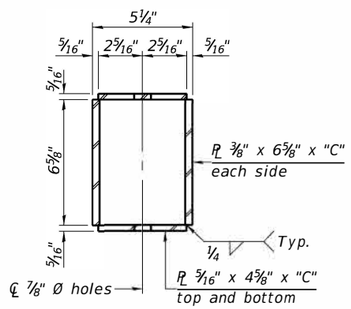

SECTION C-C

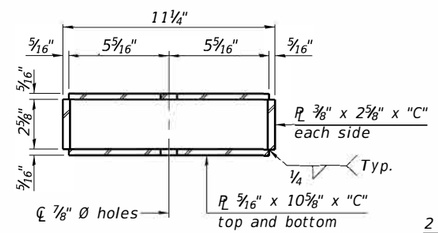

SECTION D-D

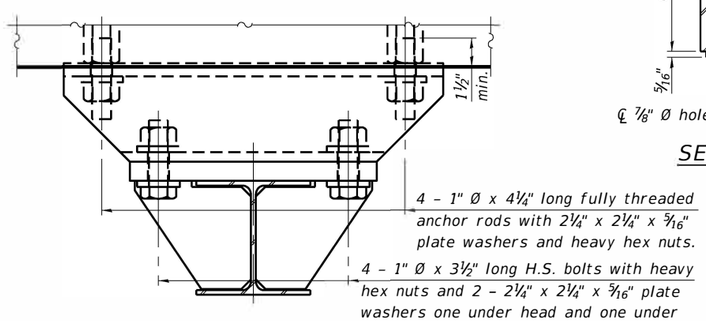

SECTION B-B

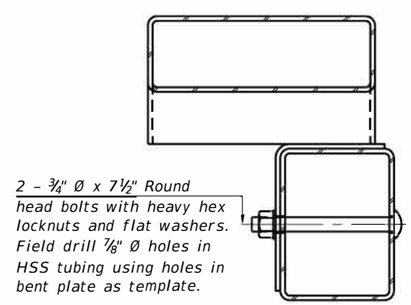

SECTION E-E

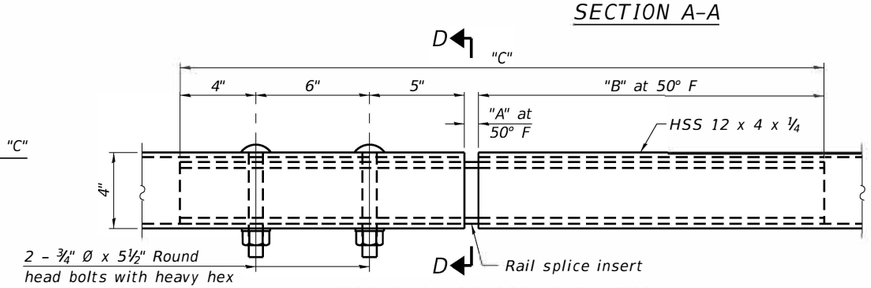

TOP RAIL SPLICE ELEVATION

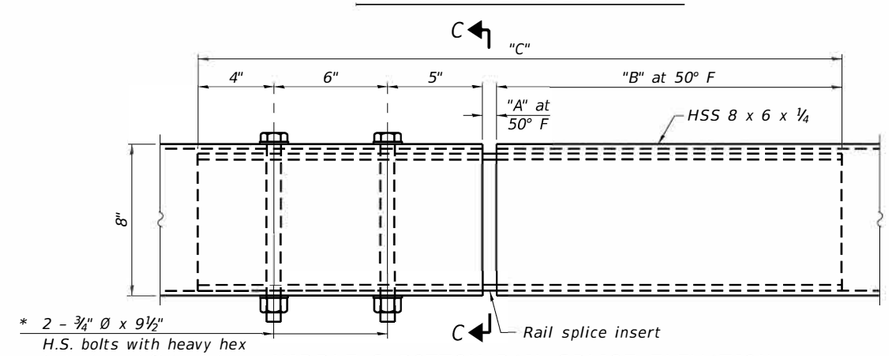

MIDDLE & BOTTOM RAIL SPLICE ELEVATION

* Bolt orientation shown for middle rail. Flip for bottom rail.

RAILING CRITERIA

MASH 2016 Test Level	4
Rail system weight (plf)	120
Max post spacing	8'-0"

SPLICE DIMENSIONS

Location	T	A	B	C
All locs. not over exp. jts.	0	½"	1'-6"	2'-9½"
Over Strip Seal Jt.	≤4"	2½"	1'-8"	3'-1½"
Over Finger or Modular Jt.	≤9½"	5½"	1'-10¾"	3'-7¼"
Over Finger or Modular Jt.	≤15"	8¼"	2'-1½"	4'-0¾"

T = ; total movement along centerline of roadway at expansion joint.

(Sheet 1 of 3)

REVISION	DATE	BY	REMARKS

DESIGNED BKC
DRAWN FDL
REVIEWED EEL
APPROVED BKC

WHITESIDE COUNTY
F.A.U. 5563 (E. ELEVENTH ST.) OVER
ILLINOIS-MISSISSIPPI FEEDER CANAL. STATION 20+00

WILLETT HOFMANN & ASSOCIATES INC
ENGINEERING ARCHITECTURE AND SURVEYING
809 EAST 2ND STREET, DIXON, IL 61021-0367
T: 815-284-3381 DESIGN FIRM: #184-000918

STEEL RAILING, TYPE IL-OH
STRUCTURE NO. 098-6010
STRUCTURAL SHEET NO. 7 OF 25 SHEETS

F.A.U.	SECTION	COUNTY	TOTAL SHEETS	SHEET NO.
5563	19-00137-00-BR	WHITESIDE	60	25
	WHA# 1286J24	CONTRACT 85779		
	ILLINOIS			

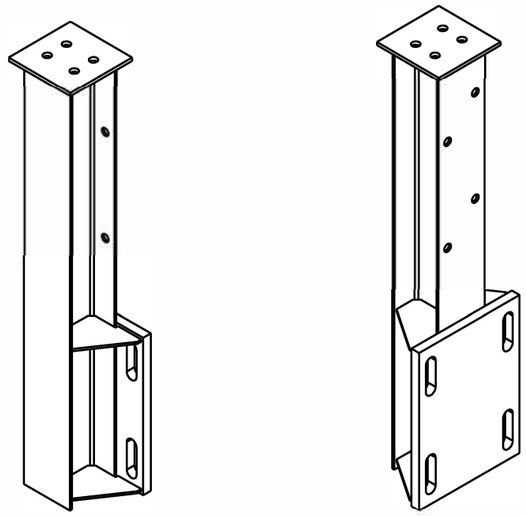

ISOMETRIC VIEWS POST ASSEMBLY

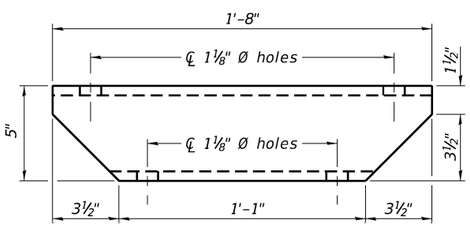

SPACER TUBE PLAN

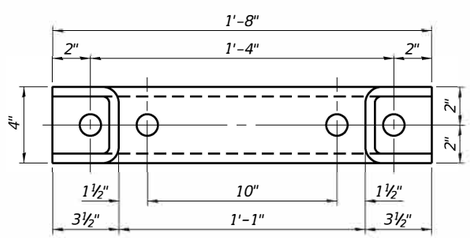

SPACER TUBE ELEVATION

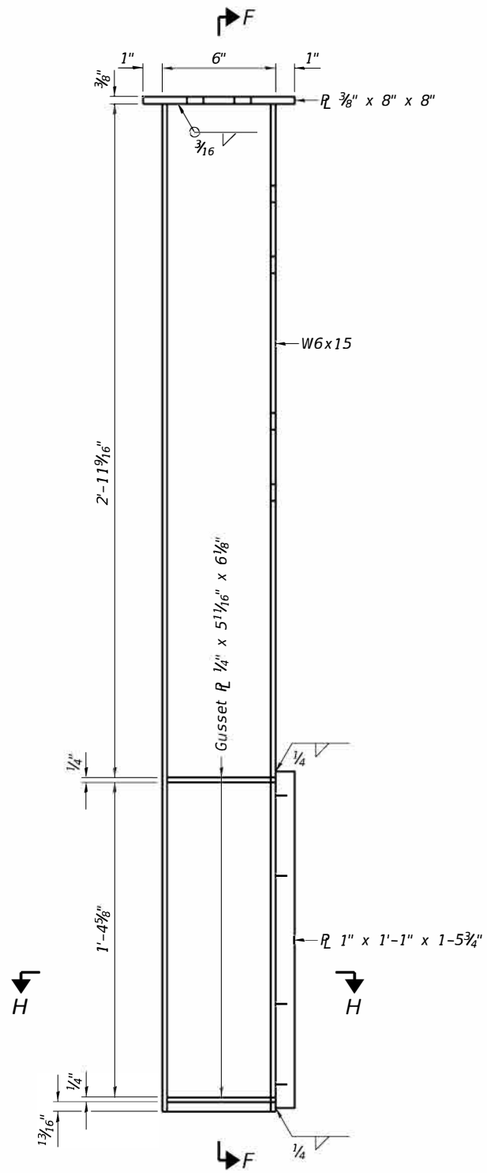

SIDE ELEVATION POST ASSEMBLY

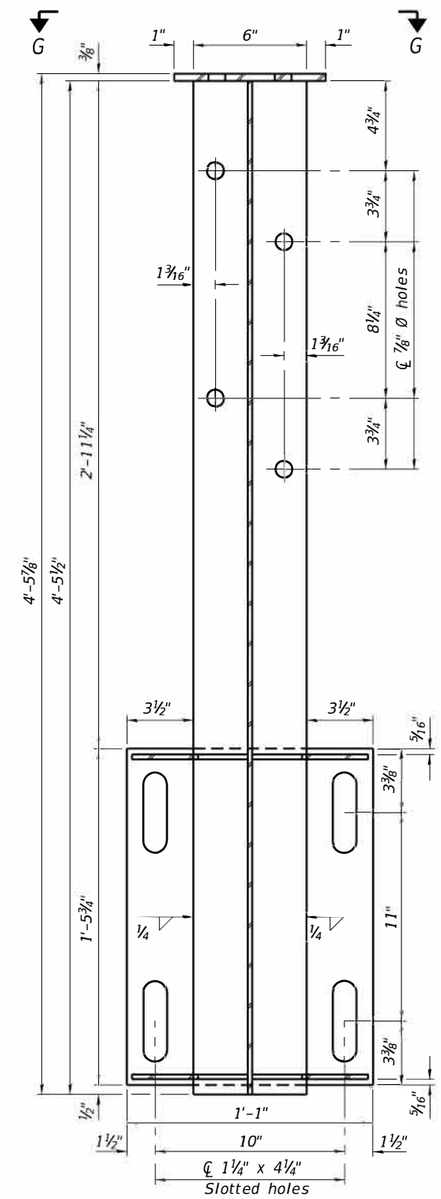

SECTION F-F

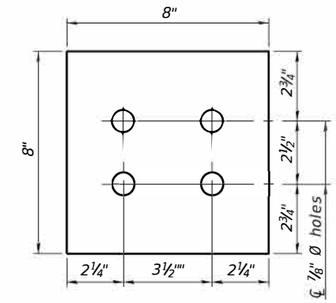

VIEW G-G
(Showing top plate)

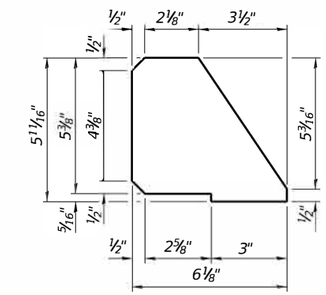

GUSSET PLATE

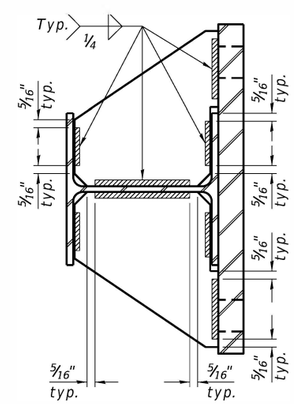

SECTION H-H
(Showing gusset plate welds)

(Sheet 2 of 3)

REVISION	DATE	BY	REMARKS

DESIGNED	BKC
DRAWN	FDL
REVIEWED	EEL
APPROVED	BKC

WHITESIDE COUNTY
F.A.U. 5563 (E. ELEVENTH ST.) OVER
ILLINOIS-MISSISSIPPI FEEDER CANAL. STATION 20+00

WILLETT HOFMANN & ASSOCIATES INC
ENGINEERING ARCHITECTURE AND SURVEYING
849 EAST 2ND STREET, DIXON, IL 61021-0367
T: 815-284-3381 DESIGN FIRM: #184-000918

STEEL RAILING, TYPE IL-OH
STRUCTURE NO. 098-6010
STRUCTURAL SHEET NO. 8 OF 25 SHEETS

F.A.U.	SECTION	COUNTY	TOTAL SHEETS	SHEET NO.
5563	19-00137-00-BR	WHITESIDE	60	26
	WHA* 1286J24	CONTRACT 85779		
	ILLINOIS			

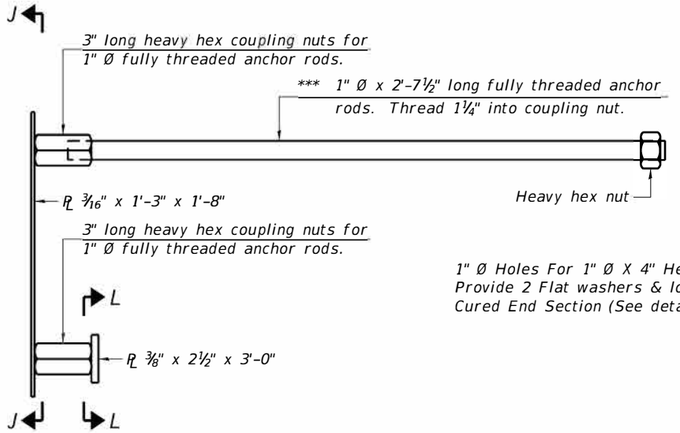

ANCHORAGE ASSEMBLY

*** For skewed bridge decks use 1" Ø x 1'-3" long fully threaded anchor rods at acute corners of bridge deck.

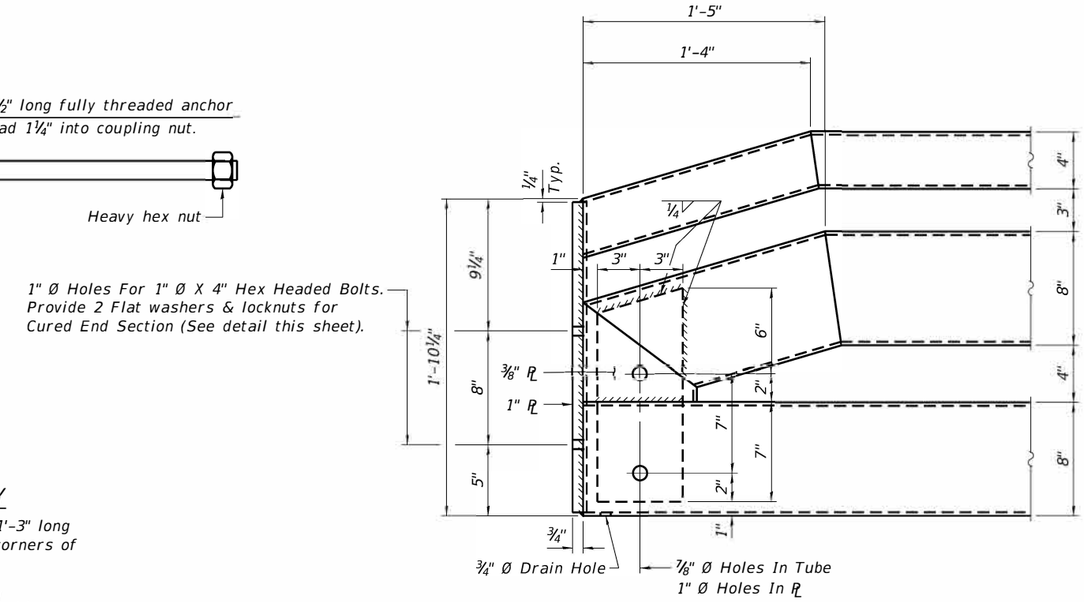

Notes:

All plates shall be AASHTO M270 grade 50.

All HSS tubing shall be ASTM A500 grade C.

All heavy hex nuts including heavy hex coupling nuts shall be according to ASTM A563 grade DH.

All fully threaded anchor rods shall be ASTM F1554 grade 105.

All round head bolts shall be ASTM A449.

All steel rail elements including shims shall be galvanized according to Article 509.05 of the Standard Specifications.

Rail splice inserts may be built out of 2 - 3/8" bent plates in lieu of the 4 plate rail splice inserts shown, provided the outside dimensions are matched.

A sufficient number shims of various thicknesses, built to the dimensions shown in the shim plate detail, shall be provided to adjust posts for plumbness and horizontal alignment. Cost included with Steel Railing, Type IL-OH.

The spacer tubes shall be fastened to the bridge deck and bridge approach slab snug tight and given an additional ½ turn. The 1" diameter high strength bolts used to connect the spacer tubes to the post assemblies shall be tightened according to Article 505.04(f)(2) of the Standard Specifications.

All HSS tubing serving as railing shall be CVN tested according to Article 1006.34(b) of the Standard Specifications.

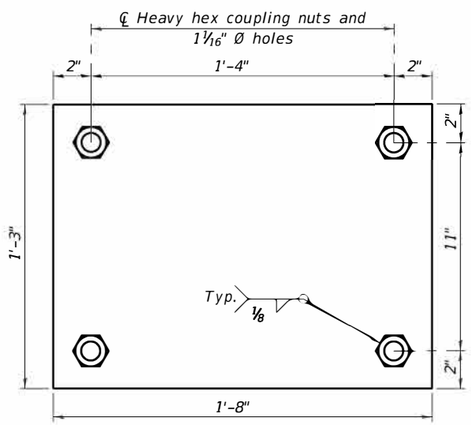

SECTION J-J

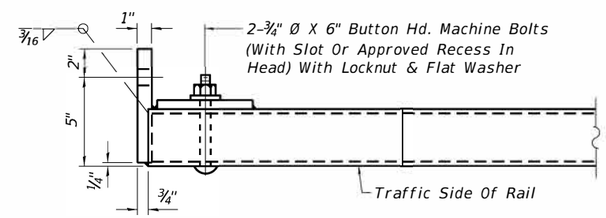

END OF RAIL DETAILS

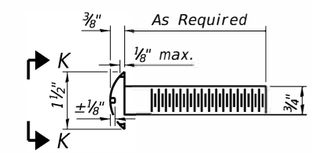

ROUND HEAD BOLT DETAIL

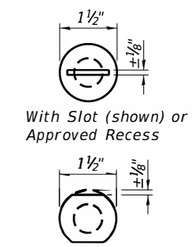

VIEW K-K

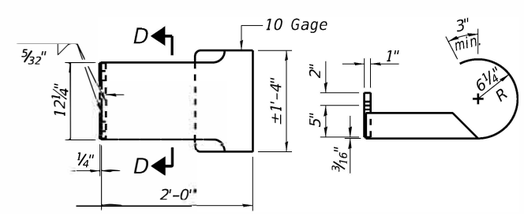

CURLED END SECTION DETAILS

***(4 required)

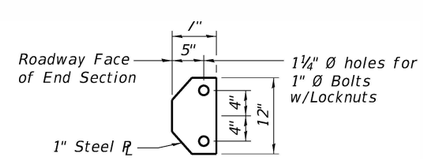

SECTION D-D

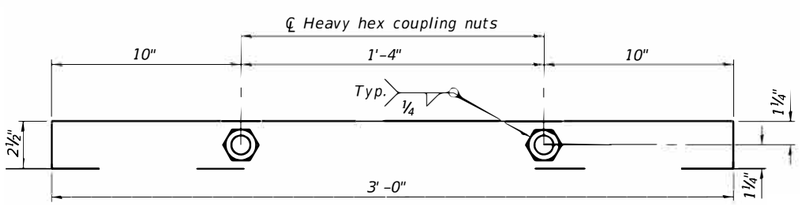

SECTION L-L

BILL OF MATERIAL

Item	Unit	Quantity
Steel Railing, Type IL-OH	Foot	204

(Sheet 3 of 3)

REVISION	DATE	BY	REMARKS

DESIGNED	BKC
DRAWN	FDL
REVIEWED	EEL
APPROVED	BKC

WHITESIDE COUNTY
F.A.U. 5563 (E. ELEVENTH ST.) OVER
ILLINOIS-MISSISSIPPI FEEDER CANAL. STATION 20+00

WILLETT HOFMANN & ASSOCIATES INC
ENGINEERING ARCHITECTURE LAND SURVEYING
809 EAST 2ND STREET, DIXON, IL 61021-0367
T: 815-284-3381 DESIGN FIRM: #184-000918

STEEL RAILING, TYPE IL-OH
STRUCTURE NO. 098-6010

STRUCTURAL SHEET NO. 9 OF 25 SHEETS

F.A.U.	SECTION	COUNTY	TOTAL SHEETS	SHEET NO.
5563	19-00137-00-BR	WHITESIDE	60	27
	WHA* 1286J24	CONTRACT 85779		
	ILLINOIS			

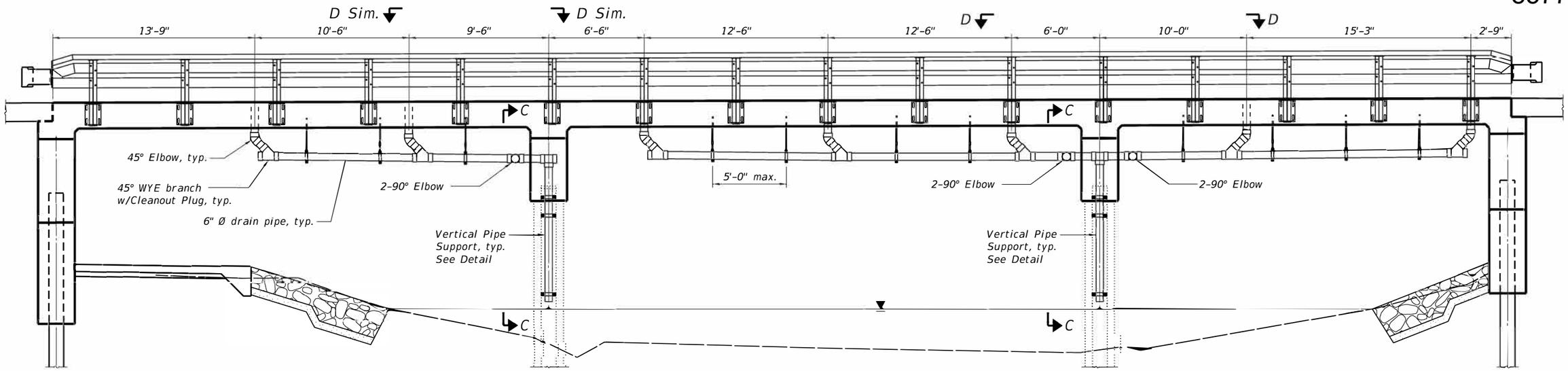

ELEVATION
(Looking North)

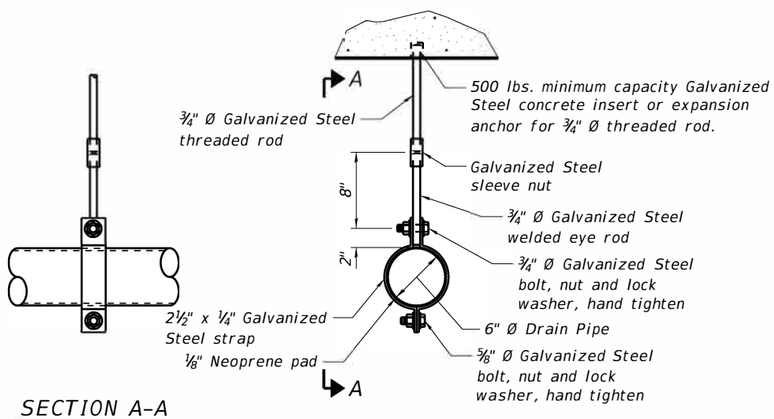

SECTION A-A

PIPE HANGER DETAIL

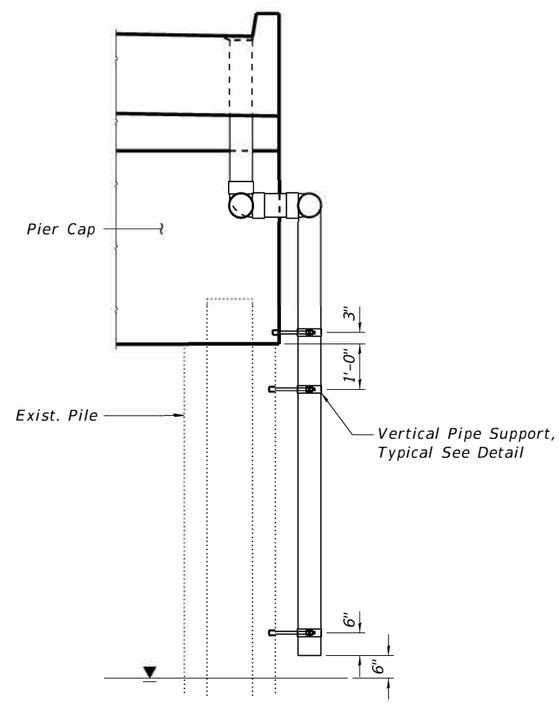

SECTION C-C

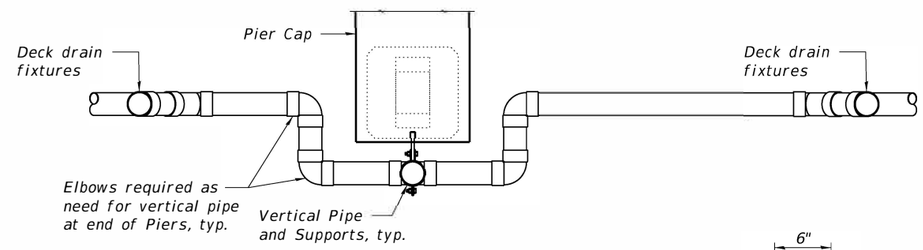

SECTION D-D
(Deck not shown for clarity)

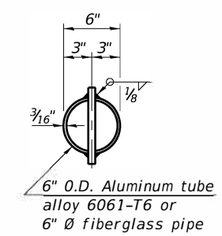

TOP PLAN
(Showing aluminum tube)

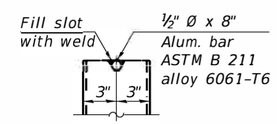

ALUMINUM TUBE

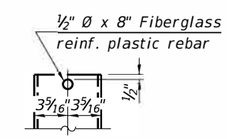

FIBERGLASS PIPE

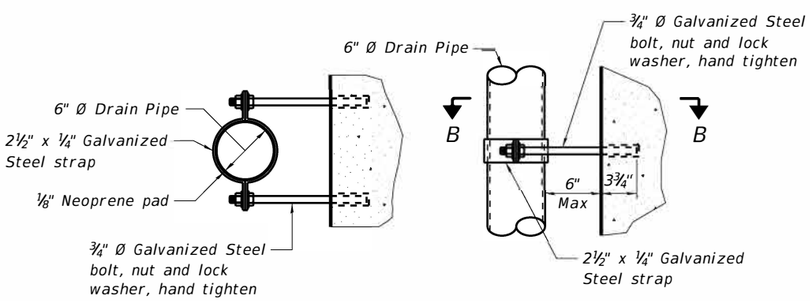

SECTION B-B

VERTICAL PIPE SUPPORT DETAIL

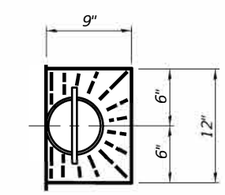

TOP PLAN

BILL OF MATERIAL

Item	Unit	Quantity
Drainage System for Structures	L. Sum	1

REVISION	DATE	BY	REMARKS

DESIGNED	BKC
DRAWN	FDL
REVIEWED	EEL
APPROVED	BKC

WHITESIDE COUNTY
F.A.U. 5563 (E. ELEVENTH ST.) OVER
ILLINOIS-MISSISSIPPI FEEDER CANAL. STATION 20+00

WILLETT HOFMANN & ASSOCIATES INC
ENGINEERING ARCHITECTURE AND SURVEYING
809 EAST 2ND STREET, DIXON, IL 61021-0367
T: 815-284-3381 DESIGN FIRM: #184-000918

DRAINAGE DETAILS
STRUCTURE NO. 098-6010
STRUCTURAL SHEET NO. 10 OF 25 SHEETS

F.A.U.	SECTION	COUNTY	TOTAL SHEETS	SHEET NO.
5563	19-00137-00-BR	WHITESIDE	60	28
WHA# 1286J24		CONTRACT 85779		
ILLINOIS				

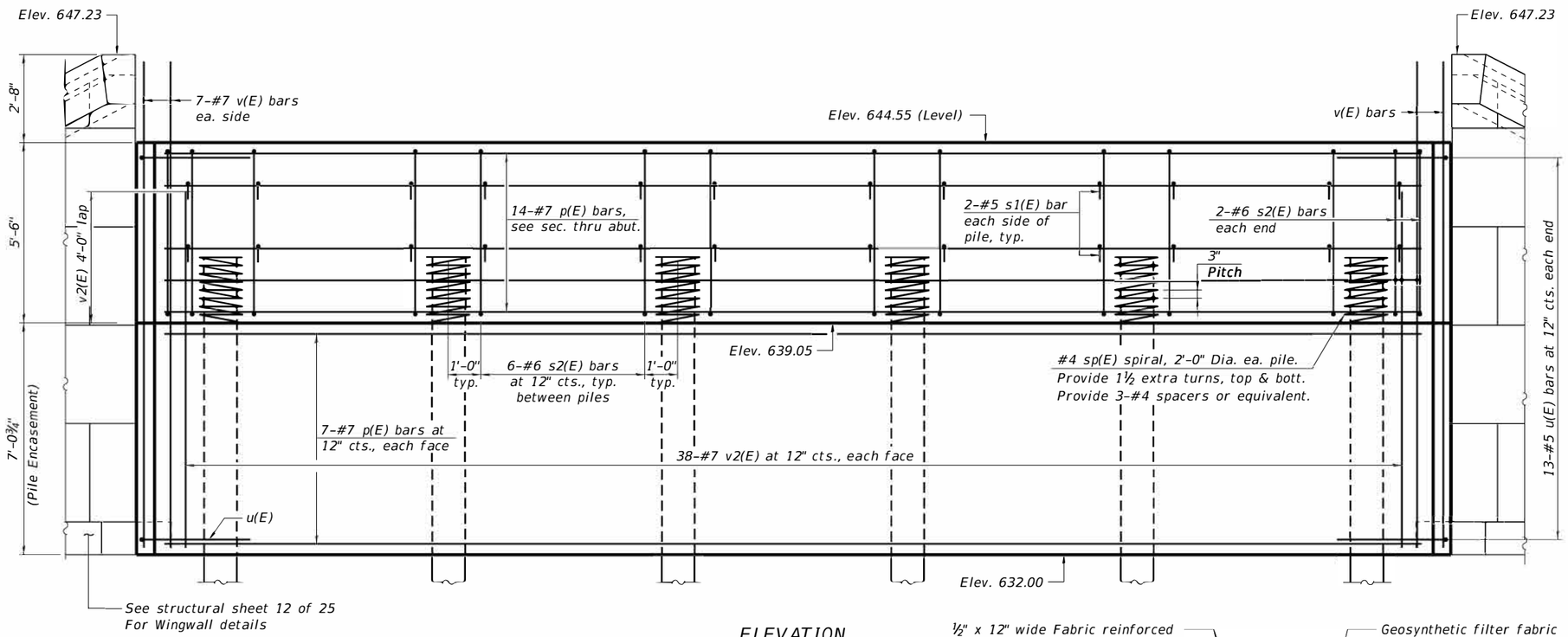

ELEVATION

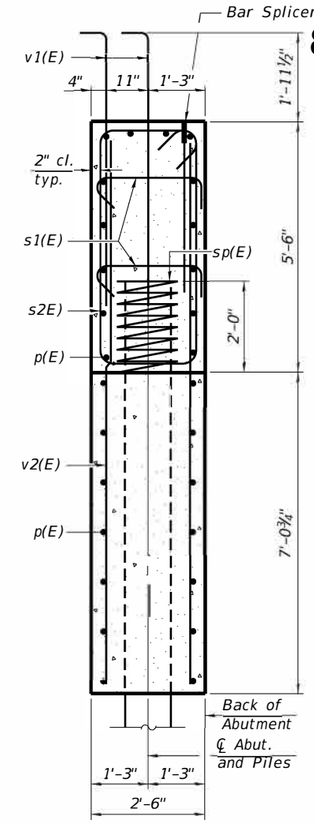

SEC. THRU ABUT.

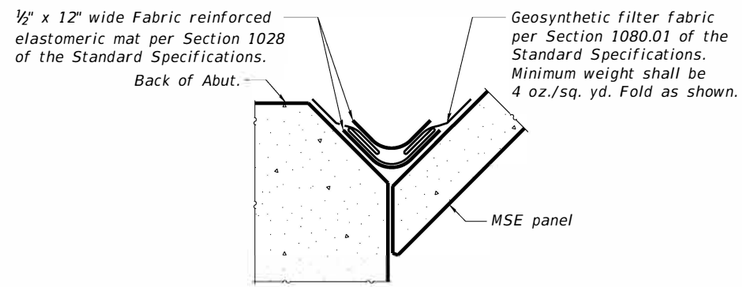

WINGWALL JOINT DETAIL

Cost of elastomeric mat and filter fabric included with Mechanically Stabilized Earth wall.

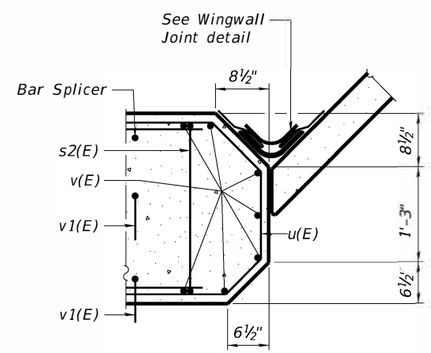

DETAIL A

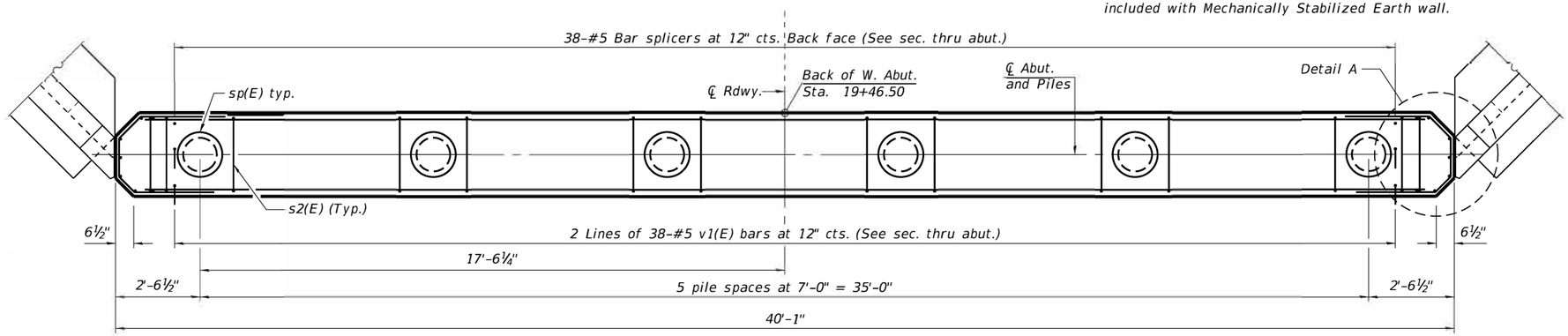

PLAN

PILE DATA

Type: Metal Shell Piles, 12" Ø x 0.25"
Nominal Required Bearing: 257 k
Factored Resistance Available: 141 k
Est. Length: 65'
No. Production Piles: 5
No. Test Piles: 1

REVISION	DATE	BY	REMARKS

DESIGNED	BKC
DRAWN	FDL
REVIEWED	EEL
APPROVED	BKC

WHITESIDE COUNTY
F.A.U. 5563 (E. ELEVENTH ST.) OVER
ILLINOIS-MISSISSIPPI FEEDER CANAL. STATION 20+00

WILLETT HOFMANN & ASSOCIATES INC
ENGINEERING ARCHITECTURE AND SURVEYING
809 EAST 2ND STREET, DIXON, IL 61021-0367
T: 815-284-3381 DESIGN FIRM: #184-000918

WEST ABUTMENT DETAILS
STRUCTURE NO. 098-6010

STRUCTURAL SHEET NO 11 OF 25 SHEETS

F.A.U.	SECTION	COUNTY	TOTAL SHEETS	SHEET NO.
5563	19-00137-00-BR	WHITESIDE	60	29
	WHA# 1286J24	CONTRACT 85779		
	ILLINOIS			

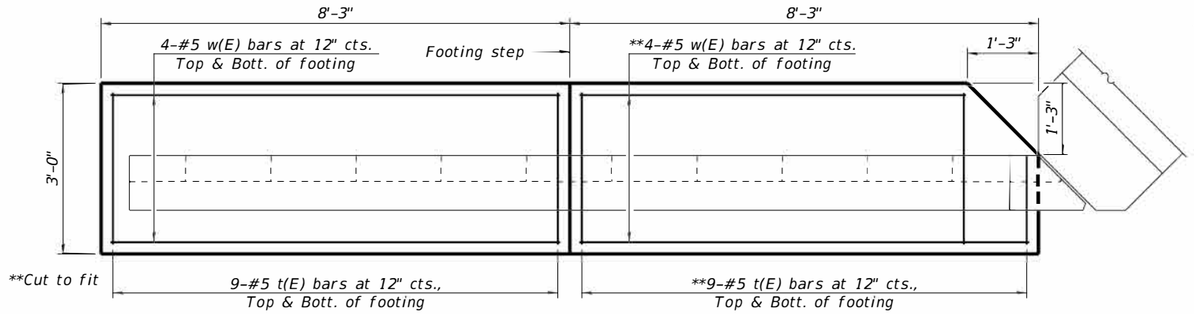

PLAN

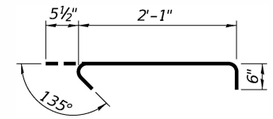

BAR s1(E)

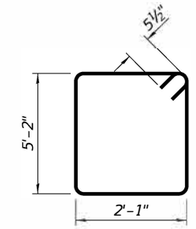

BAR s2(E)

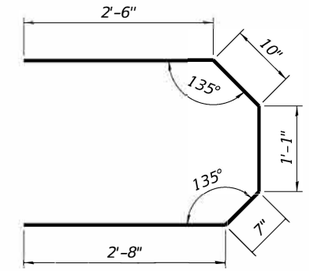

BAR u(E)

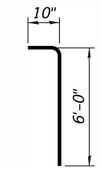

BAR v1(E)

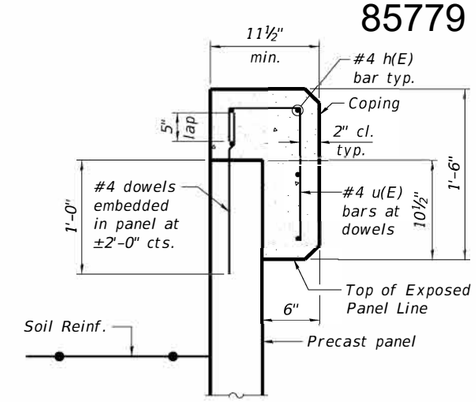

DETAIL B

The cost of the concrete and the reinforcing steel required for the coping shall be included in the cost of Mechanically Stablized Earth Retaining Wall.

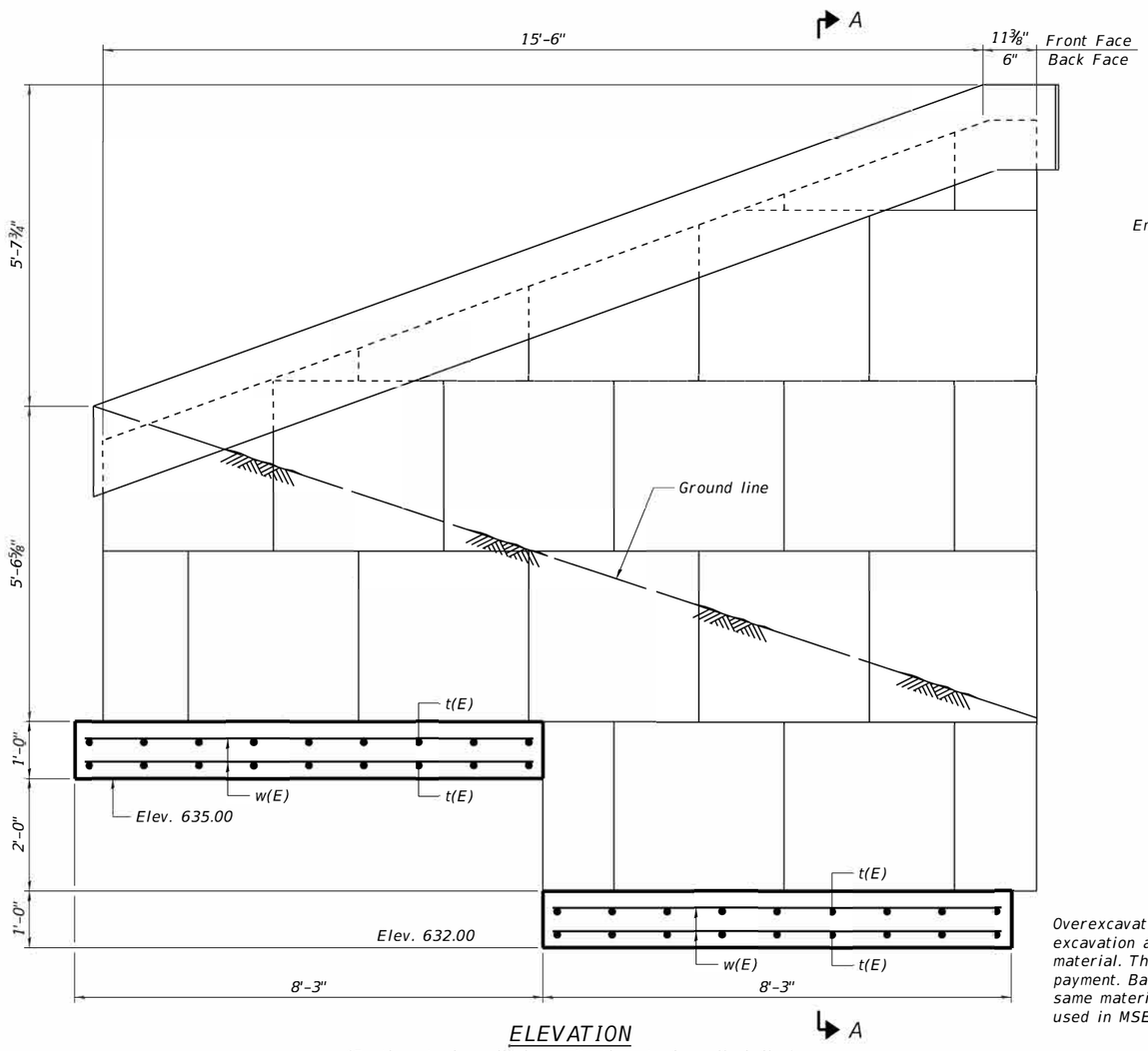

ELEVATION

(Southwest wingwall shown, Northwest wingwall similar)

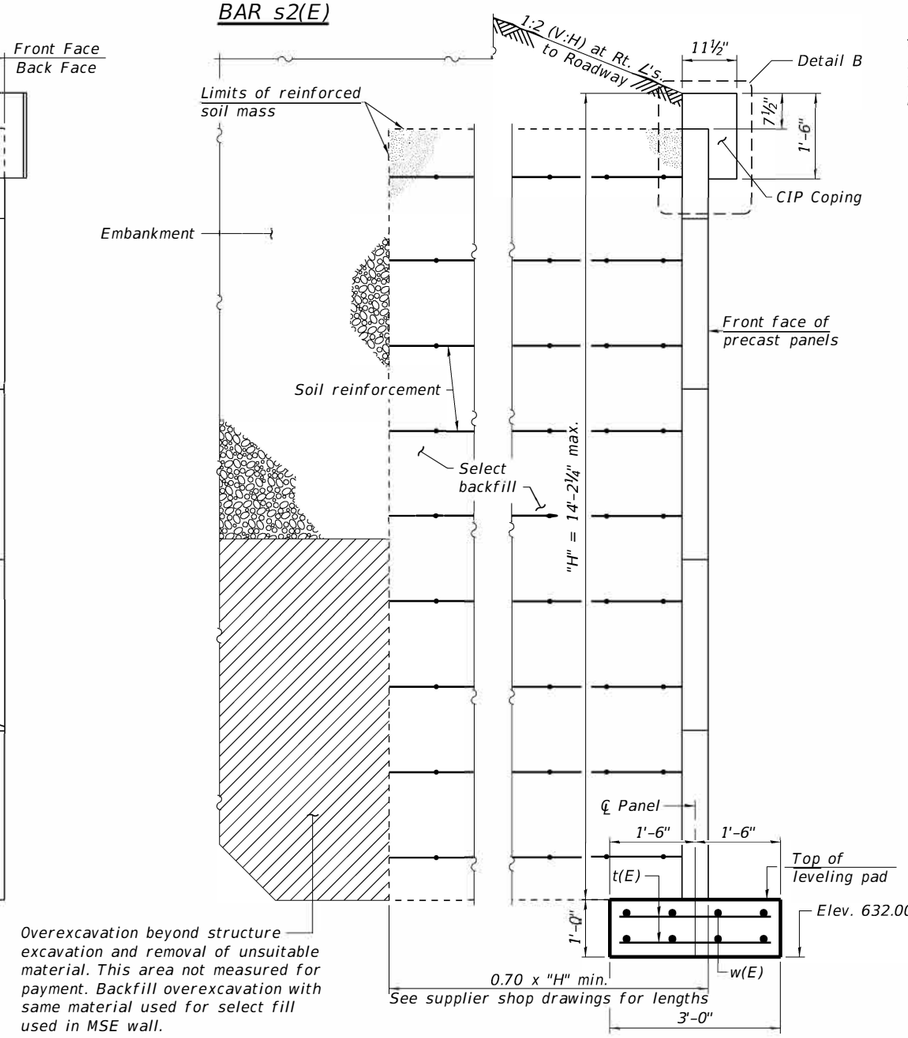

Overexcavation beyond structure excavation and removal of unsuitable material. This area not measured for payment. Backfill overexcavation with same material used for select fill used in MSE wall.

SECTION A-A

BILL OF MATERIAL

	Bar	No.	Size	Length	Shape
	p(E)	28	#7	38'-4"	
	s1(E)	24	#5	3'-1"	
	s2(E)	34	#6	15'-5"	
*	sp(E)	6	#4	2'-0"	
	t(E)	72	#5	2'-8"	
	u(E)	26	#5	7'-8"	
	v(E)	14	#7	14'-11"	
	v1(E)	76	#5	6'-10"	
	v2(E)	76	#7	10'-10"	
	w(E)	32	#5	7'-11"	
	Structure Excavation		Cu. Yd.	293	
	Concrete Structures		Cu. Yd.	23.5	
	Concrete Encasement		Cu. Yd.	24.8	
	Reinforcement Bars, Epoxy Coated		Pound	6,580	
	Bar Splicers		Each	38	
	Furnishing Metal Shell Piles 12" x 0.25"		Foot	325	
	Driving Piles		Foot	325	
	Test Pile Metal Shell		Each	1	
	Mechanically Stablized Earth Retaining Wall		Sq. Ft.	325	
	Granular Backfill for Structures		Cu. Yds	136	
	Geocomposite Wall Drain		Sq. Yd.	55	

*Length is height of spiral.

NOTES:

For details of piles see sheet 16 of 25.

For drainage layout, see sheet 3 of 25.

All exposed edges shall have ¾" chamfers, except as noted.

Headed bars shall conform to ASTM A970 with threaded attachment; Class HA; and reinforcement bars conforming to ASTM A706. Cost included with Reinforcement Bars, Epoxy Coated.

REVISION	DATE	BY	REMARKS

DESIGNED BKC
DRAWN FDL
REVIEWED EEL
APPROVED BKC

WHITESIDE COUNTY
F.A.U. 5563 (E. ELEVENTH ST.) OVER
ILLINOIS-MISSISSIPPI FEEDER CANAL. STATION 20+00

WILLETT HOFMANN & ASSOCIATES INC
ENGINEERING ARCHITECTURE LAND SURVEYING
809 EAST 2ND STREET, DIXON, IL 61021-0367
T: 815-284-3381 DESIGN FIRM: #184-000918

WEST ABUTMENT DETAILS
STRUCTURE NO. 098-6010

STRUCTURAL SHEET NO. 12 of 25 SHEETS

F.A.U.	SECTION	COUNTY	TOTAL SHEETS	SHEET NO.
5563	19-00137-00-BR	WHITESIDE	60	30
	WHA* 1286J24	CONTRACT 85779		
	ILLINOIS			

FILE = S:\PROJECTS\2024\1286J24_RF\DESIGN\CAD_SHEETS\1286J24_West Abutment.dgn

PRINT_ORGANIZER_BW.pltcfg 8/14/2025 1:38:28 PM = PLOTTED

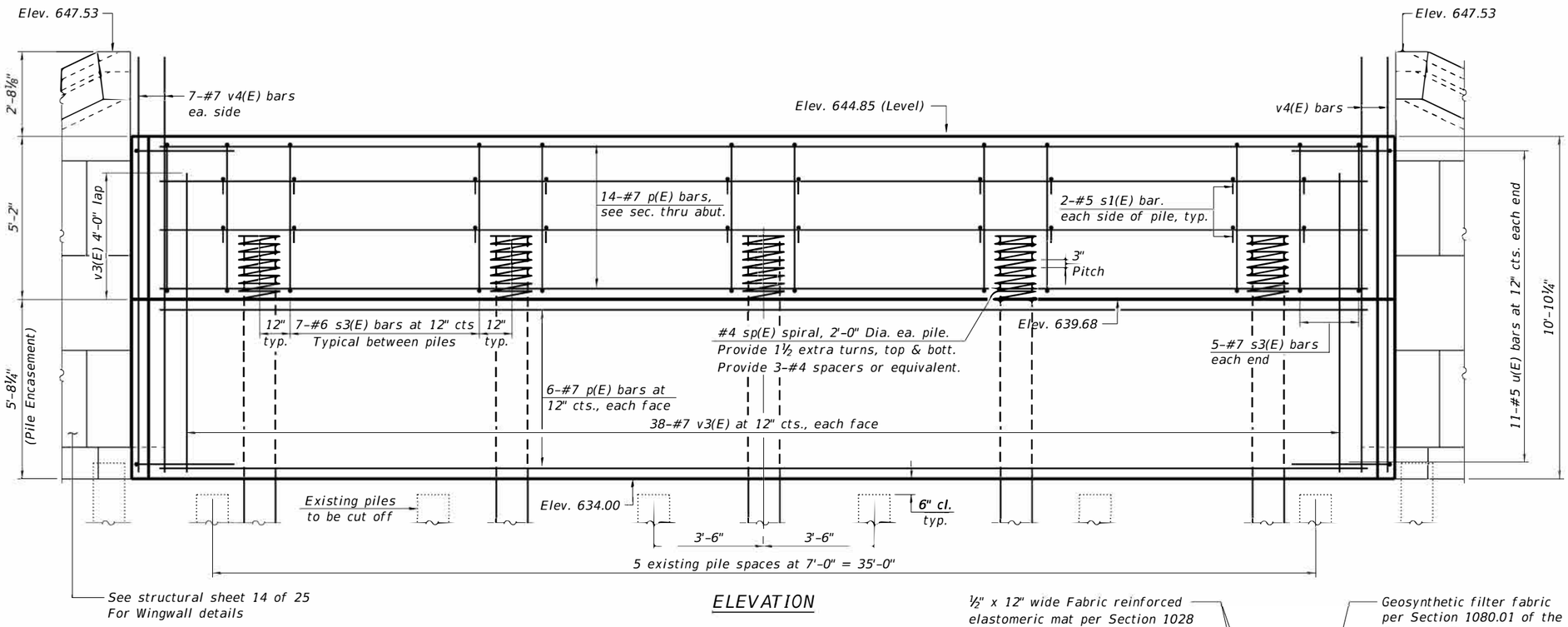

ELEVATION

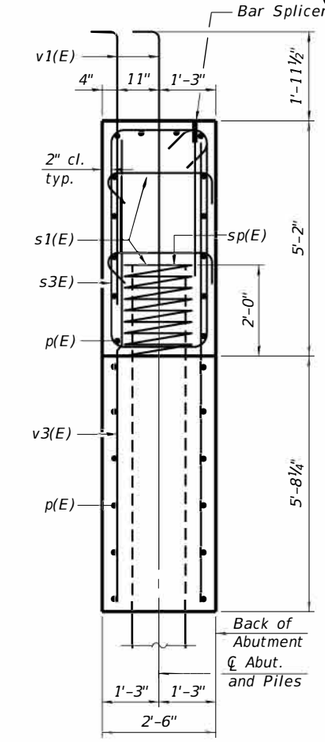

SEC. THRU ABUT.

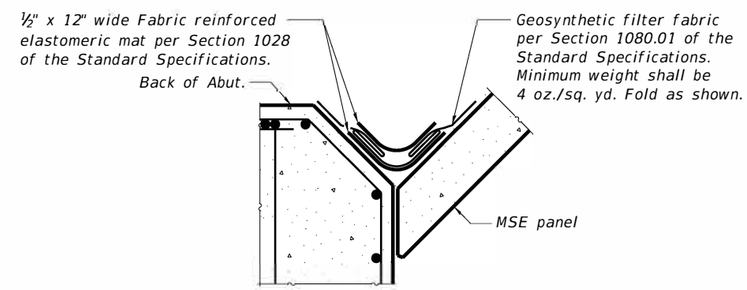

WINGWALL JOINT DETAIL

Cost of elastomeric mat and filter fabric included with Mechanically Stabilized Earth wall.

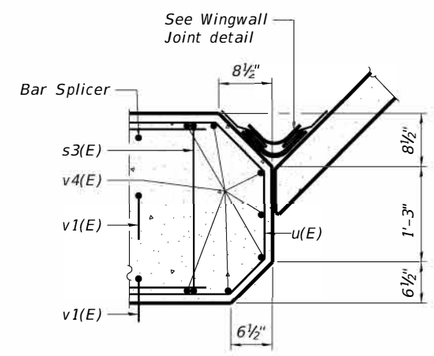

DETAIL A

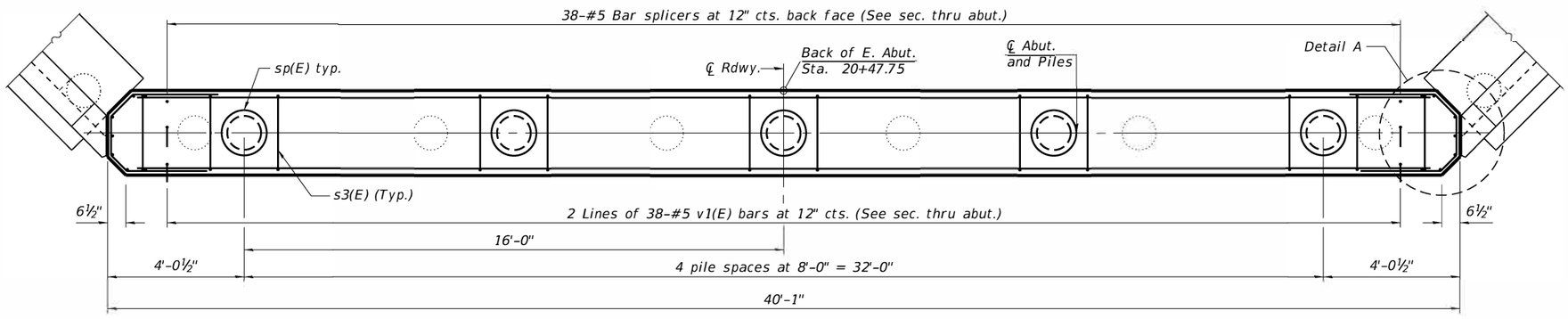

PLAN

PILE DATA

Type: Metal Shell Piles, 12" Ø x 0.25"
Nominal Required Bearing: 278 k
Factored Resistance Available: 153 k
Est. Length: 64'
No. Production Piles: 4
No. Test Piles: 1

REVISION	DATE	BY	REMARKS

DESIGNED	BKC
DRAWN	FDL
REVIEWED	EEL
APPROVED	BKC

WHITESIDE COUNTY
F.A.U. 5563 (E. ELEVENTH ST.) OVER
ILLINOIS-MISSISSIPPI FEEDER CANAL. STATION 20+00

WILLETT HOFMANN & ASSOCIATES INC
ENGINEERING ARCHITECTURE AND SURVEYING
809 EAST 2ND STREET, DIXON, IL 61021-0367
T: 815-284-3381 DESIGN FIRM: #184-000918

EAST ABUTMENT DETAILS
STRUCTURE NO. 098-6010

STRUCTURAL SHEET NO. 13 OF 25 SHEETS

F.A.U.	SECTION	COUNTY	TOTAL SHEETS	SHEET NO.
5563	19-00137-00-BR	WHITESIDE	60	31
	WHA* 1286J24	CONTRACT 85779		
	ILLINOIS			

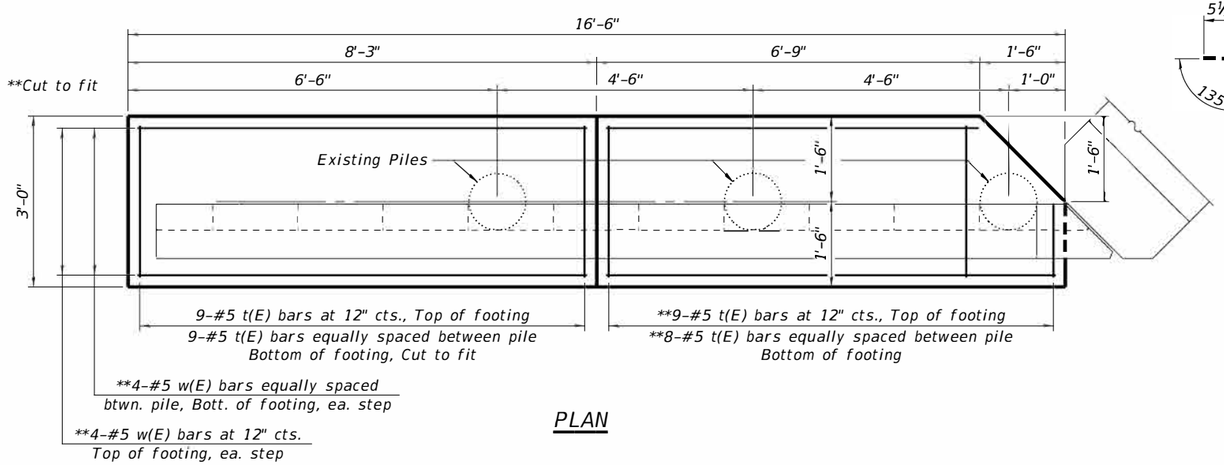

PLAN

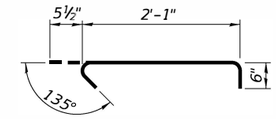

BAR s1(E)

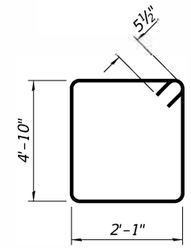

BAR s3(E)

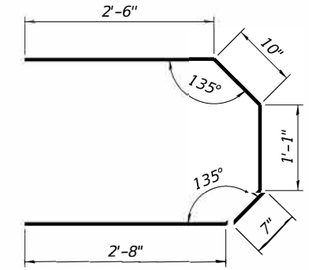

BAR u(E)

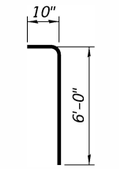

BAR v1(E)

MIN. BAR LENGTH	
Size	Lap f'c = 3.5 ksi
#4	3'-2"
#5	4'-8"
#6	6'-5"
#7	8'-4"

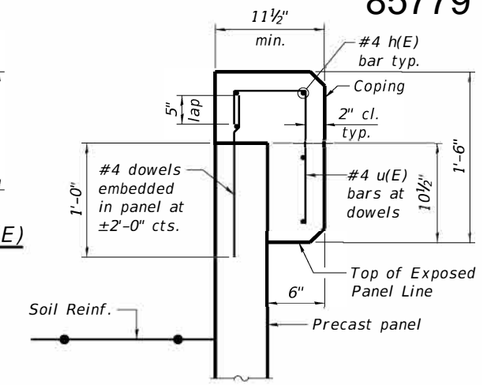

DETAIL B

The cost of the concrete and the reinforcing steel required for the coping shall be included in the cost of Mechanically Stablized Earth Retaining Wall.

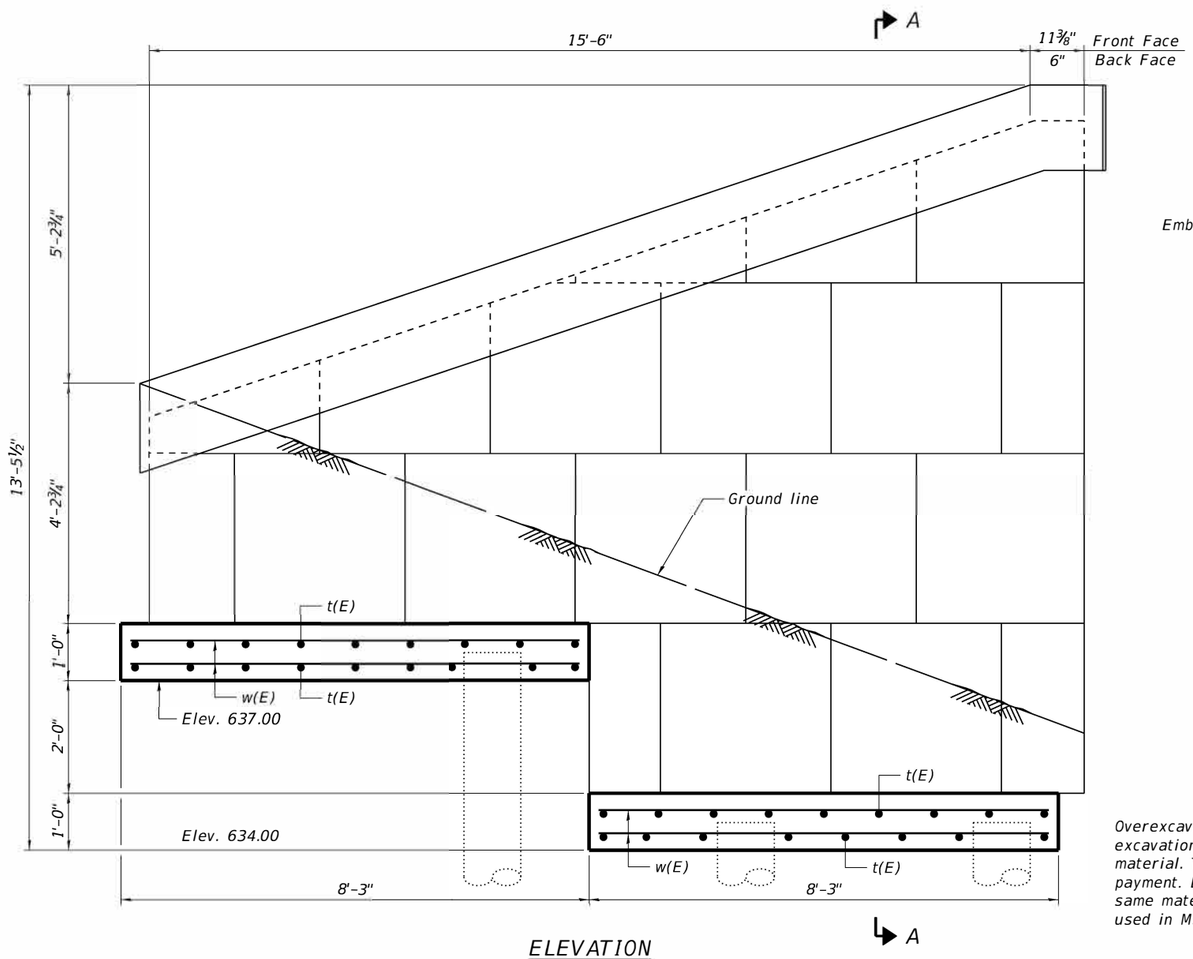

ELEVATION

(Northeast wingwall shown, Southeast wingwall similar)

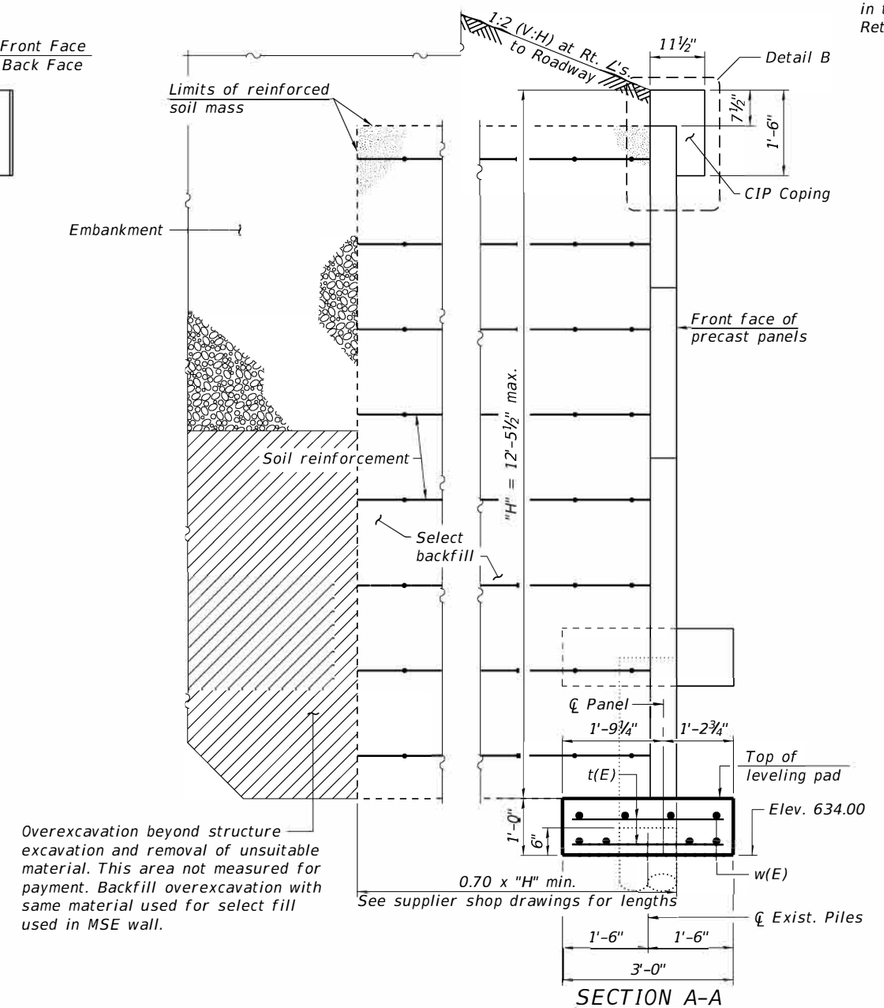

Overexcavation beyond structure excavation and removal of unsuitable material. This area not measured for payment. Backfill overexcavation with same material used for select fill used in MSE wall.

SECTION A-A

BILL OF MATERIAL

Bar	No.	Size	Length	Shape
p(E)	26	#7	38'-4"	
s1(E)	20	#5	3'-1"	
s3(E)	38	#6	14'-9"	
* sp(E)	5	#4	2'-0"	
t(E)	70	#5	2'-8"	
u(E)	22	#5	7'-8"	
v1(E)	76	#5	6'-10"	
v3(E)	76	#7	9'-6"	
v4(E)	14	#7	13'-2"	
w(E)	32	#5	7'-11"	
Structure Excavation		Cu. Yd.	143	
Concrete Structures		Cu. Yd.	22.2	
Concrete Encasement		Cu. Yd.	20.1	
Reinforcement Bars, Epoxy Coated		Pound	6,140	
Bar Splicers		Each	38	
Furnishing Metal Shell Piles 12" x 0.25"		Foot	256	
Driving Piles		Foot	256	
Test Pile Metal Shell		Each	1	
Mechanically Stablized Earth Retaining Wall		Sq. Ft.	290	
Granular Backfill for Structures		Cu. Yds	98	
Geocomposite Wall Drain		Sq. Yd.	47	

*Length is height of spiral.

NOTES:

For details of piles see sheet 19 of 25.

For drainage layout, see sheet 3 of 25.

All exposed edges shall have ¾" chamfers, except as noted.

Headed bars shall conform to ASTM A970 with threaded attachment; Class HA; and reinforcement bars conforming to ASTM A706. Cost included with Reinforcement Bars, Epoxy Coated.

REVISION	DATE	BY	REMARKS

DESIGNED	BKC
DRAWN	FDL
REVIEWED	EEL
APPROVED	BKC

WHITESIDE COUNTY
F.A.U. 5563 (E. ELEVENTH ST.) OVER
ILLINOIS-MISSISSIPPI FEEDER CANAL. STATION 20+00

WILLETT HOFMANN & ASSOCIATES INC
ENGINEERING ARCHITECTURE LAND SURVEYING
809 EAST 2ND STREET, DIXON, IL 61021-0367
T: 815-284-3381 DESIGN FIRM: #184-000918

EAST ABUTMENT DETAILS
STRUCTURE NO. 098-6010

STRUCTURAL SHEET NO. 14 OF 25 SHEETS

F.A.U.	SECTION	COUNTY	TOTAL SHEETS	SHEET NO.
5563	19-00137-00-BR	WHITESIDE	60	32
	WHA* 1286J24	CONTRACT 85779		
		ILLINOIS		

FILE = S:\PROJECTS\2024\1286J24_RF\DESIGN\CAD_SHEETS\1286J24_East Abutment.dgn

PRINT_ORGANIZER_BW.pltcfg 8/14/2025 1:38:31 PM = PLOTTED

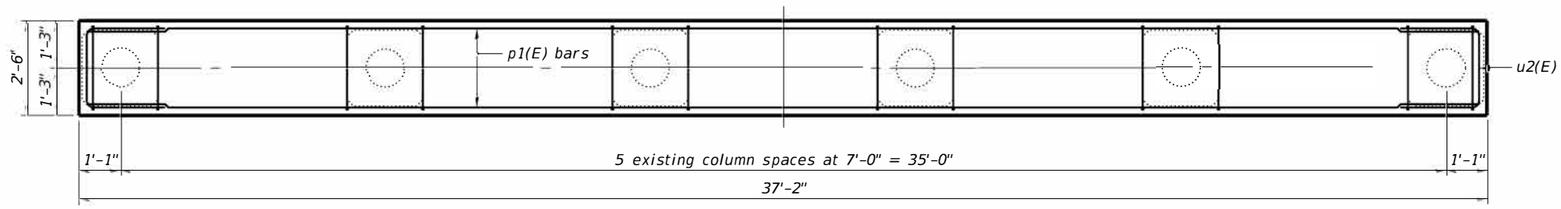

TOP PLAN

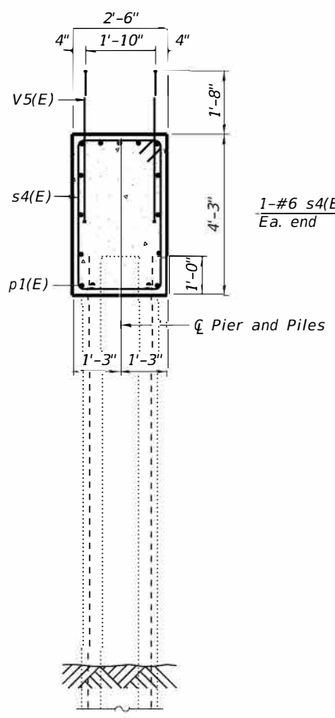

SECTION A-A

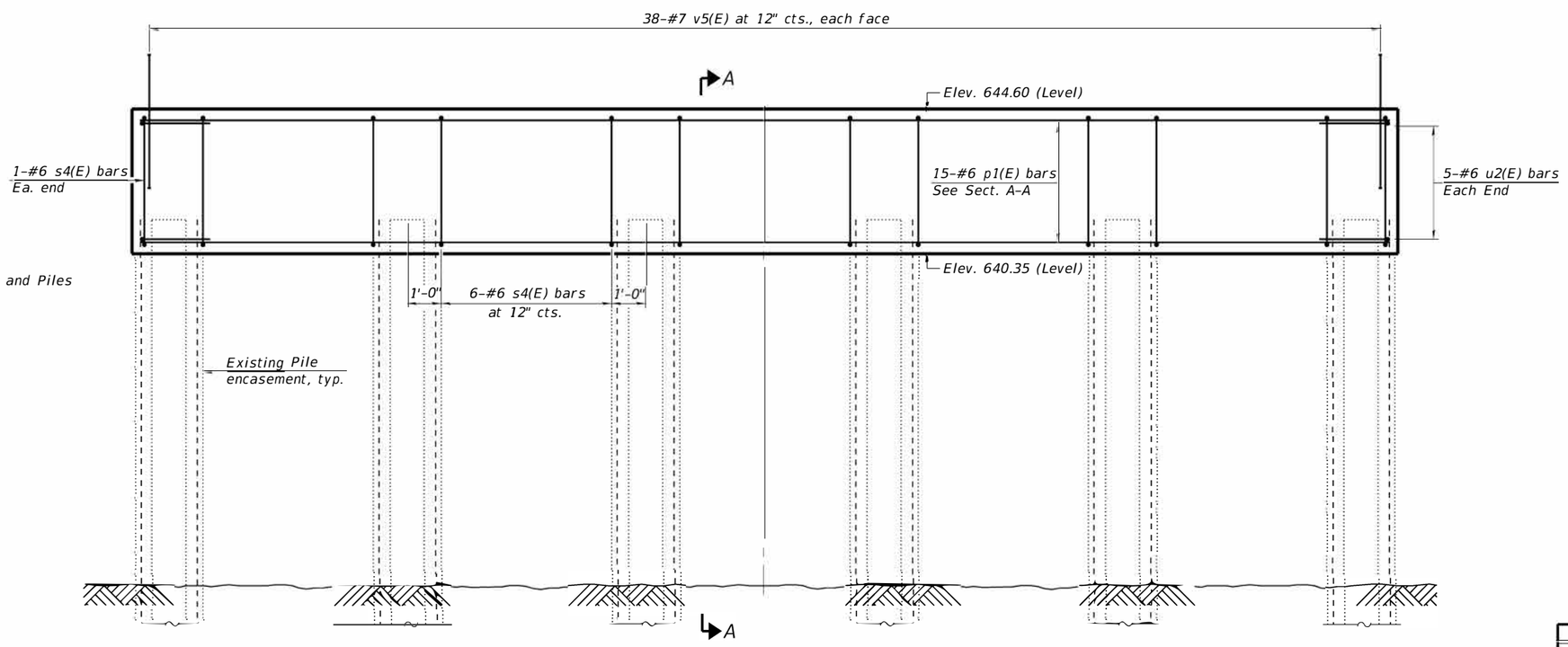

ELEVATION
(Looking Upstation)

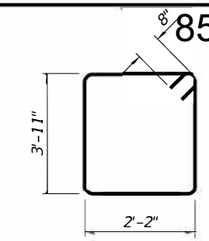

BAR s4(E)

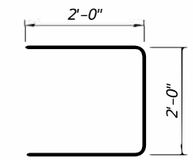

BAR u2(E)

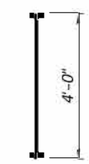

BAR v5(E)
(Headed)

TWO PIERS
BILL OF MATERIAL

Bar	No.	Size	Length	Shape
p1(E)	30	#6	36'-8"	
s4(E)	64	#6	13'-6"	
u2(E)	20	#6	6'-0"	
v5(E)	152	#7	4'-0"	
Concrete Structures			Cu. Yd.	29.1
Reinforcement Bars, Epoxy Coated			Pound	4,380

REVISION	DATE	BY	REMARKS

DESIGNED
DRAWN FDL
REVIEWED
APPROVED BKC

WHITESIDE COUNTY
F.A.U. 5563 (E. ELEVENTH ST.) OVER
ILLINOIS-MISSISSIPPI FEEDER CANAL. STATION 20+00

WILLETT HOFMANN & ASSOCIATES INC
ENGINEERING ARCHITECTURE LAND SURVEYING
809 EAST 2ND STREET, DIXON, IL 61021-0367
T: 815-284-3381 DESIGN FIRM: #184-000918

PIERS
STRUCTURE NO. 098-6010

STRUCTURAL SHEET NO. 15 OF 25 SHEETS

F.A.U.	SECTION	COUNTY	TOTAL SHEETS	SHEET NO.
5563	19-00137-00-BR	WHITESIDE	60	33
	WHA* 1286J24	CONTRACT 85779		
	ILLINOIS			

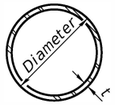

METAL SHELL PILE TABLE

Designation and outside diameter	Wall thickness t	Weight per foot (Lbs./ft.)	Inside volume (yd.³/ft.)
PP12	0.250"	31.40	0.0267
PP14	0.250"	36.75	0.0368
PP14	0.312"	45.65	0.0361
PP16	0.312"	52.32	0.0478
PP16	0.375"	62.64	0.0470

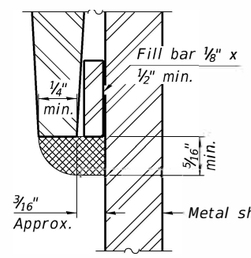

DETAIL A

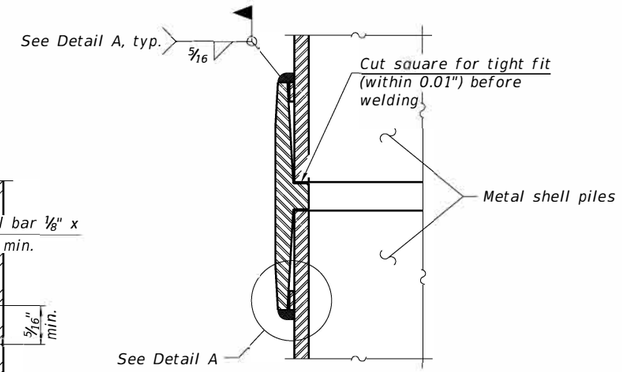

WELDED COMMERCIAL SPLICE

Notes:
The ⅛" x ½" min. fill bar may be constructed of 2 bars with a ⅛" max. gap between them.
Pile segments shall be driven to solid contact with splicer before welding.

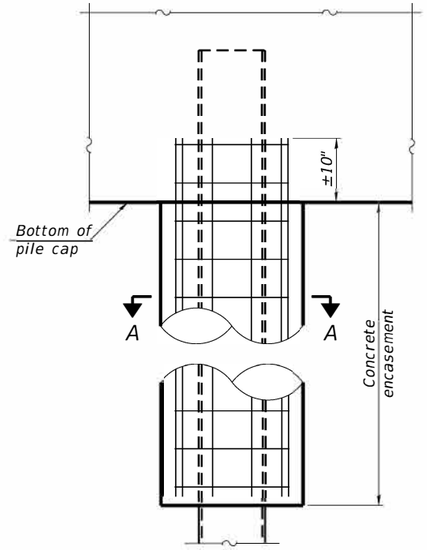

ELEVATION

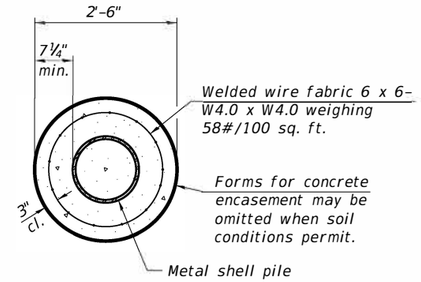

SECTION A-A

INDIVIDUAL PILE CONCRETE ENCASEMENT

(When specified)

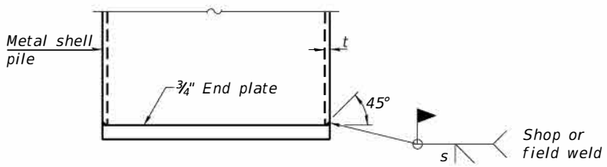

s = t - ⅛"

END PLATE ATTACHMENT

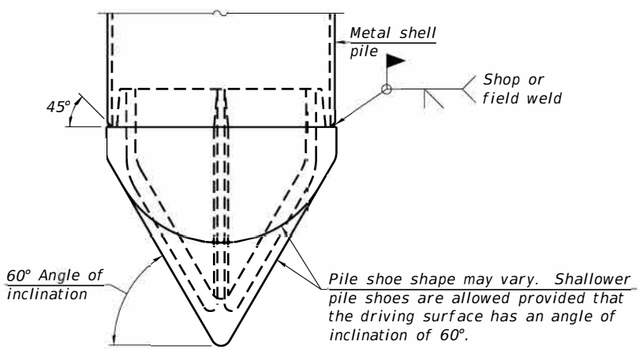

PILE SHOE ATTACHMENT

(When called for on the plans, the Contractor shall furnish metal shell pile shoes consisting of a single piece conical pile point as shown. The pile shoes shall be cast in one piece steel according to either ASTM A 148 Grade 80-50 or AASHTO M 103 Grade 65-35 and shall provide full bearing over the full circumference of the metal shell pile. The pile shoe shall have tapered leads to assure proper alignment and fitting and shall be secured to the pile with a circumferential weld).

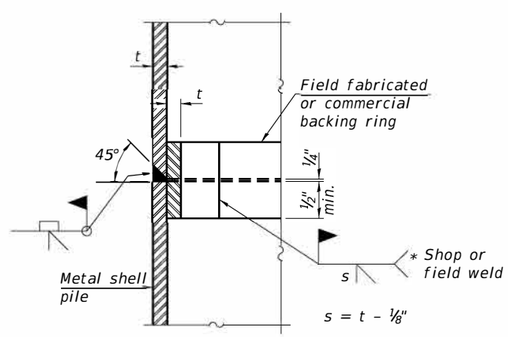

s = t - ⅛"

COMPLETE PENETRATION WELD SPLICE

* Field fabricated backing ring may be made from pile shell by removing segment to allow reducing circumference and vertically rejoin with partial joint penetration weld.

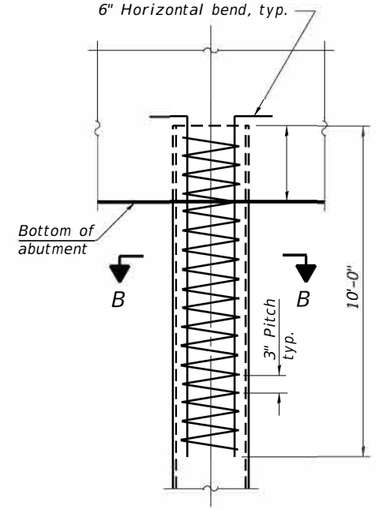

ELEVATION

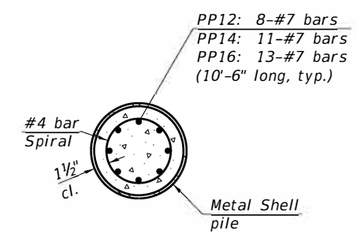

SECTION B-B

REINFORCEMENT AT ABUTMENTS

(Omit when concrete encasement is specified)

Note:
The metal shell piles shall be according to Article 1006.05 of the Standard Specifications.

REVISION	DATE	BY	REMARKS

DESIGNED	BKC
DRAWN	FDL
REVIEWED	EEL
APPROVED	BKC

WHITESIDE COUNTY
F.A.U. 5563 (E. ELEVENTH ST.) OVER
ILLINOIS-MISSISSIPPI FEEDER CANAL. STATION 20+00

WILLETT HOFMANN & ASSOCIATES INC
ENGINEERING ARCHITECTURE LAND SURVEYING
809 EAST 2ND STREET, DIXON, IL 61021-0367
T: 815-284-3381 DESIGN FIRM: #184-000918

METAL SHELL PILE DETAILS
STRUCTURE NO. 098-6010
STRUCTURAL SHEET NO. 16 OF 18 SHEETS

F.A.U.	SECTION	COUNTY	TOTAL SHEETS	SHEET NO.
5563	19-00137-00-BR	WHITESIDE	60	34
	WHA* 1286J24	CONTRACT 85779		
	ILLINOIS			

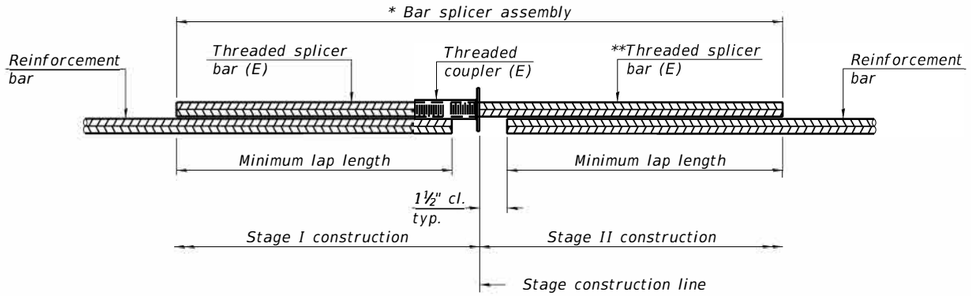

STANDARD BAR SPLICER ASSEMBLY PLAN

Only bar splicer assemblies as presented on the approved QPL list may be used.

Threaded splicer bar length = min. lap length + 1½" + thread length

* Epoxy not required on Bar Splicer Assembly components used in conjunction with black bars.

Location	Bar size	No. assemblies required	Minimum lap length
W. Abut.	#5	38	4'-0"
E. Abut.	#5	38	4'-0"

**Need Bolt only at this end of Splicer Assembly, and cost to be included in Bar Splicer Assembly. See Special Provisions.

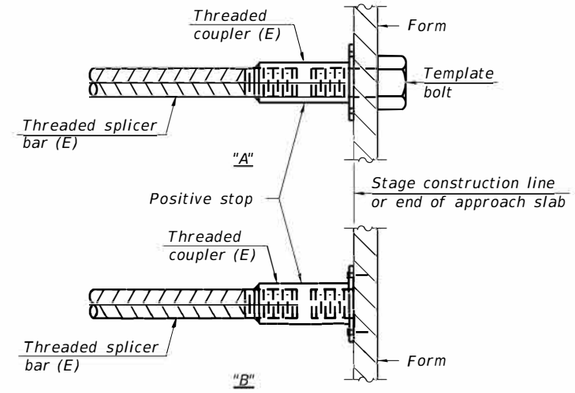

INSTALLATION AND SETTING METHODS

"A" : Set bar splicer assembly by means of a template bolt.
"B" : Set bar splicer assembly by nailing to wood forms or cementing to steel forms.
(E) : Indicates epoxy coating.

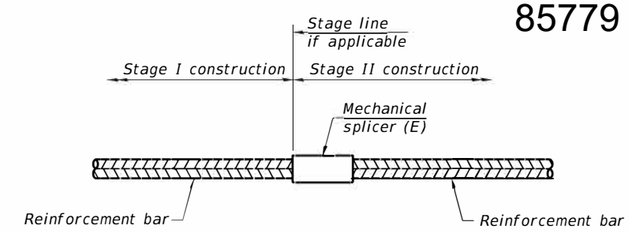

STANDARD MECHANICAL SPLICER

Location	Bar size	No. assemblies required

Notes:

Splicer bars shall be deformed with threaded ends and have a minimum 60 ksi yield strength.

All reinforcement shall be lapped and tied to the splicer bars.

Bar splicer assemblies shall be epoxy coated according to the requirements for reinforcement bars. See Section 508 of the Standard Specifications.

See approved list of bar splicer assemblies and mechanical splicers for alternatives.

REVISION	DATE	BY	REMARKS

DESIGNED BKC
DRAWN FDL
REVIEWED EEL
APPROVED BKC

WHITESIDE COUNTY
F.A.U. 5563 (E. ELEVENTH ST.) OVER
ILLINOIS-MISSISSIPPI FEEDER CANAL. STATION 20+00

WILLETT HOFMANN & ASSOCIATES INC
ENGINEERING ARCHITECTURE LAND SURVEYING
809 EAST 2ND STREET, DIXON, IL 61021-0367
T: 815-284-3381 DESIGN FIRM: #184-000918

BAR SPLICER ASSEMBLY AND MECHANICAL SPLICER DETAILS
STRUCTURE NO. 098-6010
STRUCTURAL SHEET NO. 17 OF 25 SHEETS

F.A.U.	SECTION	COUNTY	TOTAL SHEETS	SHEET NO.
5563	19-00137-00-BR	WHITESIDE	60	35
	WHA* 1286J24	CONTRACT 85779		
	ILLINOIS			

STATE OF ILLINOIS
DEPARTMENT OF PUBLIC WORKS & BUILDINGS
DIVISION OF HIGHWAYS

ROUTE NO.	SECTION	COUNTY	TOTAL SHEETS	SHEET NO.
3-B 4-A				
FED. ROAD DIST. NO. 7	ILLINOIS	FED. AID PROJECT		

85779
SHEET NO. 13
13 SHEETS

BRIDGE FOUNDATION BORING LOG

BRIDGE East 11th St. over Hennepin Feeder of Ill.-Miss. Canal — Date 7-24-62 — Bored By F. Hirsch — Checked By

SEC. 103-B-TR — STA 8+39.00
COUNTY Whiteside
W. Abt.
Boring No. 1
Station 7+91.25
Offset 19' Rt. ℄

Surface Water El.
Groundwater El. at Completion
After Hours

Description	Elevation	N	Qu t/s.f.	w (%)
Ground Surface 639.2	0			
Augered 4' to seat auger.				
Hit water at 5.5'				
635.2				
Medium, sand to medium gravel. Moist.	-5	18		
Loose: Wet		7		
Very Loose:	-10	4		
Medium:		10		
Medium: 624.2	-15	11		
Medium: grey sand		13		
Medium: 618.2	-20	13		
Medium, grey sand, find gravel		10		
Loose:	-25	6		
Loose:		6		
Loose: 608.2	-30	6		
Medium: Grey sand and fine to medium gravel.		13		
Medium:	-35	15		
Medium:		25		
Dense:	-40	36		
Medium:		29		
Medium:	-45	21		

Description	Elevation	N	Qu t/s.f.	w (%)
45				
Medium: Grey sand and fine to medium gravel		20		
Medium: 50		17		
Medium:		15		
Medium: 55		13		
Medium:		11		
Loose, same as above. 579.2 60		7		
3" buff clayey silt.				
Buff, clayey silt with some gravel.		26		
Same as above: 574.2 65		21		
Medium, brown, fine sand and fine to medium gravel.		27		
Medium, brown, fine sand. 70 568.7		18		
Finished Boring				

DESIGNED Walter Berry
CHECKED
DRAWN
CHECKED

DEC 17 1962
EXAMINED H. E. Baumann — ENGINEER OF BRIDGE AND TRAFFIC STRUCTURES
PASSED — ENGINEER OF DESIGN
APPROVED — HIGHWAY ENGINEER

N – Standard Penetration Test – Blows per foot to drive 2" O.D. Split Spoon Sampler 12" with 140# hammer falling 30".

Qu – Unconfined Compressive Strength – t/sf

w – Water Content – percentage of oven dry weight – %.

Type failure:
B – Bulge Failure
S – Shear Failure
E – Estimated Value

BRIDGE FOUNDATION BORING LOG

BRIDGE East 11th St. over Hennepin Feeder of Ill.-Miss. Canal — Date 7-30-62 — Bored By F. Hirsch — Checked By

SEC. 103-B-TR — STA 8+39.00
COUNTY Whiteside
E. Abt.
Boring No. 2
Station 8+86.75
Offset 10' Lt. ℄

Description	Elevation	N	Qu t/s.f.	w (%)
Ground Surface 640.5	0			
Augered 4' to seat auger.				
636.5				
Loose, brown, sand	-5	10		
Loose 632.5		7		
Very loose, brown, fine sand. 629.5	-10	3		
Medium, brown, sand and fine gravel		12		
Medium:	-15	14		
Medium, grey, sand, fine to medium gravel. Angular to sub-angular pieces.		15		
Medium: same	-20	15		
Medium: same		12		
Loose: same	-25	6		
Loose: same		5		
Loose: same	-30	4		
Loose: same		4		
Loose: same	-35	4		
604.0				
Medium, grey, sand, fine to coarse gravel		20		
Medium:	-40	22		
Medium:		24		
Medium:	-45	25		

Description	Elevation	N	Qu t/s.f.	w (%)
45				
Medium, grey, sand, fine to coarse gravel.		23		
Medium: same 590.5 50		24		
6" buff clayey silt. Too small to test.				
Same as above, about a 2" sample looked as if there may be some gravel in the clayey silt.		21		
Dense (very stiff,) buff sandy, gravelly material with layers of clay and silt. 55 685.5		41		
Dense, grey, silty fine sand, 2" layer of clayey silt.		36		
Loose, grey, silty sand. 60		10		
Medium, grey, silty sand.		14		
Medium, grey, silty sand. 65		17		
Same:		17		
Same: 70		17		
Same:		19		
666.0				
Very Dense, brown, silt dry - just moist. About 5" sample - broken. 75		65/5" Refusal		
Finished Boring				

BORINGS
COLOMA ROAD DISTRICT - SEC 103-B-TR
EAST 11TH STREET
WHITESIDE COUNTY
STA. 8+39.00

REVISION	DATE	BY	REMARKS

DESIGNED	BKC
DRAWN	FDL
REVIEWED	EEL
APPROVED	BKC

WHITESIDE COUNTY
F.A.U. 5563 (E. ELEVENTH ST.) OVER
ILLINOIS-MISSISSIPPI FEEDER CANAL. STATION 20+00

WILLETT HOFMANN & ASSOCIATES INC
ENGINEERING ARCHITECTURE AND SURVEYING
809 EAST 2ND STREET, DIXON, IL 61021-0367
T: 815 843 3811 DESIGN FIRM: #184-009-18

EXISTING BORING LOGS
STRUCTURE NO. 098-6010
STRUCTURAL SHEET NO. 18 OF 25 SHEETS

F.A.U.	SECTION	COUNTY	TOTAL SHEETS	SHEET NO.
5563	19-00137-00-BR	WHITESIDE	60	36
	WHA# 1286J24	CONTRACT 85779		
	ILLINOIS			

85779

B.M. Top of North end of conc. brace rod between Concrete Posts on Canal R.O.W. 95'± South of Sta. 6+86.5 Elev. 639.61

STATE OF ILLINOIS
DEPARTMENT OF PUBLIC WORKS & BUILDINGS
DIVISION OF HIGHWAYS

ROUTE NO.	SECTION	COUNTY	TOTAL SHEETS	SHEET NO.
S. B. I. R. A.				
FED. ROAD DIST. NO. 7		ILLINOIS	FED. AID PROJECT-	

SHEET NO. 7
13 SHEETS

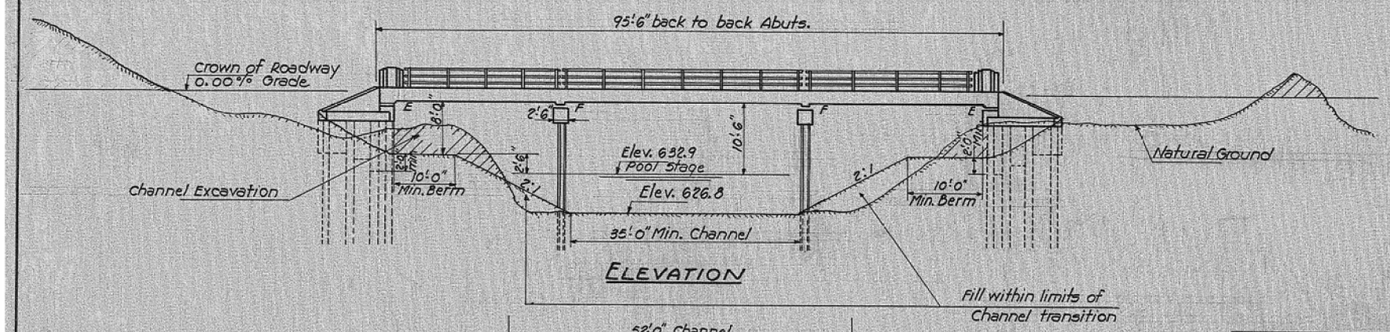

ELEVATION

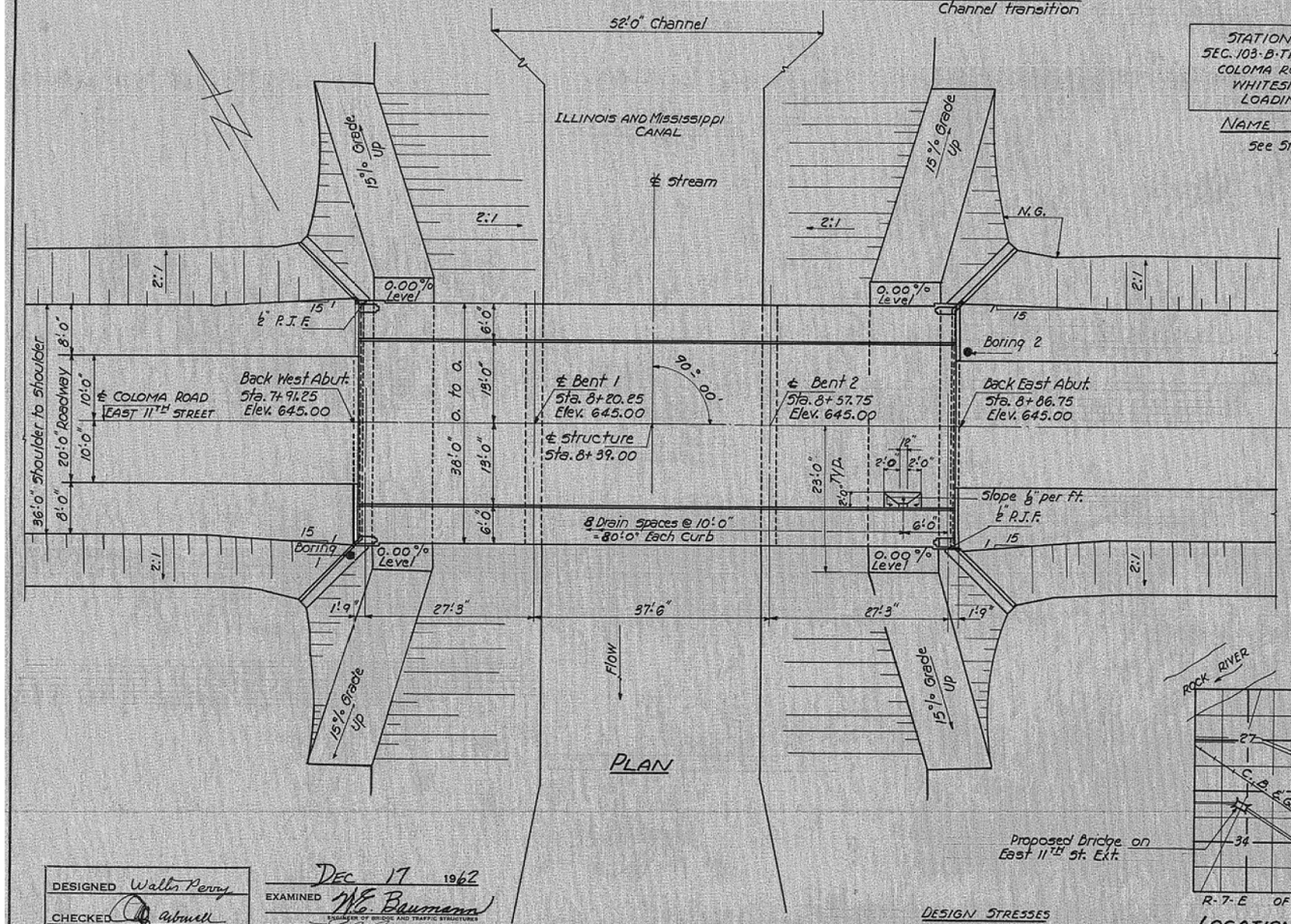

PLAN

STATION 8+39.00
SEC. 103-B-TR - BUILT 1963
COLOMA ROAD DISTRICT
WHITESIDE COUNTY
LOADING H20-516

NAME PLATE
See Standard 2113

GENERAL NOTES

Coarse aggregate to be used in End Post must be free of chert flint limonite, lignite and soft sandstone.

The concrete floor slab shall be finished in accordance with Art. 51.19 of the Standard Specifications.

All Reinforcement Bars shall be lapped 20 diameters unless otherwise shown.

All rollers, rockers, bearing plates, lead plates, pintles and anchor bolts shall be fabricated and set in accordance with Art. 51.15 of the Standard Specifications and are included in quantity of Structural Steel. Estimated Weight = 6450 Lbs.

The exposed surfaces of the expansion guard shall be given two shop coats of red lead paint, the contact surfaces shall be given one coat of red lead paint. Anchor studs shall not be painted. Expansion guards are included in the quantity of Structural Steel. Estimated Weight = 760 Lbs.

Except as otherwise provided, all Structural Steel shall receive one shop coat of red lead paint and two field coats of aluminum paint. See Arts. 56.1 to 56.5 inclusive of the Standard Specifications.

The Contractor shall drive one Metal Shell test pile each in a permanent location at West Abutment and Pier 2 as directed by the Engineer before ordering the remainder of Piles.

The entire back face of the Abutment and Wings shall be waterproofed.

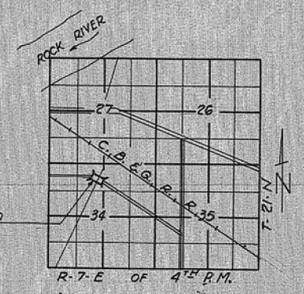

Proposed Bridge on East 11TH St. Ext.

LOCATION PLAN

TOTAL BILL OF MATERIAL

ITEM	UNIT	SUPER	SUBSTR	TOTAL
Channel Excavation	Cu. Yds.		780	780
Class-A Excavation for Structures	Cu. Yds.		190	190
Structural Steel	Lbs.	7210	-	7210
Class-X Concrete	Cu. Yds.	223.4	78.6	302.0
Metal Handrail	Lin. Ft.	179	-	179
Reinforcement Bars	Lbs.	44490	9930	54420
Metal Shell Piles 12" ϕ	Lin. Ft.		1618	1618
Test Piles (Metal Shell)	Each		2	2
Class-X Concrete Encasement	Cu. Yds.		23.7	23.7
Name Plates	Each	1	-	1
Protective Coat	Sq. Yds.	420		420

DESIGN STRESSES
fc - - - 1400 #/□" Super. & Subst.
fs - - - 20000 #/□" Reinf.
fs - - - 20000 #/□" Struct.
n - - - 10

Loading H20-516

GENERAL PLAN & ELEVATION
COLOMA ROAD DISTRICT-SEC. 103-B-TR.
EAST 11TH STREET BRIDGE OVER HENNEPIN
FEEDER OF THE ILL. MISSISSIPPI CANAL
WHITESIDE COUNTY
STATION 8+39.00

DESIGNED Walter Perry
CHECKED Cabnell
DRAWN W.P. M. Miller
CHECKED

DEC 17 1962
EXAMINED W. E. Baumann — ENGINEER OF BRIDGE AND TRAFFIC STRUCTURES
PASSED — ENGINEER OF DESIGN
APPROVED — CHIEF HIGHWAY ENGINEER

REVISION	DATE	BY	REMARKS

DESIGNED BKC
DRAWN FDL
REVIEWED EEL
APPROVED BKC

WHITESIDE COUNTY
F.A.U. 5563 (E. ELEVENTH ST.) OVER
ILLINOIS-MISSISSIPPI FEEDER CANAL. STATION 20+00

WILLETT HOFMANN & ASSOCIATES INC
ENGINEERING ARCHITECTURE LAND SURVEYING
809 EAST 2ND STREET, DIXON, IL 61021-0367
T: 815-284-3381 DESIGN FIRM: #184-000918

EXISTING PLANS
STRUCTURE NO. 098-6010
STRUCTURAL SHEET NO. 19 OF 25 SHEETS

F.A.U.	SECTION	COUNTY	TOTAL SHEETS	SHEET NO.
5563	19-00137-00-BR	WHITESIDE	60	37
	WHA# 1286J24	CONTRACT 85779		
	ILLINOIS			

85779

STATE OF ILLINOIS
DEPARTMENT OF PUBLIC WORKS & BUILDINGS
DIVISION OF HIGHWAYS

ROUTE NO.	SECTION	COUNTY	TOTAL SHEETS	SHEET NO.
E. B. L. F. A.				
FED. ROAD DIST. NO. 7	ILLINOIS	FED. AID PROJECT-		

SHEET NO. 8
13 SHEETS

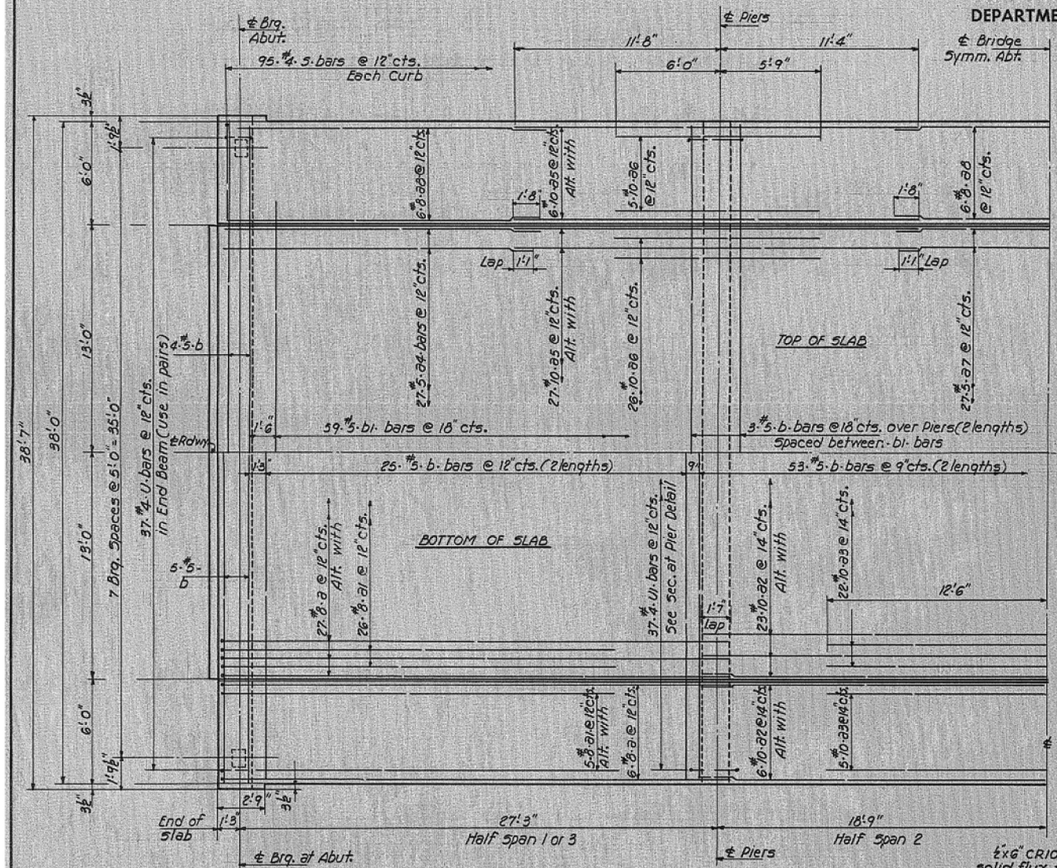

HALF PLAN

Note: for placement of n-bars See Sheet 3

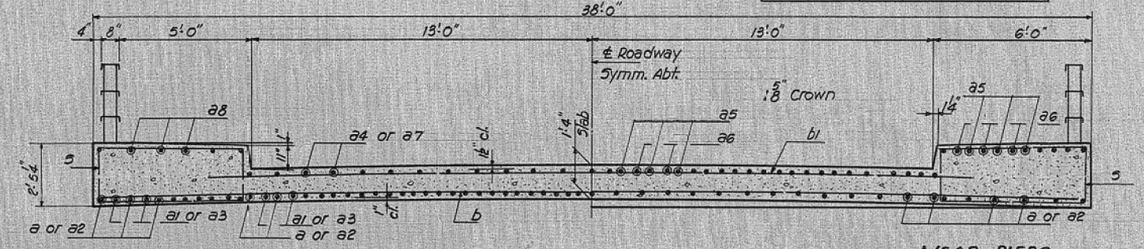

MID-SPAN

CROSS SECTION

NEAR PIERS

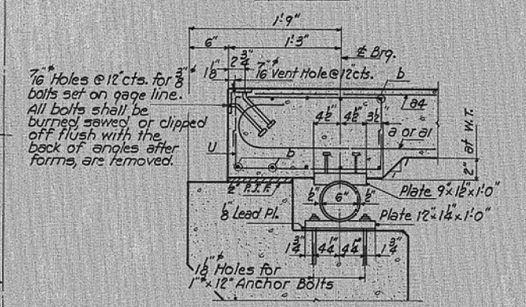

SECTION AT ABUTMENT

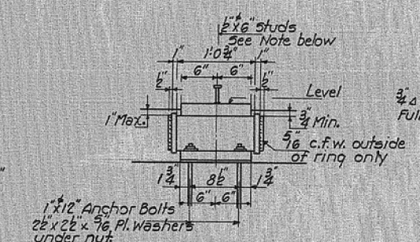

ROLLER DETAIL

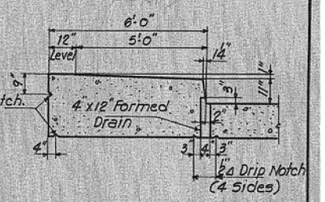

CURB & DRAIN DETAIL

For Drain Spacing See Sheet-1

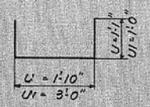

BARS U-U1

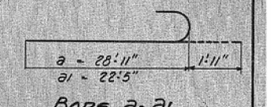

BARS a-a1

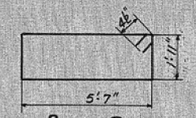

BAR 5

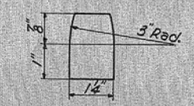

PINTLE DETAIL

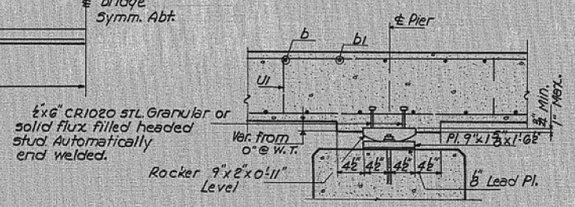

SECTION AT PIER

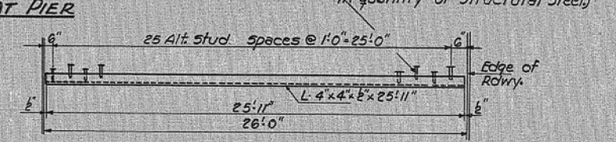

ARMOR ANGLE DETAIL

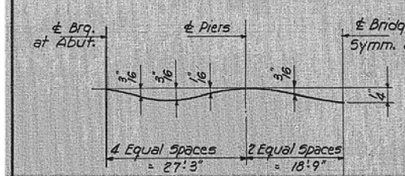

DEAD LOAD DEFLECTION DIAGRAM

(Weight of Concrete only)

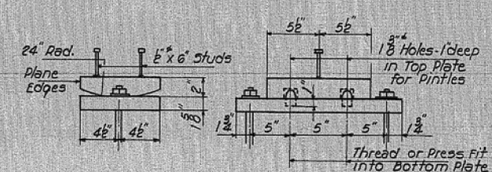

ROCKER PLATE DETAILS

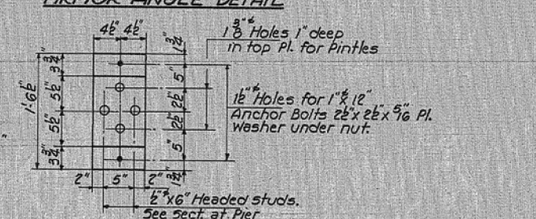

PLAN

BILL OF MATERIAL

BAR	NO.	SIZE	LENGTH	SHAPE
a	78	#8	30'-0"	
a1	72	#8	23'-6"	
a2	35	#10	39'-3"	
a3	32	#10	25'-0"	
a4	54	#5	17'-6"	
a5	78	#10	23'-0"	
a6	72	#10	11'-9"	
a7	27	#5	17'-0"	
a8	36	#8	10'-3"	
b	254	#5	19'-6"	
b1	59	#5	29'-0"	
s	190	#4	15'-9"	
U	148	#4	4'-0"	
U1	74	#4	5'-0"	
n	32	#4	4'-6"	
Class-X-concrete			Cu. Yds.	222.1
Reinforcement Bars			Lbs.	44390
Structural Steel			Lbs.	7210

SUPERSTRUCTURE
EAST 11TH STREET-SEC. 103-B-TR
WHITESIDE COUNTY
STATION 8+39.00

DEC 17 1962

DESIGNED	Walter Perry	EXAMINED	H. G. Baumann, ENGINEER OF BRIDGE AND TRAFFIC STRUCTURES
CHECKED	Arbuckle	PASSED	ENGINEER OF DESIGN
DRAWN	W.P. M. Miller	APPROVED	V. G. Hoff, CHIEF HIGHWAY ENGINEER
CHECKED			

REVISION	DATE	BY	REMARKS

DESIGNED	BKC
DRAWN	FDL
REVIEWED	EEL
APPROVED	BKC

WHITESIDE COUNTY
F.A.U. 5563 (E. ELEVENTH ST.) OVER
ILLINOIS-MISSISSIPPI FEEDER CANAL. STATION 20+00

WILLETT HOFMANN & ASSOCIATES INC
ENGINEERING ARCHITECTURE LAND SURVEYING
809 EAST 2ND STREET, DIXON, IL 61021-0367
T: 815-284-3381 DESIGN FIRM: #184-000918

EXISTING PLANS
STRUCTURE NO. 098-6010
STRUCTURAL SHEET NO. 20 OF 25 SHEETS

F.A.U.	SECTION	COUNTY	TOTAL SHEETS	SHEET NO.
5563	19-00137-00-BR	WHITESIDE	60	38
	WHA# 1286J24	CONTRACT 85779		
	ILLINOIS			

85779

ROUTE NO.	SECTION	COUNTY	TOTAL SHEETS	SHEET NO.
F. A. I.				
FED. ROAD DIST. NO. 7		ILLINOIS	FED. AID PROJECT-	

SHEET NO. 9
13 SHEETS

STATE OF ILLINOIS
DEPARTMENT OF PUBLIC WORKS & BUILDINGS
DIVISION OF HIGHWAYS

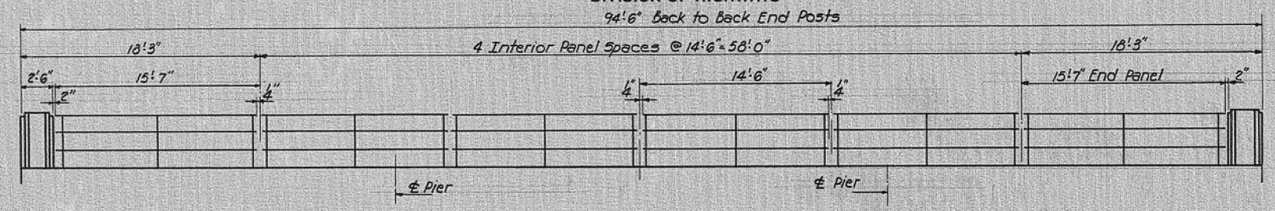

ELEVATION

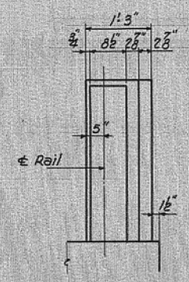

END VIEW

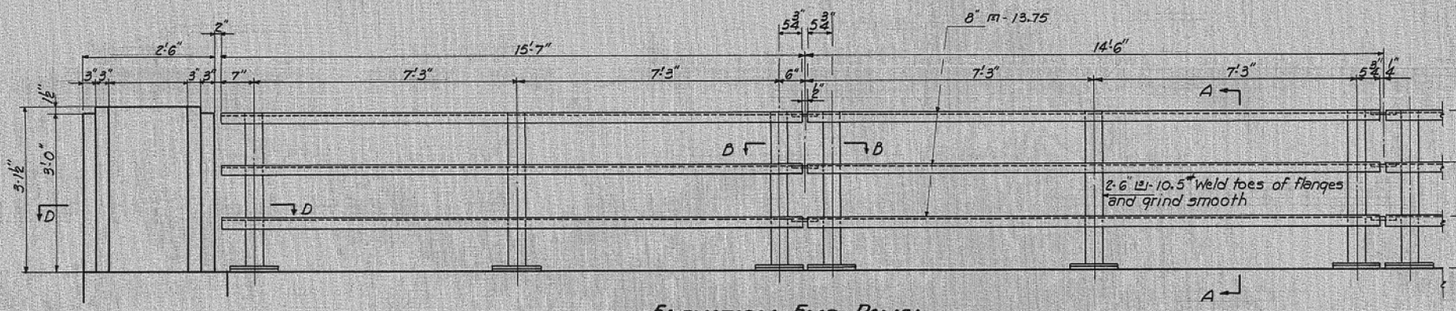

ELEVATION END POST
Outside Face

ELEVATION END PANEL

ELEVATION TYPICAL INTERIOR PANEL

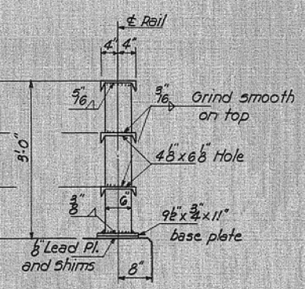

SECTION A-A

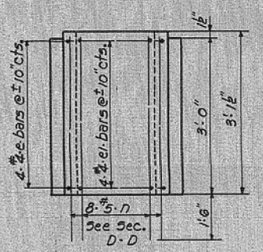

ELEVATION END POST
Inside Face

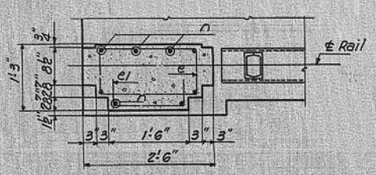

SECTION D-D

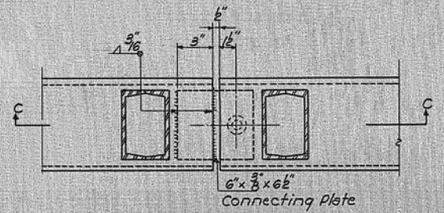

SECTION B-B

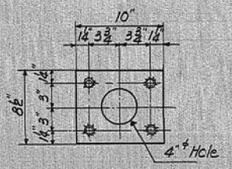

ANCHOR DEVICE

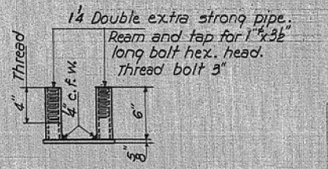

END VIEW

BILL OF MATERIAL

BAR	No.	SIZE	LENGTH	SHAPE
e	16	#4	5'-9"	
e1	16	#4	3'-3"	
Class "X" Concrete			Cu. Yds. 1.3	
Reinforcement Bars			Lbs. 100	
Metal Handrail			Lin. Ft. 179	

n-bars billed with superstructure Quantities.

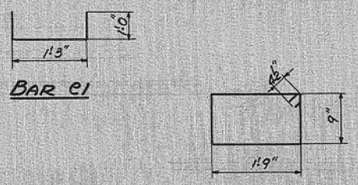

BAR e1

BAR e

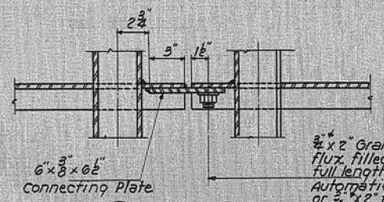

SECTION C-C

¾"x2" Granular or solid flux filled stud. Threaded full length. Automatically end welded or ¾"x2" fully threaded stud welded with 3/16 c.f.w. Provide washer and lock nut.

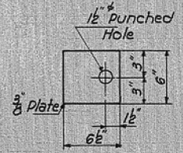

PLAN OF CONNECTING PLATE

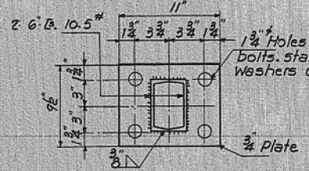

BASE PLATE

Notes
After erection, all bolts and washers shall be spot painted with one coat of red lead paint. The entire rail shall then receive two coats of aluminum paint. Provide 1-⅛" and 2-1/16 shims for 50% of the Posts.

DESIGNED	Willett Kong	
CHECKED	Ahmed	
DRAWN	W.P.	M. Miller
CHECKED		

DEC 17 1962

EXAMINED H.E. Baumann — ENGINEER OF BRIDGE AND TRAFFIC STRUCTURES
PASSED E. Blenk — ENGINEER OF DESIGN
APPROVED V.E. Statt — CHIEF HIGHWAY ENGINEER

RAIL AND END POST DETAILS
EAST 11TH ST. - SEC. 103-B-TR
WHITESIDE COUNTY
STATION 8+39.00

REVISION	DATE	BY	REMARKS

DESIGNED	BKC
DRAWN	FDL
REVIEWED	EEL
APPROVED	BKC

WHITESIDE COUNTY
F.A.U. 5563 (E. ELEVENTH ST.) OVER
ILLINOIS-MISSISSIPPI FEEDER CANAL. STATION 20+00

WILLETT HOFMANN & ASSOCIATES INC
ENGINEERING ARCHITECTURE LAND SURVEYING
809 EAST 2ND STREET, DIXON, IL 61021-0367
T: 815-284-3381 DESIGN FIRM: #184-000918

EXISTING PLANS
STRUCTURE NO. 098-6010
STRUCTURAL SHEET NO. 21 OF 25 SHEETS

F.A.U.	SECTION	COUNTY	TOTAL SHEETS	SHEET NO.
5563	19-00137-00-BR	WHITESIDE	60	39
	WHA* 1286J24	CONTRACT 85779		
	ILLINOIS			

85779

STATE OF ILLINOIS
DEPARTMENT OF PUBLIC WORKS & BUILDINGS
DIVISION OF HIGHWAYS

ROUTE NO.	SECTION	COUNTY	TOTAL SHEETS	SHEET NO.
S. B. I. R. A.				
FED. ROAD DIST. NO. 7		ILLINOIS	FED. AID PROJECT-	

SHEET NO. 10
13 SHEETS

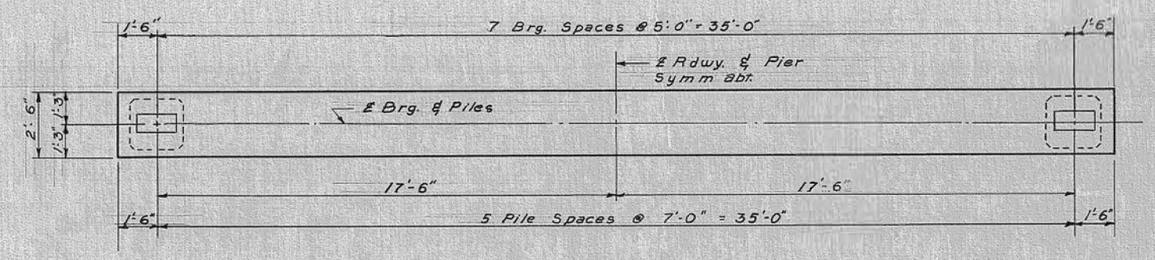

PLAN

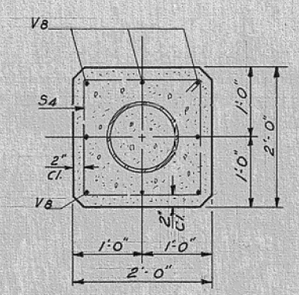

SEC. B-B

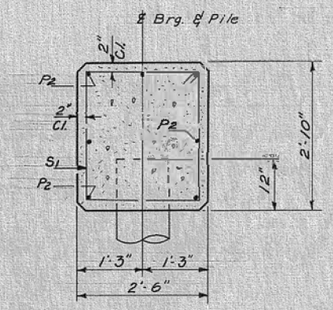

SEC. A-A

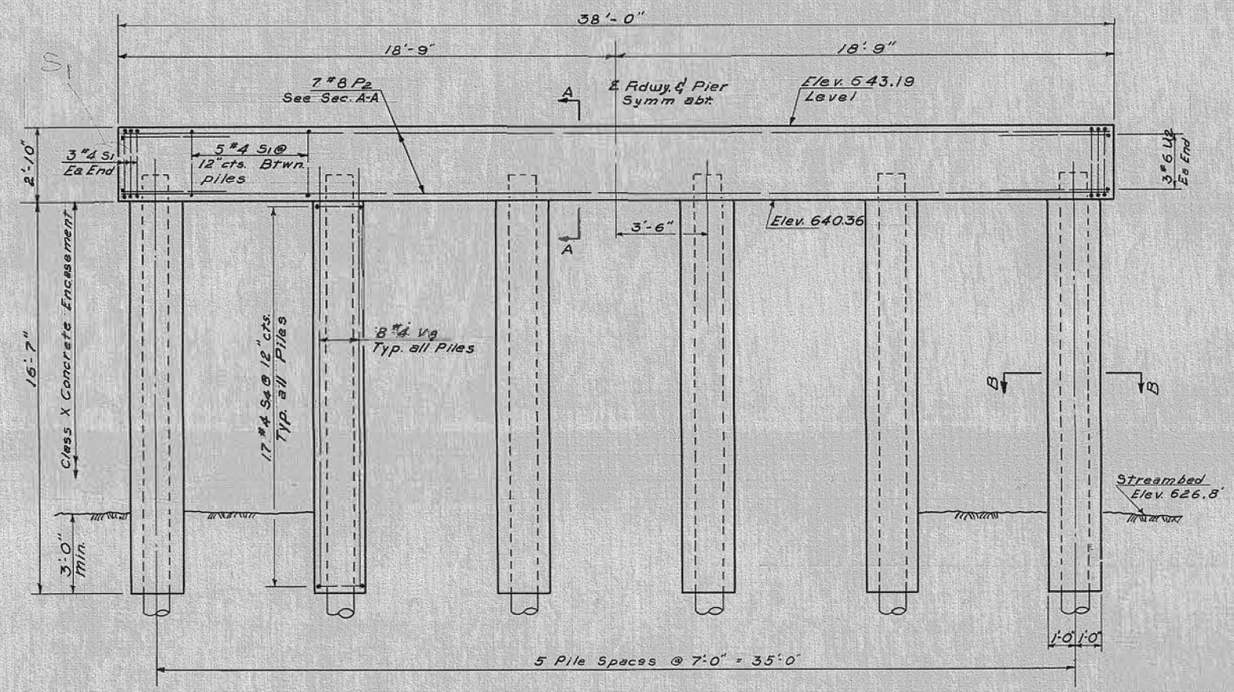

ELEVATION

PILE DATA
Type Metal Shell
Capacity 45 Tons
Est'd. Length 53'
No. Req'd. 11
Test Piles 1

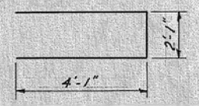

Bar U2

Notes:
For details of S_1, S_4 bars, see sheet #5.
All edges shall have 2" chamfers or fillets.

(2 PIERS)
BILL OF MATERIAL

Bar	No.	Size	Length	Shape
P2	14	#8	37'-8"	—
S1	62	#4	10'-1"	
S4	204	#4	7'-5"	
U2	12	#6	10'-3"	
V8	96	#4	17'-6"	—
Class X Concrete			Cu. Yds.	19.9
Reinf. Bars			Lbs.	4140
Metal Shell Piles 12"			Lin. Ft.	583
Test Pile (Metal Shell)			Ea.	1
Class X Concrete Encasement			Cu. Yds.	23.7

PIERS
EAST 11TH STREET ~ SEC. 103-B-TR
WHITESIDE COUNTY
STA. 8 + 39.00

DESIGNED	Walter Perry	
CHECKED	O. Carmell	
DRAWN	W.P. Perry	
CHECKED	O.C.	

DEC 17 1962

EXAMINED H. E. Baumann — ENGINEER OF BRIDGE AND TRAFFIC STRUCTURES
PASSED E. Theisen — ENGINEER OF DESIGN
APPROVED V. E. Huff — CHIEF HIGHWAY ENGINEER

REVISION	DATE	BY	REMARKS

DESIGNED	BKC
DRAWN	FDL
REVIEWED	EEL
APPROVED	BKC

WHITESIDE COUNTY
F.A.U. 5563 (E. ELEVENTH ST.) OVER
ILLINOIS-MISSISSIPPI FEEDER CANAL. STATION 20+00

WILLETT HOFMANN & ASSOCIATES INC
ENGINEERING ARCHITECTURE AND SURVEYING
809 EAST 2ND STREET, DIXON, IL 61021-0367
T: 815-284-3381 DESIGN FIRM: #184-000918

EXISTING PLANS
STRUCTURE NO. 098-6010
STRUCTURAL SHEET NO. 22 OF 25 SHEETS

F.A.U.	SECTION	COUNTY	TOTAL SHEETS	SHEET NO.
5563	19-00137-00-BR	WHITESIDE	60	40
	WHA# 1286J24	CONTRACT 85779		
	ILLINOIS			

85779

STATE OF ILLINOIS
DEPARTMENT OF PUBLIC WORKS & BUILDINGS
DIVISION OF HIGHWAYS

ROUTE NO.	SECTION	COUNTY	TOTAL SHEETS	SHEET NO.
S. B. I. / F. A.				
FED. ROAD DIST. NO. 7	ILLINOIS	FED. AID PROJECT-		

SHEET NO. 11
13 SHEETS

PILE DATA
Type Metal Shell
Capacity 25 Tons
Est. Length 45'
No. Req'd. 23
Test Piles 1

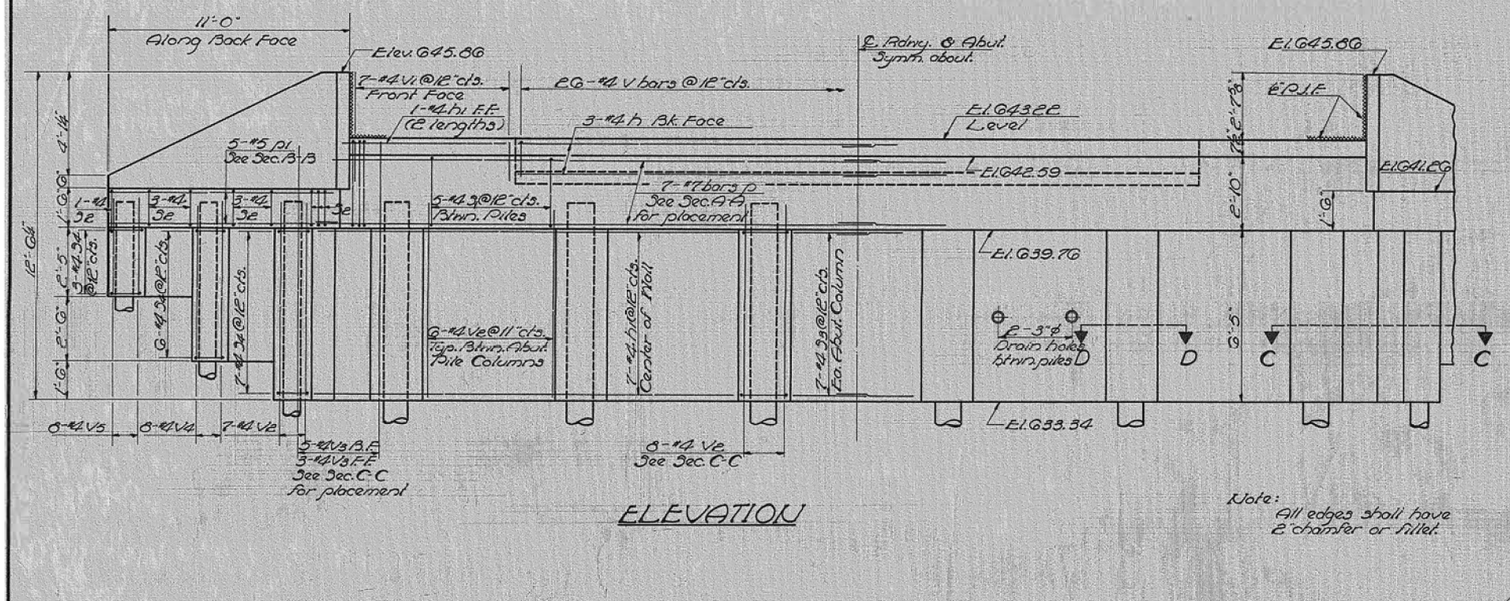

ELEVATION

Note: All edges shall have 2" chamfer or fillet.

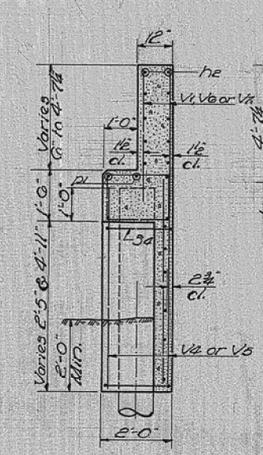

SEC. B-B

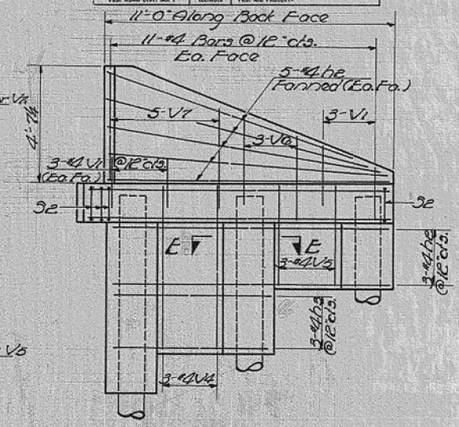

ELEVATION WING WALL

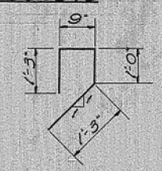

BAR V

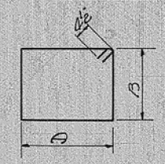

3 BARS

Bar	A	B
31	2'-2"	2'-6"
32	1'-8"	1'-2"
33	1'-8"	1'-11"
34	1'-8"	1'-8"

BILL OF MATERIAL

Bar	No.	Size	Length	Shape
h	12	#4	13'-6"	—
h1	38	#4	20'-9"	—
h2	52	#4	10'-9"	—
h3	12	#4	6'-6"	—
h4	40	#6	4'-9"	—
p	14	#7	38'-3"	—
p1	20	#5	12'-6"	—
31	62	#4	10'-1"	☐
32	40	#4	6'-5"	☐
33	64	#4	7'-11"	☐
34	64	#4	7'-5"	☐
V	52	#4	4'-3"	⊓
V1	76	#4	2'-0"	—
V2	186	#4	7'-6"	—
V3	32	#4	9'-0"	—
V4	44	#4	6'-0"	—
V5	44	#4	3'-6"	—
V6	24	#4	3'-3"	—
V7	40	#4	4'-3"	—

Class X Conc.	Cu. Yds.	58.7
Reinf. Bars	Lbs.	5790
Metal Shell Piles (12")	Lin. Ft.	1035
Test Piles (Metal Shell)	Ea.	1

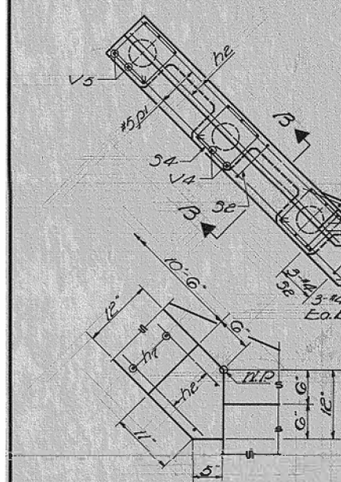

CORNER DETAIL

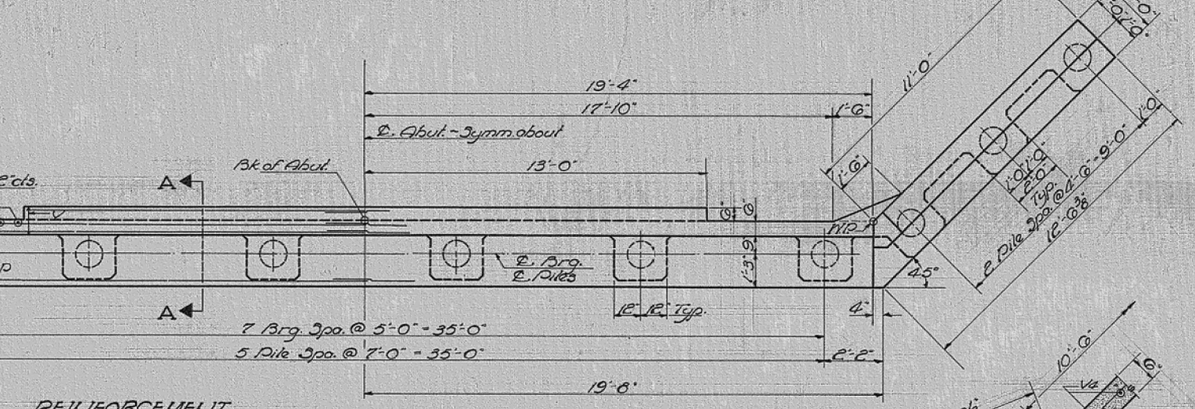

REINFORCEMENT

PLAN

DIMENSIONS

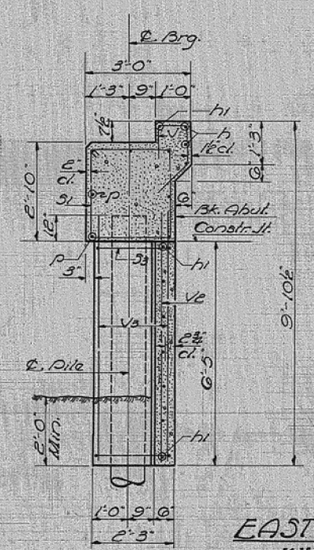

SEC. A-A

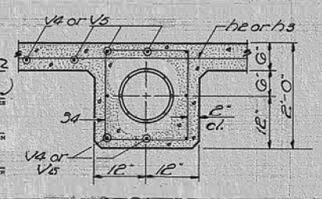

SEC. E-E

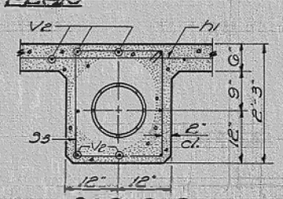

SEC. D-D

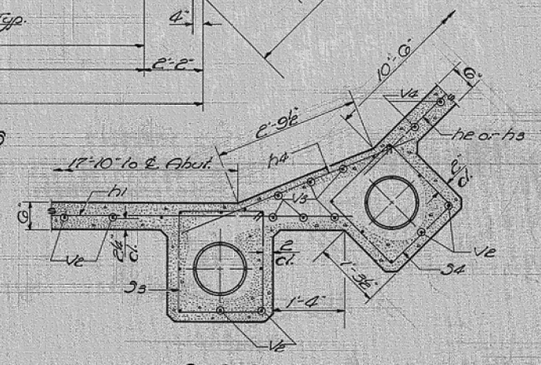

SEC. C-C

ABUTMENTS
EAST 11TH ST. - SEC. 103-B-TR
WHITESIDE COUNTY
STA. 8 + 39.00

REVISION	DATE	BY	REMARKS

DESIGNED	BKC
DRAWN	FDL
REVIEWED	EEL
APPROVED	BKC

WHITESIDE COUNTY
F.A.U. 5563 (E. ELEVENTH ST.) OVER
ILLINOIS-MISSISSIPPI FEEDER CANAL. STATION 20+00

WILLETT HOFMANN & ASSOCIATES INC
ENGINEERING ARCHITECTURE LAND SURVEYING
809 EAST 2ND STREET, DIXON, IL 61021-0367
T: 815-284-3381 DESIGN FIRM: #184-000918

EXISTING PLANS
STRUCTURE NO. 098-6010
STRUCTURAL SHEET NO. 23 OF 25 SHEETS

F.A.U.	SECTION	COUNTY	TOTAL SHEETS	SHEET NO.
5563	19-00137-00-BR	WHITESIDE	60	41
	WHA# 1286J24	CONTRACT 85779		
	ILLINOIS			

85779

STATE OF ILLINOIS
DEPARTMENT OF PUBLIC WORKS & BUILDINGS
DIVISION OF HIGHWAYS

ROUTE NO.	SECTION	COUNTY	TOTAL SHEETS	SHEET NO.
S. B. I. F. A.				
FED. ROAD DIST. NO. 7	ILLINOIS	FED. AID PROJECT-		

SHEET NO. 12
13 SHEETS

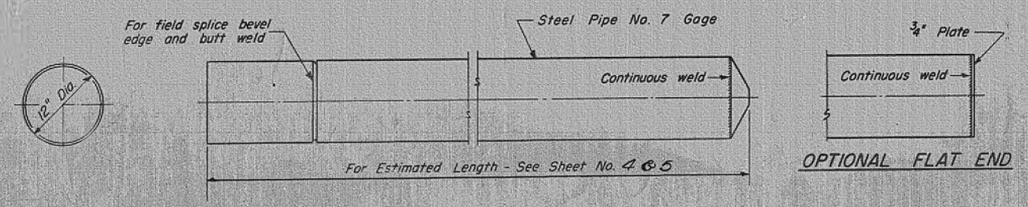

OPTIONAL FLAT END

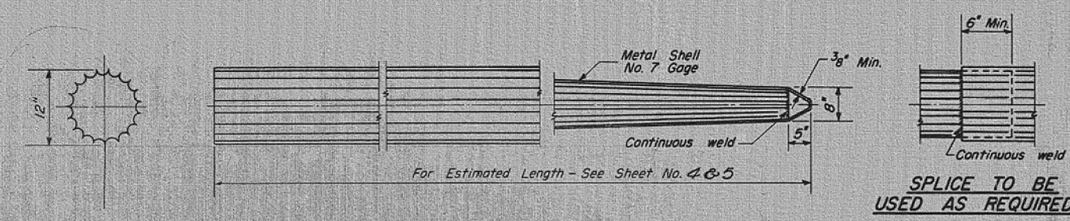

SPLICE TO BE USED AS REQUIRED

ALLOWABLE TAPERS

1-Taper 1'1/2'-6" for 10' + 12" Cylindrical Section Extension
2-Taper 1'1/4'-0" for 17' + 12" Cylindrical Section Extension
3-Taper 1'1/7'-0" for 30' + 12" Cylindrical Section Extension

SECTION A

Note: Driving and bearing ends of pipe shall be cut square.

DETAIL OF CYLINDRICAL STEEL SHELL FOR CAST IN PLACE CONCRETE PILES

DETAIL OF TAPERED METAL SHELL FOR CAST IN PLACE CONCRETE PILES

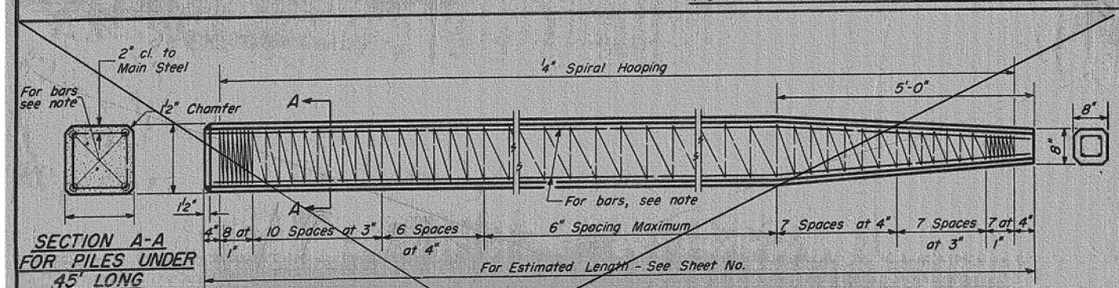

SECTION A-A FOR PILES UNDER 45' LONG

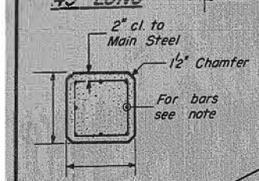

SECTION A-A FOR PILES 45' OR MORE

VOID

Note: For 1" Piles 45' long or more use 8-#8 bars 4 of the full length and 4 to the point of bevel. For 1" Piles under 45' long use 4-#9 bars the full length.

Handling: For Pile lengths up to 45', use two slings placed at a distance of 0.21 L* from each end.
For Piles longer than 45', use three slings placed at a distance of 0.12 L* from each end and at mid-point of pile.

*L = Over all length of pile to be handled.

DETAIL OF PRECAST CONCRETE PILES

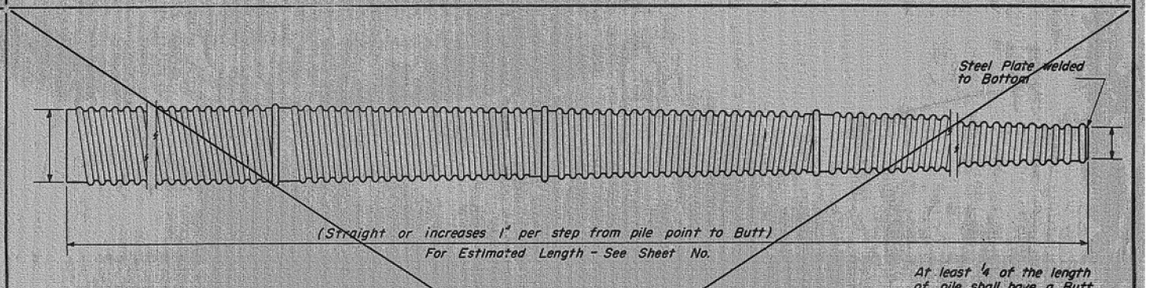

VOID

At least 1/4 of the length of pile shall have a Butt diameter equal to or greater than 12".
Gages are furnished to suit soil conditions (14 Gage Min.)

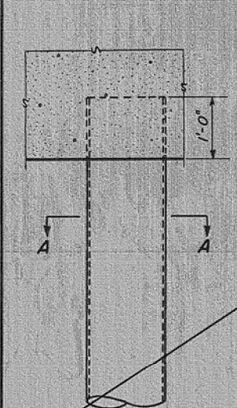

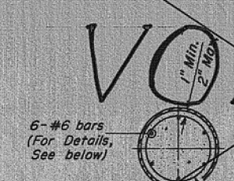

Reinforcement is incidental to the cost of furnishing piles.

SECTION A-A

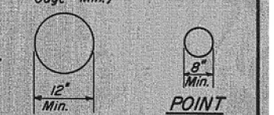

BUTT

POINT
(Applies only to Step Taper type pile)

DETAIL OF MANDREL DRIVEN STRAIGHT OR STEP-TAPER PILES FOR CAST IN PLACE CONCRETE PILES

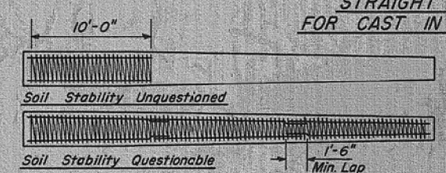

PILES
EAST 11TH ST. ~ SEC. 103-B-TR
WHITESIDE COUNTY
STA. 8 + 39.00

DESIGNED	Walter Perry	
CHECKED	R. Caldwell	
DRAWN	H. L. Jacobs	
CHECKED	W. A. Bausaman	

DEC 17 1962

EXAMINED	H. E. Baumann	ENGINEER OF BRIDGE AND TRAFFIC STRUCTURES
PASSED	E. L. Heinz	ENGINEER OF DESIGN
APPROVED	R. E. Olff	CHIEF HIGHWAY ENGINEER

X-1 Rev. 5-12-61 9-27-62

REVISION	DATE	BY	REMARKS

DESIGNED	BKC
DRAWN	FDL
REVIEWED	EEL
APPROVED	BKC

WHITESIDE COUNTY
F.A.U. 5563 (E. ELEVENTH ST.) OVER
ILLINOIS-MISSISSIPPI FEEDER CANAL. STATION 20+00

WILLETT HOFMANN & ASSOCIATES INC
ENGINEERING ARCHITECTURE LAND SURVEYING
809 EAST 2ND STREET, DIXON, IL 61021-0367
T: 815-284-3381 DESIGN FIRM: #184-000918

EXISTING PLANS
STRUCTURE NO. 098-6010
STRUCTURAL SHEET NO. 24 OF 25 SHEETS

F.A.U.	SECTION	COUNTY	TOTAL SHEETS	SHEET NO.
5563	19-00137-00-BR	WHITESIDE	60	42
	WHA# 1286J24	CONTRACT 85779		
	ILLINOIS			

STATE OF ILLINOIS
DEPARTMENT OF PUBLIC WORKS & BUILDINGS
DIVISION OF HIGHWAYS

ROUTE NO.	SECTION	COUNTY	TOTAL SHEETS	SHEET NO.
FED. ROAD DIST. NO. 1	ILLINOIS	FED. AID PROJECT		

SHEET NO. 13
13 SHEETS

BRIDGE FOUNDATION BORING LOG

BRIDGE East 11th St. over Hennepin Feeder of Ill.-Miss. Canal — Date 7-24-62 — Bored By F. Hirsch — Checked By

SEC. 103-B-TR — STA. 8+39.00

COUNTY Whiteside — W. Abt. — Boring No. 1 — Station 7+91.25 — Offset 19' Rt. ℄

Surface Water El. ____ Groundwater El. at Completion ____ After ____ Hours

Description	Elevation	N	Qu t/s.f.	w (%)
Ground Surface	639.2			
Augered 4' to seat auger.	0			
Hit water at 5.5'				
	635.2			
Medium, sand to medium gravel. Moist.	-5	18		
Loose: Wet		7		
Very Loose:	-10	4		
Medium:		10		
Medium:	624.2 -15	11		
Medium: grey sand		13		
Medium:	-20	13		
	618.2			
Medium, grey sand, find gravel		10		
Loose:	-25	6		
Loose:		6		
Loose:	-30	6		
	608.2			
Medium: Grey sand and fine to medium gravel.		13		
Medium:	-35	15		
Medium:		25		
Dense:	-40	36		
Medium:		29		
Medium:	-45	21		
		45		
Medium: Grey sand and fine to medium gravel		20		
Medium:		50		
Medium:		17		
Medium:		15		
Medium:		55		
Medium:		13		
Loose, same as above.		11		
	579.2	60		
3" buff clayey silt.		7		
Buff, clayey silt with some gravel.		26		
Same as above:		21		
	574.2	65		
Medium, brown, fine sand and fine to medium gravel.		27		
Medium, brown, fine sand.		18		
	568.7	70		
Finished Boring				

BRIDGE FOUNDATION BORING LOG

BRIDGE East 11th St. over Hennepin Feeder of Ill.-Miss. Canal — Date 7-30-62 — Bored By F. Hirsch — Checked By

SEC. 103-B-TR — STA. 8+39.00

COUNTY Whiteside — E. Abt. — Boring No. 2 — Station 8+86.75 — Offset 10' Lt. ℄

Description	Elevation	N	Qu t/s.f.	w (%)
Ground Surface	640.5			
Augered 4' to seat auger.	0			
	636.5			
Loose, brown, sand	-5	10		
Loose		7		
	632.5			
Very loose, brown, fine sand.	-10	3		
	629.5			
Medium, brown, sand and fine gravel		12		
Medium:	-15	14		
Medium, grey, sand, fine to medium gravel. Angular to sub-anguler pieces.		15		
Medium: same	-20	15		
Medium: same		12		
Loose: same	-25	6		
Loose: same		5		
Loose: same	-30	4		
Loose: same		4		
Loose: same	-35	4		
	604.0			
Medium, grey, sand, fine to coarse gravel		20		
Medium:	-40	22		
Medium:		24		
Medium:	-45	25		
		45		
Medium, grey, sand, fine to coarse gravel.		23		
Medium: same		24		
	590.5	50		
6" buff clayey silt. Too small to test.				
Same as above, about a 2" sample looked as if there may be some gravel in the clayey silt.		21		
Dense (very stiff,) buff sandy, gravelly material with layers of clay and silt.		41		
	585.5			
Dense, grey, silty fine sand. 2" layer of clayey silt.		36		
Loose, grey, silty sand.		10		
		60		
Medium, grey, silty sand.		14		
Medium, grey, silty sand.		17		
		65		
Same:		17		
Same:		17		
		70		
Same:		19		
	566.0			
Very Dense, brown, silt dry - just moist. About 3" sample - broken.		75		65/9" Refusal
Finished Boring				

N – Standard Penetration Test – Blows per foot to drive 2" O.D. Split Spoon Sampler 12" with 140# hammer falling 30".

Qu – Unconfined Compressive Strength – t/sf

w – Water Content – percentage of oven dry weight – %.

Type failure:
B – Bulge Failure
S – Shear Failure
E – Estimated Value

DESIGNED Walter Berry
CHECKED
DRAWN
CHECKED

DEC 17 1962
EXAMINED H. E. Baumann — ENGINEER OF BRIDGE AND TRAFFIC STRUCTURES
PASSED — CHIEF ENGINEER OF DESIGN
APPROVED — HIGHWAY ENGINEER

BORINGS
COLOMA ROAD DISTRICT - SEC 103-B-TR
EAST 11TH STREET
WHITESIDE COUNTY
STA. 8 + 39.00

REVISION	DATE	BY	REMARKS

DESIGNED	BKC
DRAWN	FDL
REVIEWED	EEL
APPROVED	BKC

WHITESIDE COUNTY
F.A.U. 5563 (E. ELEVENTH ST.) OVER
ILLINOIS-MISSISSIPPI FEEDER CANAL. STATION 20+00

WILLETT HOFMANN & ASSOCIATES INC
ENGINEERING ARCHITECTURE LAND SURVEYING
809 EAST 2ND STREET, DIXON, IL 61021-0367
T: 815-284-3381 DESIGN FIRM: #184-000918

EXISTING PLANS
STRUCTURE NO. 098-6010
STRUCTURAL SHEET NO. 25 OF 25 SHEETS

F.A.U.	SECTION	COUNTY	TOTAL SHEETS	SHEET NO.
5563	19-00137-00-BR	WHITESIDE	60	43
	WHA# 1286J24	CONTRACT 85779		
	ILLINOIS			

TRAFFIC CONTROL FOR ROAD CLOSURE

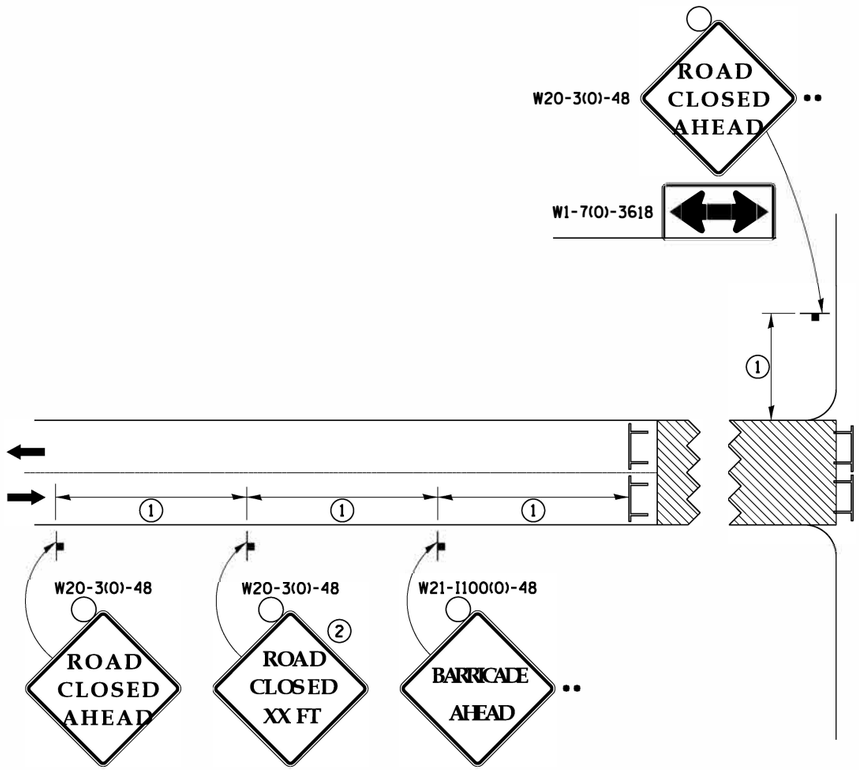

CONDITION II

Minor Sideroad Closure

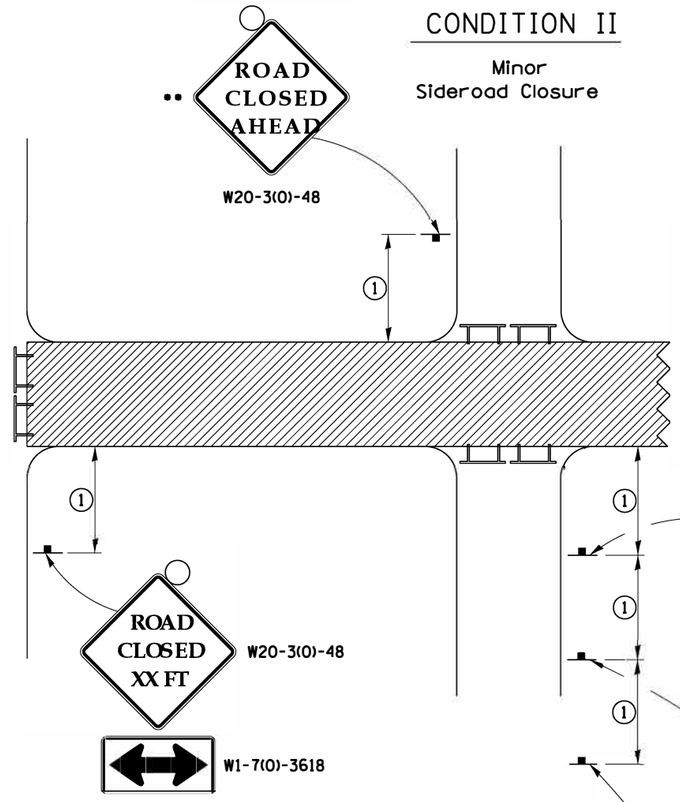

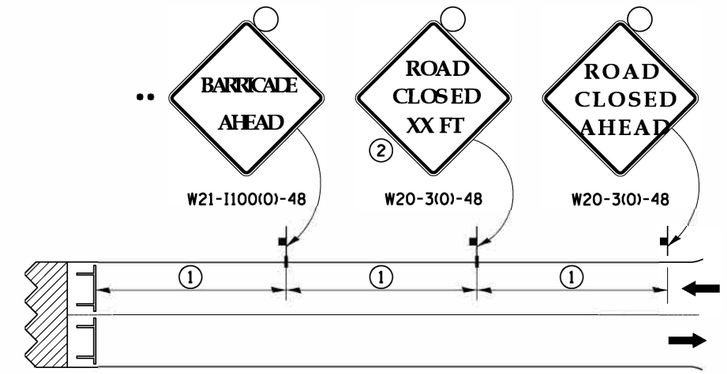

SYMBOLS

- Work area
- Type III Barricade with Flashers
- Sign with flashing light

CONDITION I

Major Sideroad Closure

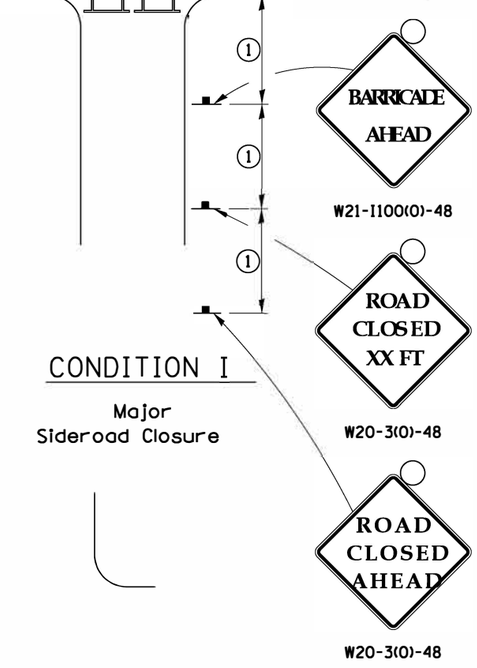

① SIGN SPACING TABLE

Posted Speed	Sign Spacing
45 MPH and above	500'
Below 45 MPH	250'

② SIGN LEGEND

Posted Speed Limit	Distance
45 MPH and above	1000'
Below 45 MPH	500'

ROAD CLOSED TO THRU TRAFFIC BARRICADE SET UP

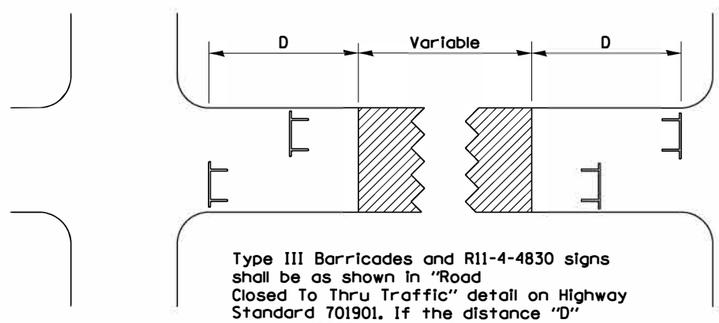

Type III Barricades and R11-4-4830 signs shall be as shown in "Road Closed To Thru Traffic" detail on Highway Standard 701901. If the distance "D" exceeds 2000' an additional set of barricades and R11-4-4830 shall be placed at each end of the work area.

GENERAL NOTES

Longitudinal dimensions may be adjusted to fit field conditions.

Side roads requiring all three signs as shown in CONDITION I (Major Sideroad Closure), shall be listed in the special provision.

•• Where local access is to be maintained, barricades are to be set up as shown in "Road Closed To Thru Traffic". Type III Barricades and R11-2-4830 signs shall be as shown in "Road Closed To All Traffic" detail on Highway Standard 701901.

All dimensions are in inches unless otherwise shown.

TYPICAL APPLICATION FOR ROAD CLOSURE

REVISION	DATE	BY	REMARKS

DESIGNED DCB
DRAWN FDL
REVIEWED DCB
APPROVED BKC

WHITESIDE COUNTY
F.A.U. 5563 (E. ELEVENTH ST.) OVER
ILLINOIS-MISSISSIPPI FEEDER CANAL. STATION 20+00

WILLETT HOFMANN & ASSOCIATES INC
ENGINEERING ARCHITECTURE LAND SURVEYING
809 EAST 2ND STREET, DIXON, IL 61021-0367
T: 815-284-3381 DESIGN FIRM: #184-000918

REGION 2 / DISTRICT 2 STANDARD - 40.1

SHEET NO. 1 OF 5 SHEETS

F.A.U.	SECTION	COUNTY	TOTAL SHEETS	SHEET NO.
5563	19-00137-00-BR	WHITESIDE	60	44
	WHA* 1286J24	CONTRACT 85779		
	ILLINOIS			

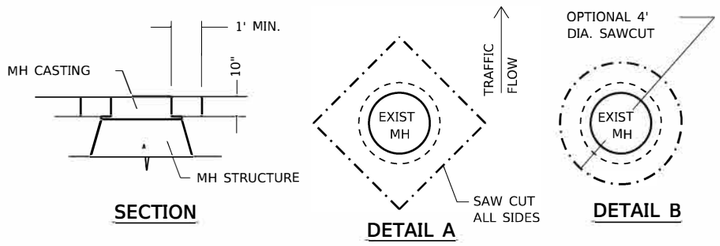

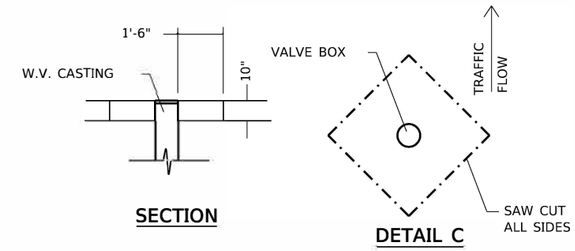

MANHOLE ADJUSTMENT DETAIL

1. ADJUST MANHOLE AFTER PAVING OPERATION IS COMPLETE.
2. THE CONTRACTOR SHALL MARK THE LOCATION OF EVERY MANHOLE PRIOR TO PAVING BY A METHOD APPROVED BY THE ENGINEER. THIS WORK SHALL BE INCIDENTAL TO THE MANHOLE ADJUSTMENT.
3. SAW CUT SQUARE OPENING AS SHOWN IN DETAIL A OR A CIRCULAR OPENING AS SHOWN IN DETAIL B WITH THE MANHOLE CENTERED IN THE MIDDLE OF THE OPENING.
4. REMOVE ALL PAVEMEMT MATERIAL AND ADJUST THE MANHOLE TO WITHIN $^{57}/_{64}$" BELOW THE TOP OF THE NEW PAVEMENT. IN NO CASE SHALL THE MANHOLE BE ABOVE THE PAVEMENT SURFACE. THE REMOVAL SHALL INCLUDE ALL TYPES OF MATERIALS, AND NO ADDITIONAL COMPENSATION WILL BE GIVEN DEPENDING ON THE TYPE OF MATERIAL. NO ADJUSTMENTS SHALL BE MADE WITH WOOD SCHIMS.
5. FILL VOID WITH MINIMUM OF 10" OF CONCRETE, THIS WORK SHALL MEET THE REQUIREMENTS OF ARTICLE 442.02 NOTE #1 AND ARTICLE 701.17(e)(2)&(3). TROWEL OFF CONCRETE FLUSH WITH NEW PAVEMENT AND BROOM FINISH. MANHOLE FRAME SHALL BE RECESSED FROM CONCRETE NO MORE THAN 3/8".
6. IF THE ENGINEER DETERMINES A MANHOLE DOES NOT NEED ADJUSTED, THE CONTRACTOR SHALL PAVE AROUND THE MANHOLE AND NO ADJUSTMENT WILL BE PAID.
7. THE CONTRACTOR IS RESPONSIBLE FOR PROTECTING ALL MANHOLES BEING PAVED OVER OR AROUND. THE CONTRACTOR SHALL BE RESPONSIBLE FOR ALL DAMAGES OCCURRED DURING CONSTRUCTION.
8. CONTRACTOR SHALL CLEAN OUT ANY CONSTRUCTION DEBRIS INSIDE THE MANHOLE DURING THE ADJUSTMENT OF THE CASTING. THIS WORK SHALL BE INCIDENTAL TO THE MANHOLE ADJUSTMENT.

VALVE BOX ADJUSTMENT DETAIL

1. ADJUST WATER VALVE AFTER PAVING OPERATION IS COMPLETE.
2. THE CONTRACTOR SHALL MARK THE LOCATION OF EVERY WATER VALVE PRIOR TO PAVING BY A METHOD APPROVED BY THE ENGINEER. THIS WORK SHALL BE INCIDENTAL TO THE WATER VALVE ADJUSTMENT.
3. SAW CUT SQUARE OPENING AS SHOWN IN DETAIL A OR A CIRCULAR OPENING AS SHOWN IN DETAIL B WITH THE WATER VALVE CENTERED IN THE MIDDLE OF THE OPENING.
4. REMOVE ALL PAVEMEMT MATERIAL AND ADJUST THE WATER VALVE TO WITHIN $^{57}/_{64}$" BELOW THE TOP OF THE NEW PAVEMENT. IN NO CASE SHALL THE WATER VALVE BE ABOVE THE PAVEMENT SURFACE. THE REMOVAL SHALL INCLUDE ALL TYPES OF MATERIALS, AND NO ADDITIONAL COMPENSATION WILL BE GIVEN DEPENDING ON THE TYPE OF MATERIAL.
5. FILL VOID WITH MINIMUM OF 10" OF CONCRETE, THIS WORK SHALL MEET THE REQUIREMENTS OF ARTICLE 442.02 NOTE #1 AND ARTICLE 701.17(e)(2)&(3). TROWEL OFF CONCRETE FLUSH WITH NEW PAVEMENT AND BROOM FINISH. WATER VALVE BOX FRAME SHALL BE RECESSED FROM CONCRETE NO MORE THAN 3/8".
6. IF THE ENGINEER DETERMINES A WATER VALVE DOES NOT NEED ADJUSTED, THE CONTRACTOR SHALL PAVE AROUND THE WATER VALVE AND NO ADJUSTMENT WILL BE PAID.
7. THE CONTRACTOR IS RESPONSIBLE FOR PROTECTING ALL WATER VALVES BEING PAVED OVER OR AROUND. THE CONTRACTOR SHALL BE RESPONSIBLE FOR ALL DAMAGES OCCURRED DURING CONSTRUCTION.
8. CONTRACTOR SHALL CLEAN OUT ANY CONSTRUCTION DEBRIS INSIDE THE WATER VALVE DURING THE ADJUSTMENT OF THE CASTING. THIS WORK SHALL BE INCIDENTAL TO THE WATER VALVE ADJUSTMENT.

REVISION	DATE	BY	REMARKS

DESIGNED	DCB
DRAWN	FDL
REVIEWED	DCB
APPROVED	BKC

WHITESIDE COUNTY
F.A.U. 5563 (E. ELEVENTH ST.) OVER
ILLINOIS-MISSISSIPPI FEEDER CANAL. STATION 20+00

WILLETT HOFMANN & ASSOCIATES INC
ENGINEERING ARCHITECTURE LAND SURVEYING
809 EAST 2ND STREET, DIXON, IL 61021-0367
T: 815-284-3381 DESIGN FIRM: #184-000918

MANHOLE AND VALVE BOX ADJUSTMENT DETAILS

SHEET NO. 2 OF 5 SHEETS

F.A.U.	SECTION	COUNTY	TOTAL SHEETS	SHEET NO.
5563	19-00137-00-BR	WHITESIDE	60	45
	WHA* 1286J24	CONTRACT 85779		
	ILLINOIS			

DOUBLE POST HINGED BOLLARD INSTALLATION INSTRUCTIONS

1. Verify that all Double Post Hinged Bollard parts are in the shipment package as shown on the "Bill of Material".
2. Provide Double Post Hinged Bollard Anchor System (see included Anchor System Drawings–CPAS12) at a location to suit your specific needs.
3. Install DHB Base true and level on Anchor System using the flat washers and hex nuts included in your Anchor System Kit. Use S.S. shims to level if needed. Torque hex nuts to Minimum 100 ft–lbs for Anchor Systems CPAS12.
4. Install DHB Posts (Item 1) to DHB Base (Item 2) using Hinge Bolts (Item 5) and Hex Nuts (Item 6) as shown. Tack Weld Hex Nuts to Hinge Bolts or Chisel Hinge Bolt Threads such that Hex Nuts cannot be easily removed.
5. Install Locking Pin thru UP Position Bollard Posts, and install Padlocks as needed.
6. Install the four Labels at the locations shown.
7. Install Post Adjusting Screw (Item 9) in threaded hole in center of DHB Base (Item 2). Adjust Screw to keep DHB Posts (Item 1) from rocking while in upright Padlocked postion.
8. Check the functional operation of the Hinged Bollard Posts.
9. Note: S.S. shims, tools, grease, and padlocks are not provided.
10. LEVELING BOLT INSTRUCTIONS:
    A. START 1/2" (13) X 1 3/4" 18–8 STAINLESS STEEL HEX IN CENTER HOLE OF BASE PLATE. (THREADS HAVE BEEN LEFT PAINTED FOR A TIGHT FIT). TURN BOLT SLIGHTLY THROUGH BASE.
    B. INSTALL POSTS IN LOCKING UPRIGHT POSITION. BEGIN RAISING LEVELING BOLT WITH WRENCH UNTIL CONTACT IS MADE WITH POSTS. RESULTS WILL BE A STABLE SET OF POSTS.

Design Criteria

The Hinged Bollard is designed to fail at a static (or equivalent impact load) load of approximately 1,200 pounds horizontal force applied at 27 inches above grade. The Hinged Bollard System should fail in one of the following modes.

1. The Hinge Bolt connection will shear and the Bollard will rotate to grade.
2. The Anchor System will fail and the Bollard Base will rotate.
3. The Earth will yield and the foundation will tip in rotation.

If installation conforms to the specifications and these drawings, TrafficGuard,® Inc. expects the failure to occur in the sequence shown with the Hinge Bolt connection shear as the governing failure.

DOUBLE POST HINGED BOLLARD INSTALLATION DRAWING — THIRD ANGLE PROJECTION — Do not scale from drawing

Rev.	Date	by	Description	Action	by
2	11.14.10	wkz	Locking Pins & Note	Design	wkz
1	1.30.10	wkz	Safety Labels replace arrows & change revision block	Drawn	wkz
				Checked	wkz

Drawing Size: Letter; Drawing Date: 12.10.10; Sheet 1 of 2

TrafficGuard,® Inc.
Toll Free P.O. Box 201, Geneva, IL. 60134
Bus: 1.877.727.7347 Fax: 1.800.814.7194

Copyright: 2010; Assembly Shipping Weight: 84 Pounds; Drawing Number: DHB–1

General Specifications and Notes for all Parts and Weldments

1. All Steel Work shall conform to the AISC "Specification for the Design, Fabrication and Erection of Structural Steel for Buildings" – Latest Edition unless noted on the dwg.
2. All Welding shall be performed by qualified welders and shall conform to the American Welding Society ANSI/AWS D1.1– Latest Edition of the Structural Welding Code–Steel.
3. All Material shall be new and shall be as noted on the drawing and/or in the Bill of Material. SS indicates Stainless Steel and HDG indicates Hot Dip Galvanized.
4. All Painting Work shall conform to the manufacturer's specification and installation instructions and the SSPC (Steel Stuctures Painting Council) and as noted on the dwg.
5. All hole center dimensions shall have a tolerance of 1/16 inch± and other dimensions shall have a tolerance of 1/8 inch± unless noted on the drawing.
6. All work shall be packaged and shipped per specific instructions by PARS Direct.

BILL OF MATERIAL

ITEM	PART #	DESCRIPTION	QTY.
1	DHBF1	DHB POST	2
2	DHBF2	DHB BASE	1
3	1004	SINGLE LOCKING PIN SS316	1
4	2004	DOUBLE LOCKING PIN SS316	1
5	0010	#3/4" x 8" HEX HEAD HINGE BOLT – 18–8 SS	2
6	0006	#3/4" HEX NUT – 18–8 SS	2
7	0107	SAFETY LABEL 3" x 12"	2
8	0101	THREE INCH CLEARANCE LABEL	2
9	0051	LEVELING BOLT #1/2" x 1 1/2" HEX HEAD 18–8 SS	1

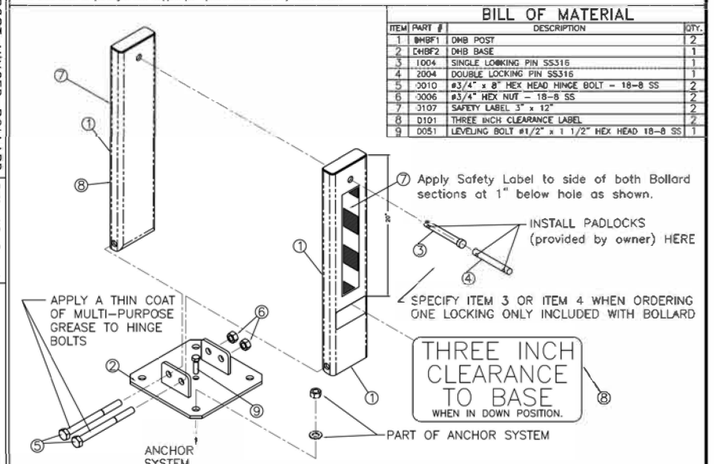

DOUBLE POST HINGED BOLLARD ASSEMBLY DRAWING — THIRD ANGLE PROJECTION — Do not scale from drawing

Rev.	Date	by	Description	Action	by
2	11.14.10	wkz	Locking Pins & Note	Design	wkz
1	1.30.10	wkz	Safety Labels replace arrows & change revision block	Drawn	wkz
				Checked	wkz

Drawing Size: Letter; Drawing Date: 12.10.10; Sheet 2 of 2

TrafficGuard® Inc.
Toll Free P.O. Box 201, Geneva, IL. 60134
Bus: 1.877.727.7347 Fax: 1.800.814.7194

Copyright: 2010; Assembly Shipping Weight: 84 Pounds; Drawing Number: DHB–2

LEVELING BOLT INSTRUCTIONS:

1. START 1/2" (13) X 1 3/4" 18–8 STAINLESS STEEL HEX IN CENTER HOLE OF BASE PLATE. (THREADS HAVE BEEN LEFT PAINTED FOR A TIGHT FIT)
2. TURN BOLT SLIGHTLY THROUGH BASE.
3. INSTALL POSTS AND LOCKING UPRIGHT POSITION.
4. BEGIN RAISING LEVELING BOLT WITH WRENCH UNTIL CONTACT IS MADE WITH POSTS. RESULTS WILL BE A STABLE SET OF POSTS.

TrafficGuard
"Authorities on Limiting Access"
P.O. Box 201, Geneva, IL. 60134
877–727–7347
www.trafficguard.net

DHB

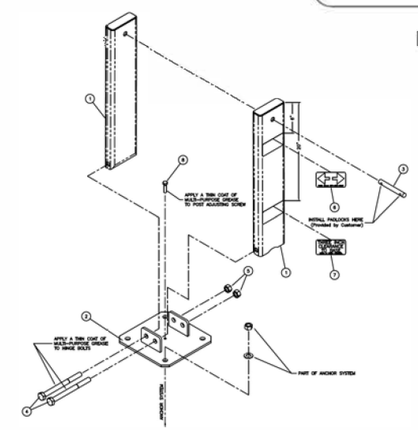

CPAS12 COLLASPIBLE POST ANCHOR SYSTEM ASSEMBLY

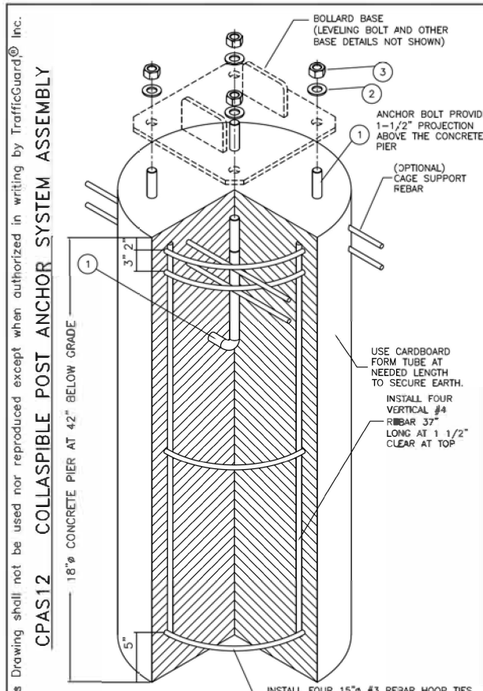

BILL OF MATERIAL
OPTIONAL CPAS12 KIT IF ORDERED

ITEM	PART #	DESCRIPTION	QTY.
*	9001	CPAS12 KIT – INCLUDES THE FOLLOWING PART NUMBERS	*
1	0002	ø3/4" x 12" TYPE L ANCHOR BOLT–H.D.G.	4
2	0007	ø3/4" TYPE A FLAT NARROW WASHER GALVANIZED STEEL	4
3	0006	ø3/4" HEX NUT GALVANIZED STEEL	4

NOTE: CONCRETE, FORM AND REBAR PROVIDED BY OTHERS

CONCRETE PIER ANCHOR SYSTEM INSTALLATION DRAWING CPAS12 — THIRD ANGLE PROJECTION — Do not scale from drawing

Rev.	Date	by	Description	Action	by
2	11.14.10	wkz	Locking Pins & Note	Design	wkz
1	–	–	–	Drawn	wkz
				Checked	wkz

Dwg. Scale: nts; Copyrwrite: 2010; Assembly Shipping Weight: 84 Pounds; Drawing Number: CPAS12; Dwg. Size: Letter; Drawing Date: 12.10.10; Sheet: 1 of 2

Toll Free TrafficGuard,® Inc.
P.O. Box 201, Geneva, IL. 60134
Bus: 1.877.727.7347 Fax: 1.800.814.7194

CPAS12 COLLASPIBLE POST ANCHOR SYSTEM DETAILS

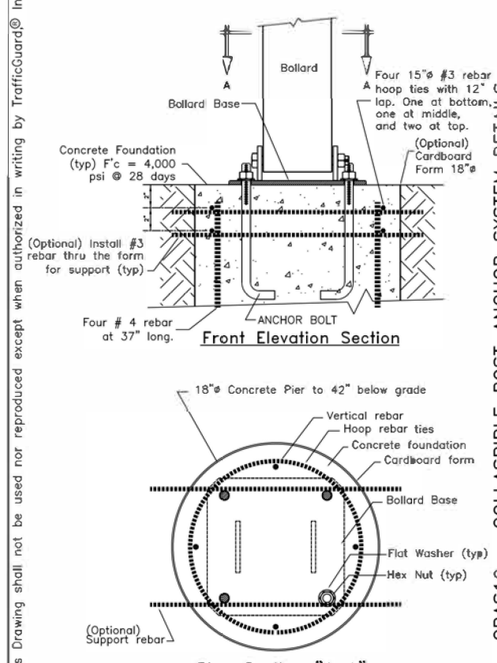

These Anchorage systems are designed for the noted loading based on a quality substrate material and proper installation, by the customer's contractor. The installation shall conform to the drawing and the manufacturer's instructions. The customer is responsible to determine the adequate quality of new or existing concrete and the earth mass to provide resistance to the anchorage system. If the concrete is solid and uncracked with adequate edge and spacing distances, the anchorage shall have an unconfined ultimate tensile strength of F'c(minimum)=4,000 pounds per square inch. The earth shall have an unconfined strength of Qu(minimum)=4,000 pounds per square foot. If you have questionable substrates, contact your local structural engineer for appropriate anchorage evaluation and/or anchorage design. A test installation may be required to determine the adequacy of the anchorage system for your specific installation. Call for guidance, if needed.

CONCRETE PIER ANCHOR SYSTEM DETAIL DRAWING CPAS12 — THIRD ANGLE PROJECTION — Do not scale from drawing

Rev.	Date	by	Description	Action	by
2	11.14.10	wkz	Locking Pins & Note	Design	wkz
1	–	–	–	Drawn	wkz
				Checked	wkz

Dwg. Scale: nts; Copyrwrite: 2010; Assembly Shipping Weight: 84 Pounds; Drawing Number: CPAS12; Dwg. Size: Letter; Drawing Date: 12.10.10; Sheet: 2 of 2

Toll Free TrafficGuard,® Inc.
P.O. Box 201, Geneva, IL. 60134
Bus: 1.877.727.7347 Fax: 1.800.814.7194

REVISION	DATE	BY	REMARKS

DESIGNED
DRAWN
REVIEWED DCB
APPROVED BKC

WHITESIDE COUNTY
F.A.U. 5563 (E. ELEVENTH ST.) OVER
ILLINOIS-MISSISSIPPI FEEDER CANAL. STATION 20+00

WILLETT HOFMANN & ASSOCIATES INC
ENGINEERING ARCHITECTURE LAND SURVEYING
809 EAST 2ND STREET, DIXON, IL 61021-0367
T: 815-284-3381 DESIGN FIRM: #184-000918

SCREWLOCK DOUBLE POST HINGED BOLLARD DETAILS

SHEET NO. 3 OF 5 SHEETS

F.A.U.	SECTION	COUNTY	TOTAL SHEETS	SHEET NO.
5563	19-00137-00-BR	WHITESIDE	60	46
	WHA* 1286J24	CONTRACT 85779		
	ILLINOIS			

PERIMETER EROSION BARRIER (SPECIAL) DETAIL

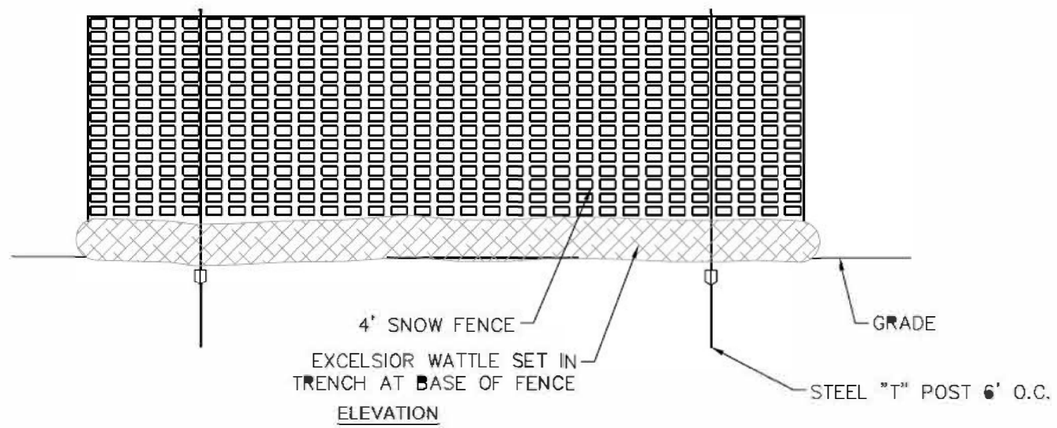

ELEVATION

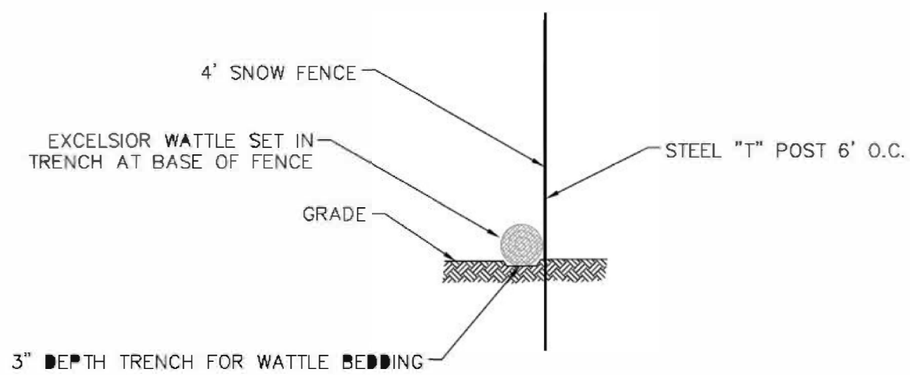

SIDE VIEW

REVISION	DATE	BY	REMARKS

DESIGNED
DRAWN
REVIEWED DCB
APPROVED BKC

WHITESIDE COUNTY
F.A.U. 5563 (E. ELEVENTH ST.) OVER
ILLINOIS-MISSISSIPPI FEEDER CANAL. STATION 20+00

WILLETT HOFMANN & ASSOCIATES INC
ENGINEERING ARCHITECTURE LAND SURVEYING
809 EAST 2ND STREET, DIXON, IL 61021-0367
T: 815-284-3381 DESIGN FIRM: #184-000918

PERIMETER EROSION BARRIER (SPECIAL) DETAIL

SHEET NO. 4 OF 5 SHEETS

F.A.U.	SECTION	COUNTY	TOTAL SHEETS	SHEET NO.
5563	19-00137-00-BR	WHITESIDE	60	47
	WHA* 1286J24	CONTRACT 85779		
	ILLINOIS			

INLETS, SPECIAL

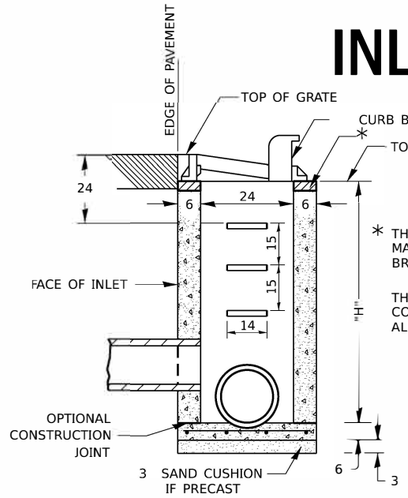

SEC. A-A

* THE WALL ADJUSTMENTS SHALL BE MADE WITH CONCRETE BUILDING BRICK OR CLASS SI CONCRETE.

THE HEIGHT OF THE BOX MAY BE CONSTRUCTED 6 SHORT TO ALLOW FOR FIELD ADJUSTMENTS.

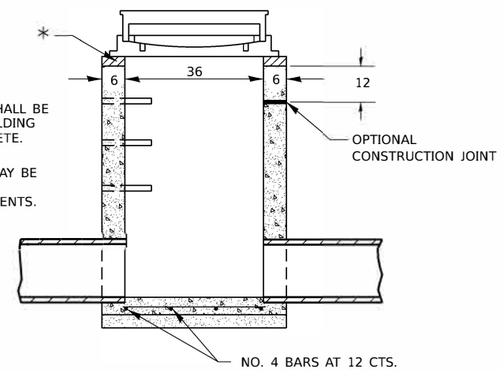

SEC. B-B

NOTES

SEE STANDARD 602701 FOR DETAILS OF STEPS.

EXCEPT AS NOTED HEREON INLET SPECIAL SHALL BE CONSTRUCTED IN ACCORDANCE WITH SECTION 602 OF THE STANDARD SPECIFICATIONS.

THE SIDE WALLS MAY BE BUILT AS PRECAST SEGMENTED SECTIONS.

ALL VOIDS AROUND PIPE ENTRANCE, BOTH INSIDE AND OUTSIDE, SHALL BE SEALED WITH MORTAR.

WEIGHT OF CAST IRON FRAME & GRATE = 530 lbs. ± .
STEPS SHALL BE OMITTED WHEN DEPTH OF "H" IS LESS THAN 5 ft.

CLASS SI CONCRETE OR PRECAST CONCRETE SHALL BE USED THROUGHOUT. PRECAST CONCRETE SHALL BE IN ACCORDANCE WITH ARTICLES 504.01 THRU 504.05 OF THE STANDARD SPECIFICATIONS EXCEPT THAT CONCRETE STRENGTH SHALL BE 4,000 psi AFTER 28 DAYS.

THE CONTRACT UNIT PRICE EACH FOR INLETS, SPECIAL SHALL INCLUDE THE COST OF CONSTRUCTING THE INLET BOX, FURNISHING AND INSTALLING THE FRAME AND GRATE, THE CAST IRON STEPS (IF USED), THE PRECAST FLOOR SLABS, SAND CUSHION (WHEN USED) AND REINFORCEMENT BARS.

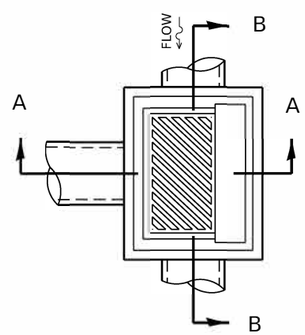

DETAIL OF FRAME & GRATE

FRAME AND GRATE FOR INLETS, SPECIAL

85779

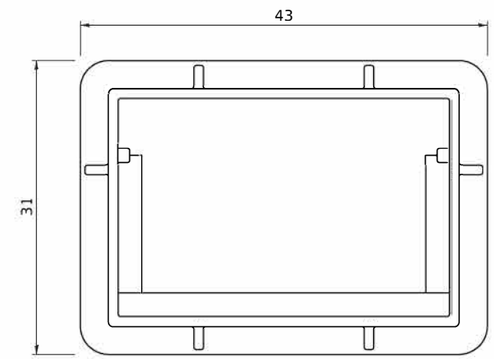

PLAN OF FRAME
WITHOUT GRATE AND CURB BOX

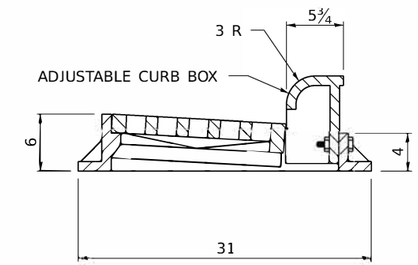

TRANSVERSE SECTION

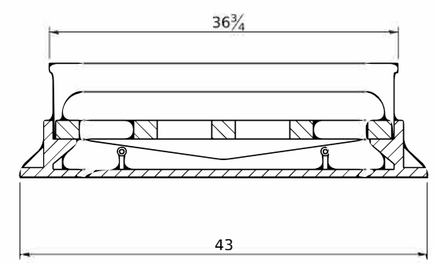

LONGITUDINAL SECTION

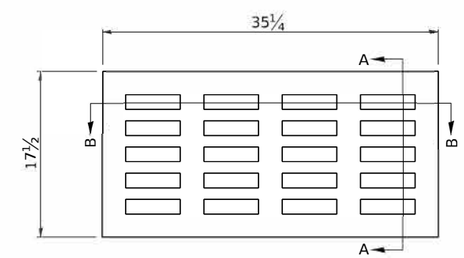

PLAN OF GRATE

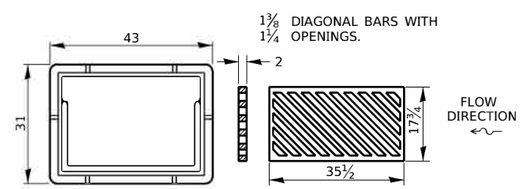

PLAN OF FRAME PLAN OF GRATE

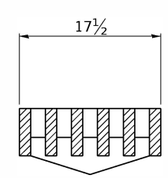

SECTION A-A

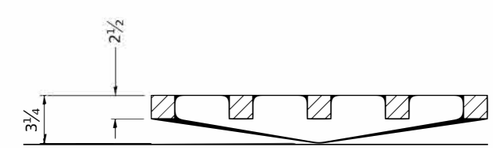

SECTION B-B

* THIS GRATE TO BE USED WITHOUT CURB BOX WHEN INLET IS IN DRIVEWAY.

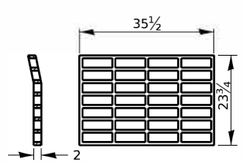

PLAN OF GRATE *

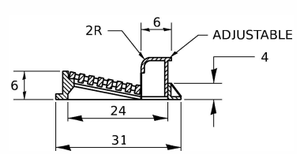

SECTION A-A

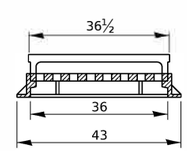

SECTION B-B

ALL DIMENSIONS ARE IN INCHES UNLESS OTHERWISE NOTED.

ALL DIMENSIONS ARE IN INCHES UNLESS OTHERWISE NOTED.

R 3246 OR EQUIVALENT
APPROXIMATE WEIGHT - 495 LBS.

REVISED - 1-05-16
REVISED - 6-27-14
REVISED - 10-13-11

INLETS, SPECIAL 10.2

REVISED - 6-27-14
REVISED - 10-13-11

FRAME AND GRATE FOR INLETS, SPECIAL 13.2

REVISION	DATE	BY	REMARKS

DESIGNED
DRAWN
REVIEWED DCB
APPROVED BKC

WHITESIDE COUNTY
F.A.U. 5563 (E. ELEVENTH ST.) OVER
ILLINOIS-MISSISSIPPI FEEDER CANAL. STATION 20+00

WILLETT HOFMANN & ASSOCIATES INC
ENGINEERING ARCHITECTURE LAND SURVEYING
809 EAST 2ND STREET, DIXON, IL 61021-0367
T: 815-284-3381 DESIGN FIRM: #184-000918

INLETS, SPECIAL DETAIL

SHEET NO. 5 OF 5 SHEETS

F.A.U.	SECTION	COUNTY	TOTAL SHEETS	SHEET NO.
5563	19-00137-00-BR	WHITESIDE	60	48
	WHA* 1286J24	CONTRACT 85779		
	ILLINOIS			

FILE = S:\PROJECTS\2024\1286J24_RF\DESIGN\CAD_SHEETS\1286J24_Detail Sheets.dgn

PRINT_ORGANIZER_BW.pltcfg 8/21/2025 9:16:27 AM = PLOTTED

85779

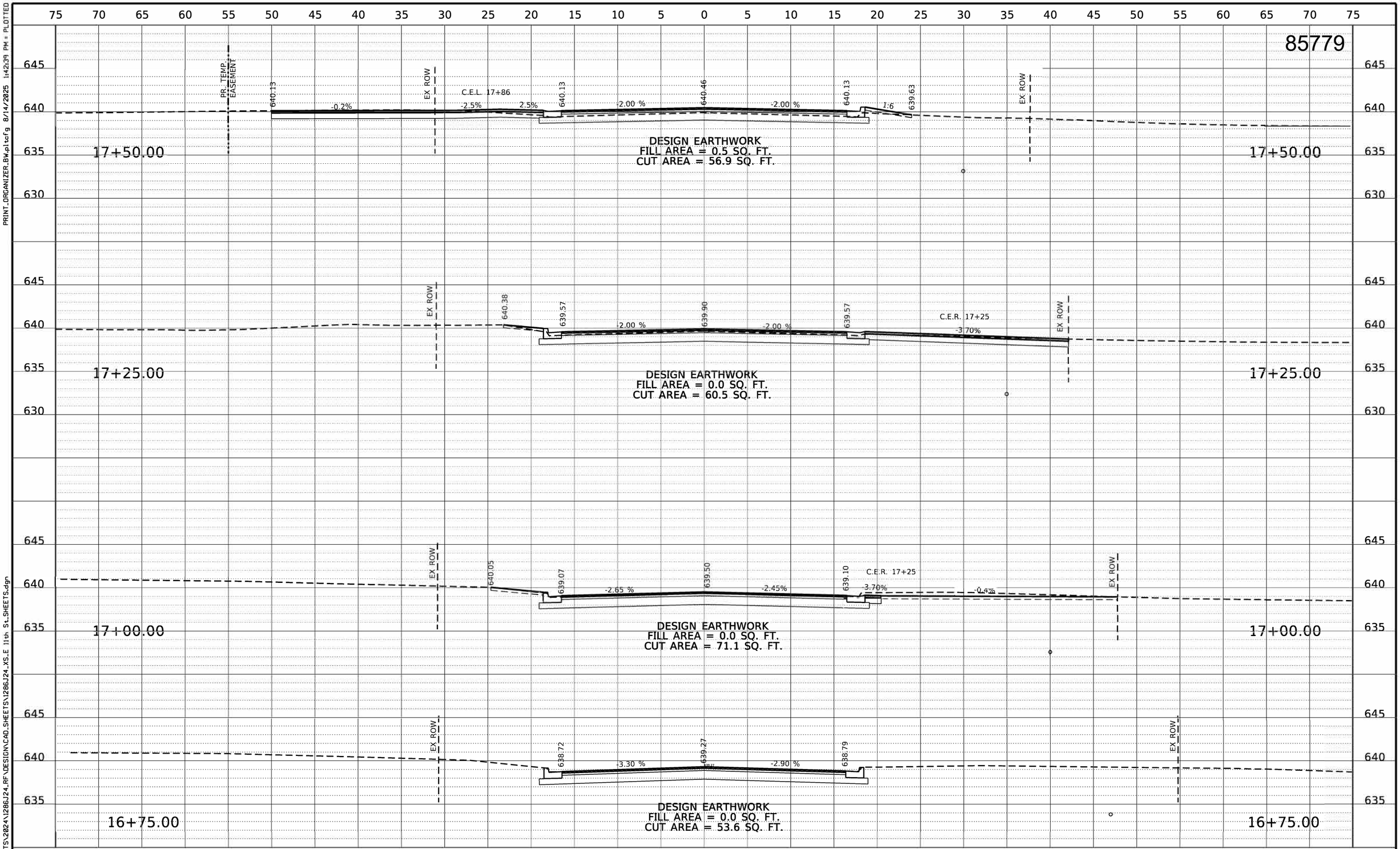

REVISION	DATE	BY	REMARKS

DESIGNED	KM
DRAWN	DJB
REVIEWED	DCB
APPROVED	BKC

WHITESIDE COUNTY
F.A.U. 5563 (E. ELEVENTH ST.) OVER
ILLINOIS-MISSISSIPPI FEEDER CANAL. STATION 20+00

WILLETT HOFMANN & ASSOCIATES INC
ENGINEERING ARCHITECTURE LAND SURVEYING
809 EAST 2ND STREET, DIXON, IL 61021-0367
T: 815-284-3381 DESIGN FIRM: #184-000918

CROSS SECTION SHEETS
E 11TH STREET - MAINLINE

SCALE: 1" = 10'-0" | SHEET NO. 1 OF 5 SHEETS | STA. 17+00 TO STA. 18+00.00

F.A.U.	SECTION	COUNTY	TOTAL SHEETS	SHEET NO.
5563	19-00137-00-BR	WHITESIDE	60	49
	WHA# 1286J24	CONTRACT 85779		
	ILLINOIS			

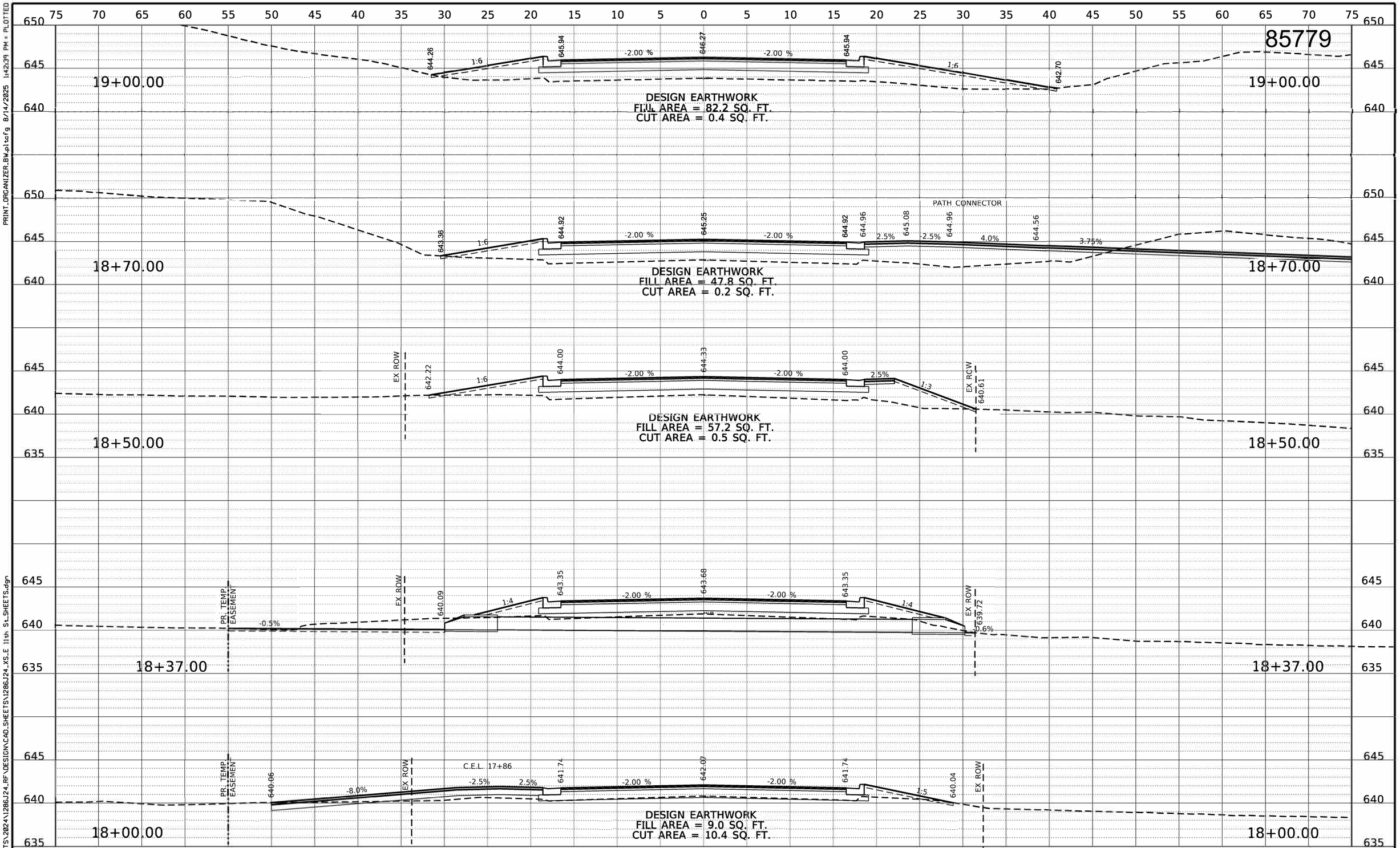

REVISION	DATE	BY	REMARKS

DESIGNED	KM
DRAWN	DJB
REVIEWED	DCB
APPROVED	BKC

WHITESIDE COUNTY
F.A.U. 5563 (E. ELEVENTH ST.) OVER
ILLINOIS-MISSISSIPPI FEEDER CANAL. STATION 20+00

WILLETT HOFMANN & ASSOCIATES INC
ENGINEERING ARCHITECTURE AND SURVEYING
809 EAST 2ND STREET, DIXON, IL 61021-0367
T: 815-284-3381 DESIGN FIRM: #184-000918

CROSS SECTION SHEETS
E 11TH STREET - MAINLINE

SCALE: 1" = 10'-0" | SHEET NO. 2 OF 5 SHEETS | STA. 18+50 TO STA. 19+40.00

F.A.U.	SECTION	COUNTY	TOTAL SHEETS	SHEET NO.
5563	19-00137-00-BR	WHITESIDE	60	50
	WHA* 1286J24	CONTRACT 85779		
	ILLINOIS			

85779

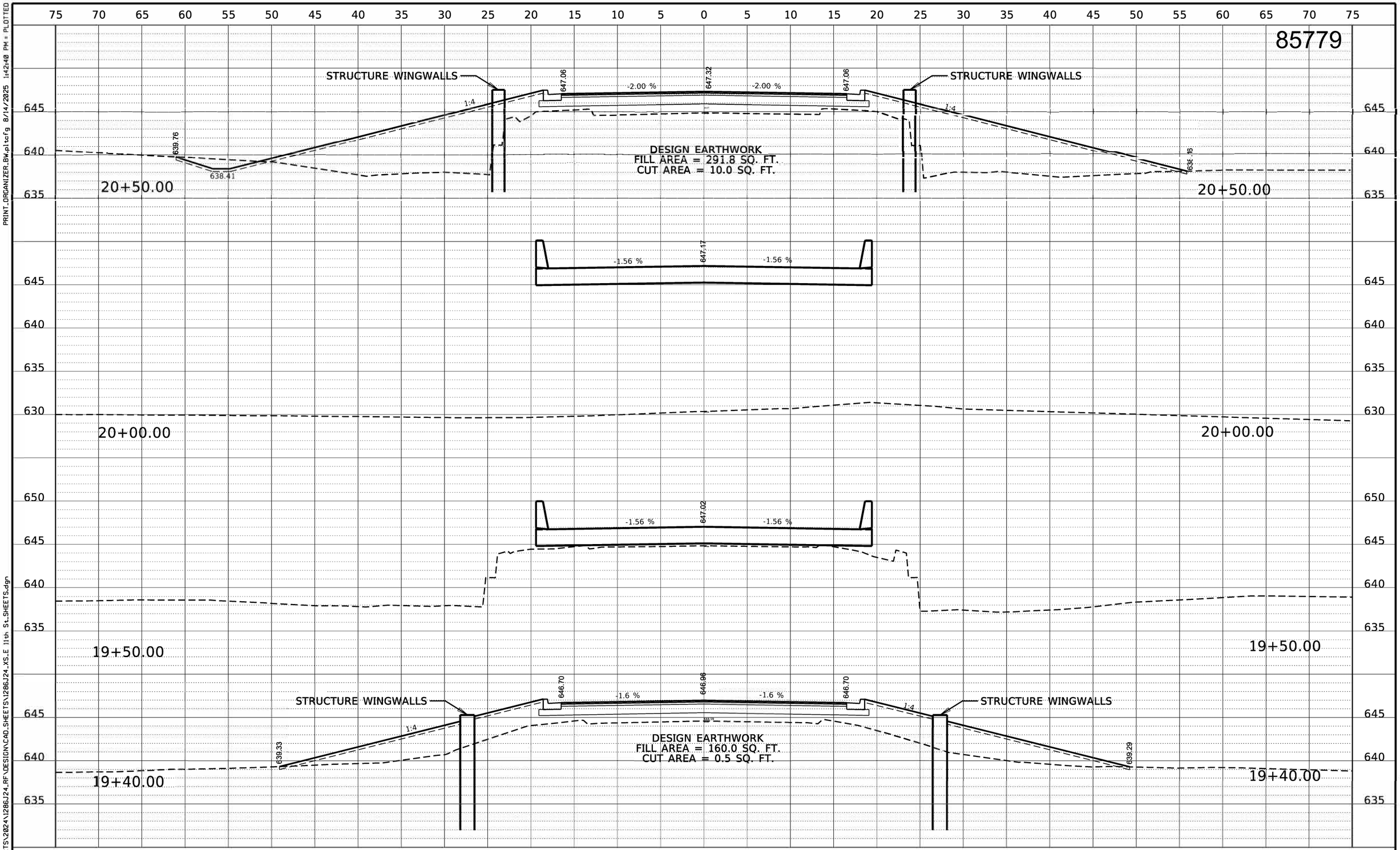

REVISION	DATE	BY	REMARKS

DESIGNED	KM
DRAWN	DJB
REVIEWED	DCB
APPROVED	BKC

WHITESIDE COUNTY
F.A.U. 5563 (E. ELEVENTH ST.) OVER
ILLINOIS-MISSISSIPPI FEEDER CANAL. STATION 20+00

WILLETT HOFMANN & ASSOCIATES INC
ENGINEERING ARCHITECTURE AND SURVEYING
849 EAST 2ND STREET, DIXON, IL 61021-0367
T: 815-284-3381 DESIGN FIRM: #184-000918

CROSS SECTION SHEETS
E 11TH STREET - MAINLINE

SCALE: 1" = 10'-0" | SHEET NO. 3 OF 5 SHEETS | STA. 19+50 TO STA. 20+60.00

F.A.U.	SECTION	COUNTY	TOTAL SHEETS	SHEET NO.
5563	19-00137-00-BR	WHITESIDE	60	51
	WHA# 1286J24	CONTRACT 85779		
	ILLINOIS			

85779

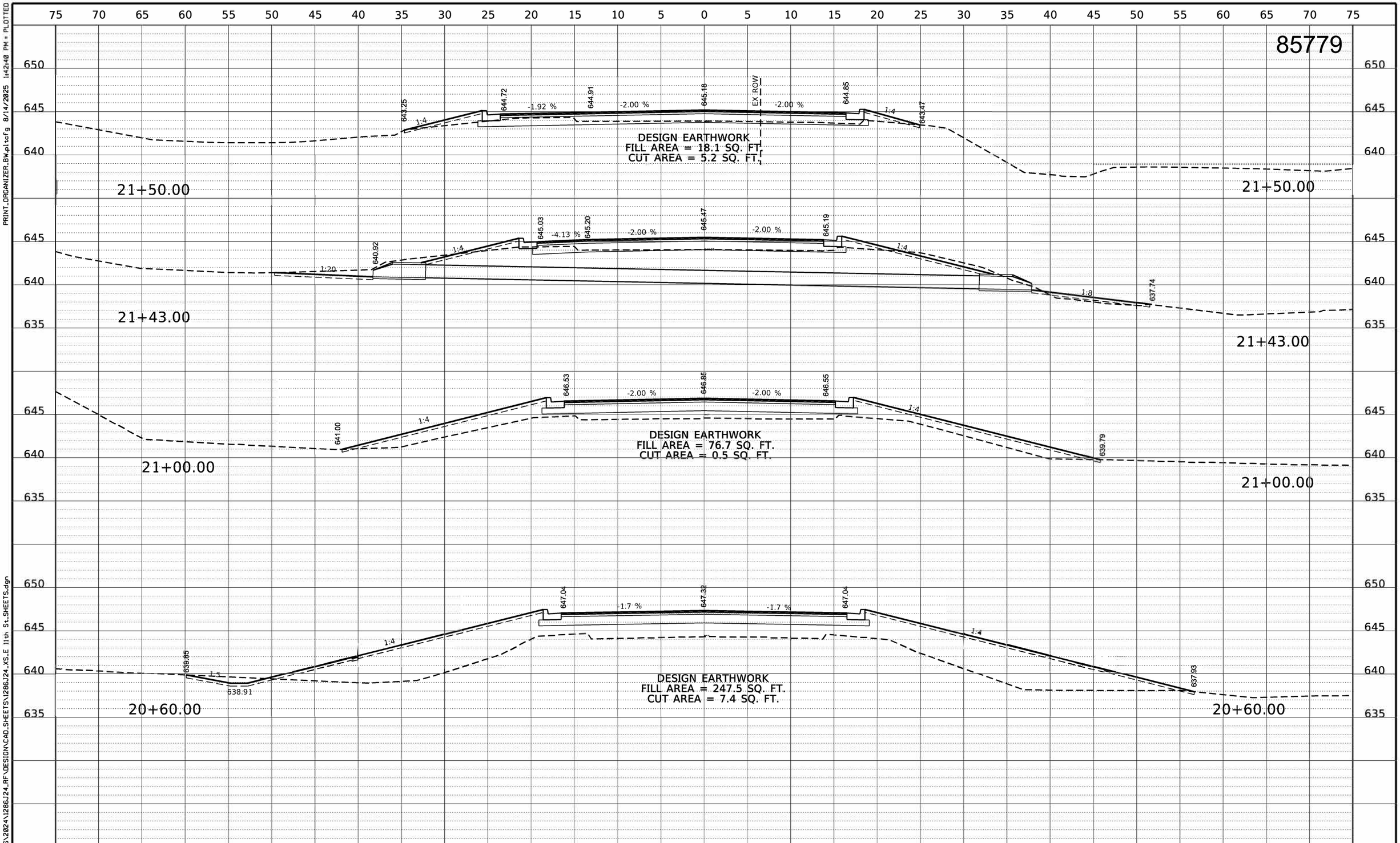

REVISION	DATE	BY	REMARKS

DESIGNED	KM
DRAWN	DJB
REVIEWED	DCB
APPROVED	BKC

WHITESIDE COUNTY
F.A.U. 5563 (E. ELEVENTH ST.) OVER
ILLINOIS-MISSISSIPPI FEEDER CANAL. STATION 20+00

WILLETT HOFMANN & ASSOCIATES INC
ENGINEERING ARCHITECTURE AND SURVEYING
809 EAST 2ND STREET, DIXON, IL 61021-0367
T: 815-284-3381 DESIGN FIRM: #184-000918

CROSS SECTION SHEETS
E 11TH STREET - MAINLINE

SCALE: 1" = 10'-0" | SHEET NO. 4 OF 5 SHEETS | STA. 21+00 TO STA. 22+00.00

F.A.U.	SECTION	COUNTY	TOTAL SHEETS	SHEET NO.
5563	19-00137-00-BR	WHITESIDE	60	52
	WHA# 1286J24	CONTRACT 85779		
		ILLINOIS		

85779

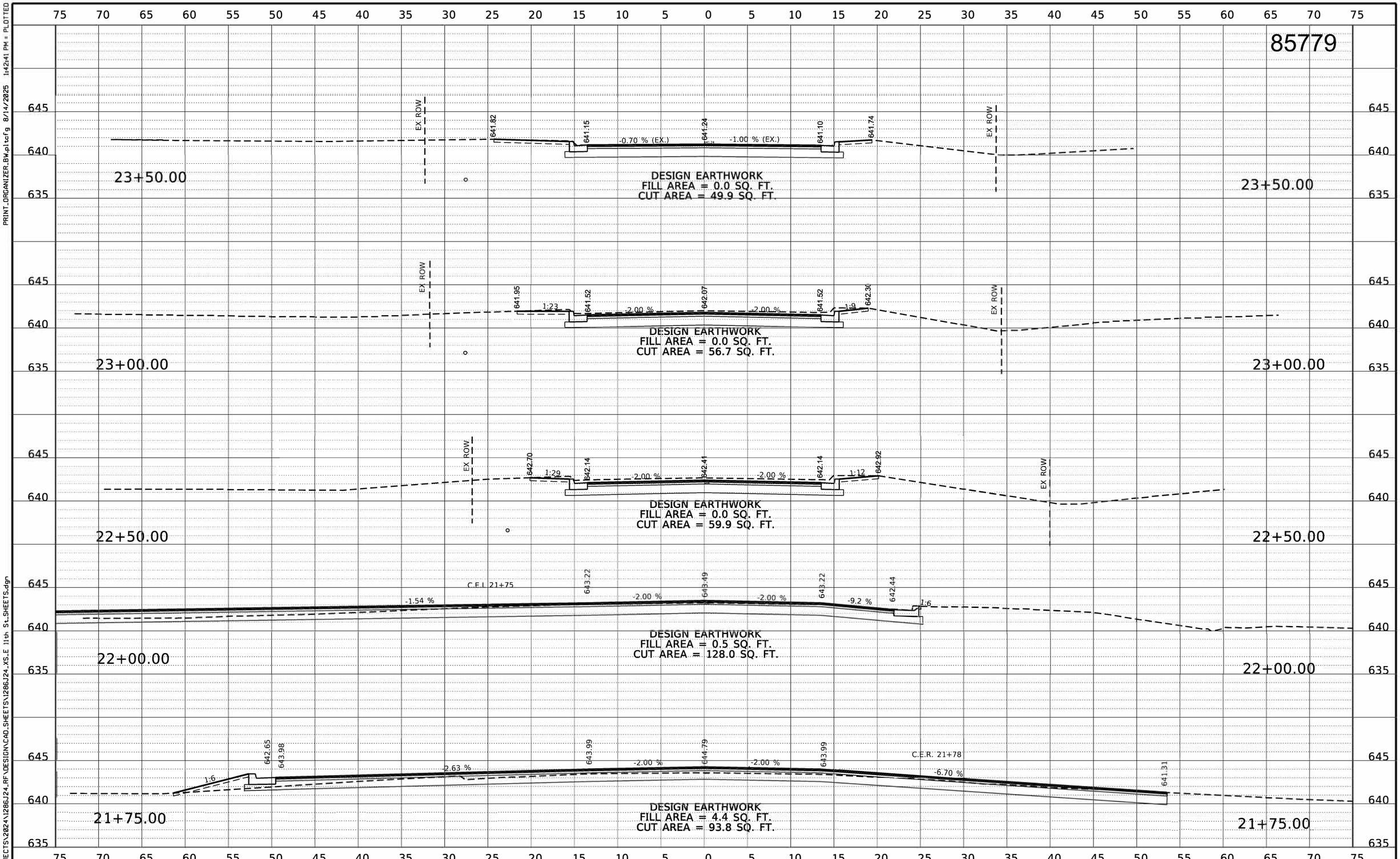

REVISION	DATE	BY	REMARKS

DESIGNED	KM
DRAWN	DJB
REVIEWED	DCB
APPROVED	BKC

WHITESIDE COUNTY
F.A.U. 5563 (E. ELEVENTH ST.) OVER
ILLINOIS-MISSISSIPPI FEEDER CANAL. STATION 20+00

WILLETT HOFMANN & ASSOCIATES INC
ENGINEERING ARCHITECTURE LAND SURVEYING
809 EAST 2ND STREET, DIXON, IL 61021-0367
T: 815-284-3381 DESIGN FIRM: #184-000918

CROSS SECTION SHEETS
E 11TH STREET - MAINLINE

SCALE: 1" = 10'-0" | SHEET NO. 5 OF 5 SHEETS | STA. 22+50 TO STA. 23+00.00

F.A.U.	SECTION	COUNTY	TOTAL SHEETS	SHEET NO.
5563	19-00137-00-BR	WHITESIDE	60	53
WHA* 1286J24		CONTRACT 85779		
ILLINOIS				

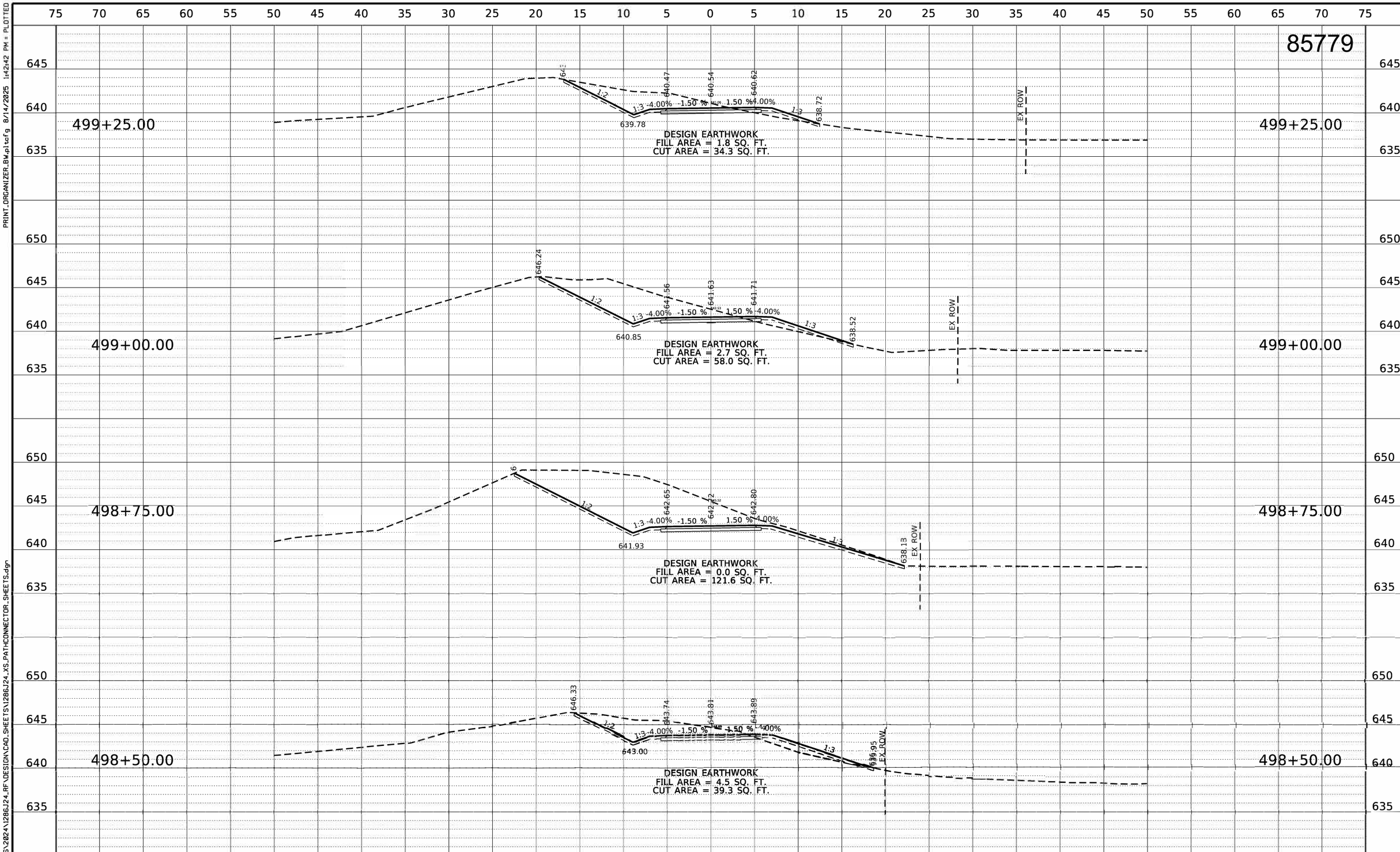

REVISION	DATE	BY	REMARKS

DESIGNED	KM
DRAWN	DJB
REVIEWED	DCB
APPROVED	BKC

WHITESIDE COUNTY
F.A.U. 5563 (E. ELEVENTH ST.) OVER
ILLINOIS-MISSISSIPPI FEEDER CANAL. STATION 20+00

WILLETT HOFMANN & ASSOCIATES INC
ENGINEERING ARCHITECTURE LAND SURVEYING
809 EAST 2ND STREET, DIXON, IL 61021-0367
T: 815-284-3381 DESIGN FIRM: #184-000918

CROSS SECTION SHEETS
PATH CONNECTOR

SCALE: 1" = 10'-0" | SHEET NO. 1 OF 2 SHEETS | STA. 498+50.00 TO STA. 499+25.00

F.A.U.	SECTION	COUNTY	TOTAL SHEETS	SHEET NO.
5563	19-00137-00-BR	WHITESIDE	60	54
	WHA* 1286J24	CONTRACT 85779		
	ILLINOIS			

FILE = S:\PROJECTS\2024\1286J24_RF\DESIGN\CAD_SHEETS\1286J24_XS_PATHCONNECTOR_SHEETS.dgn

PRINT_ORGANIZER_BW.pltcfg 8/14/2025 1:42:42 PM = PLOTTED

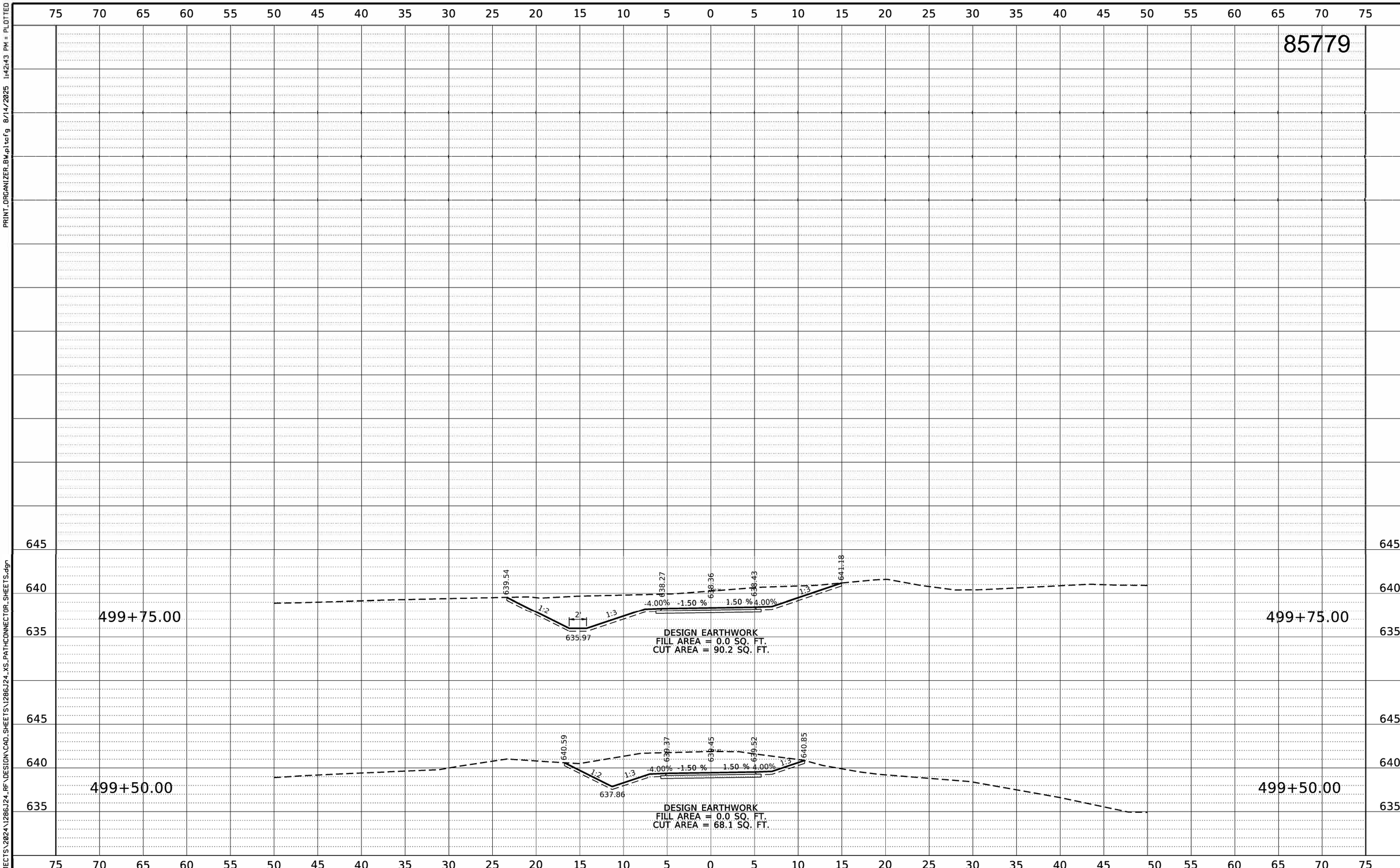

REVISION	DATE	BY	REMARKS

DESIGNED	KM
DRAWN	DJB
REVIEWED	DCB
APPROVED	BKC

WHITESIDE COUNTY
F.A.U. 5563 (E. ELEVENTH ST.) OVER
ILLINOIS-MISSISSIPPI FEEDER CANAL. STATION 20+00

WILLETT HOFMANN & ASSOCIATES INC
ENGINEERING ARCHITECTURE LAND SURVEYING
809 EAST 2ND STREET, DIXON, IL 61021-0367
T: 815-284-3381 DESIGN FIRM: #184-000918

CROSS SECTION SHEETS
PATH CONNECTOR

SCALE: 1" = 10'-0" | SHEET NO. 2 OF 2 SHEETS | STA. 499+50.00 TO STA. 499+75.00

F.A.U.	SECTION	COUNTY	TOTAL SHEETS	SHEET NO.
5563	19-00137-00-BR	WHITESIDE	60	55
	WHA* 1286J24	CONTRACT 85779		
		ILLINOIS		

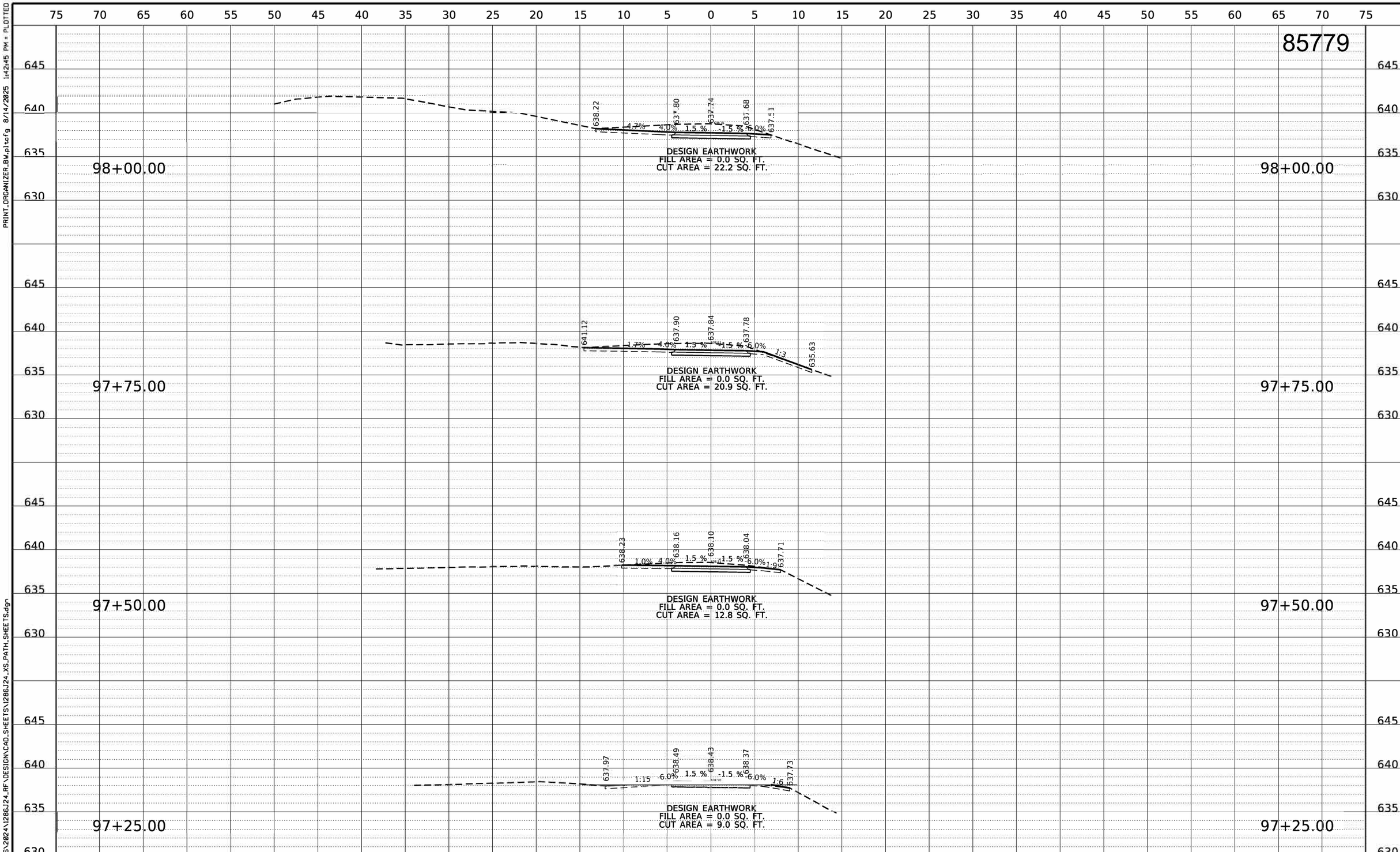

REVISION	DATE	BY	REMARKS

DESIGNED	KM
DRAWN	DJB
REVIEWED	DCB
APPROVED	BKC

WHITESIDE COUNTY
F.A.U. 5563 (E. ELEVENTH ST.) OVER
ILLINOIS-MISSISSIPPI FEEDER CANAL. STATION 20+00

WILLETT HOFMANN & ASSOCIATES INC
ENGINEERING ARCHITECTURE ..AND SURVEYING
809 EAST 2ND STREET, DIXON, IL 61021-0367
T: 815-284-3381 DESIGN FIRM: #184-000918

CROSS SECTION SHEETS
E 11TH STREET - PATH

SCALE: 1" = 10'-0" | SHEET NO. 1 OF 5 SHEETS | STA. 97+25 TO STA. 98+00.00

F.A.U.	SECTION	COUNTY	TOTAL SHEETS	SHEET NO.
5563	19-00137-00-BR	WHITESIDE	60	56
	WHA# 1286J24	CONTRACT 85779		
	ILLINOIS			

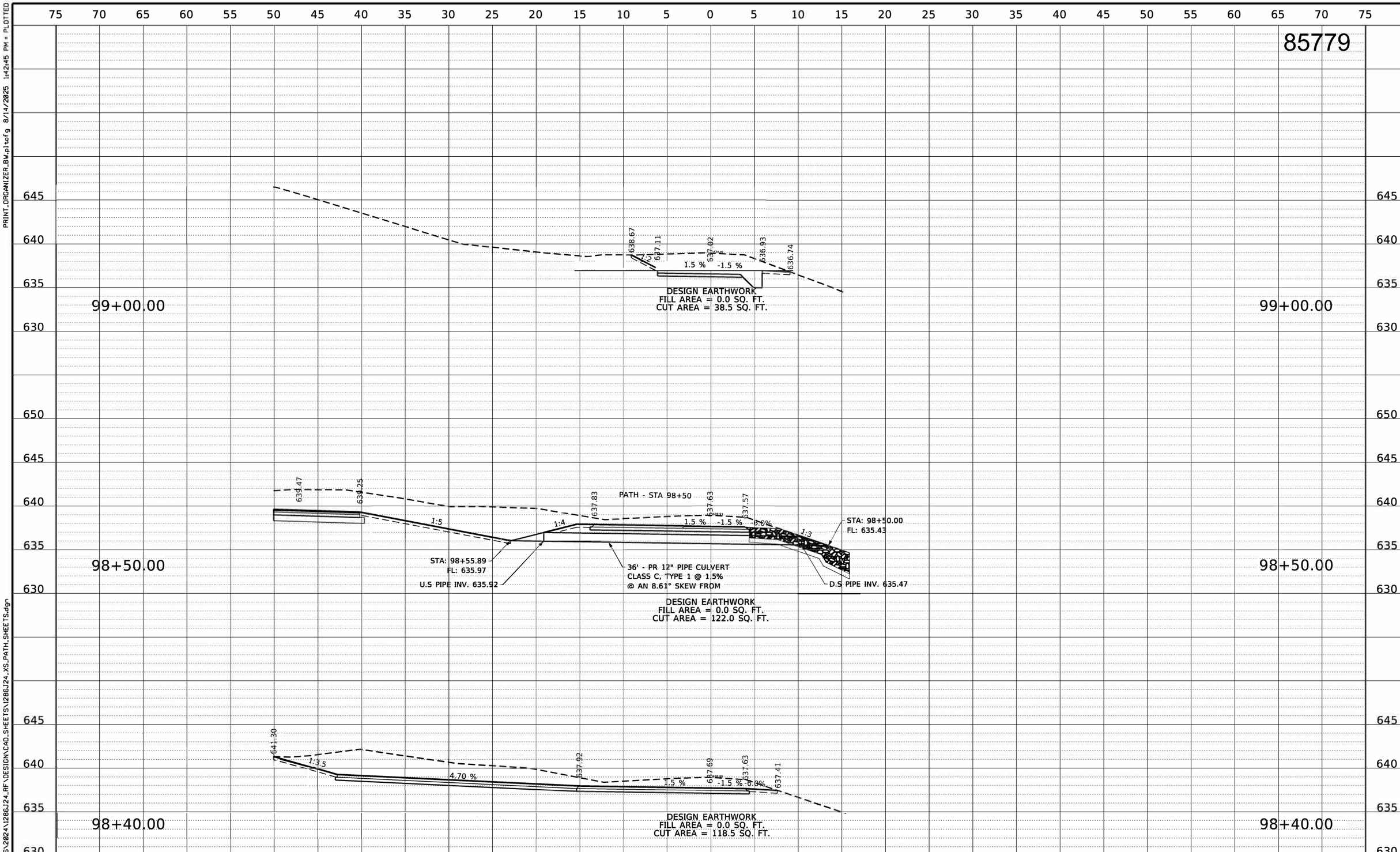

REVISION	DATE	BY	REMARKS

DESIGNED	KM
DRAWN	DJB
REVIEWED	DCB
APPROVED	BKC

WHITESIDE COUNTY
F.A.U. 5563 (E. ELEVENTH ST.) OVER
ILLINOIS-MISSISSIPPI FEEDER CANAL. STATION 20+00

WILLETT HOFMANN & ASSOCIATES INC
ENGINEERING ARCHITECTURE LAND SURVEYING
809 EAST 2ND STREET, DIXON, IL 61021-0367
T: 815-284-3381 DESIGN FIRM: #184-000918

CROSS SECTION SHEETS
E 11TH STREET - PATH

SCALE: 1" = 10'-0" | SHEET NO. 2 OF 5 SHEETS | STA. 98+40 TO STA. 99+00.00

F.A.U.	SECTION	COUNTY	TOTAL SHEETS	SHEET NO.
5563	19-00137-00-BR	WHITESIDE	60	57
	WHA* 1286J24	CONTRACT 85779		
	ILLINOIS			

85779

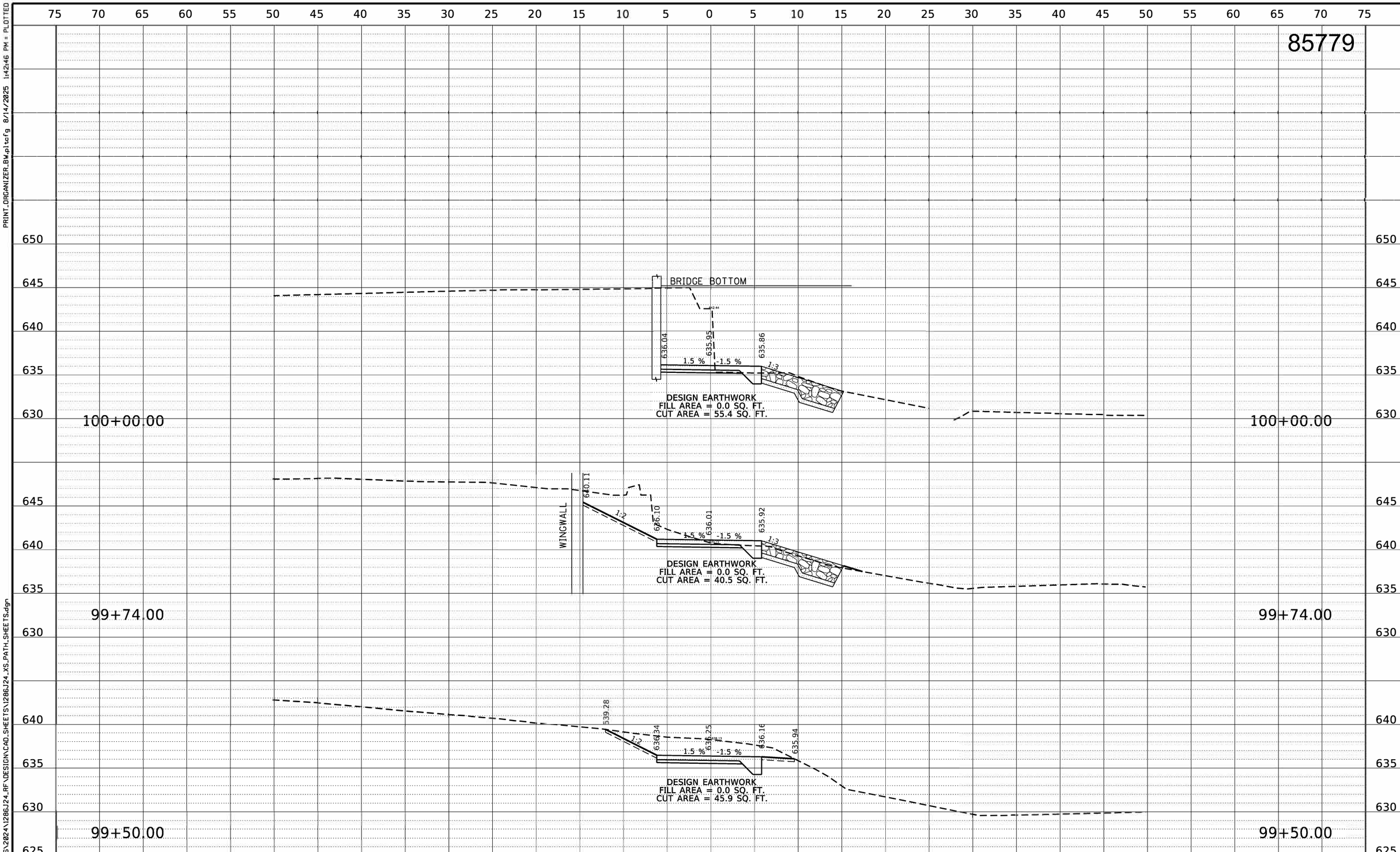

REVISION	DATE	BY	REMARKS

DESIGNED	KM
DRAWN	DJB
REVIEWED	DCB
APPROVED	BKC

WHITESIDE COUNTY
F.A.U. 5563 (E. ELEVENTH ST.) OVER
ILLINOIS-MISSISSIPPI FEEDER CANAL. STATION 20+00

WILLETT HOFMANN & ASSOCIATES INC
ENGINEERING ARCHITECTURE ...AND SURVEYING
809 EAST 2ND STREET, DIXON, IL 61021-0367
T: 815-284-3381 DESIGN FIRM: #184-000918

CROSS SECTION SHEETS
E 11TH STREET - PATH

SCALE: 1" = 10'-0" | SHEET NO. 3 OF 5 SHEETS | STA. 99+50 TO STA. 100+00.00

F.A.U.	SECTION	COUNTY	TOTAL SHEETS	SHEET NO.
5563	19-00137-00-BR	WHITESIDE	60	58
	WHA# 1286J24	CONTRACT 85779		
	ILLINOIS			

85779

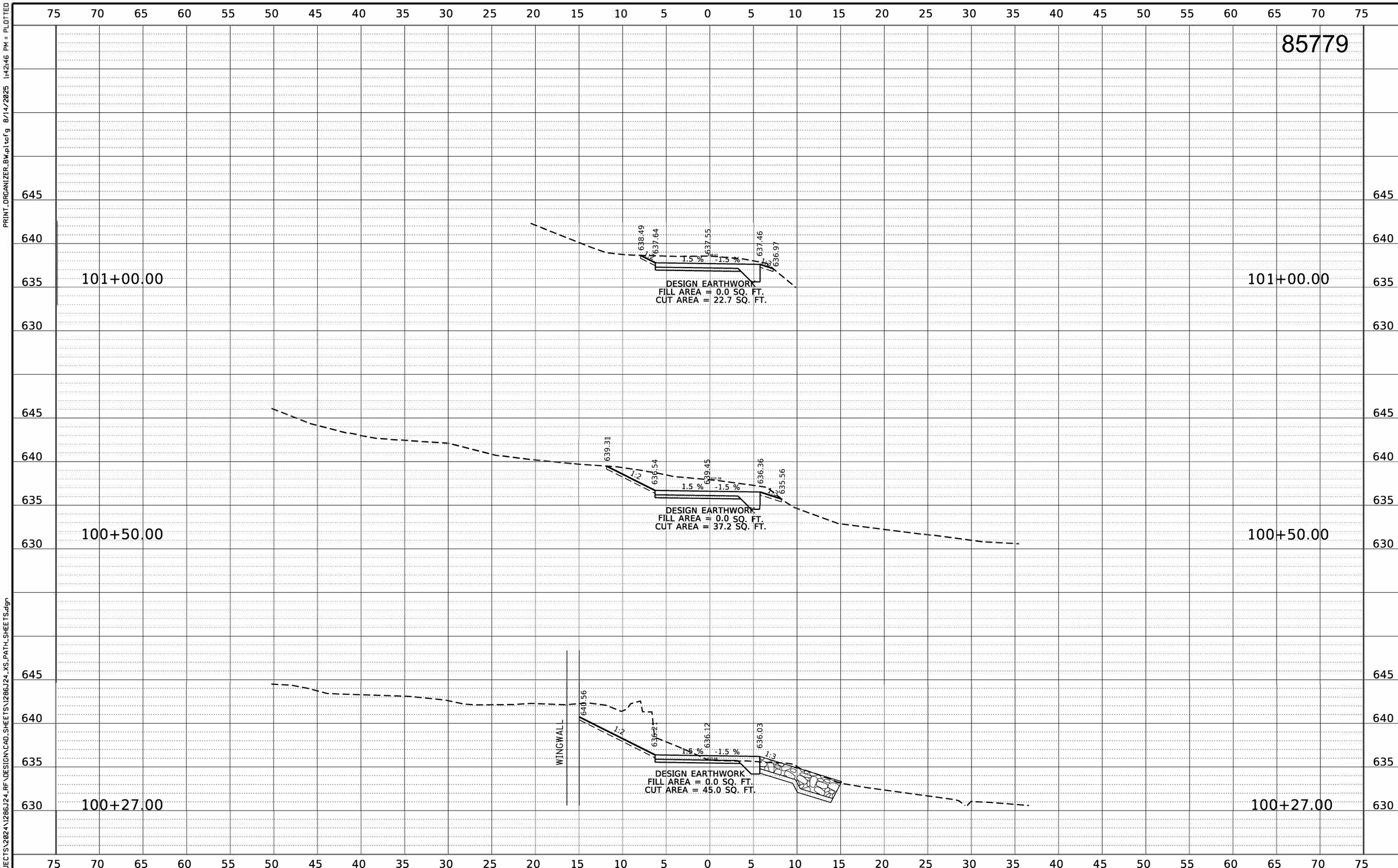

REVISION	DATE	BY	REMARKS

DESIGNED	KM
DRAWN	DJB
REVIEWED	DCB
APPROVED	BKC

WHITESIDE COUNTY
F.A.U. 5563 (E. ELEVENTH ST.) OVER
ILLINOIS-MISSISSIPPI FEEDER CANAL. STATION 20+00

WILLETT HOFMANN & ASSOCIATES INC
ENGINEERING ARCHITECTURE LAND SURVEYING
809 EAST 2ND STREET, DIXON, IL 61021-0367
T: 815-284-3381 DESIGN FIRM: #184-000918

CROSS SECTION SHEETS
E 11TH STREET - PATH

SCALE: 1" = 10'-0"	SHEET NO. 4 OF 5 SHEETS	STA. 100+27 TO STA. 101+00.00

F.A.U.	SECTION	COUNTY	TOTAL SHEETS	SHEET NO.
5563	19-00137-00-BR	WHITESIDE	60	59
	WHA* 1286J24	CONTRACT 85779		
	ILLINOIS			

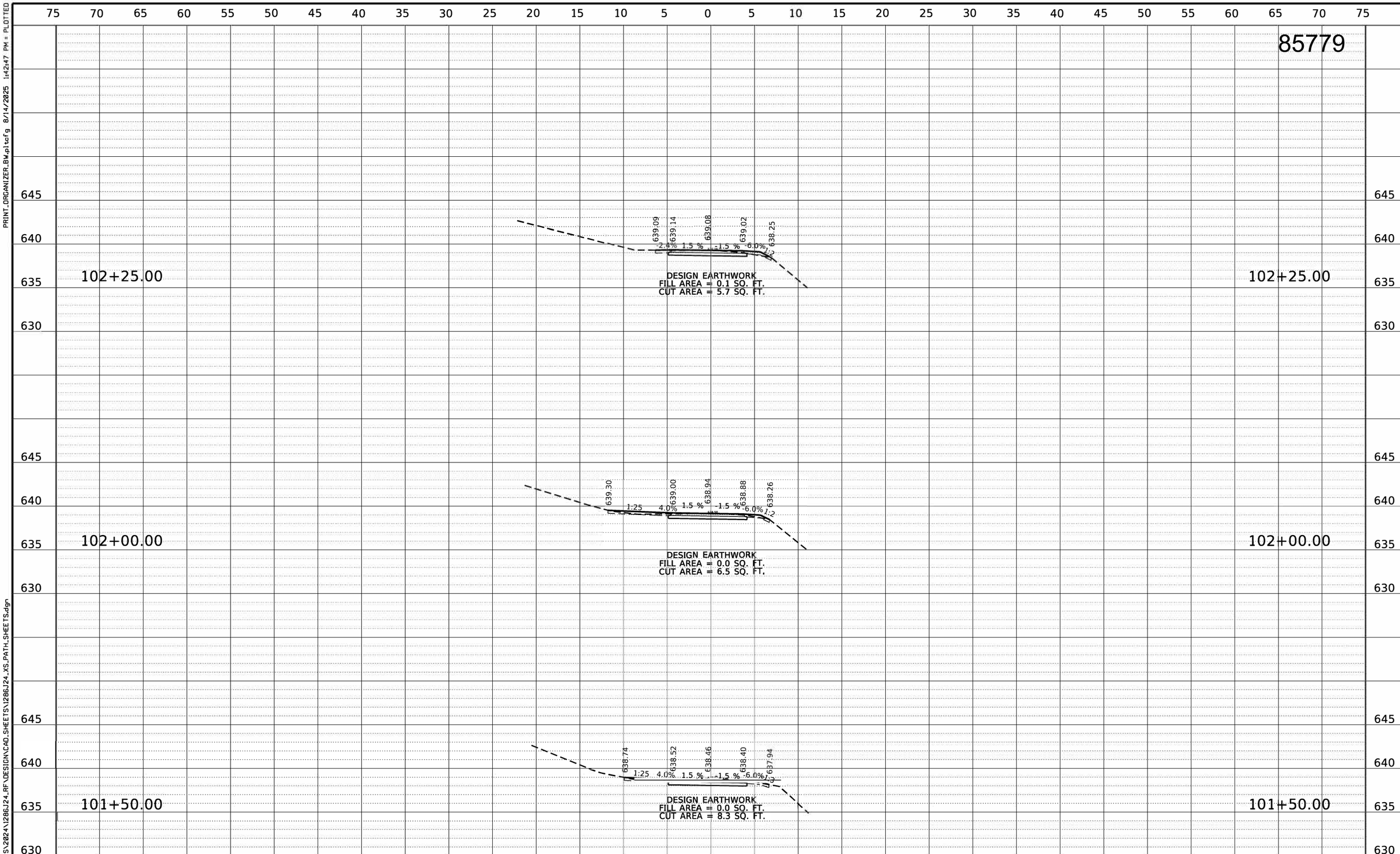

REVISION	DATE	BY	REMARKS

DESIGNED	KM
DRAWN	DJB
REVIEWED	DCB
APPROVED	BKC

WHITESIDE COUNTY
F.A.U. 5563 (E. ELEVENTH ST.) OVER
ILLINOIS-MISSISSIPPI FEEDER CANAL. STATION 20+00

WILLETT HOFMANN & ASSOCIATES INC
ENGINEERING ARCHITECTURE ..AND SURVEYING
809 EAST 2ND STREET, DIXON, IL 61021-0367
T: 815-284-3381 DESIGN FIRM: #184-000918

CROSS SECTION SHEETS
E 11TH STREET - PATH

SCALE: 1" = 10'-0"	SHEET NO. 5 OF 5 SHEETS	STA. 101+50 TO STA. 102+25.00

F.A.U.	SECTION	COUNTY	TOTAL SHEETS	SHEET NO.
5563	19-00137-00-BR	WHITESIDE	60	60
	WHA* 1286J24	CONTRACT 85779		
	ILLINOIS			

PRINT_ORGANIZER_BW.pltcfg 8/14/2025 1:42:47 PM = PLOTTED

FILE = S:\PROJECTS\2024\1286J24_RF\DESIGN\CAD_SHEETS\1286J24_XS_PATH_SHEETS.dgn