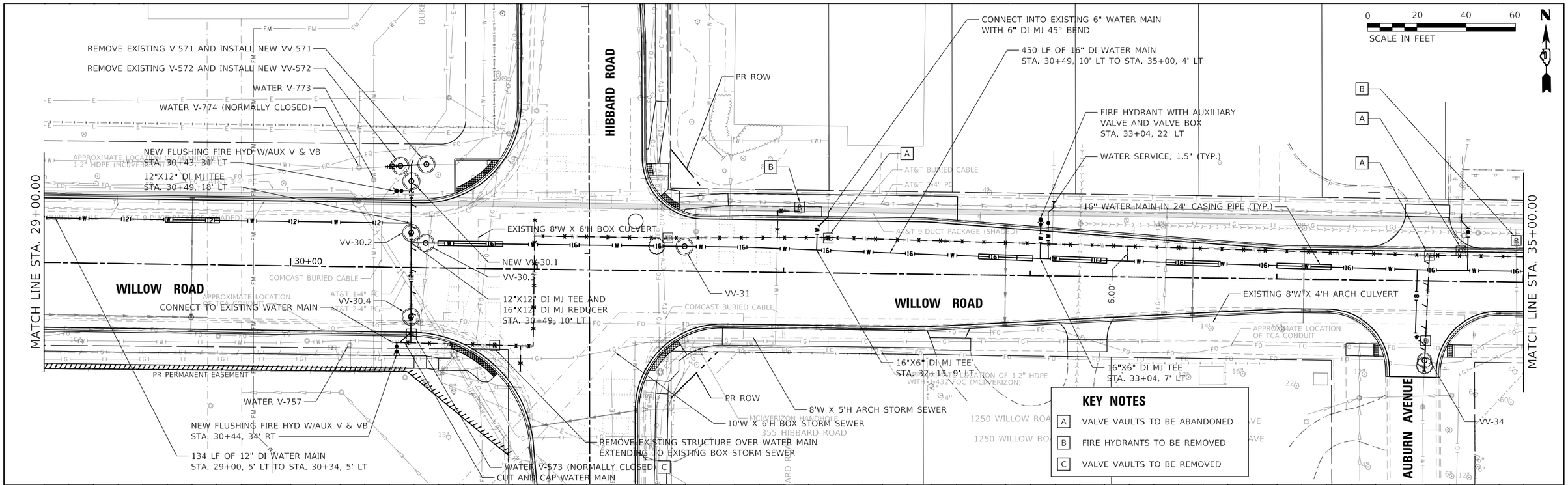


## KEY NOTES

- A — VALVE VAULTS TO BE ABANDONED
- B — FIRE HYDRANTS TO BE REMOVED
- C — VALVE VAULTS TO BE REMOVED

| LOCATION | STRUCTURE NO. | VALVE VAULT TYPE | STATION | OFFSET | RIM ELEV | TOP OF PIPE |
|---|---|---|---|---|---|---|
| WILLOW | *VV-30.1 | GATE VALVE 12" WITH VAULT, 5'-DIAMETER | 30+48.60 | 35.00' LT | 623.83 | 617.75 |
| WILLOW | VV-30.2 | GATE VALVE 12" WITH VAULT, 5'-DIAMETER | 30+48.80 | 14.05' LT | 623.75 | 615.23 |
| WILLOW | VV-30.3 | BUTTERFLY VALVE 16" WITH VAULT, 6'-DIAMETER | 30+54.70 | 10.00' LT | 623.79 | 615.23 |
| WILLOW | VV-30.4 | GATE VALVE 12" WITH VAULT, 5'-DIAMETER | 30+49.10 | 20.00' RT | 623.57 | 617.57 |
| WILLOW | VV-571 | GATE VALVE 12" WITH VAULT, 5'-DIAMETER | 30+54.60 | 42.00' LT | 623.74 | 618.54 |
| WILLOW | VV-572 | GATE VALVE 12" WITH VAULT, 5'-DIAMETER | 30+44.05 | 41.15' LT | 623.74 | 618.54 |
| WILLOW | VV-31 | BUTTERFLY VALVE 16" WITH VAULT, 6'-DIAMETER | 31+59.75 | 10.00' LT | 624.06 | 615.88 |
| WILLOW/AUBURN | VV-34 | GATE VALVE 8" WITH VAULT, 5'-DIAMETER | 34+60.35 | 32.25' RT | 623.80 | 618.30 |

*VALVE WILL BE NORMALLY CLOSED AFTER INSTALLATION

## GENERAL NOTES

1. SEE CONVEYANCE SHEETS FOR STORM SEWER SYSTEM MODIFICATIONS.
2. SHUTDOWN OF WATER MAIN SHALL BE COORDINATED WITH OWNER, AND OWNER SHALL OPERATE ALL EXISTING VALVES.
3. CONTRACTOR SHALL PROVIDE OWNER WITH PLAN FOR FLUSHING, PRESSURE TESTING, AND CHLORINATION OF NEW MAIN.
4. CONTRACTOR SHALL COMMUNICATE WITH RESIDENTS DURING CONSTRUCTION. ACCESS TO THE RESIDENCES SHALL BE REQUIRED AT THE END OF EACH WORK DAY. DURING THE WORK DAY, THE CONTRACTOR MAY BLOCK ACCESS TO/FROM THE RESIDENCES GIVEN PRIOR 48 HOUR NOTICE TO THE RESIDENTS.
5. NOT ALL SANITARY AND WATER SERVICES MAY BE SHOWN ON THE DRAWINGS.

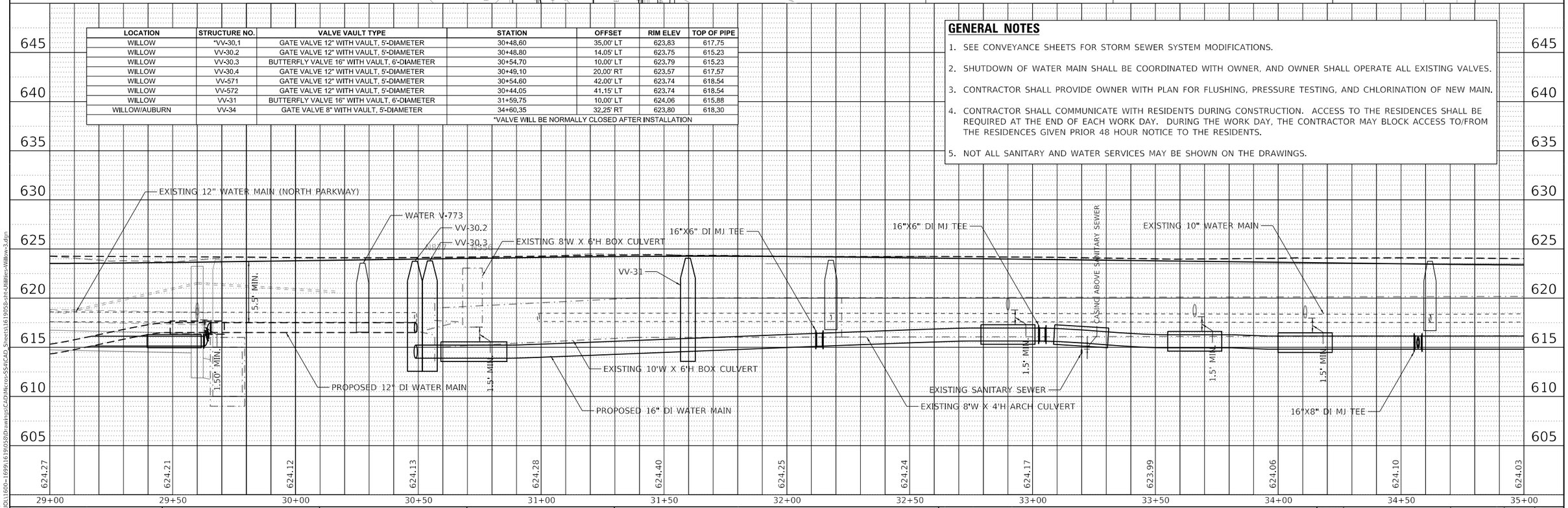


PLAN — SURVEYED / PLOTTED / ALIGNMENT CHECKED / RT. OF WAY CHECKED / CADD FILE NAME / NOTE BOOK NO. / BY / DATE

PROFILE — SURVEYED / PLOTTED / GRADES CHECKED / B.M. NOTED / STRUCTURE NOTATIONS CHKD / NOTE BOOK NO. / BY / DATE

MODEL: Default
FILE NAME: S:\IDOL\1600-1699\1619\0580\Drawings\CADD\Microstation\CAD Sheets\1619058-sht-Utilities-Willow-3.dgn

STRAND ASSOCIATES®
1170 SOUTH HOUBOLT ROAD
JOLIET, ILLINOIS 60431
(815) 744-4200

| | | |
|---|---|---|
| USER NAME = AlexaM | DESIGNED - | REVISED - |
| | DRAWN - | REVISED - |
| PLOT SCALE = 40.0000 ' / in. | CHECKED - | REVISED - |
| PLOT DATE = 7/8/2026 | DATE - 2/27/2026 | REVISED - |

**STATE OF ILLINOIS**
**DEPARTMENT OF TRANSPORTATION**

**UTILITIES PLAN AND PROFILE**
**WILLOW ROAD**

SCALE: 1" = 20' | SHEET 3 OF 8 SHEETS | STA. 29+00.00 TO STA. 35+00.00

| F.A.U. RTE. | SECTION | COUNTY | TOTAL SHEETS | SHEET NO. |
|---|---|---|---|---|
| 3561 | 08-00103-00-FP | COOK | 254 | 101 |

CONTRACT NO. 61M29

ILLINOIS | FED. AID PROJECT

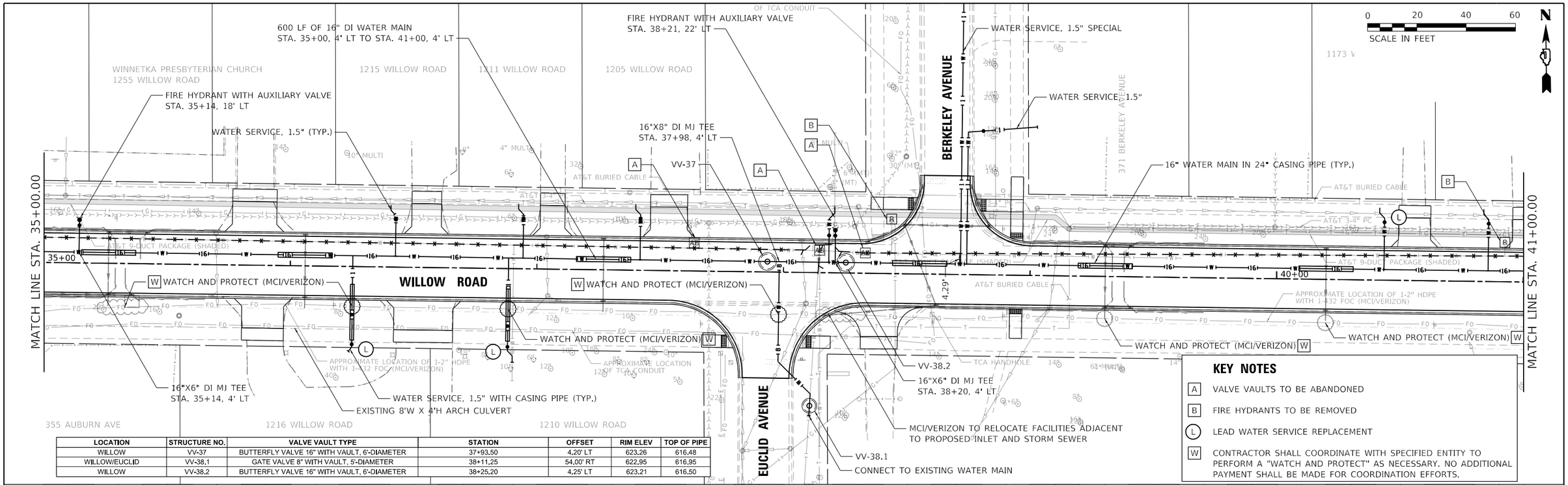


| LOCATION | STRUCTURE NO. | VALVE VAULT TYPE | STATION | OFFSET | RIM ELEV | TOP OF PIPE |
|---|---|---|---|---|---|---|
| WILLOW | VV-37 | BUTTERFLY VALVE 16" WITH VAULT, 6'-DIAMETER | 37+93.50 | 4.20' LT | 623.26 | 616.48 |
| WILLOW/EUCLID | VV-38.1 | GATE VALVE 8" WITH VAULT, 5'-DIAMETER | 38+11.25 | 54.00' RT | 622.95 | 616.95 |
| WILLOW | VV-38.2 | BUTTERFLY VALVE 16" WITH VAULT, 6'-DIAMETER | 38+25.20 | 4.25' LT | 623.21 | 616.50 |

## KEY NOTES

- (A) VALVE VAULTS TO BE ABANDONED
- (B) FIRE HYDRANTS TO BE REMOVED
- (L) LEAD WATER SERVICE REPLACEMENT
- (W) CONTRACTOR SHALL COORDINATE WITH SPECIFIED ENTITY TO PERFORM A "WATCH AND PROTECT" AS NECESSARY. NO ADDITIONAL PAYMENT SHALL BE MADE FOR COORDINATION EFFORTS.

## GENERAL NOTES

1. SEE CONVEYANCE SHEETS FOR STORM SEWER SYSTEM MODIFICATIONS.
2. SHUTDOWN OF WATER MAIN SHALL BE COORDINATED WITH OWNER, AND OWNER SHALL OPERATE ALL EXISTING VALVES.
3. CONTRACTOR SHALL PROVIDE OWNER WITH PLAN FOR FLUSHING, PRESSURE TESTING, AND CHLORINATION OF NEW MAIN.
4. CONTRACTOR SHALL COMMUNICATE WITH RESIDENTS DURING CONSTRUCTION. ACCESS TO THE RESIDENCES SHALL BE REQUIRED AT THE END OF EACH WORK DAY. DURING THE WORK DAY, THE CONTRACTOR MAY BLOCK ACCESS TO/FROM THE RESIDENCES GIVEN PRIOR 48 HOUR NOTICE TO THE RESIDENTS.
5. NOT ALL SANITARY AND WATER SERVICES MAY BE SHOWN ON THE DRAWINGS.

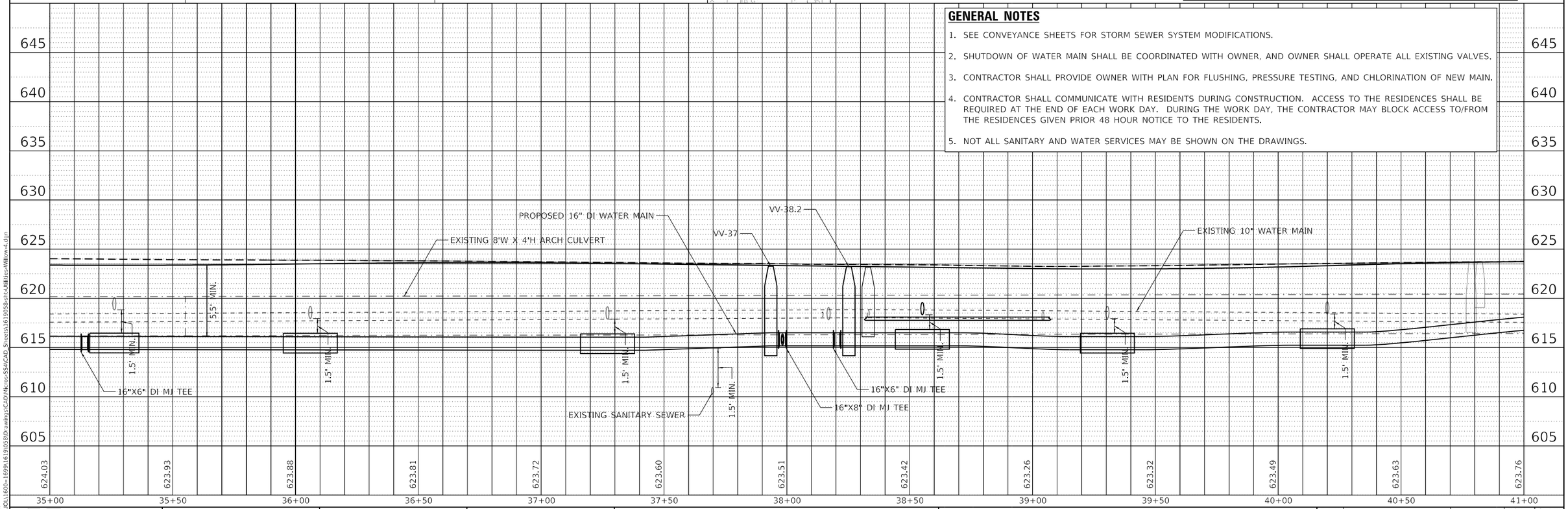


MODEL: Default
FILE NAME: S:\JOL\1600-1699\1619\058\Drawings\CAD\Micro-SS4\CAD_Sheets\1619058-sht-Utilities-Willow-4.dgn

STRAND ASSOCIATES®
1170 SOUTH HOUBOLT ROAD
JOLIET, ILLINOIS 60431
(815) 744-4200

| | | |
|---|---|---|
| USER NAME = AlexaM | DESIGNED - | REVISED - |
| | DRAWN - | REVISED - |
| PLOT SCALE = 40.0000 ' / in. | CHECKED - | REVISED - |
| PLOT DATE = 7/8/2026 | DATE - 2/27/2026 | REVISED - |

**STATE OF ILLINOIS**
**DEPARTMENT OF TRANSPORTATION**

**UTILITIES PLAN AND PROFILE**
**WILLOW ROAD**

SCALE: 1" = 20' | SHEET 4 OF 8 SHEETS | STA. 35+00.00 TO STA. 41+00.00

| F.A.U. RTE. | SECTION | COUNTY | TOTAL SHEETS | SHEET NO. |
|---|---|---|---|---|
| 3561 | 08-00103-00-FP | COOK | 254 | 102 |

CONTRACT NO. 61M29

ILLINOIS | FED. AID PROJECT

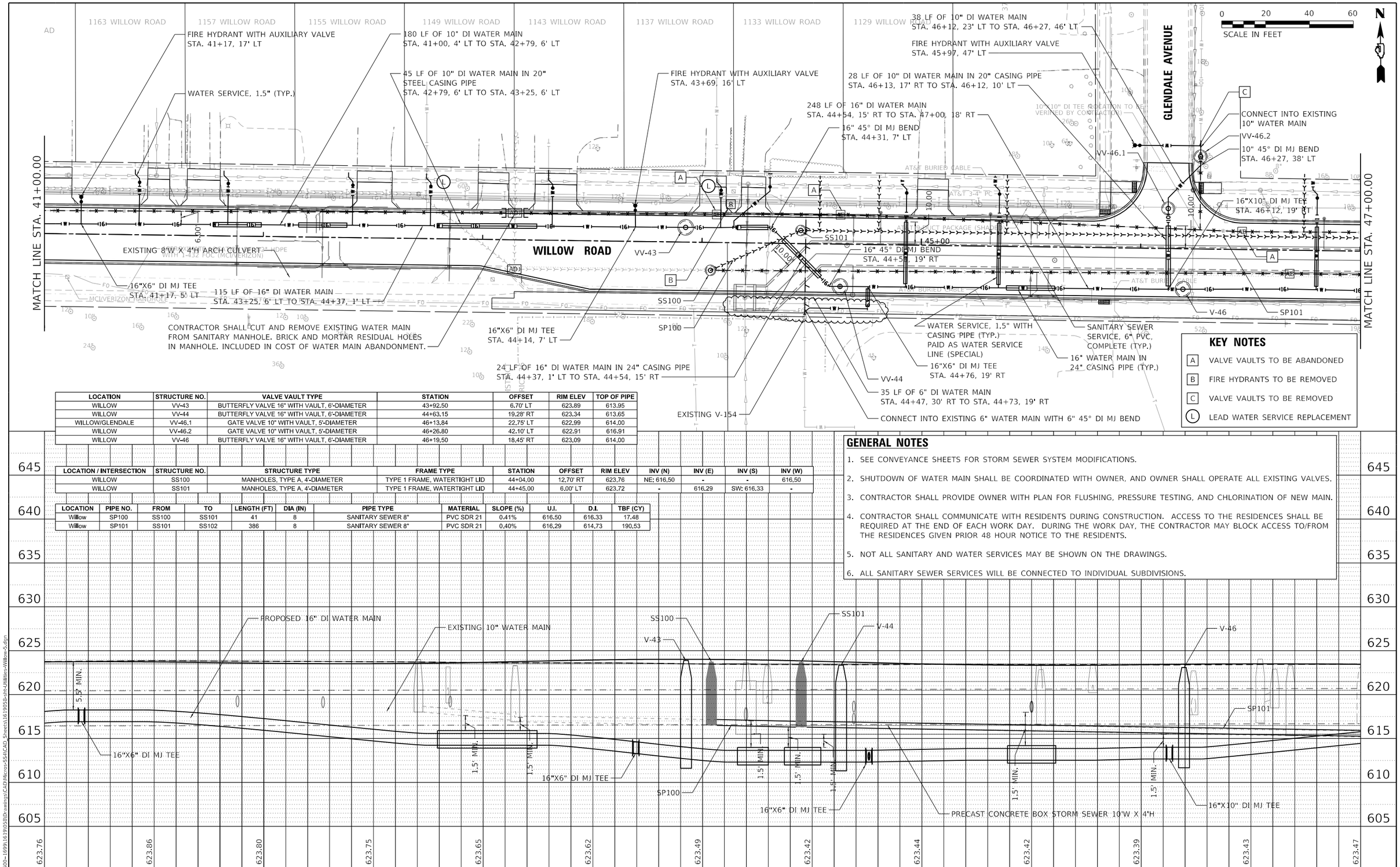


| LOCATION | STRUCTURE NO. | VALVE VAULT TYPE | STATION | OFFSET | RIM ELEV | TOP OF PIPE |
|---|---|---|---|---|---|---|
| WILLOW | VV-43 | BUTTERFLY VALVE 16" WITH VAULT, 6'-DIAMETER | 43+92.50 | 6.70' LT | 623.89 | 613.95 |
| WILLOW | VV-44 | BUTTERFLY VALVE 16" WITH VAULT, 6'-DIAMETER | 44+63.15 | 19.28' RT | 623.34 | 613.65 |
| WILLOW/GLENDALE | VV-46.1 | GATE VALVE 10" WITH VAULT, 5'-DIAMETER | 46+13.84 | 22.75' LT | 622.99 | 614.00 |
| WILLOW | VV-46.2 | GATE VALVE 10" WITH VAULT, 5'-DIAMETER | 46+26.80 | 42.10' LT | 622.91 | 616.91 |
| WILLOW | VV-46 | BUTTERFLY VALVE 16" WITH VAULT, 6'-DIAMETER | 46+19.50 | 18.45' RT | 623.09 | 614.00 |

| LOCATION / INTERSECTION | STRUCTURE NO. | STRUCTURE TYPE | FRAME TYPE | STATION | OFFSET | RIM ELEV | INV (N) | INV (E) | INV (S) | INV (W) |
|---|---|---|---|---|---|---|---|---|---|---|
| WILLOW | SS100 | MANHOLES, TYPE A, 4'-DIAMETER | TYPE 1 FRAME, WATERTIGHT LID | 44+04.00 | 12.70' RT | 623.76 | NE: 616.50 | - | - | 616.50 |
| WILLOW | SS101 | MANHOLES, TYPE A, 4'-DIAMETER | TYPE 1 FRAME, WATERTIGHT LID | 44+45.00 | 6.00' LT | 623.72 | - | 616.29 | SW: 616.33 | - |

| LOCATION | PIPE NO. | FROM | TO | LENGTH (FT) | DIA (IN) | PIPE TYPE | MATERIAL | SLOPE (%) | U.I. | D.I. | TBF (CY) |
|---|---|---|---|---|---|---|---|---|---|---|---|
| Willow | SP100 | SS100 | SS101 | 41 | 8 | SANITARY SEWER 8" | PVC SDR 21 | 0.41% | 616.50 | 616.33 | 17.48 |
| Willow | SP101 | SS101 | SS102 | 386 | 8 | SANITARY SEWER 8" | PVC SDR 21 | 0.40% | 616.29 | 614.73 | 190.53 |

## GENERAL NOTES

1. SEE CONVEYANCE SHEETS FOR STORM SEWER SYSTEM MODIFICATIONS.
2. SHUTDOWN OF WATER MAIN SHALL BE COORDINATED WITH OWNER, AND OWNER SHALL OPERATE ALL EXISTING VALVES.
3. CONTRACTOR SHALL PROVIDE OWNER WITH PLAN FOR FLUSHING, PRESSURE TESTING, AND CHLORINATION OF NEW MAIN.
4. CONTRACTOR SHALL COMMUNICATE WITH RESIDENTS DURING CONSTRUCTION. ACCESS TO THE RESIDENCES SHALL BE REQUIRED AT THE END OF EACH WORK DAY. DURING THE WORK DAY, THE CONTRACTOR MAY BLOCK ACCESS TO/FROM THE RESIDENCES GIVEN PRIOR 48 HOUR NOTICE TO THE RESIDENTS.
5. NOT ALL SANITARY AND WATER SERVICES MAY BE SHOWN ON THE DRAWINGS.
6. ALL SANITARY SEWER SERVICES WILL BE CONNECTED TO INDIVIDUAL SUBDIVISIONS.

PLAN: SURVEYED / PLOTTED / ALIGNMENT CHECKED / RT. OF WAY CHECKED / CADD FILE NAME / NOTE BOOK NO. / BY / DATE

PROFILE: SURVEYED / PLOTTED / GRADES CHECKED / B.M. NOTED / STRUCTURE NOTATNS CHKD / NOTE BOOK NO. / BY / DATE

MODEL: Default
FILE NAME: S:\JOL\1600-1699\1619\058\Drawings\CADMicro-SS4\CAD_Sheets\1619058-sht-Utilities-Willow-5.dgn

STRAND ASSOCIATES®
1170 SOUTH HOUBOLT ROAD
JOLIET, ILLINOIS 60431
(815) 744-4200

| | | |
|---|---|---|
| USER NAME = AlexaM | DESIGNED - | REVISED - |
| | DRAWN - | REVISED - |
| PLOT SCALE = 40.0000 ' / in. | CHECKED - | REVISED - |
| PLOT DATE = 7/8/2026 | DATE - 2/27/2026 | REVISED - |

**STATE OF ILLINOIS**
**DEPARTMENT OF TRANSPORTATION**

**UTILITIES PLAN AND PROFILE**
**WILLOW ROAD**

SCALE: 1" = 20' | SHEET 5 OF 8 SHEETS | STA. 41+00.00 TO STA. 47+00.00

| F.A.U. RTE. | SECTION | COUNTY | TOTAL SHEETS | SHEET NO. |
|---|---|---|---|---|
| 3561 | 08-00103-00-FP | COOK | 254 | 103 |
| | | CONTRACT NO. 61M29 | | |
| | | ILLINOIS | FED. AID PROJECT | |

| LOCATION | STRUCTURE NO. | VALVE VAULT TYPE | STATION | OFFSET | RIM ELEV | TOP OF PIPE |
|---|---|---|---|---|---|---|
| WILLOW/GLENDALE | VV-48 | GATE VALVE 8" WITH VAULT, 5'-DIAMETER | 48+45.50 | 29.75' RT | 622.71 | 616.17 |
| WILLOW | VV-51.1 | BUTTERFLY VALVE 16" WITH VAULT, 6'-DIAMETER | 51+82.40 | 18.80' RT | 623.80 | 617.26 |
| WILLOW | VV-51.2 | BUTTERFLY VALVE 16" WITH VAULT, 6'-DIAMETER | 51+90.58 | 18.44' LT | 622.78 | 613.65 |
| WILLOW/ROSEWOOD | VV-51.3 | BUTTERFLY VALVE 16" WITH VAULT, 6'-DIAMETER | 51+96.00 | 47.10' LT | 623.46 | 617.46 |
| WILLOW/ROSEWOOD | VV-52 | GATE VALVE 8" WITH VAULT, 5'-DIAMETER | 52+19.00 | 51.00' RT | 623.83 | 617.00 |

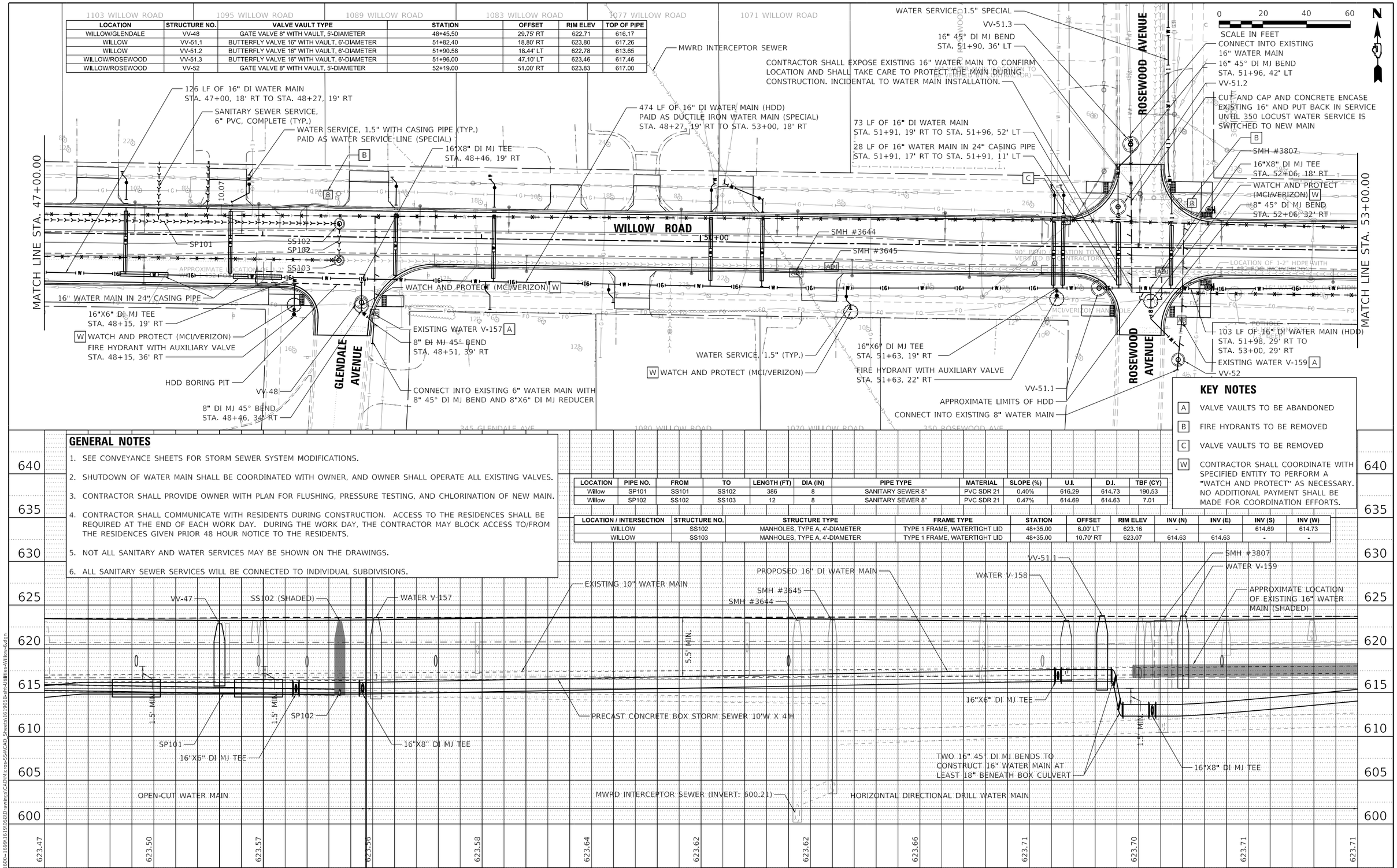


## GENERAL NOTES

1. SEE CONVEYANCE SHEETS FOR STORM SEWER SYSTEM MODIFICATIONS.
2. SHUTDOWN OF WATER MAIN SHALL BE COORDINATED WITH OWNER, AND OWNER SHALL OPERATE ALL EXISTING VALVES.
3. CONTRACTOR SHALL PROVIDE OWNER WITH PLAN FOR FLUSHING, PRESSURE TESTING, AND CHLORINATION OF NEW MAIN.
4. CONTRACTOR SHALL COMMUNICATE WITH RESIDENTS DURING CONSTRUCTION. ACCESS TO THE RESIDENCES SHALL BE REQUIRED AT THE END OF EACH WORK DAY. DURING THE WORK DAY, THE CONTRACTOR MAY BLOCK ACCESS TO/FROM THE RESIDENCES GIVEN PRIOR 48 HOUR NOTICE TO THE RESIDENTS.
5. NOT ALL SANITARY AND WATER SERVICES MAY BE SHOWN ON THE DRAWINGS.
6. ALL SANITARY SEWER SERVICES WILL BE CONNECTED TO INDIVIDUAL SUBDIVISIONS.

| LOCATION | PIPE NO. | FROM | TO | LENGTH (FT) | DIA (IN) | PIPE TYPE | MATERIAL | SLOPE (%) | U.I. | D.I. | TBF (CY) |
|---|---|---|---|---|---|---|---|---|---|---|---|
| Willow | SP101 | SS101 | SS102 | 386 | 8 | SANITARY SEWER 8" | PVC SDR 21 | 0.40% | 616.29 | 614.73 | 190.53 |
| Willow | SP102 | SS102 | SS103 | 12 | 8 | SANITARY SEWER 8" | PVC SDR 21 | 0.47% | 614.69 | 614.63 | 7.01 |

| LOCATION / INTERSECTION | STRUCTURE NO. | STRUCTURE TYPE | FRAME TYPE | STATION | OFFSET | RIM ELEV | INV (N) | INV (E) | INV (S) | INV (W) |
|---|---|---|---|---|---|---|---|---|---|---|
| WILLOW | SS102 | MANHOLES, TYPE A, 4'-DIAMETER | TYPE 1 FRAME, WATERTIGHT LID | 48+35.00 | 6.00' LT | 623.16 | - | - | 614.69 | 614.73 |
| WILLOW | SS103 | MANHOLES, TYPE A, 4'-DIAMETER | TYPE 1 FRAME, WATERTIGHT LID | 48+35.00 | 10.70' RT | 623.07 | 614.63 | 614.63 | - | - |

## KEY NOTES

- A — VALVE VAULTS TO BE ABANDONED
- B — FIRE HYDRANTS TO BE REMOVED
- C — VALVE VAULTS TO BE REMOVED
- W — CONTRACTOR SHALL COORDINATE WITH SPECIFIED ENTITY TO PERFORM A "WATCH AND PROTECT" AS NECESSARY. NO ADDITIONAL PAYMENT SHALL BE MADE FOR COORDINATION EFFORTS.

PLAN — SURVEYED / PLOTTED / ALIGNMENT CHECKED / RT. OF WAY CHECKED / CADD FILE NAME / NOTE BOOK NO. / DATE / BY

PROFILE — SURVEYED / PLOTTED / GRADES CHECKED / B.M. NOTED / STRUCTURE NOTATIONS CHKD / NOTE BOOK NO. / DATE / BY

MODEL: Default
FILE NAME: S:\JOL\1600-1699\1619\0538\Drawings\CADMicros-SS4\CAD_Sheets\1619058-sht-Utilities-Willow-6.dgn


STRAND ASSOCIATES®
1170 SOUTH HOUBOLT ROAD
JOLIET, ILLINOIS 60431
(815) 744-4200


| | | | |
|---|---|---|---|
| USER NAME = AlexaM | DESIGNED - | REVISED - | |
| | DRAWN - | REVISED - | |
| PLOT SCALE = 40.0000 ' / in. | CHECKED - | REVISED - | |
| PLOT DATE = 7/8/2026 | DATE - 2/27/2026 | REVISED - | |

**STATE OF ILLINOIS**
**DEPARTMENT OF TRANSPORTATION**

**UTILITIES PLAN AND PROFILE**
**WILLOW ROAD**

SCALE: 1" = 20' | SHEET 6 OF 8 SHEETS | STA. 47+00.00 TO STA. 53+00.00

| F.A.U. RTE. | SECTION | COUNTY | TOTAL SHEETS | SHEET NO. |
|---|---|---|---|---|
| 3561 | 08-00103-00-FP | COOK | 254 | 104 |

CONTRACT NO. 61M29

ILLINOIS FED. AID PROJECT

## KEY NOTES

- [A] VALVE VAULTS TO BE ABANDONED
- [B] FIRE HYDRANTS TO BE REMOVED
- [C] VALVE VAULTS TO BE REMOVED
- (L) LEAD WATER SERVICE REPLACEMENT
- [S] SINGLE PIPE LENGTH OF SEWER SHALL BE INSTALLED WITHIN BOX CULVERT RISER. THERE SHALL BE NO JOINTS WITHIN THE RISER.
- [W] CONTRACTOR SHALL COORDINATE WITH SPECIFIED ENTITY TO PERFORM A "WATCH AND PROTECT" AS NECESSARY. NO ADDITIONAL PAYMENT SHALL BE MADE FOR COORDINATION EFFORTS.

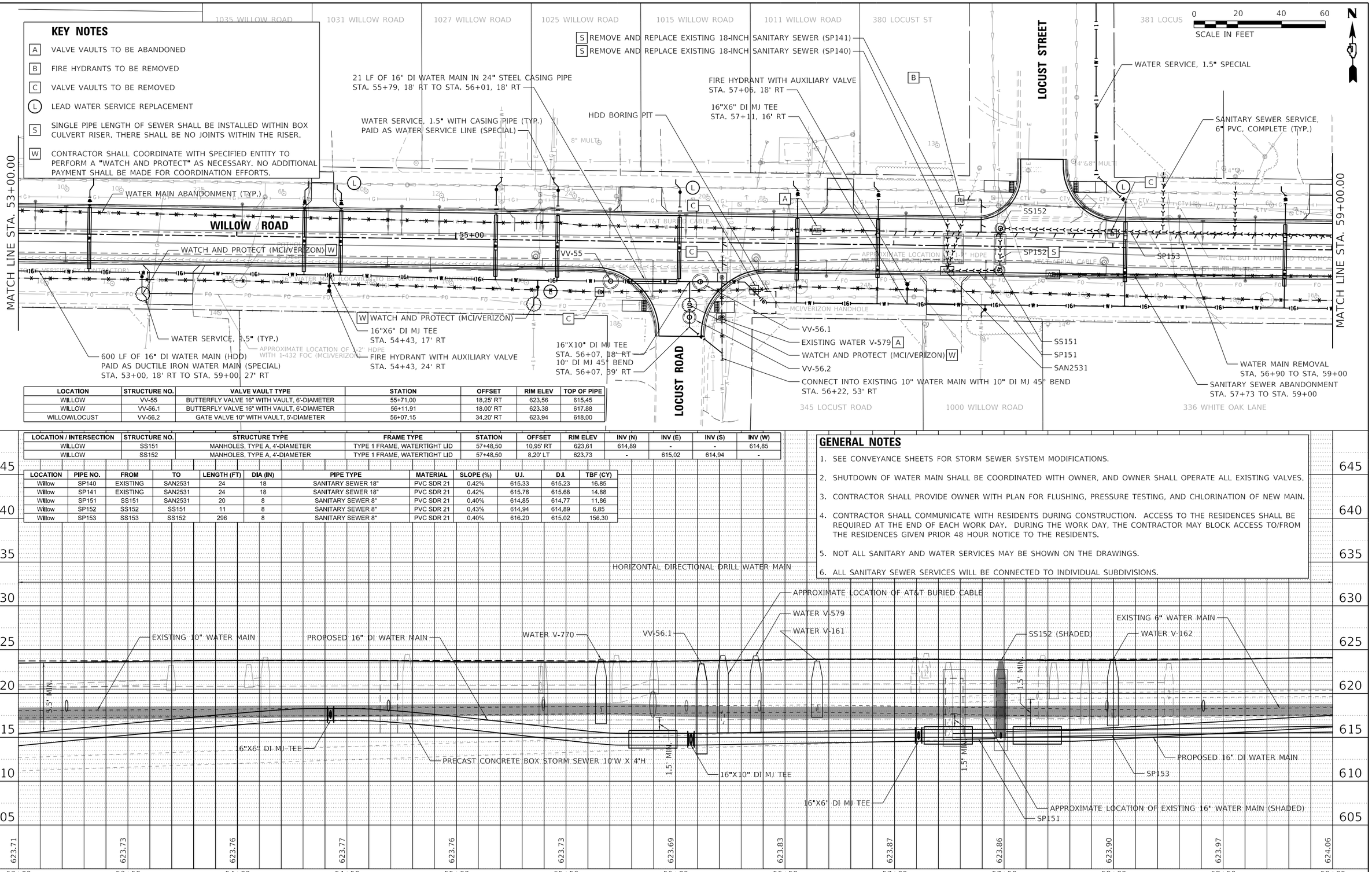


| LOCATION | STRUCTURE NO. | VALVE VAULT TYPE | STATION | OFFSET | RIM ELEV | TOP OF PIPE |
|---|---|---|---|---|---|---|
| WILLOW | VV-55 | BUTTERFLY VALVE 16" WITH VAULT, 6'-DIAMETER | 55+71.00 | 18.25' RT | 623.56 | 615.45 |
| WILLOW | VV-56.1 | BUTTERFLY VALVE 16" WITH VAULT, 6'-DIAMETER | 56+11.91 | 18.00' RT | 623.38 | 617.88 |
| WILLOW/LOCUST | VV-56.2 | GATE VALVE 10" WITH VAULT, 5'-DIAMETER | 56+07.15 | 34.20' RT | 623.94 | 618.00 |

| LOCATION / INTERSECTION | STRUCTURE NO. | STRUCTURE TYPE | FRAME TYPE | STATION | OFFSET | RIM ELEV | INV (N) | INV (E) | INV (S) | INV (W) |
|---|---|---|---|---|---|---|---|---|---|---|
| WILLOW | SS151 | MANHOLES, TYPE A, 4'-DIAMETER | TYPE 1 FRAME, WATERTIGHT LID | 57+48.50 | 10.95' RT | 623.61 | 614.89 | - | - | 614.85 |
| WILLOW | SS152 | MANHOLES, TYPE A, 4'-DIAMETER | TYPE 1 FRAME, WATERTIGHT LID | 57+48.50 | 8.20' LT | 623.73 | - | 615.02 | 614.94 | - |

| LOCATION | PIPE NO. | FROM | TO | LENGTH (FT) | DIA (IN) | PIPE TYPE | MATERIAL | SLOPE (%) | U.I. | D.I. | TBF (CY) |
|---|---|---|---|---|---|---|---|---|---|---|---|
| Willow | SP140 | EXISTING | SAN2531 | 24 | 18 | SANITARY SEWER 18" | PVC SDR 21 | 0.42% | 615.33 | 615.23 | 16.85 |
| Willow | SP141 | EXISTING | SAN2531 | 24 | 18 | SANITARY SEWER 18" | PVC SDR 21 | 0.42% | 615.78 | 615.68 | 14.88 |
| Willow | SP151 | SS151 | SAN2531 | 20 | 8 | SANITARY SEWER 8" | PVC SDR 21 | 0.40% | 614.85 | 614.77 | 11.86 |
| Willow | SP152 | SS152 | SS151 | 11 | 8 | SANITARY SEWER 8" | PVC SDR 21 | 0.43% | 614.94 | 614.89 | 6.85 |
| Willow | SP153 | SS153 | SS152 | 296 | 8 | SANITARY SEWER 8" | PVC SDR 21 | 0.40% | 616.20 | 615.02 | 156.30 |

## GENERAL NOTES

1. SEE CONVEYANCE SHEETS FOR STORM SEWER SYSTEM MODIFICATIONS.
2. SHUTDOWN OF WATER MAIN SHALL BE COORDINATED WITH OWNER, AND OWNER SHALL OPERATE ALL EXISTING VALVES.
3. CONTRACTOR SHALL PROVIDE OWNER WITH PLAN FOR FLUSHING, PRESSURE TESTING, AND CHLORINATION OF NEW MAIN.
4. CONTRACTOR SHALL COMMUNICATE WITH RESIDENTS DURING CONSTRUCTION. ACCESS TO THE RESIDENCES SHALL BE REQUIRED AT THE END OF EACH WORK DAY. DURING THE WORK DAY, THE CONTRACTOR MAY BLOCK ACCESS TO/FROM THE RESIDENCES GIVEN PRIOR 48 HOUR NOTICE TO THE RESIDENTS.
5. NOT ALL SANITARY AND WATER SERVICES MAY BE SHOWN ON THE DRAWINGS.
6. ALL SANITARY SEWER SERVICES WILL BE CONNECTED TO INDIVIDUAL SUBDIVISIONS.

PLAN — NOTE BOOK NO.____ — SURVEYED / PLOTTED / ALIGNMENT CHECKED / RT. OF WAY CHECKED / CADD FILE NAME — BY — DATE

PROFILE — NOTE BOOK NO.____ — SURVEYED / PLOTTED / GRADES CHECKED / B.M. NOTED / STRUCTURE NOTATIONS CHKD — BY — DATE

MODEL: Default
FILE NAME: S:\IDL\1600-1699\1619\05B\Drawings\CAD\Micros\SS4\CAD_Sheets\1619058-sht-Utilities-Willow-7.dgn


STRAND ASSOCIATES®
1170 SOUTH HOUBOLT ROAD
JOLIET, ILLINOIS 60431
(815) 744-4200


| | | | |
|---|---|---|---|
| USER NAME = AlexaM | DESIGNED - | REVISED - | |
| | DRAWN - | REVISED - | |
| PLOT SCALE = 40.0000 ' / in. | CHECKED - | REVISED - | |
| PLOT DATE = 7/8/2026 | DATE - 2/27/2026 | REVISED - | |

**STATE OF ILLINOIS**
**DEPARTMENT OF TRANSPORTATION**

**UTILITIES PLAN AND PROFILE**
**WILLOW ROAD**

SCALE: 1" = 20' | SHEET 7 OF 8 SHEETS | STA. 53+00.00 TO STA. 59+00.00

| F.A.U. RTE. | SECTION | COUNTY | TOTAL SHEETS | SHEET NO. |
|---|---|---|---|---|
| 3561 | 08-00103-00-FP | COOK | 254 | 105 |

CONTRACT NO. 61M29

ILLINOIS | FED. AID PROJECT

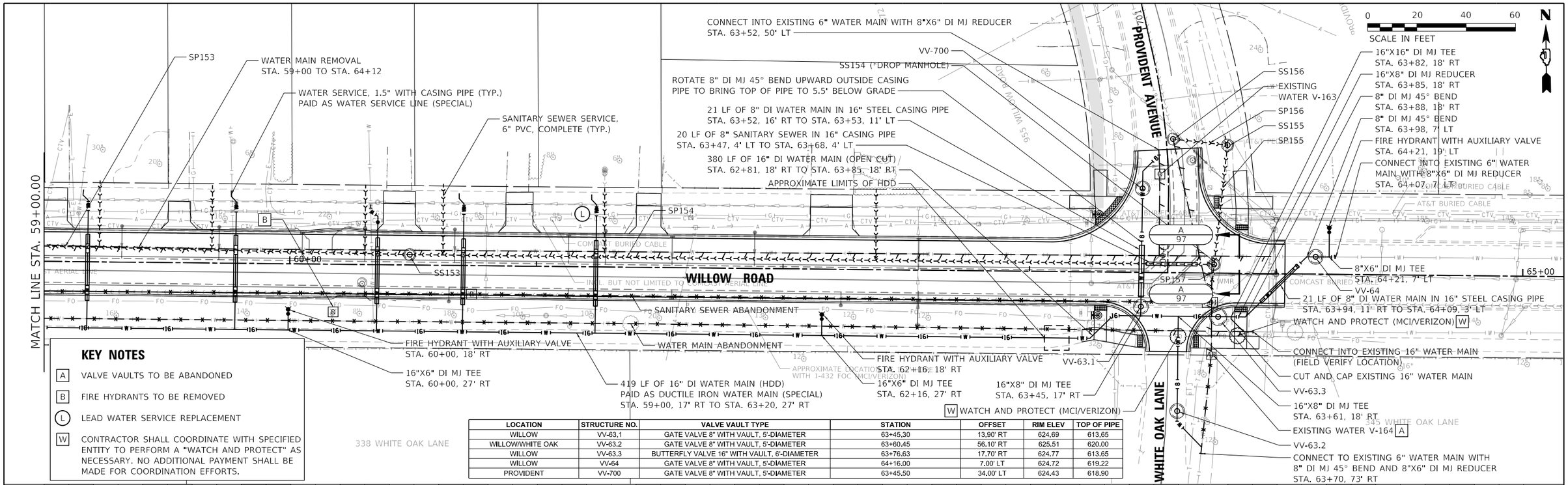


## KEY NOTES

- A — VALVE VAULTS TO BE ABANDONED
- B — FIRE HYDRANTS TO BE REMOVED
- L — LEAD WATER SERVICE REPLACEMENT
- W — CONTRACTOR SHALL COORDINATE WITH SPECIFIED ENTITY TO PERFORM A "WATCH AND PROTECT" AS NECESSARY. NO ADDITIONAL PAYMENT SHALL BE MADE FOR COORDINATION EFFORTS.

| LOCATION | STRUCTURE NO. | VALVE VAULT TYPE | STATION | OFFSET | RIM ELEV | TOP OF PIPE |
|---|---|---|---|---|---|---|
| WILLOW | VV-63.1 | GATE VALVE 8" WITH VAULT, 5'-DIAMETER | 63+45.30 | 13.90' RT | 624.69 | 613.65 |
| WILLOW/WHITE OAK | VV-63.2 | GATE VALVE 8" WITH VAULT, 5'-DIAMETER | 63+60.45 | 56.10' RT | 625.51 | 620.00 |
| WILLOW | VV-63.3 | BUTTERFLY VALVE 16" WITH VAULT, 6'-DIAMETER | 63+76.63 | 17.70' RT | 624.77 | 613.65 |
| WILLOW | VV-64 | GATE VALVE 8" WITH VAULT, 5'-DIAMETER | 64+16.00 | 7.00' LT | 624.72 | 619.22 |
| PROVIDENT | VV-700 | GATE VALVE 8" WITH VAULT, 5'-DIAMETER | 63+45.50 | 34.00' LT | 624.43 | 618.90 |

| LOCATION / INTERSECTION | STRUCTURE NO. | STRUCTURE TYPE | FRAME TYPE | STATION | OFFSET | RIM ELEV | INV (N) | INV (E) | INV (S) | INV (W) |
|---|---|---|---|---|---|---|---|---|---|---|
| WILLOW | SS153 | MANHOLES, TYPE A, 4'-DIAMETER | TYPE 1 FRAME, WATERTIGHT LID | 60+48.55 | 4.20' LT | 623.97 | - | 616.28 | - | 616.20 |
| WILLOW | *SS154 | MANHOLES, TYPE A, 4'-DIAMETER | TYPE 1 FRAME, WATERTIGHT LID | 63+74.80 | 3.50' LT | 624.88 | 620.43 | - | - | 617.56 |
| WILLOW | SS155 | MANHOLES, TYPE A, 4'-DIAMETER | TYPE 1 FRAME, WATERTIGHT LID | 63+79.80 | 51.95' LT | 624.84 | - | - | 620.79 | 620.87 |
| WILLOW | SS156 | MANHOLES, TYPE A, 4'-DIAMETER | TYPE 1 FRAME, WATERTIGHT LID | 63+57.60 | 54.20' LT | 624.81 | 621.05 | 621.05 | - | - |

*SS154 SHALL BE A DROP MANHOLE CONFORMING TO THE MWRD STANDARD DETAIL ON THE "UTILITIES STANDARD DETAILS - SANITARY SEWER CONSTRUCTION" SHEET.

| LOCATION | PIPE NO. | FROM | TO | LENGTH (FT) | DIA (IN) | PIPE TYPE | MATERIAL | SLOPE (%) | U.I. | D.I. | TBF (CY) |
|---|---|---|---|---|---|---|---|---|---|---|---|
| Willow | SP153 | SS153 | SS152 | 296 | 8 | SANITARY SEWER 8" | PVC SDR 21 | 0.40% | 616.20 | 615.02 | 156.30 |
| Willow | SP154 | SS154 | SS153 | 322 | 8 | SANITARY SEWER 8" | PVC SDR 21 | 0.40% | 617.56 | 616.28 | 143.74 |
| Willow | SP155 | SS155 | SS154 | 44 | 8 | SANITARY SEWER 8" | PVC SDR 21 | 0.81% | 620.79 | 620.43 | 3.79 |
| Willow | SP156 | SS156 | SS155 | 22 | 8 | SANITARY SEWER 8" | PVC SDR 21 | 0.81% | 621.05 | 620.87 | 0.94 |
| Willow | SP157 | SAN1835 | SS154 | 15 | 8 | SANITARY SEWER 8" | PVC SDR 21 | 1.04% | 620.86 | 620.70 | 0.82 |

## GENERAL NOTES

1. SEE CONVEYANCE SHEETS FOR STORM SEWER SYSTEM MODIFICATIONS.
2. SHUTDOWN OF WATER MAIN SHALL BE COORDINATED WITH OWNER, AND OWNER SHALL OPERATE ALL EXISTING VALVES.
3. CONTRACTOR SHALL PROVIDE OWNER WITH PLAN FOR FLUSHING, PRESSURE TESTING, AND CHLORINATION OF NEW MAIN.
4. CONTRACTOR SHALL COMMUNICATE WITH RESIDENTS DURING CONSTRUCTION. ACCESS TO THE RESIDENCES SHALL BE REQUIRED AT THE END OF EACH WORK DAY. DURING THE WORK DAY, THE CONTRACTOR MAY BLOCK ACCESS TO/FROM THE RESIDENCES GIVEN PRIOR 48 HOUR NOTICE TO THE RESIDENTS.
5. NOT ALL SANITARY AND WATER SERVICES MAY BE SHOWN ON THE DRAWINGS.
6. ALL SANITARY SEWER SERVICES WILL BE CONNECTED TO INDIVIDUAL SUBDIVISIONS.

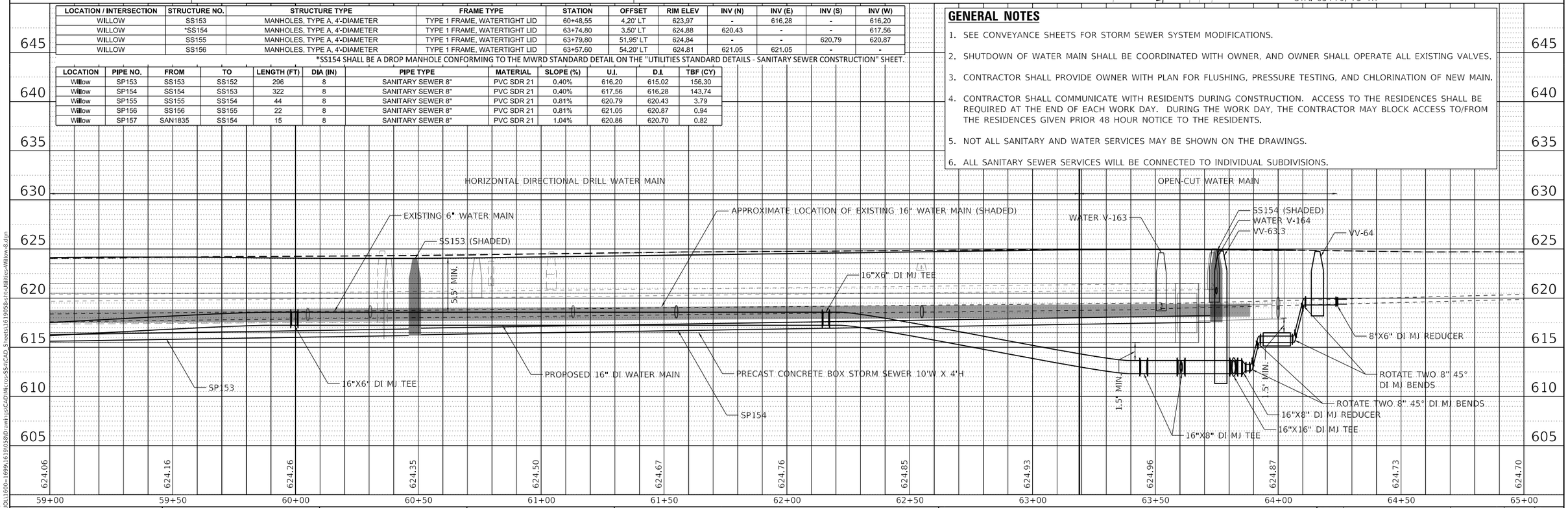


PLAN — SURVEYED / PLOTTED / ALIGNMENT CHECKED / RT. OF WAY CHECKED / CADD FILE NAME / NOTE BOOK NO. / BY / DATE

PROFILE — SURVEYED / PLOTTED / PROFILE CHECKED / B.M. NOTED / STRUCTURE NOTATNS CHKD / NOTE BOOK NO. / BY / DATE

MODEL: Default
FILE NAME: S:\JOL\1600-1699\1619\058\Drawings\CADD\Microstation\CAD_Sheets\1619058-sht-Utilities-Willow-S.dgn

STRAND ASSOCIATES®
1170 SOUTH HOUBOLT ROAD
JOLIET, ILLINOIS 60431
(815) 744-4200

| | | |
|---|---|---|
| USER NAME = AlexaM | DESIGNED - | REVISED - |
| | DRAWN - | REVISED - |
| PLOT SCALE = 40.0000 ' / in. | CHECKED - | REVISED - |
| PLOT DATE = 7/8/2026 | DATE - 2/27/2026 | REVISED - |

**STATE OF ILLINOIS**
**DEPARTMENT OF TRANSPORTATION**

**UTILITIES PLAN AND PROFILE**
**WILLOW ROAD**

SCALE: 1" = 20' | SHEET 8 OF 8 SHEETS | STA. 59+00.00 TO STA. 65+00.00

| F.A.U. RTE. | SECTION | COUNTY | TOTAL SHEETS | SHEET NO. |
|---|---|---|---|---|
| 3561 | 08-00103-00-FP | COOK | 254 | 106 |

CONTRACT NO. 61M29

ILLINOIS | FED. AID PROJECT

# VILLAGE OF WINNETKA
# ILLINOIS DEPARTMENT OF TRANSPORTATION
# PLAT OF HIGHWAYS

SPACE RESERVED FOR RECORDING OFFICER

**SHEET INDEX**


1 COVER & OWNERS INDEX
2 LEGEND SHEET
3 PLAT OF HIGHWAYS


## ROUTE: WILLOW ROAD
## LIMITS: WEST VILLAGE MUNICIPAL LIMITS TO PROVIDENT AVENUE
## SECTION: 08-00103-00-FP
## COUNTY: COOK
## JOB NO.: R-90-018-25

| PARCEL NO. | OWNER NAME | SHEET NO. | PROPERTY ACQUIRED BY |
|---|---|---|---|
| 01825001 | THE FOREST PRESERVE DISTRICT OF COOK COUNTY | 3 | |
| 01825002 | WINNETKA PRESBYTERIAN CHURCH, AN ILLINOIS RELIGIOUS CORPORATION | 3 | |
| 01825003 | THE TRUSTEE OF THE BURIC FAMILY TRUST DATED APRIL 26, 2023 | 3 | |




R. 13 E.




**PROPOSED CENTERLINE BEGINS**
**WILLOW ROAD**
**P.O.T. STA 10+00.00**

**PROPOSED CENTERLINE BEGINS**
**HIBBARD ROAD**
**P.O.T. STA. 195+00.00**

**PROPOSED CENTERLINE ENDS**
**HIBBARD ROAD**
**P.O.T. STA 214+12.71**

**PROPOSED CENTERLINE ENDS**
**WILLOW ROAD**
**P.O.T. STA. 67+57.49**

THIS DOCUMENT PREPARED BY CLAASSEN, WHITE & ASSOCIATES, P.C.

MAIL TO:
VILLAGE OF WINNETKA
1390 WILLOW ROAD
WINNETKA, ILLINOIS 60093

**PREPARED BY:**


CWA SURVEY
*CLAASSEN, WHITE & ASSOCIATES, P.C.*
*LAND SURVEYORS*
121 AIRPORT DRIVE, UNIT I, JOLIET, ILLINOIS 60431
(815) 744-3720 claassenwhite@cwasurvey.com
CWA Job #7673


**LOCATION MAP**

**PROJECT LENGTH, WILLOW ROAD = 5,757.49 FEET**
**PROJECT LENGTH, HIBBARD ROAD = 1,912.71 FEET**
**OVERALL PROJECT LENGTH = 7,670.20 FEET = 1.453 MILES**

MODEL: Default
FILE NAME: D:\Projects\7673 Strand Willow Road\Microstation ORD\7673-ROW-Sheet1.dgn

| | | | |
|---|---|---|---|
| PLOTTED BY: = JMH | FIELD - 09/04/2025 | REVISED - | |
| FIELD WORK COMPLETED = 09/04/2025 | DRAWN - JMH | REVISED - | |
| PLOT SCALE = 1"=1' | CHECKED - KAG | REVISED - | |
| PLOT DATE = 09/09/2025 | DATE - 09/09/2025 | REVISED - | |

VILLAGE OF WINNETKA
ILLINOIS DEPARTMENT OF TRANSPORTATION
PLAT OF HIGHWAYS

| | | |
|---|---|---|
| F.A. RTE.: | SECTION: 08-00103-00-FP | COUNTY: COOK JOB NO.: R-90-018-25 |
| | STA. TO STA. | ROUTE: WILLOW ROAD |
| | | SHEET NO. 1 OF 3 SHEETS |

MODEL: Default
FILE NAME: S:\JOL\1600-1699\1619058\Drawings\CAD\Micro-SS4\CAD_Sheets\1619058-cht-P01.dgn

STRAND ASSOCIATES®
1170 SOUTH HOUBOLT ROAD
JOLIET, ILLINOIS 60431
(815) 744-4200

| | | |
|---|---|---|
| USER NAME = AlexaM | DESIGNED - | REVISED - |
| | DRAWN - | REVISED - |
| PLOT SCALE = 2.0000 ' / in. | CHECKED - | REVISED - |
| PLOT DATE = 7/8/2026 | DATE - 2/27/2026 | REVISED - |

STATE OF ILLINOIS
DEPARTMENT OF TRANSPORTATION

PLAT OF HIGHWAYS

SCALE: SHEET 1 OF 3 SHEETS STA. TO STA.

| F.A.U. RTE. | SECTION | COUNTY | TOTAL SHEETS | SHEET NO. |
|---|---|---|---|---|
| 3561 | 08-00103-00-FP | COOK | 254 | 107 |
| | | CONTRACT NO. 61M29 | | |
| | ILLINOIS | FED. AID PROJECT | | |

## LEGEND FOR EXISTING TOPOGRAPHIC SYMBOLS

TRAFFIC SIGNAL GULFBOX
TRAFFIC SIGNAL HANDHOLE
TRAFFIC SIGNAL SIGNAL POST
TRAFFIC SIGNAL STEEL MAST ARM
TRAFFIC SIGNAL PEDESTRIAN PUSH BUTTON
TRAFFIC SIGNAL WOODEN POLE
TRAFFIC SIGNAL VEHICLE DETECTION PRIORITY
TRAFFIC SIGNAL VEHICLE DETECTION MAGNET
TRAFFIC SIGNAL JUNCTION BOX
TRAFFIC SIGNAL CONTROLLER
TRAFFIC SIGNAL HEAVY DUTY HANDHOLE
RAILROAD CANTILEVER MAST ARM
RAILROAD CROSSBUCK
RAILROAD TRACK
RAILROAD TRACK (ABANDONED)
RAILROAD CROSSGATE
RAILROAD CONTROL BOX
RAILROAD FLASHING SIGNAL
UTILITY TELEPHONE SPLICE BOX
UTILITY POWER POLE
UTILITY TRAFFIC SIGNAL
UTILITY LIGHT POLE
UTILITY FIRE HYDRANT
UTILITY MANHOLE
UTILITY TELEPHONE POLE
UTILITY GUY ANCHOR
UTILITY PIPELINE WARNING SIGN
UTILITY HANDHOLE
UTILITY SPLICE BOX
UTILITY JUNCTION BOX
UTILITY HEAVY DUTY HANDHOLE
UTILITY DOUBLE HANDHOLE
UTILITY CONTROLLER
UTILITY WATER METER

DRAINAGE FLOW LINE
RIP RAP
HEADWALL
CULVERT END SECTION
DRAINAGE MANHOLE
INLET
ROADWAY DITCH FLOW
VEGETATION LINE
STUMP
SHRUB
EVERGREEN TREE
DECIDUOUS TREE
WOODS/BUSH LINE
TRAFFIC SIGN
GUARDRAIL POST
GUARDRAIL
FIELD LINE
LEVEE/NOISE BARRIER
FENCE
MAIL BOX
ADVERTISING SIGN
MARSH
LIGHTING HANDHOLE
LIGHTING POWER POLE
LIGHTING JUNCTION BOX
LIGHTING HEAVYDUTY HANDHOLE
LIGHTING CONTROLLER
LIGHTING PULL POINT
HIGHWAY LIGHTING ELECTRICAL GROUND
HIGHWAY LIGHTING SINGLE UNIT
HIGHWAY LIGHTING DOUBLE UNIT
EXISTING CONCRETE BARRIER
EXISTING CREEK OR DITCH
EXISTING EDGE OF WATER
EXISTING EDGE OF PAVEMENT

## BASIS OF COORDINATE & BEARING STATEMENT

ALL COORDINATES, BEARINGS AND DISTANCES SHOWN HEREON ARE BASED ON ILLINOIS STATE PLANE (EAST ZONE) NAD83 (2011 ADJUSTMENT).

GROUND DISTANCE = GRID DISTANCE DIVIDED BY PROJECT COMBINATION FACTOR OF 0.99997687.

AREAS SHOWN BASED ON GROUND DISTANCES.

ALL DIMENSIONS ARE MEASURED UNLESS OTHERWISE SPECIFIED.

ALL MEASURED AND CALCULATED DISTANCES ARE "GRID" NOT "GROUND".

## TOPOGRAPHIC STATEMENT

THE TOPOGRAPHY SHOWN HEREON WAS SURVEYED BY CWA SURVEY IN SEPTEMBER, 2025.

## RIGHT OF WAY LEGEND

SECTION CORNERS
QUARTER SECTION CORNERS

EXISTING CENTERLINE
EXISTING RIGHT-OF-WAY LINE
FORMER RIGHT OF WAY LINE
EXISTING EASEMENT LINE
EXISTING RIGHT OF WAY & ACCESS CONTROL LINE
PROPOSED RIGHT OF WAY & ACCESS CONTROL LINE
PROPOSED ACCESS CONTROL LINE
PROPOSED CENTERLINE
PROPOSED RIGHT-OF-WAY LINE
PROPOSED TEMPORARY EASEMENT LINE
PROPOSED PERMANENT EASEMENT LINE
SECTION LINE
QUARTER SECTION LINE
QUARTER QUARTER SECTION LINE
PROPERTY LINE (TITLE)
RECORDED PLAT/DEED LINE
APPARENT PROPERTY LINE
SAME OWNERSHIP
121.45' MEASURED DIMENSION
(121.45') RECORDED DIMENSION
FOUND STONE
FOUND IRON PIPE OR IRON ROD AT CORNER UNLESS OTHERWISE NOTED
SET 5/8 INCH IRON ROD WITH PLASTIC CAP IDENTIFIED BY SURVEYORS LICENSE NUMBER AT CORNER UNLESS OTHERWISE NOTED
PERMANENT SURVEY MONUMENT, I.D.O.T. STD. 667101 (TO BE SET BY OTHERS)
SET 5/8 INCH IRON ROD AS SURVEY CONTROL UNLESS OTHERWISE NOTED
FOUND CUT CROSS
SET CUT CROSS

■ STAKING OF PROPOSED RIGHT-OF-WAY AND PERMANENT EASEMENT CORNERS. SET 5/8 INCH METAL ROD WITH DEPARTMENT OF TRANSPORTATION SURVEY ALUMINUM CAP TO MONUMENT THE POSITION SHOWN. IDENTIFIED BY INSCRIPTION DATA AND SURVEYORS LICENSE NUMBER.

■B STAKING OF PROPOSED RIGHT-OF-WAY AND PERMANENT EASEMENT CORNERS IN CULTIVATED AREA, A MINIMUM OF 20 INCHES BELOW THE GROUND SURFACE. SET 5/8 INCH METAL ROD WITH DIVISION OF HIGHWAY SURVEY ALUMINUM CAP TO MONUMENT THE POSITION SHOWN. IDENTIFIED BY INSCRIPTION DATA AND SURVEYORS LICENSE NUMBER.

## LEGEND FOR ABBREVIATIONS

| | |
|---|---|
| A/C | ACCESS CONTROL |
| AC | ACRE |
| AVE | AVENUE |
| BK | BOOK |
| BLVD | BOULEVARD |
| ℄ | CENTERLINE |
| CAB | CABINET |
| CH | COUNTY HIGHWAY |
| Ch | CHAIN |
| CP | CONTROL POINT |
| CPS | COTTON PICKER SPINDLE |
| DB | DEED BOOK |
| E | EAST |
| EX | EXISTING |
| FA | FEDERAL AID |
| FAI | FEDERAL AID INTERSTATE |
| FAP | FEDERAL AID PRIMARY |
| FAS | FEDERAL AID SECONDARY |
| FAU | FEDERAL AID URBAN |
| FND | FOUND |
| ha | HECTARE |
| IP | IRON PIPE |
| IR | IRON ROD |
| LT | LEFT |
| m | METER |
| $m^2$ | SQUARE METERS |
| N | NORTH |
| N/F | NOW OR FORMERLY |
| N & BC | NAIL AND BOTTLE CAP |
| N & C | NAIL AND CAP |
| N & W | NAIL AND WASHER |
| NE | NORTHEAST |
| NW | NORTHWEST |
| PB | PLAT BOOK |
| PG | PAGE |
| POB | POINT OF BEGINNING |
| POC | POINT OF COMMENCEMENT |
| POT | POINT ON TANGENT |
| ¢ | PROPERTY LINE |
| PR | PROPOSED |
| R | RANGE |
| RD | ROAD |
| REC | RECORD |
| ROW | RIGHT-OF-WAY |
| RR | RAILROAD |
| RRS | RAILROAD SPIKE |
| RT | RIGHT |
| RTE | ROUTE |
| S | SOUTH |
| SBI | STATE BOND ISSUE |
| SE | SOUTHEAST |
| SEC | SECTION |
| SQ FT | SQUARE FEET |
| SR | STATE ROUTE |
| ST | STREET |
| STA | STATION |
| SMK | SURVEY MARKER |
| SW | SOUTHWEST |
| T | TOWNSHIP |
| TR | TOWNSHIP ROAD |
| USGS | U.S. GEOLOGICAL SURVEY |
| W | WEST |

SPACE RESERVED FOR RECORDING OFFICER

## PROPOSED PARCEL NUMBER LEGEND

| | |
|---|---|
| 00123001 | PROPOSED FEE SIMPLE ACQUISITION |
| 00123001PE | PROPOSED PERMANENT EASEMENT |
| 00123001TE | PROPOSED TEMPORARY EASEMENT |
| 00123001DED | PROPOSED DEDICATION |
| 00123001AC | PROPOSED ACCESS CONTROL LINE |
| 00123001A | PROPOSED FEE SIMPLE ACQUISITION WITH MULTIPLE TRACTS |
| 00123001TE-A | PROPOSED TEMPORARY EASEMENT WITH MULTIPLE TRACTS |

## CURVE ABBREVIATIONS

| | |
|---|---|
| PC | POINT OF CURVATURE |
| PI | POINT OF INTERSECTION |
| PT | POINT OF TANGENCY |
| PRC | POINT OF REVERSE CURVE |
| PCC | POINT OF COMPOUND CURVE |
| R | RADIUS OF CURVE |
| L | LENGTH OF CURVE |
| CB | CHORD BEARING |
| C | CHORD LENGTH |
| D | DEGREE OF CURVE |
| E | EXTERNAL ORDINATE |
| Δ | DELTA |

## PREPARED BY:


CWA SURVEY
*CLAASSEN, WHITE & ASSOCIATES, P.C.*
*LAND SURVEYORS*
121 AIRPORT DRIVE, UNIT I, JOLIET, ILLINOIS 60431
(815) 744-3720 claassenwhite@cwasurvey.com
CWA Job #7673


MODEL: Default
FILE NAME: P:\Projects\7673 Strand Willow Road\Microstation ORD\7673-ROW-Sheet2.dgn

| | | | |
|---|---|---|---|
| PLOTTED BY: = JMH | FIELD - 09/04/2025 | REVISED - | |
| FIELD WORK COMPLETED = 09/04/2025 | DRAWN - JMH | REVISED - | |
| PLOT SCALE = N/A | CHECKED - KAG | REVISED - | |
| PLOT DATE = 10/20/2025 | DATE - 09/09/2025 | REVISED - | |

**VILLAGE OF WINNETKA**
**ILLINOIS DEPARTMENT OF TRANSPORTATION**
**PLAT OF HIGHWAYS**

| | | |
|---|---|---|
| F.A. RTE.: | SECTION: 08-00103-00-FP | COUNTY: COOK JOB NO.: R-90-018-25 |
| | STA. TO STA. | ROUTE: WILLOW ROAD |
| | | SHEET NO. 2 OF 3 SHEETS |

MODEL: Default
FILE NAME: S:\JOL\1600-1699\1619\05B\D-cwilmps\CAD\Micro-SS4\CAD_Sheets\1619\05B-ilht-POH.dgn


STRAND ASSOCIATES®
1170 SOUTH HOUBOLT ROAD
JOLIET, ILLINOIS 60431
(815) 744-4200


| | | |
|---|---|---|
| USER NAME = AlexaM | DESIGNED - | REVISED - |
| | DRAWN - | REVISED - |
| PLOT SCALE = 2.0000 ' / in. | CHECKED - | REVISED - |
| PLOT DATE = 7/8/2026 | DATE - 2/27/2026 | REVISED - |

**STATE OF ILLINOIS**
**DEPARTMENT OF TRANSPORTATION**

**PLAT OF HIGHWAYS**

SCALE: SHEET 2 OF 3 SHEETS STA. TO STA.

| F.A.U. RTE. | SECTION | COUNTY | TOTAL SHEETS | SHEET NO. |
|---|---|---|---|---|
| 3561 | 08-00103-00-FP | COOK | 254 | 108 |
| | | CONTRACT NO. 61M29 | | |
| | | ILLINOIS | FED. AID PROJECT | |

# PART OF THE E. 1/2 OF SECTION 19 & PART OF THE W. 1/2 OF SECTION 20, ALL IN TWP. 42 N., R. 13 E. OF THE 3RD. P.M., IN COOK COUNTY, ILLINOIS.

| PARCEL NUMBER | TOTAL HOLDINGS | FEE SIMPLE ACQUISITION | | | | | | REMAINDER | EASEMENT AREA | | PARCEL INDEX NUMBER |
|---|---|---|---|---|---|---|---|---|---|---|---|
| | | GROSS | | PREVIOUSLY DEDICATED | | NET | | | | | |
| | ACRES | ACRES | SQ FT | ACRES | SQ FT | ACRES | SQ FT | ACRES | ACRES | SQ FT | |
| 01825001 | 0.758 | | | | | | | 0.758 | 0.073 | 3,172 | 05-19-406-021 |
| 01825002 | 1.929 | 0.002 | 104 | | | 0.002 | 104 | 1.927 | | | 05-20-119-015<br>05-20-119-016 THRU -023 |
| 01825003 | 0.302 | 0.004 | 180 | | | 0.004 | 180 | 0.298 | | | 05-20-300-037 |

SPACE RESERVED FOR RECORDING OFFICER

SECTION CORNER COORDINATE TABLE
COORDINATES SHOWN HEREON ARE REFERENCED TO THE ILLINOIS STATE PLANE COORDINATE SYSTEM, EAST ZONE, NAD83 (2011)

| PT. NO. | NORTHING | EASTING |
|---|---|---|
| 205 | 1,982,648.6330 | 1,142,140.7310 |
| 305 | 1,977,362.1230 | 1,142,152.7400 |
| 313 | 1,979,973.2414 | 1,144,795.4338 |
| 398 | 1,980,032.2009 | 1,139,509.2494 |

COORDINATE TABLE ~ WILLOW ROAD
COORDINATES SHOWN HEREON ARE REFERENCED TO THE ILLINOIS STATE PLANE COORDINATE SYSTEM, EAST ZONE, NAD83 (2011)

| PT. NO. | STATION | OFFSET | NORTHING | EASTING |
|---|---|---|---|---|
| P.O.T. | 10+00.00 | 0.00' RT. | 1,980,038.1187 | 1,140,028.1144 |
| P.I. | 17+05.16 | 0.00' RT. | 1,980,028.5238 | 1,140,733.2051 |
| 405 | 27+92.03 | 51.13' RT. | 1,979,962.7974 | 1,141,819.2918 |
| 409 | 28+24.78 | 33.96' RT. | 1,979,979.5210 | 1,141,852.2741 |
| 461 | 28+24.92 | 43.36' RT. | 1,979,970.1205 | 1,141,852.2841 |
| 462 | 30+47.84 | 42.24' RT. | 1,979,968.2483 | 1,142,075.2044 |
| 418 | 30+60.36 | 50.23' LT. | 1,980,060.5360 | 1,142,088.9583 |
| 417 | 30+70.30 | 60.39' LT. | 1,980,070.5679 | 1,142,099.0422 |
| 410 | 30+88.80 | 32.63' RT. | 1,979,977.3036 | 1,142,116.2809 |
| 463 | 30+89.43 | 75.63' RT. | 1,979,934.2965 | 1,142,116.3378 |
| 467 | 31+20.78 | 0.00' RT. | 1,980,009.5012 | 1,142,148.7023 |
| 470 | 31+21.24 | 0.00' RT. | 1,980,009.4951 | 1,142,149.1604 |
| 225 | 31+21.31 | 0.53' LT. | 1,980,010.0280 | 1,142,149.2376 |
| 457 | 31+53.51 | 49.51' LT. | 1,980,058.5738 | 1,142,182.0813 |
| 232 | 31+53.77 | 33.51' LT. | 1,980,042.5739 | 1,142,182.1329 |
| 244 | 31+54.79 | 32.49' RT. | 1,979,976.5654 | 1,142,182.2819 |
| 450 | 31+55.07 | 51.49' RT. | 1,979,957.5654 | 1,142,182.3071 |
| 458 | 31+66.77 | 33.50' LT. | 1,980,042.3931 | 1,142,195.1316 |
| 451 | 31+73.79 | 32.50' RT. | 1,979,976.3013 | 1,142,201.2801 |
| 243 | 34+22.61 | 32.69' RT. | 1,979,972.8426 | 1,142,450.0790 |
| 242 | 34+80.62 | 32.73' RT. | 1,979,972.0362 | 1,142,508.0818 |
| P.I. | 38+65.68 | 0.00' RT. | 1,979,999.6948 | 1,142,893.5326 |
| P.I. | 57+67.74 | 0.00' RT. | 1,979,974.2998 | 1,144,795.4312 |
| P.O.T. | 67+57.49 | 0.00' RT. | 1,979,964.3296 | 1,145,785.1238 |

COORDINATE TABLE ~ HIBBARD ROAD
COORDINATES SHOWN HEREON ARE REFERENCED TO THE ILLINOIS STATE PLANE COORDINATE SYSTEM, EAST ZONE, NAD83 (2011)

| PT. NO. | STATION | OFFSET | NORTHING | EASTING |
|---|---|---|---|---|
| P.O.T | 195+00.00 | 0.00' RT. | 1,979,116.2601 | 1,142,150.3633 |
| P.I. | 197+10.89 | 0.00' RT. | 1,979,327.1511 | 1,142,150.0629 |
| 246 | 202+18.66 | 33.08' RT. | 1,979,834.9662 | 1,142,182.4692 |
| 245 | 202+31.66 | 33.08' RT. | 1,979,847.9669 | 1,142,182.4520 |
| 463 | 203+18.08 | 32.92' LT. | 1,979,934.2965 | 1,142,116.3378 |
| 450 | 203+41.26 | 33.08' RT. | 1,979,957.5654 | 1,142,182.3071 |
| 462 | 203+52.09 | 74.01' LT. | 1,979,968.2483 | 1,142,075.2044 |
| 451 | 203+59.97 | 52.08' RT. | 1,979,976.3013 | 1,142,201.2801 |
| 244 | 203+60.26 | 33.08' RT. | 1,979,976.5654 | 1,142,182.2819 |
| 410 | 203+61.09 | 32.92' LT. | 1,979,977.3036 | 1,142,116.2809 |
| 470 | 203+93.24 | 0.00' RT. | 1,980,009.4951 | 1,142,149.1604 |
| 467 | 203+93.24 | 0.46' LT. | 1,980,009.5012 | 1,142,148.7023 |
| 225 | 203+93.77 | 0.08' RT. | 1,980,010.0280 | 1,142,149.2376 |
| 458 | 204+26.02 | 46.05' RT. | 1,980,042.3931 | 1,142,195.1316 |
| 232 | 204+26.23 | 33.05' RT. | 1,980,042.5739 | 1,142,182.1329 |
| 457 | 204+42.23 | 33.04' RT. | 1,980,058.5738 | 1,142,182.0813 |
| 418 | 204+44.42 | 60.08' LT. | 1,980,060.5360 | 1,142,088.9583 |
| 417 | 204+54.43 | 49.97' LT. | 1,980,070.5679 | 1,142,099.0422 |
| P.I. | 209+16.88 | 0.00' RT. | 1,980,533.1383 | 1,142,147.8786 |
| P.O.T. | 214+12.71 | 0.00' RT. | 1,981,028.9612 | 1,142,146.2961 |

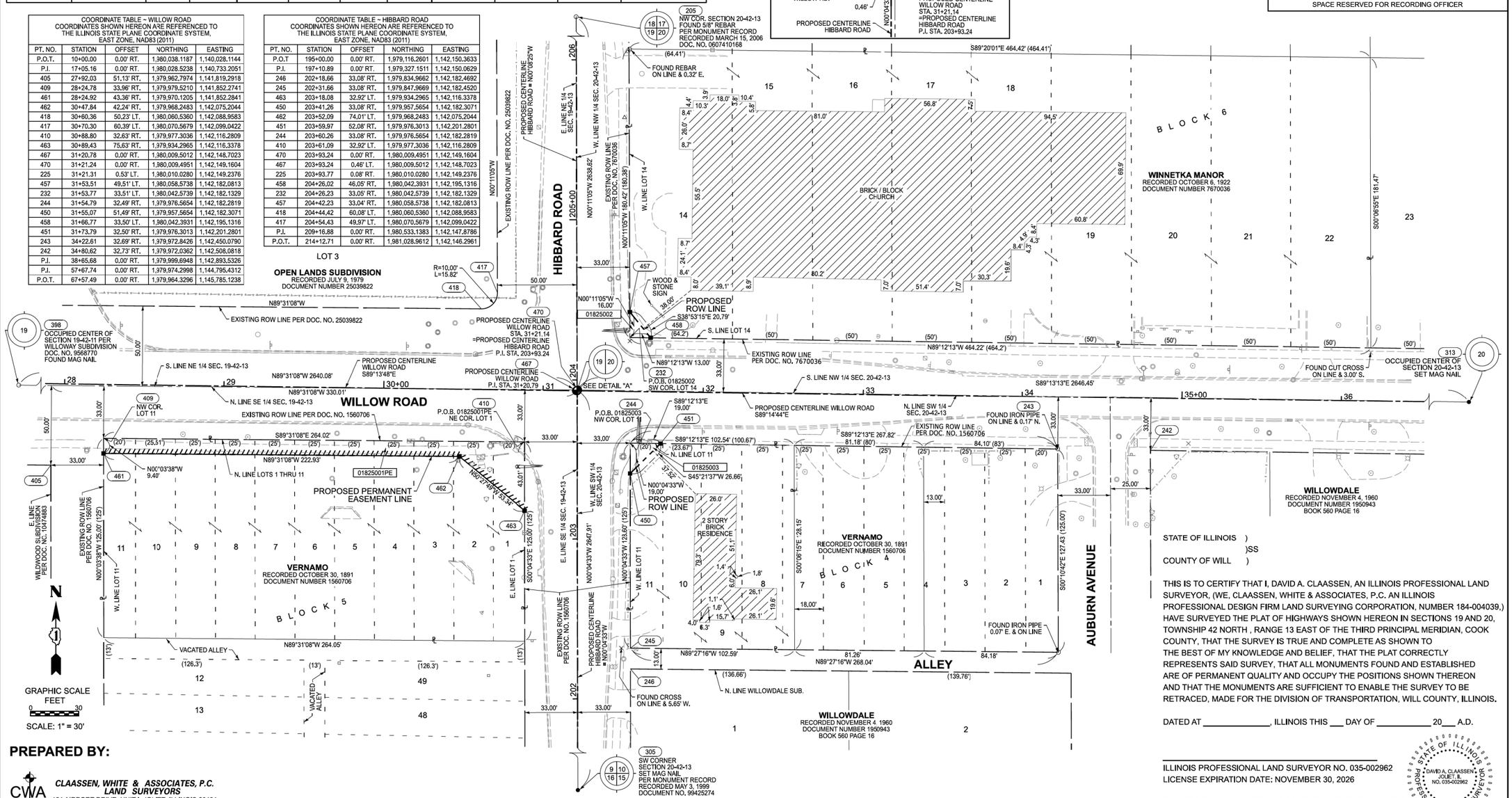


STATE OF ILLINOIS )
)SS
COUNTY OF WILL )

THIS IS TO CERTIFY THAT I, DAVID A. CLAASSEN, AN ILLINOIS PROFESSIONAL LAND SURVEYOR, (WE, CLAASSEN, WHITE & ASSOCIATES, P.C. AN ILLINOIS PROFESSIONAL DESIGN FIRM LAND SURVEYING CORPORATION, NUMBER 184-004039,) HAVE SURVEYED THE PLAT OF HIGHWAYS SHOWN HEREON IN SECTIONS 19 AND 20, TOWNSHIP 42 NORTH , RANGE 13 EAST OF THE THIRD PRINCIPAL MERIDIAN, COOK COUNTY, THAT THE SURVEY IS TRUE AND COMPLETE AS SHOWN TO THE BEST OF MY KNOWLEDGE AND BELIEF, THAT THE PLAT CORRECTLY REPRESENTS SAID SURVEY, THAT ALL MONUMENTS FOUND AND ESTABLISHED ARE OF PERMANENT QUALITY AND OCCUPY THE POSITIONS SHOWN THEREON AND THAT THE MONUMENTS ARE SUFFICIENT TO ENABLE THE SURVEY TO BE RETRACED, MADE FOR THE DIVISION OF TRANSPORTATION, WILL COUNTY, ILLINOIS.

DATED AT _____, ILLINOIS THIS ___ DAY OF _____ 20___ A.D.

_____
ILLINOIS PROFESSIONAL LAND SURVEYOR NO. 035-002962
LICENSE EXPIRATION DATE: NOVEMBER 30, 2026

STATE OF ILLINOIS · DAVID A. CLAASSEN · JOLIET, IL · NO. 035-002962 · PROFESSIONAL LAND SURVEYOR

THIS PROFESSIONAL SERVICE CONFORMS TO THE CURRENT ILLINOIS MINIMUM STANDARDS FOR A BOUNDARY SURVEY.

**PREPARED BY:**

CWA SURVEY

*CLAASSEN, WHITE & ASSOCIATES, P.C.*
*LAND SURVEYORS*
121 AIRPORT DRIVE, UNIT I, JOLIET, ILLINOIS 60431
(815) 744-3720 claassenwhite@cwasurvey.com
CWA Job #7673

MODEL: SHEET
FILE NAME: P:\Projects\7673 Strand Willow Road\Microstation ORD\7673-ROW-Sheet 3.dgn

| | | | |
|---|---|---|---|
| PLOTTED BY: = JMH | FIELD - 09/04/2025 | REVISED - | |
| FIELD WORK COMPLETED = 09/04/2025 | DRAWN - JMH | REVISED - | |
| PLOT SCALE = 1"=30' | CHECKED - KAG | REVISED - | |
| PLOT DATE = 09/08/2025 | DATE - 09/05/2025 | REVISED - | |

**VILLAGE OF WINNETKA**
**ILLINOIS DEPARTMENT OF TRANSPORTATION**
**PLAT OF HIGHWAYS**

| | | |
|---|---|---|
| F.A. RTE.: | SECTION: 08-00103-00-FP | COUNTY: COOK JOB NO.: R-90-018-25 |
| | STA 27+92.03 TO STA 36+00 | ROUTE: WILLOW ROAD |
| | | SHEET NO. 3 OF 3 SHEETS |

MODEL: Default
FILE NAME: S:\JOL\1600-1699\1619\058\Drawings\CAD\Micros-SSA\CAD_Sheets\1619058-PH-POH.dgn

STRAND ASSOCIATES®
1170 SOUTH HOUBOLT ROAD
JOLIET, ILLINOIS 60431
(815) 744-4200

| | | |
|---|---|---|
| USER NAME = AlexaM | DESIGNED - | REVISED - |
| | DRAWN - | REVISED - |
| PLOT SCALE = 2.0000 ' / in. | CHECKED - | REVISED - |
| PLOT DATE = 7/8/2026 | DATE - 2/27/2026 | REVISED - |

**STATE OF ILLINOIS**
**DEPARTMENT OF TRANSPORTATION**

**PLAT OF HIGHWAYS**

SCALE: SHEET 3 OF 3 SHEETS STA. TO STA.

| F.A.U. RTE. | SECTION | COUNTY | TOTAL SHEETS | SHEET NO. |
|---|---|---|---|---|
| 3561 | 08-00103-00-FP | COOK | 254 | 109 |

CONTRACT NO. 61M29
ILLINOIS FED. AID PROJECT

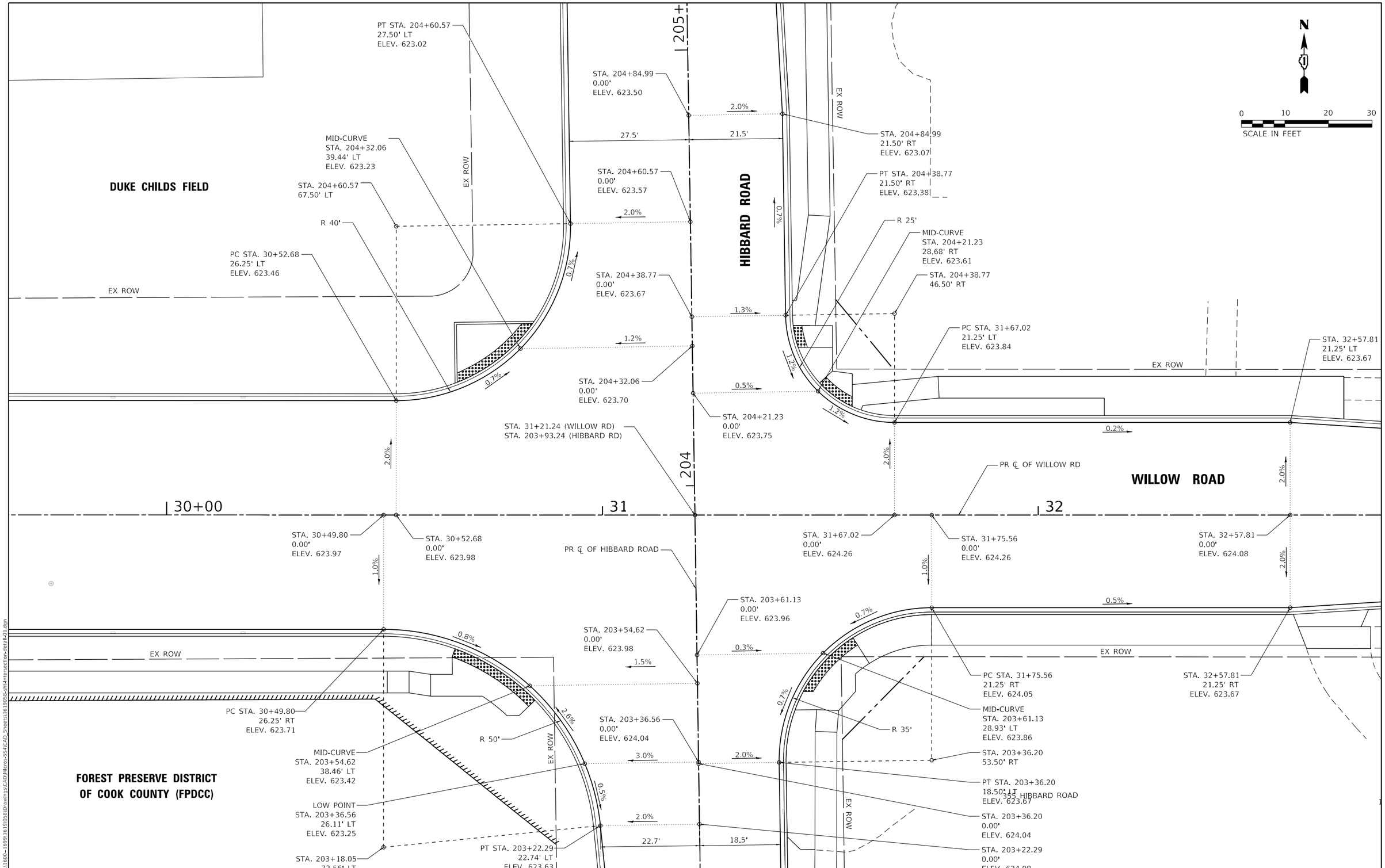


MODEL: Default
FILE NAME: S:\DL\1600-1699\1619058\Drawings\CAD\Micro-SSA\CAD_Sheets\1619058-int-Intersection-detail-01.dgn

STRAND ASSOCIATES®
1170 SOUTH HOUBOLT ROAD
JOLIET, ILLINOIS 60431
(815) 744-4200

| | | |
|---|---|---|
| USER NAME = AlexaM | DESIGNED - | REVISED - |
| | DRAWN - | REVISED - |
| PLOT SCALE = 20.0000 ' / in. | CHECKED - | REVISED - |
| PLOT DATE = 7/8/2026 | DATE - 2/27/2026 | REVISED - |

**STATE OF ILLINOIS**
**DEPARTMENT OF TRANSPORTATION**

**INTERSECTION GRADING DETAIL**
**WILLOW ROAD**

SCALE: 1" = 10' | SHEET 1 OF 9 SHEETS | STA. N/A TO STA. N/A

| F.A.U. RTE. | SECTION | COUNTY | TOTAL SHEETS | SHEET NO. |
|---|---|---|---|---|
| 3561 | 08-00103-00-FP | COOK | 254 | 110 |
| | | CONTRACT NO. 61M29 | | |
| | | ILLINOIS | FED. AID PROJECT | |

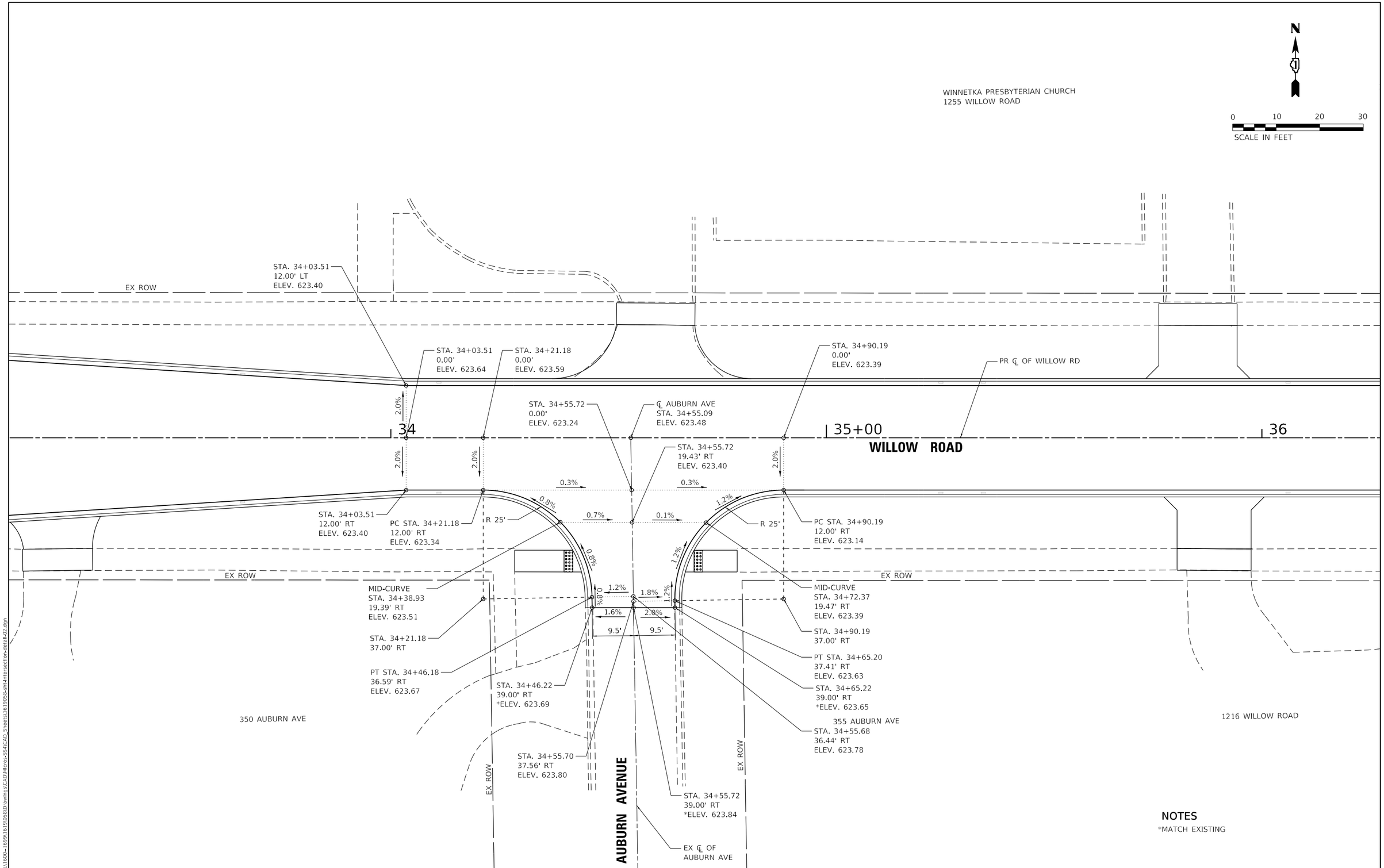


MODEL: Default
FILE NAME: S:\OL\1600-1699\1619058\Drawings\CADMicro-SS4\CAD_Sheets\1619058-sht-intersection-detail-02.dgn

STRAND ASSOCIATES®
1170 SOUTH HOUBOLT ROAD
JOLIET, ILLINOIS 60431
(815) 744-4200

| | | |
|---|---|---|
| USER NAME = AlexaM | DESIGNED - | REVISED - |
| | DRAWN - | REVISED - |
| PLOT SCALE = 20.0000 ' / in. | CHECKED - | REVISED - |
| PLOT DATE = 7/8/2026 | DATE - 2/27/2026 | REVISED - |

**STATE OF ILLINOIS**
**DEPARTMENT OF TRANSPORTATION**

**INTERSECTION GRADING DETAIL**
**WILLOW ROAD**

SCALE: 1" = 10' | SHEET 2 OF 9 SHEETS | STA. N/A TO STA. N/A

| F.A.U. RTE. | SECTION | COUNTY | TOTAL SHEETS | SHEET NO. |
|---|---|---|---|---|
| 3561 | 08-00103-00-FP | COOK | 254 | 111 |

CONTRACT NO. 61M29

ILLINOIS FED. AID PROJECT

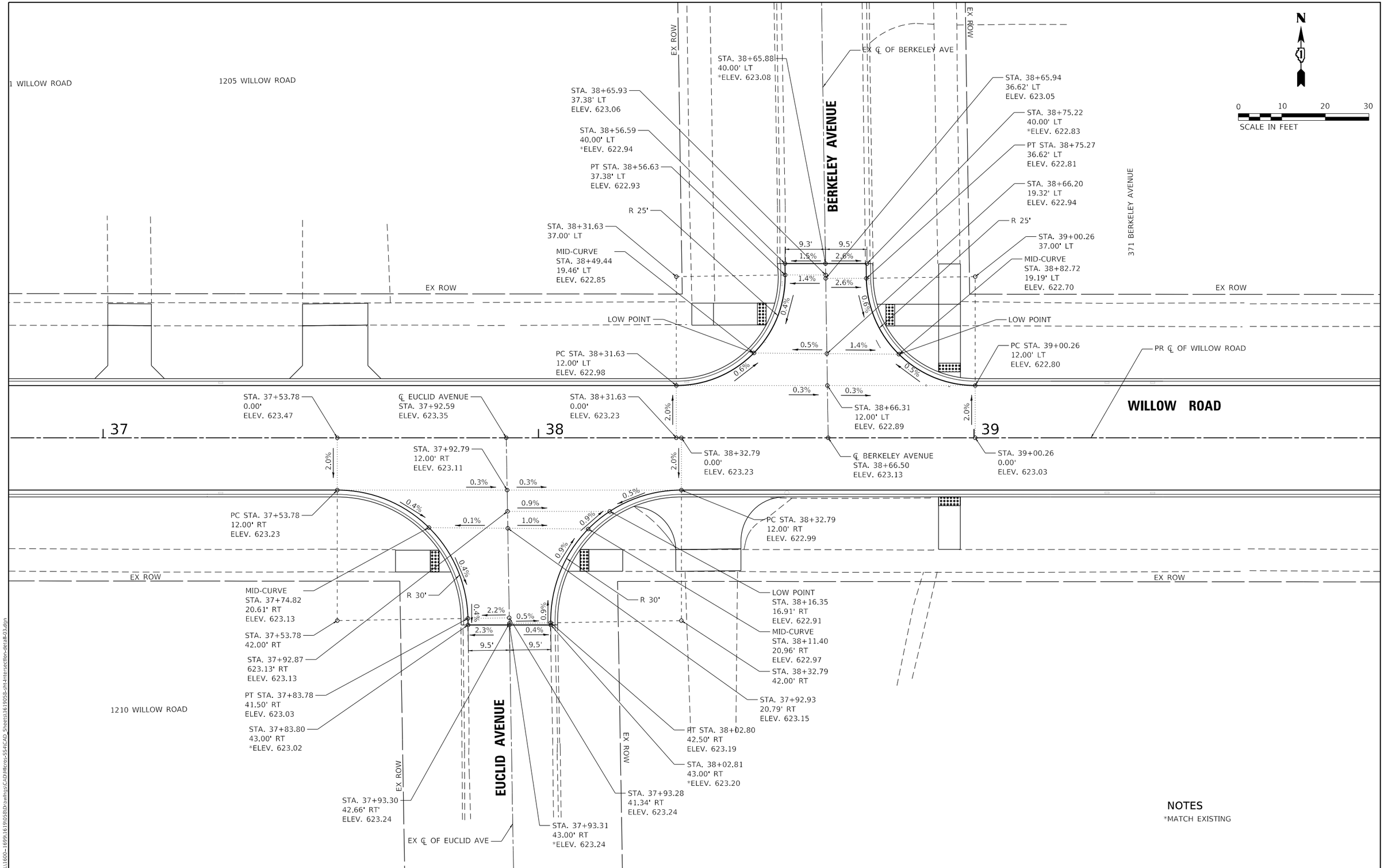


## NOTES

*MATCH EXISTING

MODEL: Default
FILE NAME: S:\CDL\1600-1699\1619058\Drawings\CAD\Microstation\Sheets\1619058-int-Intersection-detail-03.dgn


STRAND ASSOCIATES®
1170 SOUTH HOUBOLT ROAD
JOLIET, ILLINOIS 60431
(815) 744-4200


| | | | |
|---|---|---|---|
| USER NAME = AlexaM | DESIGNED - | REVISED - | |
| | DRAWN - | REVISED - | |
| PLOT SCALE = 20.0000 ' / in. | CHECKED - | REVISED - | |
| PLOT DATE = 7/8/2026 | DATE - 2/27/2026 | REVISED - | |

**STATE OF ILLINOIS**
**DEPARTMENT OF TRANSPORTATION**

**INTERSECTION GRADING DETAIL**
**WILLOW ROAD**

SCALE: 1" = 10' | SHEET 3 OF 9 SHEETS | STA. N/A TO STA. N/A

| F.A.U. RTE. | SECTION | COUNTY | TOTAL SHEETS | SHEET NO. |
|---|---|---|---|---|
| 3561 | 08-00103-00-FP | COOK | 254 | 112 |
| | | CONTRACT NO. 61M29 | | |
| | | ILLINOIS | FED. AID PROJECT | |

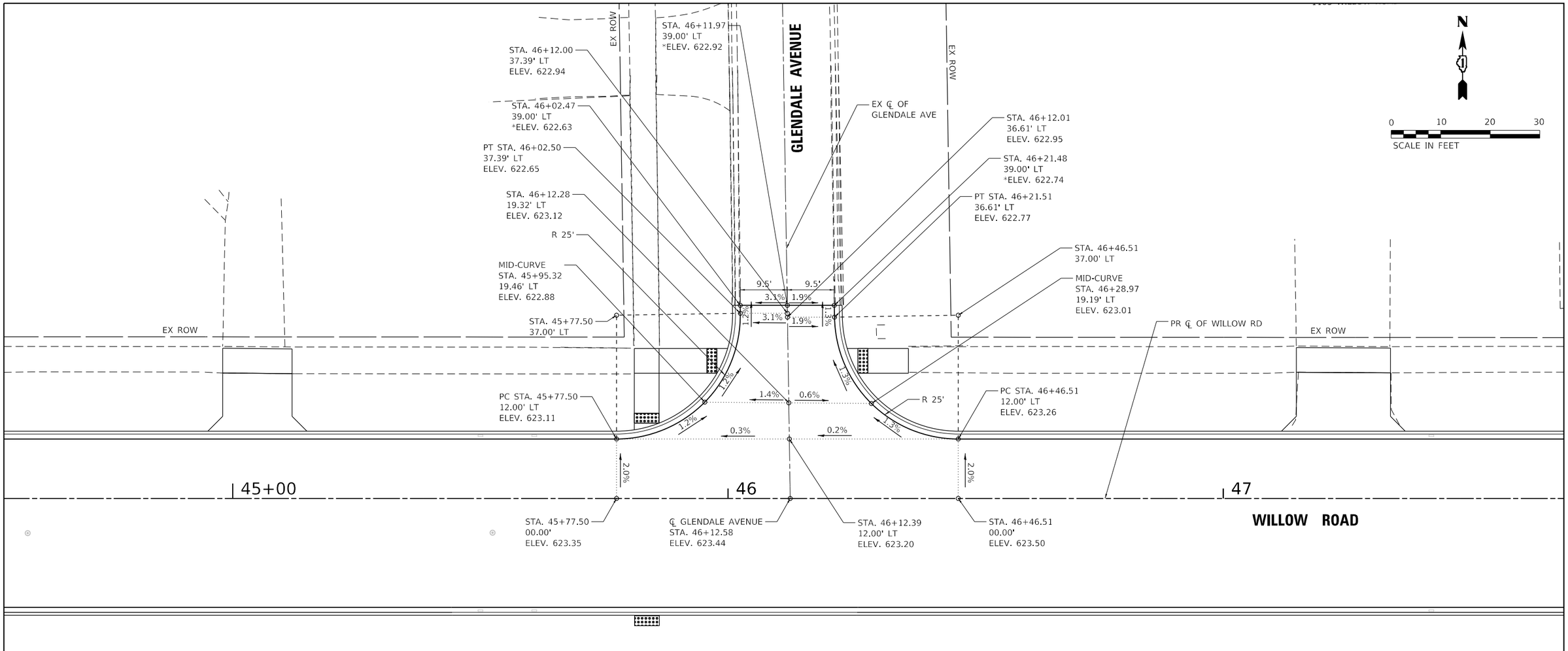

NOTES

*MATCH EXISTING

MODEL: Default
FILE NAME: S:\CDL\1600-1699\1619058\Drawings\CAD\Micros-SSA\CAD_Sheets\1619058-int-Intersection-detail-01.dgn

| | | | | | |
|---|---|---|---|---|---|
| STRAND ASSOCIATES® 1170 SOUTH HOUBOLT ROAD JOLIET, ILLINOIS 60431 (815) 744-4200 | USER NAME = AlexaM | DESIGNED - | REVISED - | STATE OF ILLINOIS DEPARTMENT OF TRANSPORTATION | INTERSECTION GRADING DETAIL WILLOW ROAD |
| | | DRAWN - | REVISED - | | |
| | PLOT SCALE = 20.0000 ' / in. | CHECKED - | REVISED - | | |
| | PLOT DATE = 7/8/2026 | DATE - 2/27/2026 | REVISED - | | SCALE: 1" = 10' SHEET 4 OF 9 SHEETS STA. N/A TO STA. N/A |

| F.A.U. RTE. | SECTION | COUNTY | TOTAL SHEETS | SHEET NO. |
|---|---|---|---|---|
| 3561 | 08-00103-00-FP | COOK | 254 | 113 |
| | | CONTRACT NO. 61M29 | | |
| | | ILLINOIS | FED. AID PROJECT | |

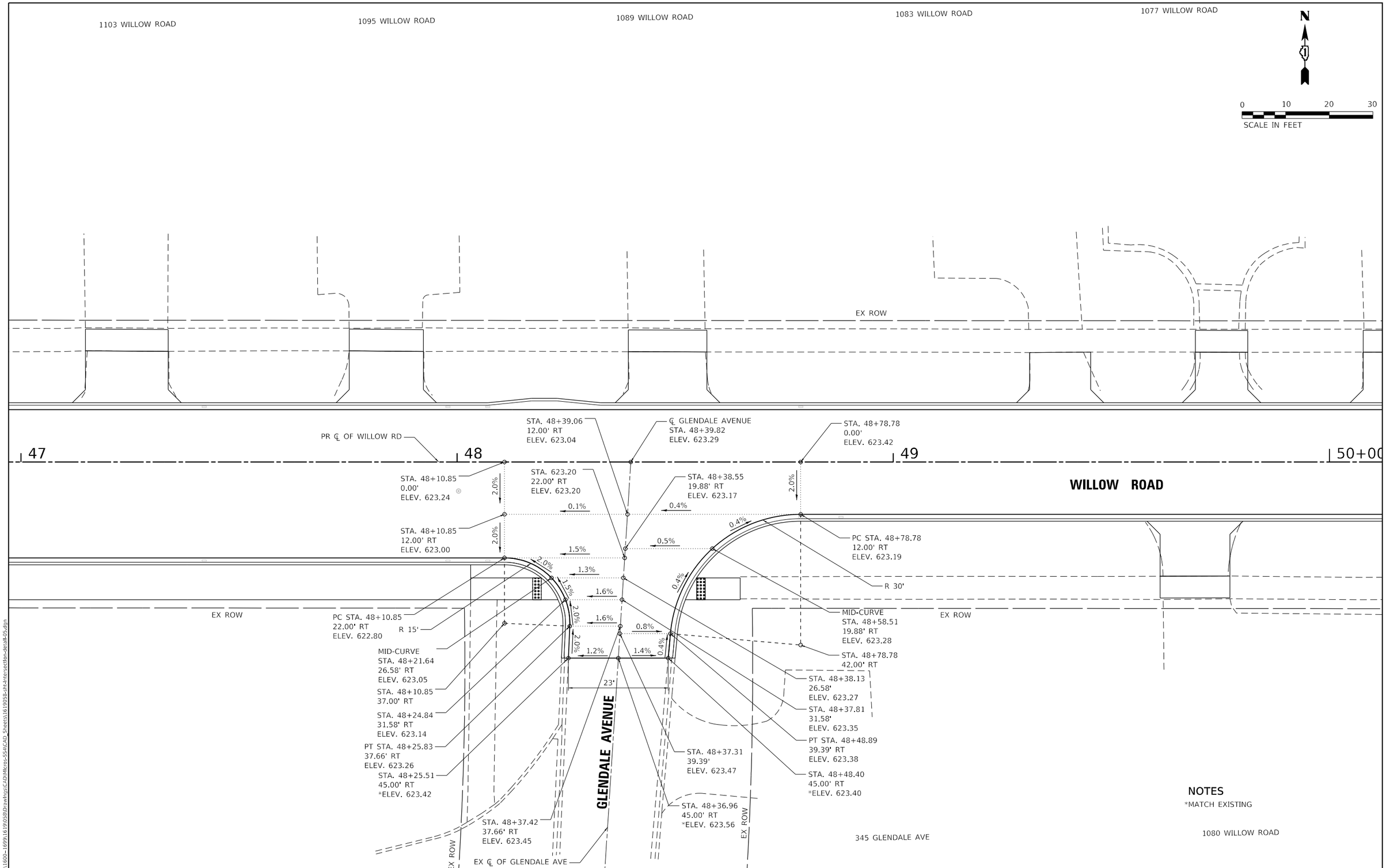


MODEL: Default
FILE NAME: S:\JOL\1600-1699\1619058\Drawings\CAD\Micro-SS4\CAD_Sheets\1619058-int-intersection-detail-05.dgn

STRAND ASSOCIATES®
1170 SOUTH HOUBOLT ROAD
JOLIET, ILLINOIS 60431
(815) 744-4200

| | | |
|---|---|---|
| USER NAME = AlexaM | DESIGNED - | REVISED - |
| | DRAWN - | REVISED - |
| PLOT SCALE = 20.0000 ' / in. | CHECKED - | REVISED - |
| PLOT DATE = 7/8/2026 | DATE - 2/27/2026 | REVISED - |

**STATE OF ILLINOIS**
**DEPARTMENT OF TRANSPORTATION**

**INTERSECTION GRADING DETAIL**
**WILLOW ROAD**

SCALE: 1" = 10' | SHEET 5 OF 9 SHEETS | STA. N/A TO STA. N/A

| F.A.U. RTE. | SECTION | COUNTY | TOTAL SHEETS | SHEET NO. |
|---|---|---|---|---|
| 3561 | 08-00103-00-FP | COOK | 254 | 114 |
| | | CONTRACT NO. 61M29 | | |
| | ILLINOIS | FED. AID PROJECT | | |

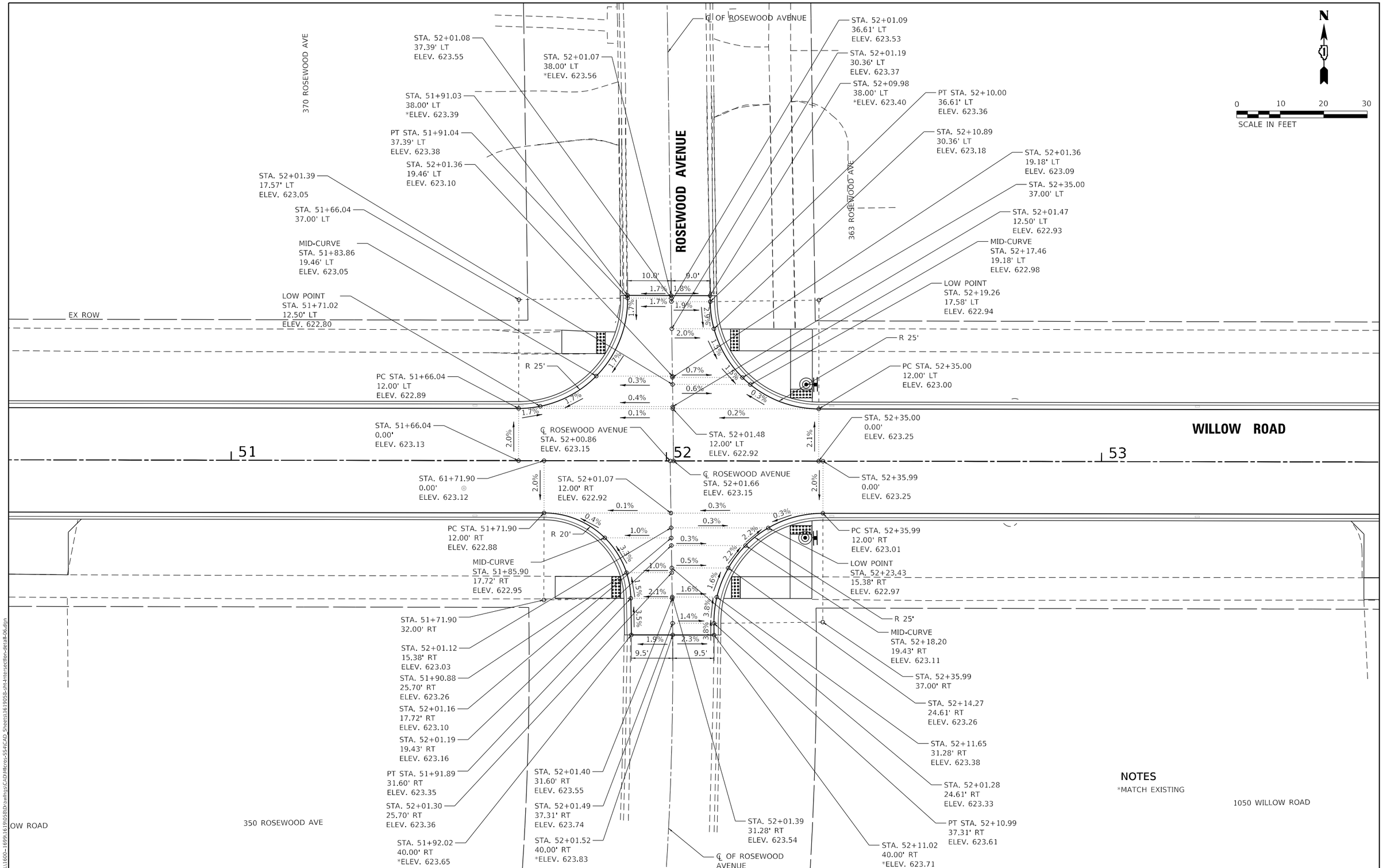


NOTES

*MATCH EXISTING

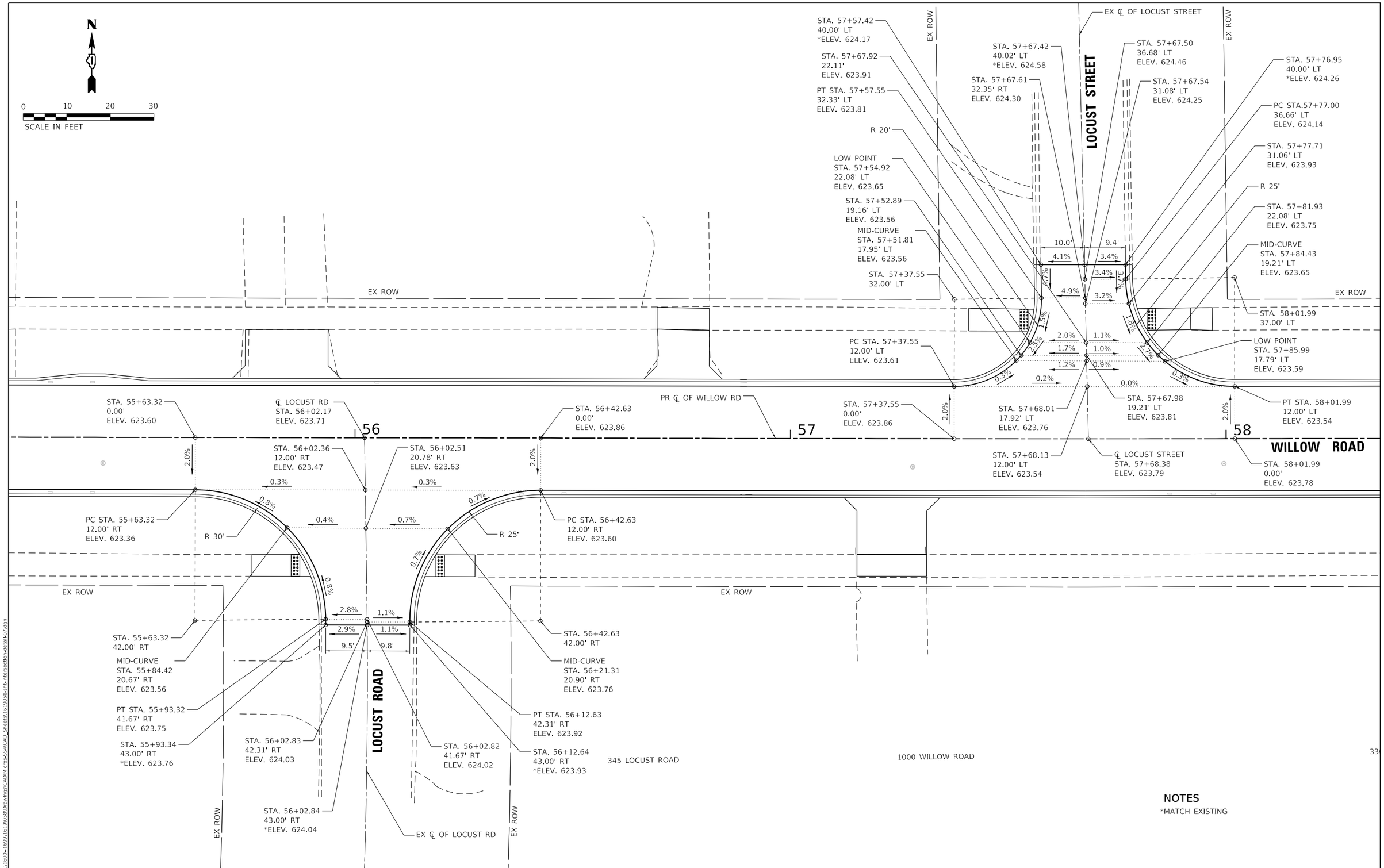


NOTES

*MATCH EXISTING

MODEL: Default
FILE NAME: S:\JOL\1600-1699\1619\038\Drawings\CAD\Micros-Sta\CAD_Sheets\1619038-int-intersection-detail-07.dgn

| | | | | | |
|---|---|---|---|---|---|
| STRAND ASSOCIATES® 1170 SOUTH HOUBOLT ROAD JOLIET, ILLINOIS 60431 (815) 744-4200 | USER NAME = AlexaM | DESIGNED - | REVISED - | STATE OF ILLINOIS DEPARTMENT OF TRANSPORTATION | INTERSECTION GRADING DETAIL WILLOW ROAD |
| | | DRAWN - | REVISED - | | |
| | PLOT SCALE = 20.0000 ' / in. | CHECKED - | REVISED - | | |
| | PLOT DATE = 7/8/2026 | DATE - 2/27/2026 | REVISED - | | SCALE: 1" = 10' SHEET 7 OF 9 SHEETS STA. N/A TO STA. N/A |

| F.A.U. RTE. | SECTION | COUNTY | TOTAL SHEETS | SHEET NO. |
|---|---|---|---|---|
| 3561 | 08-00103-00-FP | COOK | 254 | 116 |
| | | CONTRACT NO. 61M29 | | |
| | | ILLINOIS FED. AID PROJECT | | |

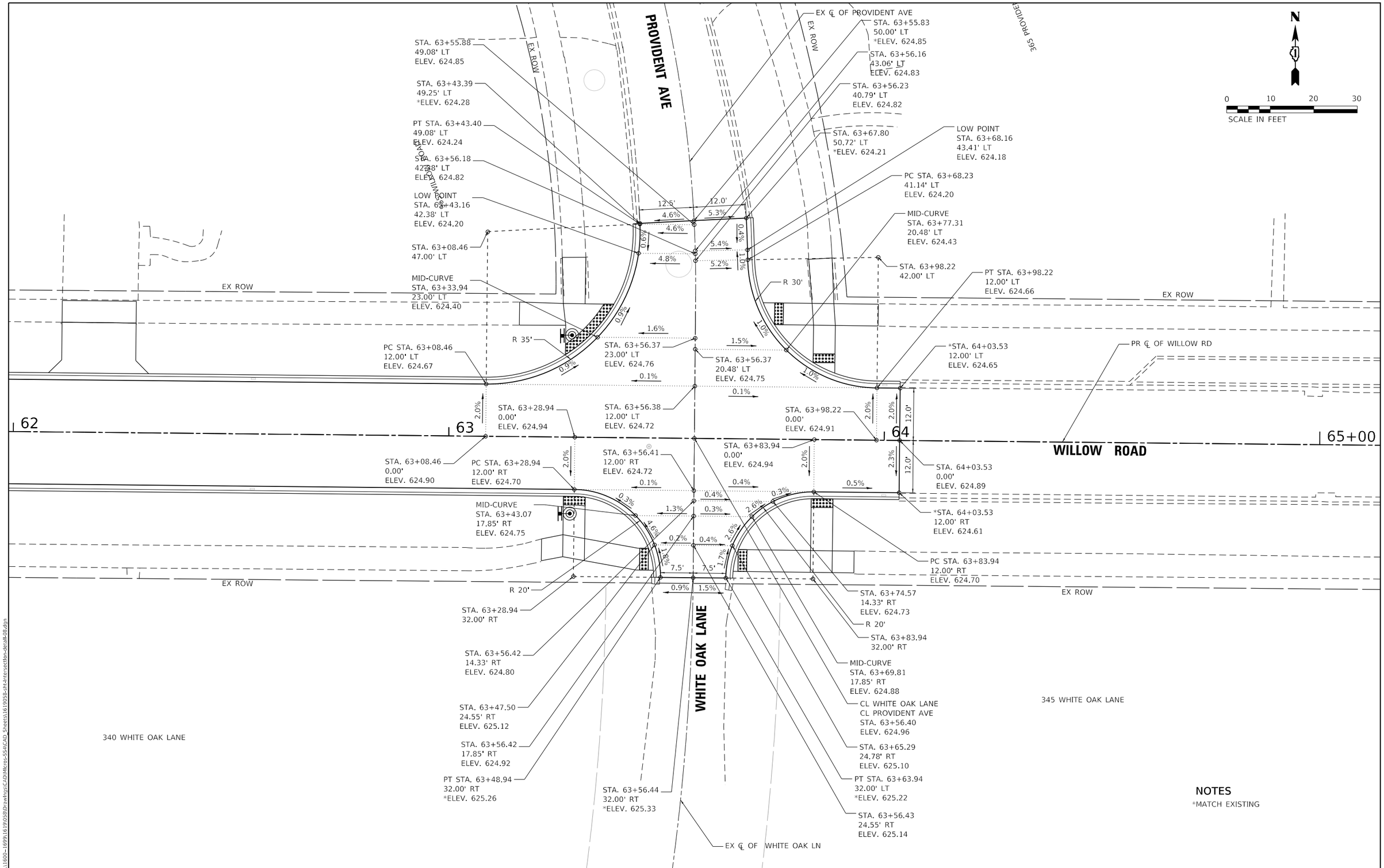


## NOTES

*MATCH EXISTING

MODEL: Default
FILE NAME: S:\JOL\1660-1699\16190\38\Drawings\CAD\Micros-Sta\CAD Sheets\1619038-int-intersection-detail-08.dgn


STRAND ASSOCIATES®
1170 SOUTH HOUBOLT ROAD
JOLIET, ILLINOIS 60431
(815) 744-4200


| | | | |
|---|---|---|---|
| USER NAME = AlexaM | DESIGNED - | REVISED - | |
| | DRAWN - | REVISED - | |
| PLOT SCALE = 20.0000 ' / in. | CHECKED - | REVISED - | |
| PLOT DATE = 7/8/2026 | DATE - 2/27/2026 | REVISED - | |

**STATE OF ILLINOIS**
**DEPARTMENT OF TRANSPORTATION**

**INTERSECTION GRADING DETAIL**
**WILLOW ROAD**

SCALE: 1" = 10' | SHEET 8 OF 9 SHEETS | STA. N/A | TO STA. N/A

| F.A.U. RTE. | SECTION | COUNTY | TOTAL SHEETS | SHEET NO. |
|---|---|---|---|---|
| 3561 | 08-00103-00-FP | COOK | 254 | 117 |

CONTRACT NO. 61M29

ILLINOIS | FED. AID PROJECT

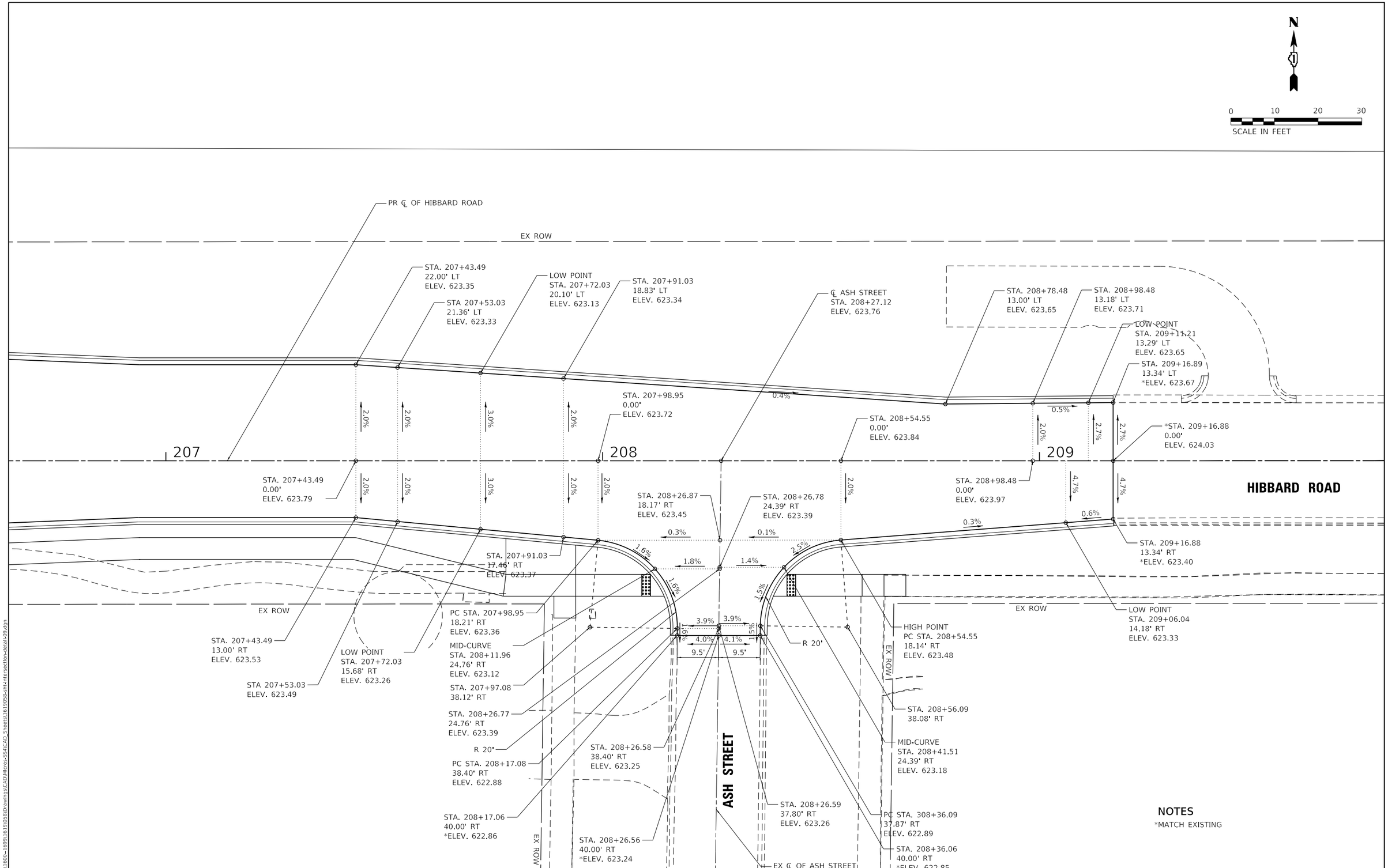


MODEL: Default
FILE NAME: S:\JOL\1600-1699\1619058\Drawings\CADMicro-SS4\CAD_Sheets\1619058-int-Intersection-detail-09.dgn

STRAND ASSOCIATES®
1170 SOUTH HOUBOLT ROAD
JOLIET, ILLINOIS 60431
(815) 744-4200

| | | | |
|---|---|---|---|
| USER NAME = AlexaM | DESIGNED - | REVISED - | |
| | DRAWN - | REVISED - | |
| PLOT SCALE = 20.0000 ' / in. | CHECKED - | REVISED - | |
| PLOT DATE = 7/8/2026 | DATE - 2/27/2026 | REVISED - | |

**STATE OF ILLINOIS**
**DEPARTMENT OF TRANSPORTATION**

**INTERSECTION GRADING DETAIL**
**HIBBARD ROAD**

SCALE: 1" = 10' | SHEET 9 OF 9 SHEETS | STA. N/A TO STA. N/A

| F.A.U. RTE. | SECTION | COUNTY | TOTAL SHEETS | SHEET NO. |
|---|---|---|---|---|
| 3561 | 08-00103-00-FP | COOK | 254 | 118 |

CONTRACT NO. 61M29

ILLINOIS | FED. AID PROJECT

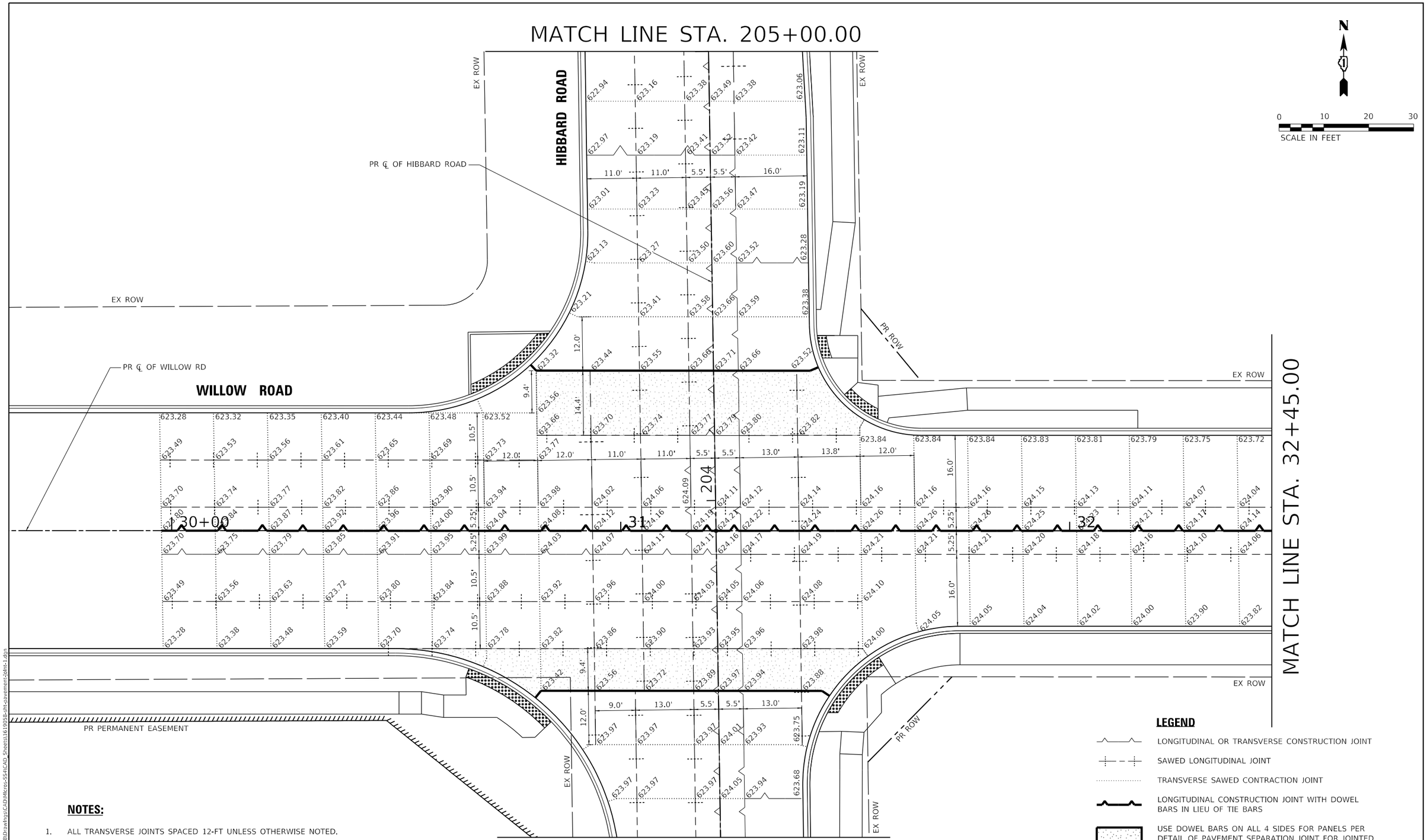


## NOTES:

1. ALL TRANSVERSE JOINTS SPACED 12-FT UNLESS OTHERWISE NOTED.
2. ELEVATIONS SHOWN AT CURB AND GUTTER LOCATIONS ARE EDGE OF PAVEMENT ELEVATIONS.

## LEGEND

- LONGITUDINAL OR TRANSVERSE CONSTRUCTION JOINT
- SAWED LONGITUDINAL JOINT
- TRANSVERSE SAWED CONTRACTION JOINT
- LONGITUDINAL CONSTRUCTION JOINT WITH DOWEL BARS IN LIEU OF TIE BARS
- USE DOWEL BARS ON ALL 4 SIDES FOR PANELS PER DETAIL OF PAVEMENT SEPARATION JOINT FOR JOINTED PCC PAVEMENTS AT INTERSECTIONS (BD 52)
- SLEEPER SLAB (PAVEMENT SEPARATION JOINT)

MODEL: Default
FILE NAME: $:\DOL\1600-1699\16190SB\Drawings\CAD\Micros-SS4\CAD_Sheets\16190SB-4th-pavement-joints-1.dgn


STRAND ASSOCIATES®
1170 SOUTH HOUBOLT ROAD
JOLIET, ILLINOIS 60431
(815) 744-4200


| | | |
|---|---|---|
| USER NAME = AlexaM | DESIGNED - | REVISED - |
| | DRAWN - | REVISED - |
| PLOT SCALE = 20.0000 ' / in. | CHECKED - | REVISED - |
| PLOT DATE = 7/8/2026 | DATE - 2/27/2026 | REVISED - |

**STATE OF ILLINOIS**
**DEPARTMENT OF TRANSPORTATION**

**PAVEMENT JOINTING DETAIL**
**WILLOW ROAD AND HIBBARD ROAD**

SCALE: 1" = 10' | SHEET 1 OF 2 SHEETS | STA. N/A | TO STA. N/A

| F.A.U. RTE. | SECTION | COUNTY | TOTAL SHEETS | SHEET NO. |
|---|---|---|---|---|
| 3561 | 08-00103-00-FP | COOK | 254 | 119 |

CONTRACT NO. 61M29

ILLINOIS | FED. AID PROJECT

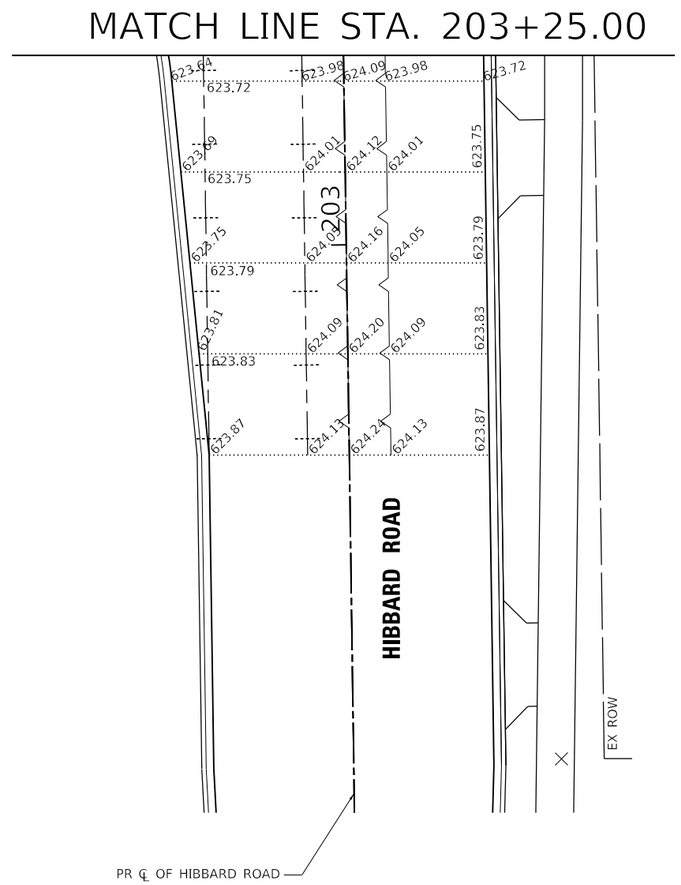


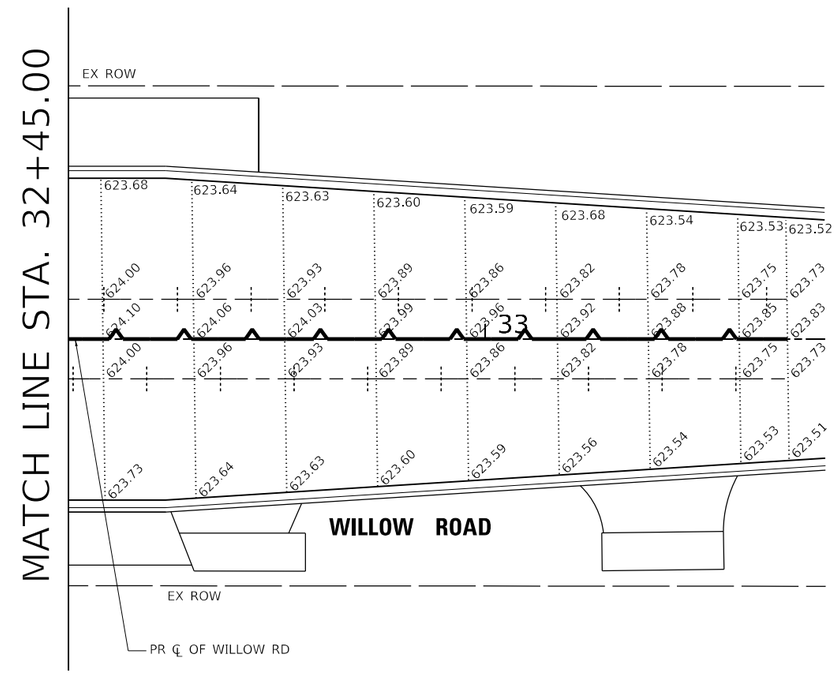


N

0 10 20 30
SCALE IN FEET

## LEGEND

- LONGITUDINAL OR TRANSVERSE CONSTRUCTION JOINT
- SAWED LONGITUDINAL JOINT
- TRANSVERSE SAWED CONTRACTION JOINT
- LONGITUDINAL CONSTRUCTION JOINT WITH DOWEL BARS IN LIEU OF TIE BARS
- USE DOWEL BARS ON ALL 4 SIDES FOR PANELS PER DETAIL OF PAVEMENT SEPARATION JOINT FOR JOINTED PCC PAVEMENTS AT INTERSECTIONS (BD 52)
- SLEEPER SLAB (PAVEMENT SEPARATION JOINT)

## NOTES:

1. ALL TRANSVERSE JOINTS SPACED 12-FT UNLESS OTHERWISE NOTED.
2. ELEVATIONS SHOWN AT CURB AND GUTTER LOCATIONS ARE EDGE OF PAVEMENT ELEVATIONS.

MODEL: Default
FILE NAME: S:\JOL\1660-1699\1619038\Drawings\CAD\Micros-SS4\CAD Sheets\1619038-alt-pavement-joint-2.dgn


STRAND ASSOCIATES®
1170 SOUTH HOUBOLT ROAD
JOLIET, ILLINOIS 60431
(815) 744-4200


| | | |
|---|---|---|
| USER NAME = AlexaM | DESIGNED - | REVISED - |
| | DRAWN - | REVISED - |
| PLOT SCALE = 20.0000 ' / in. | CHECKED - | REVISED - |
| PLOT DATE = 7/8/2026 | DATE - 2/27/2026 | REVISED - |

**STATE OF ILLINOIS**
**DEPARTMENT OF TRANSPORTATION**

**PAVEMENT JOINTING DETAIL**
**WILLOW ROAD AND HIBBARD ROAD**

SCALE: 1" = 10' | SHEET 2 OF 2 SHEETS | STA. N/A | TO STA. N/A

| F.A.U. RTE. | SECTION | COUNTY | TOTAL SHEETS | SHEET NO. |
|---|---|---|---|---|
| 3561 | 08-00103-00-FP | COOK | 254 | 120 |

CONTRACT NO. 61M29

ILLINOIS | FED. AID PROJECT

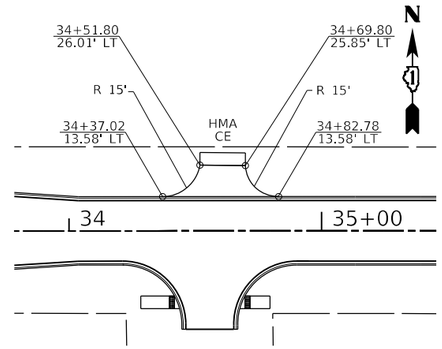


**WILLOW ROAD**
**STA. 34 + 60.79 LT**

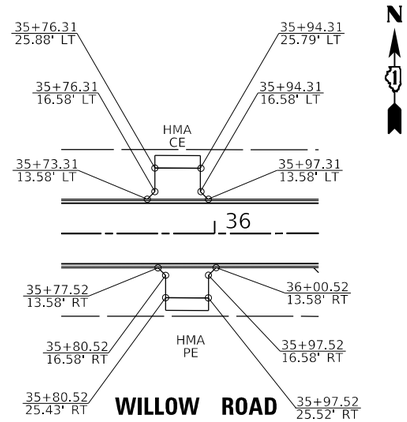


**WILLOW ROAD**
**STA. 35 + 85.31 LT**
**STA. 35 + 89.02 RT**

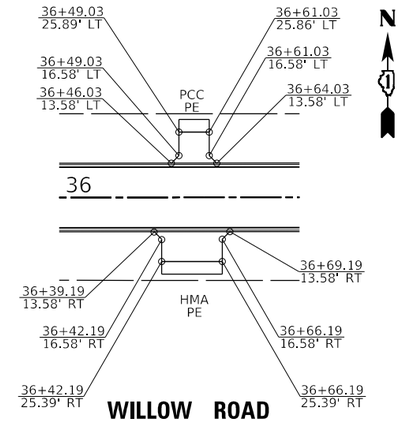


**WILLOW ROAD**
**STA. 36 + 55.03 LT**
**STA. 36 + 54.19 RT**

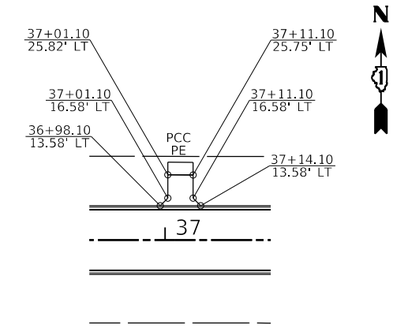


**WILLOW ROAD**
**STA. 37 + 06.10 LT**

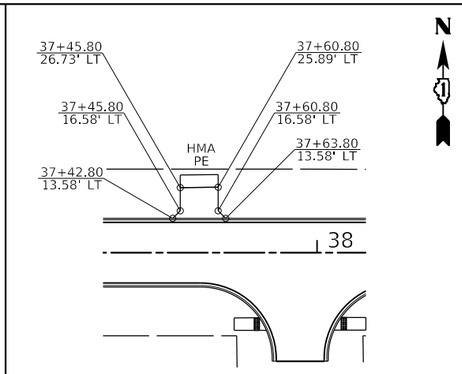


**WILLOW ROAD**
**STA. 37 + 55.89 LT**

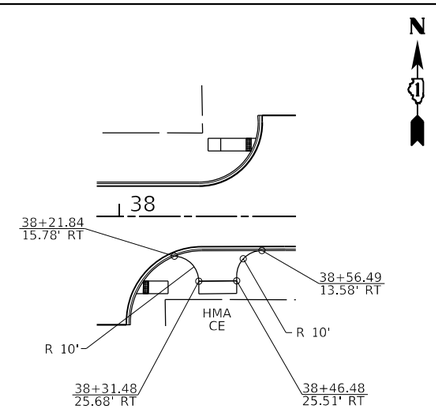


**WILLOW ROAD**
**STA. 38 + 38.98 RT**

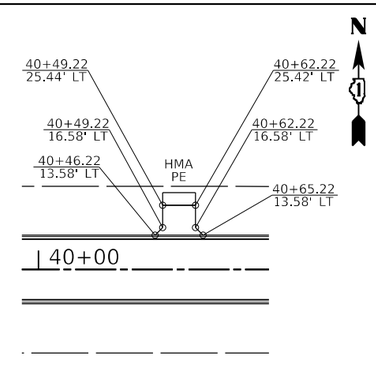


**WILLOW ROAD**
**STA. 40 + 55.72 LT**

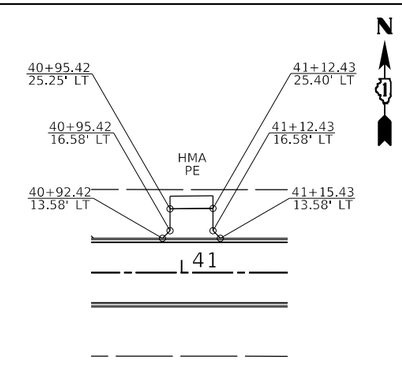


**WILLOW ROAD**
**STA. 41 + 03.93 LT**

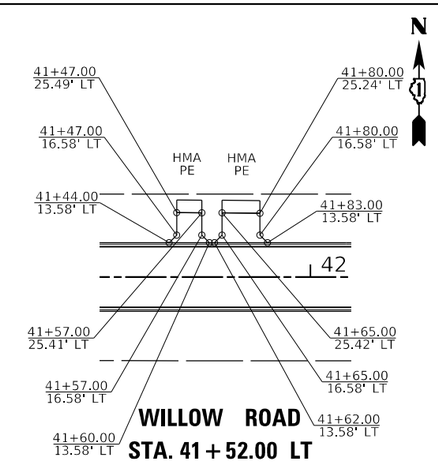


**WILLOW ROAD**
**STA. 41 + 52.00 LT**
**STA. 41 + 72.50 LT**

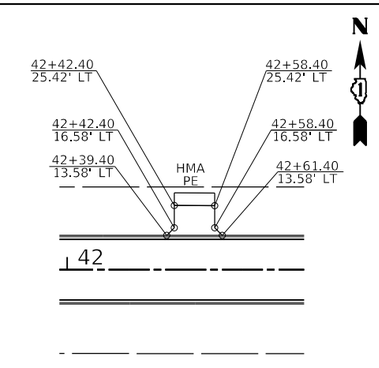


**WILLOW ROAD**
**STA. 42 + 50.40 LT**

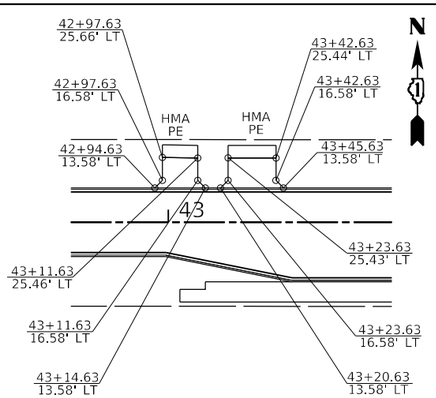


**WILLOW ROAD**
**STA. 43 + 04.63 LT**
**STA. 43 + 33.13 LT**

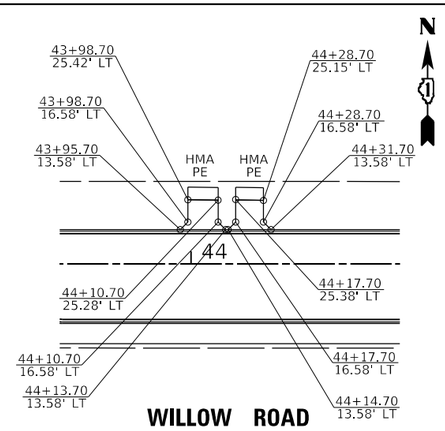


**WILLOW ROAD**
**STA. 44 + 04.70 LT**
**STA. 44 + 23.20 RT**

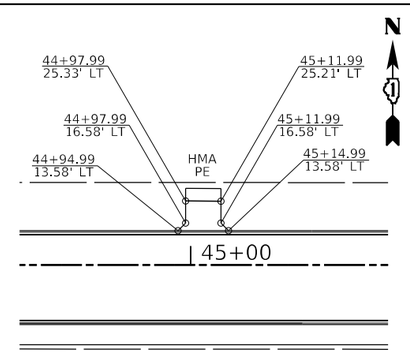


**WILLOW ROAD**
**STA. 45 + 04.99 LT**

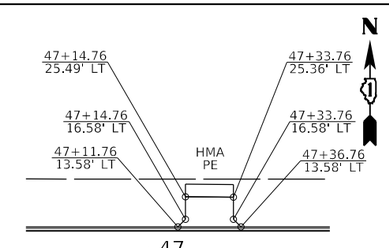


**WILLOW ROAD**
**STA. 47 + 24.26 LT**

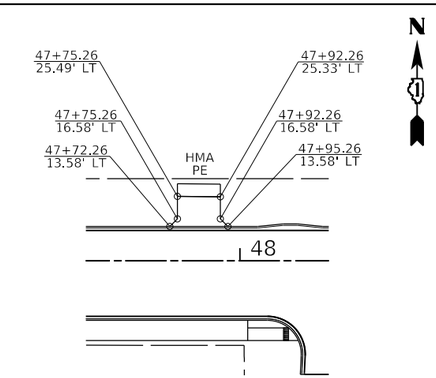


**WILLOW ROAD**
**STA. 47 + 83.76 LT**

MODEL: Default
FILE NAME: S:\DOL\1600-1699\1619058\Drawings\CADd\Micro-SS4\CAD_Sheets\1619058-sht-driveway-1.dgn


STRAND ASSOCIATES®
1170 SOUTH HOUBOLT ROAD
JOLIET, ILLINOIS 60431
(815) 744-4200


| | | | |
|---|---|---|---|
| USER NAME = AlexaM | DESIGNED - | REVISED - | |
| | DRAWN - | REVISED - | |
| PLOT SCALE = 60.0000 ' / in. | CHECKED - | REVISED - | |
| PLOT DATE = 7/8/2026 | DATE - 2/27/2026 | REVISED - | |

**STATE OF ILLINOIS**
**DEPARTMENT OF TRANSPORTATION**

**ENTRANCE DETAILS**
**WILLOW ROAD AND HIBBARD ROAD**

SCALE: N.T.S. | SHEET 1 OF 3 SHEETS | STA. N/A | TO STA. N/A

| F.A.U. RTE. | SECTION | COUNTY | TOTAL SHEETS | SHEET NO. |
|---|---|---|---|---|
| 3561 | 08-00103-00-FP | COOK | 254 | 121 |
| | | CONTRACT NO. 61M29 | | |
| | | ILLINOIS | FED. AID PROJECT | |

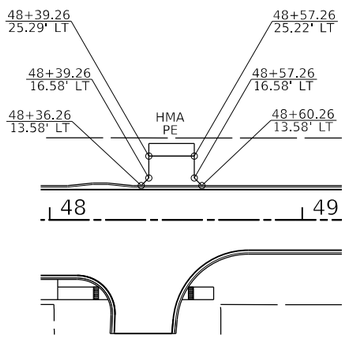


**WILLOW ROAD**
**STA. 48 + 48.26 LT**

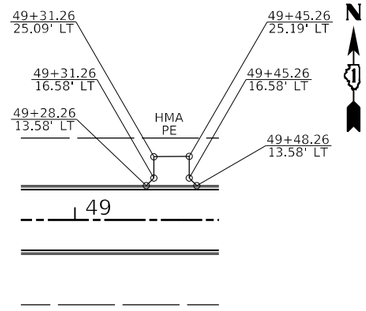


**WILLOW ROAD**
**STA. 49 + 38.26 LT**

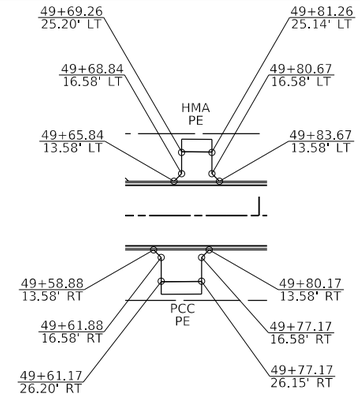


**WILLOW ROAD**
**STA. 49 + 69.17 RT**
**STA. 49 + 75.26 LT**

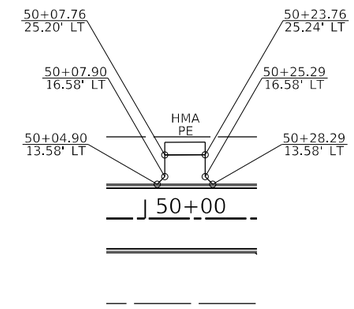


**WILLOW ROAD**
**STA. 50 + 16.26 LT**

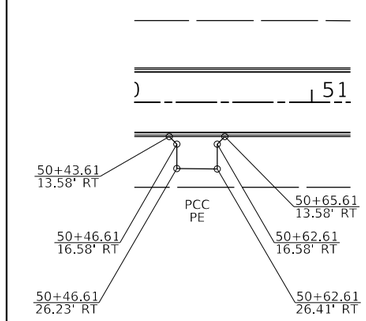


**WILLOW ROAD**
**STA. 50 + 54.61 RT**

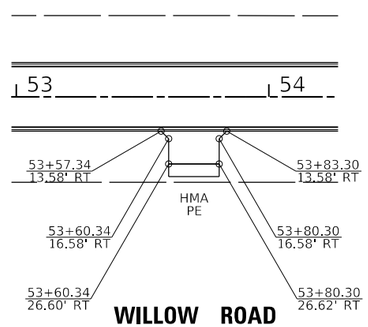


**WILLOW ROAD**
**STA. 53 + 70.34 RT**

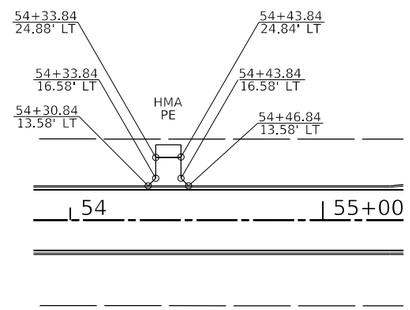


**WILLOW ROAD**
**STA. 54 + 38.84 LT**

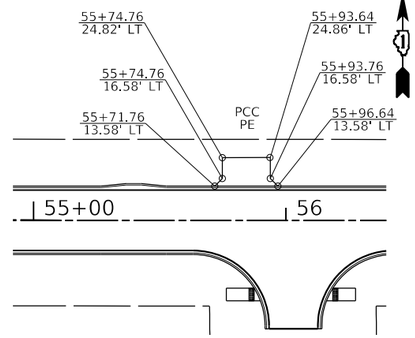


**WILLOW ROAD**
**STA. 55 + 87.26 LT**

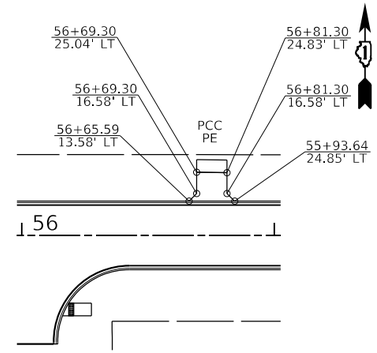


**WILLOW ROAD**
**STA. 56 + 75.30 LT**

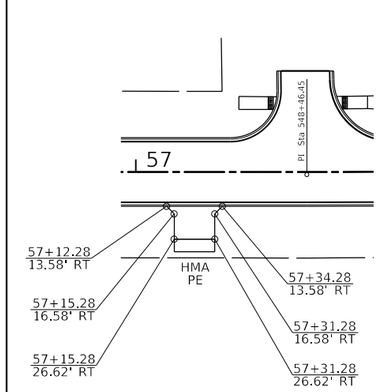


**WILLOW ROAD**
**STA. 57 + 23.28 RT**

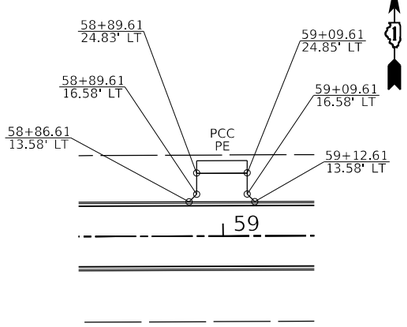


**WILLOW ROAD**
**STA. 58 + 99.61 LT**

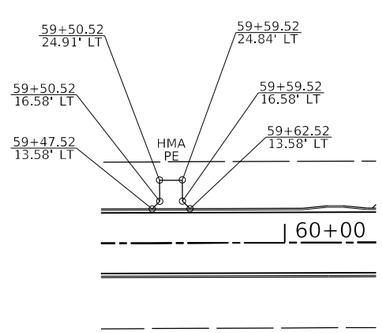


**WILLOW ROAD**
**STA. 59 + 55.02 LT**

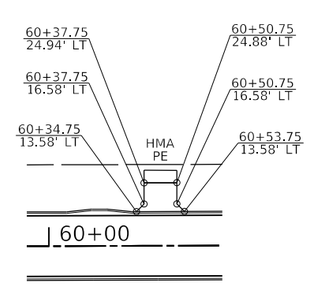


**WILLOW ROAD**
**STA. 60 + 44.25 LT**

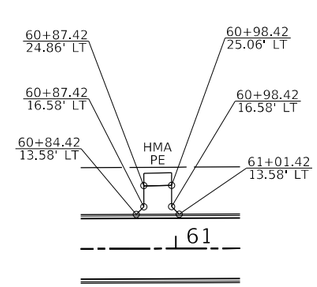


**WILLOW ROAD**
**STA. 60 + 92.92 LT**

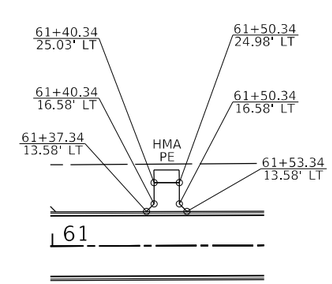


**WILLOW ROAD**
**STA. 61 + 45.34 LT**

MODEL: Default
FILE NAME: S:\DOL\1600-1699\1619058\Drawings\CADd\Micro-SS4\CAD_Sheets\1619058-sht-dtlr-ewy-2.dgn


STRAND ASSOCIATES®
1170 SOUTH HOUBOLT ROAD
JOLIET, ILLINOIS 60431
(815) 744-4200


| | | | |
|---|---|---|---|
| USER NAME = AlexaM | DESIGNED - | REVISED - | |
| | DRAWN - | REVISED - | |
| PLOT SCALE = 60.0000 ' / in. | CHECKED - | REVISED - | |
| PLOT DATE = 7/8/2026 | DATE - 2/27/2026 | REVISED - | |

**STATE OF ILLINOIS**
**DEPARTMENT OF TRANSPORTATION**

**ENTRANCE DETAILS**
**WILLOW ROAD AND HIBBARD ROAD**

SCALE: N.T.S. | SHEET 2 OF 3 SHEETS | STA. N/A TO STA. N/A

| F.A.U. RTE. | SECTION | COUNTY | TOTAL SHEETS | SHEET NO. |
|---|---|---|---|---|
| 3561 | 08-00103-00-FP | COOK | 254 | 122 |
| | | CONTRACT NO. 61M29 | | |
| | | ILLINOIS | FED. AID PROJECT | |

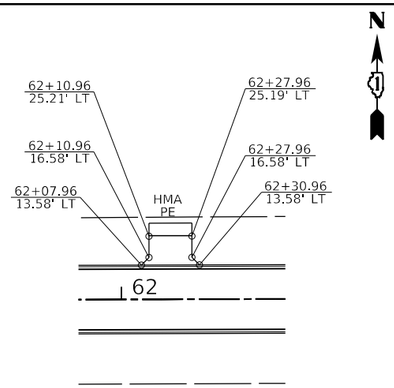


**WILLOW ROAD**
**STA. 62 + 19.46 LT**

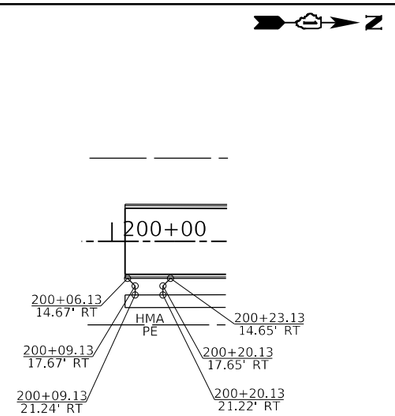


**HIBBARD ROAD**
**STA. 200 + 14.63 RT**

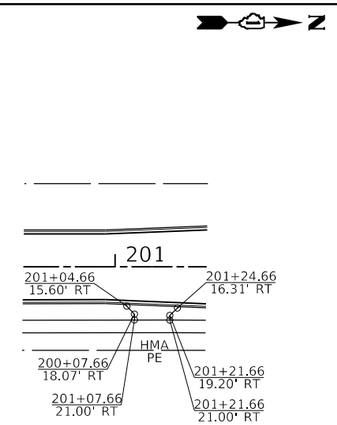


**HIBBARD ROAD**
**STA. 201 + 14.66 RT**

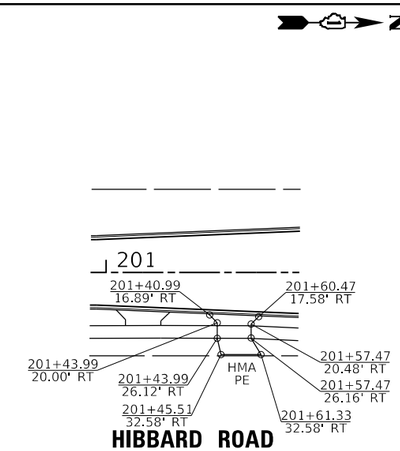


**HIBBARD ROAD**
**STA. 201 + 50.26 RT**

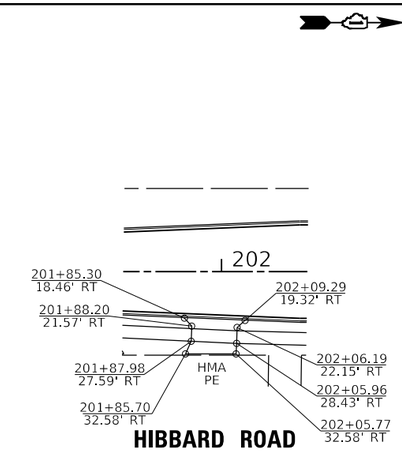


**HIBBARD ROAD**
**STA. 201 + 97.15 RT**

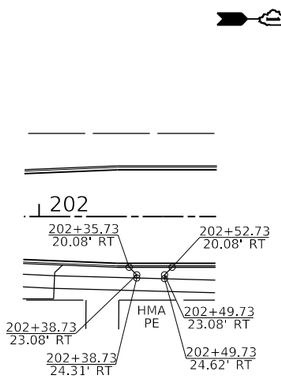


**HIBBARD ROAD**
**STA. 202 + 44.23 RT**

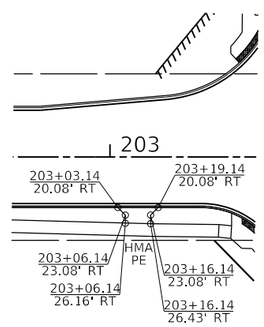


**HIBBARD ROAD**
**STA. 203 + 11.14 RT**

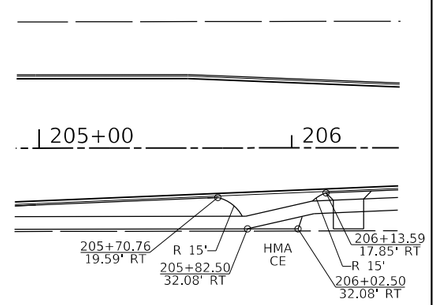


**HIBBARD ROAD**
**STA. 205 + 92.50 RT**

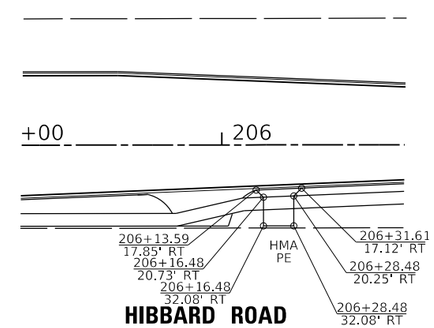


**HIBBARD ROAD**
**STA. 206 + 22.48 RT**

MODEL: Default
FILE NAME: S:\OL\1600-1699\1610\058\Drawings\CADMicro-SS4\CAD_Sheets\1610058-sht-driveway-3.dgn


STRAND ASSOCIATES®
1170 SOUTH HOUBOLT ROAD
JOLIET, ILLINOIS 60431
(815) 744-4200


| | | |
|---|---|---|
| USER NAME = AlexaM | DESIGNED - | REVISED - |
| | DRAWN - | REVISED - |
| PLOT SCALE = 60.0000 ' / in. | CHECKED - | REVISED - |
| PLOT DATE = 7/8/2026 | DATE - 2/27/2026 | REVISED - |

**STATE OF ILLINOIS**
**DEPARTMENT OF TRANSPORTATION**

**ENTRANCE DETAILS**
**WILLOW ROAD AND HIBBARD ROAD**

SCALE: N.T.S. | SHEET 3 OF 3 SHEETS | STA. N/A TO STA. N/A

| F.A.U. RTE. | SECTION | COUNTY | TOTAL SHEETS | SHEET NO. |
|---|---|---|---|---|
| 3561 | 08-00103-00-FP | COOK | 254 | 123 |
| | | CONTRACT NO. 61M29 | | |
| | ILLINOIS | FED. AID PROJECT | | |

## EXISTING SIGN SCHEDULE

| SIGN # | DESCRIPTION | DESIGNATION | EXISTING LOCATION | | | EXISTING SIZE | | REMOVE SIGN PANEL TYPE 1 (SQ FT) | REMOVE SIGN PANEL ASSEMBLY - TYPE A (EACH) | REMOVE AND RELOCATE SIGN PANEL ASSEMBLY - TYPE A (EACH) |
|---|---|---|---|---|---|---|---|---|---|---|
| | | | STATION | OFFSET RT/LT | SUPPORT TYPE | WIDTH (IN) | HEIGHT (IN) | | | |
| EX-WILL-WP-1001 | INTERSECTION WARNING | W2-2L | 12+65.45 | R | WOOD POST | 30.0 | 30.0 | 6.25 | 1 | 0 |
| EX-WILL-WP-1002 | STREET NAME (FOREST WAY DR) | D3-1 | 12+65.45 | R | WOOD POST | 30.0 | 8.0 | 1.67 | | 0 |
| EX-WILL-TS-1003 | SPEED LIMIT 35 | R2-1 | 15+93.96 | L | TELESCOPING STEEL | 30.0 | 36.0 | 7.50 | 1 | 0 |
| EX-WILL-TS-1004 | STOP SIGN | R1-1 | 16+69.44 | L | TELESCOPING STEEL | 30.0 | 30.0 | 6.25 | 1 | 0 |
| EX-WILL-TS-1005 | CROSS TRAFFIC DOES NOT STOP | W4-4P | 16+69.44 | L | TELESCOPING STEEL | 24.0 | 12.0 | 2.00 | | 0 |
| EX-WILL-TS-1006 | TWO-DIRECTION ARROW | W1-7 | 17+02.29 | R | TELESCOPING STEEL | 48.0 | 24.0 | 8.00 | 1 | 0 |
| EX-WILL-PM-1007 | STREET NAME (FOREST WAY DR) | D3-1 | 17+21.96 | L | POLE MOUNTED | 24.0 | 8.0 | 1.33 | 0 | 0 |
| EX-WILL-PM-1008 | STREET NAME (WILLOW RD) | D3-1 | 17+21.96 | L | POLE MOUNTED | 24.0 | 8.0 | 1.33 | 0 | 0 |
| EX-WILL-PM-1009 | DO NOT ENTER | R5-1 | 18+04.29 | R | POLE MOUNTED | 30.0 | 30.0 | 6.25 | 0 | 0 |
| EX-WILL-PM-1010 | DO NOT ENTER | R5-1 | 18+04.29 | R | POLE MOUNTED | 30.0 | 30.0 | 6.25 | 0 | 0 |
| EX-WILL-TS-1011 | TREE CITY | - | 18+37.88 | R | TELESCOPING STEEL | 12.0 | 15.0 | 1.25 | 1 | 0 |
| EX-WILL-TS-1012 | DELIVERIES USE EAST ENTRANCE | - | 18+37.88 | R | TELESCOPING STEEL | 12.0 | 9.0 | 0.75 | | 0 |
| EX-WILL-TS-1013 | SPEED LIMIT 35 | R2-1 | 19+12.03 | R | TELESCOPING STEEL | 24.0 | 30.0 | 5.00 | 1 | 0 |
| EX-WILL-TS-1014 | INTERSECTION WARNING | W2-2 | 20+61.64 | L | TELESCOPING STEEL | 30.0 | 30.0 | 6.25 | 1 | 0 |
| EX-WILL-TS-1015 | STREET NAME (FOREST WAY DRIVE) | D3-1 | 20+61.64 | L | TELESCOPING STEEL | 30.0 | 8.0 | 1.67 | | 0 |
| EX-WILL-TS-1016 | NO PARKING STOPPING OR STANDING | - | 20+61.64 | L | TELESCOPING STEEL | 12.0 | 15.0 | 1.25 | | 0 |
| EX-WILL-TS-1017 | DO NOT ENTER | R5-1 | 23+70.54 | L | TELESCOPING STEEL | 30.0 | 30.0 | 6.25 | 1 | 0 |
| EX-WILL-TS-1018 | NO COMMERCIAL VEHICLES | R5-4 | 23+70.54 | L | TELESCOPING STEEL | 24.0 | 30.0 | 5.00 | | 0 |
| EX-WILL-TS-1019 | NO PARKING STOPPING OR STANDING | - | 24+26.73 | R | TELESCOPING STEEL | 12.0 | 15.0 | 1.25 | 1 | 0 |
| EX-WILL-TS-1020 | NO PARKING STOPPING OR STANDING | - | 24+73.94 | L | TELESCOPING STEEL | 12.0 | 15.0 | 1.25 | 1 | 0 |
| EX-WILL-TS-1021 | SIGNAL AHEAD | W3-3 | 25+91.11 | R | TELESCOPING STEEL | 36.0 | 36.0 | 9.00 | 1 | 0 |
| EX-WILL-TS-1022 | STREET NAME (HIBBARD RD) | D3-1 | 25+91.11 | R | TELESCOPING STEEL | 30.0 | 8.0 | 1.67 | | 0 |
| EX-WILL-TS-1023 | NO PARKING STOPPING OR STANDING | - | 26+72.78 | L | TELESCOPING STEEL | 12.0 | 15.0 | 1.25 | 1 | 0 |
| EX-WILL-TS-1024 | NO PARKING STOPPING OR STANDING | - | 27+57.31 | R | TELESCOPING STEEL | 12.0 | 15.0 | 1.25 | 1 | 0 |
| EX-WILL-TS-1025 | ENTER ONLY | - | 27+85.17 | L | TELESCOPING STEEL | 12.0 | 15.0 | 1.25 | 1 | 0 |
| EX-WILL-TS-1026 | NO COMMERCIAL VEHICLES | R5-4 | 27+85.17 | L | TELESCOPING STEEL | 24.0 | 30.0 | 5.00 | | 0 |
| EX-WILL-TS-1027 | ENTER ONLY | - | 28+35.06 | L | TELESCOPING STEEL | 12.0 | 15.0 | 1.25 | 1 | 0 |
| EX-WILL-TS-1028 | NO COMMERCIAL VEHICLES | R5-4 | 28+35.06 | L | TELESCOPING STEEL | 24.0 | 30.0 | 5.00 | | 0 |
| EX-WILL-TS-1029 | NO PARKING STOPPING OR STANDING | - | 29+28.58 | L | TELESCOPING STEEL | 12.0 | 15.0 | 1.25 | 1 | 0 |
| EX-WILL-TS-1030 | NO PARKING STOPPING OR STANDING | - | 29+64.32 | R | TELESCOPING STEEL | 12.0 | 15.0 | 1.25 | 1 | 0 |
| EX-WILL-TS-1031 | SPEED LIMIT 35 | R2-1 | 30+14.02 | L | TELESCOPING STEEL | 30.0 | 36.0 | 7.50 | 1 | 0 |
| EX-WILL-TS-1032 | LANE ENDS | W4-2 | 32+00.00 | R | TELESCOPING STEEL | 36.0 | 36.0 | 9.00 | 1 | 0 |
| EX-WILL-TS-1033 | NO PARKING ANYTIME | R7-1 | 32+00.00 | R | TELESCOPING STEEL | 12.0 | 18.0 | 1.50 | | 0 |
| EX-WILL-TS-1034 | NO PARKING ANYTIME | R7-1 | 32+79.46 | L | TELESCOPING STEEL | 12.0 | 18.0 | 1.50 | 1 | 0 |
| EX-WILL-TS-1035 | NO PARKING ANYTIME | R7-1 | 32+84.23 | R | TELESCOPING STEEL | 12.0 | 18.0 | 1.50 | 1 | 0 |
| EX-WILL-TS-1036 | NO PARKING ANYTIME | R7-1 | 33+41.86 | L | TELESCOPING STEEL | 12.0 | 18.0 | 1.50 | 1 | 0 |
| EX-WILL-TS-1037 | STOP SIGN | R1-1 | 34+68.77 | R | TELESCOPING STEEL | 30.0 | 30.0 | 6.25 | 1 | 0 |
| EX-WILL-SP-1038 | STREET NAME (AUBURN AVE) | D3-1 | 34+80.02 | R | STEEL | 24.0 | 8.0 | 1.33 | 1 | 0 |
| EX-WILL-SP-1039 | STREET NAME (WILLOW RD) | D3-1 | 34+80.02 | R | STEEL | 24.0 | 8.0 | 1.33 | | 0 |
| EX-WILL-TS-1040 | SIGNAL AHEAD | W3-3 | 35+29.45 | L | TELESCOPING STEEL | 36.0 | 36.0 | 9.00 | 1 | 0 |
| EX-WILL-TS-1041 | STREET NAME (HIBBARD RD) | D3-1 | 35+29.45 | L | TELESCOPING STEEL | 30.0 | 8.0 | 1.67 | | 0 |
| EX-WILL-TS-1042 | SPEED LIMIT 30 | R2-1 | 36+17.66 | R | TELESCOPING STEEL | 24.0 | 30.0 | 5.00 | 1 | 0 |
| EX-WILL-TS-1043 | NO PARKING ANYTIME | R7-1 | 36+17.66 | R | TELESCOPING STEEL | 12.0 | 18.0 | 1.50 | | 0 |

## EXISTING SIGN SCHEDULE

| SIGN # | DESCRIPTION | DESIGNATION | EXISTING LOCATION | | | EXISTING SIZE | | REMOVE SIGN PANEL TYPE 1 (SQ FT) | REMOVE SIGN PANEL ASSEMBLY - TYPE A (EACH) | REMOVE AND RELOCATE SIGN PANEL ASSEMBLY - TYPE A (EACH) |
|---|---|---|---|---|---|---|---|---|---|---|
| | | | STATION | OFFSET RT/LT | SUPPORT TYPE | WIDTH (IN) | HEIGHT (IN) | | | |
| EX-WILL-TS-1044 | NO OUTLET | W14-2a | 37+66.61 | R | TELESCOPING STEEL | 24.0 | 6.0 | 1.00 | 1 | 0 |
| EX-WILL-TS-1045 | STREET NAME (EUCLID AVE) | D3-1 | 37+66.61 | R | TELESCOPING STEEL | 24.0 | 8.0 | 1.33 | | 0 |
| EX-WILL-TS-1046 | STREET NAME (WILLOW RD) | D3-1 | 37+66.61 | R | TELESCOPING STEEL | 24.0 | 8.0 | 1.33 | | 0 |
| EX-WILL-TS-1047 | STOP SIGN | R1-1 | 38+07.87 | R | TELESCOPING STEEL | 30.0 | 30.0 | 6.25 | 1 | 0 |
| EX-WILL-TS-1048 | STOP SIGN | R1-1 | 38+52.83 | L | TELESCOPING STEEL | 30.0 | 30.0 | 6.25 | 1 | 0 |
| EX-WILL-SP-1049 | STREET NAME (BERKELEY AVE) | D3-1 | 38+89.19 | L | STEEL | 24.0 | 8.0 | 1.33 | 1 | 0 |
| EX-WILL-SP-1050 | STREET NAME (WILLOW RD) | D3-1 | 38+89.19 | L | STEEL | 24.0 | 8.0 | 1.33 | | 0 |
| EX-WILL-TS-1051 | SCHOOL | S1-1 | 40+64.01 | R | TELESCOPING STEEL | 36.0 | 36.0 | 9.00 | 1 | 0 |
| EX-WILL-TS-1052 | AHEAD | W16-9P | 40+64.01 | R | TELESCOPING STEEL | 24.0 | 12.0 | 2.00 | | 0 |
| EX-WILL-TS-1053 | SPEED LIMIT 30 | R2-1 | 42+93.52 | L | TELESCOPING STEEL | 24.0 | 30.0 | 5.00 | 1 | 0 |
| EX-WILL-TS-1054 | END SCHOOL ZONE | S5-2 | 42+93.52 | L | TELESCOPING STEEL | 24.0 | 30.0 | 5.00 | | 0 |
| EX-WILL-SP-1055 | SCHOOL SPEED LIMIT 20 | S5-1 | 42+98.16 | R | STEEL | 36.0 | 36.0 | 9.00 | 1 | 0 |
| EX-WILL-SP-1056 | FINES HIGHER | R2-6P | 42+98.16 | R | STEEL | 24.0 | 18.0 | 3.00 | | 0 |
| EX-WILL-TS-1057 | NO PARKING SCHOOL BUS ONLY | - | 44+32.64 | R | TELESCOPING STEEL | 12.0 | 15.0 | 1.25 | 1 | 0 |
| EX-WILL-TS-1058 | VISITOR PARKING ONLY | - | 44+32.64 | R | TELESCOPING STEEL | 12.0 | 15.0 | 1.25 | | 0 |
| EX-WILL-TS-1059 | ARROW | W1-6 | 44+32.64 | R | TELESCOPING STEEL | 24.0 | 12.0 | 2.00 | | 0 |
| EX-WILL-TS-1060 | NO PARKING SCHOOL BUS ONLY | - | 45+39.49 | R | TELESCOPING STEEL | 12.0 | 15.0 | 1.25 | 1 | 0 |
| EX-WILL-TS-1061 | VISITOR PARKING ONLY | - | 45+39.49 | R | TELESCOPING STEEL | 12.0 | 15.0 | 1.25 | | 0 |
| EX-WILL-TS-1062 | LARGE ARROW | W1-6 | 45+39.49 | R | TELESCOPING STEEL | 24.0 | 12.0 | 2.00 | | 0 |
| EX-WILL-TS-1063 | SCHOOL | S1-1 | 45+58.01 | R | TELESCOPING STEEL | 36.0 | 36.0 | 9.00 | 1 | 0 |
| EX-WILL-TS-1064 | DOWNWARD DIAGONAL ARROW | W16-7P | 45+58.01 | R | TELESCOPING STEEL | 12.0 | 9.0 | 0.75 | | 0 |
| EX-WILL-TS-1065 | UNIDENTIFIABLE SIGN | - | 45+97.56 | L | TELESCOPING STEEL | 30.0 | 12.0 | 2.50 | 1 | 0 |
| EX-WILL-TS-1066 | STOP SIGN | R1-1 | 45+97.64 | L | TELESCOPING STEEL | 30.0 | 30.0 | 6.25 | 1 | 0 |
| EX-WILL-TS-1067 | UNIDENTIFIABLE SIGN | - | 46+26.58 | L | TELESCOPING STEEL | 30.0 | 12.0 | 2.50 | 1 | 0 |
| EX-WILL-SP-1068 | STREET NAME (GLENDALE AVE) | D3-1 | 46+39.16 | L | STEEL | 24.0 | 8.0 | 1.33 | 1 | 0 |
| EX-WILL-SP-1069 | STREET NAME (WILLOW RD) | D3-1 | 46+39.16 | L | STEEL | 24.0 | 8.0 | 1.33 | | 0 |
| EX-WILL-TS-1070 | SCHOOL | S1-1 | 46+44.49 | L | TELESCOPING STEEL | 36.0 | 36.0 | 9.00 | 1 | 0 |
| EX-WILL-TS-1071 | DOWNWARD DIAGONAL ARROW | W16-7P | 46+44.49 | L | TELESCOPING STEEL | 12.0 | 9.0 | 0.75 | | 0 |
| EX-WILL-TS-1072 | NO PARKING 8 AM - 4 PM | - | 46+66.38 | R | TELESCOPING STEEL | 12.0 | 15.0 | 1.25 | 1 | 0 |
| EX-WILL-TS-1073 | STREET NAME (GLENDALE AVE) | D3-1 | 48+19.04 | R | TELESCOPING STEEL | 24.0 | 8.0 | 1.33 | 1 | 0 |
| EX-WILL-TS-1074 | STREET NAME (WILLOW RD) | D3-1 | 48+19.04 | R | TELESCOPING STEEL | 24.0 | 8.0 | 1.33 | | 0 |
| EX-WILL-TS-1075 | UNIDENTIFIABLE SIGN | - | 48+19.04 | R | TELESCOPING STEEL | 30.0 | 12.0 | 2.50 | | 0 |
| EX-WILL-TS-1076 | STOP SIGN | R1-1 | 48+52.03 | R | TELESCOPING STEEL | 30.0 | 30.0 | 6.25 | 1 | 0 |
| EX-WILL-TS-1077 | UNIDENTIFIABLE SIGN | - | 48+52.03 | R | TELESCOPING STEEL | 30.0 | 12.0 | 2.50 | | 0 |
| EX-WILL-TS-1078 | NO ENTRY TO CIRCLE AFTER LEFT TURN | - | 48+69.24 | L | TELESCOPING STEEL | 12.0 | 12.0 | 1.00 | 1 | 0 |
| EX-WILL-TS-1079 | SPEED LIMIT 30 | R2-1 | 48+75.53 | R | TELESCOPING STEEL | 24.0 | 30.0 | 5.00 | 1 | 0 |
| EX-WILL-TS-1080 | END SCHOOL ZONE | S5-2 | 48+75.53 | R | TELESCOPING STEEL | 24.0 | 30.0 | 5.00 | | 0 |
| EX-WILL-SP-1081 | SCHOOL SPEED LIMIT 20 | S5-1 | 49+02.04 | L | STEEL | 24.0 | 48.0 | 8.00 | 1 | 0 |
| EX-WILL-SP-1082 | FINES HIGHER | R2-6P | 49+02.04 | L | STEEL | 24.0 | 18.0 | 3.00 | | 0 |
| EX-WILL-TS-1083 | SCHOOL | S1-1 | 51+11.29 | L | TELESCOPING STEEL | 36.0 | 36.0 | 9.00 | 1 | 0 |
| EX-WILL-TS-1084 | AHEAD | W16-9P | 51+11.29 | L | TELESCOPING STEEL | 24.0 | 12.0 | 2.00 | | 0 |
| EX-WILL-SP-1085 | STREET NAME (ROSEWOOD AVE) | D3-1 | 51+75.69 | L | STEEL | 24.0 | 8.0 | 1.33 | 1 | 0 |
| EX-WILL-SP-1086 | STREET NAME (WILLOW RD) | D3-1 | 51+75.69 | L | STEEL | 24.0 | 8.0 | 1.33 | | 0 |

## EXISTING SIGN SCHEDULE

| SIGN # | DESCRIPTION | DESIGNATION | EXISTING LOCATION | | | EXISTING SIZE | | REMOVE SIGN PANEL TYPE 1 (SQ FT) | REMOVE SIGN PANEL ASSEMBLY - TYPE A (EACH) | REMOVE AND RELOCATE SIGN PANEL ASSEMBLY - TYPE A (EACH) |
|---|---|---|---|---|---|---|---|---|---|---|
| | | | STATION | OFFSET RT/LT | SUPPORT TYPE | WIDTH (IN) | HEIGHT (IN) | | | |
| EX-WILL-TS-1087 | STOP SIGN | R1-1 | 51+84.36 | L | TELESCOPING STEEL | 30.0 | 30.0 | 6.25 | 1 | 0 |
| EX-WILL-WP-1088 | ROSEWOOD AVENUE | - | 51+88.01 | R | WOOD POST | 24.0 | 18.0 | 3.00 | 0 | 1 |
| EX-WILL-TS-1089 | STOP SIGN | R1-1 | 52+13.56 | R | TELESCOPING STEEL | 30.0 | 30.0 | 6.25 | 1 | 0 |
| EX-WILL-SP-1090 | PEDESTRIAN CROSSING | W11-2 | 52+34.27 | R | STEEL | 30.0 | 30.0 | 6.25 | 0 | 1 |
| EX-WILL-SP-1091 | DOWNWARD DIAGONAL ARROW | W16-7P | 52+34.27 | R | STEEL | 30.0 | 12.0 | 2.50 | 0 | |
| EX-WILL-SP-1092 | STOP FOR PEDESTRIANS WHEN FLASHING | - | 52+34.27 | R | STEEL | 30.0 | 12.0 | 2.50 | 0 | |
| EX-WILL-SP-1093 | PEDESTRIAN CROSSING | W11-2 | 52+34.27 | R | STEEL | 30.0 | 30.0 | 6.25 | 0 | |
| EX-WILL-SP-1094 | DOWNWARD DIAGONAL ARROW | W16-7P | 52+34.27 | R | STEEL | 30.0 | 12.0 | 2.50 | 0 | |
| EX-WILL-SP-1095 | STOP FOR PEDESTRIANS WHEN FLASHING | - | 52+34.27 | R | STEEL | 30.0 | 12.0 | 2.50 | 0 | |
| EX-WILL-SP-1096 | PEDESTRIAN CROSSING | W11-2 | 52+35.33 | L | STEEL | 30.0 | 30.0 | 6.25 | 0 | 1 |
| EX-WILL-SP-1097 | DOWNWARD DIAGONAL ARROW | W16-7P | 52+35.33 | L | STEEL | 30.0 | 12.0 | 2.50 | 0 | |
| EX-WILL-SP-1098 | STOP FOR PEDESTRIANS WHEN FLASHING | - | 52+35.33 | L | STEEL | 30.0 | 12.0 | 2.50 | 0 | |
| EX-WILL-SP-1099 | PEDESTRIAN CROSSING | W11-2 | 52+35.33 | L | STEEL | 30.0 | 30.0 | 6.25 | 0 | |
| EX-WILL-SP-1100 | DOWNWARD DIAGONAL ARROW | W16-7P | 52+35.33 | L | STEEL | 30.0 | 12.0 | 2.50 | 0 | |
| EX-WILL-SP-1101 | STOP FOR PEDESTRIANS WHEN FLASHING | - | 52+35.33 | L | STEEL | 30.0 | 12.0 | 2.50 | 0 | |
| EX-WILL-SP-1102 | STREET NAME (LOCUST RD) | D3-1 | 55+78.17 | R | STEEL | 24.0 | 8.0 | 1.33 | 1 | 0 |
| EX-WILL-SP-1103 | STREET NAME (WILLOW RD) | D3-1 | 55+78.17 | R | STEEL | 24.0 | 8.0 | 1.33 | | 0 |
| EX-WILL-TS-1104 | STOP SIGN | R1-1 | 56+16.21 | R | TELESCOPING STEEL | 30.0 | 30.0 | 6.25 | 1 | 0 |
| EX-WILL-WP-1105 | LOCUST ROAD | - | 56+18.45 | R | WOOD POST | 24.0 | 18.0 | 3.00 | 0 | 1 |
| EX-WILL-TS-1106 | SPEED LIMIT 30 | R2-1 | 56+99.92 | R | TELESCOPING STEEL | 24.0 | 30.0 | 5.00 | 1 | 0 |
| EX-WILL-TS-1107 | NO PARKING ANYTIME | R7-1 | 56+99.92 | R | TELESCOPING STEEL | 12.0 | 18.0 | 1.50 | | 0 |
| EX-WILL-PM-1108 | STREET NAME (LOCUST ST) | D3-1 | 57+45.22 | R | POLE MOUNTED | 24.0 | 8.0 | 1.33 | 0 | 0 |
| EX-WILL-PM-1109 | STREET NAME (WILLOW RD) | D3-1 | 57+45.22 | R | POLE MOUNTED | 24.0 | 8.0 | 1.33 | 0 | 0 |
| EX-WILL-TS-1110 | STOP SIGN | R1-1 | 57+52.55 | L | TELESCOPING STEEL | 30.0 | 30.0 | 6.25 | 1 | 0 |
| EX-WILL-TS-1111 | NO PARKING ANYTIME | R7-1 | 59+13.14 | R | TELESCOPING STEEL | 12.0 | 18.0 | 1.50 | 1 | 0 |
| EX-WILL-TS-1112 | NO PARKING ANYTIME | R7-1 | 61+61.08 | R | TELESCOPING STEEL | 12.0 | 18.0 | 1.50 | 1 | 0 |
| EX-WILL-PM-1113 | SPEED LIMIT 30 | R2-1 | 62+79.07 | L | POLE MOUNTED | 24.0 | 30.0 | 5.00 | 0 | 0 |
| EX-WILL-PM-1114 | NO PARKING ANYTIME | R7-1 | 62+79.07 | L | POLE MOUNTED | 12.0 | 18.0 | 1.50 | 0 | 0 |
| EX-WILL-SP-1115 | PEDESTRIAN CROSSING | W11-2 | 63+20.57 | R | STEEL | 30.0 | 30.0 | 6.25 | 0 | 1 |
| EX-WILL-SP-1116 | DOWNWARD DIAGONAL ARROW | W16-7P | 63+20.57 | R | STEEL | 30.0 | 12.0 | 2.50 | 0 | |
| EX-WILL-SP-1117 | STOP FOR PEDESTRIANS WHEN FLASHING | - | 63+20.57 | R | STEEL | 30.0 | 12.0 | 2.50 | 0 | |
| EX-WILL-SP-1118 | PEDESTRIAN CROSSING | W11-2 | 63+20.57 | R | STEEL | 30.0 | 30.0 | 6.25 | 0 | |
| EX-WILL-SP-1119 | DOWNWARD DIAGONAL ARROW | W16-7P | 63+20.57 | R | STEEL | 30.0 | 12.0 | 2.50 | 0 | |
| EX-WILL-SP-1120 | STOP FOR PEDESTRIANS WHEN FLASHING | - | 63+20.57 | R | STEEL | 30.0 | 12.0 | 2.50 | 0 | |
| EX-WILL-SP-1121 | PEDESTRIAN CROSSING | W11-2 | 63+23.48 | L | STEEL | 30.0 | 30.0 | 6.25 | 0 | 1 |
| EX-WILL-SP-1122 | DOWNWARD DIAGONAL ARROW | W16-7P | 63+23.48 | L | STEEL | 30.0 | 12.0 | 2.50 | 0 | |
| EX-WILL-SP-1123 | STOP FOR PEDESTRIANS WHEN FLASHING | - | 63+23.48 | L | STEEL | 30.0 | 12.0 | 2.50 | 0 | |
| EX-WILL-SP-1124 | PEDESTRIAN CROSSING | W11-2 | 63+23.48 | L | STEEL | 30.0 | 30.0 | 6.25 | 0 | |
| EX-WILL-SP-1125 | DOWNWARD DIAGONAL ARROW | W16-7P | 63+23.48 | L | STEEL | 30.0 | 12.0 | 2.50 | 0 | |
| EX-WILL-SP-1126 | STOP FOR PEDESTRIANS WHEN FLASHING | - | 63+23.48 | L | STEEL | 30.0 | 12.0 | 2.50 | 0 | |
| EX-WILL-TS-1127 | STOP SIGN | R1-1 | 63+38.30 | L | TELESCOPING STEEL | 30.0 | 30.0 | 6.25 | 1 | 0 |
| EX-WILL-SP-1128 | STREET NAME (WHITE OAK LN) | D3-1 | 63+80.17 | R | STEEL | 24.0 | 8.0 | 1.33 | 1 | 0 |
| EX-WILL-SP-1129 | STREET NAME (WILLOW RD) | D3-1 | 63+80.17 | R | STEEL | 24.0 | 8.0 | 1.33 | | 0 |

## EXISTING SIGN SCHEDULE

| SIGN # | DESCRIPTION | DESIGNATION | EXISTING LOCATION | | | EXISTING SIZE | | REMOVE SIGN PANEL TYPE 1 (SQ FT) | REMOVE SIGN PANEL ASSEMBLY - TYPE A (EACH) | REMOVE AND RELOCATE SIGN PANEL ASSEMBLY - TYPE A (EACH) |
|---|---|---|---|---|---|---|---|---|---|---|
| | | | STATION | OFFSET RT/LT | SUPPORT TYPE | WIDTH (IN) | HEIGHT (IN) | | | |
| EX-WILL-PM-1130 | STREET NAME (PROVIDENT AVE) | D3-1 | 63+99.83 | L | POLE MOUNTED | 24.0 | 8.0 | 1.33 | 0 | 0 |
| EX-WILL-PM-1131 | STOP FOR PEDESTRIAN | R1-6A | 63+99.83 | L | POLE MOUNTED | 12.0 | 36.0 | 3.00 | 0 | 0 |
| PR-WILL-PM-1132 | DOWNWARD DIAGONAL ARROW | W16-7P | 63+99.83 | L | POLE MOUNTED | 12.0 | 8.0 | 0.67 | 0 | 0 |
| | | | | | | | | | | |
| EX-HIBB-TS-2001 | NO PARKING ANYTIME | R7-1 | 200+36.10 | R | TELESCOPING STEEL | 12.0 | 18.0 | 1.50 | 1 | 0 |
| EX-HIBB-TS-2002 | SPEED LIMIT 30 | R2-1 | 200+96.06 | L | TELESCOPING STEEL | 24.0 | 30.0 | 5.00 | 1 | 0 |
| EX-HIBB-TS-2003 | NO PARKING ANYTIME | R7-1 | 200+96.06 | L | TELESCOPING STEEL | 12.0 | 18.0 | 1.50 | | 0 |
| EX-HIBB-TS-2004 | LANE ENDS | W4-2 | 202+36.89 | L | TELESCOPING STEEL | 36.0 | 36.0 | 9.00 | 1 | 0 |
| EX-HIBB-TS-2005 | LANE ENDS | W4-2 | 205+02.79 | R | TELESCOPING STEEL | 36.0 | 36.0 | 9.00 | 1 | 0 |
| EX-HIBB-TS-2006 | NO PARKING ANYTIME | R7-1 | 206+01.95 | L | TELESCOPING STEEL | 12.0 | 18.0 | 1.50 | 1 | 0 |
| EX-HIBB-TS-2007 | PACE BUS STOP 423 | - | 206+27.44 | L | TELESCOPING STEEL | 12.0 | 12.0 | 1.00 | 0 | 1 |
| EX-HIBB-TS-2008 | SPEED LIMIT 30 | R2-1 | 206+28.19 | R | TELESCOPING STEEL | 24.0 | 30.0 | 5.00 | 1 | 0 |
| EX-HIBB-WP-2009 | SIGNAL AHEAD | W3-3 | 207+52.75 | L | WOOD POST | 36.0 | 36.0 | 9.00 | 1 | 0 |
| EX-HIBB-WP-2010 | STREET NAME (WILLOW RD) | D3-1 | 207+52.75 | L | WOOD POST | 30.0 | 8.0 | 1.67 | | 0 |
| EX-HIBB-TS-2011 | NO PARKING ANYTIME | R7-1 | 207+74.71 | R | TELESCOPING STEEL | 12.0 | 18.0 | 1.50 | 1 | 0 |
| EX-HIBB-TS-2012 | PACE BUS STOP 423 | - | 207+74.74 | R | TELESCOPING STEEL | 12.0 | 12.0 | 1.00 | 0 | 1 |
| EX-HIBB-SP-2013 | STOP SIGN | R1-1 | 208+40.24 | R | STEEL | 30.0 | 30.0 | 6.25 | 1 | 0 |
| EX-HIBB-PM-2014 | STREET NAME (ASH ST) | D3-1 | 208+47.77 | R | POLE MOUNTED | 24.0 | 8.0 | 1.33 | 0 | 0 |
| EX-HIBB-PM-2015 | STREET NAME (HIBBARD RD) | D3-1 | 208+47.77 | R | POLE MOUNTED | 24.0 | 8.0 | 1.33 | 0 | 0 |
| | | | | | | | | | | |
| TOTAL | | | | | | | | 511.00 | 68.00 | 8.00 |

MODEL: Default
FILE NAME: S:\OL\1600-1699\1619058\Drawings\CAD\Micro-SS4\CAD_Sheets\1619058-sht-ex_signage-schedule.dgn


STRAND ASSOCIATES®
1170 SOUTH HOUBOLT ROAD
JOLIET, ILLINOIS 60431
(815) 744-4200


| | | |
|---|---|---|
| USER NAME = AlexaM | DESIGNED - | REVISED - |
| | DRAWN - | REVISED - |
| PLOT SCALE = 2.0000 ' / in. | CHECKED - | REVISED - |
| PLOT DATE = 7/8/2026 | DATE - | REVISED - |

**STATE OF ILLINOIS**
**DEPARTMENT OF TRANSPORTATION**

**SIGNING SCHEDULE**

SCALE: N/A | SHEET 2 OF 4 SHEETS | STA. N/A | TO STA. N/A

| F.A.U. RTE. | SECTION | COUNTY | TOTAL SHEETS | SHEET NO. |
|---|---|---|---|---|
| 3561 | 08-00103-00-FP | COOK | 254 | 125 |
| | | CONTRACT NO. 61M29 | | |
| | ILLINOIS | FED. AID PROJECT | | |

PROPOSED SIGN SCHEDULE

| SIGN # | DESCRIPTION | DESIGNATION | PROPOSED LOCATION | | | PROPOSED SIZE | | INSTALL | | |
|---|---|---|---|---|---|---|---|---|---|---|
| | | | STATION | OFFSET RT/LT | SUPPORT TYPE | WIDTH (IN) | HEIGHT (IN) | SIGN PANEL - TYPE 1 (SQ FT) | TELESCOPING STEEL SIGN SUPPORT (FT) | BASE FOR TELESCOPING STEEL SIGN SUPPORT (EACH) |
| PR-WILL-TS-1001 | INTERSECTION WARNING | W2-2L | 12+65.45 | R | TELESCOPING STEEL | 30.0 | 30.0 | 6.25 | 13.17 | 1 |
| PR-WILL-TS-1002 | STREET NAME (FOREST WAY DR) | D3-1 | 12+65.45 | R | TELESCOPING STEEL | 30.0 | 8.0 | 1.67 | | |
| PR-WILL-TS-1003 | SPEED LIMIT 35 | R2-1 | 15+93.96 | L | TELESCOPING STEEL | 30.0 | 36.0 | 7.50 | 15.00 | 1 |
| PR-WILL-TS-1004 | STOP SIGN | R1-1 | 16+69.44 | L | TELESCOPING STEEL | 30.0 | 30.0 | 6.25 | 13.50 | 1 |
| PR-WILL-TS-1005 | CROSS TRAFFIC DOES NOT STOP | W4-4P | 16+69.44 | L | TELESCOPING STEEL | 24.0 | 12.0 | 2.00 | | |
| PR-WILL-TS-1006 | TWO-DIRECTION ARROW | W1-7 | 17+02.29 | R | TELESCOPING STEEL | 48.0 | 24.0 | 8.00 | 14.00 | 1 |
| PR-WILL-PM-1007 | STREET NAME (FOREST WAY DR) | D3-1 | 17+21.96 | L | POLE MOUNTED | 24.0 | 8.0 | 1.33 | 0.00 | 0 |
| PR-WILL-PM-1008 | STREET NAME (WILLOW RD) | D3-1 | 17+21.96 | L | POLE MOUNTED | 24.0 | 8.0 | 1.33 | 0.00 | 0 |
| PR-WILL-PM-1009 | DO NOT ENTER | R5-1 | 18+04.29 | R | POLE MOUNTED | 30.0 | 30.0 | 6.25 | 0.00 | 0 |
| PR-WILL-PM-1010 | DO NOT ENTER | R5-1 | 18+04.29 | R | POLE MOUNTED | 30.0 | 30.0 | 6.25 | 0.00 | 0 |
| PR-WILL-TS-1011 | TREE CITY | - | 18+37.88 | R | TELESCOPING STEEL | 12.0 | 15.0 | 1.25 | 12.00 | 1 |
| PR-WILL-TS-1012 | DELIVERIES USE EAST ENTRANCE | - | 18+37.88 | R | TELESCOPING STEEL | 12.0 | 9.0 | 0.75 | | |
| PR-WILL-TS-1013 | SPEED LIMIT 35 | R2-1 | 19+12.03 | R | TELESCOPING STEEL | 24.0 | 30.0 | 5.00 | 14.50 | 1 |
| PR-WILL-TS-1014 | INTERSECTION WARNING | W2-2 | 20+61.64 | L | TELESCOPING STEEL | 30.0 | 30.0 | 6.25 | 14.42 | 1 |
| PR-WILL-TS-1015 | STREET NAME (FOREST WAY DRIVE) | D3-1 | 20+61.64 | L | TELESCOPING STEEL | 30.0 | 8.0 | 1.67 | | |
| PR-WILL-TS-1016 | NO PARKING STOPPING OR STANDING | - | 20+61.64 | L | TELESCOPING STEEL | 12.0 | 15.0 | 1.25 | | |
| PR-WILL-TS-1016A | RIGHT LANE MUST TURN RIGHT | R3-7R | 22+48.07 | R | TELESCOPING STEEL | 30.0 | 30.0 | 6.25 | 12.50 | 1 |
| PR-WILL-TS-1017 | DO NOT ENTER | R5-1 | 23+70.54 | L | TELESCOPING STEEL | 30.0 | 30.0 | 6.25 | 15.00 | 1 |
| PR-WILL-TS-1018 | NO COMMERCIAL VEHICLES | R5-4 | 23+70.54 | L | TELESCOPING STEEL | 24.0 | 30.0 | 5.00 | | |
| PR-WILL-TS-1019 | NO PARKING STOPPING OR STANDING | - | 24+26.73 | R | TELESCOPING STEEL | 12.0 | 15.0 | 1.25 | 13.25 | 1 |
| PR-WILL-TS-1020 | NO PARKING STOPPING OR STANDING | - | 24+73.94 | L | TELESCOPING STEEL | 12.0 | 15.0 | 1.25 | 13.25 | 1 |
| PR-WILL-TS-1021 | SIGNAL AHEAD | W3-3 | 25+91.11 | R | TELESCOPING STEEL | 36.0 | 36.0 | 9.00 | 15.67 | 1 |
| PR-WILL-TS-1022 | STREET NAME (HIBBARD RD) | W16-8P | 25+91.11 | R | TELESCOPING STEEL | 30.0 | 8.0 | 1.67 | | |
| PR-WILL-TS-1022A | MANDATORY MOVEMENT LANE CONTROL - TURN ONLY | R3-5 | 26+07.30 | R | TELESCOPING STEEL | 30.0 | 36.0 | 7.50 | 16.25 | 1 |
| PR-WILL-TS-1023 | NO PARKING STOPPING OR STANDING | - | 26+72.78 | L | TELESCOPING STEEL | 12.0 | 15.0 | 1.25 | 13.25 | 1 |
| PR-WILL-TS-1024 | NO PARKING STOPPING OR STANDING | - | 27+57.31 | R | TELESCOPING STEEL | 12.0 | 15.0 | 1.25 | 13.25 | 1 |
| PR-WILL-TS-1024A | RIGHT LANE MUST TURN RIGHT | R3-7R | 27+97.81 | R | TELESCOPING STEEL | 30.0 | 30.0 | 6.25 | 12.50 | 1 |
| PR-WILL-TS-1025 | ENTER ONLY | - | 27+85.17 | L | TELESCOPING STEEL | 12.0 | 15.0 | 1.25 | 12.75 | 1 |
| PR-WILL-TS-1026 | NO COMMERCIAL VEHICLES | R5-4 | 27+85.17 | L | TELESCOPING STEEL | 8.0 | 18.0 | 1.00 | | |
| PR-WILL-TS-1027 | ENTER ONLY | - | 28+35.06 | L | TELESCOPING STEEL | 12.0 | 15.0 | 1.25 | 12.75 | 1 |
| PR-WILL-TS-1028 | NO COMMERCIAL VEHICLES | R5-4 | 28+35.06 | L | TELESCOPING STEEL | 8.0 | 18.0 | 1.00 | | |
| PR-WILL-TS-1028A | ADVANCE INTERSECTION LANE CONTROL | R3-8 | 28+75.82 | R | TELESCOPING STEEL | 48.0 | 30.0 | 10.00 | 12.50 | 1 |
| PR-WILL-TS-1029 | NO PARKING STOPPING OR STANDING | - | 29+28.58 | L | TELESCOPING STEEL | 12.0 | 15.0 | 1.25 | 13.25 | 1 |
| PR-WILL-TS-1030 | NO PARKING STOPPING OR STANDING | - | 29+64.32 | R | TELESCOPING STEEL | 12.0 | 15.0 | 1.25 | 13.25 | 1 |
| PR-WILL-TS-1031 | SPEED LIMIT 35 | R2-1 | 30+14.02 | L | TELESCOPING STEEL | 30.0 | 36.0 | 7.50 | 15.00 | 1 |
| PR-WILL-TS-1031A | MANDATORY MOVEMENT LANE CONTROL - TURN ONLY | R3-5 | 30+47.90 | R | TELESCOPING STEEL | 30.0 | 36.0 | 7.50 | 18.00 | 1 |
| PR-WILL-TS-1032 | LANE ENDS | W4-2 | 32+00.00 | R | TELESCOPING STEEL | 36.0 | 36.0 | 9.00 | 14.25 | 1 |
| PR-WILL-TS-1033 | NO PARKING ANYTIME | R7-1 | 32+00.00 | R | TELESCOPING STEEL | 12.0 | 15.0 | 1.25 | | |
| PR-WILL-TS-1034 | NO PARKING ANYTIME | R7-1 | 32+79.46 | L | TELESCOPING STEEL | 12.0 | 15.0 | 1.25 | 13.25 | 1 |
| PR-WILL-TS-1035 | NO PARKING ANYTIME | R7-1 | 32+84.23 | R | TELESCOPING STEEL | 12.0 | 15.0 | 1.25 | 13.25 | 1 |

PROPOSED SIGN SCHEDULE

| SIGN # | DESCRIPTION | DESIGNATION | PROPOSED LOCATION | | | PROPOSED SIZE | | INSTALL | | |
|---|---|---|---|---|---|---|---|---|---|---|
| | | | STATION | OFFSET RT/LT | SUPPORT TYPE | WIDTH (IN) | HEIGHT (IN) | SIGN PANEL - TYPE 1 (SQ FT) | TELESCOPING STEEL SIGN SUPPORT (FT) | BASE FOR TELESCOPING STEEL SIGN SUPPORT (EACH) |
| PR-WILL-TS-1036 | NO PARKING ANYTIME | R7-1 | 33+41.86 | L | TELESCOPING STEEL | 12.0 | 15.0 | 1.25 | 13.25 | 1 |
| PR-WILL-TS-1037 | STOP SIGN | R1-1 | 34+68.77 | R | TELESCOPING STEEL | 30.0 | 30.0 | 6.25 | 14.50 | 1 |
| PR-WILL-TS-1038 | STREET NAME (AUBURN AVE) | D3-1 | 34+80.02 | R | TELESCOPING STEEL | 24.0 | 8.0 | 1.33 | 13.33 | 1 |
| PR-WILL-TS-1039 | STREET NAME (WILLOW RD) | D3-1 | 34+80.02 | R | TELESCOPING STEEL | 24.0 | 8.0 | 1.33 | | |
| PR-WILL-TS-1040 | SIGNAL AHEAD | W3-3 | 35+29.45 | L | TELESCOPING STEEL | 36.0 | 36.0 | 9.00 | 13.67 | 1 |
| PR-WILL-TS-1041 | STREET NAME (HIBBARD RD) | W16-8P | 35+29.45 | L | TELESCOPING STEEL | 30.0 | 8.0 | 1.67 | | |
| PR-WILL-TS-1042 | SPEED LIMIT 30 | R2-1 | 36+17.66 | R | TELESCOPING STEEL | 24.0 | 30.0 | 5.00 | 13.75 | 1 |
| PR-WILL-TS-1043 | NO PARKING ANYTIME | R7-1 | 36+17.66 | R | TELESCOPING STEEL | 12.0 | 15.0 | 1.25 | | |
| PR-WILL-TS-1044 | NO OUTLET | W14-2a | 37+66.61 | R | TELESCOPING STEEL | 24.0 | 6.0 | 1.00 | 13.83 | 1 |
| PR-WILL-TS-1045 | STREET NAME (EUCLID AVE) | D3-1 | 37+66.61 | R | TELESCOPING STEEL | 24.0 | 8.0 | 1.33 | | |
| PR-WILL-TS-1046 | STREET NAME (WILLOW RD) | D3-1 | 37+66.61 | R | TELESCOPING STEEL | 24.0 | 8.0 | 1.33 | | |
| PR-WILL-TS-1047 | STOP SIGN | R1-1 | 38+07.87 | R | TELESCOPING STEEL | 30.0 | 30.0 | 6.25 | 14.50 | 1 |
| PR-WILL-TS-1048 | STOP SIGN | R1-1 | 38+52.83 | L | TELESCOPING STEEL | 30.0 | 30.0 | 6.25 | 14.50 | 1 |
| PR-WILL-TS-1049 | STREET NAME (BERKELEY AVE) | D3-1 | 38+89.19 | L | TELESCOPING STEEL | 24.0 | 8.0 | 1.33 | 13.33 | 1 |
| PR-WILL-TS-1050 | STREET NAME (WILLOW RD) | D3-1 | 38+89.19 | L | TELESCOPING STEEL | 24.0 | 8.0 | 1.33 | | |
| PR-WILL-TS-1051 | SCHOOL | S1-1 | 40+64.01 | R | TELESCOPING STEEL | 36.0 | 36.0 | 9.00 | 14.00 | 1 |
| PR-WILL-TS-1052 | AHEAD | W16-9P | 40+64.01 | R | TELESCOPING STEEL | 24.0 | 12.0 | 2.00 | | |
| PR-WILL-TS-1053 | SPEED LIMIT 30 | R2-1 | 42+93.52 | L | TELESCOPING STEEL | 24.0 | 30.0 | 5.00 | 15.00 | 1 |
| PR-WILL-TS-1054 | END SCHOOL ZONE | S5-2 | 42+93.52 | L | TELESCOPING STEEL | 24.0 | 30.0 | 5.00 | | |
| PR-WILL-SP-1055 | SCHOOL SPEED LIMIT 20 | S4-I100 | 42+98.16 | R | STEEL | 24.0 | 48.0 | 8.00 | 15.50 | 1 |
| PR-WILL-SP-1056 | FINES HIGHER | R2-6P | 42+98.16 | R | STEEL | 24.0 | 18.0 | 3.00 | | |
| PR-WILL-TS-1063 | SCHOOL | S1-1 | 45+58.01 | R | TELESCOPING STEEL | 36.0 | 36.0 | 9.00 | 13.75 | 1 |
| PR-WILL-TS-1064 | DOWNWARD DIAGONAL ARROW | W16-7P | 45+58.01 | R | TELESCOPING STEEL | 12.0 | 9.0 | 0.75 | | |
| PR-WILL-TS-1065 | STOP SIGN | R1-1 | 45+97.64 | L | TELESCOPING STEEL | 30.0 | 30.0 | 6.25 | 14.50 | 1 |
| PR-WILL-TS-1066 | STREET NAME (GLENDALE AVE) | D3-1 | 46+39.16 | L | TELESCOPING STEEL | 24.0 | 8.0 | 1.33 | 13.33 | 1 |
| PR-WILL-TS-1067 | STREET NAME (WILLOW RD) | D3-1 | 46+39.16 | L | TELESCOPING STEEL | 24.0 | 8.0 | 1.33 | | |
| PR-WILL-TS-1068 | SCHOOL | S1-1 | 46+44.49 | L | TELESCOPING STEEL | 36.0 | 36.0 | 9.00 | 13.75 | 1 |
| PR-WILL-TS-1069 | DOWNWARD DIAGONAL ARROW | W16-7P | 46+44.49 | L | TELESCOPING STEEL | 12.0 | 9.0 | 0.75 | | |
| PR-WILL-TS-1070 | NO PARKING 8 AM - 4 PM | - | 46+66.38 | R | TELESCOPING STEEL | 12.0 | 15.0 | 1.25 | 13.25 | 1 |
| PR-WILL-TS-1071 | STREET NAME (GLENDALE AVE) | D3-1 | 48+19.04 | R | TELESCOPING STEEL | 24.0 | 8.0 | 1.33 | 13.33 | 1 |
| PR-WILL-TS-1072 | STREET NAME (WILLOW RD) | D3-1 | 48+19.04 | R | TELESCOPING STEEL | 24.0 | 8.0 | 1.33 | | |
| PR-WILL-TS-1073 | STOP SIGN | R1-1 | 48+52.03 | R | TELESCOPING STEEL | 30.0 | 30.0 | 6.25 | 14.50 | 1 |
| PR-WILL-TS-1074 | NO ENTRY TO CIRCLE AFTER LEFT TURN | - | 48+69.24 | L | TELESCOPING STEEL | 12.0 | 12.0 | 1.00 | 13.00 | 1 |
| PR-WILL-TS-1075 | SPEED LIMIT 30 | R2-1 | 48+75.53 | R | TELESCOPING STEEL | 24.0 | 30.0 | 5.00 | 15.00 | 1 |
| PR-WILL-TS-1076 | END SCHOOL ZONE | S5-2 | 48+75.53 | R | TELESCOPING STEEL | 24.0 | 30.0 | 5.00 | | |
| PR-WILL-SP-1077 | SCHOOL SPEED LIMIT 20 | S5-1 | 49+02.04 | L | STEEL | 24.0 | 48.0 | 8.00 | 15.50 | 1 |
| PR-WILL-SP-1078 | FINES HIGHER | R2-6P | 49+02.04 | L | STEEL | 24.0 | 18.0 | 3.00 | | |
| PR-WILL-TS-1079 | SCHOOL | S1-1 | 51+11.29 | L | TELESCOPING STEEL | 36.0 | 36.0 | 9.00 | 14.00 | 1 |
| PR-WILL-TS-1080 | AHEAD | W16-9P | 51+11.29 | L | TELESCOPING STEEL | 24.0 | 12.0 | 2.00 | | |
| PR-WILL-TS-1081 | STREET NAME (ROSEWOOD AVE) | D3-1 | 51+75.69 | L | TELESCOPING STEEL | 24.0 | 8.0 | 1.33 | 13.33 | 1 |
| PR-WILL-TS-1082 | STREET NAME (WILLOW RD) | D3-1 | 51+75.69 | L | TELESCOPING STEEL | 24.0 | 8.0 | 1.33 | | |

MODEL: Default
FILE NAME: S:\OL\1600-1699\1619058\Drawings\CADMicro-SS4\CAD_Sheets\1619058-sht-or signage-schedule.dgn

STRAND ASSOCIATES®
1170 SOUTH HOUBOLT ROAD
JOLIET, ILLINOIS 60431
(815) 744-4200

| | | |
|---|---|---|
| USER NAME = AlexaM | DESIGNED - | REVISED - |
| | DRAWN - | REVISED - |
| PLOT SCALE = 2.0000 ' / in. | CHECKED - | REVISED - |
| PLOT DATE = 7/8/2026 | DATE - 2/27/2026 | REVISED - |

**STATE OF ILLINOIS**
**DEPARTMENT OF TRANSPORTATION**

**SIGNING SCHEDULE**

SCALE: N/A | SHEET 3 OF 4 SHEETS | STA. N/A | TO STA. N/A

| F.A.U. RTE. | SECTION | COUNTY | TOTAL SHEETS | SHEET NO. |
|---|---|---|---|---|
| 3561 | 08-00103-00-FP | COOK | 254 | 126 |
| | | CONTRACT NO. 61M29 | | |
| | ILLINOIS | FED. AID PROJECT | | |

PROPOSED SIGN SCHEDULE

| SIGN # | DESCRIPTION | DESIGNATION | PROPOSED LOCATION | | | PROPOSED SIZE | | INSTALL | | |
|---|---|---|---|---|---|---|---|---|---|---|
| | | | STATION | OFFSET RT/LT | SUPPORT TYPE | WIDTH (IN) | HEIGHT (IN) | SIGN PANEL - TYPE 1 (SQ FT) | TELESCOPING STEEL SIGN SUPPORT (FT) | BASE FOR TELESCOPING STEEL SIGN SUPPORT (EACH) |
| PR-WILL-TS-1083 | STOP SIGN | R1-1 | 51+84.36 | L | TELESCOPING STEEL | 30.0 | 30.0 | 6.25 | 14.50 | 1 |
| PR-WILL-WP-1084 | ROSEWOOD AVENUE | - | 51+88.01 | R | RELOCATE EXISTING SIGN PANEL ASSEMBLY | | | | | |
| PR-WILL-TS-1085 | STOP SIGN | R1-1 | 52+13.56 | R | TELESCOPING STEEL | 30.0 | 30.0 | 6.25 | 14.50 | 1 |
| EX-WILL-SP-1086 | PEDESTRIAN CROSSING | W11-2 | 52+34.27 | R | RELOCATE EXISTING SIGN PANEL ASSEMBLY | | | | | |
| EX-WILL-SP-1087 | DOWNWARD DIAGONAL ARROW | W16-7P | 52+34.27 | R | | | | | | |
| EX-WILL-SP-1088 | STOP FOR PEDESTRIANS IN CROSSWALK | - | 52+34.27 | R | METAL POST | 21.0 | 15.0 | 2.19 | 0.0 | 0 |
| EX-WILL-SP-1089 | PEDESTRIAN CROSSING | W11-2 | 52+34.27 | R | RELOCATE EXISTING SIGN PANEL ASSEMBLY | | | | | |
| EX-WILL-SP-1090 | DOWNWARD DIAGONAL ARROW | W16-7P | 52+34.27 | R | | | | | | |
| EX-WILL-SP-1091 | STOP FOR PEDESTRIANS IN CROSSWALK | - | 52+34.27 | R | METAL POST | 21.0 | 15.0 | 2.19 | 0.0 | 0 |
| EX-WILL-SP-1092 | PEDESTRIAN CROSSING | W11-2 | 52+35.33 | L | RELOCATE EXISTING SIGN PANEL ASSEMBLY | | | | | |
| EX-WILL-SP-1093 | DOWNWARD DIAGONAL ARROW | W16-7P | 52+35.33 | L | | | | | | |
| EX-WILL-SP-1094 | STOP FOR PEDESTRIANS IN CROSSWALK | - | 52+35.33 | L | METAL POST | 21.0 | 15.0 | 2.19 | 0.0 | 0 |
| EX-WILL-SP-1095 | PEDESTRIAN CROSSING | W11-2 | 52+35.33 | L | RELOCATE EXISTING SIGN PANEL ASSEMBLY | | | | | |
| EX-WILL-SP-1096 | DOWNWARD DIAGONAL ARROW | W16-7P | 52+35.33 | L | | | | | | |
| EX-WILL-SP-1097 | STOP FOR PEDESTRIANS IN CROSSWALK | - | 52+35.33 | L | METAL POST | 21.0 | 15.0 | 2.19 | 0.0 | 0 |
| PR-WILL-TS-1098 | STREET NAME (LOCUST RD) | D3-1 | 55+78.17 | R | TELESCOPING STEEL | 24.0 | 8.0 | 1.33 | 13.33 | 1 |
| PR-WILL-TS-1099 | STREET NAME (WILLOW RD) | D3-1 | 55+78.17 | R | TELESCOPING STEEL | 24.0 | 8.0 | 1.33 | | |
| PR-WILL-TS-1100 | STOP SIGN | R1-1 | 56+16.21 | R | TELESCOPING STEEL | 30.0 | 30.0 | 6.25 | 14.50 | 1 |
| PR-WILL-WP-1101 | LOCUST ROAD | - | 56+18.45 | R | RELOCATE EXISTING SIGN PANEL ASSEMBLY | | | | | |
| PR-WILL-TS-1102 | SPEED LIMIT 30 | R2-1 | 56+99.92 | R | TELESCOPING STEEL | 24.0 | 30.0 | 5.00 | 14.00 | 1 |
| PR-WILL-TS-1103 | NO PARKING ANYTIME | R7-1 | 56+99.92 | R | TELESCOPING STEEL | 12.0 | 18.0 | 1.50 | | |
| PR-WILL-PM-1104 | STREET NAME (LOCUST ST) | D3-1 | 57+45.22 | R | POLE MOUNTED | 24.0 | 8.0 | 1.33 | 0.00 | 0 |
| PR-WILL-PM-1105 | STREET NAME (WILLOW RD) | D3-1 | 57+45.22 | R | POLE MOUNTED | 24.0 | 8.0 | 1.33 | 0.00 | 0 |
| PR-WILL-TS-1106 | STOP SIGN | R1-1 | 57+52.55 | L | TELESCOPING STEEL | 30.0 | 30.0 | 6.25 | 14.50 | 1 |
| PR-WILL-TS-1107 | NO PARKING ANYTIME | R7-1 | 59+13.14 | R | TELESCOPING STEEL | 12.0 | 18.0 | 1.50 | 13.50 | 1 |
| PR-WILL-TS-1108 | NO PARKING ANYTIME | R7-1 | 61+61.08 | R | TELESCOPING STEEL | 12.0 | 18.0 | 1.50 | 13.50 | 1 |
| PR-WILL-PM-1109 | SPEED LIMIT 30 | R2-1 | 62+79.07 | L | POLE MOUNTED | 24.0 | 30.0 | 5.00 | 0.00 | 0 |
| PR-WILL-PM-1110 | NO PARKING ANYTIME | R7-1 | 62+79.07 | L | POLE MOUNTED | 12.0 | 18.0 | 1.50 | 0.00 | 0 |
| EX-WILL-SP-1111 | PEDESTRIAN CROSSING | W11-2 | 63+20.57 | R | RELOCATE EXISTING SIGN PANEL ASSEMBLY | | | | | |
| EX-WILL-SP-1112 | DOWNWARD DIAGONAL ARROW | W16-7P | 63+20.57 | R | | | | | | |
| EX-WILL-SP-1113 | STOP FOR PEDESTRIANS IN CROSSWALK | - | 63+20.57 | R | METAL POST | 21.0 | 15.0 | 2.19 | 0.0 | 0 |
| EX-WILL-SP-1114 | PEDESTRIAN CROSSING | W11-2 | 63+20.57 | R | RELOCATE EXISTING SIGN PANEL ASSEMBLY | | | | | |
| EX-WILL-SP-1115 | DOWNWARD DIAGONAL ARROW | W16-7P | 63+20.57 | R | | | | | | |
| EX-WILL-SP-1116 | STOP FOR PEDESTRIANS IN CROSSWALK | - | 63+20.57 | R | METAL POST | 21.0 | 15.0 | 2.19 | 0.0 | 0 |
| EX-WILL-SP-1117 | PEDESTRIAN CROSSING | W11-2 | 63+23.48 | L | RELOCATE EXISTING SIGN PANEL ASSEMBLY | | | | | |
| EX-WILL-SP-1118 | DOWNWARD DIAGONAL ARROW | W16-7P | 63+23.48 | L | | | | | | |
| EX-WILL-SP-1119 | STOP FOR PEDESTRIANS IN CROSSWALK | - | 63+23.48 | L | METAL POST | 21.0 | 15.0 | 2.19 | 0.0 | 0 |
| EX-WILL-SP-1120 | PEDESTRIAN CROSSING | W11-2 | 63+23.48 | L | RELOCATE EXISTING SIGN PANEL ASSEMBLY | | | | | |
| EX-WILL-SP-1121 | DOWNWARD DIAGONAL ARROW | W16-7P | 63+23.48 | L | | | | | | |
| EX-WILL-SP-1122 | STOP FOR PEDESTRIANS IN CROSSWALK | - | 63+23.48 | L | METAL POST | 21.0 | 15.0 | 2.19 | 0.0 | 0 |
| PR-WILL-TS-1123 | STOP SIGN | R1-1 | 63+38.30 | L | TELESCOPING STEEL | 30.0 | 30.0 | 6.25 | 14.50 | 1 |
| PR-WILL-TS-1124 | STREET NAME (WHITE OAK LN) | D3-1 | 63+80.17 | R | TELESCOPING STEEL | 24.0 | 8.0 | 1.33 | 13.33 | 1 |
| PR-WILL-TS-1125 | STREET NAME (WILLOW RD) | D3-1 | 63+80.17 | R | TELESCOPING STEEL | 24.0 | 8.0 | 1.33 | | |
| PR-WILL-PM-1126 | STREET NAME (PROVIDENT AVE) | D3-1 | 63+99.83 | L | POLE MOUNTED | 24.0 | 8.0 | 1.33 | 0.00 | 0 |
| | | | | | | | | | | |
| PR-HIBB-TS-2001 | NO PARKING ANYTIME | R7-1 | 200+36.10 | R | TELESCOPING STEEL | 12.0 | 18.0 | 1.50 | 13.50 | 1 |

PROPOSED SIGN SCHEDULE

| SIGN # | DESCRIPTION | DESIGNATION | PROPOSED LOCATION | | | PROPOSED SIZE | | INSTALL | | |
|---|---|---|---|---|---|---|---|---|---|---|
| | | | STATION | OFFSET RT/LT | SUPPORT TYPE | WIDTH (IN) | HEIGHT (IN) | SIGN PANEL - TYPE 1 (SQ FT) | TELESCOPING STEEL SIGN SUPPORT (FT) | BASE FOR TELESCOPING STEEL SIGN SUPPORT (EACH) |
| PR-HIBB-TS-2002 | SPEED LIMIT 30 | R2-1 | 200+96.06 | L | TELESCOPING STEEL | 24.0 | 30.0 | 5.00 | 14.00 | 1 |
| PR-HIBB-TS-2003 | NO PARKING ANYTIME | R7-1 | 200+96.06 | L | TELESCOPING STEEL | 12.0 | 18.0 | 1.50 | | |
| PR-HIBB-TS-2006 | NO PARKING ANYTIME | R7-1 | 206+01.95 | L | TELESCOPING STEEL | 12.0 | 18.0 | 1.50 | 13.50 | 1 |
| PR-HIBB-TS-2008 | SPEED LIMIT 30 | R2-1 | 206+37.02 | R | TELESCOPING STEEL | 24.0 | 30.0 | 5.00 | 14.50 | 1 |
| PR-HIBB-TS-2009 | SIGNAL AHEAD | W3-3 | 207+52.75 | L | TELESCOPING STEEL | 36.0 | 36.0 | 9.00 | 13.67 | 1 |
| PR-HIBB-TS-2010 | STREET NAME (WILLOW RD) | W16-8P | 207+52.75 | L | TELESCOPING STEEL | 30.0 | 8.0 | 1.67 | | |
| PR-HIBB-TS-2011 | NO PARKING ANYTIME | R7-1 | 207+74.71 | R | TELESCOPING STEEL | 12.0 | 18.0 | 1.50 | 13.50 | 1 |
| PR-HIBB-TS-2012 | PACE BUS STOP 423 | - | 207+74.74 | R | RELOCATE EXISTING SIGN | | | | | |
| PR-HIBB-TS-2013 | STOP SIGN | R1-1 | 208+40.24 | R | TELESCOPING STEEL | 30.0 | 30.0 | 6.25 | 14.50 | 1 |
| PR-HIBB-PM-2014 | STREET NAME (ASH ST) | D3-1 | 208+47.77 | R | POLE MOUNTED | 24.0 | 8.0 | 1.33 | 0.00 | 0 |
| PR-HIBB-PM-2015 | STREET NAME (HIBBARD RD) | D3-1 | 208+47.77 | R | POLE MOUNTED | 24.0 | 8.0 | 1.33 | 0.00 | 0 |
| | | | | | | | | | | |
| | | | | | | | TOTAL | 417.00 | 934.00 | 69 |

MODEL: Default
FILE NAME: S:\JOL\1600-1699\161905B\Drawings\CAD\Micro-SS4\CAD_Sheets\161905B-sht-cor_signage-schedule.dgn


STRAND ASSOCIATES®
1170 SOUTH HOUBOLT ROAD
JOLIET, ILLINOIS 60431
(815) 744-4200


| | | |
|---|---|---|
| USER NAME = AlexaM | DESIGNED - | REVISED - |
| | DRAWN - | REVISED - |
| PLOT SCALE = 2.0000 ' / in. | CHECKED - | REVISED - |
| PLOT DATE = 7/8/2026 | DATE - | REVISED - |

**STATE OF ILLINOIS**
**DEPARTMENT OF TRANSPORTATION**

**SIGNING SCHEDULE**

SCALE: N/A | SHEET 4 OF 4 SHEETS | STA. N/A | TO STA. N/A

| F.A.U. RTE. | SECTION | COUNTY | TOTAL SHEETS | SHEET NO. |
|---|---|---|---|---|
| 3561 | 08-00103-00-FP | COOK | 254 | 127 |

CONTRACT NO. 61M29

ILLINOIS | FED. AID PROJECT

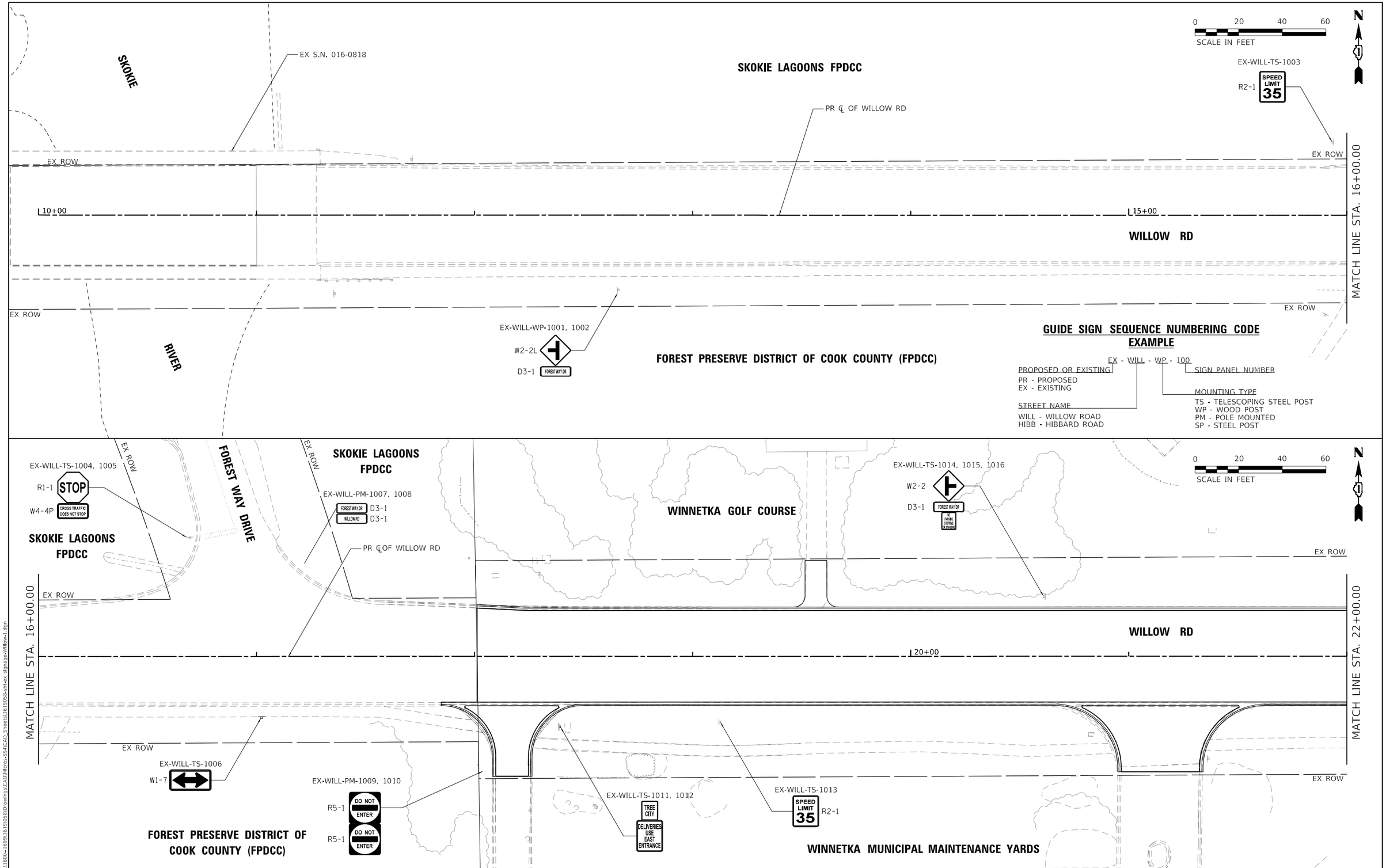


MODEL: Default
FILE NAME: S:\JOL\1600-1699\1619058\Drawings\CADd\Micro-SSA\CAD Sheets\1619058-ph-ex signage-Willow-1.dgn

STRAND ASSOCIATES®
1170 SOUTH HOUBOLT ROAD
JOLIET, ILLINOIS 60431
(815) 744-4200

| | | |
|---|---|---|
| USER NAME = AlexaM | DESIGNED - | REVISED - |
| | DRAWN - | REVISED - |
| PLOT SCALE = 40.0000 ' / in. | CHECKED - | REVISED - |
| PLOT DATE = 7/8/2026 | DATE - 2/27/2026 | REVISED - |

**STATE OF ILLINOIS**
**DEPARTMENT OF TRANSPORTATION**

**EXISTING SIGNAGE PLAN**
**WILLOW ROAD**

SCALE: 1" = 20' | SHEET 1 OF 5 SHEETS | STA. 10+00.00 TO STA. 22+00.00

| F.A.U. RTE. | SECTION | COUNTY | TOTAL SHEETS | SHEET NO. |
|---|---|---|---|---|
| 3561 | 08-00103-00-FP | COOK | 254 | 128 |
| | | CONTRACT NO. 61M29 | | |
| | | ILLINOIS | FED. AID PROJECT | |

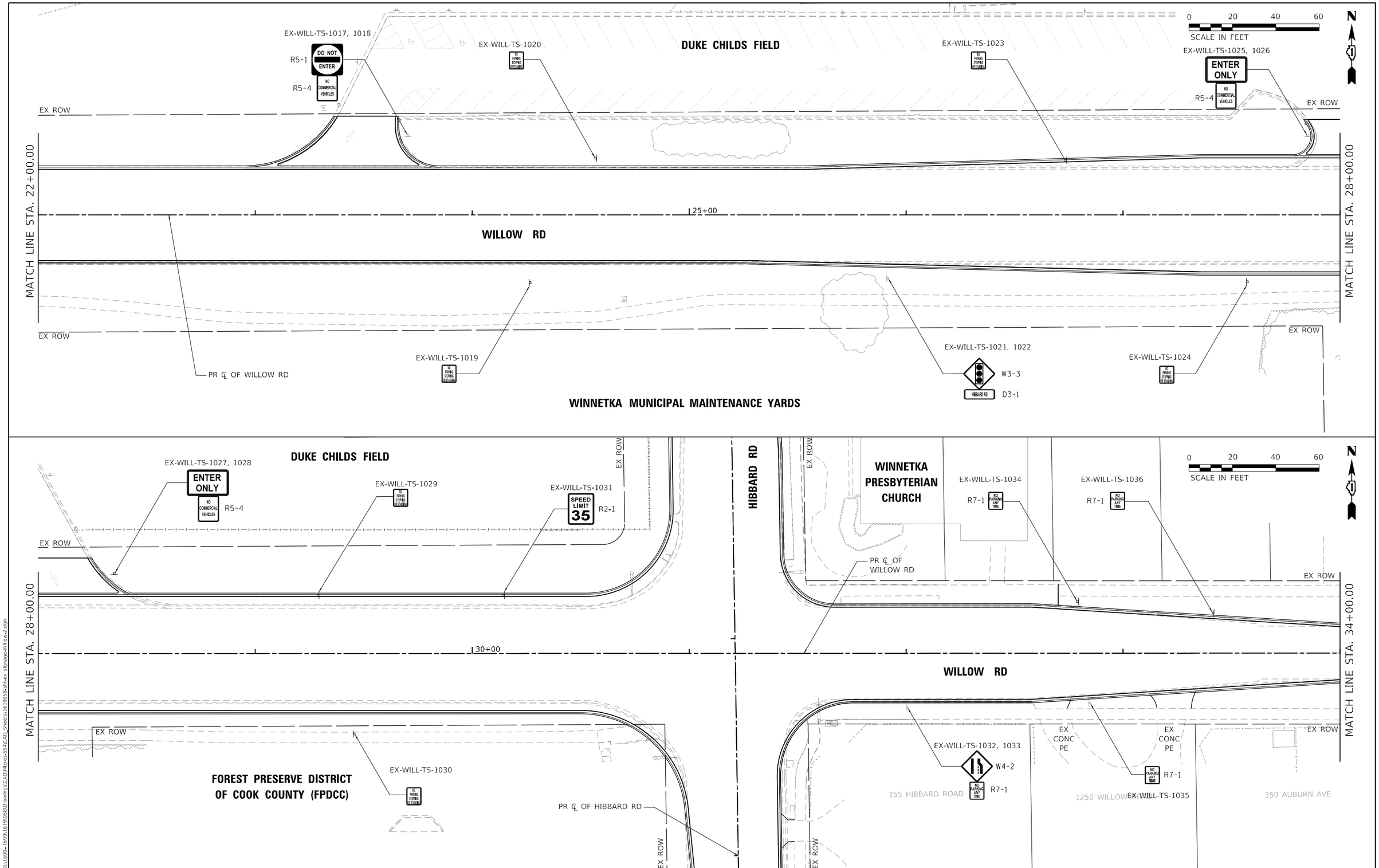


MODEL: Default
FILE NAME: S:\DL\1600-1699\1619\058\Drawings\CADd\Micro-SS4\CAD Sheets\1619058-sht-ex signage-Willow-2.dgn


STRAND ASSOCIATES®
1170 SOUTH HOUBOLT ROAD
JOLIET, ILLINOIS 60431
(815) 744-4200


| | | |
|---|---|---|
| USER NAME = AlexaM | DESIGNED - | REVISED - |
| | DRAWN - | REVISED - |
| PLOT SCALE = 40.0000 ' / in. | CHECKED - | REVISED - |
| PLOT DATE = 7/8/2026 | DATE - 2/27/2026 | REVISED - |

**STATE OF ILLINOIS**
**DEPARTMENT OF TRANSPORTATION**

**EXISTING SIGNAGE PLAN**
**WILLOW ROAD**

SCALE: 1" = 20' | SHEET 2 OF 5 SHEETS | STA. 22+00.00 TO STA. 34+00.00

| F.A.U. RTE. | SECTION | COUNTY | TOTAL SHEETS | SHEET NO. |
|---|---|---|---|---|
| 3561 | 08-00103-00-FP | COOK | 254 | 129 |

CONTRACT NO. 61M29

ILLINOIS | FED. AID PROJECT

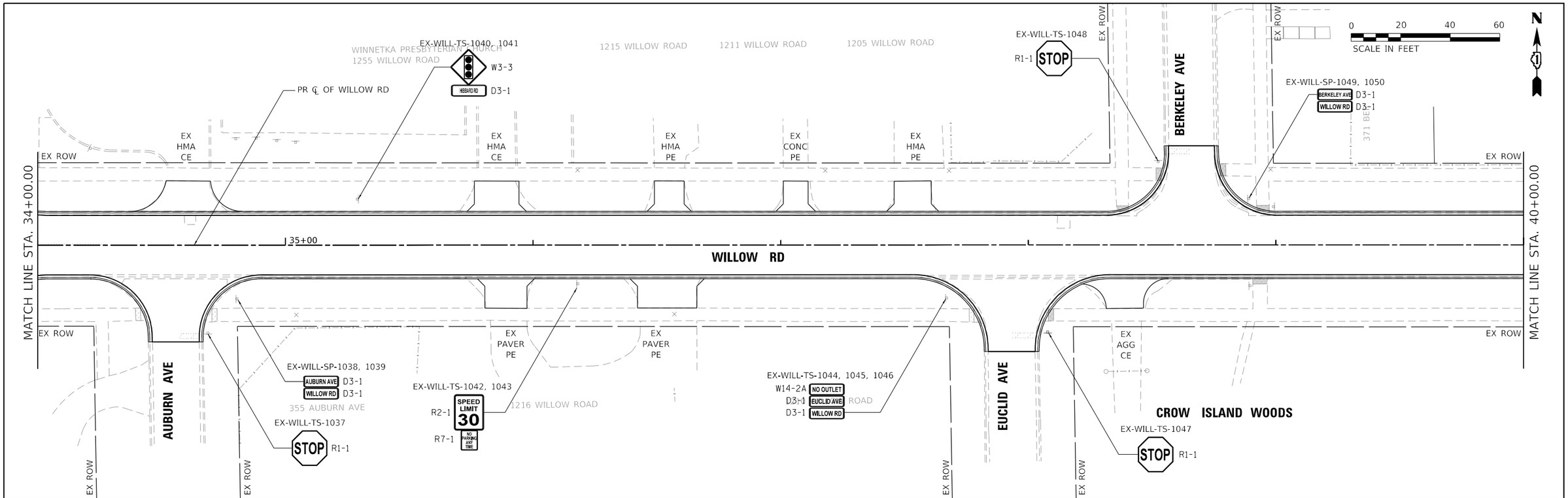


MODEL: Default
FILE NAME: S:\OL\1600-1699\1619058\Drawings\CAD\Micro-SSA\CAD_Sheets\1619058-sht-ex signage-Willow-3.dgn

STRAND ASSOCIATES®
1170 SOUTH HOUBOLT ROAD
JOLIET, ILLINOIS 60431
(815) 744-4200

| | | | |
|---|---|---|---|
| USER NAME = AlexaM | DESIGNED - | REVISED - | |
| | DRAWN - | REVISED - | |
| PLOT SCALE = 40.0000 ' / in. | CHECKED - | REVISED - | |
| PLOT DATE = 7/8/2026 | DATE - 2/27/2026 | REVISED - | |

**STATE OF ILLINOIS**
**DEPARTMENT OF TRANSPORTATION**

**EXISTING SIGNAGE PLAN**
**WILLOW ROAD**

SCALE: 1" = 20' | SHEET 3 OF 5 SHEETS | STA. 34+00.00 TO STA. 46+00.00

| F.A.U. RTE. | SECTION | COUNTY | TOTAL SHEETS | SHEET NO. |
|---|---|---|---|---|
| 3561 | 08-00103-00-FP | COOK | 254 | 130 |
| | | CONTRACT NO. 61M29 | | |
| | | ILLINOIS | FED. AID PROJECT | |

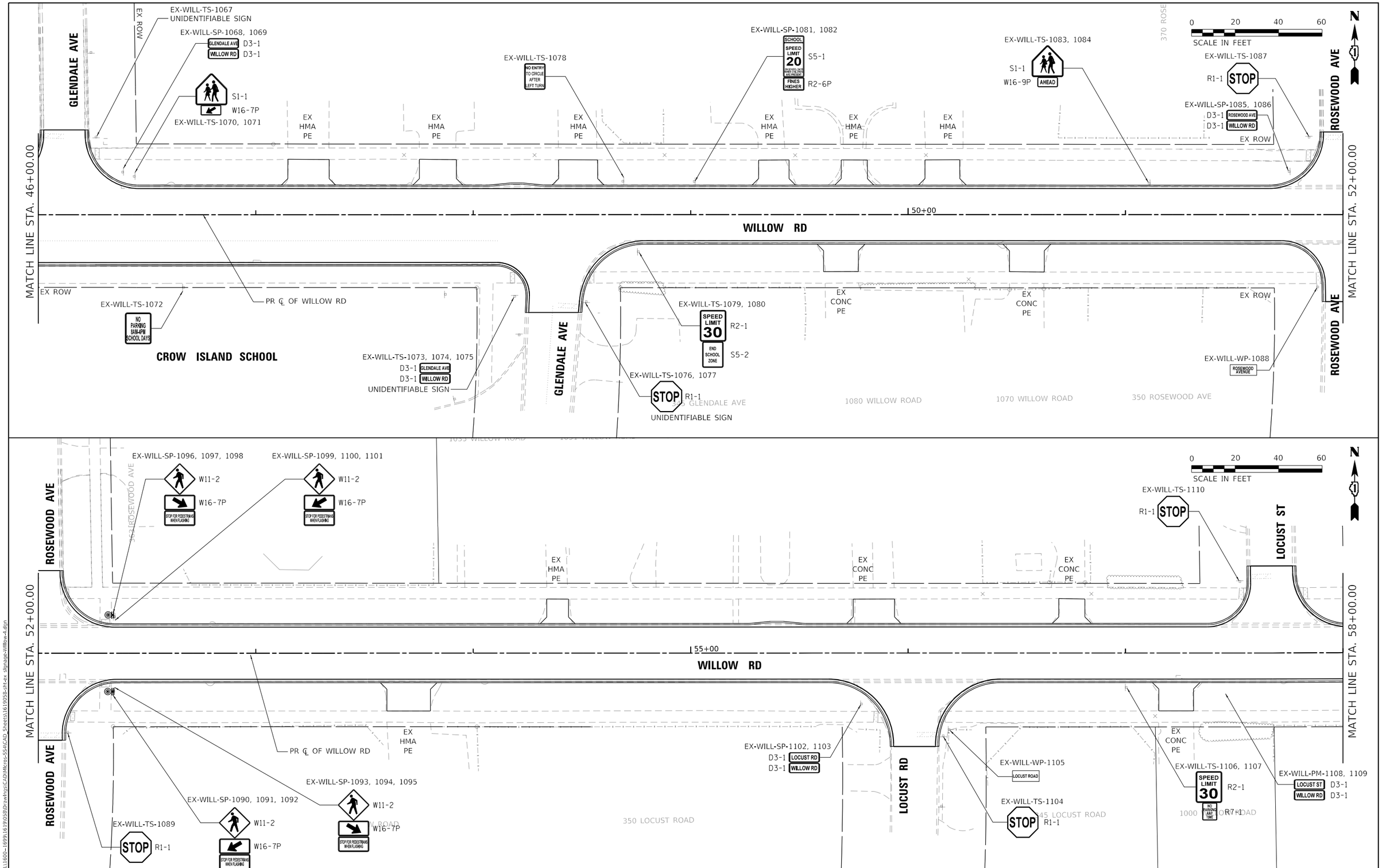


MODEL: Default
FILE NAME: S:\JOL\1600-1699\1619038\Drawings\CAD\Micro-SS4\CAD Sheets\1619038-sht-ex signage-Willow-4.dgn

STRAND ASSOCIATES®
1170 SOUTH HOUBOLT ROAD
JOLIET, ILLINOIS 60431
(815) 744-4200

| | | |
|---|---|---|
| USER NAME = AlexaM | DESIGNED - | REVISED - |
| | DRAWN - | REVISED - |
| PLOT SCALE = 40.0000 ' / in. | CHECKED - | REVISED - |
| PLOT DATE = 7/8/2026 | DATE - 2/27/2026 | REVISED - |

**STATE OF ILLINOIS**
**DEPARTMENT OF TRANSPORTATION**

**EXISTING SIGNAGE PLAN**
**WILLOW ROAD**

SCALE: 1" = 20' | SHEET 4 OF 5 SHEETS | STA. 46+00.00 TO STA. 58+00.00

| F.A.U. RTE. | SECTION | COUNTY | TOTAL SHEETS | SHEET NO. |
|---|---|---|---|---|
| 3561 | 08-00103-00-FP | COOK | 254 | 131 |
| | | CONTRACT NO. 61M29 | | |
| | | ILLINOIS | FED. AID PROJECT | |

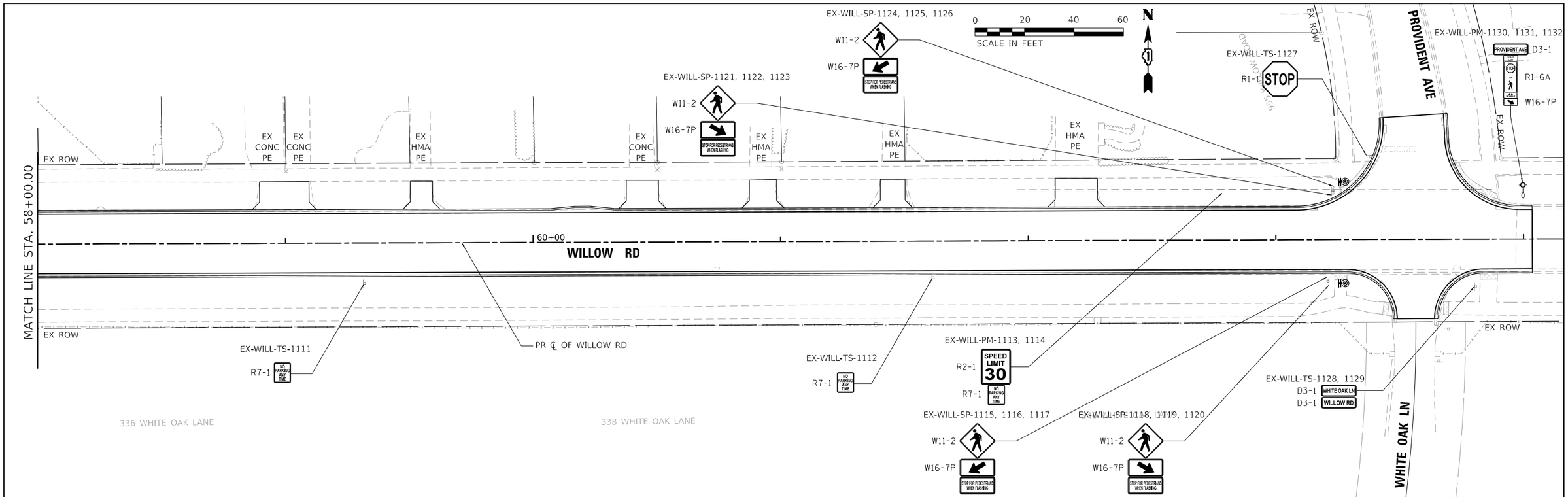


MODEL: Default
FILE NAME: S:\DL\1600-1699\16190508\Drawings\CAD\Micros-SSA\CAD_Sheets\16190508-ph-ex signage-Willow-5.dgn


STRAND ASSOCIATES®
1170 SOUTH HOUBOLT ROAD
JOLIET, ILLINOIS 60431
(815) 744-4200


| | | |
|---|---|---|
| USER NAME = AlexaM | DESIGNED - | REVISED - |
| | DRAWN - | REVISED - |
| PLOT SCALE = 40.0000 ' / in. | CHECKED - | REVISED - |
| PLOT DATE = 7/8/2026 | DATE - 2/27/2026 | REVISED - |

**STATE OF ILLINOIS**
**DEPARTMENT OF TRANSPORTATION**

**EXISTING SIGNAGE PLAN**
**WILLOW ROAD**

SCALE: 1" = 20' | SHEET 5 OF 5 SHEETS | STA. 58+00.00 TO STA.

| F.A.U. RTE. | SECTION | COUNTY | TOTAL SHEETS | SHEET NO. |
|---|---|---|---|---|
| 3561 | 08-00103-00-FP | COOK | 254 | 132 |

CONTRACT NO. 61M29

ILLINOIS | FED. AID PROJECT

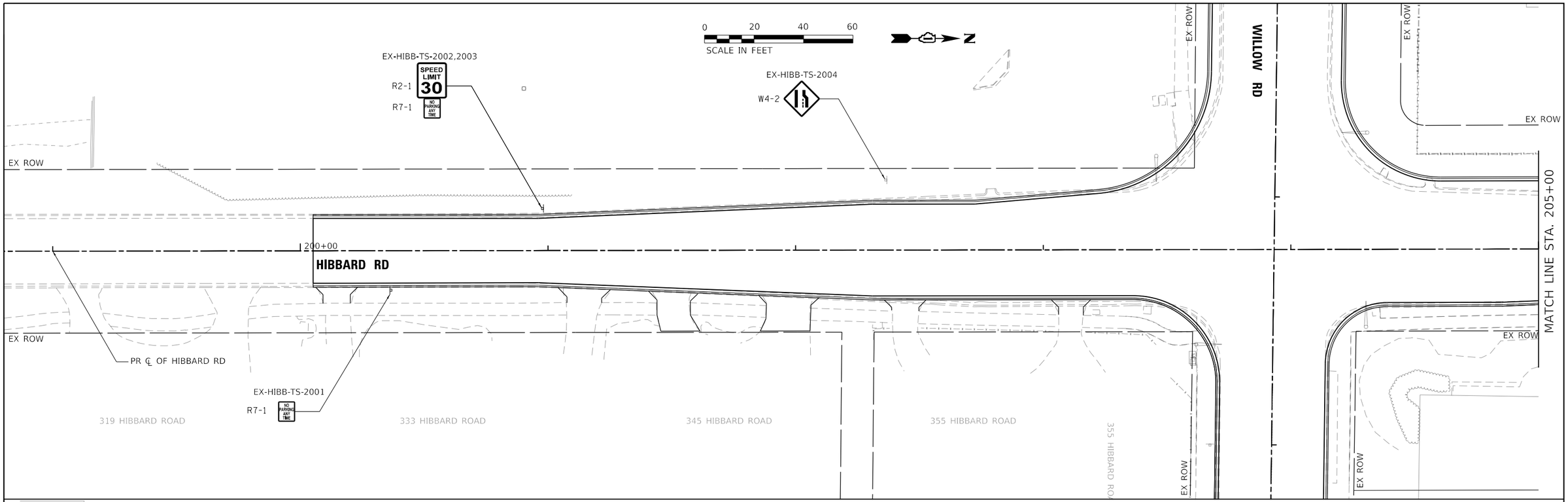


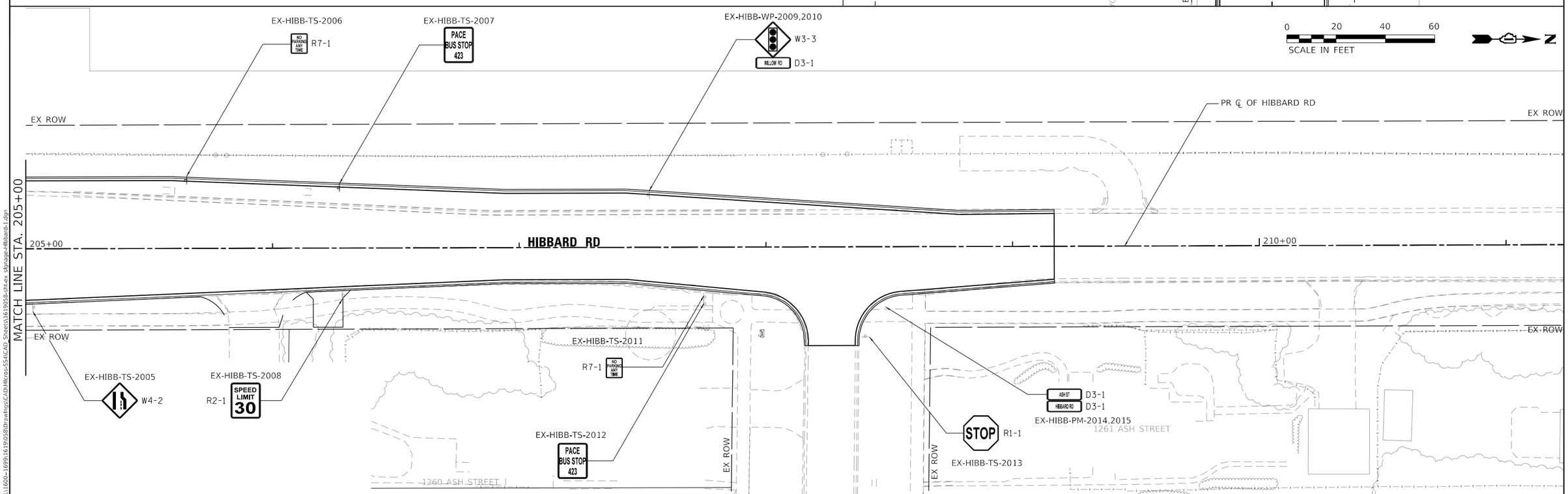


MODEL: Default
FILE NAME: S:\OL\1600-1699\1619\0580\Drawings\CAD\Micros-SSA\CAD Sheets\1619058-ph-ex signage-Hibbard-1.dgn


STRAND ASSOCIATES®
1170 SOUTH HOUBOLT ROAD
JOLIET, ILLINOIS 60431
(815) 744-4200


| | | |
|---|---|---|
| USER NAME = AlexaM | DESIGNED - | REVISED - |
| | DRAWN - | REVISED - |
| PLOT SCALE = 40.0000 ' / in. | CHECKED - | REVISED - |
| PLOT DATE = 7/8/2026 | DATE - 2/27/2026 | REVISED - |

**STATE OF ILLINOIS**
**DEPARTMENT OF TRANSPORTATION**

**EXISTING SIGNAGE PLAN**
**HIBBARD ROAD**

SCALE: 1" = 20' | SHEET 1 OF 1 SHEETS | STA. 198+80.26 TO STA. 211+23.46

| F.A.U. RTE. | SECTION | COUNTY | TOTAL SHEETS | SHEET NO. |
|---|---|---|---|---|
| 3561 | 08-00103-00-FP | COOK | 254 | 133 |
| | | CONTRACT NO. 61M29 | | |
| | | ILLINOIS | FED. AID PROJECT | |

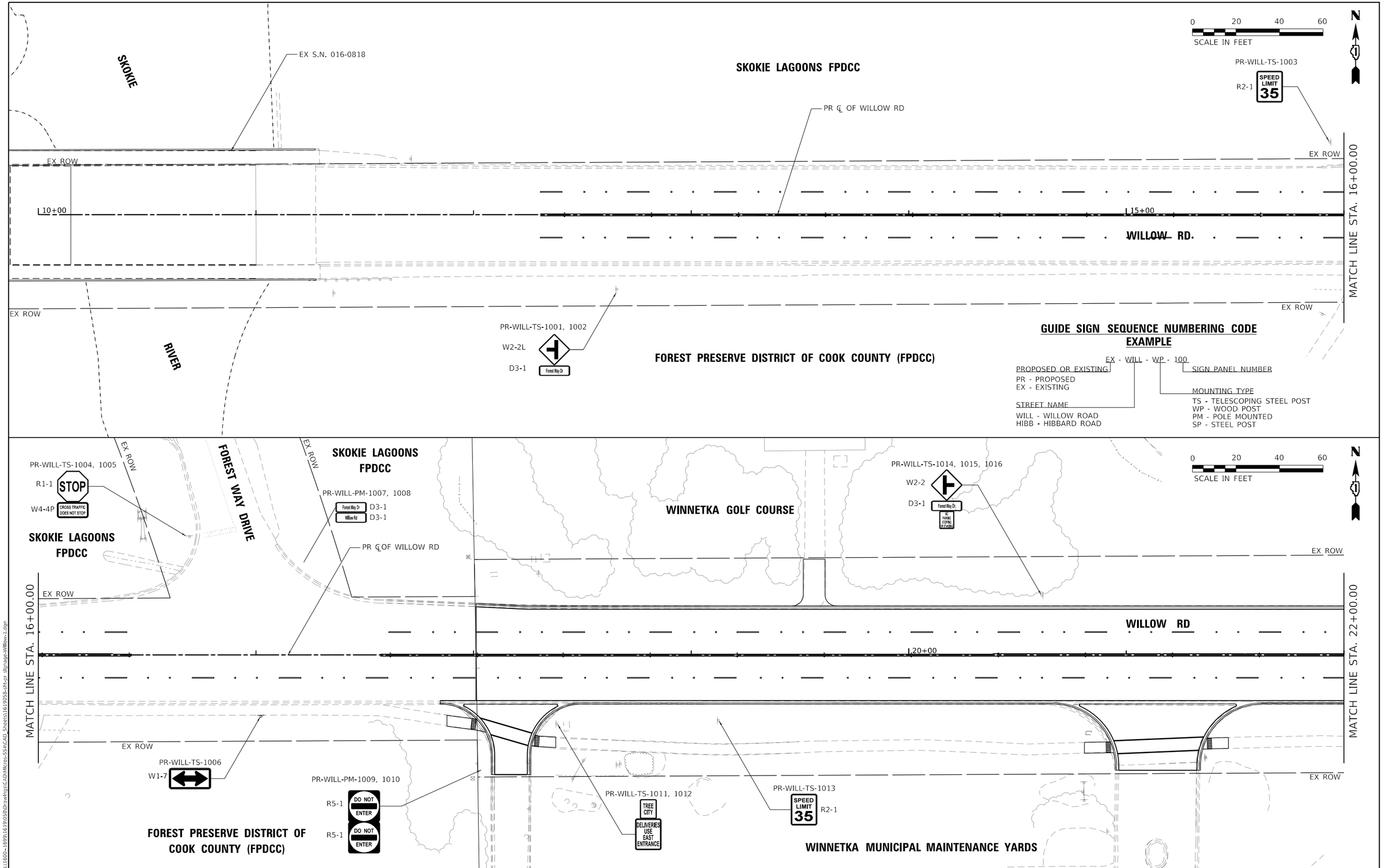


MODEL: Default
FILE NAME: S:\OL\1600-1699\1619058\Drawings\CAD\Micro-SS4\CAD_Sheets\1619058-sht-pr 4signage-Willow-1.dgn

STRAND ASSOCIATES®
1170 SOUTH HOUBOLT ROAD
JOLIET, ILLINOIS 60431
(815) 744-4200

| | | |
|---|---|---|
| USER NAME = AlexaM | DESIGNED - | REVISED - |
| | DRAWN - | REVISED - |
| PLOT SCALE = 40.0000 ' / in. | CHECKED - | REVISED - |
| PLOT DATE = 7/8/2026 | DATE - 2/27/2026 | REVISED - |

**STATE OF ILLINOIS**
**DEPARTMENT OF TRANSPORTATION**

**PROPOSED SIGNAGE PLAN**
**WILLOW ROAD**

SCALE: 1" = 20' | SHEET 1 OF 5 SHEETS | STA. 10+00.00 TO STA. 22+00.00

| F.A.U. RTE. | SECTION | COUNTY | TOTAL SHEETS | SHEET NO. |
|---|---|---|---|---|
| 3561 | 08-00103-00-FP | COOK | 254 | 134 |
| | | CONTRACT NO. 61M29 | | |
| | | ILLINOIS | FED. AID PROJECT | |

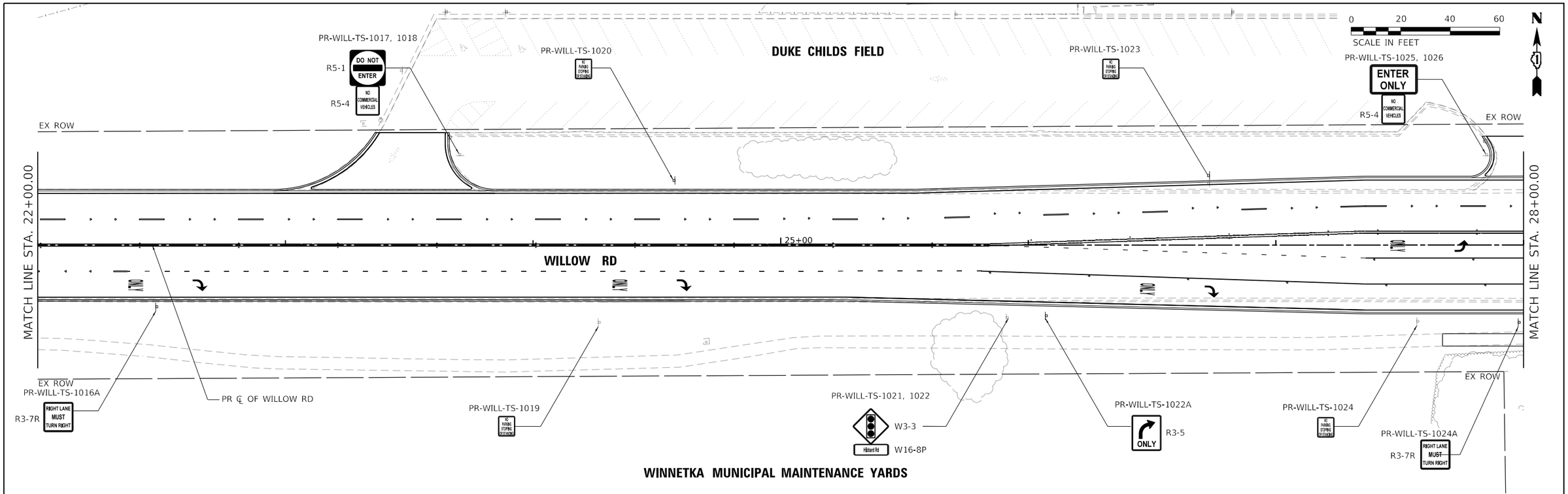


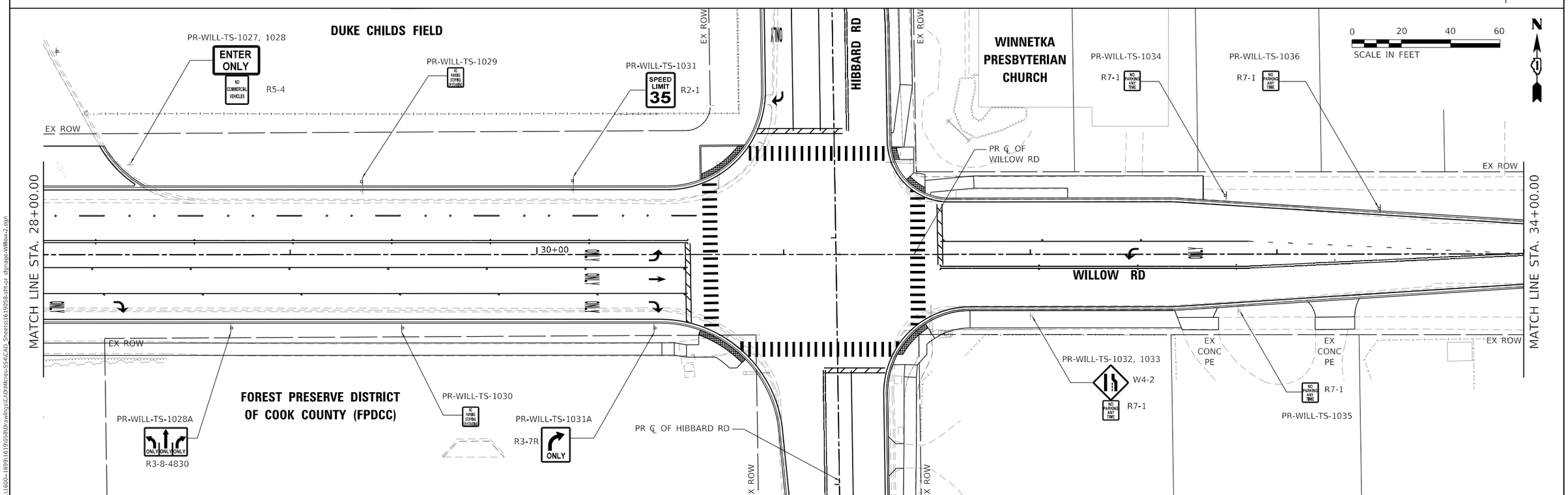


MODEL: Default
FILE NAME: S:\DL\1600-1699\1619\05BID\awings\CADD\Micro-Sta\CAD Sheets\1619058-sht-sr dignage-Willow-2.dgn


STRAND ASSOCIATES®
1170 SOUTH HOUBOLT ROAD
JOLIET, ILLINOIS 60431
(815) 744-4200


| | | | |
|---|---|---|---|
| USER NAME = AlexaM | DESIGNED - | REVISED - | |
| | DRAWN - | REVISED - | |
| PLOT SCALE = 40.0000 ' / in. | CHECKED - | REVISED - | |
| PLOT DATE = 7/8/2026 | DATE - 2/27/2026 | REVISED - | |

**STATE OF ILLINOIS**
**DEPARTMENT OF TRANSPORTATION**

**PROPOSED SIGNAGE PLAN**
**WILLOW ROAD**

SCALE: 1" = 20' | SHEET 2 OF 5 SHEETS | STA. 22+00.00 TO STA. 34+00.00

| F.A.U. RTE. | SECTION | COUNTY | TOTAL SHEETS | SHEET NO. |
|---|---|---|---|---|
| 3561 | 08-00103-00-FP | COOK | 254 | 135 |
| | | CONTRACT NO. 61M29 | | |
| | | ILLINOIS | FED. AID PROJECT | |

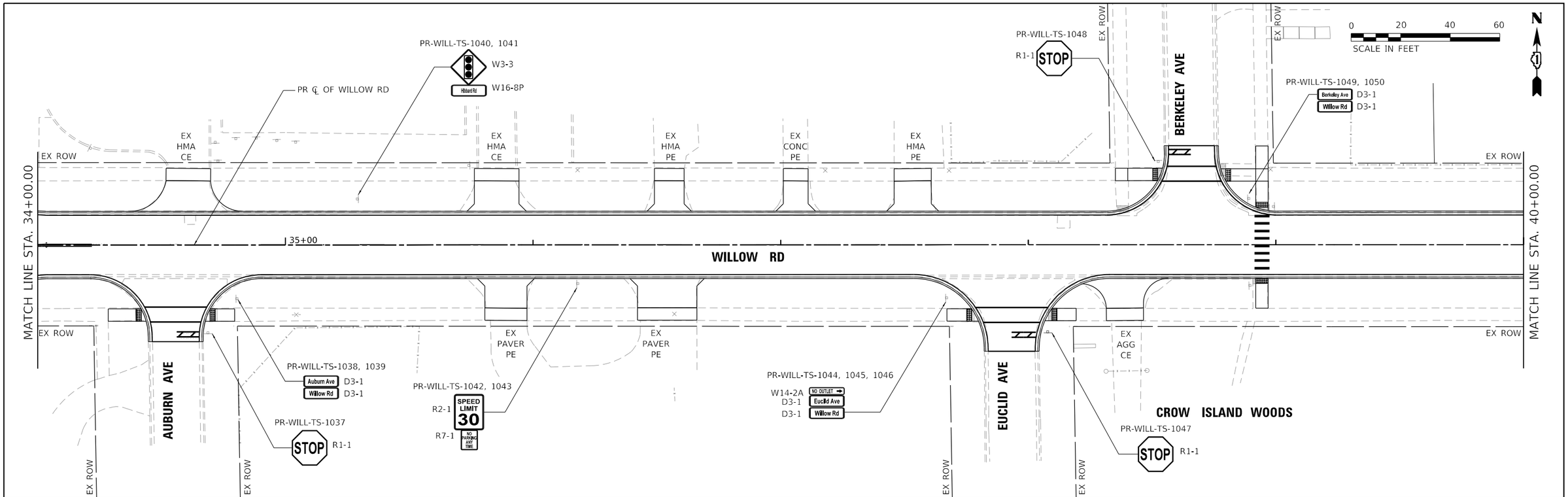


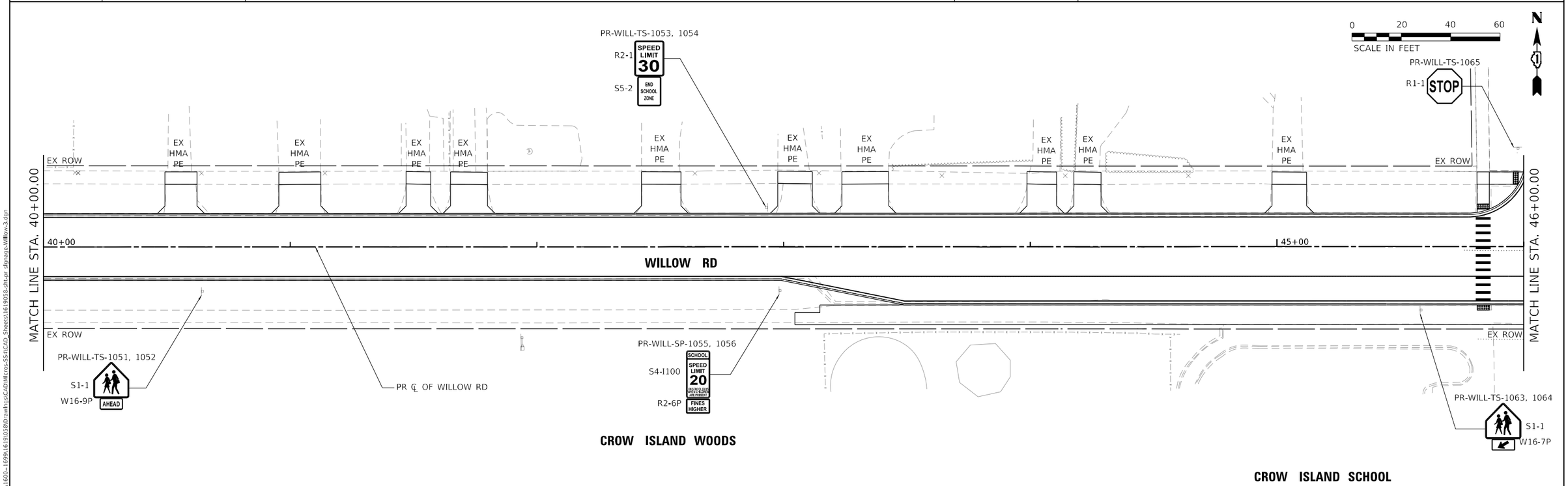


MODEL: Default
FILE NAME: S:\OLL\1600-1699\1619\0058\Drawings\CAD\Micros-SSA\CAD_Sheets\1619058-pn-pr_signage-Willow-3.dgn

STRAND ASSOCIATES®
1170 SOUTH HOUBOLT ROAD
JOLIET, ILLINOIS 60431
(815) 744-4200

| | | |
|---|---|---|
| USER NAME = AlexaM | DESIGNED - | REVISED - |
| | DRAWN - | REVISED - |
| PLOT SCALE = 40.0000 ' / in. | CHECKED - | REVISED - |
| PLOT DATE = 7/8/2026 | DATE - 2/27/2026 | REVISED - |

**STATE OF ILLINOIS**
**DEPARTMENT OF TRANSPORTATION**

**PROPOSED SIGNAGE PLAN**
**WILLOW ROAD**

SCALE: 1" = 20' | SHEET 3 OF 5 SHEETS | STA. 34+00.00 TO STA. 46+00.00

| F.A.U. RTE. | SECTION | COUNTY | TOTAL SHEETS | SHEET NO. |
|---|---|---|---|---|
| 3561 | 08-00103-00-FP | COOK | 254 | 136 |
| | | CONTRACT NO. 61M29 | | |
| | | ILLINOIS | FED. AID PROJECT | |

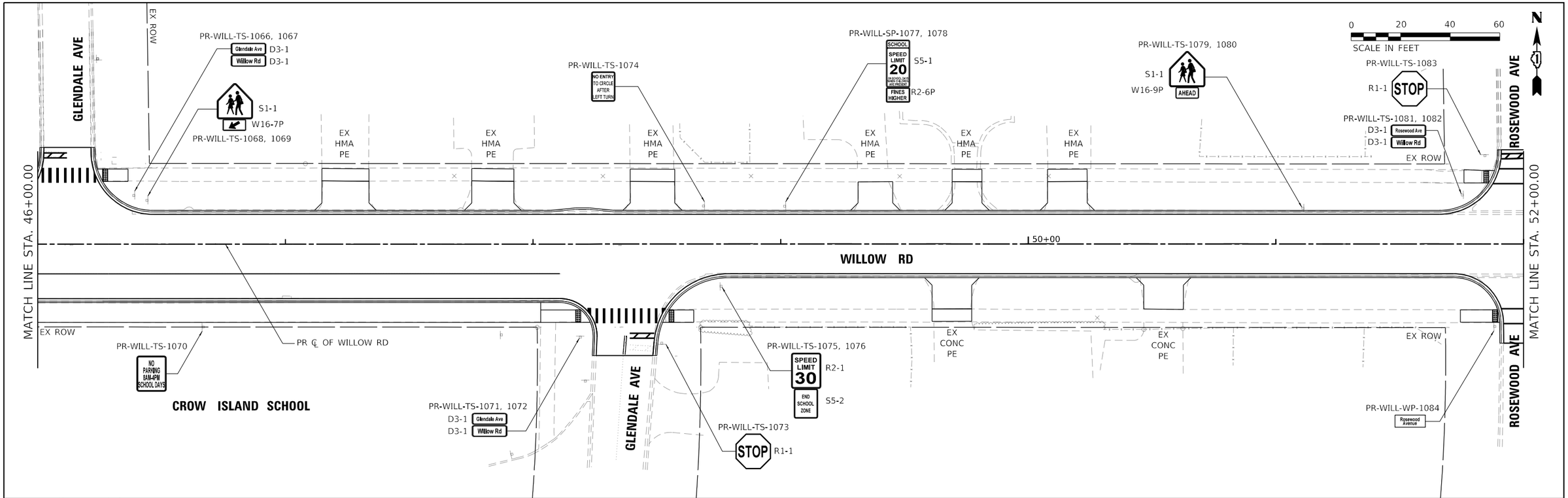


MODEL: Default
FILE NAME: S:\JOL\1600-1699\1619\05B\Drawings\CAD\Micros-SS4\CAD_Sheets\1619\05B-sht-pr_dgnsnpc-Willow-4.dgn


STRAND ASSOCIATES®
1170 SOUTH HOUBOLT ROAD
JOLIET, ILLINOIS 60431
(815) 744-4200


| | | |
|---|---|---|
| USER NAME = AlexaM | DESIGNED - | REVISED - |
| | DRAWN - | REVISED - |
| PLOT SCALE = 40.0000 ' / in. | CHECKED - | REVISED - |
| PLOT DATE = 7/8/2026 | DATE - 2/27/2026 | REVISED - |

**STATE OF ILLINOIS**
**DEPARTMENT OF TRANSPORTATION**

**PROPOSED SIGNAGE PLAN**
**WILLOW ROAD**

SCALE: 1" = 20' | SHEET 4 OF 5 SHEETS | STA. 46+00.00 TO STA. 58+00.00

| F.A.U. RTE. | SECTION | COUNTY | TOTAL SHEETS | SHEET NO. |
|---|---|---|---|---|
| 3561 | 08-00103-00-FP | COOK | 254 | 137 |

CONTRACT NO. 61M29

ILLINOIS | FED. AID PROJECT

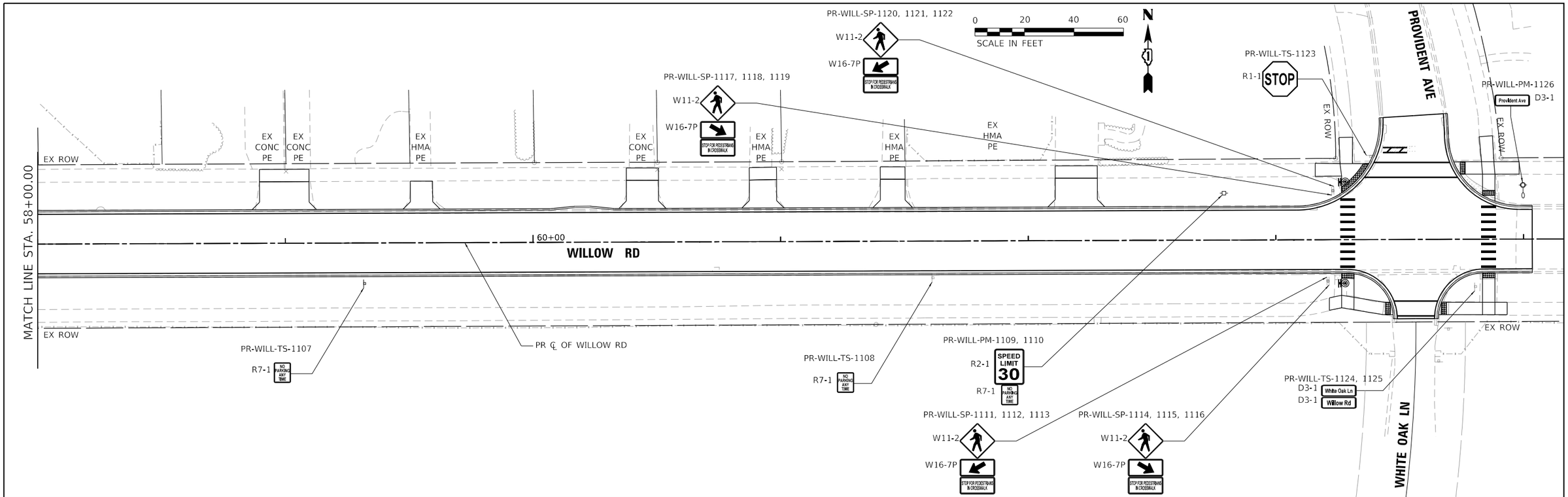


MODEL: Default
FILE NAME: S:\OL\1600-1699\1619\0058\Drawings\CAD\Micros-SSA\CAD_Sheets\1619058-sht-pr_signage-Willow-5.dgn


STRAND ASSOCIATES®
1170 SOUTH HOUBOLT ROAD
JOLIET, ILLINOIS 60431
(815) 744-4200


| | | |
|---|---|---|
| USER NAME = AlexaM | DESIGNED - | REVISED - |
| | DRAWN - | REVISED - |
| PLOT SCALE = 40.0000 ' / in. | CHECKED - | REVISED - |
| PLOT DATE = 7/8/2026 | DATE - 2/27/2026 | REVISED - |

**STATE OF ILLINOIS**
**DEPARTMENT OF TRANSPORTATION**

**PROPOSED SIGNAGE PLAN**
**WILLOW ROAD**

SCALE: 1" = 20' | SHEET 5 OF 5 SHEETS | STA. 58+00.00 TO STA.

| F.A.U. RTE. | SECTION | COUNTY | TOTAL SHEETS | SHEET NO. |
|---|---|---|---|---|
| 3561 | 08-00103-00-FP | COOK | 254 | 138 |

CONTRACT NO. 61M29

ILLINOIS | FED. AID PROJECT

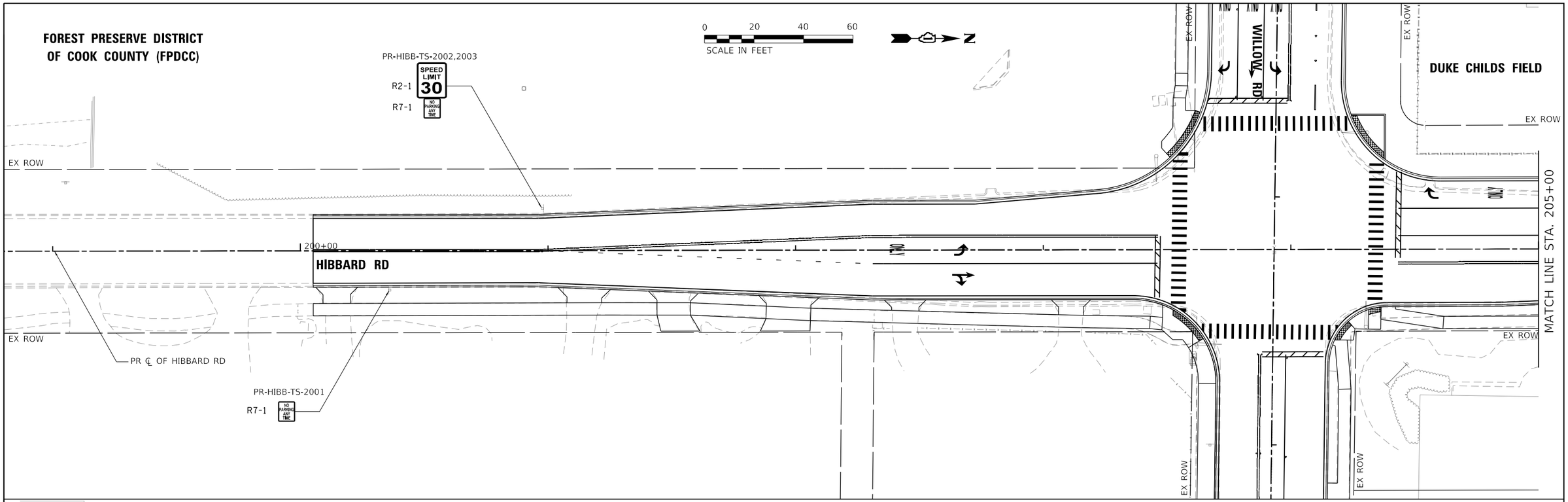


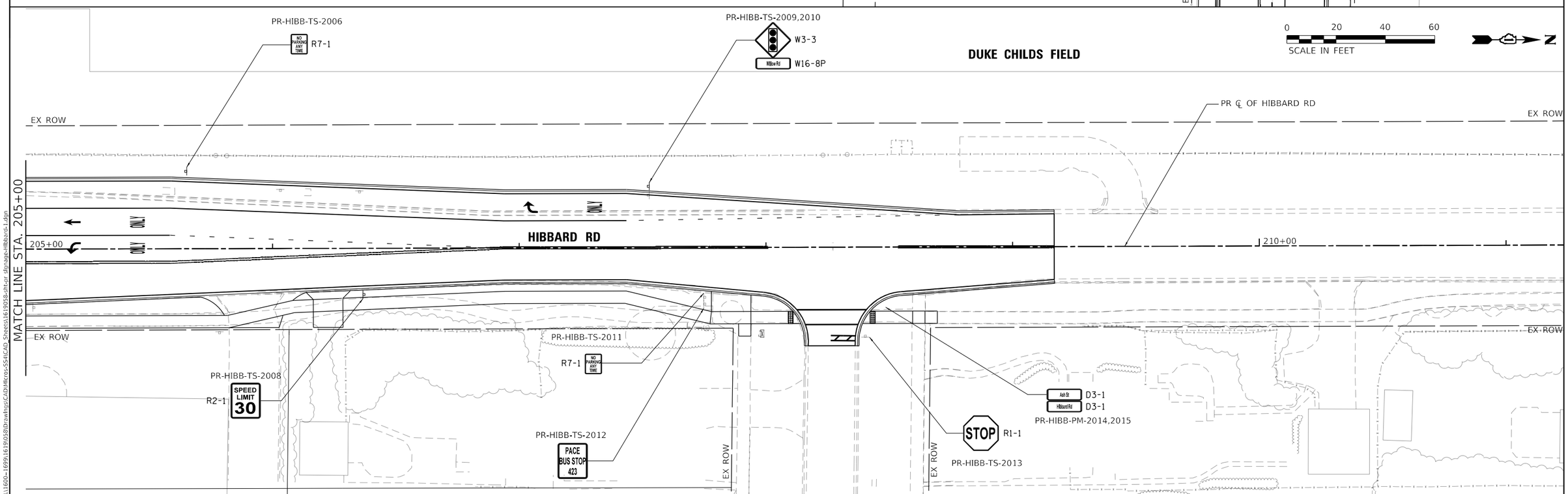


MODEL: Default
FILE NAME: S:\OLL\1600-1699\1619\0058\Drawings\CAD\Micros-SSA\CAD_Sheets\1619058-ph-pr signage-Hibbard-1.dgn


STRAND ASSOCIATES®
1170 SOUTH HOUBOLT ROAD
JOLIET, ILLINOIS 60431
(815) 744-4200


| | | |
|---|---|---|
| USER NAME = AlexaM | DESIGNED - | REVISED - |
| | DRAWN - | REVISED - |
| PLOT SCALE = 40.0000 ' / in. | CHECKED - | REVISED - |
| PLOT DATE = 7/8/2026 | DATE - 2/27/2026 | REVISED - |

**STATE OF ILLINOIS**
**DEPARTMENT OF TRANSPORTATION**

**PROPOSED SIGNAGE PLAN**
**HIBBARD ROAD**

SCALE: 1" = 20' | SHEET 1 OF 1 SHEETS | STA. 198+80.26 TO STA. 211+23.46

| F.A.U. RTE. | SECTION | COUNTY | TOTAL SHEETS | SHEET NO. |
|---|---|---|---|---|
| 3561 | 08-00103-00-FP | COOK | 254 | 139 |
| | | CONTRACT NO. 61M29 | | |
| | | ILLINOIS | FED. AID PROJECT | |

## NOTES:

1. ALL PAVEMENT MARKINGS SHALL BE INSTALLED ACCORDING TO IDOT D1 PAVEMENT MARKING DETAIL TC-13.
2. ALL RAISED REFLECTIVE PAVEMENT MARKERS SHALL BE INSTALLED ACCORDING TO IDOT D1 RAISED REFLECTIVE PAVEMENT MARKERS DETAIL TC-11.

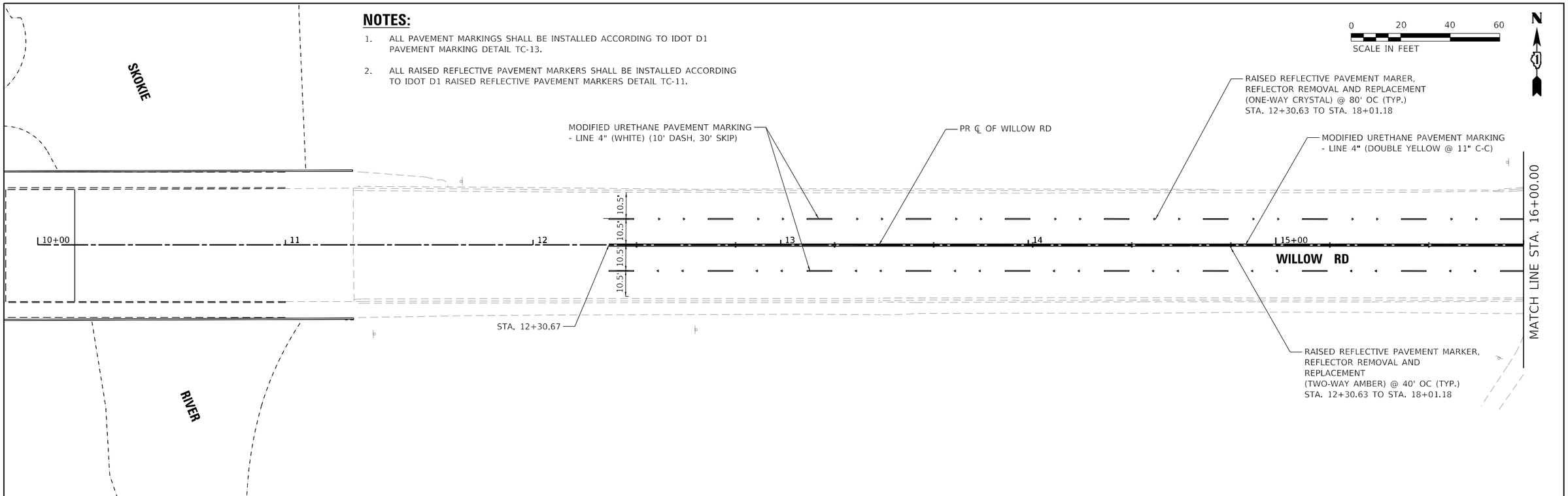


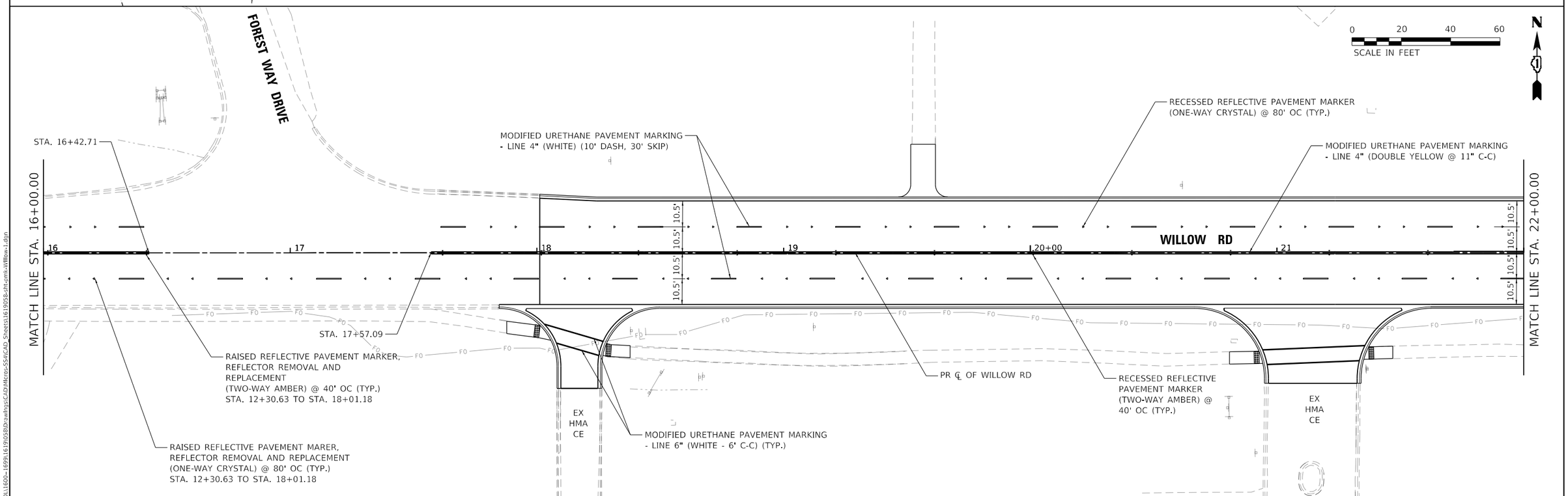


MODEL: Default
FILE NAME: S:\OLL1600-1699\1619\0058\Drawings\CAD\Micros-SSA\CAD_Sheets\1619058-pt-pmk-xWillow-1.dgn


STRAND ASSOCIATES®
1170 SOUTH HOUBOLT ROAD
JOLIET, ILLINOIS 60431
(815) 744-4200


| | | |
|---|---|---|
| USER NAME = AlexaM | DESIGNED - | REVISED - |
| | DRAWN - | REVISED - |
| PLOT SCALE = 40.0000 ' / in. | CHECKED - | REVISED - |
| PLOT DATE = 7/8/2026 | DATE - 2/27/2026 | REVISED - |

**STATE OF ILLINOIS**
**DEPARTMENT OF TRANSPORTATION**

**PAVEMENT MARKING PLAN**
**WILLOW ROAD**

SCALE: 1" = 20' | SHEET 1 OF 5 SHEETS | STA. 10+00.00 TO STA. 22+00.00

| F.A.U. RTE. | SECTION | COUNTY | TOTAL SHEETS | SHEET NO. |
|---|---|---|---|---|
| 3561 | 08-00103-00-FP | COOK | 254 | 140 |
| | | CONTRACT NO. 61M29 | | |
| | | ILLINOIS | FED. AID PROJECT | |

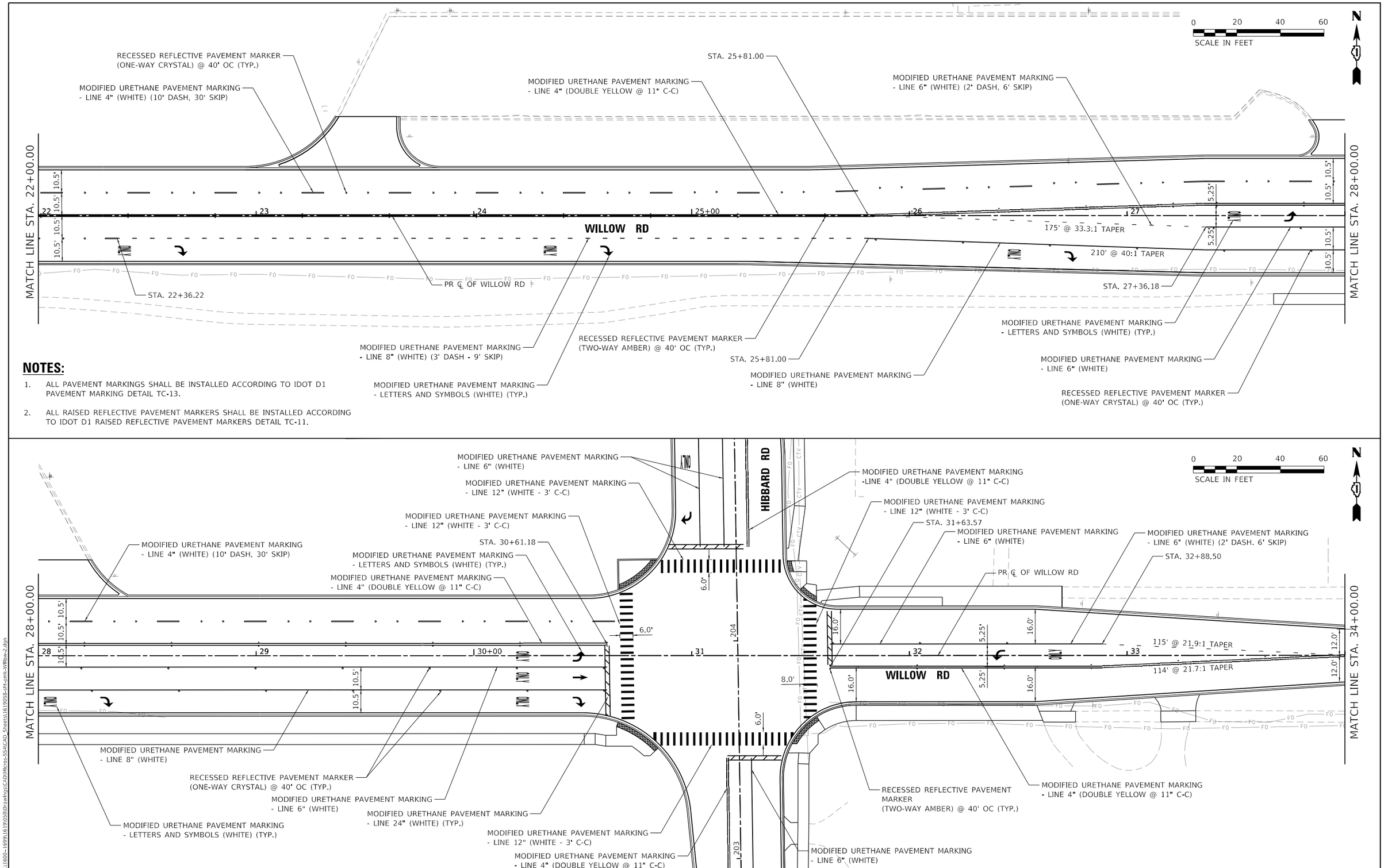


## NOTES:

1. ALL PAVEMENT MARKINGS SHALL BE INSTALLED ACCORDING TO IDOT D1 PAVEMENT MARKING DETAIL TC-13.
2. ALL RAISED REFLECTIVE PAVEMENT MARKERS SHALL BE INSTALLED ACCORDING TO IDOT D1 RAISED REFLECTIVE PAVEMENT MARKERS DETAIL TC-11.

MODEL: Default
FILE NAME: S:\JOL\1600-1699\1619058\Drawings\CADd\Micro-Station\CAD Sheets\1619058-sht-pmk-willow-2.dgn


STRAND ASSOCIATES®
1170 SOUTH HOUBOLT ROAD
JOLIET, ILLINOIS 60431
(815) 744-4200


| | | |
|---|---|---|
| USER NAME = AlexaM | DESIGNED - | REVISED - |
| | DRAWN - | REVISED - |
| PLOT SCALE = 40.0000 ' / in. | CHECKED - | REVISED - |
| PLOT DATE = 7/8/2026 | DATE - 2/27/2026 | REVISED - |

**STATE OF ILLINOIS**
**DEPARTMENT OF TRANSPORTATION**

**PAVEMENT MARKING PLAN**
**WILLOW ROAD**

SCALE: 1" = 20' | SHEET 2 OF 5 SHEETS | STA. 22+00.00 TO STA. 34+00.00

| F.A.U. RTE. | SECTION | COUNTY | TOTAL SHEETS | SHEET NO. |
|---|---|---|---|---|
| 3561 | 08-00103-00-FP | COOK | 254 | 141 |
| | | CONTRACT NO. 61M29 | | |
| | | ILLINOIS | FED. AID PROJECT | |

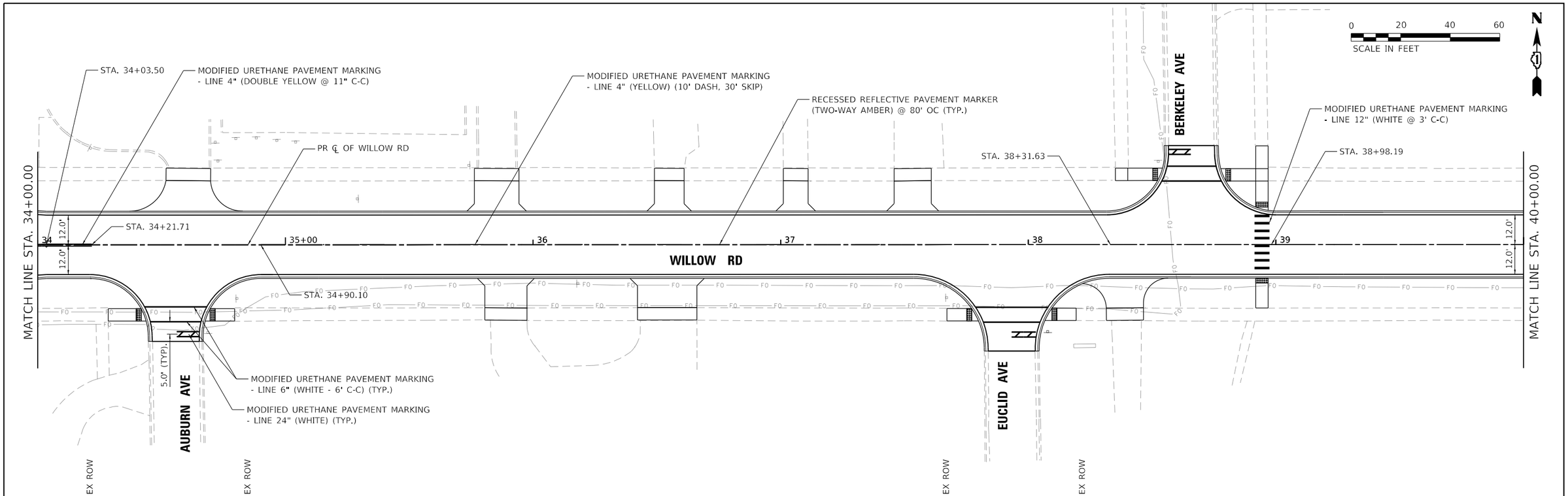


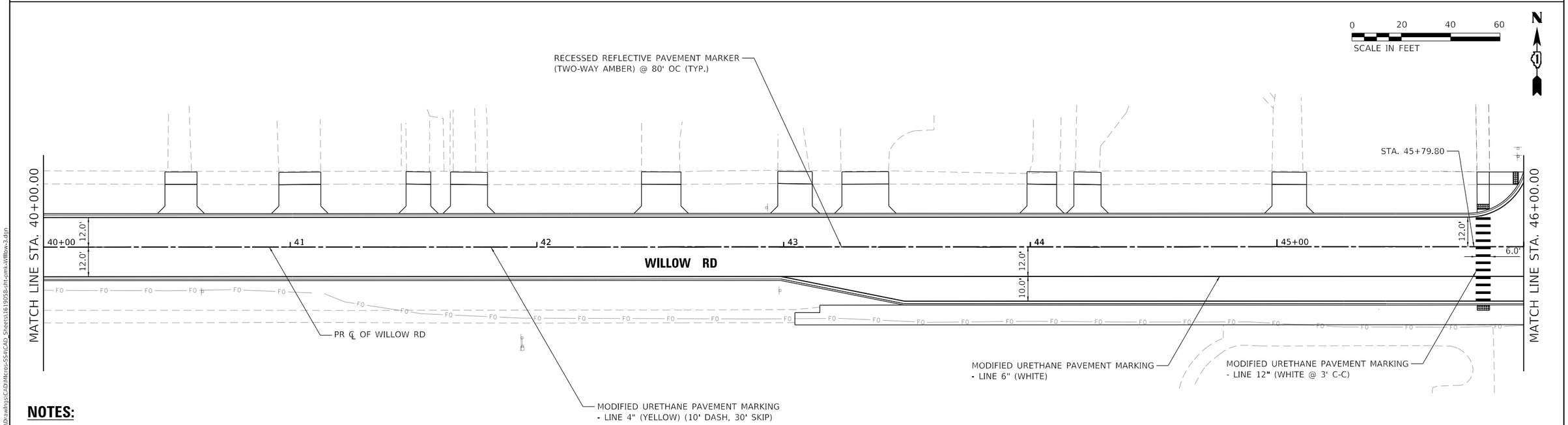


## NOTES:

1. ALL PAVEMENT MARKINGS SHALL BE INSTALLED ACCORDING TO IDOT D1 PAVEMENT MARKING DETAIL TC-13.
2. ALL RAISED REFLECTIVE PAVEMENT MARKERS SHALL BE INSTALLED ACCORDING TO IDOT D1 RAISED REFLECTIVE PAVEMENT MARKERS DETAIL TC-11.

MODEL: Default
FILE NAME: S:\OL\1600-1699\1619058\Drawings\CAD\Micros-SSA\CAD_Sheets\1619058-PM-pmk-WWow-3.dgn


STRAND ASSOCIATES®
1170 SOUTH HOUBOLT ROAD
JOLIET, ILLINOIS 60431
(815) 744-4200


| | | | |
|---|---|---|---|
| USER NAME = AlexaM | DESIGNED - | REVISED - | |
| | DRAWN - | REVISED - | |
| PLOT SCALE = 40.0000 ' / in. | CHECKED - | REVISED - | |
| PLOT DATE = 7/8/2026 | DATE - 2/27/2026 | REVISED - | |

**STATE OF ILLINOIS**
**DEPARTMENT OF TRANSPORTATION**

**PAVEMENT MARKING PLAN**
**WILLOW ROAD**

SCALE: 1" = 20' | SHEET 3 OF 5 SHEETS | STA. 34+00.00 TO STA. 46+00.00

| F.A.U. RTE. | SECTION | COUNTY | TOTAL SHEETS | SHEET NO. |
|---|---|---|---|---|
| 3561 | 08-00103-00-FP | COOK | 254 | 142 |
| | | CONTRACT NO. 61M29 | | |
| | | ILLINOIS | FED. AID PROJECT | |

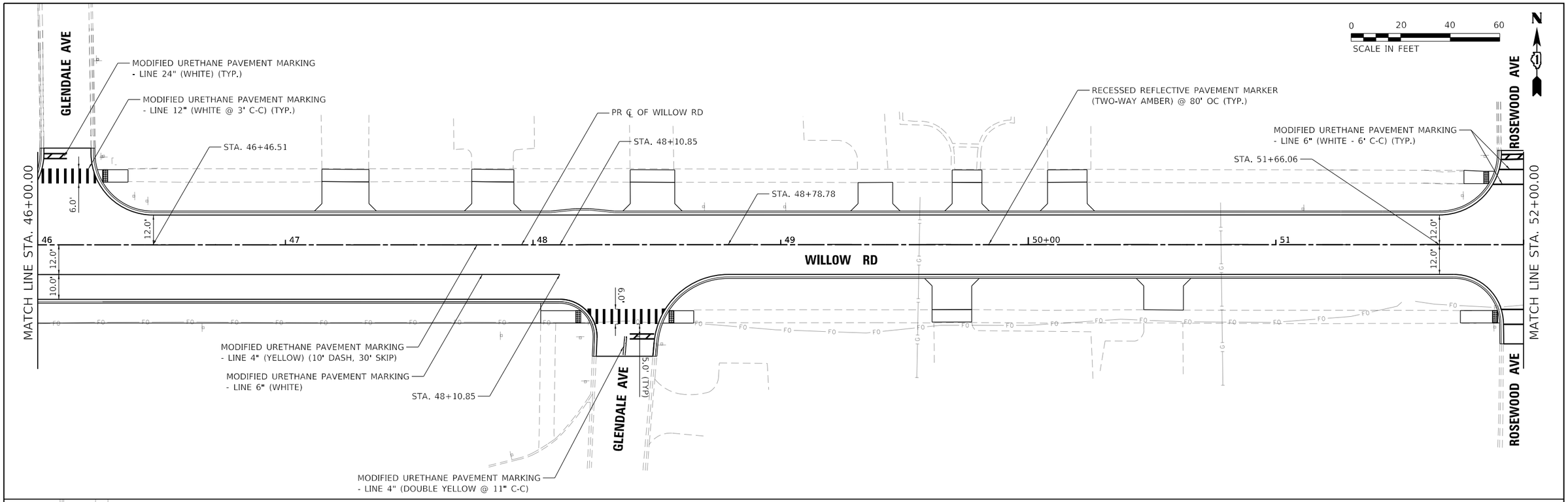


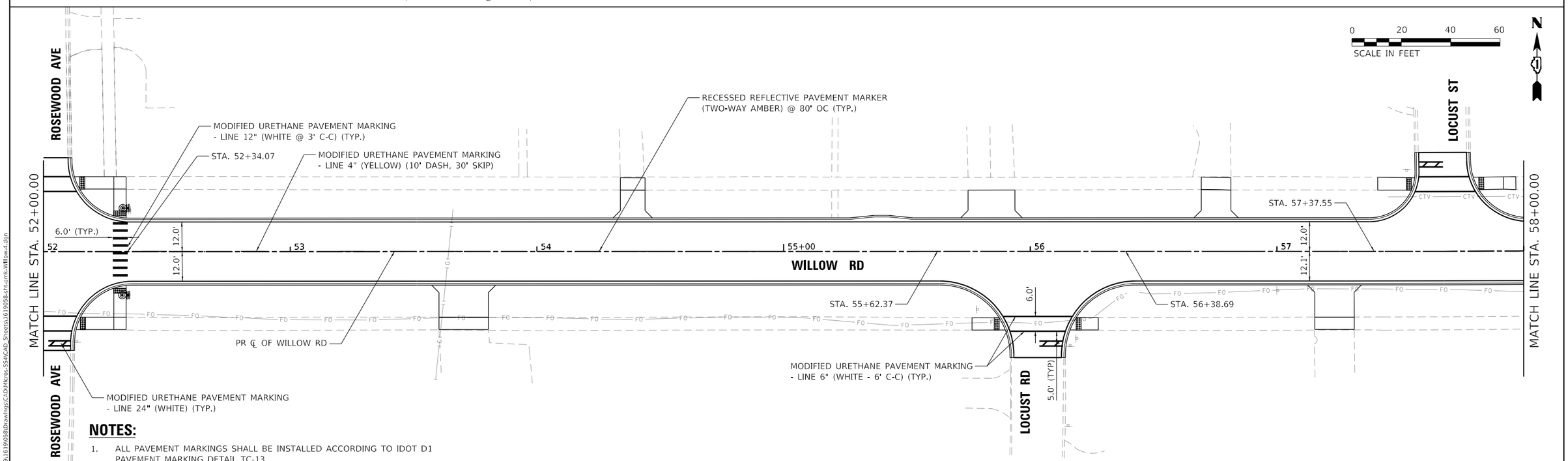


## NOTES:

1. ALL PAVEMENT MARKINGS SHALL BE INSTALLED ACCORDING TO IDOT D1 PAVEMENT MARKING DETAIL TC-13.
2. ALL RAISED REFLECTIVE PAVEMENT MARKERS SHALL BE INSTALLED ACCORDING TO IDOT D1 RAISED REFLECTIVE PAVEMENT MARKERS DETAIL TC-11.

MODEL: Default
FILE NAME: $:\JOL\1600-1699\1619038\Drawings\CAD\Micro-SS4\CAD_Sheets\1619038-sht-pmk-Willow-4.dgn


STRAND ASSOCIATES®
1170 SOUTH HOUBOLT ROAD
JOLIET, ILLINOIS 60431
(815) 744-4200


| | | |
|---|---|---|
| USER NAME = AlexaM | DESIGNED - | REVISED - |
| | DRAWN - | REVISED - |
| PLOT SCALE = 40.0000 ' / in. | CHECKED - | REVISED - |
| PLOT DATE = 7/8/2026 | DATE - 2/27/2026 | REVISED - |

**STATE OF ILLINOIS**
**DEPARTMENT OF TRANSPORTATION**

**PAVEMENT MARKING PLAN**
**WILLOW ROAD**

SCALE: 1" = 20' | SHEET 4 OF 5 SHEETS | STA. 46+00.00 TO STA. 58+00.00

| F.A.U. RTE. | SECTION | COUNTY | TOTAL SHEETS | SHEET NO. |
|---|---|---|---|---|
| 3561 | 08-00103-00-FP | COOK | 254 | 143 |

CONTRACT NO. 61M29

ILLINOIS | FED. AID PROJECT

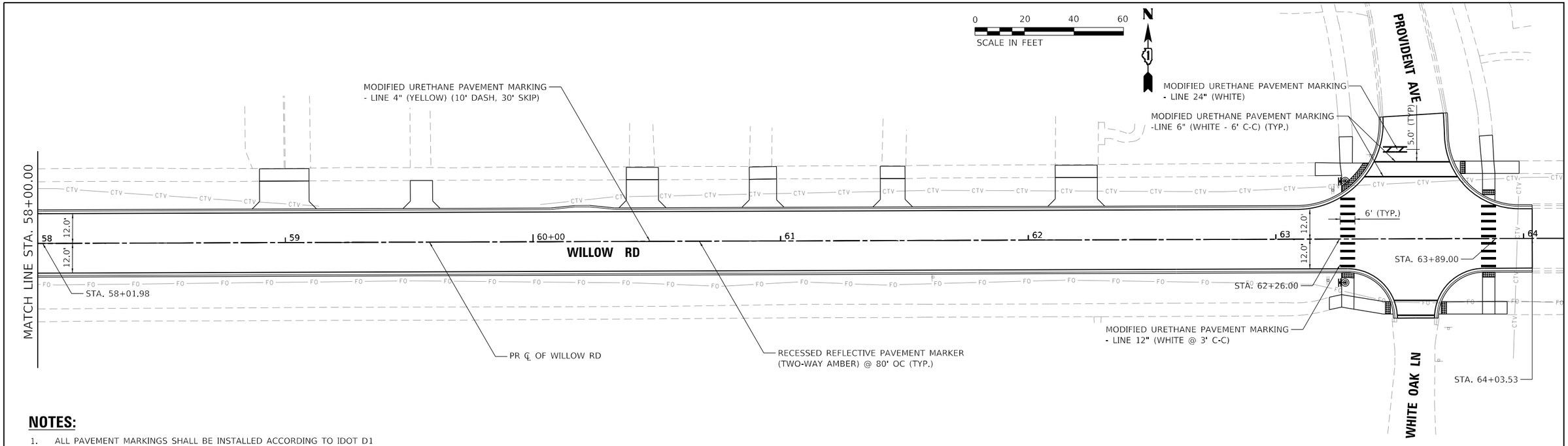


## NOTES:

1. ALL PAVEMENT MARKINGS SHALL BE INSTALLED ACCORDING TO IDOT D1 PAVEMENT MARKING DETAIL TC-13.
2. ALL RAISED REFLECTIVE PAVEMENT MARKERS SHALL BE INSTALLED ACCORDING TO IDOT D1 RAISED REFLECTIVE PAVEMENT MARKERS DETAIL TC-11.

MODEL: Default
FILE NAME: S:\Oli\1600-1699\16190508\Drawings\CAD\Micros-SSA\CAD_Sheets\16190508-pmk-Willow-5.dgn

STRAND ASSOCIATES®
1170 SOUTH HOUBOLT ROAD
JOLIET, ILLINOIS 60431
(815) 744-4200

| | | |
|---|---|---|
| USER NAME = AlexaM | DESIGNED - | REVISED - |
| | DRAWN - | REVISED - |
| PLOT SCALE = 40.0000 ' / in. | CHECKED - | REVISED - |
| PLOT DATE = 7/8/2026 | DATE - 2/27/2026 | REVISED - |

**STATE OF ILLINOIS**
**DEPARTMENT OF TRANSPORTATION**

**PAVEMENT MARKING PLAN**
**WILLOW ROAD**

SCALE: 1" = 20' | SHEET 5 OF 5 SHEETS | STA. 58+00.00 TO STA.

| F.A.U. RTE. | SECTION | COUNTY | TOTAL SHEETS | SHEET NO. |
|---|---|---|---|---|
| 3561 | 08-00103-00-FP | COOK | 254 | 144 |

CONTRACT NO. 61M29

ILLINOIS | FED. AID PROJECT

**FOREST PRESERVE DISTRICT OF COOK COUNTY (FPDCC)**

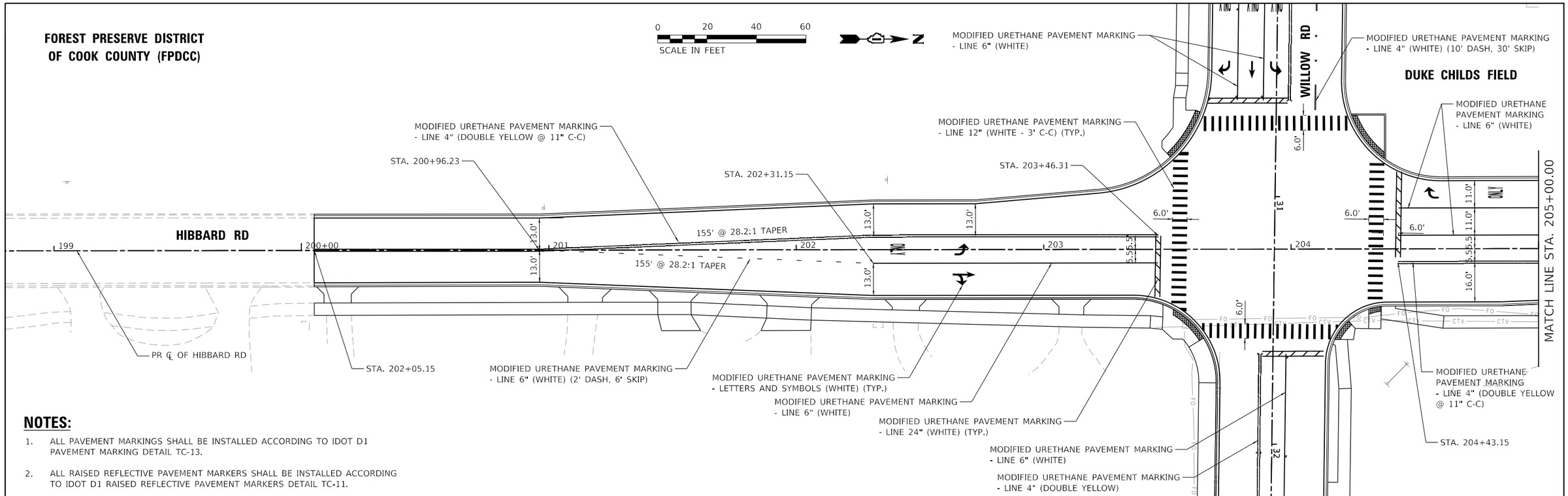


## NOTES:

1. ALL PAVEMENT MARKINGS SHALL BE INSTALLED ACCORDING TO IDOT D1 PAVEMENT MARKING DETAIL TC-13.
2. ALL RAISED REFLECTIVE PAVEMENT MARKERS SHALL BE INSTALLED ACCORDING TO IDOT D1 RAISED REFLECTIVE PAVEMENT MARKERS DETAIL TC-11.

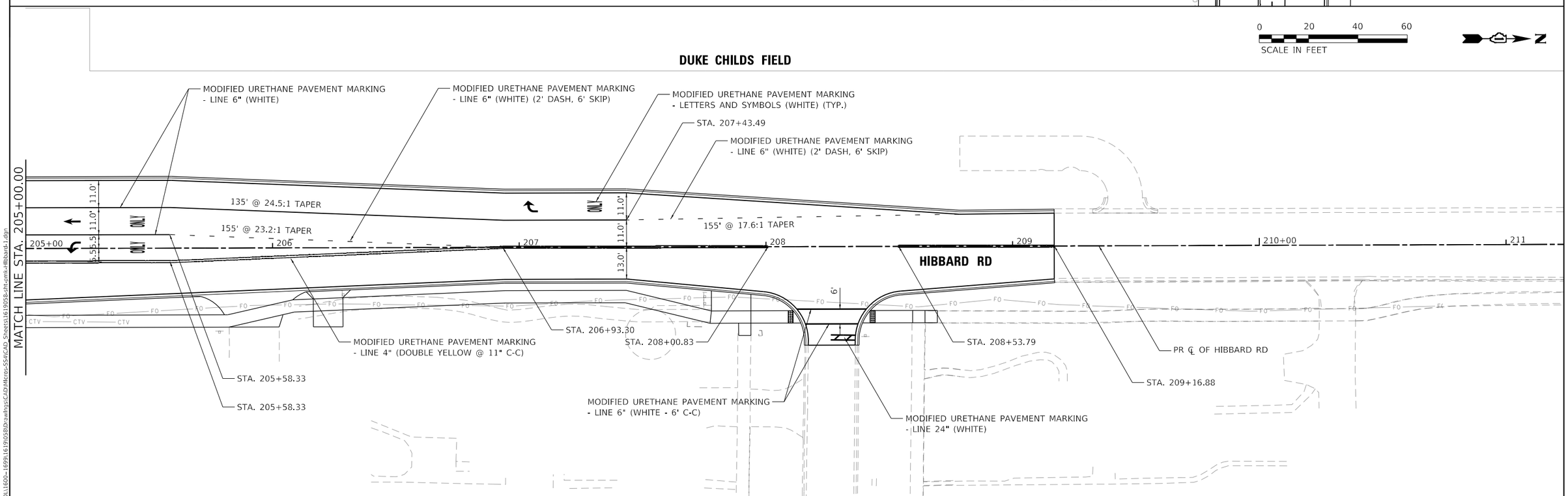


MODEL: Default
FILE NAME: S:\OL\1600-1699\1619\0058\Drawings\CAD\Micros-SSA\CAD_Sheets\1619058-PM-pmk-Hibbard-1.dgn

| | | | | | |
|---|---|---|---|---|---|
| STRAND ASSOCIATES® 1170 SOUTH HOUBOLT ROAD JOLIET, ILLINOIS 60431 (815) 744-4200 | USER NAME = AlexaM | DESIGNED - | REVISED - | STATE OF ILLINOIS DEPARTMENT OF TRANSPORTATION | PAVEMENT MARKING PLAN HIBBARD ROAD |
| | | DRAWN - | REVISED - | | |
| | PLOT SCALE = 40.0000 ' / in. | CHECKED - | REVISED - | | |
| | PLOT DATE = 7/8/2026 | DATE - 2/27/2026 | REVISED - | | SCALE: 1" = 20' SHEET 1 OF 1 SHEETS STA. 22+00.00 TO STA. 34+00.00 |

| F.A.U. RTE. | SECTION | COUNTY | TOTAL SHEETS | SHEET NO. |
|---|---|---|---|---|
| 3561 | 08-00103-00-FP | COOK | 254 | 145 |
| | | CONTRACT NO. 61M29 | | |
| | | ILLINOIS | FED. AID PROJECT | |

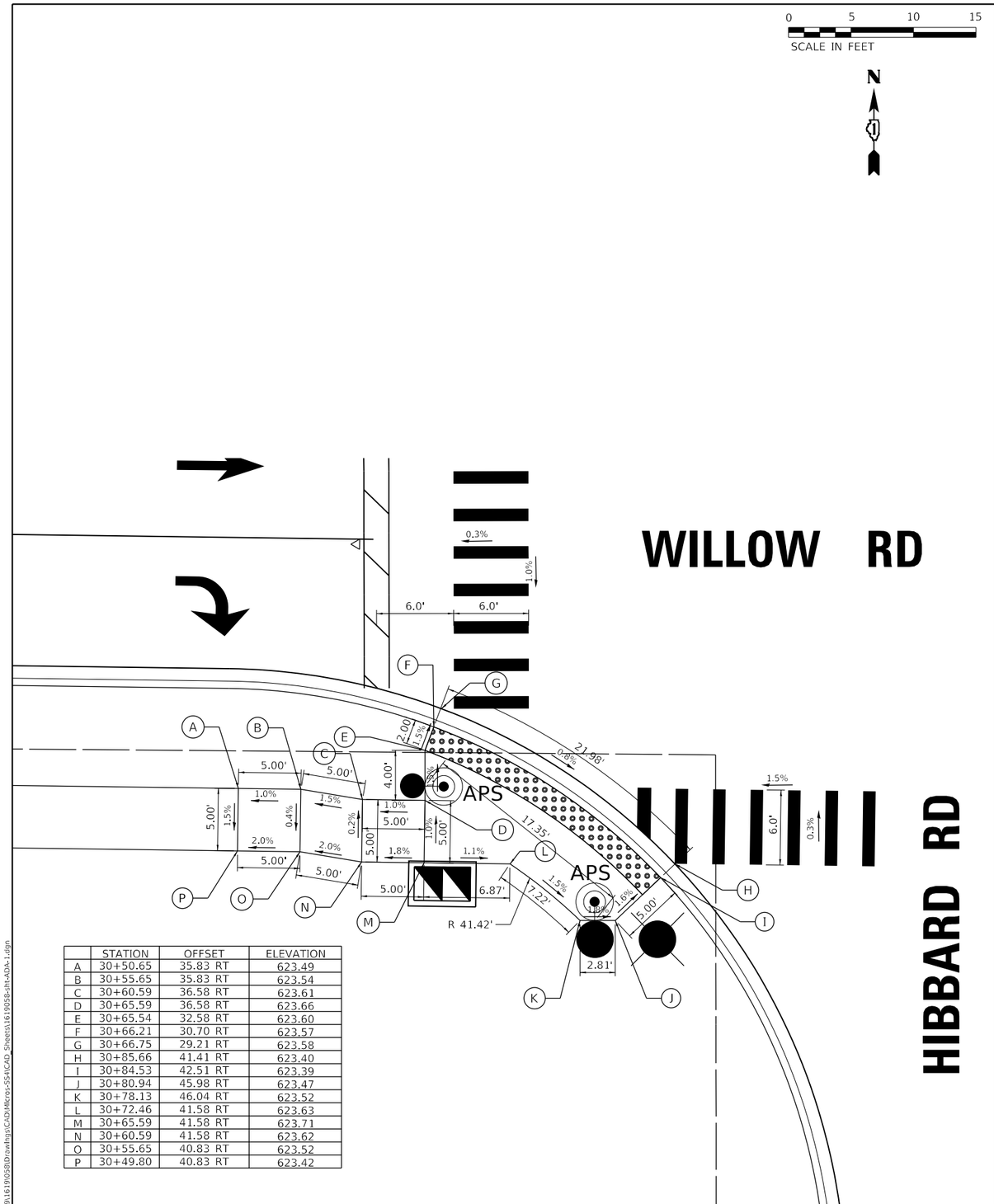


| | STATION | OFFSET | ELEVATION |
|---|---|---|---|
| A | 30+50.65 | 35.83 RT | 623.49 |
| B | 30+55.65 | 35.83 RT | 623.54 |
| C | 30+60.59 | 36.58 RT | 623.61 |
| D | 30+65.59 | 36.58 RT | 623.66 |
| E | 30+65.54 | 32.58 RT | 623.60 |
| F | 30+66.21 | 30.70 RT | 623.57 |
| G | 30+66.75 | 29.21 RT | 623.58 |
| H | 30+85.66 | 41.41 RT | 623.40 |
| I | 30+84.53 | 42.51 RT | 623.39 |
| J | 30+80.94 | 45.98 RT | 623.47 |
| K | 30+78.13 | 46.04 RT | 623.52 |
| L | 30+72.46 | 41.58 RT | 623.63 |
| M | 30+65.59 | 41.58 RT | 623.71 |
| N | 30+60.59 | 41.58 RT | 623.62 |
| O | 30+55.65 | 40.83 RT | 623.52 |
| P | 30+49.80 | 40.83 RT | 623.42 |

LOCATION: WILLOW ROAD AND HIBBARD ROAD SW CORNER

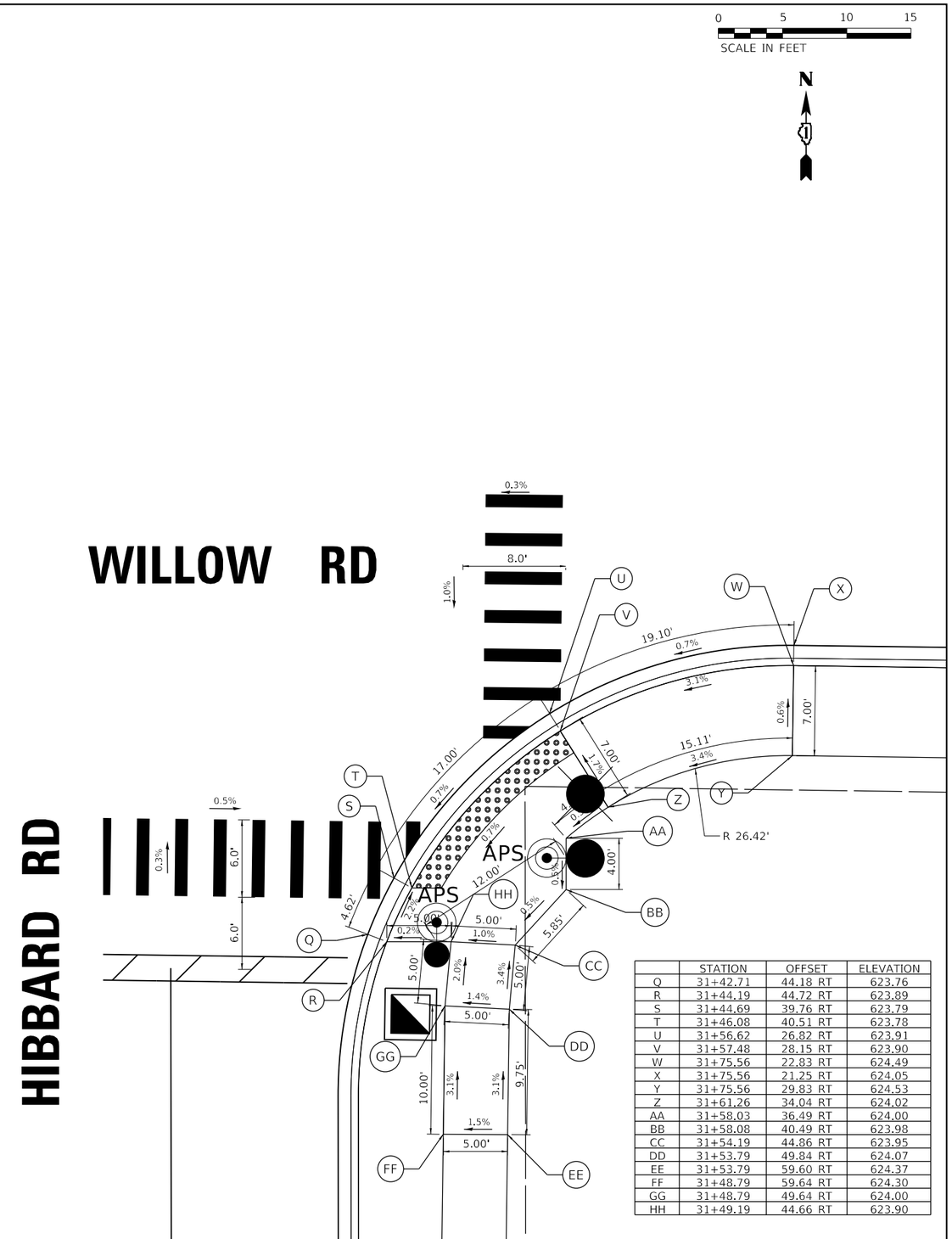


| | STATION | OFFSET | ELEVATION |
|---|---|---|---|
| Q | 31+42.71 | 44.18 RT | 623.76 |
| R | 31+44.19 | 44.72 RT | 623.89 |
| S | 31+44.69 | 39.76 RT | 623.79 |
| T | 31+46.08 | 40.51 RT | 623.78 |
| U | 31+56.62 | 26.82 RT | 623.91 |
| V | 31+57.48 | 28.15 RT | 623.90 |
| W | 31+75.56 | 22.83 RT | 624.49 |
| X | 31+75.56 | 21.25 RT | 624.05 |
| Y | 31+75.56 | 29.83 RT | 624.53 |
| Z | 31+61.26 | 34.04 RT | 624.02 |
| AA | 31+58.03 | 36.49 RT | 624.00 |
| BB | 31+58.08 | 40.49 RT | 623.98 |
| CC | 31+54.19 | 44.86 RT | 623.95 |
| DD | 31+53.79 | 49.84 RT | 624.07 |
| EE | 31+53.79 | 59.60 RT | 624.37 |
| FF | 31+48.79 | 59.64 RT | 624.30 |
| GG | 31+48.79 | 49.64 RT | 624.00 |
| HH | 31+49.19 | 44.66 RT | 623.90 |

LOCATION: WILLOW ROAD AND HIBBARD ROAD SE CORNER

**LEGEND** DETECTABLE WARNINGS

MODEL: Default
FILE NAME: S:\JOL\1600-1699\1610\58\Drawings\CADMicro-SS4\CAD_Sheets\1610058-sht-40A-1.dgn

STRAND ASSOCIATES®
1170 SOUTH HOUBOLT ROAD
JOLIET, ILLINOIS 60431
(815) 744-4200

| | | | |
|---|---|---|---|
| USER NAME = AlexaM | DESIGNED - | REVISED - | |
| | DRAWN - | REVISED - | |
| PLOT SCALE = 10.0000 ' / in. | CHECKED - | REVISED - | |
| PLOT DATE = 7/8/2026 | DATE - 2/27/2026 | REVISED - | |

**STATE OF ILLINOIS**
**DEPARTMENT OF TRANSPORTATION**

**CURB RAMP DETAIL**
**WILLOW ROAD AND HIBBARD ROAD**

SCALE: 1" = 5' | SHEET 1 OF 10 SHEETS | STA. TO STA.

| F.A.U. RTE. | SECTION | COUNTY | TOTAL SHEETS | SHEET NO. |
|---|---|---|---|---|
| 3561 | 08-00103-00-FP | COOK | 254 | 146 |
| | | CONTRACT NO. 61M29 | | |
| | ILLINOIS | FED. AID PROJECT | | |

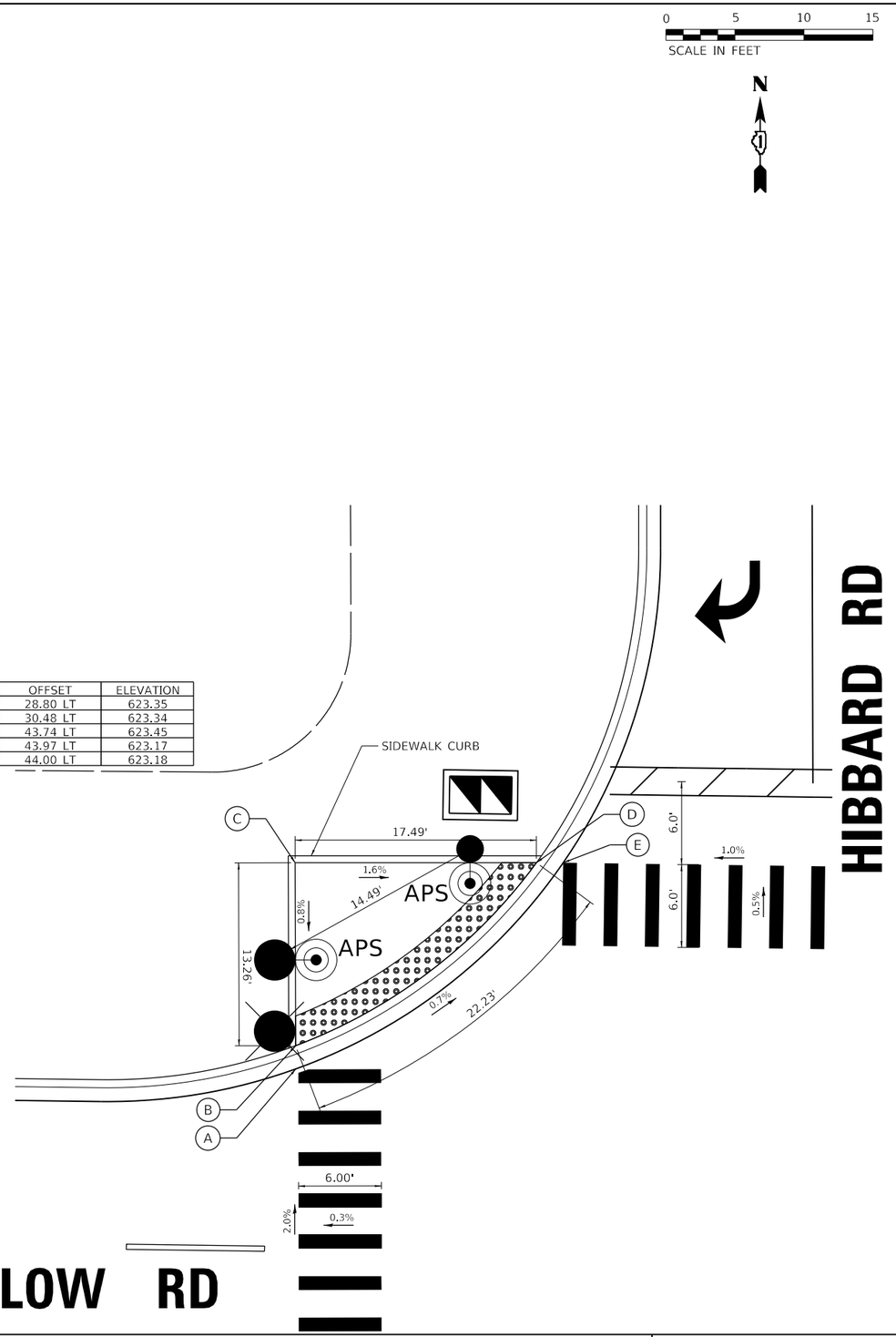


| | STATION | OFFSET | ELEVATION |
|---|---|---|---|
| A | 30+66.73 | 28.80 LT | 623.35 |
| B | 30+66.70 | 30.48 LT | 623.34 |
| C | 30+66.49 | 43.74 LT | 623.45 |
| D | 30+83.98 | 43.97 LT | 623.17 |
| E | 30+85.92 | 44.00 LT | 623.18 |

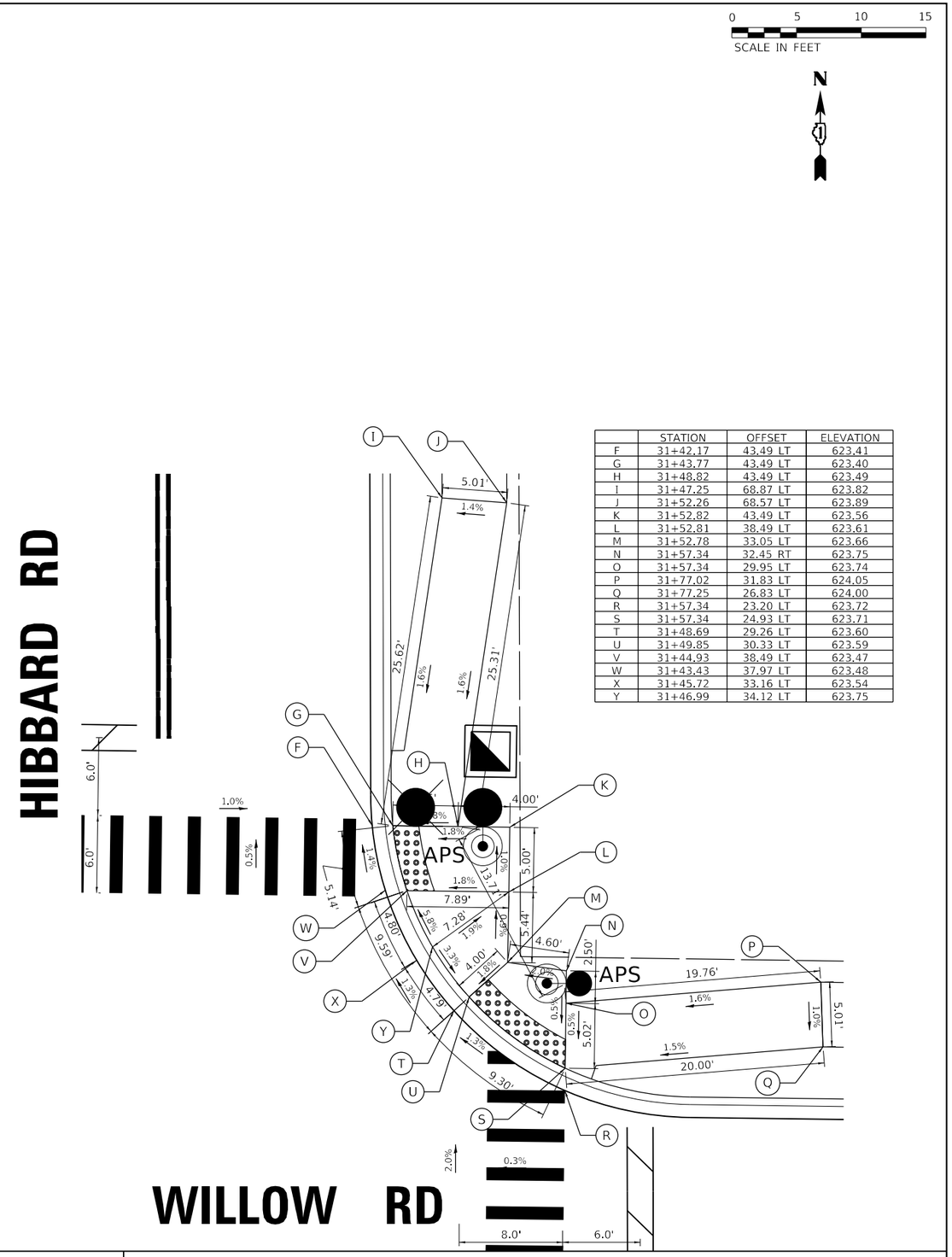


| | STATION | OFFSET | ELEVATION |
|---|---|---|---|
| F | 31+42.17 | 43.49 LT | 623.41 |
| G | 31+43.77 | 43.49 LT | 623.40 |
| H | 31+48.82 | 43.49 LT | 623.49 |
| I | 31+47.25 | 68.87 LT | 623.82 |
| J | 31+52.26 | 68.57 LT | 623.89 |
| K | 31+52.82 | 43.49 LT | 623.56 |
| L | 31+52.81 | 38.49 LT | 623.61 |
| M | 31+52.78 | 33.05 LT | 623.66 |
| N | 31+57.34 | 32.45 RT | 623.75 |
| O | 31+57.34 | 29.95 LT | 623.74 |
| P | 31+77.02 | 31.83 LT | 624.05 |
| Q | 31+77.25 | 26.83 LT | 624.00 |
| R | 31+57.34 | 23.20 LT | 623.72 |
| S | 31+57.34 | 24.93 LT | 623.71 |
| T | 31+48.69 | 29.26 LT | 623.60 |
| U | 31+49.85 | 30.33 LT | 623.59 |
| V | 31+44.93 | 38.49 LT | 623.47 |
| W | 31+43.43 | 37.97 LT | 623.48 |
| X | 31+45.72 | 33.16 LT | 623.54 |
| Y | 31+46.99 | 34.12 LT | 623.75 |

LOCATION: WILLOW ROAD AND HIBBARD ROAD NW CORNER

**LEGEND** DETECTABLE WARNINGS

LOCATION: WILLOW ROAD AND HIBBARD ROAD NE CORNER


STRAND ASSOCIATES®
1170 SOUTH HOUBOLT ROAD
JOLIET, ILLINOIS 60431
(815) 744-4200


| | | |
|---|---|---|
| USER NAME = AlexaM | DESIGNED - | REVISED - |
| | DRAWN - | REVISED - |
| PLOT SCALE = 10.0000 ' / in. | CHECKED - | REVISED - |
| PLOT DATE = 7/8/2026 | DATE - 2/27/2026 | REVISED - |

**STATE OF ILLINOIS**
**DEPARTMENT OF TRANSPORTATION**

**CURB RAMP DETAIL**
**WILLOW ROAD AND HIBBARD ROAD**

SCALE: 1" = 5' | SHEET 2 OF 10 SHEETS | STA. TO STA.

| F.A.U. RTE. | SECTION | COUNTY | TOTAL SHEETS | SHEET NO. |
|---|---|---|---|---|
| 3561 | 08-00103-00-FP | COOK | 254 | 147 |
| | | CONTRACT NO. 61M29 | | |
| | | ILLINOIS | FED. AID PROJECT | |

MODEL: Default
FILE NAME: S:\OL\1600-1699\1619058\Drawings\CAD\Micros-SS4\CAD_Sheets\1619058-JH-A0A-2.dgn

| | STATION | OFFSET | ELEVATION |
|---|---|---|---|
| A | 34+28.41 | 30.80 RT | 624.23 |
| B | 34+28.41 | 25.80 RT | 624.20 |
| C | 34+41.75 | 25.80 RT | 623.56 |
| D | 34+43.15 | 25.06 RT | 623.57 |
| E | 34+45.47 | 31.06 RT | 623.62 |
| F | 34+43.77 | 30.80 RT | 623.61 |
| FF | 34+41.75 | 30.80 RT | 623.63 |
| G | 34+65.91 | 31.06 RT | 623.56 |
| H | 34+67.61 | 30.81 RT | 623.55 |
| HH | 34+69.62 | 30.81 RT | 623.56 |
| I | 34+79.53 | 30.81 RT | 624.10 |
| J | 34+79.53 | 25.81 RT | 624.20 |
| K | 34+69.62 | 25.81 RT | 623.47 |
| L | 34+68.23 | 25.06 RT | 623.48 |

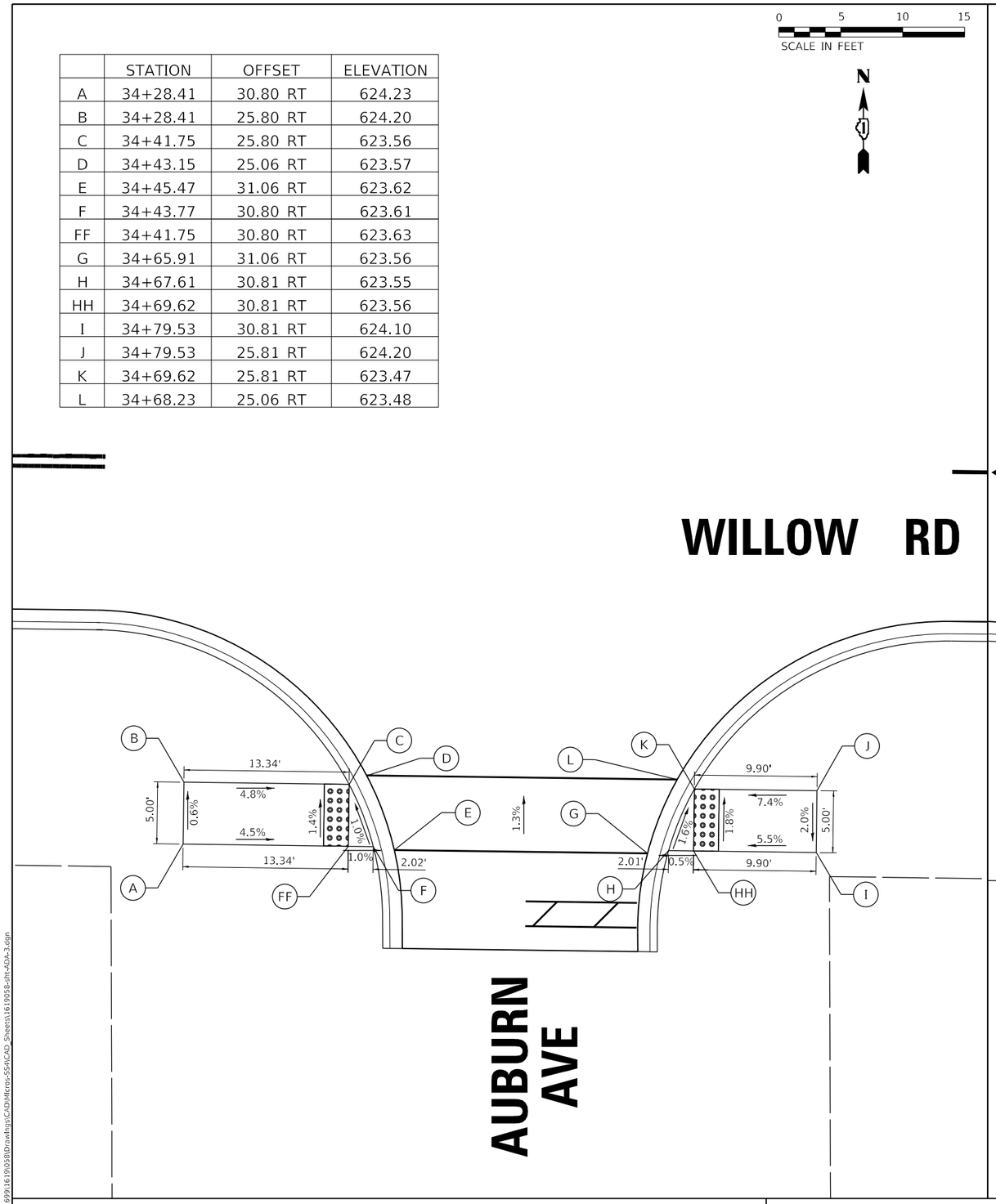


LOCATION: WILLOW ROAD AND AUBURN AVENUE

| | STATION | OFFSET | ELEVATION |
|---|---|---|---|
| A | 37+67.14 | 30.82 RT | 623.67 |
| B | 37+67.14 | 25.82 RT | 623.66 |
| C | 37+77.14 | 25.82 RT | 623.09 |
| D | 37+78.72 | 25.32 RT | 623.10 |
| E | 37+81.82 | 31.32 RT | 623.07 |
| F | 37+79.92 | 30.82 RT | 623.06 |
| FF | 37+77.14 | 30.82 RT | 623.07 |
| G | 38+04.76 | 31.32 RT | 623.06 |
| H | 38+06.75 | 30.66 RT | 623.05 |
| HH | 38+09.54 | 30.66 RT | 623.08 |
| I | 38+19.34 | 30.67 RT | 623.54 |
| J | 38+19.34 | 25.67 RT | 623.51 |
| K | 38+09.55 | 25.66 RT | 623.03 |
| L | 38+07.86 | 25.32 RT | 623.04 |

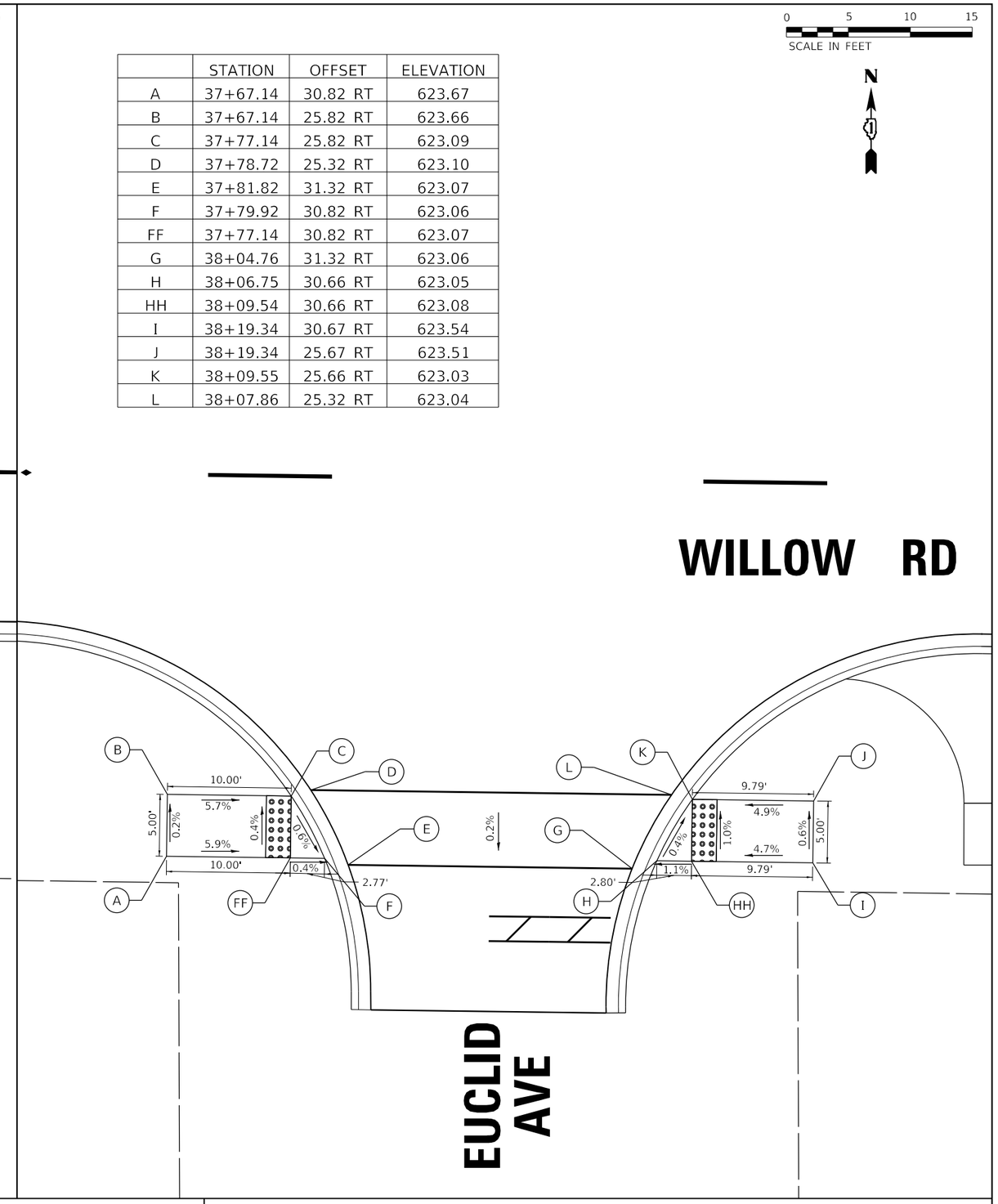


LOCATION: WILLOW ROAD AND EUCLID AVENUE

**LEGEND** DETECTABLE WARNINGS

MODEL: Default
FILE NAME: S:\JOL\1600-1699\1619\058\Drawings\CAD\Micros-SS4\CAD_Sheets\1619058-plt-ADA-3.dgn

STRAND ASSOCIATES®
1170 SOUTH HOUBOLT ROAD
JOLIET, ILLINOIS 60431
(815) 744-4200

| | | |
|---|---|---|
| USER NAME = AlexaM | DESIGNED - | REVISED - |
| | DRAWN - | REVISED - |
| PLOT SCALE = 10.0000 ' / in. | CHECKED - | REVISED - |
| PLOT DATE = 7/8/2026 | DATE - 2/27/2026 | REVISED - |

**STATE OF ILLINOIS**
**DEPARTMENT OF TRANSPORTATION**

**CURB RAMP DETAIL**
**WILLOW ROAD**

SCALE: 1" = 5' | SHEET 3 OF 10 SHEETS | STA. TO STA.

| F.A.U. RTE. | SECTION | COUNTY | TOTAL SHEETS | SHEET NO. |
|---|---|---|---|---|
| 3561 | 08-00103-00-FP | COOK | 254 | 148 |
| | | CONTRACT NO. 61M29 | | |
| | ILLINOIS | FED. AID PROJECT | | |

| | STATION | OFFSET | ELEVATION |
|---|---|---|---|
| A | 38+35.18 | 25.85 LT | 623.41 |
| B | 38+35.18 | 30.92 LT | 623.33 |
| C | 38+40.18 | 30.92 LT | 623.29 |
| D | 38+54.24 | 30.92 LT | 622.89 |
| DD | 38+52.26 | 30.92 LT | 622.92 |
| E | 38+56.06 | 31.68 LT | 622.90 |
| F | 38+53.93 | 25.69 LT | 622.88 |
| G | 38+52.26 | 25.92 LT | 622.87 |
| H | 38+40.17 | 25.87 LT | 623.35 |
| I | 38+77.97 | 25.68 LT | 622.75 |
| J | 38+79.76 | 25.68 LT | 622.74 |
| K | 38+91.87 | 25.68 LT | 623.22 |
| L | 38+91.87 | 15.14 LT | 622.75 |
| M | 38+91.87 | 13.45 LT | 622.76 |
| N | 38+96.87 | 12.23 LT | 622.79 |
| O | 38+96.87 | 13.83 LT | 622.78 |
| OO | 38+96.87 | 15.14 LT | 622.80 |
| P | 38+96.87 | 25.68 LT | 623.24 |
| Q | 38+96.87 | 30.68 LT | 623.23 |
| R | 38+96.87 | 39.93 LT | 623.15 |
| S | 38+91.87 | 39.93 LT | 623.04 |
| T | 38+91.87 | 30.68 LT | 623.19 |
| U | 38+77.72 | 30.68 LT | 622.77 |
| UU | 38+79.77 | 30.68 LT | 622.79 |
| V | 38+75.84 | 31.68 LT | 622.78 |

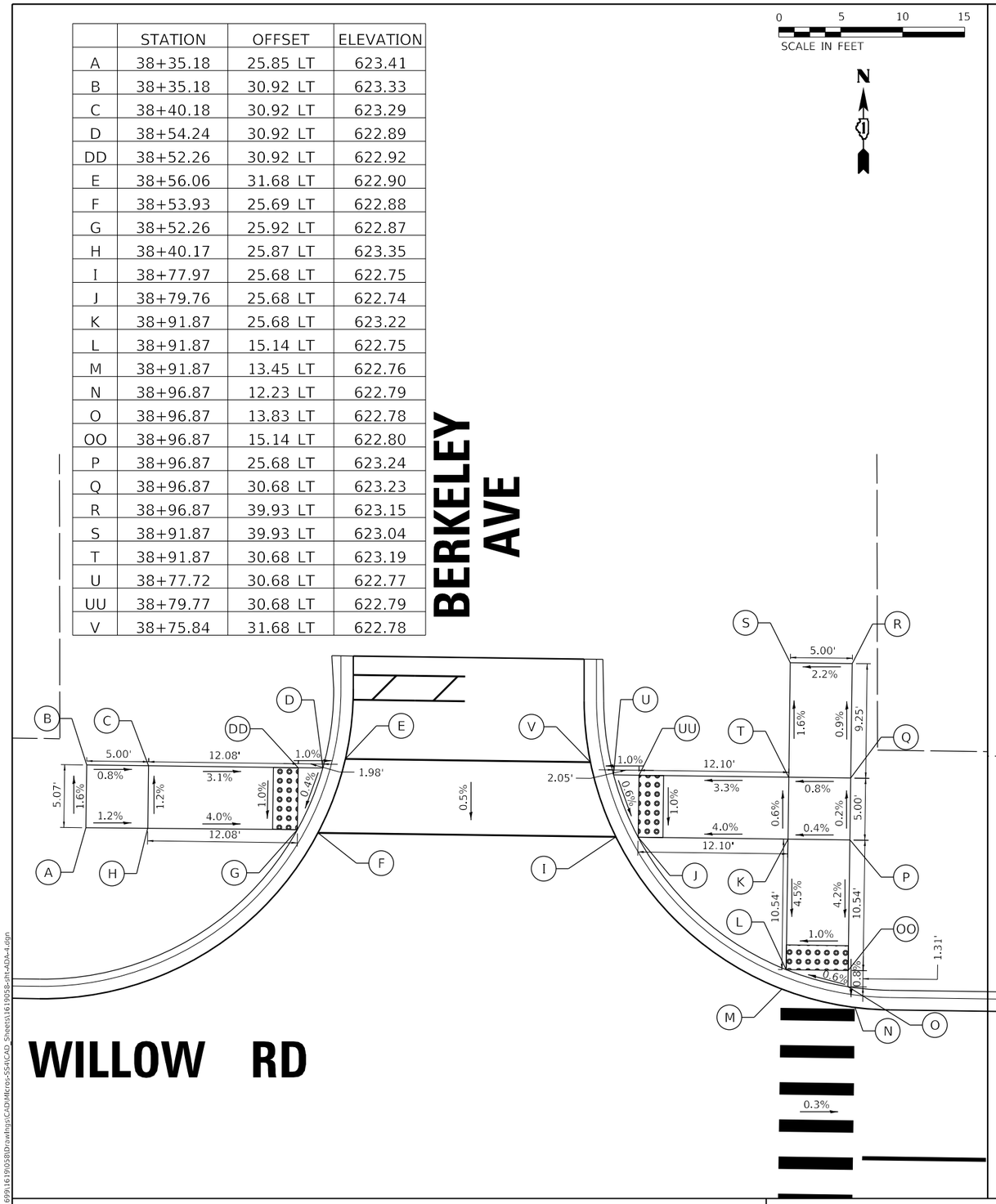


| | STATION | OFFSET | ELEVATION |
|---|---|---|---|
| A | 45+81.09 | 12.26 LT | 623.08 |
| B | 45+81.09 | 13.86 LT | 623.07 |
| BB | 45+81.09 | 15.22 LT | 623.08 |
| C | 45+81.09 | 25.28 LT | 623.36 |
| D | 45+81.09 | 30.28 LT | 623.31 |
| E | 45+86.09 | 30.28 LT | 623.28 |
| F | 45+99.93 | 30.28 LT | 622.71 |
| FF | 45+97.77 | 30.28 LT | 622.73 |
| G | 46+01.58 | 30.28 LT | 622.72 |
| H | 45+99.58 | 25.28 LT | 622.79 |
| I | 45+97.77 | 25.28 LT | 622.78 |
| J | 45+86.09 | 25.28 LT | 623.31 |
| K | 45+86.09 | 15.22 LT | 623.00 |
| L | 45+86.09 | 13.52 LT | 623.01 |
| M | 46+24.42 | 25.28 LT | 622.92 |
| N | 46+26.23 | 25.28 LT | 622.91 |
| O | 46+36.43 | 25.28 LT | 623.44 |
| P | 46+36.43 | 30.28 LT | 623.52 |
| Q | 46+24.08 | 30.28 LT | 622.83 |
| QQ | 46+26.24 | 30.28 LT | 622.85 |
| R | 46+22.43 | 30.28 LT | 622.84 |

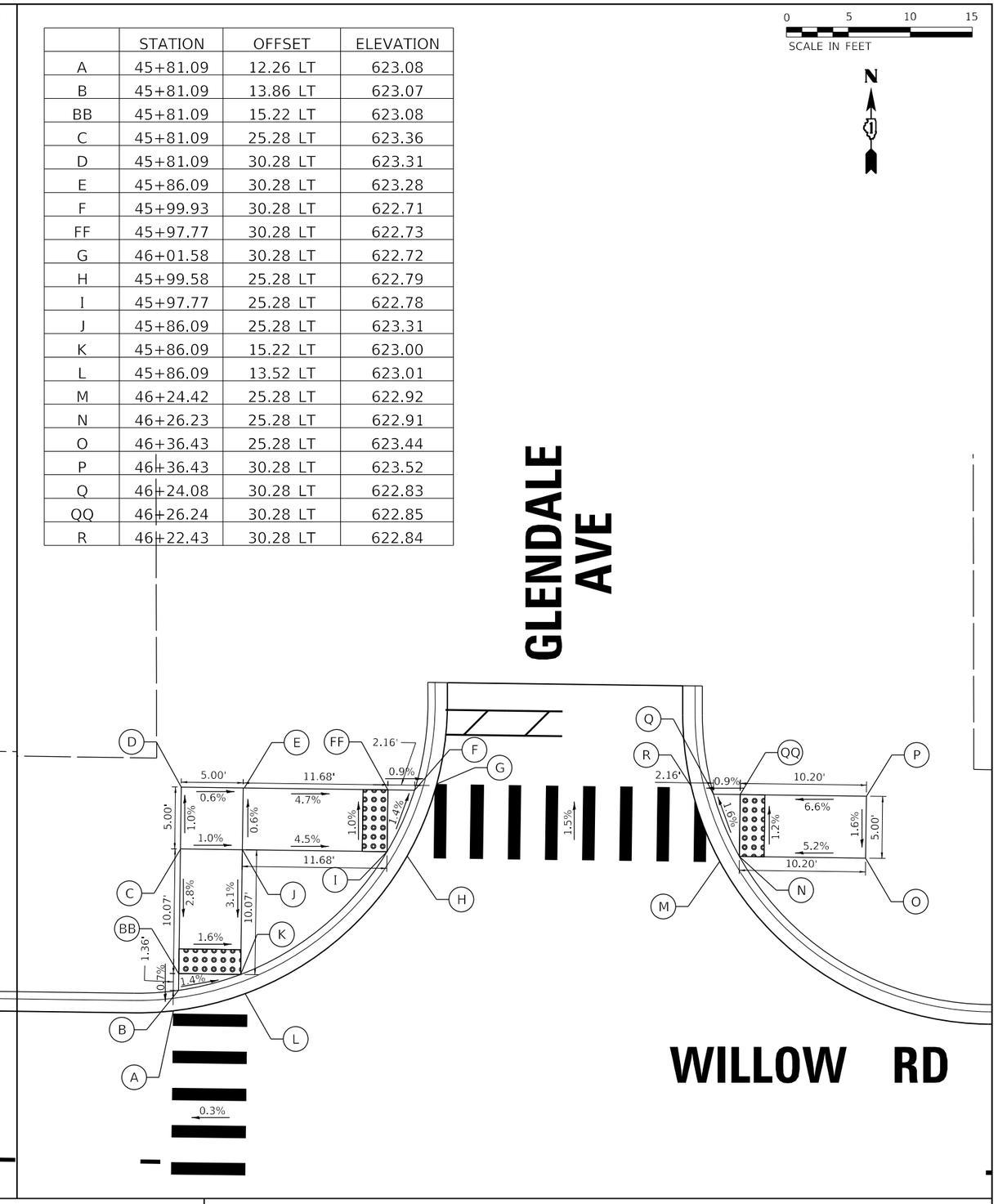


LOCATION: WILLOW ROAD AND BERKELEY AVE

**LEGEND** DETECTABLE WARNINGS

LOCATION: WILLOW ROAD AND GLENDALE AVE NORTH


STRAND ASSOCIATES®
1170 SOUTH HOUBOLT ROAD
JOLIET, ILLINOIS 60431
(815) 744-4200


| | | | |
|---|---|---|---|
| USER NAME = AlexaM | DESIGNED - | REVISED - | |
| | DRAWN - | REVISED - | |
| PLOT SCALE = 10.0000 ' / in. | CHECKED - | REVISED - | |
| PLOT DATE = 7/8/2026 | DATE - 2/27/2026 | REVISED - | |

**STATE OF ILLINOIS**
**DEPARTMENT OF TRANSPORTATION**

**CURB RAMP DETAIL**
**WILLOW ROAD**

SCALE: 1" = 5' | SHEET 4 OF 10 SHEETS | STA. TO STA.

| F.A.U. RTE. | SECTION | COUNTY | TOTAL SHEETS | SHEET NO. |
|---|---|---|---|---|
| 3561 | 08-00103-00-FP | COOK | 254 | 149 |
| | | CONTRACT NO. 61M29 | | |
| | | ILLINOIS FED. AID PROJECT | | |

MODEL: Default
FILE NAME: S:\CL\1600-1699\1619\058\Drawings\CAD\Micros\SSA\CAD_Sheets\1619058-sht-402-4.dgn

| | STATION | OFFSET | ELEVATION |
|---|---|---|---|
| A | 48+03.12 | 31.58 RT | 623.36 |
| B | 48+03.12 | 26.58 RT | 623.30 |
| C | 48+19.31 | 26.58 RT | 623.04 |
| D | 48+21.64 | 26.58 RT | 623.05 |
| E | 48+24.84 | 31.58 RT | 623.14 |
| F | 48+23.12 | 31.58 RT | 623.13 |
| FF | 48+19.30 | 31.58 RT | 623.14 |
| G | 48+50.65 | 31.58 RT | 623.35 |
| H | 48+52.34 | 31.58 RT | 623.34 |
| HH | 48+54.91 | 31.58 RT | 623.37 |
| I | 48+64.91 | 31.58 RT | 623.81 |
| J | 48+64.91 | 26.58 RT | 623.54 |
| K | 48+54.91 | 26.58 RT | 623.31 |
| L | 48+53.04 | 26.58 RT | 623.32 |

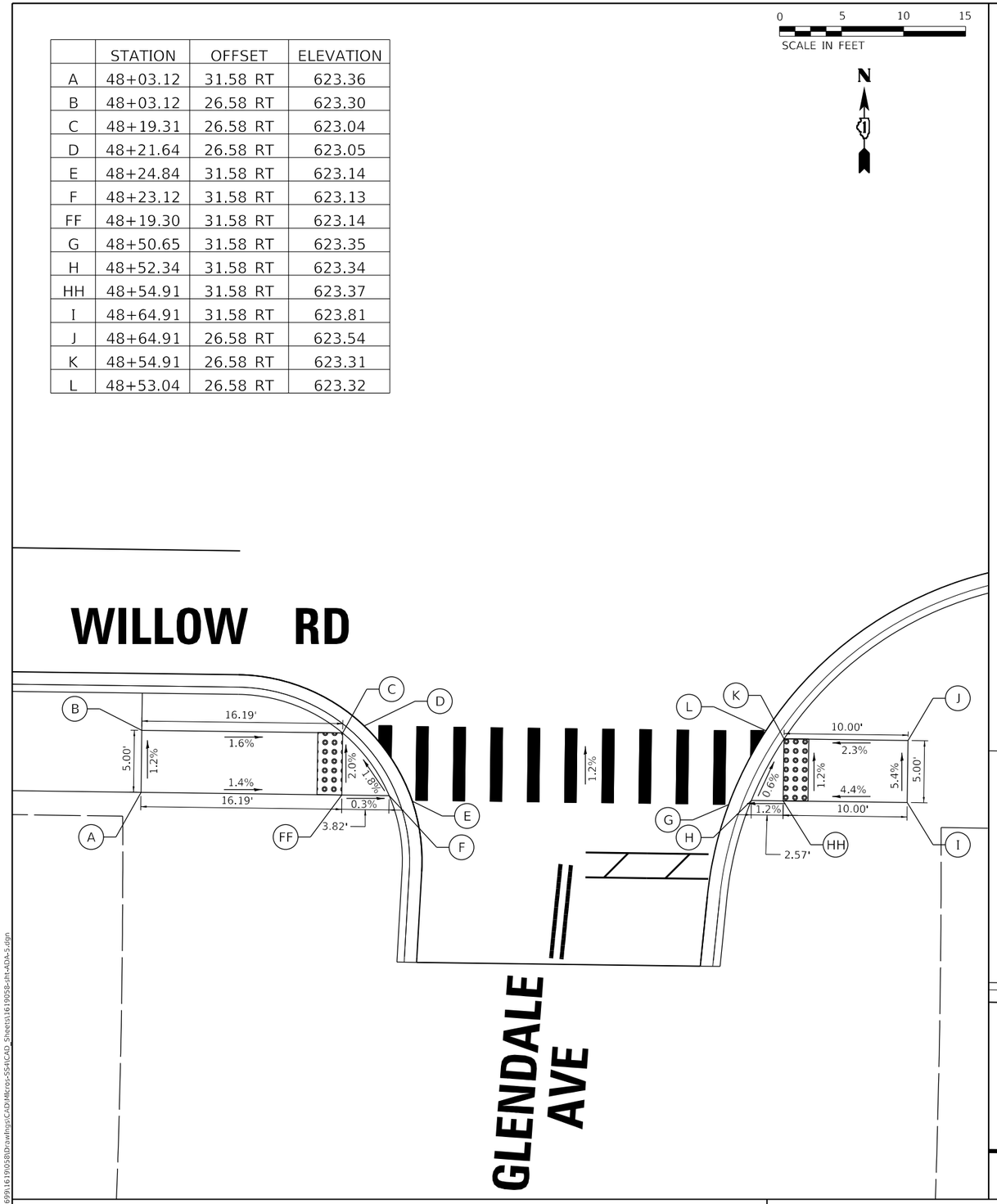


| | STATION | OFFSET | ELEVATION |
|---|---|---|---|
| A | 51+75.94 | 24.63 LT | 623.60 |
| B | 51+75.94 | 30.01 LT | 623.69 |
| BB | 51+85.94 | 29.63 LT | 623.23 |
| C | 51+88.27 | 29.63 LT | 623.22 |
| D | 51+88.93 | 29.63 LT | 623.23 |
| E | 51+87.77 | 24.63 LT | 623.12 |
| F | 51+85.92 | 24.63 LT | 623.11 |
| G | 52+12.89 | 25.32 LT | 623.09 |
| H | 52+14.70 | 25.32 LT | 623.08 |
| I | 52+28.50 | 25.32 LT | 624.10 |
| J | 52+28.50 | 14.50 LT | 623.96 |
| K | 52+28.50 | 12.86 LT | 623.97 |
| L | 52+33.50 | 12.05 LT | 623.90 |
| M | 52+33.50 | 13.63 LT | 623.89 |
| MM | 52+33.50 | 14.50 LT | 623.90 |
| N | 52+33.50 | 25.32 LT | 624.03 |
| O | 52+33.50 | 30.32 LT | 623.96 |
| P | 52+28.50 | 30.32 LT | 624.03 |
| Q | 52+12.55 | 30.32 LT | 623.17 |
| QQ | 52+14.70 | 30.32 LT | 623.18 |
| R | 52+10.91 | 30.32 LT | 623.18 |

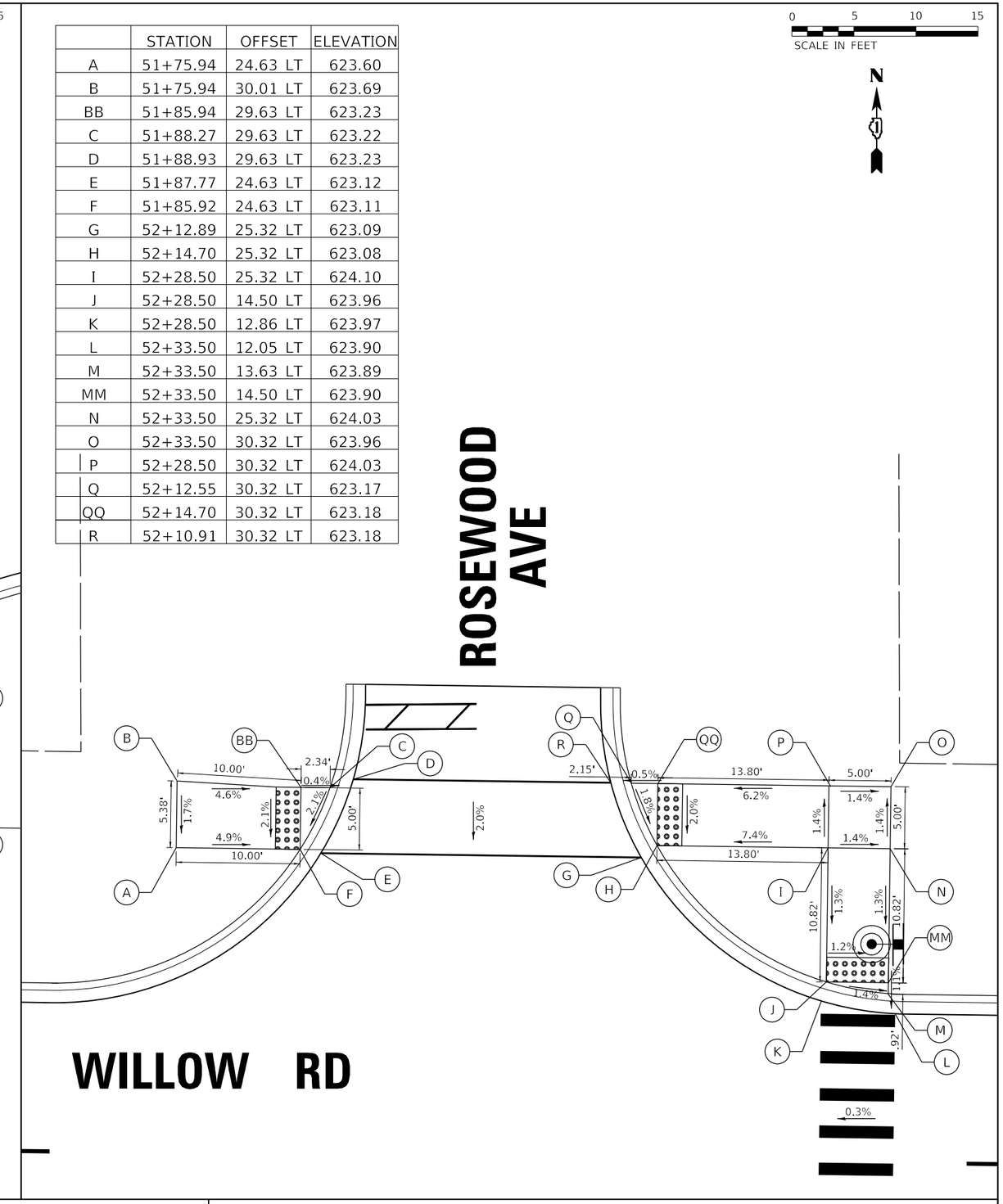


LOCATION: WILLOW ROAD AND GLENDALE AVENUE SOUTH

**LEGEND** DETECTABLE WARNINGS

LOCATION: WILLOW ROAD AND ROSEWOOD AVENUE NORTH


STRAND ASSOCIATES®
1170 SOUTH HOUBOLT ROAD
JOLIET, ILLINOIS 60431
(815) 744-4200


| | | | |
|---|---|---|---|
| USER NAME = AlexaM | DESIGNED - | REVISED - | |
| | DRAWN - | REVISED - | |
| PLOT SCALE = 10.0000 ' / in. | CHECKED - | REVISED - | |
| PLOT DATE = 7/8/2026 | DATE - 2/27/2026 | REVISED - | |

**STATE OF ILLINOIS**
**DEPARTMENT OF TRANSPORTATION**

**CURB RAMP DETAIL**
**WILLOW ROAD**

SCALE: 1" = 5' | SHEET 5 OF 10 SHEETS | STA. TO STA.

| F.A.U. RTE. | SECTION | COUNTY | TOTAL SHEETS | SHEET NO. |
|---|---|---|---|---|
| 3561 | 08-00103-00-FP | COOK | 254 | 150 |

CONTRACT NO. 61M29

ILLINOIS | FED. AID PROJECT

MODEL: Default
FILE NAME: S:\OLL\1600-1699\1619\0058\Drawings\CAD\Micros-SSA\CAD_Sheets\1619058-pht-A0A-5.dgn

| | STATION | OFFSET | ELEVATION |
|---|---|---|---|
| A | 51+74.51 | 31.59 RT | 623.97 |
| B | 51+74.51 | 26.59 RT | 624.08 |
| C | 51+89.50 | 26.59 RT | 623.26 |
| D | 51+91.02 | 26.12 RT | 623.27 |
| E | 51+91.91 | 32.12 RT | 623.36 |
| F | 51+90.31 | 31.59 RT | 623.35 |
| FF | 51+89.50 | 31.59 RT | 623.36 |
| G | 52+11.47 | 32.12 RT | 623.38 |
| H | 52+13.21 | 31.59 RT | 623.37 |
| HH | 52+15.01 | 31.59 RT | 623.38 |
| I | 52+28.49 | 31.59 RT | 623.92 |
| J | 52+33.49 | 31.59 RT | 623.96 |
| K | 52+33.49 | 26.59 RT | 623.90 |
| L | 52+33.49 | 13.72 RT | 622.99 |
| LL | 52+33.49 | 14.82 RT | 623.00 |
| M | 52+34.09 | 12.07 RT | 623.00 |
| N | 52+28.08 | 13.28 RT | 622.98 |
| O | 52+28.49 | 14.82 RT | 622.97 |
| P | 52+28.49 | 26.59 RT | 623.86 |
| Q | 52+15.02 | 26.59 RT | 623.27 |
| R | 52+13.48 | 26.12 RT | 623.28 |

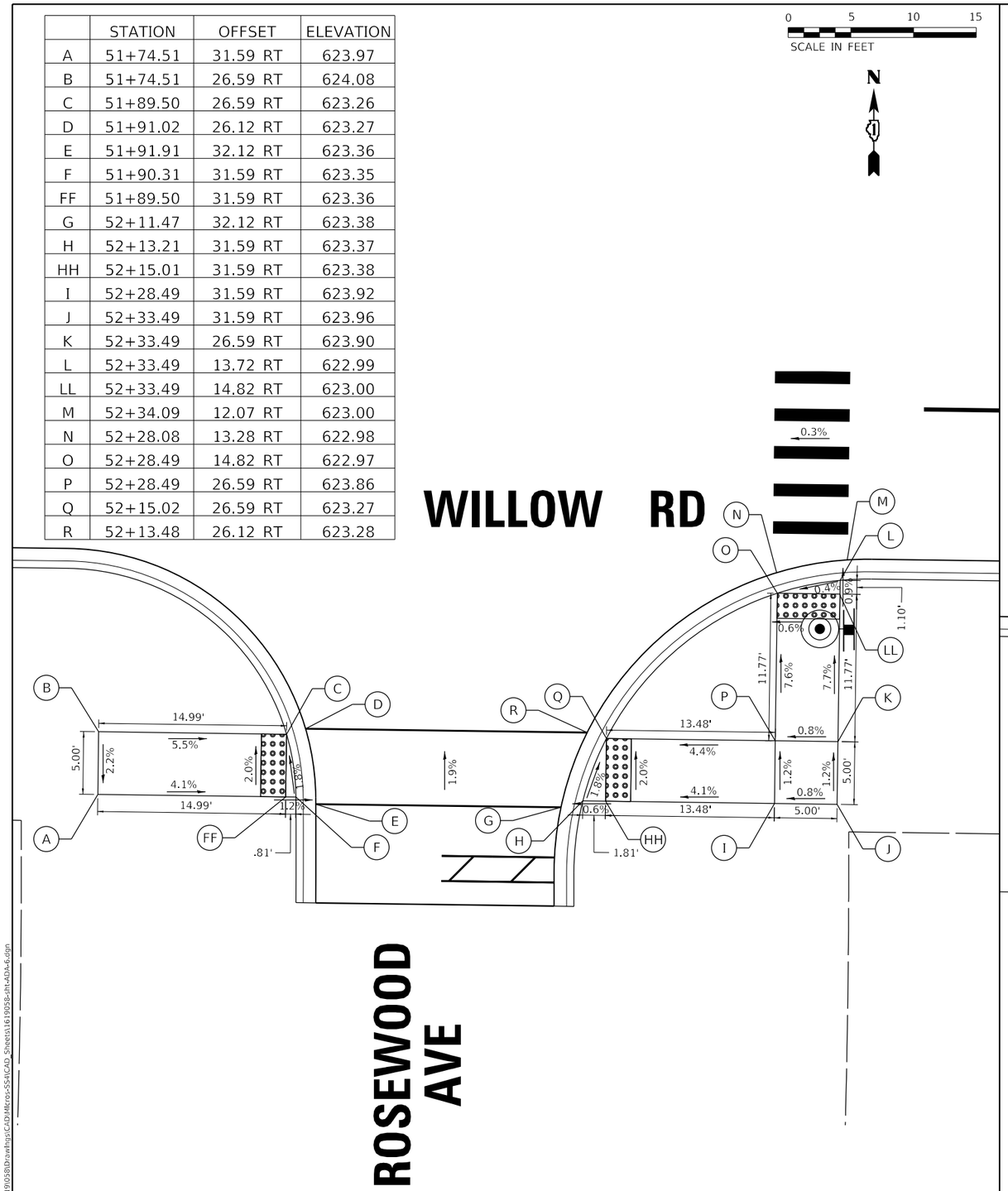


| | STATION | OFFSET | ELEVATION |
|---|---|---|---|
| A | 55+76.36 | 31.85 RT | 623.75 |
| B | 55+76.36 | 26.85 RT | 623.72 |
| C | 55+87.36 | 26.85 RT | 623.60 |
| D | 55+88.92 | 26.35 RT | 623.61 |
| E | 55+91.73 | 32.35 RT | 623.67 |
| F | 55+89.87 | 31.85 RT | 623.66 |
| FF | 55+87.36 | 31.85 RT | 623.67 |
| G | 56+14.22 | 32.35 RT | 623.85 |
| H | 56+16.09 | 31.85 RT | 623.84 |
| HH | 56+18.59 | 31.85 RT | 623.85 |
| I | 56+27.58 | 31.85 RT | 623.93 |
| J | 56+27.58 | 26.85 RT | 623.87 |
| K | 56+18.59 | 26.85 RT | 623.80 |
| L | 56+17.03 | 26.35 RT | 623.81 |

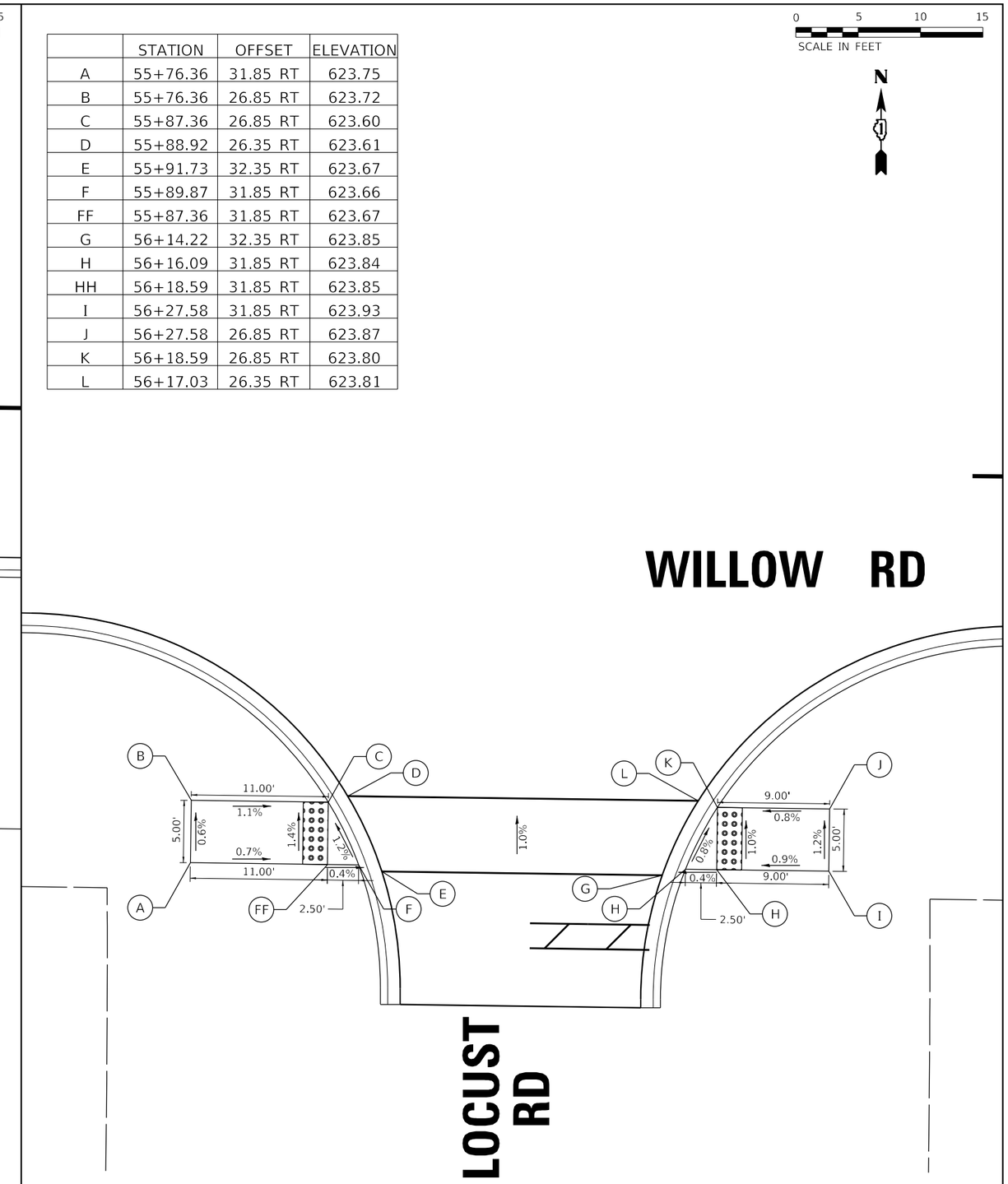


LOCATION: WILLOW ROAD AND ROSEWOOD AVENUE SOUTH

**LEGEND** DETECTABLE WARNINGS

LOCATION: WILLOW ROAD AND LOCUST ROAD


STRAND ASSOCIATES®
1170 SOUTH HOUBOLT ROAD
JOLIET, ILLINOIS 60431
(815) 744-4200


| | | |
|---|---|---|
| USER NAME = AlexaM | DESIGNED - | REVISED - |
| | DRAWN - | REVISED - |
| PLOT SCALE = 10.0000 ' / in. | CHECKED - | REVISED - |
| PLOT DATE = 7/8/2026 | DATE - 2/27/2026 | REVISED - |

**STATE OF ILLINOIS**
**DEPARTMENT OF TRANSPORTATION**

**CURB RAMP DETAIL**
**WILLOW ROAD**

SCALE: 1" = 5' | SHEET 6 OF 10 SHEETS | STA. TO STA.

| F.A.U. RTE. | SECTION | COUNTY | TOTAL SHEETS | SHEET NO. |
|---|---|---|---|---|
| 3561 | 08-00103-00-FP | COOK | 254 | 151 |

CONTRACT NO. 61M29

ILLINOIS | FED. AID PROJECT

MODEL: Default
FILE NAME: S:\OL\1600-1699\1619\058\Drawings\CAD\Micro-SSA\CAD_Sheets\1619058-jrh-A02-6.dgn

| | STATION | OFFSET | ELEVATION |
|---|---|---|---|
| A | 57+40.85 | 24.75 LT | 624.16 |
| B | 57+40.85 | 29.97 LT | 624.24 |
| C | 57+55.83 | 29.75 LT | 623.76 |
| CC | 57+54.47 | 29.75 LT | 623.77 |
| D | 57+57.46 | 30.14 LT | 623.77 |
| E | 57+55.94 | 24.13 LT | 623.69 |
| F | 57+54.48 | 24.75 LT | 623.68 |
| G | 57+80.56 | 24.14 LT | 623.82 |
| H | 57+81.94 | 24.91 LT | 623.81 |
| I | 57+91.94 | 25.05 LT | 624.31 |
| II | 57+96.92 | 24.87 LT | 624.64 |
| J | 57+91.86 | 30.06 LT | 624.36 |
| JJ | 57+96.86 | 30.10 LT | 624.46 |
| K | 57+79.68 | 29.92 LT | 623.91 |
| KK | 57+81.95 | 29.91 LT | 623.92 |
| L | 57+77.95 | 30.14 LT | 623.92 |

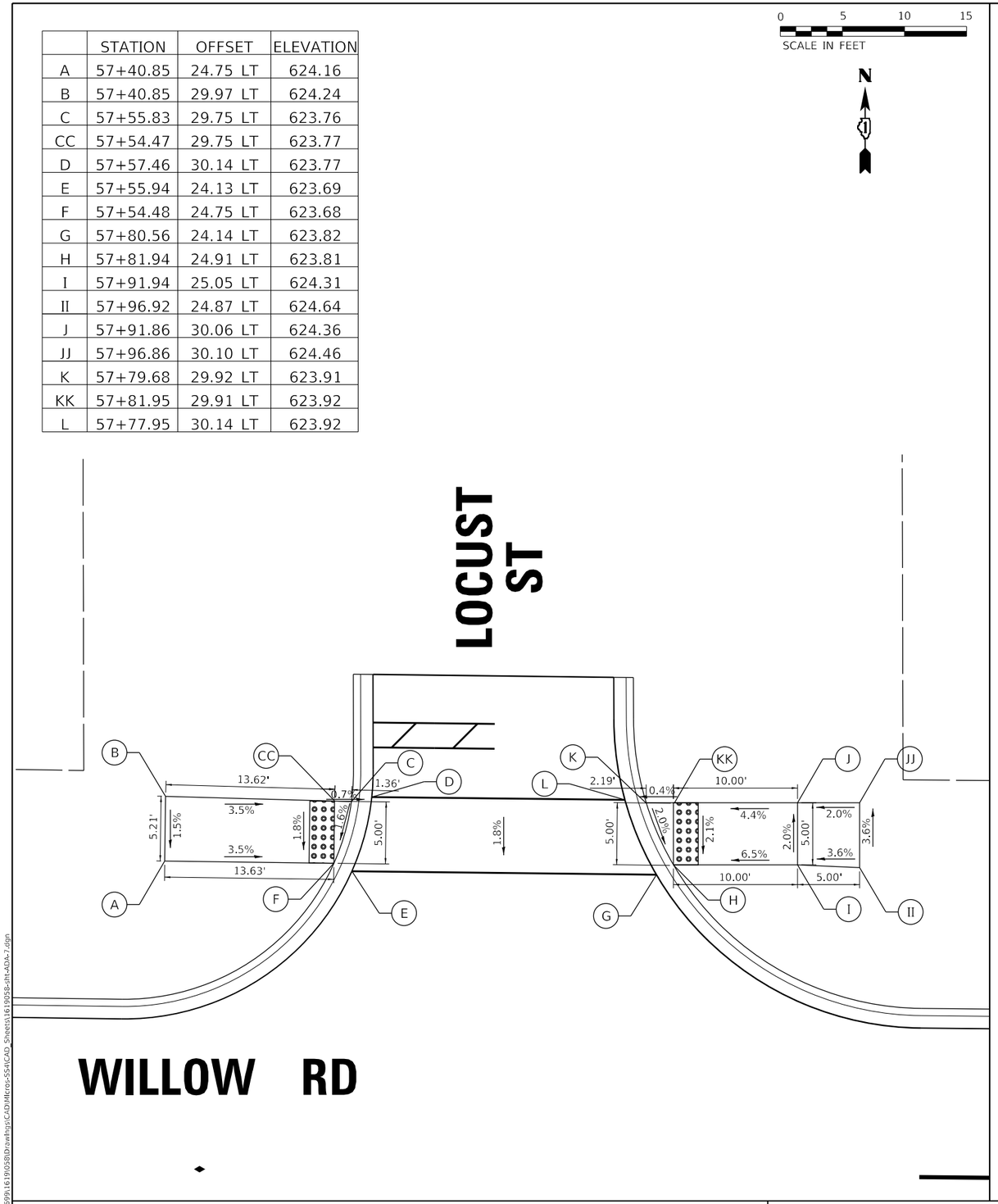


| | STATION | OFFSET | ELEVATION |
|---|---|---|---|
| A | 63+26.01 | 16.72 LT | 624.47 |
| B | 63+26.58 | 18.92 LT | 624.46 |
| C | 63+26.60 | 25.67 LT | 624.48 |
| D | 63+15.95 | 25.60 LT | 624.95 |
| E | 63+15.96 | 30.91 LT | 624.97 |
| F | 63+26.00 | 30.67 LT | 624.49 |
| G | 63+25.65 | 41.27 LT | 624.74 |
| H | 63+31.05 | 41.35 LT | 624.72 |
| I | 63+31.00 | 30.66 LT | 624.42 |
| J | 63+37.60 | 30.64 LT | 624.32 |
| K | 63+39.66 | 31.13 LT | 624.33 |

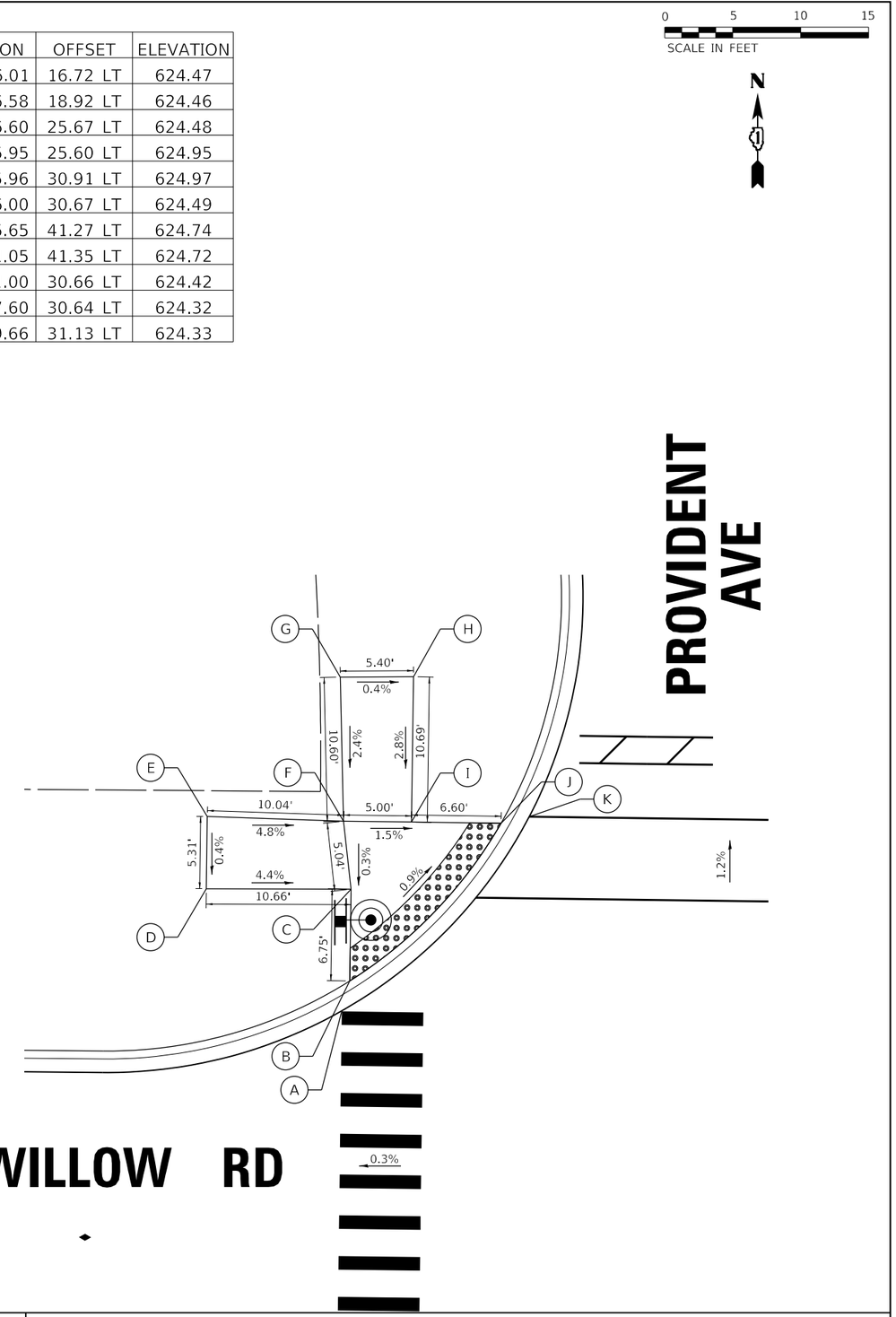


LOCATION: WILLOW ROAD AND LOCUST STREET

**LEGEND** DETECTABLE WARNINGS

LOCATION: WILLOW ROAD AND PROVIDENT AVENUE NW CORNER

MODEL: Default
FILE NAME: S:\DOL\1600-1699\1619058\Drawings\CADd\Micro-SS4\CAD_Sheets\1619058-sh-ADA-7.dgn

STRAND ASSOCIATES®
1170 SOUTH HOUBOLT ROAD
JOLIET, ILLINOIS 60431
(815) 744-4200

| | | | |
|---|---|---|---|
| USER NAME = AlexaM | DESIGNED - | REVISED - | |
| | DRAWN - | REVISED - | |
| PLOT SCALE = 10.0000 ' / in. | CHECKED - | REVISED - | |
| PLOT DATE = 7/8/2026 | DATE - 2/27/2026 | REVISED - | |

**STATE OF ILLINOIS**
**DEPARTMENT OF TRANSPORTATION**

**CURB RAMP DETAIL**
**WILLOW ROAD**

SCALE: 1" = 5' | SHEET 7 OF 10 SHEETS | STA. TO STA.

| F.A.U. RTE. | SECTION | COUNTY | TOTAL SHEETS | SHEET NO. |
|---|---|---|---|---|
| 3561 | 08-00103-00-FP | COOK | 254 | 152 |
| | | CONTRACT NO. 61M29 | | |
| | | ILLINOIS | FED. AID PROJECT | |

| | STATION | OFFSET | ELEVATION |
|---|---|---|---|
| A | 63+70.29 | 31.04 LT | 624.30 |
| B | 63+71.89 | 31.32 LT | 624.29 |
| BB | 63+74.54 | 31.31 LT | 624.31 |
| C | 63+83.11 | 31.28 LT | 624.68 |
| D | 63+82.24 | 41.38 LT | 624.85 |
| E | 63+87.59 | 41.74 LT | 624.88 |
| F | 63+88.12 | 31.26 LT | 624.70 |
| G | 63+98.33 | 31.23 LT | 624.85 |
| H | 63+98.32 | 26.23 LT | 624.75 |
| I | 63+88.51 | 26.26 LT | 624.68 |
| J | 63+88.48 | 15.31 LT | 624.55 |
| JJ | 63+88.48 | 17.69 LT | 624.56 |
| K | 63+88.87 | 13.49 LT | 624.56 |
| L | 63+82.88 | 16.22 LT | 624.50 |
| M | 63+83.48 | 17.70 LT | 624.49 |
| N | 63+83.51 | 26.28 LT | 624.65 |
| O | 63+74.53 | 26.31 LT | 624.36 |
| P | 63+73.48 | 25.03 LT | 624.37 |

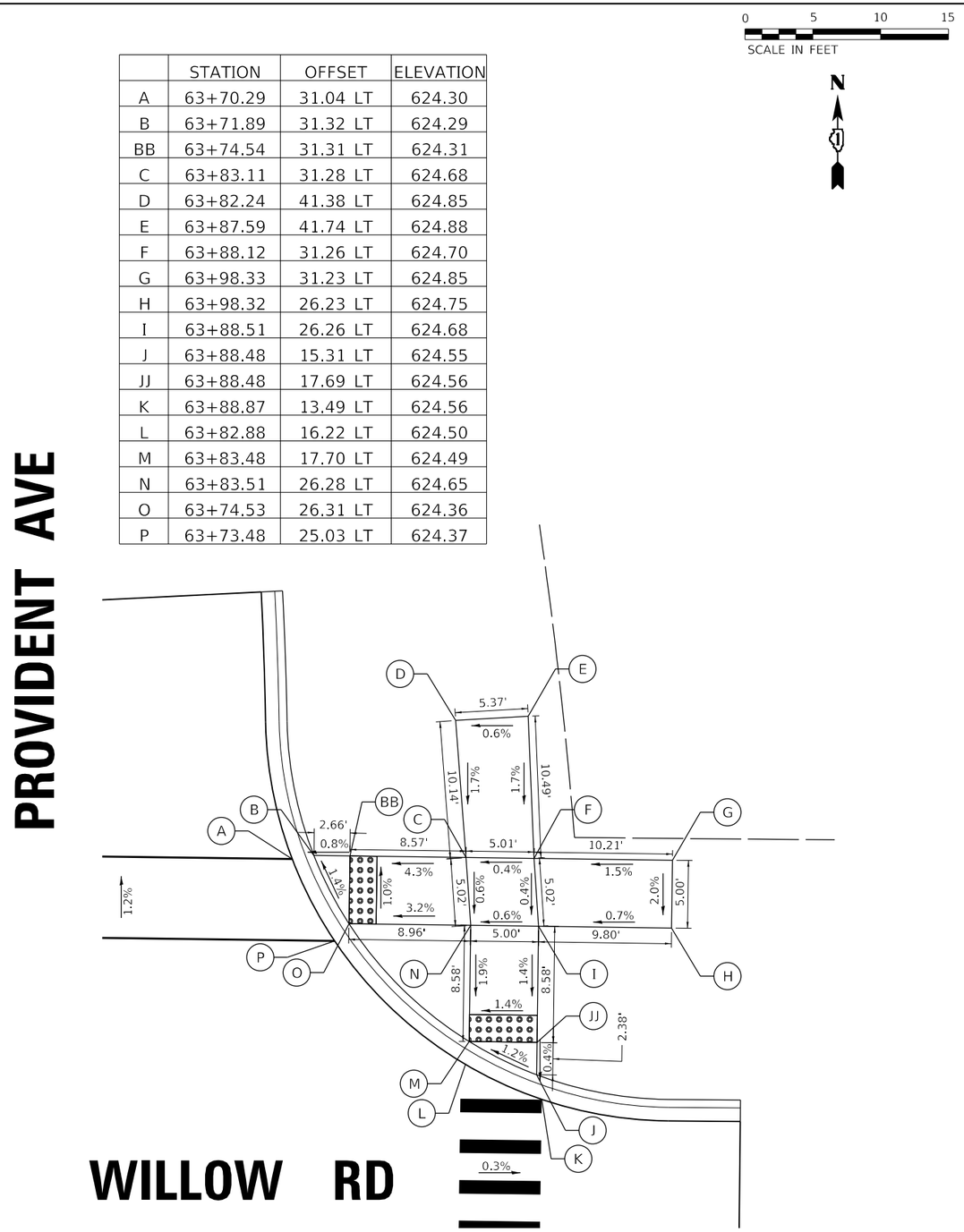


| | STATION | OFFSET | ELEVATION |
|---|---|---|---|
| A | 63+21.54 | 23.46 RT | 624.91 |
| B | 63+26.44 | 22.42 RT | 624.99 |
| C | 63+26.47 | 13.58 RT | 624.69 |
| D | 63+25.92 | 12.00 RT | 624.70 |
| E | 63+31.92 | 12.22 RT | 624.71 |
| F | 63+31.47 | 13.76 RT | 624.70 |
| G | 63+31.44 | 23.27 RT | 625.05 |
| H | 63+46.12 | 25.37 RT | 625.11 |
| I | 63+47.62 | 24.87 RT | 625.12 |
| J | 63+48.91 | 30.88 RT | 625.21 |
| K | 63+47.28 | 30.37 RT | 625.20 |
| KK | 63+46.10 | 30.37 RT | 625.19 |
| L | 63+31.42 | 28.34 RT | 625.10 |
| M | 63+26.42 | 27.49 RT | 625.05 |
| N | 63+21.52 | 28.45 RT | 624.96 |

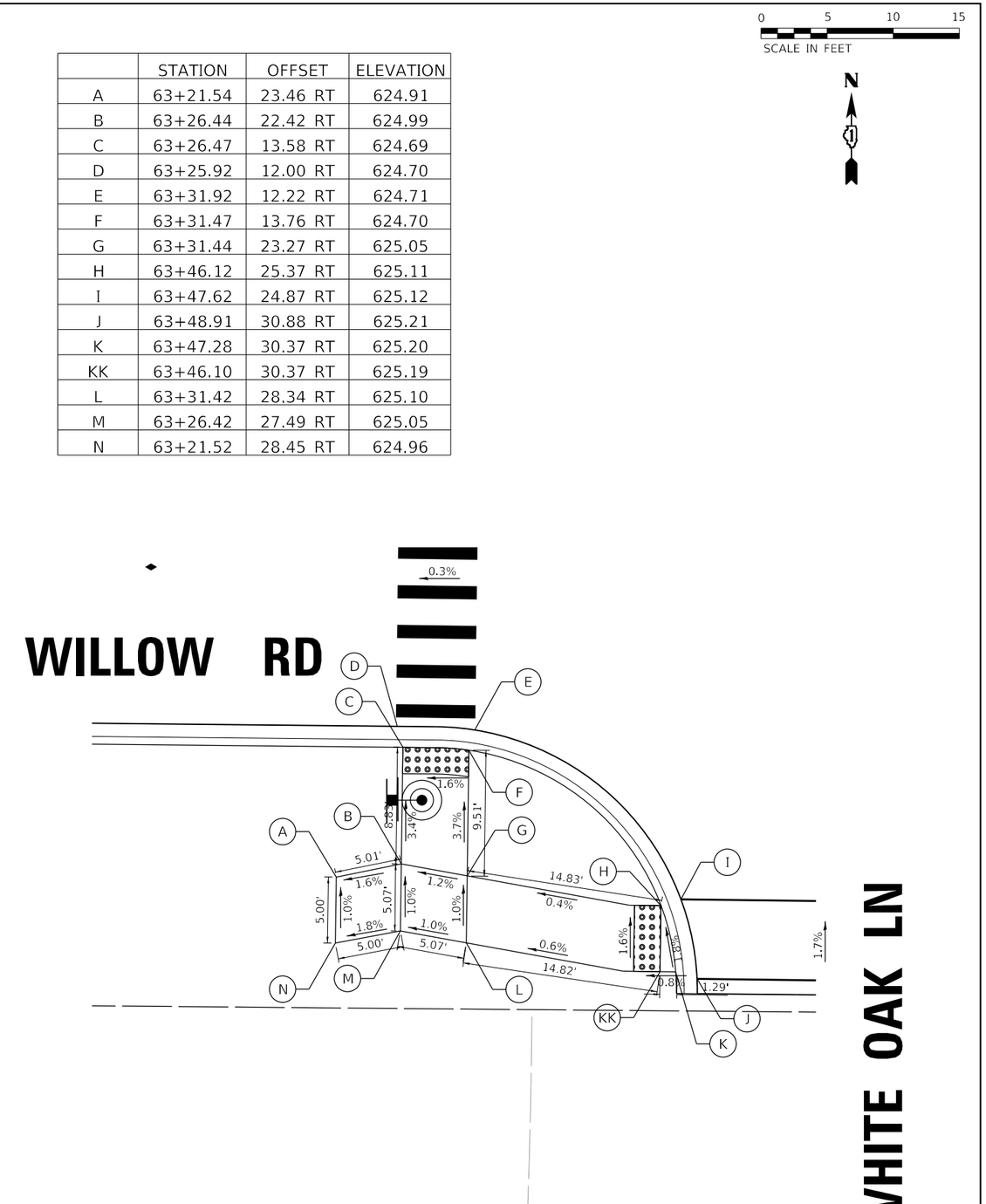


LOCATION: WILLOW ROAD AND PROVIDENT AVENUE NE CORNER

**LEGEND** DETECTABLE WARNINGS

LOCATION: WILLOW ROAD AND WHITE OAK LANE SW CORNER

MODEL: Default
FILE NAME: S:\JOL\1600-1699\1619058\Drawings\CAD\Micro-SS4\CAD_Sheets\1619058-cht-ADA-8.dgn

STRAND ASSOCIATES®
1170 SOUTH HOUBOLT ROAD
JOLIET, ILLINOIS 60431
(815) 744-4200

| | | |
|---|---|---|
| USER NAME = AlexaM | DESIGNED - | REVISED - |
| | DRAWN - | REVISED - |
| PLOT SCALE = 10.0000 ' / in. | CHECKED - | REVISED - |
| PLOT DATE = 7/8/2026 | DATE - 2/27/2026 | REVISED - |

**STATE OF ILLINOIS**
**DEPARTMENT OF TRANSPORTATION**

**CURB RAMP DETAIL**
**WILLOW ROAD**

SCALE: 1" = 5' | SHEET 8 OF 10 SHEETS | STA. TO STA.

| F.A.U. RTE. | SECTION | COUNTY | TOTAL SHEETS | SHEET NO. |
|---|---|---|---|---|
| 3561 | 08-00103-00-FP | COOK | 254 | 153 |
| | | CONTRACT NO. 61M29 | | |
| | ILLINOIS | FED. AID PROJECT | | |

0 5 10 15
SCALE IN FEET

N

| | STATION | OFFSET | ELEVATION |
|---|---|---|---|
| A | 63+65.23 | 24.93 RT | 625.10 |
| B | 63+66.73 | 25.44 RT | 625.09 |
| C | 63+83.34 | 25.49 RT | 624.94 |
| D | 63+83.38 | 13.59 RT | 624.69 |
| E | 63+82.79 | 12.03 RT | 624.70 |
| F | 63+88.79 | 12.00 RT | 624.69 |
| G | 63+88.38 | 13.58 RT | 624.68 |
| H | 63+88.34 | 25.51 RT | 624.90 |
| I | 63+93.34 | 25.53 RT | 624.81 |
| J | 63+93.32 | 30.53 RT | 624.86 |
| K | 63+88.40 | 30.51 RT | 624.94 |
| L | 63+83.32 | 30.49 RT | 625.00 |
| M | 63+65.59 | 30.43 RT | 625.17 |
| MM | 63+66.71 | 30.44 RT | 625.16 |
| N | 63+63.97 | 30.93 RT | 625.18 |

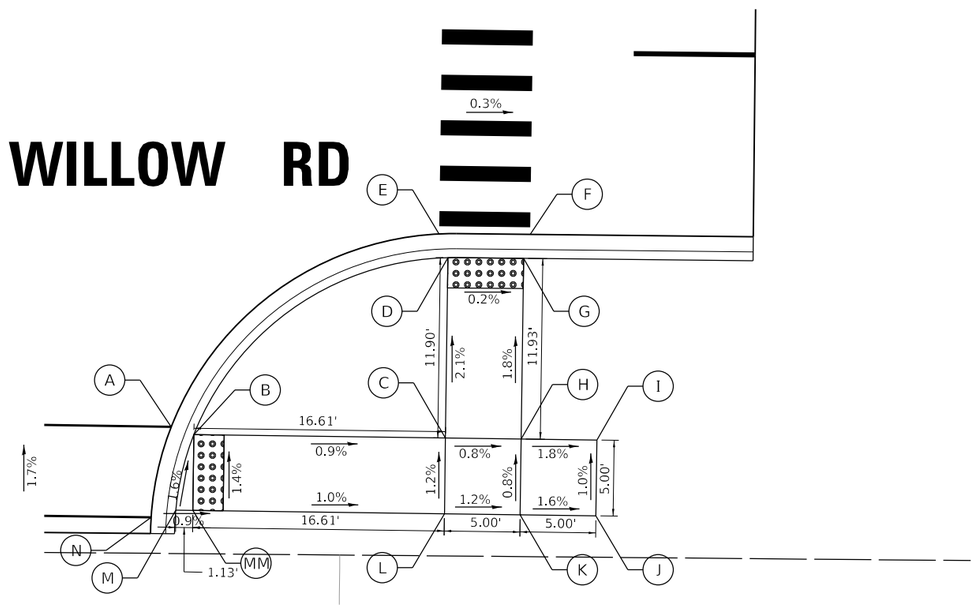


LOCATION: WILLOW ROAD AND WHITE OAK LANE SE CORNER

0 5 10 15
SCALE IN FEET

N

| | STATION | OFFSET | ELEVATION |
|---|---|---|---|
| A | 207+77.84 | 16.23 RT | 623.30 |
| B | 207+77.84 | 17.82 RT | 623.29 |
| C | 207+77.84 | 26.00 RT | 623.25 |
| D | 207+77.24 | 31.00 RT | 623.20 |
| E | 207+88.84 | 31.00 RT | 623.26 |
| F | 207+88.84 | 36.00 RT | 623.24 |
| G | 207+93.84 | 36.00 RT | 623.22 |
| H | 207+93.84 | 31.00 RT | 623.27 |
| I | 208+14.07 | 31.00 RT | 623.03 |
| II | 208+10.95 | 31.00 RT | 623.06 |
| J | 208+15.91 | 31.37 RT | 623.04 |
| K | 208+12.49 | 25.37 RT | 623.12 |
| L | 208+10.95 | 26.00 RT | 623.11 |
| M | 207+93.84 | 26.00 RT | 623.34 |
| N | 207+93.84 | 19.32 RT | 623.36 |
| O | 207+93.84 | 17.63 RT | 623.37 |

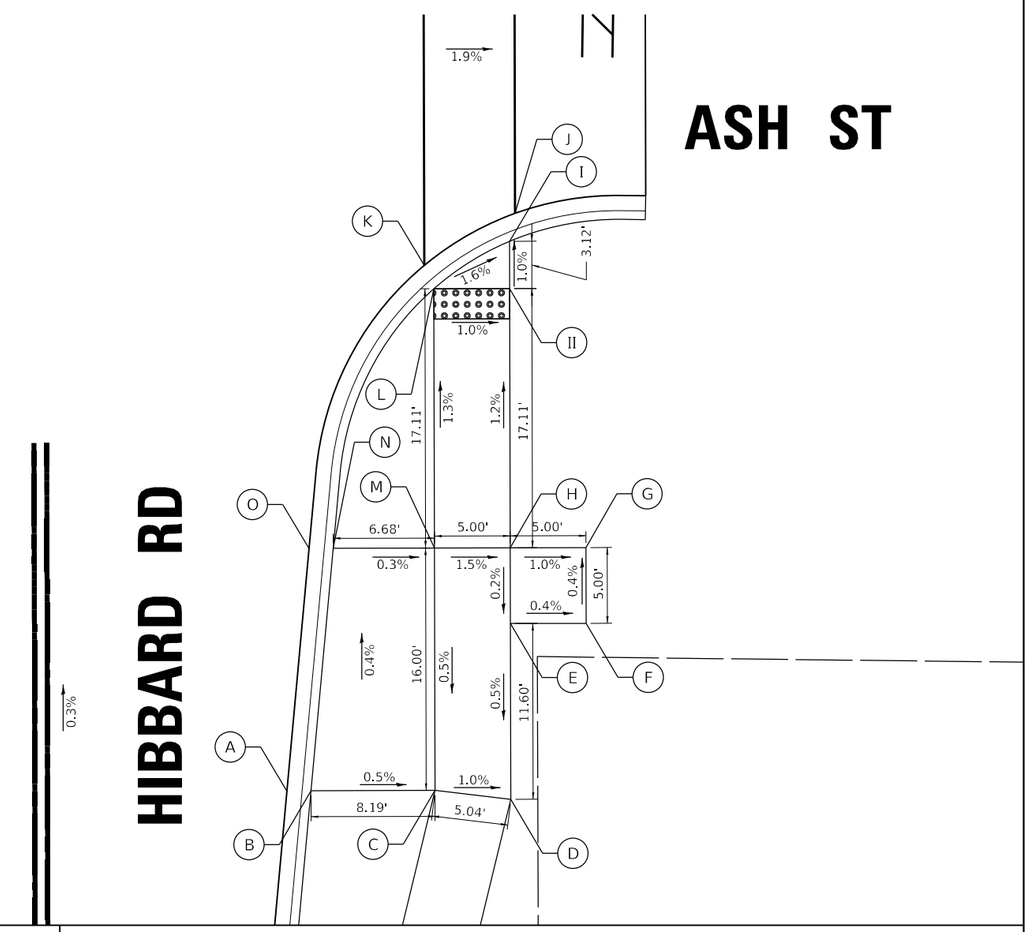


LOCATION: HIBBARD ROAD AND ASH STREET SE CORNER

**LEGEND** DETECTABLE WARNINGS

**STATE OF ILLINOIS**
**DEPARTMENT OF TRANSPORTATION**

**CURB RAMP DETAIL**
**WILLOW ROAD AND HIBBARD ROAD**

SCALE: 1" = 5' | SHEET 9 OF 10 SHEETS | STA. TO STA.

| F.A.U. RTE. | SECTION | COUNTY | TOTAL SHEETS | SHEET NO. |
|---|---|---|---|---|
| 3561 | 08-00103-00-FP | COOK | 254 | 154 |

CONTRACT NO. 61M29

ILLINOIS | FED. AID PROJECT


STRAND ASSOCIATES®
1170 SOUTH HOUBOLT ROAD
JOLIET, ILLINOIS 60431
(815) 744-4200


| | | | |
|---|---|---|---|
| USER NAME = AlexaM | DESIGNED - | REVISED - | |
| | DRAWN - | REVISED - | |
| PLOT SCALE = 10.0000 ' / in. | CHECKED - | REVISED - | |
| PLOT DATE = 7/8/2026 | DATE - 2/27/2026 | REVISED - | |

MODEL: Default
FILE NAME: S:\OL\1600-1699\1619058\Drawings\CADMicro-SS4\CAD_Sheets\1619058-sht-ADA-9.dgn

| | STATION | OFFSET | ELEVATION |
|---|---|---|---|
| C | 208+64.40 | 26.00 RT | 623.23 |
| D | 208+69.40 | 26.00 RT | 623.31 |
| E | 208+69.40 | 31.00 RT | 623.19 |
| F | 208+64.40 | 31.00 RT | 623.18 |
| G | 208+59.40 | 31.00 RT | 623.16 |
| H | 208+39.09 | 31.00 RT | 622.97 |
| HH | 208+42.19 | 31.00 RT | 623.01 |
| I | 208+37.25 | 31.37 RT | 622.98 |
| J | 208+40.64 | 25.37 RT | 623.09 |
| K | 208+42.19 | 26.00 RT | 623.08 |
| L | 208+59.40 | 26.00 RT | 623.21 |

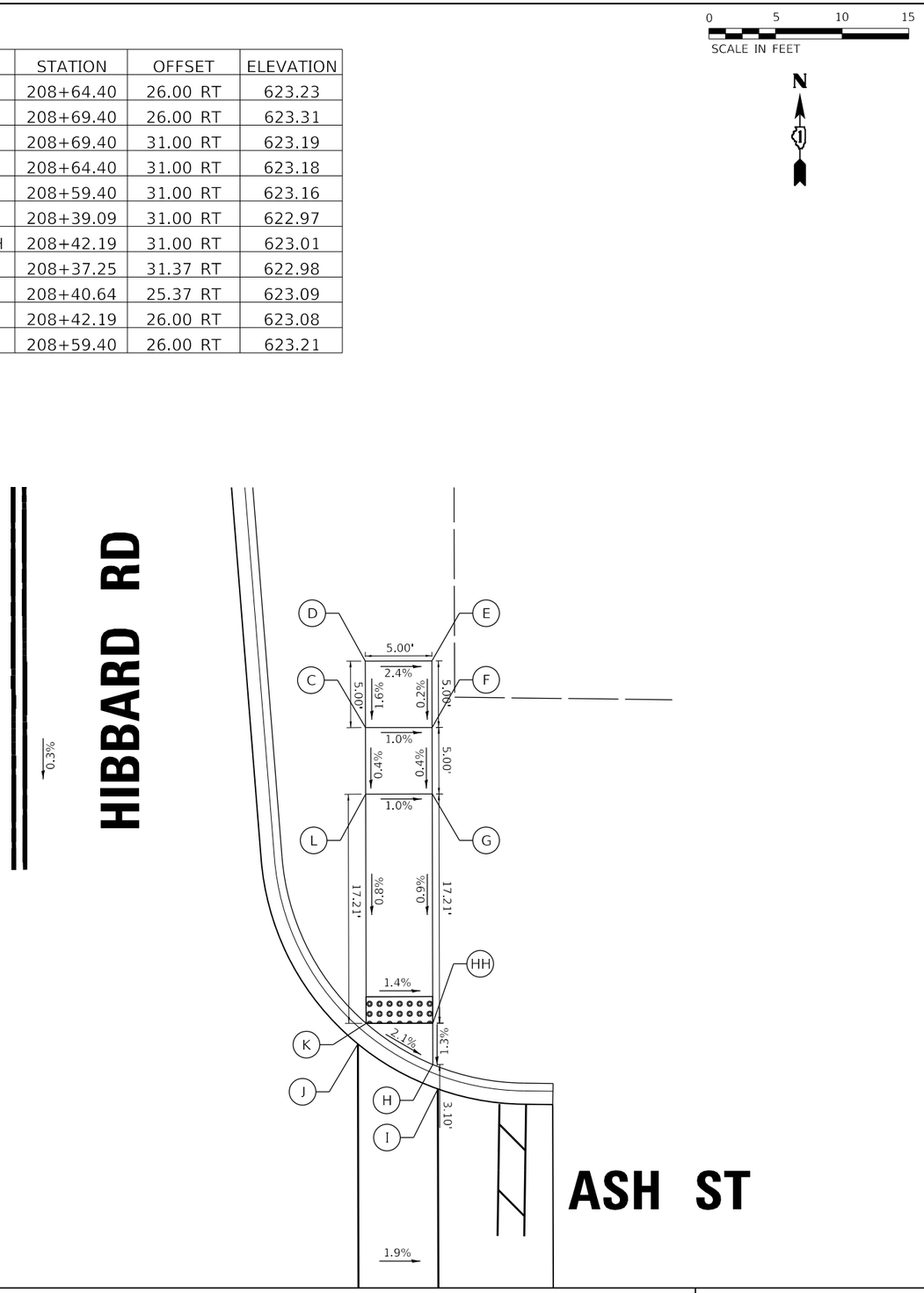


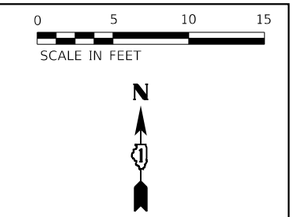


LOCATION: HIBBARD ROAD AND ASH STREET NE CORNER

**LEGEND** DETECTABLE WARNINGS

LOCATION: HIBBARD ROAD AND ASH STREET WEST

STRAND ASSOCIATES®
1170 SOUTH HOUBOLT ROAD
JOLIET, ILLINOIS 60431
(815) 744-4200

| | | | |
|---|---|---|---|
| USER NAME = AlexaM | DESIGNED - | REVISED - | |
| | DRAWN - | REVISED - | |
| PLOT SCALE = 10.0000 ' / in. | CHECKED - | REVISED - | |
| PLOT DATE = 7/8/2026 | DATE - 2/27/2026 | REVISED - | |

**STATE OF ILLINOIS**
**DEPARTMENT OF TRANSPORTATION**

**CURB RAMP DETAIL**
**HIBBARD ROAD**

SCALE: 1" = 5' | SHEET 10 OF 10 SHEETS | STA. TO STA.

| F.A.U. RTE. | SECTION | COUNTY | TOTAL SHEETS | SHEET NO. |
|---|---|---|---|---|
| 3561 | 08-00103-00-FP | COOK | 254 | 155 |
| | | CONTRACT NO. 61M29 | | |
| | | ILLINOIS FED. AID PROJECT | | |

MODEL: Default
FILE NAME: S:\DL\1600-1699\1619058\Drawings\CAD\Micro-SSA\CAD_Sheets\1619058-sht-A0A-10.dgn

## LEGEND

SODDING, SALT TOLERANT *

PERIMETER EROSION BARRIER

INLET FILTER

INLET & PIPE PROTECTION

* ALL DISTURBED AREAS SCHEDULED FOR PERMANENT SODDING RESTORATION SHALL ALSO RECEIVE TEMPORARY EROSION CONTROL SEEDING AS NEEDED DURING CONSTRUCTION PER SECTION 280 OF THE STANDARD SPECIFICATIONS FOR ROAD AND BRIDGE CONSTRUCTION.

* ALL PERMANENT SODDING RESTORATION SHALL BE PLACED ON 6 INCHES OF NEW TOPSOIL IN ACCORDANCE WITH SECTION 211 OF THE STANDARD SPECIFICATIONS FOR ROAD AND BRIDGE CONSTRUCTION.

## EROSION CONTROL & LANDSCAPING GENERAL NOTES

1. ALL AREAS DISTRUBED BY THE CONTRACTOR SHALL BE RESTORED WITH 6" TOPSOIL AND SEEDING OR SODDING AS SHOWN ON THE PLANS.
2. ALL TEMPORARY SOIL EROSION AND SEDIMENT CONTROL MEASURES SHALL BE REMOVED WITHIN THIRTY (30) DAYS AFTER FINAL SITE STABILIZATION IS ACHIEVED OR AFTER THE TEMPORARY MEASURES ARE NO LONGER NEEDED. TRAPPED SEDIMENT AND OTHER DISTURBED SOIL AREAS SHALL BE PERMANENTLY STABILIZED.
3. PROPOSED DRAINAGE STRUCTURES RECEIVING RUNOFF SHALL BE PROTECTED WITH INLET FILTERS OR INLET AND PIPE PROTECTION IMMEDIATELY AFTER CONSTRUCTION.
4. PERIMETER EROSION BARRIER IS SHOWN OUTSIDE THE RIGHT-OF-WAY FOR CLARITY. PERIMETER EROSION BARRIER SHOULD BE CONSTRUCTED 6" INSIDE THE RIGHT-OF-WAY IN THESE LOCATIONS.
5. EROSION CONTROL MEASURES SHALL BE CHECKED WEEKLY AND AFTER EACH RAINFALL, 1/2" OR GREATER IN A 24 HOUR PERIOD, OR EQUIVALENT SNOWFALL. ADDITIONALLY DURING WINTER MONTHS, ALL MEASURES SHOULD BE CHECKED AFTER EACH SIGNIFICANT SNOW MELT.
6. EROSION CONTROL ITEMS ARE CONSIDERED TO BE HIGH PRIORITY ITEMS ON THIS CONTRACT. THE ENGINEER WILL IMPLEMENT ALL PROVISIONS OF THE SPECIFICATION NECESSARY TO ASSURE THAT EROSION CONTROL ITEMS ARE CONSTRUCTED AND MAINTAINED IN A TIMELY WAY. ALL EROSION CONTROL MEASURES SHALL BE INSTALLED PRIOR TO BEGINNING ANY CONSTRUCTION ACTIVITIES WHICH WILL POTENTIALLY CREATE ERODIBLE CONDITIONS.
7. PROPOSED DRAINAGE STRUCTURES WITHIN THE PARKWAY RECEIVING RUNOFF SHALL BE PROTECTED WITH INLET AND PIPE PROTECTION IMMEDIATELY AFTER CONSTRUCTION.
8. PERMANENT STABILIZATION SHALL OCCUR AT EACH CONSTRUCTION STAGE PRIOR TO MOVING ONTO THE NEXT STAGE.
9. STABILIZED CONSTRUCTION ENTRANCES ACCORDING TO THE ILLINOIS URBAN MANUAL LATEST EDITION WILL BE REQUIRED. ALL LOCATIONS SHALL BE APPROVED BY THE RESIDENT ENGINEER.

## ANTICIPATED CONSTRUCTION SEQUENCE

1. INSTALL TEMPORARY EROSION AND SEDIMENT CONTROL SUCH AS PERIMETER EROSION BARRIER AND INLET FILTERS.
2. PERFORM TREE REMOVAL, DEMOLITION, AND EARTHWORK NECESSARY FOR ROADWAY IMPROVEMENTS.
3. PROVIDE TEMPORARY SEEDING ON ALL DISTURBED AREAS.
4. INSTALL AND/OR RELOCATE ALL UNDERGROUND UTILITIES AS NECESSARY OR AS SHOWN ON PLANS.
5. COMPLETE ROADWAY IMPROVEMENTS AS SHOWN ON PLANS.
6. AFTER FINAL CONSTRUCTION OF ALL ROADWAY ITEMS, PERFORM FINAL LANDSCAPING AND PERMANENT EROSION CONTROL MEASURES AS SHOWN ON PLANS.

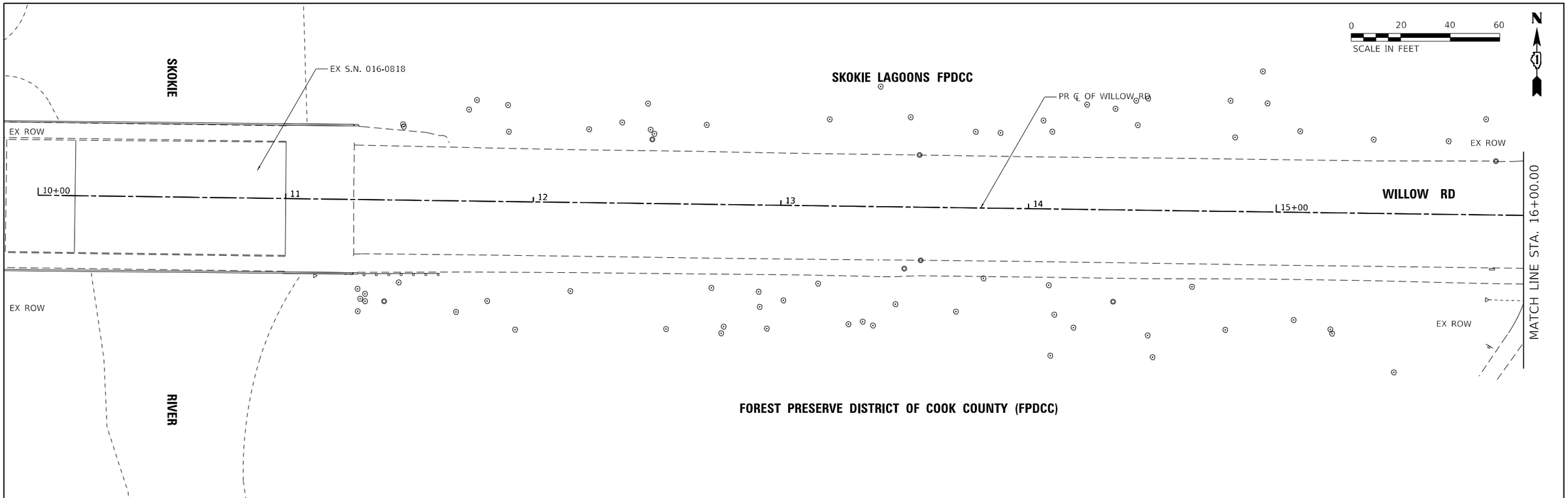


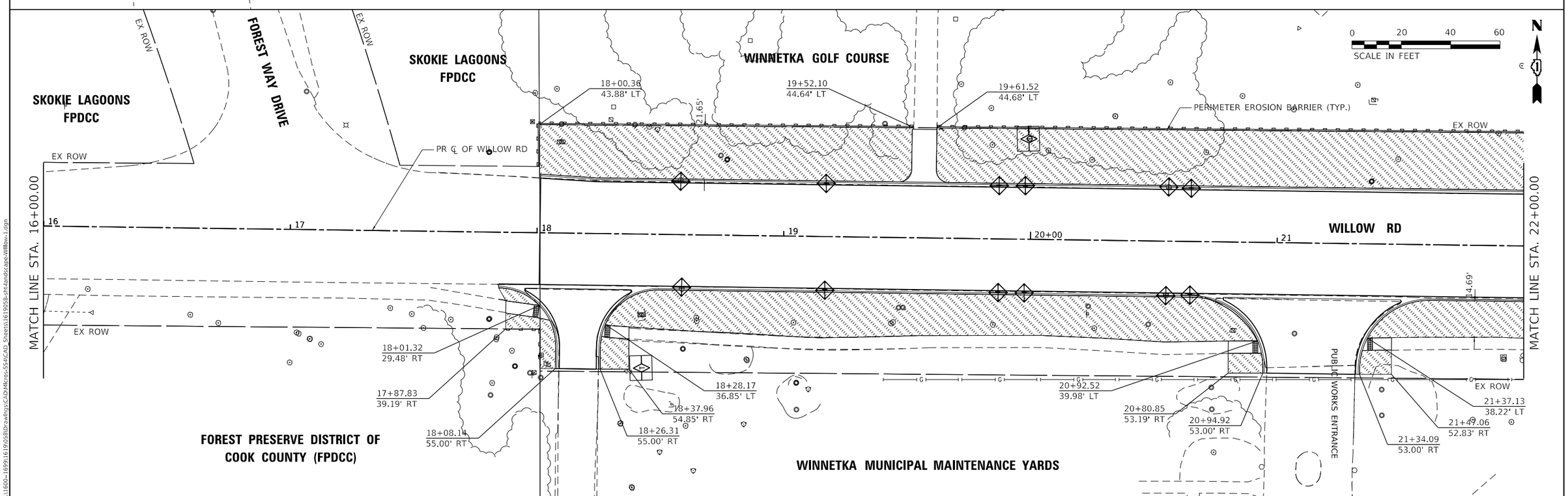


MODEL: Default
FILE NAME: S:\JOL\1600-1699\16190\38\Drawings\CAD\Micros-SS4\CAD Sheets\16190S8-sht-Landscape-Willow-1.dgn

SA STRAND ASSOCIATES®
1170 SOUTH HOUBOLT ROAD
JOLIET, ILLINOIS 60431
(815) 744-4200

| | | |
|---|---|---|
| USER NAME = AlexaM | DESIGNED - | REVISED - |
| | DRAWN - | REVISED - |
| PLOT SCALE = 40.0000 ' / in. | CHECKED - | REVISED - |
| PLOT DATE = 7/8/2026 | DATE - 2/27/2026 | REVISED - |

**STATE OF ILLINOIS**
**DEPARTMENT OF TRANSPORTATION**

**LANDSCAPING AND EROSION CONTROL PLAN**
**WILLOW ROAD**

SCALE: 1" = 20' | SHEET 1 OF 5 SHEETS | STA. 10+00.00 TO STA. 22+00.00

| F.A.U. RTE. | SECTION | COUNTY | TOTAL SHEETS | SHEET NO. |
|---|---|---|---|---|
| 3561 | 08-00103-00-FP | COOK | 254 | 157 |

CONTRACT NO. 61M29

ILLINOIS | FED. AID PROJECT

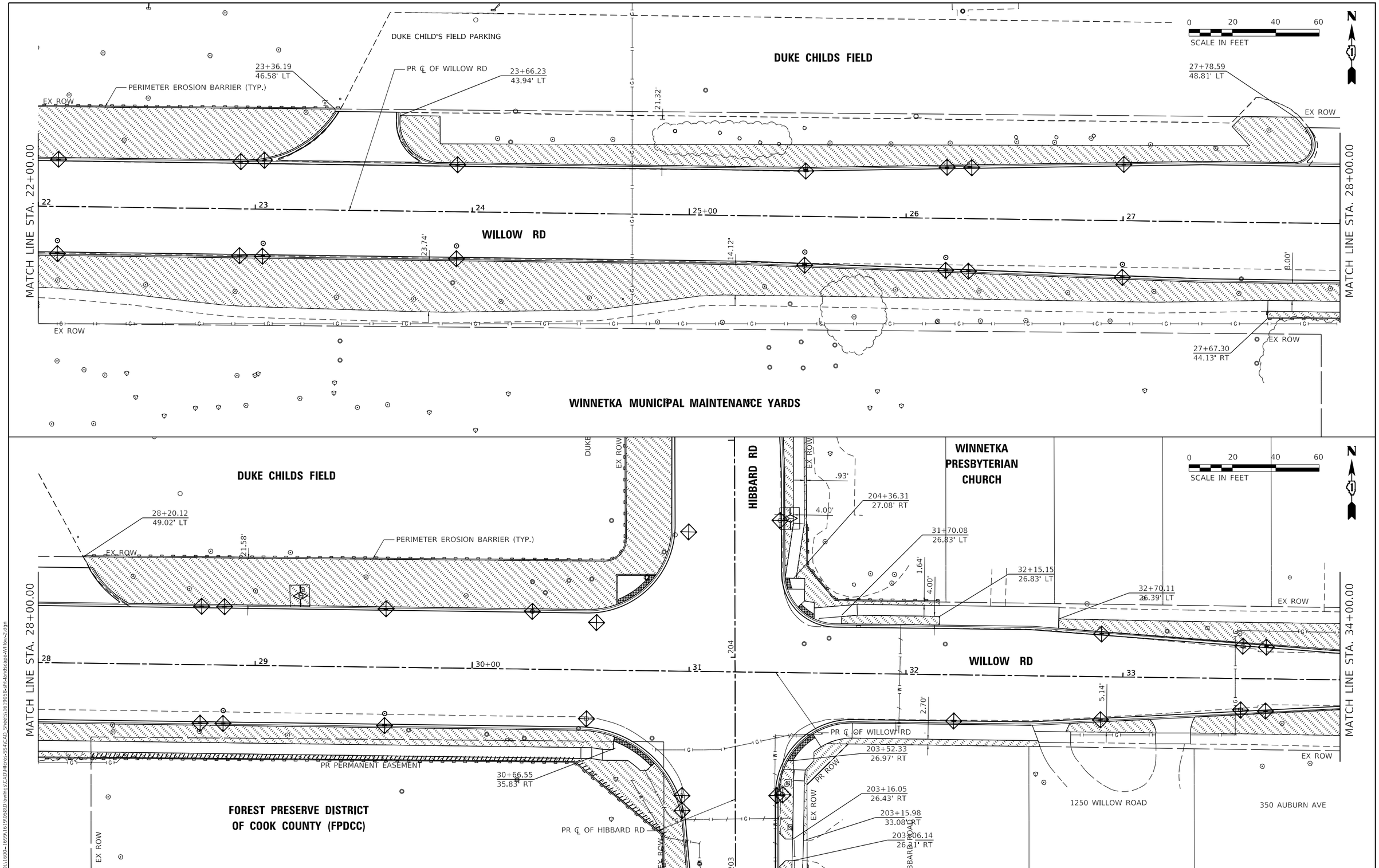


MODEL: Default
FILE NAME: S:\DOL\1600-1699\1619058\Drawings\CADD\Micro-Station\CAD Sheets\1619058-lrh1-landscape-Willow-2.dgn


STRAND ASSOCIATES®
1170 SOUTH HOUBOLT ROAD
JOLIET, ILLINOIS 60431
(815) 744-4200


| | | |
|---|---|---|
| USER NAME = AlexaM | DESIGNED - | REVISED - |
| | DRAWN - | REVISED - |
| PLOT SCALE = 40.0000 ' / in. | CHECKED - | REVISED - |
| PLOT DATE = 7/8/2026 | DATE - 2/27/2026 | REVISED - |

**STATE OF ILLINOIS**
**DEPARTMENT OF TRANSPORTATION**

**LANDSCAPING AND EROSION CONTROL PLAN**
**WILLOW ROAD**

SCALE: 1" = 20' | SHEET 2 OF 5 SHEETS | STA. 22+00.00 TO STA. 34+00.00

| F.A.U. RTE. | SECTION | COUNTY | TOTAL SHEETS | SHEET NO. |
|---|---|---|---|---|
| 3561 | 08-00103-00-FP | COOK | 254 | 158 |

CONTRACT NO. 61M29

ILLINOIS | FED. AID PROJECT

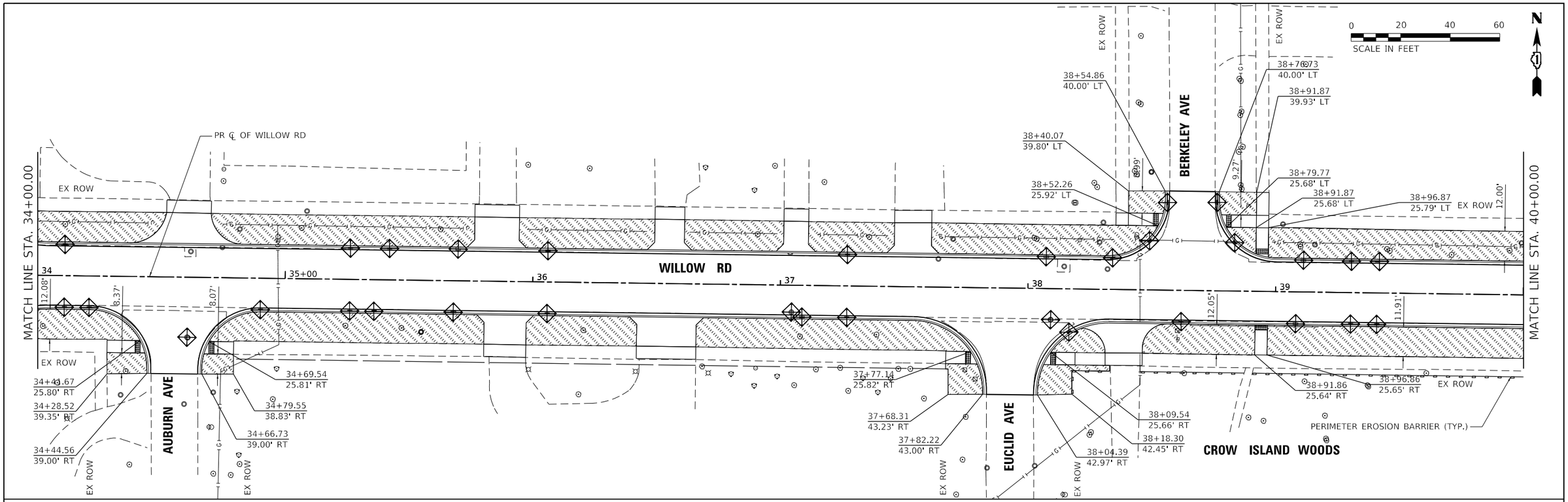


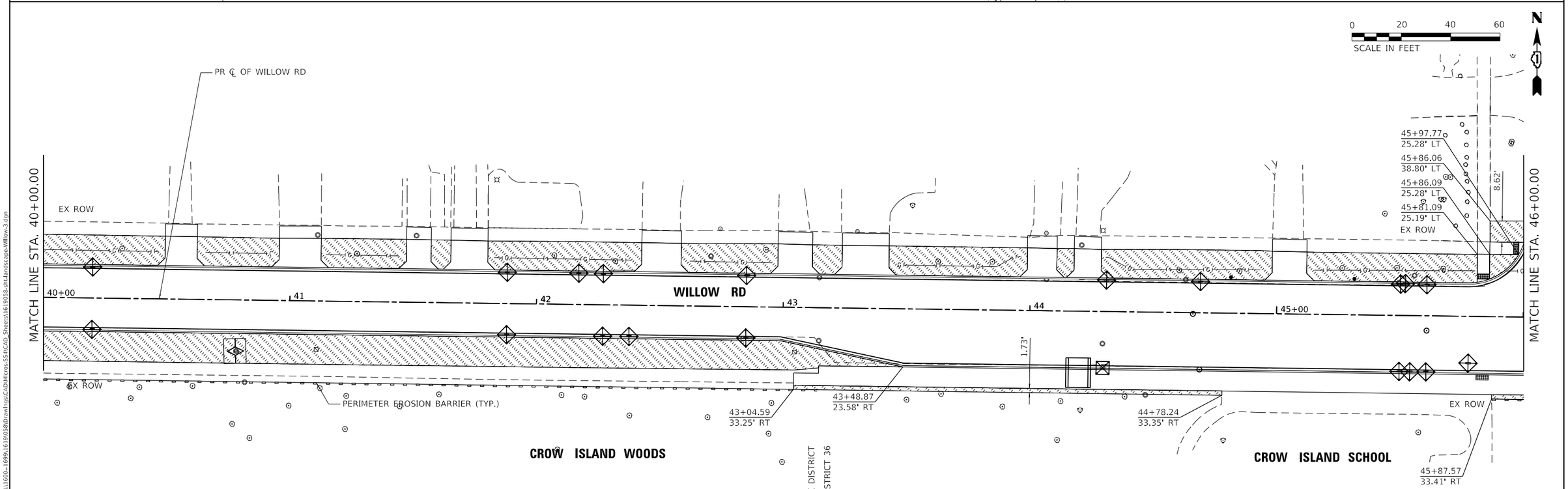


MODEL: Default
FILE NAME: S:\OL\1600-1699\1619\058\Drawings\CAD\Micros-SSA\CAD_Sheets\1619058-pH-landscape-Willow-3.dgn


STRAND ASSOCIATES®
1170 SOUTH HOUBOLT ROAD
JOLIET, ILLINOIS 60431
(815) 744-4200


| | | |
|---|---|---|
| USER NAME = AlexaM | DESIGNED - | REVISED - |
| | DRAWN - | REVISED - |
| PLOT SCALE = 40.0000 ' / in. | CHECKED - | REVISED - |
| PLOT DATE = 7/8/2026 | DATE - 2/27/2026 | REVISED - |

**STATE OF ILLINOIS**
**DEPARTMENT OF TRANSPORTATION**

**LANDSCAPING AND EROSION CONTROL PLAN**
**WILLOW ROAD**

SCALE: 1" = 20' | SHEET 3 OF 5 SHEETS | STA. 34+00.00 TO STA. 46+00.00

| F.A.U. RTE. | SECTION | COUNTY | TOTAL SHEETS | SHEET NO. |
|---|---|---|---|---|
| 3561 | 08-00103-00-FP | COOK | 254 | 159 |
| | | CONTRACT NO. 61M29 | | |
| | | ILLINOIS FED. AID PROJECT | | |

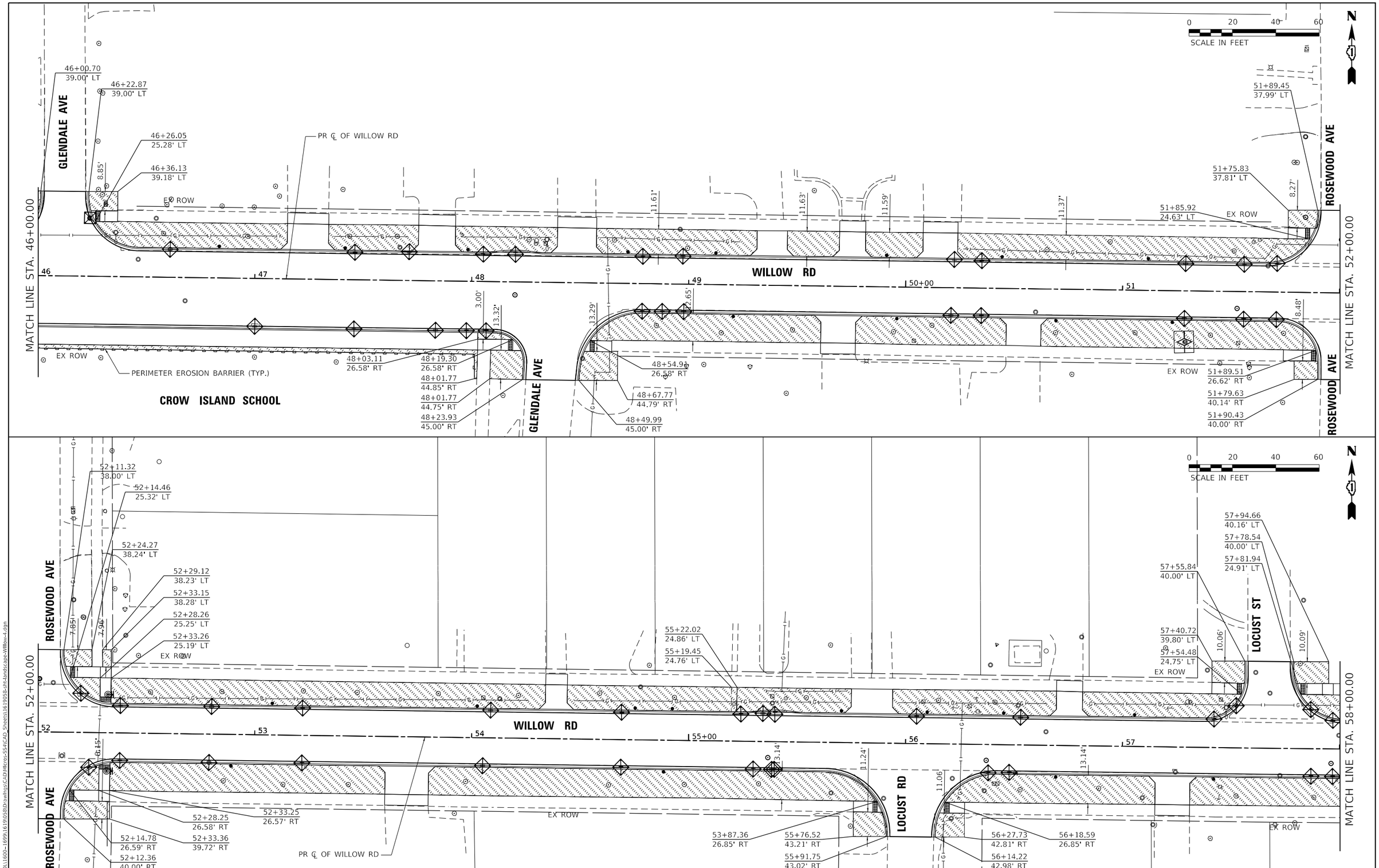


MODEL: Default
FILE NAME: S:\OL\1600-1699\1619058\Drawings\CADVMicro-SS4\CAD Sheets\1619058-lrt-landscape-Willow-4.dgn

| | | | | |
|---|---|---|---|---|
| STRAND ASSOCIATES® 1170 SOUTH HOUBOLT ROAD JOLIET, ILLINOIS 60431 (815) 744-4200 | USER NAME = AlexaM | DESIGNED - | REVISED - | STATE OF ILLINOIS DEPARTMENT OF TRANSPORTATION |
| | | DRAWN - | REVISED - | |
| | PLOT SCALE = 40.0000 ' / in. | CHECKED - | REVISED - | |
| | PLOT DATE = 7/8/2026 | DATE - 2/27/2026 | REVISED - | |

**LANDSCAPING AND EROSION CONTROL PLAN**
**WILLOW ROAD**

SCALE: 1" = 20' | SHEET 4 OF 5 SHEETS | STA. 46+00.00 TO STA. 58+00.00

| F.A.U. RTE. | SECTION | COUNTY | TOTAL SHEETS | SHEET NO. |
|---|---|---|---|---|
| 3561 | 08-00103-00-FP | COOK | 254 | 160 |
| | | CONTRACT NO. 61M29 | | |
| | | ILLINOIS | FED. AID PROJECT | |

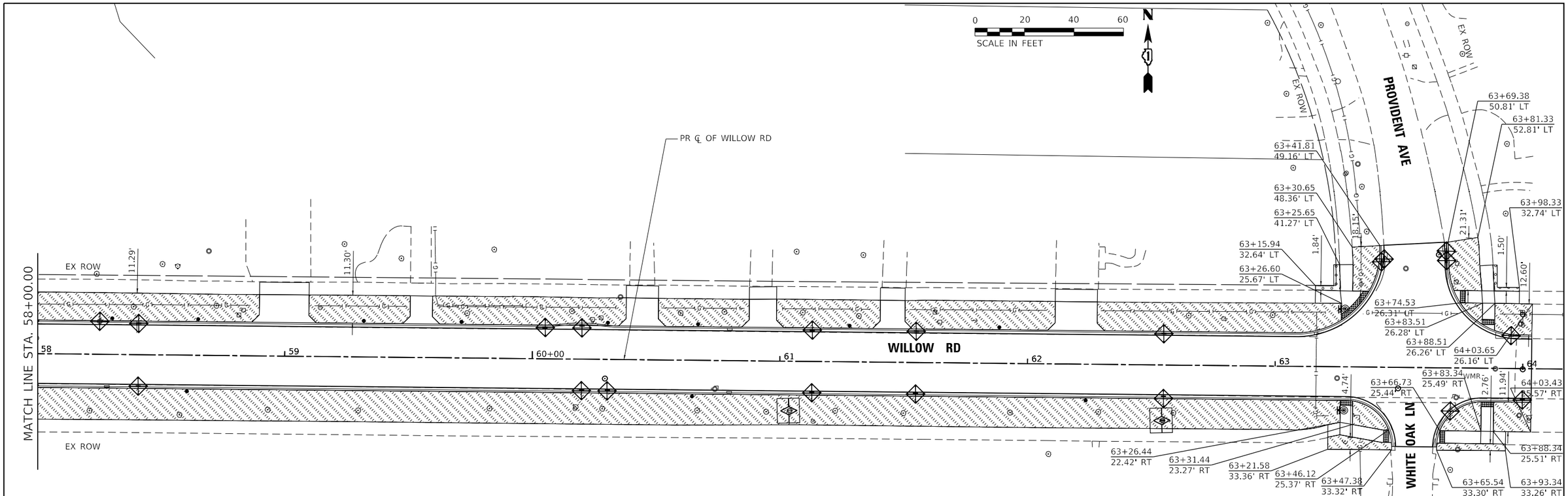


MODEL: Default
FILE NAME: S:\DOL\1600-1699\16190508\Drawings\CAD\Micros-SSA\CAD_Sheets\16190508-pht-Landscape-Willow-5.dgn

| | | | | | |
|---|---|---|---|---|---|
| STRAND ASSOCIATES® 1170 SOUTH HOUBOLT ROAD JOLIET, ILLINOIS 60431 (815) 744-4200 | USER NAME = AlexaM | DESIGNED - | REVISED - | STATE OF ILLINOIS DEPARTMENT OF TRANSPORTATION | LANDSCAPING AND EROSION CONTROL PLAN WILLOW ROAD |
| | | DRAWN - | REVISED - | | |
| | PLOT SCALE = 40.0000 ' / in. | CHECKED - | REVISED - | | |
| | PLOT DATE = 7/8/2026 | DATE - 2/27/2026 | REVISED - | | SCALE: 1" = 20' SHEET 5 OF 5 SHEETS STA. 58+00.00 TO STA. 64+16.62 |

| F.A.U. RTE. | SECTION | COUNTY | TOTAL SHEETS | SHEET NO. |
|---|---|---|---|---|
| 3561 | 08-00103-00-FP | COOK | 254 | 161 |
| | | CONTRACT NO. 61M29 | | |
| | ILLINOIS | FED. AID PROJECT | | |

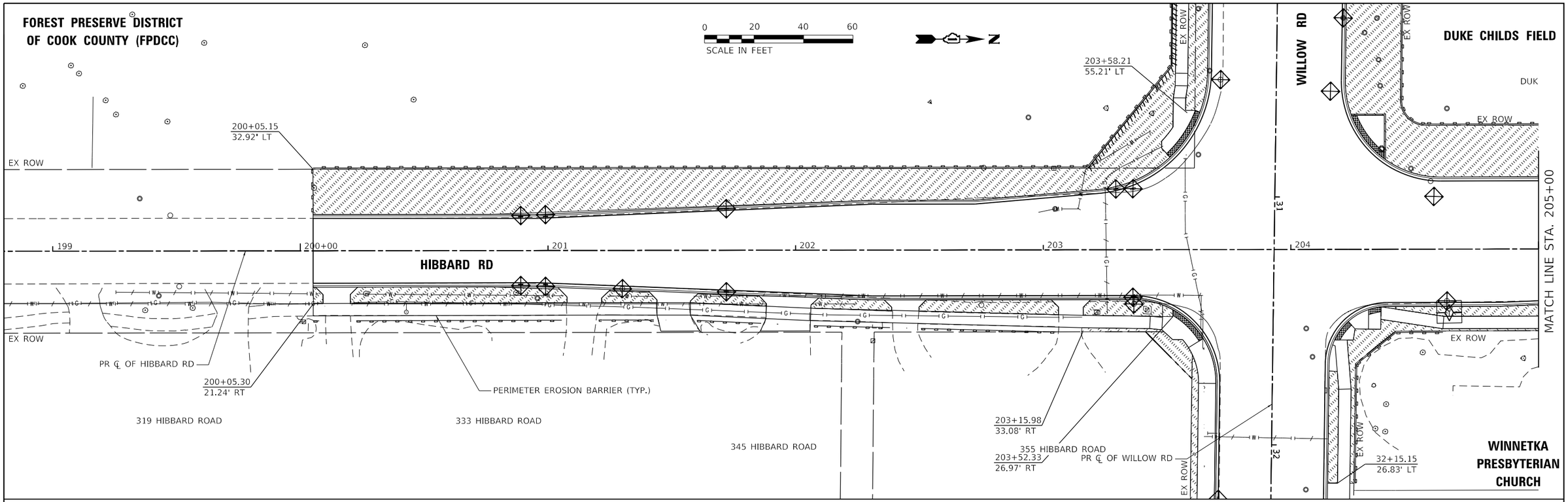


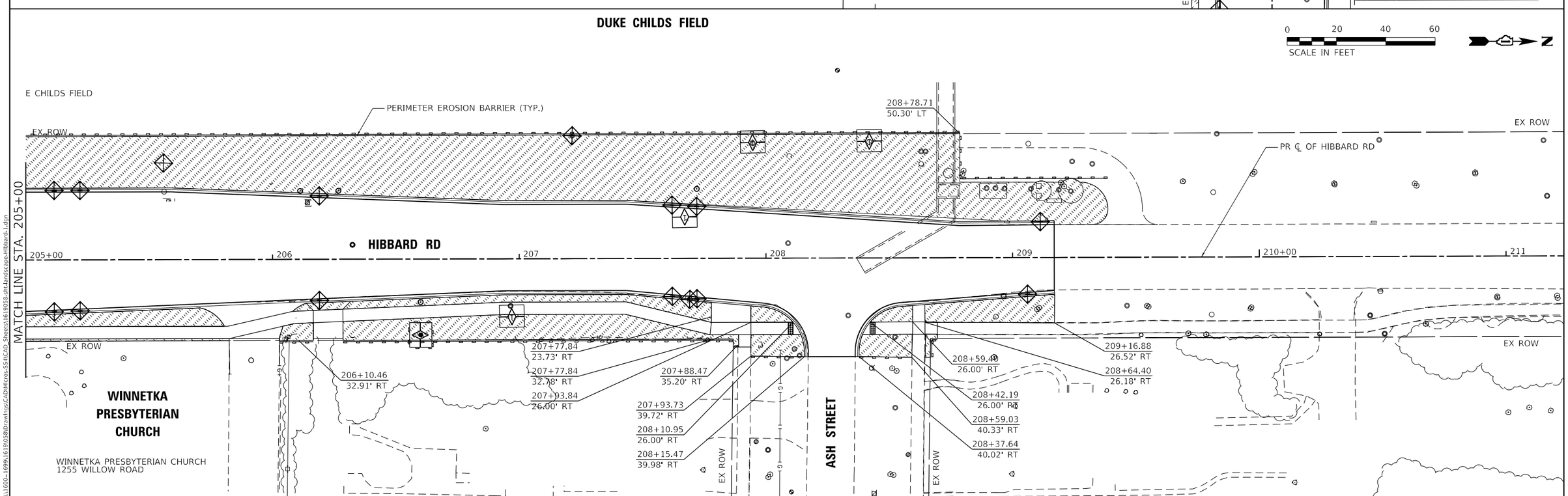


MODEL: Default
FILE NAME: S:\DOL\1600-1699\1619\0058\Drawings\CAD\Micros-SSA\CAD_Sheets\1619058-PH-Landscape-Hibbard-1.dgn

STRAND ASSOCIATES®
1170 SOUTH HOUBOLT ROAD
JOLIET, ILLINOIS 60431
(815) 744-4200

| | | |
|---|---|---|
| USER NAME = AlexaM | DESIGNED - | REVISED - |
| | DRAWN - | REVISED - |
| PLOT SCALE = 40.0000 ' / in. | CHECKED - | REVISED - |
| PLOT DATE = 7/8/2026 | DATE - 2/27/2026 | REVISED - |

**STATE OF ILLINOIS**
**DEPARTMENT OF TRANSPORTATION**

**LANDSCAPING AND EROSION CONTROL PLAN**
**HIBBARD ROAD**

SCALE: 1" = 20' | SHEET 1 OF 1 SHEETS | STA. 198+80.26 TO STA. 211+23.46

| F.A.U. RTE. | SECTION | COUNTY | TOTAL SHEETS | SHEET NO. |
|---|---|---|---|---|
| 3561 | 08-00103-00-FP | COOK | 254 | 162 |
| | | CONTRACT NO. 61M29 | | |
| | | ILLINOIS | FED. AID PROJECT | |

# TRAFFIC SIGNAL LEGEND

| ITEM | EXISTING | PROPOSED |
|---|---|---|
| TRAFFIC SIGNAL CABINET | | |
| UNINTERRUPTABLE POWER SUPPLY | | |
| COMMUNICATION CABINET | ECC | CC |
| MASTER CONTROLLER | EMC | MC |
| MASTER MASTER CONTROLLER | EMMC | MMC |
| SERVICE INSTALLATION<br>-(P) POLE MOUNTED | P | P |
| SERVICE INSTALLATION<br>-(G) GROUND MOUNTED<br>-(GM) GROUND MOUNTED METERED | G GM | G GM |
| CELLULAR MODEM | CM | CM |
| TELEPHONE CONNECTION | ET | T |
| STEEL MAST ARM ASSEMBLY AND POLE | | |
| ALUMINUM MAST ARM ASSEMBLY AND POLE | | |
| STEEL COMBINATION MAST ARM ASSEMBLY AND POLE WITH LUMINAIRE | | |
| SIGNAL POST<br>-(BM) BARREL MOUNTED - TEMPORARY | | BM |
| WOOD POLE | | |
| GUY WIRE | | |
| SIGNAL HEAD | | |
| SIGNAL HEAD WITH BACKPLATE | | |
| SIGNAL HEAD - PROGRAMMABLE | P P | P P |
| FLASHER INSTALLATION<br>-(FS) SOLAR POWERED | F FS<br>F FS | F FS<br>F FS |
| PEDESTRIAN SIGNAL HEAD | | |
| PEDESTRIAN PUSH BUTTON<br>-(APS) ACCESSIBLE PEDESTRIAN PUSH BUTTON | APS | APS |
| RADAR DETECTION SENSOR | R | R |
| VIDEO DETECTION CAMERA | V | V |
| RADAR/VIDEO DETECTION ZONE | | |
| PAN, TILT, ZOOM (PTZ) CAMERA | PTZ | PTZ |
| EMERGENCY VEHICLE LIGHT DETECTOR | | |
| CONFIRMATION BEACON | | |
| WIRELESS INTERCONNECT | | |
| WIRELESS INTERCONNECT RADIO REPEATER | ERR | RR |
| WIRELESS ACCESS POINT | | |

| ITEM | EXISTING | PROPOSED |
|---|---|---|
| HANDHOLE<br>-SQUARE<br>-ROUND | | |
| DOUBLE HANDHOLE | | |
| HEAVY DUTY HANDHOLE<br>-SQUARE<br>-ROUND | H | H |
| JUNCTION BOX | | |
| RAILROAD CANTILEVER MAST ARM | | |
| RAILROAD FLASHING SIGNAL | | |
| RAILROAD CROSSING GATE | | |
| RAILROAD CROSSBUCK | | |
| RAILROAD CONTROLLER BUNGALOW | | |
| UNDERGROUND CONDUIT (UC), GALVANIZED STEEL | | |
| TEMPORARY SPAN WIRE, TETHER WIRE, AND CABLE | | |
| SYSTEM ITEM | S | SP |
| INTERSECTION ITEM | I | IP |
| REMOVAL ITEM | | R |
| RELOCATE ITEM | | RL |
| ABANDON ITEM | | A |
| CONTROLLER CABINET AND FOUNDATION TO BE REMOVED | | RCF |
| MAST ARM POLE AND FOUNDATION TO BE REMOVED | | RMF |
| SIGNAL POST AND FOUNDATION TO BE REMOVED | | RPF |
| DETECTOR LOOP, TYPE I | | |
| PREFORMED DETECTOR LOOP | P P | P P |
| WIRELESS DETECTOR SENSOR | W | W |

| ITEM | EXISTING | PROPOSED |
|---|---|---|
| SIGNAL HEAD<br>-(P) PROGRAMMABLE SIGNAL HEAD<br>-(EV) ELONGATED VISORS | R Y G<br>P EV | R Y G<br>P EV |
| SIGNAL HEAD WITH BACKPLATE<br>-(RB) RETROREFLECTIVE BACKPLATE<br>-(P) PROGRAMMABLE SIGNAL HEAD<br>-(EV) ELONGATED VISORS | R Y G<br>RB P EV | R Y G<br>RB P EV |
| PEDESTRIAN SIGNAL HEAD WITH COUNTDOWN TIMER | C D | C D |
| ILLUMINATED LED SIGN "NO LEFT TURN"/"NO RIGHT TURN" | | |
| ELECTRIC CABLE, SIGNAL, NO. 14 - 2/C, 3/C, 5/C, 7/C | 5 | 5 |
| ELECTRIC CABLE, LEAD-IN, NO. 14, 1 PAIR | 1P | 1P |
| SERVICE CABLE, 2/C - NO. 2, NO. 4, NO. 6 | 2#2<br>2#4<br>2#6 | 2#2<br>2#4<br>2#6 |
| GROUND CABLE NO. 6 SOLID COPPER (GREEN), 1/C | 1#6 | 1#6 |
| ELECTRIC CABLE, TRACER, NO. 14, 1/C | 1 | 1 |
| ELECTRIC CABLE, RAILROAD, NO. 14, 3/C | RAILROAD NO. 14 3/C<br>3 | RAILROAD NO. 14 3/C<br>3 |
| ELECTRIC CABLE, STREET NAME SIGN NO. 14, 3/C, TYPE SOOW | SOOW<br>3 | SOOW<br>3 |
| VENDOR CABLE | V | V |
| EMERGENCY VEHICLE PRIORITY LINE SENSOR CABLE, NO. 20, 3/C | 3#20 | 3#20 |
| OUTDOOR RATED NETWORK CABLE | ONC | ONC |
| FIBER OPTIC CABLE<br>-12F: 12 MULTIMODE<br>-24F: 12 MULTIMODE / 12 SINGLE MODE<br>-36F: 12 MULTIMODE / 24 SINGLE MODE<br>-24SM: 24 SINGLE MODE<br>-48SM: 48 SINGLE MODE | 12F<br>24F<br>36F<br>24SM<br>48SM | 24F<br>36F<br>24SM<br>48SM |
| GROUND ROD<br>-(C) CONTROLLER<br>-(M) MAST ARM<br>-(P) POST<br>-(S) SERVICE | C M P S | C M P S |

MODEL: TS-01a [Sheet]
FILE NAME: c:\pw_work\pwidot\lawrence.demanche@illinois.gov\d0951416\TS-01.dgn

| | | | |
|---|---|---|---|
| USER NAME = lawrence.demanche | DESIGNED - IP | REVISED - | |
| | DRAWN - IP | REVISED - | |
| PLOT SCALE = $SCALE$ | CHECKED - NB/KK | REVISED - | |
| PLOT DATE = 12/15/2025 | DATE - 10/15/2025 | REVISED - | |

**STATE OF ILLINOIS**
**DEPARTMENT OF TRANSPORTATION**

**DISTRICT ONE**
**STANDARD TRAFFIC SIGNAL DESIGN DETAILS**

SCALE: NONE | SHEET 1 OF 7 SHEETS | STA. | TO STA.

| F.A.U. RTE. | SECTION | COUNTY | TOTAL SHEETS | SHEET NO. |
|---|---|---|---|---|
| 3561 | 08-00103-00-FP | COOK | 254 | 163 |
| | TS-01 | CONTRACT NO. 61M29 | | |
| | | ILLINOIS | FED. AID PROJECT | |

## DETECTOR LOOP NOTES:

1. LOOPS SHALL BE SPLICED IN SERIES.
2. SAW-CUTS SHALL BE A MINIMUM WIDTH OF 5/16" AT A DEPTH OF 3". IF IN CONCRETE, THE SAW-CUT DEPTH SHALL BE TO THE TOP OF THE REINFORCEMENT.
3. LOOP CORNERS SHALL BE DRILLED WITH A 2" DIAMETER CORE.
4. EACH PAIR OF LOOP WIRES SHALL BE PLACED IN A SEPARATE EMPTY COILABLE NON-METALLIC CONDUIT FROM THE EDGE OF PAVEMENT TO THE HANDHOLE. SPACING BETWEEN THE HOLES DRILLED IN THE PAVEMENT SHALL NOT BE LESS THAN 6". EMPTY COILABLE NON-METALLIC CONDUIT SHALL BE INCLUDED IN THE COST OF THE DETECTOR LOOP PAY ITEM.
5. THE NUMBER OF LOOP TURNS SHALL BE AS RECOMMENDED BY THE AMPLIFIER MANUFACTURER. ALL ADJACENT SIDES OF THE LOOPS SHALL BE INSTALLED IN SUCH A WAY THAT THE CURRENT FLOW IS IN THE SAME DIRECTION TO REINFORCE ITS MAGNETIC FIELDS FOR SMALL VEHICLE DETECTION.
6. EACH LEAD-IN CABLE SHALL BE IDENTIFIED AND PERMANENTLY TAGGED IN THE HANDHOLE. EACH LEAD-IN CABLE TAG SHALL INDICATE THE LOCATION OF THE LOOP, LOOP NUMBER, LOOP DIRECTION (IN OR OUT), AND LOOP ROTATION (CLOCKWISE/COUNTERCLOCKWISE) IN WATER PROOF INK. SEE DETECTOR LOOP LEAD-IN CABLE TAG DETAIL. THE CONTRACTOR SHALL MARK THE LOOP LOCATIONS ON THE RECORD DRAWINGS AND PRESENT THEM TO THE ENGINEER AFTER THE FINAL INSPECTION.
7. ALL LOOP CABLE SHALL BE FASTENED WITH PLASTIC TIE WRAP TO THE HANDHOLE HOOKS.
8. IN ASPHALT PAVEMENT, LOOPS SHOULD BE PLACED IN THE BINDER AND THE DIVE HOLES MARKED AT THE CURB WITH A SAW-CUT. THE SAW-CUT SHALL BE CUT IN ACCORDANCE WITH LOCAL AND E.P.A. DUST CONTROL REQUIREMENTS. DETECTOR LOOP(S) SHALL NOT BE INSTALLED IN WET CONDITIONS AND THE SAW-CUTS MUST BE FREE OF DEBRIS AND RESIDUE SUCH AS DUST AND WATER WHICH IS TO BE ACHIEVED BY THE USE OF COMPRESSED AIR, WIRE BRUSHING AND HEAT DRYING ACCORDING TO SEALANT MANUFACTURER REQUIREMENTS. THE DETECTOR WIRE SHALL BE HELD IN PLACE BY THE USE OF FORM WEDGES. WEDGES SHALL BE SPACED NO MORE THAN 18" APART.
9. LOOP SPLICES SHALL BE SOLDERED USING A SOLDERING IRON. BLOW TORCHES OR OTHER DEVICES WHICH OXIDIZE COPPER CABLE SHALL NOT BE ALLOWED FOR SOLDERING OPERATIONS.
10. PREFORMED DETECTOR LOOPS SHALL BE USED WHERE NEW CONCRETE PAVEMENT IS PROPOSED. THE INSTALLATION OF PREFORMED LOOPS SHALL BE IN ACCORDANCE WITH THE DISTRICT 1 SPECIFICATIONS OR AS DIRECTED BY THE ENGINEER.

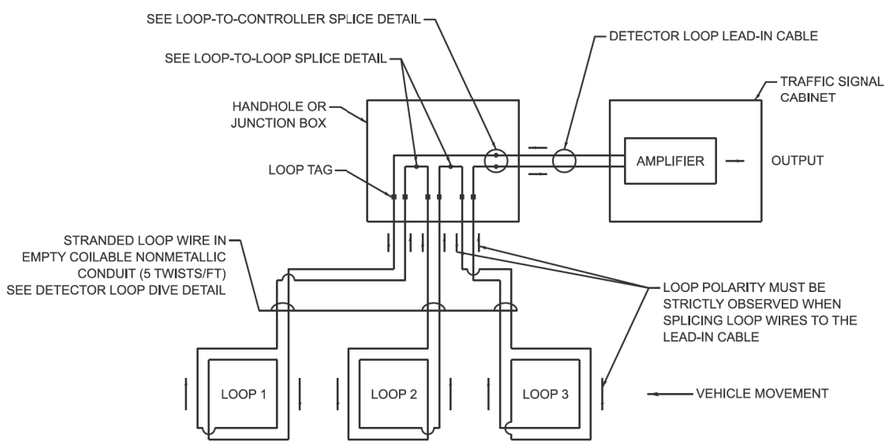


## DETECTOR LOOP WIRING SCHEMATIC

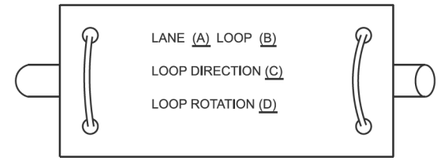


A. LANE 1 IS THE LANE CLOSEST TO THE CENTERLINE OF THE ROADWAY.

B. LOOP #1 IS THE LOOP CLOSEST TO THE INTERSECTION.

C. LABEL LOOP CABLE "IN" OR LOOP CABLE "OUT".

D. LABEL LOOP CABLE CLOCKWISE OR LOOP CABLE COUNTERCLOCKWISE.

## DETECTOR LOOP LEAD-IN CABLE TAG

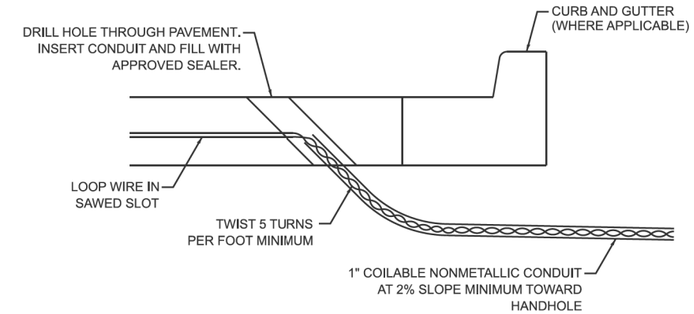


## DETECTOR LOOP DIVE DETAIL

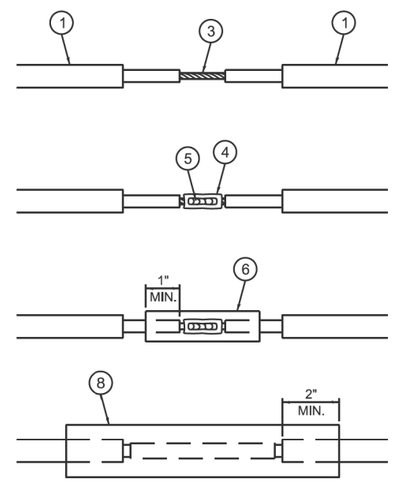


## LOOP-TO-LOOP SPLICE DETAIL

1. DETECTOR LOOP CABLE.
2. DETECTOR LOOP LEAD-IN CABLE
3. BARE CONDUCTORS TWISTED TOGETHER.
4. BUTT SPLICE CRIMP CONNECTOR.
5. SPLICE SOLDERED WITH ROSIN CORE FLUX. ALL EXPOSED SURFACES OF THE SOLDER SHALL BE SMOOTH. THE SPLICES SHALL BE STAGGERED.
6. WCSMW 30/100 HEAT SHRINK TUBE, 3" MINIMUM LENGTH, UNDERWATER GRADE.
7. SELF-INFUSED, SILICONE ELECTRICAL TAPE TIGHTLY WRAPPED AROUND CABLES.
8. WCS 200/750 HEAT SHRINK TUBE, 8" MINIMUM LENGTH, UNDERWATER GRADE.

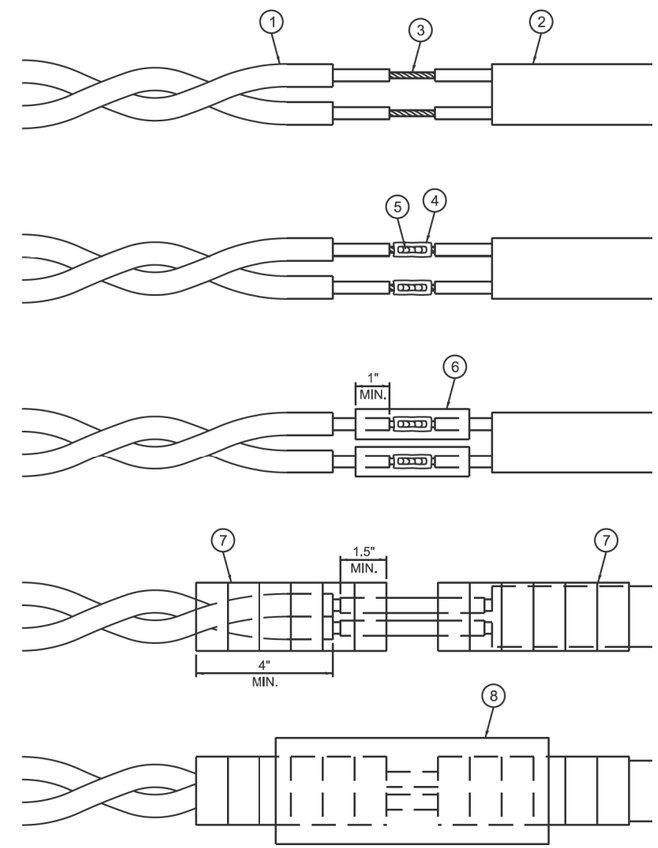


## LOOP-TO-CONTROLLER SPLICE DETAIL

MODEL: TS-C1b [Sheet]
FILE NAME: c:\pw_work\pwidot\lawrence.demanche@illinois.gov\d0951416\TS-01.dgn

| | | | |
|---|---|---|---|
| USER NAME = lawrence.demanche | DESIGNED - IP | REVISED - | |
| | DRAWN - IP | REVISED - | |
| PLOT SCALE = $SCALE$ | CHECKED - NB/KK | REVISED - | |
| PLOT DATE = 12/16/2025 | DATE - 10/15/2025 | REVISED - | |

STATE OF ILLINOIS
DEPARTMENT OF TRANSPORTATION

DISTRICT ONE
STANDARD TRAFFIC SIGNAL DESIGN DETAILS

SCALE: NONE | SHEET 2 OF 7 SHEETS | STA. TO STA.

| F.A.U. RTE. | SECTION | COUNTY | TOTAL SHEETS | SHEET NO. |
|---|---|---|---|---|
| 3561 | 08-00103-00-FP | COOK | 254 | 164 |
| | TS-01 | CONTRACT NO. 61M29 | | |
| | | ILLINOIS | FED. AID PROJECT | |

## NOTES:

1. THE MAST ARM MOUNTED SIGNAL HEADS SHALL BE CENTERED ON THE LANES OR AS SHOWN ON THE TRAFFIC SIGNAL PLANS.
2. REFER TO THE TRAFFIC SIGNAL EQUIPMENT OFFSET MINIMUMS TABLE.
3. A 4' MINIMUM UNOBSTRUCTED PEDESTRIAN ACCESS ROUTE SHALL BE MAINTAINED.
4. THE PUSH-BUTTON SHALL BE LOCATED 5' OR LESS FROM THE OUTSIDE EDGE OF THE MARKED CROSSWALK FARTHEST FROM THE INTERSECTION FOR THE CROSSWALK THAT THE PUSH-BUTTON CONTROLS.
5. IF THE MAST ARM POLE OR SIGNAL POST WHERE THE PUSH-BUTTON IS TO BE INSTALLED IS NOT IMMEDIATELY ADJACENT TO THE SIDEWALK, PROVIDE A FIRM, STABLE, AND SLIP RESISTANT SURFACE UP TO THE MAST ARM POLE OR SIGNAL POST. THE MINIMUM PAVED AREA IN FRONT OF THE PUSH-BUTTON SHALL BE 2.5' X 4'. IF THIS DOES NOT MEET THE REQUIREMENT STATED IN NOTE 3, A SEPARATE PEDESTRIAN SIGNAL POST SHALL BE INSTALLED TO PLACE THE PUSH-BUTTON ADJACENT TO THE SIDEWALK SURFACE.
6. THE HEIGHT OF THE PEDESTRIAN PUSH-BUTTON SHALL BE 36". IF APPROVED BY THE AREA TRAFFIC SIGNAL ENGINEER, THE PUSH-BUTTON MAY BE LOCATED AT A HEIGHT BETWEEN 30" AND 42". THE HEIGHT OF THE EQUESTRIAN PUSH-BUTTON SHAL BE 72" OR AS DIRECTED BY THE ENGINEER.
7. THE FACE OF THE PUSH-BUTTON SHALL BE PARALLEL TO THE CROSSWALK IT CONTROLS.
8. THE PUSH-BUTTON SHALL BE LOCATED BEHIND THE DETECTABLE WARNING.
9. WHERE A PUSH-BUTTON IS BEING INSTALLED ON A MAST ARM POLE OR SIGNAL POST ADJACENT TO THE PEDESTRIAN ACCESS ROUTE, THE PROPOSED FOUNDATION SHALL BE INSTALLED WITHIN THE SIDE CURB IN ORDER TO MEET THE 10" REACH REQUIREMENT.
10. THE SIDEWALK PANEL IN FRONT OF THE PUSH-BUTTON SHALL HAVE A SLOPE LESS THAN 5%.
11. WHERE TWO PEDESTRIAN PUSH-BUTTONS ARE PROVIDED ON THE SAME CORNER, THEY SHALL BE 10' OR MORE APART. EXCEPTION: IN ALTERATIONS WHERE TECHNICALLY INFEASIBLE TO PROVIDE 10' SEPARATION BETWEEN PUSH-BUTTONS ON THE SAME CORNER.
12. CORRESPONDING PEDESTRIAN EQUIPMENT (SIGNAL HEAD AND PUSH-BUTTON) SHALL BE INSTALLED ON THE SAME POST CLOSEST TO THE CROSSWALK IT CONTROLS.
13. PEDESTRIAN SIGNAL HEADS INSTALLED ON MAST ARM POLES OR SIGNAL POSTS SHALL BE MOUNTED WITH THE BOTTOM OF THE SIGNAL HOUSING (INCLUDING BRACKETS) NOT LESS THAN 8' OR MORE THAN 10' ABOVE SIDEWALK LEVEL. PEDESTRIAN SIGNAL HEADS INSTALLED ON PEDESTRIAN SIGNAL POSTS SHALL BE MOUNTED WITH THE BOTTOM OF THE SIGNAL HOUSING (INCLUDING BRACKETS) NOT LESS THAN 8' ABOVE SIDEWALK LEVEL. THE PEDESTRIAN SIGNAL HEADS SHALL BE POSITIONED AND ADJUSTED TO PROVIDE MAXIMUM VISIBILITY AT THE BEGINNING OF THE CONTROLLED CROSSWALK.
14. THE LOCATIONS OF THE PEDESTRIAN PUSH-BUTTONS AND PEDESTRIAN SIGNAL HEADS SHALL MEET THE REQUIREMENTS OF THE MUTCD, PROWAG, AND THE REQUIREMENTS ON THIS DETAIL SHEET.

## TRAFFIC SIGNAL MAST ARM AND SIGNAL POST

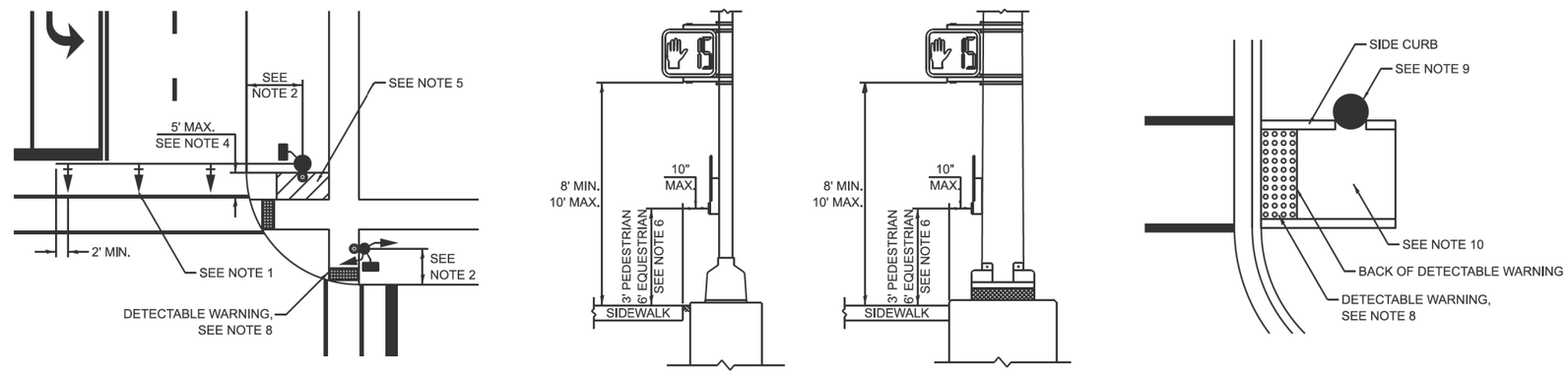


## PEDESTRIAN SIGNAL POST

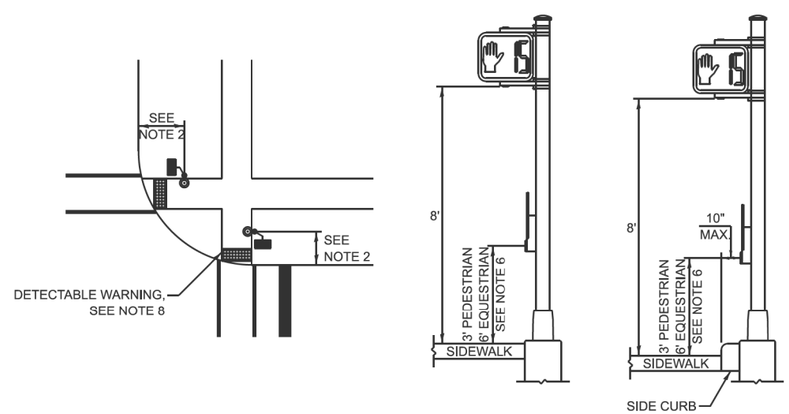


## PUSH-BUTTON LOCATIONS

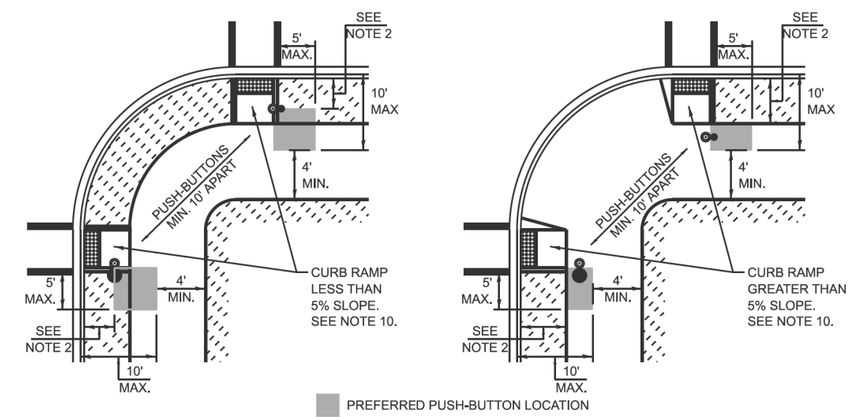


| TRAFFIC SIGNAL EQUIPMENT | BARRIER CURB (MINIMUM DISTANCE FROM THE BACK OF CURB TO THE CENTER OF THE FOUNDATION) | SHOULDER / NON-BARRIER CURB (MINIMUM DISTANCE FROM THE EDGE LINE OF THE RIGHT-MOST LANE TO THE CENTER OF THE FOUNDATION) |
|---|---|---|
| MAST ARM ASSEMBLY AND POLE | 6' | SHOULDER WIDTH + 2', MINIMUM 10' |
| SIGNAL POST | 4' | SHOULDER WIDTH + 2', MINIMUM 10' |
| PEDESTRIAN SIGNAL POST | 4' | 4' - SEE NOTE 2 |
| TEMPORARY WOOD POLE | 6' | SHOULDER WIDTH + 2', MINIMUM 10' |
| TRAFFIC SIGNAL CABINET | 6' - SEE NOTE 3 | SHOULDER WIDTH + 6', MINIMUM 16' - SEE NOTE 3 |
| SERVICE CABINET | 6' - SEE NOTE 3 | SHOULDER WIDTH + 6', MINIMUM 16' - SEE NOTE 3 |

## TRAFFIC SIGNAL EQUIPMENT OFFSET MINIMUMS

## NOTES:

1. CONTACT THE AREA TRAFFIC SIGNAL ENGINEER FOR ASSISTANCE LOCATING THE TRAFFIC SIGNAL EQUIPMENT WHEN THERE ARE CONFLICTS AND THE MINIMUM OFFSET DISTANCES CANNOT BE MET.
2. MINIMUM DISTANCE FROM THE BACK OF THE DETECTABLE WARNING.
3. MINIMUM DISTANCE TO THE ROADWAY SIDE OF THE FOUNDATION.
4. ANY CHANGES TO THE OFFSETS OF THE FOUNDATIONS FROM THE MINIMUM DISTANCES LISTED IN THE "TRAFFIC SIGNAL EQUIPMENT OFFSET" TABLE AND THE TRAFFIC SIGNAL PLAN COULD AFFECT THE PLACEMENT OF THE TRAFFIC SIGNAL HEADS, PEDESTRIAN SIGNAL HEADS, AND THE PEDESTRIAN PUSH-BUTTONS. THE SIGNAL HEAD PLACEMENT ON THE MAST ARMS SHALL REMAIN AS PER THE TRAFFIC SIGNAL PLAN AND THE "TRAFFIC SIGNAL MAST ARM AND SIGNAL POST" DETAIL ABOVE. THE PROPOSED MAST ARM LENGTHS MAY NEED TO BE REVISED TO MEET THESE REQUIREMENTS. THE LOCATIONS OF THE PEDESTRIAN PUSH-BUTTONS AND PEDESTRIAN SIGNAL HEADS SHALL MEET THE REQUIREMENTS OF THE MUTCD, PROWAG, AND THE REQUIREMENTS ON THIS DETAIL SHEET.

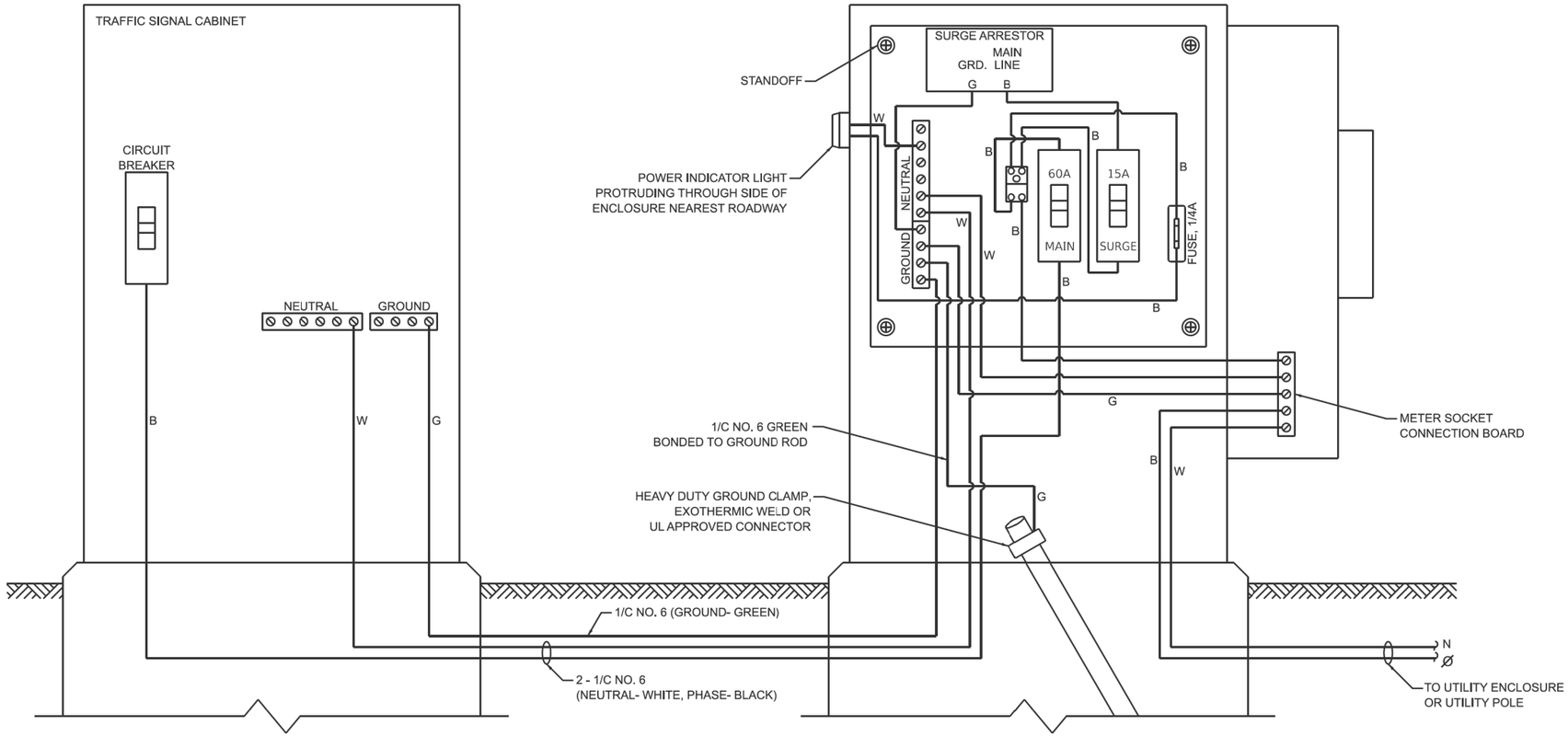


## ELECTRIC SERVICE WIRING DIAGRAM IN GROUND MOUNTED SERVICE CABINET

## NOTES:

1. THE GROUND MOUNTED SERVICE CABINET IS TO BE LOCATED BETWEEN THE TRAFFIC SIGNAL CABINET AND THE UTILITY CONNECTION, PREFERABLY 20' TO 50' FROM THE TRAFFIC SIGNAL CONTROLLER CABINET.
2. ELECTRIC SERVICE PANELS SHALL BE CONSTRUCTED TO UL STD. 508, INDUSTRIAL CONTROL PANEL, AND CARRY THE UL LABEL.
3. ALL WIRING SHALL BE NEATLY DRESSED AND SUPPORTED.
4. THE METER SOCKET IS TO BE PROVIDED BY THE CONTRACTOR. THE METER IS TO BE PROVIDED BY THE UTILITY COMPANY.

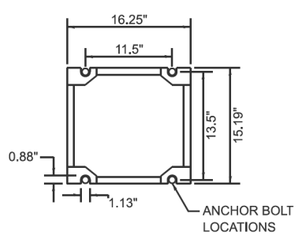


## CABINET BASE BOLT PATTERN

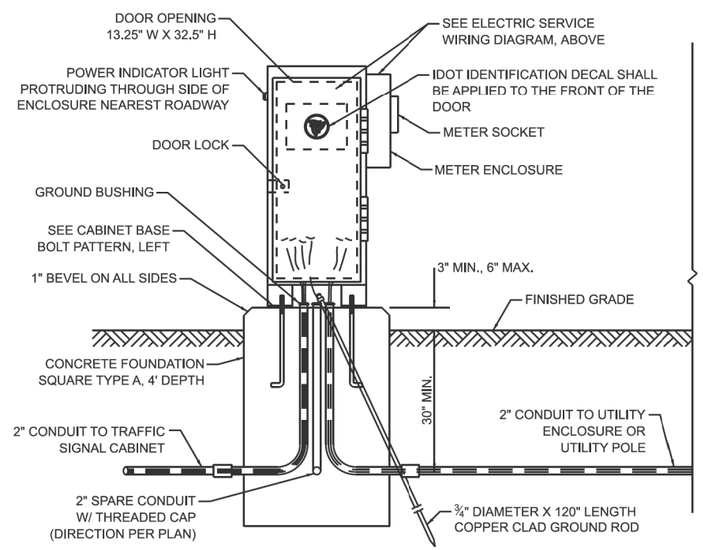


## SERVICE INSTALLATION - GROUND MOUNTED WITH METER

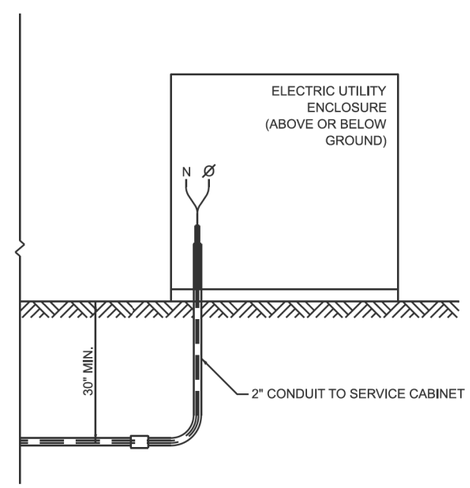


## CONNECTION TO UTILITY ENCLOSURE

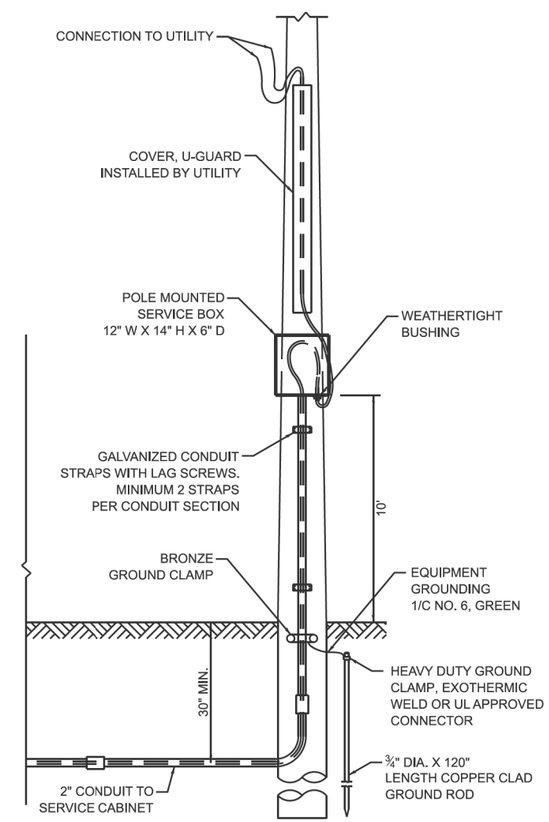


## CONNECTION TO UTILITY POLE

MODEL: TS-C1d [Sheet]
FILE NAME: c:\pw_work\pwidot\lawrence.demanche@illinois.gov\d0951416\TS-01.dgn

| | | | |
|---|---|---|---|
| USER NAME = lawrence.demanche | DESIGNED - IP | REVISED - | |
| | DRAWN - IP | REVISED - | |
| PLOT SCALE = $SCALE$ | CHECKED - NB/KK | REVISED - | |
| PLOT DATE = 12/16/2025 | DATE - 10/15/2025 | REVISED - | |

STATE OF ILLINOIS
DEPARTMENT OF TRANSPORTATION

DISTRICT ONE
STANDARD TRAFFIC SIGNAL DESIGN DETAILS

SCALE: NONE | SHEET 4 OF 7 SHEETS | STA. | TO STA.

| F.A.U. RTE. | SECTION | COUNTY | TOTAL SHEETS | SHEET NO. |
|---|---|---|---|---|
| 3561 | 08-00103-00-FP | COOK | 254 | 166 |
| | TS-01 | CONTRACT NO. 61M29 | | |
| | | ILLINOIS | FED. AID PROJECT | |

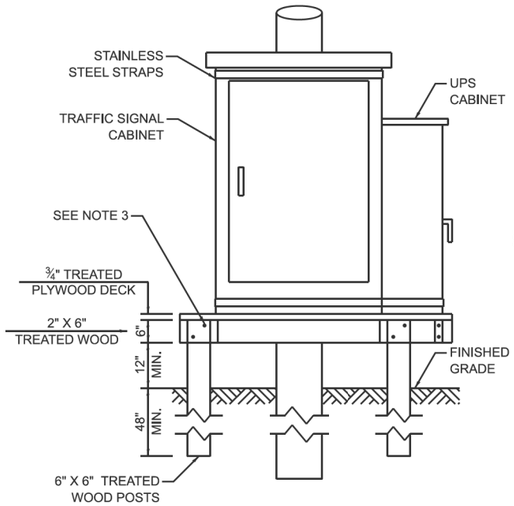


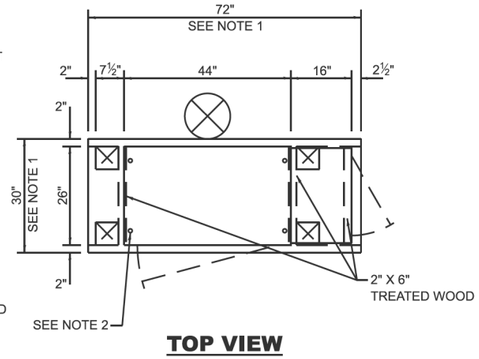


**TOP VIEW**

## NOTES:

1. THE PLATFORM SIZE IS BASED ON A TRAFFIC SIGNAL CABINET TYPE IV WITH BASE DIMENSIONS OF 26" X 44" AND UNINTERRUPTABLE POWER SUPPLY CABINET WITH BASE DIMENSIONS OF 16" X 25". ADJUST THE PLATFORM SIZE TO FIT THE BASE DIMENSIONS OF THE CABINET SUPPLIED.
2. DRILLED HOLES THROUGH THE PLATFORM ARE TO MATCH THE TRAFFIC SIGNAL CABINET BOLT TEMPLATE. THE CABINET SHALL BE FASTENED TO THE PLATFORM WITH CARRIAGE BOLTS, WASHERS, AND NUTS.
3. ALL WOOD SUPPORT FRAMING SHALL BE FASTENED TO THE WOOD POSTS WITH 2 LAG SCREWS FOR EACH CONNECTION.

## TEMPORARY TRAFFIC SIGNAL CABINET WOOD SUPPORT PLATFORM

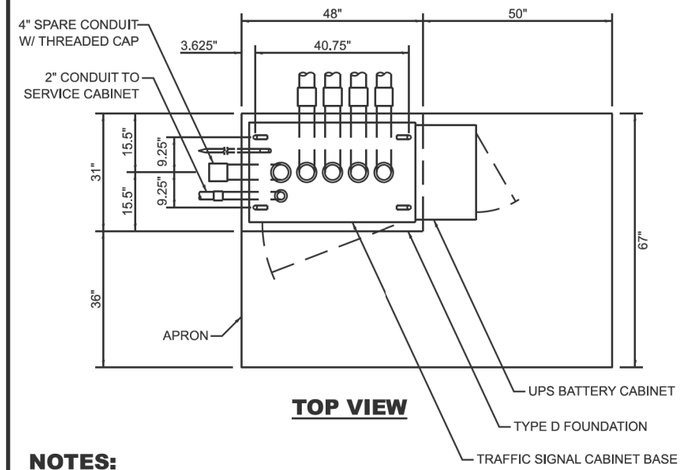


**TOP VIEW**

## NOTES:

1. THE TOP OF THE FOUNDATION SHALL BE HIGHER THAN THE TOP OF THE DOUBLE HANDHOLE.

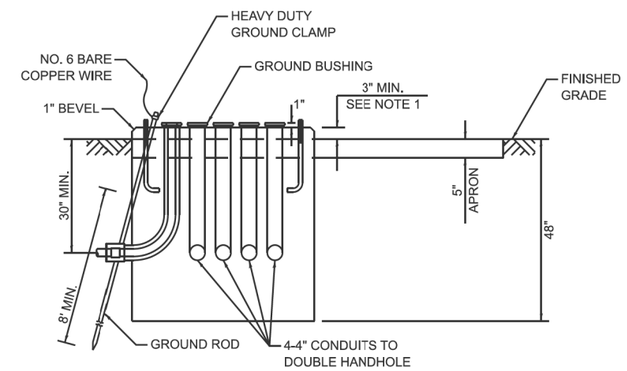


## TYPE D FOUNDATION
## TYPE IV AND TYPE V TRAFFIC SIGNAL CABINET AND UPS BATTERY CABINET

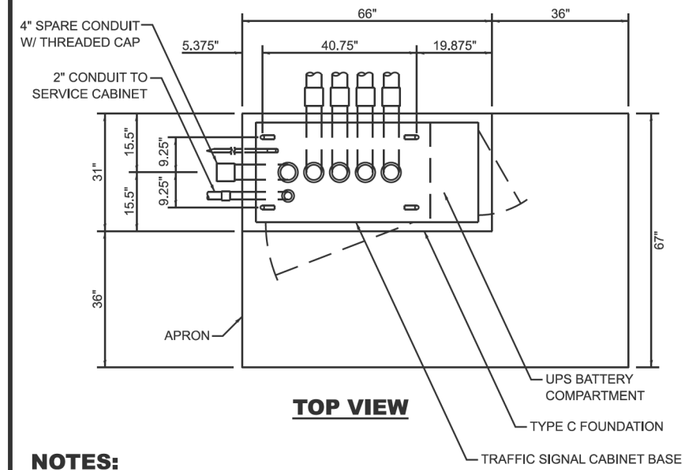


**TOP VIEW**

## NOTES:

1. THE TOP OF THE FOUNDATION SHALL BE HIGHER THAN THE TOP OF THE DOUBLE HANDHOLE.

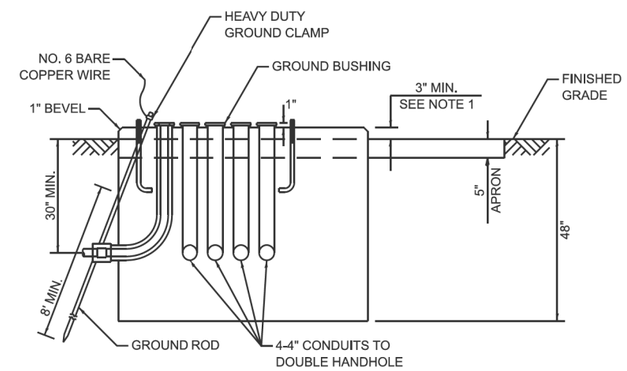


## TYPE C FOUNDATION
## SUPER P AND SUPER R TRAFFIC SIGNAL CABINETS

| MAST ARM LENGTH | FOUNDATION DEPTH | FOUNDATION DIAMETER | SPIRAL DIAMETER | QUANTITY OF REBARS | SIZE OF REBARS |
|---|---|---|---|---|---|
| LESS THAN 30' | 10' | 30" | 24" | 8 | #6 |
| GREATER THAN OR EQUAL TO 30' AND LESS THAN 40' | 13.5' | 30" | 24" | 8 | #6 |
| | 11' | 36" | 30" | 12 | #7 |
| GREATER THAN OR EQUAL TO 40' AND LESS THAN 50' | 13' | 36" | 30" | 12 | #7 |
| GREATER THAN OR EQUAL TO 50' AND UP TO 55' | 15' | 36" | 30" | 12 | #7 |
| GREATER THAN OR EQUAL TO 56' AND LESS THAN 65' | 21' | 42" | 36" | 16 | #8 |
| GREATER THAN OR EQUAL TO 65' AND UP TO 75' | 25' | 42" | 36" | 16 | #8 |

## DEPTH OF MAST ARM FOUNDATIONS, TYPE E

| FOUNDATION | DEPTH |
|---|---|
| TYPE A - SIGNAL POST, SERVICE CABINET | 4' |
| TYPE C - TRAFFIC SIGNAL CABINET WITH UPS | 4' |
| TYPE D - TRAFFIC SIGNAL CABINET | 4' |

## DEPTH OF FOUNDATIONS TYPES A, C & D

| VERTICAL CABLE | LENGTH |
|---|---|
| MAST ARM MOUNTED SIGNAL HEAD (L = MAST ARM LENGTH - DISTANCE TO SIGNAL HEAD FROM END OF ARM) | 20'+L |
| BRACKET MOUNTED SIGNAL HEAD (MAST ARM POLE OR SIGNAL POLE) | 13' |
| PEDESTRIAN SIGNAL HEAD | 10' |
| PEDESTRIAN PUSH BUTTON | 6' |
| SERVICE INSTALLATION POLE MOUNT TO SERVICE DROP | 13.5' |
| SERVICE INSTALLATION POLE MOUNT TO GROUND | 13.5' |
| SERVICE INSTALLATION GROUND MOUNT | 6' |
| FOUNDATION (SIGNAL POST, MAST ARM, TRAFFIC SIGNAL CABINET, SERVICE CABINET) | 3' |

## VERTICAL CABLE LENGTH

| CABLE SLACK | LENGTH |
|---|---|
| HANDHOLE | 6.5' |
| DOUBLE HANDHOLE | 13' |
| SIGNAL POST | 2' |
| MAST ARM | 2' |
| TRAFFIC SIGNAL CABINET OR SERVICE CABINET | 1.5' |
| FIBER OPTIC CABLE AT TRAFFIC SIGNAL CABINET | 13' |
| GROUND CABLE AT SIGNAL POST, MAST ARM, OR CABINET | 1.5' |
| GROUND CABLE AT HANDHOLE OR DOUBLE HANDHOLE | 6.5' |
| GROUND CABLE BETWEEN HANDHOLE FRAME AND COVER | 5' |

## CABLE SLACK LENGTH

## TYPE E FOUNDATION NOTES:

1. FOR STANDARD AND COMBINATION MAST ARM ASSEMBLIES. FOUNDATION DEPTHS FOR STANDARD DUAL MAST ARMS WITH THE LONGEST ARM LENGTH UP TO AND INCLUDING 55' SHALL BE INCREASE BY 1' OF THAT SHOWN IN THE TABLE, BASED ON THE LONGER OF THE TWO ARMS.
2. SEE STATE STANDARD 878001 CONCRETE FOUNDATION DETAILS FOR MORE INFORMATION.

MODEL: TS-d1e [Sheet]
FILE NAME: c:\pw_work\pwidot\lawrence.demanche@illinois.gov\d0951416\TS-01.dgn

| | | | |
|---|---|---|---|
| USER NAME = lawrence.demanche | DESIGNED - IP | REVISED - | |
| | DRAWN - IP | REVISED - | |
| PLOT SCALE = $SCALE$ | CHECKED - NB/KK | REVISED - | |
| PLOT DATE = 12/16/2025 | DATE - 10/15/2025 | REVISED - | |

STATE OF ILLINOIS
DEPARTMENT OF TRANSPORTATION

DISTRICT ONE
STANDARD TRAFFIC SIGNAL DESIGN DETAILS

SCALE: NONE | SHEET 5 OF 7 SHEETS | STA. TO STA.

| F.A.U. RTE. | SECTION | COUNTY | TOTAL SHEETS | SHEET NO. |
|---|---|---|---|---|
| 3561 | 08-00103-00-FP | COOK | 254 | 167 |
| | TS-01 | CONTRACT NO. 61M29 | | |
| | | ILLINOIS FED. AID PROJECT | | |

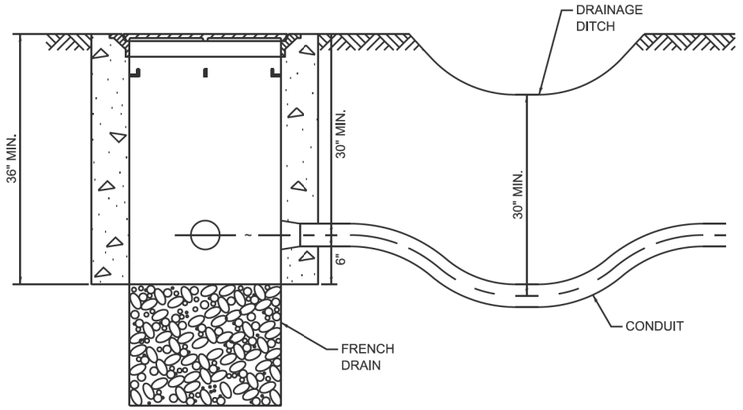


## NOTES:

1. THE CONDUIT DEPTH SHALL BE A MINIMUM OF 30" BELOW THE BOTTOM OF THE DRAINAGE DITCH OR ANY SLOPING GROUND.
2. THE MINIMUM CONDUIT DEPTH APPLIES TO ALL CONDUIT PLACED UNDER ROADWAY PAVEMENT, MULTI-USE PATHS, SIDEWALKS AND SOIL SURFACES.
3. THE MINIMUM CONDUIT DEPTH APPLIES TO ALL HANDHOLES, HEAVY DUTY HANDHOLES AND DOUBLE HANDHOLES.

## HANDHOLE WITH MINIMUM CONDUIT DEPTH

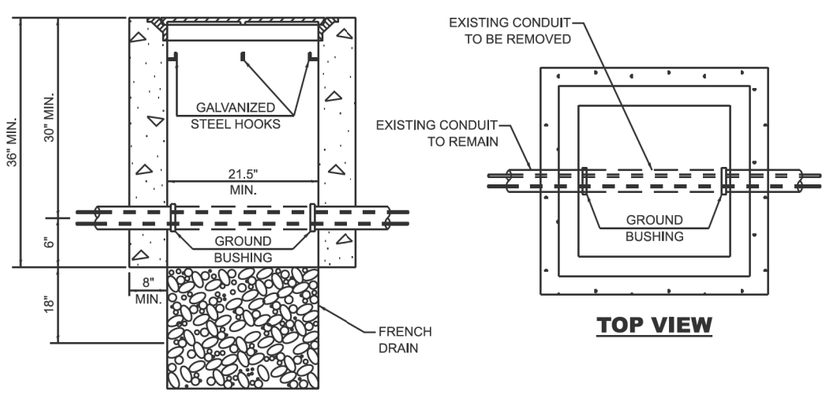


TOP VIEW

## NOTES:

1. HANDHOLE CONSTRUCTED PER STATE STANDARD 814001.
2. REMOVAL OF THE EXISTING CONDUIT FROM THE HANDHOLE AND THE INSTALLATION OF THE CONDUIT BUSHINGS SHALL BE INCLUDED WITH THE COST OF THE HANDHOLE.

## HANDHOLE TO INTERCEPT EXISTING CONDUIT

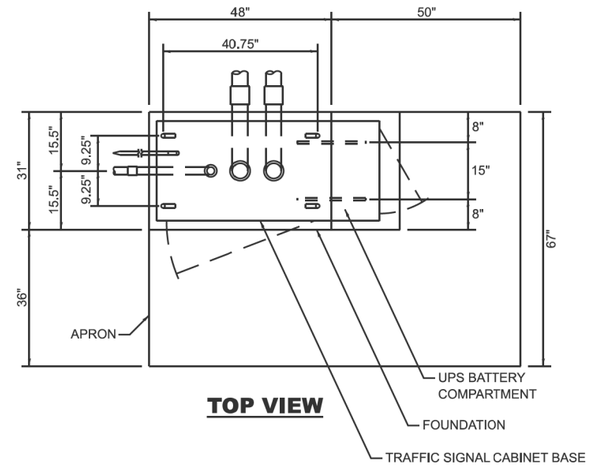


TOP VIEW

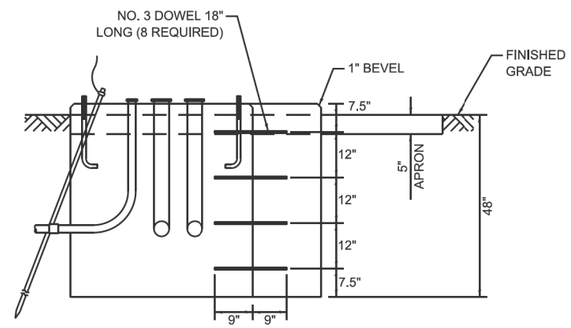


## MODIFY EXISTING TYPE "D" FOUNDATION TO TYPE "C" FOUNDATION

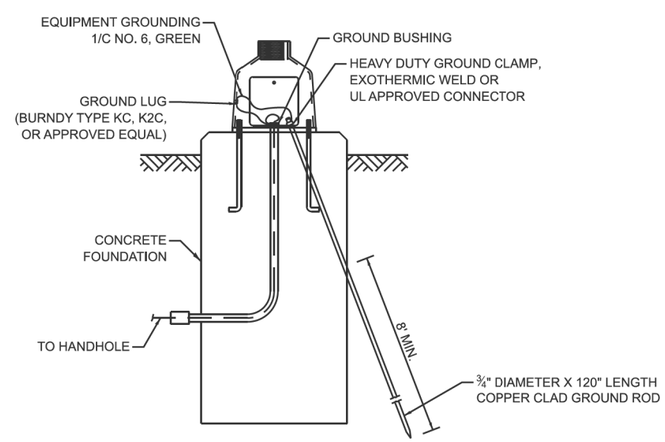


## MAST ARM / POST GROUNDING DETAIL

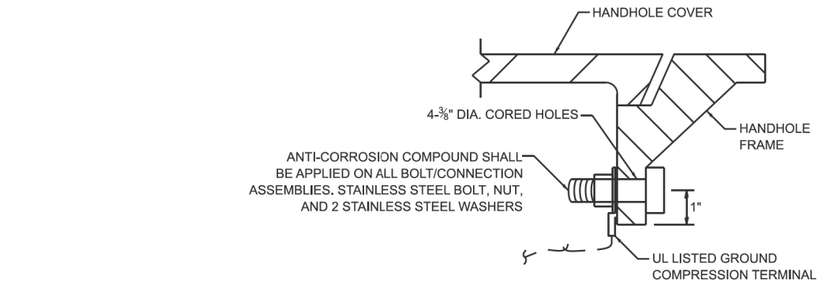


DETAIL A

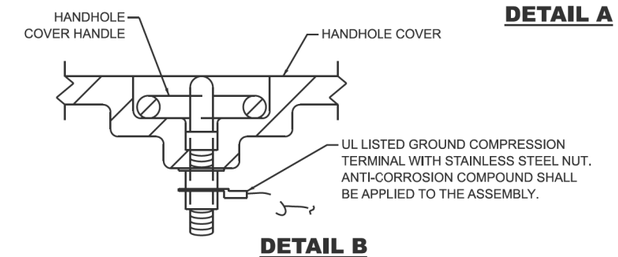


DETAIL B

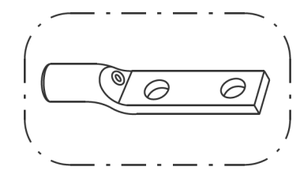

HEAVY-DUTY COMPRESSION TERMINAL (BURNDY TYPE YGHA OR APPROVED EQUAL)

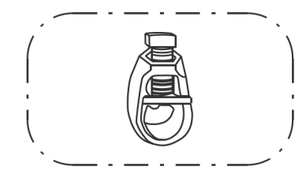

¾" HEAVY-DUTY GROUND ROD CLAMP BRONZE OR COPPER, UL APPROVED (BURNDY TYPE GRC OR APPROVED EQUAL)

## NOTES:

1. CONDUIT THAT HAS BEEN DRILLED INTO AN EXISTING HANDHOLE WILL REQUIRE A GROUND BUSHING FOR THE CONDUIT TO BE PROPERLY GROUNDED.
2. GROUND CABLE SHALL BE LOOPED OVER HOOKS IN THE HANDHOLES. 6.5' OF SLACK SHALL BE PROVIDED IN SINGLE AND DOUBLE HANDHOLES. 5' OF SLACK SHALL BE PROVIDED BETWEEN THE FRAME AND COVER.

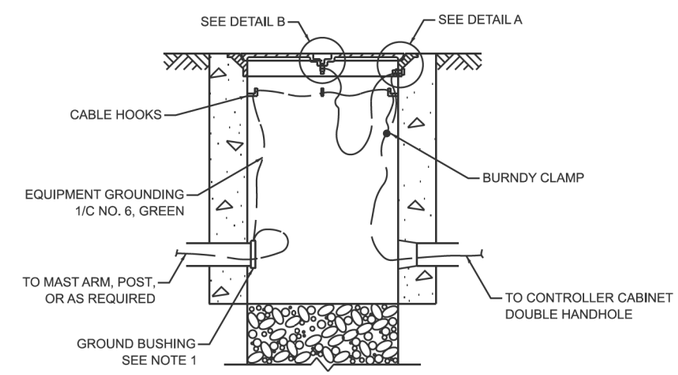


## HANDHOLE GROUNDING DETAIL

MODEL: TS-C1f [Sheet]
FILE NAME: c:\pw_work\pwidot\lawrence.demanche@illinois.gov\d0951416\TS-01.dgn

| | | | |
|---|---|---|---|
| USER NAME = lawrence.demanche | DESIGNED - IP | REVISED - | |
| | DRAWN - IP | REVISED - | |
| PLOT SCALE = $SCALE$ | CHECKED - NB/KK | REVISED - | |
| PLOT DATE = 12/16/2025 | DATE - 10/15/2025 | REVISED - | |

STATE OF ILLINOIS
DEPARTMENT OF TRANSPORTATION

DISTRICT ONE
STANDARD TRAFFIC SIGNAL DESIGN DETAILS

SCALE: NONE | SHEET 6 OF 7 SHEETS | STA. | TO STA.

| F.A.U. RTE. | SECTION | COUNTY | TOTAL SHEETS | SHEET NO. |
|---|---|---|---|---|
| 3561 | 08-00103-00-FP | COOK | 254 | 168 |
| | TS-01 | CONTRACT NO. 61M29 | | |
| | | ILLINOIS | FED. AID PROJECT | |

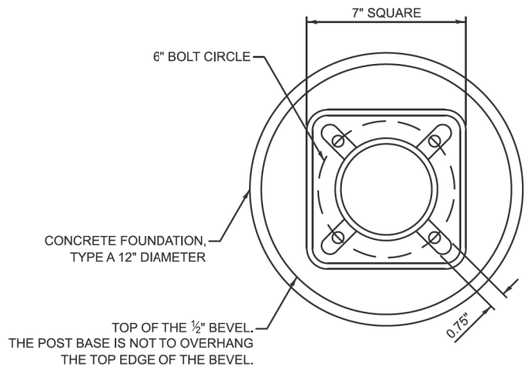


**BOLT PATTERN**

## NOTES:

1. IF THE PEDESTRIAN SIGNAL POST FOUNDATION IS INSTALLED WITHIN A SIDEWALK CURB, THE TOP OF THE FOUNDATION SHALL BE INSTALLED FLUSH WITH THE TOP OF THE SIDEWALK CURB.

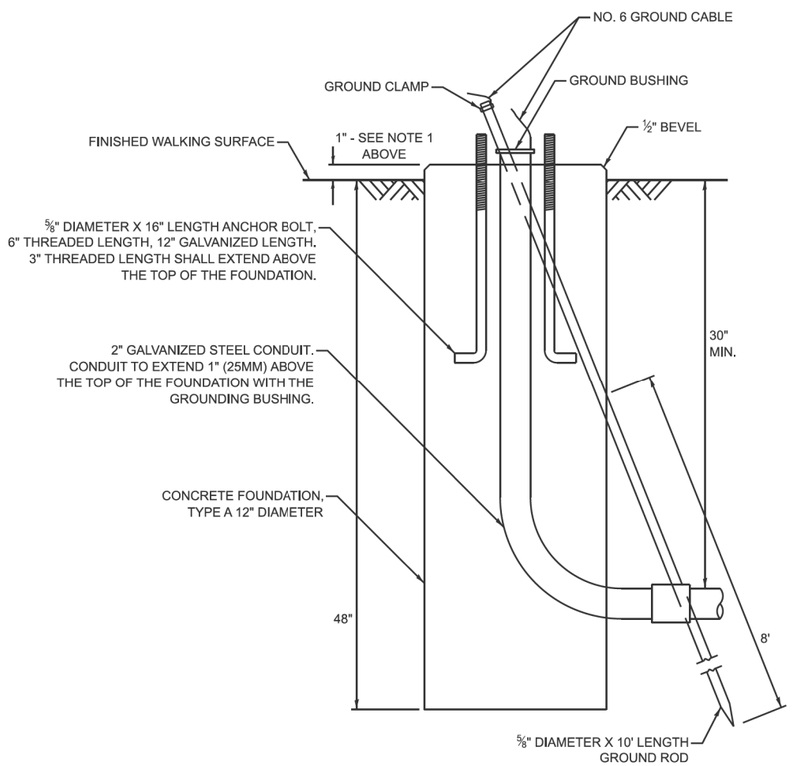


**CONCRETE FOUNDATION, TYPE A 12-INCH DIAMETER**

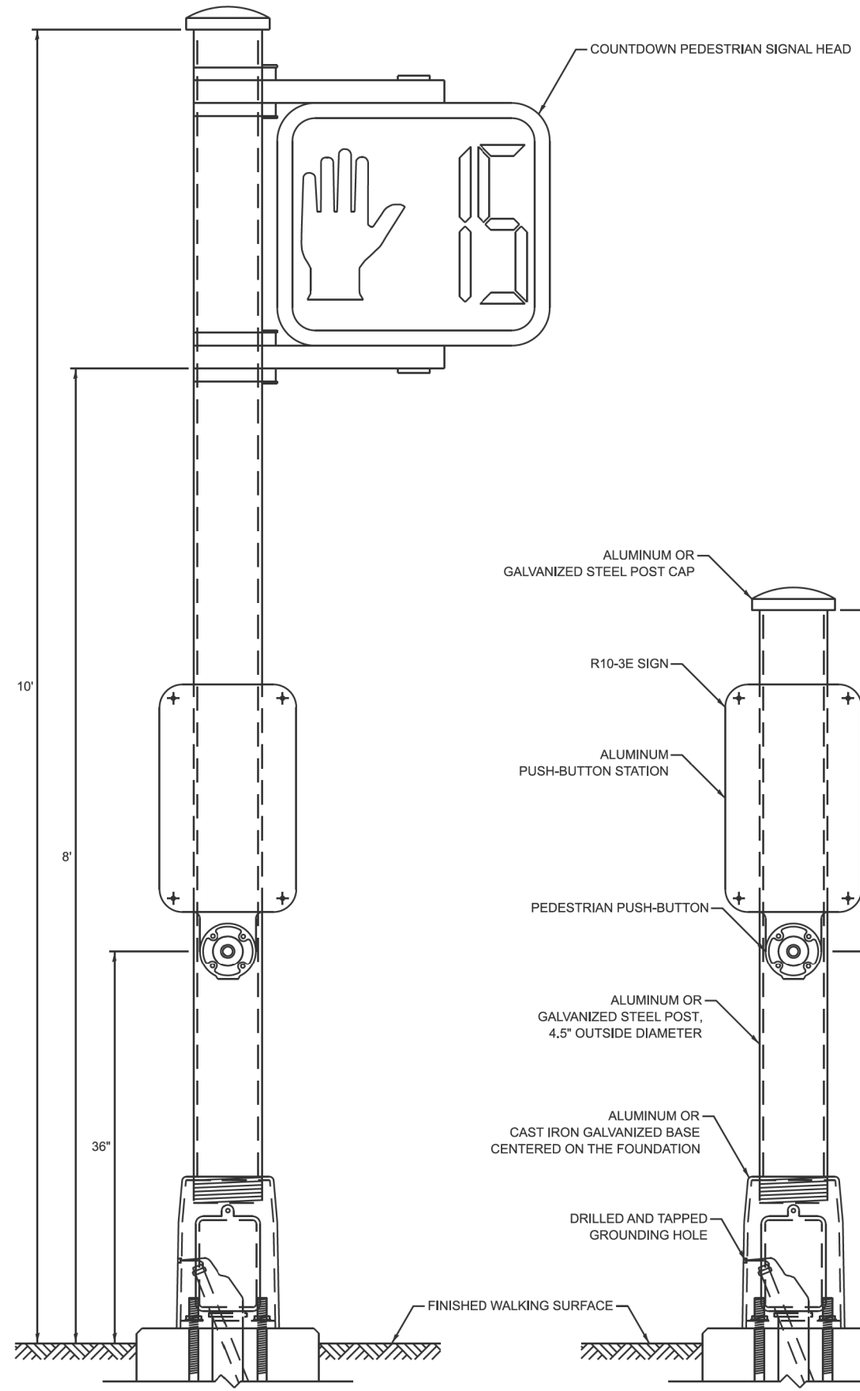


**PEDESTRIAN SIGNAL POST, 10 FT.**

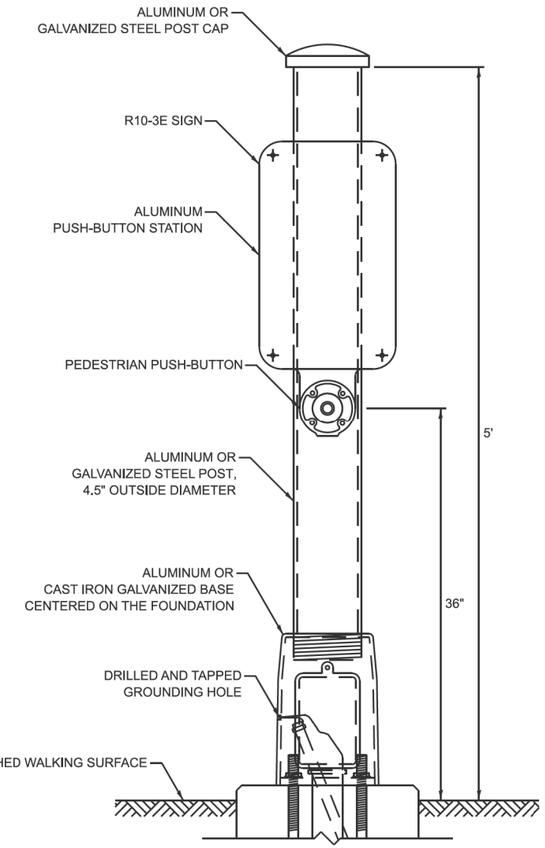


**PEDESTRIAN SIGNAL POST, 5 FT.**

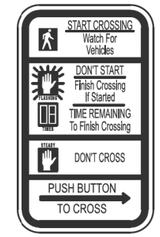


R10-3E
9" X 15"

W10-I101
18" X 24"

## SIGN NOTES:

1. THE SIGN PANELS SHALL BE TYPE AP SHEETING.
2. WHEN SIGN R10-3E IS INSTALLED AT MEDIANS WHERE ONLY ONE PUSH-BUTTON IS BEING USED FOR BOTH DIRECTIONS, THE ARROW SHALL BE BI-DIRECTIONAL.
3. SIGN W10-I101 IS REQUIRED FOR EACH PEDESTRIAN SIGNAL HEAD AT RAILROAD INTERSECTIONS.

MODEL: TS-C1g [Sheet]
FILE NAME: c:\pw_work\pwidot\lawrence.demanche@illinois.gov\d0951416\TS-01.dgn

| | | | |
|---|---|---|---|
| USER NAME = lawrence.demanche | DESIGNED - IP | REVISED - | |
| | DRAWN - IP | REVISED - | |
| PLOT SCALE = $SCALE$ | CHECKED - NB/KK | REVISED - | |
| PLOT DATE = 12/16/2025 | DATE - 10/15/2025 | REVISED - | |

STATE OF ILLINOIS
DEPARTMENT OF TRANSPORTATION

DISTRICT ONE
STANDARD TRAFFIC SIGNAL DESIGN DETAILS

SCALE: NONE | SHEET 7 OF 7 SHEETS | STA. TO STA.

| F.A.U. RTE. | SECTION | COUNTY | TOTAL SHEETS | SHEET NO. |
|---|---|---|---|---|
| 3561 | 08-00103-00-FP | COOK | 254 | 169 |
| | TS-01 | CONTRACT NO. 61M29 | | |
| | | ILLINOIS | FED. AID PROJECT | |

## NOTES:

1. ALL EXISTING TRAFFIC SIGNAL CABLE NO LONGER REQUIRED SHALL BE REMOVED.
2. ALL EXISTING CONDUIT SHALL BE ABANDONED.

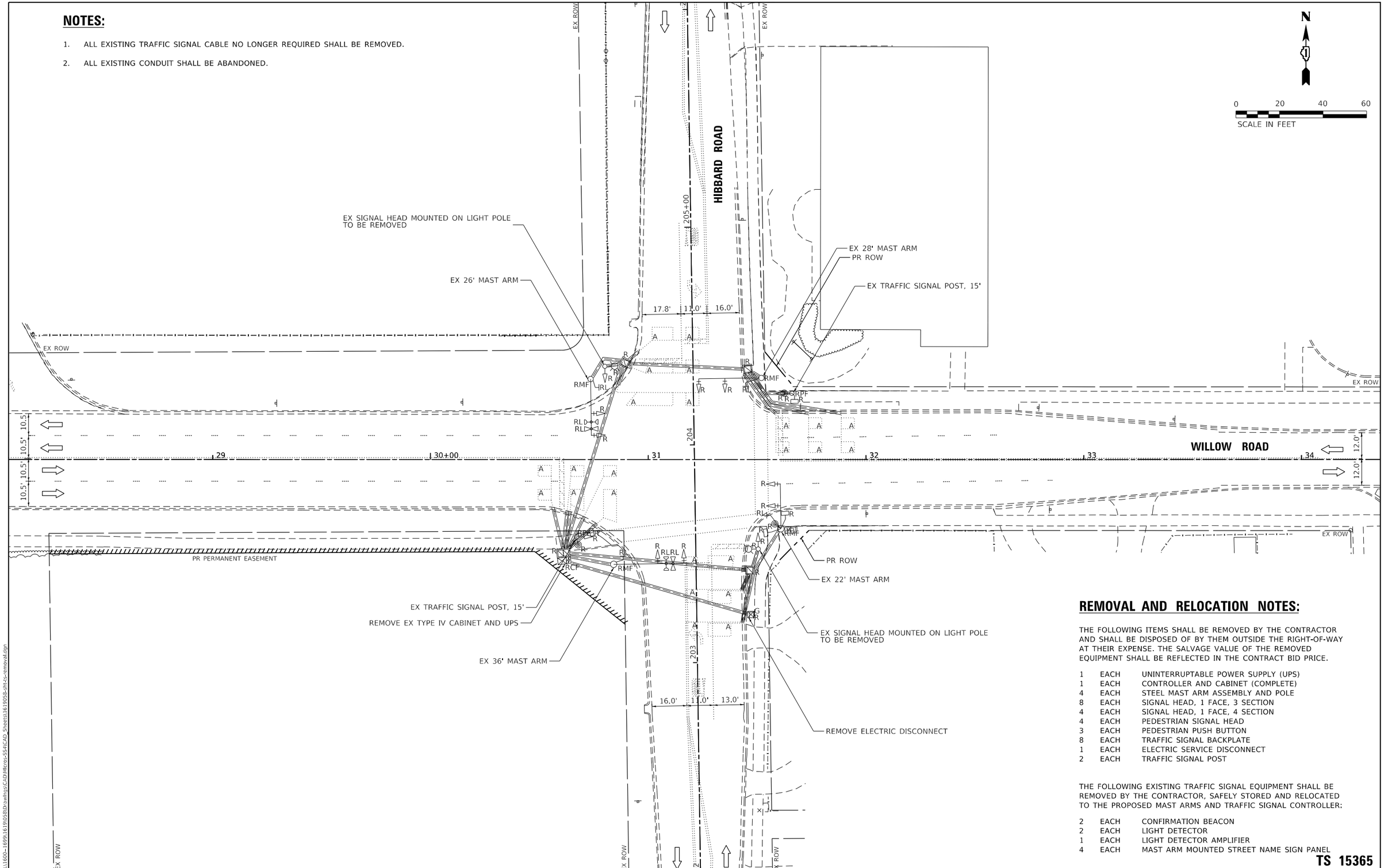


## REMOVAL AND RELOCATION NOTES:

THE FOLLOWING ITEMS SHALL BE REMOVED BY THE CONTRACTOR AND SHALL BE DISPOSED OF BY THEM OUTSIDE THE RIGHT-OF-WAY AT THEIR EXPENSE. THE SALVAGE VALUE OF THE REMOVED EQUIPMENT SHALL BE REFLECTED IN THE CONTRACT BID PRICE.

| | | |
|---|---|---|
| 1 | EACH | UNINTERRUPTABLE POWER SUPPLY (UPS) |
| 1 | EACH | CONTROLLER AND CABINET (COMPLETE) |
| 4 | EACH | STEEL MAST ARM ASSEMBLY AND POLE |
| 8 | EACH | SIGNAL HEAD, 1 FACE, 3 SECTION |
| 4 | EACH | SIGNAL HEAD, 1 FACE, 4 SECTION |
| 4 | EACH | PEDESTRIAN SIGNAL HEAD |
| 3 | EACH | PEDESTRIAN PUSH BUTTON |
| 8 | EACH | TRAFFIC SIGNAL BACKPLATE |
| 1 | EACH | ELECTRIC SERVICE DISCONNECT |
| 2 | EACH | TRAFFIC SIGNAL POST |

THE FOLLOWING EXISTING TRAFFIC SIGNAL EQUIPMENT SHALL BE REMOVED BY THE CONTRACTOR, SAFELY STORED AND RELOCATED TO THE PROPOSED MAST ARMS AND TRAFFIC SIGNAL CONTROLLER:

| | | |
|---|---|---|
| 2 | EACH | CONFIRMATION BEACON |
| 2 | EACH | LIGHT DETECTOR |
| 1 | EACH | LIGHT DETECTOR AMPLIFIER |
| 4 | EACH | MAST ARM MOUNTED STREET NAME SIGN PANEL |

**TS 15365**

MODEL: Default
FILE NAME: S:\JOL\1600-1699\1619058\Drawings\CADd\Micro-SS4\CAD_Sheets\1619058-PH-5-removal.dgn


STRAND ASSOCIATES®
1170 SOUTH HOUBOLT ROAD
JOLIET, ILLINOIS 60431
(815) 744-4200


| | | | |
|---|---|---|---|
| USER NAME = AlexaM | DESIGNED - ACM | REVISED - | |
| | DRAWN - ACM | REVISED - | |
| PLOT SCALE = 40.0000 ' / in. | CHECKED - RRS | REVISED - | |
| PLOT DATE = 7/8/2026 | DATE - 2/27/2026 | REVISED - | |

**STATE OF ILLINOIS**
**DEPARTMENT OF TRANSPORTATION**

**TRAFFIC SIGNAL REMOVAL PLAN**
**WILLOW ROAD AND HIBBARD ROAD**

SCALE: 1" = 20' | SHEET 1 OF 1 SHEETS | STA. 10+00.00 TO STA. 22+00.00

| F.A.U. RTE. | SECTION | COUNTY | TOTAL SHEETS | SHEET NO. |
|---|---|---|---|---|
| 3561 | 08-00103-00-FP | COOK | 254 | 170 |
| | | CONTRACT NO. 61M29 | | |
| | | ILLINOIS | FED. AID PROJECT | |

## NOTES:

1. CONTRACTOR SHALL INSTALL A SERVICE INSTALLATION GROUND MOUNTED, METERED AND 2" CONDUIT TO EXISTING SERVICE CONNECTION AS PART OF TEMPORARY TRAFFIC SIGNAL INSTALLATION. 2" CONDUIT SHOULD BE INSTALLED TO CONNECT TO THE TEMPORARY TRAFFIC SIGNAL CONTROLLER CABINET DURING TEMPORARY TRAFFIC SIGNAL OPERATION.
2. TEMPORARY LUMINAIRES MOUNTED ON TEMPORARY TRAFFIC SIGNAL WOOD POLES TO BE POWERED OUT OF THE TEMPORARY LIGHTING CONTROLLER IN THE TEMPORARY TRAFFIC SIGNAL CABINET. SEE LIGHTING PLANS FOR DETAILS.
3. THE MOUNTING LOCATIONS OF THE VIDEO DETECTORS SHALL BE DETERMINED PER THE MANUFACTURER'S RECOMMENDATIONS.

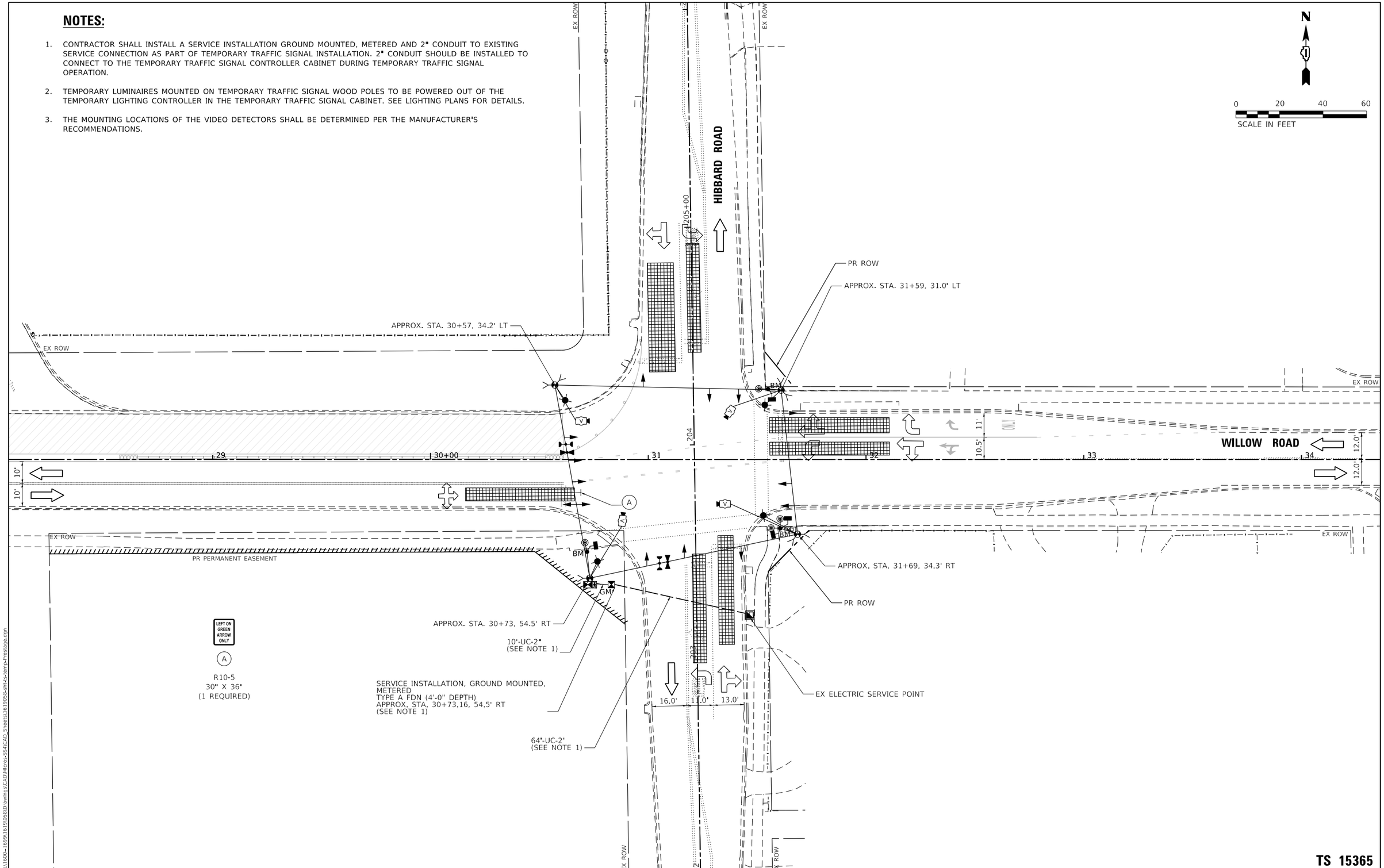


**TS 15365**

MODEL: Default
FILE NAME: S:\JOL\1600-1699\1619058\Drawings\CADd\Micro-SS4\CAD_Sheets\1619058-pht-ts-temp-Prestage.dgn


STRAND ASSOCIATES®
1170 SOUTH HOUBOLT ROAD
JOLIET, ILLINOIS 60431
(815) 744-4200


| | | | |
|---|---|---|---|
| USER NAME = AlexaM | DESIGNED - ACM | REVISED - | |
| | DRAWN - ACM | REVISED - | |
| PLOT SCALE = 40.0000 ' / in. | CHECKED - RRS | REVISED - | |
| PLOT DATE = 7/8/2026 | DATE - 2/27/2026 | REVISED - | |

**STATE OF ILLINOIS**
**DEPARTMENT OF TRANSPORTATION**

**TEMPORARY TRAFFIC SIGNAL INSTALLATION PLAN (PRESTAGE)**
**WILLOW ROAD AND HIBBARD ROAD**

SCALE: 1" = 20' | SHEET 1 OF 7 SHEETS | STA. N/A TO STA. N/A

| F.A.U. RTE. | SECTION | COUNTY | TOTAL SHEETS | SHEET NO. |
|---|---|---|---|---|
| 3561 | 08-00103-00-FP | COOK | 254 | 171 |

CONTRACT NO. 61M29

ILLINOIS | FED. AID PROJECT

## EXISTING CONTROLLER SEQUENCE

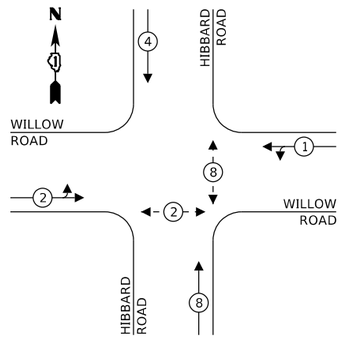


## TEMPORARY CONTROLLER SEQUENCE

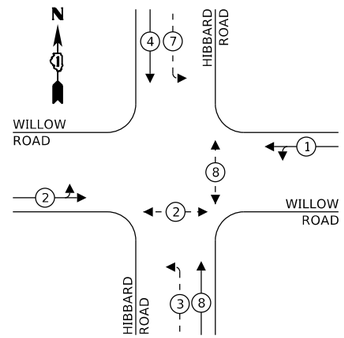


## LEGEND:

- PROTECTED PHASE
- PROTECTED/PERMITTED PHASE
- PEDESTRIAN PHASE
- OL — OVERLAP

## EXISTING /TEMPORARY EMERGENCY VEHICLE PREEMPTION SEQUENCE

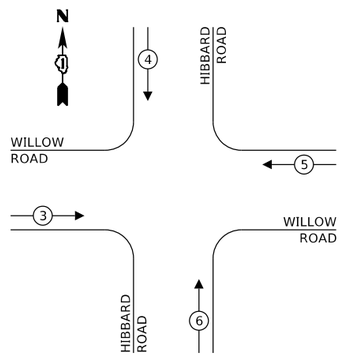


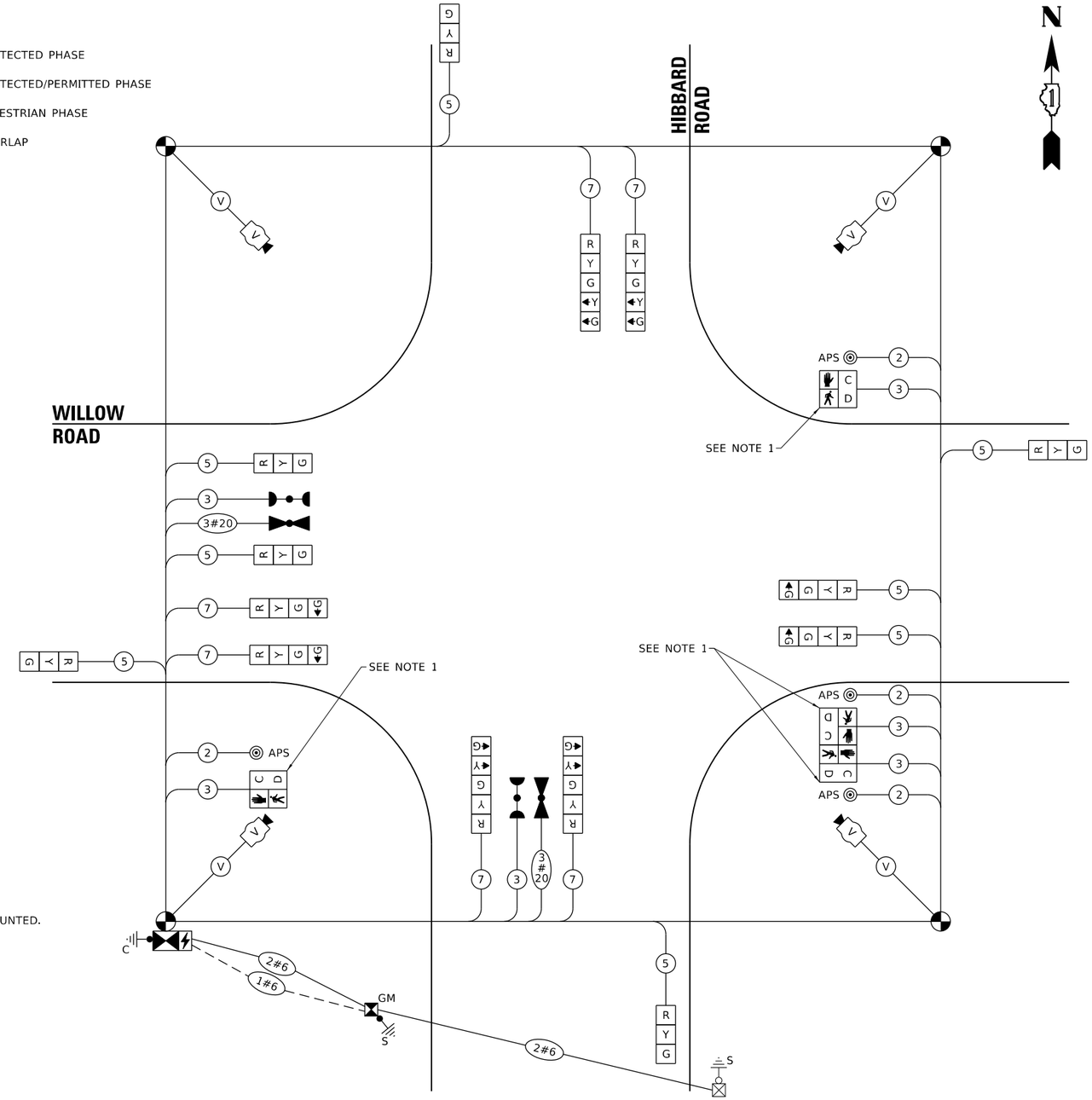


## TEMPORARY CABLE PLAN

(NOT TO SCALE)

## NOTE:

1. SIGNAL HEAD AND PUSH BUTTON SHALL BE BARREL MOUNTED.

### TRAFFIC SIGNAL ELECTRIC SERVICE REQUIREMENTS

| TYPE | QUANTITY | UNIT WATTAGE | TOTAL WATTAGE |
|---|---|---|---|
| SIGNAL HEAD | | | |
| 1 OR 3 - SECTION | 9 | 11 | 99 |
| 4 - SECTION | | 14 | |
| 5 - SECTION | 4 | 13 | 52 |
| PROGRAMMABLE SIGNALS | | | |
| 3 - SECTION | | 22 | |
| 4 - SECTION | | 32 | |
| 5 - SECTION | | 28 | |
| PED. SIGNAL | 4 | 15 | 60 |
| CONTROLLER | 1 | 150 | 150 |
| MASTER CONTROLLER | | 100 | |
| UPS | 1 | 25 | 25 |
| DETECTION RADAR OR VIDEO | 4 | 20 | 80 |
| BLANK-OUT SIGN | | 25 | |
| NETWORK SWITCH II OR III | | 35 | |
| CELLULAR MODEM | | 15 | |
| PTZ CAMERA | | 75 | |
| **TOTAL UPS SIZING** | | | 466 |
| UPS CHARGING | 1 | 225 | 225 |
| BATTERY HEATER MAT | 1 | 180 | 180 |
| CABINET HEATER | 1 | 200 | 200 |
| FLASHER | | 15 | |
| LED STREET NAME SIGN | | 120 | |
| LUMINAIRE | 4 | 240 | 960 |
| **TOTAL SERVICE WIRE SIZING** | | | 2031 |

ENERGY COSTS TO:

VILLAGE OF WINNETKA

ENERGY SUPPLY: CONTACT:
PHONE:
COMPANY: VILLAGE OF WINNETKA
ACCOUNT NUMBER:
METER NUMBER:

TS 15365

MODEL: Default
FILE NAME: S:\DL\1600-1699\16190SB\Drawings\CAD\Micros-SS4\CAD_Sheets\16190SB-sht-sc-cable plan-Prestage.dgn


STRAND ASSOCIATES®
1170 SOUTH HOUBOLT ROAD
JOLIET, ILLINOIS 60431
(815) 744-4200


| | | | |
|---|---|---|---|
| USER NAME = AlexaM | DESIGNED - ACM | REVISED - | |
| | DRAWN - ACM | REVISED - | |
| PLOT SCALE = 20.0000 ' / in. | CHECKED - RRS | REVISED - | |
| PLOT DATE = 7/8/2026 | DATE - 2/27/2026 | REVISED - | |

**STATE OF ILLINOIS**
**DEPARTMENT OF TRANSPORTATION**

**TEMPORARY CABLE PLAN, PHASE DESIGNATION DIAGRAM, AND EMERGENCY VEHICLE PREEMPTION SEQUENCE (PRESTAGE)**
**WILLOW ROAD**

SCALE: N.T.S. | SHEET 1 OF 7 SHEETS | STA. N/A | TO STA. N/A

| F.A.U. RTE. | SECTION | COUNTY | TOTAL SHEETS | SHEET NO. |
|---|---|---|---|---|
| 3561 | 08-00103-00-FP | COOK | 254 | 172 |

CONTRACT NO. 61M29

ILLINOIS | FED. AID PROJECT

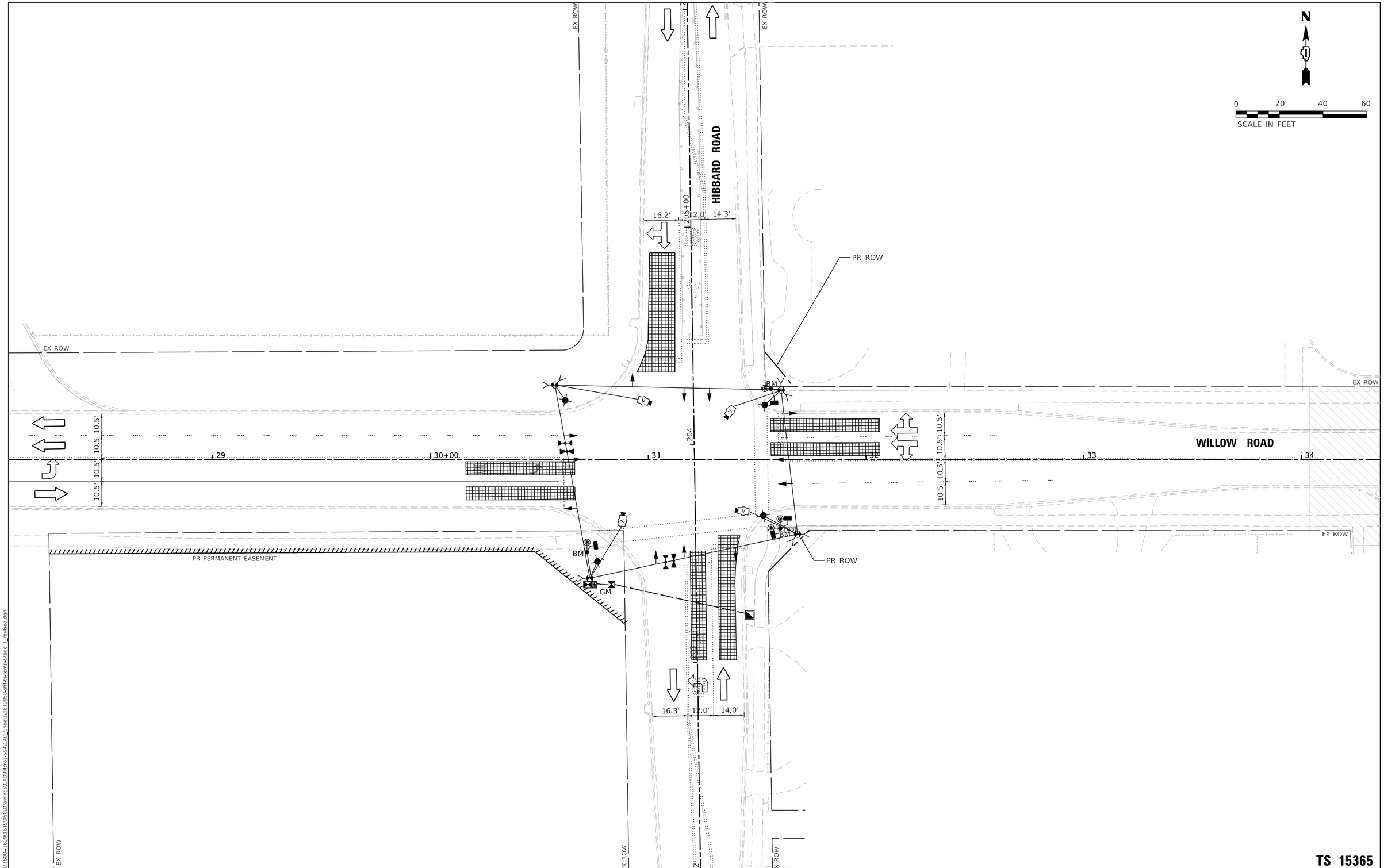


TS 15365

MODEL: Default
FILE NAME: S:\JOL\1600-1699\1619058\Drawings\CADd\Micro-SS4\CAD_Sheets\1619058-sht-ts-temp-Stage_1_revised.dgn


STRAND ASSOCIATES®
1170 SOUTH HOUBOLT ROAD
JOLIET, ILLINOIS 60431
(815) 744-4200


| | | | |
|---|---|---|---|
| USER NAME = AlexaM | DESIGNED - ACM | REVISED - | |
| | DRAWN - ACM | REVISED - | |
| PLOT SCALE = 40.0000 ' / in. | CHECKED - RRS | REVISED - | |
| PLOT DATE = 7/8/2026 | DATE - 2/27/2026 | REVISED - | |

**STATE OF ILLINOIS**
**DEPARTMENT OF TRANSPORTATION**

**TEMPORARY TRAFFIC SIGNAL INSTALLATION PLAN (STAGE 1)**
**WILLOW ROAD AND HIBBARD ROAD**

SCALE: 1" = 20' | SHEET 7 OF 7 SHEETS | STA. N/A TO STA. N/A

| F.A.U. RTE. | SECTION | COUNTY | TOTAL SHEETS | SHEET NO. |
|---|---|---|---|---|
| 3561 | 08-00103-00-FP | COOK | 254 | 173 |
| | | CONTRACT NO. 61M29 | | |
| | | ILLINOIS | FED. AID PROJECT | |

## EXISTING CONTROLLER SEQUENCE

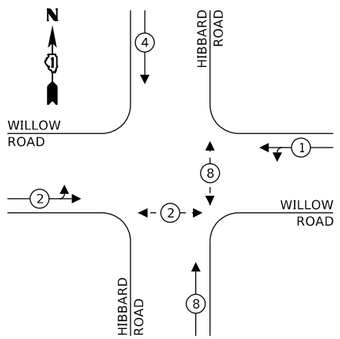


## TEMPORARY CONTROLLER SEQUENCE

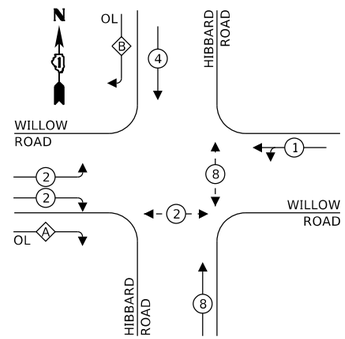


## EXISTING /TEMPORARY EMERGENCY VEHICLE PREEMPTION SEQUENCE

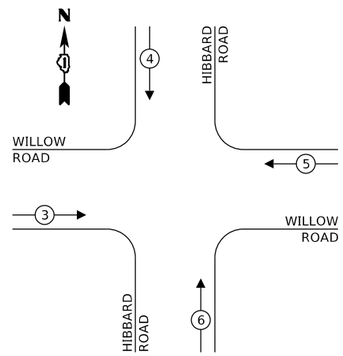


## RIGHT TURN OVERLAP PHASE DESIGNATION:

| OVERLAP LETTER | | PERMISSIVE PHASE | | PROTECTED PHASE |
|---|---|---|---|---|
| A | = | 2 | + | 8 |
| B | = | 4 | + | 2 |

## LEGEND:

- PROTECTED PHASE
- PROTECTED/PERMITTED PHASE
- PEDESTRIAN PHASE
- OL OVERLAP

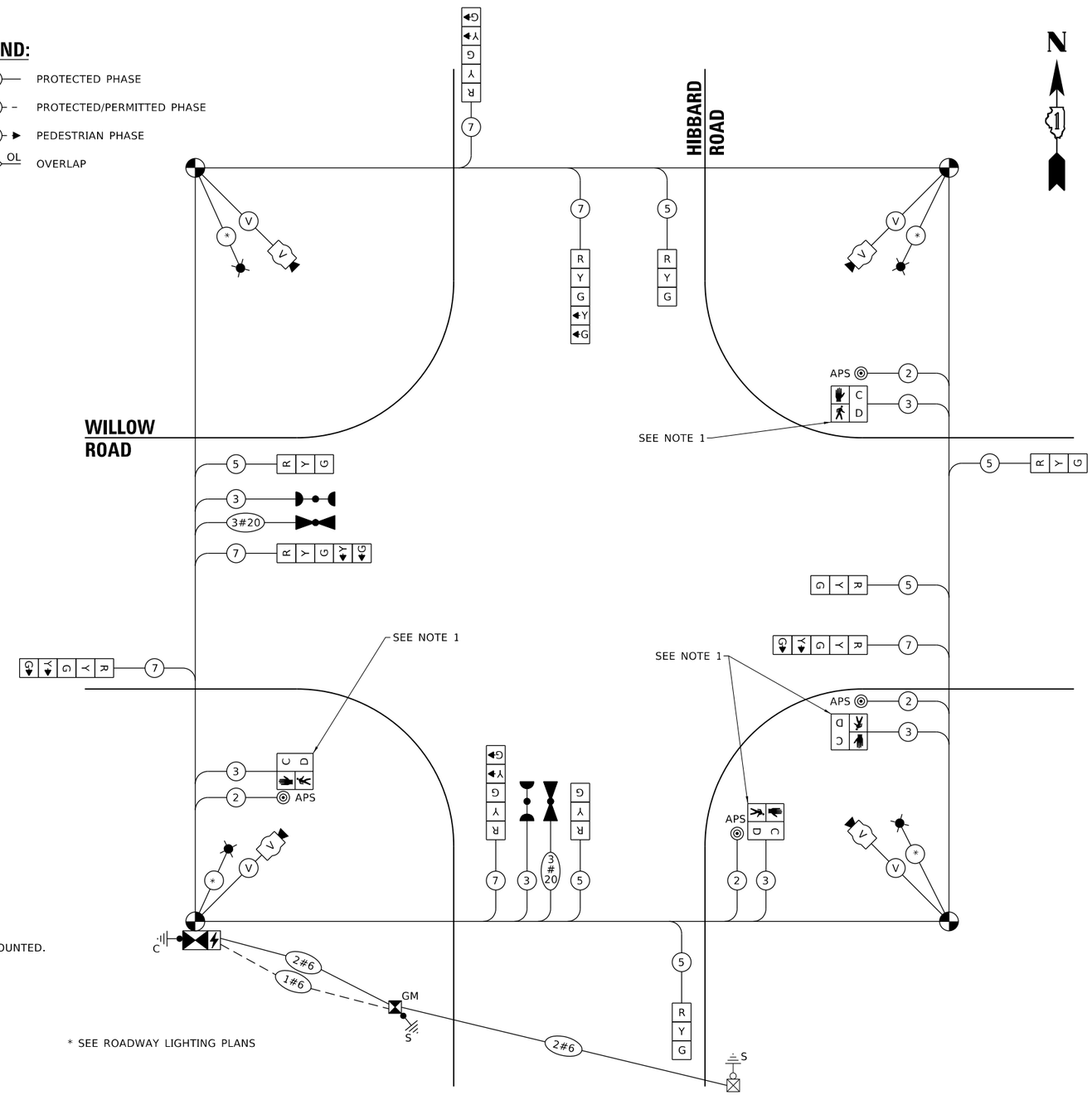


* SEE ROADWAY LIGHTING PLANS

## TEMPORARY CABLE PLAN
(NOT TO SCALE)

## TRAFFIC SIGNAL ELECTRIC SERVICE REQUIREMENTS

| TYPE | QUANTITY | UNIT WATTAGE | TOTAL WATTAGE |
|---|---|---|---|
| SIGNAL HEAD | | | |
| 1 OR 3 - SECTION | 6 | 11 | 66 |
| 4 - SECTION | | 14 | |
| 5 - SECTION | 6 | 13 | 78 |
| PROGRAMMABLE SIGNALS | | | |
| 3 - SECTION | | 22 | |
| 4 - SECTION | | 32 | |
| 5 - SECTION | | 28 | |
| PED. SIGNAL | 4 | 15 | 60 |
| CONTROLLER | 1 | 150 | 150 |
| MASTER CONTROLLER | | 100 | |
| UPS | 1 | 25 | 25 |
| DETECTION RADAR OR VIDEO | 4 | 20 | 80 |
| BLANK-OUT SIGN | | 25 | |
| NETWORK SWITCH II OR III | | 35 | |
| CELLULAR MODEM | | 15 | |
| PTZ CAMERA | | 75 | |
| **TOTAL UPS SIZING** | | | 519 |
| UPS CHARGING | 1 | 225 | 225 |
| BATTERY HEATER MAT | 1 | 180 | 180 |
| CABINET HEATER | 1 | 200 | 200 |
| FLASHER | | 15 | |
| LED STREET NAME SIGN | | 120 | |
| LUMINAIRE | 4 | 240 | 960 |
| **TOTAL SERVICE WIRE SIZING** | | | 2024 |

## NOTE:

1. SIGNAL HEAD AND PUSH BUTTON SHALL BE BARREL MOUNTED.

ENERGY COSTS TO:

VILLAGE OF WINNETKA

ENERGY SUPPLY: CONTACT:
PHONE:
COMPANY: VILLAGE OF WINNETKA
ACCOUNT NUMBER:
METER NUMBER:

TS 15365

MODEL: Default
FILE NAME: S:\OL\1600-1699\16190580\Drawings\CAD\Micro-SS4\CAD_Sheets\1619058-sht-2-cable plan-Stage 1 revised.dgn

STRAND ASSOCIATES®
1170 SOUTH HOUBOLT ROAD
JOLIET, ILLINOIS 60431
(815) 744-4200

| | | | |
|---|---|---|---|
| USER NAME = AlexaM | DESIGNED - ACM | REVISED - | |
| | DRAWN - ACM | REVISED - | |
| PLOT SCALE = 20.0000 ' / in. | CHECKED - RRS | REVISED - | |
| PLOT DATE = 7/8/2026 | DATE - 2/27/2026 | REVISED - | |

STATE OF ILLINOIS
DEPARTMENT OF TRANSPORTATION

TEMPORARY CABLE PLAN, PHASE DESIGNATION DIAGRAM, AND EMERGENCY VEHICLE PREEMPTION SEQUENCE (STAGE 1)
WILLOW ROAD

SCALE: N.T.S. | SHEET 7 OF 7 SHEETS | STA. N/A | TO STA. N/A

| F.A.U. RTE. | SECTION | COUNTY | TOTAL SHEETS | SHEET NO. |
|---|---|---|---|---|
| 3561 | 08-00103-00-FP | COOK | 254 | 174 |
| | | CONTRACT NO. 61M29 | | |
| | ILLINOIS | FED. AID PROJECT | | |

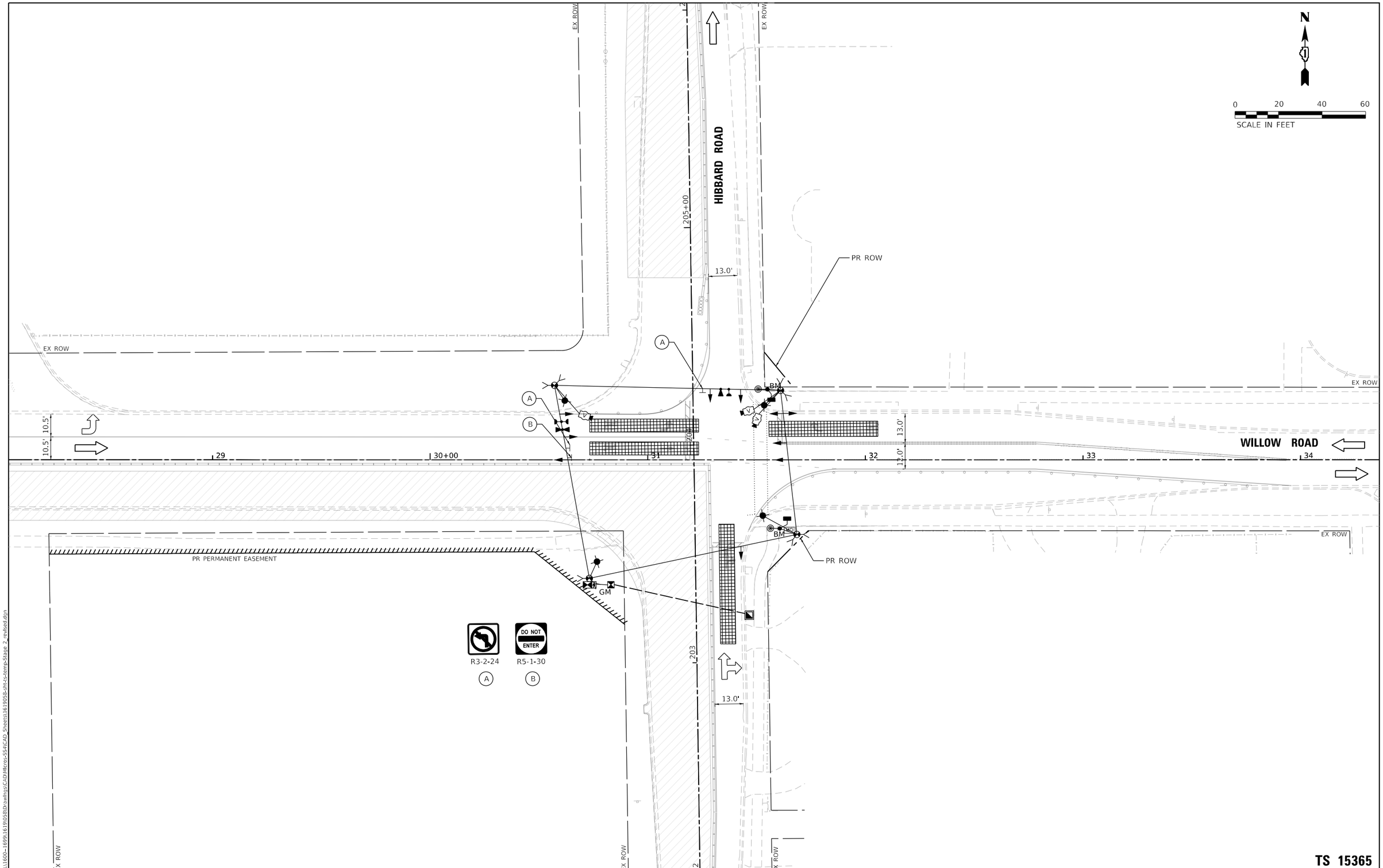


TS 15365

MODEL: Default
FILE NAME: S:\JOL\1600-1699\1619058\Drawings\CADMicro-SS4\CAD_Sheets\1619058-sht-ts-temp-Stage_2_revised.dgn

STRAND ASSOCIATES®
1170 SOUTH HOUBOLT ROAD
JOLIET, ILLINOIS 60431
(815) 744-4200

| | | | |
|---|---|---|---|
| USER NAME = AlexaM | DESIGNED - ACM | REVISED - | |
| | DRAWN - ACM | REVISED - | |
| PLOT SCALE = 40.0000 ' / in. | CHECKED - RRS | REVISED - | |
| PLOT DATE = 7/8/2026 | DATE - 2/27/2026 | REVISED - | |

**STATE OF ILLINOIS**
**DEPARTMENT OF TRANSPORTATION**

**TEMPORARY TRAFFIC SIGNAL INSTALLATION PLAN (STAGE 2)**
**WILLOW ROAD AND HIBBARD ROAD**

SCALE: 1" = 20' | SHEET 2 OF 7 SHEETS | STA. N/A | TO STA. N/A

| F.A.U. RTE. | SECTION | COUNTY | TOTAL SHEETS | SHEET NO. |
|---|---|---|---|---|
| 3561 | 08-00103-00-FP | COOK | 254 | 175 |
| | | CONTRACT NO. 61M29 | | |
| | ILLINOIS | FED. AID PROJECT | | |

## EXISTING CONTROLLER SEQUENCE

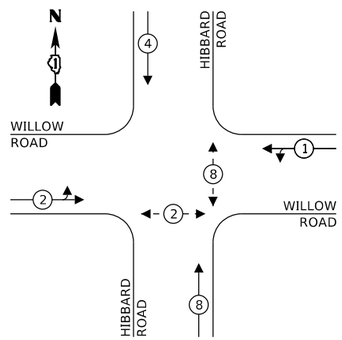


## TEMPORARY CONTROLLER SEQUENCE

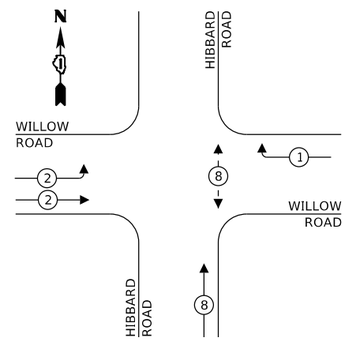


## EXISTING EMERGENCY VEHICLE PREEMPTION SEQUENCE

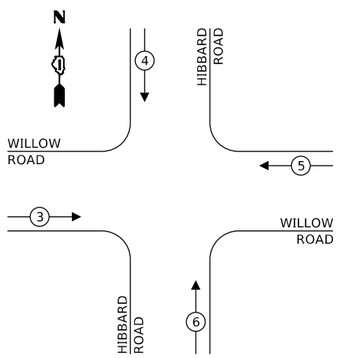


## TEMPORARY EMERGENCY VEHICLE PREEMPTION SEQUENCE

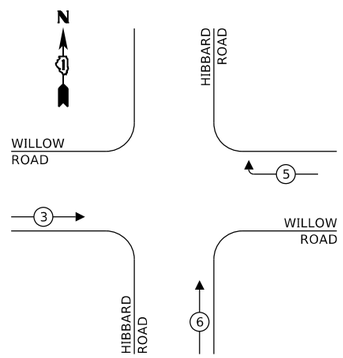


## LEGEND:

- PROTECTED PHASE
- PROTECTED/PERMITTED PHASE
- PEDESTRIAN PHASE
- OL OVERLAP

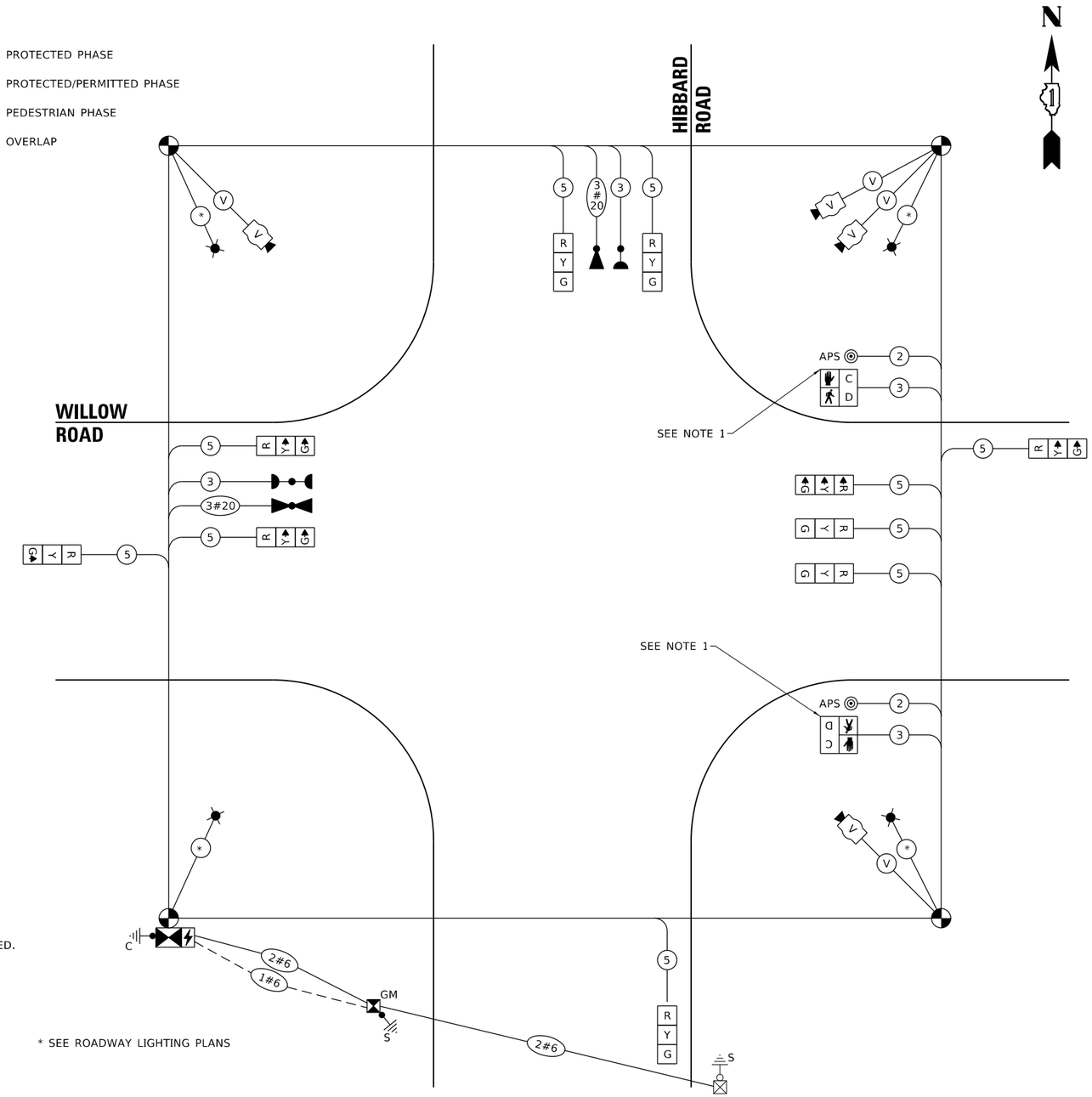


* SEE ROADWAY LIGHTING PLANS

## TEMPORARY CABLE PLAN

(NOT TO SCALE)

## TRAFFIC SIGNAL ELECTRIC SERVICE REQUIREMENTS

| TYPE | QUANTITY | UNIT WATTAGE | TOTAL WATTAGE |
|---|---|---|---|
| SIGNAL HEAD | | | |
| 1 OR 3 - SECTION | 11 | 11 | 121 |
| 4 - SECTION | | 14 | |
| 5 - SECTION | | 13 | |
| PROGRAMMABLE SIGNALS | | | |
| 3 - SECTION | | 22 | |
| 4 - SECTION | | 32 | |
| 5 - SECTION | | 28 | |
| PED. SIGNAL | 2 | 15 | 30 |
| CONTROLLER | 1 | 150 | 150 |
| MASTER CONTROLLER | | 100 | |
| UPS | 1 | 25 | 25 |
| DETECTION RADAR OR VIDEO | 3 | 20 | 60 |
| BLANK-OUT SIGN | | 25 | |
| NETWORK SWITCH II OR III | | 35 | |
| CELLULAR MODEM | | 15 | |
| PTZ CAMERA | | 75 | |
| **TOTAL UPS SIZING** | | | 386 |
| UPS CHARGING | 1 | 225 | 225 |
| BATTERY HEATER MAT | 1 | 180 | 180 |
| CABINET HEATER | 1 | 200 | 200 |
| FLASHER | | 15 | |
| LED STREET NAME SIGN | | 120 | |
| LUMINAIRE | 4 | 240 | 960 |
| **TOTAL SERVICE WIRE SIZING** | | | 1951 |

## NOTE:

1. SIGNAL HEAD AND PUSH BUTTON SHALL BE BARREL MOUNTED.

ENERGY COSTS TO:

VILLAGE OF WINNETKA

ENERGY SUPPLY: CONTACT:
PHONE:
COMPANY: VILLAGE OF WINNETKA
ACCOUNT NUMBER:
METER NUMBER:

TS 15365


STRAND ASSOCIATES®
1170 SOUTH HOUBOLT ROAD
JOLIET, ILLINOIS 60431
(815) 744-4200


| | | | |
|---|---|---|---|
| USER NAME = AlexaM | DESIGNED - ACM | REVISED - | |
| | DRAWN - ACM | REVISED - | |
| PLOT SCALE = 20.0000 ' / in. | CHECKED - RRS | REVISED - | |
| PLOT DATE = 7/8/2026 | DATE - 2/27/2026 | REVISED - | |

**STATE OF ILLINOIS**
**DEPARTMENT OF TRANSPORTATION**

**TEMPORARY CABLE PLAN, PHASE DESIGNATION DIAGRAM, AND EMERGENCY VEHICLE PREEMPTION SEQUENCE (STAGE 2)**
**WILLOW ROAD**

SCALE: N.T.S. | SHEET 2 OF 7 SHEETS | STA. N/A | TO STA. N/A

| F.A.U. RTE. | SECTION | COUNTY | TOTAL SHEETS | SHEET NO. |
|---|---|---|---|---|
| 3561 | 08-00103-00-FP | COOK | 254 | 176 |
| | | CONTRACT NO. 61M29 | | |
| | | ILLINOIS | FED. AID PROJECT | |

MODEL: Default
FILE NAME: S:\DOL\1600--1699\16190SB\Drawings\CAD\Micros-SS4\CAD_Sheets\16190SB-sht-ts-cable plan-Stage 2 revised.dgn

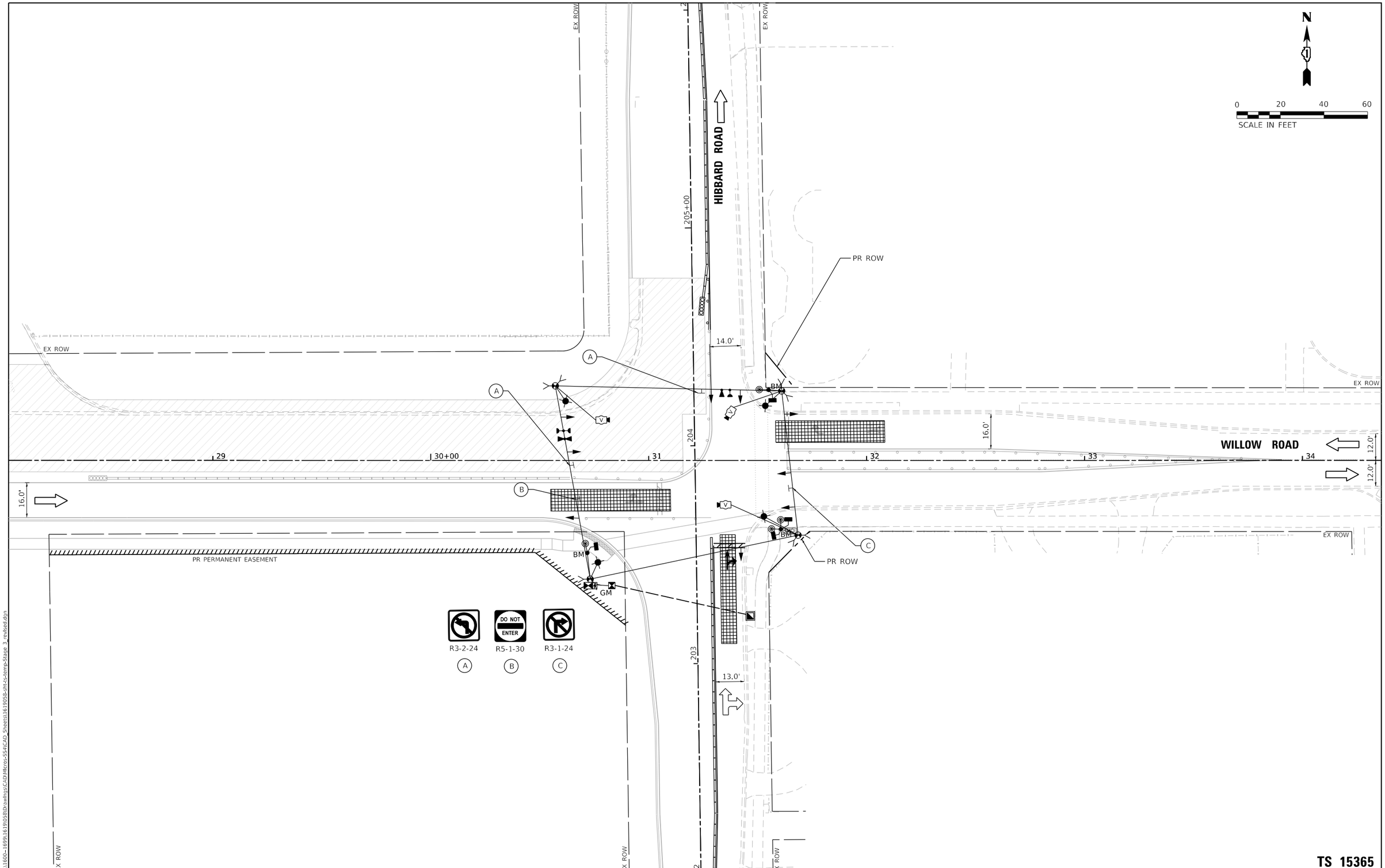


TS 15365

MODEL: Default
FILE NAME: S:\JOL\1600-1699\1619058\Drawings\CADMicro-SS4\CAD_Sheets\1619058-sht-tt-temp-Stage_3_revised.dgn


STRAND ASSOCIATES®
1170 SOUTH HOUBOLT ROAD
JOLIET, ILLINOIS 60431
(815) 744-4200


| | | | |
|---|---|---|---|
| USER NAME = AlexaM | DESIGNED - ACM | REVISED - | |
| | DRAWN - ACM | REVISED - | |
| PLOT SCALE = 40.0000 ' / in. | CHECKED - RRS | REVISED - | |
| PLOT DATE = 7/8/2026 | DATE - 2/27/2026 | REVISED - | |

**STATE OF ILLINOIS**
**DEPARTMENT OF TRANSPORTATION**

**TEMPORARY TRAFFIC SIGNAL INSTALLATION PLAN (STAGE 3)**
**WILLOW ROAD AND HIBBARD ROAD**

SCALE: 1" = 20' | SHEET 3 OF 7 SHEETS | STA. N/A | TO STA. N/A

| F.A.U. RTE. | SECTION | COUNTY | TOTAL SHEETS | SHEET NO. |
|---|---|---|---|---|
| 3561 | 08-00103-00-FP | COOK | 254 | 177 |
| | | CONTRACT NO. 61M29 | | |
| | | ILLINOIS | FED. AID PROJECT | |

## EXISTING CONTROLLER SEQUENCE

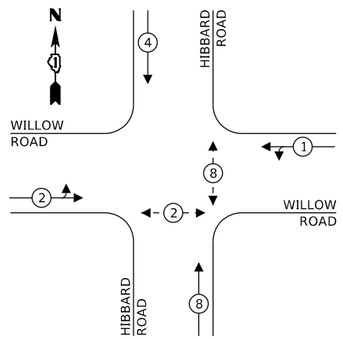


## TEMPORARY CONTROLLER SEQUENCE

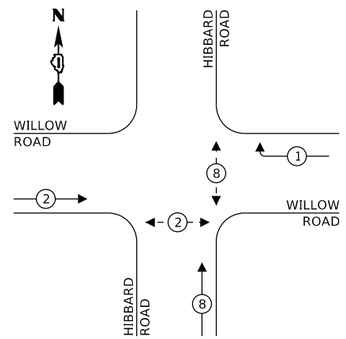


## EXISTING EMERGENCY VEHICLE PREEMPTION SEQUENCE

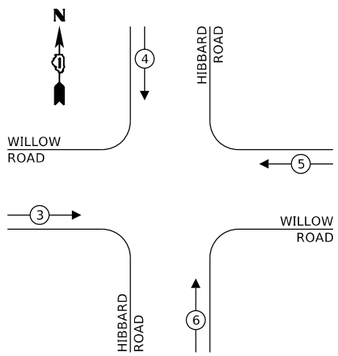


## TEMPORARY EMERGENCY VEHICLE PREEMPTION SEQUENCE

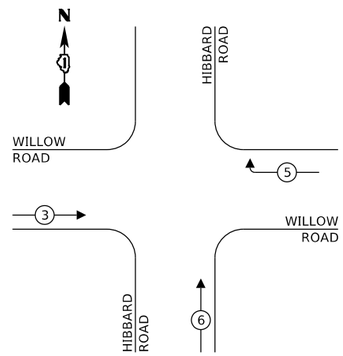


## LEGEND:

- PROTECTED PHASE
- PROTECTED/PERMITTED PHASE
- PEDESTRIAN PHASE
- OL — OVERLAP

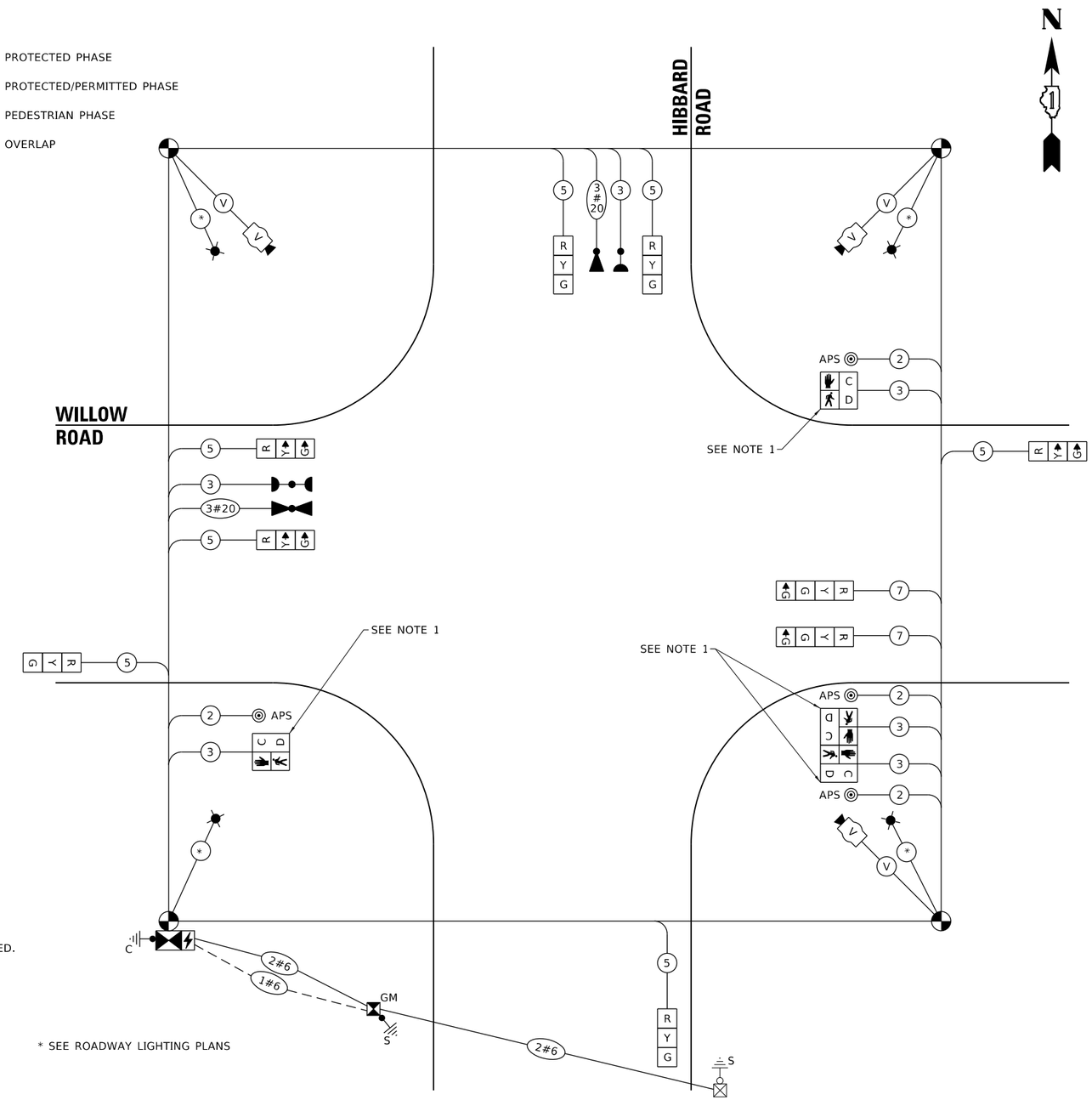


* SEE ROADWAY LIGHTING PLANS

## TEMPORARY CABLE PLAN

(NOT TO SCALE)

### TRAFFIC SIGNAL ELECTRIC SERVICE REQUIREMENTS

| TYPE | QUANTITY | UNIT WATTAGE | TOTAL WATTAGE |
|---|---|---|---|
| SIGNAL HEAD | | | |
| 1 OR 3 - SECTION | 9 | 11 | 99 |
| 4 - SECTION | | 14 | |
| 5 - SECTION | | 13 | |
| PROGRAMMABLE SIGNALS | | | |
| 3 - SECTION | | 22 | |
| 4 - SECTION | | 32 | |
| 5 - SECTION | | 28 | |
| PED. SIGNAL | 4 | 15 | 60 |
| CONTROLLER | 1 | 150 | 150 |
| MASTER CONTROLLER | | 100 | |
| UPS | 1 | 25 | 25 |
| DETECTION RADAR OR VIDEO | 3 | 20 | 60 |
| BLANK-OUT SIGN | | 25 | |
| NETWORK SWITCH II OR III | | 35 | |
| CELLULAR MODEM | | 15 | |
| PTZ CAMERA | | 75 | |
| **TOTAL UPS SIZING** | | | 394 |
| UPS CHARGING | 1 | 225 | 225 |
| BATTERY HEATER MAT | 1 | 180 | 180 |
| CABINET HEATER | 1 | 200 | 200 |
| FLASHER | | 15 | |
| LED STREET NAME SIGN | | 120 | |
| LUMINAIRE | 4 | 240 | 960 |
| **TOTAL SERVICE WIRE SIZING** | | | 1959 |

## NOTE:

1. SIGNAL HEAD AND PUSH BUTTON SHALL BE BARREL MOUNTED.

ENERGY COSTS TO:

VILLAGE OF WINNETKA

ENERGY SUPPLY: CONTACT:
PHONE:
COMPANY: VILLAGE OF WINNETKA
ACCOUNT NUMBER:
METER NUMBER:

**TS 15365**

MODEL: Default
FILE NAME: S:\DL\1600--1699\1619058\Drawings\CADd\Micro-SS4\CAD_Sheets\1619058-sht-tc-cable plan-Stage 3-revised.dgn

STRAND ASSOCIATES®
1170 SOUTH HOUBOLT ROAD
JOLIET, ILLINOIS 60431
(815) 744-4200

| | | | |
|---|---|---|---|
| USER NAME = AlexaM | DESIGNED - ACM | REVISED - | |
| | DRAWN - ACM | REVISED - | |
| PLOT SCALE = 20.0000 ' / in. | CHECKED - RRS | REVISED - | |
| PLOT DATE = 7/8/2026 | DATE - 2/27/2026 | REVISED - | |

**STATE OF ILLINOIS**
**DEPARTMENT OF TRANSPORTATION**

**TEMPORARY CABLE PLAN, PHASE DESIGNATION DIAGRAM, AND EMERGENCY VEHICLE PREEMPTION SEQUENCE (STAGE 3)**
**WILLOW ROAD**

SCALE: N.T.S. | SHEET 3 OF 7 SHEETS | STA. N/A | TO STA. N/A

| F.A.U. RTE. | SECTION | COUNTY | TOTAL SHEETS | SHEET NO. |
|---|---|---|---|---|
| 3561 | 08-00103-00-FP | COOK | 254 | 178 |
| | | CONTRACT NO. 61M29 | | |
| | | ILLINOIS | FED. AID PROJECT | |

N

0 20 40 60
SCALE IN FEET

HIBBARD ROAD

WILLOW ROAD

EX ROW

PR ROW

PR PERMANENT EASEMENT

14.0'

16.0'

16.0'

16.0'

12.0'

12.0'

13.0'

205+00

204

203

202

29

30+00

31

32

33

34

BM

GM

A

B

C

V

R3-2-24
A

R5-1-30
B

R3-1-24
C

TS 15365


STRAND ASSOCIATES®
1170 SOUTH HOUBOLT ROAD
JOLIET, ILLINOIS 60431
(815) 744-4200


| | | | |
|---|---|---|---|
| USER NAME = AlexaM | DESIGNED - ACM | REVISED - | |
| | DRAWN - ACM | REVISED - | |
| PLOT SCALE = 40.0000 ' / in. | CHECKED - RRS | REVISED - | |
| PLOT DATE = 7/8/2026 | DATE - 2/27/2026 | REVISED - | |

**STATE OF ILLINOIS**
**DEPARTMENT OF TRANSPORTATION**

**TEMPORARY TRAFFIC SIGNAL INSTALLATION PLAN (STAGE 3A)**
**WILLOW ROAD AND HIBBARD ROAD**

SCALE: 1" = 20' | SHEET 4 OF 7 SHEETS | STA. N/A TO STA. N/A

| F.A.U. RTE. | SECTION | COUNTY | TOTAL SHEETS | SHEET NO. |
|---|---|---|---|---|
| 3561 | 08-00103-00-FP | COOK | 254 | 179 |
| | | CONTRACT NO. 61M29 | | |
| | | ILLINOIS | FED. AID PROJECT | |

MODEL: Default
FILE NAME: S:\OL\1600-1699\1619058\Drawings\CAD\Micro-SS4\CAD_Sheets\1619058-pht-ts-temp-Stage_3a_revised.dgn

## EXISTING CONTROLLER SEQUENCE

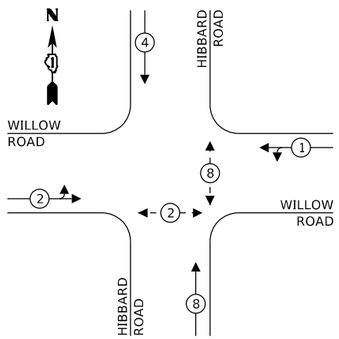


## TEMPORARY CONTROLLER SEQUENCE

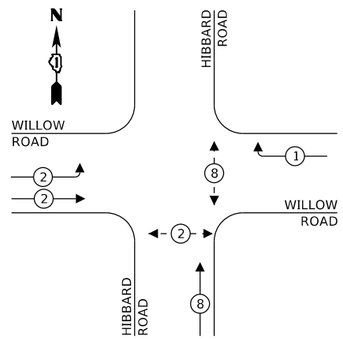


## EXISTING EMERGENCY VEHICLE PREEMPTION SEQUENCE

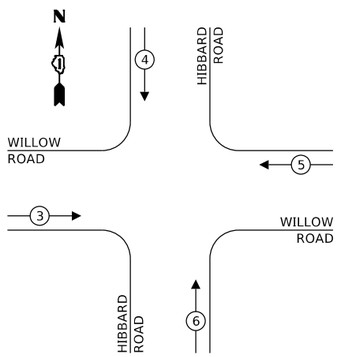


## TEMPORARY EMERGENCY VEHICLE PREEMPTION SEQUENCE

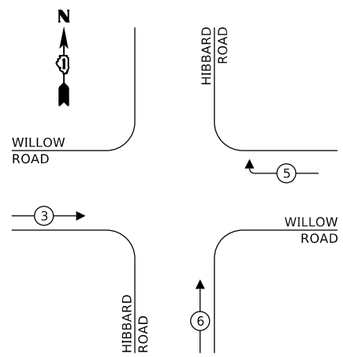


## LEGEND:

- PROTECTED PHASE
- PROTECTED/PERMITTED PHASE
- PEDESTRIAN PHASE
- OL OVERLAP

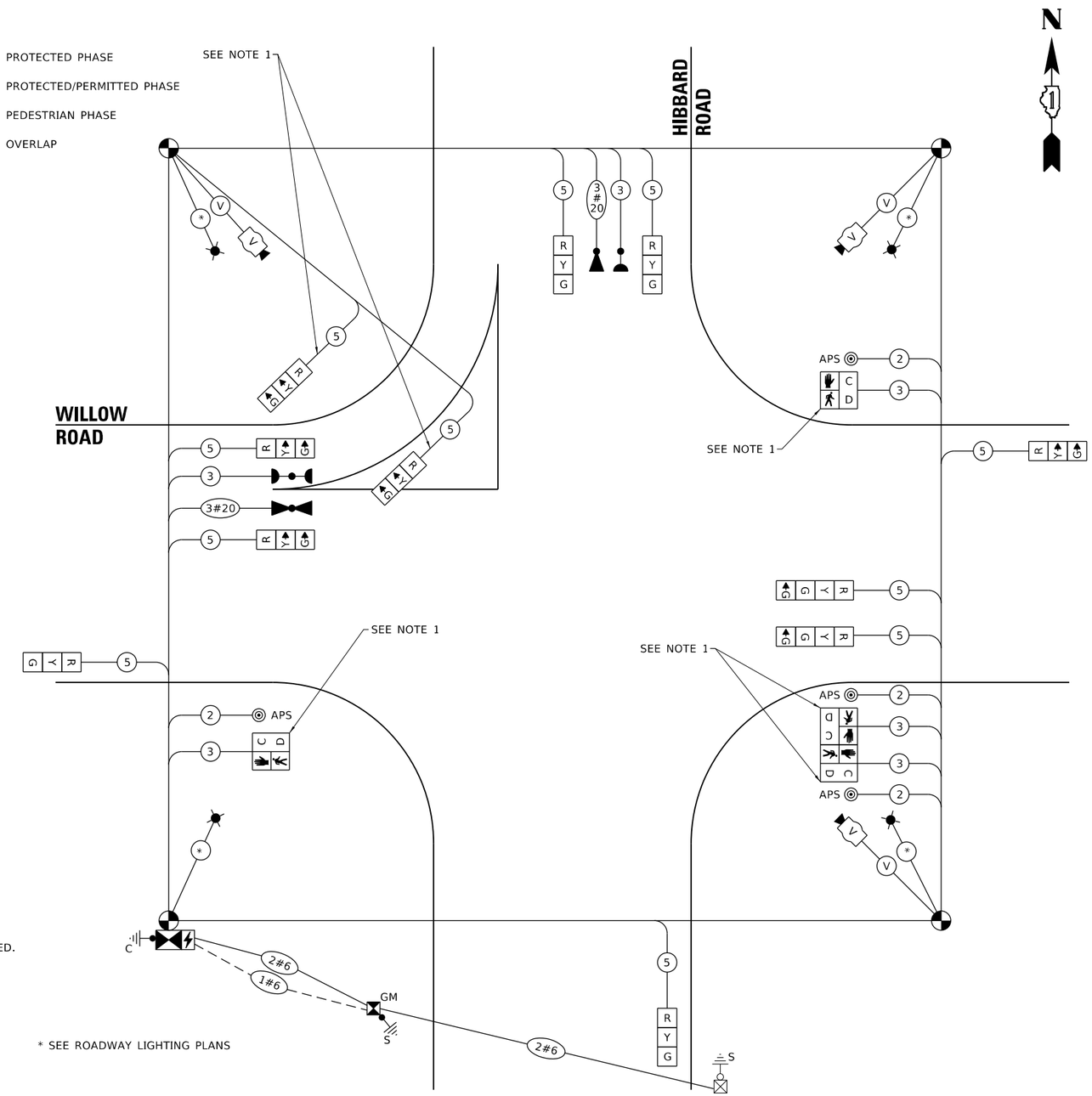


* SEE ROADWAY LIGHTING PLANS

## TEMPORARY CABLE PLAN

(NOT TO SCALE)

## TRAFFIC SIGNAL ELECTRIC SERVICE REQUIREMENTS

| TYPE | QUANTITY | UNIT WATTAGE | TOTAL WATTAGE |
|---|---|---|---|
| SIGNAL HEAD | | | |
| 1 OR 3 - SECTION | 11 | 11 | 121 |
| 4 - SECTION | | 14 | |
| 5 - SECTION | | 13 | |
| PROGRAMMABLE SIGNALS | | | |
| 3 - SECTION | | 22 | |
| 4 - SECTION | | 32 | |
| 5 - SECTION | | 28 | |
| PED. SIGNAL | 4 | 15 | 60 |
| CONTROLLER | 1 | 150 | 150 |
| MASTER CONTROLLER | | 100 | |
| UPS | 1 | 25 | 25 |
| DETECTION RADAR OR VIDEO | 3 | 20 | 60 |
| BLANK-OUT SIGN | | 25 | |
| NETWORK SWITCH II OR III | | 35 | |
| CELLULAR MODEM | | 15 | |
| PTZ CAMERA | | 75 | |
| **TOTAL UPS SIZING** | | | 416 |
| UPS CHARGING | 1 | 225 | 225 |
| BATTERY HEATER MAT | 1 | 180 | 180 |
| CABINET HEATER | 1 | 200 | 200 |
| FLASHER | | 15 | |
| LED STREET NAME SIGN | | 120 | |
| LUMINAIRE | 4 | 240 | 960 |
| **TOTAL SERVICE WIRE SIZING** | | | 1981 |

## NOTE:

1. SIGNAL HEAD AND PUSH BUTTON SHALL BE BARREL MOUNTED.

ENERGY COSTS TO:

VILLAGE OF WINNETKA

ENERGY SUPPLY: CONTACT:
PHONE:
COMPANY: VILLAGE OF WINNETKA
ACCOUNT NUMBER:
METER NUMBER:

TS 15365


STRAND ASSOCIATES®
1170 SOUTH HOUBOLT ROAD
JOLIET, ILLINOIS 60431
(815) 744-4200


| | | | |
|---|---|---|---|
| USER NAME = AlexaM | DESIGNED - ACM | REVISED - | |
| | DRAWN - ACM | REVISED - | |
| PLOT SCALE = 20.0000 ' / in. | CHECKED - RRS | REVISED - | |
| PLOT DATE = 7/8/2026 | DATE - 2/27/2026 | REVISED - | |

**STATE OF ILLINOIS**
**DEPARTMENT OF TRANSPORTATION**

**TEMPORARY CABLE PLAN, PHASE DESIGNATION DIAGRAM, AND EMERGENCY VEHICLE PREEMPTION SEQUENCE (STAGE 3A)**
**WILLOW ROAD**

SCALE: N.T.S. | SHEET 4 OF 7 SHEETS | STA. N/A | TO STA. N/A

| F.A.U. RTE. | SECTION | COUNTY | TOTAL SHEETS | SHEET NO. |
|---|---|---|---|---|
| 3561 | 08-00103-00-FP | COOK | 254 | 180 |
| | | CONTRACT NO. 61M29 | | |
| | | ILLINOIS | FED. AID PROJECT | |

MODEL: Default
FILE NAME: S:\JOL\1600-1699\1619\05\Dr\awings\CAD\Micro-SS4\CAD_Sheets\1619058-lht-sc-cable plan-Stage 3a_revised.dgn

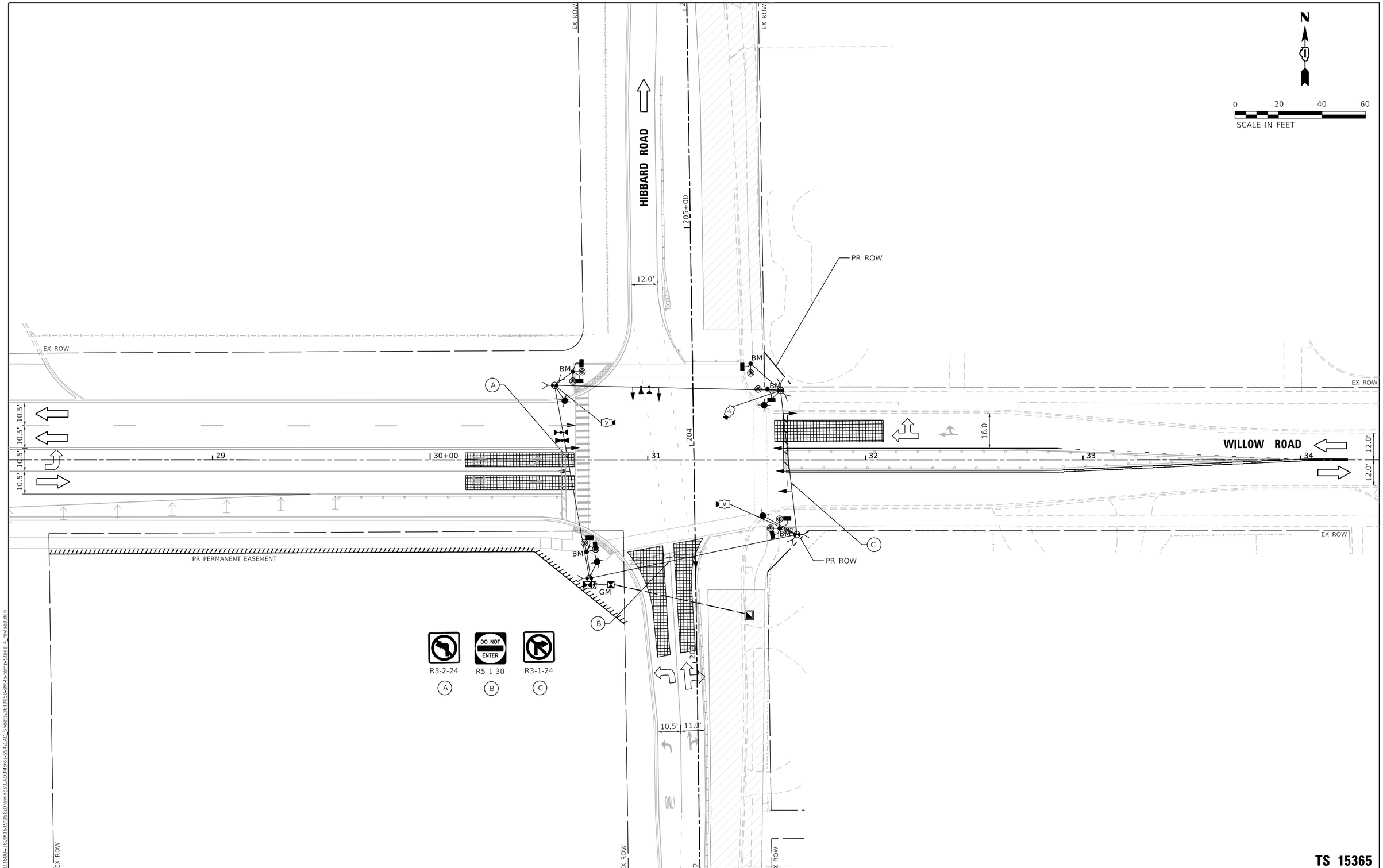


TS 15365

MODEL: Default
FILE NAME: S:\DL\1600-1699\1619058\Drawings\CAD\Micros\SSA\CAD_Sheets\1619058-sht-ts-temp-Stage 4_revised.dgn


STRAND ASSOCIATES®
1170 SOUTH HOUBOLT ROAD
JOLIET, ILLINOIS 60431
(815) 744-4200


| | | | |
|---|---|---|---|
| USER NAME = AlexaM | DESIGNED - ACM | REVISED - | |
| | DRAWN - ACM | REVISED - | |
| PLOT SCALE = 40.0000 ' / in. | CHECKED - RRS | REVISED - | |
| PLOT DATE = 7/8/2026 | DATE - 2/27/2026 | REVISED - | |

**STATE OF ILLINOIS**
**DEPARTMENT OF TRANSPORTATION**

**TEMPORARY TRAFFIC SIGNAL INSTALLATION PLAN (STAGE 4)**
**WILLOW ROAD AND HIBBARD ROAD**

SCALE: 1" = 20' | SHEET 5 OF 7 SHEETS | STA. N/A TO STA. N/A

| F.A.U. RTE. | SECTION | COUNTY | TOTAL SHEETS | SHEET NO. |
|---|---|---|---|---|
| 3561 | 08-00103-00-FP | COOK | 254 | 181 |
| | | CONTRACT NO. 61M29 | | |
| | | ILLINOIS | FED. AID PROJECT | |

## EXISTING CONTROLLER SEQUENCE

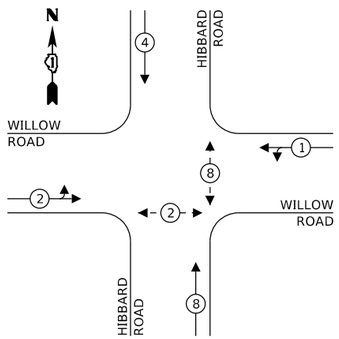


## TEMPORARY CONTROLLER SEQUENCE

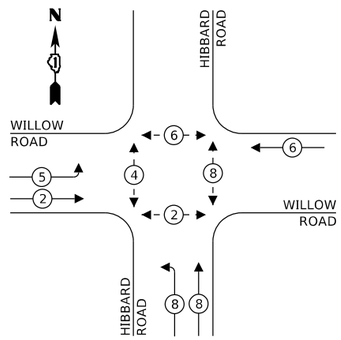


## EXISTING EMERGENCY VEHICLE PREEMPTION SEQUENCE

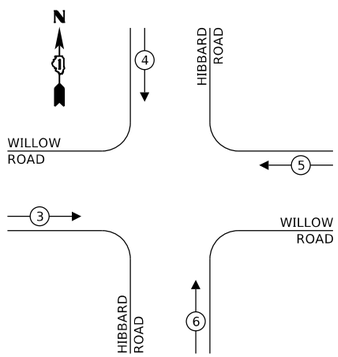


## TEMPORARY EMERGENCY VEHICLE PREEMPTION SEQUENCE

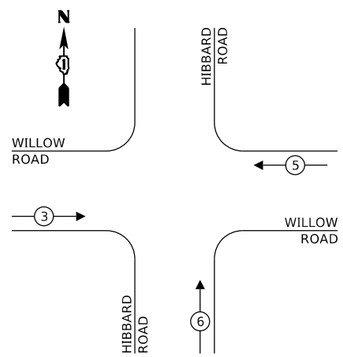


## LEGEND:

- PROTECTED PHASE
- PROTECTED/PERMITTED PHASE
- PEDESTRIAN PHASE
- OL OVERLAP

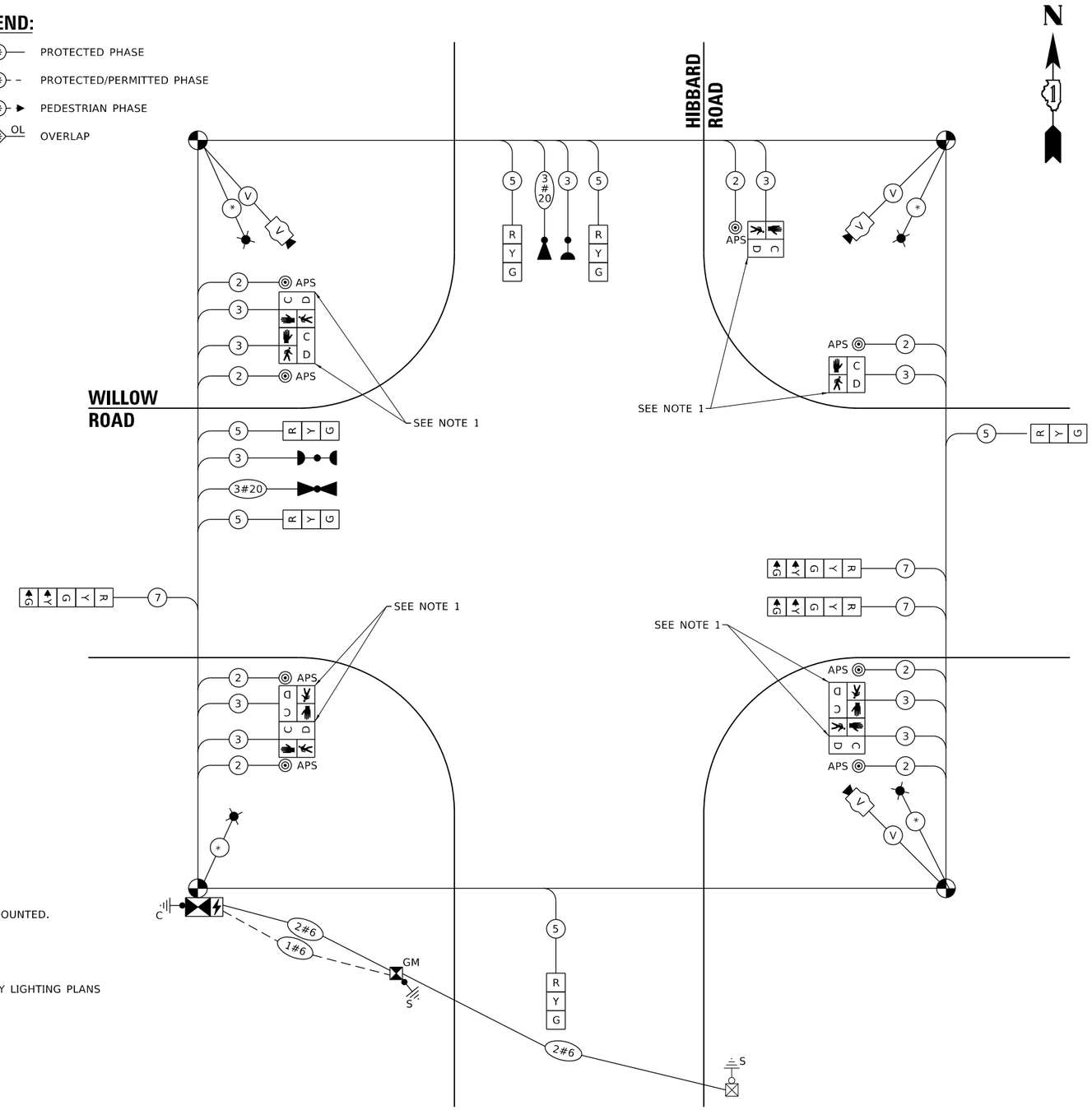


## TEMPORARY CABLE PLAN
(NOT TO SCALE)

## NOTE:

1. SIGNAL HEAD AND PUSH BUTTON SHALL BE BARREL MOUNTED.

* SEE ROADWAY LIGHTING PLANS

### TRAFFIC SIGNAL ELECTRIC SERVICE REQUIREMENTS

| TYPE | QUANTITY | UNIT WATTAGE | TOTAL WATTAGE |
|---|---|---|---|
| SIGNAL HEAD | | | |
| 1 OR 3 - SECTION | 6 | 11 | 66 |
| 4 - SECTION | | 14 | |
| 5 - SECTION | 3 | 13 | 39 |
| PROGRAMMABLE SIGNALS | | | |
| 3 - SECTION | | 22 | |
| 4 - SECTION | | 32 | |
| 5 - SECTION | | 28 | |
| PED. SIGNAL | 8 | 15 | 120 |
| CONTROLLER | 1 | 150 | 150 |
| MASTER CONTROLLER | | 100 | |
| UPS | 1 | 25 | 25 |
| DETECTION RADAR OR VIDEO | 3 | 20 | 60 |
| BLANK-OUT SIGN | | 25 | |
| NETWORK SWITCH II OR III | | 35 | |
| CELLULAR MODEM | | 15 | |
| PTZ CAMERA | | 75 | |
| **TOTAL UPS SIZING** | | | 460 |
| UPS CHARGING | 1 | 225 | 225 |
| BATTERY HEATER MAT | 1 | 180 | 180 |
| CABINET HEATER | 1 | 200 | 200 |
| FLASHER | | 15 | |
| LED STREET NAME SIGN | | 120 | |
| LUMINAIRE | 4 | 240 | 960 |
| **TOTAL SERVICE WIRE SIZING** | | | 2025 |

ENERGY COSTS TO:

VILLAGE OF WINNETKA

ENERGY SUPPLY: CONTACT:
PHONE:
COMPANY: VILLAGE OF WINNETKA
ACCOUNT NUMBER:
METER NUMBER:

**TS 15365**


STRAND ASSOCIATES®
1170 SOUTH HOUBOLT ROAD
JOLIET, ILLINOIS 60431
(815) 744-4200


| | | | |
|---|---|---|---|
| USER NAME = AlexaM | DESIGNED - ACM | REVISED - | |
| | DRAWN - ACM | REVISED - | |
| PLOT SCALE = 20.0000 ' / in. | CHECKED - RRS | REVISED - | |
| PLOT DATE = 7/8/2026 | DATE - 2/27/2026 | REVISED - | |

**STATE OF ILLINOIS**
**DEPARTMENT OF TRANSPORTATION**

**TEMPORARY CABLE PLAN, PHASE DESIGNATION DIAGRAM, AND EMERGENCY VEHICLE PREEMPTION SEQUENCE (STAGE 4)**
**WILLOW ROAD**

SCALE: N.T.S. | SHEET 5 OF 7 SHEETS | STA. N/A TO STA. N/A

| F.A.U. RTE. | SECTION | COUNTY | TOTAL SHEETS | SHEET NO. |
|---|---|---|---|---|
| 3561 | 08-00103-00-FP | COOK | 254 | 182 |

CONTRACT NO. 61M29

ILLINOIS | FED. AID PROJECT

MODEL: Default
FILE NAME: S:\OL\1600--1699\16190958\Drawings\CADd\Micro-SS4\CAD_Sheets\16190958-sht-tc-cable plan-Stage 4 -revised.dgn

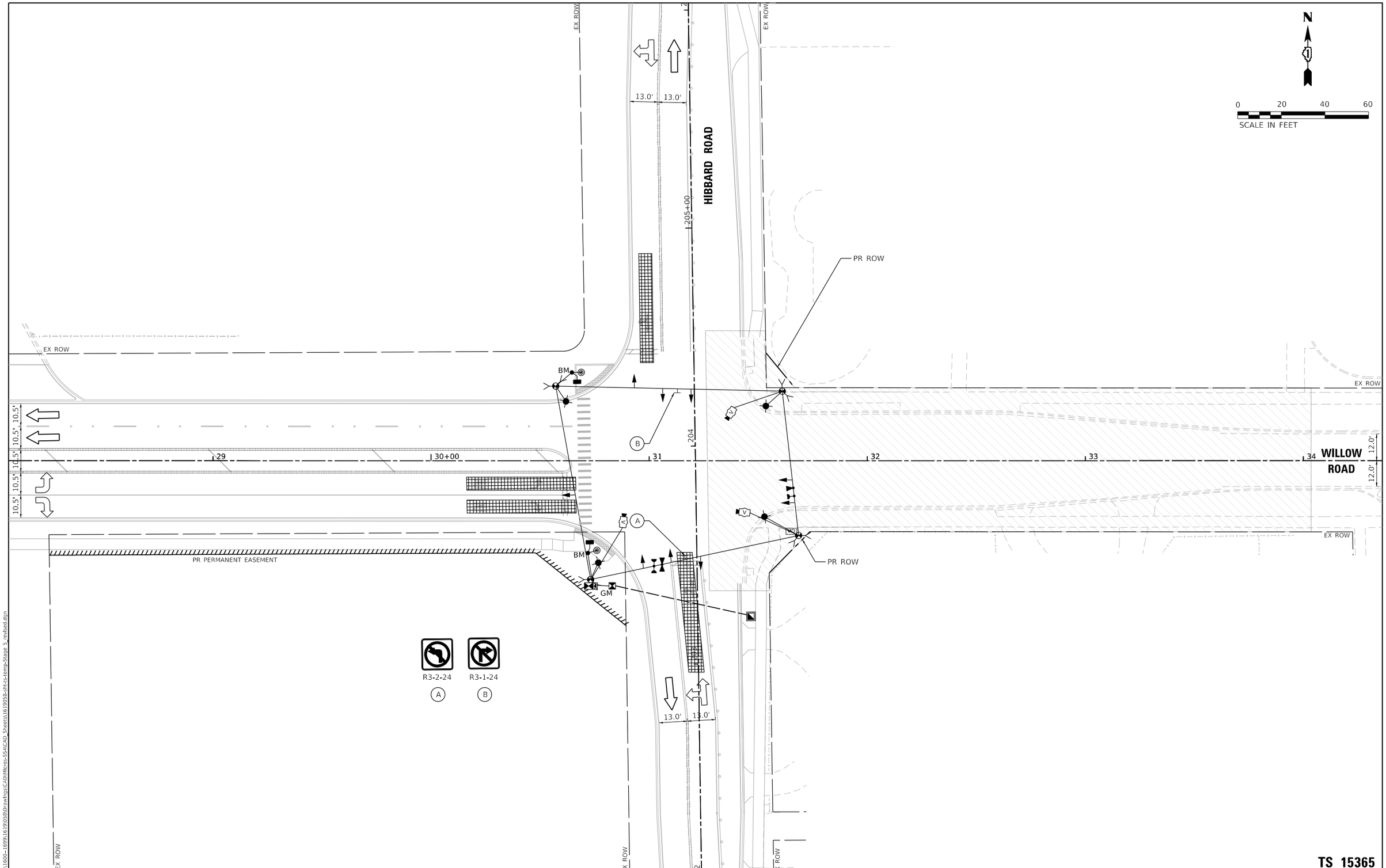


MODEL: Default
FILE NAME: S:\DOL\1600-1699\1619\058\Drawings\CAD\Micros-SS4\CAD_Sheets\1619058-sht-ts-temp-Stage 5_revised.dgn

STRAND ASSOCIATES®
1170 SOUTH HOUBOLT ROAD
JOLIET, ILLINOIS 60431
(815) 744-4200

| | | | |
|---|---|---|---|
| USER NAME = AlexaM | DESIGNED - ACM | REVISED - | |
| | DRAWN - ACM | REVISED - | |
| PLOT SCALE = 40.0000 ' / in. | CHECKED - RRS | REVISED - | |
| PLOT DATE = 7/8/2026 | DATE - 2/27/2026 | REVISED - | |

**STATE OF ILLINOIS**
**DEPARTMENT OF TRANSPORTATION**

**TEMPORARY TRAFFIC SIGNAL INSTALLATION PLAN (STAGE 5)**
**WILLOW ROAD AND HIBBARD ROAD**

SCALE: 1" = 20' | SHEET 6 OF 7 SHEETS | STA. N/A | TO STA. N/A

| F.A.U. RTE. | SECTION | COUNTY | TOTAL SHEETS | SHEET NO. |
|---|---|---|---|---|
| 3561 | 08-00103-00-FP | COOK | 254 | 183 |
| | | CONTRACT NO. 61M29 | | |
| | | ILLINOIS | FED. AID PROJECT | |

## EXISTING CONTROLLER SEQUENCE

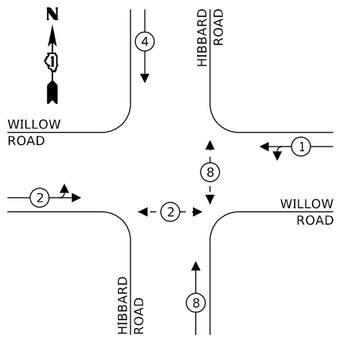


## TEMPORARY CONTROLLER SEQUENCE

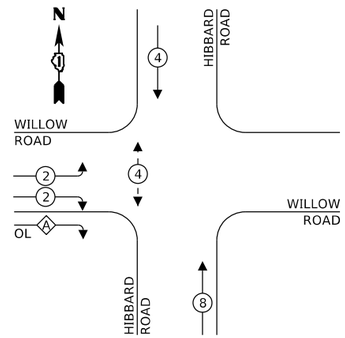


## EXISTING EMERGENCY VEHICLE PREEMPTION SEQUENCE

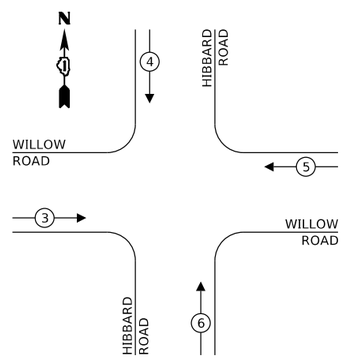


## TEMPORARY EMERGENCY VEHICLE PREEMPTION SEQUENCE

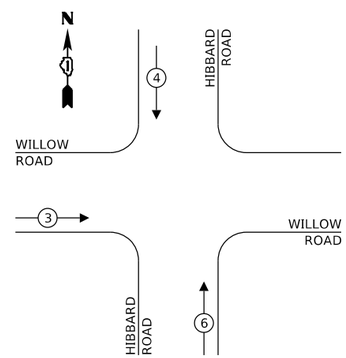


## LEGEND:

- PROTECTED PHASE
- PROTECTED/PERMITTED PHASE
- PEDESTRIAN PHASE
- OL — OVERLAP

## RIGHT TURN OVERLAP PHASE DESIGNATION:

| OVERLAP LETTER | | PERMISSIVE PHASE | | PROTECTED PHASE |
|---|---|---|---|---|
| A | = | 2 | + | 8 |

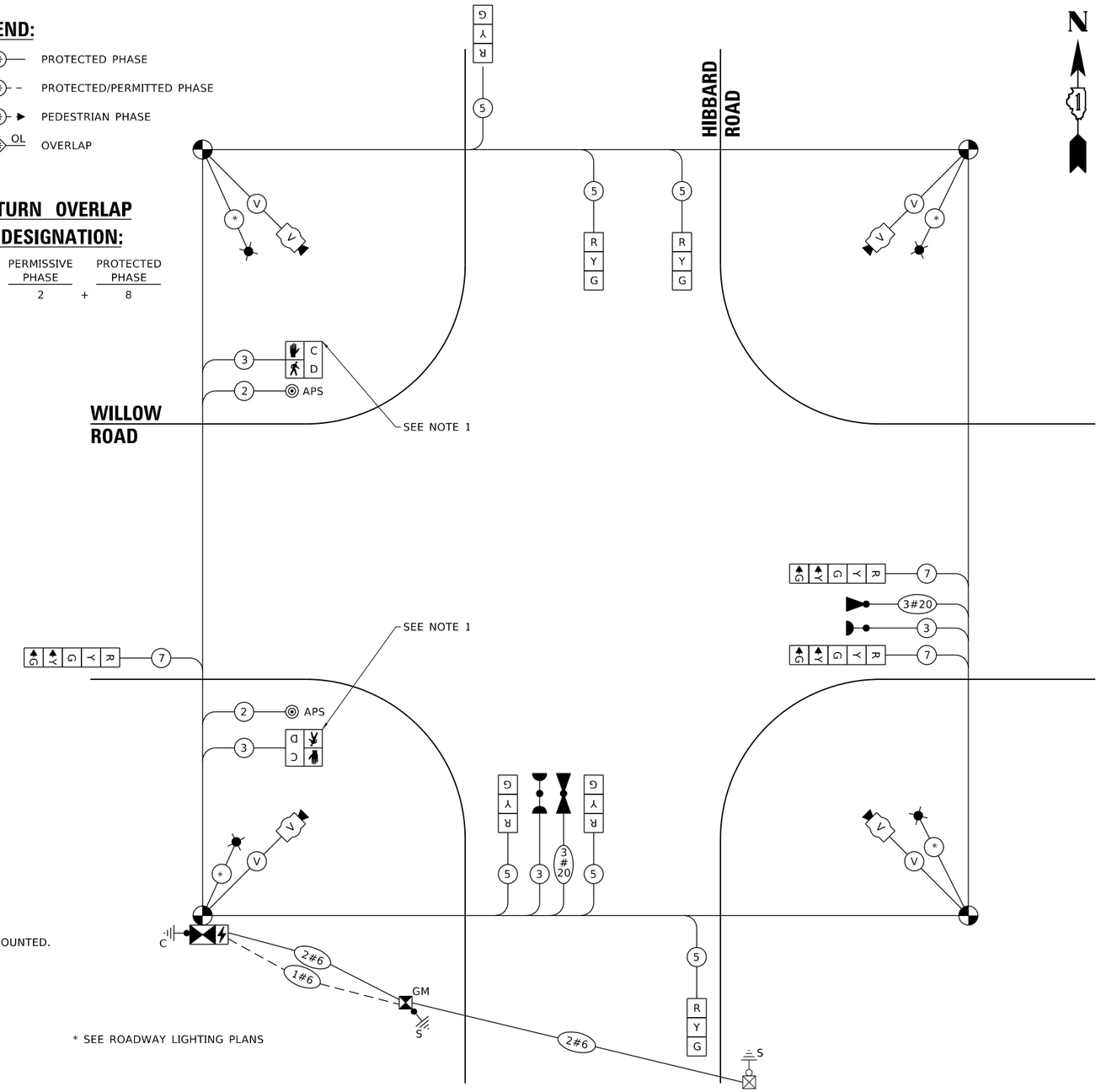


* SEE ROADWAY LIGHTING PLANS

## TEMPORARY CABLE PLAN

(NOT TO SCALE)

## NOTE:

1. SIGNAL HEAD AND PUSH BUTTON SHALL BE BARREL MOUNTED.

### TRAFFIC SIGNAL ELECTRIC SERVICE REQUIREMENTS

| TYPE | QUANTITY | UNIT WATTAGE | TOTAL WATTAGE |
|---|---|---|---|
| SIGNAL HEAD | | | |
| 1 OR 3 - SECTION | 6 | 11 | 66 |
| 4 - SECTION | | 14 | |
| 5 - SECTION | 3 | 13 | 39 |
| PROGRAMMABLE SIGNALS | | | |
| 3 - SECTION | | 22 | |
| 4 - SECTION | | 32 | |
| 5 - SECTION | | 28 | |
| PED. SIGNAL | 2 | 15 | 30 |
| CONTROLLER | 1 | 150 | 150 |
| MASTER CONTROLLER | | 100 | |
| UPS | 1 | 25 | 25 |
| DETECTION RADAR OR VIDEO | 3 | 20 | 60 |
| BLANK-OUT SIGN | | 25 | |
| NETWORK SWITCH II OR III | | 35 | |
| CELLULAR MODEM | | 15 | |
| PTZ CAMERA | | 75 | |
| **TOTAL UPS SIZING** | | | 370 |
| UPS CHARGING | 1 | 225 | 225 |
| BATTERY HEATER MAT | 1 | 180 | 180 |
| CABINET HEATER | 1 | 200 | 200 |
| FLASHER | | 15 | |
| LED STREET NAME SIGN | | 120 | |
| LUMINAIRE | 4 | 240 | 960 |
| **TOTAL SERVICE WIRE SIZING** | | | 1935 |

ENERGY COSTS TO:

VILLAGE OF WINNETKA

ENERGY SUPPLY: CONTACT:

PHONE:

COMPANY: VILLAGE OF WINNETKA

ACCOUNT NUMBER:

METER NUMBER:

TS 15365

MODEL: Default
FILE NAME: S:\JOL\1600-1699\1619058\Drawings\CAD\Micro-SS4\CAD_Sheets\1619058-int-2-cable plan-Stage 5_revised.dgn


STRAND ASSOCIATES®
1170 SOUTH HOUBOLT ROAD
JOLIET, ILLINOIS 60431
(815) 744-4200


| | | | |
|---|---|---|---|
| USER NAME = AlexaM | DESIGNED - ACM | REVISED - | |
| | DRAWN - ACM | REVISED - | |
| PLOT SCALE = 20.0000 ' / in. | CHECKED - RRS | REVISED - | |
| PLOT DATE = 7/8/2026 | DATE - 2/27/2026 | REVISED - | |

**STATE OF ILLINOIS**
**DEPARTMENT OF TRANSPORTATION**

**TEMPORARY CABLE PLAN, PHASE DESIGNATION DIAGRAM, AND EMERGENCY VEHICLE PREEMPTION SEQUENCE (STAGE 5)**
**WILLOW ROAD**

SCALE: N.T.S. | SHEET 6 OF 7 SHEETS | STA. N/A | TO STA. N/A

| F.A.U. RTE. | SECTION | COUNTY | TOTAL SHEETS | SHEET NO. |
|---|---|---|---|---|
| 3561 | 08-00103-00-FP | COOK | 254 | 184 |
| | | CONTRACT NO. 61M29 | | |
| | ILLINOIS | FED. AID PROJECT | | |

## NOTES:

1. SERVICE INSTALLATION, GROUND MOUNTED, METERED WAS INSTALLED AS PART OF THE TEMPORARY TRAFFIC SIGNAL INSTALLATION. SEE TEMPORARY TRAFFIC SIGNAL SHEETS FOR DETAILS. THE DISCONNECTION AND RECONNECTION OF THE SERVICE FOR THE PERMANENT CONDITION IS INCLUDED IN THE UNIT PRICE OF THE SERVICE INSTALLATION, GROUND MOUNTED, METERED PAY ITEM.
2. ALL PROPOSED PUSHBUTTONS SHALL BE APS.
3. THERE SHALL BE A MINIMUM OF 4' SIDEWALK CLEARANCE NEXT TO TRAFFIC SIGNAL FOUNDATIONS TO BE ADA COMPLIANT.
4. THIS LOCATION HAS BEEN DESIGNED TO BE PROWAG/MUTCD COMPLIANT. ANY DEVIATION FROM THIS PLAN FOR THE TRAFFIC SIGNAL MAST ARMS AND/OR POSTS THAT HAVE PEDESTRIAN EQUIPMENT WILL HAVE TO BE APPROVED BY THE ENGINEER TO ENSURE COMPLIANCE.
5. APS SHALL BE PARALLEL TO CORRESPONDING CROSSWALK.
6. SEE SHEETS 146 AND 147 FOR ADA CORNER DETAILS.

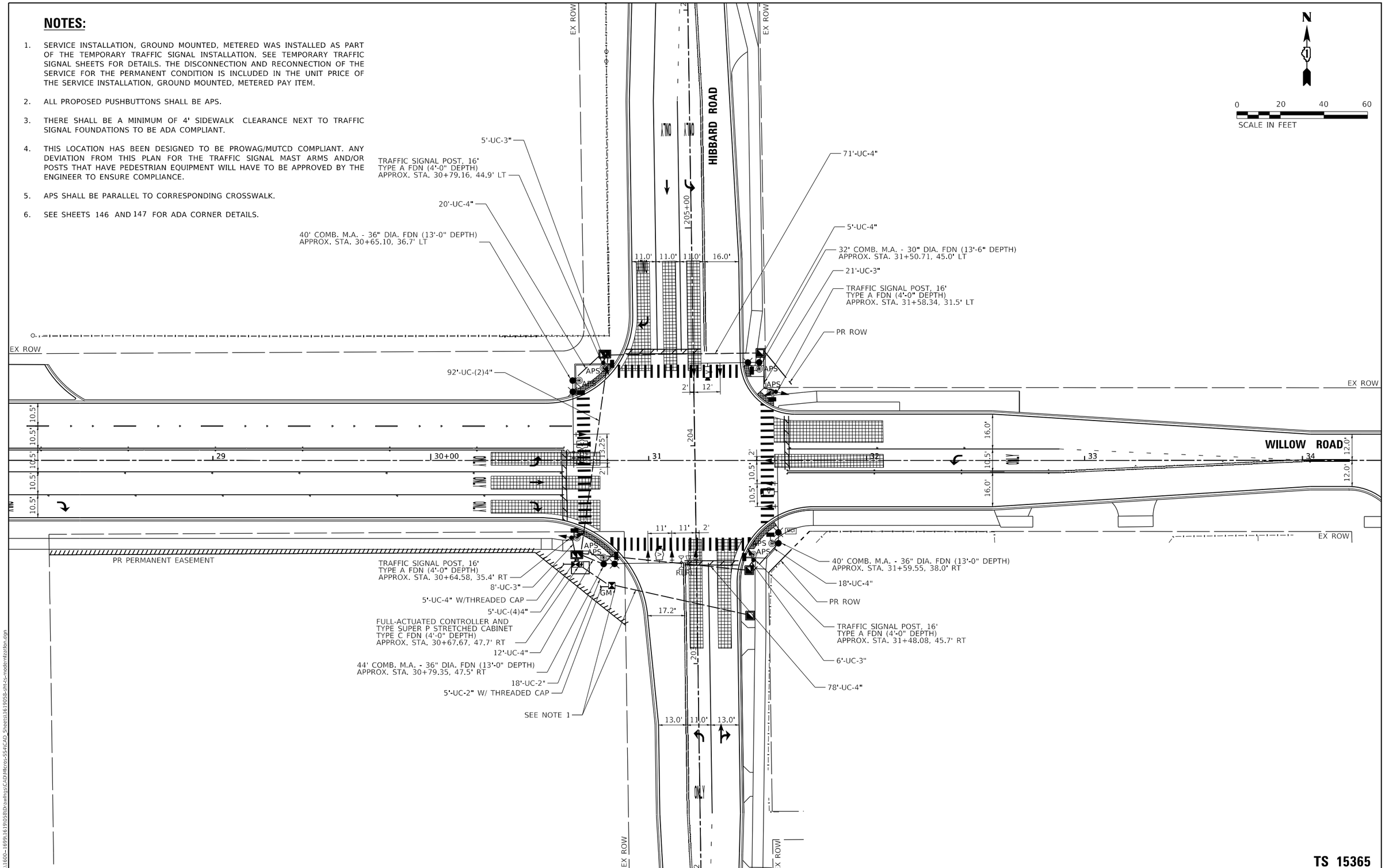


TS 15365

| | | | | | |
|---|---|---|---|---|---|
| STRAND ASSOCIATES® 1170 SOUTH HOUBOLT ROAD JOLIET, ILLINOIS 60431 (815) 744-4200 | USER NAME = AlexaM | DESIGNED - ACM | REVISED - | STATE OF ILLINOIS DEPARTMENT OF TRANSPORTATION | TRAFFIC SIGNAL MODERNIZATION PLAN WILLOW ROAD AND HIBBARD ROAD |
| | | DRAWN - ACM | REVISED - | | |
| | PLOT SCALE = 40.0000 ' / in. | CHECKED - RRS | REVISED - | | |
| | PLOT DATE = 7/8/2026 | DATE - 2/27/2026 | REVISED - | | SCALE: 1" = 20' SHEET 1 OF 1 SHEETS STA. N/A TO STA. N/A |

| F.A.U. RTE. | SECTION | COUNTY | TOTAL SHEETS | SHEET NO. |
|---|---|---|---|---|
| 3561 | 08-00103-00-FP | COOK | 254 | 185 |
| | | CONTRACT NO. 61M29 | | |
| | | ILLINOIS FED. AID PROJECT | | |

MODEL: Default
FILE NAME: S:\JOL\1600-1699\1619058\Drawings\CAD\Micro-SS4\CAD_Sheets\1619058-sht-2-modernization.dgn

## PROPOSED CONTROLLER SEQUENCE

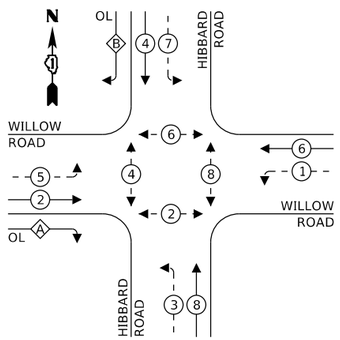


## LEGEND:

- PROTECTED PHASE
- PROTECTED/PERMITTED PHASE
- PEDESTRIAN PHASE
- OL — OVERLAP

## RIGHT TURN OVERLAP PHASE DESIGNATION:

| OVERLAP LETTER | | PERMISSIVE PHASE | | PROTECTED PHASE |
|---|---|---|---|---|
| A | = | 2 | + | 3 |
| B | = | 4 | + | 5 |

## PROPOSED EMERGENCY VEHICLE PREEMPTION SEQUENCE

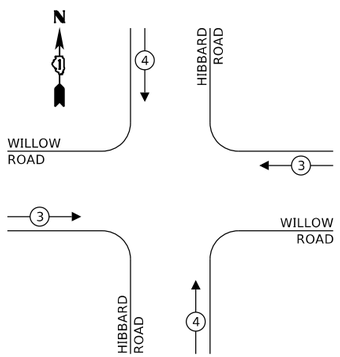


## TRAFFIC SIGNAL ELECTRIC SERVICE REQUIREMENTS

| TYPE | QUANTITY | UNIT WATTAGE | TOTAL WATTAGE |
|---|---|---|---|
| SIGNAL HEAD | | | |
| 1 OR 3 - SECTION | 6 | 11 | 66 |
| 4 - SECTION | | 14 | |
| 5 - SECTION | 12 | 13 | 156 |
| PROGRAMMABLE SIGNALS | | | |
| 3 - SECTION | | 22 | |
| 4 - SECTION | | 32 | |
| 5 - SECTION | | 28 | |
| PED. SIGNAL | 8 | 15 | 120 |
| CONTROLLER | 1 | 150 | 150 |
| MASTER CONTROLLER | | 100 | |
| UPS | 1 | 25 | 25 |
| DETECTION RADAR OR VIDEO | 4 | 20 | 80 |
| BLANK-OUT SIGN | | 25 | |
| NETWORK SWITCH II OR III | | 35 | |
| CELLULAR MODEM | | 15 | |
| PTZ CAMERA | | 75 | |
| **TOTAL UPS SIZING** | | | 597 |
| UPS CHARGING | 1 | 225 | 225 |
| BATTERY HEATER MAT | 1 | 180 | 180 |
| CABINET HEATER | 1 | 200 | 200 |
| FLASHER | | 15 | |
| LED STREET NAME SIGN | | 120 | |
| LUMINAIRE | | 240 | |
| **TOTAL SERVICE WIRE SIZING** | | | 1202 |

## NOTES:

1. ALL RED SIGNAL INDICATIONS SHALL HAVE A LENS COVER.
2. LUMINAIRE PLACEMENT SHALL BE PER THE ROADWAY LIGHTING PLANS.

* SEE ROADWAY LIGHTING PLANS

ENERGY COSTS TO:

VILLAGE OF WINNETKA

ENERGY SUPPLY: CONTACT:
PHONE:
COMPANY: VILLAGE OF WINNETKA
ACCOUNT NUMBER:
METER NUMBER:

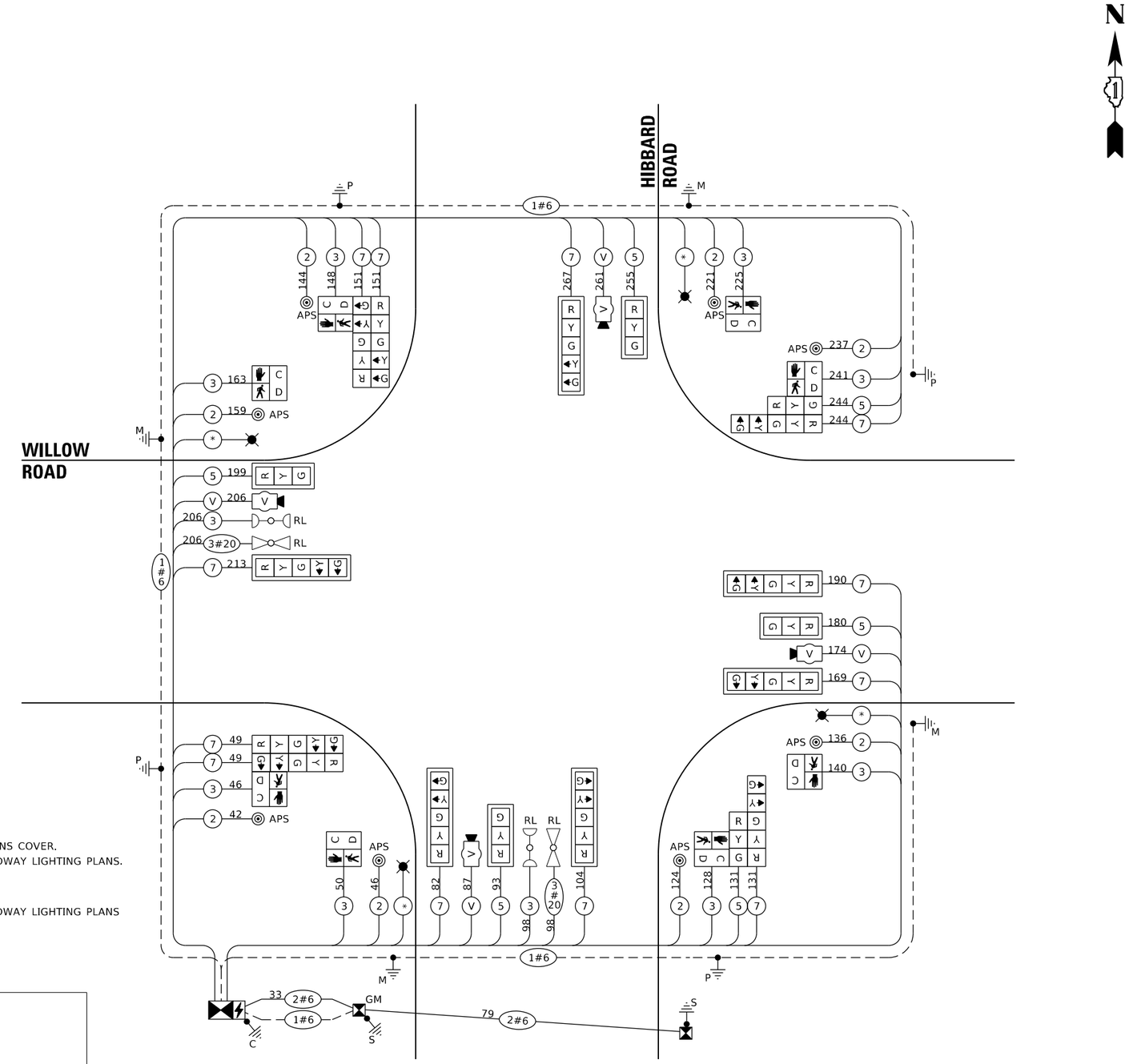


## CABLE PLAN
(NOT TO SCALE)

TS 15365

MODEL: Default
FILE NAME: S:\DOL\1600--1699\1619058\Drawings\CADD\Micro-Station\Sheets\1619058-sht-cs-cable plan-proposed.dgn


STRAND ASSOCIATES®
1170 SOUTH HOUBOLT ROAD
JOLIET, ILLINOIS 60431
(815) 744-4200


| | | | |
|---|---|---|---|
| USER NAME = AlexaM | DESIGNED - ACM | REVISED - | |
| | DRAWN - ACM | REVISED - | |
| PLOT SCALE = 20.0000 ' / in. | CHECKED - RRS | REVISED - | |
| PLOT DATE = 7/8/2026 | DATE - 2/27/2026 | REVISED - | |

**STATE OF ILLINOIS**
**DEPARTMENT OF TRANSPORTATION**

**CABLE PLAN, PHASE DESIGNATION DIAGRAM, AND EMERGENCY VEHICLE PREEMPTION SEQUENCE**
**WILLOW ROAD**

SCALE: N.T.S. | SHEET 1 OF 1 SHEETS | STA. N/A | TO STA. N/A

| F.A.U. RTE. | SECTION | COUNTY | TOTAL SHEETS | SHEET NO. |
|---|---|---|---|---|
| 3561 | 08-00103-00-FP | COOK | 254 | 186 |
| | | CONTRACT NO. 61M29 | | |
| | ILLINOIS | FED. AID PROJECT | | |

# SCHEDULE OF QUANTITIES

| | ITEM | UNIT | QUANTITY |
|---|---|---|---|
| | RELOCATE SIGN PANEL - TYPE 2 | SQ FT | 30 |
| | UNDERGROUND CONDUIT, GALVANIZED STEEL, 2" DIA. | FOOT | 87 |
| | UNDERGROUND CONDUIT, GALVANIZED STEEL, 3" DIA. | FOOT | 40 |
| | UNDERGROUND CONDUIT, GALVANIZED STEEL, 4" DIA. | FOOT | 413 |
| | HANDHOLE | EACH | 3 |
| | DOUBLE HANDHOLE | EACH | 2 |
| | MAINTENANCE OF EXISTING TRAFFIC SIGNAL INSTALLATION | EACH | 1 |
| * | PAINT NEW TRAFFIC SIGNAL POST | EACH | 4 |
| * | PAINT NEW COMBINATION MAST ARM AND POLE, UNDER 40 FOOT | EACH | 1 |
| * | PAINT NEW COMBINATION MAST ARM AND POLE, 40 FOOT AND OVER | EACH | 3 |
| | ELECTRIC CABLE IN CONDUIT, SIGNAL NO. 14 2C | FOOT | 1,107 |
| | ELECTRIC CABLE IN CONDUIT, SIGNAL NO. 14 3C | FOOT | 1,445 |
| | ELECTRIC CABLE IN CONDUIT, SIGNAL NO. 14 5C | FOOT | 1,108 |
| | ELECTRIC CABLE IN CONDUIT, SIGNAL NO. 14 7C | FOOT | 1,790 |
| | ELECTRIC CABLE IN CONDUIT, SERVICE, NO. 6 2 C | FOOT | 112 |
| | ELECTRIC CABLE IN CONDUIT, EQUIPMENT GROUNDING CONDUCTOR, NO. 6 1C | FOOT | 506 |
| | TRAFFIC SIGNAL POST, 16 FT. | EACH | 4 |
| | STEEL COMBINATION MAST ARM ASSEMBLY AND POLE 32 FT. | EACH | 1 |
| | STEEL COMBINATION MAST ARM ASSEMBLY AND POLE 40 FT. | EACH | 2 |
| | STEEL COMBINATION MAST ARM ASSEMBLY AND POLE 44 FT. | EACH | 1 |
| | CONCRETE FOUNDATION, TYPE A | FOOT | 20 |
| | CONCRETE FOUNDATION, TYPE C | FOOT | 4 |
| | CONCRETE FOUNDATION, TYPE E 30-INCH DIAMETER | FOOT | 13.5 |
| | CONCRETE FOUNDATION, TYPE E 36-INCH DIAMETER | FOOT | 39 |
| | SIGNAL HEAD, LED, 1-FACE, 3-SECTION, MAST-ARM MOUNTED | EACH | 4 |
| | SIGNAL HEAD, LED, 1-FACE, 3-SECTION, BRACKET MOUNTED | EACH | 2 |
| | SIGNAL HEAD, LED, 1-FACE, 5-SECTION, BRACKET MOUNTED | EACH | 6 |
| | SIGNAL HEAD, LED, 1-FACE, 5-SECTION, MAST-ARM MOUNTED | EACH | 6 |
| | PEDESTRIAN SIGNAL HEAD, LED, 1-FACE, BRACKET MOUNTED WITH COUNTDOWN TIMER | EACH | 8 |
| | TRAFFIC SIGNAL BACKPLATE, LOUVERED, FORMED PLASTIC | EACH | 10 |
| | TEMPORARY TRAFFIC SIGNAL INSTALLATION | EACH | 1 |
| * | RELOCATE EXISTING EMERGENCY VEHICLE PRIORITY SYSTEM, DETECTOR UNIT | EACH | 2 |
| * | RELOCATE EXISTING EMERGENCY VEHICLE PRIORITY SYSTEM, PHASING UNIT | EACH | 1 |
| | REMOVE EXISTING TRAFFIC SIGNAL EQUIPMENT | EACH | 1 |
| | REMOVE EXISTING HANDHOLE | EACH | 3 |
| | REMOVE EXISTING DOUBLE HANDHOLE | EACH | 1 |
| | REMOVE EXISTING CONCRETE FOUNDATION | EACH | 7 |
| * | EMERGENCY VEHICLE PRIORITY SYSTEM LINE SENSOR CABLE, NO. 20 3/C | FOOT | 297 |
| | SERVICE INSTALLATION, GROUND MOUNTED, METERED | EACH | 1 |
| | FULL-ACTUATED CONTROLLER AND TYPE IV STRETCHED CABINET | EACH | 1 |
| | UNINTERRUPTABLE POWER SUPPLY (SPECIAL) | EACH | 1 |
| | ACCESSIBLE PEDESTRIAN SIGNALS | EACH | 8 |
| | LED SIGNAL FACE, LENS COVER | EACH | 18 |
| | VIDEO VEHICLE DETECTION SYSTEM, SINGLE APPROACH | EACH | 4 |
| | TEMPORARY TRAFFIC SIGNAL TIMING | EACH | 1 |
| | RE-OPTIMIZE TRAFFIC SIGNAL SYSTEM LEVEL 1 | EACH | 1 |

*100% COST TO THE VILLAGE OF WINNETKA

**TS 15365**

MODEL: Default
FILE NAME: S:\JOL\1600-1699\1619058\Drawings\CADd\Micro-SS4\CAD_Sheets\1619058-sht-ts-SOQ.dgn

STRAND ASSOCIATES®
1170 SOUTH HOUBOLT ROAD
JOLIET, ILLINOIS 60431
(815) 744-4200

| | | | |
|---|---|---|---|
| USER NAME = AlexaM | DESIGNED - ACM | REVISED - | |
| | DRAWN - ACM | REVISED - | |
| PLOT SCALE = 40.0000 ' / in. | CHECKED - RRS | REVISED - | |
| PLOT DATE = 7/8/2026 | DATE - 2/27/2026 | REVISED - | |

**STATE OF ILLINOIS**
**DEPARTMENT OF TRANSPORTATION**

**SCHEDULE OF QUANTITIES**
**WILLOW ROAD AND HIBBARD ROAD**

SCALE: N.T.S. | SHEET 1 OF 1 SHEETS | STA. N/A TO STA. N/A

| F.A.U. RTE. | SECTION | COUNTY | TOTAL SHEETS | SHEET NO. |
|---|---|---|---|---|
| 3561 | 08-00103-00-FP | COOK | 254 | 187 |

CONTRACT NO. 61M29

ILLINOIS | FED. AID PROJECT

## LIGHTING AND ELECTRICAL LEGEND

| SYMBOL | DESCRIPTION |
|---|---|
| R | EXISTING POLE FOUNDATION AND LIGHTING UNIT TO BE REMOVED, SALVAGE |
| | EXISTING TRAFFIC SIGNAL CONTROLLER TO BE REMOVED |
| H E | EXISTING HANDHOLE |
| H R | EXISTING HANDHOLE TO BE REMOVED |
| L | EXISTING UNDERGROUND CABLE TO BE REMOVED OR ABANDONED IN PLACE |
| | EXISTING UNDERGROUND CABLE |
| | EXISTING UNDERGROUND CABLE IN CONDUIT |
| TEMP | TEMPORARY TRAFFIC SIGNAL CABINET EQUIPPED WITH TEMPORARY LIGHTING CONTROLLER |
| T | TEMPORARY LUMINAIRE, LED, ROADWAY, OUTPUT DESIGNATION D, 30 FT MOUNTING HEIGHT, 8 FT MAST ARM, TYPE II DISTRIBUTION, MINIMUM 6667 LUMENS MOUNTED ON TEMPORARY TRAFFIC SIGNAL WOOD POLE. (SEE TEMPORARY TRAFFIC SIGNAL DRAWINGS FOR DETAILS) |
| A/C | AERIAL CABLE, 2-1/C NO. 8 WITH MESSENGER WIRE |
| | PROPOSED TRAFFIC SIGNAL CABINET (SEE TRAFFIC SIGNAL DRAWINGS FOR DETAILS) EQUIPPED WITH COMBINATION LIGHTING CONTROLLER |
| | PROPOSED TRAFFIC SIGNAL HANDHOLES (SEE TRAFFIC SIGNAL DRAWINGS FOR DETAILS) |
| | COMBINATION MAST ARM ASSEMBLY AND POLE EQUIPPED WITH (SEE TRAFFIC SIGNAL DRAWINGS FOR LUMINAIRE ARM LENGTH) LUMINAIRE, TYPE A (SPECIAL) 45' MH |
| | ELECTRIC CABLE IN CONDUIT, 600V (XLP-TYPE USE) (NUMBER AND SIZE AS NOTED) IN PROPOSED TRAFFIC SIGNAL CONDUIT (SEE TRAFFIC SIGNAL DRAWINGS FOR DETAILS) |

## CALL-OUT SAMPLE

DEFINITION AND EXAMPLE

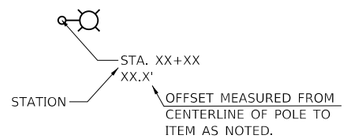


## ABBREVIATIONS

| ABBREVIATION | DESCRIPTION |
|---|---|
| AC | ALTERNATING CURRENT |
| A/C | AERIAL CABLE |
| AFG | ABOVE FINISHED GRADE |
| CB | CIRCUIT BREAKER |
| CKT | CIRCUIT |
| CM | CENTIMETER |
| CP | CONTROL PANEL |
| CT | CURRENT TRANSFORMER |
| DA | DAVIT ARM |
| DC | DIRECT CURRENT |
| DIA | DIAMETER |
| DP | DISTRIBUTION PANEL |
| EX | EXISTING UNIT TO REMAIN |
| ECA | ELECTRIC CABLE ASSEMBLY |
| FT | FEET OR FOOT |
| FOC | FACE OF CURB |
| GND | GROUND |
| HID | HIGH INTENSITY DISCHARGE |
| HPS | HIGH PRESSURE SODIUM |
| JB | JUNCTION BOX |
| KVA | KILOVOLT-AMPERE |
| KW | KILOWATTS |
| LF | LINEAR FOOT |
| LTFM | LIQUID TIGHT FLEXIBLE METALLIC |
| LPS | LOW PRESSURE SODIUM |
| M | METER |
| MA | MAST ARM |
| MM | MILLIMETER |
| M.H. | MOUNTING HEIGHT |
| MW | MESSENGER WIRE |
| NO. # | NUMBER |
| PR | PROPOSED |
| PB | PUSH BUTTON |
| PNL | PANEL |
| PVC | POLYVINYL CHLORIDE |
| PVCC RGC | PVC COATED RIGID GALVANIZED CONDUIT |
| PT | POTENTIAL TRANSFORMER |
| R | EXISTING UNIT TO BE REMOVED (OWNER SALVAGED U.N.O.) |
| RR | EXISTING UNIT TO BE REMOVED AND REINSTALLED |
| RECP | RECEPTACLE |
| RGC | RIGID GALVANIZED CONDUIT |
| SEL SW | SELECTOR SWITCH |
| SPARE | SPARE |
| SPACE | SPACE |
| SS | STAINLESS STEEL |
| STA | STATION |
| XFMR | TRANSFORMER |
| UD | UNIT DUCT |
| U.N.O. | UNLESS NOTED OTHERWISE |
| UGC, GS | UNDERGROUND CONDUIT, GALVANIZED STEEL |
| WP | WOOD POLE |

## GENERAL NOTES

1. THE LOCATION OF BURIED AND ABOVE GROUND UTILITIES SHOWN ARE APPROXIMATE AND ARE SHOWN FOR INFORMATION ONLY. REROUTING, DISCONNECTION, RELOCATION, PROTECTION, ETC., OF ANY UTILITIES MUST BE COORDINATED BETWEEN THE CONTRACTOR, UTILITY COMPANY, AND OWNER. THE CONTRACTOR SHALL FIELD VERIFY THE EXACT LOCATION OF ALL UNDERGROUND UTILITIES BASED ON UTILITY/ JULIE MARKINGS PRIOR TO BEGINNING CONSTRUCTION.
2. ALL NEW CONDUITS, UNIT DUCTS AND APPURTENANCES ARE INDICATED DIAGRAMMATICALLY ON THE DRAWINGS. THE ACTUAL LOCATIONS IN THE FIELD SHALL BE APPROVED BY THE ENGINEER.
3. THE ELECTRICAL WORK SHALL BE PERFORMED IN ACCORDANCE WITH THE LATEST CODES, STANDARDS AND THE IDOT STANDARD SPECIFICATIONS FOR ROAD AND BRIDGE CONSTRUCTION ADOPTED JANUARY 1, 2022, AND SUPPLEMENTAL SPECIFICATIONS AND RECURRING SPECIAL PROVISIONS ADOPTED JANUARY 1, 2026.
4. IT SHALL BE THE CONTRACTOR'S RESPONSIBILITY TO MARK THE PROPOSED LOCATIONS OF ALL THE LIGHT POLES FOR EXAMINATION AND CONFIRMATION WITH THE ENGINEER AT THE PRE CONSTRUCTION INSPECTION. THE EXACT LOCATION OF ALL ITEMS SHALL BE CONFIRMED WITH THE ENGINEER PRIOR TO STARTING WORK.
5. THE CONTRACTOR SHALL BE RESPONSIBLE FOR THE ESTABLISHMENT OF THE FINISHED GRADE. THE ENGINEER MAY ASSIST THE CONTRACTOR, AS APPLICABLE, BUT THE RESPONSIBILITY FOR COORDINATION OF THE FINISHED GRADE SHALL REMAIN WITH THE CONTRACTOR.
6. ALL LUMINAIRES SHALL BE ORIENTED WITH THE OPTICS PERPENDICULAR TO THE ROADWAY UNLESS NOTED OTHERWISE OR DIRECTED BY THE ENGINEER. THE LUMINAIRES MAY REQUIRE NIGHT-TIME OPTICAL ADJUSTMENT UPON INSPECTION BY THE ENGINEER.
7. CONDUITS AND UNIT DUCTS SHALL BE INSTALLED AT A MINIMUM 30 INCH DEPTH BELOW GRADE AND POSITIONED IN THE FIELD TO AVOID CONFLICT WITH ROADWAY UNDERDRAINS AND OTHER EXISTING AND PROPOSED UTILITIES. THE CONTRACTOR SHALL INCREASE DEPTH OF UNIT DUCT AND CONDUIT AS REQUIRED. THE CONTRACTOR SHALL COORDINATE RACEWAY DEPTH WITH THE ELECTRICAL DETAILS AND THE ENGINEER.
8. WHERE THE CONTRACTOR'S EXCAVATION MEETS AN OBSTRUCTION, THE CONTRACTOR SHALL NOTIFY THE ENGINEER FOR DIRECTION IN WRITING PRIOR TO FURTHER EXCAVATION. THE CONTRACTOR SHALL RESTORE ANY DAMAGE TO EXISTING SYSTEMS OR UTILITIES AND REMOVE EXISTING OBSTRUCTIONS AND FOUNDATIONS TO THE SATISFACTION OF THE ENGINEER.
9. THE CONTRACTOR SHALL COORDINATE INSTALLATION OF CONDUITS, FOUNDATIONS AND UNIT DUCTS WITH THE ROADWAY, DRAINAGE, CURB, AND SIDEWALK WORK AND UNDERGROUND UTILITIES.
10. SPLICING OF CONDUCTORS SHALL BE IN POLE BASES OR ABOVE-GRADE WEATHER TIGHT JUNCTION BOXES ONLY. SPLICES BELOW GRADE ARE NOT PERMITTED. UNLESS NOTED TO BE SPLICED IN A HANDHOLE. WHEN SPLICED IN A HANDHOLE, A WATERPROOF SPLICE SHALL BE USED.
11. ALL MEASUREMENTS ARE APPROXIMATE. THE CONTRACTOR SHALL VERIFY MEASUREMENTS IN THE FIELD.
12. EXISTING UNIT DUCT SHALL BE REMOVED OR ABANDONED IN ACCORDANCE WITH SECTION 842 OF IDOT STANDARD SPECIFICATIONS FOR ROAD AND BRIDGE CONSTRUCTION.
13. DELIVERY OF ITEMS TO BE SALVAGED SHALL BE COORDINATED WITH THE VILLAGE OF WINNETKA.

## INDEX OF LIGHTING DRAWINGS:


| | |
|---|---|
| 189 | LIGHTING REMOVAL PLAN |
| 190 | TEMPORARY LIGHTING PLAN |
| 191 | PROPOSED LIGHTING PLAN |
| 192 - 195 | DISTRICT 1 LIGHTING STANDARDS |


## IDOT D-1 STANDARDS

| | |
|---|---|
| BE 240 | COMBINATION LIGHTING CONTROLLER |
| BE 702 | MISCELLANEOUS ELECTRICAL DETAILS, SHEET A - (CABLE SPLICE, POLE WIRING, TRENCH DETAIL) |
| | TEMPORARY LIGHT POLE DETAILS |
| | TEMPORARY AERIAL CABLE INSTALLATION |

## LIGHTING BILL OF MATERIAL

| | CODE NO. | ITEM | UNIT | TOTAL QUANTITY |
|---|---|---|---|---|
| * | 81702110 | ELECTRIC CABLE IN CONDUIT, 600V (XLP-TYPE USE) 1/C NO. 10 | FOOT | 1350 |
| * | 81800240 | AERIAL CABLE, 2-1/C NO. 8 WITH MESSENGER WIRE | FOOT | 300 |
| | 84200500 | REMOVAL OF LIGHTING UNIT, SALVAGE | EACH | 2 |
| | 84200804 | REMOVAL OF POLE FOUNDATION | EACH | 2 |
| * | X8211004 | TEMPORARY LUMINAIRE, LED, ROADWAY, OUTPUT DESIGNATION D | EACH | 4 |
| * | X8212031 | LUMINAIRE, TYPE A (SPECIAL) | EACH | 4 |
| * | X8250060 | TEMPORARY LIGHTING CONTROLLER | EACH | 1 |
| * | X8250091 | COMBINATION LIGHTING CONTROLLER | EACH | 1 |

* INDICATES SPECIAL PROVISION

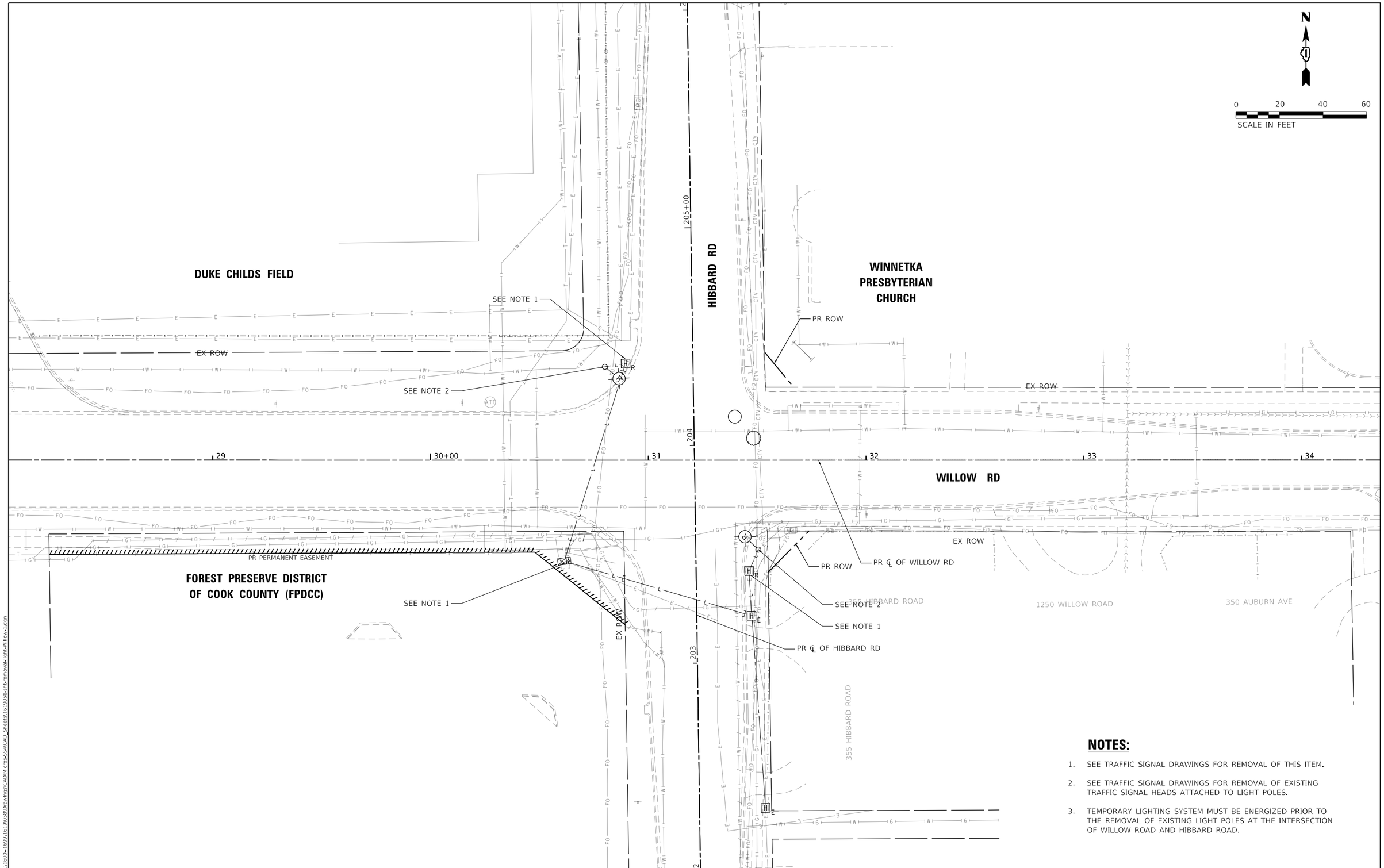


## NOTES:

1. SEE TRAFFIC SIGNAL DRAWINGS FOR REMOVAL OF THIS ITEM.
2. SEE TRAFFIC SIGNAL DRAWINGS FOR REMOVAL OF EXISTING TRAFFIC SIGNAL HEADS ATTACHED TO LIGHT POLES.
3. TEMPORARY LIGHTING SYSTEM MUST BE ENERGIZED PRIOR TO THE REMOVAL OF EXISTING LIGHT POLES AT THE INTERSECTION OF WILLOW ROAD AND HIBBARD ROAD.

MODEL: Default
FILE NAME: S:\JOL\1600-1699\1619038\Drawings\CAD\Micro-SSA\CAD Sheets\1619038-lth-removal-light-Willow-1.dgn

STRAND ASSOCIATES®
1170 SOUTH HOUBOLT ROAD
JOLIET, ILLINOIS 60431
(815) 744-4200

| | | |
|---|---|---|
| USER NAME = AlexaM | DESIGNED - | REVISED - |
| | DRAWN - | REVISED - |
| PLOT SCALE = 40.0000 ' / in. | CHECKED - | REVISED - |
| PLOT DATE = 7/8/2026 | DATE - 2/27/2026 | REVISED - |

**STATE OF ILLINOIS**
**DEPARTMENT OF TRANSPORTATION**

**LIGHTING REMOVAL PLAN**
**WILLOW ROAD**

SCALE: 1" = 20' | SHEET 1 OF 1 SHEETS | STA. 27+86.27 TO STA. 34+00.00

| F.A.U. RTE. | SECTION | COUNTY | TOTAL SHEETS | SHEET NO. |
|---|---|---|---|---|
| 3561 | 08-00103-00-FP | COOK | 254 | 189 |

CONTRACT NO. 61M29

ILLINOIS | FED. AID PROJECT

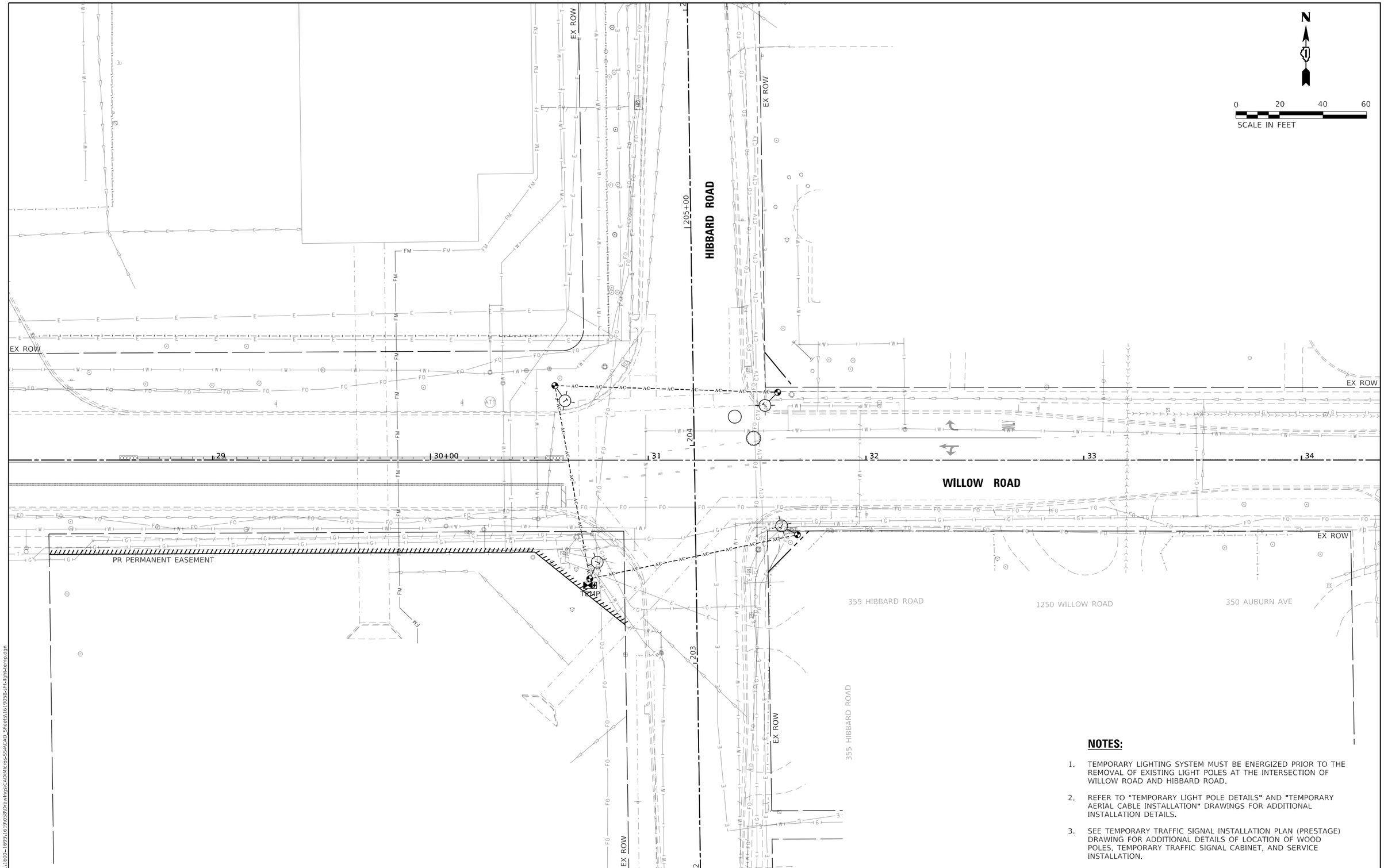


## NOTES:

1. TEMPORARY LIGHTING SYSTEM MUST BE ENERGIZED PRIOR TO THE REMOVAL OF EXISTING LIGHT POLES AT THE INTERSECTION OF WILLOW ROAD AND HIBBARD ROAD.
2. REFER TO "TEMPORARY LIGHT POLE DETAILS" AND "TEMPORARY AERIAL CABLE INSTALLATION" DRAWINGS FOR ADDITIONAL INSTALLATION DETAILS.
3. SEE TEMPORARY TRAFFIC SIGNAL INSTALLATION PLAN (PRESTAGE) DRAWING FOR ADDITIONAL DETAILS OF LOCATION OF WOOD POLES, TEMPORARY TRAFFIC SIGNAL CABINET, AND SERVICE INSTALLATION.

MODEL: Default
FILE NAME: S:\JOL\1600-1699\1619038\Drawings\CAD\Micro-SS4\CAD Sheets\1619038-ltlgnt-temp.dgn

STRAND ASSOCIATES®
1170 SOUTH HOUBOLT ROAD
JOLIET, ILLINOIS 60431
(815) 744-4200

| | | |
|---|---|---|
| USER NAME = AlexaM | DESIGNED - | REVISED - |
| | DRAWN - | REVISED - |
| PLOT SCALE = 40.0000 ' / in. | CHECKED - | REVISED - |
| PLOT DATE = 7/8/2026 | DATE - 2/27/2026 | REVISED - |

**STATE OF ILLINOIS**
**DEPARTMENT OF TRANSPORTATION**

**TEMPORARY LIGHTING PLAN**
**WILLOW ROAD AND HIBBARD ROAD**

SCALE: 1" = 20' | SHEET 1 OF 1 SHEETS | STA. 28+06.24 TO STA. 34+36.19

| F.A.U. RTE. | SECTION | COUNTY | TOTAL SHEETS | SHEET NO. |
|---|---|---|---|---|
| 3561 | 08-00103-00-FP | COOK | 254 | 190 |

CONTRACT NO. 61M29

ILLINOIS | FED. AID PROJECT

N

0 20 40 60
SCALE IN FEET

DUKE CHILDS FIELD

HIBBARD RD

WINNETKA PRESBYTERIAN CHURCH

EX ROW

PR ROW

WILLOW RD

29 30+00 31 32 33 34

205+00

204

203

202

PR PERMANENT EASEMENT

FOREST PRESERVE DISTRICT OF COOK COUNTY (FPDCC)

PR ROW

PR ℄ OF WILLOW RD

PR ℄ OF HIBBARD RD

355 HIBBARD ROAD

1250 WILLOW ROAD

350 AUBURN AVE

355 HIBBARD ROAD

## PROPOSED LEGEND

(A) 2 - ELECTRIC CABLE IN CONDUIT, 600V (XLP-TYPE USE) 1/C NO. 10

(B) 4 - ELECTRIC CABLE IN CONDUIT, 600V (XLP-TYPE USE) 1/C NO. 10

MODEL: Default
FILE NAME: $:\IDOL\1600-1699\1619038\Drawings\CAD\Micros-SSA\CAD_Sheets\1619038-sht-Hjnt-Willow-1.dgn


STRAND ASSOCIATES®
1170 SOUTH HOUBOLT ROAD
JOLIET, ILLINOIS 60431
(815) 744-4200


| | | | |
|---|---|---|---|
| USER NAME = AlexaM | DESIGNED - | REVISED - | |
| | DRAWN - | REVISED - | |
| PLOT SCALE = 40.0000 ' / in. | CHECKED - | REVISED - | |
| PLOT DATE = 7/8/2026 | DATE - 2/27/2026 | REVISED - | |

**STATE OF ILLINOIS**
**DEPARTMENT OF TRANSPORTATION**

**PROPOSED LIGHTING PLAN**
**WILLOW ROAD**

SCALE: 1" = 20' | SHEET 1 OF 1 SHEETS | STA. 27+86.33 TO STA. 34+00.00

| F.A.U. RTE. | SECTION | COUNTY | TOTAL SHEETS | SHEET NO. |
|---|---|---|---|---|
| 3561 | 08-00103-00-FP | COOK | 254 | 191 |

CONTRACT NO. 61M29

ILLINOIS | FED. AID PROJECT

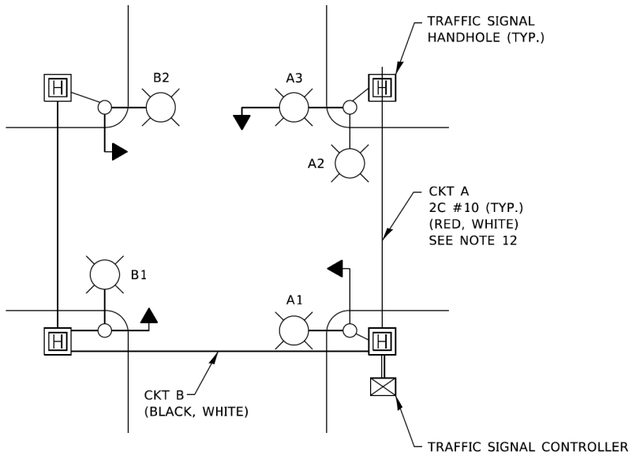


## TYPICAL LIGHTING CIRCUIT

(NOT TO SCALE)

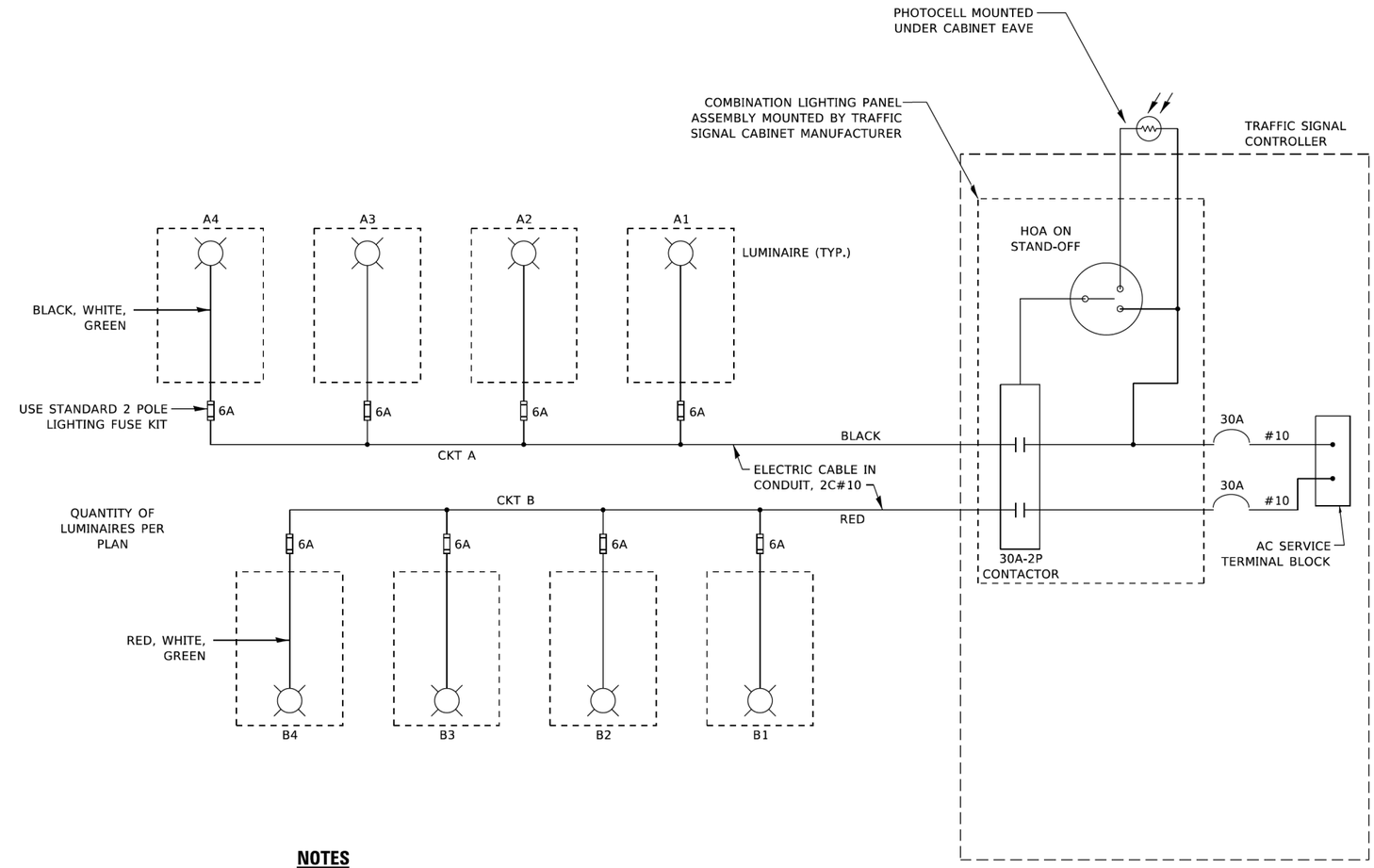


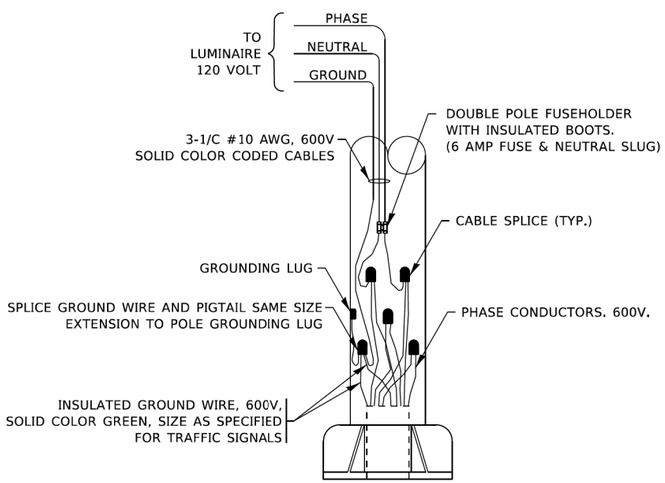


## COMBINATION POLE WIRING DETAIL

(NOT TO SCALE)

## NOTES

1. 4 LUMINAIRES PER CIRCUIT, MAXIMUM.
2. TWO #10 (XLP-TYPE USE) CABLES TO BE USED FOR LIGHTING CIRCUITS.
3. ROUTE LIGHTING CIRCUITS IN TRAFFIC SIGNAL CONDUIT SYSTEM.
4. ALL SPLICES AND CONNECTIONS FOR ROADWAY LIGHTING SHALL BE AT POLE BASE ONLY.
5. FOR LIGHTING CIRCUITS, CONNECT TWO CIRCUIT BREAKERS TO AC SERVICE TERMINAL BLOCK.
6. ALL WIRING SHALL BE NEATLY DRESSED, IDENTIFIED BY TAGS, AND SUPPORTED. (UNDERGROUND SPLICING OF LIGHTING CONDUCTORS IS NOT PERMITTED).
7. THE H.O.A. SWITCH SHALL BE LABELED AS "LIGHTING CONTROL" WITH THE POSITIONS "AUTO", "OFF" AND "TEST" WITH ENGRAVED NAME PLATES.
8. LIGHTING CONNECTED TO UPS BYPASS CIRCUIT.
9. COMBINATION LIGHTING MUST BE INSTALLED PRIOR TO SIGNAL TURN ON.
10. LUMINAIRE VOLTAGE SHALL BE 120V
11. POLE WIRING & FUSE KITS ARE INCLUDED IN THE LUMINAIRE PAY ITEM.
12. THE UNDERGROUND EQUIPMENT GROUND WIRE IS SHOWN IN THE TRAFFIC SIGNAL PLANS AND IS INCLUDED IN THE SIGNAL PLANS. IT IS SHARED GROUND BETWEEN SIGNALS AND LIGHTING.


STRAND ASSOCIATES®
1170 SOUTH HOUBOLT ROAD
JOLIET, ILLINOIS 60431
(815) 744-4200


| | | | |
|---|---|---|---|
| USER NAME = demanchelt | DESIGNED - RT | REVISED - T.G. 4/12/2017 | |
| | DRAWN - | REVISED - R. TOMSONS 3/22/18 | |
| PLOT SCALE = 100.0000 ' / in. | CHECKED - RT | REVISED - T.G. 8/03/2021 | |
| PLOT DATE = 5/5/2022 | DATE - 08/18/2014 | REVISED - T.G. 5/05/2022 | |

**STATE OF ILLINOIS**
**DEPARTMENT OF TRANSPORTATION**

**COMBINATION LIGHTING, TRAFFIC SIGNAL SCHEMATIC**

SCALE: NONE | SHEET 1 OF 1 SHEETS | STA. TO STA.

| F.A.U. RTE. | SECTION | COUNTY | TOTAL SHEETS | SHEET NO. |
|---|---|---|---|---|
| 3561 | 08-00103-00-FP | COOK | 254 | 192 |
| | BE-240 | CONTRACT NO. 61M29 | | |
| | ILLINOIS | FED. AID PROJECT | | |

MODEL: Default
FILE NAME: pw:\\ildot-pw.bentley.com:PWIDOT\Documents\IDOT Offices\District 1\Projects\DistStd22x34\CADData\CADsheets\be240.dgn

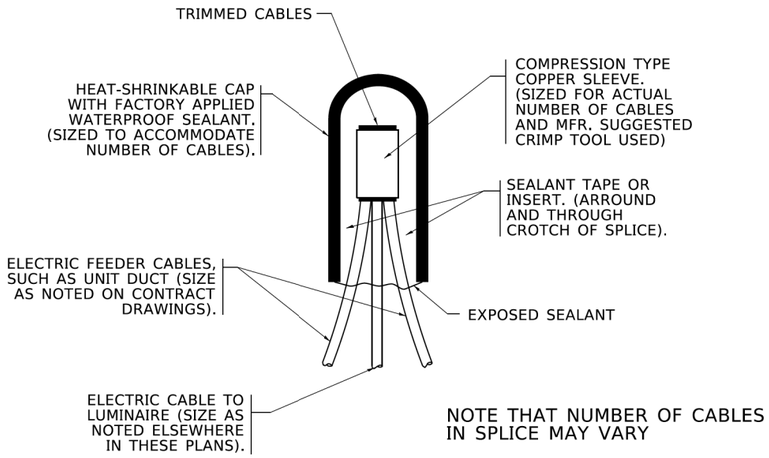


**TYPICAL SPLICE DETAIL**

**N.T.S.**

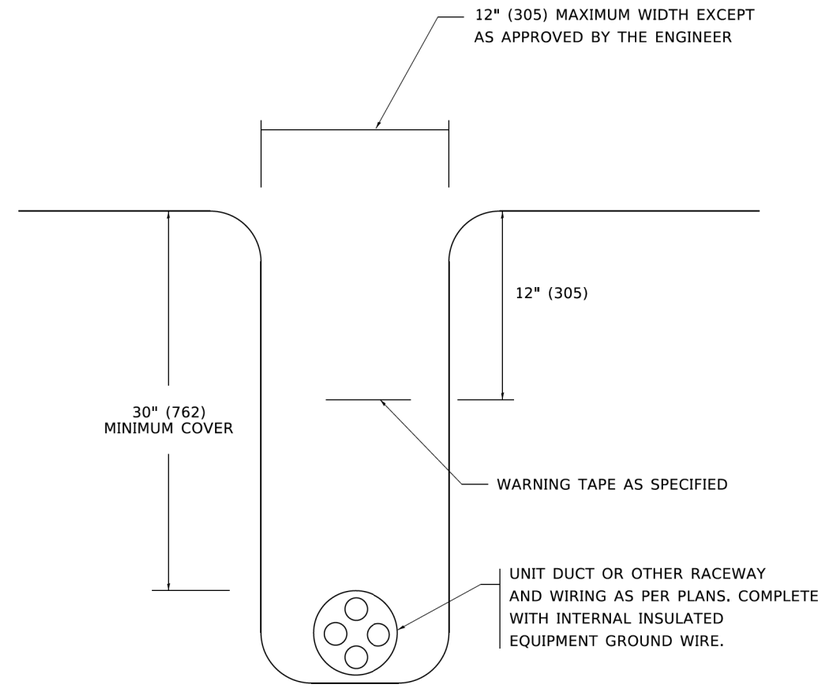


**TYPICAL WIRING IN TRENCH DETAIL**

**N.T.S.**

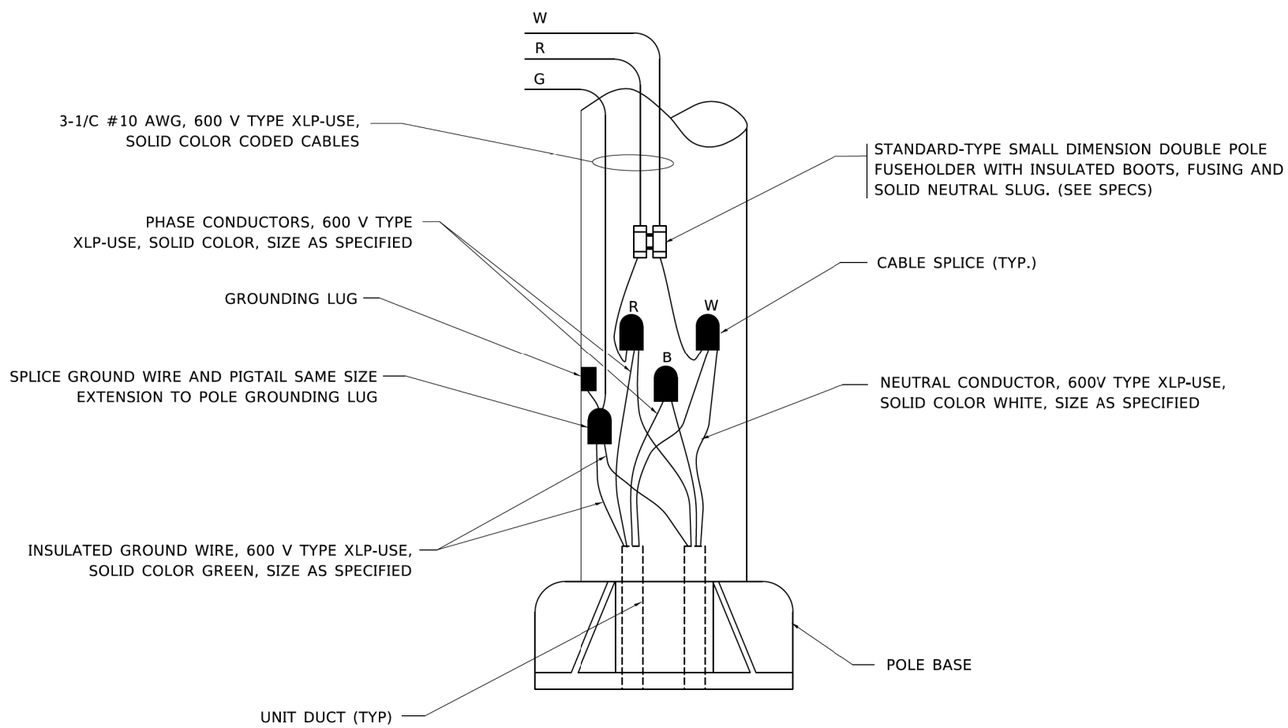


**POLE WIRING DETAIL**

**N.T.S.**

MODEL: Default
FILE NAME: pw:\\planroom.dot.illinois.gov:PWIDOT\Documents\IDOT Offices\District 1\Projects\DistStd22x34\CADData\CADsheets\be702.dgn

| | | | | | | | | | | | |
|---|---|---|---|---|---|---|---|---|---|---|---|
| STRAND ASSOCIATES® 1170 SOUTH HOUBOLT ROAD JOLIET, ILLINOIS 60431 (815) 744-4200 | USER NAME = leysa | DESIGNED - | REVISED - 02/04/2020 | STATE OF ILLINOIS DEPARTMENT OF TRANSPORTATION | MISC. ELECTRICAL DETAILS SHEET A | F.A.U. RTE. | SECTION | COUNTY | TOTAL SHEETS | SHEET NO. |
| | | DRAWN - | REVISED - | | | 3561 | 08-00103-00-FP | COOK | 254 | 193 |
| | PLOT SCALE = 50.0000 ' / in. | CHECKED - | REVISED - | | | BE-702 | | CONTRACT NO. 61M29 | | |
| | PLOT DATE = 3/2/2020 | DATE - 08/08/2003 | REVISED - | | SCALE: NONE SHEET 1 OF 1 SHEETS STA. TO STA. | ILLINOIS FED. AID PROJECT | | | | |

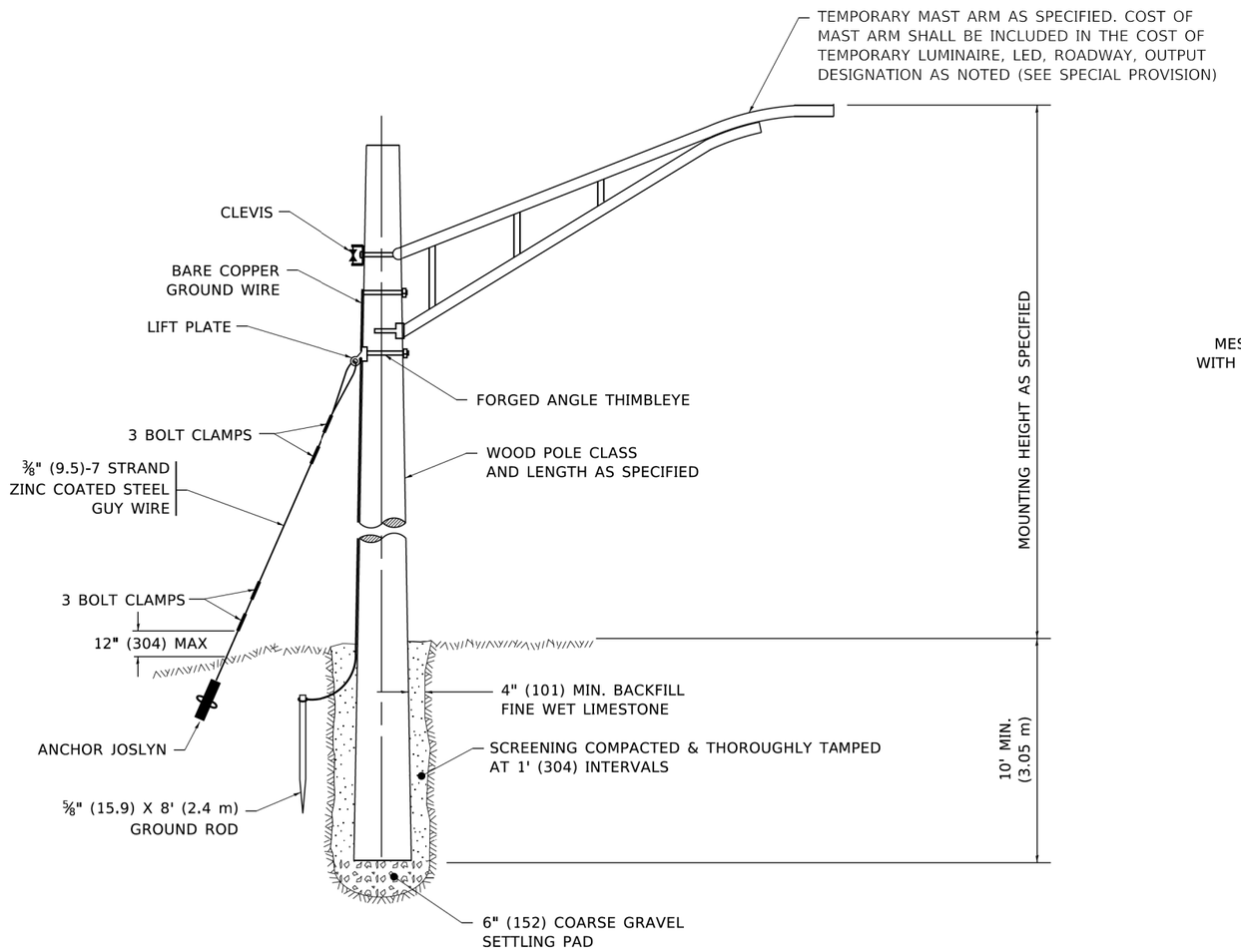


# TEMPORARY LIGHT POLE DETAIL

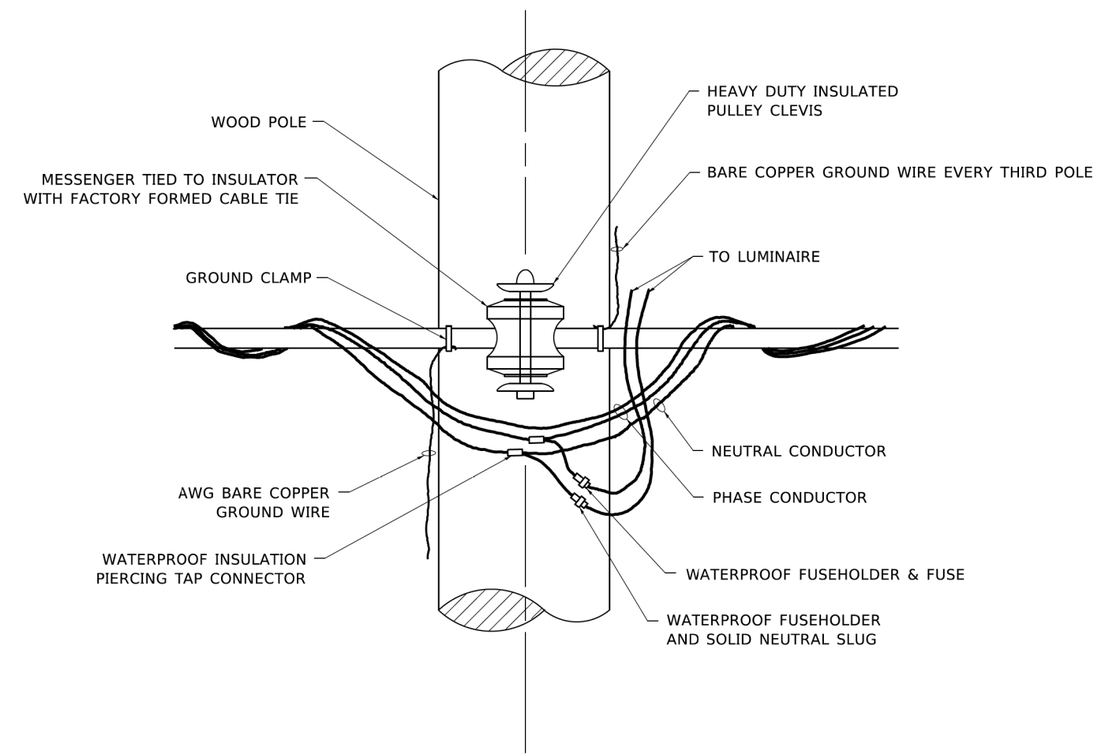


# TEMPORARY LIGHT POLE ATTACHMENT DETAIL

NOTE:

1. ALL DIMENSIONS IN INCHES (MILLIMETERS) UNLESS OTHERWISE INDICATED.
2. MAST ARM SHALL BE RATED FOR THE SPECIFIED MOUNTING HEIGHT.

MODEL: Default
FILE NAME: pw:\\plannroom.dot.illinois.gov:PWIDOT\Documents\IDOT Offices\District 1\Projects\DistStd22x34\CADData\CADsheets\be800.dgn

STRAND ASSOCIATES®
1170 SOUTH HOUBOLT ROAD
JOLIET, ILLINOIS 60431
(815) 744-4200

| | | | |
|---|---|---|---|
| USER NAME = footemj | DESIGNED - | REVISED - | 08-08-03 |
| | DRAWN - | REVISED - | R.T. 07-26-16 |
| PLOT SCALE = 50.0010 ' / in. | CHECKED - | REVISED - | |
| PLOT DATE = 4/19/2019 | DATE - | REVISED - | |

**STATE OF ILLINOIS**
**DEPARTMENT OF TRANSPORTATION**

**TEMPORARY LIGHT POLE DETAILS**

SCALE: NONE | SHEET 1 OF 1 SHEETS | STA. TO STA.

| F.A.U. RTE. | SECTION | COUNTY | TOTAL SHEETS | SHEET NO. |
|---|---|---|---|---|
| 3561 | 08-00103-00-FP | COOK | 254 | 194 |

CONTRACT NO. 61M29

ILLINOIS | FED. AID PROJECT

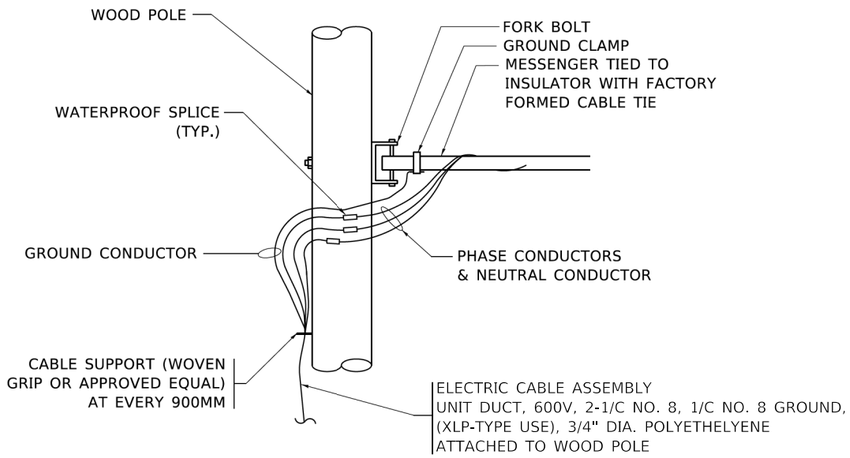


**AERIAL CABLE CONNECTION DETAIL**

N.T.S.

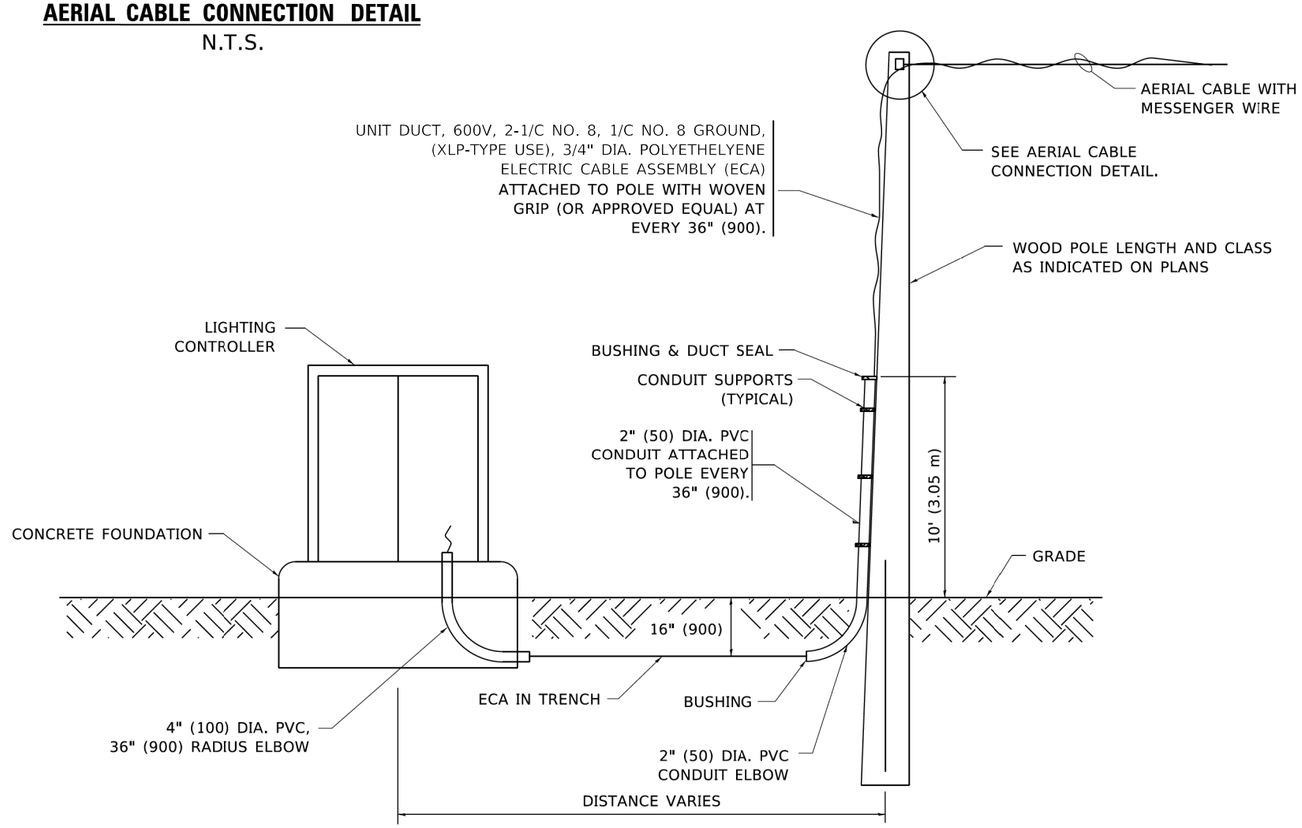


**WOOD POLE TO LIGHTING CONTROLLER WIRING CONNECTION DETAIL**

N.T.S.

NOTES:

1. ALL DIMENSIONS IN INCHES (MILLIMETERS) UNLESS OTHERWISE INDICATED.
2. SEE PROPOSED LIGHTING PLAN FOR CONDUIT, CABLE AND ROUTING.
3. THE CONTRACTOR SHALL PROVIDE INTERMEDIATE SUPPORTS TO MAINTAIN MINIMUM CLEARANCES. REFER TO AERIAL AERIAL CABLE ATTACHED TO STRUCTURE DETAIL.
4. COST OF SPLICES AND MOUNTING HARDWARE SHALL BE INCLUDED IN THE UNIT PRICE FOR AERIAL CABLE.
5. COST OF CONDUIT AND HARDWARE FOR TRANSITION FROM TEMPORARY LIGHTING CONTROLLER TO WOOD POLE SHALL BE INCLUDED IN THE COST OF THE TEMPORARY LIGHTING CONTROLLER.

STRAND ASSOCIATES®
1170 SOUTH HOUBOLT ROAD
JOLIET, ILLINOIS 60431
(815) 744-4200

| | | | |
|---|---|---|---|
| USER NAME = footemj | DESIGNED - | REVISED - | 08-08-03 |
| | DRAWN - | REVISED - | |
| PLOT SCALE = 50.0000 ' / in. | CHECKED - | REVISED - | |
| PLOT DATE = 4/19/2019 | DATE - | REVISED - | |

**STATE OF ILLINOIS**
**DEPARTMENT OF TRANSPORTATION**

**TEMPORARY AERIAL CABLE INSTALLATION**

SCALE: NONE | SHEET 1 OF 1 SHEETS | STA. TO STA.

| F.A.U. RTE. | SECTION | COUNTY | TOTAL SHEETS | SHEET NO. |
|---|---|---|---|---|
| 3561 | 08-00103-00-FP | COOK | 254 | 195 |

CONTRACT NO. 61M29

ILLINOIS | FED. AID PROJECT

MODEL: Default
FILE NAME: pw:\\planroom.dot.illinois.gov:PWIDOT\Documents\IDOT Offices\District 1\Projects\DistStd22x34\CADdata\CADsheets\tbe801.dgn

tbe801.dgn 4/19/2019 3:26:08 PM User:footemj

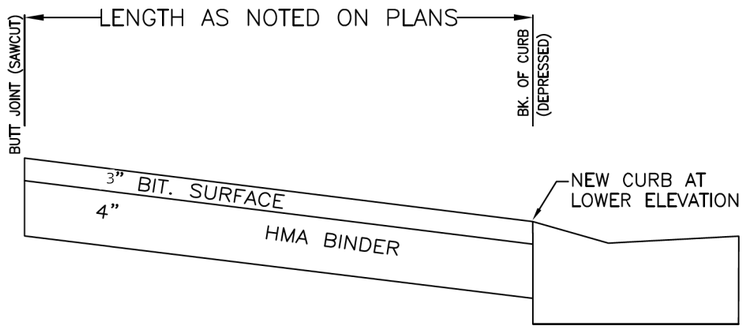


DRIVEWAY SURFACE TO BE LOWERED

NOT TO SCALE

DATE: 2-1-2023

# TYPICAL HMA DRIVEWAY

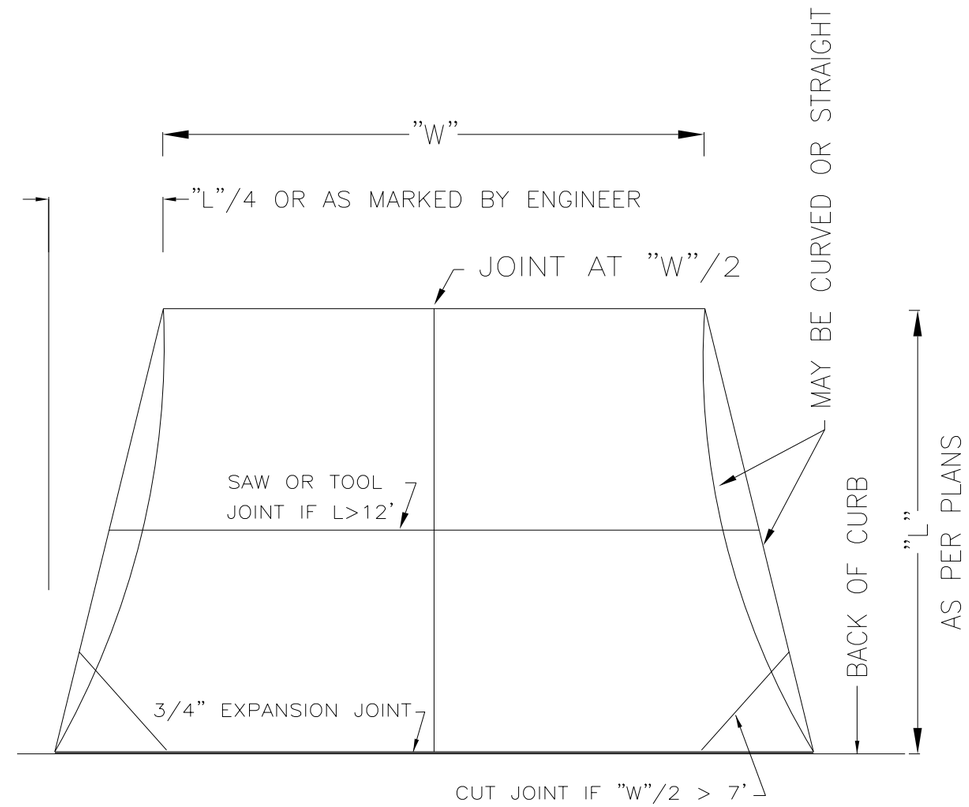


NOT TO SCALE

DATE: 2-1-2022

# TYPICAL PCC DRIVEWAY

MODEL: Default
FILE NAME: $:\DOL\1600-1699\1619038\Drawings\CAD\Micros-SSA\CAD_Sheets\1619038-sht-VOW-Standard Details.dgn

STRAND ASSOCIATES®
1170 SOUTH HOUBOLT ROAD
JOLIET, ILLINOIS 60431
(815) 744-4200

| | | |
|---|---|---|
| USER NAME = AlexaM | DESIGNED - | REVISED - |
| | DRAWN - | REVISED - |
| PLOT SCALE = 100.0000 ' / in. | CHECKED - | REVISED - |
| PLOT DATE = 7/8/2026 | DATE - 2/27/2026 | REVISED - |

**STATE OF ILLINOIS**
**DEPARTMENT OF TRANSPORTATION**

**VILLAGE OF WINNETKA STANDARD DETAILS**

SCALE: N/A | SHEET 1 OF 1 SHEETS | STA. N/A TO STA. N/A

| F.A.U. RTE. | SECTION | COUNTY | TOTAL SHEETS | SHEET NO. |
|---|---|---|---|---|
| 3561 | 08-00103-00-FP | COOK | 254 | 196 |

CONTRACT NO. 61M29

ILLINOIS | FED. AID PROJECT

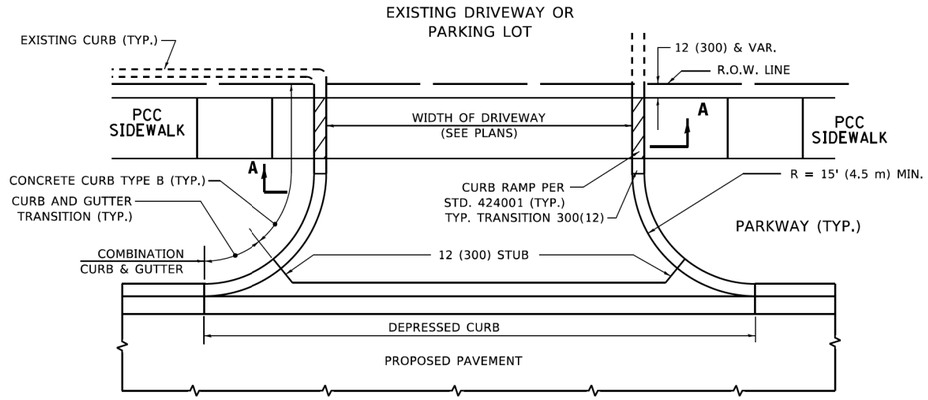


**WITH CONCRETE CURB, TYPE B**

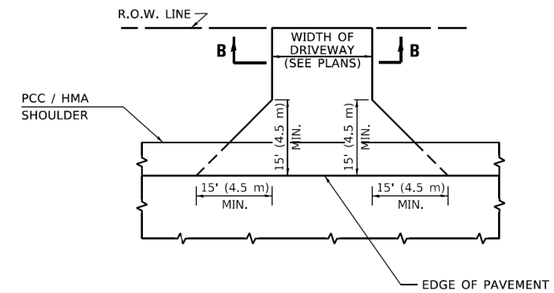


**ADJACENT TO PCC /HMA SHOULDER**

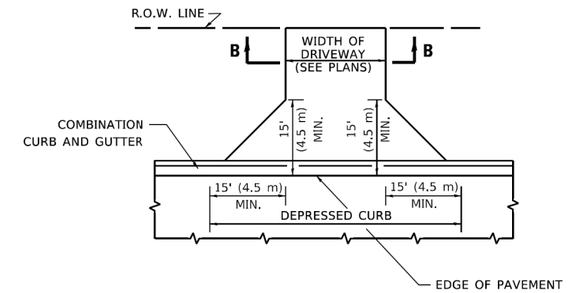


**ADJACENT TO CURB AND GUTTER**

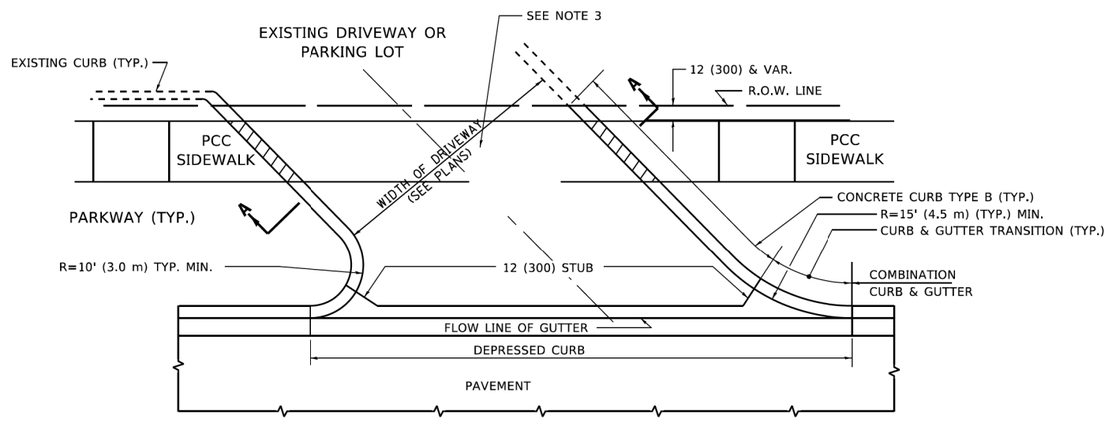


**WITH CONCRETE CURB, TYPE B**

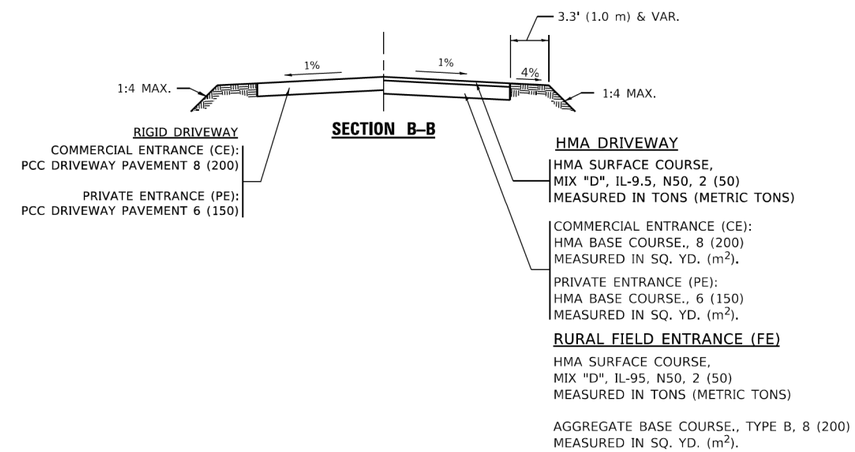


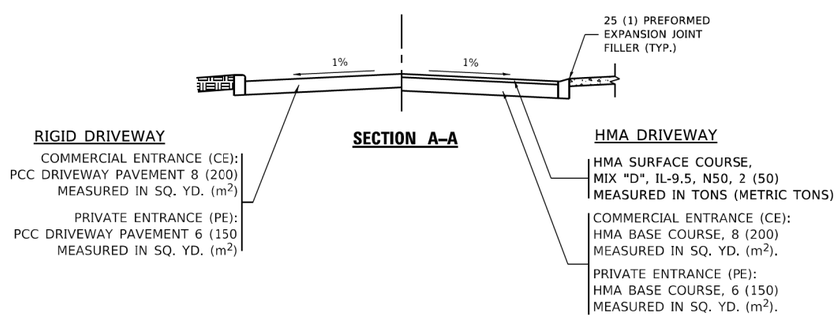


## GENERAL NOTES

1. DRIVEWAY SLOPES, LOCATIONS, & GEOMETRIC LAYOUT SHALL BE IN ACCORDANCE WITH THE LATEST EDITION OF THE "HANDBOOK FOR POLICY ON PERMITS FOR ACCESS DRIVEWAYS TO STATE HIGHWAYS". FOR FURTHER LAYOUT REQUIREMENTS, REFER TO ILLUSTRATIONS IN THE PERMIT HANDBOOK. DRIVEWAYS SHALL BE REPLACED IN KIND, UNLESS OTHERWISE NOTED ON THE PLANS.

2. COMMERCIAL DRIVEWAYS SHALL BE CONSTRUCTED WITH CONCRETE CURB, TYPE B RETURNS EXCEPT WHEN THE SIDEWALK EDGE IS 4 FEET (1.2 METERS) OR LESS FROM THE BACK OF CURB, CONSTRUCT A FLARE DRIVEWAY WITHOUT CURB.

ALL DIMENSIONS ARE IN INCHES (MILLIMETERS) UNLESS OTHERWISE NOTED.

MODEL: Default
FILE NAME: pw:\\ildot-pw.bentley.com:PWIDOT\Documents\IDOT Offices\District 1\Projects\DistStd22x34\CADData\CADsheets\bd01.dgn

| | | | |
|---|---|---|---|
| USER NAME = Lawrence,DeManche | DESIGNED - R. SHAH | REVISED - R. BORO 06-11-08 | |
| | DRAWN - | REVISED - R. BORO 09-06-11 | |
| PLOT SCALE = 100.0000 ' / in. | CHECKED - | REVISED - K. SMITH 08-28-19 | |
| PLOT DATE = 11/18/2022 | DATE - 11-04-95 | REVISED - K. SMITH 11-18-22 | |

**STATE OF ILLINOIS**
**DEPARTMENT OF TRANSPORTATION**

**DRIVEWAY DETAILS – DISTANCE BETWEEN R.O.W. AND FACE OF CURB & EDGE OF SHOULDER ≥15'(4.5m)**

SCALE: NONE | SHEET 1 OF 1 SHEETS | STA. TO STA.

| F.A.U. RTE. | SECTION | COUNTY | TOTAL SHEETS | SHEET NO. |
|---|---|---|---|---|
| 3561 | 08-00103-00-FP | COOK | 254 | 197 |
| BD400–01 (BD–01) | | CONTRACT NO. 61M29 | | |
| | | ILLINOIS | FED. AID PROJECT | |

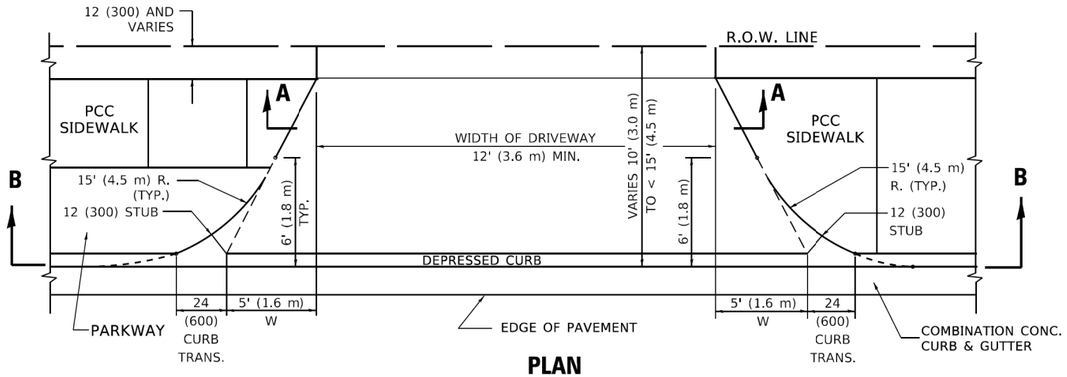


**PLAN**

**10' (3.0 m) TO < 15' (4.5 m)**

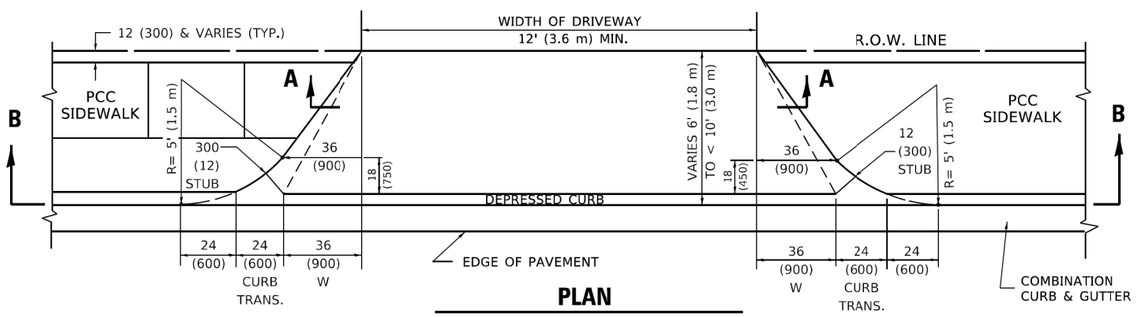


**PLAN**

**6' (1.8 m) TO < 10' (3.0 m)**

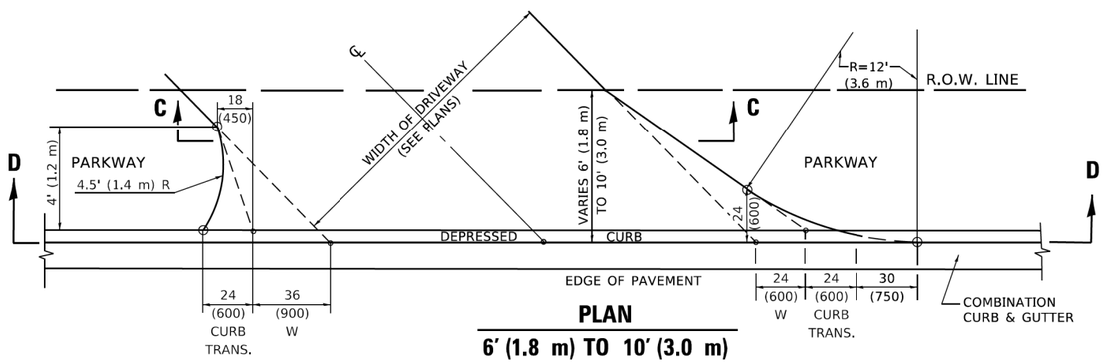


**PLAN**

**6' (1.8 m) TO 10' (3.0 m)**

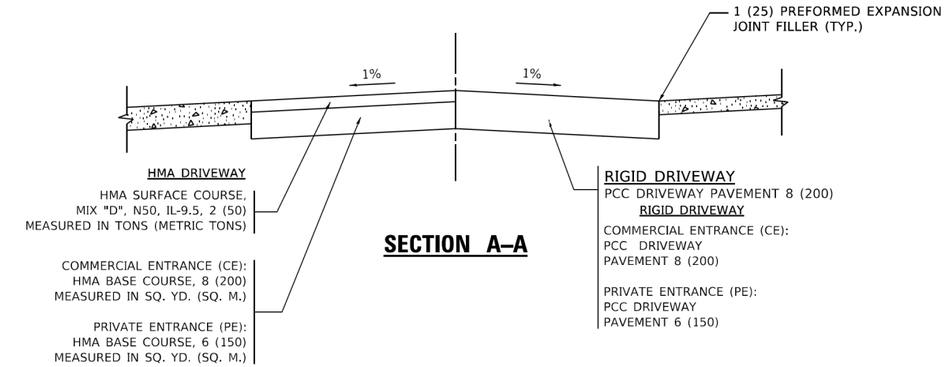


**SECTION A–A**

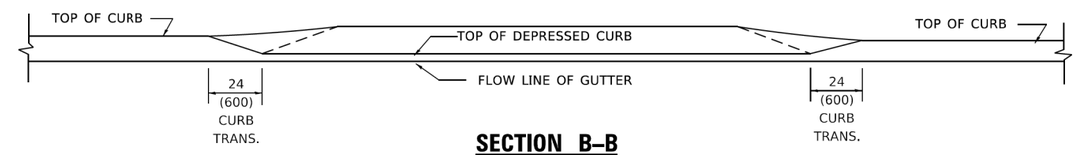


**SECTION B–B**

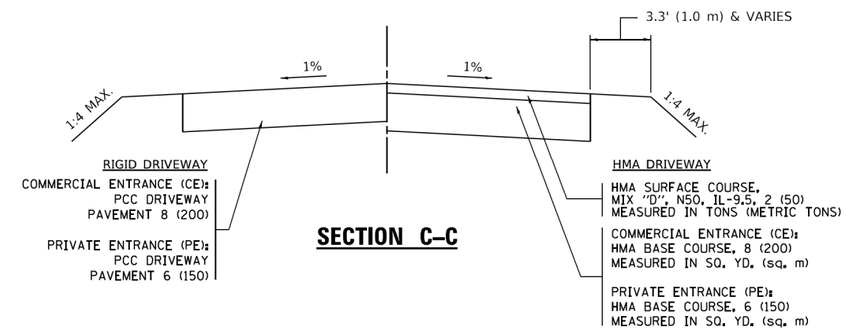


**SECTION C–C**

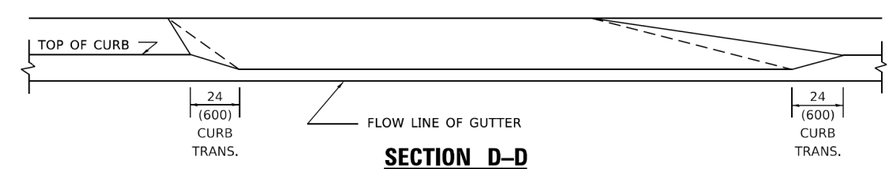


**SECTION D–D**

## GENERAL NOTES

1. DRIVEWAY SLOPES, LOCATIONS, & GEOMETRIC LAYOUT SHALL BE IN ACCORDANCE WITH THE LATEST EDITION OF THE "HANDBOOK FOR POLICY ON PERMITS FOR ACCESS DRIVEWAYS TO STATE HIGHWAYS". FOR FURTHER LAYOUT REQUIREMENTS, REFER TO ILLUSTRATION 10 IN THE PERMIT HANDBOOK. WHERE SIDEWALKS EXIST, DRIVEWAYS SHALL BE REPLACED WITH RIGID PAVEMENT. WHERE NO SIDEWALKS EXIST, DRIVEWAYS SHALL BE REPLACED IN KIND. SIDEWALK CROSS SLOPE THRU DRIVEWAY AREA TO BE A MAXIMUM OF 1:50.
2. WHEN THE DISTANCE BETWEEN R.O.W. AND THE BACK OF CURB IS EQUAL TO OR LESS THAN 8' (2.4 m), THE PCC SIDEWALK SHALL EXTEND TO THE BACK OF CURB.
3. "W" VARIES FROM 36 (900) TO 5' (1.5 m) PROPORTIONAL TO THE LENGTH (L), FROM 6' (1.8 m) TO 10' (3 m).

ALL DIMENSIONS ARE IN INCHES (MILLIMETERS) UNLESS OTHERWISE NOTED.

MODEL: Default
FILE NAME: pw:\\ildot-pw.bentley.com:PWIDOT\Documents\IDOT Offices\District 1\Projects\Dist\Std22x34\CADData\CADsheets\bd02.dgn

| | | | |
|---|---|---|---|
| USER NAME = Lawrence.DeManche | DESIGNED - R. SHAH | REVISED - R. BORO 01-01-07 | |
| | DRAWN - | REVISED - R. BORO 09-06-11 | |
| PLOT SCALE = 100.0000 ' / in. | CHECKED - | REVISED - K. SMITH 08-27-19 | |
| PLOT DATE = 11/18/2022 | DATE - 11-06-95 | REVISED - K. SMITH 11-18-22 | |

**STATE OF ILLINOIS**
**DEPARTMENT OF TRANSPORTATION**

**DRIVEWAY DETAILS**
**DISTANCE BETWEEN ROW AND FACE OF CURB < 15' (4.5m)**

SCALE: NONE | SHEET 1 OF 1 SHEETS | STA. TO STA.

| F.A.U. RTE. | SECTION | COUNTY | TOTAL SHEETS | SHEET NO. |
|---|---|---|---|---|
| 3561 | 08-00103-00-FP | COOK | 254 | 198 |
| | BD400–02 (BD–02) | CONTRACT NO. 61M29 | | |
| | | ILLINOIS | FED. AID PROJECT | |

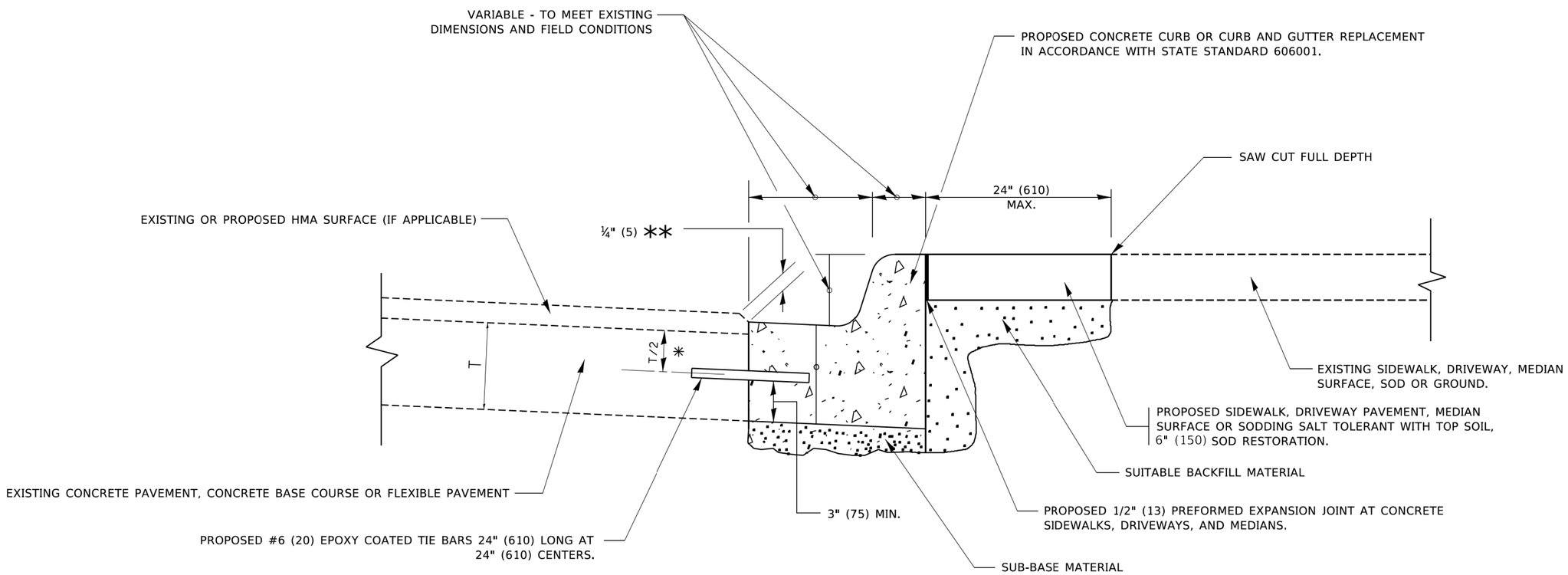


* 3" (75) MINIMUM FROM TOP AND BOTTOM OF THE CONCRETE PAVEMENT OR BASE COURSE.

** IF THE FINAL SURFACE OF THE PAVEMENT IS CONCRETE, THE GUTTER IS TO BE FLUSH WITH THE PAVEMENT.

# CURB OR CURB AND GUTTER REMOVAL AND REPLACEMENT

ALL DIMENSIONS ARE IN INCHES (MILLIMETERS) UNLESS OTHERWISE SHOWN.

MODEL: Default
FILE NAME: pw:\\planroom.dot.illinois.gov:PWIDOT\Documents\IDOT Offices\District 1\Projects\DistStd22x34\CADData\CADsheets\bd24.dgn

| | | | |
|---|---|---|---|
| USER NAME = footemj | DESIGNED - A. HOUSEH | REVISED - A. ABBAS 03-21-97 | STATE OF ILLINOIS DEPARTMENT OF TRANSPORTATION |
| | DRAWN - | REVISED - M. GOMEZ 01-22-01 | |
| PLOT SCALE = 50.0000 ' / in. | CHECKED - | REVISED - R. BORO 12-15-09 | |
| PLOT DATE = 7/11/2019 | DATE - 03-11-94 | REVISED - K. SMITH 07-11-19 | |

CURB OR CURB AND GUTTER REMOVAL AND REPLACEMENT

SCALE: NONE | SHEET 1 OF 1 SHEETS | STA. | TO STA.

| F.A.U. RTE. | SECTION | COUNTY | TOTAL SHEETS | SHEET NO. |
|---|---|---|---|---|
| 3561 | 08-00103-00-FP | COOK | 254 | 199 |
| BD600–06 (BD–24) | | CONTRACT NO. 61M29 | | |
| | | ILLINOIS FED. AID PROJECT | | |

# TYPICAL APPLICATION

**THE USE OF CROSS STREET PAVEMENT SEPARATION JOINTS FOR SKEWED OR LARGE INTERSECTIONS WHERE JOINTS MAY NOT MATCH**

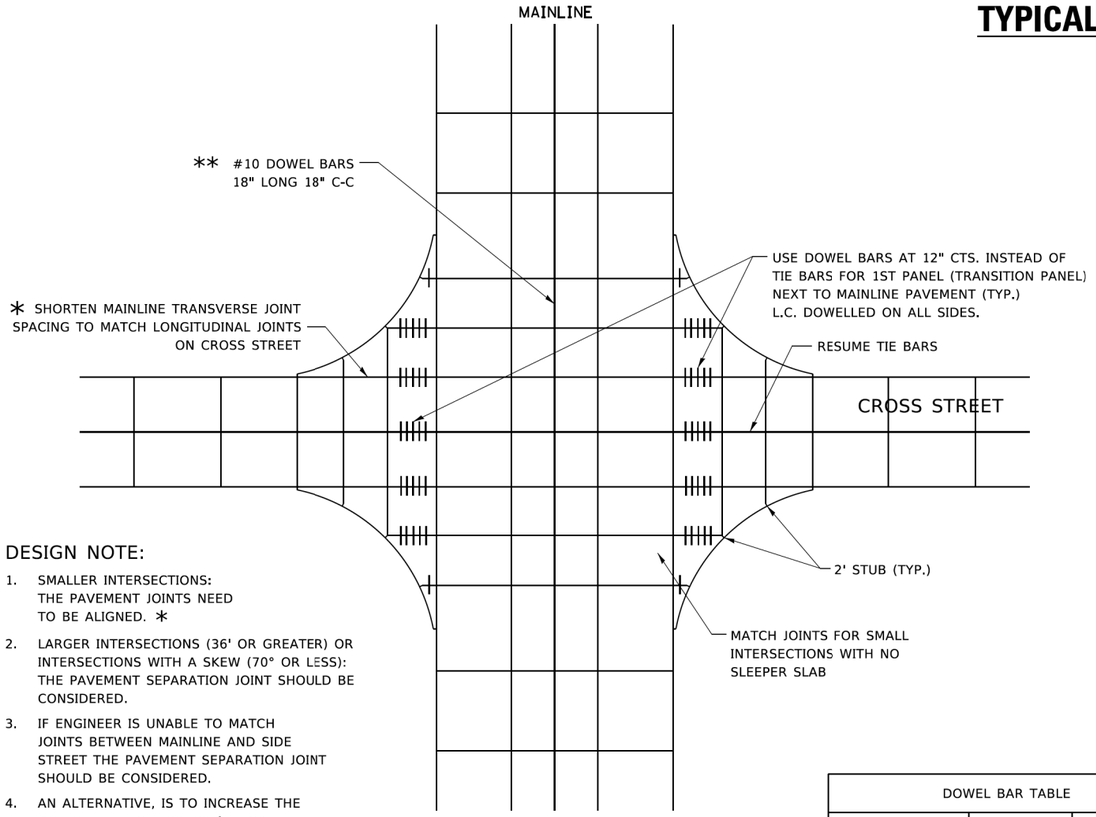


## PLAN

DESIGN NOTE:

1. SMALLER INTERSECTIONS: THE PAVEMENT JOINTS NEED TO BE ALIGNED. *
2. LARGER INTERSECTIONS (36' OR GREATER) OR INTERSECTIONS WITH A SKEW (70° OR LESS): THE PAVEMENT SEPARATION JOINT SHOULD BE CONSIDERED.
3. IF ENGINEER IS UNABLE TO MATCH JOINTS BETWEEN MAINLINE AND SIDE STREET THE PAVEMENT SEPARATION JOINT SHOULD BE CONSIDERED.
4. AN ALTERNATIVE, IS TO INCREASE THE PAVEMENT THICKNESS BY ½" FOR THE LENGTH OF THE AFFECTED PANELS AT THE INTERSECTION.
5. FOR LARGE INTERSECTIONS, (6 LANES OR MORE) WHERE JOINTS CAN BE MATCHED , USE #8 (25) DOWEL BARS INSTEAD OF #8 (25) TIE BARS AT EDGE OF MAINLINE PAVEMENT WHEN NO PAVEMENT SEPARATION JOINTS USED.

| DOWEL BAR TABLE | | |
|---|---|---|
| PAVEMENT THICKNESS | DOWEL BAR DIAMETER | DOWEL BAR LENGTH |
| 8" OR GREATER | 1½" | 18" |
| LESS THAN 8" | NA | NA |

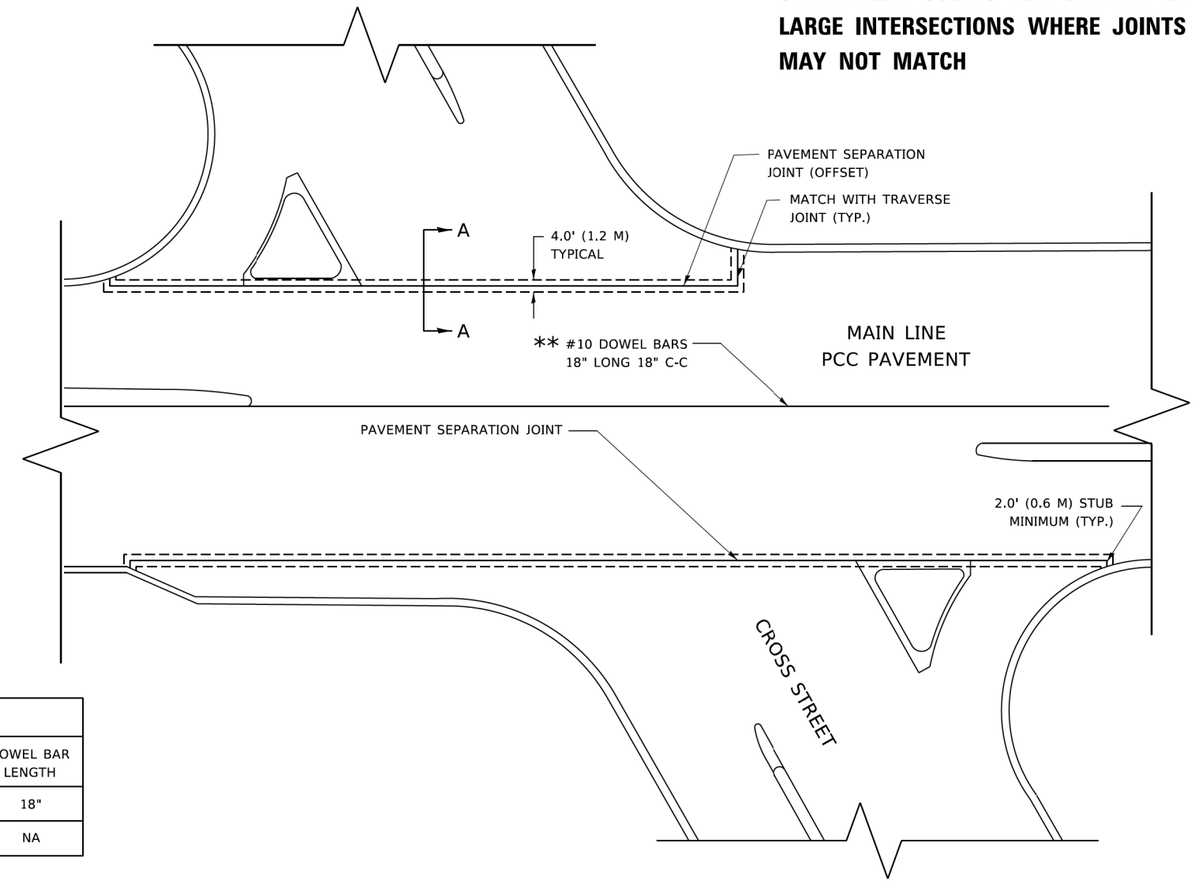


NOTE:

1. JOINT FILLER SHALL CONSIST OF A SHEET OF ½" BITUMINOUS PREFORMED FIBER JOINT FILLER CONFORMING TO ARTICLE 1051.03 OF THE STANDARD SPECIFICATIONS.
2. THE JOINT SHALL BE SEALED WITH A HOT POUR JOINT SEALER CONFORMING TO ARTICLE 1050.02 OF THE STANDARD SPECIFICATIONS.
3. A SINGLE LAYER OF FELT ROOFING PAPER SHALL SERVE AS A BOND BREAKER.
4. JOINT SHALL CONTINUE THROUGH COMBINATION CURB & GUTTER OR PCC SHOULDER.

METHOD OF MEASUREMENT

THIS WORK WILL BE MEASURED FOR PAYMENT IN FEET, MEASURED IN PLACE.

BASIS OF PAYMENT

1. THIS WORK WILL BE PAID FOR AT THE UNIT PRICE PER FOOT FOR "SLEEPER SLAB".
2. BOND BREAKER AND½" (13MM) JOINT FILLER SHALL BE INCLUDED IN THE PAY ITEM "SLEEPER sLAB"

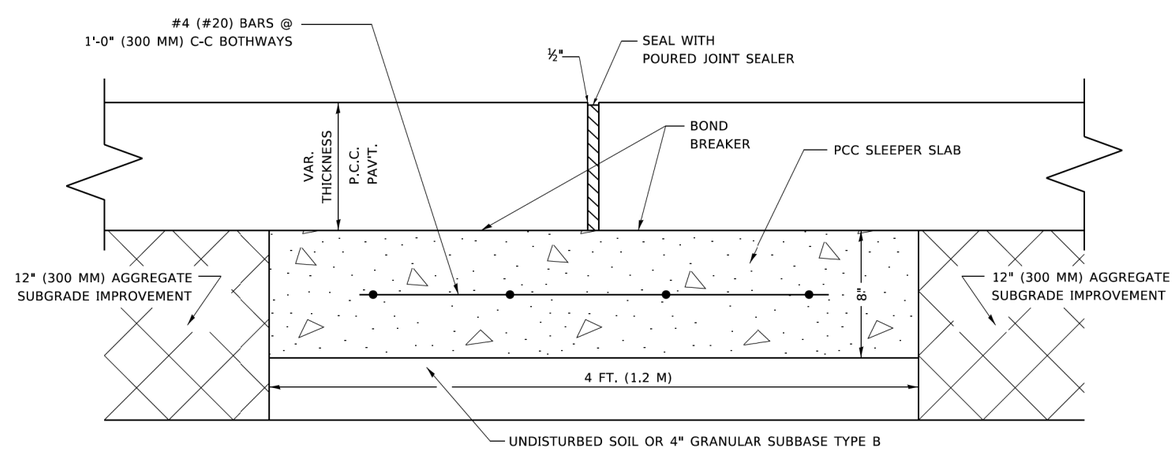


## PROPOSED SECTION A–A

MODEL: Default
FILE NAME: C:\pw_work\pwidot\footemj\d0108315\bd52.dgn

| | | | |
|---|---|---|---|
| USER NAME = footemj | DESIGNED - TGM | REVISED - CADD 06-18-10 | |
| | DRAWN - | REVISED - O. PATEL 3-27-19 | |
| PLOT SCALE = 50.0000 ' / in. | CHECKED - AM | REVISED - | |
| PLOT DATE = 3/27/2019 | DATE - 05-14-2002 | REVISED - | |

**STATE OF ILLINOIS**
**DEPARTMENT OF TRANSPORTATION**

**DETAIL OF PAVEMENT SEPARATION JOINT FOR JOINTED PCC PAVEMENTS AT INTERSECTIONS**

SCALE: NONE | SHEET 1 OF 1 SHEETS | STA. TO STA.

| F.A.U. RTE. | SECTION | COUNTY | TOTAL SHEETS | SHEET NO. |
|---|---|---|---|---|
| 3561 | 08-00103-00-FP | COOK | 254 | 200 |
| BD52 | | CONTRACT NO. 61M29 | | |
| | | ILLINOIS | FED. AID PROJECT | |