F.A.I. RTE.	SECTION	COUNTY	TOTAL SHEETS	SHEET NO.
57	139 HBR-6	KANKAKEE	202	1
		CONTRACT NO. 66997		
	ILLINOIS	FED. AID PROJECT		

"AS BUILTS"

P-93-020-20
D-93-043-20
R-93-005-20

* 202+2= 204 TOTAL SHEETS

STATE OF ILLINOIS
DEPARTMENT OF TRANSPORTATION

PROPOSED HIGHWAY PLANS

FAI 57 AND WALDRON ROAD (FAU 6184)

SECTION 139 HBR-6
PROJECT NHPP QL8L(443)

ROADWAY IMPROVEMENTS AND BRIDGE REPLACEMENT
KANKAKEE COUNTY

C-93-079-20

INDEX OF SHEETS

1			COVER SHEET
2			INDEX OF SHEETS, GENERAL NOTES, STANDARDS
3			SIGNATURE SHEET
4	TO	17	SUMMARY OF QUANTITIES
18	TO	20	TYPICAL SECTIONS
21	TO	22	REMOVAL SCHEDULE OF QUANTITIES
23			EARTHWORK SCHEDULE OF QUANTITIES
24			ROADWAY SCHEDULE QUANTITIES
25			MOT SCHEDULE OF QUANTITIES
26			EROSION CONTROL SCHEDULE OF QUANTITIES
27	TO	28	DRAINAGE SCHEDULE OF QUANTITIES
29			PMK AND SIGNING SCHEDULE OF QUANTITIES
30			ALIGNMENT, TIES, AND BENCHMARKS
31	TO	33	REMOVAL PLANS
34	TO	38	PLAN AND PROFILES
39			ADA RAMPS PLAN
40	TO	69	SUGGESTED STAGES OF CONSTRUCTION
70	TO	72	EROSION AND SEDIMENT CONTROL PLANS
73	TO	78	DRAINAGE AND UTILITY PLANS
79			GRADING PLAN
80	TO	83	PLAT OF HIGHWAYS
84	TO	87	SIGNING AND PAVEMENT MARKING PLANS
88			SIGNING DETAIL
89			PAVEMENT MARKING DETAIL
90	TO	143	STRUCTURE SN 046-0153
144	TO	166	RETAINING WALLS A & B
167			BYCYCLE RAILING DETAIL
168			ROADWAY DETAIL
169	TO	170A	PAVEMENT CONNECTOR DETAIL
170B			CONCRETE BARRIER TRANSITION DETAIL
171			PATTERN
172	TO	184	CROSS SECTIONS, I-57
185	TO	199	CROSS SECTIONS, WALDRON ROAD
200	TO	202	CROSS SECTIONS, MUNI 2530

BEGIN CONSTRUCTION
STA. 15 + 38

BEGIN CONSTRUCTION
STA. 226 + 00

EXISTING STRUCTURE SN 046-0800
PROPOSED STRUCTURE SN 046-0153
TWO SPAN, PLATE GRIDER BRIDGE
STA. 18 + 24 TO STA. 20 + 93

END CONSTRUCTION
STA. 26 + 35

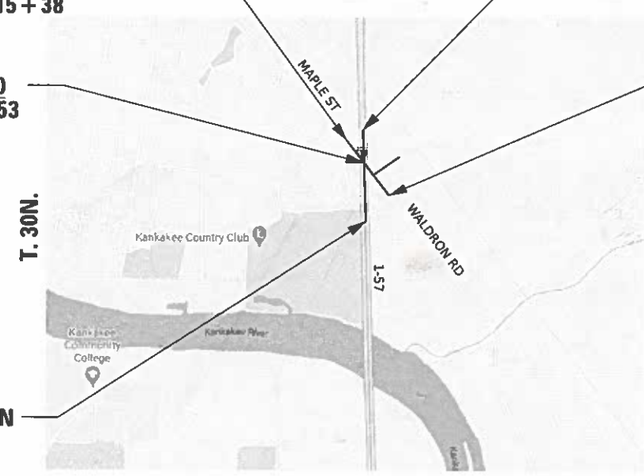

END CONSTRUCTION
STA. 233 + 50

N
LOCATION MAP
NOT TO SCALE

GROSS LENGTH = 2047.00 FT = 00.388 MILE
NET LENGTH = 2047.00 FT = 00.388 MILE

LOCATION OF SECTION INDICATED THUS:-

FUNCTIONAL CLASSIFICATION
MINOR ARTERIAL
2016 ADT = 4,770
INTERSATE URBAN HIGHWAY
2016 ADT = 28,000
P.V. = 68% S.U. = 4% M.U. = 28%

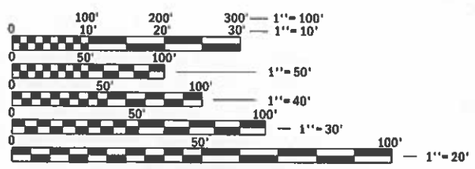

FULL SIZE PLANS HAVE BEEN PREPARED USING STANDARD ENGINEERING SCALES. REDUCED SIZED PLANS WILL NOT CONFORM TO STANDARD SCALES. IN MAKING MEASUREMENTS ON REDUCED PLANS, THE ABOVE SCALES MAY BE USED.

J.U.L.I.E.
JOINT UTILITY LOCATION INFORMATION FOR EXCAVATION
1-800-892-0123
OR 811

DISTRICT 3 NO. (815) 434-6131
PROJECT ENGINEER: BRAD DUNCAN P.E.
UNIT CHIEF: LUIS CALDERON P.E.

CONTRACT NO. 66997

STATE OF ILLINOIS
DEPARTMENT OF TRANSPORTATION

SUBMITTED March 24, 20 21
REGIONAL ENGINEER

August 13, 2021
ENGINEER OF DESIGN AND ENVIRONMENT

August 13, 2021
DIRECTOR OF HIGHWAYS PROJECT IMPLEMENTATION

PRINTED BY THE AUTHORITY OF THE STATE OF ILLINOIS

GENERAL NOTES

THE HMA SURFACE OF ALL MAILBOX TURNOUTS, PRIVATE ENTRANCES, COMMERCIAL ENTRANCES, AND SIDE ROADS SHALL BE MADE NEATLY, IN A WORKMANLIKE MANNER, AND SHALL ACCURATELY CONFORM TO THE SHAPES AND DIMENSIONS SHOWN ON THE PLAN DETAILS. IF REQUIRED BY THE ENGINEER, THE CONTRACTOR SHALL SAW CUT THE HMA SURFACE TO CONFORM TO THE SHAPES AND DIMENSIONS SHOWN ON THE PLAN DETAILS. THIS WORK WILL BE INCLUDED IN THE COST OF THE HMA SURFACE.

THE BASE COURSE WIDENING SHALL BE CARRIED THROUGH ALL ENTRANCES, SIDE ROADS, AND MAILBOX TURNOUTS. EXCEPTIONS WILL BE SHOWN ON THE PLANS.

THE FINISHED EARTHWORK SHALL HAVE A VEGETATION SUSTAINING SOIL COVERING THE TOP FOUR INCHES (100 MILLIMETERS) IN AREAS TO BE SEEDED OR SODDED. THE VEGETATION SUSTAINING SOIL REQUIRED WILL NOT BE PAID FOR SEPARATELY BUT WILL BE INCLUDED IN THE COST OF TOPSOIL EXCAVATION AND PLACEMENT.

SHORT TERM PAVEMENT MARKING SHALL BE USED TO OUTLINE EXIT AND ENTRANCE RAMPS FOR THE PRIME COAT APPLICATION AND EACH RESURFACING LIFT.

ON EXISTING PAVEMENT WHICH MAY BE RESURFACED, THE NEW HMA PAVEMENT SHALL BE BUILT WITH THE SAME CROSS SLOPE UNLESS NEW CROSS SLOPE RATES ARE GIVEN ON THE PLANS.

ALL ELEVATIONS REFERRING TO U.S.G.S. MEAN SEA LEVEL DATUM.

UNLESS OTHERWISE NOTED IN THE PLAN SHEETS, STATIONS AND OFFSETS REFERENCES ARE FROM THE PROPOSED CENTERLINE OF THE PARTICULAR ROADWAY SHOWN.

THE ABANDONED AT&T CONDUIT ATTACHED TO THE BRIDGE DECK SHALL BE INCLUDED IN THE COST OF REMOVAL OF EXISTING STRUCTURES

THE CONTRACTOR'S ATTENTION IS DIRECTED TO THE PRESENCE OF DEPARTMENT-OWNED UNDERGROUND ELECTRICAL CABLE WITHIN THE LIMITS OF THE PROPOSED IMPROVEMENT. THE CONTRACTOR SHALL REQUEST THE ILLINOIS DEPARTMENT OF TRANSPORTATION IN OTTAWA (815-434-8417) TO LOCATE THE UNDERGROUND FACILITIES, PROVIDING A MINIMUM OF 72 HOURS NOTICE. THE DEPARTMENT IS NOT A MEMBER OF THE JOINT UTILITY LOCATING INFORMATION FOR EXCAVATORS (JULIE) SYSTEM.

ALL DAMAGE TO DEPARTMENT OWNED UNDERGROUND FACILITIES, CAUSED BY THE CONTRACTOR SHALL BE REPAIRED TO THE SATISFACTION OF THE ENGINEER AND AT NO EXPENSE TO THE DEPARTMENT. THIS SHALL INCLUDE ALL TEMPORARY REPAIRS REQUIRED TO KEEP THE FACILITY OPERATIONAL WHILE MATERIAL IS BEING OBTAINED TO MAKE PERMANENT REPAIRS. SPLICING OF ELECTRIC CABLE WILL NOT BE ALLOWED. ELECTRIC CABLE SHALL BE REPLACED FROM POLE TO POLE OR CONTROLLER.

THE WORK REQUIRED TO CONNECT ANY SEWER TO AN EXISTING DRAINAGE STRUCTURE OR PIPE WILL NOT BE PAID FOR SEPARATELY, BUT WILL BE CONSIDERED AS INCLUDED IN THE CONTRACT UNIT PRICE BID FOR THE SEWER ITEMS.

MEMBERS OF JULIE KNOWN TO BE WITHIN THE LIMITS OF THE IMPROVEMENT ARE: (SEE STATUS OF UTILITIES TO BE ADJUSTED SPECIAL PROVISION FOR CONTACT INFORMATION)

1. COMMONWEALTH EDISON COMPANY
2. AT&T
3. AQUA IL (WATER)
4. CMS (FIBER OPIC)
5. COMCAST
6. NICOR
7. CITY OF KANKAKEE (SANITARY SEWER)

THE CONTRACTOR SHALL CONTACT JULIE AT LEAST 48 HOURS PRIOR TO EXCAVATION TO DETERMINE WHICH UTILITIES ARE WITHIN THE AREA.

THE FOLLOWING RATES OF APPLICATION HAVE BEEN USED IN CALCULATING PLAN QUANTITIES:

GRANULAR MATERIALS	2.05	TONS / CU YD
SHORT TERM PAVEMENT MARKING	10	FT / 100 FT OF PROPOSED
HMA	SEE MIXTURE TABLE	

COMMITMENTS

DUE TO THE POSSIBLE PRESENCE OF THE INDIANA BAT AND NORTHERN LONG EARED BAT, TREES WITH A DIAMETER 3 INCHES OR GREATER AT BREAST HEIGHT WILL NOT BE CLEARED BETWEEN APRIL 1ST AND SEPTEMBER 30TH.

ENVIRONMENTAL COORDINATION

LETTER OF UNDERSTANDING

TRANSPORTATION MANAGEMENT PLAN

IDOT HIGHWAY STANDARDS

BLR 17-4	TRAFFIC CONTROL DEVICES - DAY LABOR CONSTRUCTION
BLR 25-1	TYPE 1A BARRICADE FOR NON-NHS ROUTES
BLR 28	CONCRETE CURB TYPE B AND COMBINATION CONCRETE CURB AND GUTTER
000001-08	STANDARD SYMBOLS, ABBREVIATIONS AND PATTERNS
001001-02	AREAS OF REINFORCEMENT BARS
001006	DECIMAL OF AN INCH AND OF A FOOT
202001-01	EARTH MEDIAN DITCH CHECK
280001-07	TEMPORARY EROSION CONTROL SYSTEMS
420001-09	PAVEMENT JOINTS
424001-11	PERPENDICULAR CURB RAMPS FOR SIDEWALKS
442201-03	CLASS C AND D PATCHES
515001-04	NAME PLATE FOR BRIDGES
542301-03	PRECAST REINFORCED CONCRETE FLARED END SECTION
602001-02	CATCH BASIN, TYPE A
602011-02	CATCH BASIN, TYPE C
602301-04	INLET, TYPE A
602401-07	PRECAST MANHOLE, TYPE A, 4' (1.22M) DIAMETER
602416-09	PRECAST MANHOLE, TYPE A, 8' (2.44 M) DIAMETER
604001-05	FRAME AND LIDS, TYPE 1
604041-03	FRAME AND GATE, TYPE 9
604101-01	MEDIAN INLET FOR 24 (600 MM) REINFORCED CONCRETE PIPE
630001-12	STEEL PLATE BEAM GUARDRAIL
630116	BACKSIDE PROTECTION OF GUARDRAIL
630301-09	SHOULDER WIDENING FOR TYPE 1 (SPECIAL) GUARDRAIL TERMINALS
631026-06	TRAFFIC BARRIER TERMINAL TYPE 5
631031-17	TRAFFIC BARRIER TERMINAL TYPE 6
635001-02	DELINEATORS
642001-02	SHOULDER RUMBLE STRIPS, 16 INCH
667101-02	PERMANENT SURVEY MARKER
701001-02	OFF-ROAD OPERATIONS, 2L, 2W, MORE THAN 15' (4.5M) AWAY
701006-05	OFF-ROAD OPERATIONS, 2L, 2W, 15' (4.5M) TO 24" (600MM) FROM PAVEMENT EDGE
701011-04	OFF-ROAD MOVING OPERATION, 2L, 2W, DAY ONLY
701201-05	LANE CLOSURE, 2L, 2W, DAY ONLY, FOR SPEED > 45 MPH
701301-04	LANE CLOSURE, 2L, 2W, SHORT TIME OPERATIONS
701321-18	LANE CLOSURE, 2L, 2W, BRIDGE REPAIR WITH BARRIER
701326-04	LANE CLOSURE, 2L, 2W, PAVEMENT WIDENING, FOR SPEED > 45 MPH
701400-10	APPROACH TO LANE CLOSURE, FREEWAY/EXPRESSWAY
701401-12	LANE CLOSURE, FREEWAY/EXPRESSWAY
701406-12	LANE CLOSURE, FREEWAY/EXPRESSWAY, DAY OPERATIONS ONLY
701901-08	TRAFFIC CONTROL DEVICES
704001-08	TEMPORARY CONCRETE BARRIER
720001-01	SIGN PANEL MOUNTING DETAILS
720006-04	SIGN PANEL ERECTION DETAILS
720011-01	METAL POSTS FOR SIGNS, MARKERS & DELINEATORS
725001-01	OBJECT AND TERMINAL MARKERS
782006-01	GUARDRAIL AND BARRIER WALL REFLECTOR MOUNTING DETAILS

TRANSMART, INC.
THOMAS M. WALSH, P.E.
#062-054595

DATE: 03/26/2021

SIGNATURE AND SEAL
APPLY TO DRAWINGS:
1-24, 27-28, 30-39
73-79, 167-202

THOMAS M. WALSH
062-054595
LICENSED
PROFESSIONAL
ENGINEER
OF
ILLINOIS

EXPIRATION DATE: 11-30-2021

HUTCHISON ENGINEERING, INC.
LUKE D. ZELLER, P.E.
#062-064201

DATE: 03/26/2021

SIGNATURE AND SEAL
APPLY TO DRAWINGS:
25-26, 29, 40-72
84-89

LUKE D. ZELLER
062-064201
REGISTERED
PROFESSIONAL
ENGINEER OF
STATE OF ILLINOIS

EXPIRATION DATE: 11-30-2021

SIGNATURES AND SEALS THAT
APPLY TO DRAWINGS
80-83, 90-143, AND 144-166
ARE ON THE FIRST SHEET
OF THOSE RESPECTIVE DRAWINGS

STATE OF ILLINOIS
DEPARTMENT OF TRANSPORTATION
DISTRICT THREE
AS BUILT INFORMATION

ALAN HARWOOD
SUPERVISING CONSTRUCTION FIELD ENGINEER

SCOTT JULIAN
RESIDENT ENGINEER / TECHNICIAN

START & END DATES
OF CONSTRUCTION:

INSPECTORS: DAVE MOLOHON

GREGG PRAIRIE, MR GREEN

ADEL GHOLEH, QUIGG

KATOSKA SIMBALL

STATE OF ILLINOIS
DEPARTMENT OF TRANSPORTATION
DISTRICT THREE

PREPARED BY:
DISTRICT STUDIES & PLANS ENGINEER

DATE:

EXAMINED BY:
DISTRICT CONSTRUCTION ENGINEER

DISTRICT MATERIALS ENGINEER

DISTRICT OPERATIONS ENGINEER

MODEL: Plan 1
FILE NAME: D:\0000\3-3H-Signature.dgn

TranSmart
411 South Wells Street Suite 1000
Chicago, Illinois 60607

USER NAME = rsalehian	DESIGNED -	REVISED -	
	DRAWN -	REVISED -	
PLOT SCALE = 0.166666 ' / in.	CHECKED -	REVISED -	
PLOT DATE = 3/29/2021	DATE - 2021/03/26	REVISED -	

STATE OF ILLINOIS
DEPARTMENT OF TRANSPORTATION

RE FIELD ENGINEER & DISTRICT STUDIES
SIGNATURE

SCALE: SHEET OF SHEETS STA. TO STA.

F.A.I. RTE.	SECTION	COUNTY	TOTAL SHEETS	SHEET NO.
57	139 HBR-6	KANKAKEE	202	3

CONTRACT NO. 66997

ILLINOIS FED. AID PROJECT

CODE NO.	ITEM	UNIT	TOTAL QUANTITY (URBAN)	CONSTRUCTION CODE: NHPP 90% FED / 10% STATE, BRIDGE, 0010, 046-0153	NHPP 90% FED / 10% STATE, RETAINING WALL, 0044, WALL A	NHPP 90% FED / 10% STATE, RETAINING WALL, 0044, WALL B	NHPP 90% FED / 10% STATE, ROADWAY, 0004, URBAN
20100110	TREE REMOVAL (6 TO 15 UNITS DIAMETER)	UNIT	~~1063~~ 1844				1063
20100210	TREE REMOVAL (OVER 15 UNITS DIAMETER)	UNIT	~~333~~ 560.2				333
20200100	EARTH EXCAVATION	CU YD	13720				13720
20800150	TRENCH BACKFILL	CU YD	~~940~~ 1312.5				940
21101505	TOPSOIL EXCAVATION AND PLACEMENT	CU YD	~~1245~~ 2123.2				1245
25000210	SEEDING, CLASS 2A	ACRE	~~2.25~~ 4.0				2.25
25000400	NITROGEN FERTILIZER NUTRIENT	POUND	~~190~~ 358.5				190
25000500	PHOSPHORUS FERTILIZER NUTRIENT	POUND	~~190~~ 358.5				190
25000600	POTASSIUM FERTILIZER NUTRIENT	POUND	~~190~~ 358.5				190
25100115	MULCH, METHOD 2	ACRE	~~2.25~~ 4.0				2.25
25100630	EROSION CONTROL BLANKET	SQ YD	~~9516~~ 18900.8				9516
25100900	TURF REINFORCEMENT MAT	SQ YD	~~362~~ 227.6				362
28000250	TEMPORARY EROSION CONTROL SEEDING	POUND	~~250~~ 0				250
28000305	TEMPORARY DITCH CHECKS	FOOT	~~180~~ 40.0				180
28000400	PERIMETER EROSION BARRIER	FOOT	~~2008~~ 2039				2008

* SPECIALTY ITEMS

MODEL: Plan 1
FILE NAME: D:\SIGNS_BK_SC01.dgn

TranSmart
411 South Wells Street - Suite 1000
Chicago, Illinois 60607

USER NAME = nasiahan	DESIGNED - BJD	REVISED -
	DRAWN - BJD	REVISED -
PLOT SCALE = 0.10000833' / in.	CHECKED - TW	REVISED -
PLOT DATE = 3/29/2021	DATE - 2021/03/26	REVISED -

STATE OF ILLINOIS
DEPARTMENT OF TRANSPORTATION

I-57 & WALDRON ROAD
SUMMARY OF QUANTITIES

SCALE: NTS | SHEET 1 OF 14 SHEETS | STA. | TO STA.

F.A.I. RTE.	SECTION	COUNTY	TOTAL SHEETS	SHEET NO.
57	138 HBR-6	KANKAKEE	202	4

CONTRACT NO. 66997
ILLINOIS | FED. AID PROJECT

REV. 8/26/21 REV. 5/12/21 REV. 4/29/21 REV. 4/9/21

URBAN

CODE NO.	ITEM	UNIT	TOTAL QUANTITY	CONSTRUCTION CODE: NHPP 90% FED / 10% STATE, BRIDGE, 0010, 046-0153	NHPP 90% FED / 10% STATE, RETAINING WALL, 0044, WALL A	NHPP 90% FED / 10% STATE, RETAINING WALL, 0044, WALL B	NHPP 90% FED / 10% STATE, ROADWAY, 0004, URBAN
28000500	INLET AND PIPE PROTECTION	EACH	~~1~~ ø				1
28000510	INLET FILTERS	EACH	~~18~~ ø				18 △1
28100105	STONE RIPRAP, CLASS A3	SQ YD	~~175~~	265.3			175
28200200	FILTER FABRIC	SQ YD	~~175~~	265.3			175
30300118	AGGREGATE SUBGRADE IMPROVEMENT 18"	SQ YD	~~2673~~	3146.1			2673
31100200	SUBBASE GRANULAR MATERIAL, TYPE A	CU YD	~~10009~~	488			10009
35100500	AGGREGATE BASE COURSE, TYPE A 6"	SQ YD	~~467~~	468.9			467
35501288	HOT-MIX ASPHALT BASE COURSE, 2 1/2"	SQ YD	~~58~~	51.9			58
35501308	HOT-MIX ASPHALT BASE COURSE, 6"	SQ YD	~~257~~	404.5			257
35600702	HOT-MIX ASPHALT BASE COURSE WIDENING, 6 1/2"	SQ YD	~~8~~ ø				8
40201000	AGGREGATE FOR TEMPORARY ACCESS	TON	~~36~~ ø				36
40603080	HOT-MIX ASPHALT BINDER COURSE, IL-19.0, N50	TON	~~118~~	205.5			118 △1
40604050	HOT-MIX ASPHALT SURFACE COURSE, IL-9.5, MIX "C", N50	TON	~~81~~	60			81
40604060	HOT-MIX ASPHALT SURFACE COURSE, IL-9.5, MIX "D", N50	TON	~~79~~	293.6			79

* SPECIALTY ITEMS

△1 REV. 8/26/21 REV. 4/9/21

CODE NO.	ITEM	UNIT	TOTAL QUANTITY (URBAN)	CONSTRUCTION CODE: NHPP 90% FED / 10% STATE, BRIDGE, 0010, 046-0153	NHPP 90% FED / 10% STATE, RETAINING WALL, 0044, WALL A	NHPP 90% FED / 10% STATE, RETAINING WALL, 0044, WALL B	NHPP 90% FED / 10% STATE, ROADWAY, 0004, URBAN
40604170	POLYMERIZED HOT-MIX ASPHALT SURFACE COURSE, IL-9.5, MIX "E", N50	TON	~~310~~ 0				310
40700100	BITUMINOUS MATERIALS (TACK COAT)	POUND	~~954~~	3702.4			954
40701886	HOT-MIX ASPHALT PAVEMENT (FULL-DEPTH), 10 1/4"	SQ YD	~~2119~~	2278.7			2119
42000060	WELDED WIRE REINFORCEMENT	SQ YD	~~402~~	412.2			402
42000080	PAVEMENT CONNECTOR (PCC) FOR BRIDGE APPROACH SLAB	SQ YD	~~402~~	412.2			402
42001300	PROTECTIVE COAT	SQ YD	~~1181~~	355			1181
42400410	PORTLAND CEMENT CONCRETE SIDEWALK 8 INCH	SQ FT	~~331~~	339.9			331
* 42400800	DETECTABLE WARNINGS	SQ FT	~~56~~	54.6			56
44000100	PAVEMENT REMOVAL	SQ YD	~~2472~~	2984.5			2472
44000157	HOT-MIX ASPHALT SURFACE REMOVAL, 2"	SQ YD	~~2764~~	2738.7			2764
44000164	HOT-MIX ASPHALT SURFACE REMOVAL, 3 3/4"	SQ YD	~~922~~	1583.6			922
44000200	DRIVEWAY PAVEMENT REMOVAL	SQ YD	~~223~~	142			223
44000400	GUTTER REMOVAL	FOOT	~~358~~	654.5			358
44000500	COMBINATION CURB AND GUTTER REMOVAL	FOOT	~~508~~	701			508
44000600	SIDEWALK REMOVAL	SQ FT	27				27

* SPECIALTY ITEMS

MODEL: Plan 1
FILE NAME: D306663_SH_SQ03.dgn

TranSmart
411 South Wells Street Suite 1000
Chicago, Illinois 60607

USER NAME = hsalehfan	DESIGNED - BJD	REVISED -	
	DRAWN - BJD	REVISED -	
PLOT SCALE = 0.16666633 ' / in.	CHECKED - TW	REVISED -	
PLOT DATE = 3/29/2021	DATE = 2021/03/26	REVISED -	

STATE OF ILLINOIS
DEPARTMENT OF TRANSPORTATION

I-57 & WALDRON ROAD
SUMMARY OF QUANTITIES

SCALE: | SHEET 3 OF 14 SHEETS | STA. | TO STA.

F.A.I. RTE.	SECTION	COUNTY	TOTAL SHEETS	SHEET NO.
57	139 HBR-6	KANKAKEE	202	6

CONTRACT NO. 66997
ILLINOIS | FED. AID PROJECT

REV. 5/12/21 REV. 4/29/21 REV. 4/9/21

CODE NO.	ITEM	UNIT	TOTAL QUANTITY (URBAN)	CONSTRUCTION CODE: NHPP 90% FED / 10% STATE, BRIDGE, 0010, 046-0153	NHPP 90% FED / 10% STATE, RETAINING WALL, 0044, WALL A	NHPP 90% FED / 10% STATE, RETAINING WALL, 0044, WALL B	NHPP 90% FED / 10% STATE, ROADWAY, 0004, URBAN
44001980	CONCRETE BARRIER REMOVAL	FOOT	~~1081~~	1016			1081
44004250	PAVED SHOULDER REMOVAL	SQ YD	~~1109~~	896.5			1109
44200099	PAVEMENT PATCHING, TYPE III, 8 INCH	SQ YD	~~18~~	58.9			18
44200101	PAVEMENT PATCHING, TYPE IV, 8 INCH	SQ YD	~~25~~	41.2			25
48100500	AGGREGATE SHOULDERS, TYPE A 6"	SQ YD	~~75~~	58			75
48203021	HOT-MIX ASPHALT SHOULDERS, 6"	SQ YD	~~1449~~	1448.9			1449
50100100	REMOVAL OF EXISTING STRUCTURES	EACH	1	1			
50104400	CONCRETE HEADWALL REMOVAL	EACH	2				2
50105220	PIPE CULVERT REMOVAL	FOOT	~~26~~	1047			26
50157300	PROTECTIVE SHIELD	SQ YD	~~443~~	378.2 443			
50200100	STRUCTURE EXCAVATION	CU YD	2046	775	833	438	
50200400	ROCK EXCAVATION FOR STRUCTURES	CU YD	~~482~~	172.1.1 102			380
50300225	CONCRETE STRUCTURES	CU YD	~~790.2~~	868.1 366.4	277.6	146.2	
50300255	CONCRETE SUPERSTRUCTURE	CU YD	~~508.1~~	511.6 508.1			

* SPECIALTY ITEMS

MODEL: Plan 1
FILE NAME: D391653_SH_SOQ4.dgn

TranSmart
411 South Wells Street Suite 1000
Chicago, Illinois 60607

USER NAME = nealshan	DESIGNED - BJD	REVISED -
	DRAWN - BJD	REVISED -
PLOT SCALE = 0.16666633 ' / in.	CHECKED - TW	REVISED -
PLOT DATE = 3/29/2021	DATE - 2021/03/26	REVISED -

STATE OF ILLINOIS
DEPARTMENT OF TRANSPORTATION

I-57 & WALDRON ROAD
SUMMARY OF QUANTITIES

SCALE: | SHEET 4 OF 14 SHEETS | STA. | TO STA.

F.A.I. RTE.	SECTION	COUNTY	TOTAL SHEETS	SHEET NO.
57	139 HBR-6	KANKAKEE	202	7

CONTRACT NO. 68997
ILLINOIS | FED. AID PROJECT

REV. 5/12/21 REV. 4/9/21

CODE NO.	ITEM	UNIT	TOTAL QUANTITY	CONSTRUCTION CODE NHPP 90% FED / 10% STATE BRIDGE 0010 046-0153	NHPP 90% FED / 10% STATE RETAINING WALL 0044 WALL A	NHPP 90% FED / 10% STATE RETAINING WALL 0044 WALL B	NHPP 90% FED / 10% STATE ROADWAY 0004 URBAN
			URBAN				
50300260	BRIDGE DECK GROOVING	SQ YD	~~1324~~ 1099	1324			
50300300	PROTECTIVE COAT	SQ YD	~~1961~~ 2022.2	1961			
50500105	FURNISHING AND ERECTING STRUCTURAL STEEL	L SUM	1	1			
50500505	STUD SHEAR CONNECTORS	EACH	11710	9389	1615	706	
50800205	REINFORCEMENT BARS, EPOXY COATED	POUND	~~208540~~ 224014	208540	52950	29370	
50800515	BAR SPLICERS	EACH	~~1167~~ 1169	1167			
50901720	BICYCLE RAILING	FOOT	~~469~~ 471.9				469
50901730	BRIDGE FENCE RAILING	FOOT	~~324~~ ~~305.5~~	324			
50901750	PARAPET RAILING	FOOT	~~334~~ 363.5	334			
51100100	SLOPE WALL 4 INCH	SQ YD	~~43~~ 91.5	43			
51500100	NAME PLATES	EACH	1	1			
* 51603000	DRILLED SHAFT IN SOIL	CU YD	~~87.3~~ 94.8	87.3			
* 51604000	DRILLED SHAFT IN ROCK	CU YD	~~51.2~~ 40.0	51.2			
52000110	PREFORMED JOINT STRIP SEAL	FOOT	158	158			

* SPECIALTY ITEMS

MODEL: Plan 1
FILE NAME: D:\Bridge_Bid_SOQ.dgn

TranSmart
411 South Wells Street-Suite 1000
Chicago, Illinois 60607

USER NAME = nealshan	DESIGNED - BJD	REVISED -
	DRAWN - BJD	REVISED -
PLOT SCALE = 0.18888833 ' / in.	CHECKED - TW	REVISED -
PLOT DATE = 3/29/2021	DATE - 2021/03/26	REVISED -

STATE OF ILLINOIS
DEPARTMENT OF TRANSPORTATION

I-57 & WALDRON ROAD
SUMMARY OF QUANTITIES

SCALE: | SHEET 5 OF 14 SHEETS | STA. | TO STA.

F.A.I RTE.	SECTION	COUNTY	TOTAL SHEETS	SHEET NO.
57	139 HBR-6	KANKAKEE	202	8
		CONTRACT NO. 66997		
		ILLINOIS	FED. AID PROJECT	

REV. 5/12/21 REV. 4/29/21 REV. 4/9/21

CODE NO.	ITEM	UNIT	TOTAL QUANTITY (URBAN)	CONSTRUCTION CODE: NHPP 90% FED / 10% STATE, BRIDGE, 0010, 046-0153	NHPP 90% FED / 10% STATE, RETAINING WALL, 0044, WALL A	NHPP 90% FED / 10% STATE, RETAINING WALL, 0044, WALL B	NHPP 90% FED / 10% STATE, ROADWAY, 0004, URBAN
52100010	ELASTOMERIC BEARING ASSEMBLY, TYPE I	EACH	12	12			
52100530	ANCHOR BOLTS, 1 1/4"	EACH	24	24			
52100540	ANCHOR BOLTS, 1 1/2"	EACH	12	12			
52200020	TEMPORARY SOIL RETENTION SYSTEM	SQ FT	~~2050*~~	835 640			1410
52200105	FURNISHING SOLDIER PILES (W SECTION)	FOOT	~~3512~~	856.86 266	2390	856	
52200200	DRILLING AND SETTING SOLDIER PILES (IN SOIL)	CU FT	~~11710~~	10134.9 984	8739	1987	
52200205	DRILLING AND SETTING SOLDIER PILES (IN ROCK)	CU FT	~~6482~~	6744.5 351	3593	2488	
52200250	UNTREATED TIMBER LAGGING	SQ FT	~~9579~~	8567.27	6234	3345	
542A5509	PIPE CULVERTS, CLASS A, TYPE 1 EQUIVALENT ROUND-SIZE 54"	FOOT	~~588~~	600.2			589
54213657	PRECAST REINFORCED CONCRETE FLARED END SECTIONS 12"	EACH	4				4
54213660	PRECAST REINFORCED CONCRETE FLARED END SECTIONS 15"	EACH	3				3
550A0050	STORM SEWERS, CLASS A, TYPE 1 12"	FOOT	~~96~~	94.5			96
550A0070	STORM SEWERS, CLASS A, TYPE 1 15"	FOOT	~~268~~	254.5			268
550A0340	STORM SEWERS, CLASS A, TYPE 2 12"	FOOT	~~208~~	210.8			209

1

* SPECIALTY ITEMS

MODEL: Plan 1
FILE NAME: D:\BRIDGE_BIA_SCGL.dgn

TranSmart
~~111 South Wells Street Suite 1000~~
Chicago, Illinois 60607

USER NAME = nadahlan	DESIGNED - BJD	REVISED -	
	DRAWN - BJD	REVISED -	
PLOT SCALE = 0.18888833 ' / in.	CHECKED - TW	REVISED -	
PLOT DATE = 3/29/2021	DATE - 2021/03/26	REVISED -	

STATE OF ILLINOIS
DEPARTMENT OF TRANSPORTATION

I-57 & WALDRON ROAD
SUMMARY OF QUANTITIES

SCALE: | SHEET 6 OF 14 SHEETS | STA. | TO STA.

F.A.I RTE.	SECTION	COUNTY	TOTAL SHEETS	SHEET NO.
57	139 HBR-6	KANKAKEE	202	9

CONTRACT NO. 66997
ILLINOIS FED. AID PROJECT

1 REV. 8/26/21 REV. 5/12/21 REV. 4/29/21 REV. 4/9/21

CODE NO.	ITEM	UNIT	TOTAL QUANTITY (URBAN)	CONSTRUCTION CODE: NHPP 90% FED / 10% STATE, BRIDGE, 0010, 046-0153	NHPP 90% FED / 10% STATE, RETAINING WALL, 0044, WALL A	NHPP 90% FED / 10% STATE, RETAINING WALL, 0044, WALL B	NHPP 90% FED / 10% STATE, ROADWAY, 0004, URBAN
550A0360	STORM SEWERS, CLASS A, TYPE 2 15"	FOOT	~~190~~	369			190
550A0380	STORM SEWERS, CLASS A, TYPE 2 18"	FOOT	~~292~~	302.5			292
550A0640	STORM SEWERS, CLASS A, TYPE 3 12"	FOOT	~~34~~	36			34
550A0660	STORM SEWERS, CLASS A, TYPE 3 15"	FOOT	~~120~~	124			120
55100500	STORM SEWER REMOVAL 12"	FOOT	~~116~~	56			116
58600101	GRANULAR BACKFILL FOR STRUCTURES	CU YD	~~439~~	292.6 439			
58700300	CONCRETE SEALER	SQ FT	~~15673~~	14657.5 2780	8395	4398	
59100100	GEOCOMPOSITE WALL DRAIN	SQ YD	~~989~~	834.85 230	473	266	
60108501	PIPE UNDERDRAINS, TYPE 3	FOOT	~~63~~	35			63
60200105	CATCH BASINS, TYPE A, 4'-DIAMETER, TYPE 1 FRAME, OPEN LID	EACH	8				8
60209005	CATCH BASINS, TYPE C, WITH MEDIAN INLET (604101)	EACH	1				1
60218300	MANHOLES, TYPE A, 4'-DIAMETER, TYPE 1 FRAME, OPEN LID	EACH	4				4
60218400	MANHOLES, TYPE A, 4'-DIAMETER, TYPE 1 FRAME, CLOSED LID	EACH	5				5
60224459	MANHOLES, TYPE A, 8'-DIAMETER, TYPE 1 FRAME, CLOSED LID	EACH	5				5

* SPECIALTY ITEMS

1

1

MODEL: Plan 1
FILE NAME: D:\BBDS_BK_SC07.dgn

TranSmart
411 South Wells Street Suite 1000
Chicago, Illinois 60607

USER NAME = nsalehian	DESIGNED - BJD	REVISED -
	DRAWN - BJD	REVISED -
PLOT SCALE = 0.10000833 '/ IN.	CHECKED - TW	REVISED -
PLOT DATE = 3/29/2021	DATE - 2021/03/26	REVISED -

STATE OF ILLINOIS
DEPARTMENT OF TRANSPORTATION

I-57 & WALDRON ROAD
SUMMARY OF QUANTITIES

SCALE: | SHEET 7 OF 14 SHEETS | STA. | TO STA.

F.A.I. RTE.	SECTION	COUNTY	TOTAL SHEETS	SHEET NO.
57	139 HBR-6	KANKAKEE	202	10
		CONTRACT NO. 66997		
	ILLINOIS	FED. AID PROJECT		

1 REV. 8/26/21 REV. 4/9/21

CODE NO.	ITEM	UNIT	TOTAL QUANTITY	CONSTRUCTION CODE			
			URBAN	NHPP 90% FED / 10% STATE	NHPP 90% FED / 10% STATE	NHPP 90% FED / 10% STATE	NHPP 90% FED / 10% STATE
				BRIDGE	RETAINING WALL	RETAINING WALL	ROADWAY
				0010	0044	0044	0004
				046-0153	WALL A	WALL B	URBAN
60234200	INLETS, TYPE A, TYPE 1 FRAME, OPEN LID	EACH	5				5
60236600	INLETS, TYPE A, TYPE 9 FRAME AND GRATE	EACH	1				1
60406000	FRAMES AND LIDS, TYPE 1, OPEN LID	EACH	~~6~~ 0				6
60500050	REMOVING CATCH BASINS	EACH	~~2~~ 3				2
60500060	REMOVING INLETS	EACH	2				2
60602500	CONCRETE GUTTER, TYPE A	FOOT	~~190~~ 188				190
60602800	CONCRETE GUTTER, TYPE B	FOOT	~~900~~ 993.9				900
60603800	COMBINATION CONCRETE CURB AND GUTTER, TYPE B-6.12	FOOT	~~574~~ 693.9				574
60605000	COMBINATION CONCRETE CURB AND GUTTER, TYPE B-6.24	FOOT	~~965~~ 972				965
* 63000001	STEEL PLATE BEAM GUARDRAIL, TYPE A, 6 FOOT POSTS	FOOT	~~150~~ 125				150
* 63000035	BACK SIDE PROTECTION OF GUARDRAIL	FOOT	~~207~~ 181.5				207
* 63100070	TRAFFIC BARRIER TERMINAL, TYPE 5	EACH	2				2
* 63100085	TRAFFIC BARRIER TERMINAL, TYPE 6	EACH	2				2
* 63100167	TRAFFIC BARRIER TERMINAL, TYPE 1 (SPECIAL) TANGENT	EACH	4				4

* SPECIALTY ITEMS

	CODE NO.	ITEM	UNIT	URBAN TOTAL QUANTITY	CONSTRUCTION CODE: NHPP 90% FED / 10% STATE, BRIDGE, 0010, 046-0153	NHPP 90% FED / 10% STATE, RETAINING WALL, 0044, WALL A	NHPP 90% FED / 10% STATE, RETAINING WALL, 0044, WALL B	NHPP 90% FED / 10% STATE, ROADWAY, 0004, URBAN
	63200310	GUARDRAIL REMOVAL	FOOT	1130				1130
	63700805	CONCRETE BARRIER TRANSITION	FOOT	~~50~~	86			50
	63800910	MODULAR GLARE SCREEN SYSTEM, PERMANENT	FOOT	~~50~~	84.5			50
	63700900	CONCRETE BARRIER BASE	FOOT	~~50~~	86			50
	64200116	SHOULDER RUMBLE STRIPS, 16 INCH	FOOT	~~3109~~	8603			3109
	64300260	IMPACT ATTENUATORS (FULLY REDIRECTIVE, NARROW), TEST LEVEL 3	EACH	1				1
	64301090	ATTENUATOR BASE	SQ YD	~~10~~	∅			10
*	66700205	PERMANENT SURVEY MARKERS, TYPE I	EACH	1				1
*	66900200	NON-SPECIAL WASTE DISPOSAL	CU YD	~~780~~	∅			780
*	66900530	SOIL DISPOSAL ANALYSIS	EACH	3				3
*	66901001	REGULATED SUBSTANCES PRE-CONSTRUCTION PLAN	LSUM	1				1
*	66901003	REGULATED SUBSTANCES FINAL CONSTRUCTION REPORT	LSUM	1				1
*	66901006	REGULATED SUBSTANCES MONITORING	CAL DA	~~58~~	62			58
	67000400	ENGINEER'S FIELD OFFICE, TYPE A	CAL MO	18				18
	67100100	MOBILIZATION	L SUM	1				1
	70100405	TRAFFIC CONTROL AND PROTECTION, STANDARD 701321	EACH	1				1
	70100700	TRAFFIC CONTROL AND PROTECTION, STANDARD 701406	L SUM	1				1

* SPECIALTY ITEMS

MODEL: Plan 1
FILENAME: D:\pwidot_tmp_BJD\9.dgn

TranSmart
411 South Wells Street Suite 1000
Chicago, Illinois 60607

USER NAME = nsalehian	DESIGNED - BJD	REVISED -
	DRAWN - BJD	REVISED -
PLOT SCALE = 0.18888833 ' / in.	CHECKED - TW	REVISED -
PLOT DATE = 3/29/2021	DATE - 2021/03/26	REVISED -

STATE OF ILLINOIS
DEPARTMENT OF TRANSPORTATION

I-57 & WALDRON ROAD
SUMMARY OF QUANTITIES

SCALE: | SHEET 9 OF 14 SHEETS | STA. | TO STA.

F.A.I RTE.	SECTION	COUNTY	TOTAL SHEETS	SHEET NO.
57	139 HBR-6	KANKAKEE	202	12

CONTRACT NO. 66997
ILLINOIS | FED. AID PROJECT

REV. 5/12/21 REV. 4/29/21 REV. 4/9/21

CODE NO.	ITEM	UNIT	TOTAL QUANTITY (URBAN)	CONSTRUCTION CODE: NHPP 90% FED / 10% STATE, BRIDGE 0010 046-0153	NHPP 90% FED / 10% STATE, RETAINING WALL 0044 WALL A	NHPP 90% FED / 10% STATE, RETAINING WALL 0044 WALL B	NHPP 90% FED / 10% STATE, ROADWAY 0004 URBAN
* 70103815	TRAFFIC CONTROL SURVEILLANCE	CAL DA	~~300~~	407.18			300
70106500	TEMPORARY BRIDGE TRAFFIC SIGNALS	EACH	1				1
70107025	CHANGEABLE MESSAGE SIGN	CAL DA	~~840~~	454			840
70200100	NIGHTTIME WORK ZONE LIGHTING	L SUM	1				1
70300100	SHORT TERM PAVEMENT MARKING	FOOT	~~4379~~	ϕ			4379
70300150	SHORT TERM PAVEMENT MARKING REMOVAL	SQ FT	~~731~~	ϕ			731
70300220	TEMPORARY PAVEMENT MARKING - LINE 4"	FOOT	~~8200~~	5252.5			8200
70300280	TEMPORARY PAVEMENT MARKING - LINE 24"	FOOT	~~156~~	34			156
70300904	PAVEMENT MARKING TAPE, TYPE IV 4"	FOOT	~~92430~~	8564			92430
70400100	TEMPORARY CONCRETE BARRIER	FOOT	~~5825~~	4425			5825
70400200	RELOCATE TEMPORARY CONCRETE BARRIER	FOOT	~~4175~~	987.5			4175
70600250	IMPACT ATTENUATORS, TEMPORARY (NON- REDIRECTIVE), TEST LEVEL 3	EACH	~~11~~	2			11
70600260	IMPACT ATTENUATORS, TEMPORARY (FULLY REDIRECTIVE, NARROW), TEST LEVEL 3	EACH	~~4~~	8			4
70600332	IMPACT ATTENUATORS, RELOCATE (FULLY REDIRECTIVE, NARROW), TEST LEVEL 3	EACH	~~3~~	1			3

* SPECIALTY ITEMS

	CODE NO.	ITEM	UNIT	TOTAL QUANTITY (URBAN)	CONSTRUCTION CODE: NHPP 90% FED / 10% STATE, BRIDGE 0010 046-0153	NHPP 90% FED / 10% STATE, RETAINING WALL 0044 WALL A	NHPP 90% FED / 10% STATE, RETAINING WALL 0044 WALL B	NHPP 90% FED / 10% STATE, ROADWAY 0004 URBAN
	70600350	IMPACT ATTENUATORS, RELOCATE (NON- REDIRECTIVE), TEST LEVEL 3	EACH	~~21~~	1			21
	X9300100	HMA SURF CSE IL 9.5, MIX D, N70	TON	239.78				
*	72000100	SIGN PANEL - TYPE 1	SQ FT	~~43~~	42.5			43
	X9300101	STRUCT STEEL FILL PLATES	EA	2.0				
*	72000200	SIGN PANEL - TYPE 2	SQ FT	20				20
	X9300500	REPL TY 1 W/ IN F&G	EA	14				
*	72400100	REMOVE SIGN PANEL ASSEMBLY - TYPE A	EACH	6				6
	X9302700	CHAIN LINK FENCE, 6'	FOOT	850.5				
*	72501000	TERMINAL MARKER - DIRECT APPLIED	EACH	~~8~~	4			8
	X9302900	MOD. URETHANE PVMT MRKG LINE - 4"	FOOT	832				
*	73000100	WOOD SIGN SUPPORT	FOOT	~~127~~	133.5			127
	X9304000	ANTI-GRAFFITI TREATMENT	SF	9640.8				
*	78000200	THERMOPLASTIC PAVEMENT MARKING - LINE 4"	FOOT	~~2273~~	13071.4			2273
	X9304001	TCP SHLDR CLOSURES	LSUM	1.0				
*	78000400	THERMOPLASTIC PAVEMENT MARKING - LINE 6"	FOOT	~~442~~	358.5			442
	XXX16100	CREDIT NON-COMPLIANT WORK	$	450				
*	78000600	THERMOPLASTIC PAVEMENT MARKING - LINE 12"	FOOT	~~165~~	177			165
*	78008210	POLYUREA PAVEMENT MARKING TYPE I - LINE 4"	FOOT	~~10556~~	0			10556
*	78008230	POLYUREA PAVEMENT MARKING TYPE I - LINE 6"	FOOT	~~110~~	0			110
*	78100100	RAISED REFLECTIVE PAVEMENT MARKER	EACH	~~123~~	188			123
*	78200005	GUARDRAIL REFLECTORS, TYPE A	EACH	~~16~~	11			16
	78300200	RAISED REFLECTIVE PAVEMENT MARKER REMOVAL	EACH	~~123~~	0			123

* SPECIALTY ITEMS

MODEL: Plan 1
FILE NAME: D3000003_GN_SCD11.dgn

TranSmart
411 South Wells Street Suite 1000
Chicago, Illinois 60607

USER NAME = rsolphian	DESIGNED - BJD	REVISED -	
	DRAWN - BJD	REVISED -	
PLOT SCALE = 0.18000833 ' / in.	CHECKED - TW	REVISED -	
PLOT DATE = 3/29/2021	DATE - 2021/03/26	REVISED -	

STATE OF ILLINOIS
DEPARTMENT OF TRANSPORTATION

I-57 & WALDRON ROAD
SUMMARY OF QUANTITIES

SCALE: | SHEET 11 OF 14 SHEETS | STA. | TO STA.

F.A.I. RTE.	SECTION	COUNTY	TOTAL SHEETS	SHEET NO.
	139 HBR-6	KANKAKEE	202	14

CONTRACT NO. 68997
ILLINOIS | FED. AID PROJECT

REV. 4/29/21 REV. 4/9/21

CODE NO.	ITEM	UNIT	TOTAL QUANTITY (URBAN)	CONSTRUCTION CODE: NHPP 90% FED / 10% STATE, BRIDGE, 0010, 046-0153	NHPP 90% FED / 10% STATE, RETAINING WALL, 0044, WALL A	NHPP 90% FED / 10% STATE, RETAINING WALL, 0044, WALL B	NHPP 90% FED / 10% STATE, ROADWAY, 0004, URBAN
X0326208	ALTERNATE ROUTE SIGNING	L SUM	1				1
FRC00300	GR REPAIR	$	5715.48				
X0326649	LINEAR DELINEATOR PANELS, 6 INCH	EACH	~~20~~	15			20
FRC00400	ELEC. POLE. REM.	$	1600.84				
X0326880	MESSAGE BOARD VEHICLE DRIVER	HOUR	~~1820~~	124.5			1920
FRC00800	SAN. SEWER ADJ.	$	4760.87				
X0326907	PORTABLE, VEHICLE MOUNTED, CHANGEABLE MESSAGE SIGN	CAL MO	~~15~~	1			15
FRC00900	PIPE DRAIN	$	35816.46				
X0327809	LINEAR DELINEATOR PANELS, 4 INCH	EACH	8				8
FRC01000	TIE BARS	$	3069.77				
78300202	PAVEMENT MARKING REMOVAL - WATER BLASTING	SQ FT	~~558~~	815.9			558
FRC01100	HMA SHLDR, SPL	$	20099.34				
X0327991	REMOVAL OF EXISTING PROTECTIVE SHIELD	SQ YD	~~391~~	398.2 391			
FRC01300	DETOUR SIGNS WALDRON	$	683.39				
* X0328004	REAL-TIME TRAFFIC CONTROL SENSOR UNIT	WEEK	~~240~~	151.72			240
FRC01400	RESET PRECAST APP SLABS	$	15892.12				
X0900020	THERMAL INTEGRITY PROFILE TESTING	EACH	12	12			
FRC01500	TEMP STEEL PLATES	$	6409.26				
X0900044	THERMAL INTEGRITY PROFILE DATA COLLECTION	FOOT	313	313			
FRC01600	STEEL PLATE MH LID	$	2157.65				
X2700001	TEMPORARY RUMBLE STRIPS (SPECIAL)	EACH	~~8~~	6			8
~~* X2700006~~	~~PREFORMED PLASTIC PAVEMENT MARKING, TYPE D - LINE 4"~~	~~FOOT~~	~~1230~~				~~1230~~
* X2700010	PREFORMED PLASTIC PAVEMENT MARKING, TYPE D - LINE 6"	FOOT	~~1230~~	1570			1230
* X2700015	PREFORMED PLASTIC PAVEMENT MARKING, TYPE D - LINE 24"	FOOT	~~41~~	32.6			41
X4810200	AGGREGATE SHOULDER REMOVAL	CU YD	~~67~~	42.6			67

1

* SPECIALTY ITEMS

TranSmart
~~411 South Wells Street Suite 1000~~
Chicago, Illinois 60607

USER NAME = nestelen	DESIGNED - BJD	REVISED -	
	DRAWN - BJD	REVISED -	
PLOT SCALE = 0.10000833 ' / in.	CHECKED - TW	REVISED -	
PLOT DATE = 3/29/2021	DATE - 2021/03/26	REVISED -	

STATE OF ILLINOIS
DEPARTMENT OF TRANSPORTATION

I-57 & WALDRON ROAD
SUMMARY OF QUANTITIES

SCALE: | SHEET 12 OF 14 SHEETS | STA. | TO STA.

F.A.I. RTE.	SECTION	COUNTY	TOTAL SHEETS	SHEET NO.
	138 HBR-6	KANKAKEE	202	15
		CONTRACT NO. 66997		
	ILLINOIS	FED. AID PROJECT		

1 REV. 8/27/21 REV. 4/29/21 REV. 4/9/21

MODEL: Plan 1
FILE NAME: D:\BRIDGE_BM_SC0172.dgn

CODE NO.	ITEM	UNIT	TOTAL QUANTITY (URBAN)	CONSTRUCTION CODE: NHPP 90% FED / 10% STATE, BRIDGE, 0010, 046-0153	NHPP 90% FED / 10% STATE, RETAINING WALL, 0044, WALL A	NHPP 90% FED / 10% STATE, RETAINING WALL, 0044, WALL B	NHPP 90% FED / 10% STATE, ROADWAY, 0004, URBAN
X5030305	CONCRETE WEARING SURFACE, 5"	SQ YD	299	299			
FRC01800	SOLDIER PILE SPLICE	$	1031.68				
X5040100	PRECAST BRIDGE APPROACH SLAB	SQ FT	~~2604~~	2636.6 2604			
X6380207	GLARE SCREEN REPAIR	EACH	~~35~~	554			35
X7010216	TRAFFIC CONTROL AND PROTECTION, (SPECIAL)	L SUM	1				1
FRC01900	DRAIN STRUC 3' MH	$	2687.62				
X7010239	CHANGEABLE MESSAGE SIGN, SPECIAL	CAL WK	~~840~~	531.02			840
FRC02200	RELOCATE TC DEVICES NB 57	$	3600.31				
X7010805	TRAFFIC CONTROL AND PROTECTION, STANDARD 701401 (SPECIAL)	L SUM	1				1
FRC02400	GRIND CROWN OF APP SLAB SERT	$	669.78				
X7030005	TEMPORARY PAVEMENT MARKING REMOVAL	SQ FT	~~33597~~	3095.9			33597
FRC02500	DRAIN SWALE	$	1973.39				
X7040125	PINNING TEMPORARY CONCRETE BARRIER	EACH	~~729~~	309			729
FRC03200	TEMP RAMPS	$	1196.98				
* X7830070	GROOVING FOR RECESSED PAVEMENT MARKING 5"	FOOT	~~11997~~	13903.4			11997
FRC03300	DECK PROFILE GRIND	$	5322.93				
* X7830074	GROOVING FOR RECESSED PAVEMENT MARKING 7"	FOOT	~~1580~~	1840			1580
FRC03400	LANDSCAPE REPAIR	$	5068.81				
* X8570002	SMART TRAFFIC MONITORING SYSTEM	CAL WK	~~120~~	75.86			120
FRC03600	EX MH CLEANING	$	886.57				
* X8570004	SMART TRAFFIC MONITORING DEVICE	CAL WK	~~600~~	379.3			600
FRC03700	BRUSH REM WEST ROAD	$	347.75				
Z0013798	CONSTRUCTION LAYOUT	L SUM	1				1
FRC03800	BARRIER WALL INSTALL	$	56070.96				
Z0018700	DRAINAGE STRUCTURE TO BE REMOVED	EACH	1				1
Z0022800	FENCE REMOVAL	FOOT	~~110~~	886			110

* SPECIALTY ITEMS

TranSmart
111 South Wells Street Suite 1000
Chicago, Illinois 60607

USER NAME = nsalehian	DESIGNED - BJD	REVISED -	
	DRAWN - BJD	REVISED -	
PLOT SCALE = 0.10000833 ' / in.	CHECKED - TW	REVISED -	
PLOT DATE = 3/29/2021	DATE - 2021/03/26	REVISED -	

STATE OF ILLINOIS
DEPARTMENT OF TRANSPORTATION

I-57 & WALDRON ROAD
SUMMARY OF QUANTITIES

SCALE: | SHEET 13 OF 14 SHEETS | STA. | TO STA.

F.A.I RTE.	SECTION	COUNTY	TOTAL SHEETS	SHEET NO.
	139 HBR-6	KANKAKEE	202	16
		CONTRACT NO. 66997		
		ILLINOIS FED. AID PROJECT		

REV. 5/12/21 REV. 4/29/21 REV. 4/9/21

CODE NO.	ITEM	UNIT	TOTAL QUANTITY (URBAN)	CONSTRUCTION CODE: NHPP 90% FED / 10% STATE, BRIDGE, 0010, 046-0153	NHPP 90% FED / 10% STATE, RETAINING WALL, 0044, WALL A	NHPP 90% FED / 10% STATE, RETAINING WALL, 0044, WALL B	NHPP 90% FED / 10% STATE, ROADWAY, 0004, URBAN	
Z0030850	TEMPORARY INFORMATION SIGNING	SQ FT	42				42	
Z0046304	PIPE UNDERDRAINS FOR STRUCTURES 4"	FOOT	~~1372~~	1352.5 352	660	360		
Z0056608	STORM SEWER (WATER MAIN REQUIREMENTS) 12 INCH	FOOT	~~29~~	22.94			29	1
Ø Z0076600	TRAINEES	HOUR	~~2,000~~	2895			2,000	
Z0056610	STORM SEWER (WATER MAIN REQUIREMENTS) 15 INCH	FOOT	~~22~~	Ø			22	1
Ø Z0076604	TRAINEES - TRAINING PROGRAM GRADUATE	HOUR	Ø		2,000			
* Z0062456	TEMPORARY PAVEMENT	SQ YD	~~652~~	640.6			652	1

* SPECIALTY ITEMS

Ø 0042

1 REV. 8/27/21 REV. 4/29/21 REV. 4/20/21 REV. 4/9/21

MODEL: Plan 1
FILE NAME: D:\0002 SH_BC214.dgn

TranSmart
411 South Wells Street Suite 1800
Chicago, Illinois 60607

USER NAME = nsolehan	DESIGNED - BJD	REVISED -	
	DRAWN - BJD	REVISED -	
PLOT SCALE = 0.16666633 ' / in.	CHECKED - TW	REVISED -	
PLOT DATE = 3/29/2021	DATE - 2021/03/26	REVISED -	

STATE OF ILLINOIS
DEPARTMENT OF TRANSPORTATION

I-57 & WALDRON ROAD
SUMMARY OF QUANTITIES

SCALE: SHEET 14 OF 14 SHEETS STA. TO STA.

F.A.I RTE.	SECTION	COUNTY	TOTAL SHEETS	SHEET NO.
	139 HBR-6	KANKAKEE	202	17
		CONTRACT NO. 66997		
	ILLINOIS	FED. AID PROJECT		

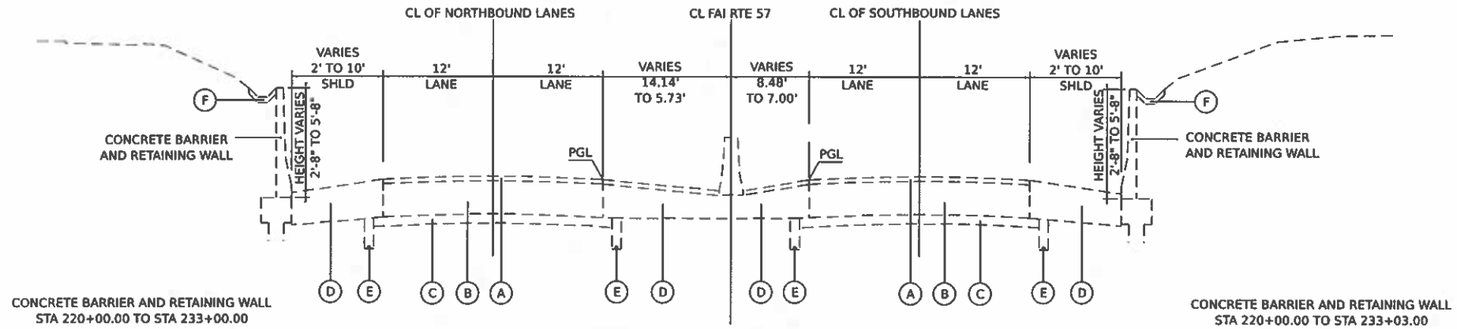

EXISTING I-57 MAINLINE

STA 226+00 TO STA 233+50.00

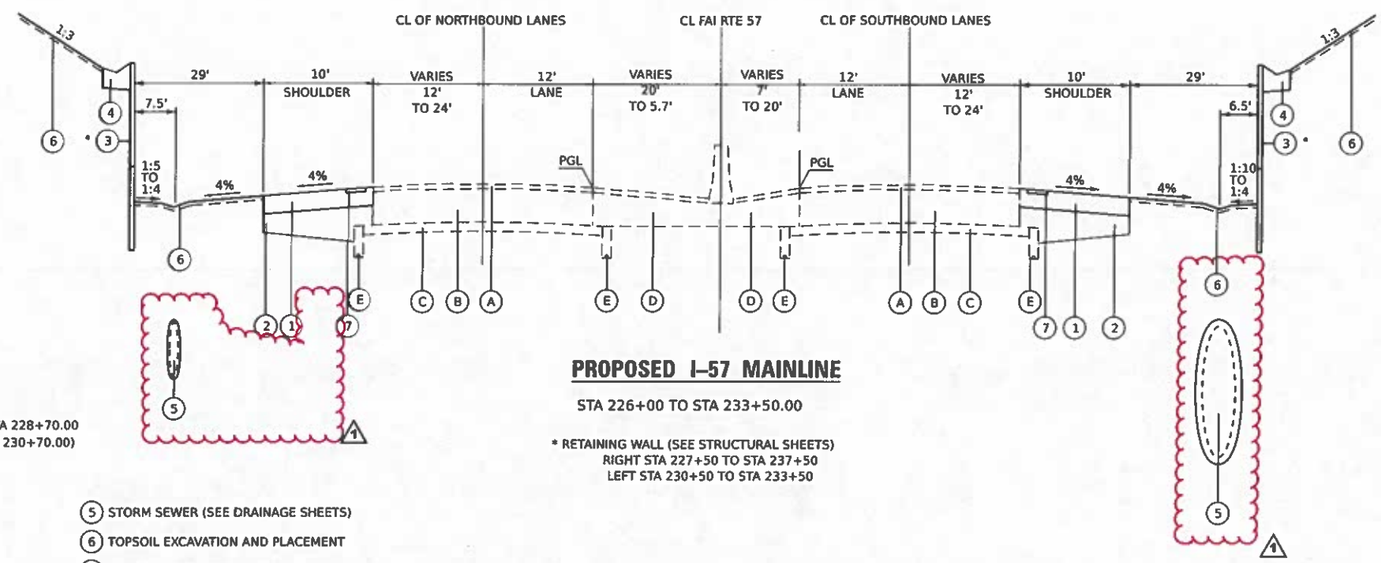

PROPOSED I-57 MAINLINE

STA 226+00 TO STA 233+50.00

* RETAINING WALL (SEE STRUCTURAL SHEETS)
RIGHT STA 227+50 TO STA 237+50
LEFT STA 230+50 TO STA 233+50

EXISTING LEGEND

- (A) 3" BITUMINOUS CONCRETE
- (B) 11 1/2" P.C.C. BASE COURSE
- (C) 4" SUB-BASE GRANULAR MATERIAL
- (D) BITUMINOUS SHOULDER 13" AND VARIES
- (E) PIPE UNDERDRAIN
- (F) PAVED DITCH (RIGHT SIDE FROM STA 220+00.00 TO STA 228+70.00
  LEFT SIDE FROM STA 220+00.00 TO STA 230+70.00)

PROPOSED LEGEND

- (1) HOT-MIX ASPHALT SHOULDERS, 6"
- (2) SUBBASE GRANULAR MATERIAL, TYPE A
- (3) RETAINING WALL (SEE STRUCTURAL SHEETS)
- (4) CONCRETE GUTTER, TYPE B
- (5) STORM SEWER (SEE DRAINAGE SHEETS)
- (6) TOPSOIL EXCAVATION AND PLACEMENT
- (7) SHOULDER RUMBLE STRIPS, 16 INCH

HMA MIXTURE REQUIREMENT TABLE

LOCATIONS:	DRIVEWAY	SHARED PATH/DRIVEWAY	I-57	I-57	WALDRON/MAPLE & DUANE/MUN	WALDRON/MAPLE & DUANE/MUN	WALDRON/MAPLE & DUANE/MUN	TEMP. PAVT. BOTTOM LIFT	TEMP. PAVT. TOP LIFT
MIXTURE USE(S):	HMA BASE COURSE 6 & 2 1/2"	HMA SURFACE COURSE	HMA SHOULDER BOTTOM LIFT(S)	HMA SHOULDER TOP LIFT	HMA FULL DEPTH BOTTOM LIFT BINDER	HMA FULL DEPTH TOP LIFT BINDER	HMA FULL DEPTH SURFACE	HMA BINDER COURSE	HMA SURFACE COURSE
BINDER GRADE (PG):	PG 64-22	PG 64-22	PG 64-22	PG 64-22	PG 64-22	SBS PG 70-28	SBS PG 70-28	PG 64-22	PG 64-22
DESIGN AIR VOIDS:	4.0% @ N50	4.0% @ N50	4.0% N70	4.0% N70	4.0% N50	4.0% N50	4.0% N50	4.0% @ N50	4.0% @ N50
MIXTURE COMPOSITION: (MIXTURE GRADATION)	IL 19.0	IL 9.5	IL 19.0	IL 9.5	IL 19.0	IL 19.0	IL 9.5	IL 19.0	IL 9.5
FRICTION AGGREGATE:		MIXTURE C		MIXTURE C			MIXTURE D		MIXTURE C
MIXTURE WEIGHT:	112.0 LB/SY/IN	112.0 LB/SY/IN	112.0 LB/SY/IN	112.0 LB/SY/IN	112.0 LB/SY/IN	112.0 LB/SY/IN	112.0 LB/SY/IN	112.0 LB/SY/IN	112.0 LB/SY/IN
QUALITY MANAGEMENT PROGRAM:	QCQA	QCQA	QCQA	QCQA	QCQA	QCQA	QCQA	QCQA	QCQA
SUBLOT SIZE:	NA	NA	NA	NA	NA	NA	NA	NA	NA
DENSITY TEST METHOD:	CORES/NUCLEAR	CORES/NUCLEAR	CORES	CORES	CORES	CORES	CORES	SATISFACTION OF ENGINEER	SATISFACTION OF ENGINEER

MODEL: Plan 1
FILE NAME: D0000007-SHeTypical Section.dgn

TranSmart
411 South Wells Street Suite 1000
Chicago, Illinois 60607

USER NAME = neelshian	DESIGNED - NS	REVISED -	
	DRAWN - NS	REVISED -	
PLOT SCALE = 0.16666633 ' / in.	CHECKED - TW	REVISED -	
PLOT DATE = 7/9/2021	DATE - 2021/07/09	REVISED -	

STATE OF ILLINOIS
DEPARTMENT OF TRANSPORTATION

I-57 & WALDRON ROAD
TYPICAL SECTIONS

SCALE: NTS | SHEET 1 OF 3 SHEETS | STA. ____ TO STA. ____

F.A.I. RTE.	SECTION	COUNTY	TOTAL SHEETS	SHEET NO.
57	139 HBR-6	KANKAKEE	202	18

CONTRACT NO. 66997
ILLINOIS | FED. AID PROJECT

REV. 8/25/21

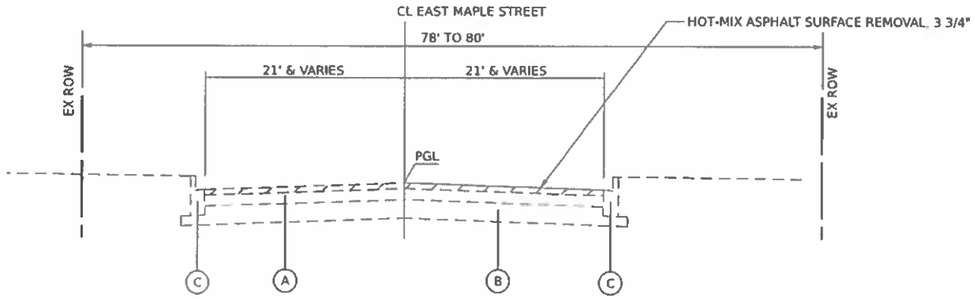

EXISTING SECTION EAST MAPLE STREET

STA 15+38.36 TO STA 17+06.80

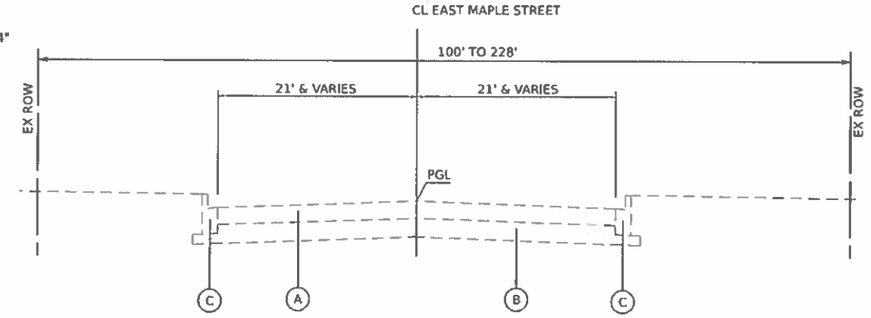

EXISTING SECTION EAST MAPLE STREET

STA 17+06.80 TO STA 18+42.84

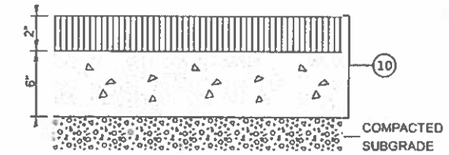

SHARED PATH CROSS SECTION

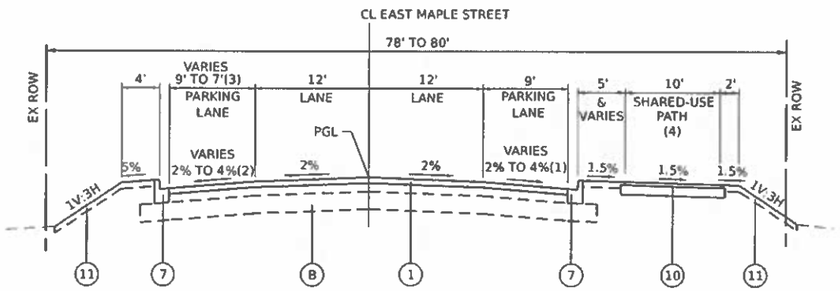

PROPOSED SECTION EAST MAPLE STREET WEST OF I-57

STA 15+38.36 TO 17+06.80
(1) TRANSITION 4% AT STA 16+15.00 TO 2% AT STA 16+45.00
(2) TRANSITION 4% AT STA 16+85.00 TO 2% AT STA 17+45.00
(3) STA 16+83.76 TO STA 17+06.80 LEFT
(4) SHARED USE PATH BEGINS AT STA 16+26.67

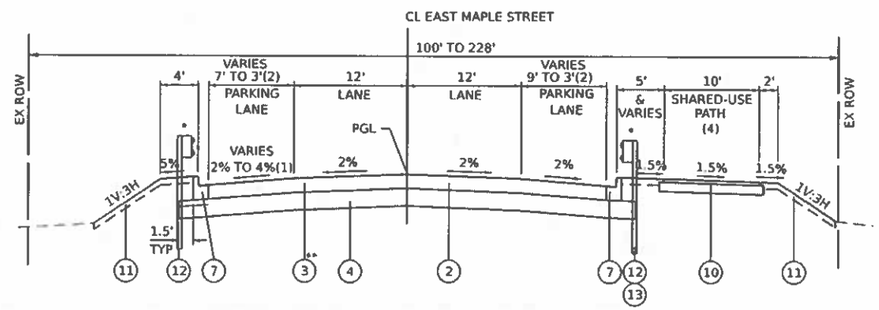

PROPOSED SECTION EAST MAPLE STREET WEST OF I-57

STA 17+06.80 TO 17+94.25
* FACE OF GUARDRAIL TO BE 6 IN. FROM FACE OF CURB
** TACK COAT TO BE APPLIED BETWEEN HMA LIFTS
(1) TRANSITION 4% AT STA 16+85.00 TO 2% AT STA 17+45.00
(2) STA 17+06.80 TO STA 18+05.36 LEFT
STA 17+43.54 TO STA 18+46.81 RIGHT

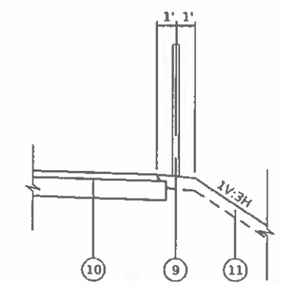

BICYCLE RAILING DETAIL

NOTE: BICYCLE RAILING TO BE INSTALLED
STA 17+00.00 TO STA 18+33.63
STA 21+64.90 TO STA 24+95.50

EXISTING LEGEND

- (A) BITUMINOUS PAVEMENT
- (B) AGGREGATE BASE
- (C) COMBINATION CONCRETE CURB AND GUTTER, B-6.12
- (D) AGGREGATE SHOULDER

PROPOSED LEGEND

1. HOT-MIX ASPHALT SURFACE COURSE, IL 9.5, MIX "D", N50 1.5"
   HOT-MIX ASPHALT BINDER COURSE, IL 19.0, N50 2.25"
2. HOT-MIX ASPHALT PAVEMENT (FULL DEPTH), 10 1/4"
3. BITUMINOUS MATERIALS (TACK COAT)
4. AGGREGATE SUBGRADE IMPROVEMENT, 18"
5. AGGREGATE SHOULDERS, TYPE A 6"
6. COMBINATION CONCRETE CURB AND GUTTER, TYPE B-6.24
7. COMBINATION CONCRETE CURB AND GUTTER, TYPE B-6.12
8. CONCRETE GUTTER, TYPE A
9. BICYCLE RAILING
10. HOT MIX ASPHALT SURFACE COURSE, IL-9.5, MIX "C", N50 2"
    AGGREGATE BASE COURSE TYPE A, 6"
11. TOPSOIL EXCAVATION AND PLACEMENT
12. STEEL PLATE BEAM GUARDRAIL, TYPE A, 6 FOOT POSTS
13. BACK SIDE PROTECTION OF GUARDRAIL

CLEAR ZONE

ROADWAY	STATION	STATION	DESIGN SPEED (MPH)	CLEAR ZONE (FT)	OBSTRUCTION-FREE CLEARANCE (FT)
EAST MAPLE STREET	15+40.00	17+93.10	30	10	1.5
WALDRON ROAD	17+93.10	26+35.00	40	10	1.5
DUANE BOULEVARD			30	10	1.5
MUN 2530	10+13.20	12+00.00	30	7	

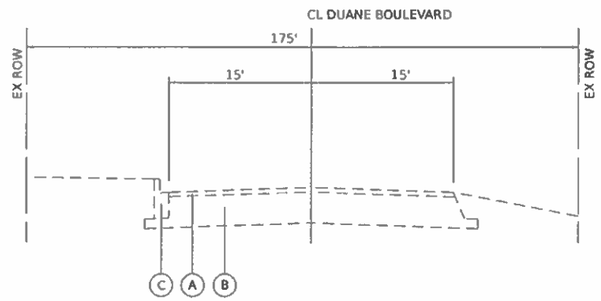

EXISTING SECTION EAST DUANE BOULEVARD

STA 31+46.02 TO 31+78.85

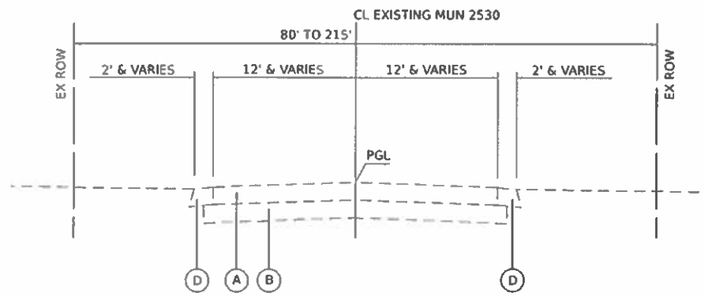

EXISTING SECTION MUN 2530

STA 10+13.20 TO STA 12+00.00

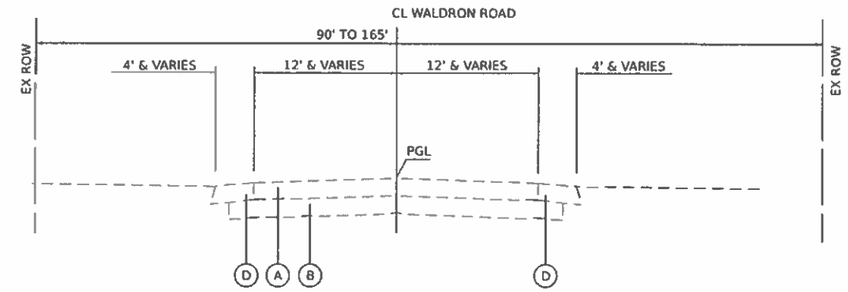

EXISTING SECTION WALDRON ROAD

STA 20+75.15 TO STA 26+35.00

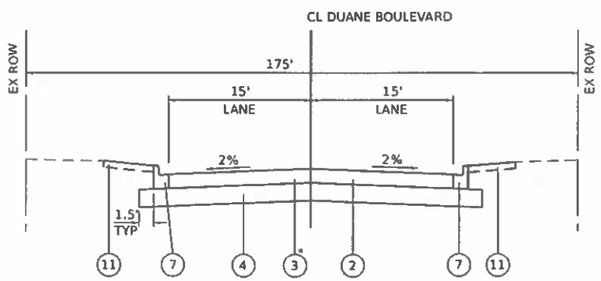

PROPOSED SECTION EAST DUANE BOULEVARD

STA 31+46.02 TO 31+78.85

* TACK COAT TO BE APPLIED BETWEEN HMA LIFTS

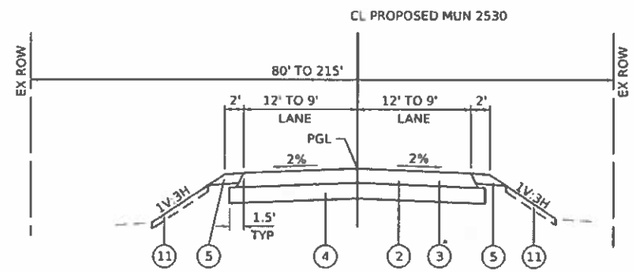

PROPOSED SECTION MUN 2530

STA 10+13.20 TO 12+00.00

* TACK COAT TO BE APPLIED BETWEEN HMA LIFTS

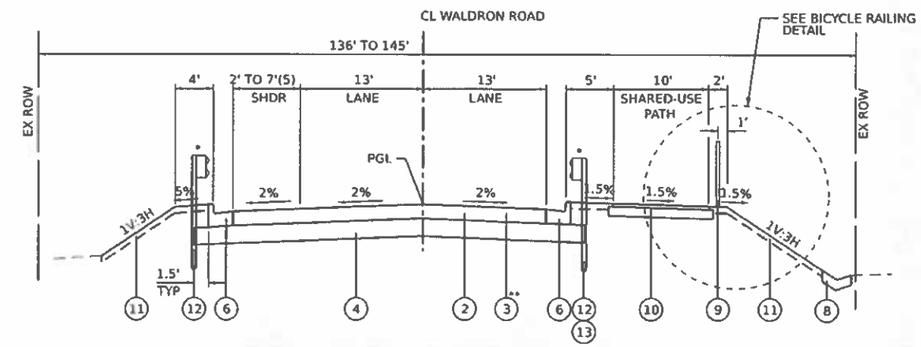

PROPOSED SECTION WALDRON ROAD EAST OF I-57

STA 21+23.85 TO 22+00.00

* FACE OF GUARDRAIL TO BE 6 IN. FROM FACE OF CURB

** TACK COAT TO BE APPLIED BETWEEN HMA LIFTS

(5) STA 21+13.76 TO STA 21+96.17 LEFT

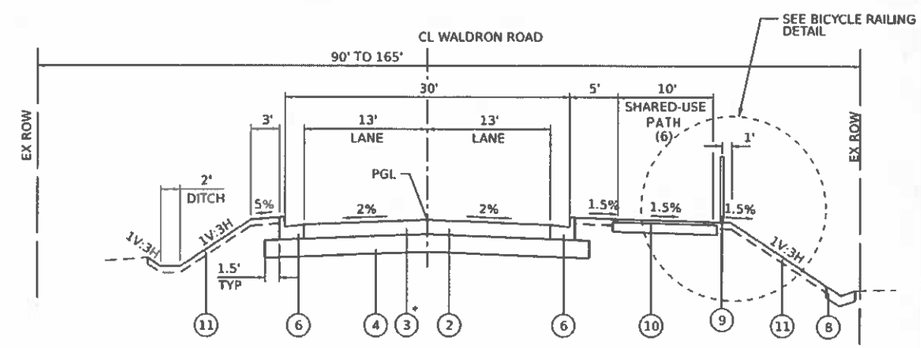

PROPOSED SECTION WALDRON ROAD EAST OF I-57

STA 22+00.00 TO 26+35.00

* TACK COAT TO BE APPLIED BETWEEN HMA LIFTS

(6) SHARED-USE PATH ENDS AT STA 24+95.50

EXISTING LEGEND

- (A) EXISTING BITUMINOUS SURFACE
- (B) EXISTING AGGREGATE BASE
- (C) EXISTING COMBINATION CONCRETE CURB AND GUTTER, B-6.12
- (D) EXISTING AGGREGATE SHOULDER

PROPOSED LEGEND

- (1) HOT-MIX ASPHALT SURFACE COURSE, IL 9.5, MIX "D", N50 1.5"
  HOT-MIX ASPHALT BINDER COURSE, IL 19.0, N50 2.25"
- (2) HOT-MIX ASPHALT PAVEMENT (FULL DEPTH), 10 1/4"
- (3) BITUMINOUS MATERIALS (TACK COAT)
- (4) AGGREGATE SUBGRADE IMPROVEMENT, 18"
- (5) AGGREGATE SHOULDERS, TYPE A 6"
- (6) COMBINATION CONCRETE CURB AND GUTTER, TYPE B-6.24
- (7) COMBINATION CONCRETE CURB AND GUTTER, TYPE B-6.12
- (8) CONCRETE GUTTER, TYPE A
- (9) BICYCLE RAILING
- (10) HOT MIX ASPHALT SURFACE COURSE, IL-9.5, MIX "C", N50 2"
  AGGREGATE BASE COURSE TYPE A, 6"
- (11) TOPSOIL EXCAVATION AND PLACEMENT
- (12) STEEL PLATE BEAM GUARDRAIL, TYPE A, 6 FOOT POSTS
- (13) BACK SIDE PROTECTION OF GUARDRAIL

MODEL: Plan 1
FILE NAME: P:\60665.5.3-Typical Sections.dgn

TranSmart
411 South Wells Street Suite 1000
Chicago, Illinois 60607

USER NAME = mallahan	DESIGNED - NS	REVISED -	
	DRAWN - NS	REVISED -	
PLOT SCALE = 0.1667 ' / in.	CHECKED - TW	REVISED -	
PLOT DATE = 3/29/2021	DATE - 2021/03/26	REVISED -	

STATE OF ILLINOIS
DEPARTMENT OF TRANSPORTATION

I-57 & WALDRON ROAD
TYPICAL SECTIONS

SCALE: NTS | SHEET 3 OF 3 SHEETS | STA. | TO STA.

F.A.I. RTE	SECTION	COUNTY	TOTAL SHEETS	SHEET NO.
57	139 HBR-6	KANKAKEE	202	20

CONTRACT NO. 66997

ILLINOIS | FED. AID PROJECT

REMOVAL SCHEDULE

START STATION	OFFSET	END STATION	OFFSET	PAVEMENT REMOVAL 44000100	HOT-MIX ASPHALT SURFACE REMOVAL, 3 3/4" 44000164	DRIVEWAY PAVEMENT REMOVAL 44000200	GUTTER REMOVAL 44000400	COMBINATION CURB AND GUTTER REMOVAL 44000500	SIDEWALK REMOVAL 44000600	CONCRETE BARRIER REMOVAL 44001980	PAVED SHOULDER REMOVAL 44004250	PAVEMENT PATCHING, TYPE III, 8 INCH 44200099	PAVEMENT PATCHING, TYPE IV, 8 INCH 44200101	GUARDRAIL REMOVAL 63200310	AGGREGATE SHOULDER REMOVAL X4810200	FENCE REMOVAL Z0022800
	FOOT		FOOT	SQ YD		SQ YD	FOOT	FOOT	SQ FT	FOOT	SQ YD	SQ YD	SQ YD	FOOT	CU YD	FOOT
I-57																
226+56.74	30.4 RT	233+50.19	30.9 RT								608.9					
226+54.19	47.0 RT	228+71.89	40.8 RT				218.2									
226+56.73	41.4 RT	233+04.56	42.2 RT							648.2						
232+88.79	40.6 RT	233+47.33	41.4 RT											58.6		
229+39.93	30.3 LT	235+50.78	33.7 LT								500.1					
229+30.04	44.3 LT	230+71.28	37.7 LT				139.8									
229+39.91	41.0 LT	233+04.05	43.4 LT							364.5						
233+16.71	42.9 LT	235+38.34	44.0 LT											221.7		
229+98.00		230+23.00								25.0						
230+75.00		231+18.00								43.0						
E MAPLE ST																
15+38.36		17+06.80			921.6											
17+06.80		17+96.08		360.2												
15+41.17	22.6 RT	15+57.89	22.8 RT			52.9										
15+38.35	21.9 RT	16+45.39	53.9 RT					129.2								
16+77.64	44.0 RT	18+14.98	16.2 RT					147.3								
17+05.21	24.7 RT	18+60.41	12.6 RT											155.5		
15+40.73	21.9 LT	17+71.23	15.8 LT					231.0								
15+43.02	22.8 LT	18+26.27	13.1 LT											283.9		
18+10.38	66.4 RT	18+84.34	66.2 RT													110.0
18+27.94	66.4 RT	18+36.40	54.3 RT						26.7							
16+13.54		16+17.34										17.9				
16+17.60	18.3 LT	17+06.80	15.3 LT										25.2			
WALDRON RD																
21+21.72		26+35.00		1399.4												
20+98.52	12.2 RT	23+20.36	12.2 RT												33.6	
21+01.32	13.1 RT	23+08.53	16.7 RT											207.3		
24+78.39	12.3 RT	25+35.50	12.6 RT			169.9										
25+35.50	12.5 RT	26+35.00	12.6 RT												4.6	
20+57.56	12.7 LT	21+63.27	16.9 LT											105.8		
22+31.30	18.2 LT	26+35.00	12.1 LT												27.8	
22+38.87	16.8 LT	23+36.49	16.5 LT											97.6		
23+16.50	50.4 RT	24+96.00	43.7 RT	264.8												
MUN 2530																
10+12.37		10+50.00		140.7												
10+50.00		12+00.00		307.0												
TOTALS				2472.1	921.6	222.8	358.0	507.5	26.7	1080.7	1109.0	17.9	25.2	1130.4	66.1	110.0

DRAINAGE STRUCTURE REMOVAL SCHEDULE

STATION	OFFSET	REMOVING CATCH BASINS 60500050	REMOVING INLETS 60500060	DRAINAGE STRUCTURE TO BE REMOVED Z0018700
	FOOT	EACH	EACH	EACH
I-57				
229+93	41.5 LT	1		
228+64	40.3 RT	1		
E MAPLE ST				
18+14	13.0 LT		1	
18+52	13.5 RT		1	
WALDRON RD				
25+29	34.9 RT			1
TOTALS		2	2	1

1

DRAINAGE PIPE REMOVAL SCHEDULE

START STATION	OFFSET	END STATION	OFFSET	PIPE CULVERT REMOVAL 50105220	STORM SEWER REMOVAL 12" 55100500
	FOOT		FOOT	FOOT	FOOT
I-57					
229+93	41.5 LT	229+92	36.5 LT		5.0
228+62	39.1 RT	228+57	36.6 RT		9.0
E MAPLE ST					
18+14	13.1 LT	18+93	45.4 RT		97.0
WALDRON RD					
24+95	34.2 RT	25+22	32.4 RT	25.0	
25+23	41.6 RT	25+28	36.4 RT		4.7
TOTALS				25	116

1

TranSmart
411 South Wells Street Suite 1000
Chicago, Illinois 60607

USER NAME = ssrkc	DESIGNED - NS	REVISED -
	DRAWN - NS	REVISED -
PLOT SCALE = 0.16666633 ' / in.	CHECKED - TW	REVISED -
PLOT DATE = 7/9/2021	DATE - 2021/03/26	REVISED -

STATE OF ILLINOIS
DEPARTMENT OF TRANSPORTATION

REMOVAL SCHEDULE

SCALE: NTS | SHEET 1 OF 1 SHEETS | STA. TO STA.

F.A.I. RTE.	SECTION	COUNTY	TOTAL SHEETS	SHEET NO.
57	139 HBR-6	KANKAKEE	202	21

CONTRACT NO. 66997

ILLINOIS FED. AID PROJECT

1 REV. 08/25/21

MODEL: Plan 1
FILE NAME: D399997-Sht-Removal Schedule.dgn

TREE REMOVAL SCHEDULE

TREE #	# OF STEMS	INDIVIDUAL STEM MEASUREMENTS 1	2	3	4	5	REMOVAL BY UNIT DIAMETER 6 TO 15 UNIT	OVER 15 UNIT
							20100110	20100210
SE QUADRANT								
1	1	24						24
2	1	21						21
3	1	16						16
4	1	19						19
SUBTOTAL							0	80
NE QUADRANT								
5	1	21						21
6	1	24						24
7	1	8					8	
8	2	20	16					36
9	1	6					6	
10	1	8					8	
11	1	11					11	
12	1	6					6	
13	2	10	10				20	
14	1	9					9	
15	1	12					12	
16	1	8					8	
17	1	13					13	
18	3	7	5	5			7	
19	1	7					7	
20	1	10					10	
21	2	7	3				7	
22	2	6	2				6	
23	1	8					8	
24	1	8					8	
25	2	11	7				18	
26	1	11					11	
27	1	10					10	
28	1	10					10	
29	1	10					10	
30	1	12					12	
31	2	6	4				6	
32	1	8					8	
33	1	6					6	
34	1	10					10	
35	2	6	4				6	
36	1	10					10	
37	1	6					6	
38	1	10					10	
39	2	7	4				7	
40	1	7					7	
41	1	6					6	
42	1	10					10	
43	1	8					8	
44	1	6					6	
45	1	6					6	
46	1	7					7	
47	1	6					6	
48	1	7					7	
SUBTOTAL							357	81

TREE REMOVAL SCHEDULE

TREE #	# OF STEMS	INDIVIDUAL STEM MEASUREMENTS 1	2	3	4	5	REMOVAL BY UNIT DIAMETER 6 TO 15 UNIT	OVER 15 UNIT
							20100110	20100210
NW QUADRANT								
72	2	6	8				14	
73	1	13					13	
74	1	8					8	
75	2	8	8				16	
76	1	10					10	
77	1	10					10	
78	2	8	5				8	
79	1	8					8	
80	1	6					6	
81	1	9					9	
82	1	7					7	
83	1	7					7	
84	1	7					7	
85	1	14					14	
86	2	6	6				12	
87	1	15					15	
88	1	8					8	
89	1	7					7	
90	2	7	7				14	
91	2	10	12				22	
92	1	10					10	
93	2	7	5				7	
94	1	8					8	
95	3	6	5	4			6	
96	1	14					14	
97	1	10					10	
98	1	6					6	
99	2	6	5				6	
100	1	6					6	
101	2	13	7				20	
102	1	10					10	
103	3	11	8	5			19	
104	1	8					8	
105	1	8					8	
106	2	10	4				10	
107	4	6	6	2	3		12	
108	1	6					6	
109	5	6	6	5	4	2	12	
110	4	6	5	4	3		6	
111	1	8					8	
SUBTOTAL							407	0

TREE REMOVAL SCHEDULE

TREE #	# OF STEMS	INDIVIDUAL STEM MEASUREMENTS 1	2	3	4	5	REMOVAL BY UNIT DIAMETER 6 TO 15 UNIT	OVER 15 UNIT
							20100110	20100210
SW QUADRANT								
49	1	16						16
50	1	10					10	
51	3	7	5	10			17	
52	1	28						28
53	1	28						28
54	1	10					10	
55	1	8					8	
56	1	6					6	
57	1	15					15	
58	1	12					12	
59	1	10					10	
60	3	6	5	7			13	
61	1	6					6	
62	1	6					6	
63	1	6					6	
64	2	13	13				26	
65	1	13					13	
66	1	12					12	
67	1	7					7	
68	1	13					13	
69	1	7					7	
70	1	8					8	
71	1	30						30
SUBTOTAL							205	102
SE OF COUNTY RD S 089 E								
112	1	40						40
113	1	30						30
114	2	9	3				9	
115	1	8					8	
116	1	8					8	
117	1	8					8	
118	1	8					8	
119	4	8	7	5	7		22	
120	1	8					8	
121	1	7					7	
122	1	6					6	
123	1	6					6	
124	1	6					6	
SUBTOTAL							94	70
TOTALS							1,063	333

MODEL: Plan 1
FILE NAME: C:\Users\tranmsh\Desktop\Tree Removal Schedule.dgn

TranSmart
411 South Wells Street Suite 1000
Chicago, Illinois 60607

USER NAME = nsalehian	DESIGNED - NS	REVISED -	STATE OF ILLINOIS DEPARTMENT OF TRANSPORTATION
	DRAWN - NS	REVISED -	
PLOT SCALE = 0.186666333 ' / in.	CHECKED - TW	REVISED -	
PLOT DATE = 3/29/2021	DATE - 2021/03/26	REVISED -	

TREE REMOVAL SCHEDULE

SCALE: NTS | SHEET 1 OF 1 SHEETS | STA. | TO STA.

F.A.I. RTE.	SECTION	COUNTY	TOTAL SHEETS	SHEET NO.
57	139 HBR-6	KANKAKEE	202	22

CONTRACT NO. 66997

ILLINOIS | FED. AID PROJECT

shrinkage= 25%

STATION	EARTH EXCAVATION (CU YD) A		ROCK EXCAVATION (CU YD) B		EXCAVATION ADJUSTED FOR SHRINKAGE (CU YD) C=A*S		EMBANKMENT (CU YD) D		EARTHWORK BALANCE WASTE (+) / SHORT (-) (CU YD) E=C-D		TOPSOIL STRIPPING (CU YD) F		TOPSOIL PLACEMENT (CU YD) G		TOPSOIL BALANCE WASTE (+) / SHORT (-) (CU YD) H=F-G	
	STAGE 1	STAGE 2	STAGE 1	STAGE 2	STAGE 1	STAGE 2	STAGE 1	STAGE 2	STAGE 1	STAGE 2	STAGE 1	STAGE 2	STAGE 1	STAGE 2	STAGE 1	STAGE 2
MAINLINE I-57																
226+00																
226+50	0.0	0.0	0.0	0.0	0.0	0.0	0.0	0.0	0.0	0.0	0.0	0.1	0.0	0.1	0.0	0.0
227+00	0.0	135.1	0.0	0.0	0.0	101.3	0.0	0.0	0.0	101.3	0.0	11.6	0.0	13.1	0.0	-1.5
227+50	0.0	428.4	0.0	0.0	0.0	321.3	0.0	0.0	0.0	321.3	0.0	29.3	0.0	29.7	0.0	-0.4
228+00	0.0	579.0	0.0	0.0	0.0	434.2	0.0	0.0	0.0	434.2	0.0	32.8	0.0	31.5	0.0	1.3
228+50	0.0	641.0	0.0	0.0	0.0	480.8	0.0	0.0	0.0	480.8	0.0	27.9	0.0	26.7	0.0	1.2
229+00	0.0	789.1	0.0	9.2	0.0	591.8	0.0	0.0	0.0	591.8	0.0	21.8	0.0	20.8	0.0	0.9
229+50	0.0	917.1	0.0	14.9	0.0	687.9	0.0	0.6	0.0	687.3	0.0	28.2	0.0	29.9	0.0	-1.7
230+00	0.0	1312.1	0.0	15.3	0.0	984.1	0.0	0.6	0.0	983.5	0.0	51.5	0.0	53.4	0.0	-2.0
230+50	325.0	1360.8	0.0	23.7	243.8	1020.6	0.0	0.0	243.8	1020.6	11.7	54.9	9.5	53.1	2.2	1.8
231+00	571.1	865.6	21.1	14.1	428.3	649.2	0.0	0.0	428.3	649.2	27.9	33.0	24.0	29.6	3.9	3.4
231+50	756.8	333.5	44.2	0.0	567.6	250.1	0.0	0.0	567.6	250.1	39.7	10.4	35.9	8.9	3.8	1.5
232+00	891.7	0.0	48.4	0.0	668.8	0.0	0.0	0.0	668.8	0.0	45.3	0.0	41.3	0.0	4.0	0.0
232+50	666.3	0.0	58.7	0.0	499.7	0.0	0.0	0.0	499.7	0.0	42.3	0.0	39.2	0.0	3.0	0.0
233+00	498.7	0.0	78.9	0.0	374.0	0.0	2.0	0.0	372.1	0.0	42.0	0.0	39.3	0.0	2.7	0.0
233+50	321.8	0.0	47.8	0.0	241.3	0.0	7.8	0.0	233.5	0.0	41.9	0.0	41.5	0.0	0.4	0.0
234+00	113.1	0.0	2.3	0.0	84.8	0.0	5.9	0.0	79.0	0.0	35.1	0.0	36.1	0.0	-1.0	0.0
234+50	9.6	0.0	0.0	0.0	7.2	0.0	0.0	0.0	7.2	0.0	14.7	0.0	14.6	0.0	0.1	0.0
235+00	9.3	0.0	0.0	0.0	7.0	0.0	0.0	0.0	7.0	0.0	0.0	0.0	0.0	0.0	0.0	0.0
235+50	9.0	0.0	0.0	0.0	6.7	0.0	0.0	0.0	6.7	0.0	0.0	0.0	0.0	0.0	0.0	0.0
236+00	4.4	0.0	0.0	0.0	3.3	0.0	0.0	0.0	3.3	0.0	0.0	0.0	0.0	0.0	0.0	0.0
SUBTOTAL	**4176.9**	**7361.8**	**301.3**	**77.1**	**3132.7**	**5521.3**	**15.6**	**1.2**	**3117.0**	**5520.2**	**300.6**	**301.4**	**281.4**	**296.9**	**19.1**	**4.6**
WALDRON RD																
15+00																
15+50	27.2	30.5	0.0	0.0	20.4	22.9	0.6	3.0	19.8	19.9	0.0	2.2	0.0	2.1	0.0	0.0
16+00	55.2	62.1	0.0	0.0	41.4	46.6	1.1	11.7	40.3	34.9	0.6	9.1	0.8	8.9	-0.2	0.3
16+50	98.9	61.2	0.0	0.0	74.2	45.9	0.5	24.8	73.7	21.1	0.6	15.2	0.8	14.5	-0.2	0.7
17+00	101.0	53.5	0.0	0.0	75.8	40.1	17.9	46.4	57.9	-6.3	8.5	16.7	4.1	15.8	4.4	0.9
17+50	47.2	33.9	0.0	0.0	35.4	25.4	112.2	56.6	-76.8	-31.2	21.4	16.0	14.5	15.4	6.9	0.5
18+00	18.6	43.0	0.0	0.0	13.9	32.2	232.8	46.0	-218.8	-13.8	27.2	10.9	22.1	11.2	5.1	-0.2
18+50	116.1	33.0	0.0	0.0	87.1	24.7	275.5	19.6	-188.4	5.1	28.7	3.4	23.2	3.8	5.6	-0.4
18+75	253.5	0.0	0.0	0.0	190.1	0.0	102.7	0.0	87.4	0.0	15.4	0.0	13.2	0.0	2.2	0.0
19+50	588.4	0.0	0.0	0.0	441.3	0.0	102.5	0.0	338.8	0.0	24.6	0.0	22.4	0.0	2.2	0.0
20+00	0.0	0.0	0.0	0.0	0.0	0.0	0.0	0.0	0.0	0.0	0.0	0.0	0.0	0.0	0.0	0.0
20+50	0.0	0.0	0.0	0.0	0.0	0.0	0.0	3.2	0.0	-3.2	0.0	10.9	0.0	9.3	0.0	1.6
21+00	0.0	0.0	0.0	0.0	0.0	0.0	17.5	162.2	-17.5	-162.2	0.0	21.2	0.0	17.6	0.0	3.6
21+50	0.0	0.0	0.0	0.0	0.0	0.0	254.1	349.1	-254.1	-349.1	8.4	22.2	6.3	17.5	2.1	4.8
22+00	0.0	0.0	0.0	0.0	0.0	0.0	559.9	252.0	-559.9	-252.0	26.4	11.9	22.6	11.9	3.8	0.0
22+50	0.0	0.0	0.0	0.0	0.0	0.0	574.1	279.5	-574.1	-279.5	36.7	11.3	33.5	9.6	3.2	1.6
23+00	4.8	3.8	0.0	0.0	3.6	2.8	414.4	279.2	-410.7	-276.3	32.2	19.3	29.4	15.1	2.8	4.1
23+50	20.8	14.0	0.0	0.0	15.6	10.5	266.7	100.2	-251.1	-89.7	24.9	15.5	18.5	15.8	6.4	-0.3
24+00	37.7	25.3	0.0	0.0	28.3	19.0	184.3	61.9	-156.0	-42.9	22.6	14.2	12.5	14.1	10.1	0.1
24+50	48.5	33.3	0.0	0.0	36.4	25.0	147.7	34.2	-111.3	-9.2	22.3	11.8	12.2	11.8	10.0	0.0
25+00	52.1	36.1	0.0	0.0	39.1	27.1	117.3	15.3	-78.2	11.8	27.0	8.0	6.0	8.2	21.0	-0.2
25+50	48.0	35.4	0.0	0.0	36.0	26.5	56.1	9.4	-20.1	17.2	19.6	5.2	3.3	5.5	16.2	-0.3
26+00	46.5	35.1	0.0	0.0	34.9	26.3	7.1	9.8	27.8	16.5	4.4	4.9	6.5	5.2	-2.1	-0.3
26+30	23.9	17.6	0.0	0.0	17.9	13.2	1.9	5.0	16.0	8.2	0.8	2.6	3.1	2.6	-2.4	-0.1
27+00	0.0	0.0	0.0	0.0	0.0	0.0	0.0	0.0	0.0	0.0	0.0	0.0	0.0	0.0	0.0	0.0
SUBTOTAL	**1588.5**	**517.7**	**0.0**	**0.0**	**1191.4**	**388.3**	**3446.9**	**1769.1**	**-2255.5**	**-1380.9**	**352.0**	**232.5**	**255.1**	**216.0**	**96.8**	**16.5**
MUN 2530																
10+50																
11+00	0.0	7.0	0.0	0.0	0.0	5.3	0.0	292.6	0.0	-287.3	0.0	31.8	0.0	19.1	0.0	12.7
11+50	0.0	36.1	0.0	0.0	0.0	27.1	0.0	86.4	0.0	-59.3	0.0	16.6	0.0	9.6	0.0	7.0
12+00	0.0	29.1	0.0	0.0	0.0	21.8	0.0	2.2	0.0	19.6	0.0	4.8	0.0	1.7	0.0	3.1
12+50	0.0	0.0	0.0	0.0	0.0	0.0	0.0	0.0	0.0	0.0	0.0	0.8	0.0	0.0	0.0	0.8
SUBTOTAL	**0.0**	**72.2**	**0.0**	**0.0**	**0.0**	**54.2**	**0.0**	**381.1**	**0.0**	**-327.0**	**0.0**	**54.0**	**0.0**	**30.4**	**0.0**	**23.7**
TOTALS	**5765.4**	**7951.6**	**301.3**	**77.1**	**4324.1**	**5963.7**	**3462.5**	**2151.4**	**861.6**	**3812.3**	**652.5**	**587.9**	**536.6**	**543.2**	**116.0**	**44.8**
	13717.1		**378.4**		**10287.8**		**5613.9**		**4673.9**		**1240.5**		**1079.8**		**160.7**	

NOTE: ROCK EXCAVATION SHALL COMPLY WITH REQUIREMENTS OF ARTICLE 205.04 PRIOR TO REUSE IN THE EMBANKMENT.

PAY ITEM	DESCRIPTION	UNIT	QUANTITY	CALCULATION
20200100	EARTH EXCAVATION	CU YD	13720	A
21101505	TOPSOIL EXCAVATION AND PLACEMENT	CU YD	1245	F
50200400	ROCK EXCAVATION FOR STRUCTURES	CU YD	380	B

TranSmart
411 South Wells Street Suite 1000
Chicago, Illinois 60607

USER NAME = rsalarian
PLOT SCALE = 0.1666667' / in.
PLOT DATE = 3/29/2021

DESIGNED - BJD
DRAWN - BJD
CHECKED - TW
DATE - 2021/03/26

REVISED - 5/7/2021
REVISED -
REVISED -
REVISED -

STATE OF ILLINOIS
DEPARTMENT OF TRANSPORTATION

SCHEDULE OF QUANTITIES
EARTHWORK

SCALE: NTS | SHEET 1 OF 1 SHEETS | STA. TO STA.

F.A.I. RTE.	SECTION	COUNTY	TOTAL SHEETS	SHEET NO.
57	139 HBR-6	KANKAKEE	202	23

CONTRACT NO. 66997

ILLINOIS | FED. AID PROJECT

MODEL: Plan 1
FILE NAME: C:\PWWorking\dot\d1000287\Sht_Earthwork\Schedule.dgn

ROADWAY SCHEDULE

START STATION	OFFSET	END STATION	OFFSET	HMA PAVT FD 10 1/4 40701886	BIT MATLS TACK CT 40700100	AGG SUBGRADE IMPR 18 30300118	HMA SC IL-9.5 D N50 40604060	HMA SC IL-9.5 C N50 40604050	HMA BC IL-19.0 N50 40603080	AGG BASE CSE A 6 35100500	HMA BASE CSE 2 1/2 35501288	HMA BASE CSE 6 35501308	COMB CC&G TB6.12 60603800	COMB CC&G TB6.24 60605000	BICYCLE RAILING 50901720	CONC GUTTER TA 60602500	CONC GUTTER TB 60602800	AGGREGATE SHLDS A 6 48100500	SUB GRAN MAT A 31100200	HMA SHOULDERS 6 48203021	PC CONC SIDEWALK 8 42400410	PVT CON PCC BR APP SL 42000080	CONC BAR TRANS 63700805	CONCRETE BARRIER BASE 63700900	MOD GLAR SCR SYS PERM 63800910	HMA BC WID 6 1/2 35600702
	FOOT		FOOT	SQ YD	POUND	SQ YD	TON	TON	TON	SQ YD	SQ YD	SQ YD	FOOT	FOOT	FOOT	FOOT	FOOT	SQ YD	CU YD	SQ YD	SQ FT	SQ YD	FOOT	FOOT	FOOT	SQ YD
I-57																										
226+56.74	30.5 RT	233+50.19	30.9 RT																5322.2	771.4						
229+39.93	30.3 LT	235+50.78	33.7 LT																4686.7	677.8						
227+50.00	70.6 RT	233+50.00	70.6 RT														600									
230+50.00	70.6 LT	233+50.00	70.6 LT														300									
229+30.05	42.7 LT	229+39.9	42.8 LT													10										
229+98.00		230+23.00																					25.0	25.0	25.0	
230+93.00		231+18.00																					25.0	25.0	25.0	
E MAPLE ST																										
14+04 ~~16+38.36~~		17+06.80					78.7		118.1																	
17+06.80		17+59.88		227.7	102.4	227.7																				
15+38.35	22.6 RT	15+61.45	22.6 RT					6.5			57.7															
16+23.45	27.0 RT	16+31.45	27.0 RT																		135.4					
16+91.47	27.0 RT	17+05.55	27.0 RT																		195.6					
17+05.55	27.0 RT	18+11.91	19.5 RT					13.2		117.5																
15+38.35	21.0 RT	16+46.22	53.9 RT										127.9													
16+76.49	54.0 RT	17+06.80	21 RT										50.2													
17+06.80	21.0 RT	18+11.91	16.7 RT			36.0							158.9													
15+38.36	21.0 LT	17+74.88	15.3 LT			23.4							237.1													
16+91.60	37.6 RT	18+33.64	29.8 RT												141.9											
17+59.88		17+96.08																				163.9				
16+26.26	22.7 RT	16+46.22	50.3 RT																							6.2
16+77.34	44.1 RT	16+82.29	26.5 RT																							1.9
WALDRON RD																										
21+75.67		26+35.00		1462.1	657.9	1462.1																				
21+75.67	19.1 RT	24+85.41	20 RT					39.2		349.7																
24.82.00	15.6 RT	25+35.00	15.6 RT					17.6				157.5														
21+75.68	13.0 RT	26+35.00	13.0 RT			208.9								459.3												
21+00.91	15 LT	22+06.07	30.5 LT			49.6								109.0												
27+55 22+46.03	33.1 LT	~~26+00.00~~	13.0 LT			179.5								396.9												
23+16.40	47.9 RT	24+96.00	46.8 RT													179.6										
21+64.85	29.6 RT	24+91.96	30.7 RT												327.1											
23+16.52	50.9 RT	24+96.00	49.8 RT					4.5				99.7														
21+21.72		21+75.67																				237.75				
MUN 2530																										
10+32.50		12+00.00		429.6	193.3	485.8																				
10+35.00	22.6 LT	12+00.00	9.0 LT															37.8								
10+30.60	17.2 RT	12+00.00	9.0 RT															37.1								
TOTALS				2119.3	953.7	2672.9	79	81	118	467.2	57.7	257.3	574.1	965.2	469.0	189.6	900	74.8	10008.9	1449.2	331.0	401.6	50.0	50.0	50.0	8.1

1

GUARDRAIL SCHEDULE

START STATION	OFFSET	END STATION	OFFSET	SPBGR TY A 6FT POSTS 63000001	BCK SD PROT OF GRDRL 63000035	TR BAR TRM T1 SPL TAN 63100167	TRAF BAR TERM T5 63100070	TRAF BAR TERM T6 63100085	TERMINAL MARKER - DA 72501000	GRDRAIL REF TYPE A 78200005	LINEAR DELIN PANELS 6 X0326649	LINEAR DELIN PANELS 4 X0327809
	FOOT		FOOT	FOOT	FOOT	EACH	EACH	EACH	EACH	EACH	EACH	EACH
I-57												
227+50.00	68.0 RT	233+50.00	68.0 RT								8	
230+50.00	68.0 LT	233+50.00	68.0 LT								4	
E MAPLE ST												
17+15.00	22.0 RT	18+11.91	17.9 RT	25	97	1		1	2	4		2
17+04.00	20.8 LT	17+90.37	15.5 LT	37.5		1	1		2	4		2
18+11.91	17.9 RT	21+50.45	15.0 RT								4	
17+90.37	15.5 LT	20+85.94	16.0 LT								4	
WALDRON RD												
21+50.45	15.0 RT	22+60.00	15.0 RT	62.5	110	1	1		2	4		2
20+85.94	16.0 LT	21+82.00	22.6 LT	25		1		1	2	4		2
TOTALS				150	207	4	2	2	8	16	20	8

LOCATION	GUARDRAIL LENGTH OF NEED (FT)
NE QUADRANT	96
NW QUADRANT	86
SW QUADRANT	97
SE QUADRANT	110

MODEL: Plan 1
FILE NAME: C:\0\8997-Roadway Schedule.dgn

TranSmart
411 South Wells Street Suite 1000
Chicago, Illinois 60607

USER NAME = nsolphien	DESIGNED - NS	REVISED -	
	DRAWN - NS	REVISED -	
PLOT SCALE = 0.18666633 ' / in.	CHECKED - TW	REVISED -	
PLOT DATE = 7/8/2021	DATE - 2021/07/09	REVISED -	

STATE OF ILLINOIS
DEPARTMENT OF TRANSPORTATION

ROADWAY AND GUARDRAIL SCHEDULE

SCALE: NTS | SHEET 1 OF 1 SHEETS | STA. TO STA.

F.A.I. RTE.	SECTION	COUNTY	TOTAL SHEETS	SHEET NO.
57	139 HBR-6	KANKAKEE	202	24

CONTRACT NO. 86997
ILLINOIS FED. AID PROJECT

1 REV. 8/25/21

TEMPORARY PAVEMENT SCHEDULE

LOCATION				FOR INFORMATION ONLY: SUBBASE GRANULAR MATERIAL, TYPE A 4"	BITUMINOUS MATERIALS (TACK COAT)	HOT MIX ASPHALT BINDER COURSE, IL-19.0, N70, 4"	HOT MIX ASPHALT SURFACE COURSE, MIX "C", N70, 2"	TEMPORARY PAVEMENT
STATION	TO	STATION	SIDE	SQ YD	POUND	TON	TON	SQ YD
								Z0062456
WALDRON ROAD								
PRE-STAGE 1								
20+72	TO	21+75	LT	42	14	7	4	31
22+35	TO	27+55	LT	288	104	52	26	230
STAGE 1								
17+06	TO	18+34	RT	106	35	18	9	77
21+39	TO	27+45	RT	422	142	71	36	314
							TOTAL	652

SEE STAGING TYPICAL AND SPECIAL PROVISION

AGGREGATE FOR TEMPORARY ACCESS SCHEDULE

LOCATION STATION +/-	SIDE	TYPE	WIDTH	LENGTH FOOT +/-	THICKNESS	TON
						40201000
STAGE 1						
E MAPLE ST						
15+49	RT	PE	13	25	0.5	13
WALDRON RD						
25+09	RT	CC	25	16	0.75	23
					TOTAL	36

REMOVAL OF THE TEMPORARY AGGREGATE IS TO BE CONSIDERED INCLUDED IN THE COST OF AGGREGATE FOR TEMPORARY ACCESS.

LENGTHS MAY VARY DUE TO FIELD REQUIREMENTS.
WIDTHS OF ENTRANCES SHOULD MATCH EXISTING ENTRANCES.

WORK ZONE PAVEMENT MARKING SCHEDULE

LOCATION			TEMPORARY PAVEMENT MARKING LINE 4" SOLID WHITE	LINE 4" SKIP DASH YELLOW	LINE 24" SOLID WHITE	PAVEMENT MARKING TAPE, TYPE LINE 4" SOLID WHITE	LINE 4" SOLID YELLOW	TEMPORARY PAVEMENT MARKING REMOVAL
			FOOT			FOOT		SQ FT
			70300220		70300280	70300904		X7030005
STAGE 1								
I-57 INSIDE LANE								
210+25	TO	235+63				4875	7614	4163
228+06	TO	249+87				3738	6525	3421
I-57 OUTSIDE LANE								
210+25	TO	235+63				7608	5040	4216
228+06	TO	249+87				6525	4290	3605
WALDRON ROAD								
15+13	TO	29+71	2477	16	36			843
MUNI 2530								
10+14	TO	13+43	344		9			118
STAGE 2								
I-57 INSIDE LANE								
210+25	TO	233+75				4875	7614	4163
229+50	TO	249+87				3738	6525	3421
I-57 OUTSIDE LANE								
210+26	TO	234+60				7608	5040	4216
229+50	TO	249+87				6525	4290	3605
WALDRON ROAD								
15+13	TO	28+92	2447	16	36			833
MUNI 2530								
10+14	TO	13+43	433		9			148
STAGE 2A								
WALDRON ROAD								
14+63	TO	28+91	WALDRON ROAD TEMPORARY MARKING TO REMAIN FROM STAGE 2					
MUNI 2530								
10+00	TO	13+43	465		9			158
STAGE 3								
WALDRON ROAD								
15+13	TO	28+77	1986	16	36			680
MUNI 2530								
10+36	TO	10+36			21			7
			8152	48	156	45492	46938	33597
		TOTAL	8200		156	92430		33597

ASSUME 3 TOTAL APPLICATIONS OF PAVEMENT MARKING TAPE ON I-57

TEMPORARY CONCRETE BARRIER SCHEDULE

STATION +/-	TO	STATION +/-	SIDE	TEMPORARY CONCRETE BARRIER	PINNING TEMPORARY CONCRETE BARRIER	RELOCATE TEMPORARY CONCRETE BARRIER	IMPACT ATTENUATORS, TEMPORARY (NON-REDIRECTIVE), TEST LEVEL	IMPACT ATTENUATORS, TEMPORARY (FULLY REDIRECTIVE, NARROW) TEST	IMPACT ATTENUATORS, RELOCATE (FULLY REDIRECTIVE, NARROW), TEST	IMPACT ATTENUATORS, RELOCATE (NON-REDIRECTIVE), TEST LEVEL 3
				FOOT	EACH	FOOT	EACH	EACH	EACH	EACH
				70400100	X7040125	70400200	70600250	70600260	70600332	70600350
STAGE 1										
I-57 INSIDE LANE										
225+99	TO	234+63	RT	2587.5			3			
229+06	TO	235+06	LT	1800.0			3			
231+07	TO	232+45	LT	412.5			3			
I-57 OUTSIDE LANE										
225+99	TO	234+60	RT			300.0				3
229+06	TO	235+06	LT			300.0				3
WALDRON ROAD										
16+42	TO	26+66	LT/RT	1025.0	246		1	1		
STAGE 2										
I-57 INSIDE LANE										
225+99	TO	234+63	RT			300.0				3
229+06	TO	235+06	LT			300.0				3
I-57 OUTSIDE LANE										
225+99	TO	234+63	RT			300.0				3
229+06	TO	235+06	LT			300.0				3
WALDRON ROAD										
16+43	TO	21+53	LT		123	512.5		1		1
18+16	TO	21+78	RT		—	362.5		2		
22+35	TO	27+23	LT	[redacted]	247	487.5	1		1	
STAGE 2A										
WALDRON ROAD										
21+53	TO	22+02	RT		12	50.0			1	
22+86	TO	27+30	RT						1	
STAGE 3										
WALDRON ROAD										
17+03	TO	26+65	RT		231	962.5				2
			TOTAL	5825.0	729	4175.0	11	4	3	21

ASSUME 3 TOTAL INSTALLATIONS/RELOCATIONS OF TEMPORARY CONCRETE BARRIER WALL ON I-57

INLET AND PIPE PROTECTION SCHEDULE

STATION	OFFSET	EACH
		28000500
WALDRON RD		
17+89	67' RT	1
	TOTAL	1

1

INLET FILTERS SCHEDULE

STATION	OFFSET	EACH
		28000510
I-57		
229+34	44' LT	1
229+92	36' LT	1
230+33	54' LT	1
E MAPLE ST		
16+15	21' RT	1
16+16	21' LT	1
17+43	17' LT	1
17+44	21' RT	1
17+65	16' LT	1
17+65	20' RT	1
WALDRON RD		
21+95	21' LT	1
21+95	14' RT	1
22+72	15' LT	1
22+73	14' RT	1
24+74	14' RT	1
24+74	46' RT	1
24+76	14' LT	1
26+30	14' LT	1
26+31	14' RT	1
	TOTAL	18

1

1

PERIMETER EROSION BARRIER SCHEDULE

STATION	TO	STATION	SIDE	LENGTH FOOT
				28000400
I-57				
226+57	TO	228+14	RT	168
229+40	TO	231+02	LT	183
230+32	TO	234+10	RT	398
232+92	TO	235+50	LT	276
E MAPLE ST				
15+41	TO	17+03	LT	196
15+55	TO	16+45	RT	146
16+78	TO	18+95	RT	198
WALDRON RD				
20+53	TO	21+93	LT	131
22+10	TO	23+17	RT	112
MUN 2530				
10+31	TO	12+00	LT	28
10+37	TO	12+00	RT	172
			TOTAL	2008

PERIMETER EROSION BARRIER IS SILT FENCE.

TEMPORARY DITCH CHECKS SCHEDULE

LOCATION STATION	LOCATION OFFSET	LENGTH FOOT
		28000305
I-57		
227+90	66' RT	10
229+30	66' RT	10
230+70	66' RT	10
231+00	66' LT	10
232+10	66' RT	10
232+20	66' LT	10
233+40	66' LT	10
233+45	66' RT	10
234+17	66' LT	10
234+20	66' RT	10
E MAPLE ST		
17+76	66' RT	10
17+99	62' RT	10
WALDRON ROAD		
23+12	49' RT	10
24+90	30' LT	10
25+50	30' LT	10
25+50	30' RT	10
26+35	30' LT	10
26+35	30' RT	10
	TOTAL	180

TEMPORARY EROSION CONTROL SEEDING SCHEDULE

STATION +/-	TO	STATION +/-	SIDE	TEMP SEED ACRES	POUNDS PER APPLICATION PER ACRE	NUMBER OF APPLICATIONS	TOTAL POUND	MULCH, METHOD 2 ACRE
							28000250	25100115
I-57								
226+57	TO	234+11	RT	0.78	100	1	78	0.78
229+40	TO	235+51	LT	0.51	100	1	51	0.51
E MAPLE ST								
15+41	TO	17+70	LT	0.10	100	1	10	0.10
15+55	TO	16+44	RT	0.01	100	1	1	0.01
16+78	TO	18+34	RT	0.11	100	1	11	0.11
WALDRON RD								
21+04	TO	22+04	LT	0.07	100	1	7	0.07
21+72	TO	26+35	RT	0.23	100	1	23	0.23
22+48	TO	26+35	LT	0.15	100	1	15	0.15
MUN 2530								
10+31	TO	12+00	LT	0.02	100	1	2	0.02
10+37	TO	12+00	RT	0.06	100	1	6	0.06
						TOTAL	204	2.04
						USE	250	2.25

MULCH METHOD 2 IS USED FOR TEMPORARY MULCHING

SEEDING, EROSION CONTROL BLANKET & NUTRIENTS SCHEDULE

LOCATION STATION +/-	TO	STATION +/-	SIDE	SEEDING, CLASS 2A ACRE	NITROGEN FERTILIZER NUTRIENT POUND	PHOSPHORUS FERTILIZER NUTRIENT POUND	POTASSIUM FERTILIZER NUTRIENT POUND	EROSION CONTROL BLANKET SQ YD	TURF REINFORCEMENT MAT SQ YD
				25000210	25000400	25000500	25000600	25100630	25100900
I-57									
226+57	TO	234+11	RT	0.78	71	71	71	3776	
229+40	TO	235+51	LT	0.51	46	46	46	2469	
E MAPLE ST									
15+41	TO	17+70	LT	0.10	9	9	9	484	
15+55	TO	16+44	RT	0.01	1	1	1	49	
16+78	TO	18+34	RT	0.11	10	10	10	533	
WALDRON RD									
21+04	TO	22+04	LT	0.07	7	7	7	236	103
21+72	TO	26+35	RT	0.23	21	21	21	855	259
22+48	TO	26+35	LT	0.15	14	14	14	726	
MUN 2530									
10+31	TO	12+00	LT	0.02	2	2	2	97	
10+37	TO	12+00	RT	0.06	6	6	6	291	
			TOTAL	2.04	187	187	187	9516	362
			USE	2.25	190	190	190	9516	362

1

MODEL: Plan 1
FILE NAME: D000007-Sht-Erosion Schedule.dgn

Hutchison Engineering, Inc.
Jacksonville Moline Peoria Shorewood
Since 1945

USER NAME = [redacted]	DESIGNED -	REVISED -
	DRAWN -	REVISED -
PLOT SCALE = 0.18666633 ' / in.	CHECKED -	REVISED -
PLOT DATE = 7/9/2021	DATE - 2021/03/26	REVISED -

STATE OF ILLINOIS
DEPARTMENT OF TRANSPORTATION

EROSION CONTROL SCHEDULE

SCALE: | SHEET 1 OF 1 SHEETS | STA. | TO STA.

F.A.I. RTE.	SECTION	COUNTY	TOTAL SHEETS	SHEET NO.
57	139 HBR-6	KANKAKEE	202	26

CONTRACT NO. 66997

ILLINOIS | FED. AID PROJECT

1 REV. 08/25/21

IL–57 DRAINAGE STRUCTURE SCHEDULE

STRUCTURE NUMBER	STATION	ALIGNMENT	OFFSET	STRUCTURE TYPE	FRAME AND GRATE	RIM ELEV.	INVERTS NORTH	INVERTS SOUTH	INVERTS EAST	INVERTS WEST	PAY ITEM	STANDARD NO.	SHEET NO.
1-01	227+40	CL PR I-57	96.9 RT	MANHOLE, TYPE A 4' DIA	TYPE 1 FRAME, CLOSED LID	644.00	-	639.00	637.50	-	60218400 *	602401-06/604001-05	74
1-02	227+13	CL PR I-57	62.9 RT	MANHOLES, TYPE A, 8' DIAMETER	TYPE 1 FRAME, CLOSED LID	632.35	-	625.45	-	-	60224459 *	602416-08/604001-05	74
1-03	229+08	CL PR I-57	62.7 RT	MANHOLES, TYPE A, 8' DIAMETER	TYPE 1 FRAME, CLOSED LID	631.14	624.67	624.57	-	-	60224459 *	602416-08/604001-05	74
1-04	230+32	CL PR I-57	54.1 LT	CATCH BASIN, TYPE A 4' DIA	TYPE 1 FRAME, OPEN LID	631.00	626.83	-	-	-	60200105 *	602001-02/604001-05	74
1-05	230+44	CL PR I-57	61.8 LT	CATCH BASIN, TYPE A 4' DIA	TYPE 1 FRAME, OPEN LID	630.91	-	625.62	-	-	60200105 *	602401-06/604001-05	74
1-06	230+21	CL PR I-57	62.7 LT	MANHOLES, TYPE A, 8' DIAMETER	TYPE 1 FRAME, CLOSED LID	630.81	624.12	624.02	-	-	60224459 *	602416-08/604001-05	74
1-07	231+39	CL PR I-57	62.4 RT	MANHOLES, TYPE A, 8' DIAMETER	TYPE 1 FRAME, CLOSED LID	630.40	623.55	623.45	-	-	60224459 *	602416-08/604001-05	74
1-08	232+52	CL PR I-57	61.6 RT	MANHOLE, TYPE A 4' DIA	TYPE 1 FRAME, CLOSED LID	629.49	624.83	624.82	-	-	60218400 *	602001-02/604001-05	74
1-09	233+44	CL PR I-57	61.7 LT	MANHOLE, TYPE A 4' DIA	TYPE 1 FRAME, CLOSED LID	629.34	624.54	-	-	-	60218400 *	602401-06/604001-05	74
1-10	233+42	CL PR I-57	62.8 LT	MANHOLES, TYPE A, 8' DIAMETER	TYPE 1 FRAME, CLOSED LID	629.4	622.64	-	-	-	60224459 *	602416-08/604001-05	74
1-11	229+35	CL PR I-58	43.5 LT	CATCH BASINS, TYPE C, WITH MEDIAN INLET (604101)	-	637.28	-	626.97	-	-	60209005 *	602011/604101-01	74
1-12	227+40	CL PR I-57	69.7 LT	PRECAST REINFORCED CONCRETE FLARED END SECTIONS 15"	-	-	-	-	-	635.00	54213660 *	542301-03	74

1

WALDRON ROAD DRAINAGE STRUCTURE SCHEDULE

STRUCTURE NUMBER	STATION	ALIGNMENT	OFFSET	STRUCTURE TYPE	FRAME AND GRATE	RIM ELEV.	INVERTS NORTH	INVERTS SOUTH	INVERTS EAST	INVERTS WEST	PAY ITEM	STANDARD NO.	SHEET NO.
3-01	16+15	WALDRON RD.	21.0 RT	INLET, TYPE A	TYPE 1 FRAME, OPEN LID	659.88	656.13	-	-	-	60234200 *	602301-04/604001-05	76
3-02	16+16	WALDRON RD.	21.0 LT	MANHOLE, TYPE A 4' DIA	TYPE 1 FRAME, OPEN LID	659.88	-	655.74	654.12	-	60218300 *	602401-06/604001-05	76
3-03	17+43	WALDRON RD.	17.1 LT	CATCH BASIN, TYPE A 4' DIA	TYPE 1 FRAME, OPEN LID	658.72	646.95	647.05	653.72	652.27	60200105 *	602001-02/604001-05	76
3-04	17+44	WALDRON RD.	21.0 RT	MANHOLE, TYPE A 4' DIA	TYPE 1 FRAME, OPEN LID	658.63	647.40	-	647.50	-	60218300 *	602401-06/604001-05	76
3-05	17+89	WALDRON RD.	66.3 RT	PRECAST REINFORCED CONCRETE FLARED END SECTIONS 12"	-	-	648.22	-	-	-	54213657 *	542301-03	76
3-06	17+64.57	WALDRON RD.	15.9 LT	INLET, TYPE A	TYPE 1 FRAME, OPEN LID	658.71	-	-	-	654.16	60234200 *	602301-04/604001-05	76
3-07	17+64.57	WADRON RD.	19.7 RT	CATCH BASIN, TYPE A 4' DIA	TYPE1 FRAME, OPEN LID.	658.64	-	647.77	-	647.67	60200105 *	602001-02/604001-05	76
4-01	21+95	WADRON RD.	13.0 RT	INLET, TYPE A	TYPE 1 FRAME, OPEN LID	651.06	646.47	-	-	-	60234200 *	602301-04/604001-05	77
4-02	21+95	WADRON RD.	21.5 LT	MANHOLE, TYPE A 4' DIA	TYPE 1 FRAME, OPEN LID	650.86	-	646.15	643.45	-	60218300 *	602401-06/604001-05	77
4-03	22+72	WADRON RD.	13.0 RT	INLET, TYPE A	TYPE 1 FRAME, OPEN LID	647.30	642.71	-	-	-	60234200 *	602301-04/604001-05	77
4-04	22+73	WADRON RD.	13.3 LT	MANHOLE, TYPE A 4' DIA	TYPE 1 FRAME, OPEN LID	647.25	-	641.45	641.35	642.71	60218300 *	602401-06/604001-05	77
4-05	24+76	WADRON RD.	13.0 LT	CATCH BASIN, TYPE A 4' DIA	TYPE 1 FRAME, OPEN LID	637.34	633.48	-	-	633.48	60200105 *	602001-02/604001-05	77
4-06	24+76	WADRON RD.	32.1 LT	PRECAST REINFORCED CONCRETE FLARED END SECTIONS 15"		-	-	633.37	-	-	54213660 *	542301-03	77
4-07	24+74	WADRON RD.	13.0 RT	INLET, TYPE A	TYPE 1 FRAME, OPEN LID	637.40	-	633.50	-	-	60234200 *	602301-04/604001-05	77
4-08	24+74	WADRON RD.	25.0 RT	CATCH BASIN, TYPE A 4' DIA	TYPE 1 FRAME, OPEN LID	636.77	633.11	631.67	631.67	-	60200105 *	602001-02/604001-05	77
4-09	24+74	WADRON RD.	45.7 RT	INLETS, TYPE A	TYPE 9 FRAME AND GRATE	634.15	631.84	-	-	-	60236600 *	602301-04/604041-03	77
4-10	26+30	WADRON RD.	13.0 LT	CATCH BASIN, TYPE A 4' DIA	TYPE 1 FRAME, OPEN LID	631.77	629.33				60200105 *	602001-02/604001-05	77
4-11	26+30	WADRON RD.	28.2 LT	PRECAST REINFORCED CONCRETE FLARED END SECTIONS 12"	-	-	-	629.26	-	-	54213657 *	542301-03	77
4-12	26+31	WADRON RD.	13.0 RT	CATCH BASIN, TYPE A 4' DIA	TYPE 1 FRAME, OPEN LID	631.7498		629.19			60200105 *	602001-02/604001-05	77
4-13	26+31	WADRON RD.	29.1 RT	PRECAST REINFORCED CONCRETE FLARED END SECTIONS 12"	-	-	629.10				54213657 *	542301-03	77
4-14	25+37	WADRON RD.	28.4 RT	PRECAST REINFORCED CONCRETE FLARED END SECTIONS 15"	-	-	-	-	-	631.00	54213660 *	542301-03	77
4-15	25+31	WADRON RD.	24.1 RT	MANHOLE, TYPE A 4' DIA	TYPE 1 FRAME, CLOSED LID	634.00	-	-	631.10	631.10	60218400 *	602401-06/604001-05	77
4-16	25+33	WADRON RD.	36.1 RT	PRECAST REINFORCED CONCRETE FLARED END SECTIONS 12"	-	-	-	-	631.00	-	54213657 *	542301-03	77
4-17	25+23	WADRON RD.	39.9 RT	MANHOLE, TYPE A 4' DIA	TYPE 1 FRAME, CLOSED LID	634.00	-	EX. INVERT	631.05	-	60218400 *	602401-06/604001-05	77

1

NOTE:

1. FOR STRUCTURES ALONG WALDRON ROAD CURB AND GUTTER,THE RIM ELEVATIONS AND OFFSETS ARE GIVEN AT EDGE OF PAVEMENT.
2. FOR STRUCTURES NOT LOCATED WITHIN CURB AND GUTTER,THE RIM ELEVATIONS AND OFFSETS ARE GIVEN AT CENTER OF STRUCTURES.

MODEL: Plan 1
FILE NAME: D306997-SHT-DRAINAGE-SCHEDULE-S1.dgn

TranSmart
411 South Wells Street Suite 1000
Chicago, Illinois 60607

USER NAME = aahke	DESIGNED - AKC	REVISED -	
	DRAWN - AKC	REVISED -	
PLOT SCALE = 0.16666633 ' / in.	CHECKED - PKT	REVISED -	
PLOT DATE = 7/6/2021	DATE - 2021/07/09	REVISED -	

STATE OF ILLINOIS
DEPARTMENT OF TRANSPORTATION

DRAINAGE STRUCTURE SCHEDULE

SCALE: NTS | SHEET 1 OF 2 SHEETS | STA. | TO STA.

F.A.I. RTE.	SECTION	COUNTY	TOTAL SHEETS	SHEET NO.
57	139 HBR-6	KANKAKEE	202	27

CONTRACT NO. 66997

ILLINOIS | FED. AID PROJECT

1 REV. 08/25/21

IL-57 PIPE SCHEDULE

PIPE NO.	STRUCTURE FROM	STRUCTURE TO	PIPE SIZE (INCHES)	LENGTH (FEET)	SLOPE (%)	PAY ITEM	PAY ITEM DESCRIPTION	TRENCH BACKFILL (CUBIC YARD)	SHEET NO.
1-01	1-01	1-12	15	18.9	13.23%	550A0360	STORM SEWERS, CLASS A, TYPE 2 15"	-	74
1-02	1-02	1-03	43 X 68	185.1	0.42%	542A5509	PIPE CULVERTS, CLASS A, TYPE 1 EQUIVALENT ROUND-SIZE 54"	176.8	74
1-03	1-03	1-06	43 X 68	102.4	0.44%	542A5509	PIPE CULVERTS, CLASS A, TYPE 1 EQUIVALENT ROUND-SIZE 54"	94.1	74
1-04	1-04	EX STR	12	40.4	1.00%	550A0050	STORM SEWERS, CLASS A, TYPE 1 12"	6.3	74
1-05	1-05	1-08	18	203.8	0.39%	550A0380	STORM SEWERS, CLASS A, TYPE 2 18"	73.0	74
1-06	1-06	1-07	43 X 68	108.7	0.43%	542A5509	PIPE CULVERTS, CLASS A, TYPE 1 EQUIVALENT ROUND-SIZE 54"	107.7	74
1-07	1-07	1-10	43 X 68	192.6	0.42%	542A5509	PIPE CULVERTS, CLASS A, TYPE 1 EQUIVALENT ROUND-SIZE 54"	197.7	74
1-08	1-08	1-09	18	87.8	0.32%	550A0380	STORM SEWERS, CLASS A, TYPE 2 18"	28.1	74
1-09	1-11	EX STR	12	53.9	1.00%	550A0340	STORM SEWERS, CLASS A, TYPE 2 12"	24.9	74

1

WALDRON ROAD PIPE SCHEDULE

PIPE NO.	STRUCTURE FROM	STRUCTURE TO	PIPE SIZE (INCHES)	LENGTH (FEET)	SLOPE (%)	PAY ITEM	PAY ITEM DESCRIPTION	TRENCH BACKFILL (CUBIC YARD)	SHEET NO.
3-01	3-01	3-02	12	39.3	1.00%	550A0050	STORM SEWERS, CLASS A, TYPE 1 12"	5.2	76
3-02	3-02	3-03	15	101.2	1.50%	550A0360	STORM SEWERS, CLASS A, TYPE 2 15"	43.4	76
			15	22.0		Z0056610	STORM SEWER (WATER MAIN REQUIREMENTS) 15 INCH		
3-03	3-03	1-01	15	120.1	6.62%	550A0660	STORM SEWERS, CLASS A, TYPE 3 15"	-	76
3-04	3-04	3-03	12	34.0	1.03%	550A0640	STORM SEWERS, CLASS A, TYPE 3 12"	46.0	76
3-05	3-05	3-07	12	44.5	1.01%	550A0340	STORM SEWERS, CLASS A, TYPE 2 12"	20.4	76
3-06	3-06	3-03	12	17.5	2.50%	550A0340	STORM SEWERS, CLASS A, TYPE 2 12"	3.0	76
3-07	3-07	3-04	12	17.0	1.00%	550A0340	STORM SEWERS, CLASS A, TYPE 2 12"	21.9	76
4-01	4-01	4-02	12	32.0	0.44%	550A0340	STORM SEWERS, CLASS A, TYPE 2 12"	5.2	77
4-02	4-02	4-04	15	74.0	1.00%	550A0360	STORM SEWERS, CLASS A, TYPE 2 15"	22.6	77
4-03	4-03	4-04	15	25.3	4.99%	550A0340	STORM SEWERS, CLASS A, TYPE 2 15"	5.4	77
4-04	4-04	4-05	15	199.0	3.96%	550A0070	STORM SEWERS, CLASS A, TYPE 1 15"	35.5	77
4-05	4-05	4-06	15	11.0	1.00%	550A0070	STORM SEWERS, CLASS A, TYPE 1 15"	-	77
4-07	4-07	4-08	12	7.8	5.00%	Z0056608	STORM SEWER (WATER MAIN REQUIREMENTS) 12 INCH	1.9	77
4-08	4-08	4-15	15	56.9	1.00%	550A0070	STORM SEWERS, CLASS A, TYPE 1 15"	15.4	77
4-09	4-09	4-08	12	21.4	0.81%	Z0056608	STORM SEWER (WATER MAIN REQUIREMENTS) 12 INCH	5.1	77
4-10	4-10	4-11	12	7.0	0.99%	550A0050	STORM SEWERS, CLASS A, TYPE 1 12"	-	77
4-11	4-12	4-13	12	6.2	1.49%	550A0050	STORM SEWERS, CLASS A, TYPE 1 12"	-	77
4-12	4-15	4-14	15	1.1	9.09%	550A0070	STORM SEWERS, CLASS A, TYPE 1 15"	-	77
4-13	4-17	4-16	12	3.1	1.64%	550A0050	STORM SEWERS, CLASS A, TYPE 1 12"	-	77

1

PIPE UNDERDRAINS SCHEDULE

FROM STATION	FROM ALIGNMENT	FROM OFFSET	TO STATION	TO ALIGNMENT	TO OFFSET	LENGTH (FT)	PAYITEM	PAY ITEM DESCRIPTION	SHEET NO.
17+64	WALDRON RD.	0.6 LT	17+65	WALDRON RD.	16.4 LT	16	60108501	PIPE UNDERDRAINS, TYPE 6	76
17+64	WALDRON RD.	1.0 RT	17+65	WALDRON RD.	17.7 RT	17	60108501	PIPE UNDERDRAINS, TYPE 6	76
26+34	WALDRON RD.	0.6 LT	26+32	WALDRON RD.	13.9 LT	15	60108501	PIPE UNDERDRAINS, TYPE 6	77
26+34	WALDRON RD.	0.4 RT	26+32	WALDRON RD.	14.0 RT	15	60108501	PIPE UNDERDRAINS, TYPE 6	77

1

MODEL: Pen 1
FILE NAME: D308897-SHT-DRAINAGE-SCHEDULE-02.dgn

TranSmart
411 South Wells Street Suite 1000
Chicago, Illinois 60607

USER NAME = aahlag	DESIGNED - AKC	REVISED -	
	DRAWN - AKC	REVISED -	
PLOT SCALE = 0.16666633 ' / in.	CHECKED - PKT	REVISED -	
PLOT DATE = 7/9/2021	DATE - 2021/07/09	REVISED -	

STATE OF ILLINOIS
DEPARTMENT OF TRANSPORTATION

DRAINAGE PIPE SCHEDULE

SCALE: NTS | SHEET 2 OF 2 SHEETS | STA. TO STA.

F.A.I. RTE.	SECTION	COUNTY	TOTAL SHEETS	SHEET NO.
57	139 HBR-6	KANKAKEE	202	28

CONTRACT NO. 68997

ILLINOIS | FED. AID PROJECT

1 REV. 08/25/21

THERMO → PREFORMED PLASTIC

PAVEMENT MARKING SCHEDULE

LOCATION				PREFORMED PLASTIC PAVEMENT MARKING, TYPE D		POLYUREA PAVEMENT MARKING TYPE 1			THERMOPLASTIC PAVEMENT MARKING				GROOVING FOR RECESSED PAVEMENT MARKING	
				6"	24"	4"		6"	4"	6"	6"	12"	5"	7"
				SKIP DASH	STOP BAR	SOLID		SKIP DASH	SOLID	SKIP DASH	SOLID	SOLID	SOLID	SKIP DASH
				WHITE	WHITE	WHITE	YELLOW	YELLOW	WHITE	YELLOW	WHITE	WHITE		
				X2700010	X2700015	78008210		78008230	78000200	78000400		78000600	X7830070	X7830074
STATION	TO	STATION	DIRECTION	FOOT										
I-57														
210+25	TO	236+00	SB	650		2575	2575						5150	650
227+00	TO	249+87	NB	580		2287	2287						4574	580
E MAPLE ST														
11+55	TO	17+60	EB/WB		15				883	160	92	165	883	160
17+60	TO	21+76	EB/WB			832		110						
WALDRON RD														
21+76	TO	29+11	EB/WB		26				1390	190			1390	190
			SUB-TOTAL	1230	41	5694	4862	110	2273	350	92	165	11997	1580
			TOTAL	1230	41	10556		110	2273	442		165	11997	1580

MOD. URETHANE

PAVEMENT MARKING REMOVAL - WATER BLASTING

STATION	TO	STATION	LOCATION	LINES 4"
				SQ FT
				X0327980
I-57				
210+25	TO	236+00	SB	217
227+00	TO	249+87	NB	194
WALDRON ROAD				
11+54	TO	29+11	CL	147
			TOTAL	558

SHORT TERM PAVEMENT MARKING REMOVAL SCHEDULE

			DIRECTION	WHITE	YELLOW
				SQ FT	
				70300150	
I-57					
210+25	TO	236+00	SB	320	
227+00	TO	249+87	NB	285	
E MAPLE ST					
11+55	TO	21+25	EB/WB		54
WALDRON RD					
21+25	TO	29+11	EB/WB		72
			SUB-TOTAL	605	126
			TOTAL	731	

RAISED REFLECTIVE PAVEMENT MARKER SCHEDULE

LOCATION				1-WAY CRYSTAL
STATION	TO	STATION	DIRECTION	EACH
				78100100
I-57				
210+25.0	TO	236+00.0	SB	65
227+00.0	TO	249+87.0	NB	58
			SUB-TOTAL	123
			TOTAL	123

RAISED REFLECTIVE PAVEMENT MARKER REMOVAL SCHEDULE

LOCATION				EACH
STATION	TO	STATION	DIRECTION	
				78300200
I-57				
210+25	TO	236+00	SB	65
227+00	TO	249+87	NB	58
			TOTAL	123

SHOULDER RUMBLE STRIPS SCHEDULE

LOCATION				16 INCH
STATION	TO	STATION	DIRECTION	FOOT
				64200116
I-57				
218+82.0	TO	235+61.0	SB	1679
228+05.0	TO	242+35.0	NB	1430
			SUB-TOTAL	3109
			TOTAL	3109

SHORT TERM PAVEMENT MARKING SCHEDULE

STATION	TO	STATION	DIRECTION	SKIP DASH WHITE TURN LANE	SOLID WHITE EDGE DIAGONAL	SOLID WHITE STOP BAR	SKIP DASH YELLOW CENTERLINE
				FOOT			
				70300100			
I-57							
210+25	TO	236+00	SB	650	309	0	0
227+00	TO	249+87	NB	580	274	0	0
I-57 SUB-TOTAL				1230	583	0	0
2 APPLICATIONS				2460	1167	0	0
E MAPLE ST							
11+55	TO	21+25	EB/WB	0	0	0	160
E MAPLE ST SUB-TOTAL				0	0	0	160
2 APPLICATIONS				0	0	0	320
WALDRON RD							
21+25	TO	29+11	EB/WB	0	0	26	190
WALDRON RD SUB-TOTAL				0	0	26	190
2 APPLICATIONS				0	0	52	380
			SUB-TOTAL	2460	1167	52	700
			TOTAL	4379			

SIGNING REMOVAL SCHEDULE

STATION	SIDE	SIGN DESCRIPTION	REMOVE SIGN PANEL ASSEMBLY - TYPE A
			EACH
			72400100
E MAPLE ST			
16+60	23.4' LT	SPEED LIMIT	1
16+84	38.0' RT	STOP SIGN	1
17+02	27.5' RT	SPEED LIMIT	1
WALDRON RD			
21+85	37.9' LT	STOP SIGN	1
26+36	24.8' LT	SPEED LIMIT	1
26+37	20.0' RT	SPEED LIMIT	1
		TOTAL	6

SIGN PANEL AND SIGN SUPPORTS SCHEDULE

LOCATION		SIGN DESIGNATION	SIGN TYPE 1	SIGN TYPE 2	WOOD SIGN SUPPORT
STATION	SIDE		SQ FT	SQ FT	FOOT
			72000100	72000200	73000100
I-57					
229+05	RT	SEE SIGN DETAIL SHEET FOR MORE INFORMATION		9.75	23.0
232+00	LT			9.75	23.0
E MAPLE ST					
16+50	LT	R2-1	7.50		13.0
16+84	RT	R1-1	6.25		14.5
17+15	RT	R2-1	7.50		13.0
WALDRON RD					
21+96	LT	R1-1	6.25		14.5
26+30	LT	R2-1	7.50		13.0
	RT	R2-1	7.50		13.0
		TOTAL	42.50	19.50	127.0
		USE	43	20	127

MODEL: Plan 1
FILE NAME: D669967-Sht-PMK and Signing Schedule.dgn

Hutchison Engineering, Inc.
Jacksonville Moline Peoria Shorewood
Since 1945

USER NAME = eehlic	DESIGNED -	REVISED -	
	DRAWN -	REVISED -	
PLOT SCALE = 0.18000833 / in.	CHECKED -	REVISED -	
PLOT DATE = 7/8/2021	DATE - 2021/03/26	REVISED -	

STATE OF ILLINOIS
DEPARTMENT OF TRANSPORTATION

PAVEMENT MARKING AND SIGNING SCHEDULE

SCALE: | SHEET 1 OF 1 SHEETS | STA. | TO STA.

F.A.I. RTE.	SECTION	COUNTY	TOTAL SHEETS	SHEET NO.
57	139 HBR-6	KANKAKEE	202	29

CONTRACT NO. 66997

ILLINOIS | FED. AID PROJECT

REV. 08/25/21

PR CURVE PR-WALDRON
PI STA = 17+07.05
Δ = 01°16'24" (RT)
D = 01°05'44"
R = 5,230.00'
T = 58.12'
E = 0.32'
e = N/A
TR = N/A
SE RUN = N/A
PC STA = 16+48.93
PT STA = 17+65.17

PR CURVE MUN2530
PI STA = 11+48.82
Δ = 13°47'32" (RT)
D = 19°05'55"
R = 300.00'
T = 36.28'
E = 2.19'
e = N/A
TR = N/A
SE RUN = N/A
PC STA = 11+12.54
PT STA = 11+84.76

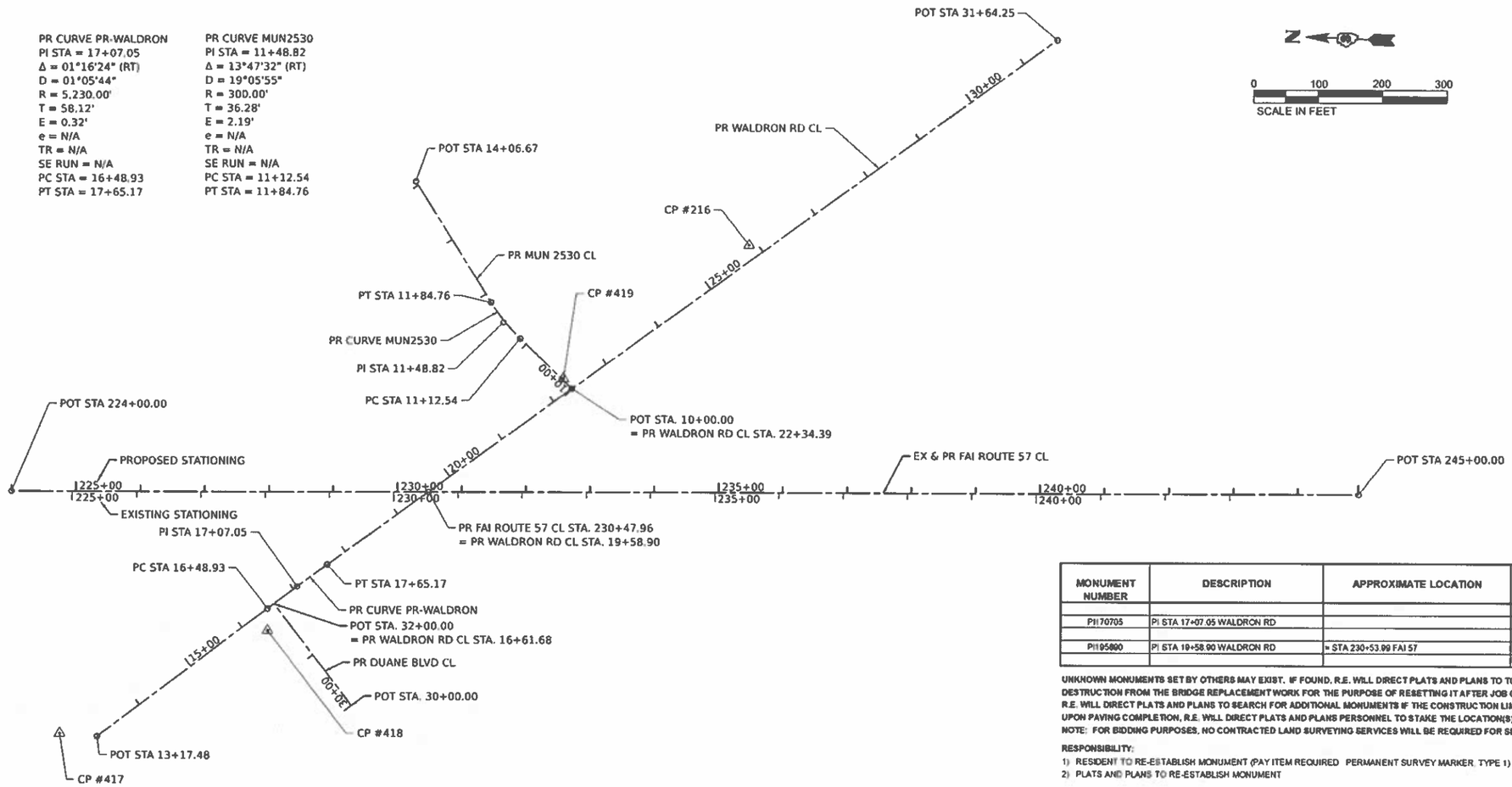

DESCRIPTION	COORDINATE	
	NORTHING	EASTING
PROPOSED EAST MAPLE STREET / WALDRON ROAD		
POT STA. 13+17.47	1,618,503.62	1,121,118.78
PC STA 16+48.93	1,618,246.98	1,121,328.52
PI STA 17+07.05	1,618,201.97	1,121,365.30
PT STA 17+65.17	1,618,156.17	1,121,401.07
POT STA 31+64.25	1,617,053.43	1,122,262.12
PROPOSED MUN 2530		
POT STA 10+00.00	1,617,786.33	1,121,689.85
PC STA 11+12.54	1,617,869.95	1,121,765.17
PI STA 11+48.82	1,617,896.90	1,121,789.46
PT STA 11+84.76	1,617,917.29	1,121,819.47
POT STA 14+06.67	1,618,042.00	1,122,003.03
PROPOSED FAI ROUTE 57		
POT STA 224+00.00	1,618,650.99	1,121,496.65
POT STA 245+00.00	1,616,558.42	1,121,573.09
PROPOSED DUANE BOULEVARD		
POT STA. 30+00.00	1,618,109.87	1,121,182.26
POT STA. 32+00.00	1,618,237.09	1,121,336.58
EXISTING FAI ROUTE 57		
POT STA. 225+00.00	1,618,557.09	1,121,500.08
POT STA. 243+00.00	1,616,758.29	1,121,565.79

MONUMENT NUMBER	DESCRIPTION	APPROXIMATE LOCATION	EXISTING MONUMENT TYPE	PROPOSED MONUMENT TYPE	MONUMENT RECORD TO BE RECORDED	RESPONSIBILITY
PI170705	PI STA 17+07.05 WALDRON RD			TYPE 1	NO	2
PI195800	PI STA 19+58.90 WALDRON RD	= STA 230+53.99 FAI 57		CUT CROSS	NO	2

UNKNOWN MONUMENTS SET BY OTHERS MAY EXIST. IF FOUND, R.E. WILL DIRECT PLATS AND PLANS TO TO GPS ANY MONUMENT SUBJECT TO DESTRUCTION FROM THE BRIDGE REPLACEMENT WORK FOR THE PURPOSE OF RESETTING IT AFTER JOB COMPLETION.
R.E. WILL DIRECT PLATS AND PLANS TO SEARCH FOR ADDITIONAL MONUMENTS IF THE CONSTRUCTION LIMITS ARE EXPANDED DURING CONSTRUCTION.
UPON PAVING COMPLETION, R.E. WILL DIRECT PLATS AND PLANS PERSONNEL TO STAKE THE LOCATION(S) FOR TYPE 1 MONUMENT CORING.
NOTE: FOR BIDDING PURPOSES, NO CONTRACTED LAND SURVEYING SERVICES WILL BE REQUIRED FOR SETTING THE LISTED PERMANENT SURVEY MARKER.

RESPONSIBILITY:
1) RESIDENT TO RE-ESTABLISH MONUMENT (PAY ITEM REQUIRED PERMANENT SURVEY MARKER, TYPE 1)
2) PLATS AND PLANS TO RE-ESTABLISH MONUMENT

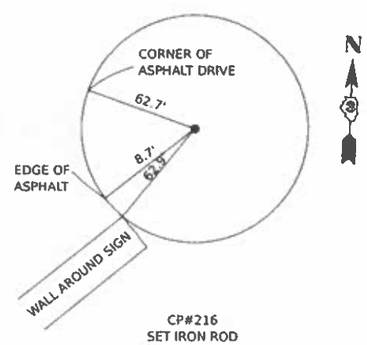

CP#216
SET IRON ROD
N: 1617519.9910
E: 1121924.1970
ELEV: 632.18

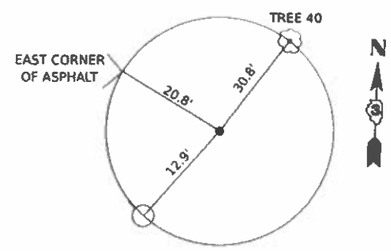

CP#417
SET IRON ROD
N: 1618561.3120
E: 1121120.9930
ELEV: 666.67

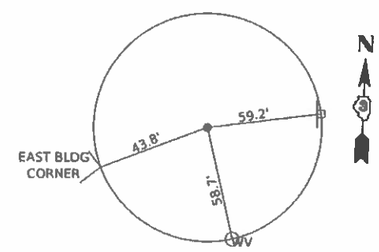

CP#418
SET IRON ROD
N: 1618245.13
E: 1121294.49
ELEV: 659.75

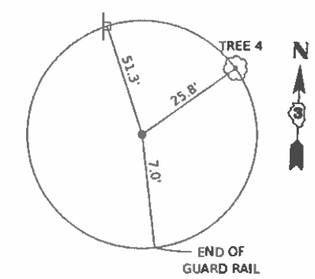

CP#419
SET IRON ROD
N: 1617800.1581
E: 1121705.1039
ELEV: 646.64

MODEL: Plan 1
FILE NAME: 0200003-3hr-Alignment.dgn

TranSmart
411 South Wells Street Suite 1000
Chicago, Illinois 60607

USER NAME = mzalphian	DESIGNED - BJD	REVISED -	
	DRAWN - BJD	REVISED -	
PLOT SCALE = 0.16666633 ' / in.	CHECKED - TW	REVISED -	
PLOT DATE = 3/29/2021	DATE - 2021/03/26	REVISED -	

STATE OF ILLINOIS
DEPARTMENT OF TRANSPORTATION

I-57 & WALDRON ROAD
ALIGNMENT & TIES

SCALE: 1" = 100' | SHEET 1 OF 1 SHEETS | STA. | TO STA.

F.A.I. RTE.	SECTION	COUNTY	TOTAL SHEETS	SHEET NO.
57	139 HBR-6	KANKAKEE	202	30
		CONTRACT NO. 66997		
		ILLINOIS FED. AID PROJECT		

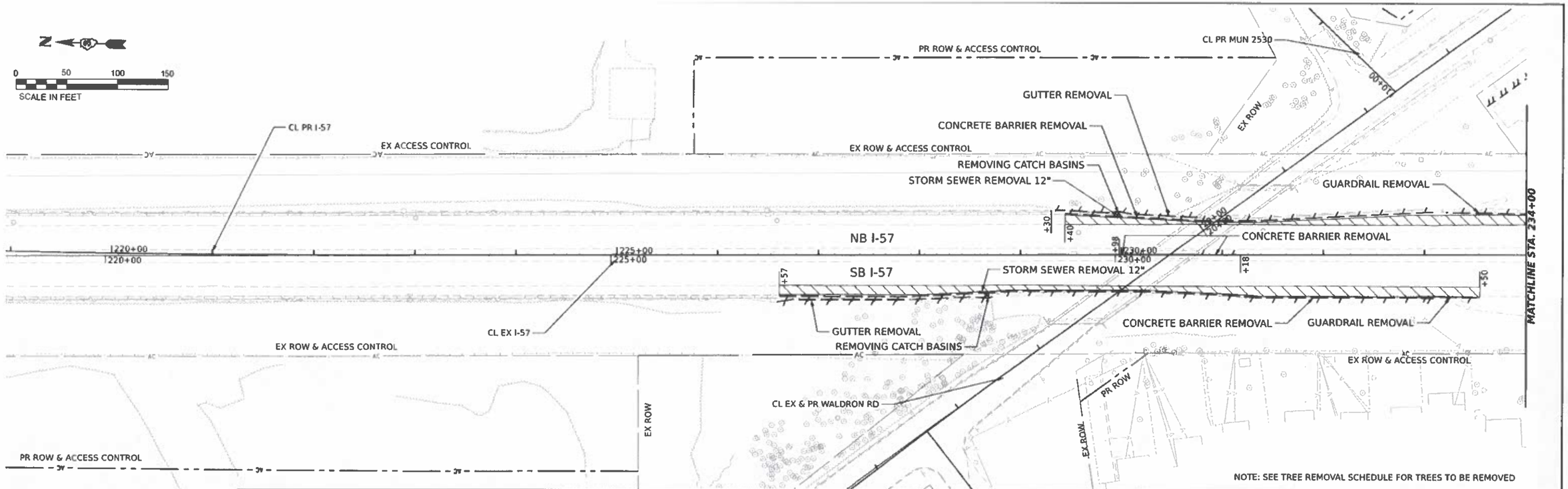

PAVEMENT REMOVAL (44000100)

AGGREGATE SHOULDER REMOVAL (X4810200)

HOT-MIX ASPHALT SURFACE REMOVAL, 3 3/4" (44000164)

DRIVEWAY PAVEMENT REMOVAL (44000200)

PAVED SHOULDER REMOVAL (44004250)

SIDEWAK REMOVAL (44000600)

INDIVIDUAL REMOVAL ITEM AS NOTED
- REMOVING CATCH BASINS (60500050)
- REMOVING INLETS (60500060)
- CONCRETE HEADWALL REMOVAL (50104400)
- DRAINAGE STRUCTURE TO BE REMOVED (Z0018700)

PAVEMENT PATCHING

LINEAR REMOVAL ITEM AS NOTED
- GUTTER REMOVAL (44000400)
- COMBINATION CURB AND GUTTER REMOVAL (44000500)
- CONCRETE BARRIER REMOVAL (44001980)
- PIPE CULVERT REMOVAL (50105220)
- STORM SEWER REMOVAL 12" (55100500)
- GUARDRAIL REMOVAL (63200310)
- FENCE REMOVAL (Z0022800)

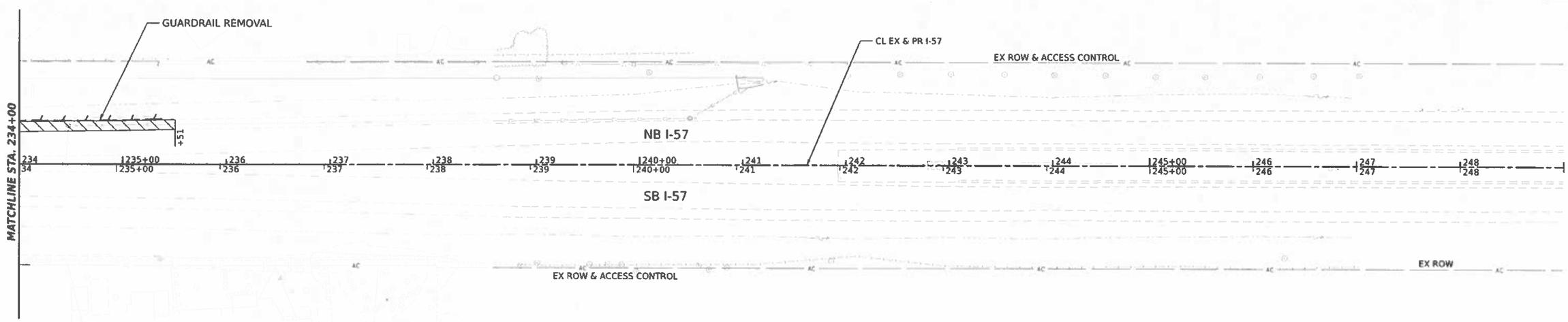

MODEL: Plan 1
FILE NAME: C:\pwworking\Sys\Removal 1.dgn

TranSmart
411 South Wells Street Suite 1000
Chicago, Illinois 60607

USER NAME = rsalehian	DESIGNED - NS	REVISED - 5/5/2021	
	DRAWN - NS	REVISED -	
PLOT SCALE = 0.16666633 ' / in.	CHECKED - TW	REVISED -	
PLOT DATE = 3/29/2021	DATE - 2021/03/26	REVISED -	

STATE OF ILLINOIS
DEPARTMENT OF TRANSPORTATION

I-57 & WALDRON ROAD
REMOVAL PLAN

SCALE: 1" = 50' | SHEET 1 OF 3 SHEETS | STA. | TO STA.

F.A.I. RTE.	SECTION	COUNTY	TOTAL SHEETS	SHEET NO.
57	139 HBR-6	KANKAKEE	202	31

CONTRACT NO. 66997

ILLINOIS | FED. AID PROJECT

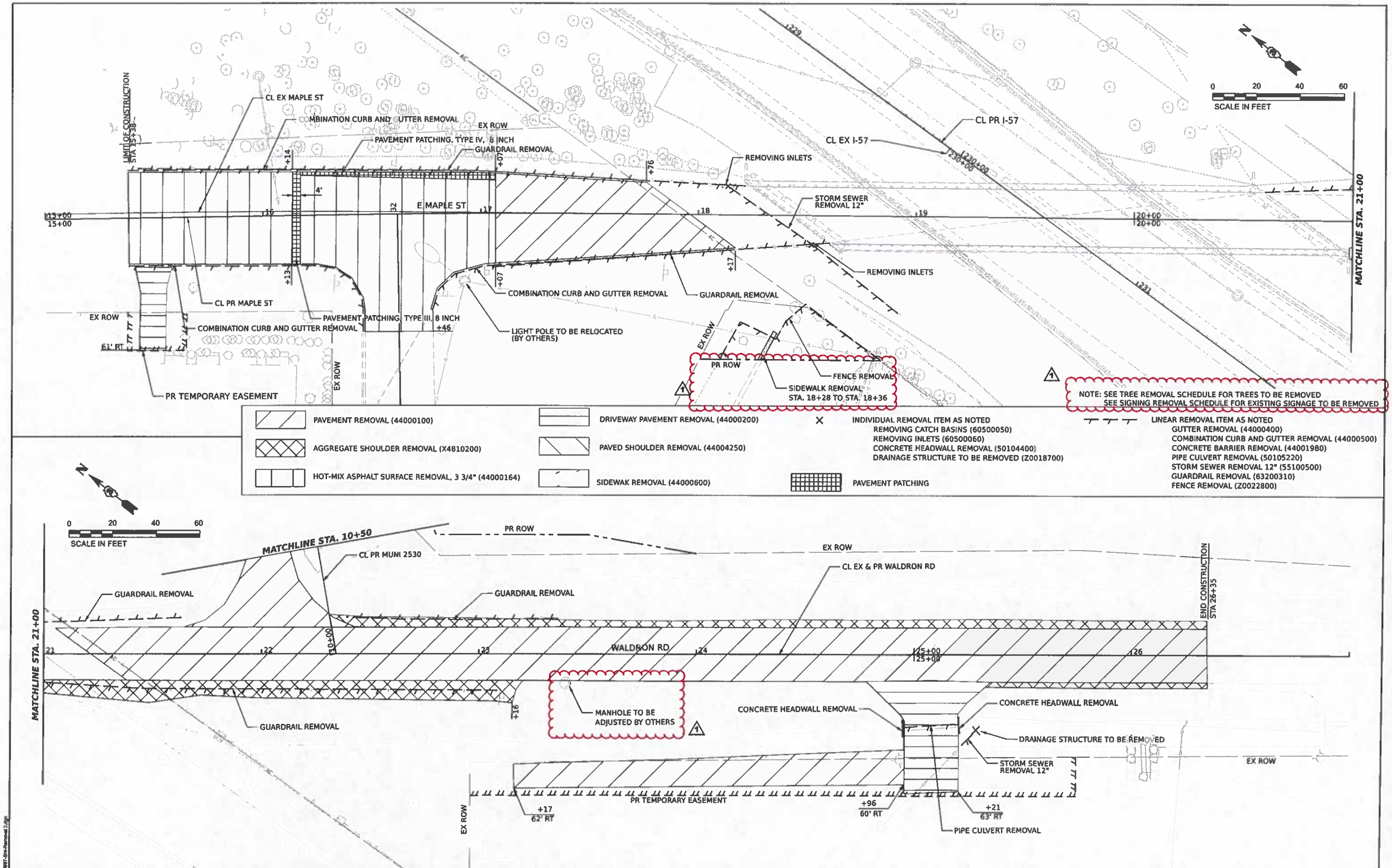

TranSmart
411 South Wells Street Suite 1000
Chicago, Illinois 60607

USER NAME = ashlac	DESIGNED - NS	REVISED -	
	DRAWN - NS	REVISED -	
PLOT SCALE = 0.16666633' / in.	CHECKED - TW	REVISED -	
PLOT DATE = 7/9/2021	DATE - 2021/03/26	REVISED -	

STATE OF ILLINOIS
DEPARTMENT OF TRANSPORTATION

I-57 & WALDRON ROAD
REMOVAL PLAN

SCALE: 1" = 20' | SHEET 2 OF 3 SHEETS | STA. TO STA.

F.A.I. RTE.	SECTION	COUNTY	TOTAL SHEETS	SHEET NO.
57	139 HBR-6	KANKAKEE	202	32

CONTRACT NO. 66997
ILLINOIS FED. AID PROJECT

REV. 08/25/21

MODEL: Plan 3
FILE NAME: C:\0066997-Sht-Removal 2.dgn

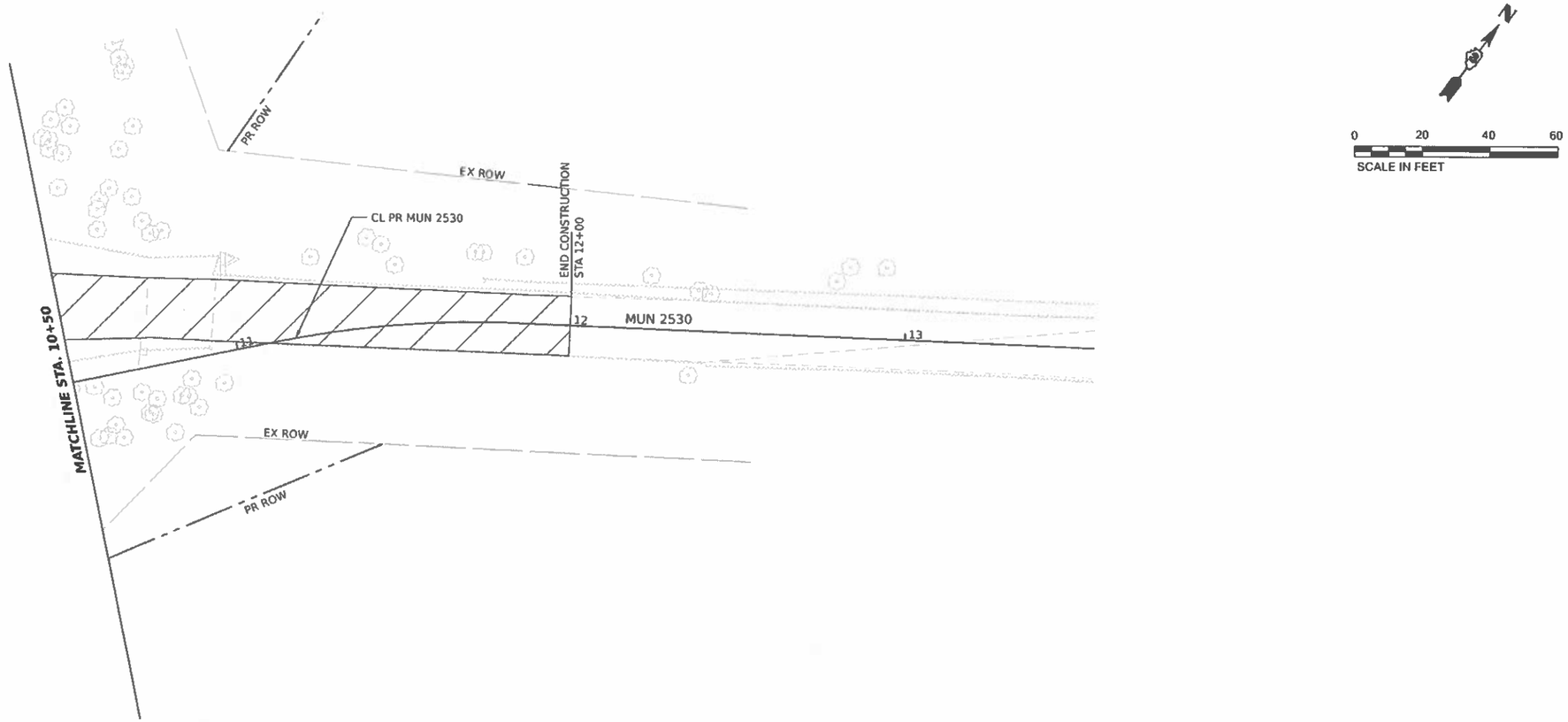

NOTE: SEE TREE REMOVAL SCHEDULE FOR TREES TO BE REMOVED

PAVEMENT REMOVAL (44000100)

AGGREGATE SHOULDER REMOVAL (X4810200)

HOT-MIX ASPHALT SURFACE REMOVAL, 3 3/4" (44000164)

DRIVEWAY PAVEMENT REMOVAL (44000200)

PAVED SHOULDER REMOVAL (44004250)

SIDEWAK REMOVAL (44000600)

X INDIVIDUAL REMOVAL ITEM AS NOTED
- REMOVING CATCH BASINS (60500050)
- REMOVING INLETS (60500060)
- CONCRETE HEADWALL REMOVAL (50104400)
- DRAINAGE STRUCTURE TO BE REMOVED (Z0018700)

PAVEMENT PATCHING

LINEAR REMOVAL ITEM AS NOTED
- GUTTER REMOVAL (44000400)
- COMBINATION CURB AND GUTTER REMOVAL (44000500)
- CONCRETE BARRIER REMOVAL (44001980)
- PIPE CULVERT REMOVAL (50105220)
- STORM SEWER REMOVAL 12" (55100500)
- GUARDRAIL REMOVAL (63200310)
- FENCE REMOVAL (Z0022800)

MODEL: Plan 5
FILE NAME: D356863-Sht-Removal 3.dgn

TranSmart
411 South Wells Street Suite 1000
Chicago, Illinois 60607

USER NAME = rsalehian	DESIGNED - NS	REVISED -	
	DRAWN - NS	REVISED -	
PLOT SCALE = 0.16666633 ' / in.	CHECKED - TW	REVISED -	
PLOT DATE = 3/29/2021	DATE - 2021/03/26	REVISED -	

STATE OF ILLINOIS
DEPARTMENT OF TRANSPORTATION

I-57 & WALDRON ROAD
REMOVAL PLAN

SCALE: 1" = 20' | SHEET 3 OF 3 SHEETS | STA. | TO STA.

F.A.I. RTE.	SECTION	COUNTY	TOTAL SHEETS	SHEET NO.
57	139 HBR-6	KANKAKEE	202	33

CONTRACT NO. 66997

ILLINOIS | FED. AID PROJECT

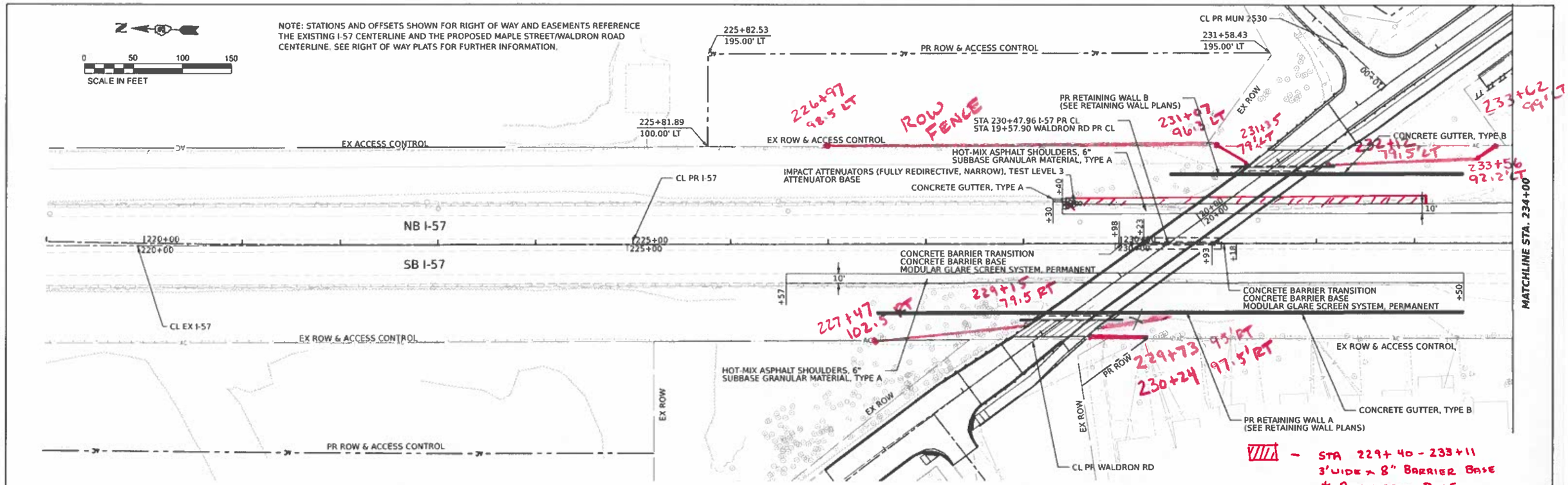

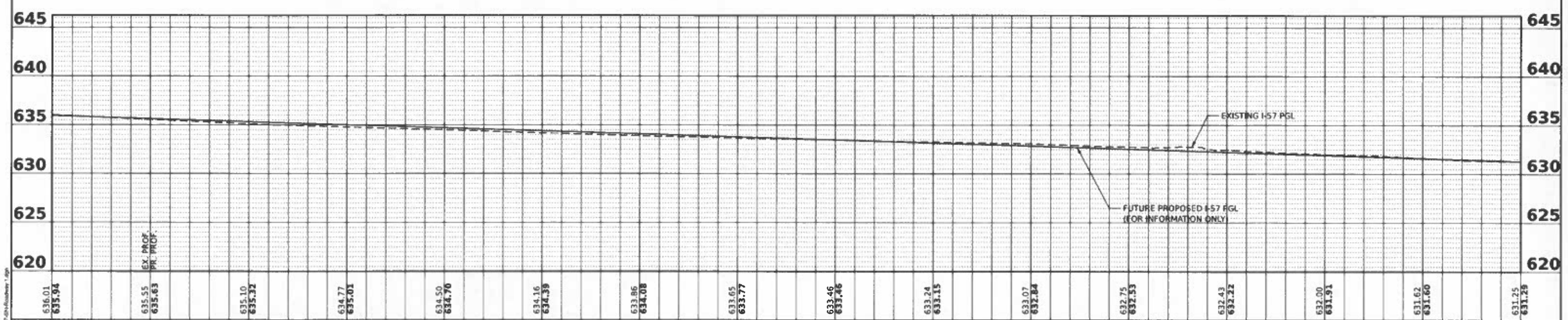

TranSmart
411 South Wells Street Suite 1000
Chicago, Illinois 60607

USER NAME = rsalerian	DESIGNED - NS	REVISED - 5/5/2021	
	DRAWN - NS	REVISED -	
PLOT SCALE = 0.1666833 ' / in.	CHECKED - TW	REVISED -	
PLOT DATE = 3/29/2021	DATE - 2021/03/26	REVISED -	

STATE OF ILLINOIS
DEPARTMENT OF TRANSPORTATION

I-57 & WALDRON ROAD
PLAN AND PROFILE

SCALE: 1" = 50' | SHEET 1 OF 5 SHEETS | STA. | TO STA.

F.A.I. RTE.	SECTION	COUNTY	TOTAL SHEETS	SHEET NO.
57	139 HBR-6	KANKAKEE	202	34

CONTRACT NO. 66997
ILLINOIS FED. AID PROJECT

MODEL: Plan 1
FILE NAME: D:\temp\7.dgn\Roadway 1.dgn

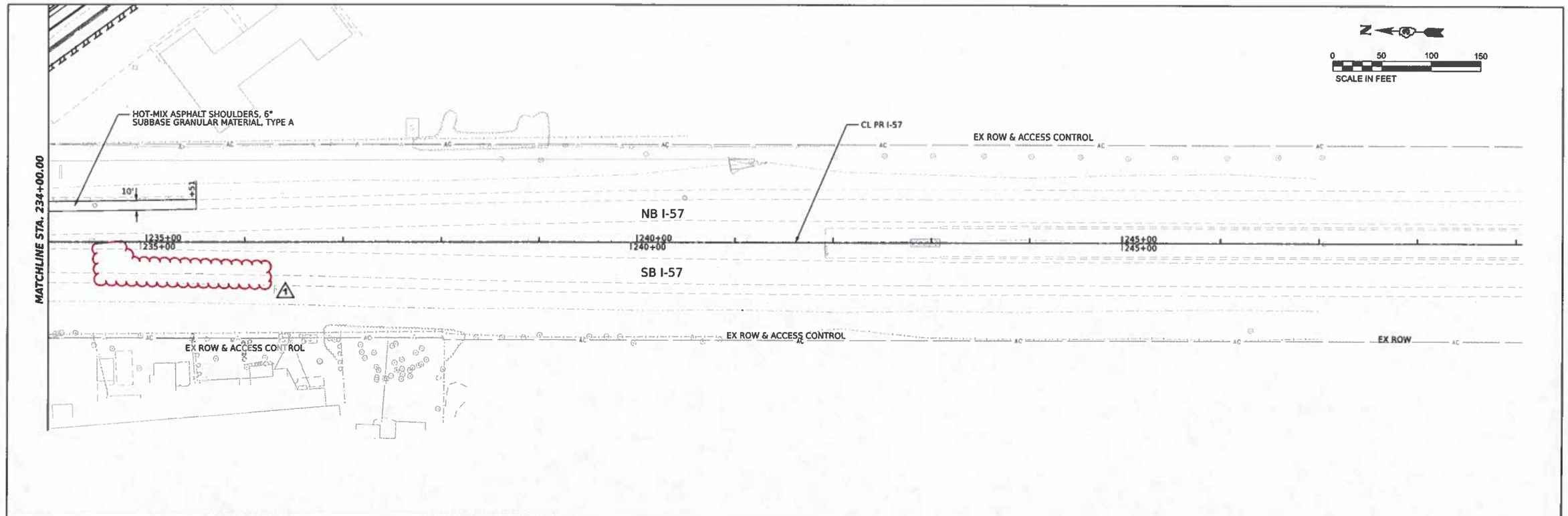

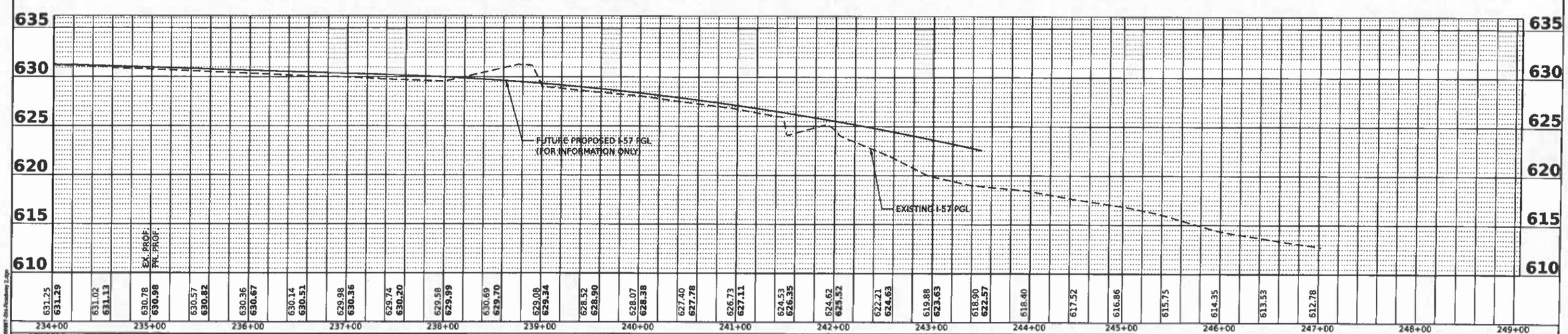

MODEL: Plan 3
FILE NAME: C:\0000IT-Jos-Roadway 2.dgn

TranSmart
411 South Wells Street Suite 1000
Chicago, Illinois 60607

USER NAME = sshko	DESIGNED - NS	REVISED -
	DRAWN - NS	REVISED -
PLOT SCALE = 0.10000533 ' / in.	CHECKED - TW	REVISED -
PLOT DATE = 7/9/2021	DATE - 2021/03/26	REVISED -

STATE OF ILLINOIS
DEPARTMENT OF TRANSPORTATION

I-57 & WALDRON ROAD
PLAN AND PROFILE

SCALE: 1" = 50' | SHEET 2 OF 5 SHEETS | STA. TO STA.

F.A.I. RTE.	SECTION	COUNTY	TOTAL SHEETS	SHEET NO.
57	139 HBR-6	KANKAKEE	202	35
		CONTRACT NO. 66997		
		ILLINOIS	FED. AID PROJECT	

REV. 08/25/21

NOTE: STATIONS AND OFFSETS SHOWN FOR RIGHT OF WAY AND EASEMENTS REFERENCE THE EXISTING I-57 CENTERLINE AND THE PROPOSED MAPLE STREET/WALDRON ROAD CENTERLINE. SEE RIGHT OF WAY PLATS FOR FURTHER INFORMATION.

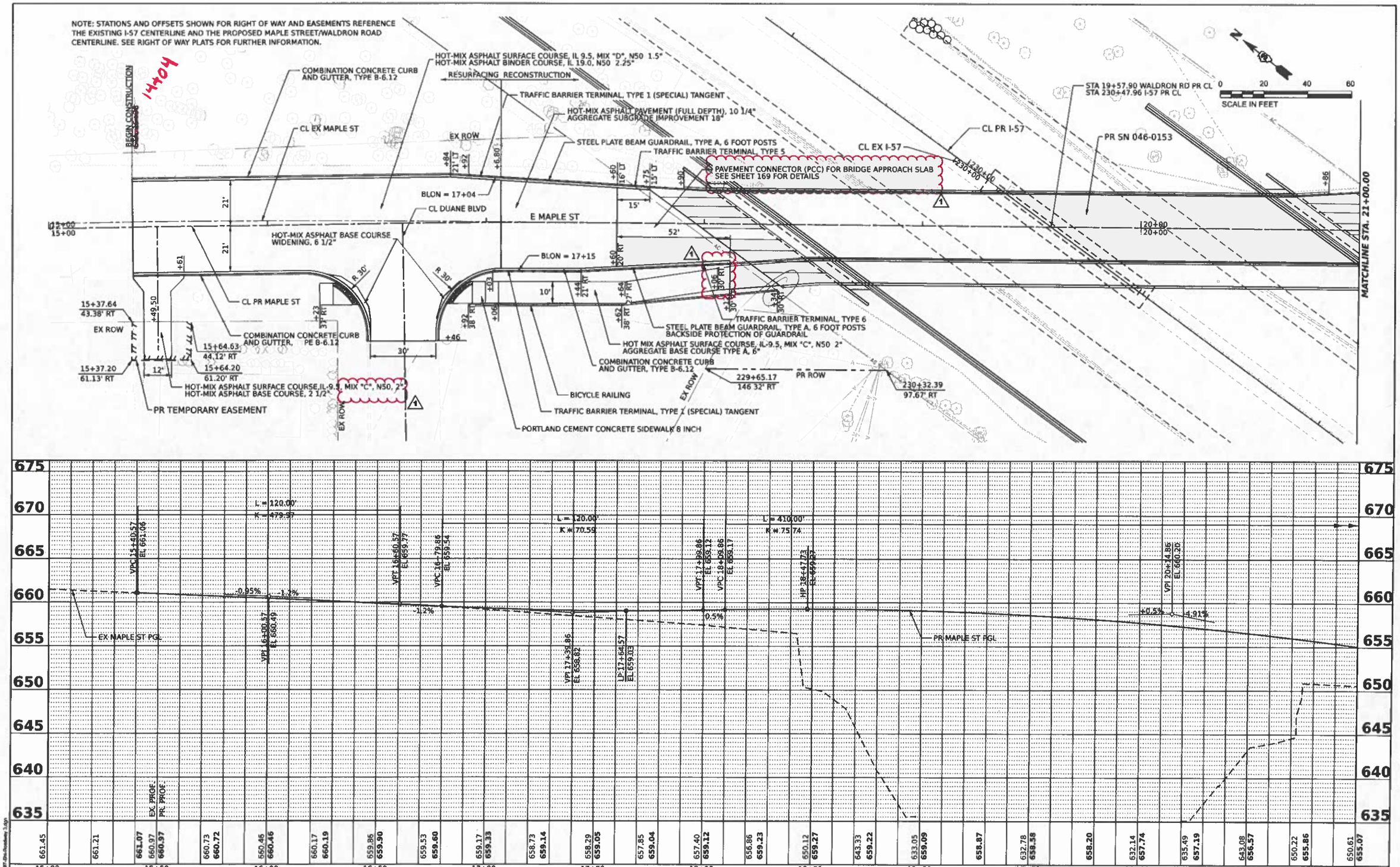

TranSmart
411 South Wells Street Suite 1000
Chicago, Illinois 60607

USER NAME = sshhs	DESIGNED - NS	REVISED -	
	DRAWN - NS	REVISED -	
PLOT SCALE = 0.16666633 ' / in.	CHECKED - TW	REVISED -	
PLOT DATE = 7/8/2021	DATE - 2021/07/09	REVISED -	

STATE OF ILLINOIS
DEPARTMENT OF TRANSPORTATION

I-57 & WALDRON ROAD
PLAN AND PROFILE

SCALE: 1" = 20' | SHEET 3 OF 5 SHEETS | STA. TO STA.

F.A.I. RTE.	SECTION	COUNTY	TOTAL SHEETS	SHEET NO.
57	139 HBR-6	KANKAKEE	202	36

CONTRACT NO. 66997
ILLINOIS | FED. AID PROJECT

REV. 08/25/21

MODEL: Plan 3
FILE NAME: D:\66997_Drs-Roadway_3.dgn

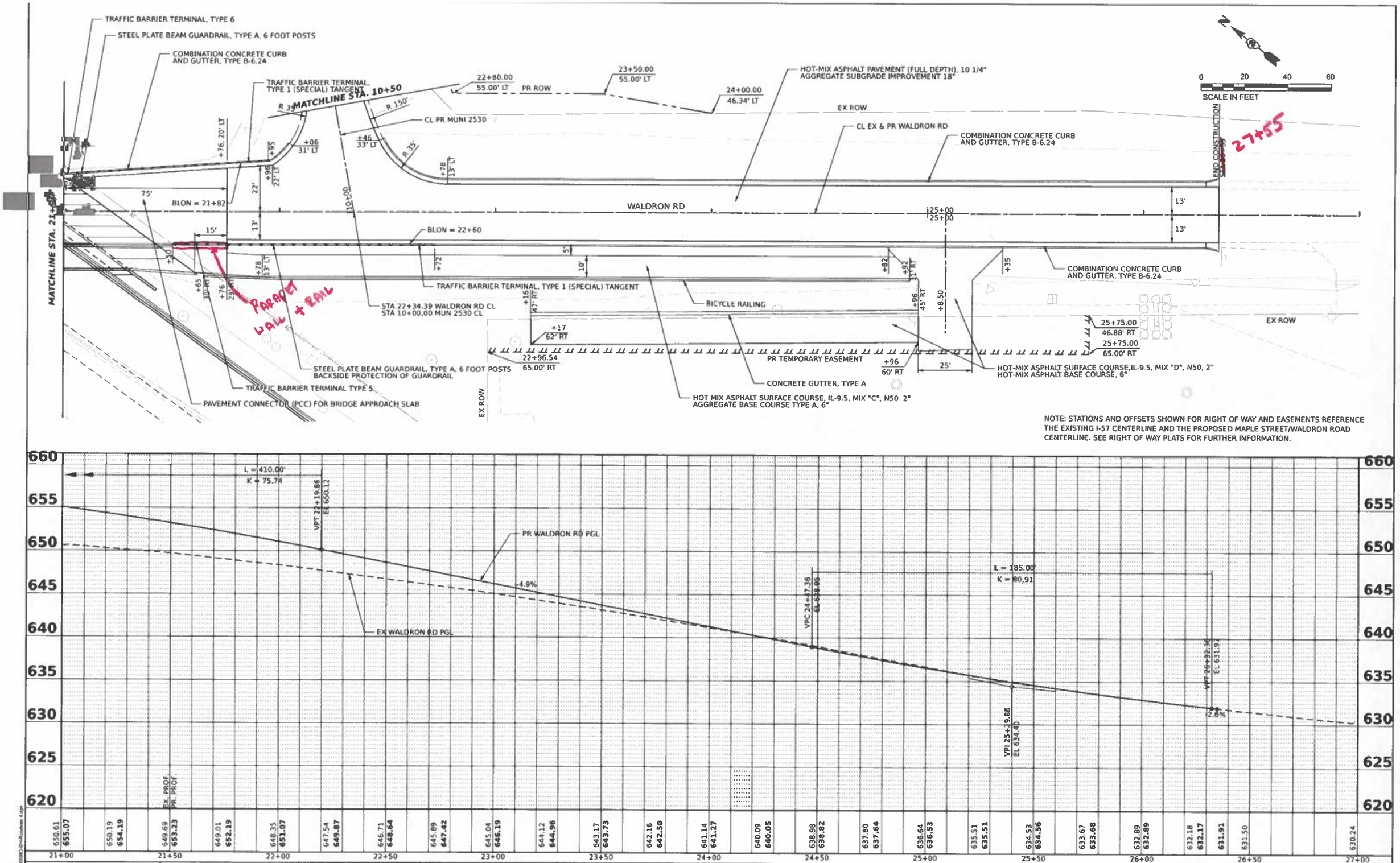

NOTE: STATIONS AND OFFSETS SHOWN FOR RIGHT OF WAY AND EASEMENTS REFERENCE THE EXISTING I-57 CENTERLINE AND THE PROPOSED MAPLE STREET/WALDRON ROAD CENTERLINE. SEE RIGHT OF WAY PLATS FOR FURTHER INFORMATION.

MODEL: Plan 4
FILE NAME: D:\0\0\62-Sh-Roadway 4.dgn

TranSmart
411 South Wells Street Suite 1000
Chicago, Illinois 60607

USER NAME = mstefanian	DESIGNED - NS	REVISED -	
	DRAWN - NS	REVISED -	
PLOT SCALE = 0.1666633 ' / in.	CHECKED - TW	REVISED -	
PLOT DATE = 3/29/2021	DATE - 2021/03/26	REVISED -	

STATE OF ILLINOIS
DEPARTMENT OF TRANSPORTATION

I-57 & WALDRON ROAD
PLAN AND PROFILE

SCALE: 1" = 20' | SHEET 4 OF 5 SHEETS | STA. | TO STA.

F.A.I. RTE.	SECTION	COUNTY	TOTAL SHEETS	SHEET NO.
57	139 HBR-6	KANKAKEE	202	37

CONTRACT NO. 66997
ILLINOIS FED. AID PROJECT

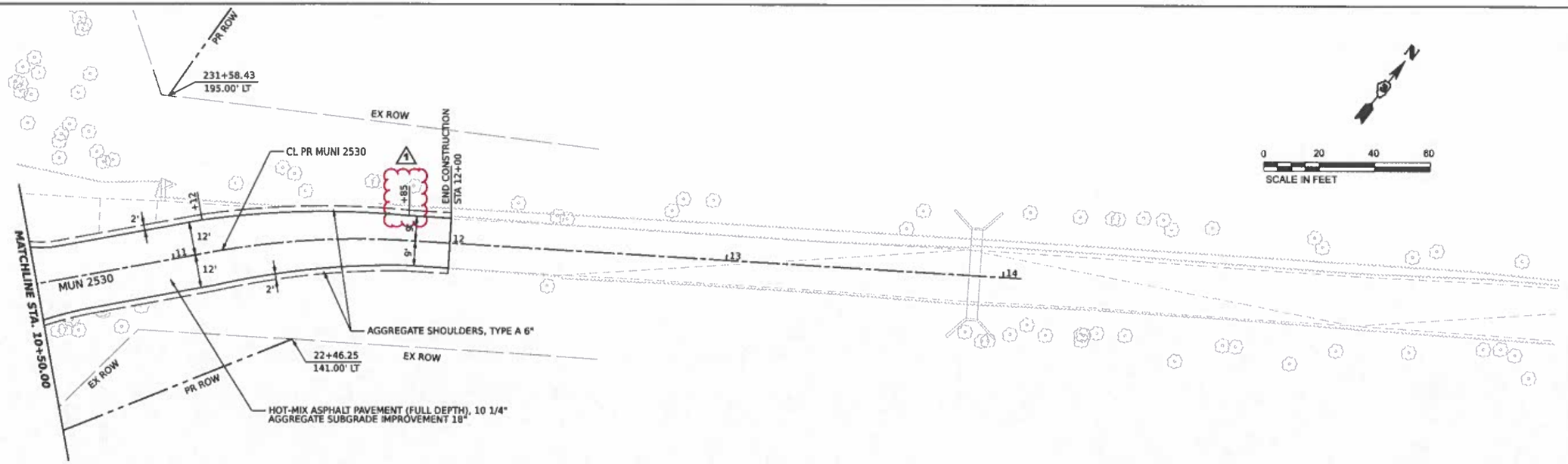

NOTE: STATIONS AND OFFSETS SHOWN FOR RIGHT OF WAY AND EASEMENTS REFERENCE THE EXISTING I-57 CENTERLINE AND THE PROPOSED MAPLE STREET/WALDRON ROAD CENTERLINE. SEE RIGHT OF WAY PLATS FOR FURTHER INFORMATION.

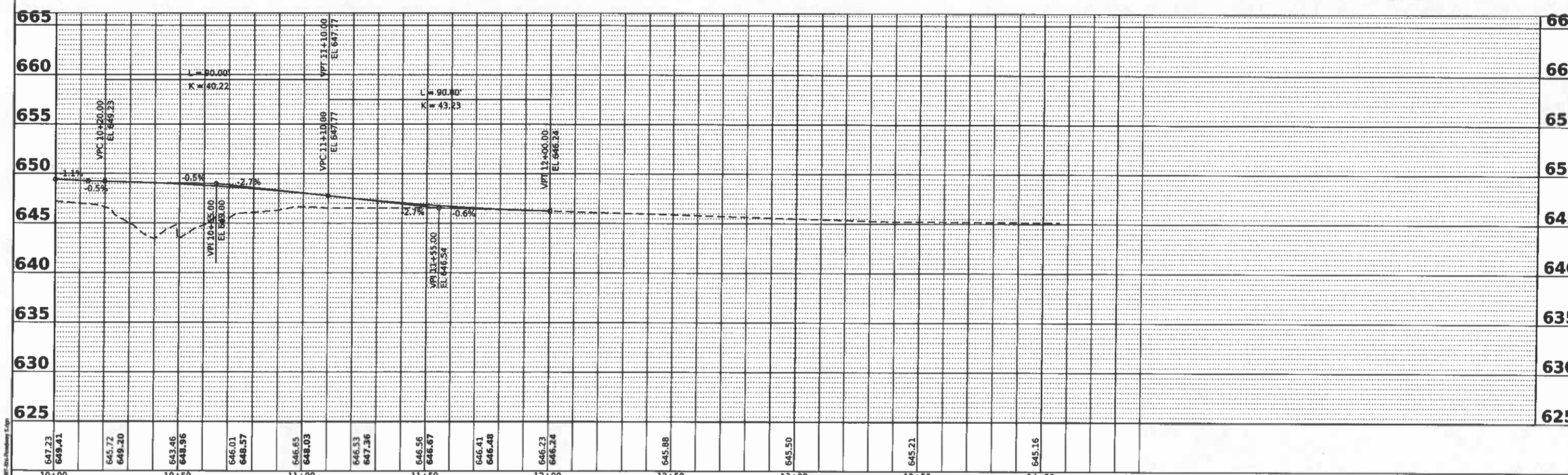

TranSmart 411 South Wells Street Suite 1000 Chicago, Illinois 60607	USER NAME = ddhho	DESIGNED - NS	REVISED -	STATE OF ILLINOIS DEPARTMENT OF TRANSPORTATION	I-57 & WALDRON ROAD PLAN AND PROFILE	F.A.I. RTE. 57	SECTION 139 HBR-6	COUNTY KANKAKEE	TOTAL SHEETS 202 / SHEET NO. 38
		DRAWN - NS	REVISED -					CONTRACT NO. 66997	
	PLOT SCALE = 0.16666633 ' / in.	CHECKED - TW	REVISED -		SCALE: 1" = 20' / SHEET 5 OF 5 SHEETS / STA. / TO STA.			ILLINOIS / FED. AID PROJECT	
	PLOT DATE = 7/8/2021	DATE - 2021/03/26	REVISED -						

MODEL: Plan-5
FILE NAME: D:\66997-Alts-Roadway-5.dgn

REV. 08/25/21

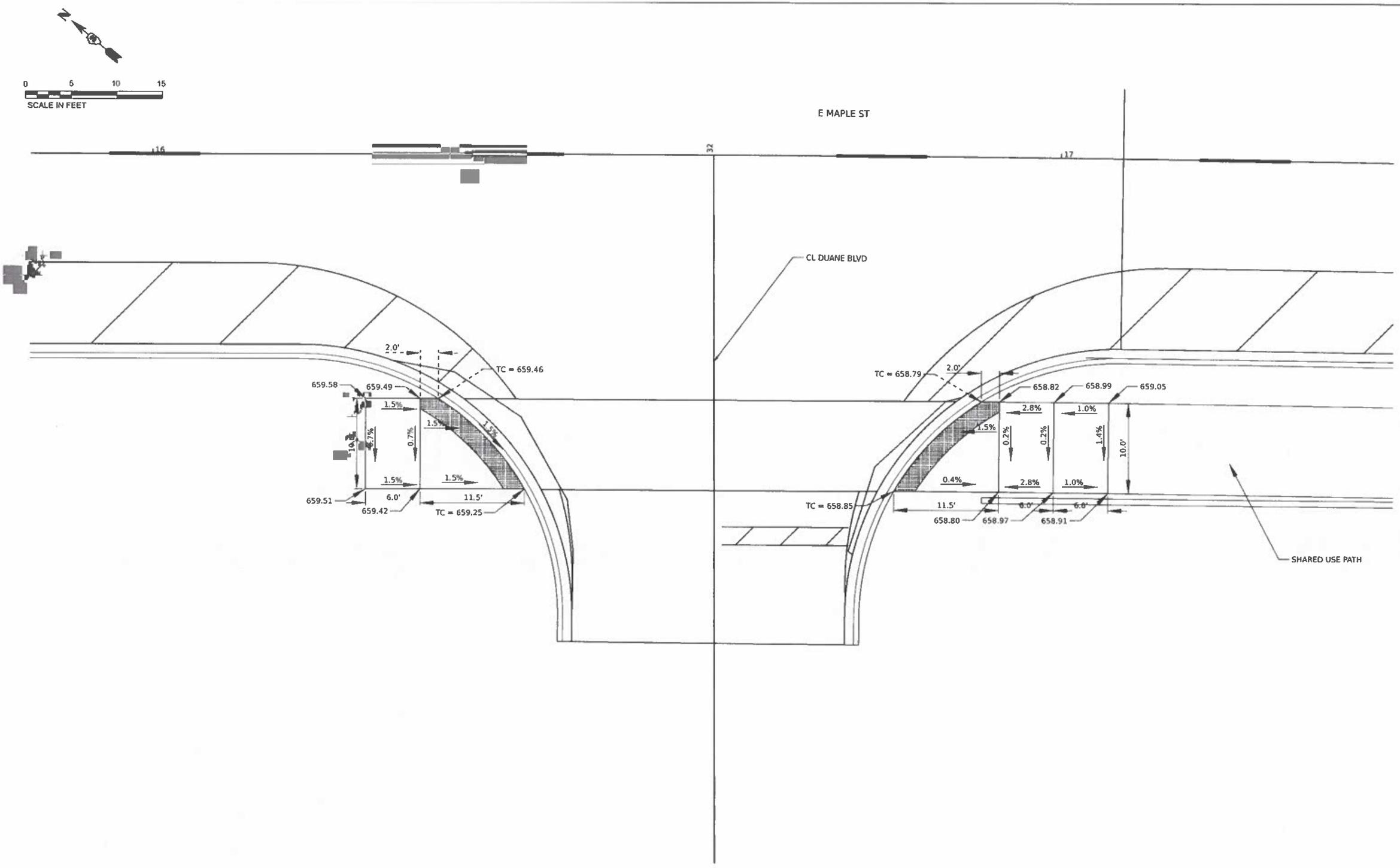

TranSmart 411 South Wells Street Suite 1000 Chicago, Illinois 60607	USER NAME = rsullivan	DESIGNED - WD	REVISED -	STATE OF ILLINOIS DEPARTMENT OF TRANSPORTATION	WALDRON ROAD ADA DESIGN	F.A.I. RTE.	SECTION	COUNTY	TOTAL SHEETS	SHEET NO.
		DRAWN - WD	REVISED -			57	139 HBR-6	KANKAKEE	202	39
	PLOT SCALE = 0.16666633' / in	CHECKED - TW	REVISED -					CONTRACT NO. 66997		
	PLOT DATE = 3/29/2021	DATE - 2021/03/26	REVISED -		SCALE: 1" = 5' SHEET 1 OF 1 SHEETS STA. TO STA.			ILLINOIS FED. AID PROJECT		

MODEL: Plan 1
FILE NAME: D308083-Sht_ADA1.dgn

PRE-STAGE 1 CONSTRUCTION

INSTALL TRAFFIC CONTROL SIGNING.

CONTRUCT NORTHBOUND SHOULDER REPAIR ALONG I-57 FROM STA 228+05 TO 242+35 AND SOUTHBOUND SHOULDER REPAIR ALONG I-57 FROM STA 218+82 TO 235+61.

CONSTRUCT TEMPORARY WIDENING ALONG WALDRON ROAD AS SHOWN IN THE PRE-STAGE 1 PLANS.

CONSTRUCT PROPOSED STORM SEWER LATERAL ALONG WALDRON ROAD AT STA 16+15.

TRAFFIC CONTROL AND PROTECTION

TRAFFIC CONTROL AND PROTECTION SHALL BE PERFORMED IN ACCORDANCE WITH THE TRAFFIC CONTROL PLAN, SECTION 701 OF THE STANDARD SPECIFICATIONS AND THE SPECIAL PROVISIONS.

I-57

TWO LANES OF TRAFFIC IN EACH DIRECTION SHALL BE ACCOMMODATED AT ALL TIMES ON EXISTING PAVEMENT, EXCEPT DURING ISOLATED DAYTIME LANE CLOSURES UTILIZING HIGHWAY STANDARD 701406.

WALDRON ROAD

TWO-WAY TRAFFIC SHALL BE ACCOMMODATED AT ALL TIMES ON EXISTING PAVEMENT, EXCEPT DURING ISOLATED FLAGGER CONTROLLED LANE CLOSURES.

EXISTING TRAFFIC CONTROL SIGNS AND DEVICES WILL BE REMOVED BY THE CONTRACTOR AFTER THE PROPOSED TRAFFIC CONTROL REQUIREMENTS ARE MET, OR AS AUTHORIZED BY THE ENGINEER. SIGNS OR DEVICES LEFT IN PLACE AT THIS TIME ARE TO BE PROTECTED FROM DAMAGE BY THE CONTRACTOR.

THE CONTRACTOR SHALL SCHEDULE OPERATIONS TO ENSURE THAT NO DROP-OFF OF GREATER THAN 12", WITHIN 3' OF THE TRAVEL LANE, IS PRESENT FOR 48 HOURS OR MORE.

DRUMS WITH STEADY-BURNING LIGHTS SHALL BE REQUIRED TO DELINEATE THE TRAVEL WAY. THE MAXIMUM SPACING SHALL BE 100 FEET, CENTER TO CENTER ALONG TANGENTS (50 FEET ALONG TAPERS); AND 25 FEET (CENTER TO CENTER) ALONG RADII TO SIDE ROADS AND ENTRANCES.

THE FOLLOWING TRAFFIC CONTROL STANDARDS ARE THE MINIMUM REQUIREMENTS FOR THE TRAFFIC FOR THIS PROJECT: 701001, 701006, 70101, 701201, 701301, 701326, 701400, 701401, 701406, 701901, AND 704001.

CHANGEABLE MESSAGE SIGNS ARE TO BE IN PLACE 2 WEEKS PRIOR TO THE BEGINNING OF CONSTRUCTION.

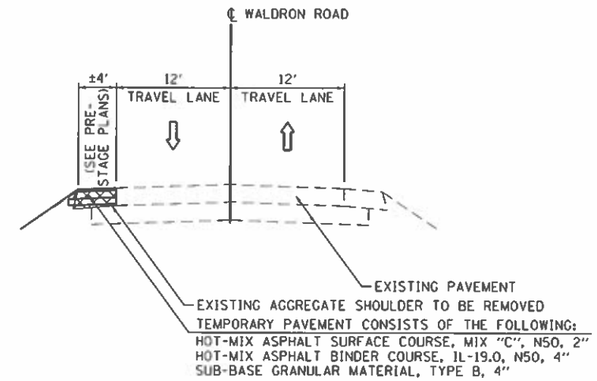

PRE-STAGE 1 TYPICAL SECTION
WALDRON ROAD

STA 20+72.26 TO 27+55.00

PRE-STAGE 1 TEMPORARY PAVEMENT CONSTRUCTION REQUIREMENTS

THE CONTRACTOR SHALL SCHEDULE OPERATIONS TO ENSURE THAT NO DROP-OFF OF >12", WITHIN 3' OF THE TRAVEL LANE, IS PRESENT FOR 48 HOURS OR MORE.

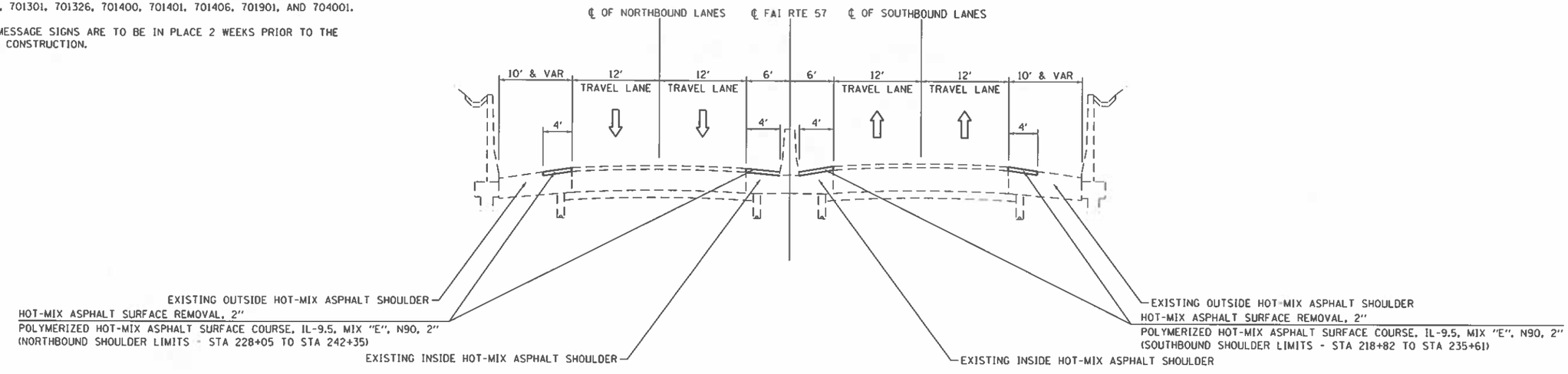

PRE-STAGE 1 TYPICAL SECTION
FAI 57

STA 218+82.00 TO 242+35.00

MODEL: Plan 1
FILE NAME: D306083-Sht-PreStage 1 Typical Sections-1.dgn

Hutchison Engineering, Inc. Jacksonville Moline Peoria Shorewood Since 1945	USER NAME = nsalenian	DESIGNED -	REVISED -	STATE OF ILLINOIS DEPARTMENT OF TRANSPORTATION	FAI 57 & WALDRON ROAD PRE-STAGE 1 TYPICAL SECTION	F.A.I. RTE.	SECTION	COUNTY	TOTAL SHEETS	SHEET NO.
		DRAWN -	REVISED -			57	139 HBR-6	KANKAKEE	202	40
	PLOT SCALE = 0.1667 ' / in.	CHECKED -	REVISED -					CONTRACT NO. 66997		
	PLOT DATE = 3/29/2021	DATE - 2021/03/26	REVISED -		SCALE: N.T.S. / SHEET 1 OF 1 SHEETS / STA. / TO STA.		ILLINOIS	FED. AID PROJECT		

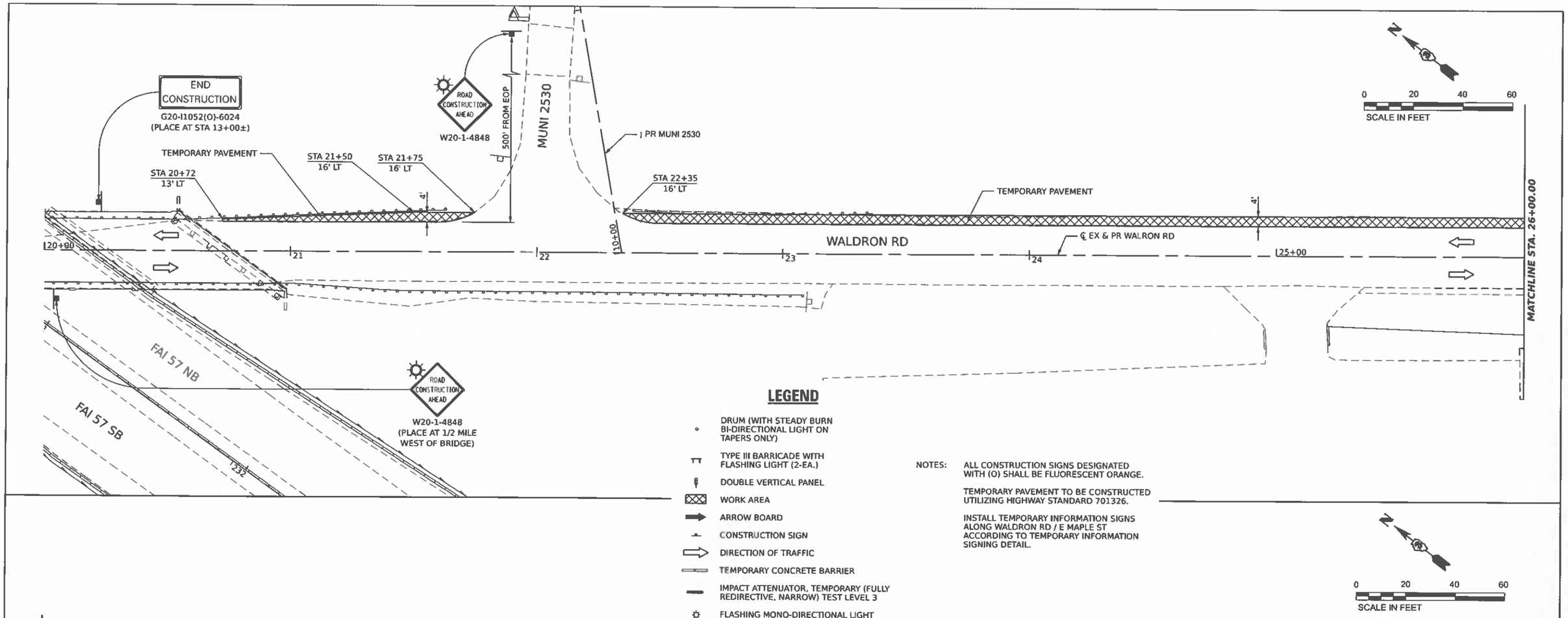

LEGEND

- DRUM (WITH STEADY BURN BI-DIRECTIONAL LIGHT ON TAPERS ONLY)
- TYPE III BARRICADE WITH FLASHING LIGHT (2-EA.)
- DOUBLE VERTICAL PANEL
- WORK AREA
- ARROW BOARD
- CONSTRUCTION SIGN
- DIRECTION OF TRAFFIC
- TEMPORARY CONCRETE BARRIER
- IMPACT ATTENUATOR, TEMPORARY (FULLY REDIRECTIVE, NARROW) TEST LEVEL 3
- FLASHING MONO-DIRECTIONAL LIGHT

NOTES:

ALL CONSTRUCTION SIGNS DESIGNATED WITH (O) SHALL BE FLUORESCENT ORANGE.

TEMPORARY PAVEMENT TO BE CONSTRUCTED UTILIZING HIGHWAY STANDARD 701326.

INSTALL TEMPORARY INFORMATION SIGNS ALONG WALDRON RD / E MAPLE ST ACCORDING TO TEMPORARY INFORMATION SIGNING DETAIL.

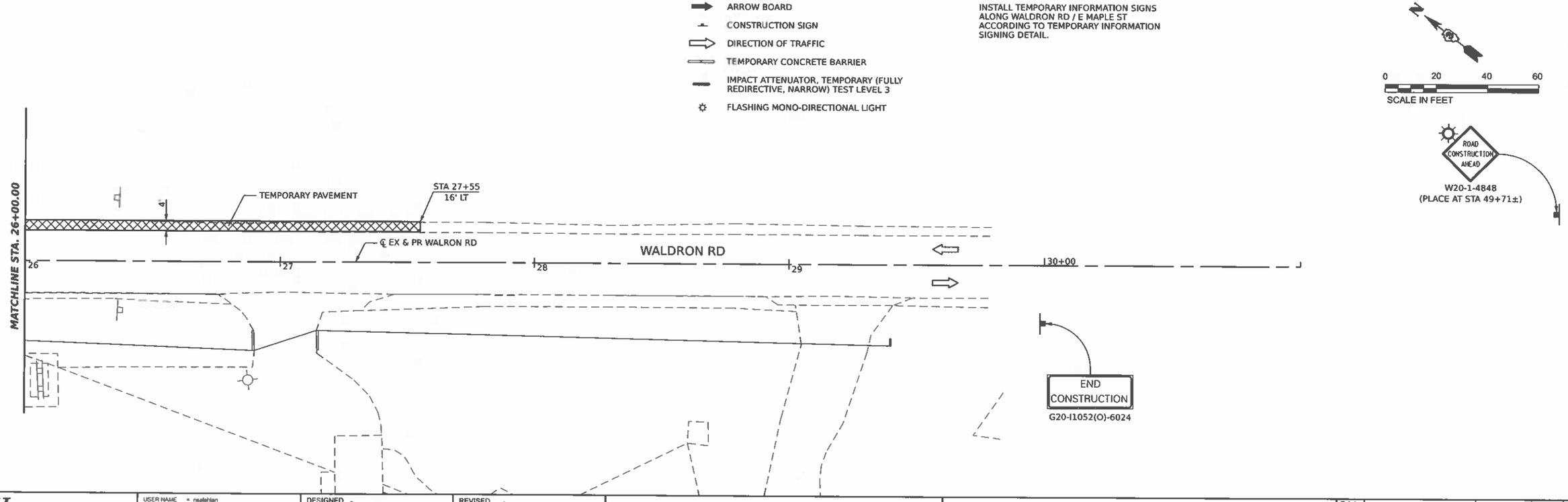

MODEL: Plan 7
FILE NAME: D350863-Sht-PreStage 1-1.dgn

Hutchison Engineering, Inc. Jacksonville Moline Peoria Shorewood Since 1945	USER NAME = nealehan	DESIGNED -	REVISED -
		DRAWN -	REVISED -
	PLOT SCALE = 0.16666633 ' / in.	CHECKED -	REVISED -
	PLOT DATE = 3/29/2021	DATE - 2021/03/26	REVISED -

STATE OF ILLINOIS
DEPARTMENT OF TRANSPORTATION

FAI 57 & WALDRON ROAD
PRE-STAGE 1 CONSTRUCTION AND TRAFFIC CONTROL

SCALE: 1"=20' | SHEET 1 OF 1 SHEETS | STA. 20+00 TO STA. 31+00

F.A.I. RTE.	SECTION	COUNTY	TOTAL SHEETS	SHEET NO.
57	139 HBR-6	KANKAKEE	202	41
		CONTRACT NO. 66997		
		ILLINOIS	FED. AID PROJECT	

STAGE 1 CONSTRUCTION

INSTALL TRAFFIC CONTROL SIGNING.

INSTALL TEMPORARY BRIDGE SIGNALS ACCORDING TO STAGE 1 PLANS.

CONSTRUCT PERMANENT EASTBOUND LANE ON WALDRON ROAD (MINUS THE SURFACE COURSE) FROM STA 17+07 TO STA 17+96 AND FROM STA 21+22 TO STA 26+35. CONSTRUCT CURB AND GUTTER FROM STA 15+38 TO STA 17+07.

CONSTRUCT MUN 2530 ACCORDING TO STAGE 1 PLANS. MUN 2530 TO REMAIN OPEN AT ALL TIMES DURING STAGE 1 UNLESS A FLAGGER CONTROLLED LANE CLOSURE IS PROVIDED.

CONSTRUCT PROPOSED STORM SEWER ALONG WALDRON ROAD AND I-57 WITHIN THE STAGE 1 CONSTRUCTION LIMITS AS SHOWN IN THE STAGE 1 PLANS.

REMOVE EASTBOUND SUBSTRUCTURE AND SUPERSTRUCTURE OF EXISTING SN 046-0080 WITHIN THE STAGE 1 LIMITS AS SHOWN IN THE STRUCTURE PLANS. CONSTRUCT EASTBOUND SUBSTRUCTURE AND SUPERSTRUCTURE OF PROPOSED SN 046-0153 WITHIN THE STAGE 1 LIMITS AS SHOWN IN THE STRUCTURE PLANS.

REMOVE EXISTING RETAINING WALL WITHIN THE STAGE 1 LIMITS. CONSTRUCT STAGE 1 PORTIONS OF RETAINING WALLS A AND B AS SHOWN IN THE RETAINING WALL PLANS.

TRAFFIC CONTROL AND PROTECTION

TRAFFIC CONTROL AND PROTECTION SHALL BE PERFORMED IN ACCORDANCE WITH THE TRAFFIC CONTROL PLAN, SECTION 701 OF THE STANDARD SPECIFICATIONS AND THE SPECIAL PROVISIONS.

I-57

MAINTAIN ONE LANE OF TRAFFIC IN EACH DIRECTION AT ALL TIMES.

DURING SUPERSTRUCTURE DEMOLITION, LIVE TRAFFIC ON I-57 UNDERNEATH THE BRIDGE WILL ONLY BE PERMITTED FOR ADVANCE DEMOLITION PERPARATIONS (SAWCUTTING, PARTIAL CHIPPING) WITH PROTECTIVE SHIELDING IN PLACE. ALL OTHER DEMOLITION OPERATIONS TO THE BRIDGE WILL DIVERT THE I-57 TRAFFIC UTILIZING A DETOUR PROVIDED IN THE "TOTAL INTERSTATE CLOSURE AT NIGHT" DETAIL. CHANGEABLE MESSAGE SIGNS SHALL BE IN PLACE 2 WEEKS PRIOR TO ANY INTERSTATE CLOSURE.

FOR BEAM PLACEMENT, DIVERT THE I-57 TRAFFIC UTILIZING THE DETOUR AS SHOWN IN THE "TOTAL INTERSTATE CLOSURE AT NIGHT" DETAIL.

DURING INSTALLATION OF FORMS FOR THE CONCRETE DECK, LANE CLOSURES WILL BE ALLOWED SO THAT NO FORMING WORK IS PERFORMED ABOVE LIVE TRAFFIC.

WALDRON ROAD

MAINTAIN ONE LANE OF TRAFFIC AT ALL TIMES UTILIZING HIGHWAY STANDARD 701321. DUANE BLVD WILL BE CLOSED DURING STAGE 1.

EXISTING TRAFFIC CONTROL SIGNS AND DEVICES WILL BE REMOVED BY THE CONTRACTOR AFTER THE PROPOSED TRAFFIC CONTROL REQUIREMENTS ARE MET, OR AS AUTHORIZED BY THE ENGINEER. SIGNS OR DEVICES LEFT IN PLACE AT THIS TIME ARE TO BE PROTECTED FROM DAMAGE BY THE CONTRACTOR.

THE CONTRACTOR SHALL SCHEDULE OPERATIONS TO ENSURE THAT NO DROP-OFF OF GREATER THAN 12", WITHIN 3' OF THE TRAVEL LANE, IS PRESENT FOR 48 HOURS OR MORE.

NO DROP-OFF GREATER THAN 24" WITHIN 12' OF THE TRAVEL LANE WILL BE ALLOWED UNLESS A FLAGGER CONTROLLED LANE CLOSURE IS PROVIDED. SEGMENTS WHERE THESE CONDITIONS OCCUR DURING NON-WORKING HOURS MUST BE PROTECTED WITH TEMPORARY CONCRETE BARRIER. UNLESS AUTHORIZED BY THE ENGINEER, THE CONTRACTOR WILL ONLY BE PAID FOR TEMPORARY CONCRETE BARRIER ALONG SEGMENTS SHOWN IN THE PLANS.

DRUMS WITH STEADY-BURNING LIGHTS SHALL BE REQUIRED TO DELINEATE THE TRAVEL WAY. THE MAXIMUM SPACING SHALL BE 100 FEET, CENTER TO CENTER ALONG TANGENTS (50 FEET ALONG TAPERS); AND 25 FEET (CENTER TO CENTER) ALONG RADII TO SIDE ROADS AND ENTRANCES.

THE CONTRACTOR MUST MAINTAIN ACCESS TO ALL PROPERTIES AT ALL TIMES. THE PAY ITEM AGGREGATE FOR TEMPORARY ACCESS HAS BEEN PROVIDED TO AID THE CONTRACTOR IN MAINTAINING THIS ACCESS.

THE FOLLOWING TRAFFIC CONTROL STANDARDS ARE THE MINIMUM REQUIREMENTS FOR THE TRAFFIC FOR THIS PROJECT: 701001, 701006, 70101, 701201, 701301, 701326, 701400, 701401, 701406, 701901 AND 704001.

CHANGEABLE MESSAGE SIGNS ARE TO BE IN PLACE 2 WEEKS PRIOR TO THE BEGINNING OF CONSTRUCTION.

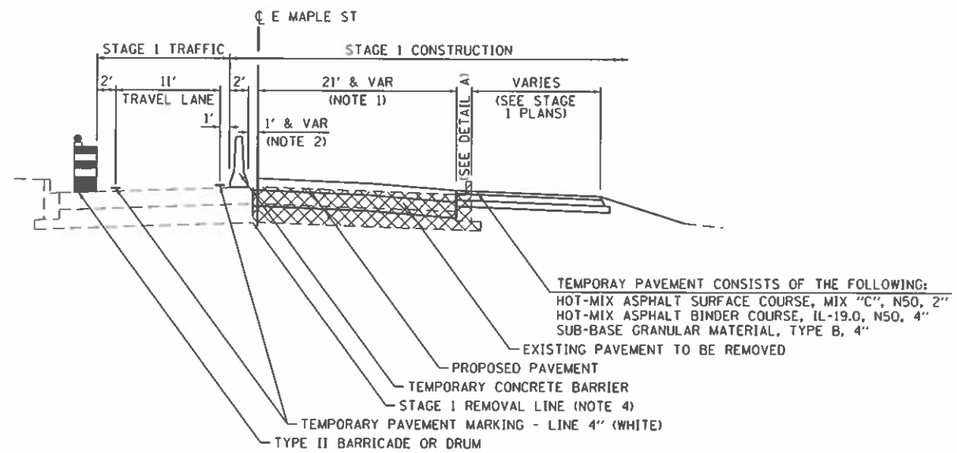

STAGE 1 TYPICAL SECTION
E MAPLE ST

STA 17+06.78 TO 17+96.21

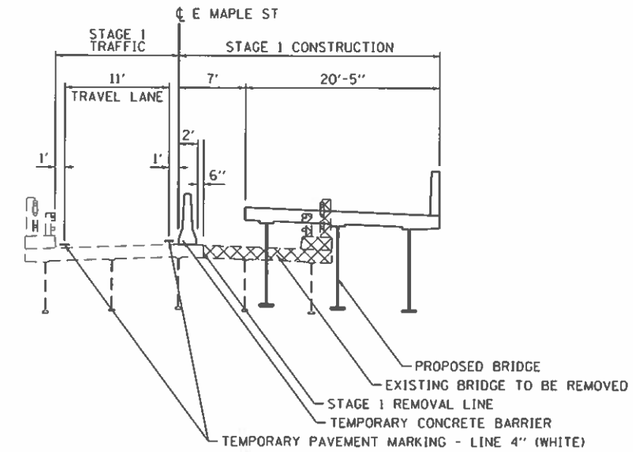

STAGE 1 BRIDGE TYPICAL SECTION
E MAPLE ST

STA 17+96.21 TO 21+21.73

NOTES:

1. VARIES FROM 21' AT STA 17+44 TO 14' AT STA 17+62.
2. VARIES FROM 1' AT STA 17+44 TO 8' AT STA 17+89. VARIES FROM 8' AT STA 21+47 TO 1' AT STA 22+00.
3. VARIES FROM 6' AT STA 21+53 TO 13' AT STA 22+00.
4. TEMPORARY SOIL RETENTION SYSTEM LIMITS: E MAPLE ST FROM STA 17+40± TO STA 19+00±. WALDRON RD FROM STA 20+10± TO STA 23+20±.

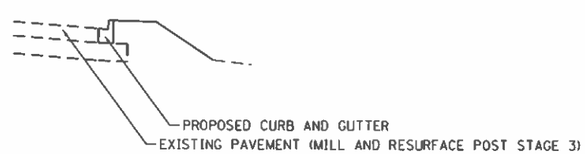

DETAIL A

STA 15+38.36 TO 17+06.78

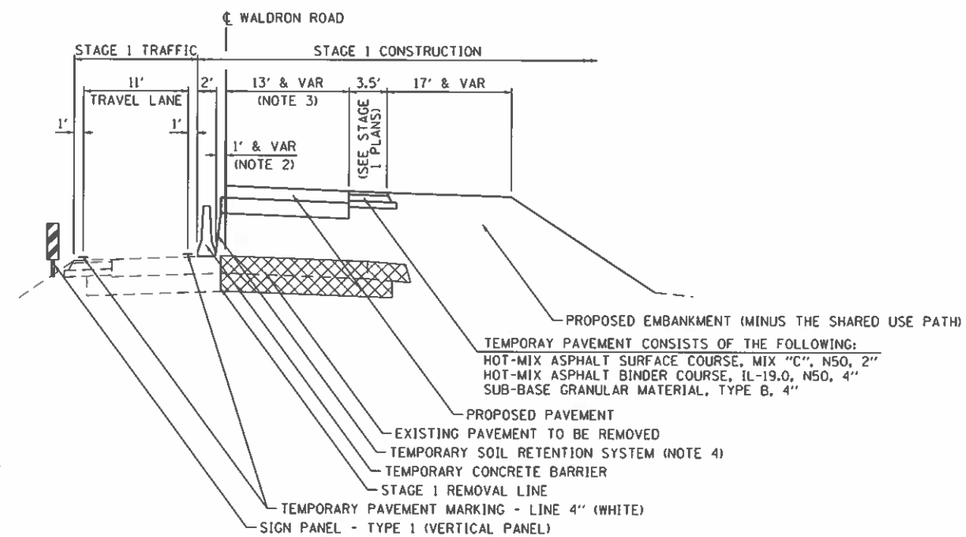

STAGE 1 TYPICAL SECTION
WALDRON ROAD

STA 21+21.73 TO 26+35.00

MODEL: Plan 1
FILE NAME: C:\SIGNS\3-Stn-Stage 1 Typical Section-1.dgn

Hutchison Engineering, Inc. Jacksonville Moline Peoria Shorewood Since 1945	USER NAME = nsalehian	DESIGNED -	REVISED -
		DRAWN -	REVISED -
	PLOT SCALE = 0.1667 ' / in.	CHECKED -	REVISED -
	PLOT DATE = 3/29/2021	DATE - 2021/03/26	REVISED -

STATE OF ILLINOIS
DEPARTMENT OF TRANSPORTATION

FAI 57 & WALDRON ROAD
STAGE 1 TYPICAL SECTIONS

SCALE: N.T.S. | SHEET 1 OF 2 SHEETS | STA. | TO STA.

F.A.I. RTE.	SECTION	COUNTY	TOTAL SHEETS	SHEET NO.
57	139 HBR-6	KANKAKEE	202	42
		CONTRACT NO. 66997		
		ILLINOIS	FED. AID PROJECT	

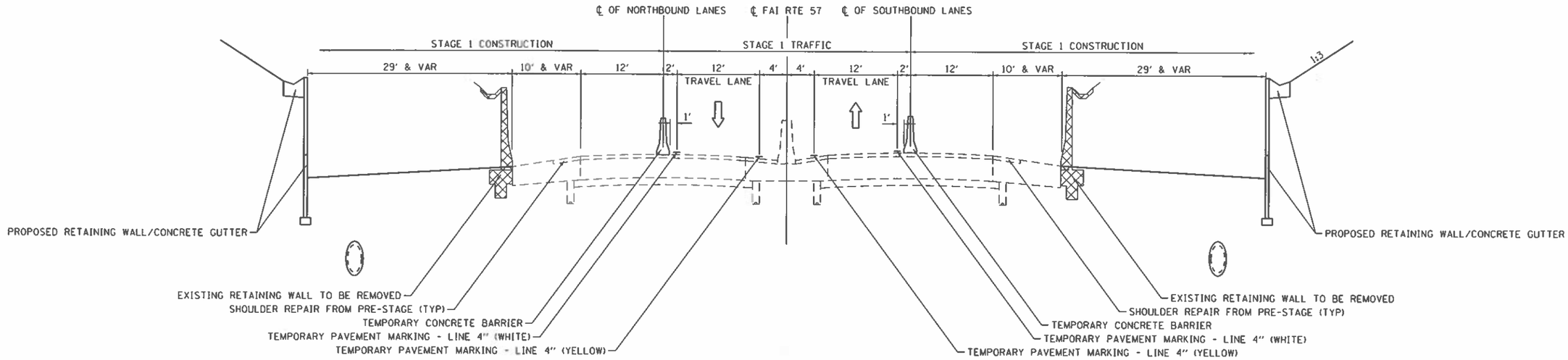

STAGE 1 TYPICAL SECTION
FAI 57 – OUTSIDE LANE WORKZONE

STA 227+00.00 TO 233+75.00

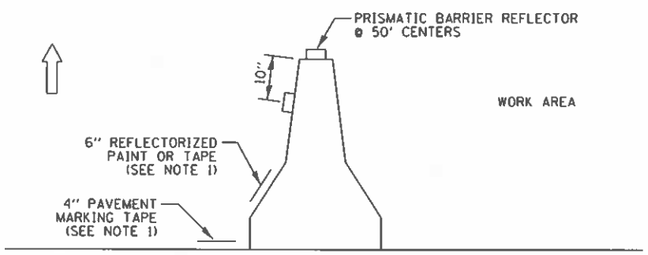

NOTES:

1. THE CONTRACTOR HAS THE OPTION OF USING EITHER THE LINE ON THE TEMPORARY CONCRETE BARRIER OR ON THE PAVEMENT.
2. THE COST OF THE REFLECTORS IS INCLUDED IN THE COST OF THE TEMPORARY CONCRETE BARRIER.

TEMPORARY CONCRETE BARRIER WALL DETAILS

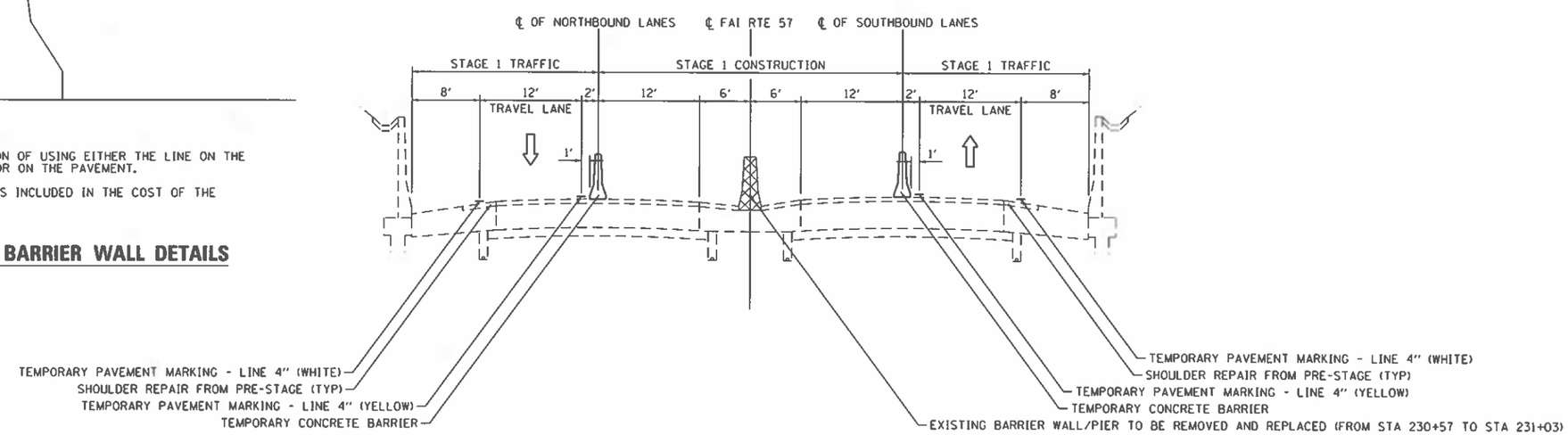

STAGE 1 TYPICAL SECTION
FAI 57 – INSIDE LANE WORKZONE

STA 227+00.00 TO 233+75.00

MODEL: Plan 1
FILE NAME: D368963-Sht-Stage 1 typical Section-2.dgn

Hutchison Engineering, Inc. Jacksonville Moline Peoria Shorewood Since 1945	USER NAME = nsalehian	DESIGNED -	REVISED -	STATE OF ILLINOIS DEPARTMENT OF TRANSPORTATION	FAI 57 & WALDRON ROAD STAGE 1 TYPICAL SECTIONS	F.A.I. RTE.	SECTION	COUNTY	TOTAL SHEETS / SHEET NO.
		DRAWN -	REVISED -			57	139 HBR-6	KANKAKEE	202 / 43
	PLOT SCALE = 0.1667 ' / in.	CHECKED -	REVISED -					CONTRACT NO. 66997	
	PLOT DATE = 3/29/2021	DATE - 2021/03/26	REVISED -		SCALE: N.T.S. / SHEET 2 OF 2 SHEETS / STA. / TO STA.		ILLINOIS	FED. AID PROJECT	

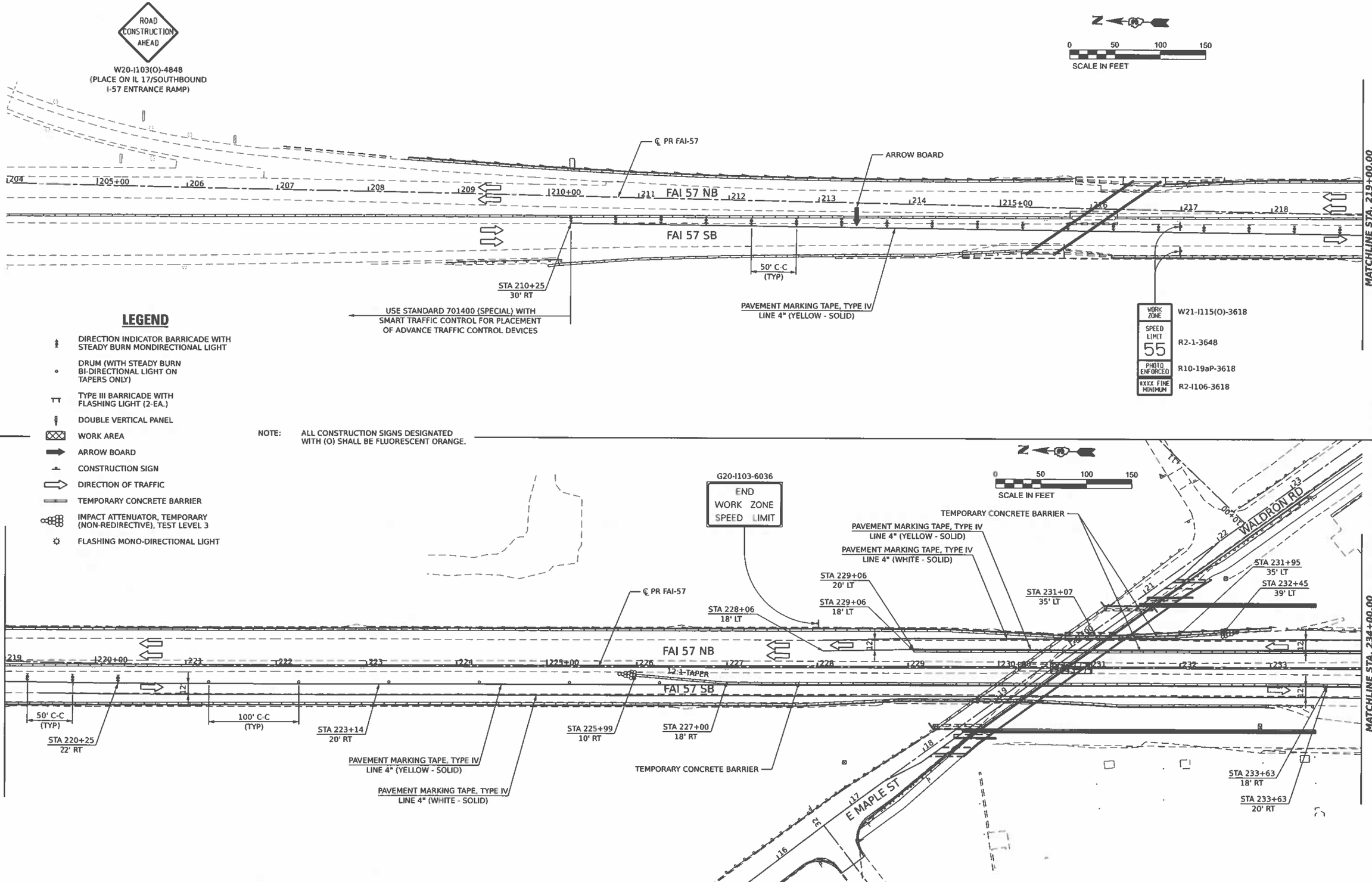

MODEL: Plan 1
FILE NAME: D306053-Sht-Stage 1-1.dgn

Hutchison Engineering, Inc. Jacksonville Moline Peoria Shorewood Since 1945	USER NAME = msalehian	DESIGNED -	REVISED -
		DRAWN -	REVISED -
	PLOT SCALE = 0.166666' / in.	CHECKED -	REVISED -
	PLOT DATE = 3/29/2021	DATE -	REVISED -

STATE OF ILLINOIS
DEPARTMENT OF TRANSPORTATION

FAI 57 & WALDRON ROAD
STAGE 1 FAI 57 INSIDE LANE CONSTRUCTION AND TRAFFIC CONTROL

SCALE: 1"=50' | SHEET 1 OF 7 SHEETS | STA. 204+00 TO STA. 234+00

F.A.I. RTE.	SECTION	COUNTY	TOTAL SHEETS	SHEET NO.
57	139 HBR-6	KANKAKEE	202	44
		CONTRACT NO. 66997		
		ILLINOIS	FED. AID PROJECT	

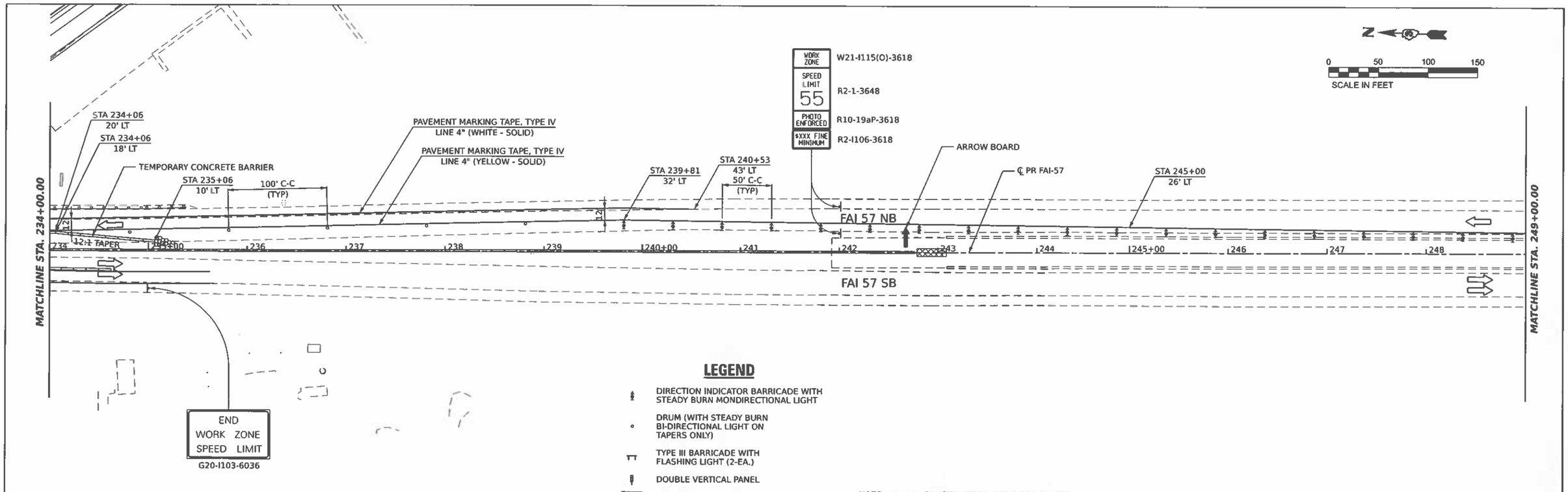

LEGEND

- DIRECTION INDICATOR BARRICADE WITH STEADY BURN MONDIRECTIONAL LIGHT
- DRUM (WITH STEADY BURN BI-DIRECTIONAL LIGHT ON TAPERS ONLY)
- TYPE III BARRICADE WITH FLASHING LIGHT (2-EA.)
- DOUBLE VERTICAL PANEL
- WORK AREA
- ARROW BOARD
- CONSTRUCTION SIGN
- DIRECTION OF TRAFFIC
- TEMPORARY CONCRETE BARRIER
- IMPACT ATTENUATOR, TEMPORARY (NON-REDIRECTIVE) TEST LEVEL 3
- FLASHING MONO-DIRECTIONAL LIGHT

NOTE: ALL CONSTRUCTION SIGNS DESIGNATED WITH (O) SHALL BE FLUORESCENT ORANGE.

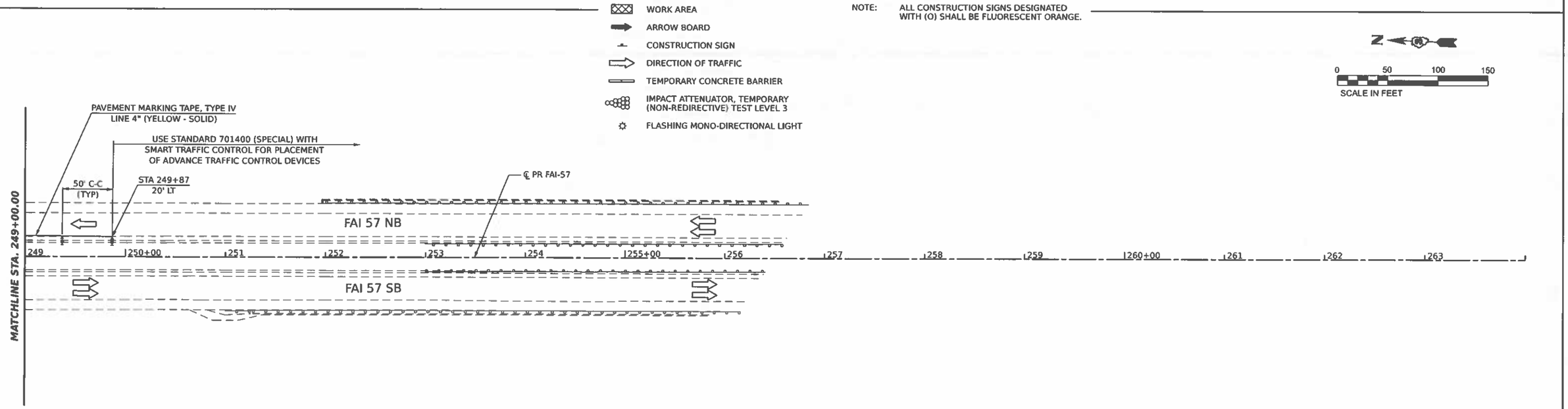

MODEL: Plan 3
FILE NAME: D580803-Sht-Stage 1-2.dgn

Hutchison Engineering, Inc. Jacksonville Moline Peoria Shorewood Since 1945	USER NAME = nsallahan	DESIGNED -	REVISED -	STATE OF ILLINOIS DEPARTMENT OF TRANSPORTATION	FAI 57 & WALDRON ROAD STAGE 1 FAI 57 INSIDE LANE CONSTRUCTION AND TRAFFIC CONTROL	F.A.I. RTE.	SECTION	COUNTY	TOTAL SHEETS	SHEET NO.
		DRAWN -	REVISED -			57	139 HBR-6	KANKAKEE	202	45
	PLOT SCALE = 0.16666633 ' / in.	CHECKED -	REVISED -					CONTRACT NO. 66997		
	PLOT DATE = 3/29/2021	DATE - 2021/03/26	REVISED -		SCALE 1"=50' / SHEET 2 OF 7 SHEETS / STA. 234+00 TO STA. 264+00			ILLINOIS FED. AID PROJECT		

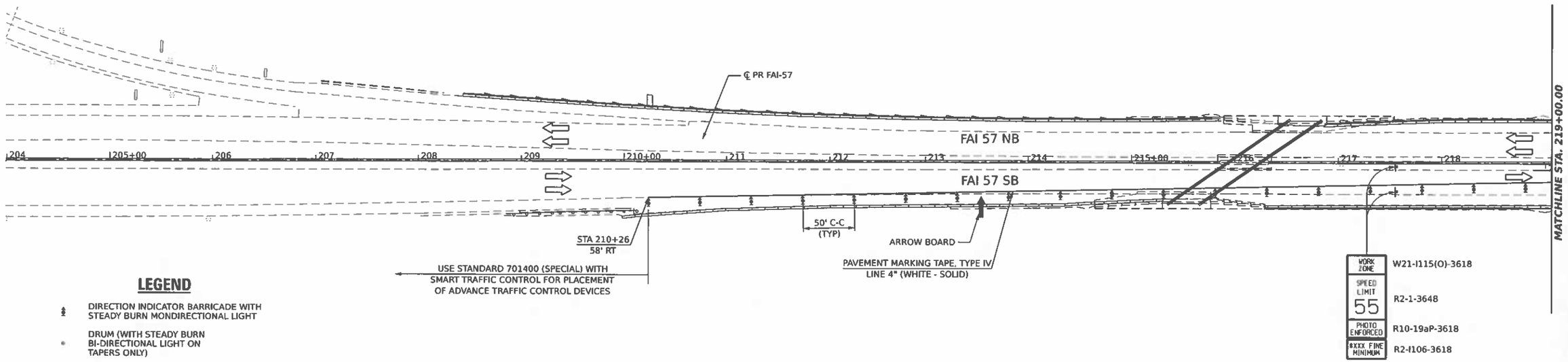

LEGEND

- DIRECTION INDICATOR BARRICADE WITH STEADY BURN MONDIRECTIONAL LIGHT
- DRUM (WITH STEADY BURN BI-DIRECTIONAL LIGHT ON TAPERS ONLY)
- TYPE III BARRICADE WITH FLASHING LIGHT (2-EA.)
- DOUBLE VERTICAL PANEL
- WORK AREA
- ARROW BOARD
- CONSTRUCTION SIGN
- DIRECTION OF TRAFFIC
- TEMPORARY CONCRETE BARRIER
- IMPACT ATTENUATOR, TEMPORARY (NON-REDIRECTIVE) TEST LEVEL 3
- FLASHING MONO-DIRECTIONAL LIGHT

NOTE: ALL CONSTRUCTION SIGNS DESIGNATED WITH (O) SHALL BE FLUORESCENT ORANGE.

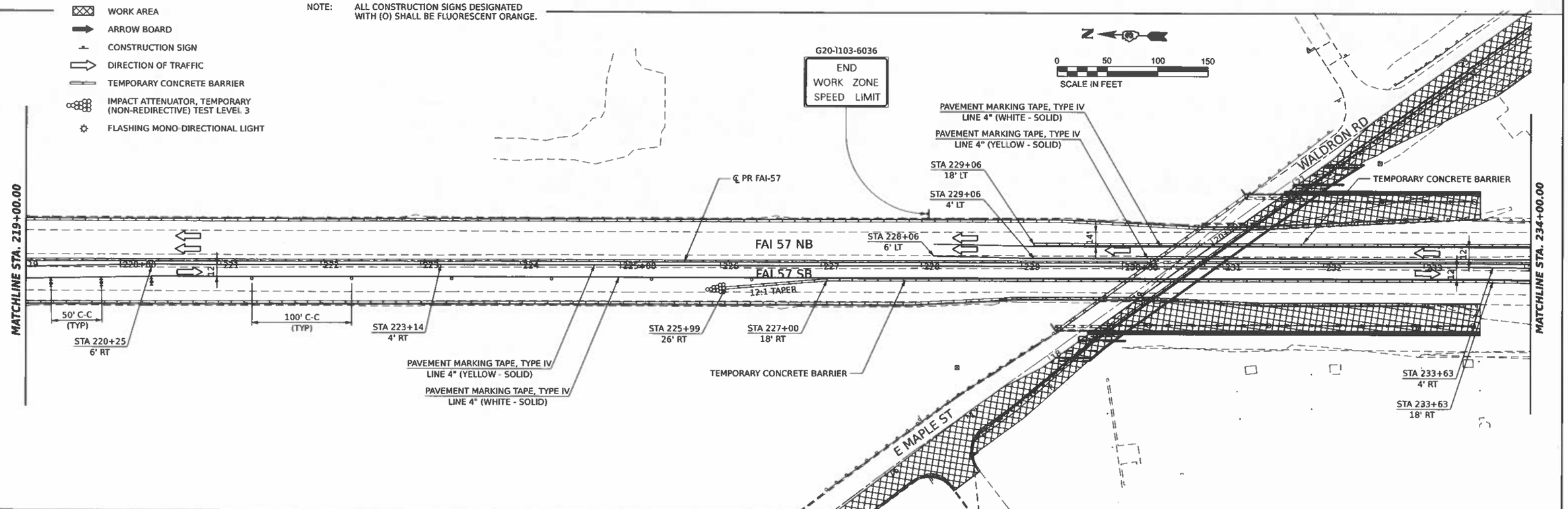

Hutchison Engineering, Inc. Jacksonville Moline Peoria Shorewood Since 1945	USER NAME = nsalehian	DESIGNED -	REVISED -	STATE OF ILLINOIS DEPARTMENT OF TRANSPORTATION	FAI 57 & WALDRON ROAD STAGE 1 FAI 57 OUTSIDE LANE CONSTRUCTION AND TRAFFIC CONTROL
		DRAWN -	REVISED -		
	PLOT SCALE = 0.166666 ' / in.	CHECKED -	REVISED -		
	PLOT DATE = 3/29/2021	DATE -	REVISED -		SCALE: 1"=50' SHEET 3 OF 7 SHEETS STA. 204+00 TO STA. 234+00

F.A.I. RTE.	SECTION	COUNTY	TOTAL SHEETS	SHEET NO.
57	139 HBR-6	KANKAKEE	202	46
		CONTRACT NO. 66997		
		ILLINOIS	FED. AID PROJECT	

MODEL: Plan 1
FILE NAME: D:\66997-Sta-Stage 1-3.dgn

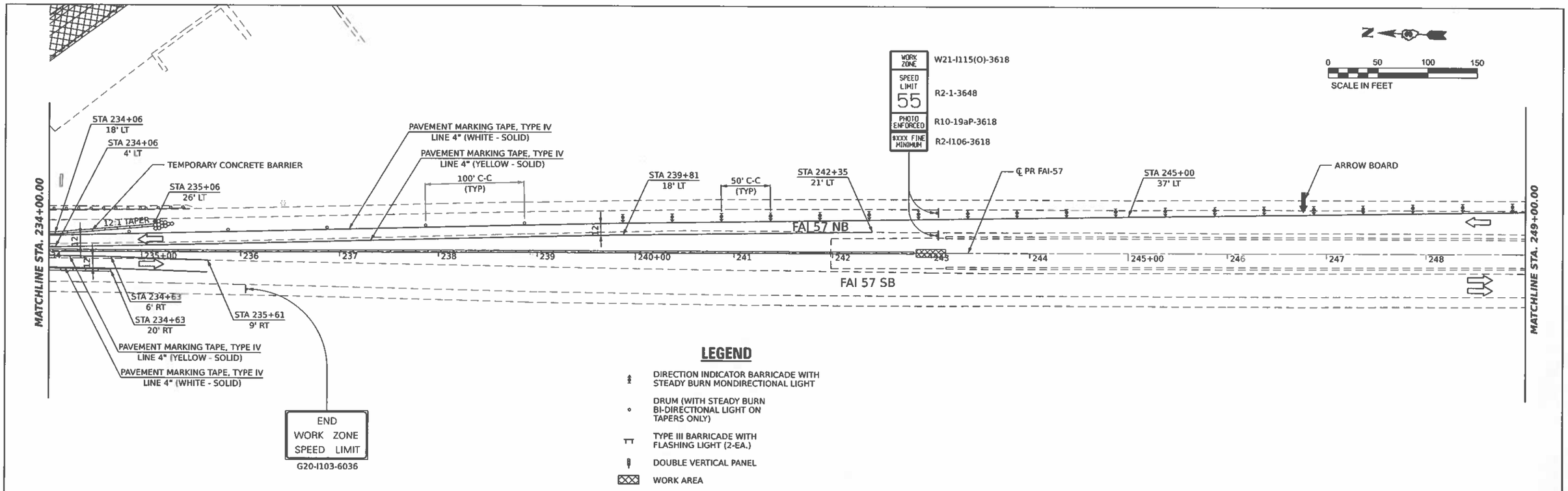

LEGEND

- DIRECTION INDICATOR BARRICADE WITH STEADY BURN MONDIRECTIONAL LIGHT
- DRUM (WITH STEADY BURN BI-DIRECTIONAL LIGHT ON TAPERS ONLY)
- TYPE III BARRICADE WITH FLASHING LIGHT (2-EA.)
- DOUBLE VERTICAL PANEL
- WORK AREA
- ARROW BOARD
- CONSTRUCTION SIGN
- DIRECTION OF TRAFFIC
- TEMPORARY CONCRETE BARRIER
- IMPACT ATTENUATOR, TEMPORARY (NON-REDIRECTIVE) TEST LEVEL 3
- FLASHING MONO-DIRECTIONAL LIGHT

NOTE: ALL CONSTRUCTION SIGNS DESIGNATED WITH (O) SHALL BE FLUORESCENT ORANGE.

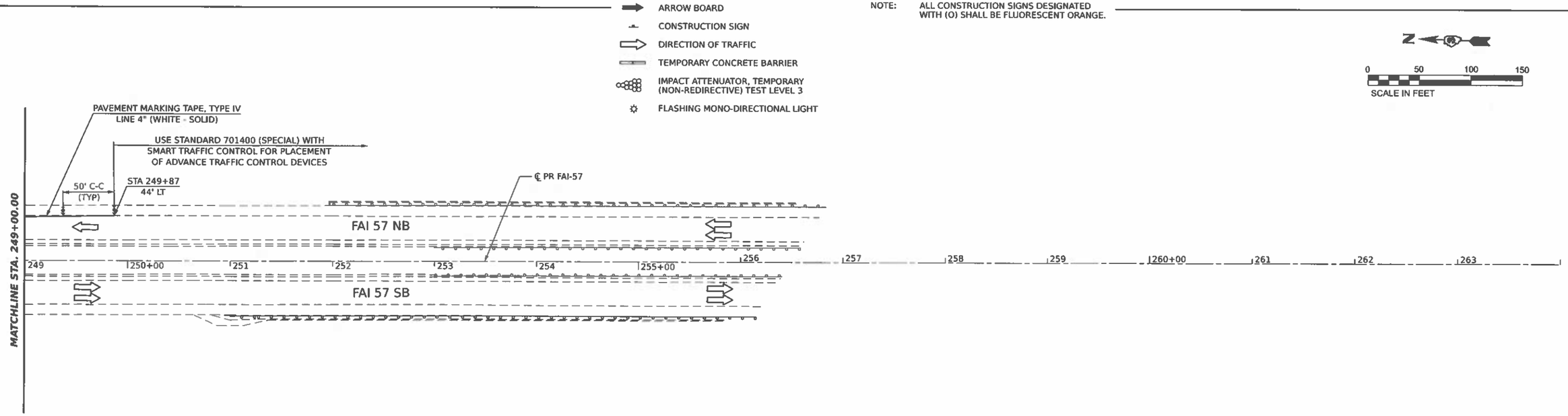

Hutchison Engineering, Inc. Jacksonville Moline Peoria Shorewood Since 1945	USER NAME =	DESIGNED -	REVISED -	STATE OF ILLINOIS DEPARTMENT OF TRANSPORTATION	FAI 57 & WALDRON ROAD STAGE 1 FAI 57 OUTSIDE LANE CONSTRUCTION AND TRAFFIC CONTROL
		DRAWN -	REVISED -		
	PLOT SCALE = 0.16666633 ' / in.	CHECKED -	REVISED -		
	PLOT DATE = 3/29/2021	DATE - 2021/03/26	REVISED -		

SCALE: 1"=50' | SHEET 4 OF 7 SHEETS | STA. 234+00 TO STA. 264+00

F.A.I. RTE.	SECTION	COUNTY	TOTAL SHEETS	SHEET NO.
57	139 HBR-6	KANKAKEE	202	47

CONTRACT NO. 66997

ILLINOIS FED. AID PROJECT

MODEL: Plan 3
FILE NAME: D305863-Sht-Stage 1-4.dgn

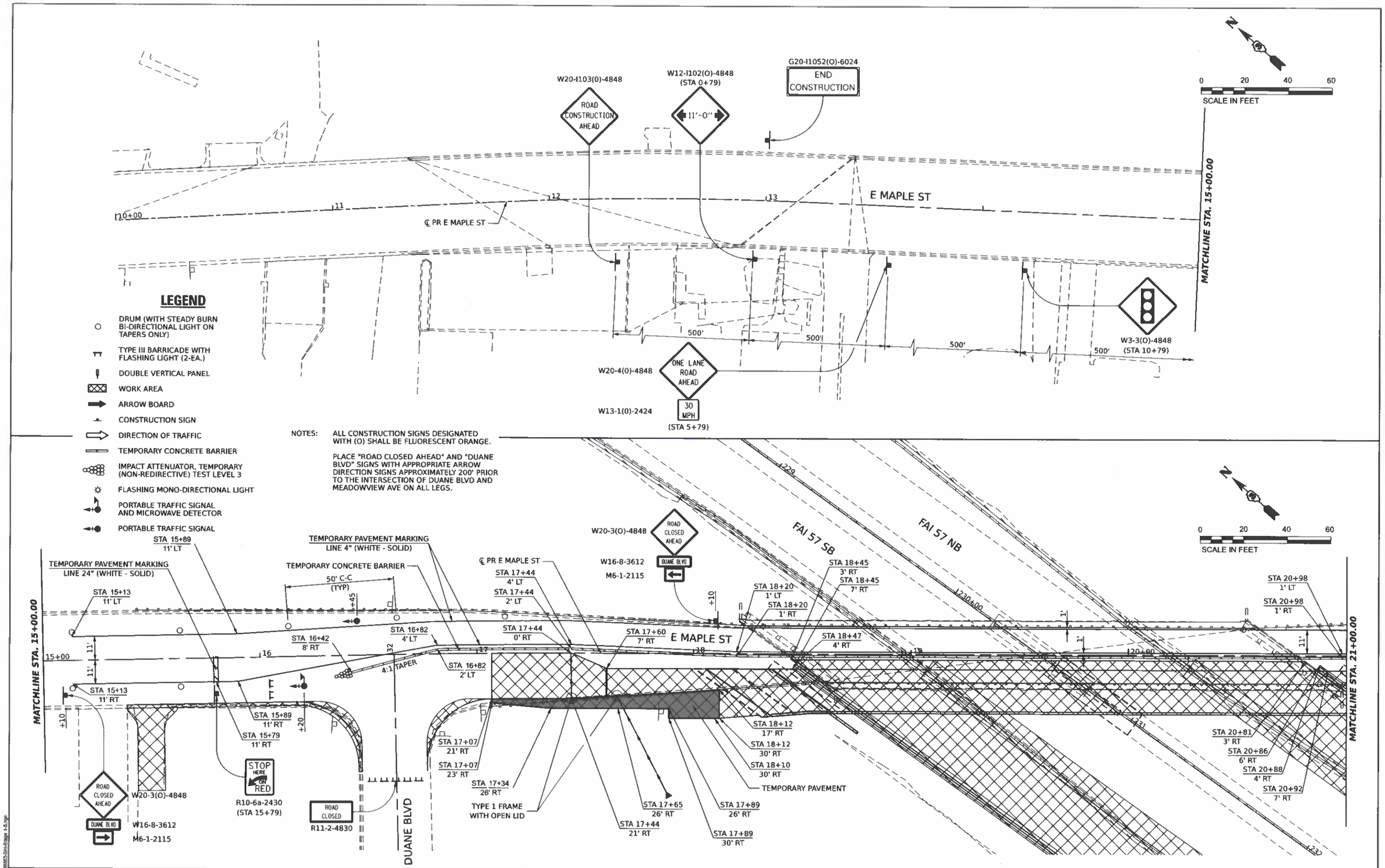

Hutchison Engineering, Inc. Jacksonville Moline Peoria Shorewood Since 1945	USER NAME = nadalhan	DESIGNED -	REVISED -	STATE OF ILLINOIS DEPARTMENT OF TRANSPORTATION	FAI 57 & WALDRON ROAD STAGE 1 CONSTRUCTION AND TRAFFIC CONTROL	F.A.I. RTE.	SECTION	COUNTY	TOTAL SHEETS / SHEET NO.
		DRAWN -	REVISED -			57	139 HBR-6	KANKAKEE	202 / 48
	PLOT SCALE = 0.16666633 ' / in.	CHECKED -	REVISED -					CONTRACT NO. 66997	
	PLOT DATE = 3/29/2021	DATE -	REVISED -		SCALE: 1"=20' / SHEET 5 OF 7 SHEETS / STA. 10+00 TO STA. 21+00			ILLINOIS FED. AID PROJECT	

MODEL: Plan 5
FILE NAME: D:\66997\Sta-#\page 1-5.dgn

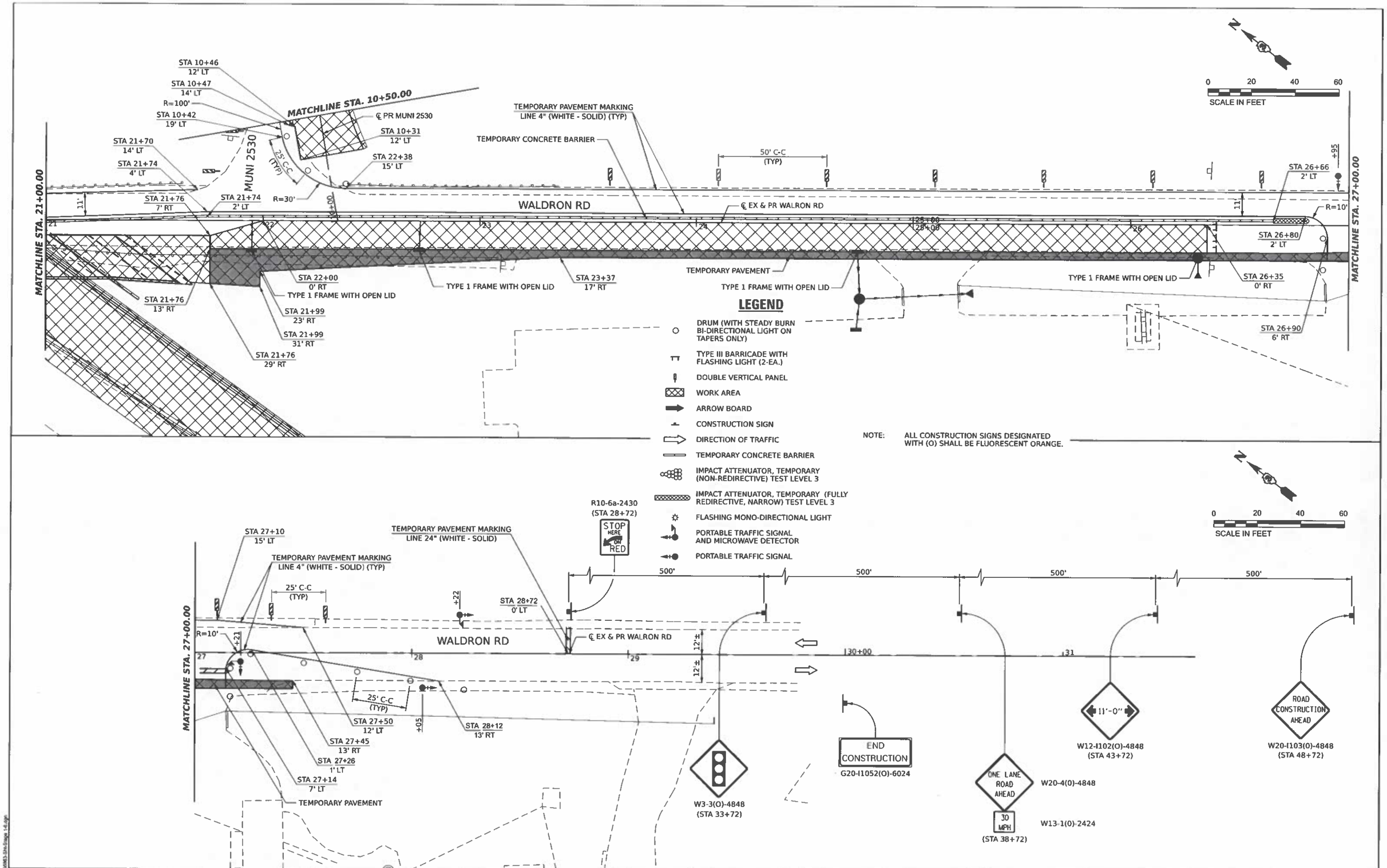

Hutchison Engineering, Inc. Jacksonville Moline Peoria Shorewood Since 1945	USER NAME = nealahan	DESIGNED -	REVISED -
		DRAWN -	REVISED -
	PLOT SCALE = 0.16666633 ' / in.	CHECKED -	REVISED -
	PLOT DATE = 3/29/2021	DATE -	REVISED -

STATE OF ILLINOIS
DEPARTMENT OF TRANSPORTATION

FAI 57 & WALDRON ROAD
STAGE 1 CONSTRUCTION AND TRAFFIC CONTROL

SCALE: 1"=20' | SHEET 6 OF 7 SHEETS | STA. 21+00 TO STA. 31+50

F.A.I. RTE.	SECTION	COUNTY	TOTAL SHEETS	SHEET NO.
57	139 HBR-6	KANKAKEE	202	49
		CONTRACT NO. 66997		
		ILLINOIS FED. AID PROJECT		

MODEL: Plan 7
FILE NAME: D5M0463-Sht-Stage 1-Edge

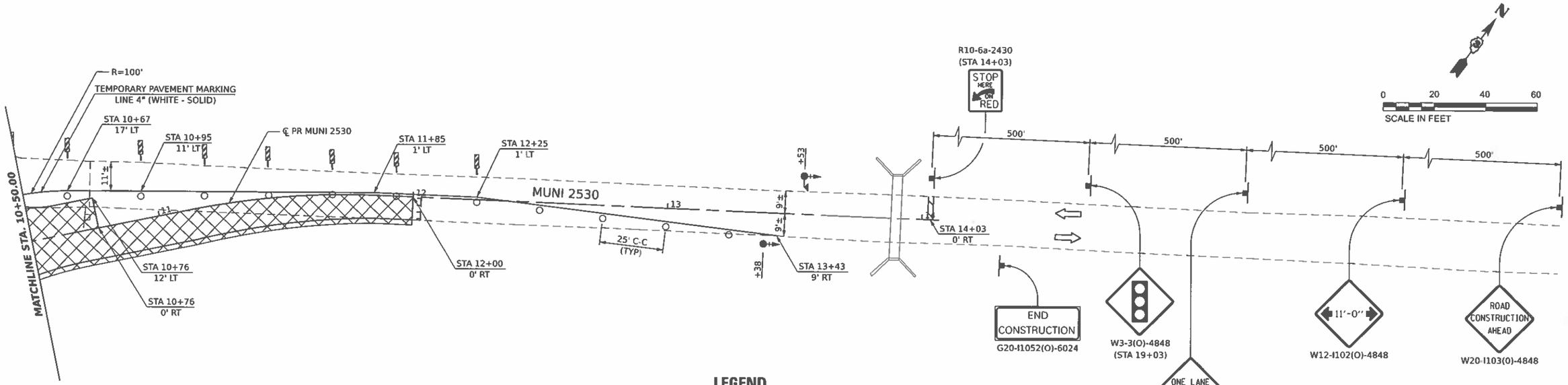

LEGEND

- DRUM (WITH STEADY BURN BI-DIRECTIONAL LIGHT ON TAPERS ONLY)
- TYPE III BARRICADE WITH FLASHING LIGHT (2-EA.)
- DOUBLE VERTICAL PANEL
- WORK AREA
- ARROW BOARD
- CONSTRUCTION SIGN
- DIRECTION OF TRAFFIC
- TEMPORARY CONCRETE BARRIER
- IMPACT ATTENUATOR, TEMPORARY (NON-REDIRECTIVE) TEST LEVEL 3
- FLASHING MONO-DIRECTIONAL LIGHT
- PORTABLE TRAFFIC SIGNAL AND MICROWAVE DETECTOR
- PORTABLE TRAFFIC SIGNAL

NOTE: ALL CONSTRUCTION SIGNS DESIGNATED WITH (O) SHALL BE FLUORESCENT ORANGE.

MODEL: Plan 9
FILE NAME: D360803-Sht-Stage 1-7.dgn

Hutchison Engineering, Inc. Jacksonville Moline Peoria Shorewood Since 1945	USER NAME = nealehlan	DESIGNED -	REVISED -	STATE OF ILLINOIS DEPARTMENT OF TRANSPORTATION	FAI 57 & WALDRON ROAD STAGE 1 CONSTRUCTION AND TRAFFIC CONTROL			F.A.I. RTE.	SECTION	COUNTY	TOTAL SHEETS / SHEET NO.
		DRAWN -	REVISED -					57	139 HBR-6	KANKAKEE	202 / 50
	PLOT SCALE = 0.16666633 ' / in.	CHECKED -	REVISED -							CONTRACT NO. 66997	
	PLOT DATE = 3/29/2021	DATE - 2021/03/26	REVISED -		SCALE: 1"=20'	SHEET 7 OF 7 SHEETS	STA. 10+50 TO STA. 14+06.67		ILLINOIS FED. AID PROJECT		

STAGE 2 CONSTRUCTION

INSTALL TRAFFIC CONTROL SIGNING.

ADJUST TEMPORARY BRIDGE SIGNALS ACCORDING TO STAGE 2 PLANS.

CONSTRUCT PERMANENT WESTBOUND LANE ON WALDRON ROAD (MINUS THE SURFACE COURSE) FROM STA 17+07 TO STA 17+96 AND FROM STA 22+22 TO STA 26+35. CONSTRUCT CURB AND GUTTER FROM STA 15+38 TO STA 17+07.

CONSTRUCT MUN 2530 ACCORDING TO STAGE 2 PLANS. MUN 2530 TO REMAIN OPEN AT ALL TIMES DURING STAGE 2 UNLESS A FLAGGER CONTROLLED LANE CLOSURE IS PROVIDED. A TEMPORARY RAMP SHALL BE CONSTRUCTED TO PROVIDE ACCESS TO THE WALDRON ROAD PAVEMENT CONSTRUCTED IN STAGE 1.

CONSTRUCT PROPOSED STORM SEWER ALONG WALDRON ROAD AND I-57 WITHIN THE STAGE 2 CONSTRUCTION LIMITS AS SHOWN IN THE STAGE 2 PLANS.

REMOVE WESTBOUND SUBSTRUCTURE AND SUPERSTRUCTURE OF EXISTING SN 046-0080 WITHIN THE STAGE 2 LIMITS AS SHOWN IN THE STRUCTURE PLANS. CONSTRUCT WESTBOUND SUBSTRUCTURE AND SUPERSTRUCTURE OF PROPOSED SN 046-0153 WITHIN THE STAGE 2 LIMITS AS SHOWN IN THE STRUCTURE PLANS.

REMOVE EXISTING RETAINING WALL WITHIN THE STAGE 2 LIMITS. CONSTRUCT STAGE 2 PORTIONS OF RETAINING WALLS A AND B AS SHOWN IN THE RETAINING WALL PLANS.

STAGE 2A CONSTRUCTION

CONSTRUCT REMAINING PERMANENT WESTBOUND LANE ON WALDRON ROAD (MINUS THE SURFACE COURSE) FROM STA 21+22 TO STA 22+22.

CONSTRUCT REMAINING MUN 2530 ACCORDING TO STAGE 2A PLANS. MUN 2530 TO REMAIN OPEN AT ALL TIMES DURING STAGE 2A UNLESS A FLAGGER CONTROLLED LANE CLOSURE IS PROVIDED.

CONSTRUCT PROPOSED STORM SEWER ALONG WALDRON ROAD WITHIN THE STAGE 2A CONSTRUCTION LIMITS AS SHOWN IN THE STAGE 2A PLANS.

TRAFFIC CONTROL AND PROTECTION

TRAFFIC CONTROL AND PROTECTION SHALL BE PERFORMED IN ACCORDANCE WITH THE TRAFFIC CONTROL PLAN, SECTION 701 OF THE STANDARD SPECIFICATIONS AND THE SPECIAL PROVISIONS.

I-57

MAINTAIN ONE LANE OF TRAFFIC IN EACH DIRECTION AT ALL TIMES.

DURING SUPERSTRUCTURE DEMOLITION, LIVE TRAFFIC ON I-57 UNDERNEATH THE BRIDGE WILL ONLY BE PERMITTED FOR ADVANCE DEMOLITION PERPARATIONS (SAWCUTTING, PARTIAL CHIPPING) WITH PROTECTIVE SHIELDING IN PLACE. ALL OTHER DEMOLITION OPERATIONS TO THE BRIDGE WILL DIVERT THE I-57 TRAFFIC UTILIZING A DETOUR PROVIDED IN THE "TOTAL INTERSTATE CLOSURE AT NIGHT" DETAIL. CHANGEABLE MESSAGE SIGNS SHALL BE IN PLACE 2 WEEKS PRIOR TO ANY INTERSTATE CLOSURE.

FOR BEAM PLACEMENT, DIVERT THE I-57 TRAFFIC UTILIZING THE DETOUR AS SHOWN IN THE "TOTAL INTERSTATE CLOSURE AT NIGHT" DETAIL.

DURING INSTALLATION OF FORMS FOR THE CONCRETE DECK, LANE CLOSURES WILL BE ALLOWED SO THAT NO FORMING WORK IS PERFORMED ABOVE LIVE TRAFFIC.

WALDRON ROAD

MAINTAIN ONE LANE OF TRAFFIC AT ALL TIMES UTILIZING HIGHWAY STANDARD 701321. DUANE BLVD WILL BE CLOSED DURING STAGE 2.

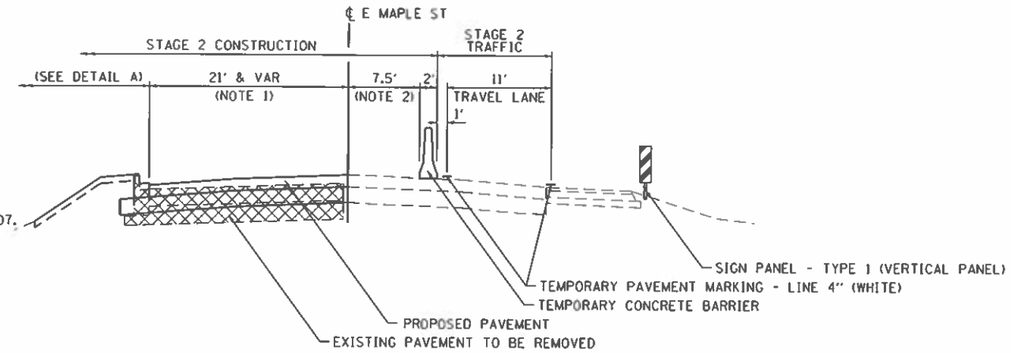

STAGE 2 TYPICAL SECTION
E MAPLE ST

STA 17+06.78 TO 17+96.21

NOTES:

1. VARIES FROM 21' AT STA 16+84 TO 22' AT STA 17+62.
2. VARIES FROM 1' AT STA 17+07 TO 7.5' AT STA 17+34. VARIES FROM 7.5' AT STA 21+56 TO 0.5' AT STA 23+37.

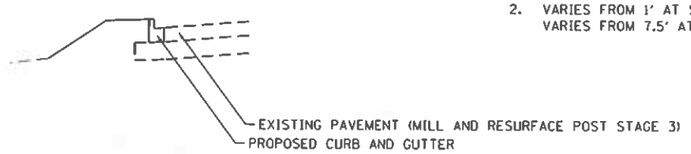

DETAIL A

STA 15+38.36 TO 17+06.78

EXISTING TRAFFIC CONTROL SIGNS AND DEVICES WILL BE REMOVED BY THE CONTRACTOR AFTER THE PROPOSED TRAFFIC CONTROL REQUIREMENTS ARE MET, OR AS AUTHORIZED BY THE ENGINEER. SIGNS OR DEVICES LEFT IN PLACE AT THIS TIME ARE TO BE PROTECTED FROM DAMAGE BY THE CONTRACTOR.

THE CONTRACTOR SHALL SCHEDULE OPERATIONS TO ENSRUE THAT NO DROP-OFF OF GREATER THAN 12", WITHIN 3' OF THE TRAVEL LANE, IS PRESENT FOR 48 HOURS OR MORE.

NO DROP-OFF GREATER THAN 24" WITHIN 12' OF THE TRAVEL LANE WILL BE ALLOWED UNLESS A FLAGGER CONTROLLED LANE CLOSURE IS PROVIDED. SEGMENTS WHERE THESE CONDITIONS OCCUR DURING NON-WORKING HOURS MUST BE PROTECTED WITH TEMPORARY CONCRETE BARRIER. UNLESS AUTHORIZED BY THE ENGINEER, THE CONTRACTOR WILL ONLY BE PAID FOR TEMPORARY CONCRETE BARRIER ALONG SEGMENTS SHOWN IN THE PLANS.

DRUMS WITH STEADY-BURNING LIGHTS SHALL BE REQUIRED TO DELINEATE THE TRAVEL WAY. THE MAXIMUM SPACING SHALL BE 100 FEET, CENTER TO CENTER ALONG TANGENTS (50 FEET ALONG TAPERS); AND 25 FEET (CENTER TO CENTER) ALONG RADII TO SIDE ROADS AND ENTRANCES.

THE FOLLOWING TRAFFIC CONTROL STANDARDS ARE THE MINIMUM REQUIREMENTS FOR THE TRAFFIC FOR THIS PROJECT: 701001, 701006, 701011, 701201, 701301, 701326, 701400, 701401, 701406, 701901 AND 704001.

CHANGEABLE MESSAGE SIGNS ARE TO BE IN PLACE 2 WEEKS PRIOR TO THE BEGINNING OF CONSTRUCTION.

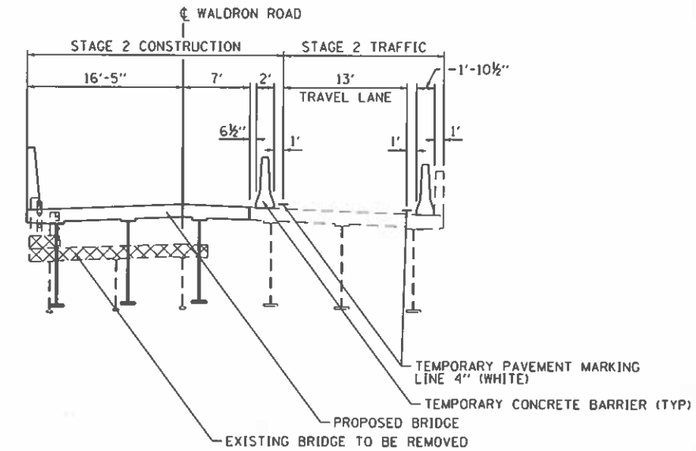

STAGE 2 BRIDGE TYPICAL SECTION
WALDRON ROAD

STA 17+96.21 TO 21+21.73

TEMPORARY PAVEMENT MARKING ON FINAL WEARING SURFACE SHALL BE PAVEMENT MARKING TAPE, TYPE IV

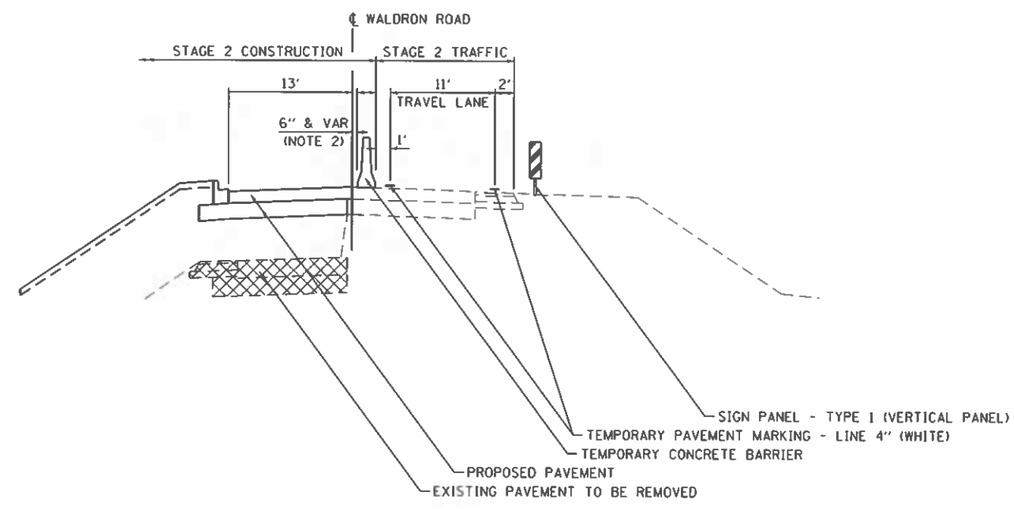

STAGE 2 TYPICAL SECTION
WALDRON ROAD

STA 22+22.20 TO 26+35.00

MODEL: Plan 1
FILE NAME: D266863-Sht-Stage 2 Typical Sections1.dgn

Hutchison Engineering, Inc. Jacksonville Moline Peoria Shorewood Since 1945	USER NAME = nasiehlan	DESIGNED -	REVISED -
		DRAWN -	REVISED -
	PLOT SCALE = 0.1667 ' / in.	CHECKED -	REVISED -
	PLOT DATE = 3/29/2021	DATE - 2021/03/26	REVISED -

STATE OF ILLINOIS
DEPARTMENT OF TRANSPORTATION

FAI 57 & WALDRON ROAD
STAGE 2 TYPICAL SECTIONS

SCALE: N.T.S. | SHEET 1 OF 2 SHEETS | STA. | TO STA.

F.A.I. RTE.	SECTION	COUNTY	TOTAL SHEETS	SHEET NO.
57	139 HBR-6	KANKAKEE	202	51
		CONTRACT NO. 66997		
		ILLINOIS FED. AID PROJECT		

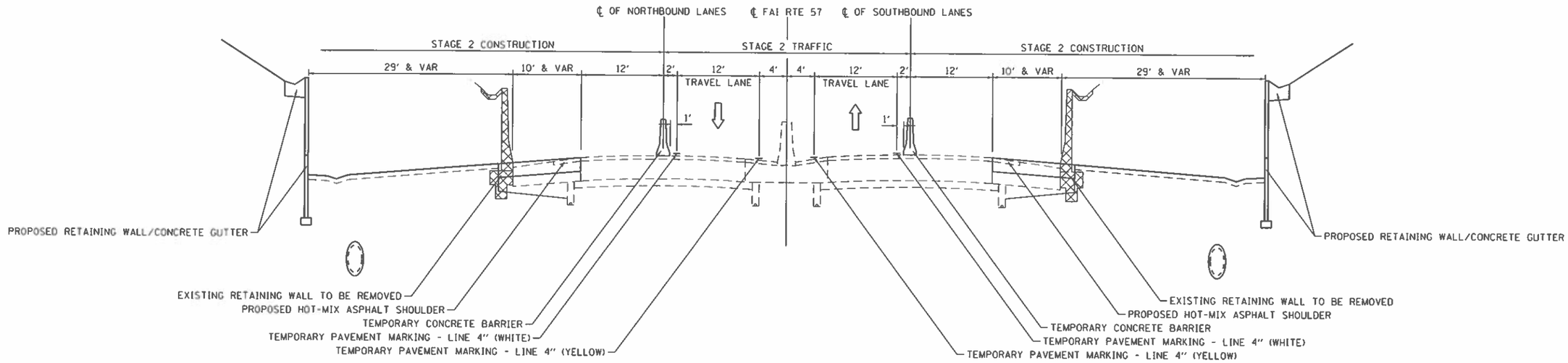

STAGE 2 TYPICAL SECTION
FAI 57 – OUTSIDE LANE WORKZONE

STA 227+00.00 TO 233+75.00

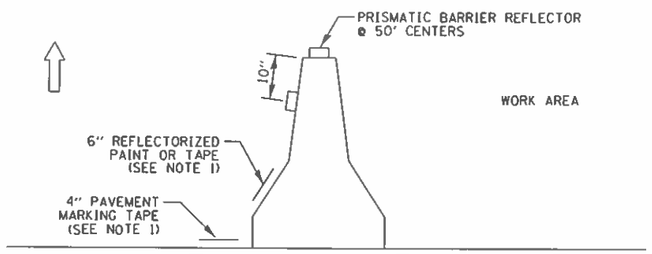

NOTES:

1. THE CONTRACTOR HAS THE OPTION OF USING EITHER THE LINE ON THE TEMPORARY CONCRETE BARRIER OR ON THE PAVEMENT.
2. THE COST OF THE REFLECTORS IS INCLUDED IN THE COST OF THE TEMPORARY CONCRETE BARRIER.

TEMPORARY CONCRETE BARRIER WALL DETAILS

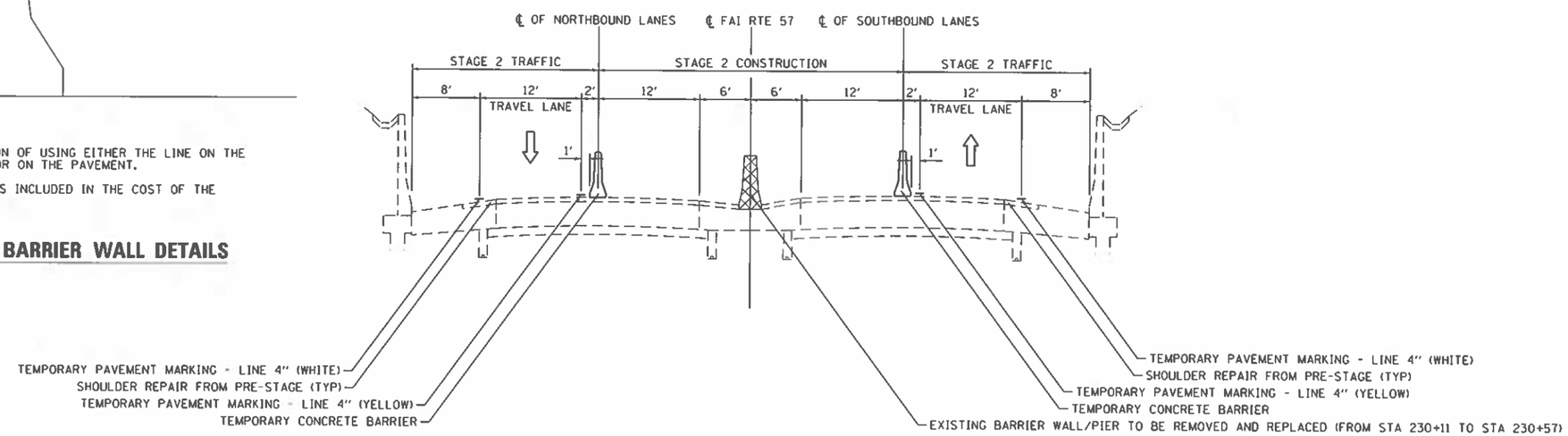

STAGE 2 TYPICAL SECTION
FAI 57 – INSIDE LANE WORKZONE

STA 227+00.00 TO 233+75.00

MODEL: Plan 1
FILE NAME: D308663-SH-Stage 2 Typical Section-2.dgn

Hutchison Engineering, Inc. Jacksonville Moline Peoria Shorewood Since 1945	USER NAME = nsalehian	DESIGNED -	REVISED -	STATE OF ILLINOIS DEPARTMENT OF TRANSPORTATION	FAI 57 & WALDRON ROAD STAGE 2 TYPICAL SECTIONS
		DRAWN -	REVISED -		
	PLOT SCALE = 0.1667' / in.	CHECKED -	REVISED -		
	PLOT DATE = 3/29/2021	DATE - 2021/03/26	REVISED -		SCALE: N.T.S. SHEET 2 OF 2 SHEETS STA. TO STA.

F.A.I. RTE.	SECTION	COUNTY	TOTAL SHEETS	SHEET NO.
57	139 HBR-6	KANKAKEE	202	52
		CONTRACT NO. 66997		
		ILLINOIS	FED. AID PROJECT	

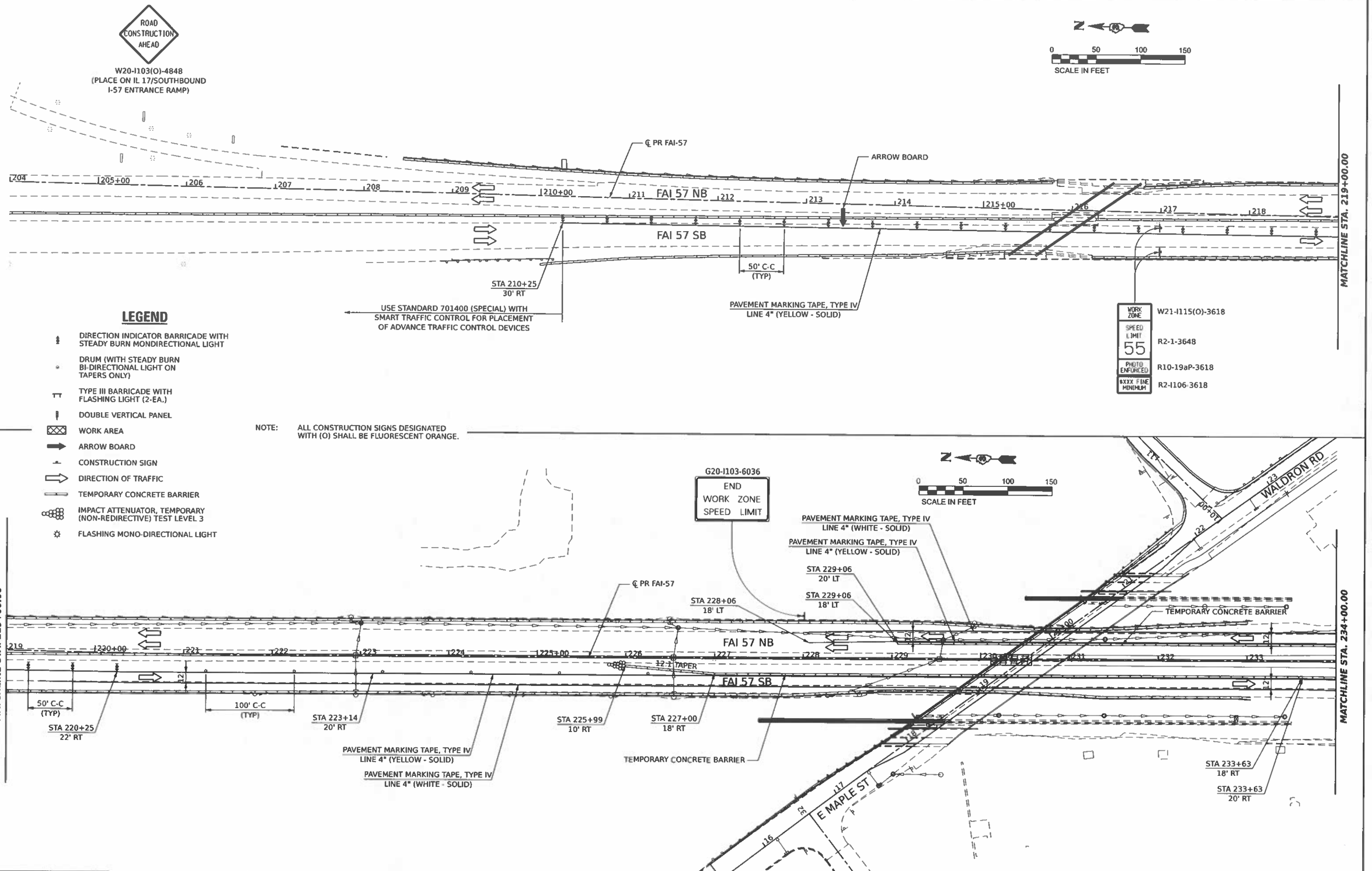

MODEL: Plan 1
FILE NAME: D3600653-Sht-Stage 2-1.dgn

Hutchison Engineering, Inc. Jacksonville Moline Peoria Shorewood Since 1945	USER NAME = nsalehian	DESIGNED -	REVISED -
		DRAWN -	REVISED -
	PLOT SCALE = 0.166666 ' / in.	CHECKED -	REVISED -
	PLOT DATE = 3/29/2021	DATE -	REVISED -

STATE OF ILLINOIS
DEPARTMENT OF TRANSPORTATION

FAI 57 & WALDRON ROAD
STAGE 2 FAI 57 INSIDE LANE CONSTRUCTION AND TRAFFIC CONTROL

SCALE: 1"=50' | SHEET 1 OF 7 SHEETS | STA. 204+00 TO STA. 234+00

F.A.I. RTE.	SECTION	COUNTY	TOTAL SHEETS	SHEET NO.
57	139 HBR-6	KANKAKEE	202	53

CONTRACT NO. 66997

ILLINOIS FED. AID PROJECT

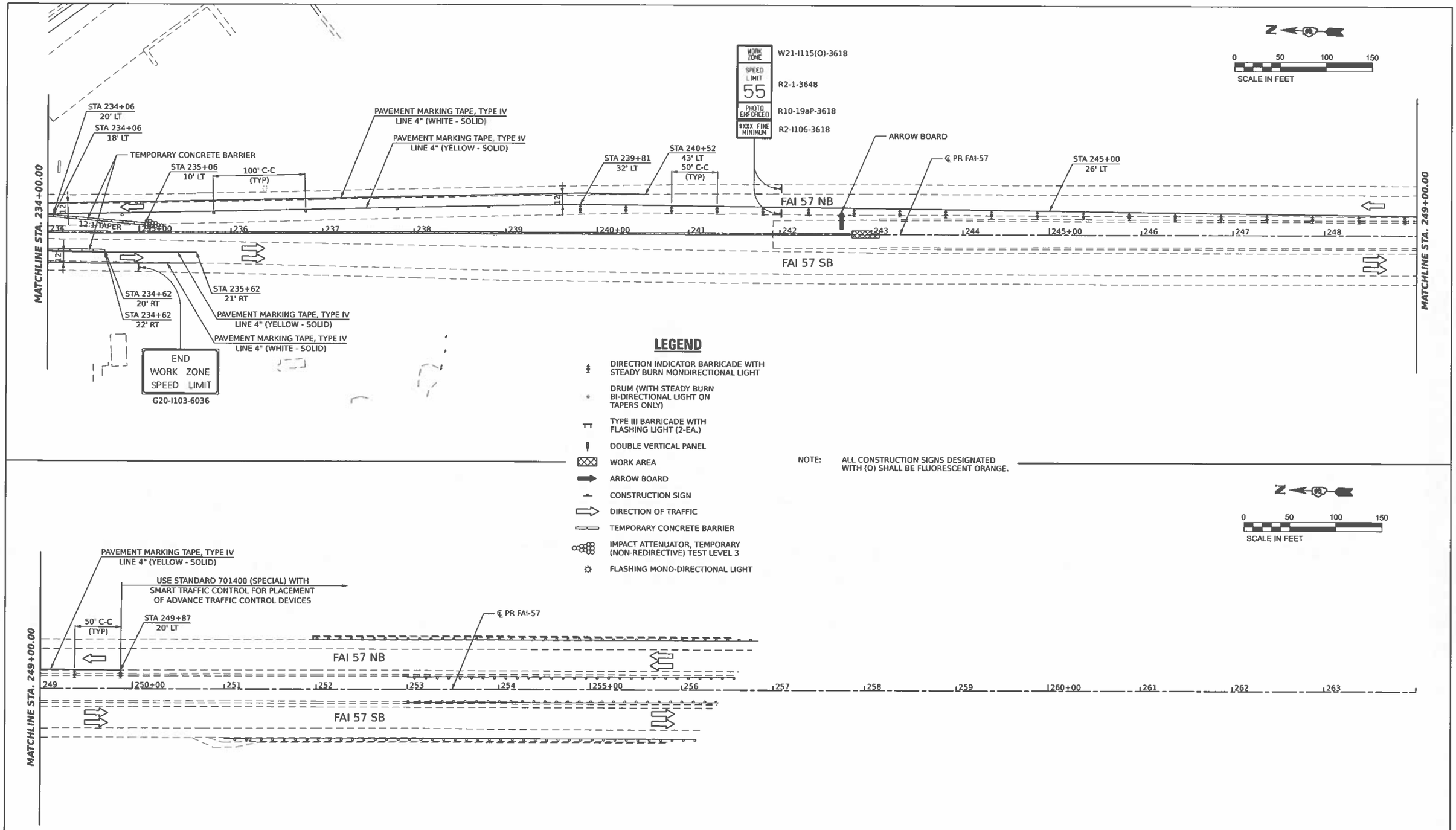

Hutchison Engineering, Inc. Jacksonville Moline Peoria Shorewood Since 1945	USER NAME = nsalehian	DESIGNED -	REVISED -
		DRAWN -	REVISED -
	PLOT SCALE = 0.16666633 ' / in.	CHECKED -	REVISED -
	PLOT DATE = 3/29/2021	DATE - 2021/03/26	REVISED -

STATE OF ILLINOIS
DEPARTMENT OF TRANSPORTATION

FAI 57 & WALDRON ROAD
STAGE 2 FAI 57 INSIDE LANE CONSTRUCTION AND TRAFFIC CONTROL

SCALE: 1"=50' | SHEET 2 OF 7 SHEETS | STA. 234+00 TO STA. 264+00

F.A.I. RTE.	SECTION	COUNTY	TOTAL SHEETS	SHEET NO.
57	139 HBR-6	KANKAKEE	202	54
		CONTRACT NO. 66997		
		ILLINOIS FED. AID PROJECT		

MODEL: Plan 3
FILE NAME: D3608663-SH-Stage 2-2.dgn

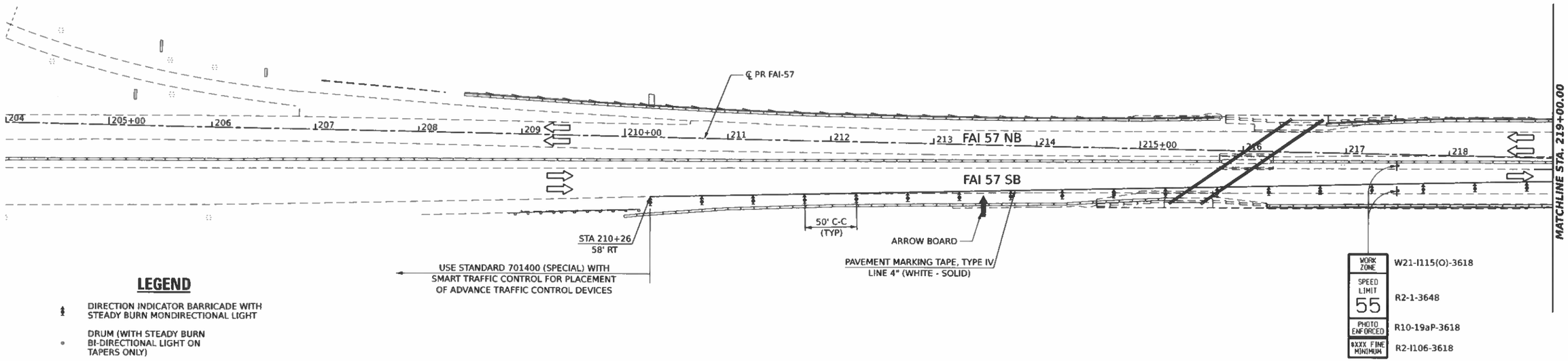

LEGEND

- DIRECTION INDICATOR BARRICADE WITH STEADY BURN MONDIRECTIONAL LIGHT
- DRUM (WITH STEADY BURN BI-DIRECTIONAL LIGHT ON TAPERS ONLY)
- TYPE III BARRICADE WITH FLASHING LIGHT (2-EA.)
- DOUBLE VERTICAL PANEL
- WORK AREA
- ARROW BOARD
- CONSTRUCTION SIGN
- DIRECTION OF TRAFFIC
- TEMPORARY CONCRETE BARRIER
- IMPACT ATTENUATOR, TEMPORARY (NON-REDIRECTIVE) TEST LEVEL 3
- FLASHING MOND-DIRECTIONAL LIGHT

NOTE: ALL CONSTRUCTION SIGNS DESIGNATED WITH (O) SHALL BE FLUORESCENT ORANGE.

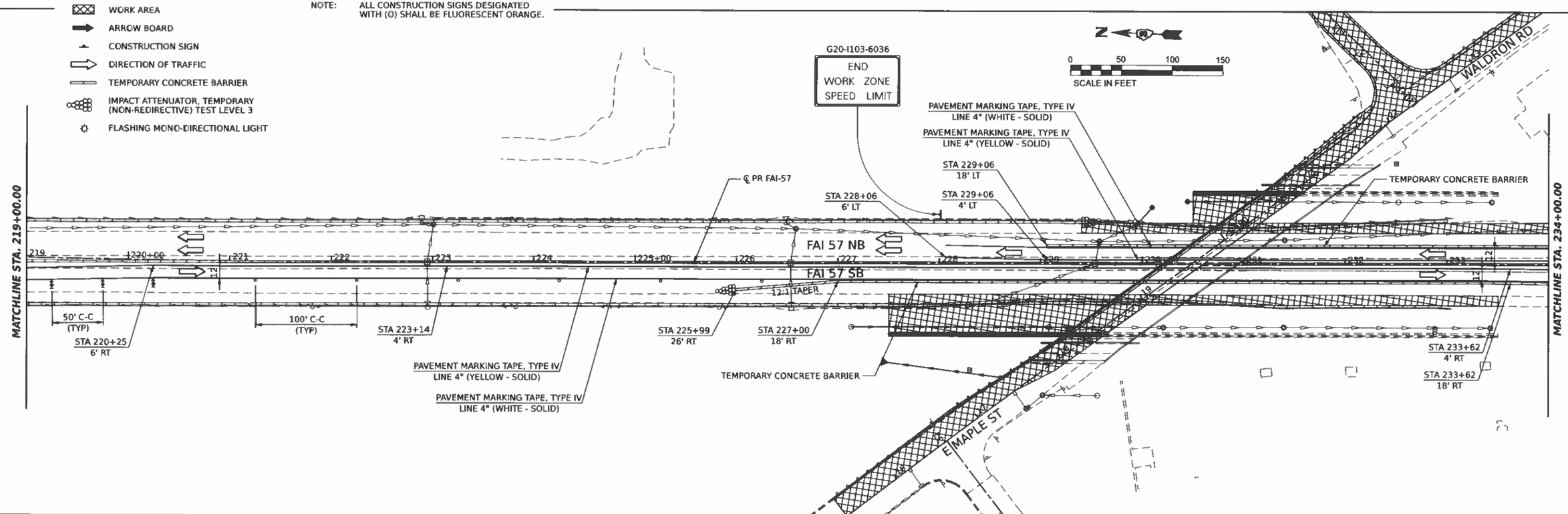

MODEL: Plan 1
FILE NAME: D305903-Sht-Stage 2-3.dgn

Hutchison Engineering, Inc. Jacksonville Moline Peoria Shorewood Since 1945	USER NAME = msalehian	DESIGNED -	REVISED -
		DRAWN -	REVISED -
	PLOT SCALE = 0.166666 ' / in.	CHECKED -	REVISED -
	PLOT DATE = 3/29/2021	DATE -	REVISED -

STATE OF ILLINOIS
DEPARTMENT OF TRANSPORTATION

FAI 57 & WALDRON ROAD
STAGE 2 FAI 57 OUTSIDE LANE CONSTRUCTION AND TRAFFIC CONTROL

SCALE: 1"=50' | SHEET 3 OF 7 SHEETS | STA. 204+00 TO STA. 234+00

F.A.I. RTE.	SECTION	COUNTY	TOTAL SHEETS	SHEET NO.
57	139 HBR-6	KANKAKEE	202	55
		CONTRACT NO. 66997		
		ILLINOIS	FED. AID PROJECT	

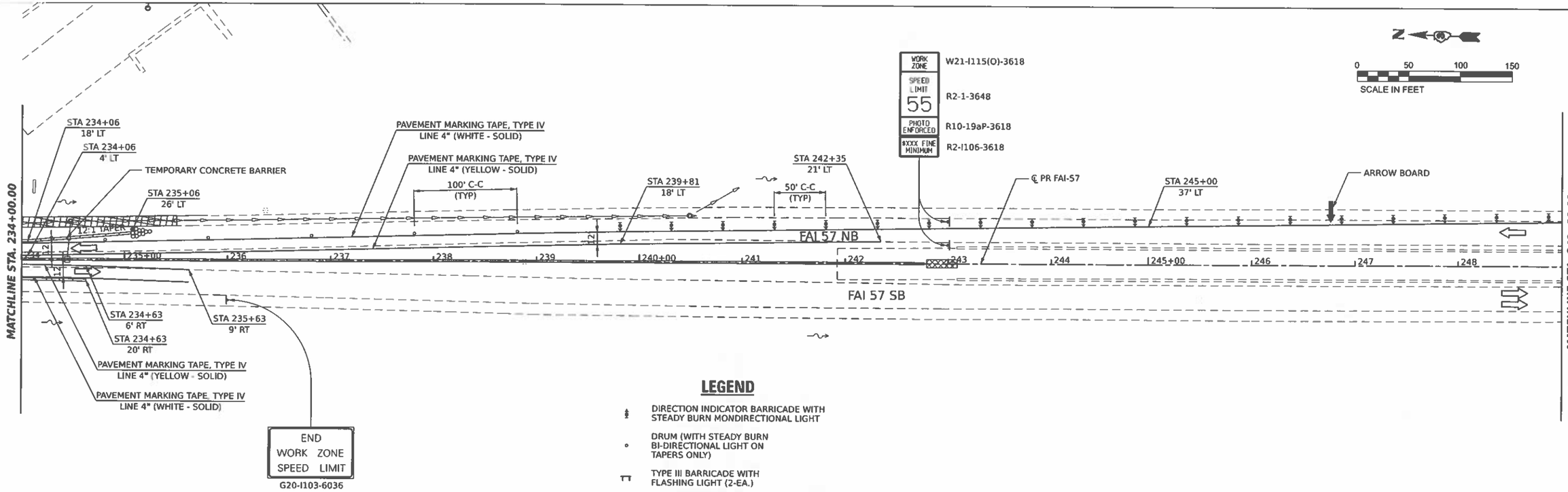

LEGEND

- DIRECTION INDICATOR BARRICADE WITH STEADY BURN MONDIRECTIONAL LIGHT
- DRUM (WITH STEADY BURN BI-DIRECTIONAL LIGHT ON TAPERS ONLY)
- TYPE III BARRICADE WITH FLASHING LIGHT (2-EA.)
- DOUBLE VERTICAL PANEL
- WORK AREA
- ARROW BOARD
- CONSTRUCTION SIGN
- DIRECTION OF TRAFFIC
- TEMPORARY CONCRETE BARRIER
- IMPACT ATTENUATOR, TEMPORARY (NON-REDIRECTIVE) TEST LEVEL 3
- FLASHING MONO-DIRECTIONAL LIGHT

NOTE: ALL CONSTRUCTION SIGNS DESIGNATED WITH (O) SHALL BE FLUORESCENT ORANGE.

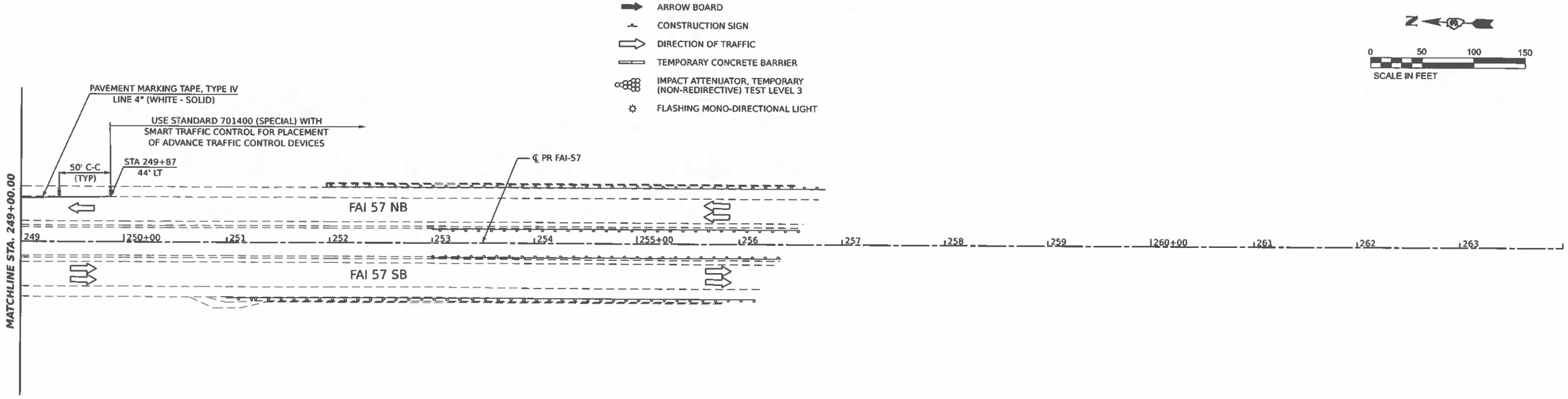

Hutchison Engineering, Inc. Jacksonville Moline Peoria Shorewood Since 1945	USER NAME = nealeHan	DESIGNED -	REVISED -	STATE OF ILLINOIS DEPARTMENT OF TRANSPORTATION	FAI 57 & WALDRON ROAD STAGE 2 FAI 57 OUTSIDE LANE CONSTRUCTION AND TRAFFIC CONTROL	F.A.I. RTE.	SECTION	COUNTY	TOTAL SHEETS	SHEET NO.
		DRAWN -	REVISED -			57	139 HBR-6	KANKAKEE	202	56
	PLOT SCALE = 0.16666633 ' / in.	CHECKED -	REVISED -					CONTRACT NO. 66997		
	PLOT DATE = 3/29/2021	DATE -	REVISED -		SCALE: 1"=50' SHEET 4 OF 7 SHEETS STA. 234+00 TO STA. 264+00			ILLINOIS FED. AID PROJECT		

MODEL: Plan 3
FILE NAME: D356983-Sht-Stage 3-4.dgn

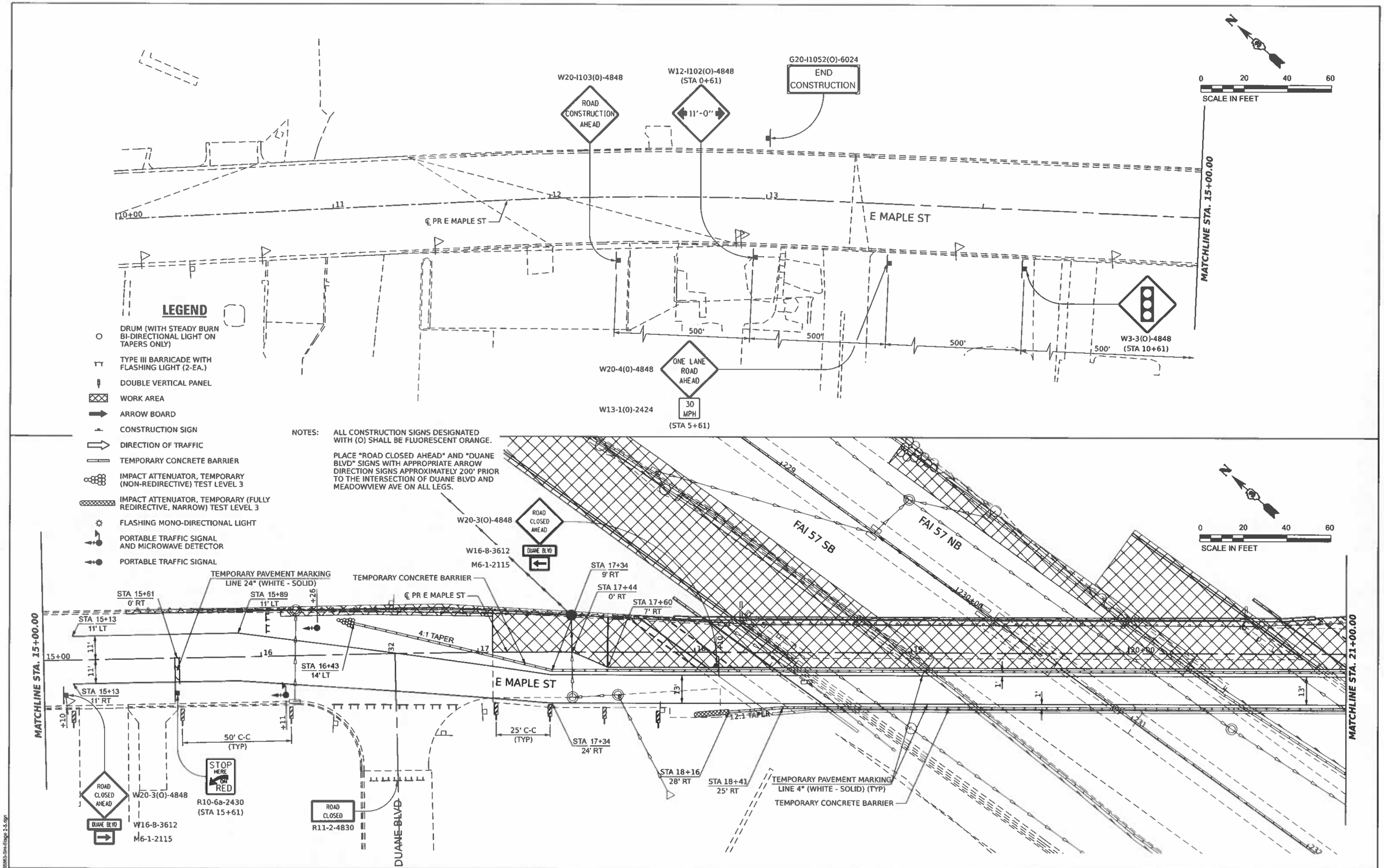

MODEL: Plan 5
FILE NAME: D:\2020\63-Sint-Stage 2-5.dgn

Hutchison Engineering, Inc. Jacksonville Moline Peoria Shorewood Since 1945	USER NAME = nsalehian	DESIGNED -	REVISED -
		DRAWN -	REVISED -
	PLOT SCALE = 0.16666633 ' / in.	CHECKED -	REVISED -
	PLOT DATE = 3/29/2021	DATE -	REVISED -

STATE OF ILLINOIS
DEPARTMENT OF TRANSPORTATION

FAI 57 & WALDRON ROAD
STAGE 2 CONSTRUCTION AND TRAFFIC CONTROL

SCALE: 1"=20' | SHEET 5 OF 7 SHEETS | STA. 10+00 TO STA. 21+00

F.A.I. RTE.	SECTION	COUNTY	TOTAL SHEETS	SHEET NO.
57	139 HBR-6	KANKAKEE	202	57

CONTRACT NO. 66997

ILLINOIS | FED. AID PROJECT

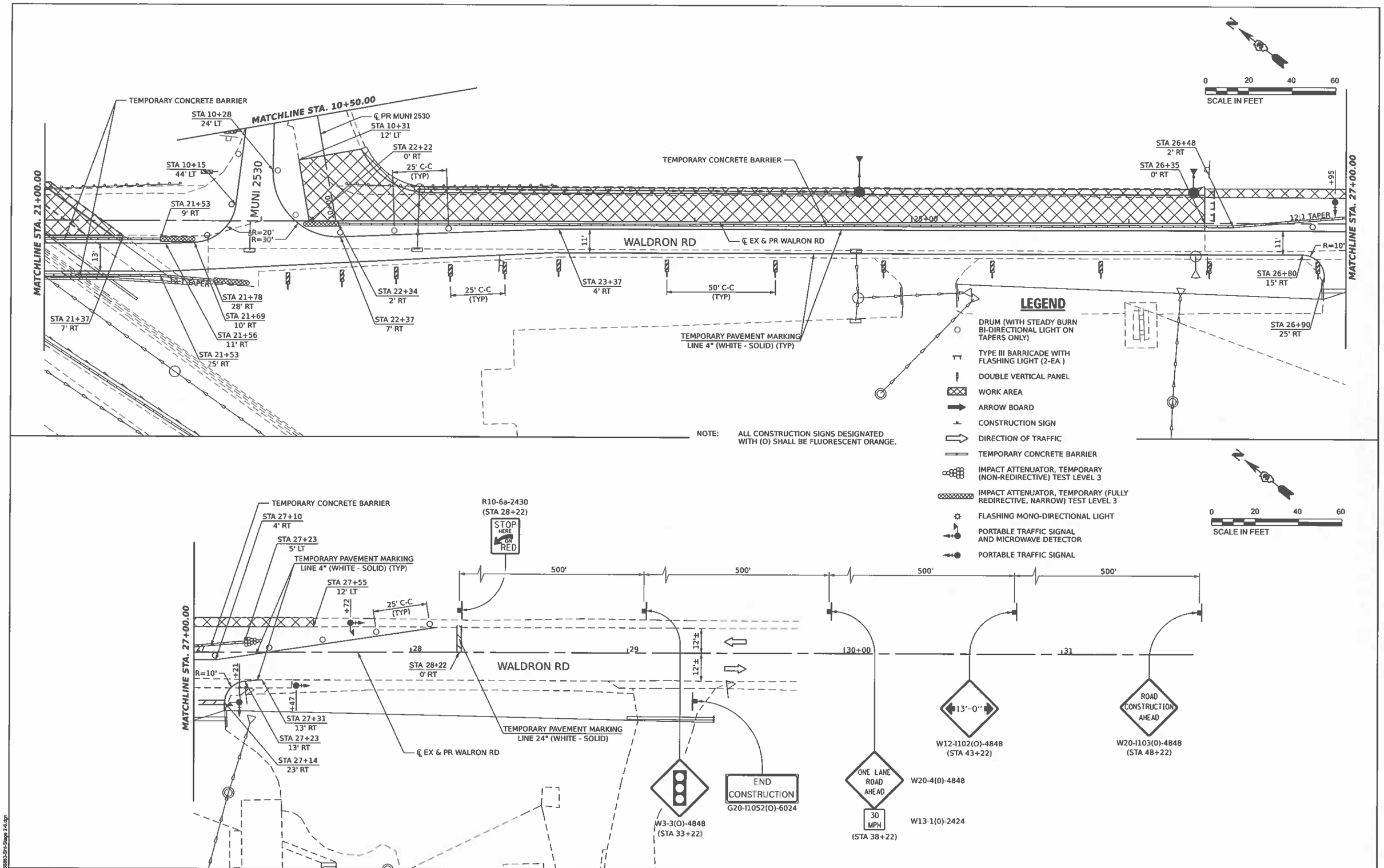

MODEL: Plan 7
FILE NAME: D3568063-Sht-Stage 2-4.dgn

Hutchison Engineering, Inc.
Jacksonville Moline Peoria Shorewood
Since 1945

USER NAME = nealehan	DESIGNED -	REVISED -	
	DRAWN -	REVISED -	
PLOT SCALE = 0.16666633 ' / in.	CHECKED -	REVISED -	
PLOT DATE = 3/29/2021	DATE -	REVISED -	

STATE OF ILLINOIS
DEPARTMENT OF TRANSPORTATION

FAI 57 & WALDRON ROAD
STAGE 2 CONSTRUCTION AND TRAFFIC CONTROL

SCALE: 1"=20' | SHEET 6 OF 7 SHEETS | STA. 21+00 TO STA. 31+50

F.A.I. RTE.	SECTION	COUNTY	TOTAL SHEETS	SHEET NO.
57	139 HBR-6	KANKAKEE	202	58
		CONTRACT NO. 66997		
		ILLINOIS	FED. AID PROJECT	

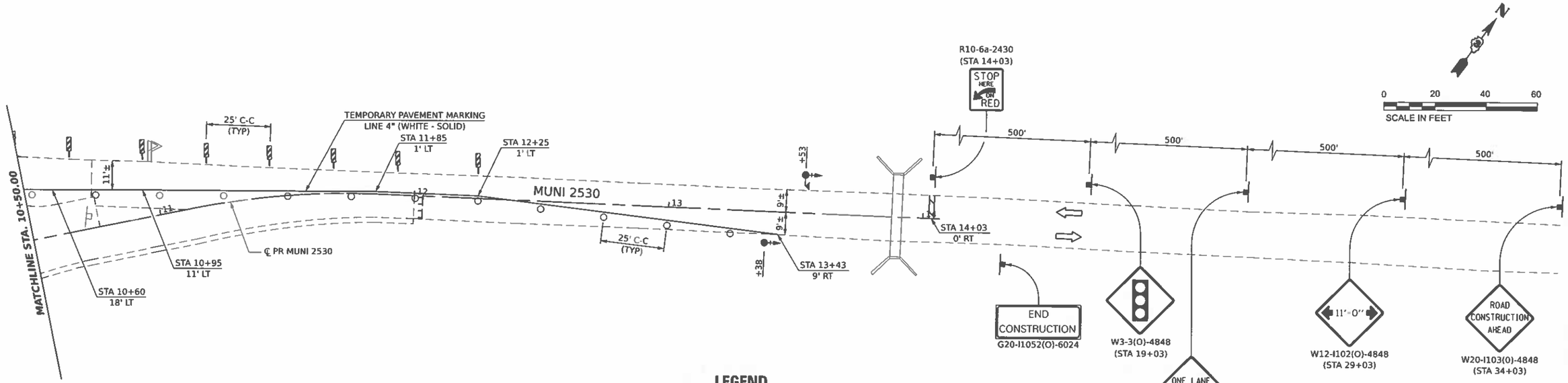

LEGEND

- DRUM (WITH STEADY BURN BI-DIRECTIONAL LIGHT ON TAPERS ONLY)
- TYPE III BARRICADE WITH FLASHING LIGHT (2-EA.)
- DOUBLE VERTICAL PANEL
- WORK AREA
- ARROW BOARD
- CONSTRUCTION SIGN
- DIRECTION OF TRAFFIC
- TEMPORARY CONCRETE BARRIER
- IMPACT ATTENUATOR, TEMPORARY (NON-REDIRECTIVE) TEST LEVEL 3
- FLASHING MONO-DIRECTIONAL LIGHT
- PORTABLE TRAFFIC SIGNAL AND MICROWAVE DETECTOR
- PORTABLE TRAFFIC SIGNAL

NOTE: ALL CONSTRUCTION SIGNS DESIGNATED WITH (O) SHALL BE FLUORESCENT ORANGE.

MODEL: Plan 9
FILE NAME: D566863-Sht-Stage 2-7.dgn

Hutchison Engineering, Inc. Jacksonville Moline Peoria Shorewood Since 1945	USER NAME = nealehlan	DESIGNED -	REVISED -	STATE OF ILLINOIS DEPARTMENT OF TRANSPORTATION	FAI 57 & WALDRON ROAD STAGE 2 CONSTRUCTION AND TRAFFIC CONTROL
		DRAWN -	REVISED -		
	PLOT SCALE = 0.16666833 '/in.	CHECKED -	REVISED -		
	PLOT DATE = 3/29/2021	DATE -	REVISED -		

SCALE: 1"=20' | SHEET 7 OF 7 SHEETS | STA. 10+50 TO STA. 14+06.67

F.A.I. RTE.	SECTION	COUNTY	TOTAL SHEETS	SHEET NO.
57	139 HBR-6	KANKAKEE	202	59

CONTRACT NO. 66997

ILLINOIS | FED. AID PROJECT

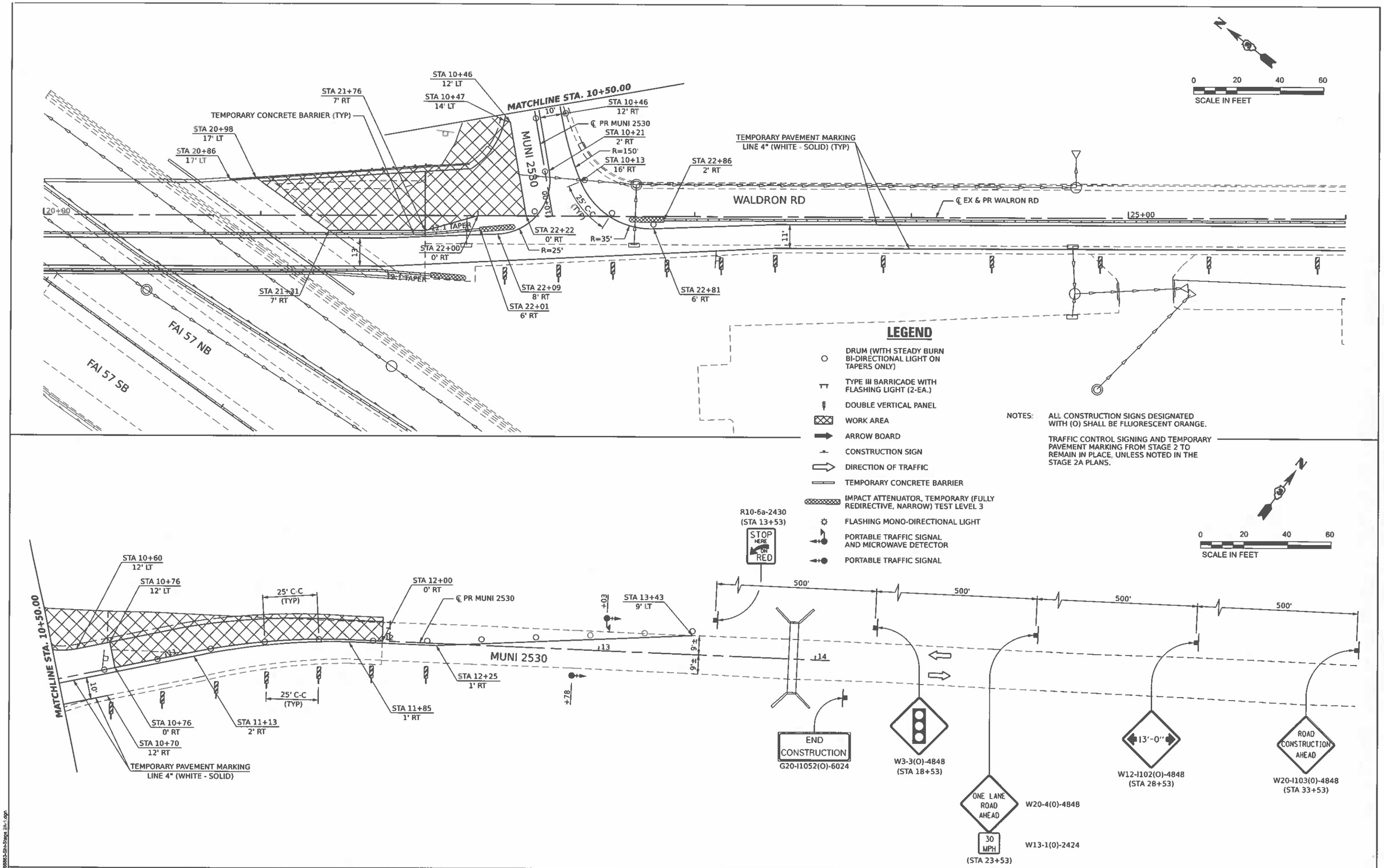

MODEL: Plan 2
FILE NAME: D268863-Sht-Stage 2A-1.dgn

Hutchison Engineering, Inc. Jacksonville Moline Peoria Shorewood Since 1945	USER NAME = nealehlan	DESIGNED -	REVISED -
		DRAWN -	REVISED -
	PLOT SCALE = 0.16668633' / in.	CHECKED -	REVISED -
	PLOT DATE = 3/29/2021	DATE -	REVISED -

STATE OF ILLINOIS
DEPARTMENT OF TRANSPORTATION

FAI 57 & WALDRON ROAD
STAGE 2A CONSTRUCTION AND TRAFFIC CONTROL

SCALE: 1"=20' | SHEET 1 OF 1 SHEETS | STA. 20+00 TO STA. 26+00

F.A.I. RTE.	SECTION	COUNTY	TOTAL SHEETS	SHEET NO.
57	139 HBR-6	KANKAKEE	202	60
		CONTRACT NO. 66997		
		ILLINOIS	FED. AID PROJECT	

STAGE 3 CONSTRUCTION

INSTALL TRAFFIC CONTROL SIGNING.

ADJUST TEMPORARY BRIDGE SIGNALS ACCORDING TO STAGE 3 PLANS.

CONSTRUCT CURB AND GUTTER AND SHARED USE PATH FROM STA 15+40 TO STA 17+96 AND FROM STA 21+22 TO STA 26+35.

MUN 2530 TO REMAIN OPEN DURING STAGE 3.

CONSTRUCT SHARED USE PATH PARAPET OF PROPOSED SN 046-0153 AS SHOWN IN THE STRUCTURE PLANS.

TRAFFIC CONTROL AND PROTECTION

TRAFFIC CONTROL AND PROTECTION SHALL BE PERFORMED IN ACCORDANCE WITH THE TRAFFIC CONTROL PLAN, SECTION 701 OF THE STANDARD SPECIFICATIONS AND THE SPECIAL PROVISIONS.

I-57
MAINTAIN EXISTING TRAFFIC.

WALDRON ROAD

MAINTAIN ONE LANE OF TRAFFIC AT ALL TIMES UTILIZING HIGHWAY STANDARD 701321. DUANE BLVD WILL BE CLOSED DURING STAGE 3.

EXISTING TRAFFIC CONTROL SIGNS AND DEVICES WILL BE REMOVED BY THE CONTRACTOR AFTER THE PROPOSED TRAFFIC CONTROL REQUIREMENTS ARE MET, OR AS AUTHORIZED BY THE ENGINEER. SIGNS OR DEVICES LEFT IN PLACE AT THIS TIME ARE TO BE PROTECTED FROM DAMAGE BY THE CONTRACTOR.

THE CONTRACTOR SHALL SCHEDULE OPERATIONS TO ENSRUE THAT NO DROP-OFF OF GREATER THAN 12", WITHIN 3' OF THE TRAVEL LANE, IS PRESENT FOR 48 HOURS OR MORE.

NO DROP-OFF GREATER THAN 24" WITHIN 12' OF THE TRAVEL LANE WILL BE ALLOWED UNLESS A FLAGGER CONTROLLED LANE CLOSURE IS PROVIDED. SEGMENTS WHERE THESE CONDITIONS OCCUR DURING NON-WORKING HOURS MUST BE PROTECTED WITH TEMPORARY CONCRETE BARRIER. UNLESS AUTHORIZED BY THE ENGINEER, THE CONTRACTOR WILL ONLY BE PAID FOR TEMPORARY CONCRETE BARRIER ALONG SEGMENTS SHOWN IN THE PLANS.

DRUMS WITH STEADY-BURNING LIGHTS SHALL BE REQUIRED TO DELINEATE THE TRAVEL WAY. THE MAXIMUM SPACING SHALL BE 100 FEET, CENTER TO CENTER ALONG TANGENTS (50 FEET ALONG TAPERS); AND 25 FEET (CENTER TO CENTER) ALONG RADII TO SIDE ROADS AND ENTRANCES.

THE FOLLOWING TRAFFIC CONTROL STANDARDS ARE THE MINIMUM REQUIREMENTS FOR THE TRAFFIC FOR THIS PROJECT: 701001, 701006, 70101, 701201, 701301, 701326, 701400, 701401, 701406, 701901 AND 704001.

CHANGEABLE MESSAGE SIGNS ARE TO BE IN PLACE 2 WEEKS PRIOR TO THE BEGINNING OF CONSTRUCTION.

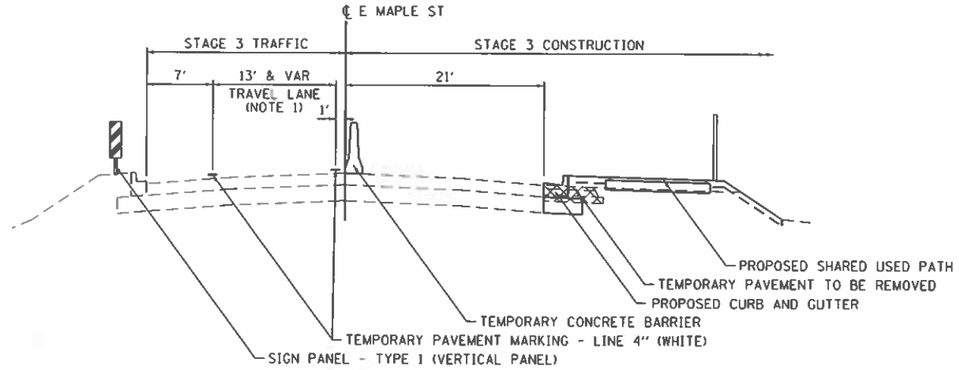

STAGE 3 TYPICAL SECTION
E MAPLE ST

STA 16+76.00 TO 17+96.21

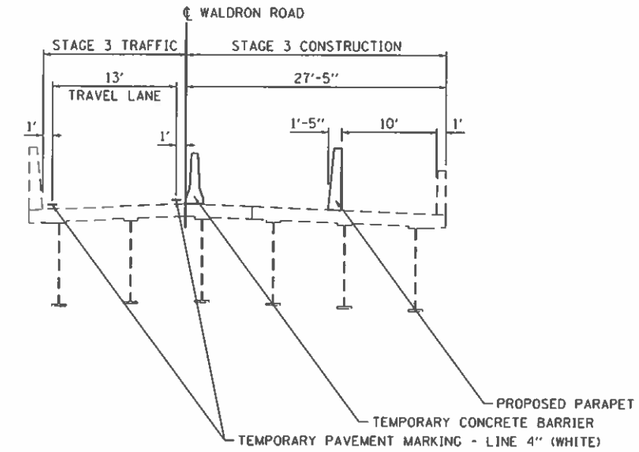

STAGE 3 BRIDGE TYPICAL SECTION
WALDRON ROAD

STA 17+96.21 TO 21+21.73

TEMPORARY PAVEMENT MARKING ON FINAL WEARING SURFACE SHALL BE PAVEMENT MARKING TAPE, TYPE IV

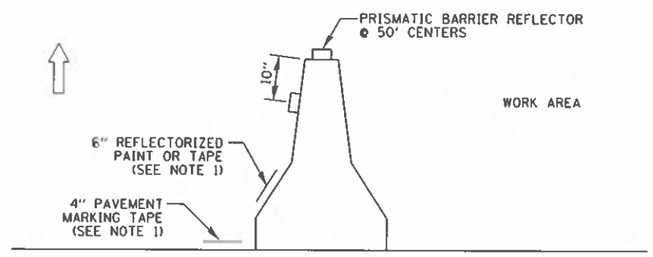

NOTES:

1. THE CONTRACTOR HAS THE OPTION OF USING EITHER THE LINE ON THE TEMPORARY CONCRETE BARRIER OR ON THE PAVEMENT.
2. THE COST OF THE REFLECTORS IS INCLUDED IN THE COST OF THE TEMPORARY CONCRETE BARRIER.

TEMPORARY CONCRETE BARRIER WALL DETAILS

NOTES:

1. VARIES FROM 11' AT STA 17+04 TO 13' AT STA 17+44.

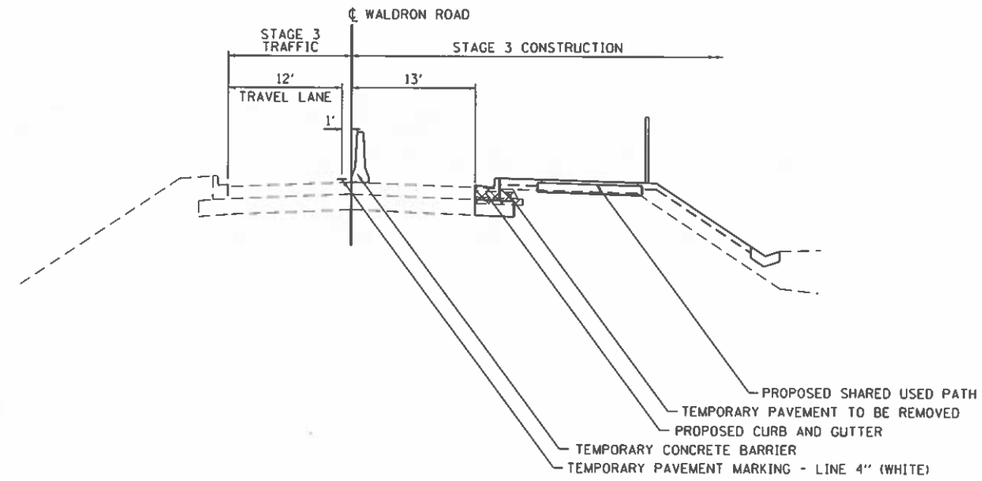

STAGE 3 TYPICAL SECTION
WALDRON ROAD

STA 21+21.73 TO 26+35.00

MODEL: Plan 1
FILE NAME: D560063-Sht-Stage 3 Typical Section-1.dgn

Hutchison Engineering, Inc. Jacksonville Moline Peoria Shorewood Since 1945	USER NAME = realehlan	DESIGNED -	REVISED -	STATE OF ILLINOIS DEPARTMENT OF TRANSPORTATION	FAI 57 & WALDRON ROAD STAGE 3 TYPICAL SECTIONS	F.A.I. RTE.	SECTION	COUNTY	TOTAL SHEETS	SHEET NO.
		DRAWN -	REVISED -			57	139 HBR-6	KANKAKEE	202	61
	PLOT SCALE = 0.1667 ' / in.	CHECKED -	REVISED -					CONTRACT NO. 66997		
	PLOT DATE = 3/29/2021	DATE - 2021/03/26	REVISED -		SCALE: N.T.S. / SHEET 1 OF 1 SHEETS / STA. / TO STA.		ILLINOIS	FED. AID PROJECT		

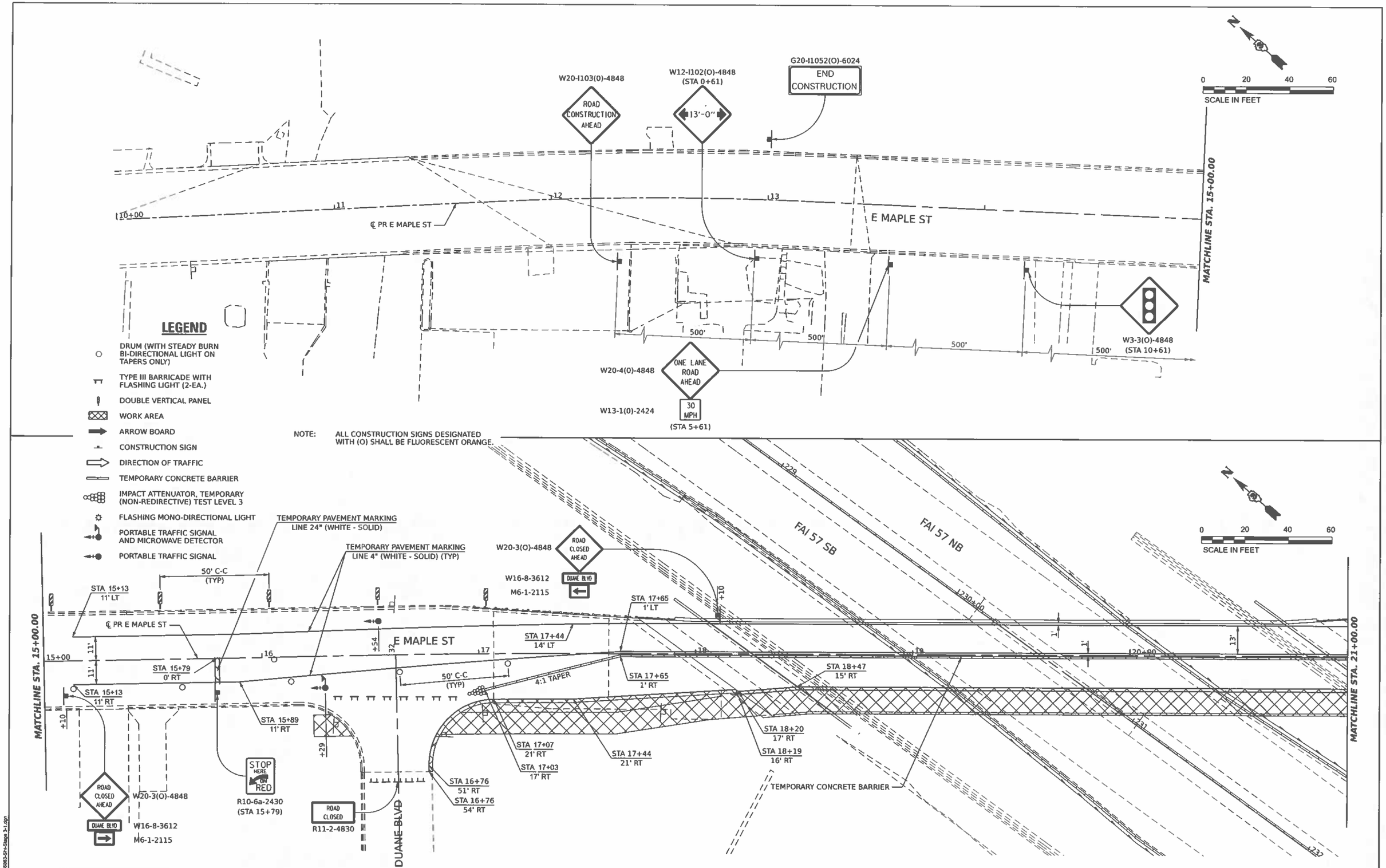

MODEL: Plan 5
FILE NAME: D368863-Sht-Stage 3-1.dgn

Hutchison Engineering, Inc.
Jacksonville Moline Peoria Shorewood
Since 1945

USER NAME = nsalehian	DESIGNED -	REVISED -	
	DRAWN -	REVISED -	
PLOT SCALE = 0.18666633 ' / in.	CHECKED -	REVISED -	
PLOT DATE = 3/29/2021	DATE -	REVISED -	

STATE OF ILLINOIS
DEPARTMENT OF TRANSPORTATION

FAI 57 & WALDRON ROAD
STAGE 3 CONSTRUCTION AND TRAFFIC CONTROL

SCALE: 1"=20' | SHEET 1 OF 2 SHEETS | STA. 10+00 TO STA. 21+00

F.A.I. RTE.	SECTION	COUNTY	TOTAL SHEETS	SHEET NO.
57	139 HBR-6	KANKAKEE	202	62
		CONTRACT NO. 66997		
		ILLINOIS FED. AID PROJECT		

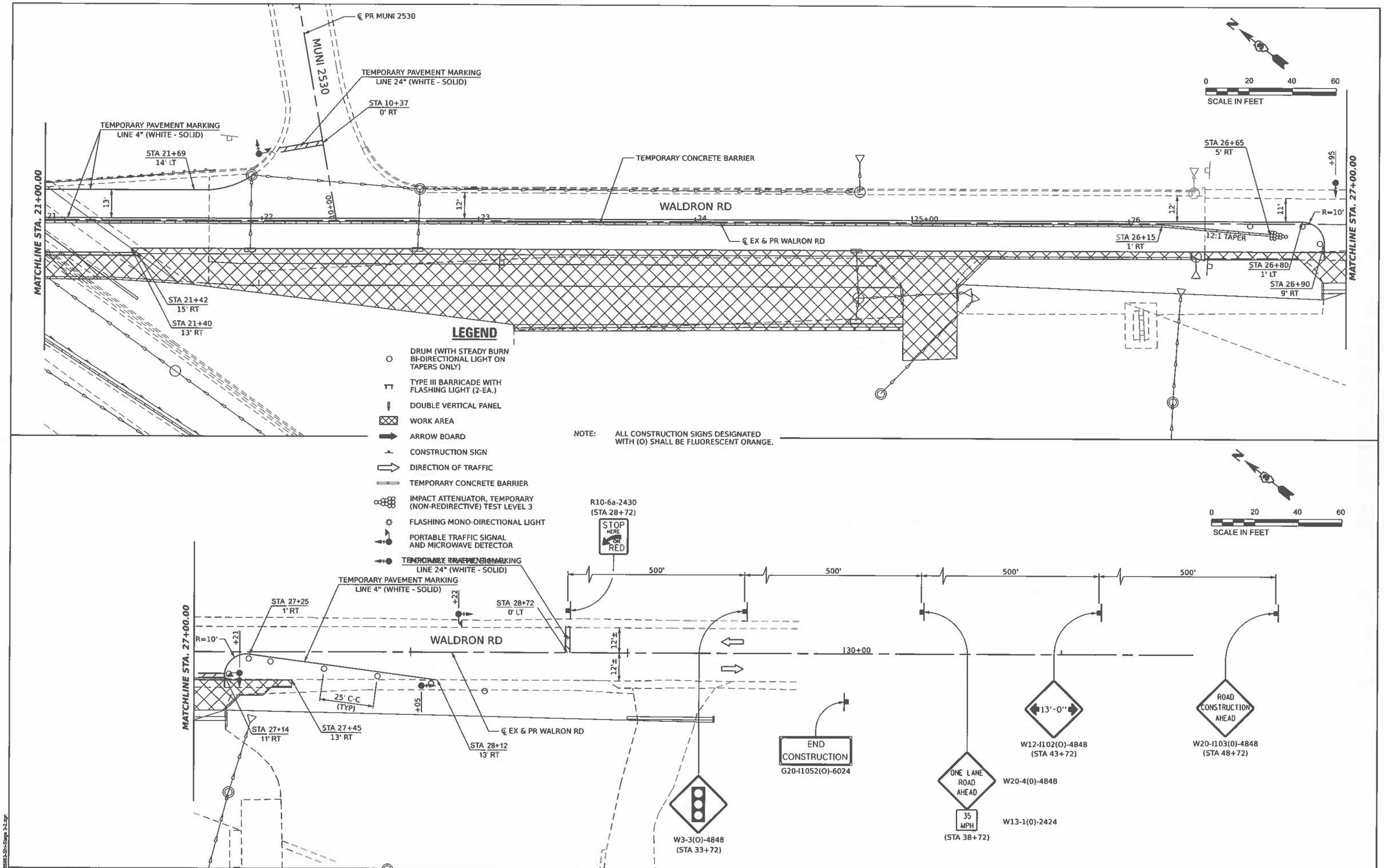

Hutchison Engineering, Inc. Jacksonville Moline Peoria Shorewood Since 1945	USER NAME = nataliehan	DESIGNED -	REVISED -
		DRAWN -	REVISED -
	PLOT SCALE = 0.16666633 ' / in.	CHECKED -	REVISED -
	PLOT DATE = 3/29/2021	DATE - 2021/03/26	REVISED -

STATE OF ILLINOIS
DEPARTMENT OF TRANSPORTATION

FAI 57 & WALDRON ROAD
STAGE 3 CONSTRUCTION AND TRAFFIC CONTROL

SCALE: 1"=20' | SHEET 2 OF 2 SHEETS | STA. 21+00 TO STA. 31+50

F.A.I. RTE.	SECTION	COUNTY	TOTAL SHEETS	SHEET NO.
57	139 HBR-6	KANKAKEE	202	63

CONTRACT NO. 66997

ILLINOIS | FED. AID PROJECT

MODEL: Plan 7
FILE NAME: D268963-Sht-Stage 3-2.dgn

LEGEND

- DRUMS OR VERTICAL BARRICADES WITH STEADY BURNING WARNING LIGHTS AT 100' CENTERS. (50' CENTERS AT TAPERS) UNLESS OTHERWISE NOTED ON PLANS
- TYPE III BARRICADE WITH FLASHING LIGHT (2-EA.)
- INTERSTATE CLOSURE AREA
- FLASHING ARROW BOARD
- CONSTRUCTION SIGN
- DIRECTION OF TRAFFIC

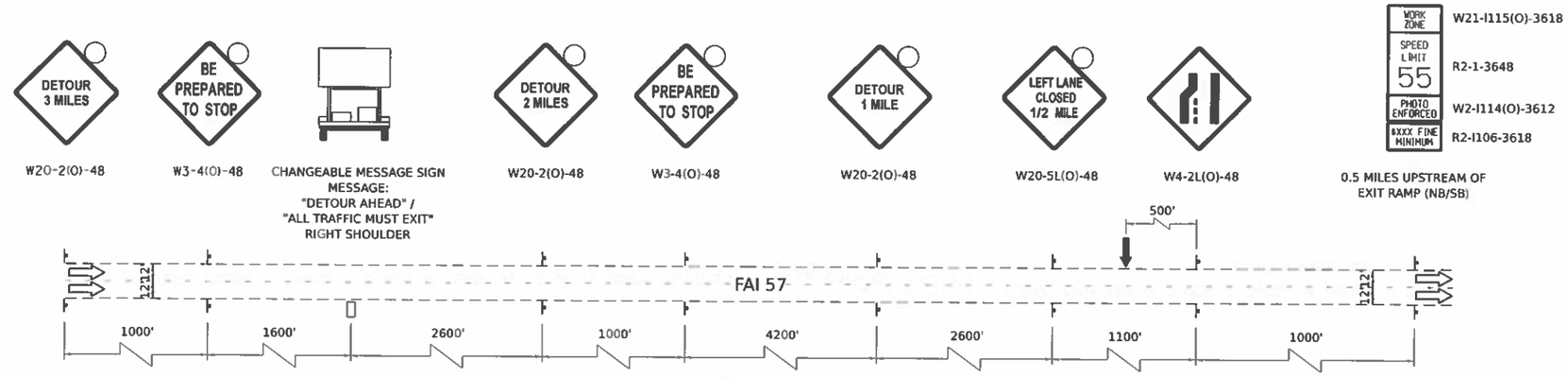

FAI 57 ADVANCED SIGNING DETAIL (NOT TO SCALE)

NOTE: TRAFFIC WILL UTILIZE DETOUR SHOWN IN THE "ALTERNATE ROUTE" DETAIL DURING EXISTING SUPERSTRUCTURE DEMOLITION AND BEAM PLACEMENT.

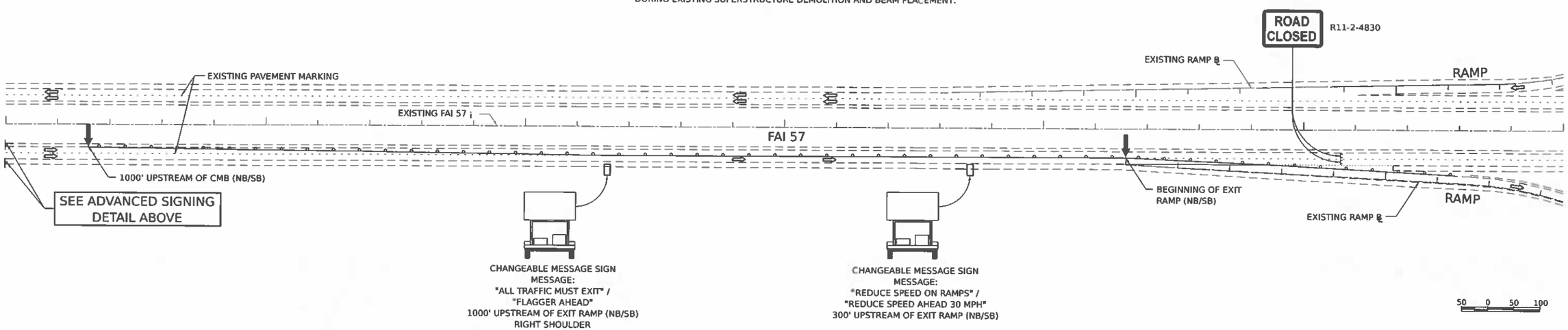

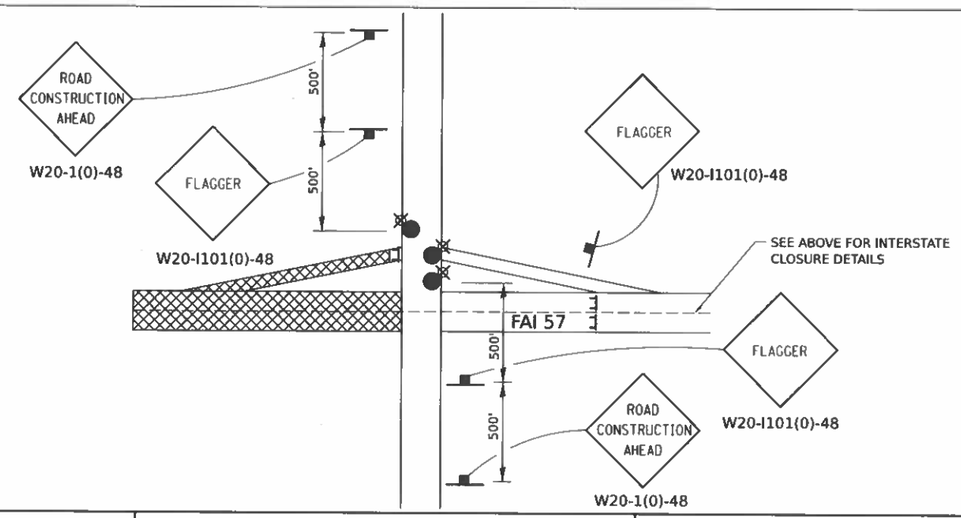

LEGEND

- LIGHTED FLAGGER STATIONS

NOTE: TRAFFIC WILL UTILIZE DETOUR SHOWN IN THE "ALTERNATE ROUTE" DETAIL DURING EXISTING SUPERSTRUCTURE DEMOLITION AND BEAM REPLACEMENT.

MODEL: Thinkbot
FILE NAME: C:\Users\hs-hang\Detail 1.dgn

Hutchison Engineering, Inc. Jacksonville Moline Peoria Shorewood Since 1945	USER NAME = nsalehian	DESIGNED -	REVISED -
		DRAWN -	REVISED -
	PLOT SCALE = 0.16666633 ' / in.	CHECKED -	REVISED -
	PLOT DATE = 3/29/2021	DATE -	REVISED -

STATE OF ILLINOIS
DEPARTMENT OF TRANSPORTATION

FAI 57
TOTAL INTERSTATE CLOSURE AT NIGHT DETAIL

SCALE: 1"=100' | SHEET 1 OF 1 SHEETS | STA. N/A | TO STA. N/A

F.A.I. RTE.	SECTION	COUNTY	TOTAL SHEETS	SHEET NO.
57	139 HBR-6	KANKAKEE	202	64
		CONTRACT NO. 66997		
		ILLINOIS FED. AID PROJECT		

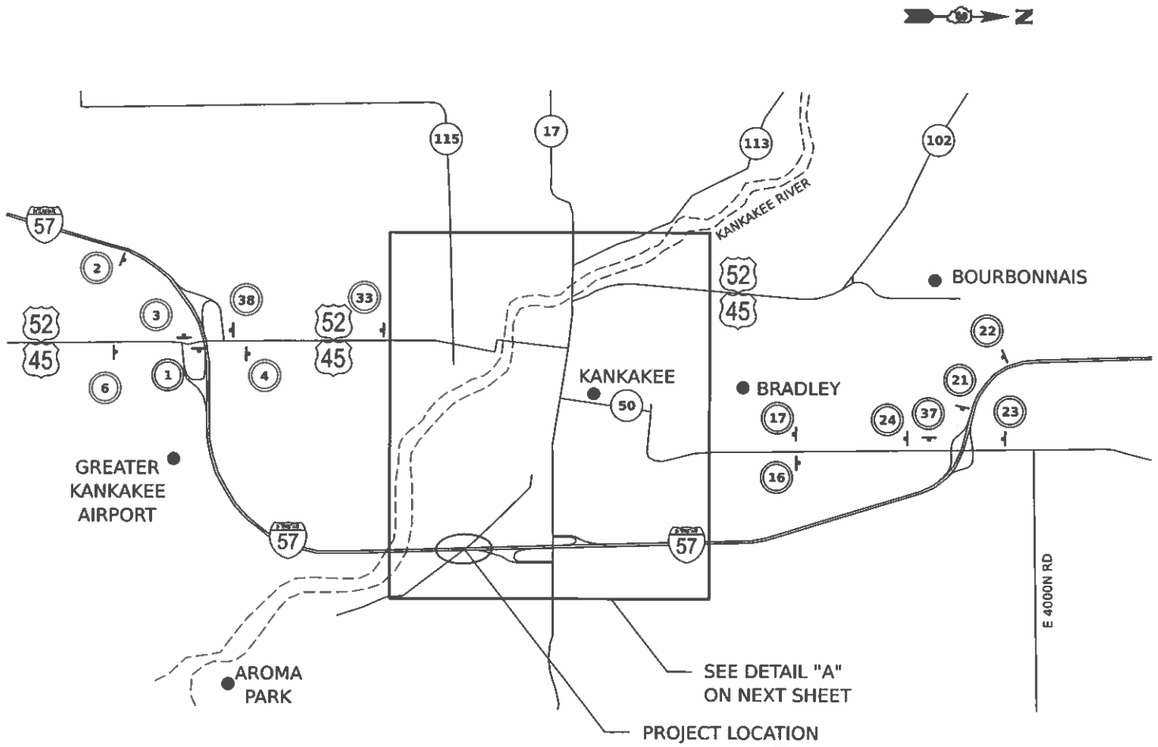

ALTERNATE ROUTE SIGNS

ALTERNATE ROUTE FOR I-57 DURING CONSTRUCTION UTILIZES US 45/52, IL 17 AND IL 50.

THE CONTRACTOR SHALL FURNISH, INSTALL, MAINTAIN AND REMOVE THE SIGNING FOR THE ALTERNATE ROUTE.

TWO EXTRA MESSAGE BOARDS ON I-57 AS OUTLINED IN THE SPECIAL PROVISIONS SHALL DISPLAY THE FOLLOWING MESSAGE:

I-57 CONSTRUCTION AHEAD
EXPECT DELAYS
ALT ROUTE AVAILABLE

SIGNS A1, B1, C, D, E, F, G, H, I: FLUORESCENT ORANGE WITH BLACK SYMBOLS.

SIGNS A2, A3, B2, B3: BLUE WITH WHITE LETTERS.

ALTERNATE ROUTE

SIGN

SIGN NUMBER

SIGN ASSEMBLY

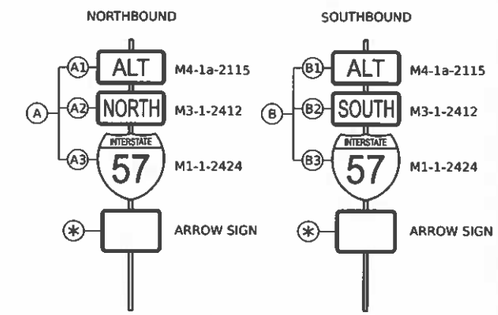

* SEE BELOW

ARROW SIGNS

SIGN NUMBER	LOCATION	PANELS
1	I-57 (NB) AT START OF RAMP	AH
2	I-57 (NB) 1/2 MILE PRIOR TO SIGN 1	AE
3	TOP OF RAMP FOR I-57 (NB) TRAFFIC HEADING NORTH ONTO US 45/52	AG
4	US 45/52 (NB) 500' NORTH OF I-57	AI
5	US 45/52 (NB) AT IL 50 JCT	AH
6	US 45/52 (NB), 100' PRIOR TO RAMP	AI
7	IL 50 (NB), SOUTH END OF BRIDGE	AC
8	IL 50 (NB) AT RIVER STREET	AG
9	IL 50 (NB) (RIVER STREET) AT HARRISON AVE	AF
10	IL 50 (NB) HARRISON AVE), 1500' SOUTH OF IL 17	AI
11	IL 50 (NB) (HARRISON AVE), AT IL 17	AI
12	IL 17 (WB), AT IL 50	BF
13	IL 50 (NB) NORTH OF IL 17	AI
14	IL 50 (NB) AND FAIR STREET	AG
15	IL 50 (NB FAIR STREET) BEFORE CURVE	AI
16	IL 50 (NB KINZIE AVE) 100' NORTH OF NORTH STREET	AI
17	IL 50 (SB KINZIE AVE) 100' NORTH OF NORTH STREET	BI
18	IL 50 (SB FAIR STREET) AT INDIANA AVE	BF
19	IL 50 (SB INDIANA AVE) 200' NORTH OF IL 17	BI
20	IL 17 (EB) AT INDIANA AVE	BG

SIGN NUMBER	LOCATION	PANELS
21	I-57 (SB) AT START OF RAMP	BH
22	I-57 (SB) 1/2 MILE PRIOR TO SIGN 21	BE
23	IL 50 (SB) 100' PRIOR TO RAMP	BI
24	IL 50 (SB) 500' SOUTH OF I-57	BI
25	IL 17 (WB) 100' PRIOR TO THE RAMP	BI
26	IL 17 (WB) 100' PRIOR TO THE RAMP	BI
27	IL 17 (WB) 1500' WEST OF I-57	BI
30	IL 17 (EB) AT HARRISON STREET	AF
33	US 45/52 (SB) 100' SOUTH OF SE AVE	BI
34	IL 50 (SB INDIANA AVE) AT RIVER STREET	BG
35	RIVER STREET, AT IL 50	BF
36	IL 50 (SB) AT E JEFFERY ST	BI
37	I-57 (SB) BOTTOM OF EXIT RAMP	BG
38	US 45/52 (SB) AT START OF RAMP	BH

MODEL: Titleblock
FILENAME: 0390813-Sht-Alternate Route 1.dgn

Hutchison Engineering, Inc.
Jacksonville Moline Peoria Shorewood
Since 1945

USER NAME = nealehan	DESIGNED -	REVISED -
	DRAWN -	REVISED -
PLOT SCALE = 0.16666833 ' / in.	CHECKED -	REVISED -
PLOT DATE = 3/29/2021	DATE -	REVISED -

STATE OF ILLINOIS
DEPARTMENT OF TRANSPORTATION

FAI 57
ALTERNATE ROUTE

SCALE: N.T.S. | SHEET 1 OF 2 SHEETS | STA. N/A | TO STA. N/A

F.A.I. RTE.	SECTION	COUNTY	TOTAL SHEETS	SHEET NO.
57	139 HBR-6	KANKAKEE	202	65

CONTRACT NO. 66997

ILLINOIS FED. AID PROJECT

DETAIL "A"

MODEL: Tiledout
FILE NAME: D306953-Sht-Alternate Route 2.dgn

Hutchison Engineering, Inc. Jacksonville Moline Peoria Shorewood Since 1945	USER NAME = nsalehian	DESIGNED -	REVISED -
		DRAWN -	REVISED -
	PLOT SCALE = 0.16666633 ' / in.	CHECKED -	REVISED -
	PLOT DATE = 3/29/2021	DATE -	REVISED -

STATE OF ILLINOIS
DEPARTMENT OF TRANSPORTATION

FAI 57
ALTERNATE ROUTE

SCALE: N.T.S. | SHEET 2 OF 2 SHEETS | STA. N/A | TO STA. N/A

F.A.I. RTE.	SECTION	COUNTY	TOTAL SHEETS	SHEET NO.
57	139 HBR-6	KANKAKEE	202	66

CONTRACT NO. 66997

ILLINOIS | FED. AID PROJECT

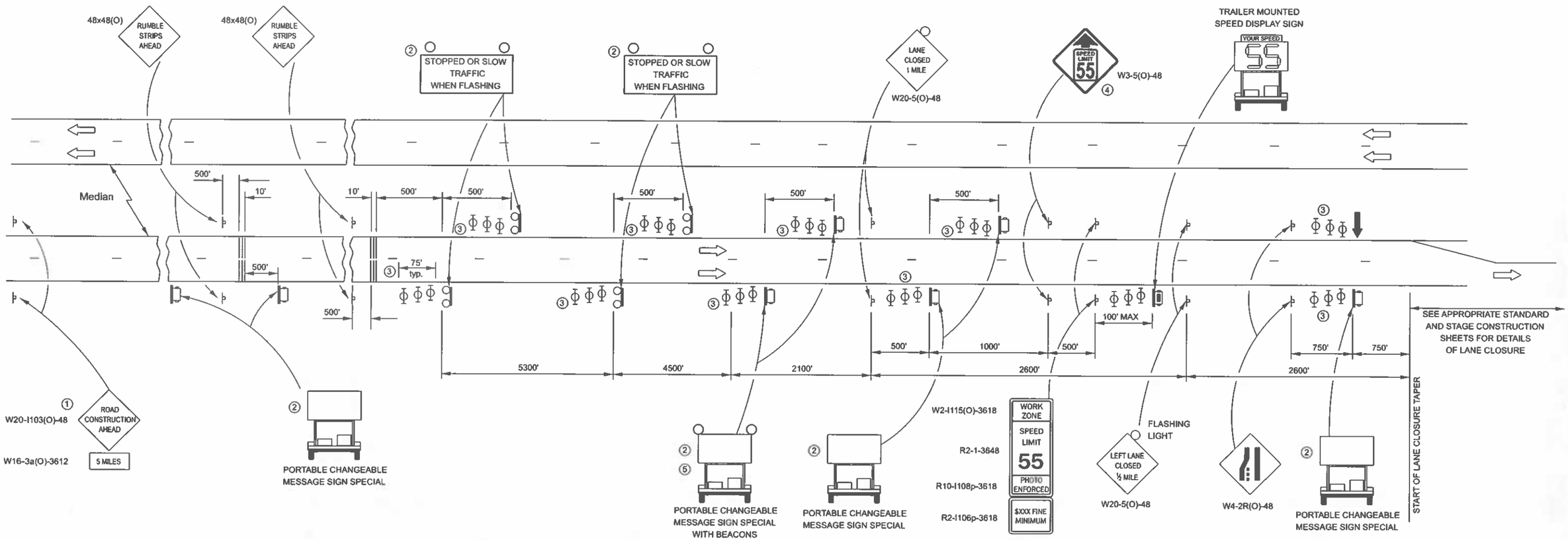

NOTES:

1. THE ROAD CONSTRUCTION AHEAD SIGN SHALL BE LOCATED 5 MILES IN ADVANCE OF THE PROJECT LIMITS.
2. UNIT TO BE PAID FOR SEPARATELY. TO BE PLACED OUTSIDE OF EXISTING PAVED SHOULDER. ANY REQUIRED EARTHWORK INCLUDED IN THE COST OF THE UNIT.
3. THREE, TYPE II BARRICADES, DRUMS, OR VERTICAL BARRICADES AT 25' CENTERS.
4. THIS SIGN SHALL ONLY BE USED IF THE EXISTING SPEED LIMIT IS GREATER THAN 65 MPH.
5. WHEN SHOWN, PORTABLE CHANGEABLE MESSAGE SIGN SPECIAL SHALL HAVE EQUIVALENT FLASHING BEACONS AS REAL TIME TRAFFIC CONTROL SIGNING. COST INCLUDED IN PORTABLE CHANGEABLE MESSAGE SIGN SPECIAL.

LEGEND:

- ARROW BOARD
- PORTABLE CHANGEABLE MESSAGE SIGN
- SIGN
- REAL-TIME TRAFFIC CONTROL SIGNING
- TYPE II BARRICADE, DRUM, OR VERTICAL BARRICADE WITH MONODIRECTIONAL FLASHING LIGHT
- TEMPORARY RUMBLE STRIPS (SPECIAL) SEE DETAIL & SPECIAL PROVISION
- SPEED DISPLAY TRAILER

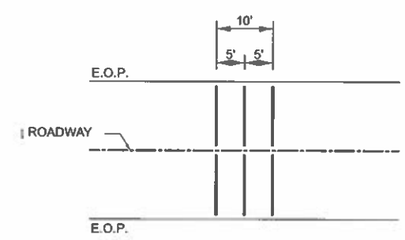

TEMPORARY RUMBLE STRIP (SPECIAL)

GENERAL NOTE:

THIS STANDARD IS USED WHERE A LANE CLOSURE IS IN PLACE LONGER THAN ONE CONSECUTIVE WEEK OR INCLUDING A WEEKEND OR HOLIDAY AS DESCRIBED IN KEEPING ROADS OPEN TO TRAFFIC.

THE FIRST TWO SIGNS ARE STATIONARY. THE OTHER SIGNS, ARROWBOARDS AND MESSAGE BOARDS SHALL BE MOVED AS NECESSARY TO MAINTAIN THE REQUIRED DISTANCE FROM THE START OF THE LANE CLOSURE TAPER(S).

SEE SPECIAL PROVISIONS FOR SMART TRAFFIC MONITORING SYSTEM, PORTABLE CHANGEABLE MESSAGE SIGN SPECIAL AND CONTROL OF WORK.

WHEN THE RIGHT LANE IS CLOSED, RIGHT LANE CLOSED SIGNS SHALL BE SUBSTITUTED FOR THE LEFT LANE CLOSED SIGNS.

WHEN EXISTING SIGNS, POLES, AND OTHER ITEMS CONFLICT WITH LOCATING THE EQUIPMENT SHOWN, THE CONTRACTOR SHALL COORDINATE WITH THE ENGINEER TO DECONFLICT EQUIPMENT PLACEMENT.

MODEL: Tilebloc
FILE NAME: D:\56283-Sta-TCP 701400 Smart Zone Special.dgn

Hutchison Engineering, Inc. Jacksonville Moline Peoria Shorewood Since 1945	USER NAME = nsalehian	DESIGNED -	REVISED -	STATE OF ILLINOIS DEPARTMENT OF TRANSPORTATION	TC&P STANDARD 701400 (SPECIAL) WITH SMART TRAFFIC CONTROL	F.A.I. RTE.	SECTION	COUNTY	TOTAL SHEETS	SHEET NO.
		DRAWN -	REVISED -			57	139 HBR-6	KANKAKEE	202	67
	PLOT SCALE = 0.18666633 ' / in.	CHECKED -	REVISED -					CONTRACT NO. 66997		
	PLOT DATE = 3/29/2021	DATE -	REVISED -		SCALE: N.T.S. SHEET 1 OF 1 SHEETS STA. N/A TO STA. N/A			ILLINOIS FED. AID PROJECT		

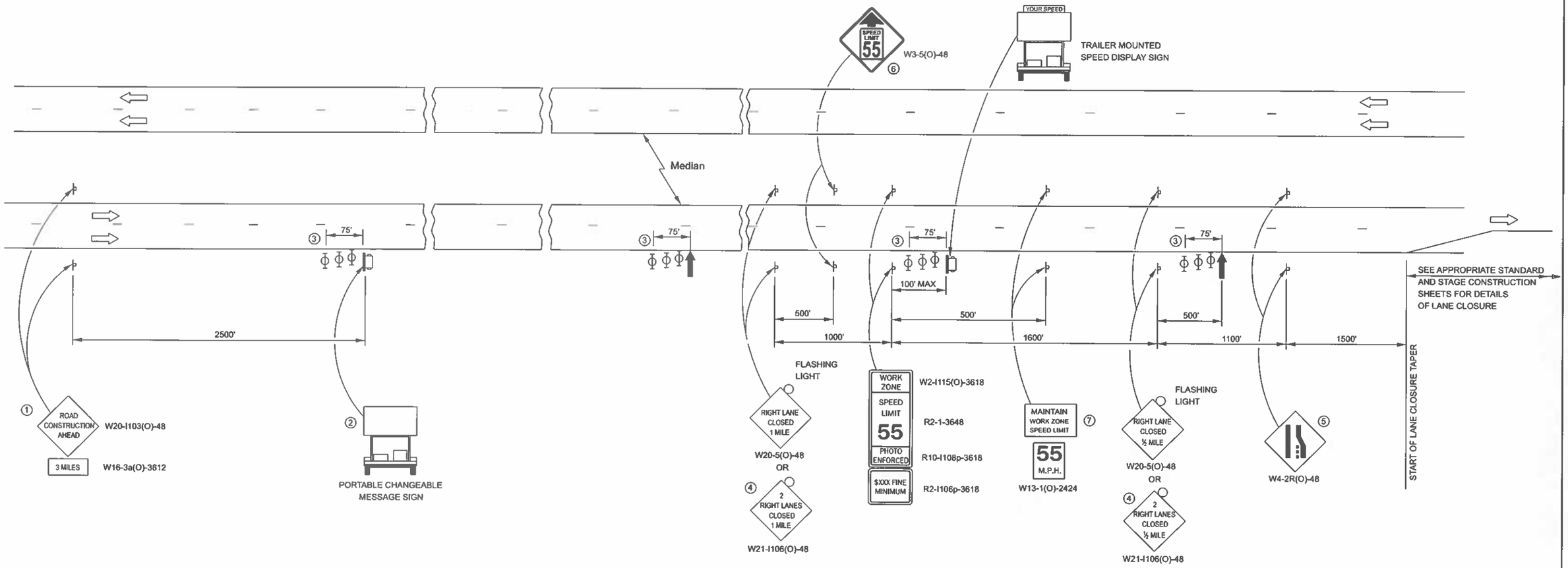

① THE ROAD CONSTRUCTION AHEAD SIGN SHALL BE LOCATED 3 MILES IN ADVANCE OF THE PROJECT LIMITS.

② TO BE PLACED IN THE MEDIAN WHEN FEASIBLE. THE MESSAGE BOARD SHALL BE USED TO DISPLAY STATUS OF LANES WITHIN THE PROJECT. THE PRIMARY MESSAGES SHALL BE:
"RIGHT LANE CLOSED" / " x MILES AHEAD"
"LEFT LANE CLOSED" / " x MILES AHEAD"
"ALL LANES OPEN"

③ THREE, TYPE II BARRICADES, DRUMS, OR VERTICAL BARRICADES AT 25' CENTERS.

④ THIS SIGN SHALL BE USED WHEN 2 LANES ARE CLOSED.

⑤ WHEN THE LEFT LANE IS CLOSED, SWITCH THESE TWO SIGNS AND THE DIRECTION OF THE MERGE ARROW.

⑥ THIS SIGN SHALL ONLY BE USED IF THE EXISTING SPEED LIMIT IS GREATER THAN 65 MPH.

⑦ 48"x36" FLUORESCENT ORANGE SIGN WITH BLACK LETTERS.

48"

MAINTAIN	8"
WORK ZONE	6"
SPEED LIMIT	6"

36"

ARROW BOARD

PORTABLE CHANGEABLE MESSAGE SIGN

SIGN

TYPE II BARRICADE, DRUM, OR VERTICAL BARRICADE WITH MONODIRECTIONAL FLASHING LIGHT

GENERAL NOTE:

THIS STANDARD IS USED WHERE AT ANY TIME A LANE IS CLOSED ON A FREEWAY/EXPRESSWAY.

TO BE USED WHEN NO OVERNIGHT / LONG TERM LANE CLOSURE IS REQUIRED.

WHEN THE LEFT LANE IS CLOSED, LEFT LANE CLOSED SIGNS SHALL BE SUBSTITUTED FOR THE RIGHT LANE CLOSED SIGNS.

THE FIRST TWO SIGNS AND THE MESSAGE BOARD ARE STATIONARY. THE OTHER SIGNS AND ARROWBOARDS SHALL BE MOVED AS NECESSARY TO MAINTAIN THE REQUIRED DISTANCE FROM THE START OF THE LANE CLOSURE TAPER(S).

SEE SPECIAL PROVISIONS.

ALL DIMENSIONS ARE IN INCHES UNLESS OTHERWISE SHOWN.

MODEL: Tlinois
FILE NAME: D:\99963-Sta TCP 701400 Special.dgn

Hutchison Engineering, Inc.
Jacksonville Moline Peoria Shorewood
Since 1945

USER NAME = nsalehian	DESIGNED -	REVISED -	
	DRAWN -	REVISED -	
PLOT SCALE = 0.16666633 ' / in.	CHECKED -	REVISED -	
PLOT DATE = 3/29/2021	DATE -	REVISED -	

STATE OF ILLINOIS
DEPARTMENT OF TRANSPORTATION

TC&P STANDARD 701400 (SPECIAL)

SCALE: N.T.S. | SHEET 1 OF 1 SHEETS | STA. N/A | TO STA. N/A

F.A.I. RTE	SECTION	COUNTY	TOTAL SHEETS	SHEET NO.
57	139 HBR-6	KANKAKEE	202	68

CONTRACT NO. 66997

ILLINOIS | FED. AID PROJECT

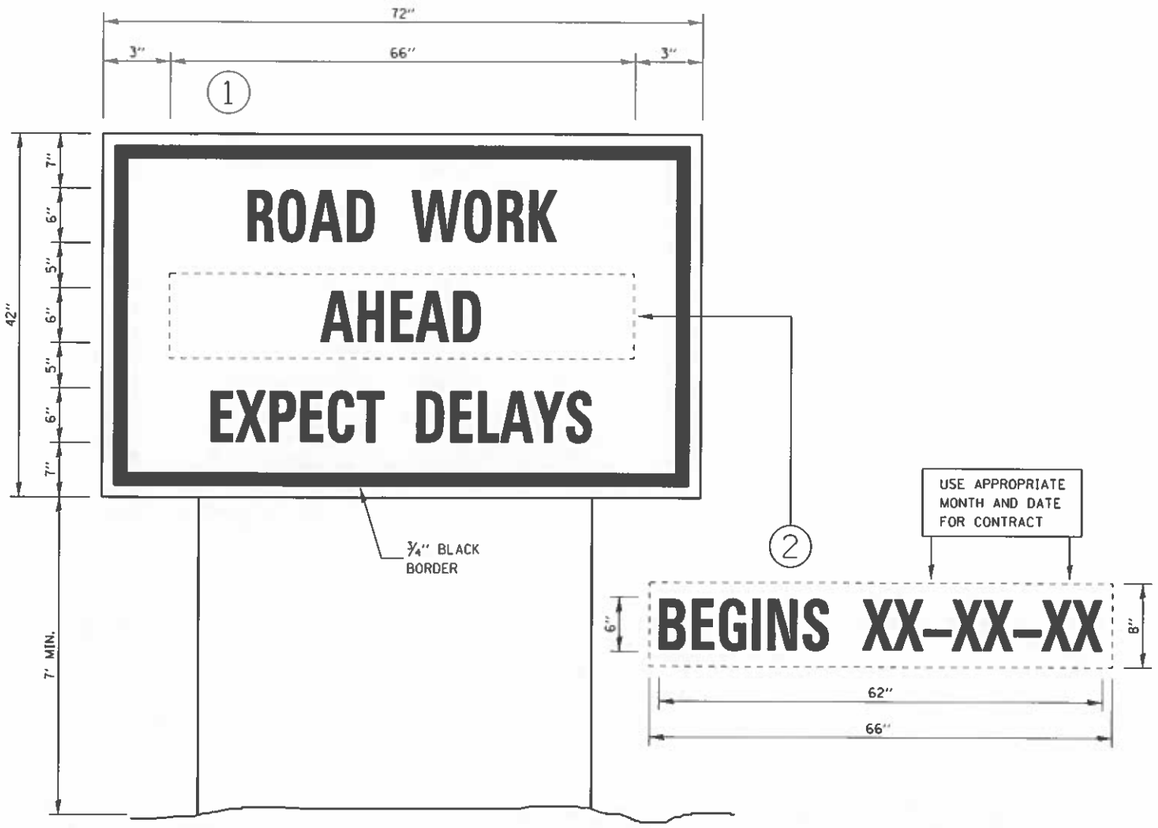

TEMPORARY INFORMATION SIGNING

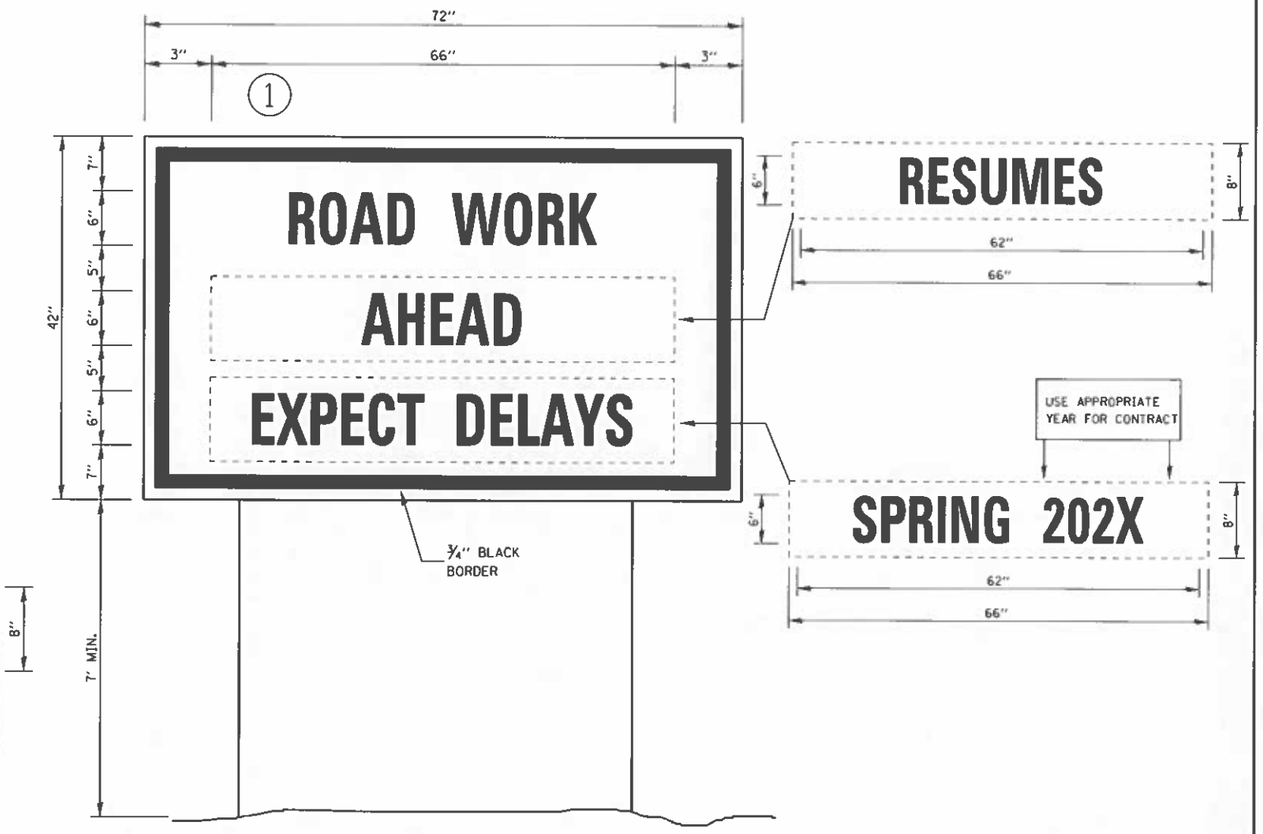

WINTER CLOSURE SIGNING

NOTES:

1. USE 6" D BLACK LETTERING ON FLOURESENT ORANGE BACKGROUND.
2. ERECT SIGNS AT LOCATIONS IN ADVANCE OF THE "ROAD CONSTRUCTION AHEAD" SIGNS AS DIRECTED BY THE ENGINEER.
3. ERECT SIGN (1) WITH INSTALLED PANEL (2) A MINIMUM OF ONE WEEK PRIOR TO THE START OF THE LANE CLOSURE.
4. REMOVE PANEL (2) ON THAT DATE.
5. SEE SPECIAL PROVISION "TEMPORARY INFORMATION SIGNING" FOR ADDITIONAL INFORMATION.
6. WILL BE PAID FOR PER SQ FT AS "TEMPORARY INFORMATION SIGNING". EACH SIGN = 21 SQ FT AND THE DATE PANEL (2) WILL NOT BE MEASURED SEPARATELY FOR PAYMENT.

MODEL: Titleblock
FILE NAME: D306803-Sht-Temporary Information Signing.dgn

Hutchison Engineering, Inc. Jacksonville Moline Peoria Shorewood Since 1945	USER NAME = nealehlan	DESIGNED -	REVISED -
		DRAWN -	REVISED -
	PLOT SCALE = 0.16666833 ' / in.	CHECKED -	REVISED -
	PLOT DATE = 3/29/2021	DATE -	REVISED -

STATE OF ILLINOIS
DEPARTMENT OF TRANSPORTATION

TEMPORARY INFORMATION SIGNING

SCALE: N.T.S. | SHEET 1 OF 1 SHEETS | STA. N/A | TO STA. N/A

F.A.I. RTE	SECTION	COUNTY	TOTAL SHEETS	SHEET NO.
57	139 HBR-6	KANKAKEE	202	69
		CONTRACT NO. 66997		
		ILLINOIS	FED. AID PROJECT	

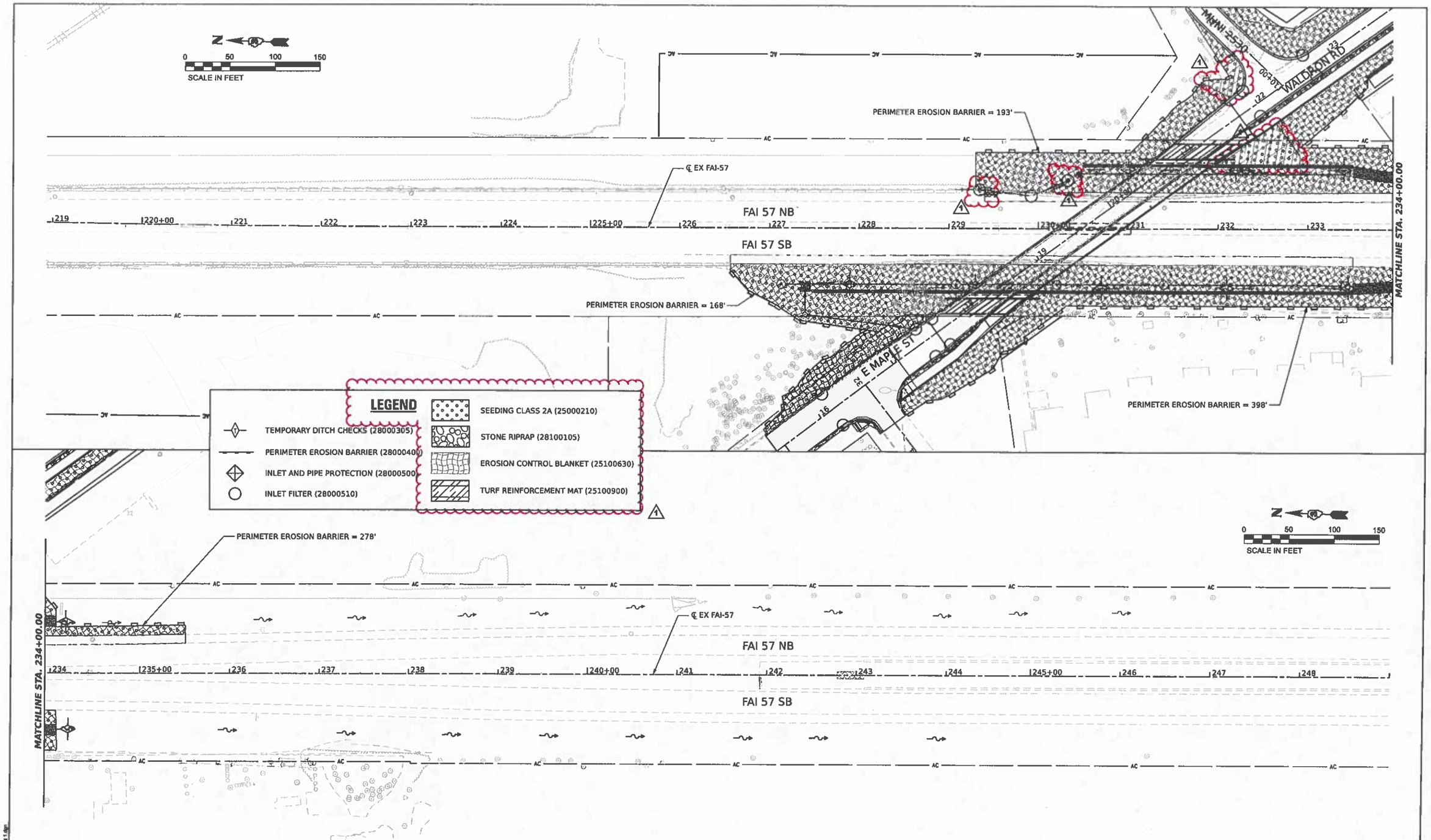

Hutchison Engineering, Inc. Jacksonville Moline Peoria Shorewood Since 1945	USER NAME = nsolehan	DESIGNED -	REVISED -
		DRAWN -	REVISED -
	PLOT SCALE = 0.10000833 '/ in.	CHECKED -	REVISED -
	PLOT DATE = 7/8/2021	DATE - 2021/03/26	REVISED -

STATE OF ILLINOIS
DEPARTMENT OF TRANSPORTATION

FAI 57 & WALDRON ROAD
EROSION CONTROL PLAN

SCALE: 1"=50' | SHEET 1 OF 3 SHEETS | STA. 219+00 TO STA. 249+00

F.A.I. RTE.	SECTION	COUNTY	TOTAL SHEETS	SHEET NO.
57	139 HBR-6	KANKAKEE	202	70
		CONTRACT NO. 66997		
		ILLINOIS	FED. AID PROJECT	

1 REV. 08/25/21

MODEL: Plan 1
FILE NAME: D300007-SH-Erosion Control 1.dgn

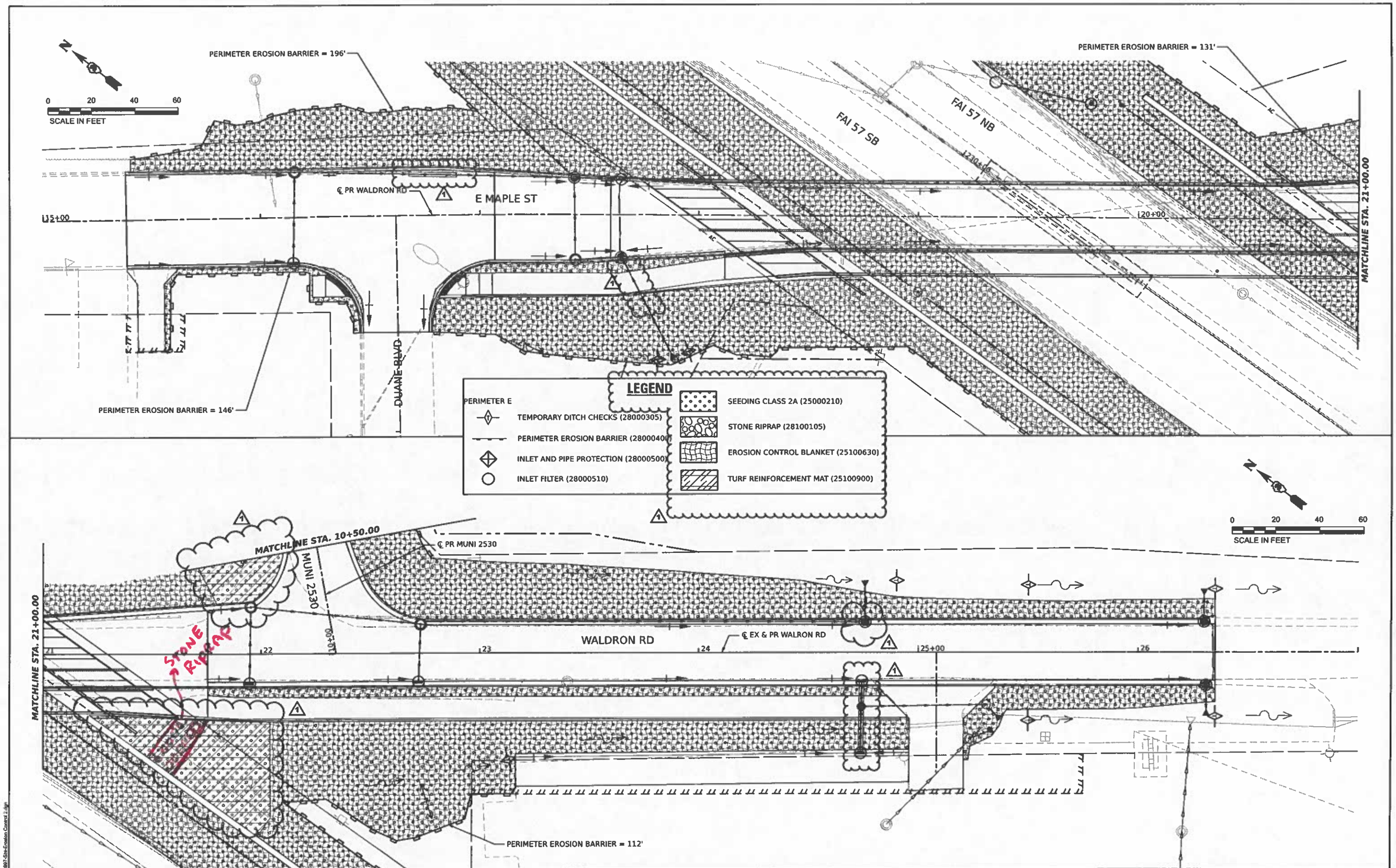

Hutchison Engineering, Inc. Jacksonville Moline Peoria Shorewood Since 1945	USER NAME = ashbc	DESIGNED - abc	REVISED -	STATE OF ILLINOIS DEPARTMENT OF TRANSPORTATION	FAI 57 & WALDRON ROAD EROSION CONTROL PLAN	F.A.I. RTE.	SECTION	COUNTY	TOTAL SHEETS	SHEET NO.
		DRAWN - def	REVISED -			57	139 HBR-6	KANKAKEE	202	71
	PLOT SCALE = 0.180000633 ' / in.	CHECKED - ghi	REVISED -					CONTRACT NO. 66997		
	PLOT DATE = 7/9/2021	DATE - 2021/03/26	REVISED -		SCALE: 1"=20' SHEET 2 OF 3 SHEETS STA. 15+00 TO STA. 27+00			ILLINOIS FED. AID PROJECT		

MODEL: Plan 3
FILE NAME: D266697-Site-Erosion Control 2.dgn

REV. 08/25/21

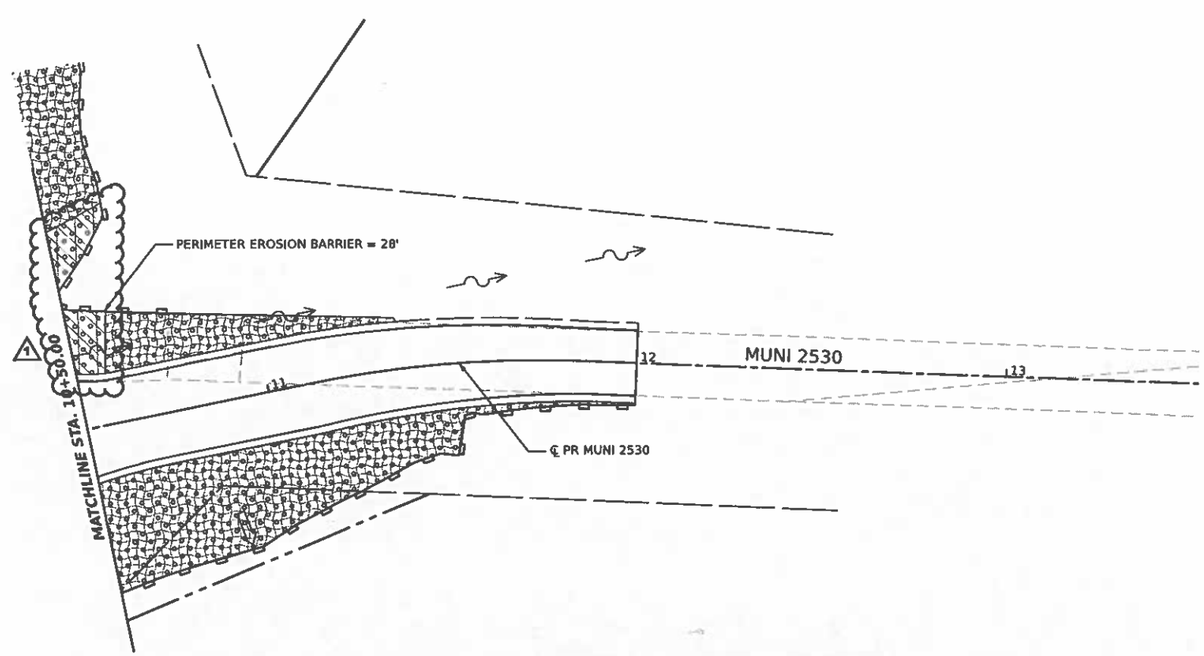

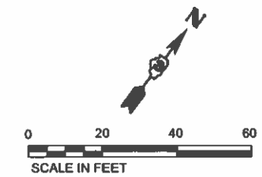

LEGEND

- TEMPORARY DITCH CHECKS (28000305)
- PERIMETER EROSION BARRIER (28000400)
- INLET AND PIPE PROTECTION (28000500)
- INLET FILTER (28000510)
- SEEDING CLASS 2A (25000210)
- STONE RIPRAP (28100105)
- EROSION CONTROL BLANKET (25100630)
- TURF REINFORCEMENT MAT (25100900)

1

MODEL: Plan 5
FILE NAME: D346997-Site Erosion Control 3.dgn

Hutchison Engineering, Inc. Jacksonville Moline Peoria Shorewood Since 1945	USER NAME = aa/inc	DESIGNED -	REVISED -	STATE OF ILLINOIS DEPARTMENT OF TRANSPORTATION	FAI 57 & WALDRON ROAD EROSION CONTROL PLAN	F.A.I. RTE.	SECTION	COUNTY	TOTAL SHEETS	SHEET NO.
		DRAWN -	REVISED -			57	139 HBR-6	KANKAKEE	202	72
	PLOT SCALE = 0.1[illegible]' / in.	CHECKED -	REVISED -					CONTRACT NO. 66997		
	PLOT DATE = 7/9/2021	DATE - 2021/03/26	REVISED -		SCALE: 1"=20' SHEET 3 OF 3 SHEETS STA. 10+50 TO STA. 13+50			ILLINOIS FED. AID PROJECT		

1 REV. 08/25/21

LEGEND

SYMBOLS	EXISTING	PROPOSED
REFERENCE LINE/CENTERLINE AND STATIONING		
RIGHT OF WAY LINE		
INTERPRETED DRAINAGE AREA		
SWALE		
DITCH		
OUTLET		
STORM SEWER		
FLARED END SECTION		
CATCH BASIN		
INLET		
MANHOLE		
NICOR GAS MAIN	G	
AERIAL LINES	A A	
WATERMAIN	W	
STRUCTURE NO.		1-01
PIPE NO.		1-01

MODEL: Plan 1
FILE NAME: D800097_DRAINAGE_LEGEND_SHEET.dgn

TranSmart
411 South Wells Street Suite 1000
Chicago, Illinois 60607

USER NAME = malahan	DESIGNED - AKC	REVISED -	
	DRAWN - AKC	REVISED -	
PLOT SCALE = 0.16668633 / in.	CHECKED - PKT	REVISED -	
PLOT DATE = 3/29/2021	DATE - 2021/03/26	REVISED -	

STATE OF ILLINOIS
DEPARTMENT OF TRANSPORTATION

DRAINAGE LEGEND

SCALE: NTS | SHEET 1 OF 1 SHEETS | STA. | TO STA.

F.A.I. RTE	SECTION	COUNTY	TOTAL SHEETS	SHEET NO.
57	(139 HBR-6	KANKAKEE	202	73

CONTRACT NO. 66863

ILLINOIS | FED. AID PROJECT

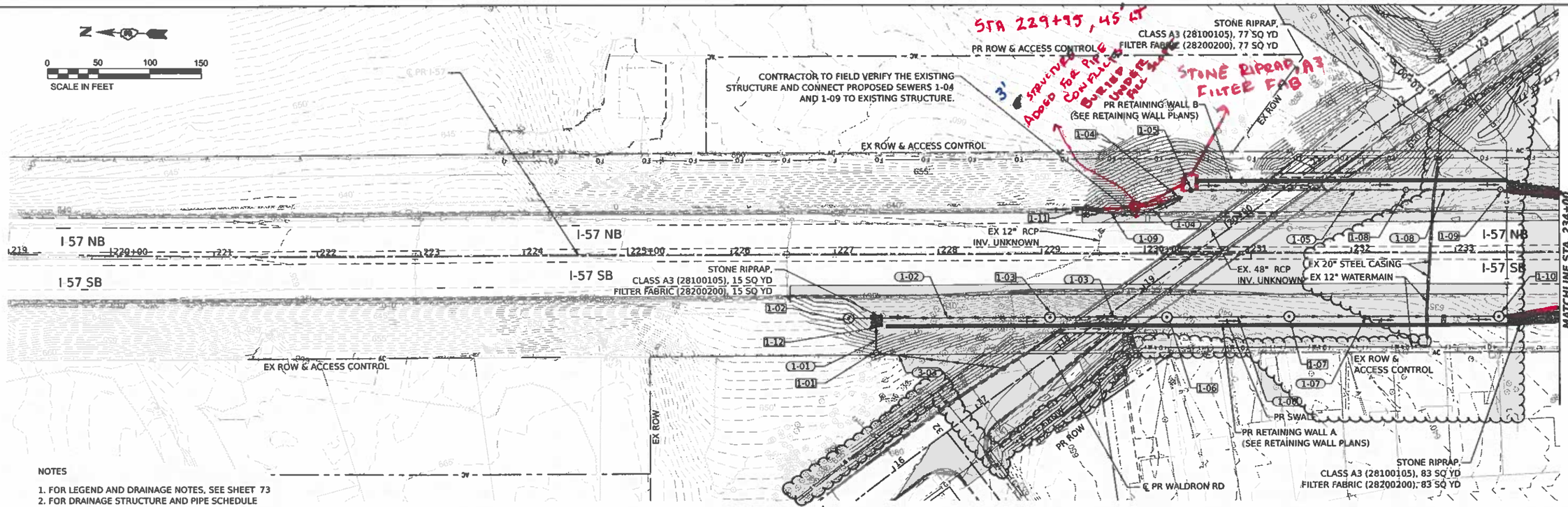

NOTES

1. FOR LEGEND AND DRAINAGE NOTES, SEE SHEET 73
2. FOR DRAINAGE STRUCTURE AND PIPE SCHEDULE SEE SHEETS 27 and 28
3. EXISTING UNDERDRAIN LOCATIONS ARE BASED ON THE BEST INFORMATION AVAILABLE. CONTRACTOR SHALL MAINTAIN EXISTING UNDERDRAIN SYSTEM IN WORKING CONDITION. ANY DAMAGE TO THE EXISTING UNDERDRAINS TO REMAIN AS A RESULT OF HIS/HER OPERATIONS SHALL BE REPAIRED TO THE ENGINEER'S SATISFACTION AT THE CONTRACTOR'S EXPENSE.
4. THE EXISTING WATER MAIN LOCATION AND DEPTH ARE APPROXIMATE AS PER BEST INFORMATION AVAILABLE AND TO BE FIELD VERIFIED. CONTRACTOR TO CONFIRM THAT THE PROPOSED STORM SEWER AND WATER MAIN HORIZONTAL AND VERTICAL CLEARANCE REQUIREMENTS ARE MET AS PER IEPA. CONTRACTOR TO AVOID DAMAGE TO EXISTING WATER MAIN LINE.

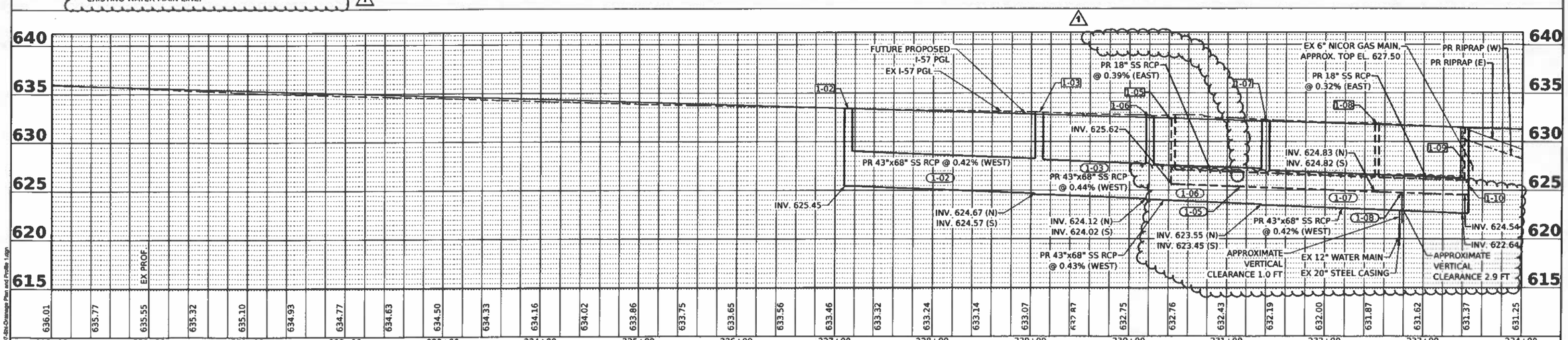

TranSmart, 411 South Wells Street Suite 1000, Chicago, Illinois 60607	USER NAME = adhkc	DESIGNED - AKC	REVISED -
		DRAWN - AKC	REVISED -
	PLOT SCALE = 0.18888833 '/ in.	CHECKED - PKT	REVISED -
	PLOT DATE = 7/9/2021	DATE - 2021/03/26	REVISED -

STATE OF ILLINOIS
DEPARTMENT OF TRANSPORTATION

DRAINAGE PLAN AND PROFILE
ILLINOIS ROUTE 57

SCALE: 1" = 50' | SHEET 1 OF 5 SHEETS | STA. TO STA.

F.A.I. RTE.	SECTION	COUNTY	TOTAL SHEETS	SHEET NO.
57	139 HBR-6	KANKAKEE	202	74

CONTRACT NO. 66997
ILLINOIS | FED. AID PROJECT

MODEL: Plan 1
FILE NAME: D266997-Sht-Drainage Plan and Profile 1.dgn

REV. 08/26/21

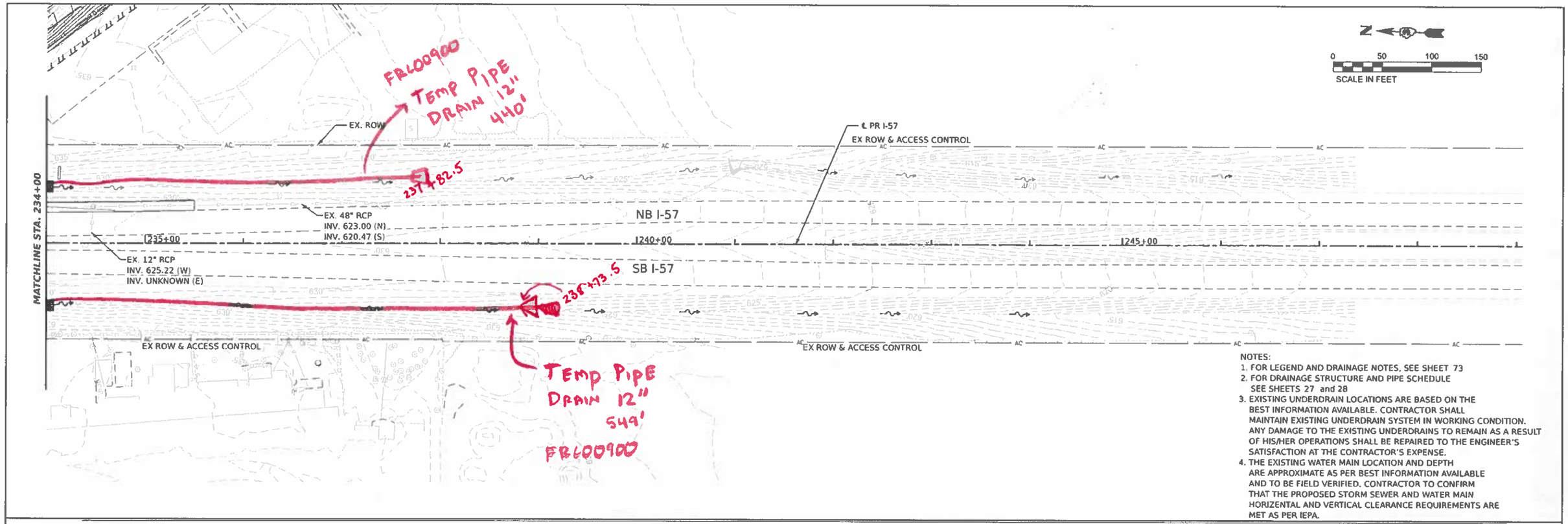

NOTES:

1. FOR LEGEND AND DRAINAGE NOTES, SEE SHEET 73
2. FOR DRAINAGE STRUCTURE AND PIPE SCHEDULE SEE SHEETS 27 and 28
3. EXISTING UNDERDRAIN LOCATIONS ARE BASED ON THE BEST INFORMATION AVAILABLE. CONTRACTOR SHALL MAINTAIN EXISTING UNDERDRAIN SYSTEM IN WORKING CONDITION. ANY DAMAGE TO THE EXISTING UNDERDRAINS TO REMAIN AS A RESULT OF HIS/HER OPERATIONS SHALL BE REPAIRED TO THE ENGINEER'S SATISFACTION AT THE CONTRACTOR'S EXPENSE.
4. THE EXISTING WATER MAIN LOCATION AND DEPTH ARE APPROXIMATE AS PER BEST INFORMATION AVAILABLE AND TO BE FIELD VERIFIED. CONTRACTOR TO CONFIRM THAT THE PROPOSED STORM SEWER AND WATER MAIN HORIZENTAL AND VERTICAL CLEARANCE REQUIREMENTS ARE MET AS PER IEPA.

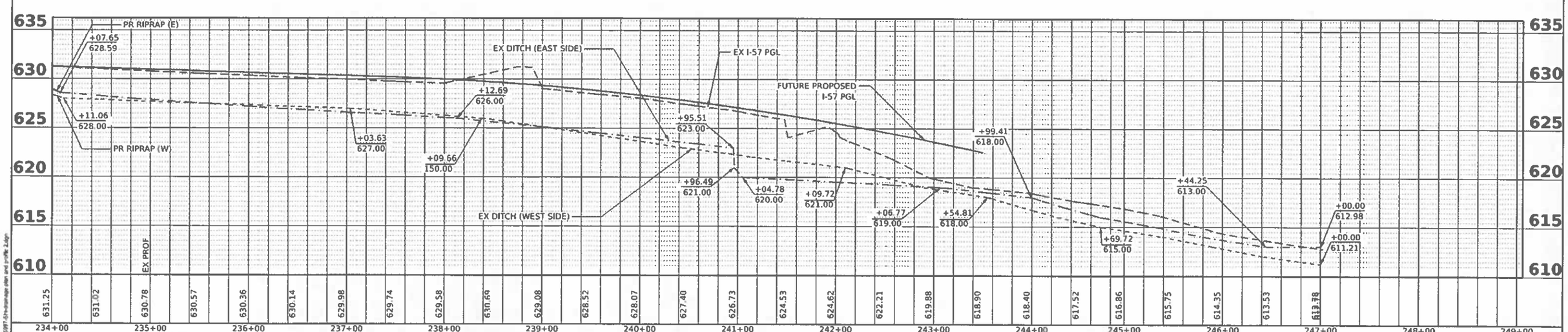

TranSmart 411 South Wells Street Suite 1000 Chicago, Illinois 60607	USER NAME = nsalehian	DESIGNED - AKC	REVISED -	STATE OF ILLINOIS DEPARTMENT OF TRANSPORTATION	DRAINAGE PLAN AND PROFILE ILLINOIS ROUTE 57	F.A.I. RTE. 57	SECTION 139 HBR-6
		DRAWN - AKC	REVISED -			COUNTY KANKAKEE	TOTAL SHEETS 202 / SHEET NO. 75
	PLOT SCALE = 0.1666633 ' / in.	CHECKED - PKT	REVISED -			CONTRACT NO. 66997	
	PLOT DATE = 3/29/2021	DATE - 2021/03/26	REVISED -		SCALE: 1" = 50' SHEET 2 OF 5 SHEETS STA. TO STA.	ILLINOIS FED. AID PROJECT	

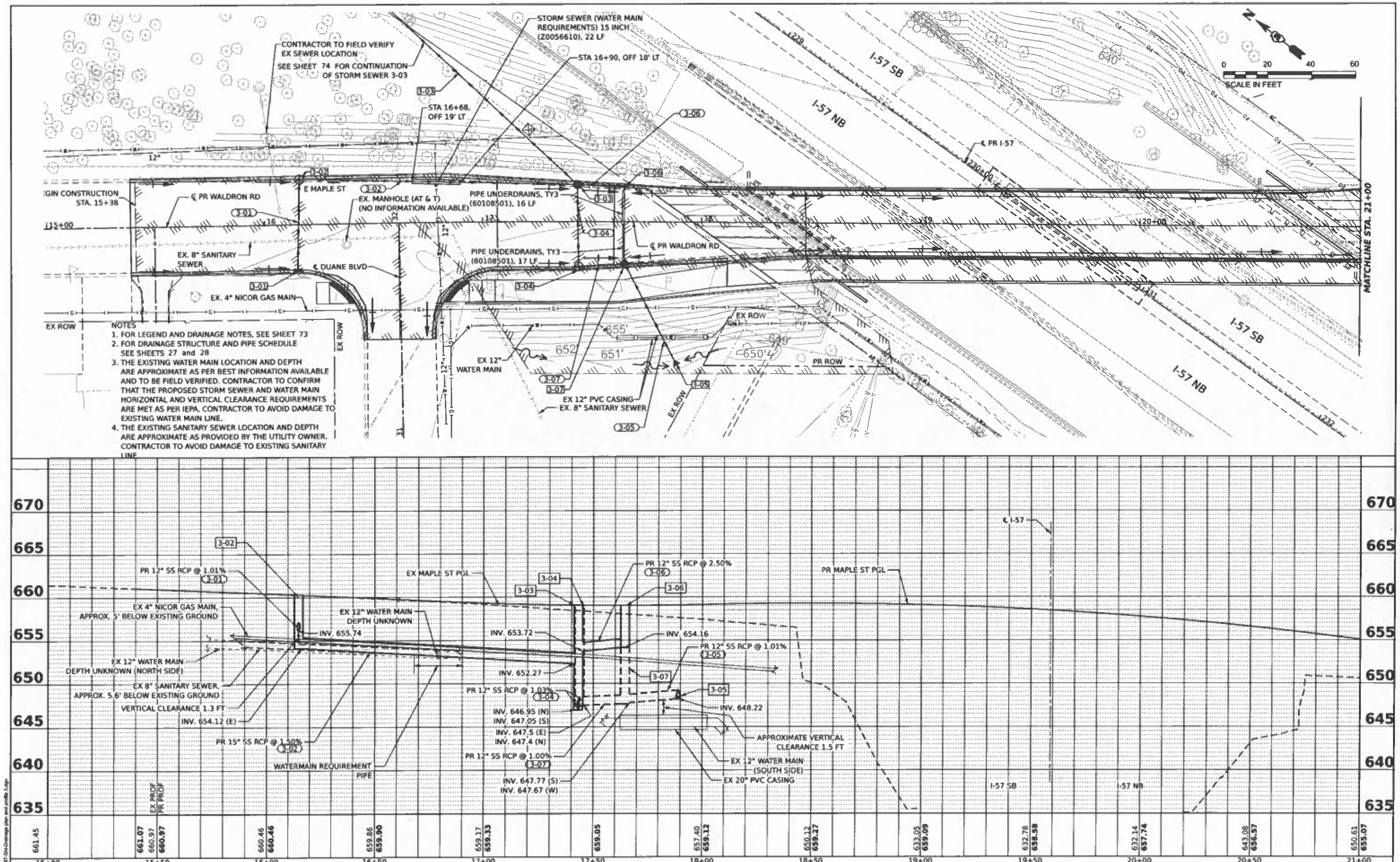

TranSmart 411 South Wells Street Suite 1000 Chicago, Illinois 60607	USER NAME = pshkc	DESIGNED - AKC	REVISED -
		DRAWN - AKC	REVISED -
	PLOT SCALE = 0.0000833' / in.	CHECKED - PKT	REVISED -
	PLOT DATE = 7/9/2021	DATE - 2021/07/09	REVISED -

STATE OF ILLINOIS
DEPARTMENT OF TRANSPORTATION

DRAINAGE PLAN AND PROFILE
WALDRON ROAD

SCALE: 1" = 20' | SHEET 3 OF 5 SHEETS | STA. | TO STA.

F.A.I. RTE.	SECTION	COUNTY	TOTAL SHEETS	SHEET NO.
57	139 HBR-6	KANKAKEE	202	76
		CONTRACT NO. 68997		
		ILLINOIS	FED. AID PROJECT	

MODEL: Plan 3
FILE NAME: D:\68997-Sht-Drainage plan and profile 3.dgn

REVISED ENTIRE SHEET 8/25/2021

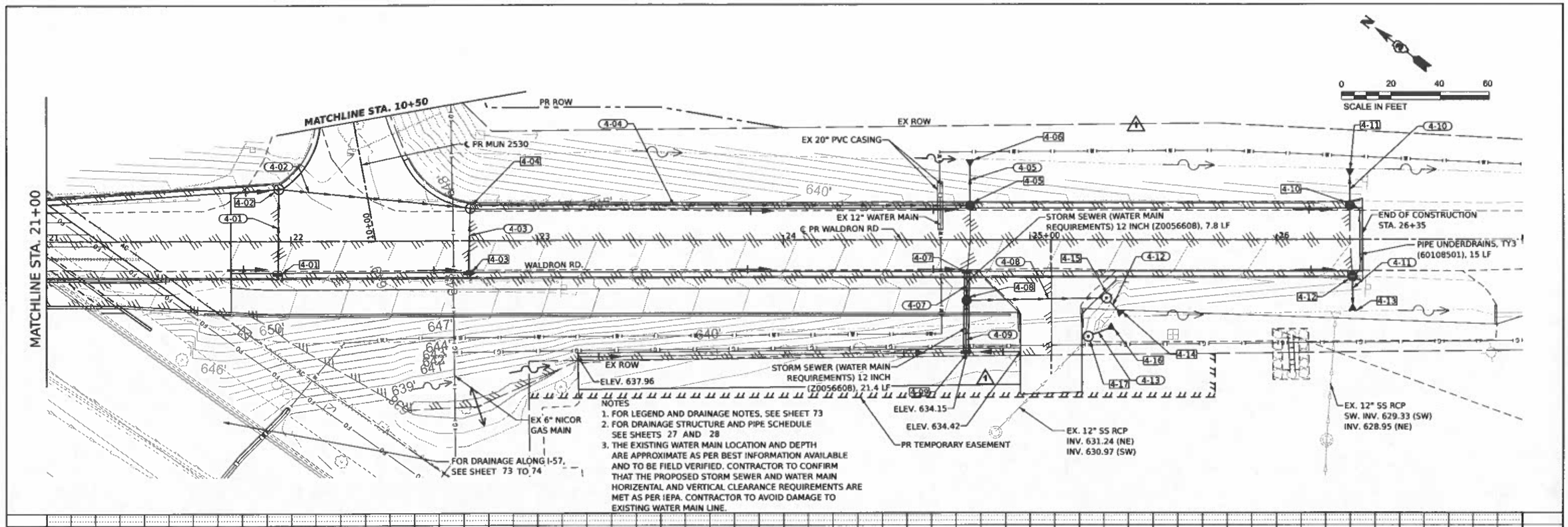

MODEL: Plan 4
FILE NAME: D360697-Sht-Drainage Plan and Profile 4.dgn

TranSmart
411 South Wells Street Suite 1000
Chicago, Illinois 60607

USER NAME = pshAc	DESIGNED - AKC	REVISED -	
	DRAWN - AKC	REVISED -	
PLOT SCALE = 0.18000833 ' / in.	CHECKED - PKT	REVISED -	
PLOT DATE = 7/9/2021	DATE - 2021/03/26	REVISED -	

STATE OF ILLINOIS
DEPARTMENT OF TRANSPORTATION

DRAINAGE PLAN AND PROFILE
WALDRON ROAD

SCALE: SHEET 4 OF 5 SHEETS STA. TO STA.

F.A.I. RTE.	SECTION	COUNTY	TOTAL SHEETS	SHEET NO.
57	139 HBR-6	KANKAKEE	202	77
		CONTRACT NO. 68997		
		ILLINOIS FED. AID PROJECT		

REVISED ENTIRE SHEET 8/25/2021

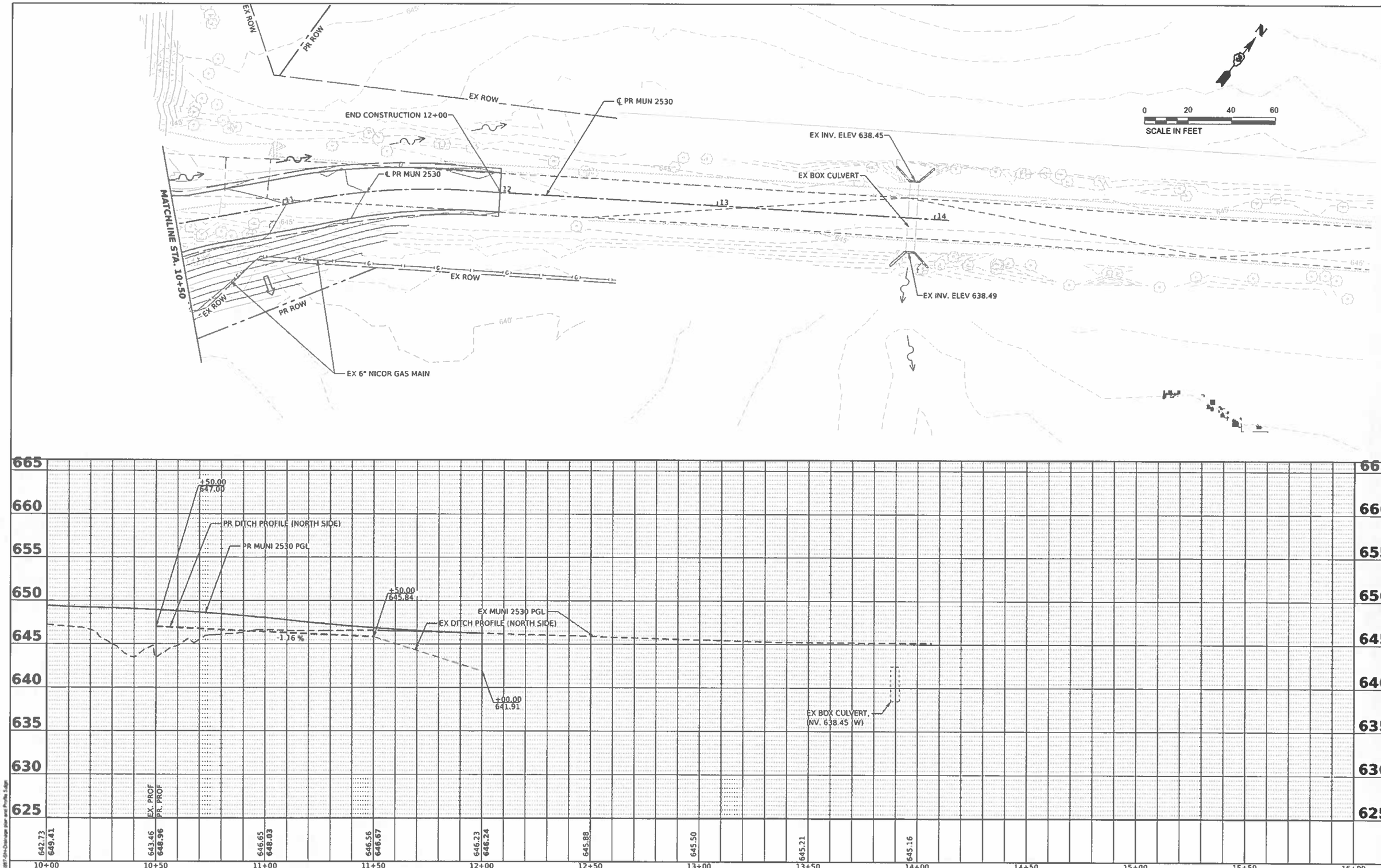

TranSmart
411 South Wells Street Suite 1000
Chicago, Illinois 60607

USER NAME = rsalehan	DESIGNED - AKC	REVISED -	
	DRAWN - AKC	REVISED -	
PLOT SCALE = 0.19666333 ' / in.	CHECKED - PKT	REVISED -	
PLOT DATE = 3/26/2021	DATE - 2021/03/26	REVISED -	

STATE OF ILLINOIS
DEPARTMENT OF TRANSPORTATION

DRAINAGE PLAN AND PROFILE
MUNICIPLE ROAD 2530

SCALE: 1" = 20' | SHEET 5 OF 5 SHEETS | STA. | TO STA.

F.A.I. RTE.	SECTION	COUNTY	TOTAL SHEETS	SHEET NO.
57	139 HBR-6	KANKAKEE	202	78

CONTRACT NO. 66997
ILLINOIS | FED. AID PROJECT

MODEL: Plan 5
FILE NAME: D:\0066997-D4-Drainage plan and Profile 5.dgn

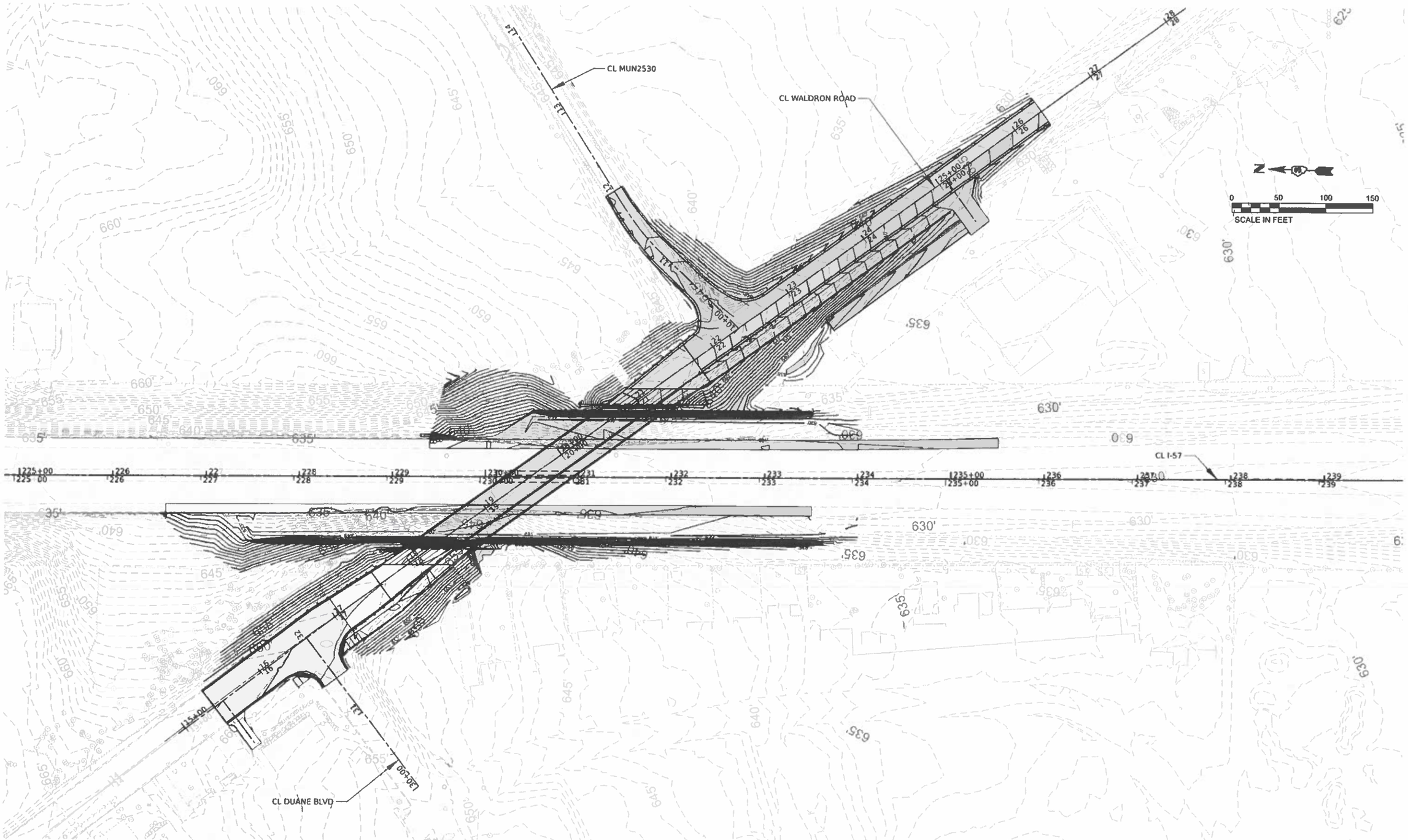

MODEL: Plan 1
FILE NAME: D360997-Site-Grading.dgn

TranSmart
411 South Wells Street Suite 1000
Chicago, Illinois 60607

USER NAME = mattarlon	DESIGNED - BJD	REVISED - 5/5/2021	
	DRAWN - BJD	REVISED -	
PLOT SCALE = 0.1666667 ' / in.	CHECKED - TW	REVISED -	
PLOT DATE = 3/29/2021	DATE - 2021/03/26	REVISED -	

STATE OF ILLINOIS
DEPARTMENT OF TRANSPORTATION

I-57 & WALDRON ROAD
GRADING PLAN

SCALE 1" = 50' | SHEET 1 OF 1 SHEETS | STA. | TO STA.

F.A.I. RTE.	SECTION	COUNTY	TOTAL SHEETS	SHEET NO.
57	139 HBR-6	KANKAKEE	202	79

CONTRACT NO. 66997

ILLINOIS | FED. AID PROJECT

STATE OF ILLINOIS
DEPARTMENT OF TRANSPORTATION
DIVISION OF HIGHWAYS

PLAT OF HIGHWAYS

F.A.I. 57 (I–57) AT WALDRON ROAD
SECTION: 139HBR–6
KANKAKEE COUNTY
JOB NO. : R–93–005–20

PARCEL NUMBER	PARCEL INDEX NUMBER	OWNER	SHEET NUMBER	PROPERTY ACQUIRED BY
		COVER SHEET	1	
		ALIGNMENT SHEET	2	
3AAL001	16-17-04-411-004	SAAD L. LABAN AND MONA N. LABAN, AS JOINT TENANTS	3	
3AAL002	16-07-04-413-005	SAAD L. LABAN AND MONA N. LABAN, AS JOINT TENANTS	4	
3AAL003TE	16-17-04-412-002	FAITH REFORMED CHURCH	4	
3AAL004	16-17-04-409-002	KATIE J. GLASS, A DIVORCED PERSON NOT SINCE REMARRIED	3	
3AAL005	16-17-04-409-001	MP PROPERTIES OF KANKAKEE, LLC, AN ILLINOIS LIMITED LIABILITY COMPANY	3	
3AAL006	16-17-04-403-047	NICHOLAS R. DUSENBURY	3	

REGION 2 DISTRICT 3

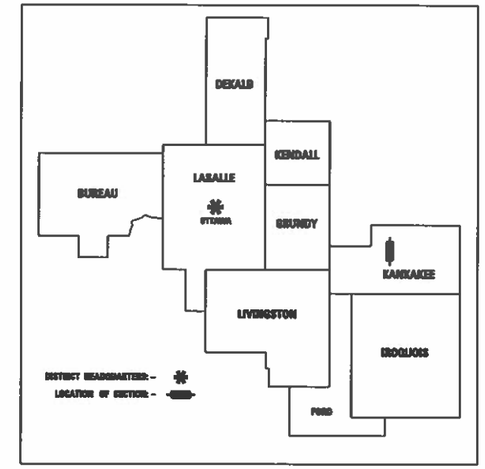

R 13W.

T. 30N.

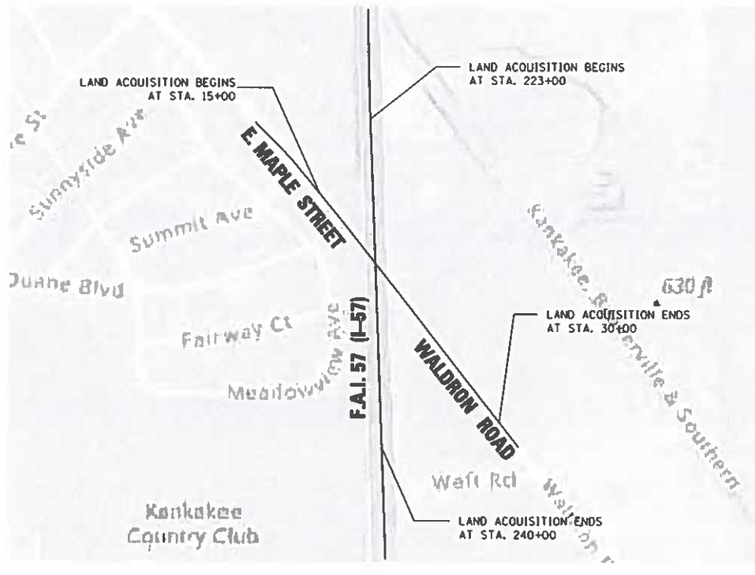

N

LEGEND

- U.S. GOVERNMENT SECTION LINE
- U.S. GOVERNMENT QUARTER SECTION LINE
- PROPERTY (DEED) LINE
- EXISTING CENTERLINE
- EXISTING RIGHT OF WAY LINE
- PROPOSED RIGHT OF WAY LINE
- TEMPORARY EASEMENT
- SECTION CORNER
- IRON PIPE OR ROD FOUND
- RIGHT-OF-WAY MARKER FOUND
- BRASS PLAQUE FOUND
- SNO SURVEY NAIL FOUND
- FIRE HYDRANT
- GUY WIRE
- SIGN
- WATER VALVE
- UTILITY PEDESTAL
- UTILITY POLE
- INLET
- MANHOLE
- CENTERLINE
- PROPERTY LINE
- SET 5/8" RB

LOCATION MAP

0 600 1200 1800

SCALE 1" = 600'

Renwick & Associates, Inc.
Professional Engineers & Land Surveyors
1504 Gardner Circle, Suite 4 W Odenna, IL 61820

MODEL: SHPOOLNAMES
FILE NAME: IPLA.DGN

USER NAME = MATTHEW MITCHELL	DESIGNED -	REVISED -	
	DRAWN - M.M. (RENWICK)	REVISED -	
PLOT SCALE = 1" = 50'	CHECKED -	REVISED -	
PLOT DATE = 06/03/2020	DATE -	REVISED -	

STATE OF ILLINOIS
DEPARTMENT OF TRANSPORTATION

PLAT OF HIGHWAYS

PROJECT | JOB NO. R-93-005-20
SCALE: 1"=50' | SHEET 1 OF 4 SHEETS | STA. 223+00 TO STA. 234+00

F.A.I. RTE.	SECTION	COUNTY	TOTAL SHEETS	SHEET NO.
57	139 HBR-6	KANKAKEE	202	80
I 57 @ WALDRON ROAD		CONTRACT NO. 66997		

ILLINOIS | FED. AID PROJECT

SE ¼ OF SECTION 4, R. 30 N., R. 13 W., OF THE 2ND P.M.

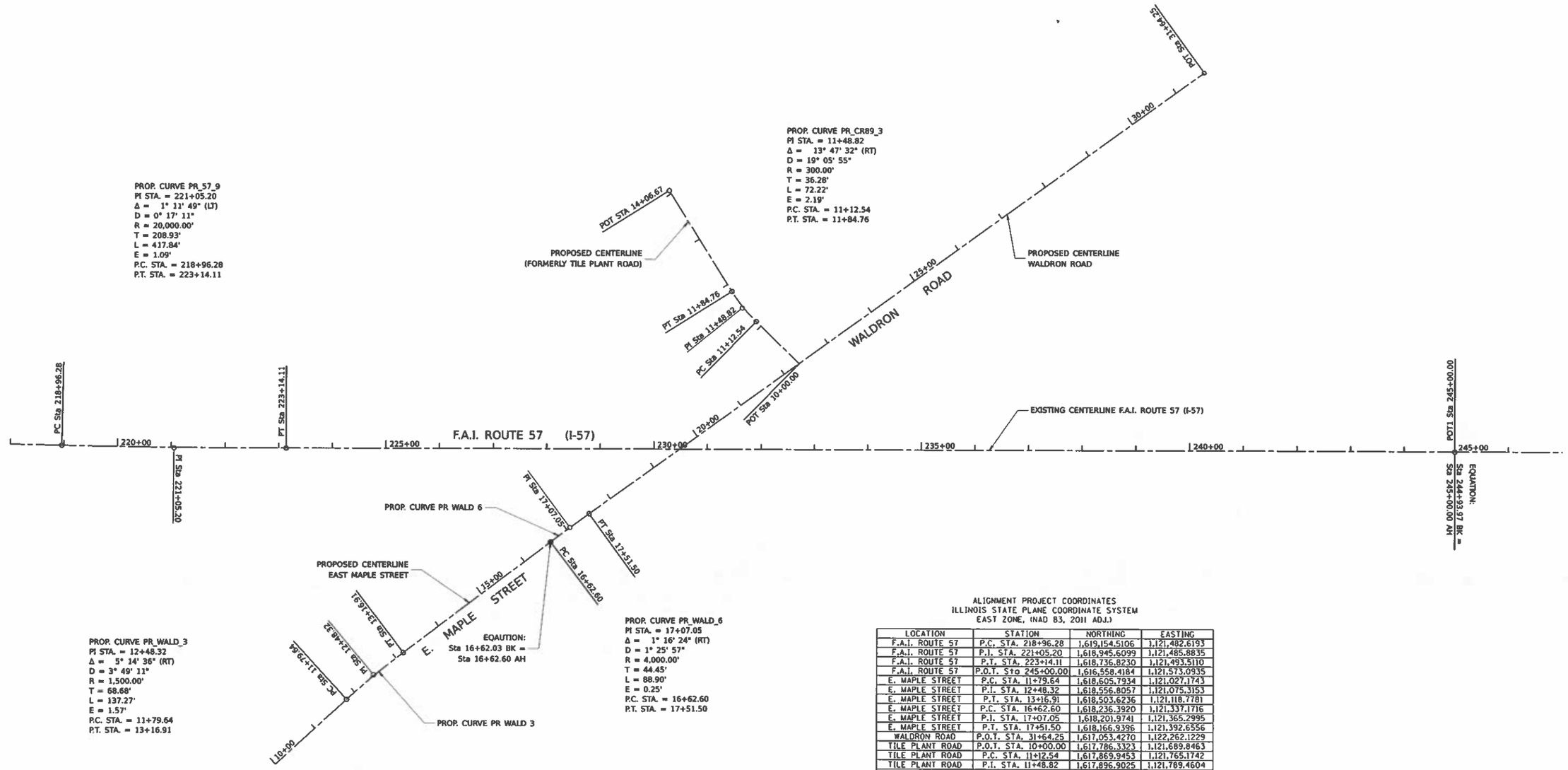

ALIGNMENT PROJECT COORDINATES
ILLINOIS STATE PLANE COORDINATE SYSTEM
EAST ZONE, (NAD 83, 2011 ADJ.)

LOCATION	STATION	NORTHING	EASTING
F.A.I. ROUTE 57	P.C. STA. 218+96.28	1,619,154.5106	1,121,482.6193
F.A.I. ROUTE 57	P.I. STA. 221+05.20	1,618,945.6099	1,121,485.8835
F.A.I. ROUTE 57	P.T. STA. 223+14.11	1,618,736.8230	1,121,493.5110
F.A.I. ROUTE 57	P.O.T. S to 245+00.00	1,616,558.4184	1,121,573.0935
E. MAPLE STREET	P.C. STA. 11+79.64	1,618,605.7934	1,121,027.1743
E. MAPLE STREET	P.I. STA. 12+48.32	1,618,556.8057	1,121,075.3153
E. MAPLE STREET	P.T. STA. 13+16.91	1,618,503.6236	1,121,118.7781
E. MAPLE STREET	P.C. STA. 16+62.60	1,618,236.3920	1,121,337.1716
E. MAPLE STREET	P.I. STA. 17+07.05	1,618,201.9741	1,121,365.2995
E. MAPLE STREET	P.T. STA. 17+51.50	1,618,166.9396	1,121,392.6556
WALDRON ROAD	P.O.T. STA. 31+64.25	1,617,053.4270	1,122,262.1229
TILE PLANT ROAD	P.O.T. STA. 10+00.00	1,617,786.3323	1,121,689.8463
TILE PLANT ROAD	P.C. STA. 11+12.54	1,617,869.9453	1,121,765.1742
TILE PLANT ROAD	P.I. STA. 11+48.82	1,617,896.9025	1,121,789.4604
TILE PLANT ROAD	P.T. STA. 11+84.76	1,617,917.2925	1,121,819.4729
TILE PLANT ROAD	P.O.T. STA. 14+06.67	1,618,042.0013	1,122,003.0347

I, KEITH W. STODDARD, HEREBY CERTIFY THAT I AM A PROFESSIONAL LAND SURVEYOR OF THE STATE OF ILLINOIS, THAT THE SURVEY OF PROPOSED WALDRON ROAD OVER F.A.I. 57 (I-57) WAS MADE BY KEITH W. STODDARD UNDER MY DIRECTION, AND THAT THE SURVEY IS TRUE AND COMPLETE AS SHOWN TO THE BEST OF MY KNOWLEDGE AND BELIEF, THAT ALL MONUMENTS AND MARKS ARE OF THE CHARACTER AND OCCUPY THE POSITION SHOWN THEREON, AND ARE SUFFICIENT TO ENABLE THE SURVEY TO BE RETRACED. THIS PROFESSIONAL SERVICE CONFORMS TO THE CURRENT ILLINOIS MINIMUM STANDARDS FOR A BOUNDARY SURVEY.

DATE:

ILLINOIS PROFESSIONAL LAND SURVEYOR
NO. 35-3122

11-30-2020
EXPIRATION DATE

KEITH W. STODDARD 3122 PROFESSIONAL LAND SURVEYOR STATE OF ILLINOIS OTTAWA, ILLINOIS

0 100 200 300
SCALE 1" = 100'

NOTE: GRID BEARINGS AND DISTANCES SHOWN HEREON ARE REFERENCED TO THE ILLINOIS STATE PLANE COORDINATE SYSTEM, EAST ZONE, (NAD 83, 2011 ADJ.).
ALL AREAS BASED ON GROUND DISTANCES.
GRID TO GROUND COMBINED FACTOR = 1.0000346

Renwick & Associates, Inc.
Professional Engineers & Land Surveyors
1304 Gardel Circle, Suite 4 V Ottawa, IL 61350

$HOOSLIBAKES
STYLES

USER NAME = MATTHEW MITCHELL	DESIGNED -	REVISED -	
	DRAWN - MM (RENWICK)	REVISED -	
PLOT SCALE = 1"=100'	CHECKED -	REVISED -	
PLOT DATE = 06/03/2020	DATE -	REVISED -	

STATE OF ILLINOIS
DEPARTMENT OF TRANSPORTATION

PLAT OF HIGHWAYS

SCALE: 1"=100' | PROJECT | SHEET 2 OF 4 SHEETS | JOB NO. R-93-005-20 | STA. 223+00 TO STA. 234+00

F.A.I. RTE.	SECTION	COUNTY	TOTAL SHEETS	SHEET NO.
57	139 HBR-6	KANKAKEE	202	81
I 57 @ WALDRON ROAD		CONTRACT NO. 66997		
		ILLINOIS	FED. AID PROJECT	

SE 1/4 OF SEC. 4, T. 30N., R. 13W. OF THE 2ND P.M.

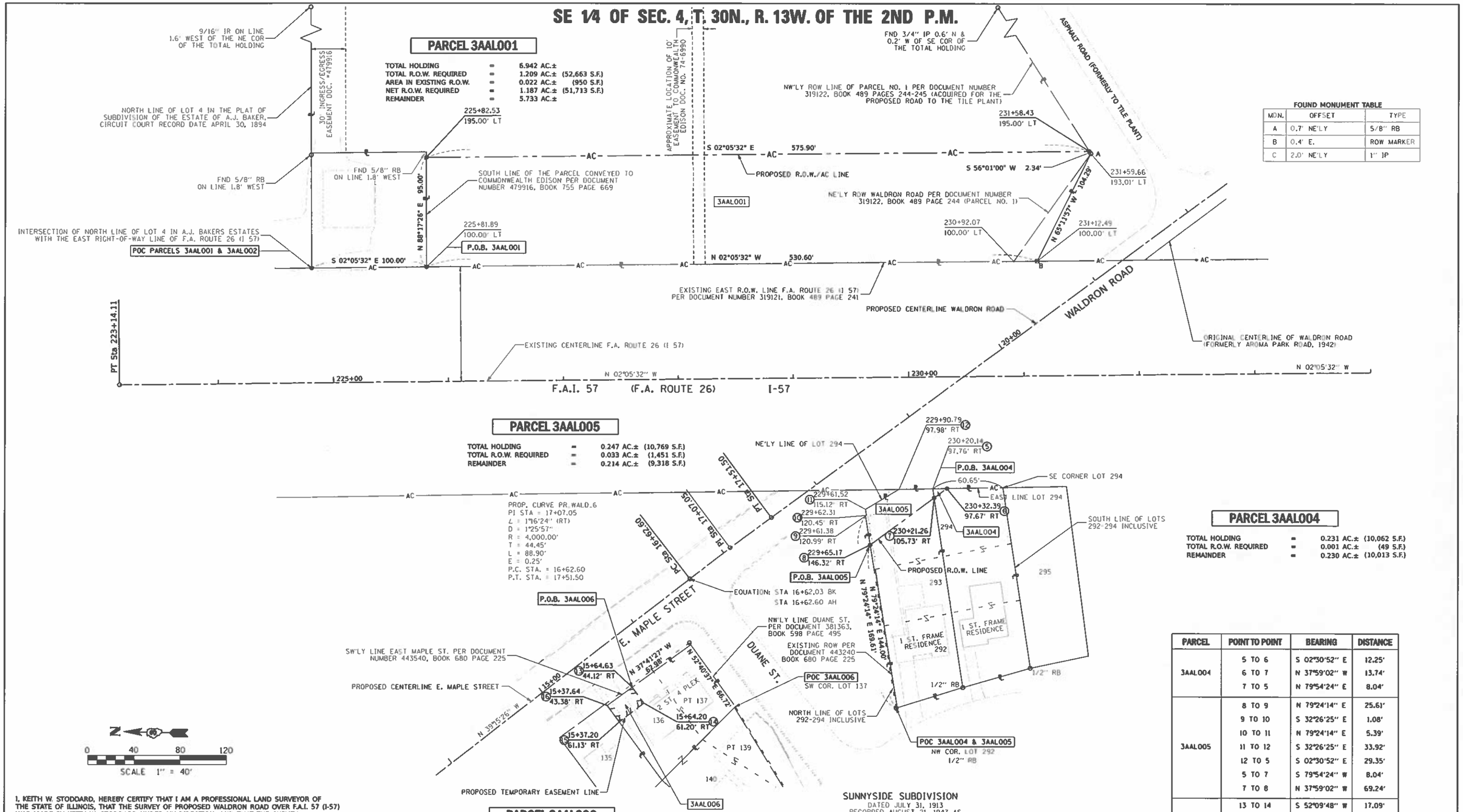

PARCEL 3AAL001

TOTAL HOLDING	=	6.942 AC.±
TOTAL R.O.W. REQUIRED	=	1.209 AC.± (52,663 S.F.)
AREA IN EXISTING R.O.W.	=	0.022 AC.± (950 S.F.)
NET R.O.W. REQUIRED	=	1.187 AC.± (51,713 S.F.)
REMAINDER	=	5.733 AC.±

FOUND MONUMENT TABLE

MON.	OFFSET	TYPE
A	0.7' NE'LY	5/8" RB
B	0.4' E.	ROW MARKER
C	2.0' NE'LY	1" IP

PARCEL 3AAL004

TOTAL HOLDING	=	0.231 AC.± (10,062 S.F.)
TOTAL R.O.W. REQUIRED	=	0.001 AC.± (49 S.F.)
REMAINDER	=	0.230 AC.± (10,013 S.F.)

PARCEL 3AAL006

TOTAL HOLDING	=	0.305 AC.± (13,273 S.F.)
TEMPORARY EASEMENT	=	0.011 AC.± (470 S.F.)
PURPOSE: ENTRANCE CONSTRUCTION		

PARCEL	POINT TO POINT	BEARING	DISTANCE
3AAL004	5 TO 6	S 02°30'52" E	12.25'
	6 TO 7	N 37°59'02" W	13.74'
	7 TO 5	N 79°54'24" E	8.04'
3AAL005	8 TO 9	N 79°24'14" E	25.61'
	9 TO 10	S 32°26'25" E	1.08'
	10 TO 11	N 79°24'14" E	5.39'
	11 TO 12	S 32°26'25" E	33.92'
	12 TO 5	S 02°30'52" E	29.35'
	5 TO 7	S 79°54'24" W	8.04'
	7 TO 8	N 37°59'02" W	69.24'
3AAL006	13 TO 14	S 52°09'48" W	17.09'
	14 TO 15	N 39°06'35" W	27.00'
	15 TO 16	N 52°09'48" E	17.76'
	16 TO 13	S 37°41'27" E	27.00'

I, KEITH W. STODDARD, HEREBY CERTIFY THAT I AM A PROFESSIONAL LAND SURVEYOR OF THE STATE OF ILLINOIS, THAT THE SURVEY OF PROPOSED WALDRON ROAD OVER F.A.I. 57 (I-57) WAS MADE BY KEITH W. STODDARD UNDER MY DIRECTION, AND THAT THE SURVEY IS TRUE AND COMPLETE AS SHOWN TO THE BEST OF MY KNOWLEDGE AND BELIEF, THAT ALL MONUMENTS AND MARKS ARE OF THE CHARACTER AND OCCUPY THE POSITION SHOWN THEREON, AND ARE SUFFICIENT TO ENABLE THE SURVEY TO BE RETRACED. THIS PROFESSIONAL SERVICE CONFORMS TO THE CURRENT ILLINOIS MINIMUM STANDARDS FOR A BOUNDARY SURVEY.

DATE:_____

ILLINOIS PROFESSIONAL LAND SURVEYOR NO. 35-3122

11-30-2020
EXPIRATION DATE

KEITH W. STODDARD 3122 PROFESSIONAL LAND SURVEYOR STATE OF ILLINOIS OTTAWA, ILLINOIS

NOTE: GRID BEARINGS AND DISTANCES SHOWN HEREON ARE REFERENCED TO THE ILLINOIS STATE PLANE COORDINATE SYSTEM, EAST ZONE, (NAD 83, 2011 ADJ.). ALL AREAS BASED ON GROUND DISTANCES. GRID TO GROUND COMBINED FACTOR = 1.0000346.

SE 1/4 OF SEC. 4, T. 30N., R. 13W. OF THE 2ND P.M.

Renwick & Associates, Inc.
Professional Engineers & Land Surveyors
1304 Gardel Circle, Suite 4 ▼ Ottawa, IL 61350

MODEL: SMOODLAMKES
FILE NAME: SP4.DGN

USER NAME = RYAN THOMPSON	DESIGNED -	REVISED -	
	DRAWN - RMT (RENWICK)	REVISED -	
PLOT SCALE = 1"=40'	CHECKED -	REVISED -	
PLOT DATE = 06/03/2020	DATE -	REVISED -	

STATE OF ILLINOIS
DEPARTMENT OF TRANSPORTATION

PLAT OF HIGHWAYS

SCALE: 1"=40' | PROJECT | SHEET 3 OF 4 SHEETS | JOB NO. R-93-005-20 | STA. 223+00 TO STA. 234+00

F.A.I RTE.	SECTION	COUNTY	TOTAL SHEETS	SHEET NO.
57	139 HBR-6	KANKAKEE	202	82
I 57 @ WALDRON ROAD		CONTRACT NO. 66997		
	ILLINOIS	FED. AID PROJECT		

SE 1/4 OF SEC. 4, T. 30 N., R. 13 W. OF THE 2ND P.M.

PARCEL 3AAL002

TOTAL HOLDING	=	29.126 AC.±
TOTAL R.O.W. REQUIRED	=	0.274 AC.± (11,943 S.F.)
AREA IN EXISTING R.O.W.	=	0.225 AC.± (9,794 S.F.)
NET R.O.W. REQUIRED	=	0.049 AC.± (2,149 S.F.)
REMAINDER	=	28.852 AC.±

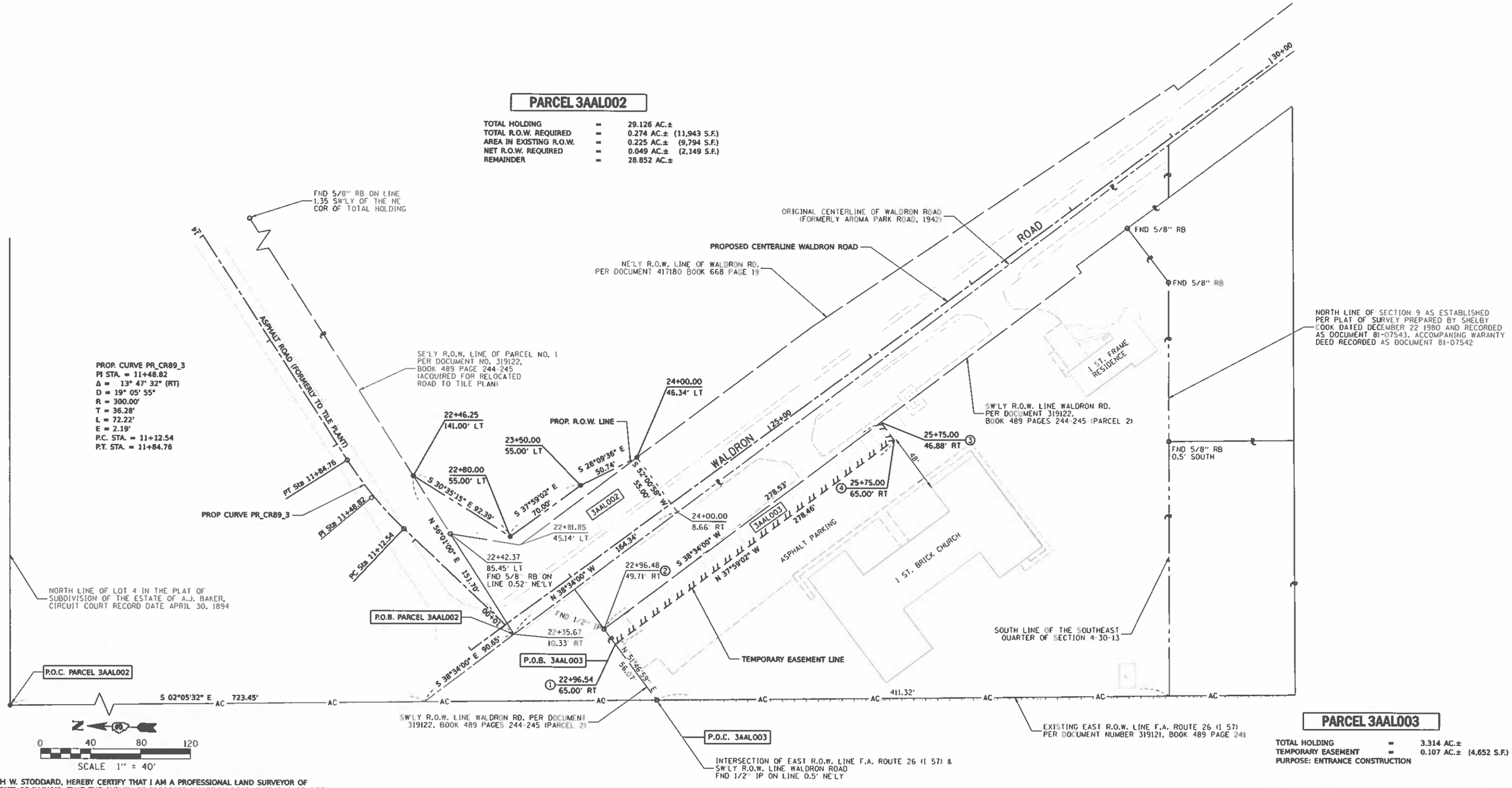

PARCEL 3AAL003

TOTAL HOLDING	=	3.314 AC.±
TEMPORARY EASEMENT	=	0.107 AC.± (4,652 S.F.)
PURPOSE: ENTRANCE CONSTRUCTION		

PARCEL	POINT TO POINT	BEARING	DISTANCE
3AAL003	1 TO 2	N 51°46'59" E	15.29'
	3 TO 4	S 52°00'58" W	18.12'

I, KEITH W. STODDARD, HEREBY CERTIFY THAT I AM A PROFESSIONAL LAND SURVEYOR OF THE STATE OF ILLINOIS, THAT THE SURVEY OF PROPOSED WALDRON ROAD OVER F.A.I. 57 (I-57) WAS MADE BY KEITH W. STODDARD UNDER MY DIRECTION, AND THAT THE SURVEY IS TRUE AND COMPLETE AS SHOWN TO THE BEST OF MY KNOWLEDGE AND BELIEF, THAT ALL MONUMENTS AND MARKS ARE OF THE CHARACTER AND OCCUPY THE POSITION SHOWN THEREON, AND ARE SUFFICIENT TO ENABLE THE SURVEY TO BE RETRACED. THIS PROFESSIONAL SERVICE CONFORMS TO THE CURRENT ILLINOIS MINIMUM STANDARDS FOR A BOUNDARY SURVEY.

DATE: _____

ILLINOIS PROFESSIONAL LAND SURVEYOR NO. 35-3122

11-30-2020
EXPIRATION DATE

KEITH W. STODDARD 3122 PROFESSIONAL LAND SURVEYOR STATE OF ILLINOIS OTTAWA, ILLINOIS

NOTE: GRID BEARINGS AND DISTANCES SHOWN HEREON ARE REFERENCED TO THE ILLINOIS STATE PLANE COORDINATE SYSTEM, EAST ZONE, (NAD 83, 2011 ADJ.). ALL AREAS BASED ON GROUND DISTANCES. GRID TO GROUND COMBINED FACTOR = 1.0000346.

Renwick & Associates, Inc.
Professional Engineers & Land Surveyors
1904 Gardner Circle, Suite 4 V Ottawa, IL 61350

MODEL: SHOREINAMES
FILE NAME: SPIELS

USER NAME = RYAN THOMPSON	DESIGNED -	REVISED -	
	DRAWN - RMT (RENWICK)	REVISED -	
PLOT SCALE = 1"=40'	CHECKED -	REVISED -	
PLOT DATE = 06/03/2020	DATE -	REVISED -	

STATE OF ILLINOIS
DEPARTMENT OF TRANSPORTATION

PLAT OF HIGHWAYS

	PROJECT	JOB NO. R-93-005-20
SCALE: 1"=40'	SHEET 4 OF 4 SHEETS	STA. 223+00 TO STA. 234+00

F.A.I. RTE.	SECTION	COUNTY	TOTAL SHEETS	SHEET NO.
57	139 HBR-6	KANKAKEE	202	83
I 57 @ WALDRON ROAD		CONTRACT NO. 66997		
		ILLINOIS FED. AID PROJECT		

SIGN NUMBERING CODE

SB-WP-01

DIRECTION OF TRAFFIC

EB - EASTBOUND
WB - WESTBOUND
NB - NORTHBOUND
SB - SOUTHBOUND

SIGN PANEL NUMBER

MOUNTING TYPE

BS - BREAKAWAY STEEL POSTS
WP - WOOD POSTS
TS - TELESCOPING STEEL POSTS
PM - POLE MOUNTED

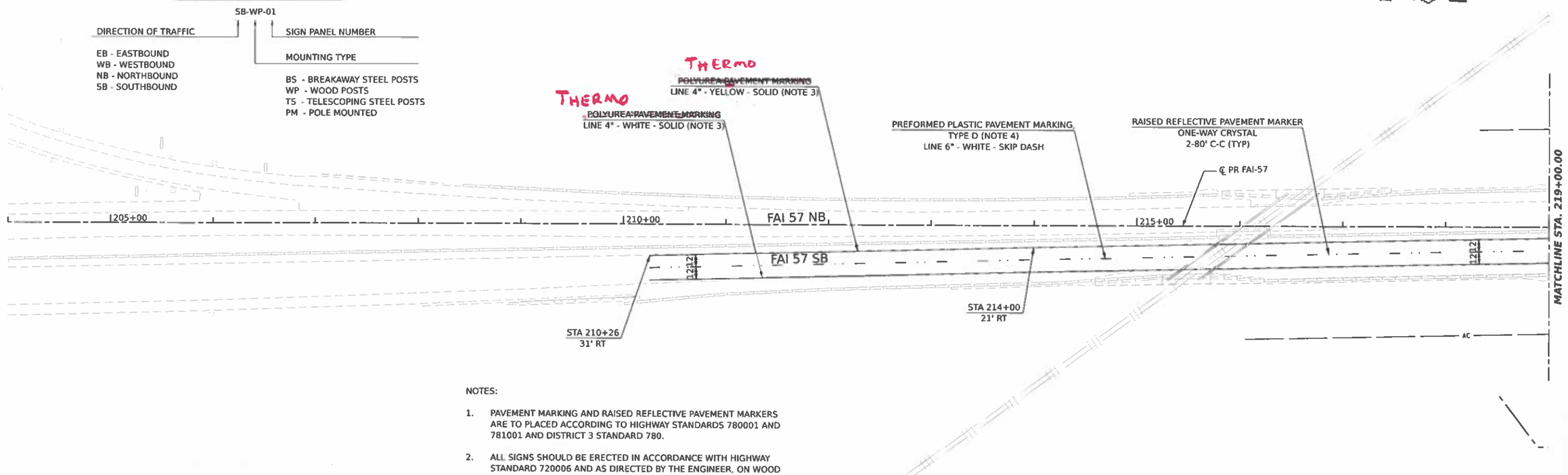

NOTES:

1. PAVEMENT MARKING AND RAISED REFLECTIVE PAVEMENT MARKERS ARE TO PLACED ACCORDING TO HIGHWAY STANDARDS 780001 AND 781001 AND DISTRICT 3 STANDARD 780.
2. ALL SIGNS SHOULD BE ERECTED IN ACCORDANCE WITH HIGHWAY STANDARD 720006 AND AS DIRECTED BY THE ENGINEER, ON WOOD SIGN SUPPORTS UNLESS OTHERWISE NOTED.
3. GROOVING FOR RECESSED PAVEMENT MARKING, 5"
4. GROOVING FOR RECESSED PAVEMENT MARKING, 7"
5. SHOULDER RUMBLE STRIPS, 16 INC
   SB - STA 218+82 TO STA 235+61
   NB - STA 228+05 TO STA 242+35

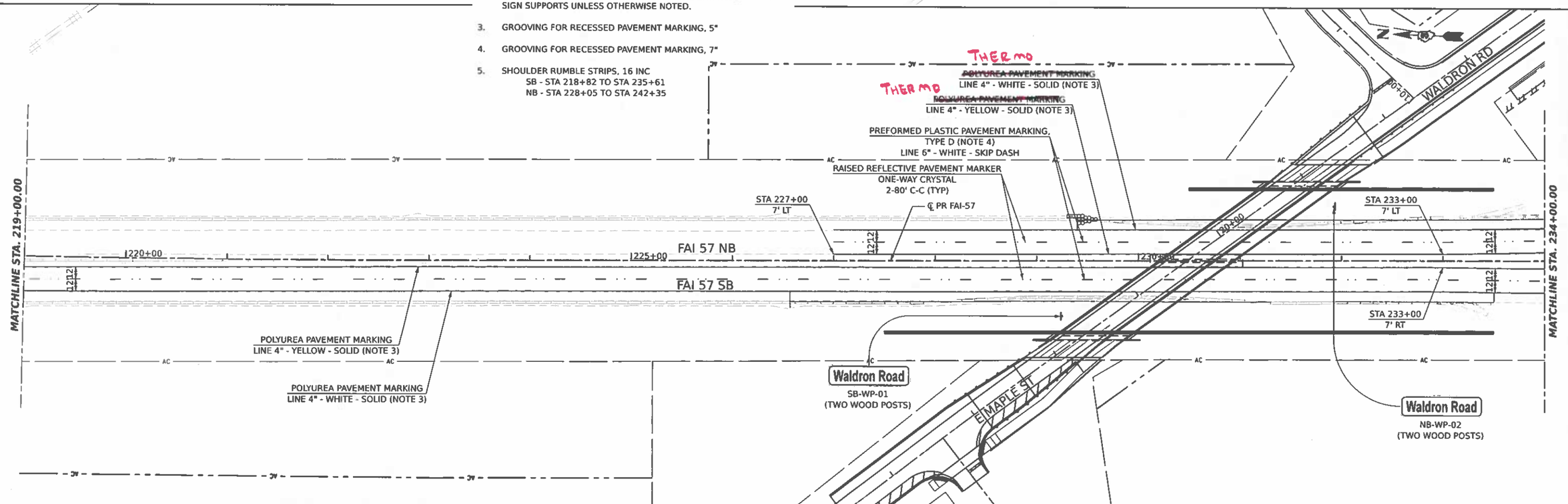

Hutchison Engineering, Inc. Jacksonville Moline Peoria Shorewood Since 1945	USER NAME = nsalehian	DESIGNED - Designed By	REVISED - Revised By1	STATE OF ILLINOIS DEPARTMENT OF TRANSPORTATION	FAI 57 & WALDRON ROAD PAVEMENT MARKING AND SIGNING PLAN
		DRAWN - Drawn By	REVISED - Revised By2		
	PLOT SCALE = 0.16666633 ' / in.	CHECKED - Checked By	REVISED - Revised By3		
	PLOT DATE = 3/29/2021	DATE - Checked Date	REVISED - Revised By4		SCALE: 1"=50' SHEET 1 OF 4 SHEETS STA. 204+00 TO STA. 234+00

F.A.I. RTE.	SECTION	COUNTY	TOTAL SHEETS	SHEET NO.
57	139 HBR-6	KANKAKEE	202	84

CONTRACT NO. 66997

ILLINOIS FED. AID PROJECT

MODEL: Plan 5
FILE NAME: D366863-Sht-pmk 1.dgn

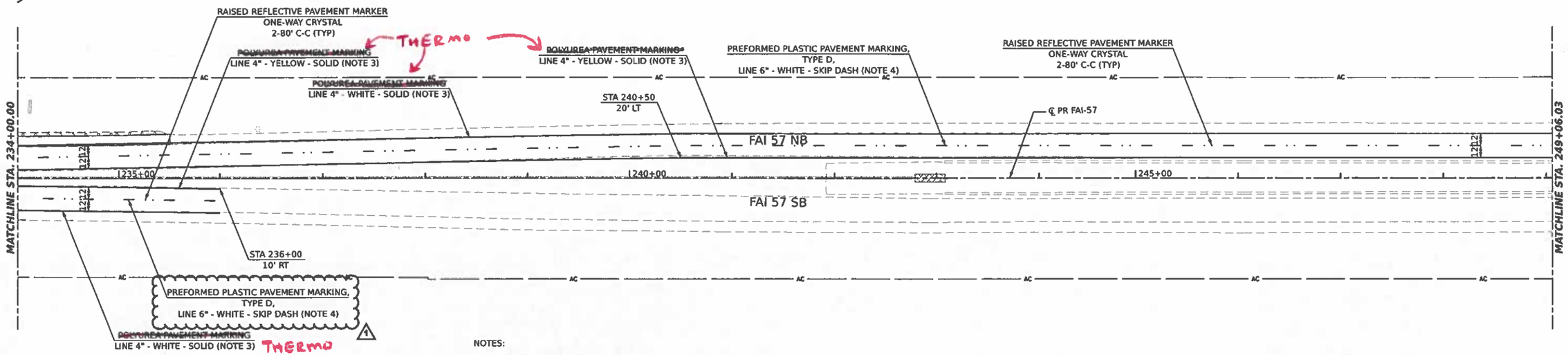

NOTES:

1. PAVEMENT MARKING AND RAISED REFLECTIVE PAVEMENT MARKERS ARE TO PLACED ACCORDING TO HIGHWAY STANDARDS 780001 AND 781001 AND DISTRICT 3 STANDARD 780.
2. ALL SIGNS SHOULD BE ERECTED IN ACCORDANCE WITH HIGHWAY STANDARD 720006 AND AS DIRECTED BY THE ENGINEER, ON WOOD SIGN SUPPORTS UNLESS OTHERWISE NOTED.
3. GROOVING FOR RECESSED PAVEMENT MARKING, 5"
4. GROOVING FOR RECESSED PAVEMENT MARKING, 7"
5. SHOULDER RUMBLE STRIPS, 16 INC
   SB - STA 218+82 TO STA 235+61
   NB - STA 228+05 TO STA 242+35

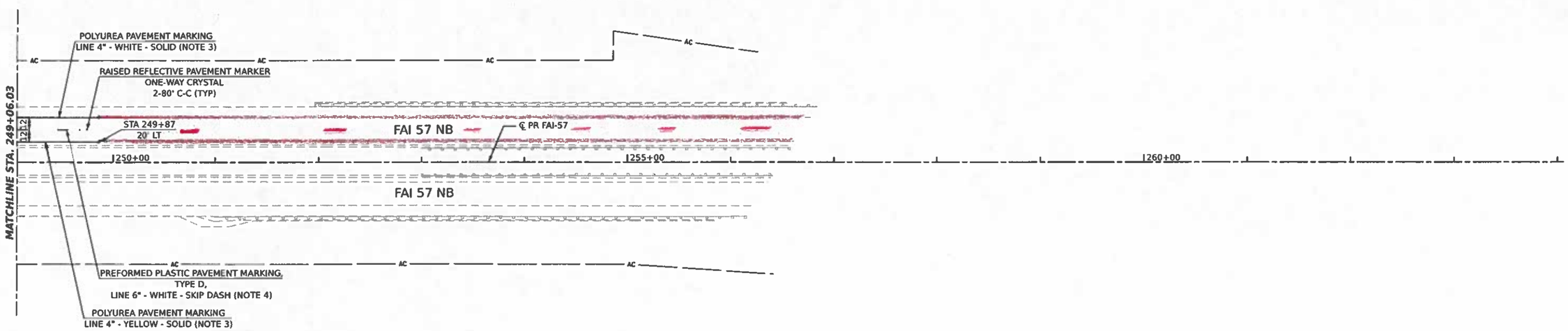

MODEL: Plan 7
FILE NAME: D:\66997-Sheet 2.dgn

Hutchison Engineering, Inc. Jacksonville Moline Peoria Shorewood Since 1945	USER NAME = ashkc	DESIGNED - Designed By	REVISED - Revised By1	STATE OF ILLINOIS DEPARTMENT OF TRANSPORTATION	FAI 57 & WALDRON ROAD PAVEMENT MARKING AND SIGNING PLAN			F.A.I. RTE.	SECTION	COUNTY	TOTAL SHEETS	SHEET NO.
		DRAWN - Drawn By	REVISED - Revised By2					57	139 HBR-6	KANKAKEE	202	85
	PLOT SCALE = 0.16666633 ' / in.	CHECKED - Checked By	REVISED - Revised By3							CONTRACT NO. 66997		
	PLOT DATE = 7/9/2021	DATE - Checked Date	REVISED - Revised By4		SCALE: 1"=50'	SHEET 2 OF 4 SHEETS	STA. 234+00 TO STA. 264+00			ILLINOIS FED. AID PROJECT		

4 REV. 08/25/21

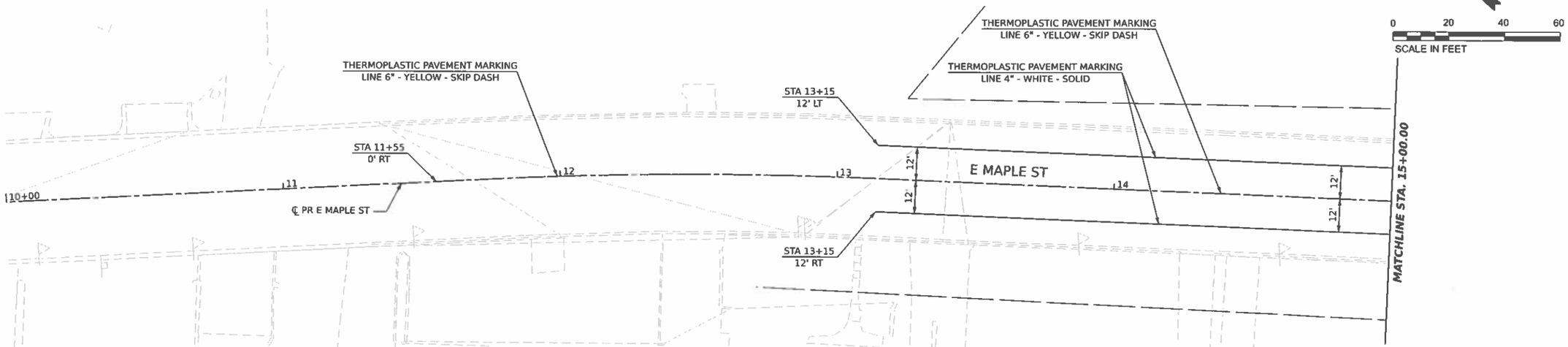

NOTES:

1. PAVEMENT MARKING AND RAISED REFLECTIVE PAVEMENT MARKERS ARE TO PLACED ACCORDING TO HIGHWAY STANDARDS 780001 AND 781001 AND DISTRICT 3 STANDARD 780.
2. ALL SIGNS SHOULD BE ERECTED IN ACCORDANCE WITH HIGHWAY STANDARD 720006 AND AS DIRECTED BY THE ENGINEER, ON WOOD SIGN SUPPORTS UNLESS OTHERWISE NOTED.
3. GROOVING FOR RECESSED PAVEMENT MARKING, 5"
4. GROOVING FOR RECESSED PAVEMENT MARKING, 7"

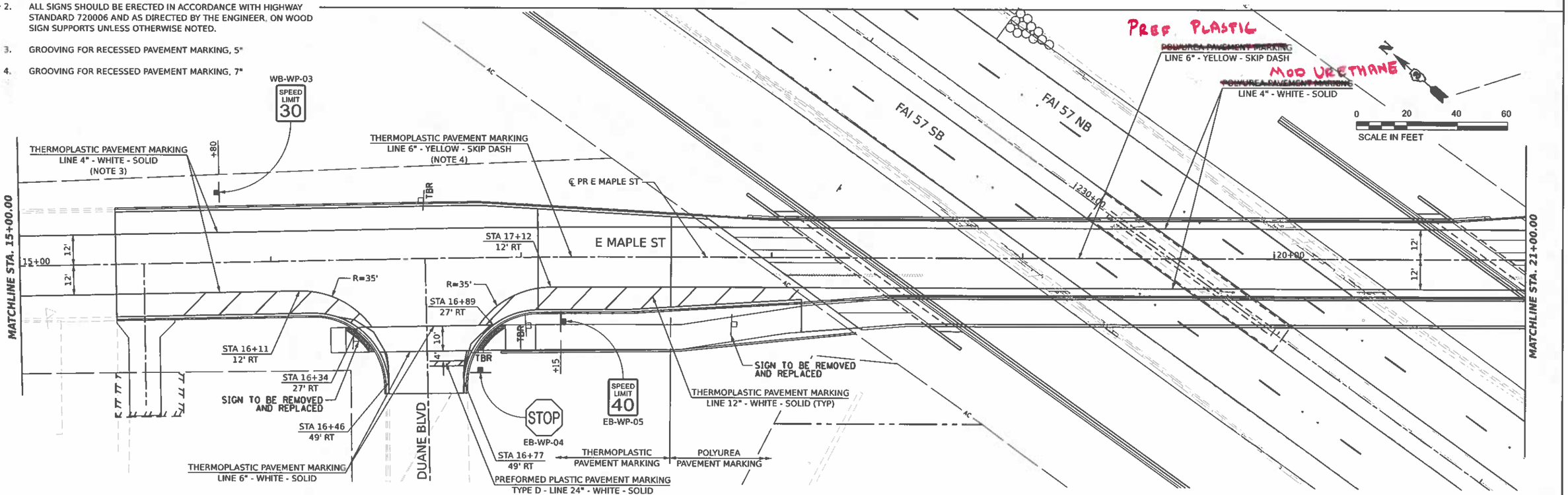

MODEL: Plan 5
FILE NAME: D266863-Sheet3.dgn

Hutchison Engineering, Inc. Jacksonville Moline Peoria Shorewood Since 1945	USERNAME = nealehan	DESIGNED -	REVISED -	STATE OF ILLINOIS DEPARTMENT OF TRANSPORTATION	FAI 57 & WALDRON ROAD PAVEMENT MARKING & SIGNING PLAN	F.A.I. RTE.	SECTION	COUNTY	TOTAL SHEETS	SHEET NO.
		DRAWN -	REVISED -			57	139 HBR-6	KANKAKEE	202	86
	PLOT SCALE = 0.16666633 ' / in.	CHECKED -	REVISED -					CONTRACT NO. 66997		
	PLOT DATE = 3/29/2021	DATE -	REVISED -		SCALE: 1"=20' SHEET 3 OF 4 SHEETS STA. 10+00 TO STA. 21+00			ILLINOIS FED. AID PROJECT		

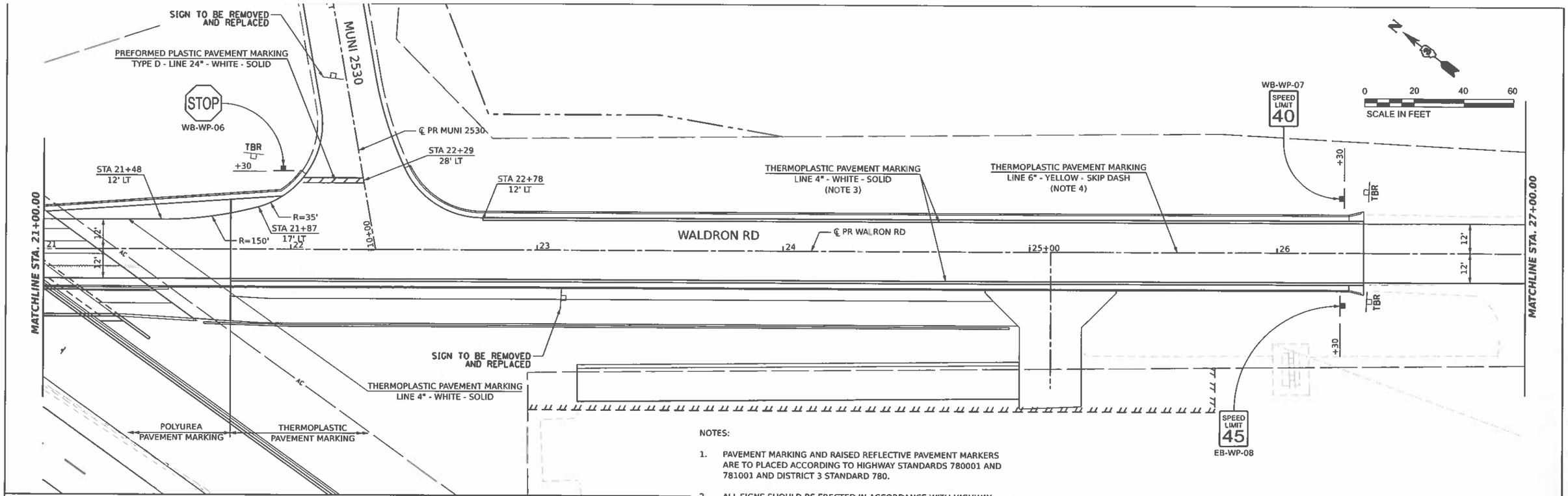

NOTES:

1. PAVEMENT MARKING AND RAISED REFLECTIVE PAVEMENT MARKERS ARE TO PLACED ACCORDING TO HIGHWAY STANDARDS 780001 AND 781001 AND DISTRICT 3 STANDARD 780.
2. ALL SIGNS SHOULD BE ERECTED IN ACCORDANCE WITH HIGHWAY STANDARD 720006 AND AS DIRECTED BY THE ENGINEER, ON WOOD SIGN SUPPORTS UNLESS OTHERWISE NOTED.
3. GROOVING FOR RECESSED PAVEMENT MARKING, 5"
4. GROOVING FOR RECESSED PAVEMENT MARKING, 7"

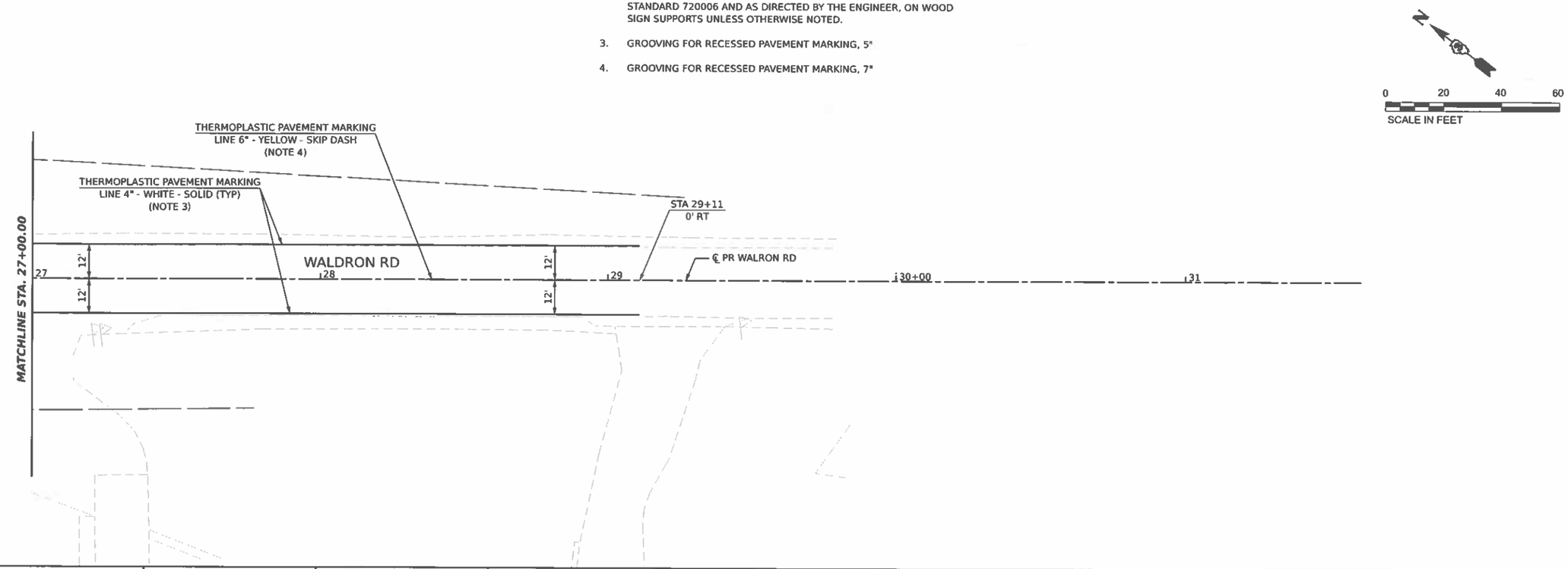

Hutchison Engineering, Inc. Jacksonville Moline Peoria Shorewood Since 1945	USER NAME = nsalehian	DESIGNED -	REVISED -	STATE OF ILLINOIS DEPARTMENT OF TRANSPORTATION	FAI 57 & WALDRON ROAD PAVEMENT MARKING & SIGNING PLAN	F.A.I. RTE. 57	SECTION 139 HBR-6	COUNTY KANKAKEE	TOTAL SHEETS 202 / SHEET NO. 87
		DRAWN -	REVISED -					CONTRACT NO. 66997	
	PLOT SCALE = 0.16666633 ' / in.	CHECKED -	REVISED -						
	PLOT DATE = 3/29/2021	DATE -	REVISED -		SCALE: 1"=20' SHEET 4 OF 4 SHEETS STA. 21+00 TO STA. 31+50		ILLINOIS FED. AID PROJECT		

MODEL: Plan 7
FILE NAME: D598863-Sht-pmk 4.dgn

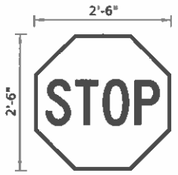

R1-1
TYPE ZZ SHEETING

R2-1
TYPE AP SHEETING

R2-1
TYPE AP SHEETING

R2-1
TYPE AP SHEETING

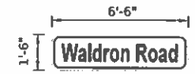

TYPE ZZ SHEETING
WHITE/GREEN BACKGROUND
3/4" BORDER
8" SERIES D LETTERS

NAME	STATION	NAME	STATION	NAME	STATION	NAME	STATION	NAME	STATION
EB-WP-04	16+85	WB-WP-03	15+80	EB-WP-05	17+15	EB-WP-08	26+30	SB-WP-01	229+05
WB-WP-06	21+97			WB-WP-07	26+30			NB-WP-02	232+00

NOTE: TYPE AP SHEETING ON ALL SIGNS UNLESS OTHERWISE NOTED.

MODEL: Tlbblock
FILE NAME: D706963-Sht-Signing Detail 1.dgn

Hutchison Engineering, Inc.
Jacksonville Moline Peoria Shorewood
Since 1945

USER NAME = nsalehian	DESIGNED -	REVISED -
	DRAWN -	REVISED -
PLOT SCALE = 0.16666633 ' / in.	CHECKED -	REVISED -
PLOT DATE = 3/29/2021	DATE -	REVISED -

STATE OF ILLINOIS
DEPARTMENT OF TRANSPORTATION

FAI 57 & WALDRON ROAD
SIGNING DETAILS

SCALE: 1"=100' | SHEET 1 OF 1 SHEETS | STA. N/A | TO STA. N/A

F.A.I. RTE.	SECTION	COUNTY	TOTAL SHEETS	SHEET NO.
57	139 HBR-6	KANKAKEE	202	88

CONTRACT NO. 66997

ILLINOIS | FED. AID PROJECT

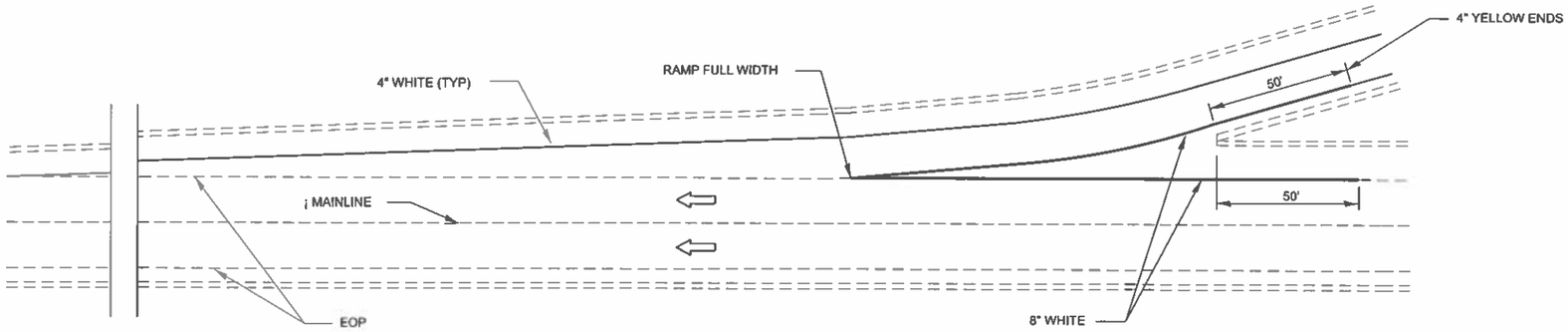

TYPICAL PAVEMENT MARKING FOR ENTRANCE RAMP TERMINALS

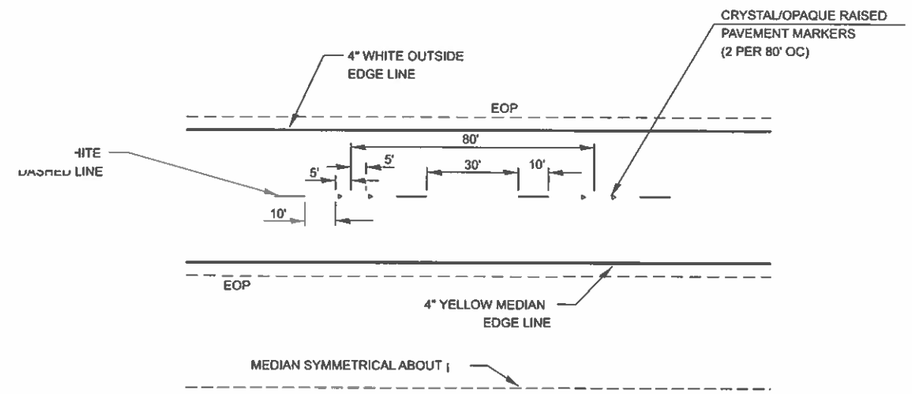

TYPICAL PAVEMENT MARKINGS

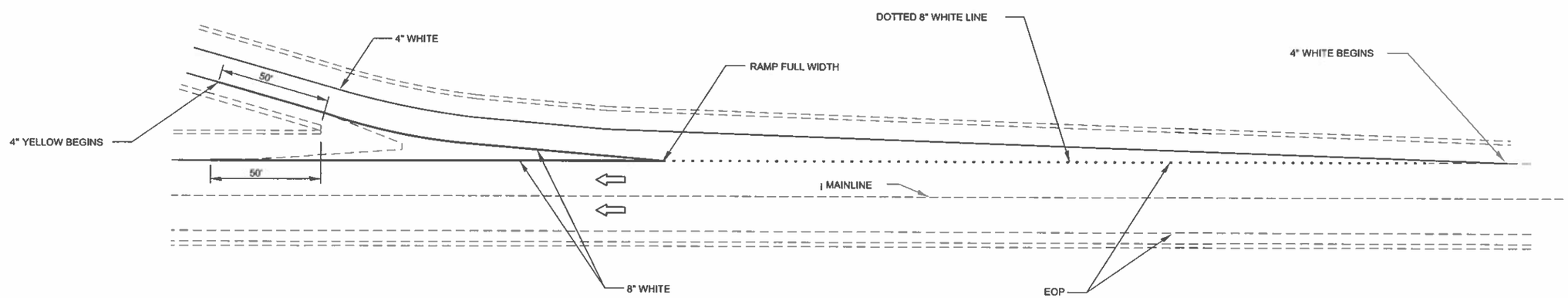

TYPICAL PAVEMENT MARKINGS FOR EXIT RAMP TERMINALS

MODEL: Thickock
FILE NAME: D:\0000853-Sta-Park Detail 1.dgn

Hutchison Engineering, Inc. Jacksonville Moline Peoria Shorewood Since 1945	USER NAME = nsalehian	DESIGNED -	REVISED -	STATE OF ILLINOIS DEPARTMENT OF TRANSPORTATION	FAI 57 & WALDRON ROAD PAVEMENT MARKING DETAIL	F.A.I. RTE.	SECTION	COUNTY	TOTAL SHEETS	SHEET NO.
		DRAWN -	REVISED -			57	139 HBR-6	KANKAKEE	202	89
	PLOT SCALE = 0.16666633 ' / in.	CHECKED -	REVISED -					CONTRACT NO. 66997		
	PLOT DATE = 3/29/2021	DATE -	REVISED -		SCALE: 1"=100' SHEET 1 OF 1 SHEETS STA. N/A TO STA. N/A		ILLINOIS FED. AID PROJECT			

Bench Mark: BM4 Cut square on North Headwall at entrance to Faith Reformed Church located at 2400 Waldron Road. El. 634.41
Existing Structure: S.N. 046-0080 built in 1953 Sta. 230+53.99.
Existing structure is a 4-span reinforced concrete deck on Steel beams supported by abutments and multi-column piers on rock.
The structure length is 234'-5¾" bk. to bk. abuts. and 32'-3" out to out deck.
Includes 6-4" AT & T Conduits

Traffic to be maintained utilizing staged construction.
Salvage: (None)

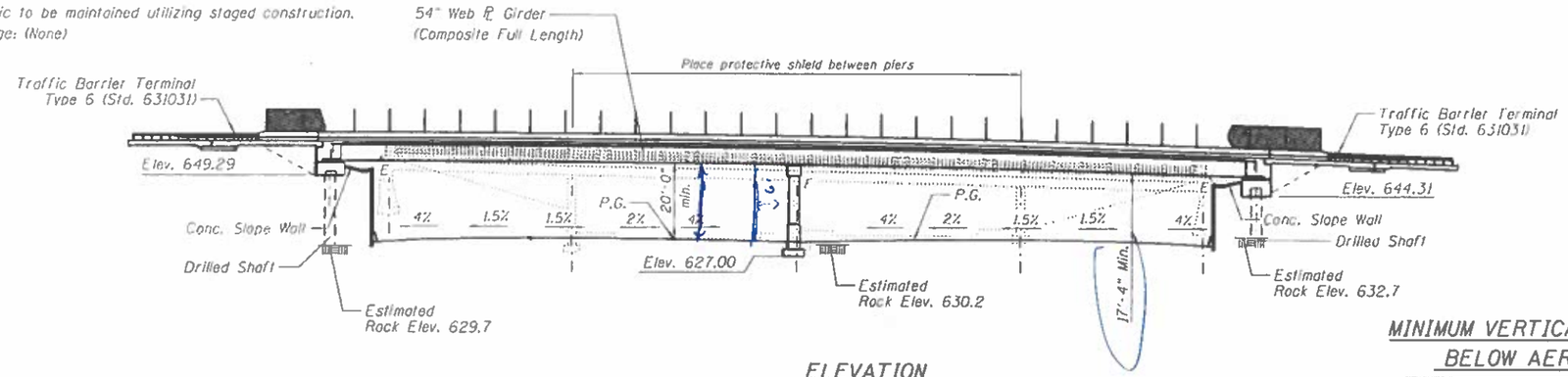

ELEVATION

LOADING HL 93

Allow 50#/sq. ft. for Future Wearing Surface.

DESIGN SPECIFICATIONS

2017 AASHTO LRFD Bridge Design Specifications, 8th Edition

DESIGN STRESSES

Field Units
f'c = 3,500 psi
f'c = 4,000 psi (Superstructure Concrete)
fy = 60,000 psi (Reinforcement)
fy = 50,000 psi (AASHTO M270, Grade 50)

SEISMIC DATA

Seismic Performance Zone (SPZ) = I
Design Spectral Acceleration at 1.0 sec. (S_{D1}) = 0.073
Design Spectral Acceleration at 0.2 sec. (S_{DS}) = 0.125
Soil Site Class = C

MINIMUM VERTICAL CLEARANCE BELOW AERIAL LINES

Station	Offset	Ex. Min. Vert. Cl.	Pr. Min. Vert. Cl.
21+12.46	11.91' Lt	30.49'	26.25'
21+46.26	12.08' Rt	28.44'	24.37'

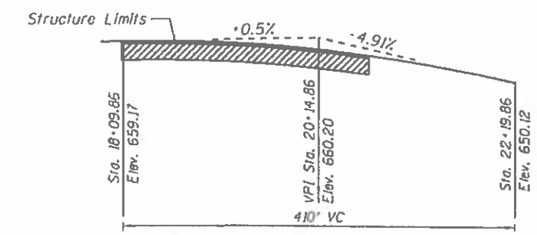

PROFILE GRADE WALDRON ROAD

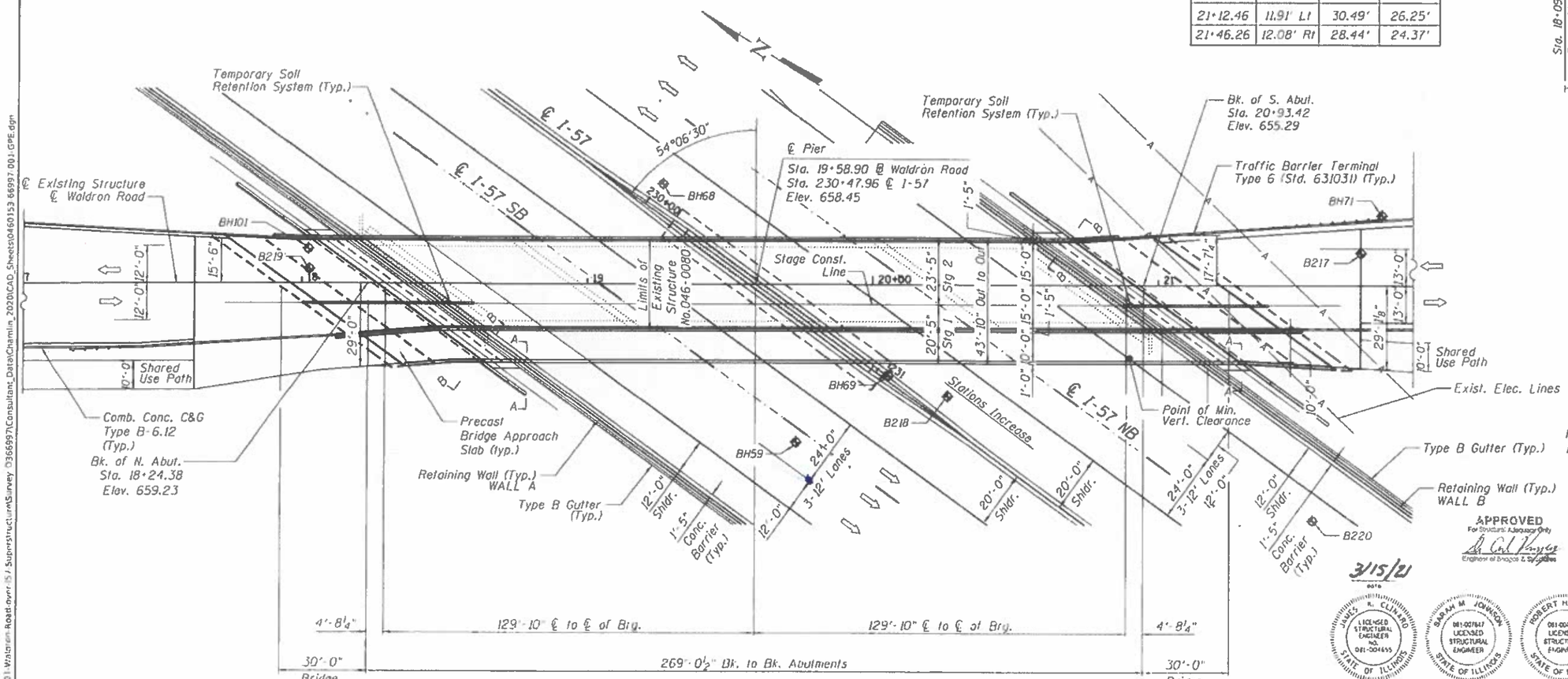

PLAN

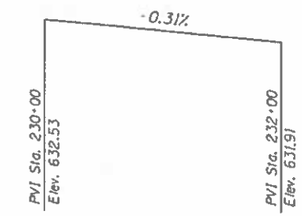

PROFILE GRADE I-57

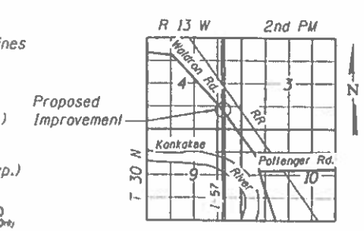

LOCATION SKETCH

APPROVED
For Structural Adequacy Only
Engineer of Bridges & Structures
3/15/21
date

LEGEND

Soil Boring Location

JAMES R. CLINARD — LICENSED STRUCTURAL ENGINEER NO. 081-004455 — STATE OF ILLINOIS
SARAH M. JOHNSON — 081-007847 LICENSED STRUCTURAL ENGINEER — STATE OF ILLINOIS — Substructure only, Sheets 4, 44-45, 48, 51-53 — 3/12/2021 — Sarah M. Johnson — Exp. 11/30/2022
ROBERT H. CURTIS — 081-006348 LICENSED STRUCTURAL ENGINEER — STATE OF ILLINOIS — Substructure only Sheets 46-47 — 3/12/2021 — Robert H. Curtis — Exp. 11/30/2022
signature — PROFESSIONAL DESIGN FIRM LICENSE NO. 184-001117

GENERAL PLAN & ELEVATION
WALDRON ROAD F.A.U. 6184
OVER I-57 FAI-57
SEC. 139HBR-6
KANKAKEE COUNTY
STATION 230+47.96
STRUCTURE NO. 046-0153

Chamlin & Associates

USER NAME =	DESIGNED - JKC	REVISED -
	CHECKED - AJO	REVISED -
PLOT SCALE =	DRAWN - LAG	REVISED -
PLOT DATE =	CHECKED - JKC	REVISED -

STATE OF ILLINOIS
DEPARTMENT OF TRANSPORTATION

GENERAL PLAN & ELEVATION
STRUCTURE NO. 046-0153
SHEET 1 OF 54 SHEETS

F.A.I RTE.	SECTION	COUNTY	TOTAL SHEETS	SHEET NO.
57	139HBR-6	KANKAKEE	202	90
		CONTRACT NO 66997		
		ILLINOIS FED. AID PROJECT		

MODEL: GPE 01
FILE NAME = C:\USERS\11111335.01\Waldron Road\Bridge\S-7 Superstructure\Survey 0366997\Consultant_Data\Chamlin_2020\CAD_Sheets\0460153 66997 001-GPE.dgn
3/12/2021 2:48:08 PM

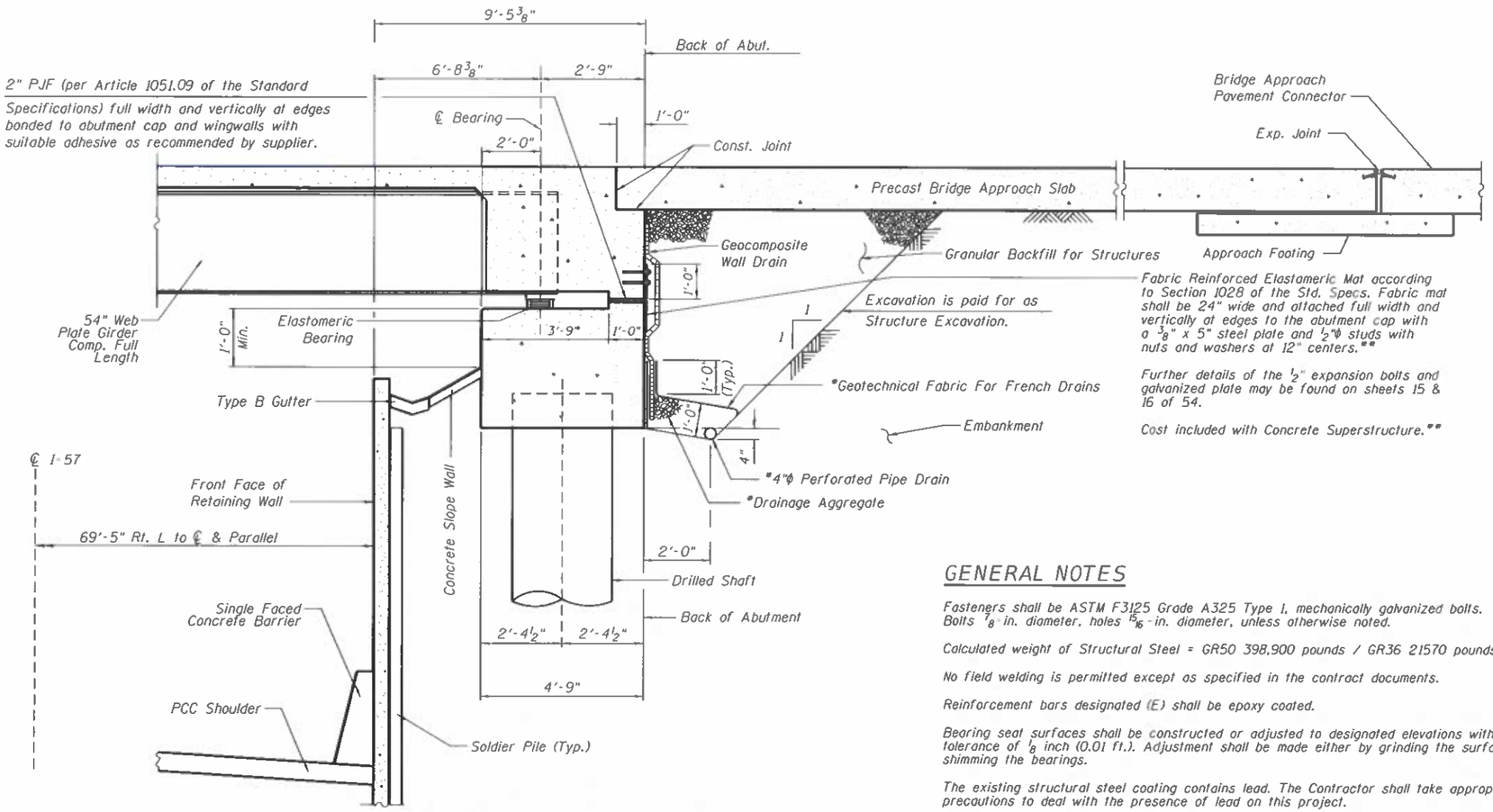

SECTION THRU SEMI INTEGRAL ABUTMENT

(Horiz. dim. ● Rt. L's)

*Included in the cost of Pipe Underdrains for Structures. (See Special Provisions)

Note:

All drainage system components shall extend to 2'-0" from the end of each wingwall except an outlet pipe shall extend until intersecting with the side slopes. The pipes shall drain into concrete headwalls. (See Article 601.05 of the Standard Specifications and Highway Standard 601101).

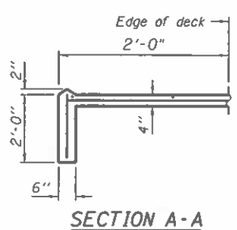

SECTION A-A

Horizontal Dimensions are at Right Angles

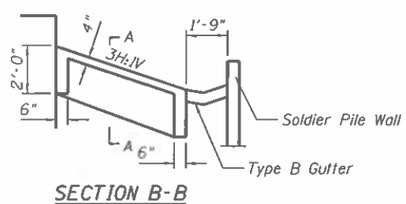

SECTION B-B

Horizontal Dimensions are at Right Angles

GENERAL NOTES

Fasteners shall be ASTM F3125 Grade A325 Type I, mechanically galvanized bolts. Bolts 7/8-in. diameter, holes 15/16-in. diameter, unless otherwise noted.

Calculated weight of Structural Steel = GR50 398,900 pounds / GR36 21570 pounds

No field welding is permitted except as specified in the contract documents.

Reinforcement bars designated (E) shall be epoxy coated.

Bearing seat surfaces shall be constructed or adjusted to designated elevations within a tolerance of 1/8 inch (0.01 ft.). Adjustment shall be made either by grinding the surface or by shimming the bearings.

The existing structural steel coating contains lead. The Contractor shall take appropriate precautions to deal with the presence of lead on this project.

The Organic Zinc Rich Primer / Epoxy / Urethane Paint System shall be used for painting new structural steel except where otherwise noted. The entire system shall be shop applied with the exception of the exterior surface and the bottom of the bottom flange of the fascia beams, masked off connection surfaces, field installed fasteners and damaged areas shall be touched up in the field. The color of the final finish coat for all interior steel surfaces shall be Gray. Munsell No. 5B 7/1. The color of the final finish coat for the exterior and bottom flange of the fascia beams shall be Interstate Green. Munsell No. 7.5G 4/8.

The embankment configuration shown shall be the minimum that must be placed and compacted prior to construction of the abutments.

The concrete for bridge decks finished according to Article 503.16(a) of the Standard Specifications shall be placed and compacted parallel to the skew on uniform increments along centerline of bridge. The machine used for finishing shall be set parallel to the skew for striking off and screeding the concrete.

Slopewall shall be reinforced with welded wire fabric, 6"x 6" W4.0 x W4.0 weighing 58 lbs. per 100 sq. ft.

Concrete Sealer shall be applied to the designated areas of the Pier.

Parapet Slipforming will not be allowed.

The Contractor shall retain the services of an engineering firm, prequalified in the IDOT consultant selection category of Highway Bridges (Advanced Typical), for preparation of the Structural Assement Report(s). Contractor's pre-approval shall not be applicable for this project. See Special Provision.

Current Ratings on File for Existing Structure
Inventory: 1.140
Operating: 1.900
Live Load Restrictions: No

Inventory and Operating Ratings and Live Load Restrictions are provided for information only. Inventory and Operating Ratings are based on HS loading and configuration. Live Load Restrictions are based on Illinois legal loads and configurations. The Ratings and Live Load Restrictions are not necessarily representative of capacities to support the Contractor's equipment.

TOTAL BILL OF MATERIAL

ITEM	UNIT	SUPER	SUB	TOTAL
Granular Backfill for Structures	Cu. Yd.	--	439	439
Removal of Existing Structures	Each	--	--	1
Protective Shield	Sq. Yd.	443	--	443
Structure Excavation	Cu. Yd.	--	775	775
Concrete Structures	Cu. Yd.	--	366.4	366.4
Concrete Superstructure	Cu. Yd.	508.1	--	508.1
Bridge Deck Grooving	Sq. Yd.	1324	--	1324
Protective Coat	Sq. Yd.	1961	--	1961
Furnishing and Erecting Structural Steel	L. Sum	1	--	1
Stud Shear Connectors	Each	9342	47	9389
Reinforcement Bars, Epoxy Coated	Pound	134640	73900	208540
Bar Splicers	Each	1065	102	1167
Bridge Fence Railing	Foot	324	--	324
Parapet Railing	Foot	334	--	334
Slope Wall 4 Inch	Sq. Yd.	--	43	43
Name Plates	Each	1	--	1
Drilled Shaft in Soil	Cu. Yd.	--	87.3	87.3
Drilled Shaft in Rock	Cu. Yd.	--	51.2	51.2
Elastomeric Bearing Assembly, Type I	Each	12	--	12
Anchor Bolts, 1 1/4"	Each	--	24	24
Anchor Bolts, 1 1/2"	Each	--	12	12
Temporary Soil Retention System	Sq. Ft.	--	640	640
Geocomposite Wall Drain	Sq. Yd.	--	230	230
Pipe Underdrains for Structures 4"	Foot	--	352	352
Concrete Wearing Surface, 5"	Sq. Yd.	--	299	299
Precast Bridge Approach Slab	Sq. Ft.	2604	--	2604
Preformed Joint Strip Seal	Foot	158	--	158
Concrete Sealer	Sq. Ft.	--	2780	2780
Furnishing Soldier Piles (W Section)	Foot	--	266	266
Drilling and Setting Soldier Piles (In Soil)	Cu. Ft.	--	984	984
Drilling and Setting Soldier Piles (In Rock)	Cu. Ft.	--	351	351
Removal of Existing Protective Shield	Sq. Yd.	391	--	391
Thermal Integrity Profile Data Collection	Foot	--	313	313
Thermal Integrity Profile Testing	Each	--	12	12
Rock Excavation For Structures	Cu. Yd.	--	102	102

INDEX OF SHEETS

1	General Plan & Elevation
2	General Data
3-6	Stage Construction Details
7-8	Top of Slab Elevations
9-10	Top of Approach Slab Elevations
11	Superstructure
12-14	Superstructure Details
15-16	Diaphragm Details
17-25	North Precast Bridge Approach Slab
26-34	South Precast Bridge Approach Slab
35-36	Preformed Joint Strip Seal
37	Parapet Railing
38	Bridge Fence Railing
39-42	Girder and Framing Details
43	Bearing Details
44	North Abutment
45	South Abutment
46	Wingwall Extension Elevations
47	Wingwall Extension Sections and Details
48	Pier
49	Bar Splicer Assembly Details
50	Temporary Concrete Barrier
51-54	Boring Logs

STATION 230+47.96
BUILT BY
STATE OF ILLINOIS
F.A.I. RT. 57 SEC. 139HBR-6
LOADING HL-93
STRUCTURE NO. 046-0153

NAME PLATE

See Std. 515001

MODEL: GENDATA 02
FILE NAME: G:\Users\1111111335-01-Waldron-Road-over-I57-Superstructure\Survey D366997\Consultant_Data\Chamlin_2020\CAD_Sheets\10460153-66997-002-GENDATA.dgn
4/19/2021 10:13:57 AM

Chamlin & Associates

USER NAME =	DESIGNED - JKC	REVISED -	
	CHECKED - AJO	REVISED -	
PLOT SCALE =	DRAWN - LAG	REVISED -	
PLOT DATE =	CHECKED - JKC	REVISED -	

STATE OF ILLINOIS
DEPARTMENT OF TRANSPORTATION

GENERAL DATA
STRUCTURE NO. 046-0153
SHEET 2 OF 54 SHEETS

F.A.I. RTE.	SECTION	COUNTY	TOTAL SHEETS	SHEET NO.
57	139HBR-6	KANKAKEE	202	91

CONTRACT NO. 66997
ILLINOIS FED. AID PROJECT

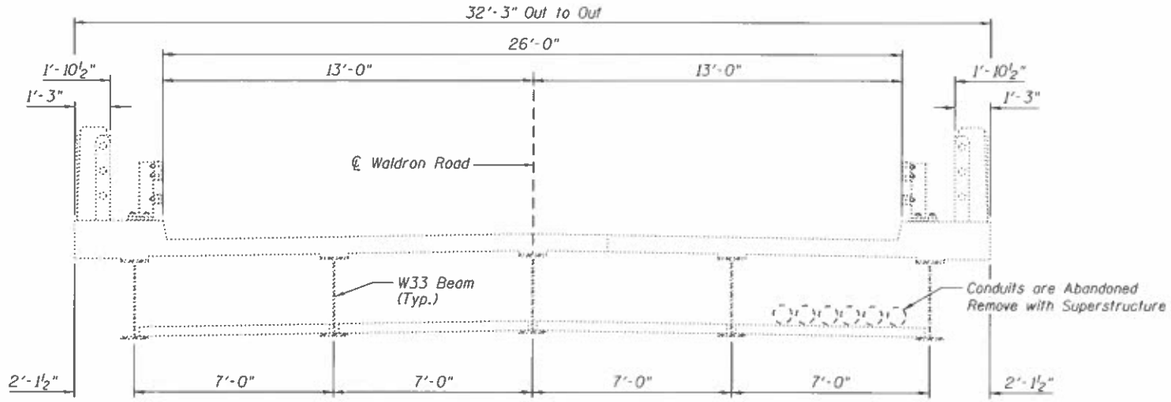

EXISTING STRUCTURE

Looking South East

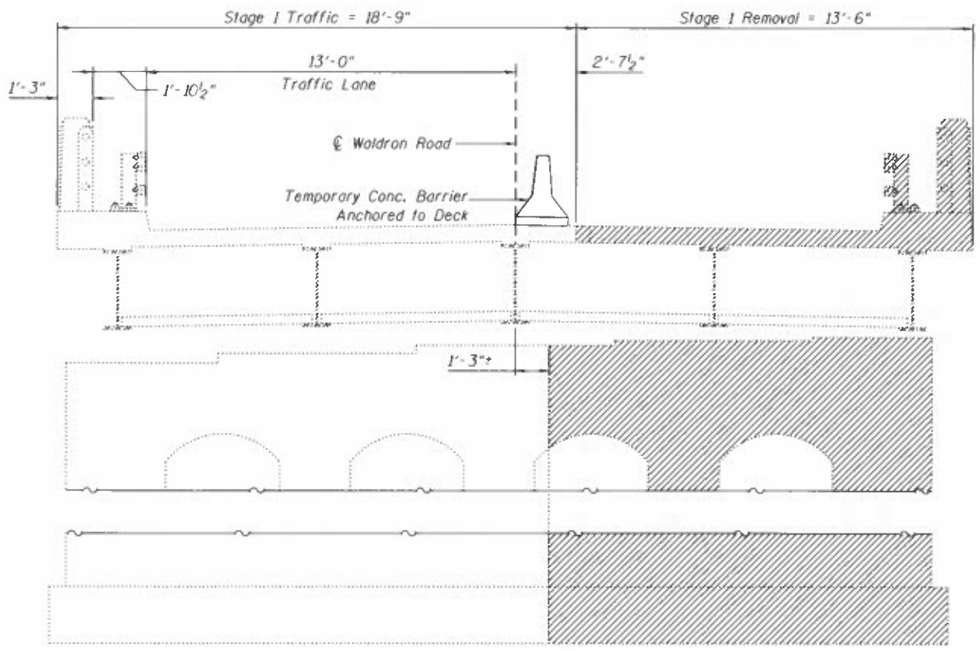

STAGE I DEMOLITION

Looking South East

LEGEND

Removal of Existing Structures

SN 046-0153 SEQUENCE OF WORK

Stage I

1. Erect Waldron Road Stage I traffic control, install temporary soil retention systems behind existing abutments, and remove stage I superstructure and roadway.
2. Erect I57 Stage I traffic control, remove Stage I of existing middle pier, and construct Stage I of new median pier.
3. Set Stage I soldier piles for Walls A & B.
4. Remove top block of existing abutments down to top of buttresses while installing timber lagging for the soldier pile walls. (The bottom of the "existing block" at the north abutment will be 2" +/- higher than the bottom of the proposed north abutment. The bottom of the "existing block" at the south abutment will be 4" +/- lower than the bottom of the proposed south abutment.)
5. Construct Stage I work for new abutments.
6. Construct Stage I superstructure and approach pavements. (The bottom of the proposed girders will be above the top of pier elevation of the existing outside piers.)

Stage II

1. Erect Waldron Road Stage II traffic control and remove stage II superstructure and roadway.
2. Maintain Erect I57 Stage I traffic control, remove Stage II of existing middle pier, and construct Stage II of new median pier.
3. Set Stage II soldier piles for Walls A & B.
4. Remove top block of existing abutments down to top of buttresses while installing timber lagging for the soldier pile walls.
5. Construct Stage II work for new abutments.
6. Erect I57 Stage II traffic control and remove existing outside piers.
7. Remove remainder of existing abutments while installing timber lagging for the soldier pile walls and removing soil between the new soldier pile wall and the existing outside piers.
8. Pour facing for soldier pile walls.
9. Construct Stage II superstructure and approach pavements.

Stage III

1. Erect Waldron Road Stage III traffic control.
2. Construct barrier wall between roadway and shared use path.
3. Install Bridge Fence Railing on outside parapet.
4. Open Waldron Road to normal traffic and continue I57 work below the bridge. (i.e., storm sewers parallel to soldier pile walls.)

NOTES

For quantity of Temporary Concrete Barrier, see Roadway Plans.

For details of Temporary Concrete Barrier, see sheet 50 of 54.

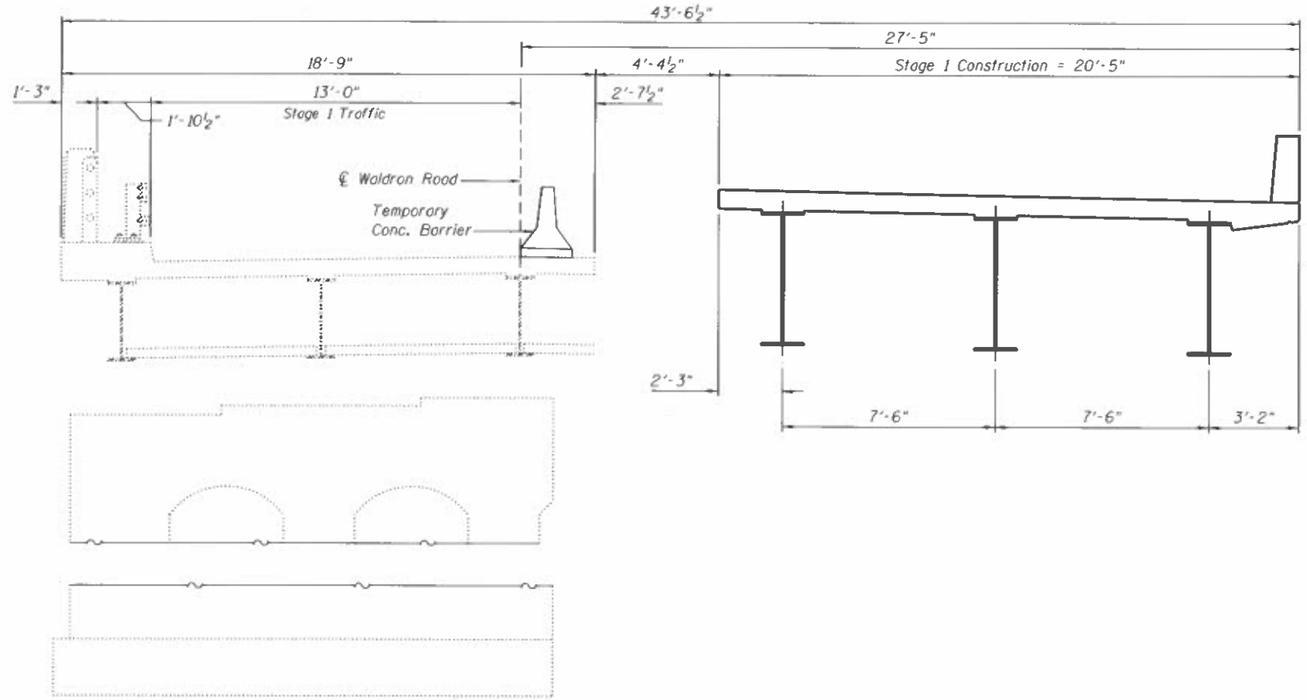

STAGE 1 CONSTRUCTION

Looking South East

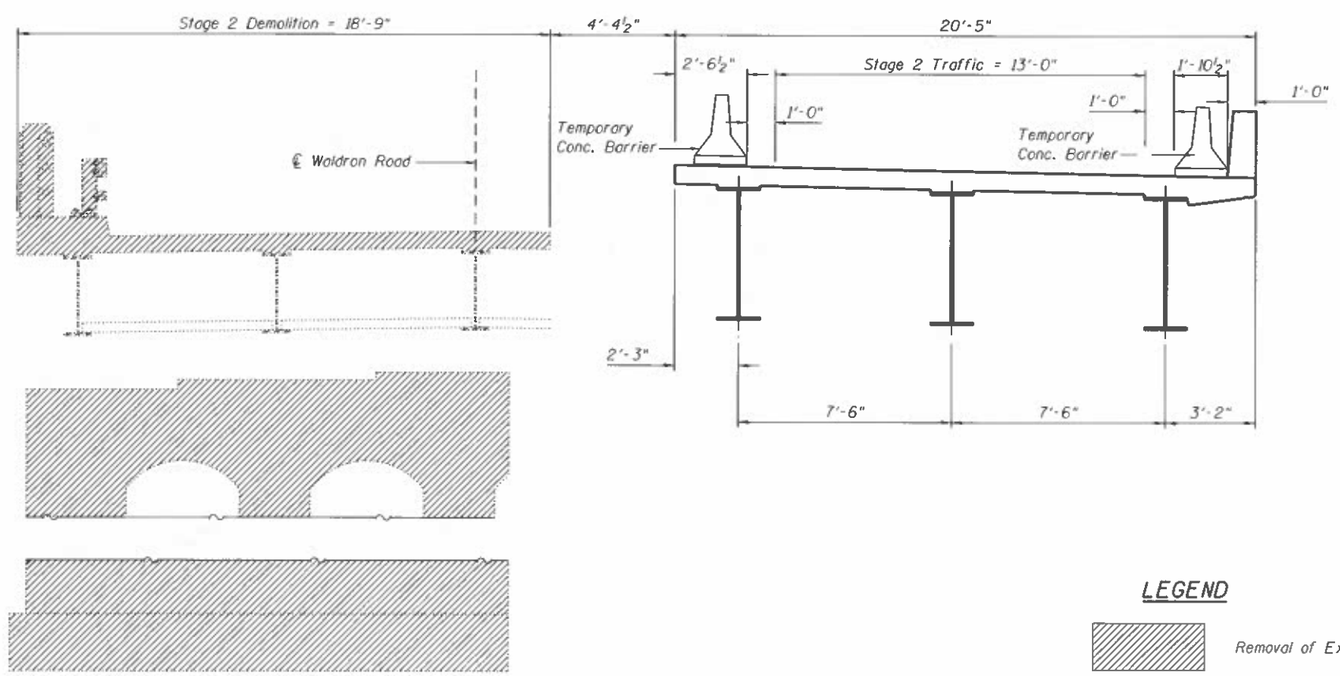

STAGE 2 DEMOLITION

Looking South East

NOTES

For quantity of Temporary Concrete Barrier, see Roadway Plans.

For details of Temporary Concrete Barrier, see sheet 50 of 54.

See sheet 3 of 54 for Sequence of work.

LEGEND

Removal of Existing Structures

MODEL: STAGE CONST DETS 4
FILE NAME: G:\Users\111111335-01-Waldron-Road-over-I57-Superstructure\Survey D366997\Consultant_Data\Chamlin_2020\CAD_Sheets\0460153-66997-003-004-005-STAGE_DETAILS.dgn

Chamlin & Associates

3/3/2021 10:26:51 AM

USER NAME =	DESIGNED - JKC	REVISED -	
	CHECKED - AJO	REVISED -	
PLOT SCALE =	DRAWN - LAG	REVISED -	
PLOT DATE =	CHECKED - JKC	REVISED -	

STATE OF ILLINOIS
DEPARTMENT OF TRANSPORTATION

STAGE CONSTRUCTION DETAILS
STRUCTURE NO. 046-0153

SHEET 4 OF 54 SHEETS

F.A.I. RTE.	SECTION	COUNTY	TOTAL SHEETS	SHEET NO.
57	139HBR-6	KANKAKEE	202	93
		CONTRACT NO. 66997		
		ILLINOIS FED. AID PROJECT		

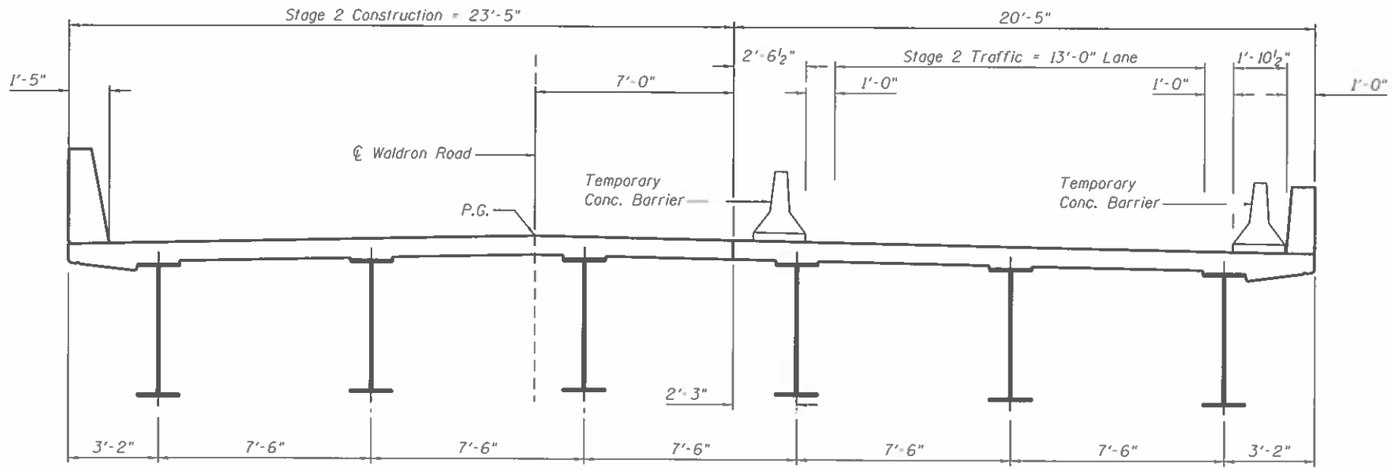

STAGE 2 CONSTRUCTION

Looking South East

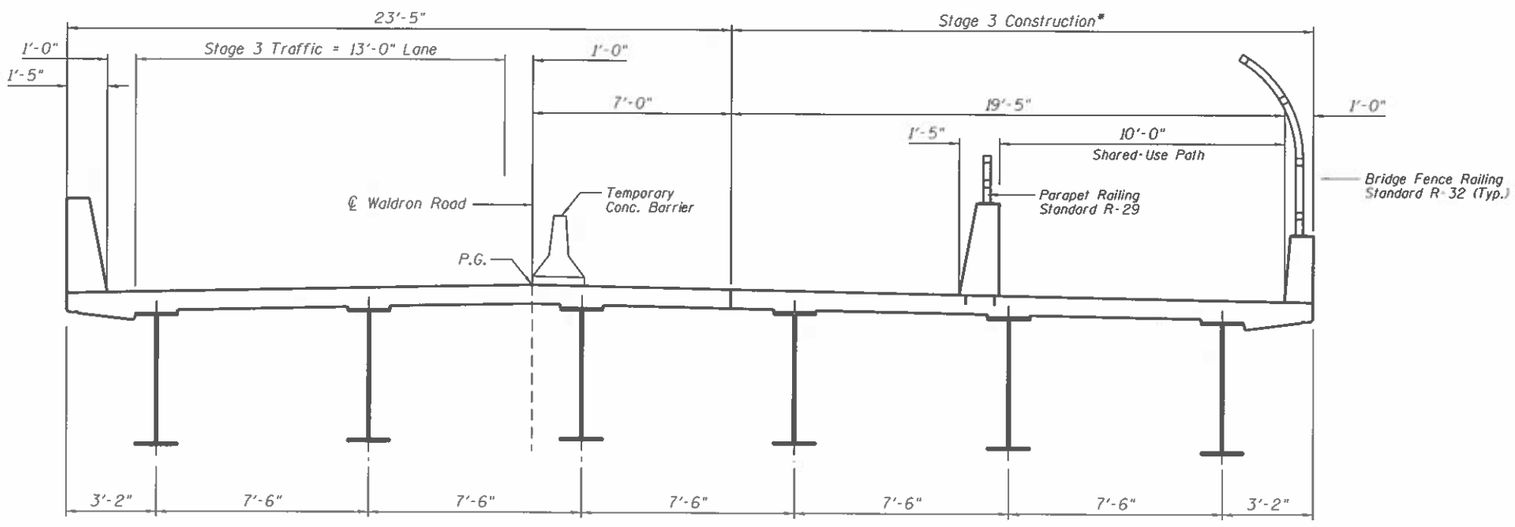

STAGE 3 CONSTRUCTION

Looking South East

* Stage 3 Construction is the addition of the Parapet separating the roadway from the shared-use path and the addition of the Parapet Railing and Bridge Fence Railing.

NOTES

Stage Construction Line differs for the superstructure and the substructure.

For quantity of Temporary Concrete Barrier, See Roadway Plans.

For details of Temporary Concrete Barrier see Sheet 50 of 54.

See sheet 3 of 54 for Sequence of Work.

MODEL: STAGE CONST DETS 5
FILE NAME: G:\Users\1\111335-01-Waldron-Road-over-I57-Superstructure\Survey D366997\Consultant_Data\Chamlin_2020\CAD_Sheets\0460153-66997-003-004-005-STAGE_DETAILS.dgn

Chamlin & Associates

USER NAME =	DESIGNED - JKC	REVISED -	
	CHECKED - AJO	REVISED -	
PLOT SCALE =	DRAWN - LAG	REVISED -	
PLOT DATE =	CHECKED - JKC	REVISED -	

3/3/2021 10:27:11 AM

STATE OF ILLINOIS
DEPARTMENT OF TRANSPORTATION

STAGE CONSTRUCTION DETAILS
STRUCTURE NO. 046-0153

SHEET 5 OF 54 SHEETS

F.A.I. RTE.	SECTION	COUNTY	TOTAL SHEETS	SHEET NO.
57	139HBR-6	KANKAKEE	202	94

CONTRACT NO. 66997

ILLINOIS | FED. AID PROJECT

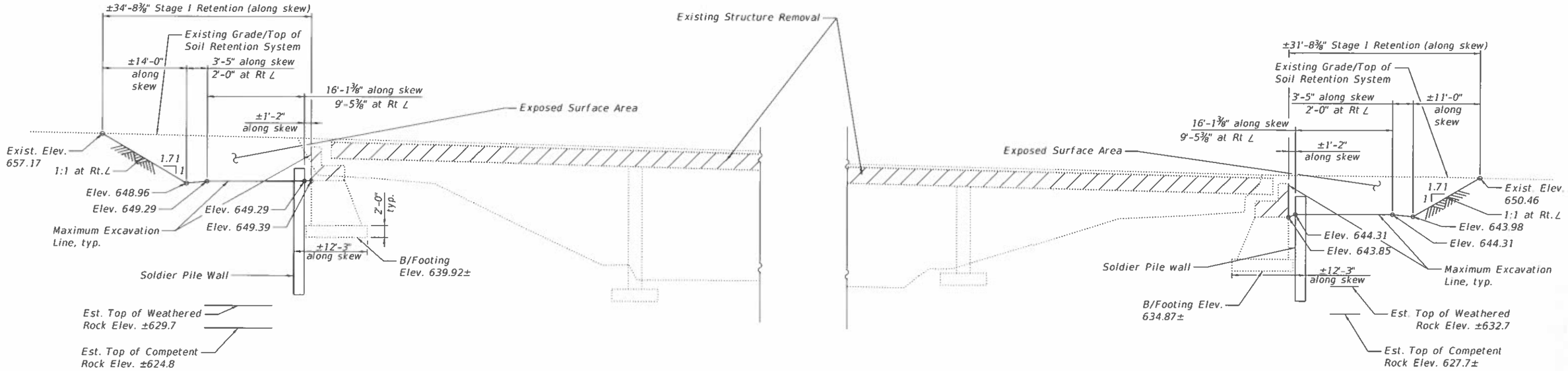

STAGE I TEMPORARY SOIL RETENTION SYSTEM

at 2.625' RT (Stage I Removal)
(Looking North)

Temporary Soil Retention System shall be made compatible with plans for Retaining Walls A and B.

See Sheet 3 of 54 for Sequence of Work.

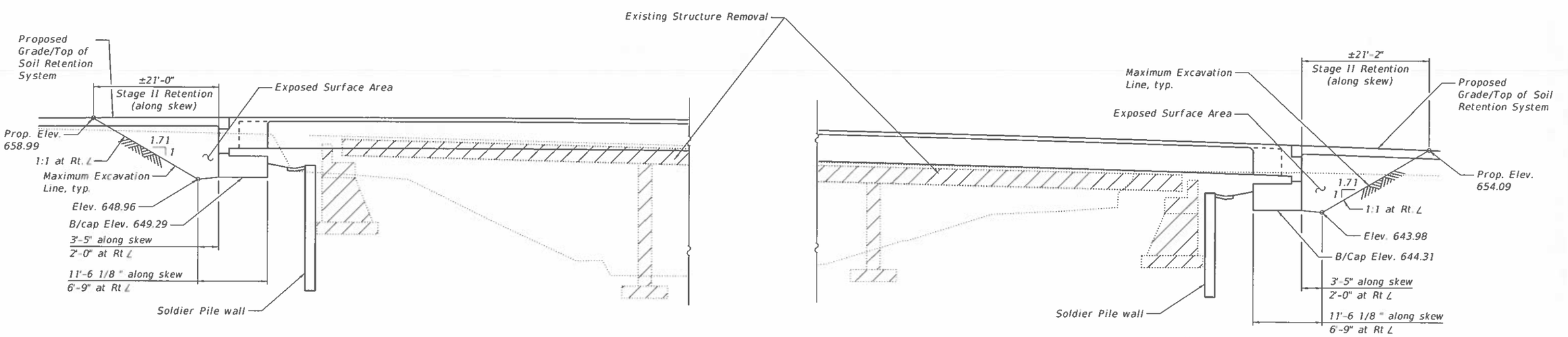

STAGE II TEMPORARY SOIL RETENTION SYSTEM

at 7.00' RT (Stage I Construction)
(Looking North)

Notes:
A cantilevered sheet piling design does not appear feasible and additional members or other retention systems may be necessary. The Contractor shall submit a temporary soil retention system design including plan details and calculations for review and acceptance by the Engineer. The temporary soil retention system design shall include details for adjustment of the system at the proposed abutment between Stage I and Stage II.

MODEL: 0460153-66997-006
FILE NAME: I:\jobs\2019\193-1901 PTB 192-011 District 3 Various Phase III Structure Projects\WO 2 - Waldron Road over I-57\Drawings\bridge substructure\Sheet\0460153-66997-006-Soil Retention System.dgn

Prairie Engineers, P.C. www.prairieengineers.com professional design firm no. 184-005965 © Copyright Prairie Engineers, P.C. 2018	USER NAME =	DESIGNED - TCD	REVISED -	STATE OF ILLINOIS DEPARTMENT OF TRANSPORTATION	STAGE CONSTRUCTION DETAILS STRUCTURE NO. 046-0153
		CHECKED - SMA	REVISED -		
	PLOT SCALE =	DRAWN - RNH	REVISED -		
	PLOT DATE =	CHECKED - SMA	REVISED -		SHEET 6 OF 54 SHEETS

F.A.I. RTE.	SECTION	COUNTY	TOTAL SHEETS	SHEET NO.
57	139HBR-6	KANKAKEE	202	95
		CONTRACT NO. 66997		
		ILLINOIS	FED. AID PROJECT	

3/11/2021 4:51:35 PM

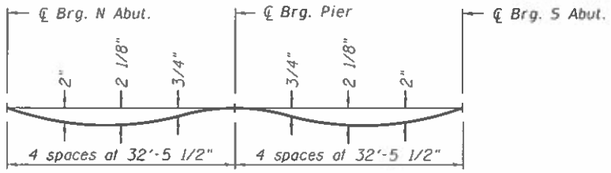

DEAD LOAD DEFLECTION DIAGRAM

(Includes weight of concrete only.)

Note:
The above deflections are not to be used in the field if the engineer is working from the grade elevations adjusted for dead load deflections as shown below and on sheet 8 of 54.

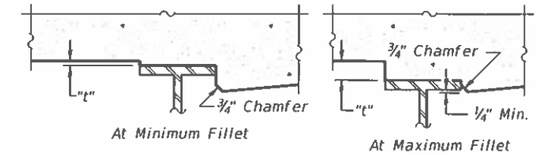

To determine "t": After all structural steel has been erected, elevations of the top flanges of the girders shall be taken at intervals shown below. These elevations subtracted from the "Theoretical Grade Elevations Adjusted for Dead Load Deflection" shown below and on sheet 8 of 54, minus slab thickness, equals the fillet heights "t" above top flange of girders.

FILLET HEIGHTS

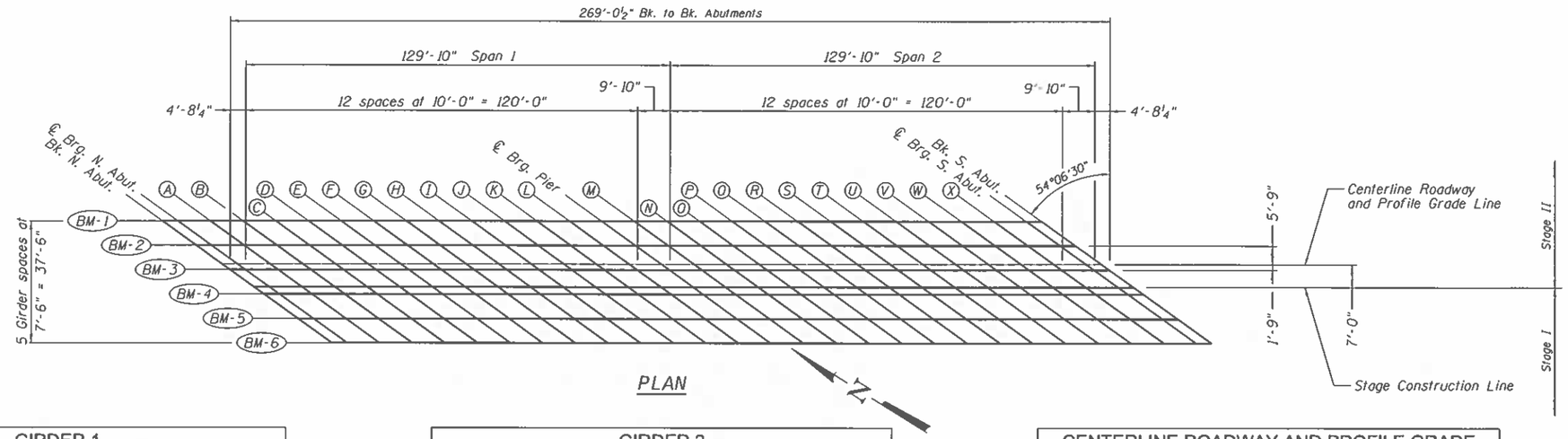

PLAN

GIRDER 1				
Location	Station	Offset	Theoretical Grade Elevations	Theoretical Grade Elevations Adjusted for Dead Load Deflections
BK. N. ABUT	18+06.07	-13.25	658.89	658.89
CL. BRG N. ABUT	18+10.76	-13.25	658.91	658.91
A	18+20.76	-13.25	658.96	659.01
B	18+30.76	-13.25	658.99	659.09
C	18+40.76	-13.25	659.00	659.15
D	18+50.76	-13.25	659.00	659.18
E	18+60.76	-13.25	658.99	659.17
F	18+70.76	-13.25	658.97	659.14
G	18+80.76	-13.25	658.93	659.08
H	18+90.76	-13.25	658.88	659.00
I	19+00.76	-13.25	658.82	658.90
J	19+10.76	-13.25	658.74	658.80
K	19+20.76	-13.25	658.65	658.68
L	19+30.76	-13.25	658.55	658.56
CL. BRG. PIER	19+40.59	-13.25	658.44	658.44
M	19+50.59	-13.25	658.31	658.32
N	19+60.59	-13.25	658.16	658.19
O	19+70.59	-13.25	658.01	658.06
P	19+80.59	-13.25	657.84	657.93
Q	19+90.59	-13.25	657.66	657.78
R	20+00.59	-13.25	657.46	657.61
S	20+10.59	-13.25	657.26	657.43
T	20+20.59	-13.25	657.03	657.21
U	20+30.59	-13.25	656.80	656.97
V	20+40.59	-13.25	656.55	656.70
W	20+50.59	-13.25	656.29	656.40
X	20+60.59	-13.25	656.02	656.07
CL. BRG S. ABUT	20+70.42	-13.25	655.73	655.73
BK. S. ABUT	20+75.11	-13.25	655.59	655.59

GIRDER 2				
Location	Station	Offset	Theoretical Grade Elevations	Theoretical Grade Elevations Adjusted for Dead Load Deflections
BK. N. ABUT	18+16.43	-5.75	659.09	659.09
CL. BRG N. ABUT	18+21.12	-5.75	659.11	659.11
A	18+31.12	-5.75	659.14	659.19
B	18+41.12	-5.75	659.15	659.26
C	18+51.12	-5.75	659.15	659.30
D	18+61.12	-5.75	659.14	659.32
E	18+71.12	-5.75	659.12	659.30
F	18+81.12	-5.75	659.08	659.25
G	18+91.12	-5.75	659.03	659.18
H	19+01.12	-5.75	658.97	659.09
I	19+11.12	-5.75	658.89	658.98
J	19+21.12	-5.75	658.80	658.85
K	19+31.12	-5.75	658.70	658.72
L	19+41.12	-5.75	658.58	658.59
CL. BRG. PIER	19+50.95	-5.75	658.45	658.45
M	19+60.95	-5.75	658.31	658.32
N	19+70.95	-5.75	658.15	658.18
O	19+80.95	-5.75	657.98	658.04
P	19+90.95	-5.75	657.80	657.89
Q	20+00.95	-5.75	657.61	657.73
R	20+10.95	-5.75	657.40	657.55
S	20+20.95	-5.75	657.18	657.35
T	20+30.95	-5.75	656.94	657.12
U	20+40.95	-5.75	656.69	656.86
V	20+50.95	-5.75	656.43	656.58
W	20+60.95	-5.75	656.16	656.26
X	20+70.95	-5.75	655.87	655.92
CL. BRG S. ABUT	20+80.78	-5.75	655.57	655.57
BK. S. ABUT	20+85.48	-5.75	655.43	655.43

CENTERLINE ROADWAY AND PROFILE GRADE				
Location	Station	Offset	Theoretical Grade Elevations	Theoretical Grade Elevations Adjusted for Dead Load Deflections
BK. N. ABUT	18+24.38	0.00	659.23	659.23
CL. BRG N. ABUT	18+29.07	0.00	659.25	659.25
A	18+39.07	0.00	659.26	659.32
B	18+49.07	0.00	659.27	659.38
C	18+59.07	0.00	659.26	659.41
D	18+69.07	0.00	659.24	659.41
E	18+79.07	0.00	659.21	659.39
F	18+89.07	0.00	659.16	659.33
G	18+99.07	0.00	659.10	659.25
H	19+09.07	0.00	659.02	659.14
I	19+19.07	0.00	658.93	659.02
J	19+29.07	0.00	658.83	658.89
K	19+39.07	0.00	658.72	658.75
L	19+49.07	0.00	658.59	658.60
CL. BRG. PIER	19+58.90	0.00	658.45	658.45
M	19+68.90	0.00	658.30	658.31
N	19+78.90	0.00	658.13	658.16
O	19+88.90	0.00	657.96	658.01
P	19+98.90	0.00	657.76	657.85
Q	20+08.90	0.00	657.56	657.68
R	20+18.90	0.00	657.34	657.49
S	20+28.90	0.00	657.10	657.28
T	20+38.90	0.00	656.86	657.04
U	20+48.90	0.00	656.60	656.77
V	20+58.90	0.00	656.33	656.48
W	20+68.90	0.00	656.04	656.15
X	20+78.90	0.00	655.74	655.80
CL. BRG S. ABUT	20+88.73	0.00	655.44	655.44
BK. S. ABUT	20+93.42	0.00	655.29	655.29

E-S

2-17-2017

Chamlin & Associates

USER NAME =	DESIGNED - JKC	REVISED -	
	CHECKED - AJO	REVISED -	
PLOT SCALE =	DRAWN - LAG	REVISED -	
PLOT DATE =	CHECKED - JKC	REVISED -	

STATE OF ILLINOIS
DEPARTMENT OF TRANSPORTATION

TOP OF SLAB ELEVATIONS
STRUCTURE NO. 046-0153

SHEET 7 OF 54 SHEETS

F.A.I. RTE.	SECTION	COUNTY	TOTAL SHEETS	SHEET NO.
57	139HBR-6	KANKAKEE	202	96

CONTRACT NO. 66997

ILLINOIS | FED. AID PROJECT

MODEL: TOP SLAB ELEV 1
FILE NAME: G:\Users\1111111335-01-Waldron-Road-over-I57-Superstructure\Survey D366997\Consultant_Data\Chamlin_2020\CAD_Sheets\0460153-66997-007-008-TOP-SLAB-ELEV.dgn

3/2/2021 2:37:15 PM

GIRDER 3

Location	Station	Offset	Theoretical Grade Elevations	Theoretical Grade Elevations Adjusted for Dead Load Deflections
BK. N. ABUT	18+26.80	1.75	659.21	659.21
CL. BRG N. ABUT	18+31.49	1.75	659.22	659.22
A	18+41.49	1.75	659.23	659.29
B	18+51.49	1.75	659.23	659.34
C	18+61.49	1.75	659.22	659.37
D	18+71.49	1.75	659.20	659.37
E	18+81.49	1.75	659.16	659.34
F	18+91.49	1.75	659.11	659.28
G	19+01.49	1.75	659.04	659.20
H	19+11.49	1.75	658.97	659.09
I	19+21.49	1.75	658.88	658.96
J	19+31.49	1.75	658.77	658.83
K	19+41.49	1.75	658.66	658.68
L	19+51.49	1.75	658.52	658.53
CL. BRG. PIER	19+61.32	1.75	658.38	658.38
M	19+71.32	1.75	658.23	658.24
N	19+81.32	1.75	658.06	658.08
O	19+91.32	1.75	657.87	657.93
P	20+01.32	1.75	657.68	657.77
Q	20+11.32	1.75	657.47	657.59
R	20+21.32	1.75	657.25	657.40
S	20+31.32	1.75	657.01	657.18
T	20+41.32	1.75	656.76	656.94
U	20+51.32	1.75	656.50	656.67
V	20+61.32	1.75	656.23	656.37
W	20+71.32	1.75	655.94	656.05
X	20+81.32	1.75	655.64	655.69
CL. BRG S. ABUT	20+91.15	1.75	655.33	655.33
BK. S. ABUT	20+95.84	1.75	655.17	655.17

STAGE CONSTRUCTION LINE

Location	Station	Offset	Theoretical Grade Elevations	Theoretical Grade Elevations Adjusted for Dead Load Deflections
BK. N. ABUT	18+34.05	7.00	659.12	659.12
CL. BRG N. ABUT	18+38.74	7.00	659.12	659.12
A	18+48.74	7.00	659.13	659.19
B	18+58.74	7.00	659.12	659.23
C	18+68.74	7.00	659.10	659.25
D	18+78.74	7.00	659.07	659.24
E	18+88.74	7.00	659.02	659.20
F	18+98.74	7.00	658.96	659.13
G	19+08.74	7.00	658.88	659.04
H	19+18.74	7.00	658.80	658.92
I	19+28.74	7.00	658.70	658.78
J	19+38.74	7.00	658.58	658.64
K	19+48.74	7.00	658.46	658.48
L	19+58.74	7.00	658.32	658.32
CL. BRG. PIER	19+68.57	7.00	658.17	658.17
M	19+78.57	7.00	658.00	658.01
N	19+88.57	7.00	657.82	657.85
O	19+98.57	7.00	657.63	657.68
P	20+08.57	7.00	657.42	657.51
Q	20+18.57	7.00	657.20	657.33
R	20+28.57	7.00	656.97	657.12
S	20+38.57	7.00	656.73	656.90
T	20+48.57	7.00	656.47	656.65
U	20+58.57	7.00	656.20	656.37
V	20+68.57	7.00	655.91	656.06
W	20+78.57	7.00	655.61	655.72
X	20+88.57	7.00	655.30	655.36
CL. BRG S. ABUT	20+98.40	7.00	654.98	654.98
BK. S. ABUT	21+03.09	7.00	654.83	654.83

GIRDER 4

Location	Station	Offset	Theoretical Grade Elevations	Theoretical Grade Elevations Adjusted for Dead Load Deflections
BK. N. ABUT	18+37.16	9.25	659.08	659.08
CL. BRG N. ABUT	18+41.85	9.25	659.08	659.08
A	18+51.85	9.25	659.08	659.14
B	18+61.85	9.25	659.07	659.18
C	18+71.85	9.25	659.05	659.19
D	18+81.85	9.25	659.01	659.18
E	18+91.85	9.25	658.96	659.14
F	19+01.85	9.25	658.89	659.06
G	19+11.85	9.25	658.81	658.96
H	19+21.85	9.25	658.72	658.84
I	19+31.85	9.25	658.62	658.70
J	19+41.85	9.25	658.50	658.55
K	19+51.85	9.25	658.37	658.40
L	19+61.85	9.25	658.23	658.23
CL. BRG. PIER	19+71.68	9.25	658.07	658.07
M	19+81.68	9.25	657.90	657.91
N	19+91.68	9.25	657.72	657.74
O	20+01.68	9.25	657.52	657.58
P	20+11.68	9.25	657.31	657.40
Q	20+21.68	9.25	657.09	657.21
R	20+31.68	9.25	656.85	657.00
S	20+41.68	9.25	656.60	656.78
T	20+51.68	9.25	656.34	656.52
U	20+61.68	9.25	656.07	656.24
V	20+71.68	9.25	655.78	655.92
W	20+81.68	9.25	655.47	655.58
X	20+91.68	9.25	655.16	655.22
CL. BRG S. ABUT	21+01.51	9.25	654.84	654.84
BK. S. ABUT	21+06.20	9.25	654.68	654.68

GIRDER 5

Location	Station	Offset	Theoretical Grade Elevations	Theoretical Grade Elevations Adjusted for Dead Load Deflections
BK. N. ABUT	18+47.53	16.75	658.93	658.93
CL. BRG N. ABUT	18+52.22	16.75	658.93	658.93
A	18+62.22	16.75	658.92	658.98
B	18+72.22	16.75	658.90	659.00
C	18+82.22	16.75	658.86	659.00
D	18+92.22	16.75	658.80	658.98
E	19+02.22	16.75	658.74	658.92
F	19+12.22	16.75	658.66	658.83
G	19+22.22	16.75	658.57	658.72
H	19+32.22	16.75	658.46	658.58
I	19+42.22	16.75	658.35	658.43
J	19+52.22	16.75	658.21	658.27
K	19+62.22	16.75	658.07	658.10
L	19+72.22	16.75	657.91	657.92
CL. BRG. PIER	19+82.05	16.75	657.74	657.74
M	19+92.05	16.75	657.56	657.57
N	20+02.05	16.75	657.36	657.39
O	20+12.05	16.75	657.15	657.21
P	20+22.05	16.75	656.93	657.02
Q	20+32.05	16.75	656.69	656.81
R	20+42.05	16.75	656.44	656.60
S	20+52.05	16.75	656.18	656.35
T	20+62.05	16.75	655.91	656.09
U	20+72.05	16.75	655.62	655.79
V	20+82.05	16.75	655.31	655.46
W	20+92.05	16.75	655.00	655.11
X	21+02.05	16.75	654.67	654.73
CL. BRG S. ABUT	21+11.88	16.75	654.33	654.33
BK. S. ABUT	21+16.57	16.75	654.17	654.17

GIRDER 6

Location	Station	Offset	Theoretical Grade Elevations	Theoretical Grade Elevations Adjusted for Dead Load Deflections
BK. N. ABUT	18+57.89	24.25	658.78	658.78
CL. BRG N. ABUT	18+62.58	24.25	658.77	658.77
A	18+72.58	24.25	658.74	658.80
B	18+82.58	24.25	658.70	658.81
C	18+92.58	24.25	658.65	658.80
D	19+02.58	24.25	658.59	658.76
E	19+12.58	24.25	658.51	658.69
F	19+22.58	24.25	658.42	658.59
G	19+32.58	24.25	658.31	658.46
H	19+42.58	24.25	658.19	658.31
I	19+52.58	24.25	658.06	658.15
J	19+62.58	24.25	657.91	657.97
K	19+72.58	24.25	657.76	657.78
L	19+82.58	24.25	657.59	657.59
CL. BRG. PIER	19+92.41	24.25	657.40	657.40
M	20+02.41	24.25	657.21	657.21
N	20+12.41	24.25	657.00	657.02
O	20+22.41	24.25	656.77	656.83
P	20+32.41	24.25	656.54	656.62
Q	20+42.41	24.25	656.28	656.41
R	20+52.41	24.25	656.02	656.17
S	20+62.41	24.25	655.74	655.92
T	20+72.41	24.25	655.45	655.64
U	20+82.41	24.25	655.15	655.32
V	20+92.41	24.25	654.84	654.98
W	21+02.41	24.25	654.51	654.61
X	21+12.41	24.25	654.16	654.22
CL. BRG S. ABUT	21+22.24	24.25	653.81	653.81
BK. S. ABUT	21+26.93	24.25	653.64	653.64

EAST EDGE OF SHOULDER			
Location	Station	Offset	Theoretical Grade
N. End North Appr. Pav't	17+73.39	-16.42	658.66
A1	17+84.21	-15.83	658.73
A2	17+95.03	-15.23	658.80
S. End North Appr. Pav't	18+05.36	-15.00	658.85

EAST EDGE OF PAVEMENT			
Location	Station	Offset	Theoretical Grade
N. End North Appr. Pav't	17+79.50	-12.00	658.78
A1	17+89.50	-12.00	658.83
A2	17+99.50	12.00	658.88
S. End North Appr. Pav't	18+09.50	-12.00	658.93

CENTERLINE ROADWAY AND PROFILE GRADE			
Location	Station	Offset	Theoretical Grade
N. End North Appr. Pav't	17+96.09	0.00	659.11
A1	18+06.09	0.00	659.16
A2	18+16.09	0.00	659.20
S. End North Appr. Pav't	18+26.09	0.00	659.24

STAGE CONSTRUCTION LINE			
Location	Station	Offset	Theoretical Grade
N. End North Appr. Pav't	18+05.76	7.00	659.01
A1	18+15.76	7.00	659.06
A2	18+25.76	7.00	659.10
S. End North Appr. Pav't	18+35.76	7.00	659.12

WEST EDGE OF PAVEMENT			
Location	Station	Offset	Theoretical Grade
N. End North Appr. Pav't	18+12.67	12.00	658.95
A1	18+22.67	12.00	658.99
A2	18+32.67	12.00	659.01
S. End North Appr. Pav't	18+42.67	12.00	659.03

WEST EDGE OF SHOULDER			
Location	Station	Offset	Theoretical Grade
N. End North Appr. Pav't	18+34.72	27.96	658.70
A1	18+43.69	27.21	658.72
A2	18+52.67	26.47	658.74
S. End North Appr. Pav't	18+62.59	26.42	658.73

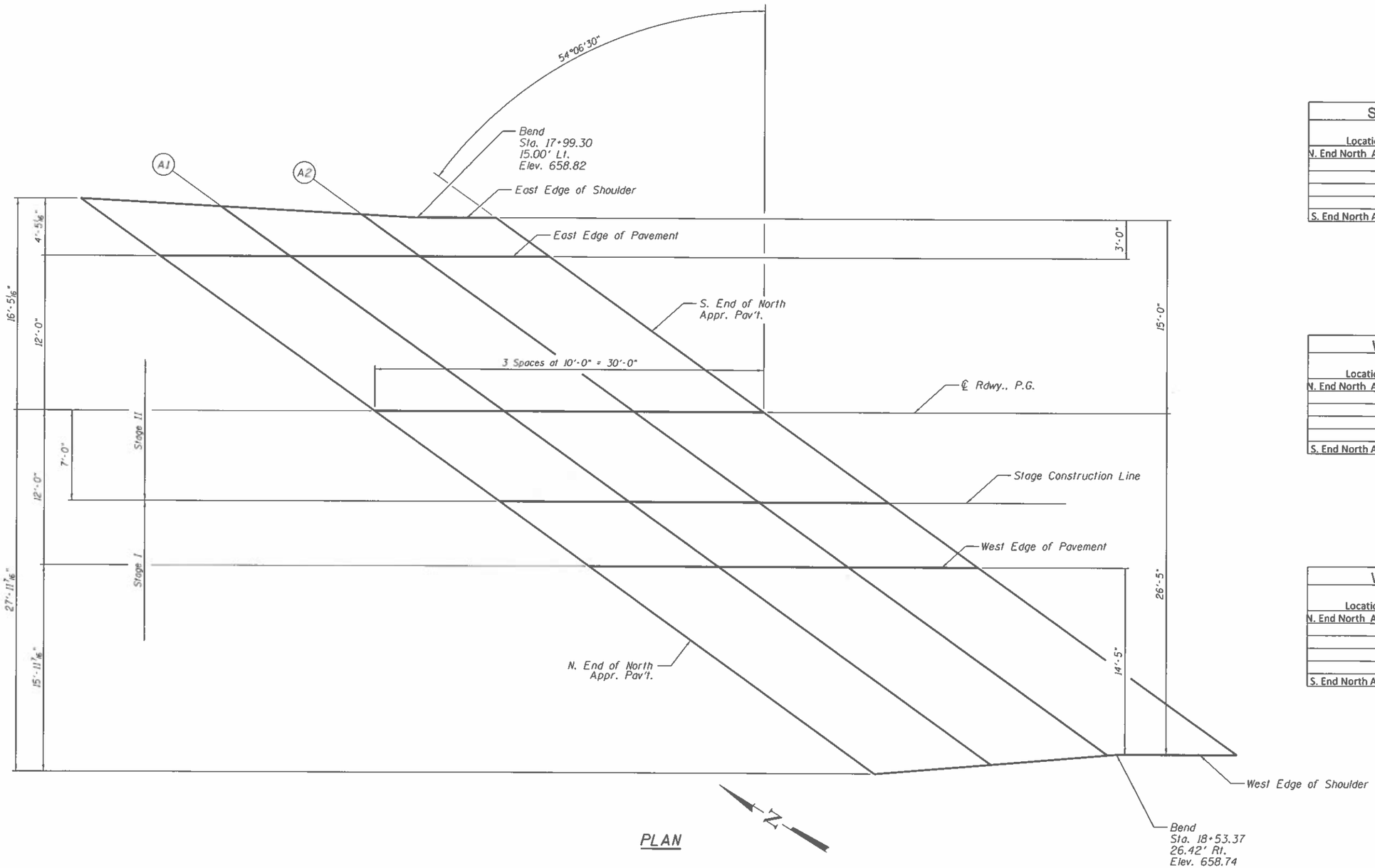

PLAN

E-AS 2-17-2017

MODEL: NORTH APP ELEVS
FILE NAME: G:\Users\11\1111335-01-Waldron-Road-over-I57-Superstructure\Survey D366997\Consultant Data\Chamlin_2020\CAD Sheets\0460153-66997-009-010-TOPAPPSLABELEVS.dgn

3/2/2021 2:41:11 PM

Chamlin & Associates

USER NAME =	DESIGNED - JKC	REVISED -	
	CHECKED - AJO	REVISED -	
PLOT SCALE =	DRAWN - LAG	REVISED -	
PLOT DATE =	CHECKED - JKC	REVISED -	

STATE OF ILLINOIS
DEPARTMENT OF TRANSPORTATION

TOP OF NORTH APPROACH SLAB ELEVATIONS
STRUCTURE NO. 046-0153

SHEET 9 OF 54 SHEETS

F.A.I. RTE.	SECTION	COUNTY	TOTAL SHEETS	SHEET NO.
57	139HBR-6	KANKAKEE	202	98
		CONTRACT NO. 66997		
		ILLINOIS	FED. AID PROJECT	

EAST EDGE OF SHOULDER			
Location	Station	Offset	Theoretical Grade
N. End South Appr. Pav't	20+70.98	-15.01	655.68
A1	20+80.11	-15.64	655.39
A2	20+89.25	-16.26	655.10
S. End South Appr. Pav't	20+98.38	-16.89	654.79

EAST EDGE OF PAVEMENT			
Location	Station	Offset	Theoretical Grade
N. End South Appr. Pav't	20+75.14	-12.00	655.62
A1	20+85.14	-12.00	655.31
A2	20+95.14	-12.00	654.99
S. End South Appr. Pav't	21+05.14	-12.00	654.66

CENTERLINE ROADWAY AND PROFILE GRADE			
Location	Station	Offset	Theoretical Grade
N. End South Appr. Pav't	20+91.72	0.00	655.34
A1	21+01.72	0.00	655.01
A2	21+11.72	0.00	654.67
S. End South Appr. Pav't	21+22.72	0.00	654.28

STAGE CONSTRUCTION LINE			
Location	Station	Offset	Theoretical Grade
N. End South Appr. Pav't	21+01.40	7.00	654.89
A1	21+11.40	7.00	654.54
A2	21+21.40	7.00	654.19
S. End South Appr. Pav't	21+31.40	7.00	653.82

WEST EDGE OF PAVEMENT			
Location	Station	Offset	Theoretical Grade
N. End South Appr. Pav't	21+08.31	12.00	654.55
A1	21+18.31	12.00	654.20
A2	21+28.31	12.00	653.84
S. End South Appr. Pav't	21+38.31	12.00	653.46

WEST EDGE OF SHOULDER			
Location	Station	Offset	Theoretical Grade
N. End South Appr. Pav't	21+28.23	26.42	653.55
A1	21+38.86	26.88	653.14
A2	21+49.78	27.54	652.70
S. End South Appr. Pav't	21+60.70	28.21	652.24

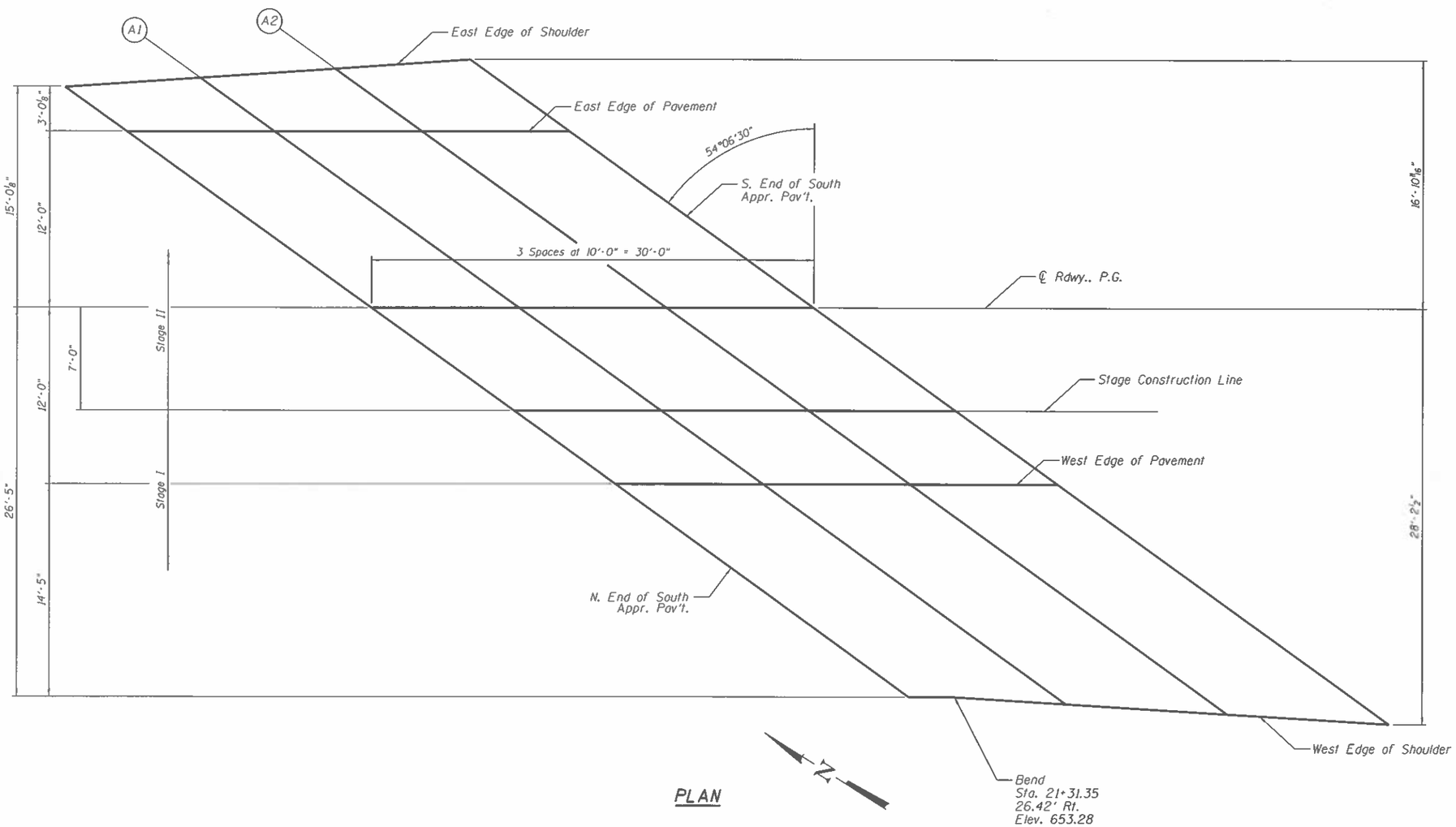

PLAN

E-AS 2-17-2017

MODEL: SOUTH APP ELEVS
FILE NAME: G:\Users\11111335-01-Waldron-Road-over-I57-Superstructure\Survey D366997\Consultant_Data\Chamlin_2020\CAD_Sheets\0460153-66997-009-010-TOPAPPSLABELEV5.dgn

Chamlin & Associates

USER NAME =	DESIGNED - JKC	REVISED -
	CHECKED - AJO	REVISED -
PLOT SCALE =	DRAWN - LAG	REVISED -
PLOT DATE =	CHECKED - JKC	REVISED -

3/2/2021 2:42:53 PM

STATE OF ILLINOIS
DEPARTMENT OF TRANSPORTATION

TOP OF SOUTH APPROACH SLAB ELEVATIONS
STRUCTURE NO. 046-0153

SHEET 10 OF 54 SHEETS

F.A.I. RTE.	SECTION	COUNTY	TOTAL SHEETS	SHEET NO.
57	139HBR-6	KANKAKEE	202	99

CONTRACT NO. 66997

ILLINOIS FED. AID PROJECT

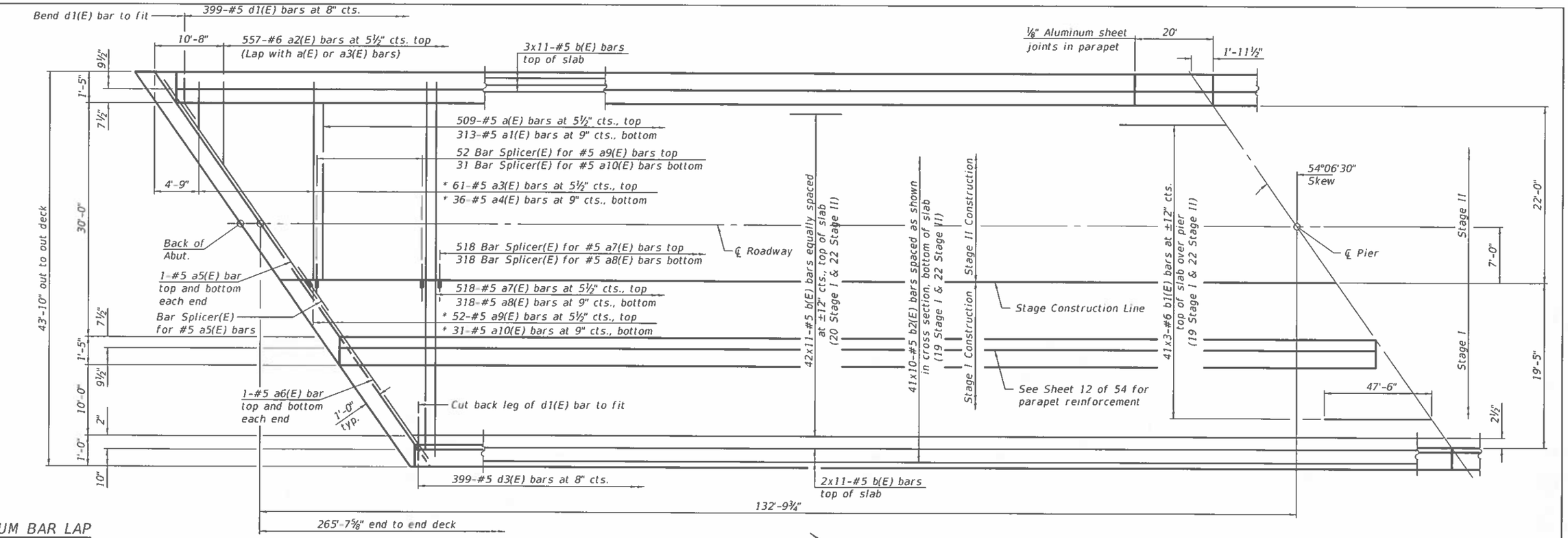

MINIMUM BAR LAP

#5 bar = 3'-6"
#6 bar = 3'-7"

* See Field Cutting Diagram on sheet 12 of 54.

PARTIAL PLAN

Notes:
See sheets 12-14 of 54 for superstructure details and Bill of Material.
Bars indicated thus 20 x 3-#5 etc. indicates 20 lines of bars with 3 lengths per line.
See sheet 49 of 54 for bar splicer details.

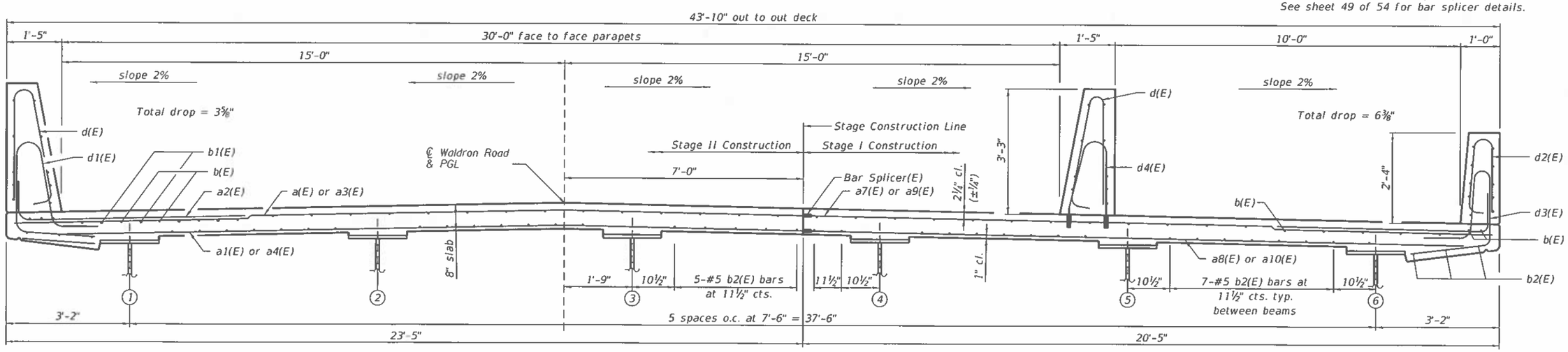

NEAR PIER

NEAR MIDSPAN

CROSS SECTION

(Looking South)

MODEL: TEMP_CONC BARRIER
FILE NAME: G:\Use\11\111335-01-Waldron-Road-over-I57-Superstructure\Survey 03669971\Consultant_Data\Chamlin_2020\CAD_Sheets\0460153-66997-011-SUPERSTRUCTURE.dgn

Chamlin & Associates

USER NAME =	DESIGNED - JKC	REVISED -	
	CHECKED - AJO	REVISED -	
PLOT SCALE =	DRAWN - LAG	REVISED -	
PLOT DATE =	CHECKED - JKC	REVISED -	

3/2/2021 2:46:30 PM

STATE OF ILLINOIS
DEPARTMENT OF TRANSPORTATION

SUPERSTRUCTURE
STRUCTURE NO. 046-0153

SHEET 11 OF 54 SHEETS

F.A.I. RTE.	SECTION	COUNTY	TOTAL SHEETS	SHEET NO.
57	139HBR-6	KANKAKEE	202	100

CONTRACT NO. 66997

ILLINOIS | FED. AID PROJECT

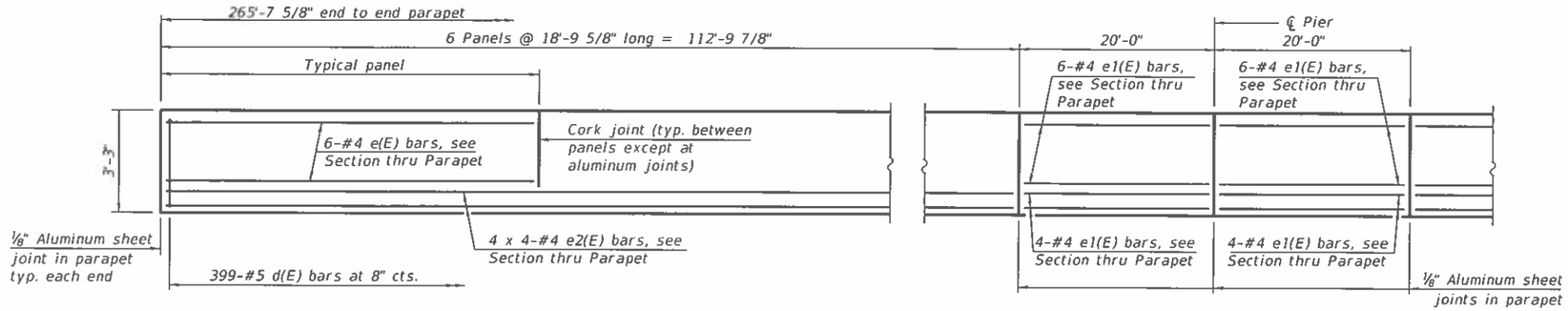

INSIDE ELEVATION OF EAST (LEFT) PARAPET

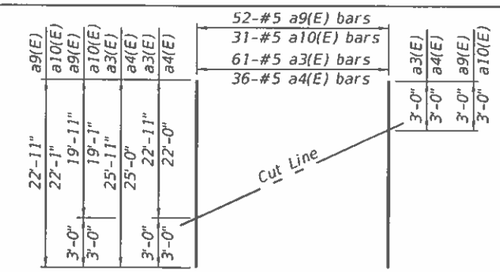

FIELD CUTTING DIAGRAM

Order a3(E), a4(E), a9(E) and a10(E) bars full length. Cut as shown and use remainder of bars in opposite end of deck.

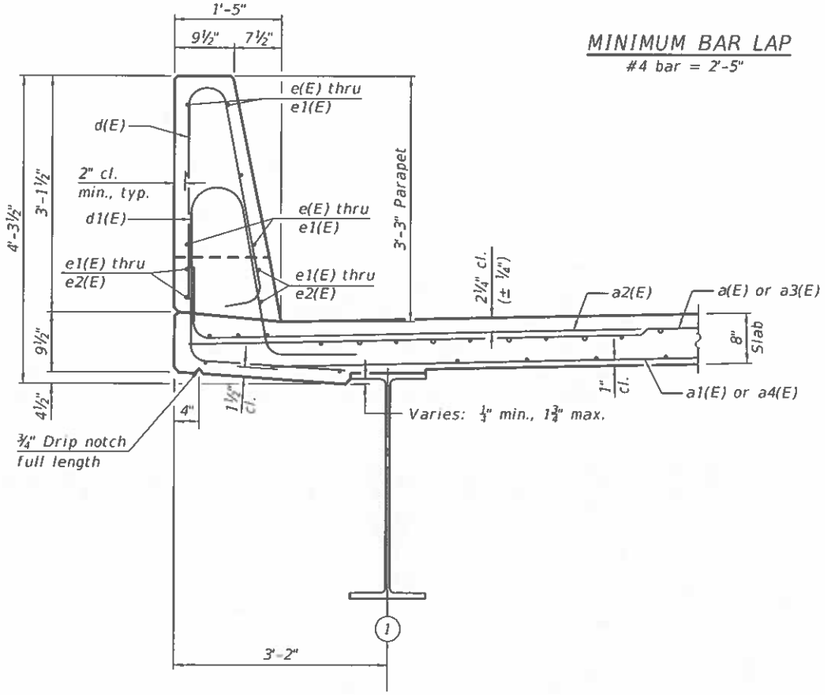

MINIMUM BAR LAP

#4 bar = 2'-5"

SECTION THRU EAST (LEFT) PARAPET

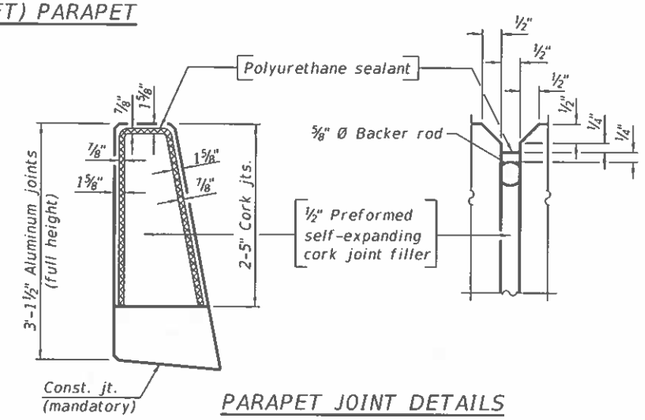

PARAPET JOINT DETAILS

Notes:

The ⅛" aluminum sheet shall be ASTM B 209 alloy 3003-H14 and coated to minimize reaction with wet concrete. Cost included with Concrete Superstructure.

The polyurethane sealant shall be according to Article 1050.04 of the Std. Spec. and the color shall be gray.

Headed bars shall conform to ASTM A970 with threaded attachment; Class HA; and reinforcement bars conforming to ASTM A706. Cost included with Reinforcement Bars, Epoxy Coated.

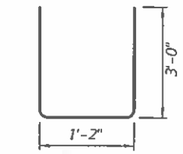

BAR u10(E)

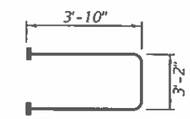

BAR s10(E)

(Headed)

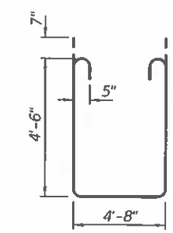

BAR s11(E)

SUPERSTRUCTURE BILL OF MATERIAL

Bar	No.	Size	Length	Shape
a(E)	509	#5	23'-2"	
a1(E)	313	#5	22'-2"	
a2(E)	1114	#6	8'-4"	
a3(E)	61	#5	25'-11"	
a4(E)	36	#5	25'-0"	
a5(E)	4	#5	39'-7"	
a6(E)	4	#5	34'-6"	
a7(E)	518	#5	20'-2"	
a8(E)	318	#5	19'-2"	
a9(E)	52	#5	22'-11"	
a10(E)	31	#5	22'-1"	
b(E)	517	#5	27'-5"	
b1(E)	123	#6	34'-1"	
b2(E)	410	#5	29'-8"	
d(E)	798	#5	6'-5"	
d1(E)	399	#5	8'-5"	
d2(E)	399	#5	5'-0"	
d3(E)	399	#5	6'-10"	
d4(E)	399	#5	5'-3"	
e(E)	216	#4	18'-6"	
e1(E)	60	#4	19'-8"	
e2(E)	96	#4	29'-11"	
m10(E)	4	#6	34'-8"	
m11(E)	16	#6	12'-6"	
m12(E)	24	#6	12'-6"	
m13(E)	8	#6	34'-8"	
m14(E)	20	#6	5'-1"	
m15(E)	4	#4	34'-8"	
m20(E)	4	#6	39'-9"	
m23(E)	8	#6	39'-9"	
m25(E)	4	#4	39'-9"	
s10(E)	82	#5	10'-10"	
s11(E)	82	#5	14'-10"	
u10(E)	82	#4	7'-2"	
Reinforcement Bars, Epoxy Coated			Lbs.	115720
Concrete Superstructure			Cu. Yds.	489.8

Bars indicated thus 1 x 2-#4 etc. indicates 1 line of bars with 2 lengths per line.

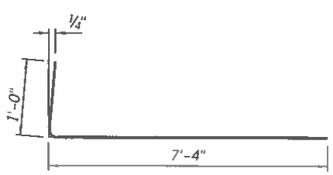

BAR a2(E)

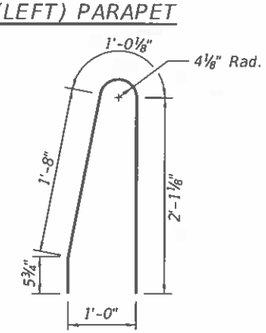

BAR d4(E)

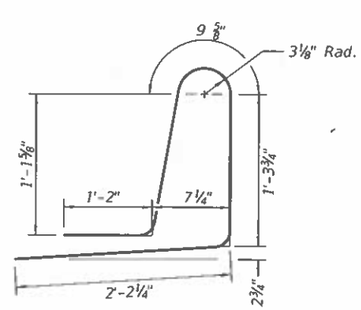

BAR d3(E)

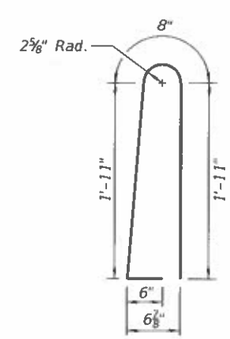

BAR d2(E)

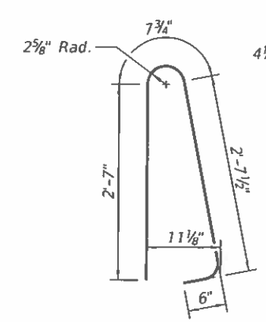

BAR d(E)

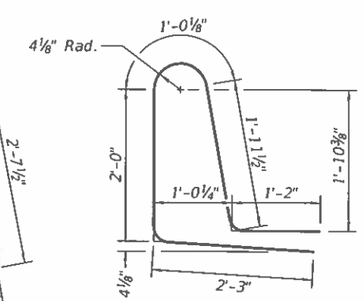

BAR d1(E)

MODEL: SUPDET-WESTPARPET
FILE NAME: G:\Users\1111111335-01-Waldron-Road-over-I57-Superstructure\Survey D366997\Consultant_Data\Chamlin_2020\CAD_Sheets\0460153-66997-012-013-014-SUPERSTR_DETAILS.dgn

Chamlin & Associates

3/2/2021 2:49:49 PM

USER NAME =	DESIGNED - JKC	REVISED -
	CHECKED - AJO	REVISED -
PLOT SCALE =	DRAWN - LAG	REVISED -
PLOT DATE =	CHECKED - JKC	REVISED -

STATE OF ILLINOIS
DEPARTMENT OF TRANSPORTATION

SUPERSTRUCTURE DETAILS
STRUCTURE NO. 046-0153

SHEET 12 OF 54 SHEETS

F.A.I. RTE.	SECTION	COUNTY	TOTAL SHEETS	SHEET NO.
57	139HBR-6	KANKAKEE	202	101

CONTRACT NO. 66997

ILLINOIS FED. AID PROJECT

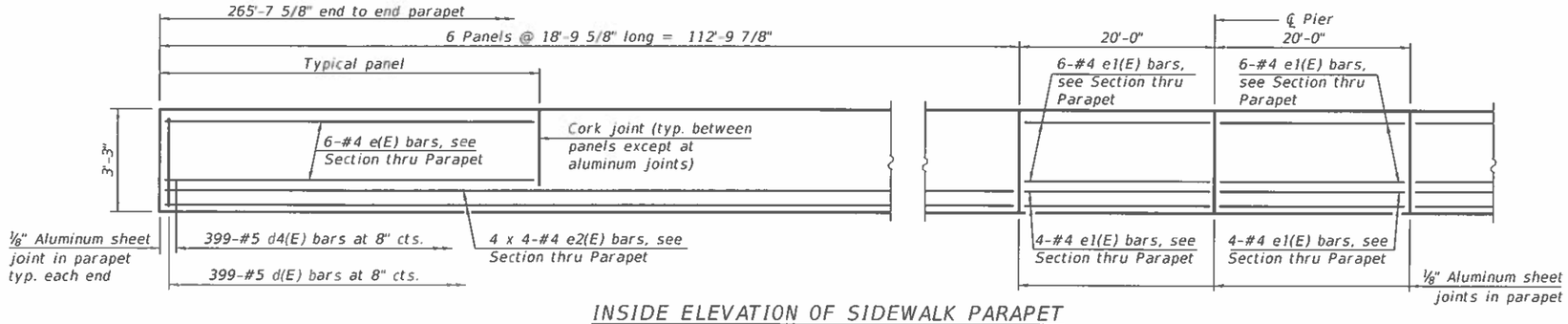

INSIDE ELEVATION OF SIDEWALK PARAPET BETWEEN ROADWAY AND PATH

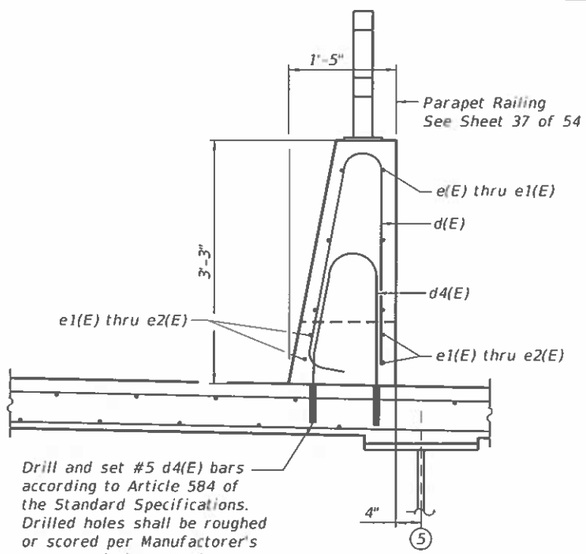

SECTION THRU SIDEWALK PARAPET

MINIMUM BAR LAP

#4 bar = 2'-5"

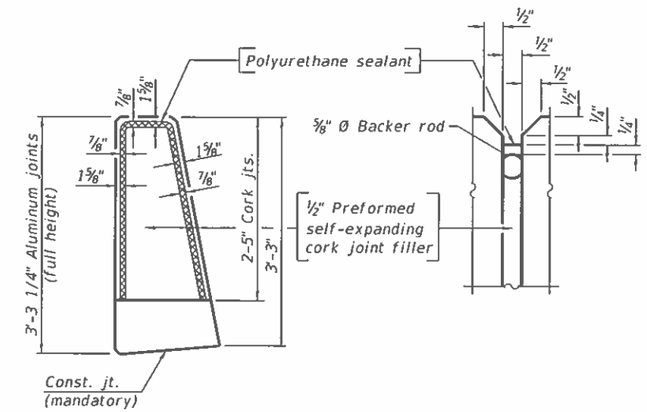

PARAPET JOINT DETAILS

Notes:

The 1/8" aluminum sheet shall be ASTM B 209 alloy 3003-H14 and coated to minimize reaction with wet concrete. Cost included with Concrete Superstructure.

The polyurethane sealant shall be according to Article 1050.04 of the Std. Spec. and the color shall be gray.

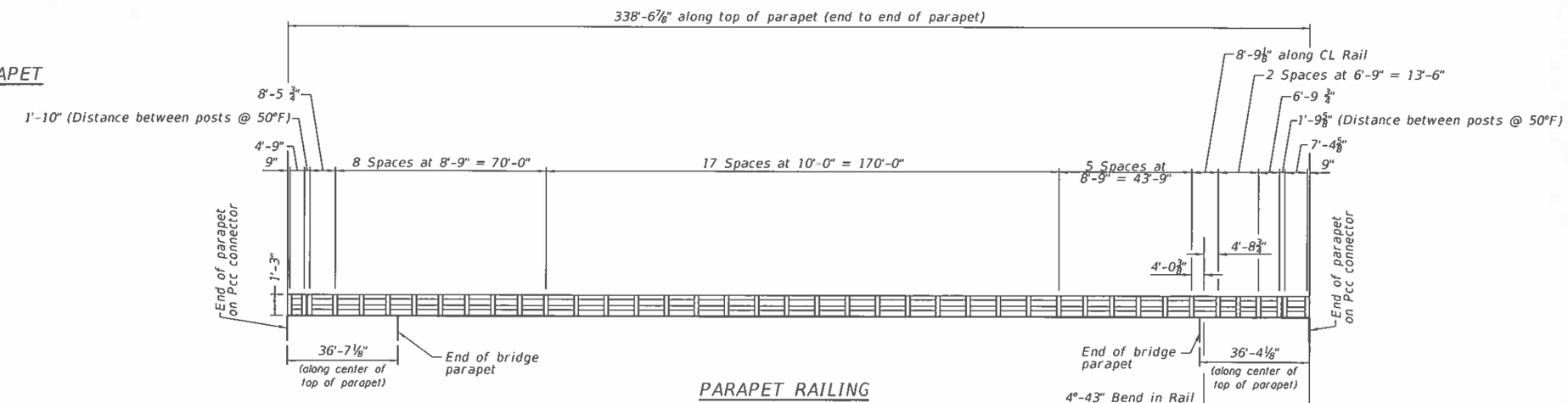

PARAPET RAILING

(Looking from roadway side)

MODEL: SUPDET-SWKPARPET
FILE NAME: G:\Users\11\131335-01-Waldron-Road-over-I57-Superstructure\Survey D366997\Consultant_Data\Chamlin_2020\CAD_Sheets\0460153-66997-012-013-014-SUPERSTR_DETAILS.dgn
3/2/2021 2:48:51 PM

Chamlin & Associates

USER NAME =	DESIGNED - JKC	REVISED -	
	CHECKED - AJO	REVISED -	
PLOT SCALE =	DRAWN - LAG	REVISED -	
PLOT DATE =	CHECKED - JKC	REVISED -	

STATE OF ILLINOIS
DEPARTMENT OF TRANSPORTATION

SUPERSTRUCTURE DETAILS
STRUCTURE NO. 046-0153
SHEET 13 OF 54 SHEETS

F.A.I. RTE.	SECTION	COUNTY	TOTAL SHEETS	SHEET NO.
57	139HBR-6	KANKAKEE	202	102

CONTRACT NO. 66997

ILLINOIS FED. AID PROJECT

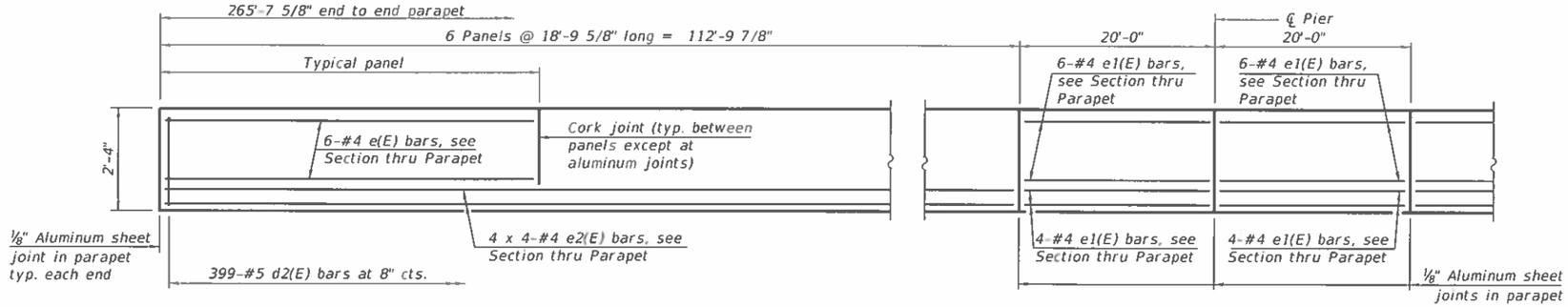

INSIDE ELEVATION OF WEST PARAPET

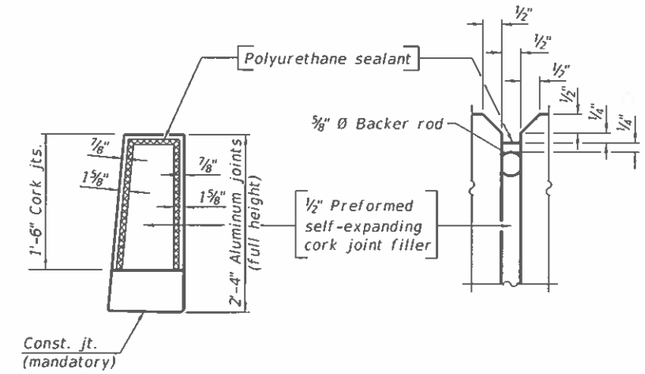

PARAPET JOINT DETAILS

MINIMUM BAR LAP

#4 bar = 2'-5"

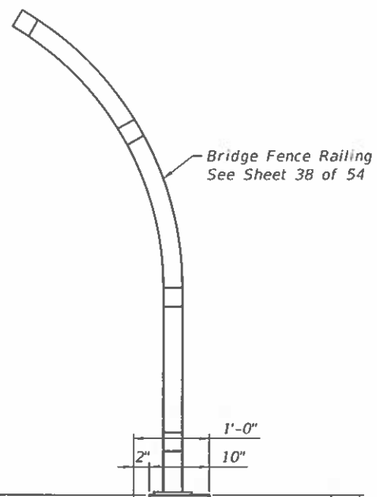

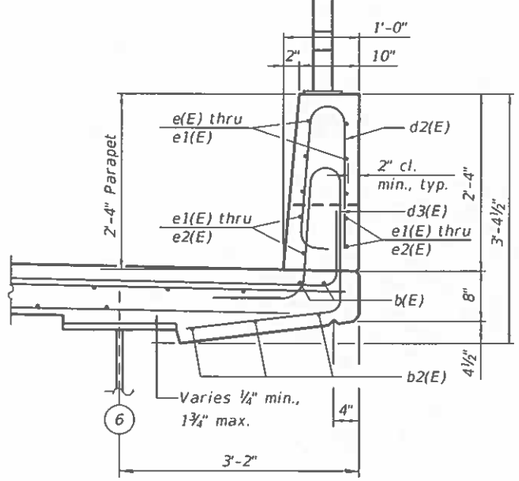

SECTION THRU WEST PARAPET

Notes:

The ⅛" aluminum sheet shall be ASTM B 209 alloy 3003-H14 and coated to minimize reaction with wet concrete. Cost included with Concrete Superstructure.

The polyurethane sealant shall be according to Article 1050.04 of the Std. Spec. and the color shall be gray.

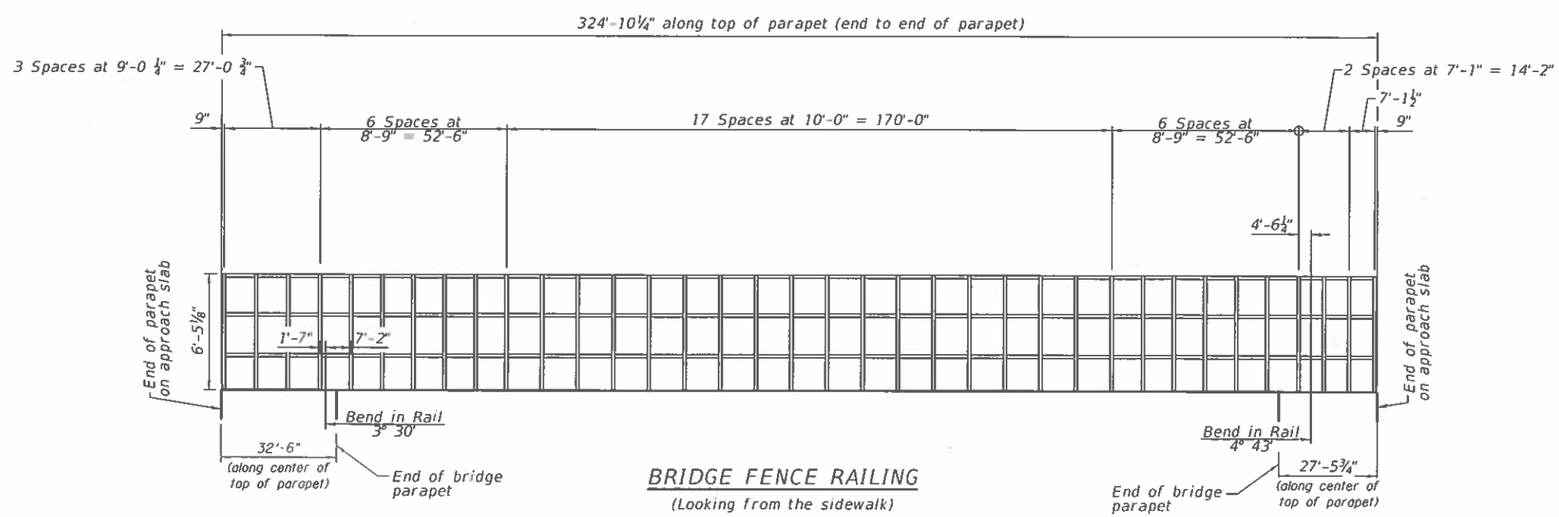

BRIDGE FENCE RAILING

(Looking from the sidewalk)

MODEL: SUPDET-EASTPARPET
FILE NAME: G:\Users\1111111335-01-Waldron-Road-over-I57-Superstructure\Survey D366997\Consultant_Data\Chamlin_2020\CAD_Sheets\0460153-66997-012-013-014_SUPERSTR_DETAILS.dgn
3/11/2021 3:32:57 PM

Chamlin & Associates

USER NAME =	DESIGNED - JKC	REVISED -	
	CHECKED - AJO	REVISED -	
PLOT SCALE =	DRAWN - LAG	REVISED -	
PLOT DATE =	CHECKED - JKC	REVISED -	

STATE OF ILLINOIS
DEPARTMENT OF TRANSPORTATION

SUPERSTRUCTURE DETAILS
STRUCTURE NO. 046-0153

SHEET 14 OF 54 SHEETS

F.A.I. RTE.	SECTION	COUNTY	TOTAL SHEETS	SHEET NO.
57	139HBR-6	KANKAKEE	202	103

CONTRACT NO. 66997

ILLINOIS | FED. AID PROJECT

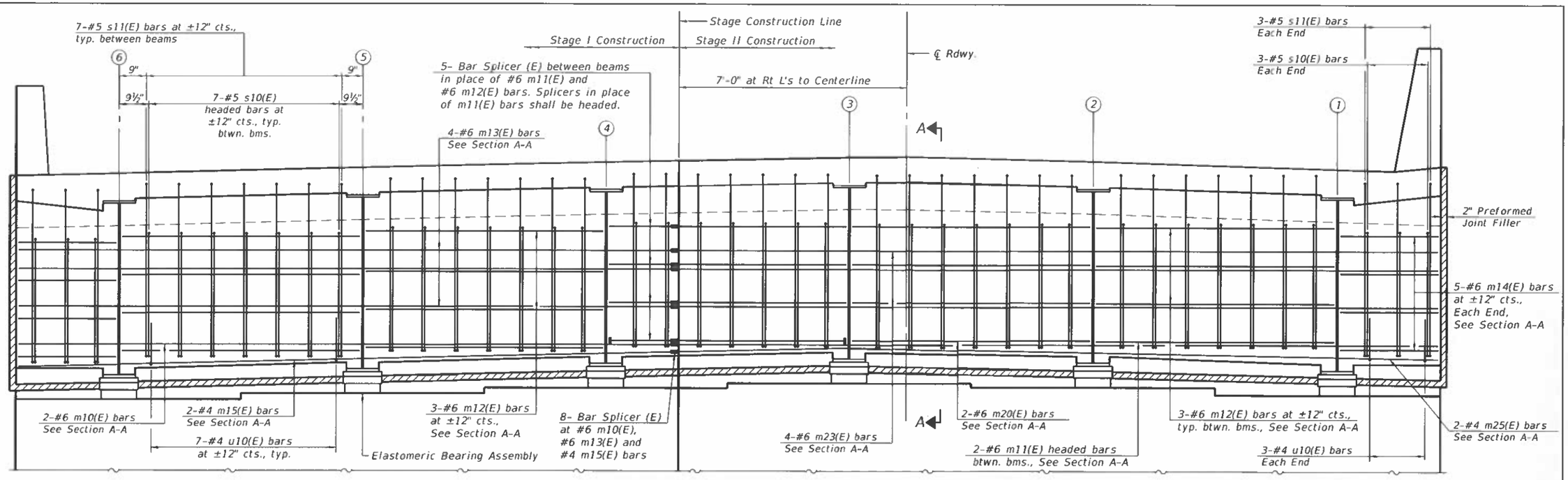

DIAPHRAGM AT NORTH ABUTMENT

(Looking North)

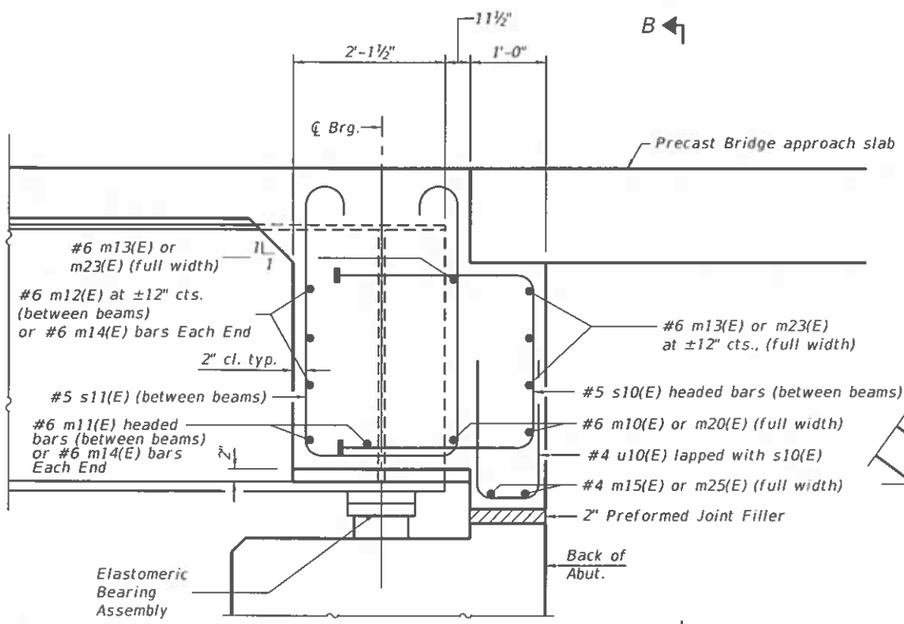

Headed bars shall conform to ASTM A970 with threaded attachment; Class HA; and reinforcement bars conforming to ASTM A706. Cost included with Reinforcement Bars, Epoxy Coated.

SECTION A-A

(at Rt. L's)

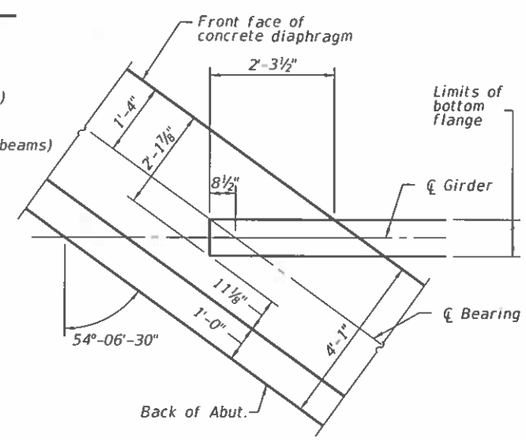

PLAN DETAIL

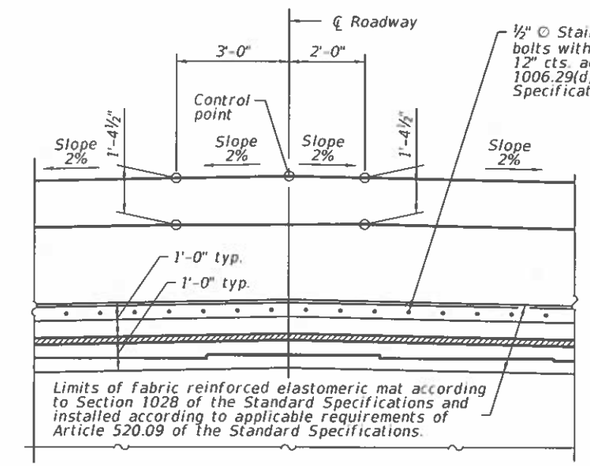

Note:
Cost of fabric reinforced elastomeric mat, galvanized plate, stainless steel expansion bolts with nuts and washers and installation are included in the cost of Concrete Superstructure.

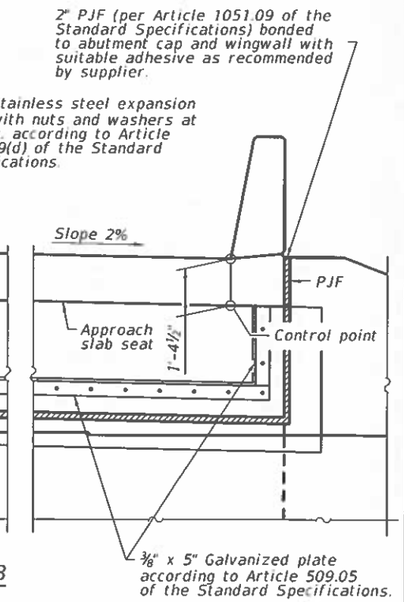

VIEW B-B

Min. lap
#4 bar 2'-5"
#6 bar 3'-7"

Notes:
See sheets 12 - 14 of 54 for superstructure details and Bill of Material.
The s10(E) and s11(E) bars shall be placed parallel to the beams. Spacing for these bars shall be at right angles to the beams.
The approach slab seat shall have a constant slope determined from the control points shown.
See sheet 49 of 54 for bar splicer details.

Chamlin & Associates	USER NAME =	DESIGNED - JKC	REVISED -
		CHECKED - AJO	REVISED -
	PLOT SCALE =	DRAWN - LAG	REVISED -
	PLOT DATE =	CHECKED - JKC	REVISED -

STATE OF ILLINOIS
DEPARTMENT OF TRANSPORTATION

DIAPHRAGM DETAILS
STRUCTURE NO. 046-0153

SHEET 15 OF 54 SHEETS

F.A.I. RTE.	SECTION	COUNTY	TOTAL SHEETS	SHEET NO.
57	139HBR-6	KANKAKEE	202	104
		CONTRACT NO. 66997		
		ILLINOIS FED. AID PROJECT		

MODEL: NORTH DIADETS
FILE NAME: G:\Users\1111\1133\5-01-Waldron Road-over-I57-Superstructure\Survey: D366997\Consultant_Data\Chamlin_2020\CAD Sheets\0460153-66997-015-016-DIAPHRAGM DETAILS.dgn
3/2/2021 2:50:47 PM

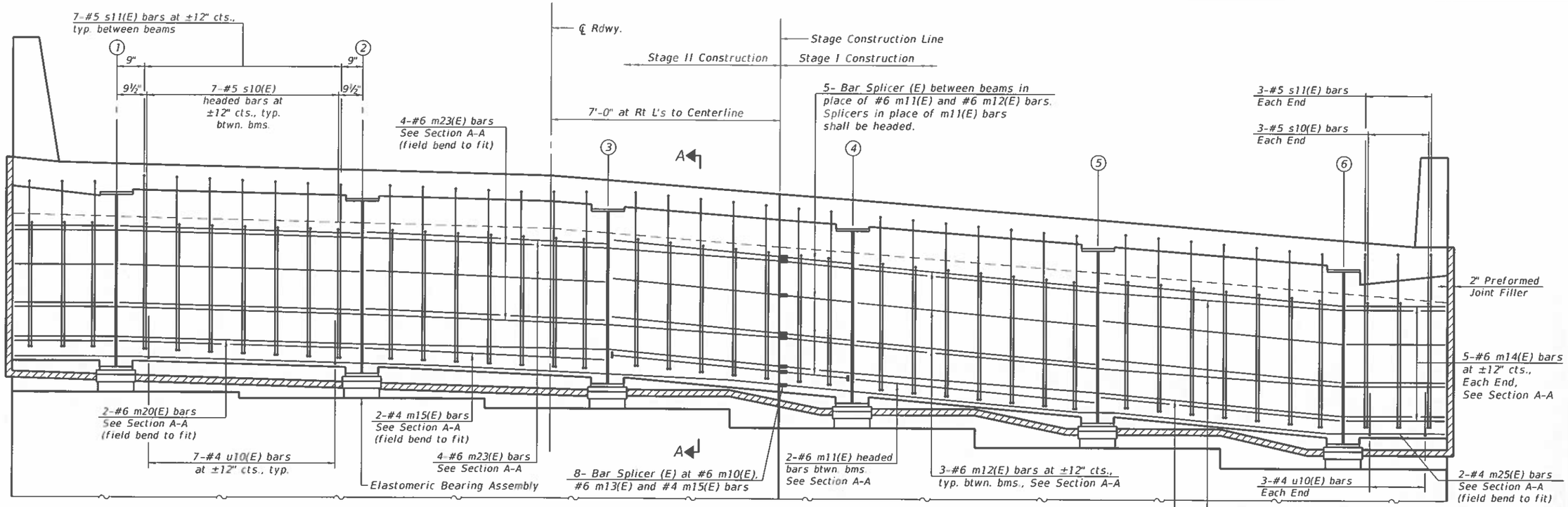

DIAPHRAGM AT SOUTH ABUTMENT
(Looking South)

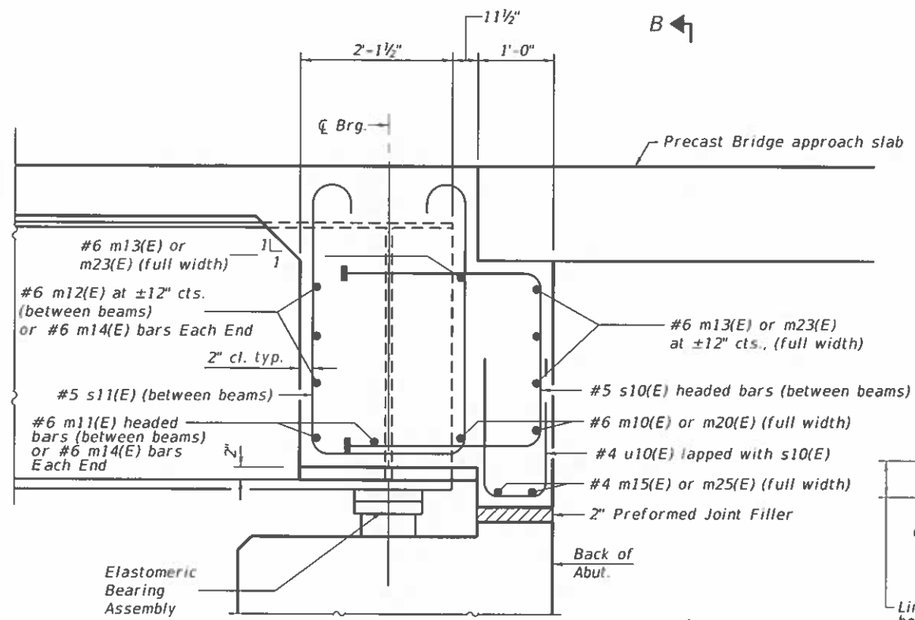

Headed bars shall conform to ASTM A970 with threaded attachment; Class HA; and reinforcement bars conforming to ASTM A706. Cost included with Reinforcement Bars, Epoxy Coated.

SECTION A-A
(at Rt. L's)

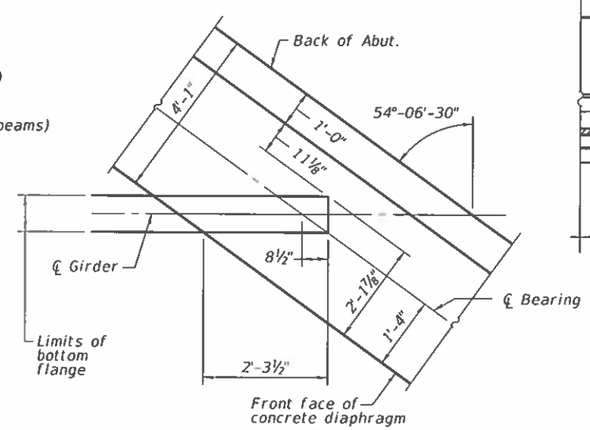

PLAN DETAIL

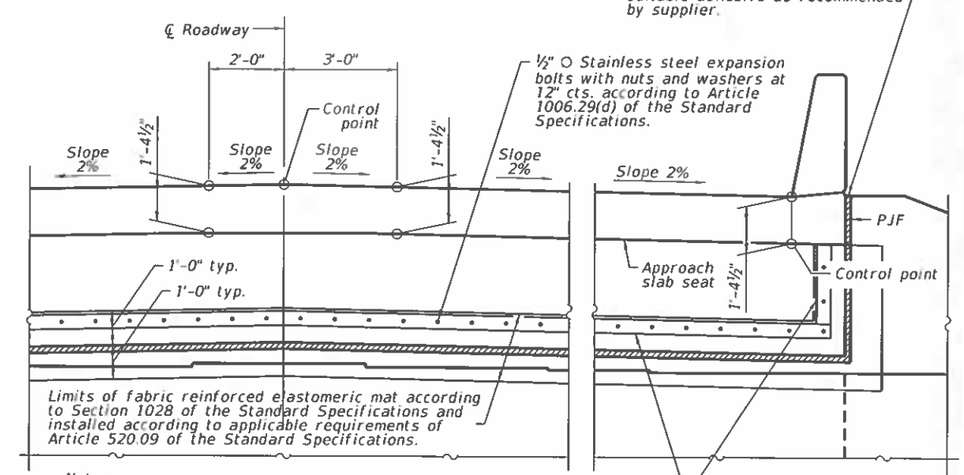

Note:
Cost of fabric reinforced elastomeric mat, galvanized plate, stainless steel expansion bolts with nuts and washers and installation are included in the cost of Concrete Superstructure.

VIEW B-B

Notes:
See sheets 12 - 14 of 54 for superstructure details and Bill of Material.
The s10(E) and s11(E) bars shall be placed parallel to the beams. Spacing for these bars shall be at right angles to the beams.
The approach slab seat shall have a constant slope determined from the control points shown.
See sheet 49 of 54 for bar splicer details.

MODEL: SOUTH DIADETS
FILE NAME: G:\Users\1111111335-01-Waldron-Road-over-I57-Superstructure\Survey D366997\Consultant_Data\Chamlin_2020\CAD_Sheets\0460153-66997-015-016-DIAPHRAGM_DETAILS.dgn
3/2/2021 2:51:15 PM

Chamlin & Associates

USER NAME =	DESIGNED - JKC	REVISED -	
	CHECKED - AJO	REVISED -	
PLOT SCALE =	DRAWN - LAG	REVISED -	
PLOT DATE =	CHECKED - JKC	REVISED -	

STATE OF ILLINOIS
DEPARTMENT OF TRANSPORTATION

DIAPHRAGM DETAILS
STRUCTURE NO. 046-0153
SHEET 16 OF 54 SHEETS

F.A.I. RTE.	SECTION	COUNTY	TOTAL SHEETS	SHEET NO.
57	139HBR-6	KANKAKEE	202	105
		CONTRACT NO. 66997		
		ILLINOIS FED. AID PROJECT		

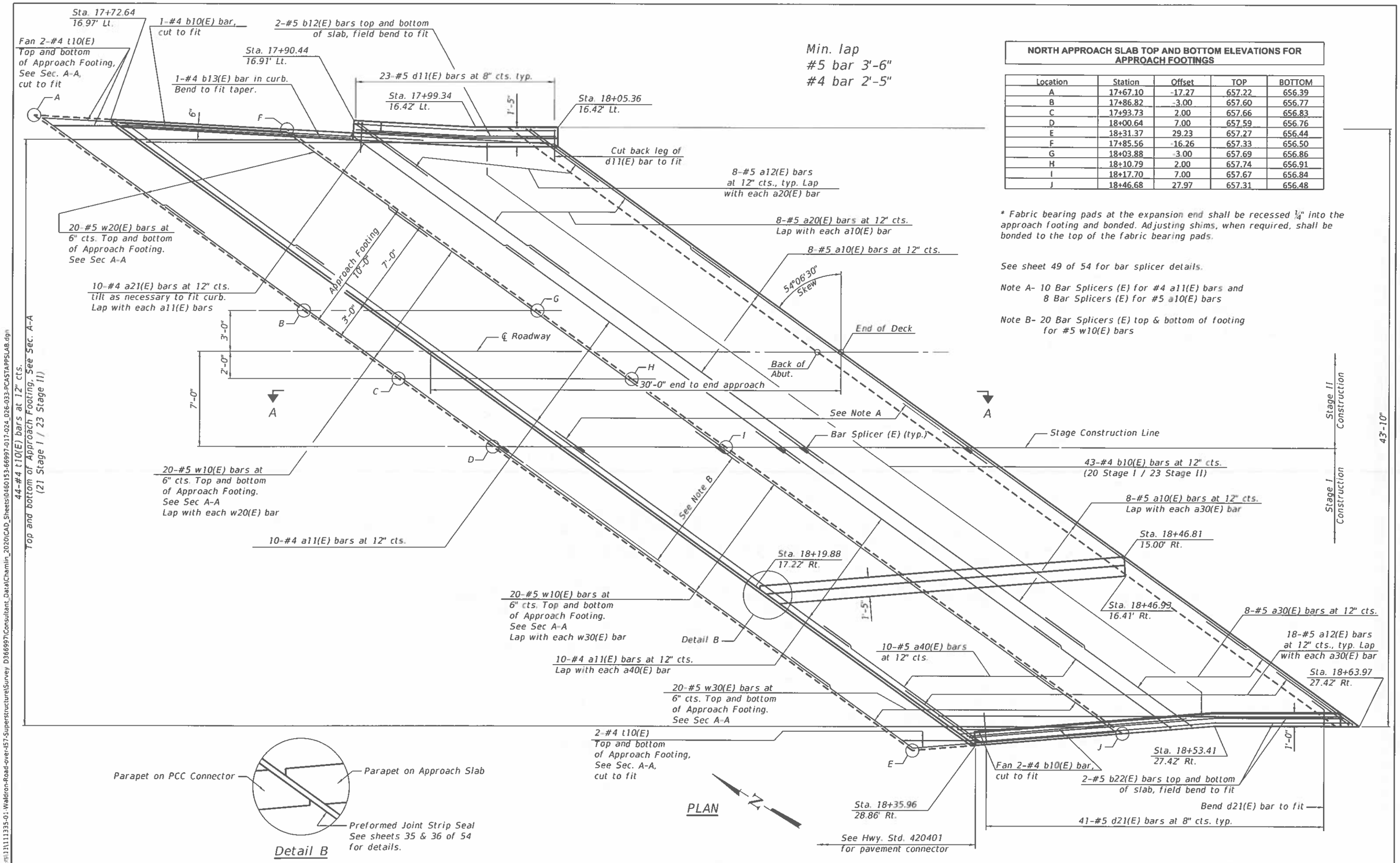

NORTH APPROACH SLAB TOP AND BOTTOM ELEVATIONS FOR APPROACH FOOTINGS

Location	Station	Offset	TOP	BOTTOM
A	17+67.10	-17.27	657.22	656.39
B	17+86.82	-3.00	657.60	656.77
C	17+93.73	2.00	657.66	656.83
D	18+00.64	7.00	657.59	656.76
E	18+31.37	29.23	657.27	656.44
F	17+85.56	-16.26	657.33	656.50
G	18+03.88	-3.00	657.69	656.86
H	18+10.79	2.00	657.74	656.91
I	18+17.70	7.00	657.67	656.84
J	18+46.68	27.97	657.31	656.48

* Fabric bearing pads at the expansion end shall be recessed ¼" into the approach footing and bonded. Adjusting shims, when required, shall be bonded to the top of the fabric bearing pads.

See sheet 49 of 54 for bar splicer details.

Note A- 10 Bar Splicers (E) for #4 a11(E) bars and 8 Bar Splicers (E) for #5 a10(E) bars

Note B- 20 Bar Splicers (E) top & bottom of footing for #5 w10(E) bars

(Sheet 1 of 9)

MODEL: 017-NORTHPLAN
FILE NAME: G:\Users\111111335-01-Waldron-Road-over-I57-Superstructure\Survey D366997\Consultant_Data\Chamlin_2020\CAD_Sheets\0460153-66997-017-024_026-033-PCASTAPPSLAB.dgn
3/2/2021 2:53:30 PM

Chamlin & Associates

USER NAME =	DESIGNED - JKC	REVISED -
	CHECKED - AJO	REVISED -
PLOT SCALE =	DRAWN - LAG	REVISED -
PLOT DATE =	CHECKED - JKC	REVISED -

STATE OF ILLINOIS
DEPARTMENT OF TRANSPORTATION

NORTH PRECAST BRIDGE APPROACH SLAB
STRUCTURE NO. 046-0153

SHEET 17 OF 54 SHEETS

F.A.I. RTE.	SECTION	COUNTY	TOTAL SHEETS	SHEET NO.
57	139HBR-6	KANKAKEE	202	106

CONTRACT NO. 66997

ILLINOIS | FED. AID PROJECT

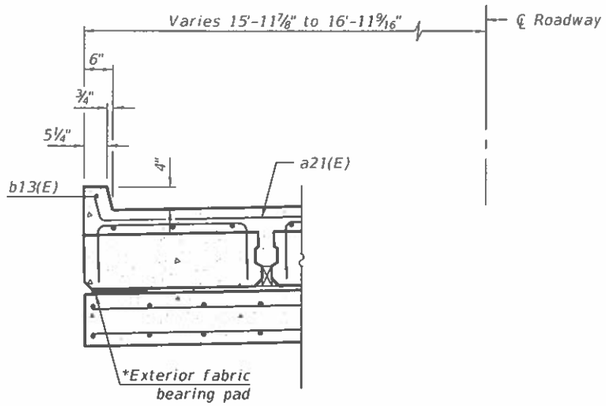

NORTHEAST CURB DETAIL
(Looking South)

Note A
Drill and set #5 d9(E) bars according to Article 584 of the Standard Specifications. Drilled holes shall be roughed or scored per Manufacturer's recommendations. Maximum depth of hole shall not exceed 6" Contractor shall take all necessary precautions to prevent drilled hole interference with deck reinforcement. Locate longitudinal bars to miss drilled locations. Locate drilled holes to miss transverse bars in deck.

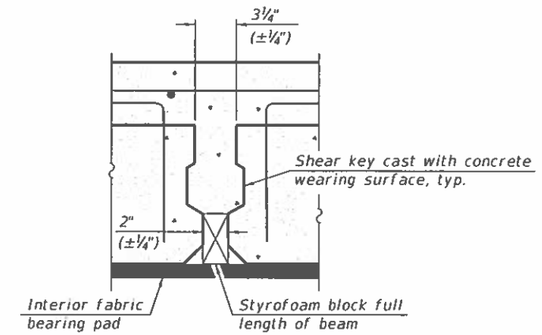

DETAIL 'A'

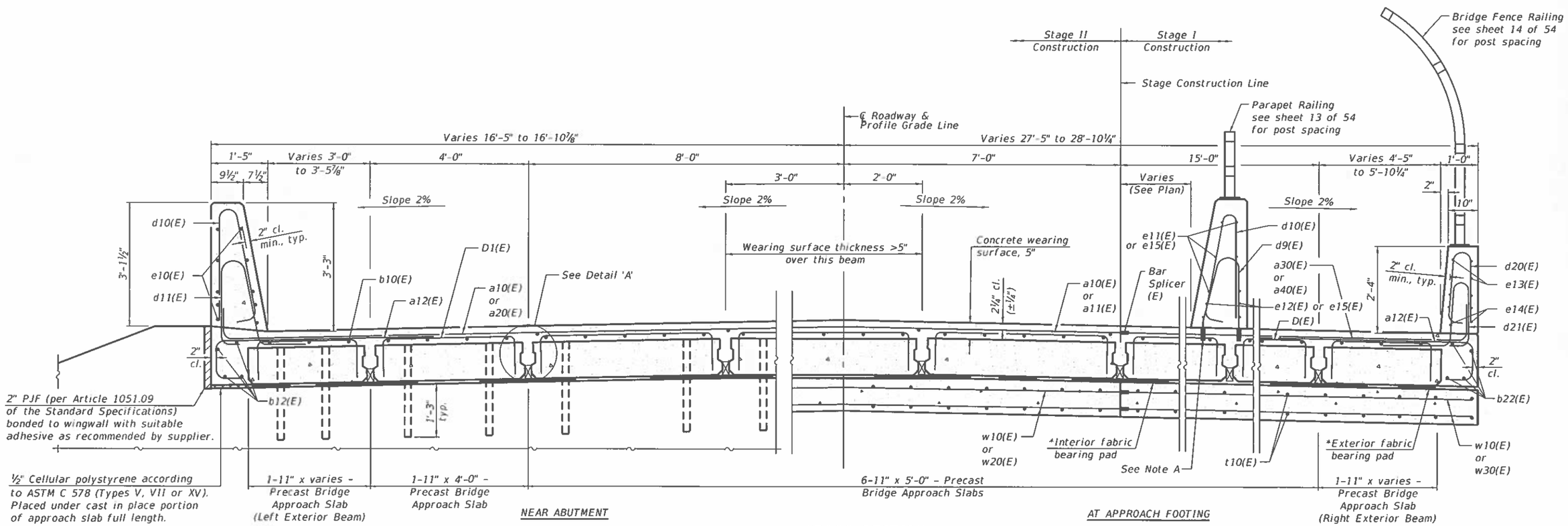

CROSS SECTION
(Looking South)

(Sheet 2 of 9)

USER NAME =	DESIGNED - JKC	REVISED -	STATE OF ILLINOIS DEPARTMENT OF TRANSPORTATION
	CHECKED - AJO	REVISED -	
PLOT SCALE =	DRAWN - LAG	REVISED -	
PLOT DATE =	CHECKED - JKC	REVISED -	

Chamlin & Associates

NORTH PRECAST BRIDGE APPROACH SLAB
STRUCTURE NO. 046-0153

SHEET 18 OF 54 SHEETS

F.A.I. RTE.	SECTION	COUNTY	TOTAL SHEETS	SHEET NO.
57	139HBR-6	KANKAKEE	202	107
		CONTRACT NO. 66997		
		ILLINOIS FED. AID PROJECT		

MODEL: 018-NORTH XS
FILE NAME: G:\USers\1\1111335-0\-Walcron-Road-over-I57-Superstructure\Survey D366997\Consultant_Data\Chamlin_2020\CAD_Sheets\046\153-66997-017-024_026-033-PCASTAPPSLAB.dgn
3/2/2021 2:52:47 PM

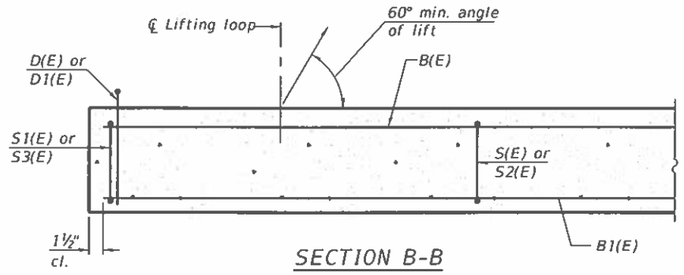

SECTION B-B

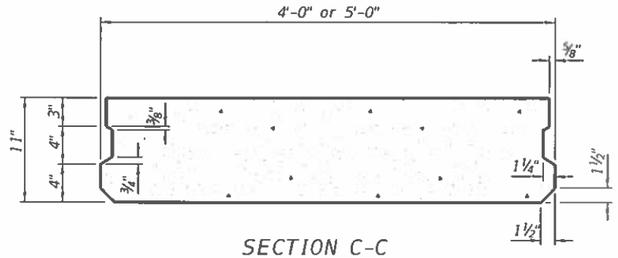

SECTION C-C
(Showing dimensions)

Notes:

The precast bridge approach slab shall be according to Section 504 of the Standard Specifications and shall be paid for at the contract unit price per square foot for Precast Bridge Approach Slab.

Cast-in-place substitution of Precast Bridge Approach Slab is not allowed.

The top surface of precast bridge approach slabs shall be finished similar to precast prestressed deck beams with concrete wearing surface as specified in the IDOT "Manual for Fabrication of Precast Prestressed Concrete Products."

Two ⅛" fabric adjusting shims of the dimensions of the exterior bearing pad shall be provided for each bearing pad location. Cost included with Precast Bridge Approach Slab.

A minimum 2 ½" Ø lifting pins shall be used to engage the lifting loops during handling.

Compressive strength of precast concrete, f'c shall be 6,000 psi.

Compressive strength of precast concrete during initial lifting, f'ci shall be 5,000 psi.

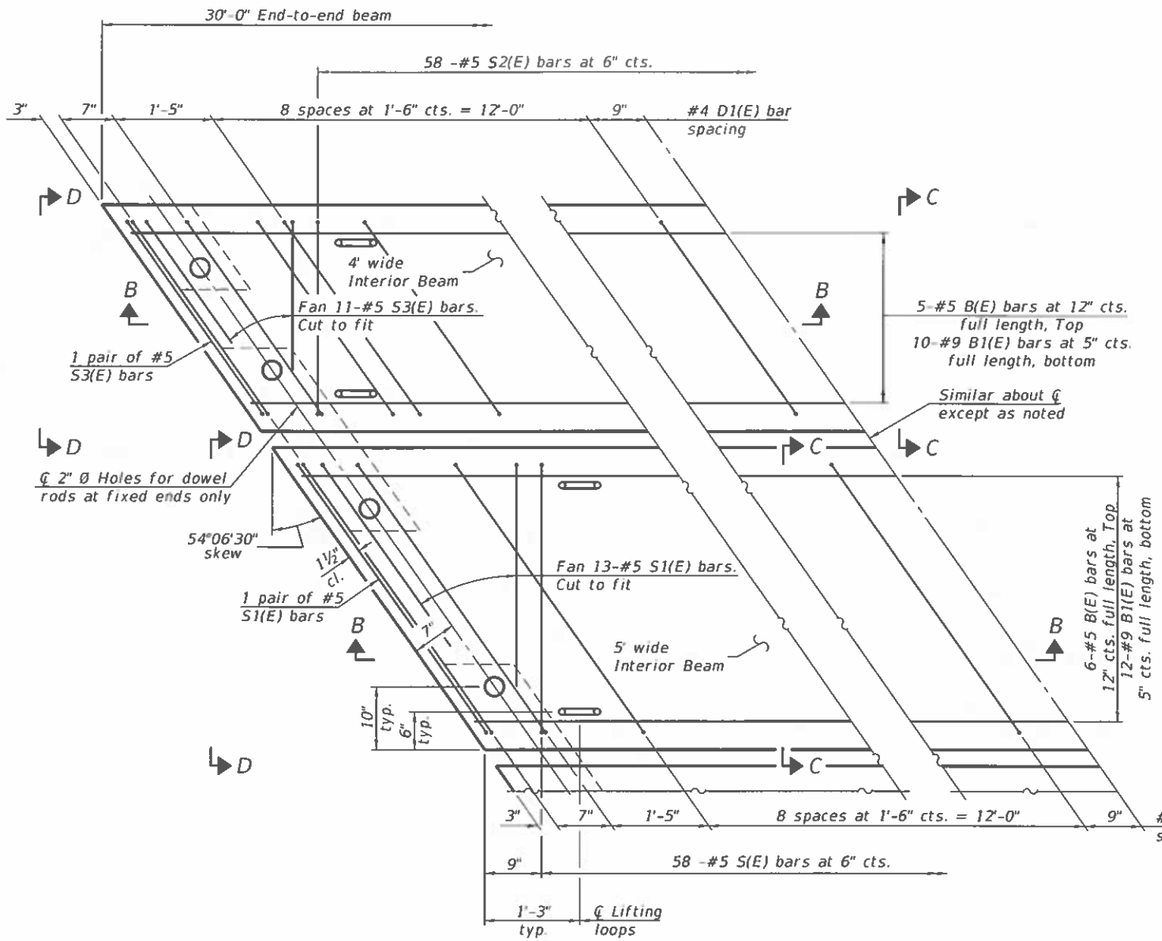

PLAN VIEW
(showing precast bridge approach beams)
(Spacing of D(E) and D1(E) bars may be adjusted up to 3" to miss the dowel rod holes and the lifting loops at the beam ends)

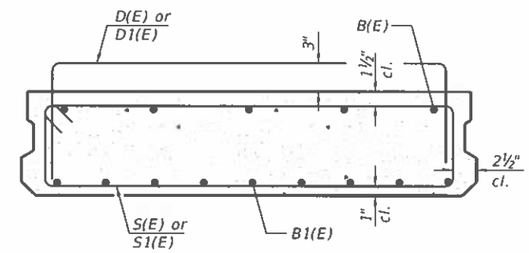

SECTION C-C
(Showing reinforcement)

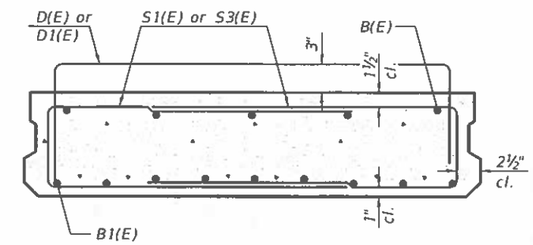

VIEW D-D
(Showing reinforcement)

BARS D(E) & D1(E)

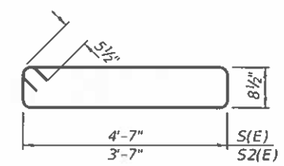

BARS S(E) & S2(E)

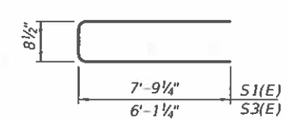

BARS S1(E) & S3(E)

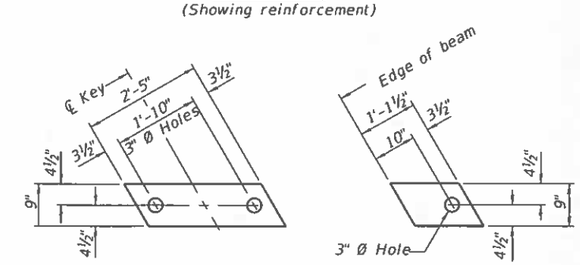

FABRIC BEARING PAD

Notes:

Bearing pads at fixed end shall be ½" thick and bearing pads at expansion end shall be ¾" thick.

Omit holes for fabric bearing pads at approach slab footing end of beams.

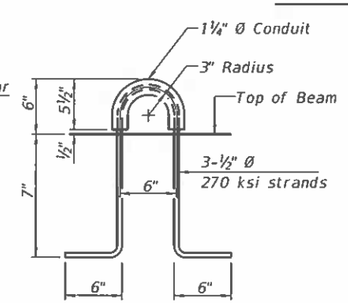

LIFTING LOOP DETAIL
(An alternate lifting loop with a proof load of 25,000 lbs. and utilized according to the manufacturer's recommendations may be used)

BAR LIST
EACH 5' WIDE INTERIOR BEAM
(For information only)

Bar	No.	Size	Length	Shape
B(E)	6	#5	29'-8"	—
B1(E)	12	#9	29'-8"	—
D(E)	22	#4	9'-9"	⊓
S(E)	58	#5	11'-6"	▭
S1(E)	30	#5	16'-3"	⊏

BAR LIST
EACH 4' WIDE INTERIOR BEAM
(For information only)

Bar	No.	Size	Length	Shape
B(E)	5	#5	29'-8"	—
B1(E)	10	#9	29'-8"	—
D1(E)	32	#4	8'-1"	⊓
S2(E)	58	#5	9'-6"	▭
S3(E)	26	#5	12'-3"	⊏

(Sheet 3 of 9)

MODEL: 019-NORTH BEAMDET 4ft 5ft
FILE NAME: G:\Users\11\111335-01-Waldron-Road-over-I57-Superstructure\Survey D366997\Consultant_Data\Chamlin_2020\CAD_Sheets\0460153-66997-017-024_026-033-PCASTAPPSLAB.dgn
3/2/2021 2:55:44 PM

Chamlin & Associates

USER NAME =	DESIGNED - JKC	REVISED -	
	CHECKED - AJO	REVISED -	
PLOT SCALE =	DRAWN - LAG	REVISED -	
PLOT DATE =	CHECKED - JKC	REVISED -	

STATE OF ILLINOIS
DEPARTMENT OF TRANSPORTATION

NORTH PRECAST BRIDGE APPROACH SLABS
STRUCTURE NO. 046-0153

SHEET 19 OF 54 SHEETS

F.A.I. RTE.	SECTION	COUNTY	TOTAL SHEETS	SHEET NO.
57	139HBR-6	KANKAKEE	202	108

CONTRACT NO. 66997

ILLINOIS FED. AID PROJECT

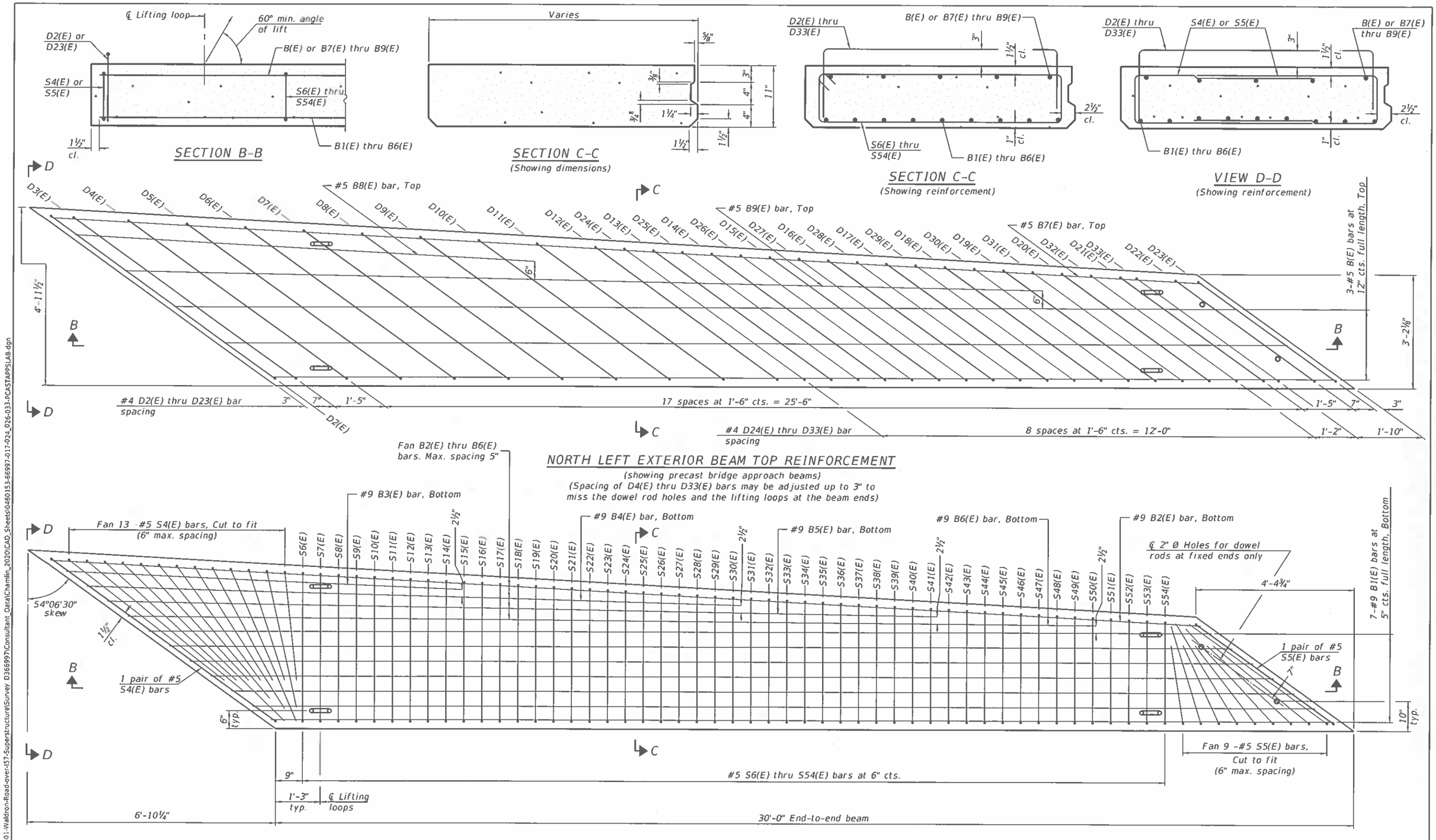

(Sheet 4 of 9)

USER NAME =	DESIGNED - JKC	REVISED -	
	CHECKED - AJO	REVISED -	
PLOT SCALE =	DRAWN - LAG	REVISED -	
PLOT DATE =	CHECKED - JKC	REVISED -	

Chamlin & Associates

STATE OF ILLINOIS
DEPARTMENT OF TRANSPORTATION

NORTH PRECAST BRIDGE APPROACH SLAB
STRUCTURE NO. 046-0153

SHEET 20 OF 54 SHEETS

F.A.I. RTE.	SECTION	COUNTY	TOTAL SHEETS	SHEET NO.
57	139HBR-6	KANKAKEE	202	109

CONTRACT NO. 66997

ILLINOIS | FED. AID PROJECT

MODEL: 020-BEAMDET_EXTNL
FILE NAME: G:\Users\1\1111335-01-Waldron-Road-over-I57-Superstructure\Survey D366997\Consultant_Data\Chamlin_2020\CAD_Sheets\0460153-66997-017-024_026-033-PCASTAPPSLAB.dgn

3/2/2021 2:56:23 PM

7'-8" D2(E)
7'-7" D3(E)
7'-6" D4(E)
7'-4" D5(E)
7'-2" D6(E)
7'-0" D7(E)
6'-10" D8(E)
6'-8" D9(E)
6'-7" D10(E)
6'-5" D11(E)
6'-3" D12(E)
6'-1" D13(E)
5'-11" D14(E)
5'-10" D15(E)
5'-8" D16(E)
5'-6" D17(E)
5'-4" D18(E)
5'-2" D19(E)
5'-0" D20(E)
4'-11" D21(E)
4'-9" D22(E)
4'-8" D23(E)
6'-2" D24(E)
6'-0" D25(E)
5'-10" D26(E)
5'-9" D27(E)
5'-7" D28(E)
5'-5" D29(E)
5'-3" D30(E)
5'-1" D31(E)
4'-11" D32(E)
4'-10" D33(E)

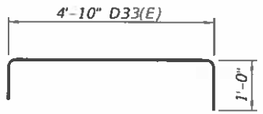

BARS D2(E) thru D33(E)

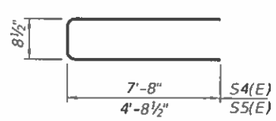

BARS S4(E) & S5(E)

4'-1½" S6(E)
4'-1" S7(E)
4'-0½" S8(E)
4'-0½" S9(E)
4'-0" S10(E)
3'-11½" S11(E)
3'-11½" S12(E)
3'-11" S13(E)
3'-10½" S14(E)
3'-10½" S15(E)
3'-10" S16(E)
3'-9½" S17(E)
3'-9½" S18(E)
3'-9" S19(E)
3'-8½" S20(E)
3'-8½" S21(E)
3'-8" S22(E)
3'-7½" S23(E)
3'-7½" S24(E)
3'-7" S25(E)
3'-7" S26(E)
3'-6½" S27(E)
3'-6" S28(E)
3'-6" S29(E)
3'-5½" S30(E)
3'-5" S31(E)
3'-5" S32(E)
3'-4½" S33(E)
3'-4" S34(E)
3'-4" S35(E)
3'-3½" S36(E)
3'-3" S37(E)
3'-3" S38(E)
3'-2½" S39(E)
3'-2" S40(E)
3'-2" S41(E)
3'-1½" S42(E)
3'-1" S43(E)
3'-1" S44(E)
3'-0½" S45(E)
3'-0" S46(E)
3'-0" S47(E)
2'-11½" S48(E)
2'-11" S49(E)
2'-11" S50(E)
2'-10½" S51(E)
2'-10" S52(E)
2'-10" S53(E)
2'-9½" S54(E)

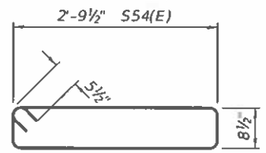

BARS S6(E) thru S54(E)

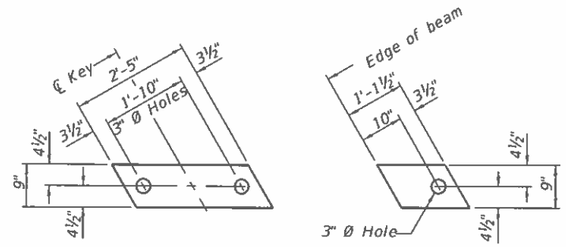

INTERIOR EXTERIOR

FABRIC BEARING PAD

Notes:
Bearing pads at fixed end shall be ½" thick and bearing pads at expansion end shall be ¾" thick.
Omit holes for fabric bearing pads at approach slab footing end of beams.

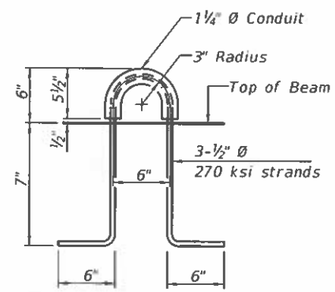

LIFTING LOOP DETAIL

(An alternate lifting loop with a proof load of 25,000 lbs. and utilized according to the manufacturer's recommendations may be used)

Notes:
The precast bridge approach slab shall be according to Section 504 of the Standard Specifications and shall be paid for at the contract unit price per square foot for Precast Bridge Approach Slab.
Cast-in-place substitution of Precast Bridge Approach Slab is not allowed.
The top surface of precast bridge approach slabs shall be finished similar to precast prestressed deck beams with concrete wearing surface as specified in the IDOT "Manual for Fabrication of Precast Prestressed Concrete Products."
Two ⅛" fabric adjusting shims of the dimensions of the exterior bearing pad shall be provided for each bearing pad location. Cost included with Precast Bridge Approach Slab.
A minimum 2 ½" Ø lifting pins shall be used to engage the lifting loops during handling.
Compressive strength of precast concrete, f'c shall be 6,000 psi.
Compressive strength of precast concrete during initial lifting, f'ci shall be 5,000 psi.

BAR LIST
NORTH LEFT EXTERIOR BEAM
(For information only)

Bar	No.	Size	Length	Shape
B(E)	3	#5	29'-8"	—
B1(E)	7	#9	29'-8"	—
B2(E)	1	#9	32'-0"	—
B3(E)	1	#9	11'-0"	—
B4(E)	1	#9	18'-2"	—
B5(E)	1	#9	23'-1"	—
B6(E)	1	#9	26'-11"	—
B7(E)	1	#5	32'-0"	—
B8(E)	1	#5	12'-9"	—
B9(E)	1	#5	25'-6"	—
D2(E)	1	#4	9'-8"	⊓
D3(E)	1	#4	9'-7"	⊓
D4(E)	1	#4	9'-6"	⊓
D5(E)	1	#4	9'-4"	⊓
D6(E)	1	#4	9'-2"	⊓
D7(E)	1	#4	9'-0"	⊓
D8(E)	1	#4	8'-10"	⊓
D9(E)	1	#4	8'-8"	⊓
D10(E)	1	#4	8'-7"	⊓
D11(E)	1	#4	8'-5"	⊓
D12(E)	1	#4	8'-3"	⊓
D13(E)	1	#4	8'-1"	⊓
D14(E)	1	#4	7'-11"	⊓
D15(E)	1	#4	7'-10"	⊓
D16(E)	1	#4	7'-8"	⊓
D17(E)	1	#4	7'-6"	⊓
D18(E)	1	#4	7'-4"	⊓
D19(E)	1	#4	7'-2"	⊓
D20(E)	1	#4	7'-0"	⊓
D21(E)	1	#4	6'-11"	⊓
D22(E)	1	#4	6'-9"	⊓
D23(E)	1	#4	6'-8"	⊓
D24(E)	1	#4	8'-2"	⊓
D25(E)	1	#4	8'-0"	⊓
D26(E)	1	#4	7'-10"	⊓
D27(E)	1	#4	7'-9"	⊓
D28(E)	1	#4	7'-7"	⊓
D29(E)	1	#4	7'-5"	⊓
D30(E)	1	#4	7'-3"	⊓
D31(E)	1	#4	7'-1"	⊓
D32(E)	1	#4	6'-11"	⊓
D33(E)	1	#4	6'-10"	⊓

BAR LIST
NORTH LEFT EXTERIOR BEAM
(For information only)

Bar	No.	Size	Length	Shape
S4(E)	15	#5	16'-1"	▭
S5(E)	11	#5	10'-2"	▭
S6(E)	1	#5	10'-7"	▭
S7(E)	1	#5	10'-6"	▭
S8(E)	1	#5	10'-5"	▭
S9(E)	1	#5	10'-5"	▭
S10(E)	1	#5	10'-4"	▭
S11(E)	1	#5	10'-3"	▭
S12(E)	1	#5	10'-3"	▭
S13(E)	1	#5	10'-2"	▭
S14(E)	1	#5	10'-1"	▭
S15(E)	1	#5	10'-1"	▭
S16(E)	1	#5	10'-0"	▭
S17(E)	1	#5	9'-11"	▭
S18(E)	1	#5	9'-11"	▭
S19(E)	1	#5	9'-10"	▭
S20(E)	1	#5	9'-9"	▭
S21(E)	1	#5	9'-9"	▭
S22(E)	1	#5	9'-8"	▭
S23(E)	1	#5	9'-7"	▭
S24(E)	1	#5	9'-7"	▭
S25(E)	1	#5	9'-6"	▭
S26(E)	1	#5	9'-6"	▭
S27(E)	1	#5	9'-5"	▭
S28(E)	1	#5	9'-4"	▭
S29(E)	1	#5	9'-4"	▭
S30(E)	1	#5	9'-3"	▭
S31(E)	1	#5	9'-2"	▭
S32(E)	1	#5	9'-2"	▭
S33(E)	1	#5	9'-1"	▭
S34(E)	1	#5	9'-0"	▭
S35(E)	1	#5	9'-0"	▭
S36(E)	1	#5	8'-11"	▭
S37(E)	1	#5	8'-10"	▭
S38(E)	1	#5	8'-10"	▭
S39(E)	1	#5	8'-9"	▭
S40(E)	1	#5	8'-8"	▭
S41(E)	1	#5	8'-8"	▭
S42(E)	1	#5	8'-7"	▭
S43(E)	1	#5	8'-6"	▭
S44(E)	1	#5	8'-6"	▭
S45(E)	1	#5	8'-5"	▭
S46(E)	1	#5	8'-4"	▭
S47(E)	1	#5	8'-4"	▭
S48(E)	1	#5	8'-3"	▭
S49(E)	1	#5	8'-2"	▭
S50(E)	1	#5	8'-2"	▭
S51(E)	1	#5	8'-1"	▭
S52(E)	1	#5	8'-0"	▭
S53(E)	1	#5	8'-0"	▭
S54(E)	1	#5	7'-11"	▭

MODEL: 021-BEAMDET EXTNL2
FILE NAME: G:\Users\111\111335-01-Waldron-Road-over-I57-Superstructure\Survey D3669971\Consultant_Data\Chamlin_2020\CAD_Sheets\0460153-66997-017-024_026-033-PCASTAPPSLAB.dgn
3/2/2021 2:57:34 PM

Chamlin & Associates

USER NAME =	DESIGNED - JKC	REVISED -	
	CHECKED - AJO	REVISED -	
PLOT SCALE =	DRAWN - LAG	REVISED -	
PLOT DATE =	CHECKED - JKC	REVISED -	

STATE OF ILLINOIS
DEPARTMENT OF TRANSPORTATION

NORTH PRECAST BRIDGE APPROACH SLAB
STRUCTURE NO. 046-0153

SHEET 21 OF 54 SHEETS

F.A.I. RTE.	SECTION	COUNTY	TOTAL SHEETS	SHEET NO.
57	139HBR-6	KANKAKEE	202	110
		CONTRACT NO. 66997		
		ILLINOIS FED. AID PROJECT		

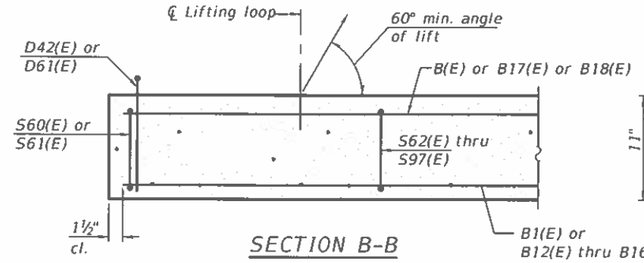

SECTION B-B

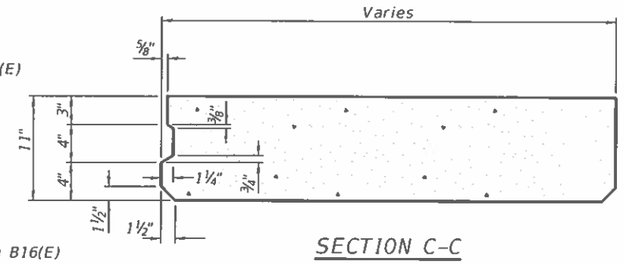

SECTION C-C
(Showing dimensions)

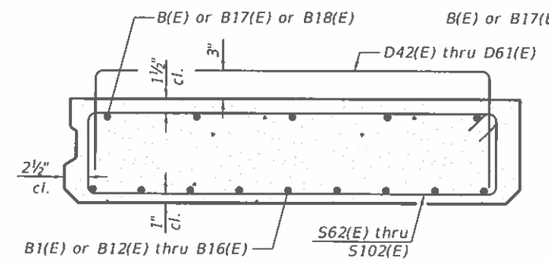

SECTION C-C
(Showing reinforcement)

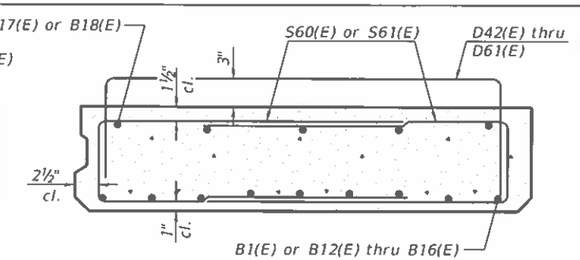

VIEW D-D
(Showing reinforcement)

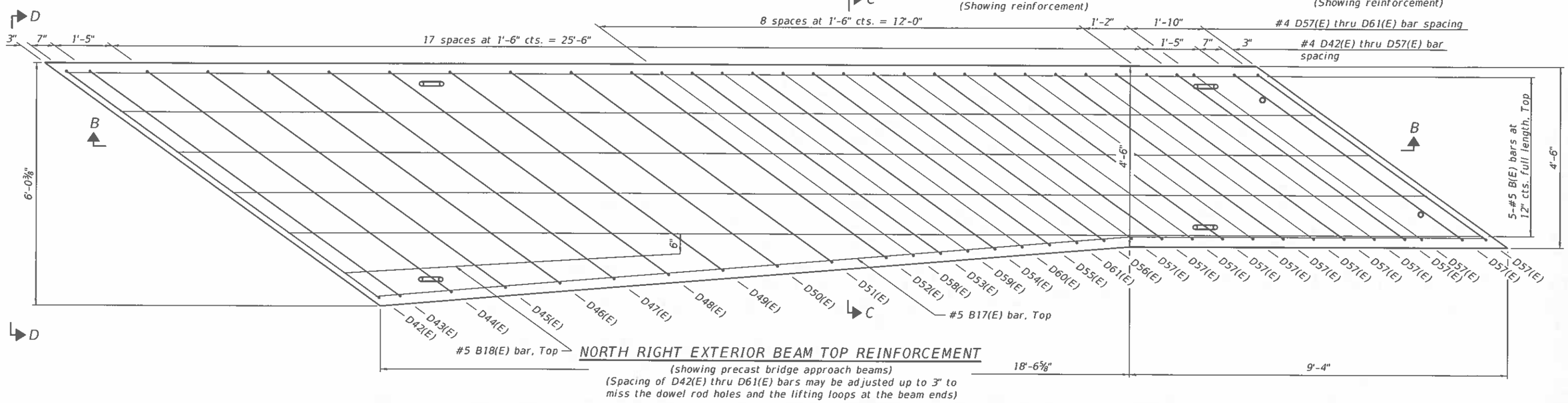

NORTH RIGHT EXTERIOR BEAM TOP REINFORCEMENT
(showing precast bridge approach beams)
(Spacing of D42(E) thru D61(E) bars may be adjusted up to 3" to miss the dowel rod holes and the lifting loops at the beam ends)

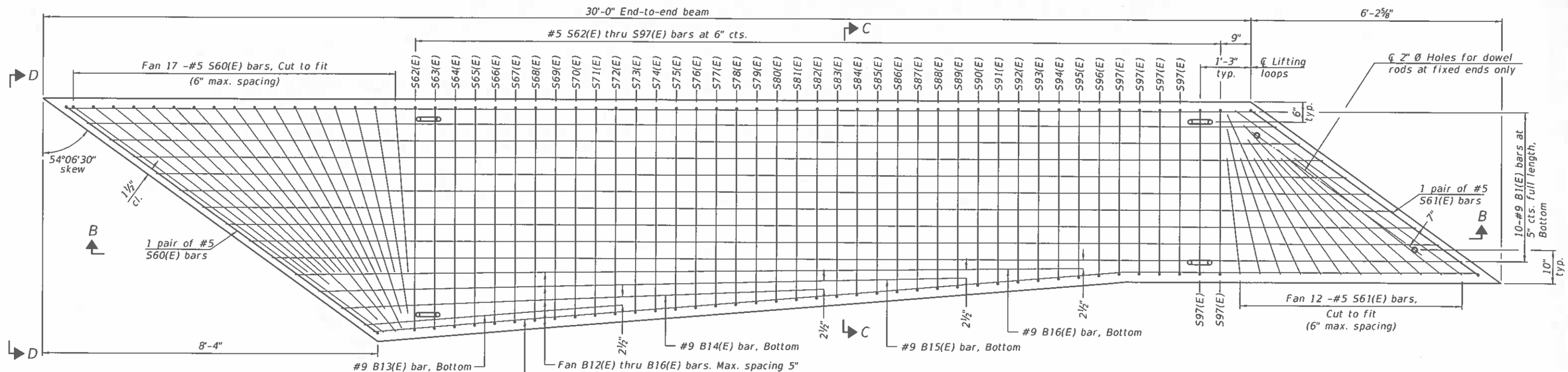

NORTH RIGHT EXTERIOR BEAM BOTTOM REINFORCEMENT

(Sheet 6 of 9)

MODEL: 022-BEAMDET EXTNR
FILE NAME: G:\Users\1111111335-01-Waldron-Road-over-I57-Superstructure\Survey D366997\Consultant_Data\Chamlin_2020\CAD_Sheets\0460153-66997-017-024_026-033-PCA5TAPPSLAB.dgn
3/2/2021 2:58:44 PM

Chamlin & Associates

USER NAME =	DESIGNED - JKC	REVISED -	
	CHECKED - AJO	REVISED -	
PLOT SCALE =	DRAWN - LAG	REVISED -	
PLOT DATE =	CHECKED - JKC	REVISED -	

STATE OF ILLINOIS
DEPARTMENT OF TRANSPORTATION

NORTH PRECAST BRIDGE APPROACH SLAB
STRUCTURE NO. 046-0153

SHEET 22 OF 54 SHEETS

F.A.I. RTE.	SECTION	COUNTY	TOTAL SHEETS	SHEET NO.
57	139HBR-6	KANKAKEE	202	111
		CONTRACT NO. 66997		
		ILLINOIS FED. AID PROJECT		

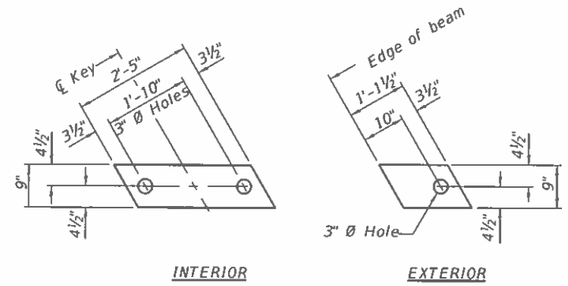

INTERIOR EXTERIOR

FABRIC BEARING PAD

Notes:
Bearing pads at fixed end shall be ½" thick and bearing pads at expansion end shall be ¾" thick.
Omit holes for fabric bearing pads at approach slab footing end of beams.

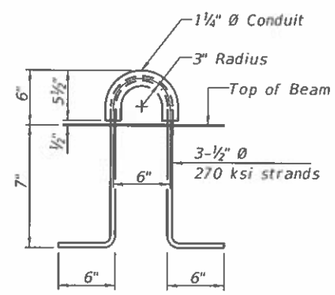

LIFTING LOOP DETAIL

(An alternate lifting loop with a proof load of 25,000 lbs. and utilized according to the manufacturer's recommendations may be used)

Notes:
The precast bridge approach slab shall be according to Section 504 of the Standard Specifications and shall be paid for at the contract unit price per square foot for Precast Bridge Approach Slab.
Cast-in-place substitution of Precast Bridge Approach Slab is not allowed.
The top surface of precast bridge approach slabs shall be finished similar to precast prestressed deck beams with concrete wearing surface as specified in the IDOT "Manual for Fabrication of Precast Prestressed Concrete Products."
Two ⅛" fabric adjusting shims of the dimensions of the exterior bearing pad shall be provided for each bearing pad location. Cost included with Precast Bridge Approach Slab.
A minimum 2 ½" Ø lifting pins shall be used to engage the lifting loops during handling.
Compressive strength of precast concrete, f'c shall be 6,000 psi.
Compressive strength of precast concrete during initial lifting, f'ci shall be 5,000 psi.

9'-7" D42(E)
9'-6" D43(E)
9'-4" D44(E)
9'-1" D45(E)
8'-11" D46(E)
8'-9" D47(E)
8'-6" D48(E)
8'-4" D49(E)
8'-2" D50(E)
8'-0" D51(E)
7'-9" D52(E)
7'-7" D53(E)
7'-5" D54(E)
7'-2" D55(E)
7'-0" D56(E)
6'-11" D57(E)
7'-8" D58(E)
7'-6" D59(E)
7'-4" D60(E)
7'-1" D61(E)

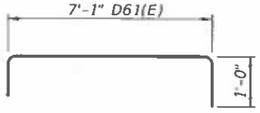

BARS D42(E) thru D61(E)

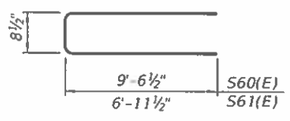

BARS S60(E) & S61(E)

5'-6½" S62(E)
5'-6" S63(E)
5'-5½" S64(E)
5'-5" S65(E)
5'-4½" S66(E)
5'-4" S67(E)
5'-3½" S68(E)
5'-3" S69(E)
5'-2½" S70(E)
5'-2" S71(E)
5'-1½" S72(E)
5'-1" S73(E)
5'-0½" S74(E)
5'-0" S75(E)
4'-11½" S76(E)
4'-11" S77(E)
4'-10½" S78(E)
4'-10" S79(E)
4'-9½" S80(E)
4'-9" S81(E)
4'-8½" S82(E)
4'-8" S83(E)
4'-7½" S84(E)
4'-7" S85(E)
4'-6½" S86(E)
4'-6" S87(E)
4'-5½" S88(E)
4'-5" S89(E)
4'-4½" S90(E)
4'-4" S91(E)
4'-3½" S92(E)
4'-3" S93(E)
4'-2½" S94(E)
4'-2" S95(E)
4'-1½" S96(E)
4'-1" S97(E)

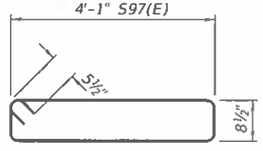

BARS S62(E) thru S97(E)

BAR LIST
NORTH RIGHT EXTERIOR BEAM
(For information only)

Bar	No.	Size	Length	Shape
B(E)	5	#5	29'-8"	—
B1(E)	10	#9	29'-8"	—
B12(E)	1	#9	27'-6"	—
B13(E)	1	#9	6'-5"	—
B14(E)	1	#9	12'-0"	—
B15(E)	1	#9	16'-1"	—
B16(E)	1	#9	19'-7"	—
B17(E)	1	#5	17'-2"	—
B18(E)	1	#5	8'-4"	—
D42(E)	1	#4	11'-7"	⊓
D43(E)	1	#4	11'-6"	⊓
D44(E)	1	#4	11'-4"	⊓
D45(E)	1	#4	11'-1"	⊓
D46(E)	1	#4	10'-11"	⊓
D47(E)	1	#4	10'-9"	⊓
D48(E)	1	#4	10'-6"	⊓
D49(E)	1	#4	10'-4"	⊓
D50(E)	1	#4	10'-2"	⊓
D51(E)	1	#4	10'-0"	⊓
D52(E)	1	#4	9'-9"	⊓
D53(E)	1	#4	9'-7"	⊓
D54(E)	1	#4	9'-5"	⊓
D55(E)	1	#4	9'-2"	⊓
D56(E)	1	#4	9'-0"	⊓
D57(E)	13	#4	8'-11"	⊓
D58(E)	1	#4	9'-8"	⊓
D59(E)	1	#4	9'-6"	⊓
D60(E)	1	#4	9'-4"	⊓
D61(E)	1	#4	9'-1"	⊓

BAR LIST
NORTH RIGHT EXTERIOR BEAM
(For information only)

Bar	No.	Size	Length	Shape
S60(E)	19	#5	19'-10"	▭
S61(E)	14	#5	14'-8"	▭
S62(E)	1	#5	13'-5"	▭
S63(E)	1	#5	13'-4"	▭
S64(E)	1	#5	13'-3"	▭
S65(E)	1	#5	13'-2"	▭
S66(E)	1	#5	13'-1"	▭
S67(E)	1	#5	13'-0"	▭
S68(E)	1	#5	12'-11"	▭
S69(E)	1	#5	12'-10"	▭
S70(E)	1	#5	12'-9"	▭
S71(E)	1	#5	12'-8"	▭
S72(E)	1	#5	12'-7"	▭
S73(E)	1	#5	12'-6"	▭
S74(E)	1	#5	12'-5"	▭
S75(E)	1	#5	12'-4"	▭
S76(E)	1	#5	12'-3"	▭
S77(E)	1	#5	12'-2"	▭
S78(E)	1	#5	12'-1"	▭
S79(E)	1	#5	12'-0"	▭
S80(E)	1	#5	11'-11"	▭
S81(E)	1	#5	11'-10"	▭
S82(E)	1	#5	11'-9"	▭
S83(E)	1	#5	11'-8"	▭
S84(E)	1	#5	11'-7"	▭
S85(E)	1	#5	11'-6"	▭
S86(E)	1	#5	11'-5"	▭
S87(E)	1	#5	11'-4"	▭
S88(E)	1	#5	11'-3"	▭
S89(E)	1	#5	11'-2"	▭
S90(E)	1	#5	11'-1"	▭
S91(E)	1	#5	11'-0"	▭
S92(E)	1	#5	10'-11"	▭
S93(E)	1	#5	10'-10"	▭
S94(E)	1	#5	10'-9"	▭
S95(E)	1	#5	10'-8"	▭
S96(E)	1	#5	10'-7"	▭
S97(E)	6	#5	10'-6"	▭

(Sheet 7 of 9)

MODEL: 023-BEAMDET EXTNR2
FILE NAME: G:\Users\1\111335-01-Waldron-Road-over-I57-Superstructure\Survey D366997\Consultant_Data\Chamlin_2020\CAD_Sheets\0460153-66997-017-024_D26-033-PCASTAPPSLAB.dgn
3/2/2021 2:59:16 PM

Chamlin & Associates

USER NAME =	DESIGNED - JKC	REVISED -	
	CHECKED - AJO	REVISED -	
PLOT SCALE =	DRAWN - LAG	REVISED -	
PLOT DATE =	CHECKED - JKC	REVISED -	

STATE OF ILLINOIS
DEPARTMENT OF TRANSPORTATION

NORTH PRECAST BRIDGE APPROACH SLAB
STRUCTURE NO. 046-0153

SHEET 23 OF 54 SHEETS

F.A.I. RTE.	SECTION	COUNTY	TOTAL SHEETS	SHEET NO.
57	139HBR-6	KANKAKEE	202	112

CONTRACT NO. 66997
ILLINOIS FED. AID PROJECT

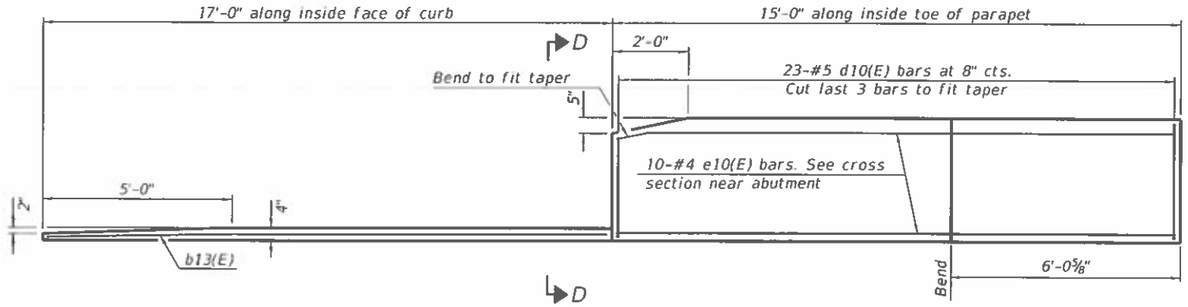

INSIDE ELEVATION OF EAST (LEFT) PARAPET AND CURB

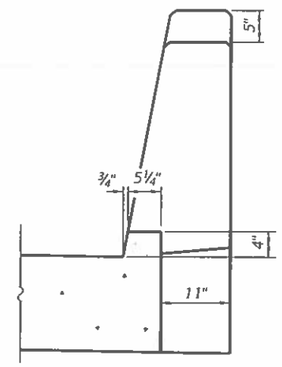

VIEW D-D

Notes:

The joint opening shall be adjusted for temperature per Article 520.04 of the Standard Specifications. However, since this detail is for jointless structures, the length of bridge used to calculate the adjustment shall be equal to half the total bridge length plus the length of the bridge approach slab.

After precast bridge approach slabs have been erected, holes shall be drilled into abutment and anchor dowels placed. Dowel holes shall be filled with non-shrink grout to top of precast slab and cured according to Article 1020.13(a)(3) or 1020.13(a)(5) of the Standard Specifications for a minimum of 24 hours before casting the shear keys and wearing surface.

Any concrete poured monolithically with the wearing surface, such as curbs, shall not be paid for separately, but will be included in the cost of Concrete Wearing Surface, 5".

The strip seal shall extend 6" beyond the edge of the approach slab on each end.

Parapet concrete shall be paid for as Concrete Superstructure.

Approach footing concrete shall be paid for as Concrete Structures.

The approach footing maximum applied service bearing pressure (Qmax) = 2.0 ksf.

Cost of excavation for approach footing included with Concrete Structures.

For Granular Backfill for Structures and drainage treatment details, see sheet 2 of 54.

Cost of cellular polystyrene is included with Concrete Superstructure.

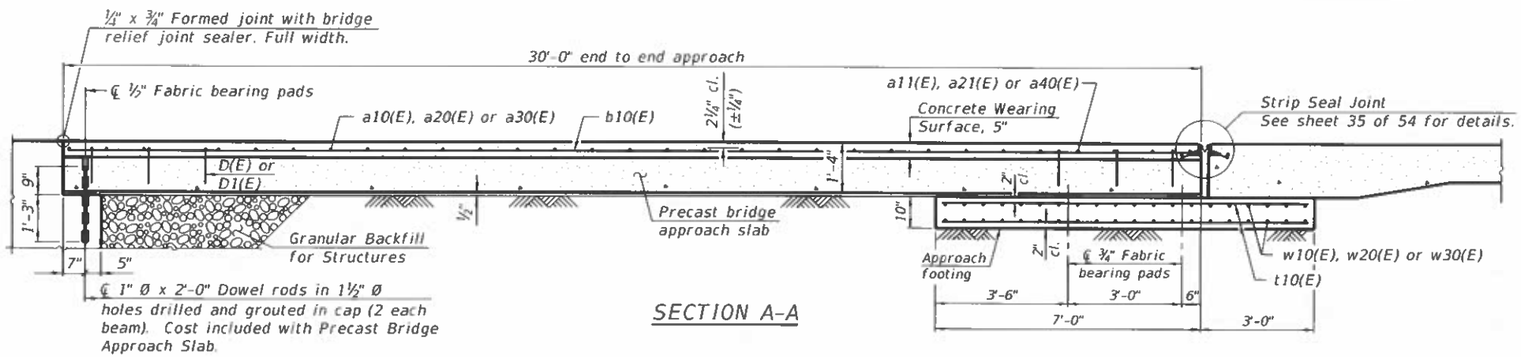

SECTION A-A

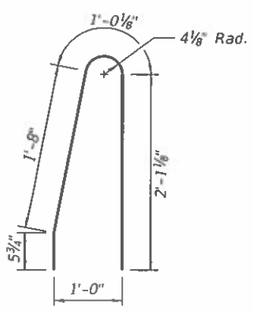

BAR d9(E)

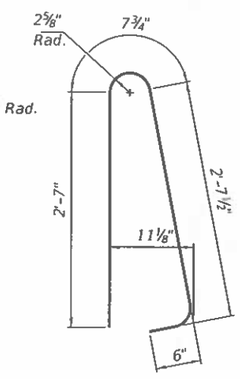

BAR d10(E)

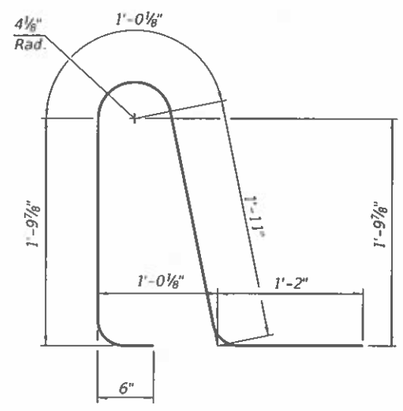

BAR d11(E)

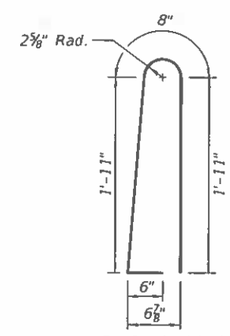

BAR d20(E)

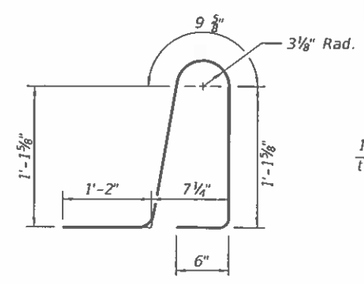

BAR d21(E)

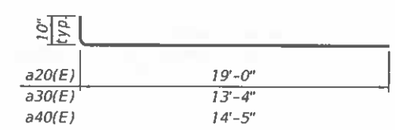

BAR a20(E), a30(E) or a40(E)

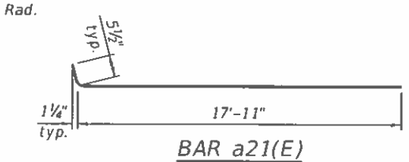

BAR a21(E)

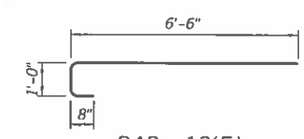

BAR a12(E)

BILL OF MATERIAL

Bar	No.	Size	Length	Shape
a10(E)	16	#5	25'-0"	
a11(E)	20	#4	25'-0"	
a12(E)	26	#5	8'-2"	
a20(E)	8	#5	19'-10"	
a21(E)	10	#4	18'-5"	
a30(E)	8	#5	14'-2"	
a40(E)	10	#5	15'-3"	
b10(E)	43	#5	29'-5"	
b12(E)	4	#5	14'-7"	
b13(E)	1	#4	16'-9"	
b22(E)	4	#5	27'-5"	
d9(E)	53	#5	5'-3"	
d10(E)	76	#5	6'-5"	
d11(E)	23	#5	6'-5"	
d20(E)	41	#5	5'-0"	
d21(E)	41	#5	4'-9"	
e10(E)	10	#4	14'-9"	
e11(E)	12	#4	13'-3"	
e12(E)	4	#4	26'-9"	
e13(E)	12	#4	13'-1"	
e14(E)	4	#4	26'-6"	
e15(E)	10	#4	9'-0"	
t10(E)	96	#4	16'-6"	
w10(E)	80	#5	30'-0"	
w20(E)	40	#5	14'-6"	
w30(E)	40	#5	11'-1"	
Concrete Superstructure			Cu. Yd.	8.7
Concrete Structures			Cu. Yd.	23.9
Reinforcement Bars, Epoxy Coated			Pound	9550
Precast Bridge Approach Slab			Sq. Ft.	1293
Concrete Wearing Surface, 5"			Sq. Yd.	148

(Sheet 8 of 9)

MODEL: 024-NCUR85
FILE NAME: G:\Use*s\1\1111335-01-Waldron-Road-over-I57-Superstructure\Survey D366997\Consultant_Data\Chamlin_2020\CAD_Sheets\0460153-66997-017-024_026-033-PCASTAPPSLAB.dgn
3/2/2021 3:01:08 PM

Chamlin & Associates

USER NAME =	DESIGNED - JKC	REVISED -	
	CHECKED - AJO	REVISED -	
PLOT SCALE =	DRAWN - LAG	REVISED -	
PLOT DATE =	CHECKED - JKC	REVISED -	

STATE OF ILLINOIS
DEPARTMENT OF TRANSPORTATION

NORTH PRECAST BRIDGE APPROACH SLAB
STRUCTURE NO. 046-0153

SHEET 24 OF 54 SHEETS

F.A.I. RTE.	SECTION	COUNTY	TOTAL SHEETS	SHEET NO.
57	139HBR-6	KANKAKEE	202	113

CONTRACT NO. 66997

ILLINOIS | FED. AID PROJECT

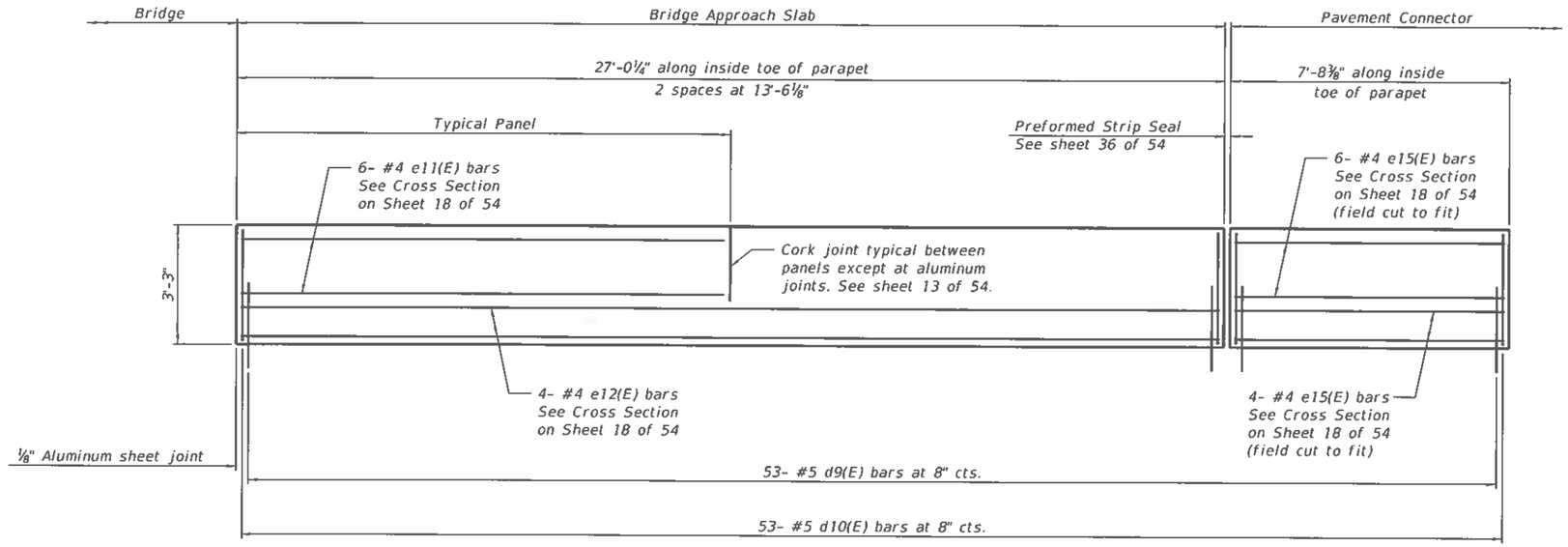

INSIDE ELEVATION OF WEST (RIGHT) PARAPET

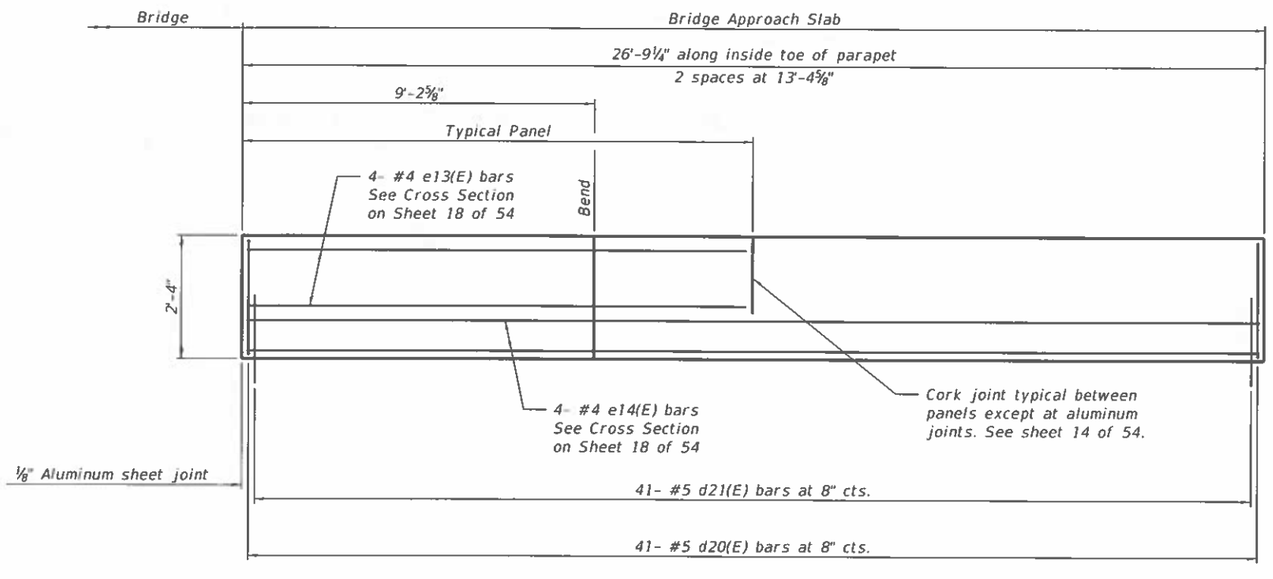

INSIDE ELEVATION OF SIDEWALK PARAPET

(Sheet 9 of 9)

Chamlin & Associates	USER NAME =	DESIGNED - JKC	REVISED -
		CHECKED - AJO	REVISED -
	PLOT SCALE =	DRAWN - LAG	REVISED -
	PLOT DATE =	CHECKED - JKC	REVISED -

STATE OF ILLINOIS
DEPARTMENT OF TRANSPORTATION

NORTH PRECAST BRIDGE APPROACH SLAB
STRUCTURE NO. 046-0153

SHEET 25 OF 54 SHEETS

F.A.I. RTE.	SECTION	COUNTY	TOTAL SHEETS	SHEET NO.
57	139HBR-6	KANKAKEE	202	114

CONTRACT NO. 66997

ILLINOIS FED. AID PROJECT

MODEL: 025-NWPARAPET
FILE NAME: G:\Users\J1111335-01-Waldron-Road-over-I57-Superstructure\Survey D366997\Consultant_Data\Chamlin_2020\CAD_Sheets\0460153-66997-017-024_026-033-PCASTAPPSLAB.dgn
3/2/2021 3:03:07 PM

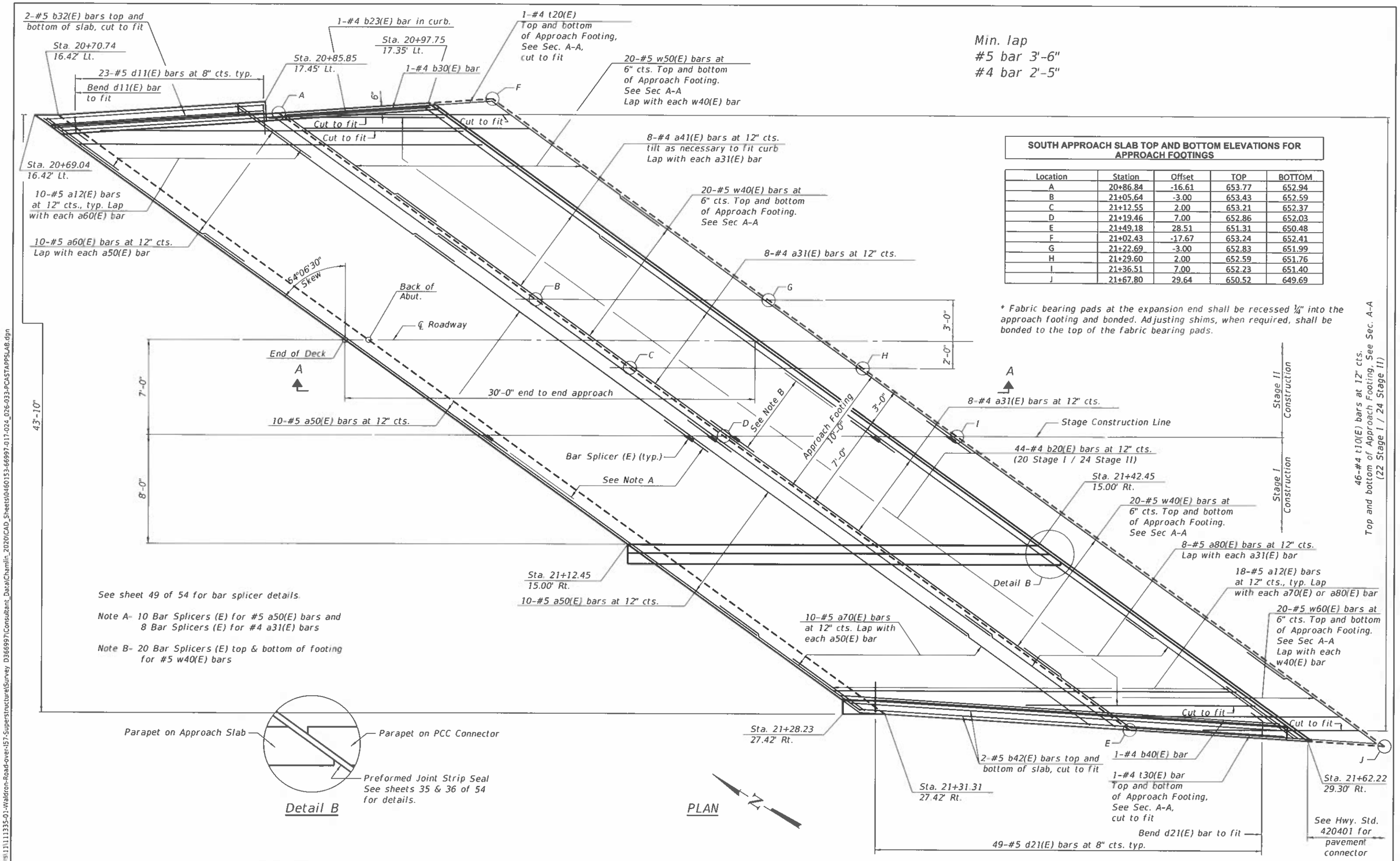

SOUTH APPROACH SLAB TOP AND BOTTOM ELEVATIONS FOR APPROACH FOOTINGS

Location	Station	Offset	TOP	BOTTOM
A	20+86.84	-16.61	653.77	652.94
B	21+05.64	-3.00	653.43	652.59
C	21+12.55	2.00	653.21	652.37
D	21+19.46	7.00	652.86	652.03
E	21+49.18	28.51	651.31	650.48
F	21+02.43	-17.67	653.24	652.41
G	21+22.69	-3.00	652.83	651.99
H	21+29.60	2.00	652.59	651.76
I	21+36.51	7.00	652.23	651.40
J	21+67.80	29.64	650.52	649.69

* Fabric bearing pads at the expansion end shall be recessed ¼" into the approach footing and bonded. Adjusting shims, when required, shall be bonded to the top of the fabric bearing pads.

See sheet 49 of 54 for bar splicer details.

Note A- 10 Bar Splicers (E) for #5 a50(E) bars and 8 Bar Splicers (E) for #4 a31(E) bars

Note B- 20 Bar Splicers (E) top & bottom of footing for #5 w40(E) bars

(Sheet 1 of 9)

MODEL: 026-SOUTHPLAN
FILE NAME: G:\Users\1111111335-01-Waldron-Road-over-I57-Superstructure\Survey D366997\Consultant_Data\Chamlin_2020\CAD_Sheets\0460153-66997-017-024_026-033-PCASTAPPSLAB.dgn
3/2/2021 2:52:16 PM

Chamlin & Associates

USER NAME =	DESIGNED - JKC	REVISED -	
	CHECKED - AJO	REVISED -	
PLOT SCALE =	DRAWN - LAG	REVISED -	
PLOT DATE =	CHECKED - JKC	REVISED -	

STATE OF ILLINOIS
DEPARTMENT OF TRANSPORTATION

SOUTH PRECAST BRIDGE APPROACH SLAB
STRUCTURE NO. 046-0153

SHEET 26 OF 54 SHEETS

F.A.I. RTE.	SECTION	COUNTY	TOTAL SHEETS	SHEET NO.
57	139HBR-6	KANKAKEE	202	115

CONTRACT NO. 66997

ILLINOIS FED. AID PROJECT

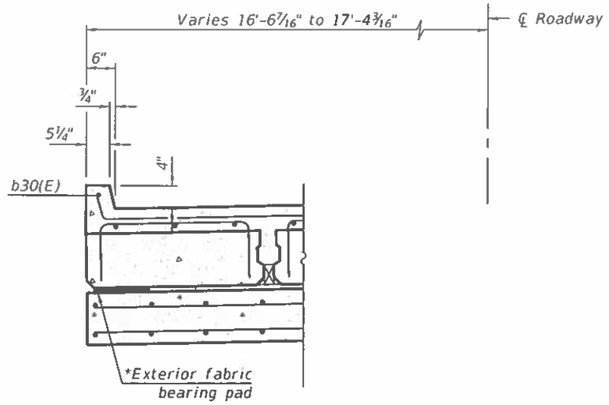

SOUTHEAST CURB DETAIL
(Looking South)

Note A
Drill and set #5 d9(E) bars according to Article 584 of the Standard Specifications. Drilled holes shall be roughed or scored per Manufactorer's recommendations. Maximum depth of hole shall not exceed 6" Contractor shall take all necessary precautions to prevent drilled hole interference with deck reinforcement. Locate longitudinal bars to miss drilled locations. Locate drilled holes to miss transverse bars in deck.

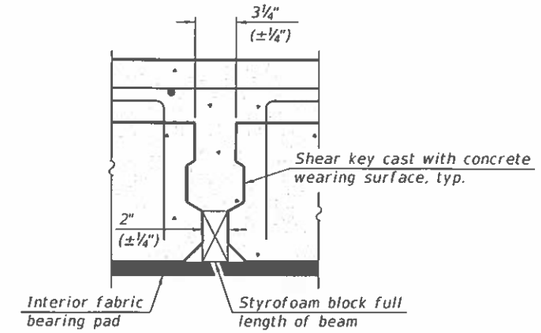

DETAIL 'A'

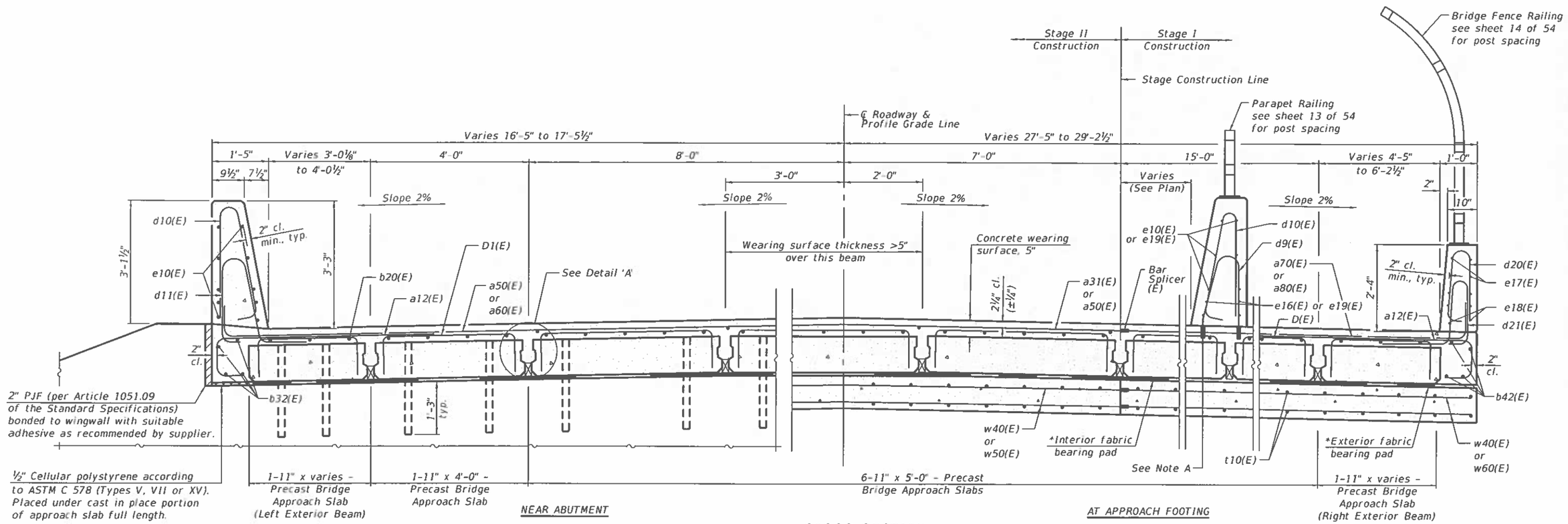

CROSS SECTION
(Looking South)

(Sheet 2 of 9)

USER NAME =	DESIGNED - JKC	REVISED -	STATE OF ILLINOIS DEPARTMENT OF TRANSPORTATION
	CHECKED - AJO	REVISED -	
PLOT SCALE =	DRAWN - LAG	REVISED -	
PLOT DATE =	CHECKED - JKC	REVISED -	

Chamlin & Associates

SOUTH PRECAST BRIDGE APPROACH SLAB
STRUCTURE NO. 046-0153

SHEET 27 OF 54 SHEETS

F.A.I. RTE.	SECTION	COUNTY	TOTAL SHEETS	SHEET NO.
57	139HBR-6	KANKAKEE	202	116

CONTRACT NO. 66997

ILLINOIS FED. AID PROJECT

MODEL: 027-SOUTH XS
FILE NAME: G:\Users\11111335-01-Waldron-Road-over-I57-Superstructure\Survey D366997\Consultant_Data\Chamlin_2020\CAD_Sheets\0460153-66997-017-024_026-033-PCASTAPPSLAB.dgn
3/2/2021 3:03:43 PM

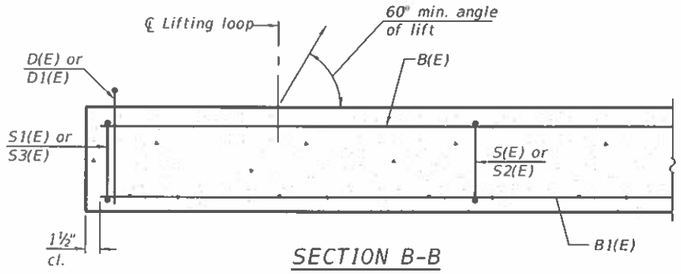

SECTION B-B

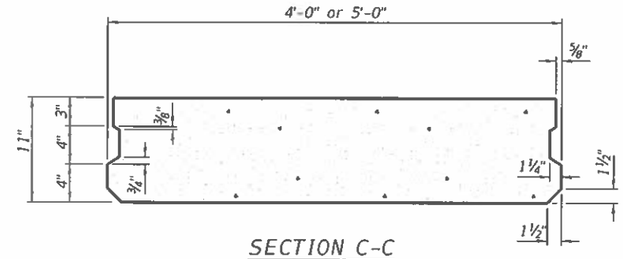

SECTION C-C
(Showing dimensions)

Notes:
The precast bridge approach slab shall be according to Section 504 of the Standard Specifications and shall be paid for at the contract unit price per square foot for Precast Bridge Approach Slab.
Cast-in-place substitution of Precast Bridge Approach Slab is not allowed.
The top surface of precast bridge approach slabs shall be finished similar to precast prestressed deck beams with concrete wearing surface as specified in the IDOT "Manual for Fabrication of Precast Prestressed Concrete Products."
Two ⅛" fabric adjusting shims of the dimensions of the exterior bearing pad shall be provided for each bearing pad location. Cost included with Precast Bridge Approach Slab.
A minimum 2 ½" Ø lifting pins shall be used to engage the lifting loops during handling.
Compressive strength of precast concrete, f'c shall be 6,000 psi.
Compressive strength of precast concrete during initial lifting, f'ci shall be 5,000 psi.

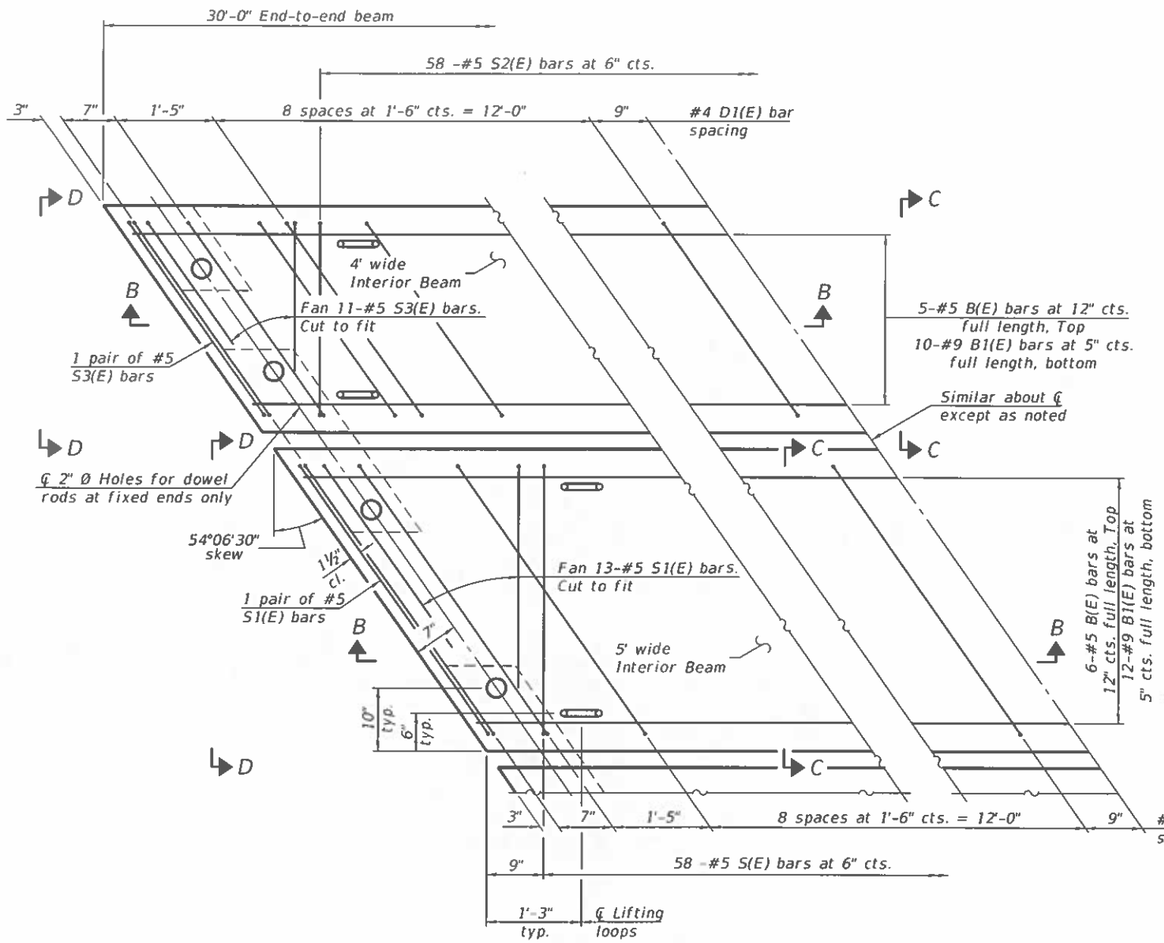

PLAN VIEW
(showing precast bridge approach beams)
(Spacing of D(E) and D1(E) bars may be adjusted up to 3" to miss the dowel rod holes and the lifting loops at the beam ends)

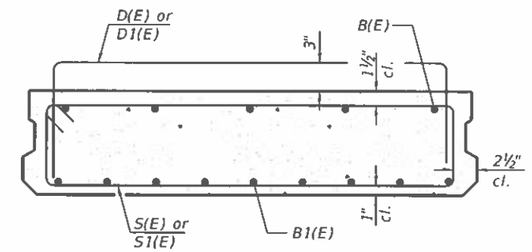

SECTION C-C
(Showing reinforcement)

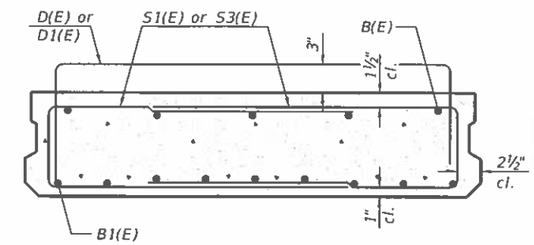

VIEW D-D
(Showing reinforcement)

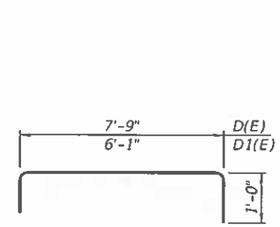

BARS D(E) & D1(E)

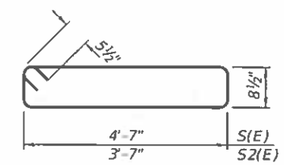

BARS S(E) & S2(E)

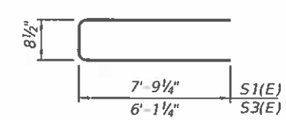

BARS S1(E) & S3(E)

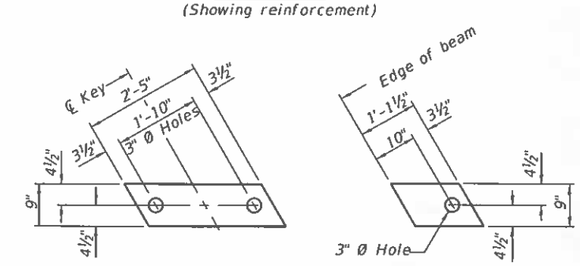

FABRIC BEARING PAD

Notes:
Bearing pads at fixed end shall be ½" thick and bearing pads at expansion end shall be ¾" thick.
Omit holes for fabric bearing pads at approach slab footing end of beams.

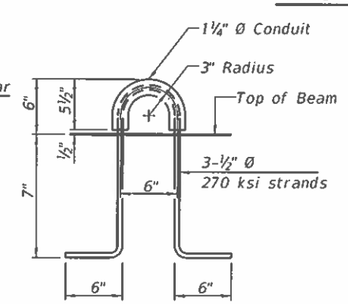

LIFTING LOOP DETAIL
(An alternate lifting loop with a proof load of 25,000 lbs. and utilized according to the manufacturer's recommendations may be used)

BAR LIST
EACH 5' WIDE INTERIOR BEAM
(For information only)

Bar	No.	Size	Length	Shape
B(E)	6	#5	29'-8"	—
B1(E)	12	#9	29'-8"	—
D(E)	22	#4	9'-9"	⊓
S(E)	58	#5	11'-6"	⊏
S1(E)	30	#5	16'-3"	⊏

BAR LIST
EACH 4' WIDE INTERIOR BEAM
(For information only)

Bar	No.	Size	Length	Shape
B(E)	5	#5	29'-8"	—
B1(E)	10	#9	29'-8"	—
D1(E)	32	#4	8'-1"	⊓
S2(E)	58	#5	9'-6"	⊏
S3(E)	26	#5	12'-3"	⊏

(Sheet 3 of 9)

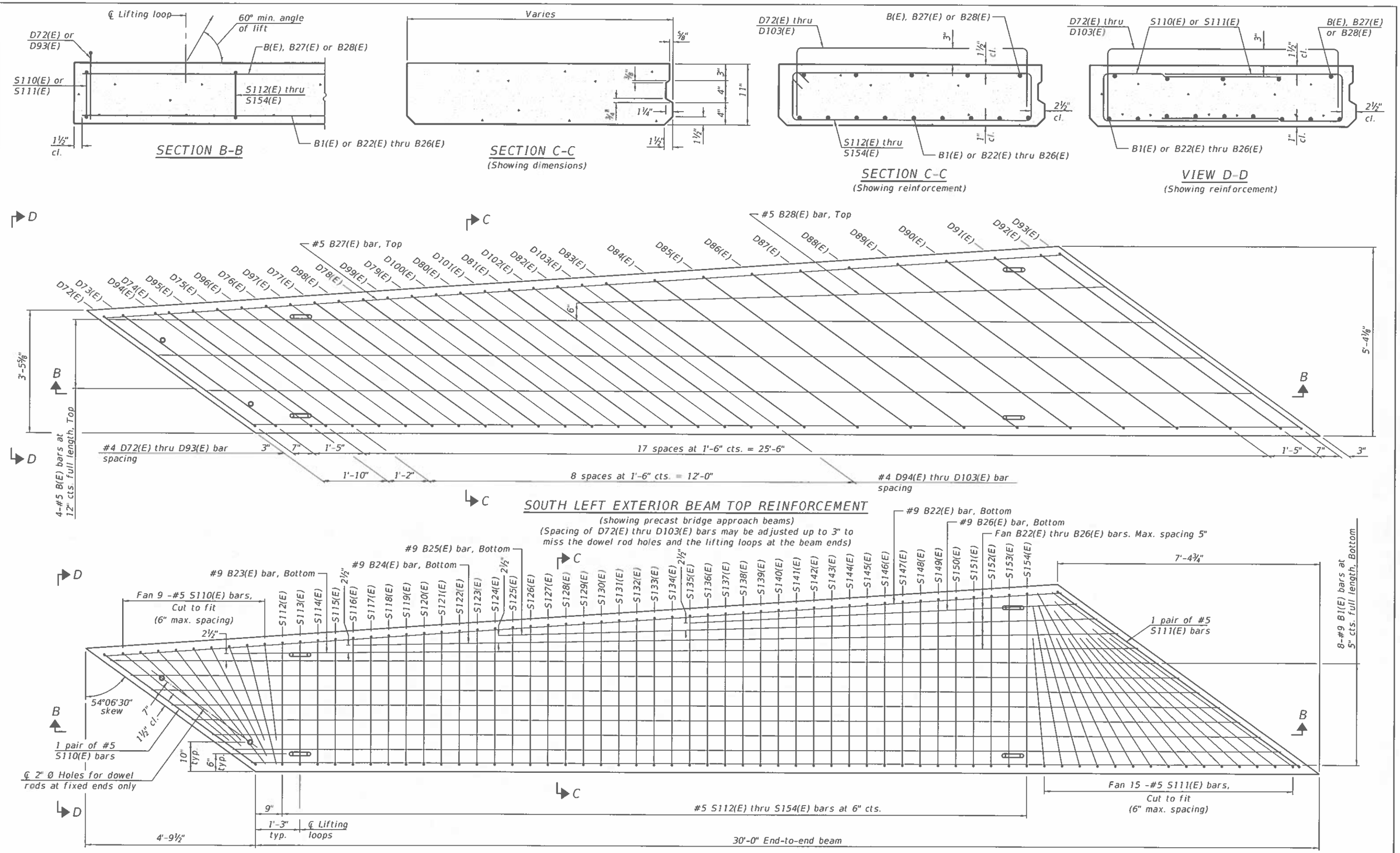

(Sheet 4 of 9)

Chamlin & Associates	USER NAME =	DESIGNED - JKC	REVISED -
		CHECKED - AJO	REVISED -
	PLOT SCALE =	DRAWN - LAG	REVISED -
	PLOT DATE =	CHECKED - JKC	REVISED -

STATE OF ILLINOIS
DEPARTMENT OF TRANSPORTATION

SOUTH PRECAST BRIDGE APPROACH SLAB
STRUCTURE NO. 046-0153

SHEET 29 OF 54 SHEETS

F.A.I. RTE.	SECTION	COUNTY	TOTAL SHEETS	SHEET NO.
57	139HBR-6	KANKAKEE	202	118
		CONTRACT NO. 66997		
		ILLINOIS FED. AID PROJECT		

MODEL: 029-BEAMDET EXTSL
FILE NAME: G:\Users\1111111335-01-Waldron-Road-over-I57-Superstructure\Survey D366997\Consultant_Data\Chamlin_2020\CAD_Sheets\0460153-66997-017-024_026-033-PCASTAPP\LAB.dgn
3/2/2021 3:04:36 PM

5'-3" D72(E)
5'-4" D73(E)
5'-5" D74(E)
5'-7" D75(E)
5'-9" D76(E)
5'-11" D77(E)
6'-1" D78(E)
6'-3" D79(E)
6'-5" D80(E)
6'-7" D81(E)
6'-9" D82(E)
6'-11" D83(E)
7'-1" D84(E)
7'-2" D85(E)
7'-4" D86(E)
7'-6" D87(E)
7'-8" D88(E)
7'-10" D89(E)
8'-0" D90(E)
8'-2" D91(E)
8'-4" D92(E)
8'-5" D93(E)
5'-5" D94(E)
5'-6" D95(E)
5'-8" D96(E)
5'-10" D97(E)
6'-0" D98(E)
6'-2" D99(E)
6'-4" D100(E)
6'-6" D101(E)
6'-8" D102(E)
6'-10" D103(E)

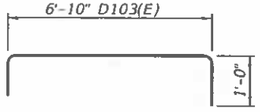

BARS D72(E) thru D103(E)

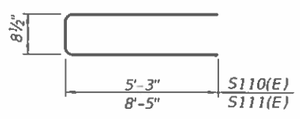

BARS S110(E) & S111(E)

3'-5" S112(E)
3'-5½" S113(E)
3'-6" S114(E)
3'-6½" S115(E)
3'-6½" S116(E)
3'-7" S117(E)
3'-7½" S118(E)
3'-8" S119(E)
3'-8½" S120(E)
3'-8½" S121(E)
3'-9" S122(E)
3'-9½" S123(E)
3'-10" S124(E)
3'-10½" S125(E)
3'-11" S126(E)
3'-11" S127(E)
3'-11½" S128(E)
4'-0" S129(E)
4'-0½" S130(E)
4'-1" S131(E)
4'-1½" S132(E)
4'-1½" S133(E)
4'-2" S134(E)
4'-2½" S135(E)
4'-3" S136(E)
4'-3½" S137(E)
4'-3½" S138(E)
4'-4" S139(E)
4'-4½" S140(E)
4'-5" S141(E)
4'-5½" S142(E)
4'-6" S143(E)
4'-6" S144(E)
4'-6½" S145(E)
4'-7" S146(E)
4'-7½" S147(E)
4'-8" S148(E)
4'-8½" S149(E)
4'-8½" S150(E)
4'-9" S151(E)
4'-9½" S152(E)
4'-10" S153(E)
4'-10½" S154(E)

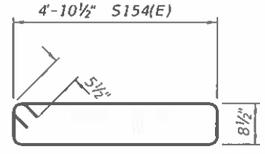

BARS S112(E) thru S154(E)

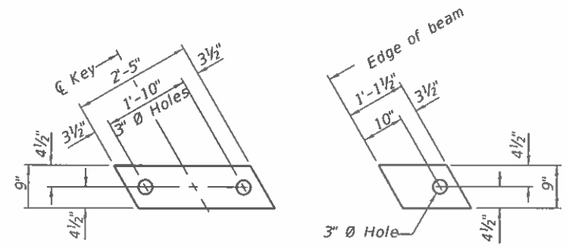

FABRIC BEARING PAD

Notes:
Bearing pads at fixed end shall be ½" thick and bearing pads at expansion end shall be ¾" thick.
Omit holes for fabric bearing pads at approach slab footing end of beams.

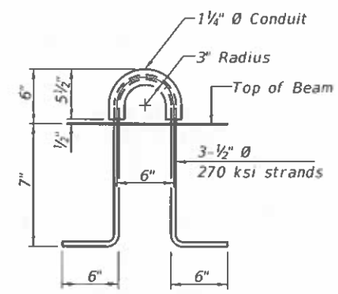

LIFTING LOOP DETAIL

(An alternate lifting loop with a proof load of 25,000 lbs. and utilized according to the manufacturer's recommendations may be used)

Notes:
The precast bridge approach slab shall be according to Section 504 of the Standard Specifications and shall be paid for at the contract unit price per square foot for Precast Bridge Approach Slab.
Cast-in-place substitution of Precast Bridge Approach Slab is not allowed.
The top surface of precast bridge approach slabs shall be finished similar to precast prestressed deck beams with concrete wearing surface as specified in the IDOT "Manual for Fabrication of Precast Prestressed Concrete Products."
Two ⅛" fabric adjusting shims of the dimensions of the exterior bearing pad shall be provided for each bearing pad location. Cost included with Precast Bridge Approach Slab.
A minimum 2 ½" Ø lifting pins shall be used to engage the lifting loops during handling.
Compressive strength of precast concrete, f'c shall be 6,000 psi.
Compressive strength of precast concrete during initial lifting, f'ci shall be 5,000 psi.

BAR LIST
SOUTH LEFT EXTERIOR BEAM
(For information only)

Bar	No.	Size	Length	Shape
B(E)	4	#5	29'-8"	—
B1(E)	8	#9	29'-8"	—
B22(E)	1	#9	27'-1"	—
B23(E)	1	#9	25'-7"	—
B24(E)	1	#9	21'-7"	—
B25(E)	1	#9	16'-10"	—
B26(E)	1	#9	10'-11"	—
B27(E)	1	#5	27'-1"	—
B28(E)	1	#5	14'-11"	—
D72(E)	1	#4	7'-3"	
D73(E)	1	#4	7'-4"	
D74(E)	1	#4	7'-5"	
D75(E)	1	#4	7'-7"	
D76(E)	1	#4	7'-9"	
D77(E)	1	#4	7'-11"	
D78(E)	1	#4	8'-1"	
D79(E)	1	#4	8'-3"	
D80(E)	1	#4	8'-5"	
D81(E)	1	#4	8'-7"	
D82(E)	1	#4	8'-9"	
D83(E)	1	#4	8'-11"	
D84(E)	1	#4	9'-1"	
D85(E)	1	#4	9'-2"	
D86(E)	1	#4	9'-4"	
D87(E)	1	#4	9'-6"	
D88(E)	1	#4	9'-8"	
D89(E)	1	#4	9'-10"	
D90(E)	1	#4	10'-0"	
D91(E)	1	#4	10'-2"	
D92(E)	1	#4	10'-4"	
D93(E)	1	#4	10'-5"	
D94(E)	1	#4	7'-5"	
D95(E)	1	#4	7'-6"	
D96(E)	1	#4	7'-8"	
D97(E)	1	#4	7'-10"	
D98(E)	1	#4	8'-0"	
D99(E)	1	#4	8'-2"	
D100(E)	1	#4	8'-4"	
D101(E)	1	#4	8'-6"	
D102(E)	1	#4	8'-8"	
D103(E)	1	#4	8'-10"	

BAR LIST
SOUTH LEFT EXTERIOR BEAM
(For information only)

Bar	No.	Size	Length	Shape
S110(E)	11	#5	11'-3"	
S111(E)	17	#5	17'-7"	
S112(E)	1	#5	9'-2"	
S113(E)	1	#5	9'-3"	
S114(E)	1	#5	9'-4"	
S115(E)	1	#5	9'-5"	
S116(E)	1	#5	9'-5"	
S117(E)	1	#5	9'-6"	
S118(E)	1	#5	9'-7"	
S119(E)	1	#5	9'-8"	
S120(E)	1	#5	9'-9"	
S121(E)	1	#5	9'-9"	
S122(E)	1	#5	9'-10"	
S123(E)	1	#5	9'-11"	
S124(E)	1	#5	10'-0"	
S125(E)	1	#5	10'-1"	
S126(E)	1	#5	10'-2"	
S127(E)	1	#5	10'-2"	
S128(E)	1	#5	10'-3"	
S129(E)	1	#5	10'-4"	
S130(E)	1	#5	10'-5"	
S131(E)	1	#5	10'-6"	
S132(E)	1	#5	10'-7"	
S133(E)	1	#5	10'-7"	
S134(E)	1	#5	10'-8"	
S135(E)	1	#5	10'-9"	
S136(E)	1	#5	10'-10"	
S137(E)	1	#5	10'-11"	
S138(E)	1	#5	10'-11"	
S139(E)	1	#5	11'-0"	
S140(E)	1	#5	11'-1"	
S141(E)	1	#5	11'-2"	
S142(E)	1	#5	11'-3"	
S143(E)	1	#5	11'-4"	
S144(E)	1	#5	11'-4"	
S145(E)	1	#5	11'-5"	
S146(E)	1	#5	11'-6"	
S147(E)	1	#5	11'-7"	
S148(E)	1	#5	11'-8"	
S149(E)	1	#5	11'-9"	
S150(E)	1	#5	11'-9"	
S151(E)	1	#5	11'-10"	
S152(E)	1	#5	11'-11"	
S153(E)	1	#5	12'-0"	
S154(E)	1	#5	12'-1"	

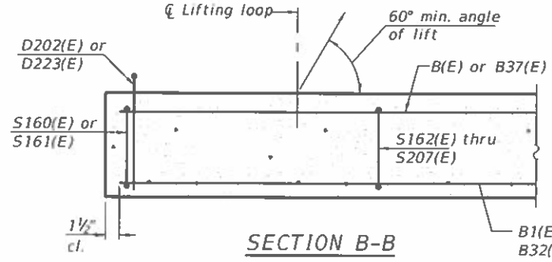

SECTION B-B

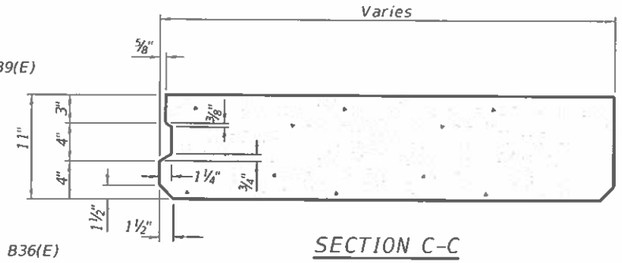

SECTION C-C
(Showing dimensions)

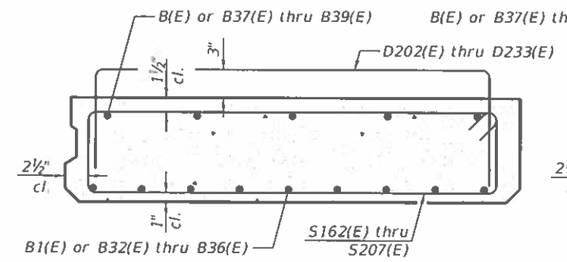

SECTION C-C
(Showing reinforcement)

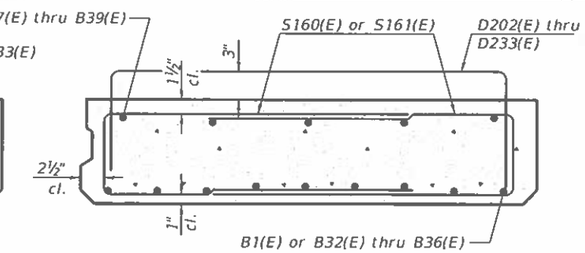

VIEW D-D
(Showing reinforcement)

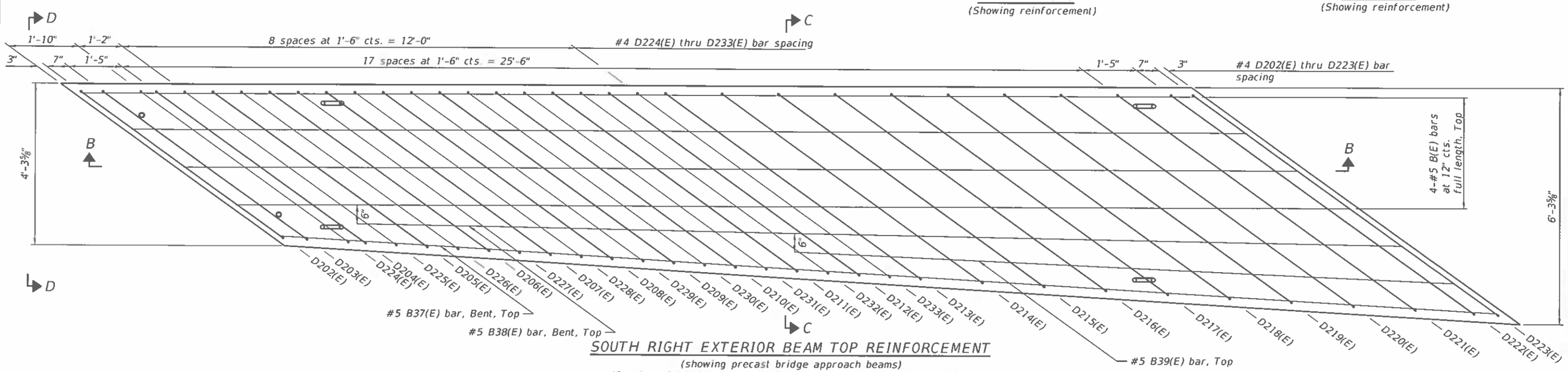

SOUTH RIGHT EXTERIOR BEAM TOP REINFORCEMENT
(showing precast bridge approach beams)
(Spacing of D202(E) thru D233(E) bars may be adjusted up to 3" to miss the dowel rod holes and the lifting loops at the beam ends)

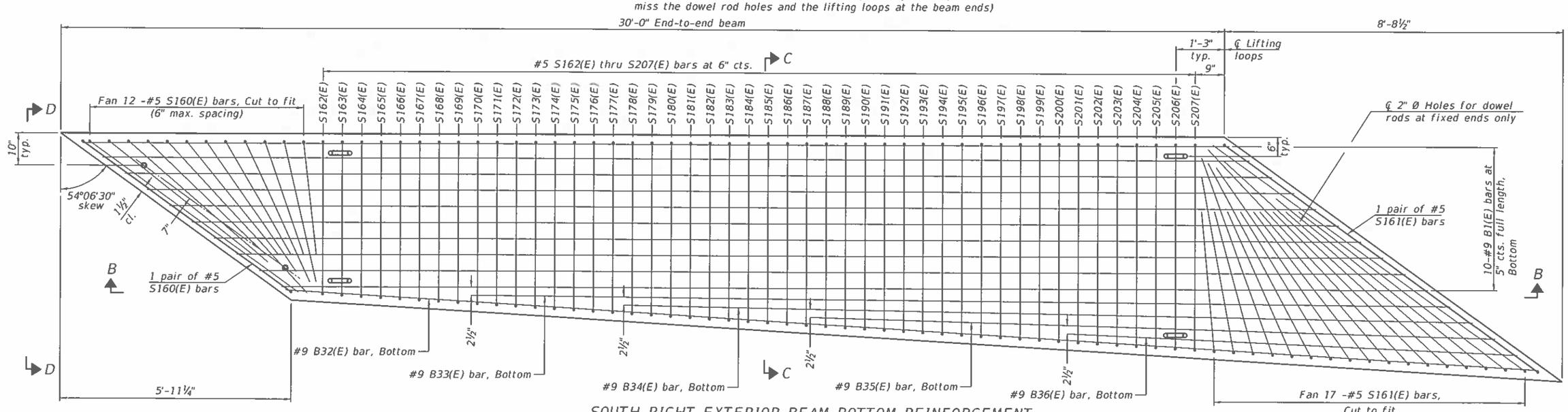

SOUTH RIGHT EXTERIOR BEAM BOTTOM REINFORCEMENT

(Sheet 6 of 9)

MODEL: 031-BEAMDET EX1SR
FILE NAME: G:\Users\1\1111335-01-Waldron-Road-over-I57-Superstructure\Survey D366997\Consultant_Data\Chamlin_2020\CAD_Sheets\0460153-66997-017-024_026-033-PCASTAPPSLAB.dgn
3/2/2021 3:05:44 PM

Chamlin & Associates

USER NAME =	DESIGNED - JKC	REVISED -	
	CHECKED - AJO	REVISED -	
PLOT SCALE =	DRAWN - LAG	REVISED -	
PLOT DATE =	CHECKED - JKC	REVISED -	

STATE OF ILLINOIS
DEPARTMENT OF TRANSPORTATION

SOUTH PRECAST BRIDGE APPROACH SLAB
STRUCTURE NO. 046-0153

SHEET 31 OF 54 SHEETS

F.A.I. RTE.	SECTION	COUNTY	TOTAL SHEETS	SHEET NO.
57	139HBR-6	KANKAKEE	202	120
		CONTRACT NO. 66997		
		ILLINOIS FED. AID PROJECT		

6'-7" D202(E)
6'-8" D203(E)
6'-10" D204(E)
7'-0" D205(E)
7'-2" D206(E)
7'-4" D207(E)
7'-6" D208(E)
7'-8" D209(E)
7'-10" D210(E)
8'-0" D211(E)
8'-2" D212(E)
8'-4" D213(E)
8'-6" D214(E)
8'-8" D215(E)
8'-10" D216(E)
9'-0" D217(E)
9'-2" D218(E)
9'-4" D219(E)
9'-6" D220(E)
9'-9" D221(E)
9'-10" D222(E)
9'-11" D223(E)
6'-9" D224(E)
6'-11" D225(E)
7'-1" D226(E)
7'-3" D227(E)
7'-5" D228(E)
7'-7" D229(E)
7'-9" D230(E)
7'-11" D231(E)
8'-1" D232(E)
8'-3" D233(E)

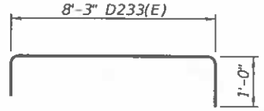

BARS D202(E) thru D233(E)

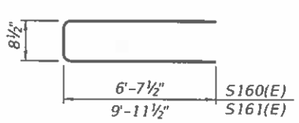

BARS S160(E) & S161(E)

3'-11" S162(E)
3'-11½" S163(E)
4'-0" S164(E)
4'-0" S165(E)
4'-0½" S166(E)
4'-1" S167(E)
4'-1" S168(E)
4'-1½" S169(E)
4'-2" S170(E)
4'-2½" S171(E)
4'-2½" S172(E)
4'-3" S173(E)
4'-3½" S174(E)
4'-4" S175(E)
4'-4" S176(E)
4'-4½" S177(E)
4'-5" S178(E)
4'-5½" S179(E)
4'-5½" S180(E)
4'-6" S181(E)
4'-6½" S182(E)
4'-6½" S183(E)
4'-7" S184(E)
4'-7½" S185(E)
4'-8" S186(E)
4'-8" S187(E)
4'-8½" S188(E)
4'-9" S189(E)
4'-9½" S190(E)
4'-9½" S191(E)
4'-10" S192(E)
4'-10½" S193(E)
4'-11" S194(E)
4'-11" S195(E)
4'-11½" S196(E)
5'-0" S197(E)
5'-0" S198(E)
5'-0½" S199(E)
5'-1" S200(E)
5'-1½" S201(E)
5'-1½" S202(E)
5'-2" S203(E)
5'-2½" S204(E)
5'-3" S205(E)
5'-3" S206(E)
5'-3½" S207(E)

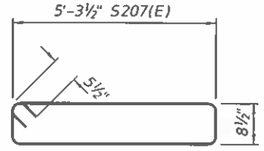

BARS S162(E) thru S207(E)

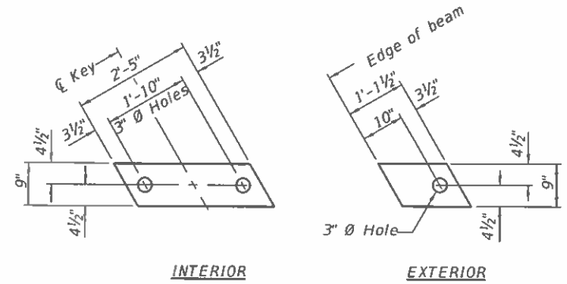

FABRIC BEARING PAD

Notes:
Bearing pads at fixed end shall be ½" thick and bearing pads at expansion end shall be ¾" thick.
Omit holes for fabric bearing pads at approach slab footing end of beams.

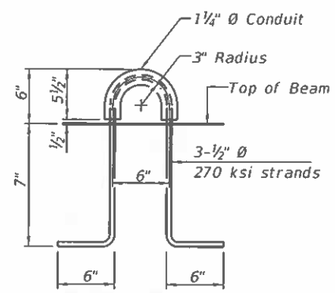

LIFTING LOOP DETAIL

(An alternate lifting loop with a proof load of 25,000 lbs. and utilized according to the manufacturer's recommendations may be used)

Notes:
The precast bridge approach slab shall be according to Section 504 of the Standard Specifications and shall be paid for at the contract unit price per square foot for Precast Bridge Approach Slab.
Cast-in-place substitution of Precast Bridge Approach Slab is not allowed.
The top surface of precast bridge approach slabs shall be finished similar to precast prestressed deck beams with concrete wearing surface as specified in the IDOT "Manual for Fabrication of Precast Prestressed Concrete Products."
Two ⅛" fabric adjusting shims of the dimensions of the exterior bearing pad shall be provided for each bearing pad location. Cost included with Precast Bridge Approach Slab.
A minimum 2 ½" Ø lifting pins shall be used to engage the lifting loops during handling.
Compressive strength of precast concrete, f'c shall be 6,000 psi.
Compressive strength of precast concrete during initial lifting, f'ci shall be 5,000 psi.

BAR LIST
SOUTH RIGHT EXTERIOR BEAM
(For information only)

Bar	No.	Size	Length	Shape
B(E)	4	#5	29'-8"	—
B1(E)	10	#9	29'-8"	—
B32(E)	1	#9	32'-4"	—
B33(E)	1	#9	25'-3"	—
B34(E)	1	#9	21'-10"	—
B35(E)	1	#9	17'-7"	—
B36(E)	1	#9	11'-7"	—
B37(E)	1	#5	32'-4"	—
B38(E)	1	#5	27'-9"	—
B39(E)	1	#5	17'-6"	—
D202(E)	1	#4	8'-7"	
D203(E)	1	#4	8'-8"	
D204(E)	1	#4	8'-10"	
D205(E)	1	#4	9'-0"	
D206(E)	1	#4	9'-2"	
D207(E)	1	#4	9'-4"	
D208(E)	1	#4	9'-6"	
D209(E)	1	#4	9'-8"	
D210(E)	1	#4	9'-10"	
D211(E)	1	#4	10'-0"	
D212(E)	1	#4	10'-2"	
D213(E)	1	#4	10'-4"	
D214(E)	1	#4	10'-6"	
D215(E)	1	#4	10'-8"	
D216(E)	1	#4	10'-10"	
D217(E)	1	#4	11'-0"	
D218(E)	1	#4	11'-2"	
D219(E)	1	#4	11'-4"	
D220(E)	1	#4	11'-6"	
D221(E)	1	#4	11'-9"	
D222(E)	1	#4	11'-10"	
D223(E)	1	#4	11'-11"	
D224(E)	1	#4	8'-9"	
D225(E)	1	#4	8'-11"	
D226(E)	1	#4	9'-1"	
D227(E)	1	#4	9'-3"	
D228(E)	1	#4	9'-5"	
D229(E)	1	#4	9'-7"	
D230(E)	1	#4	9'-9"	
D231(E)	1	#4	9'-11"	
D232(E)	1	#4	10'-1"	
D233(E)	1	#4	10'-3"	

BAR LIST
SOUTH RIGHT EXTERIOR BEAM
(For information only)

Bar	No.	Size	Length	Shape
S160(E)	14	#5	14'-0"	
S161(E)	19	#5	20'-8"	
S162(E)	1	#5	10'-2"	
S163(E)	1	#5	10'-3"	
S164(E)	1	#5	10'-4"	
S165(E)	1	#5	10'-4"	
S166(E)	1	#5	10'-5"	
S167(E)	1	#5	10'-6"	
S168(E)	1	#5	10'-6"	
S169(E)	1	#5	10'-7"	
S170(E)	1	#5	10'-8"	
S171(E)	1	#5	10'-9"	
S172(E)	1	#5	10'-9"	
S173(E)	1	#5	10'-10"	
S174(E)	1	#5	10'-11"	
S175(E)	1	#5	11'-0"	
S176(E)	1	#5	11'-0"	
S177(E)	1	#5	11'-1"	
S178(E)	1	#5	11'-2"	
S179(E)	1	#5	11'-3"	
S180(E)	1	#5	11'-3"	
S181(E)	1	#5	11'-4"	
S182(E)	1	#5	11'-5"	
S183(E)	1	#5	11'-5"	
S184(E)	1	#5	11'-6"	
S185(E)	1	#5	11'-7"	
S186(E)	1	#5	11'-8"	
S187(E)	1	#5	11'-8"	
S188(E)	1	#5	11'-9"	
S189(E)	1	#5	11'-10"	
S190(E)	1	#5	11'-11"	
S191(E)	1	#5	11'-11"	
S192(E)	1	#5	12'-0"	
S193(E)	1	#5	12'-1"	
S194(E)	1	#5	12'-2"	
S195(E)	1	#5	12'-2"	
S196(E)	1	#5	12'-3"	
S197(E)	1	#5	12'-4"	
S198(E)	1	#5	12'-4"	
S199(E)	1	#5	12'-5"	
S200(E)	1	#5	12'-6"	
S201(E)	1	#5	12'-7"	
S202(E)	1	#5	12'-7"	
S203(E)	1	#5	12'-8"	
S204(E)	1	#5	12'-9"	
S205(E)	1	#5	12'-10"	
S206(E)	1	#5	12'-10"	
S207(E)	1	#5	12'-11"	

MODEL: 032-BEAMDET EXTSR2
FILE NAME: G:\Users\111111335-01-Waldron-Road-over-I57-Superstructure\Survey D366997\Consultant_Data\Chamlin_2020\CAD_Sheets\0460153-66997-017-024_026-033-PCASTAPPSLAB.dgn
3/2/2021 3:06:21 PM

Chamlin & Associates

USER NAME =	DESIGNED - JKC	REVISED -	
	CHECKED - AJO	REVISED -	
PLOT SCALE =	DRAWN - LAG	REVISED -	
PLOT DATE =	CHECKED - JKC	REVISED -	

STATE OF ILLINOIS
DEPARTMENT OF TRANSPORTATION

SOUTH PRECAST BRIDGE APPROACH SLAB
STRUCTURE NO. 046-0153

SHEET 32 OF 54 SHEETS

F.A.I. RTE.	SECTION	COUNTY	TOTAL SHEETS	SHEET NO.
57	139HBR-6	KANKAKEE	202	121

CONTRACT NO. 66997
ILLINOIS FED. AID PROJECT

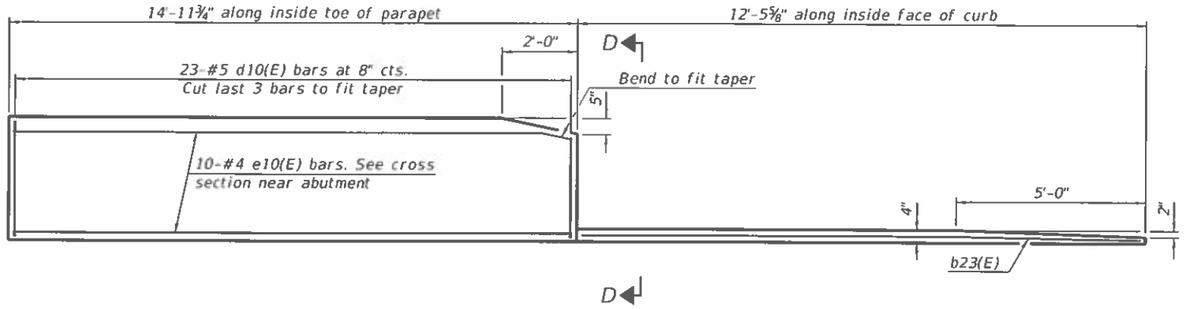

INSIDE ELEVATION OF EAST (LEFT) PARAPET AND CURB

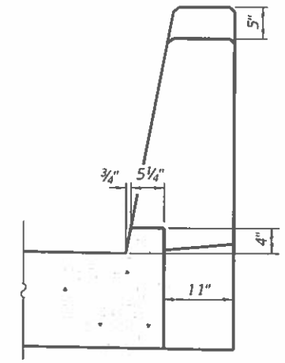

VIEW D-D

Notes:

The joint opening shall be adjusted for temperature per Article 520.04 of the Standard Specifications. However, since this detail is for jointless structures, the length of bridge used to calculate the adjustment shall be equal to half the total bridge length plus the length of the bridge approach slab.

After precast bridge approach slabs have been erected, holes shall be drilled into abutment and anchor dowels placed. Dowel holes shall be filled with non-shrink grout to top of precast slab and cured according to Article 1020.13(a)(3) or 1020.13(a)(5) of the Standard Specifications for a minimum of 24 hours before casting the shear keys and wearing surface.

Any concrete poured monolithically with the wearing surface, such as curbs, shall not be paid for separately, but will be included in the cost of Concrete Wearing Surface, 5".

The strip seal shall extend 6" beyond the edge of the approach slab on each end.

Parapet concrete shall be paid for as Concrete Superstructure.

Approach footing concrete shall be paid for as Concrete Structures.

The approach footing maximum applied service bearing pressure (Qmax) = 2.0 ksf.

Cost of excavation for approach footing included with Concrete Structures.

For Granular Backfill for Structures and drainage treatment details, see sheet 2 of .

Cost of cellular polystyrene is included with Concrete Superstructure.

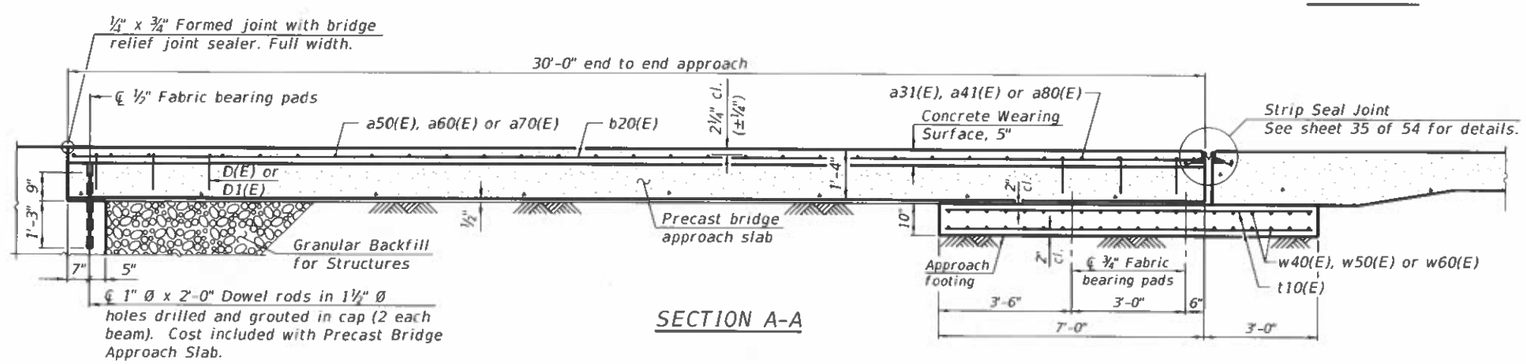

SECTION A-A

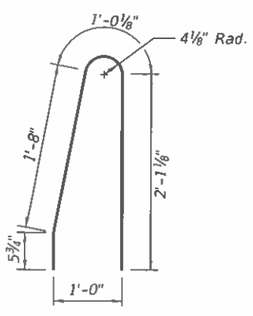

BAR d9(E)

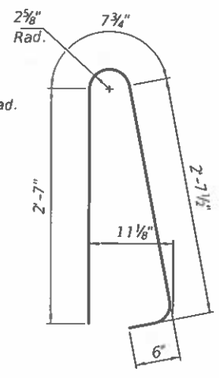

BAR d10(E)

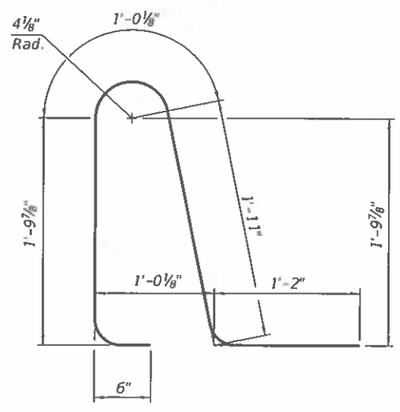

BAR d11(E)

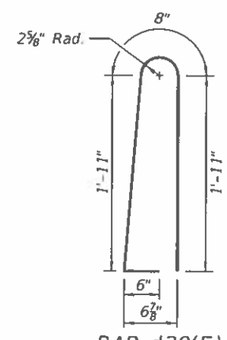

BAR d20(E)

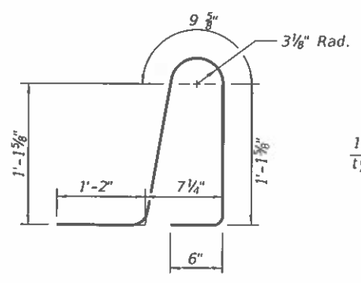

BAR d21(E)

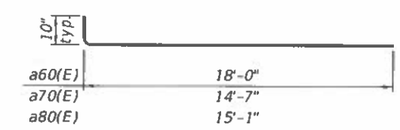

BAR a60(E), a70(E) or a80(E)

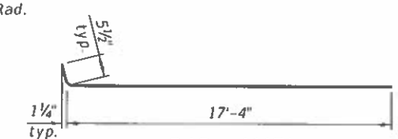

BAR a41(E)

BAR a12(E)

BILL OF MATERIAL

Bar	No.	Size	Length	Shape
a12(E)	28	#5	8'-2"	
a31(E)	16	#4	25'-0"	
a41(E)	8	#4	17'-9"	
a50(E)	20	#5	25'-0"	
a60(E)	10	#5	18'-10"	
a70(E)	10	#5	15'-5"	
a80(E)	8	#5	15'-11"	
b20(E)	44	#4	29'-5"	
b23(E)	1	#4	11'-10"	
b30(E)	1	#4	26'-11"	
b32(E)	4	#5	15'-11"	
b40(E)	1	#4	32'-2"	
b42(E)	4	#5	31'-10"	
d9(E)	49	#5	5'-3"	
d10(E)	72	#5	6'-5"	
d11(E)	23	#5	6'-5"	
d20(E)	49	#5	5'-0"	
d21(E)	49	#5	4'-9"	
e10(E)	22	#4	14'-9"	
e16(E)	4	#4	29'-9"	
e17(E)	12	#4	16'-0"	
e18(E)	4	#4	32'-0"	
e19(E)	10	#4	7'-4"	
t10(E)	92	#4	16'-6"	
t20(E)	2	#4	15'-1"	
t30(E)	2	#4	18'-0"	
w40(E)	80	#5	30'-0"	
w50(E)	40	#5	15'-3"	
w60(E)	40	#5	11'-7"	
Concrete Superstructure			Cu. Yd.	9.6
Concrete Structures			Cu. Yd.	24.3
Reinforcement Bars, Epoxy Coated			Pound	9370
Precast Bridge Approach Slab			Sq. Ft.	1311
Concrete Wearing Surface, 5"			Sq. Yd.	151

(Sheet 8 of 9)

MODEL: 033-SCURBS
FILE NAME: G:\Users\11\111335-01-Waldron-Road-over-I57-Superstructure\Survey D3669971\Consultant_Data\Chamlin_2020\CAD_Sheets\0460153-66997-017-024_026-033-PCASTAPPSLAB.dgn
3/2/2021 3:07:47 PM

Chamlin & Associates

USER NAME =	DESIGNED - JKC	REVISED -	
	CHECKED - AJO	REVISED -	
PLOT SCALE =	DRAWN - LAG	REVISED -	
PLOT DATE =	CHECKED - JKC	REVISED -	

STATE OF ILLINOIS
DEPARTMENT OF TRANSPORTATION

SOUTH PRECAST BRIDGE APPROACH SLAB
STRUCTURE NO. 046-0153

SHEET 33 OF 54 SHEETS

F.A.I. RTE.	SECTION	COUNTY	TOTAL SHEETS	SHEET NO.
57	139HBR-6	KANKAKEE	202	122

CONTRACT NO. 66997

ILLINOIS | FED. AID PROJECT

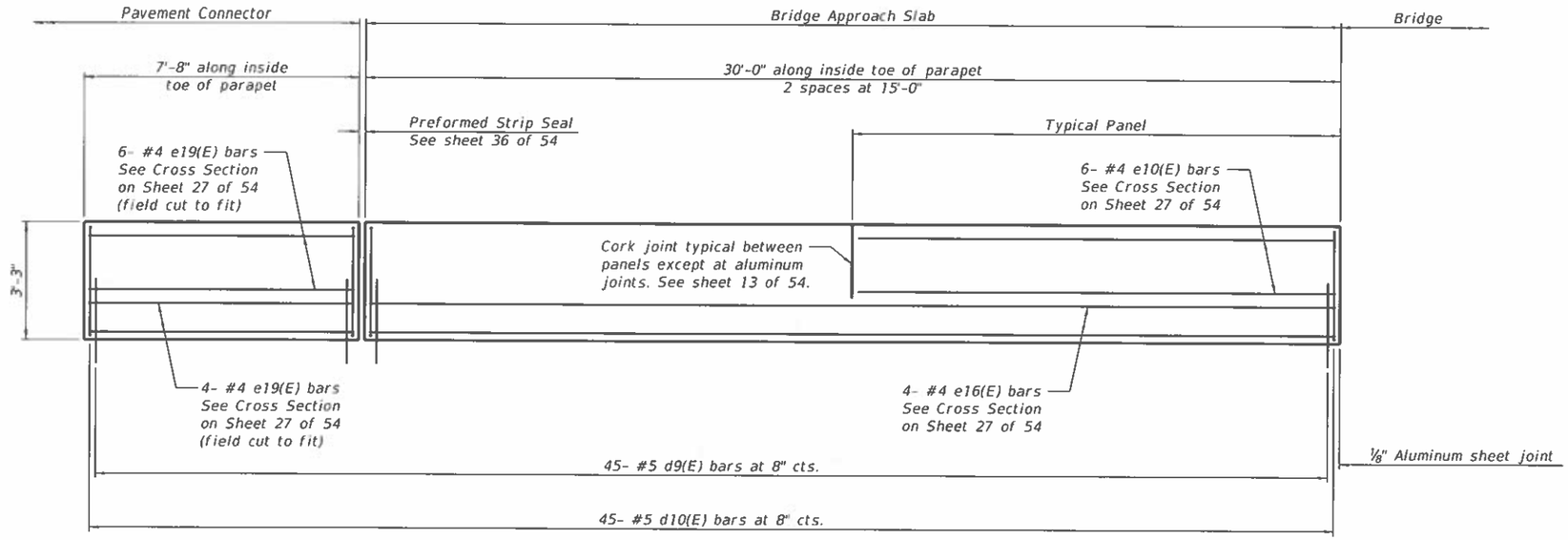

INSIDE ELEVATION OF WEST (RIGHT) PARAPET

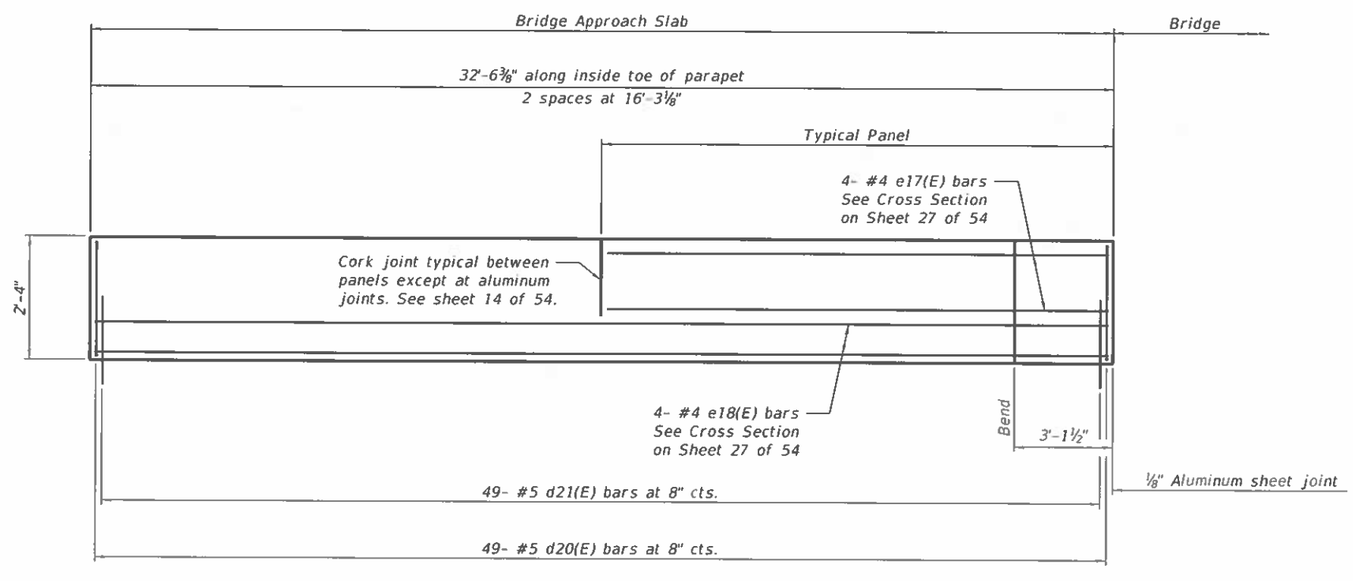

INSIDE ELEVATION OF SIDEWALK PARAPET

(Sheet 9 of 9)

MODEL: 034-SWPARAPET
FILE NAME: G:\Users\111111335-01-Waldron-Road-over-I57-Superstructure\Survey D366997\Consultant_Data\Chamlin_2020\CAD_Sheets\0460153-66997-017-024_026-033-PCASTAPPSLAB.dgn
3/2/2021 3:08:18 PM

Chamlin & Associates

USER NAME =	DESIGNED - JKC	REVISED -	
	CHECKED - AJO	REVISED -	
PLOT SCALE =	DRAWN - LAG	REVISED -	
PLOT DATE =	CHECKED - JKC	REVISED -	

STATE OF ILLINOIS
DEPARTMENT OF TRANSPORTATION

SOUTH PRECAST BRIDGE APPROACH SLAB
STRUCTURE NO. 046-0153

SHEET 34 OF 54 SHEETS

F.A.I. RTE.	SECTION	COUNTY	TOTAL SHEETS	SHEET NO.
57	139HBR-6	KANKAKEE	202	123

CONTRACT NO. 66997

ILLINOIS | FED. AID PROJECT

Notes:

The strip seal shall be made continuous and shall have a minimum thickness of 1/4". The configuration of the strip seal shall match the configuration of the locking edge rails. Open or "webbed" strip seal gland configurations are not permitted. The gland shall be sized for a maximum rated movement of 4 inches.

The locking edge rails depicted are configured for typical applications and are conceptual only. The actual configuration of the locking edge rails and matching strip seal may vary from manufacturer to manufacturer provided they fit the application and meet the minimum anchorage shown. Flanged edge rails, however, will not be allowed. Locking edge rails may exceed the 4 1/2" maximum depth provided the anchorage system is revised according to the manufacturer's recommendation.

The manufacturer's recommended installation methods shall be followed.

All steel components shall be galvanized after fabrication according to Article 520.03 of the Standard Specifications.

The Maximum space between locking edge rail segments shall be 3/16" and sealed with a suitable sealant; however, any rail joint within 10' measured perpendicular to the face of the curb or parapet shall be welded as shown in the locking edge rail splice detail.

The top surface of sidewalk sliding plates shall have a raised pattern according to ASTM A786.

Cost of parapet sliding plates, sidewalk sliding plates, embedded plates, anchorage studs, and expansion anchors included with Preformed Joint Strip Seal.

39" constant slope barrier shown, 44" constant slope barrier similar as noted.

The concrete opening below the strip seal will vary based on the locking edge rail chosen by the Contractor. Deck and parapet lengths shown elsewhere in the plans are dimensioned to the concrete opening, not the joint opening, and are based on the rolled locking edge rail. If the Contractor elects to use a different locking edge rail, dimensional adjustments may be required. One exception to this would be the strip seal joint at the end of the precast bridge approach slab. For these cases the pavement connector length shall be adjusted, not the length of the bridge approach slab.

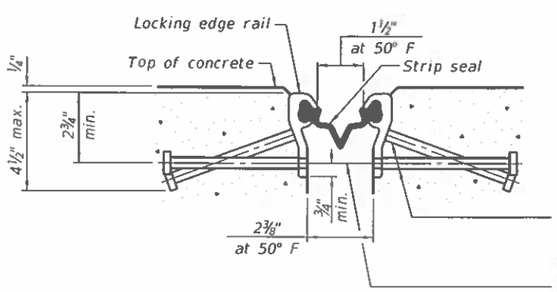

SHOWING ROLLED RAIL JOINT

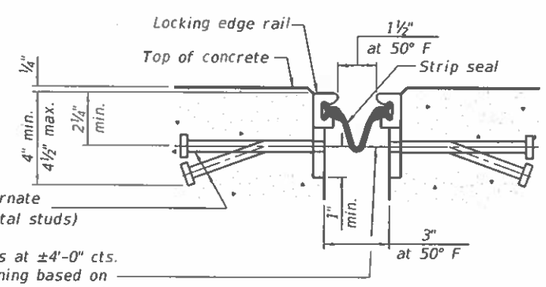

SHOWING WELDED RAIL JOINT

* 5/8" Ø x 6" studs @ 6" cts. (alternate angled/bent studs with horizontal studs)

3/8" ϕ threaded rods in 7/16" ϕ holes at ±4'-0" cts. for holding the proper joint opening based on the temperature during the deck pour. Place to miss studs. All rods shall be burned, or sawed off flush with the plates after concrete is set.

SECTION A-A

* Granular or solid flux filled headed studs conforming to Article 1006.32 of the Std. Specs., automatically end welded.

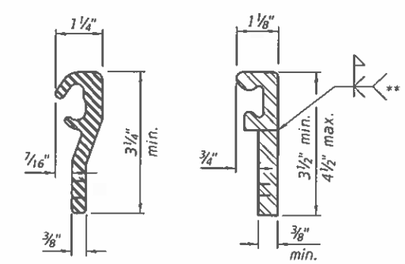

ROLLED (EXTRUDED) RAIL

WELDED RAIL

LOCKING EDGE RAILS

** Back gouge not required if complete joint penetration is verified by mock-up.

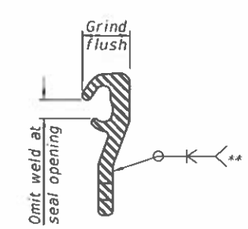

LOCKING EDGE RAIL SPLICE

The inside of the locking edge rail groove shall be free of weld residue. Rolled rail shown, welded rail similar.

BILL OF MATERIAL

Item	Unit	Total
Preformed Joint Strip Seal	Foot	158

(Sheet 1 of 2)

USER NAME =	DESIGNED - JKC	REVISED -
	CHECKED - AJO	REVISED -
PLOT SCALE =	DRAWN - LAG	REVISED -
PLOT DATE =	CHECKED - JKC	REVISED -

Chamlin & Associates

STATE OF ILLINOIS
DEPARTMENT OF TRANSPORTATION

PREFORMED JOINT STRIP SEAL - SIDEWALK
STRUCTURE NO. 046-0153

SHEET 35 OF 54 SHEETS

F.A.I. RTE.	SECTION	COUNTY	TOTAL SHEETS	SHEET NO.
57	139HBR-6	KANKAKEE	202	124

CONTRACT NO. 66997

ILLINOIS | FED. AID PROJECT

MODEL: TEMP CONC BARRIER
FILE NAME: G:\Users\1111111335-01-Waldron-Road-over-I57-Superstructure\Survey D366997\Consultant_Data\ChamlIn_2020\CAD_Sheets\0460153-66997-035-036-STRIP_SEAL_JOINT.dgn

3/2/2021 3:09:33 PM

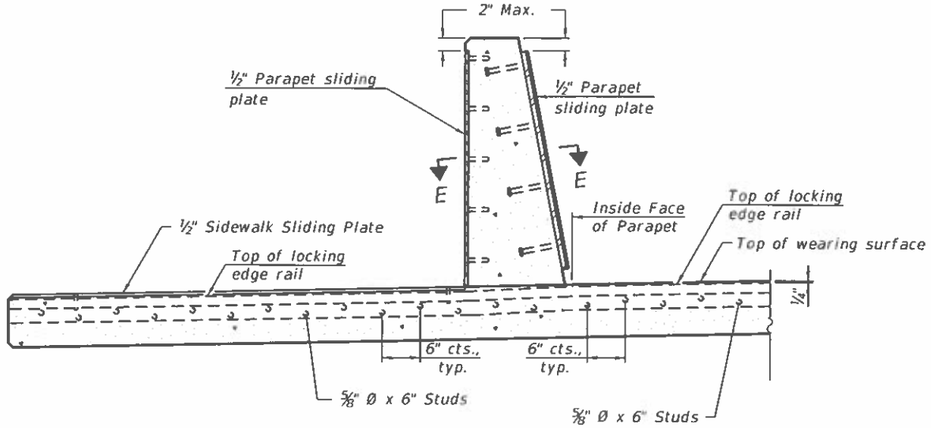

SECTION AT DECK LEVEL SIDEWALK

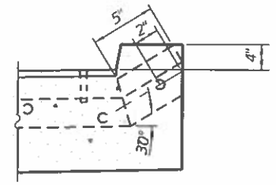

DETAIL B
AT APPROACH SLAB

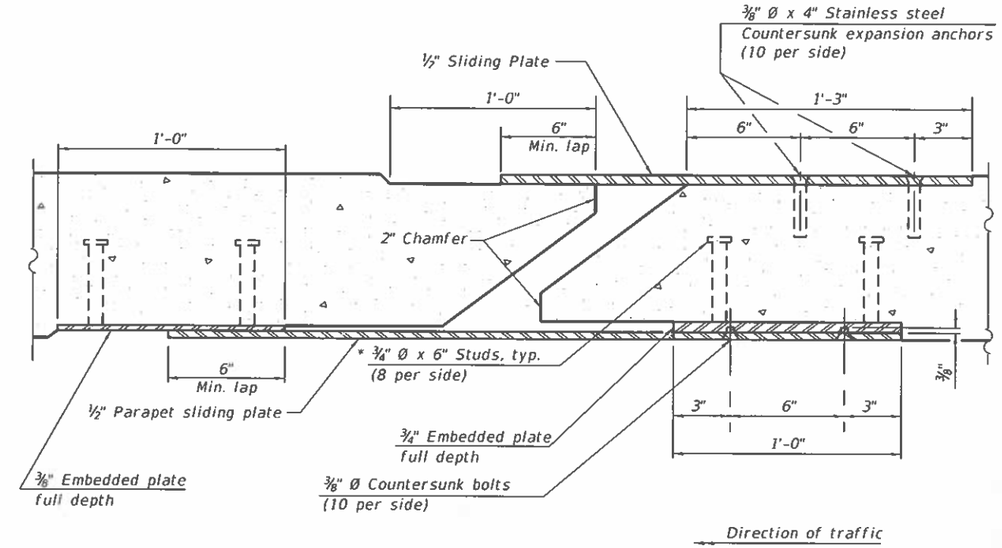

SECTION E-E

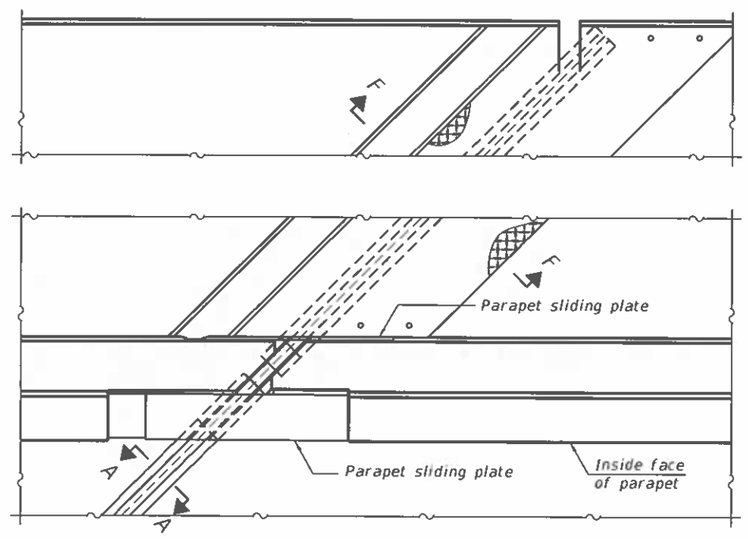

PLAN AT DECK LEVEL SIDEWALK

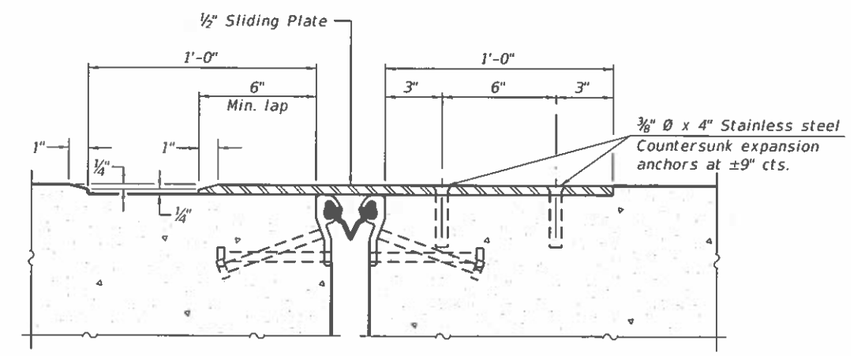

SECTION F-F

Note:
Parapet sliding plates are required at parapets separating roadway from sidewalk only.

(Sheet 2 of 2)

USER NAME =	DESIGNED - JKC	REVISED -	
	CHECKED - AJO	REVISED -	
PLOT SCALE =	DRAWN - LAG	REVISED -	
PLOT DATE =	CHECKED - JKC	REVISED -	

Chamlin & Associates

STATE OF ILLINOIS
DEPARTMENT OF TRANSPORTATION

PREFORMED JOINT STRIP SEAL - SIDEWALK
STRUCTURE NO. 046-0153

SHEET 36 OF 54 SHEETS

F.A.I. RTE.	SECTION	COUNTY	TOTAL SHEETS	SHEET NO.
57	139HBR-6	KANKAKEE	202	125
		CONTRACT NO. 66997		
		ILLINOIS	FED. AID PROJECT	

MODEL: SHEET 3
FILE NAME: G:\Users\1111111335-01-Waldron-Road-over-I57-Superstructure\Survey D3669997\Consultant_Data\Chamlin_2020\CAD_Sheets\0460153-66997-035-036-STRIP_SEAL_JOINT.dgn
3/2/2021 3:15:48 PM

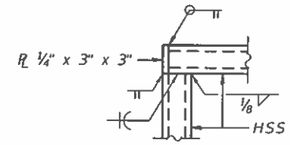

DETAIL A

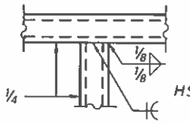

DETAIL B

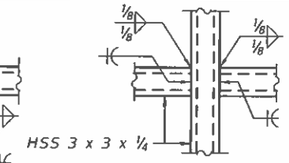

DETAIL C

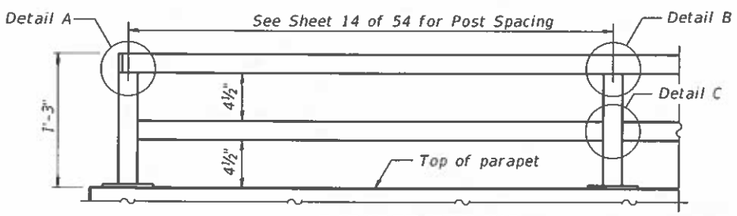

PARAPET RAILING
ELEVATION
(Inside Face of Two Element Rail)

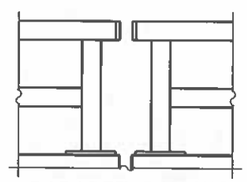

PARAPET RAILING
ELEVATION AT EXPANSION JOINT

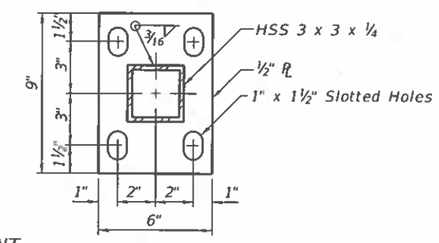

BASE PL

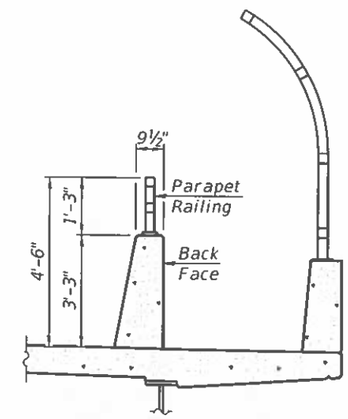

SECTION THRU DECK

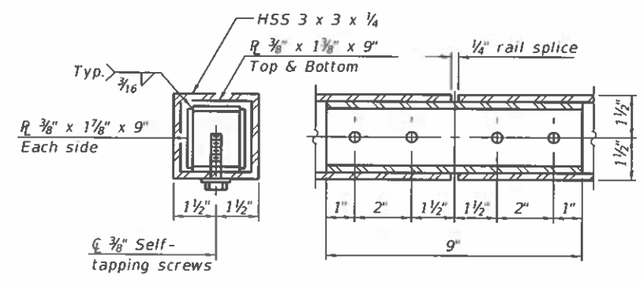

RAIL SPLICE

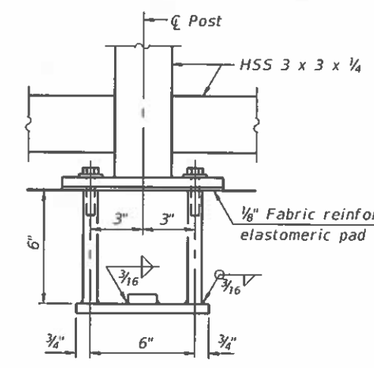

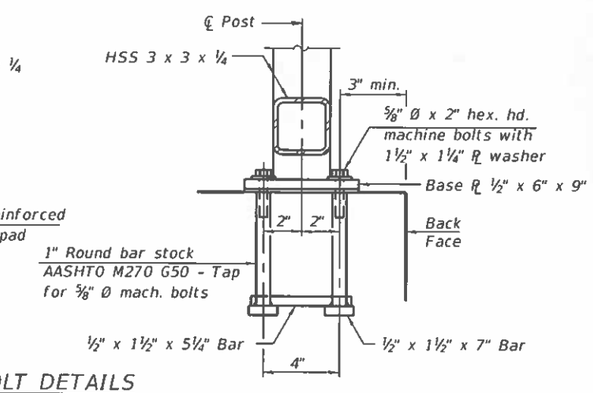

ANCHOR BOLT DETAILS

In lieu of the cast-in-place anchor device shown, the Contractor has the option of drilling and setting ⅝" Ø anchor rods according to Article 509.06 of the Standard Specifications. Embedment shall be according to the manufacturer's specifications.

Notes:

All structural steel tubing, post and railing, for parapet railing shall be CVN tested according to 1006.34(b) of the Standard Specifications.

All steel rail elements shall be galvanized according to Article 509.05 of the Standard Specifications.

BILL OF MATERIAL

Item	Unit	Quantity
Parapet Railing	Foot	334

MODEL: TEMP CONC BARRIER
FILE NAME: G:\Users\1111111335-01-Waldron-Road-over-I57-Superstructure\Survey D366997\Consultant_Data\Chamlin_2020\CAD_Sheets\0460153-66997-037-PARAPET_RAILING.dgn

Chamlin & Associates

3/2/2021 3:17:40 PM

USER NAME =	DESIGNED - JKC	REVISED -	
	CHECKED - AJO	REVISED -	
PLOT SCALE =	DRAWN - LAG	REVISED -	
PLOT DATE =	CHECKED - JKC	REVISED -	

STATE OF ILLINOIS
DEPARTMENT OF TRANSPORTATION

PARAPET RAILING
STRUCTURE NO. 046-0153

SHEET 37 OF 54 SHEETS

F.A.I. RTE.	SECTION	COUNTY	TOTAL SHEETS	SHEET NO.
57	139HBR-6	KANKAKEE	202	126

CONTRACT NO. 66997

ILLINOIS FED. AID PROJECT

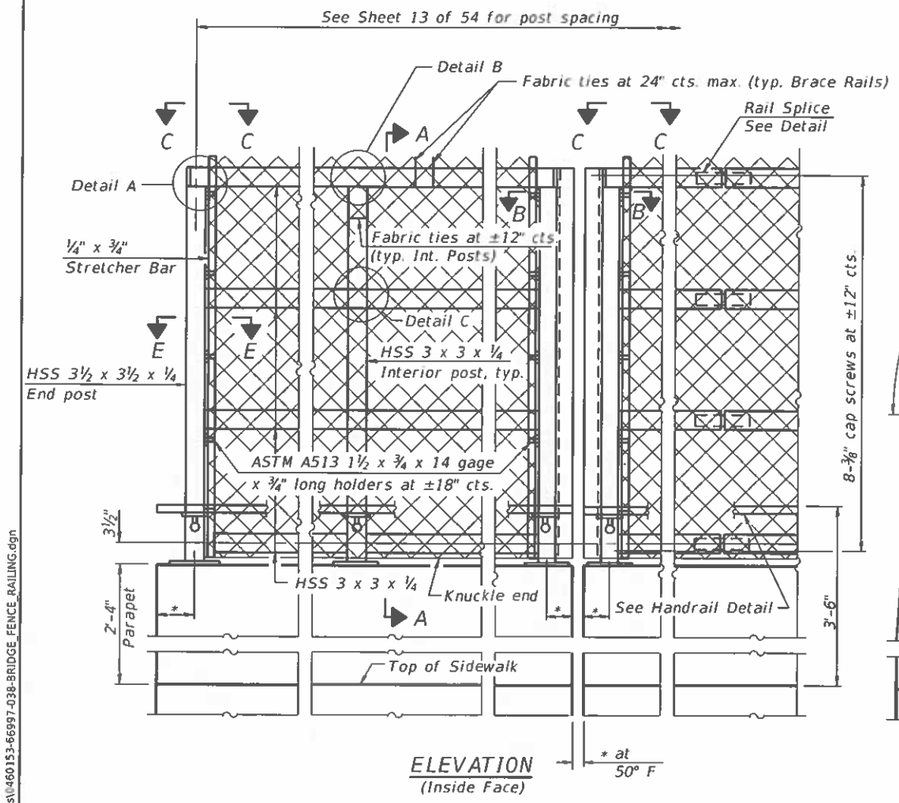

ELEVATION
(Inside Face)

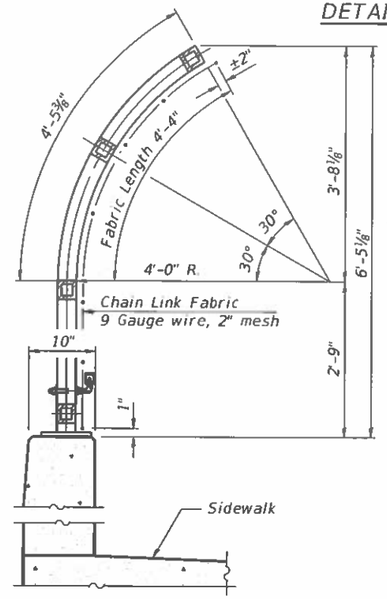

SECTION A-A

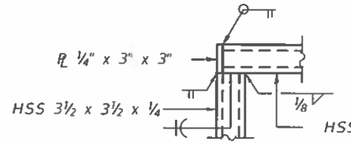

DETAIL A

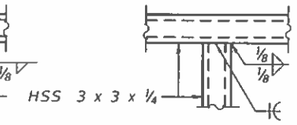

DETAIL B

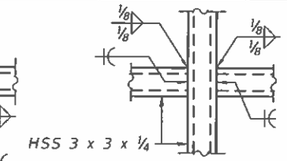

DETAIL C

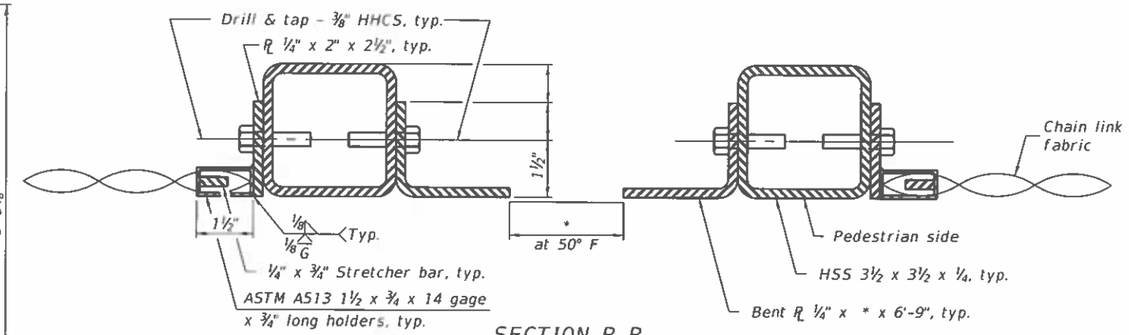

SECTION B-B
(At Expansion Joint)

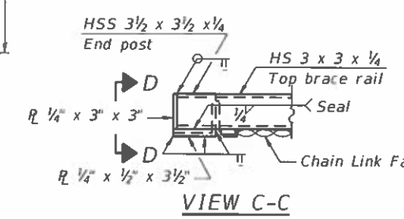

VIEW C-C

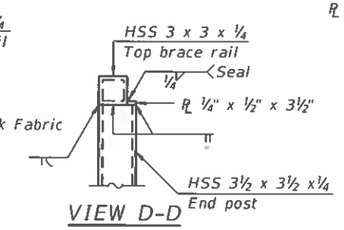

VIEW D-D

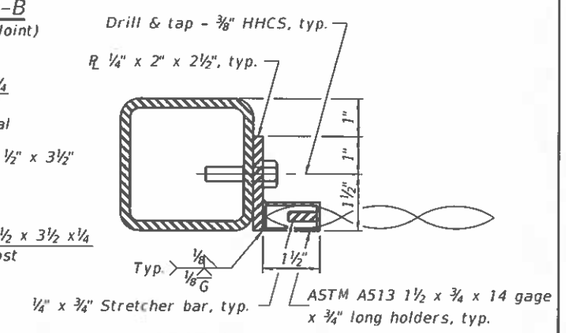

SECTION E-E

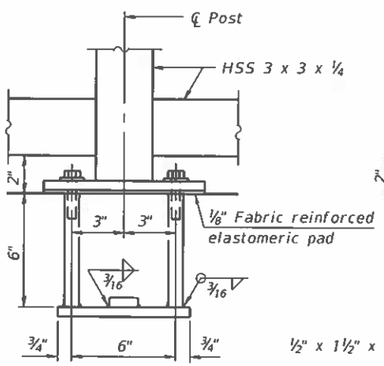

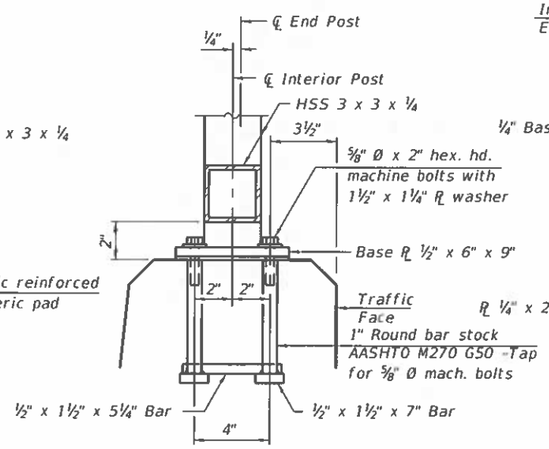

ANCHOR BOLT DETAILS

In lieu of the cast-in-place anchor device shown, the Contractor has the option of drilling and setting ⅝" Ø anchor rods according to Article 509.06 of the Standard Specifications. Embedment shall be according to the manufacturer's specifications.

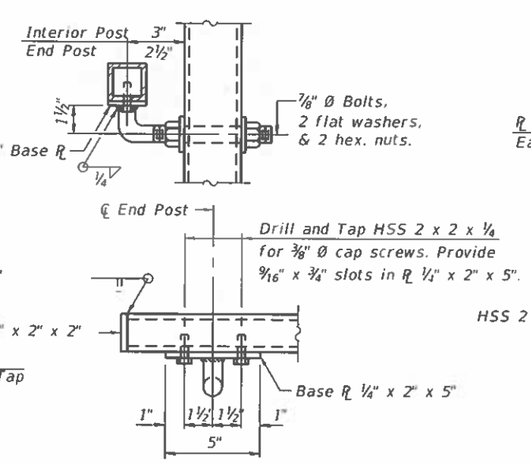

HANDRAIL DETAIL

Note:
CVN testing may be omitted for the railing.
All steel rail elements shall be galvanized according to Article 509.05 of the Standard Specifications.

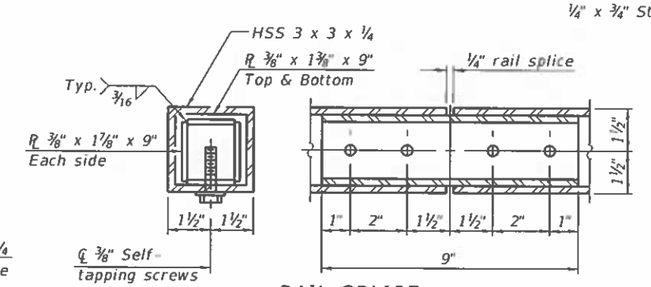

RAIL SPLICE

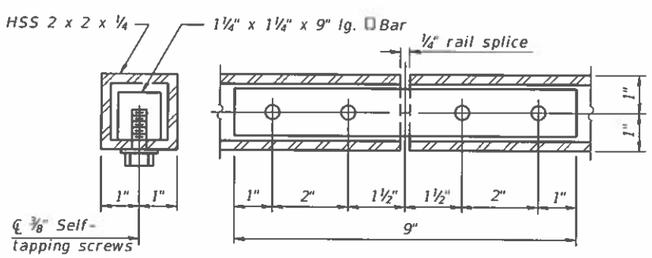

HANDRAIL SPLICE

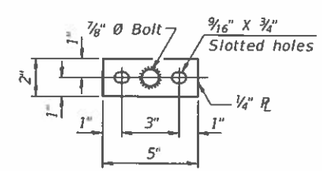

BASE PL
(Handrail)

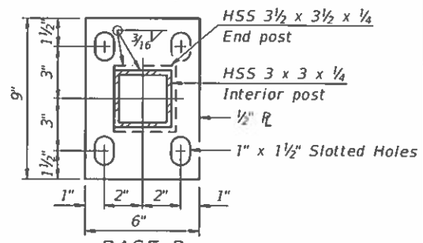

BASE PL

BILL OF MATERIAL

Item	Unit	Quantity
Bridge Fence Railing	Foot	324

R-32

1-14-2019

USER NAME =	DESIGNED - JKC	REVISED -	
	CHECKED - AJO	REVISED -	
PLOT SCALE =	DRAWN - LAG	REVISED -	
PLOT DATE =	CHECKED - JKC	REVISED -	

Chamlin & Associates

STATE OF ILLINOIS
DEPARTMENT OF TRANSPORTATION

BRIDGE FENCE RAILING, PARAPET MOUNTED
STRUCTURE NO. 046-0153

SHEET 38 OF 54 SHEETS

F.A.I. RTE.	SECTION	COUNTY	TOTAL SHEETS	SHEET NO.
57	139HBR-6	KANKAKEE	202	127

CONTRACT NO. 66997

ILLINOIS FED. AID PROJECT

MODEL: TEMP CONC BARRIER
FILE NAME: G:\Users\1\1111335-01-Waldron-Road-over-I57-Superstructure\Survey D366997\Consultant_Data\Chamlin_2020\CAD_Sheets\\460153-66997-038-BRIDGE_FENCE_RAILING.dgn

3/2/2021 3:18:35 PM

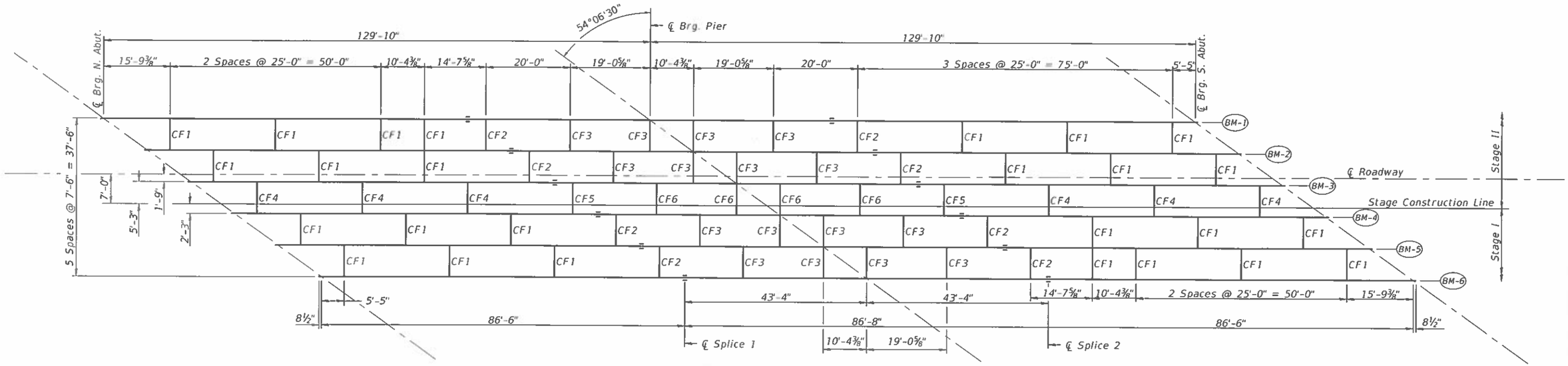

FRAMING PLAN

Note:
All cross-frame between girders shall be installed with erection pins and bolts in accordance with the erection plan as approved by the Engineer. Individual cross-frames at supports may be temporarily disconnected to install anchor rods.

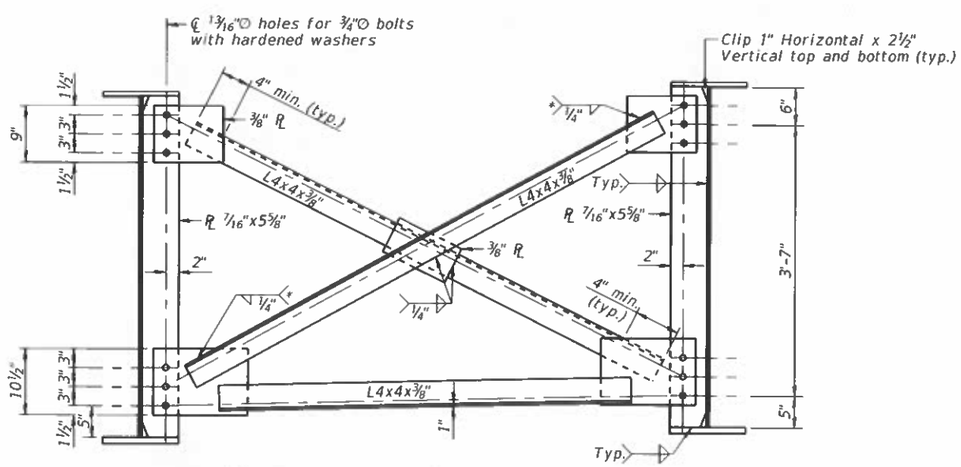

CROSS FRAME CF1
(26 REQUIRED)

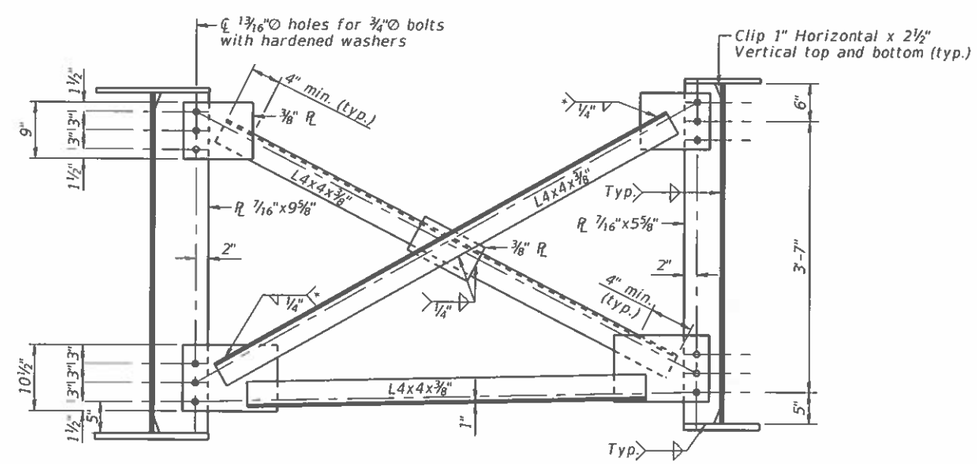

CROSS FRAME CF2
(8 REQUIRED)

MODEL: FRAMING PLAN
FILE NAME: C:\Users\1\111335-01-Waldron-Road-over-I57-Superstructure\Survey D366997\Consultant_Data\Chamlin_2020\CAD_Sheets\0460153-66997-039-040-FRAMING.dgn
3/3/2021 9:16:03 AM

Chamlin & Associates

USER NAME = CHAMLIN	DESIGNED - JKC	REVISED -	
	CHECKED - AJO	REVISED -	
PLOT SCALE =	DRAWN - ARR	REVISED -	
PLOT DATE =	CHECKED - JKC	REVISED -	

STATE OF ILLINOIS
DEPARTMENT OF TRANSPORTATION

FRAMING PLAN AND DETAILS
STRUCTURE NO. 046-0153
SHEET 39 OF 54 SHEETS

F.A.I. RTE.	SECTION	COUNTY	TOTAL SHEETS	SHEET NO.
57	139HBR-6	KANKAKEE	202	128
		CONTRACT NO. 66997		
		ILLINOIS	FED. AID PROJECT	

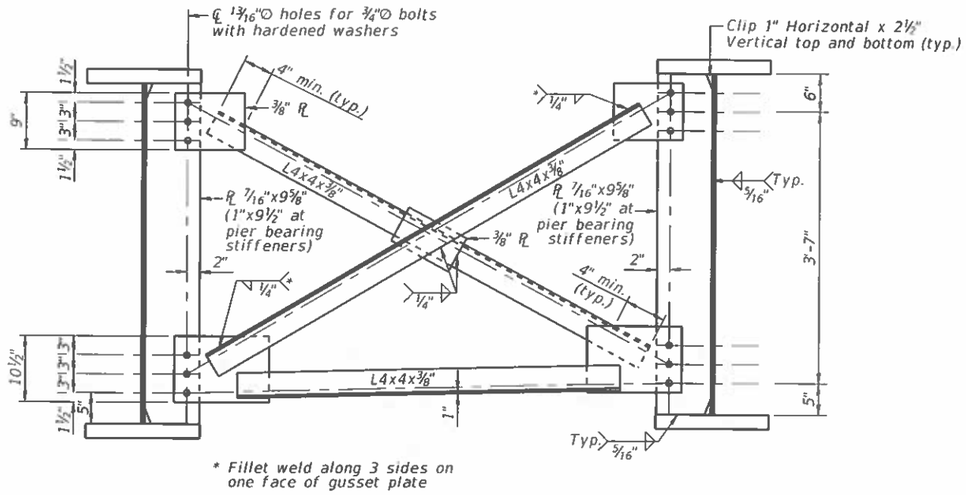

CROSS FRAME CF3
(16 REQUIRED)

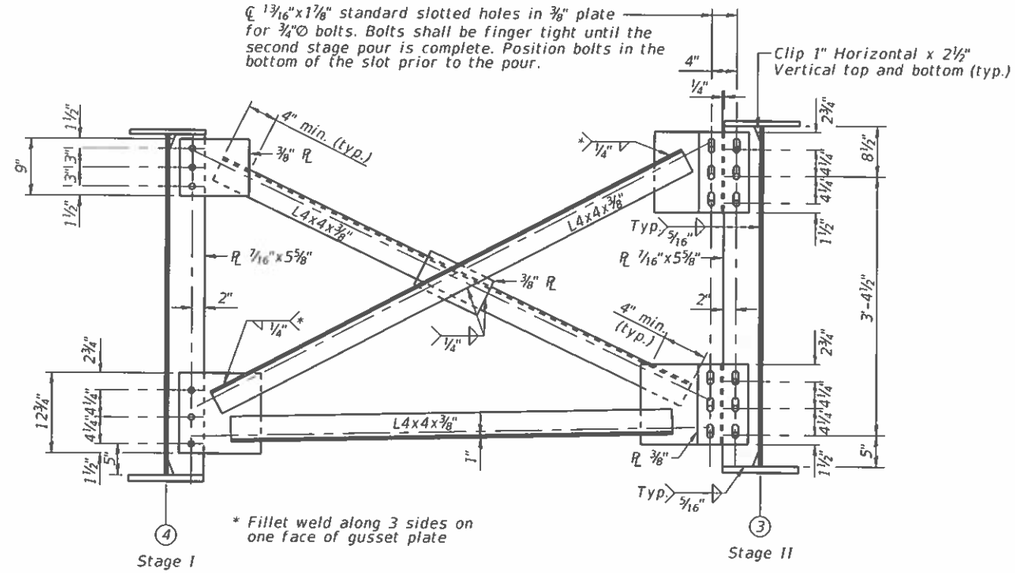

CROSS FRAME CF4
(6 REQUIRED)

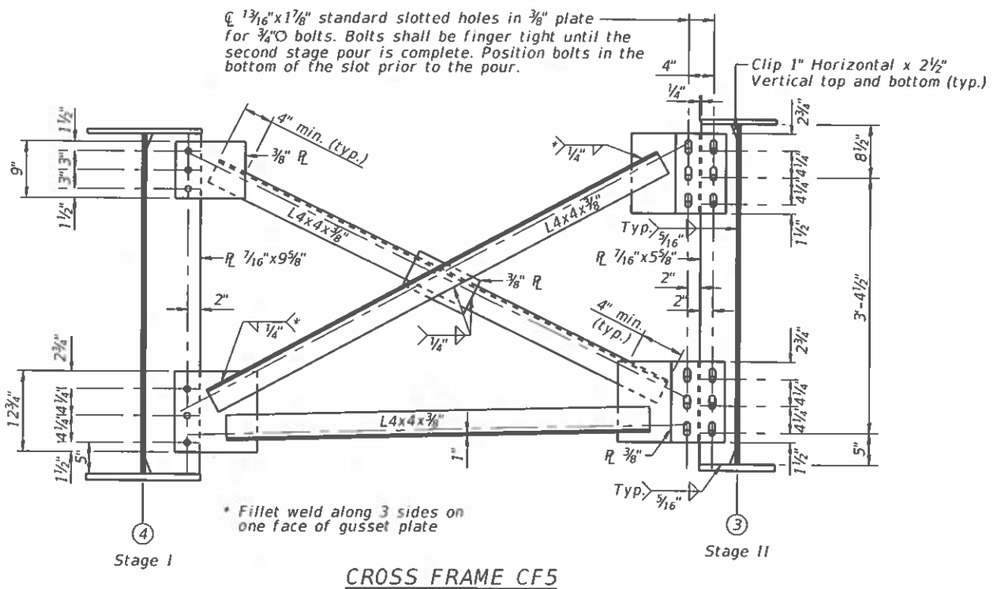

CROSS FRAME CF5
(2 REQUIRED)

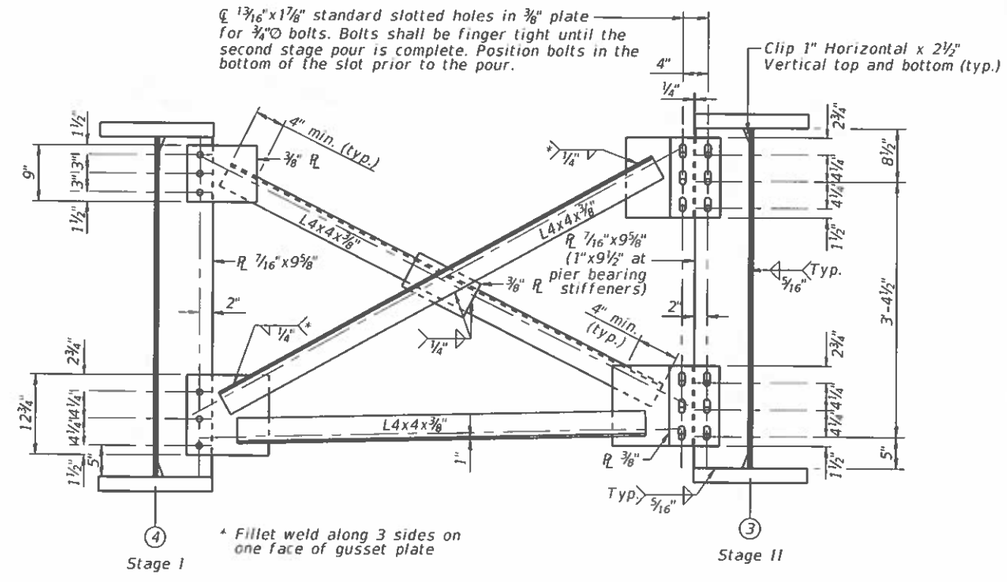

CROSS FRAME CF6
(4 REQUIRED)

MODEL: FRAMING PLAN
FILE NAME: G:\Users\111\111335-01-Waldron-Road-over-I57-Superstructure\Survey_D366997\Consultant_Data\Chamlin_2020\CAD_Sheets\0460153-66997-039-040-FRAMING.dgn

Chamlin & Associates

USER NAME = CHAMLIN	DESIGNED - JKC	REVISED -	
	CHECKED - AJO	REVISED -	
PLOT SCALE =	DRAWN - ARR	REVISED -	
PLOT DATE =	CHECKED - JKC	REVISED -	

4/27/2021 3:05:22 PM

STATE OF ILLINOIS
DEPARTMENT OF TRANSPORTATION

FRAMING PLAN AND DETAILS
STRUCTURE NO. 046-0153

SHEET 40 OF 54 SHEETS

F.A.I. RTE.	SECTION	COUNTY	TOTAL SHEETS	SHEET NO.
57	139HBR-6	KANKAKEE	202	129

CONTRACT NO. 66997

ILLINOIS | FED. AID PROJECT

TOP OF WEB ELEVATIONS (FOR FABRICATION ONLY)

LOCATION / BEAM	BM-1	BM-2	BM-3	BM-4	BM-5	BM-6
Centerline Brg. n. Abut.	658.12	658.32	658.43	658.29	658.14	657.98
Centerline Splice #1	658.12	658.20	658.19	657.93	657.67	657.38
Centerline Brg. Pier	657.59	657.61	657.54	657.22	656.90	656.56
Centerline Splice #2	657.06	657.02	656.89	656.52	656.13	655.73
Centerline Brg. S Abut.	654.94	654.78	654.53	654.04	653.54	653.02

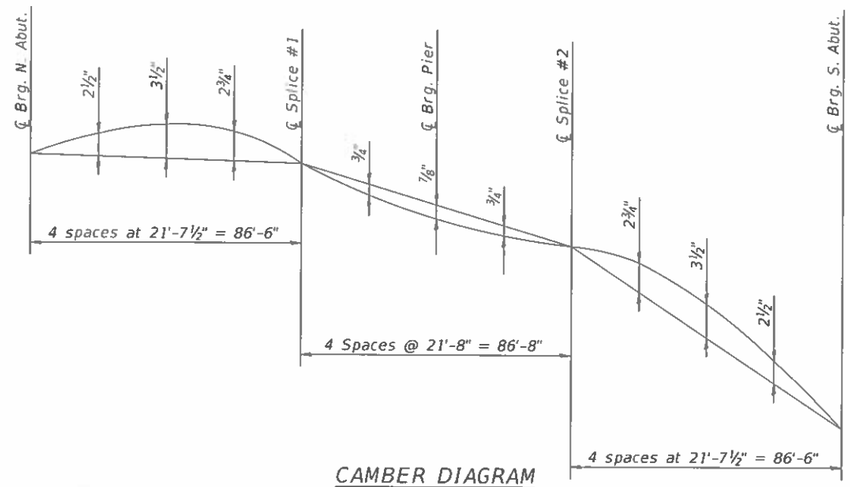

CAMBER DIAGRAM

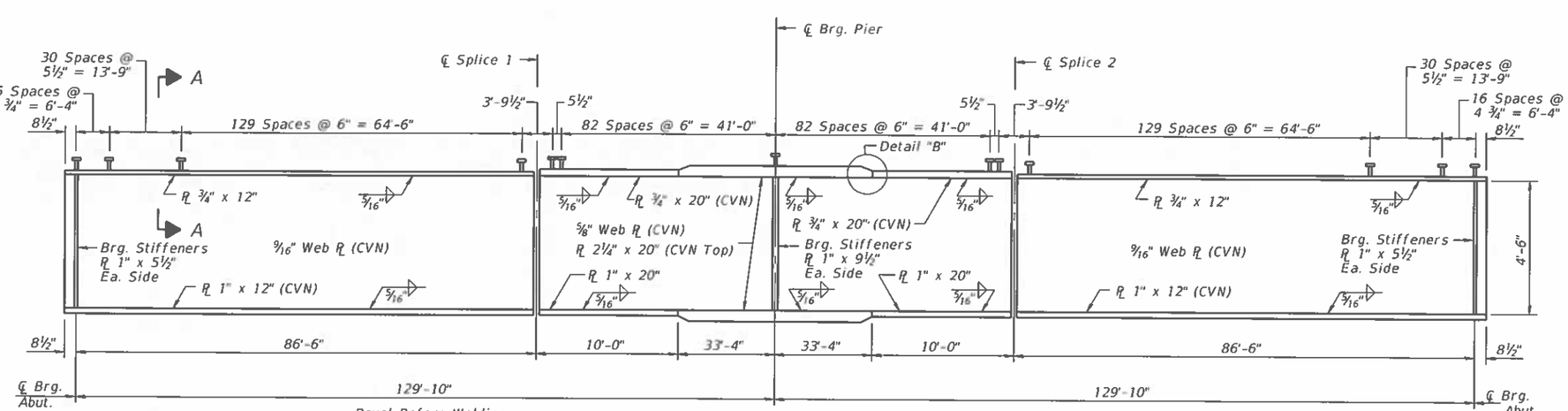

GIRDER ELEVATION

"CVN" denotes Charpy-V-Notch impact energy requirements, zone 2.

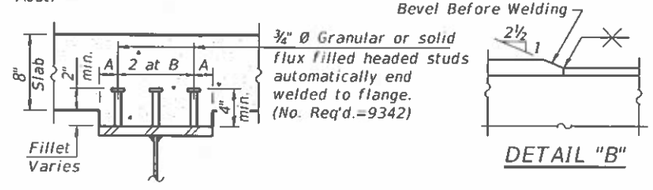

SECTION A-A

A = 2" at 12" Flange or 4" at 20" flange
B = 4" at 12" flange or 6" at 20" flange

DETAIL "B"

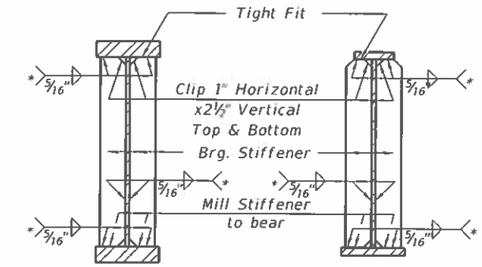

SECTION AT PIER

SECTION AT ABUTMENT

* Terminate ¼" (±⅛") from the end of plate intersects.

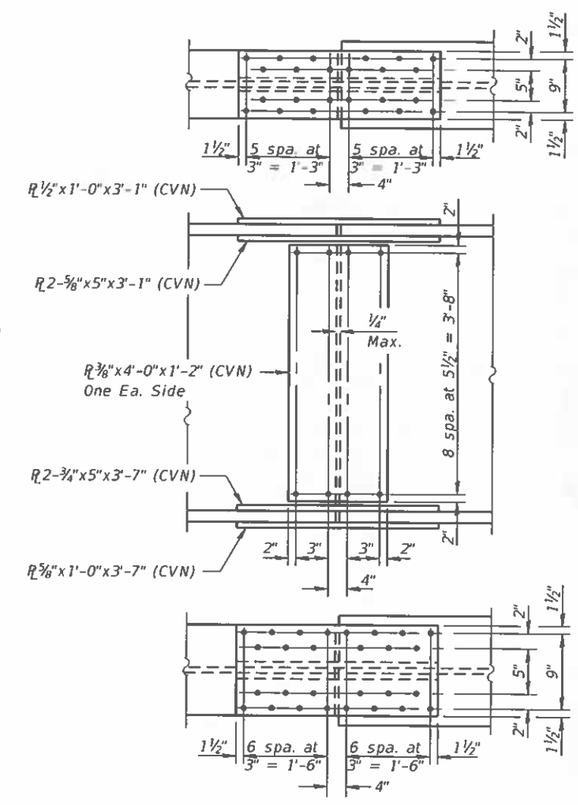

FIELD SPLICE DETAIL

(Splices 1 and 2)

Note:
All flange plates, web plates, splice plates, and bearing stiffeners shall be AASHTO M270 Gr 50 Steel.

MODEL: TEMP CONC BARRIER
FILE NAME: G:\Users\111\111335-01-Waldron-Road-over-I57-Superstructure\Survey D366997\Consultant_Data\Chamlin_2\120\CAD_Sheets\0460153-66997-041-STRUCTURAL_STEEL.dgn

Chamlin & Associates

USER NAME =	DESIGNED - JKC	REVISED -
	CHECKED - AJO	REVISED -
PLOT SCALE =	DRAWN - LAG	REVISED -
PLOT DATE =	CHECKED - JKC	REVISED -

STATE OF ILLINOIS
DEPARTMENT OF TRANSPORTATION

GIRDER AND FRAMING DETAILS
STRUCTURE NO. 046-0153

SHEET 41 OF 54 SHEETS

F.A.I. RTE.	SECTION	COUNTY	TOTAL SHEETS	SHEET NO.
57	139HBR-6	KANKAKEE	202	130

CONTRACT NO. 66997

ILLINOIS FED. AID PROJECT

4/19/2021 10:44:44 AM

INTERIOR GIRDER MOMENT TABLE			
		0.4 Sp. 1 or 0.6 Sp. 2	Pier
Is	(in^4)	23065.9	79430.6
Ic(n)	(in^4)	63658.0	--
Ic(3n)	(in^4)	47141.9	--
Ic(cr)	(in^4)	--	87286.2
Ss	(in^3)	874.6	2715.6
Sc(n)	(in^3)	1296.9	--
Sc(3n)	(in^3)	1180.7	--
Sc(cr)	(in^3)	--	2798.5
Sxc	(in^3)	1180.7	--
DC1	(k/')	1.008	1.008
MDC1	('k)	849.4	2974.4
DC2	(k/')	0.233	0.233
MDC2	('k)	222.6	623.3
DW	(k/')	0.340	0.340
MDW	('k)	326.0	912.7
LLDF	('k)	0.553	0.599
$M_{\ell+IM}$	('k)	1683.3	2519.5
fℓ (Strength I)	('k)	10.0	10.0
Mu + ⅓ fℓ Sxc	('k)	5102.7	--
Øf Mn	('k)	6259.0	--
fs DC1	(ksi)	11.65	13.14
fs DC2	(ksi)	2.26	2.67
fs DW	(ksi)	3.31	3.91
fs (ℓ+IM)	(ksi)	15.58	10.80
fℓ (Service II)	(ksi)	10.00	10.00
fs+ fℓ/2 (Service II)	(ksi)	42.48	38.77
0.95Rh Fyf	(ksi)	47.50	47.50
fs + fℓ/3 (Total)(Strength I)	(ksi)	--	47.88
Øf Fn	(ksi)	--	50.00
Vf	(k)	95.8	--

GIRDER REACTION TABLE					
		Abut.		Pier	
		Interior	Exterior	Interior	Exterior
LLDF		0.779	0.903	0.779	0.695
OCF		--	1.300	--	1.000
RDC1	(k)	42.5	40.1	176.8	166.8
RDC2	(k)	10.3	10.3	39.8	40.0
RDW	(k)	15.1	15.1	58.4	58.4
Rℓ	(k)	78.02	90.44	167.95	149.78
R_{IM}	(k)	16.74	19.40	30.17	26.91
RTotal	(k)	162.66	175.34	473.12	441.89

Is, Ss: Non-composite moment of inertia and section modulus of the steel section used for computing fs(Total-Strength I, and Service II) due to non-composite dead loads ($in.^4$ and $in.^3$).

Ic(n), Sc(n): Composite moment of inertia and section modulus of the steel and deck based upon the modular ratio, "n", used for computing fs(Total-Strength I, and Service II) in uncracked sections due to short-term composite live loads ($in.^4$ and $in.^3$).

Ic(3n), Sc(3n): Composite moment of inertia and section modulus of the steel and deck based upon 3 times the modular ratio, "3n", used for computing fs(Total-Strength I, and Service II) in uncracked sections, due to long-term composite (superimposed) dead loads ($in.^4$ and $in.^3$).

Ic(cr), Sc(cr): Composite moment of inertia and section modulus of the steel and longitudinal deck reinforcement, used for computing fs (Total-Strength I and Service II) in cracked sections, due to both short-term composite live loads and long-term composite (superimposed) dead loads ($in.^4$ and $in.^3$).

DC1: Un-factored non-composite dead load (kips/ft.).

MDC1: Un-factored moment due to non-composite dead load (kip-ft.).

DC2: Un-factored long-term composite (superimposed excluding future wearing surface) dead load (kips/ft.).

MDC2: Un-factored moment due to long-term composite (superimposed excluding future wearing surface) dead load (kip-ft.).

DW: Un-factored long-term composite (superimposed future wearing surface only) dead load (kips/ft.).

MDW: Un-factored moment due to long-term composite (superimposed future wearing surface only) dead load (kip-ft.).

$M_{\ell+IM}$: Un-factored live load moment plus dynamic load allowance (impact) (kip-ft.).

Mu (Strength I): Factored design moment (kip-ft.).
1.25 (MDC1 + MDC2) + 1.5 MDW + 1.75 $M_{\ell+IM}$

Øf Mn: Compact composite positive moment capacity computed according to Article 6.10.7.1 or non-slender negative moment capacity according to Article A6.1.1 or A6.1.2 (kip-ft).

fs DC1: Un-factored stress at edge of flange for controlling steel flange due to vertical non-composite dead loads as calculated below (ksi).
MDC1/ Snc

fs DC2: Un-factored stress at edge of flange for controlling steel flange due to vertical composite dead loads as calculated below (ksi).
MDC2/ Sc(3n) or MDC2/ Sc(cr) as applicable.

fs DW: Un-factored stress at edge of flange for controlling steel flange due to vertical composite future wearing surface loads as calculated below (ksi).
MDW/ Sc(3n) or MDW/ Sc(cr) as applicable.

fs (ℓ+IM): Un-factored stress at edge of flange for controlling steel flange due to vertical composite live load plus impact loads as calculated below (ksi).
$M_{\ell+IM}$ / Sc(n) or $M_{\ell+IM}$ / Sc(cr) as applicable.

fs + fℓ/2 (Service II): Sum of stresses as computed below (ksi).
fsDC1 + fsDC2 + fsDW + 1.3 $fs_{(\ell+IM)}$ + fℓ/2

0.95RhFyf: Composite stress capacity for Service II loading according to Article 6.10.4.2 (ksi).

fs + fℓ/3 (Total)(Strength I): Sum of stresses as computed below on non-compact section (ksi).
1.25 (fsDC1 + fsDC2) + 1.5 fsDW + 1.75 $fs_{(\ell+IM)}$ + fℓ/3

Øf Fn: Non-Compact composite positive or negative stress capacity for Strength I loading according to Article 6.10.7 or 6.10.8 (ksi).

Vf: Maximum factored shear range in span computed according to Article 6.10.10.

Note:
Mℓ and Rℓ include the effects of centrifugal force and superelevation.

OCF: Obtuse Correction factor

LLDF: Live Load Distribution Factor (Includes OCF)

Sxc: Section modulus about the major axis of section to the controlling flange, tension or compression, taken as yield moment with respect to the controlling flange over the yield strength of the controlling flange ($in.^3$)

MODEL: TEMP CONC BARRIER
FILE NAME: G:\Users\1111111335-01-Waldron-Road-over-I57-Superstructure\Survey D366997\Consultant_Data\Chamlin_2020\CAD_Sheets\0460153-66997-042_INTERIOR_GIRDER_TABLES.dgn

Chamlin & Associates

3/3/2021 9:17:26 AM

USER NAME =	DESIGNED - JKC	REVISED -	
	CHECKED - AJO	REVISED -	
PLOT SCALE =	DRAWN - LAG	REVISED -	
PLOT DATE =	CHECKED - JKC	REVISED -	

STATE OF ILLINOIS
DEPARTMENT OF TRANSPORTATION

GIRDER AND FRAMING DETAILS
STRUCTURE NO. 046-0153

SHEET 42 OF 54 SHEETS

F.A.I. RTE.	SECTION	COUNTY	TOTAL SHEETS	SHEET NO.
57	139HBR-6	KANKAKEE	202	131

CONTRACT NO. 66997

ILLINOIS | FED. AID PROJECT

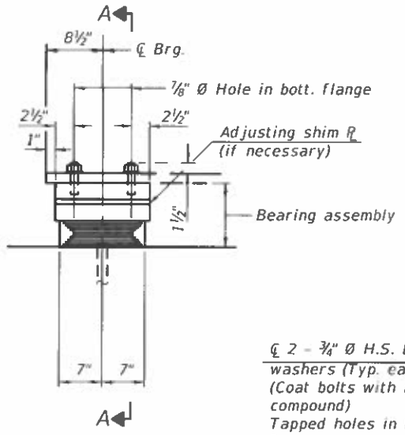

ELEVATION AT ABUT.

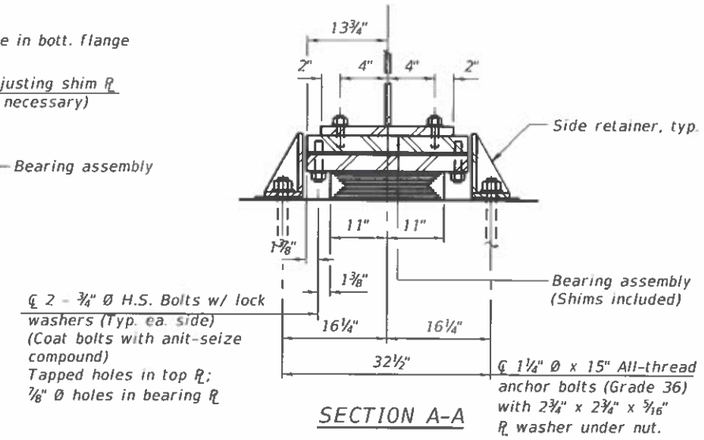

SECTION A-A

TYPE I ELASTOMERIC EXP. BRG.

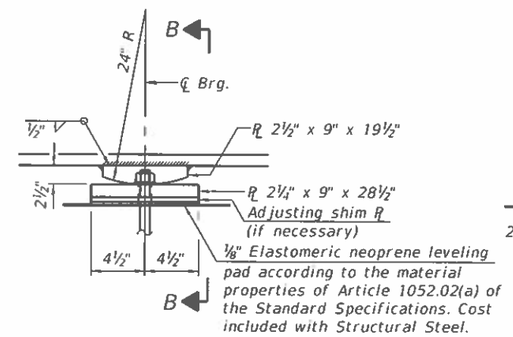

ELEVATION AT PIER

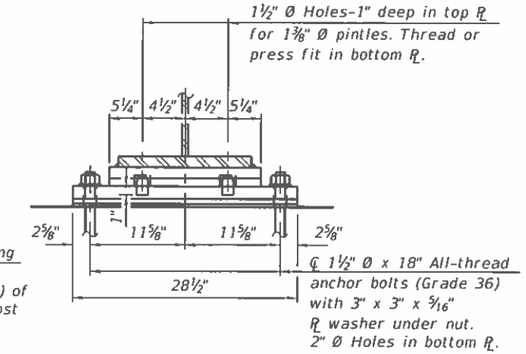

SECTION B-B

FIXED BEARING

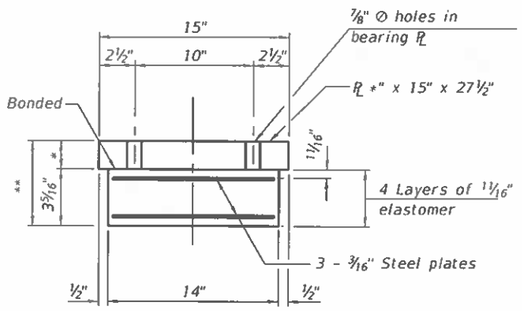

BEARING ASSEMBLY

* 2½" at North Abutment
Varies 2½" to 3" at South Abutment

** Varies 5 13/16" at edge away from span

Note:
Shim plates shall not be placed under bearing assembly.

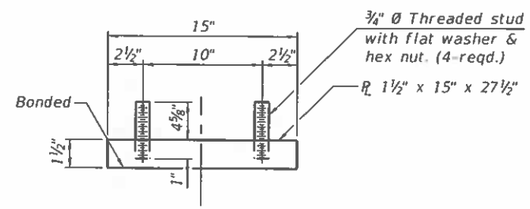

TOP PLATE

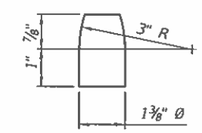

PINTLE
(Grade 50)

Notes:
Side retainers and stainless steel plates shall be included in the cost of Elastomeric Bearing Assembly, Type I.
Anchor bolts and side retainers at all supports shall be installed as each member is erected unless an equivalent temporary means of lateral restraint is used.
The Structural Steel Plates of the Fixed bearing and Elastomeric Bearing Assembly shall conform to the requirements of AASHTO M270 Grade 50.
Two ⅛ in. adjusting shims shall be provided for each bearing in addition to all other plates or shims and placed as shown on the bearing details.

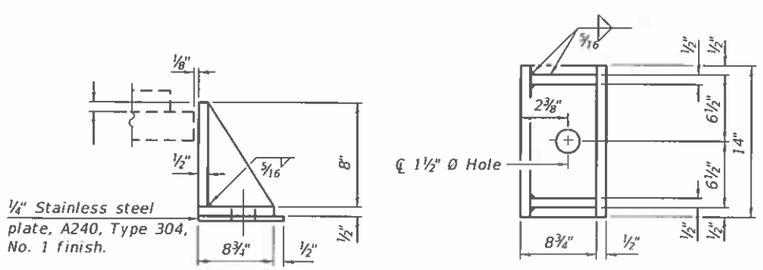

SIDE RETAINER
Equivalent rolled angle with stiffeners will be allowed in lieu of welded plates.

BILL OF MATERIAL

Item	Unit	Total
Elastomeric Bearing Assembly Type I	Each	12
Anchor Bolts 1¼"	Each	24
Anchor Bolts 1½"	Each	12

MODEL: TEMP CONC BARRIER
FILE NAME: G:\Users\111\11335-01-Waldron-Road-over-I57-Superstructure\Survey D366997\Consultant_Data\Chamlin_2020\CAD_Sheets\0460153-66997-043-BEARING_DETAILS.dgn
8/12/2021 9:51:06 AM

Chamlin & Associates

USER NAME =	DESIGNED - JKC	REVISED -	
	CHECKED - AJO	REVISED -	
PLOT SCALE =	DRAWN - LAG	REVISED -	
PLOT DATE =	CHECKED - JKC	REVISED -	

STATE OF ILLINOIS
DEPARTMENT OF TRANSPORTATION

BEARING DETAILS
STRUCTURE NO. 046-0153
SHEET 43 OF 54 SHEETS

F.A.I. RTE.	SECTION	COUNTY	TOTAL SHEETS	SHEET NO.
57	139HBR-6	KANKAKEE	202	132

CONTRACT NO. 66997
ILLINOIS FED. AID PROJECT

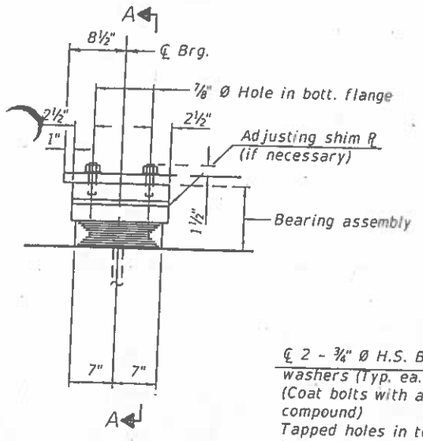

ELEVATION AT ABUT.

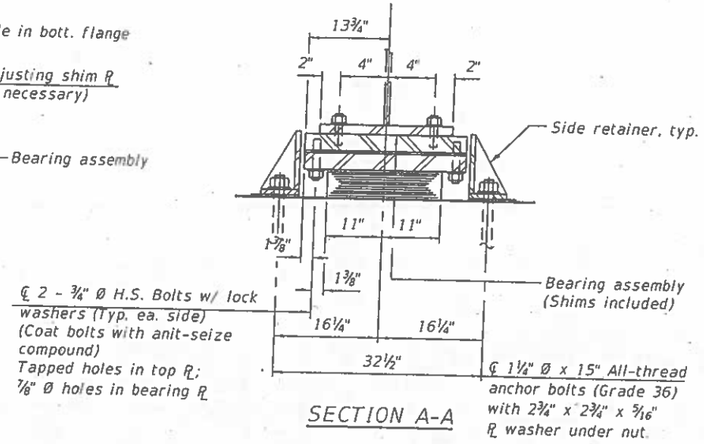

SECTION A-A

TYPE I ELASTOMERIC EXP. BRG.

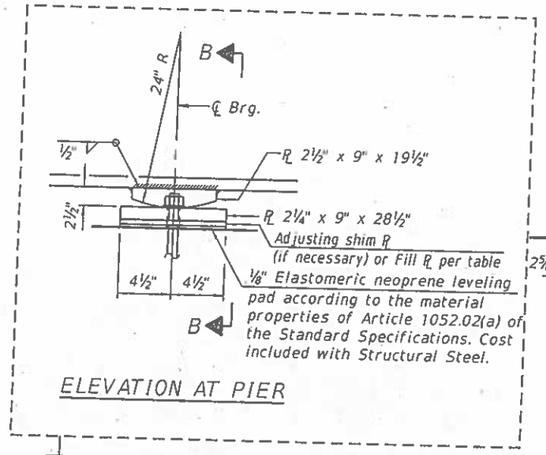

ELEVATION AT PIER

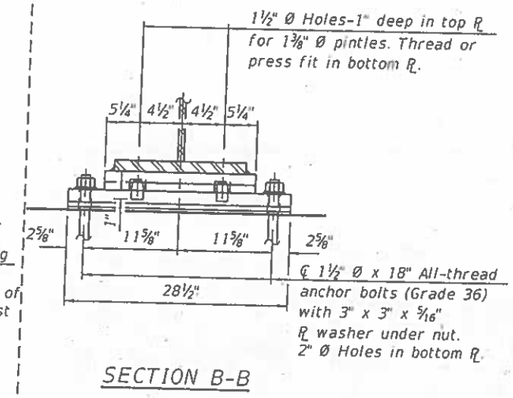

SECTION B-B

FIXED BEARING

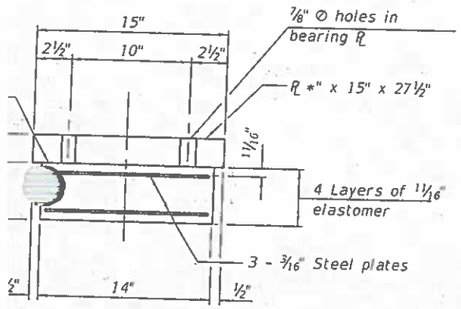

BEARING ASSEMBLY

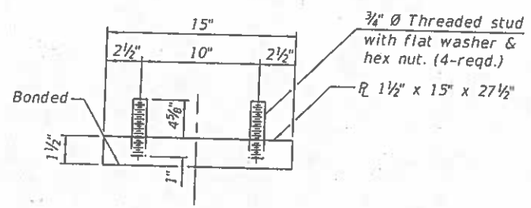

TOP PLATE

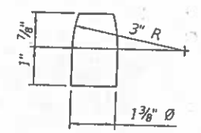

PINTLE
(Grade 50)

Notes:
Side retainers and stainless steel plates shall be included in the cost of Elastomeric Bearing Assembly, Type I.
Anchor bolts and side retainers at all supports shall be installed as each member is erected unless an equivalent temporary means of lateral restraint is used.
The Structural Steel Plates of the Fixed bearing and Elastomeric Bearing Assembly shall conform to the requirements of AASHTO M270 Grade 50.
Two ⅛ in. adjusting shims shall be provided for each bearing in addition to all other plates or shims and placed as shown on the bearing details.

* 2½" at North Abutment
Varies 2½" to 3" at South Abutment

** Varies 5 13/16" at edge away from span

Note:
Shim plates shall not be placed under bearing assembly.

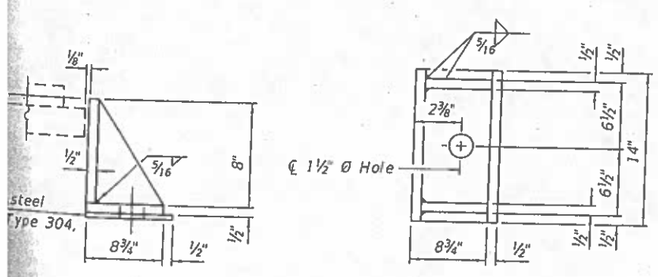

SIDE RETAINER
Equivalent rolled angle with stiffeners will be allowed in lieu of welded plates.

PIER FILL PLATE TABLE

Beam 1	⅝" x 9" x 28½"
Beam 2	⅜" x 9" x 28½"
Beams 3-6	-

1

BILL OF MATERIAL

Item	Unit	Total
Elastomeric Bearing Assembly Type I	Each	12
Anchor Bolts 1¼"	Each	24
Anchor Bolts 1½"	Each	12

USER NAME =	DESIGNED - JKC	REVISED - 1 10/27/2021 JKC	
	CHECKED - AJO	REVISED -	
PLOT SCALE =	DRAWN - LAG	REVISED -	
PLOT DATE =	CHECKED - JKC	REVISED -	

STATE OF ILLINOIS
DEPARTMENT OF TRANSPORTATION

BEARING DETAILS
STRUCTURE NO. 046-0153

F.A.I. RTE.	SECTION	COUNTY	TOTAL SHEETS	SHEET NO.
57				

Note 1.
5-#5 h1(E) bars, short face (E)
5-#5 h2(E) bars, long face (E)
4-#5 h1(E) bars, short face (W)
4-#5 h2(E) bars, long face (W)

Note 2.
1-#5 h6(E) bars, short face (E)
1-#5 h7(E) bars, long face (E)
1-#5 h8(E) bars, short face (W)
1-#5 h9(E) bars, long face (W)
(cut to fit)

Note 3.
1-#5 h3(E) bar, short face (E)
1-#5 h4(E) bar, long face (E)
2-#5 h5(E) bars (W)
at 12" cts. each face
(See field cutting diagram)

Note 4.
Order 5-p(E), 1-p1(E), 1-p2(E), 1-p3(E), 1-p4(E), 5-p5(E) bars for each stage and cut to fit for Stage II.

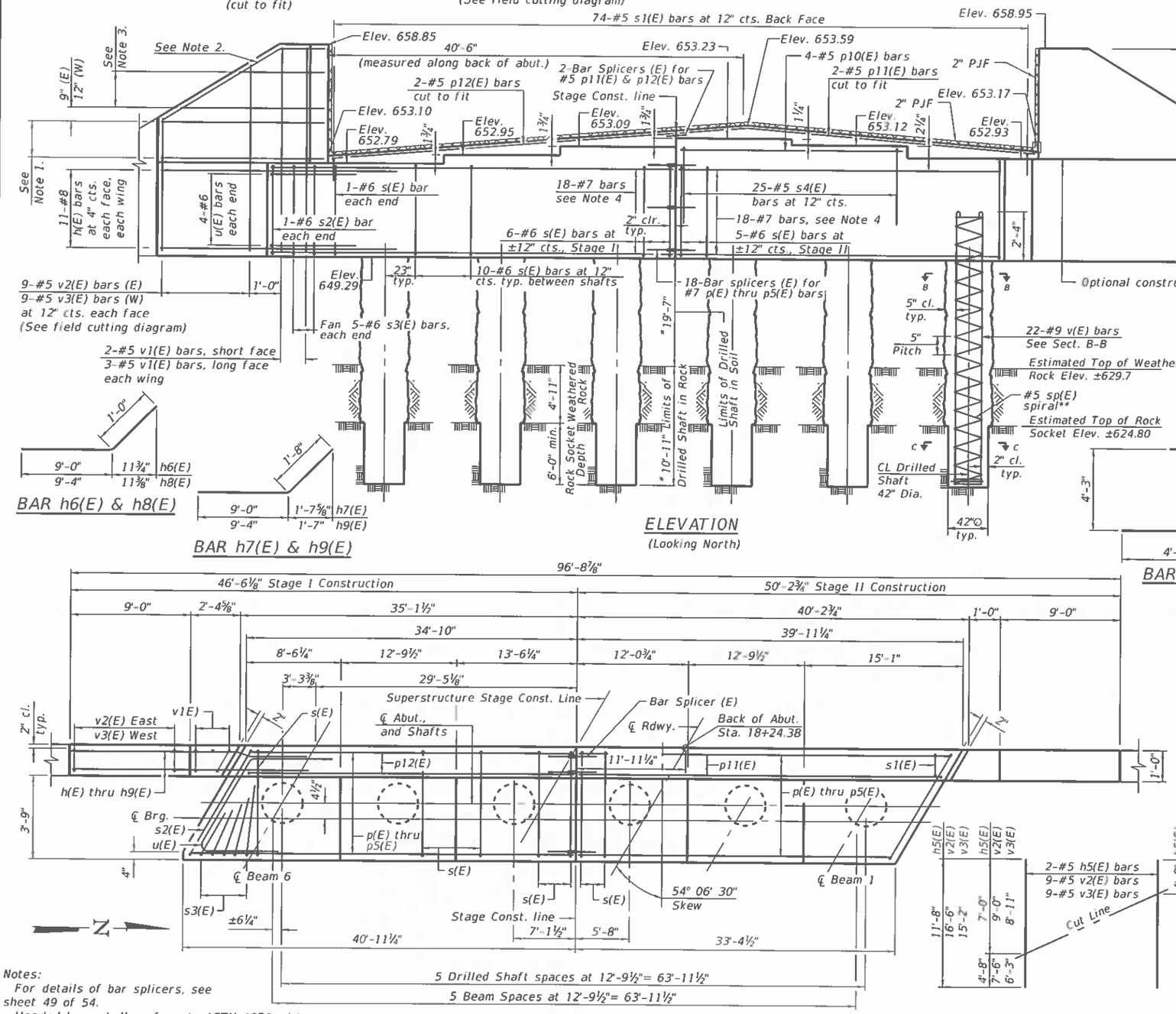

ELEVATION
(Looking North)

BAR h6(E) & h8(E)

BAR h7(E) & h9(E)

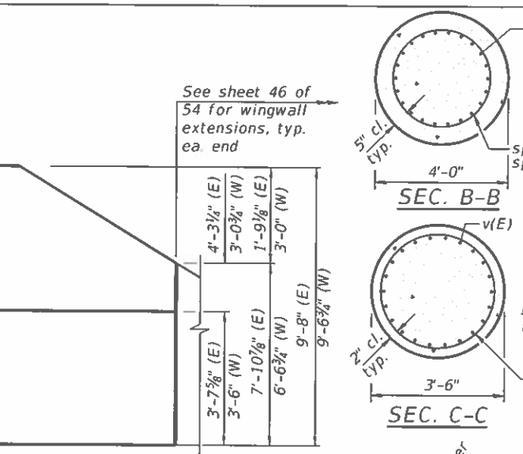

SEC. THRU ABUT.
Dimensions at right angles to abutment.

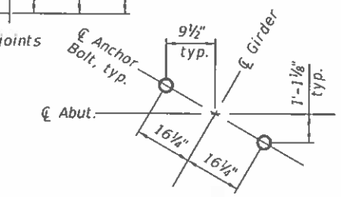

ANCHOR BOLT LOCATION DETAIL

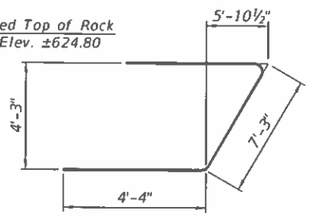

BAR u(E)

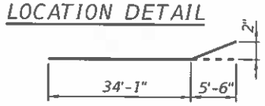

BAR p11(E)

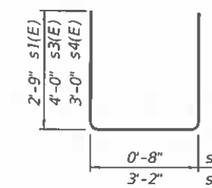

BAR s1(E), s3(E) & s4(E)

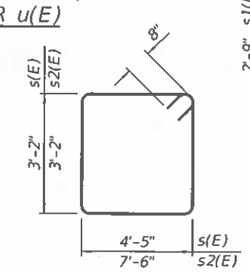

BAR s(E) & s2(E)

PLAN

MINIMUM BAR LAP
#5 bar = 3'-7"
#7 bar = 5'-0"

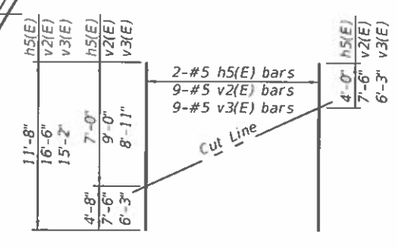

FIELD CUTTING DIAGRAM
Order bars full length. Cut as shown and use remainder of bars in opposite face.

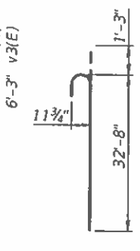

BAR v(E)

Space reinforcement in cap to miss anchor bolts.
Pour steps monolithically with cap.
Minimum lap for spirals = 3'-9"
* The quantities and detailing are based on the estimated elevations shown on the plans. The actual elevations may differ at each shaft and corresponding adjustments shall be made to the drilled shaft and reinforcement quantities and payment limits.
**Provide 1½ extra turns top and bottom of each drilled shaft. Extend spiral 2'-0" into abutment cap. Provide min. 4-#4 spacers or equivalent.
***Length is height of spiral.

BILL OF MATERIAL

Bar	No.	Size	Length	Shape
h(E)	22	#8	16'-11"	
h1(E)	9	#5	9'-10"	
h2(E)	9	#5	10'-6"	
h3(E)	1	#5	6'-2"	
h4(E)	1	#5	6'-10"	
h5(E)	2	#5	11'-8"	
h6(E)	1	#5	10'-0"	
h7(E)	1	#5	10'-8"	
h8(E)	1	#5	10'-4"	
h9(E)	1	#5	11'-0"	
p(E)	10	#7	40'-7"	
p1(E)	4	#7	39'-6"	
p2(E)	4	#7	38'-3"	
p3(E)	4	#7	37'-1"	
p4(E)	4	#7	35'-11"	
p5(E)	10	#7	34'-7"	
p10(E)	4	#5	24'-6"	
p11(E)	2	#5	39'-7"	
p12(E)	2	#5	35'-4"	
s(E)	53	#6	16'-6"	
s1(E)	74	#5	6'-2"	
s2(E)	2	#6	22'-8"	
s3(E)	10	#6	11'-2"	
s4(E)	25	#5	9'-5"	
***sp(E)	6	#5	32'-6"	
u(E)	8	#6	15'-11"	
v(E)	132	#9	33'-11"	
v1(E)	10	#5	9'-2"	
v2(E)	9	#5	16'-6"	
v3(E)	9	#5	15'-2"	
Structure Excavation			Cu. Yd.	314
Concrete Structures			Cu. Yd.	56.8
Reinforcement Bars, Epoxy Coated			Pound	27,330
Drilled shaft in soil			Cu. Yd.	54.7
Drilled shaft in rock			Cu. Yd.	26.6
Granular backfill for Structures			Cu. Yd.	197
Thermal Integrity Profile Testing			Each	6
Thermal Integrity Profile Data Collection			Foot	183
Pipe Underdrain for Structures 4"			Foot	96
Geocomp. Wall Drain			Sq. Yd.	90

Notes:
For details of bar splicers, see sheet 49 of 54.
Headed bars shall conform to ASTM A970 with threaded attachment; Class HA; and reinforcement bars conforming to ASTM A706. Cost included with Reinforcement Bars, Epoxy Coated.

MODEL: 0460153-66997-044
FILE NAME: I:\jobs\2019\193.1901 PTB 192-011 District 3 Various Phase III Structure Projects\WO 2 - Waldron Road over I-57\Drawings\bridge substructure\Sheet\0460153-66997-044-NORTH ABUTMENT.dgn

Prairie Engineers, P.C.
www.prairieengineers.com
professional design firm no. 184-005965
© Copyright Prairie Engineers, P.C. 2018

USER NAME =	DESIGNED - SMA	REVISED -	
	CHECKED - CMF/TCD	REVISED -	
PLOT SCALE =	DRAWN - JLM	REVISED -	
PLOT DATE =	CHECKED - SMA	REVISED -	

STATE OF ILLINOIS
DEPARTMENT OF TRANSPORTATION

NORTH ABUTMENT
STRUCTURE NO. 046-0153

SHEET 44 OF 54 SHEETS

F.A.I. RTE.	SECTION	COUNTY	TOTAL SHEETS	SHEET NO.
57	139HBR-6	KANKAKEE	202	133

CONTRACT NO. 66997
ILLINOIS | FED. AID PROJECT

8/12/2021 9:03:17 AM

Note 1.
4-#5 h1(E) bars, short face (E)
4-#5 h2(E) bars, long face (E)
5-#5 h1(E) bars, short face (W)
5-#5 h2(E) bars, long face (W)

Note 2.
1-#5 h8(E) bars, short face (E)
1-#5 h9(E) bars, long face (E)
1-#5 h6(E) bars, short face (W)
1-#5 h7(E) bars, long face (W)
(cut to fit)

Note 3.
2-#5 h5(E) bars (E)
at 12" cts. each face
(See field cutting diagram)
1-#5 h3(E) bar, short face (W)
1-#5 h4(E) bar, long face (W)

Note 4.
Order 5-p(E), 1-p1(E), 1-p2(E), 1-p3(E), 1-p4(E), 5-p5(E) bars for each stage and cut to fit for Stage II.

Note 5.
Order p22(E) bars full length and cut as shown in Field Cutting Diagram. Use shorter sections in upper step and longer sections in lower step for Stage II.

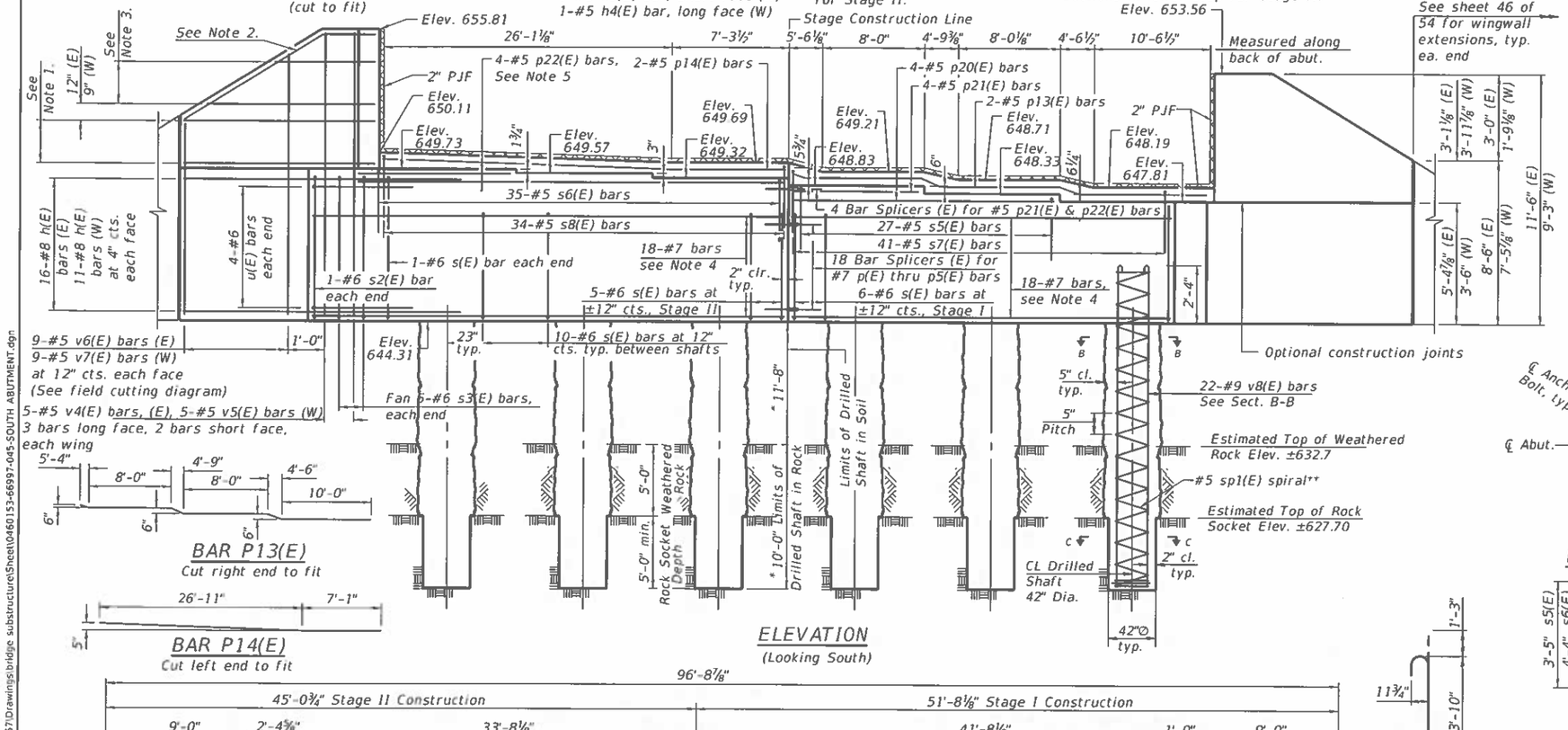

BAR P13(E)
Cut right end to fit

BAR P14(E)
Cut left end to fit

ELEVATION
(Looking South)

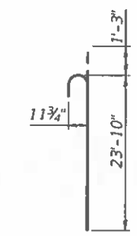

BAR v8(E)

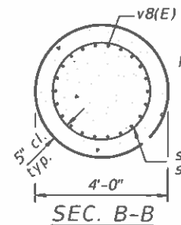

SEC. B-B

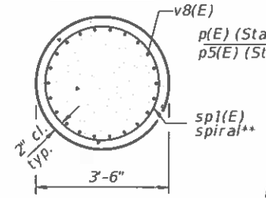

SEC. C-C

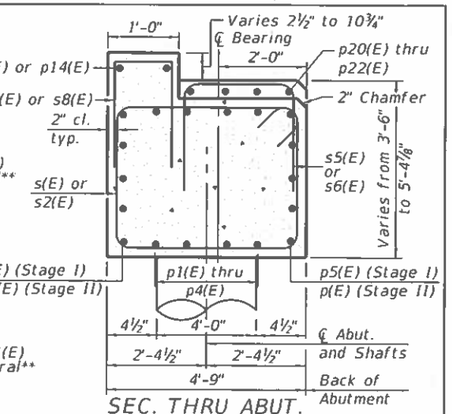

SEC. THRU ABUT.
Dimensions at right angles to abutment.

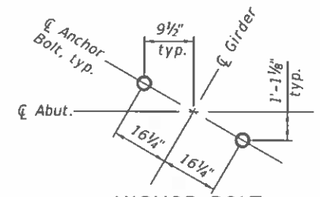

ANCHOR BOLT LOCATION DETAIL

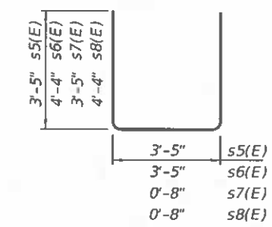

BAR s5(E) thru s8(E)

Space reinforcement in cap to miss anchor bolts.
Pour steps monolithically with cap.
See bar diagrams on sheet 44 of 54 for bars s(E) thru s3(E), u(E) and h6(E) thru h9(E).
Minimum lap for spirals = 3'-9"
* The quantities and detailing are based on the estimated elevations shown on the plans. The actual elevations may differ at each shaft and corresponding adjustments shall be made to the drilled shaft and reinforcement quantities and payment limits.
**Provide 1½ extra turns top and bottom of each drilled shaft. Extend spiral 2'-0" into abutment cap. Provide min. 4-#4 spacers or equivalent.
***Length is height of spiral.

BILL OF MATERIAL

Bar	No.	Size	Length	Shape
h(E)	27	#8	16'-11"	
h1(E)	9	#5	9'-10"	
h2(E)	9	#5	10'-6"	
h3(E)	1	#5	6'-2"	
h4(E)	1	#5	6'-10"	
h5(E)	2	#5	11'-8"	
h6(E)	1	#5	10'-0"	
h7(E)	1	#5	10'-8"	
h8(E)	1	#5	10'-4"	
h9(E)	1	#5	11'-0"	
p(E)	10	#7	40'-7"	
p1(E)	4	#7	39'-6"	
p2(E)	4	#7	38'-3"	
p3(E)	4	#7	37'-1"	
p4(E)	4	#7	35'-11"	
p5(E)	10	#7	34'-7"	
p13(E)	2	#5	40'-10"	
p14(E)	2	#5	34'-0"	
p20(E)	4	#5	25'-11"	
p21(E)	4	#5	13'-2"	
p22(E)	4	#5	48'-10"	
s(E)	53	#6	16'-6"	
s2(E)	2	#6	22'-8"	
s3(E)	10	#6	11'-2"	
s5(E)	27	#5	10'-3"	
s6(E)	35	#5	12'-1"	
s7(E)	41	#5	7'-6"	
s8(E)	34	#5	9'-4"	
sp1(E)	6	#5	23'-8"	
u(E)	8	#6	15'-11"	
v4(E)	5	#5	11'-1"	
v5(E)	5	#5	8'-10"	
v6(E)	9	#5	19'-6"	
v7(E)	9	#5	15'-9"	
v8(E)	132	#9	25'-1"	
Structure Excavation			Cu. Yd.	269
Concrete Structures			Cu. Yd.	69.2
Reinforcement Bars, Epoxy Coated			Pound	23,260
Drilled shaft in soil			Cu. Yd.	32.6
Drilled shaft in rock			Cu. Yd.	24.6
Granular backfill for Structures			Cu. Yd.	242
Thermal Integrity Profile Testing			Each	6
Thermal Integrity Profile Data Collection			Foot	130
Pipe Underdrain for Structures 4"			Foot	97
Geocomp. Wall Drain			Sq. Yd.	98

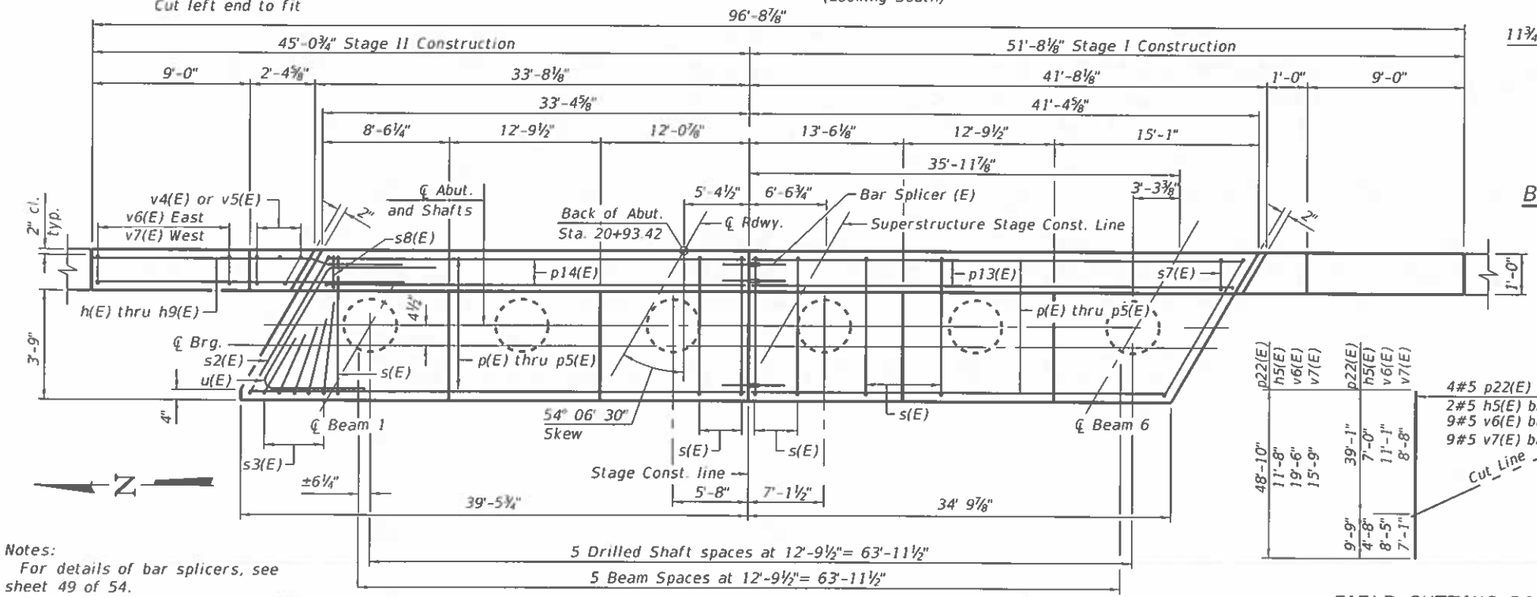

PLAN

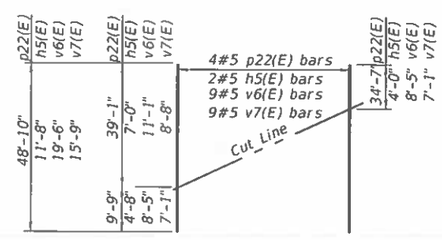

FIELD CUTTING DIAGRAM
Order bars full length. Cut as shown and use remainder of bars in opposite face, except see Note 5 for p22(E) bars.

MINIMUM BAR LAP
#5 bar = 3'-7"
#7 bar = 5'-0"

Notes:
For details of bar splicers, see sheet 49 of 54.
Headed bars shall conform to ASTM A970 with threaded attachment; Class HA; and reinforcement bars conforming to ASTM A706. Cost included with Reinforcement Bars, Epoxy Coated.

MODEL: 046015 3-66997-045
FILE NAME: I:\jobs\2019\193_901_PTB 192-011 District 3 Various Phase III Structure Projects\WO 2 - Waldron Road over I-57\Drawings\bridge substructure\Sheet\046015 3-66997-045-SOUTH ABUTMENT.dgn

Prairie Engineers, P.C.
www.prairieengineers.com
professional design firm no. 184-005965
© Copyright Prairie Engineers, P.C. 2016

USER NAME =	DESIGNED - SMA	REVISED -
	CHECKED - CMF/TCD	REVISED -
PLOT SCALE =	DRAWN - JLM	REVISED -
PLOT DATE =	CHECKED - SMA	REVISED -

STATE OF ILLINOIS
DEPARTMENT OF TRANSPORTATION

SOUTH ABUTMENT
STRUCTURE NO. 046-0153

SHEET 45 OF 54 SHEETS

F.A.I. RTE.	SECTION	COUNTY	TOTAL SHEETS	SHEET NO.
57	139HBR-6	KANKAKEE	202	134

CONTRACT NO. 66997
ILLINOIS | FED. AID PROJECT

8/12/2021 9:04:29 AM

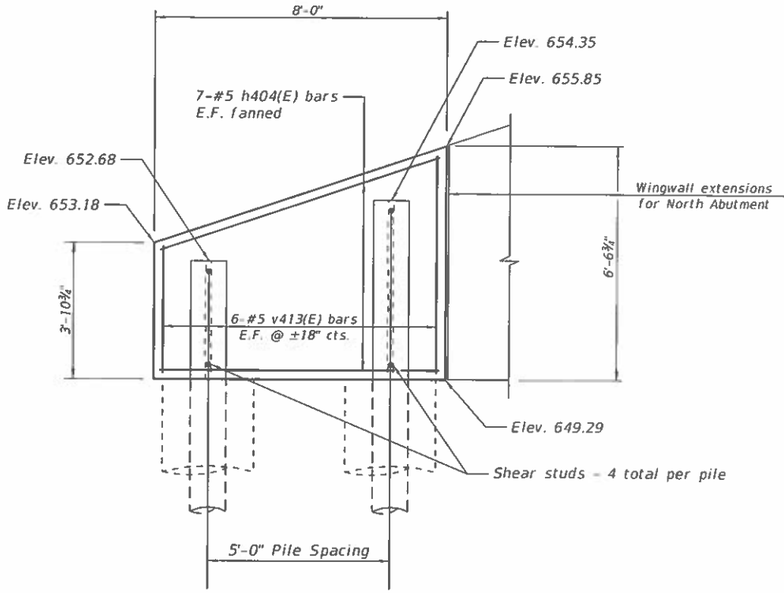

NW WINGWALL EXTENSION

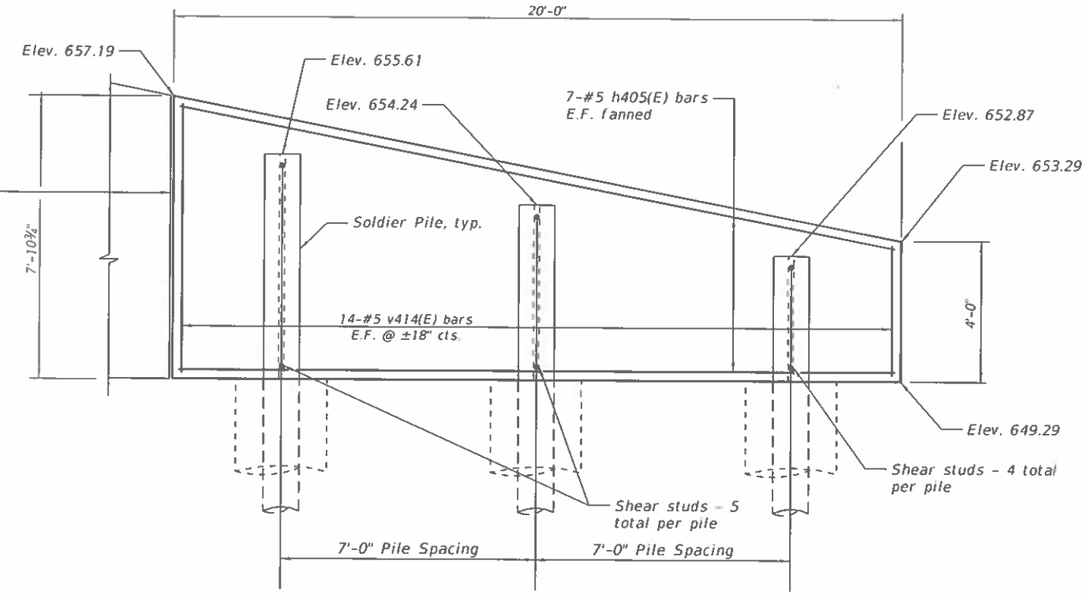

NE WINGWALL EXTENSION

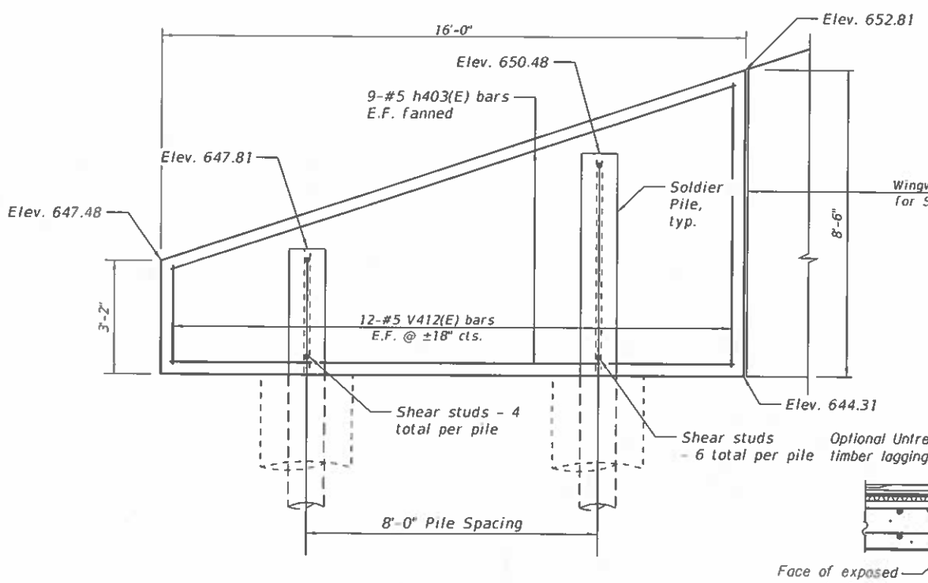

SE WINGWALL EXTENSION

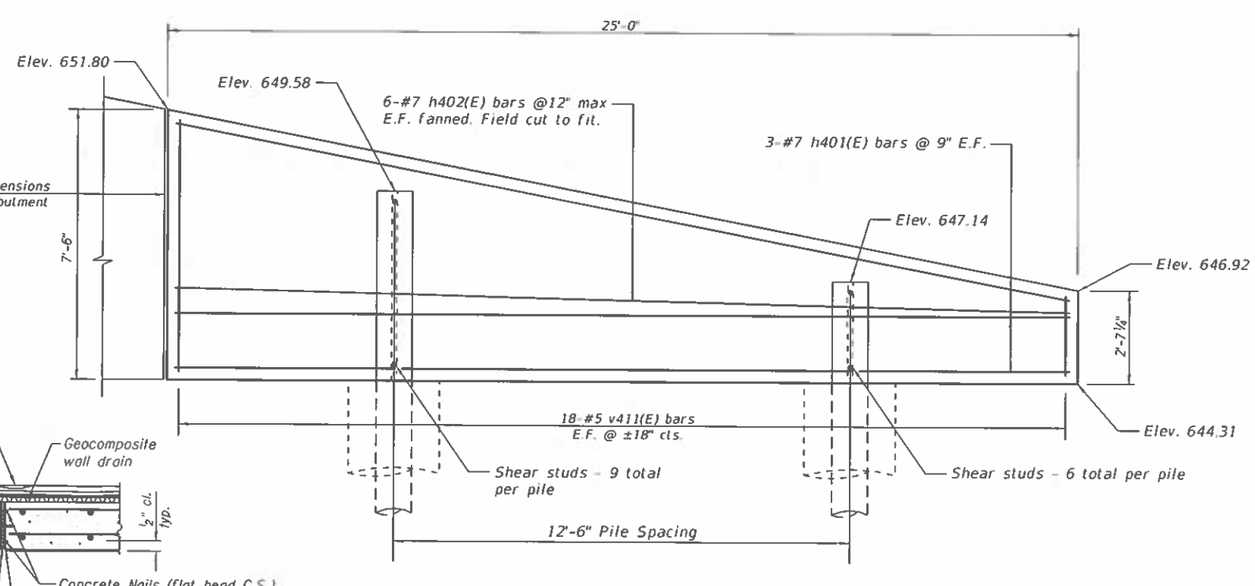

SW WINGWALL EXTENSION

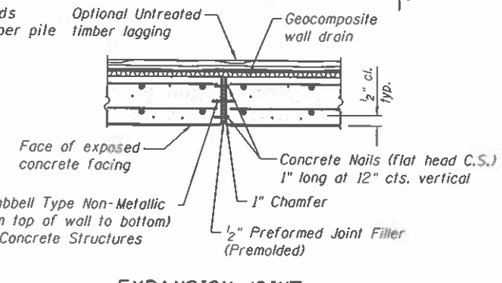

EXPANSION JOINT

Notes:
F.F. = Front Face
B.F. = Back Face
See Bill of Materials and reinforcement field cutting diagram on sheet 47 of 54.

MODEL: 0460153-66997-046
FILE NAME: I:\jobs\2019\193.1901 PTB 192-011 District 3 Various Phase III Structure Projects\WO 2 - Waldron Road over I-57\Drawings\bridge substructure\Sheet\0460153-66997-046-Wingwall Extensions.dgn
4/19/2021 2:45:31 PM

Prairie Engineers, P.C.
www.prairieengineers.com
professional design firm no. 184-005965
© Copyright Prairie Engineers, P.C. 2020

USER NAME =	DESIGNED - RC	REVISED -	
	CHECKED - CMF	REVISED -	
PLOT SCALE =	DRAWN - RNH	REVISED -	
PLOT DATE =	CHECKED - RC	REVISED -	

STATE OF ILLINOIS
DEPARTMENT OF TRANSPORTATION

WINGWALL EXTENSION ELEVATIONS
STRUCTURE NO. 046-0153

SHEET 46 OF 54 SHEETS

F.A.I. RTE.	SECTION	COUNTY	TOTAL SHEETS	SHEET NO.
57	139HBR-6	KANKAKEE	202	135

CONTRACT NO. 66997
ILLINOIS FED. AID PROJECT

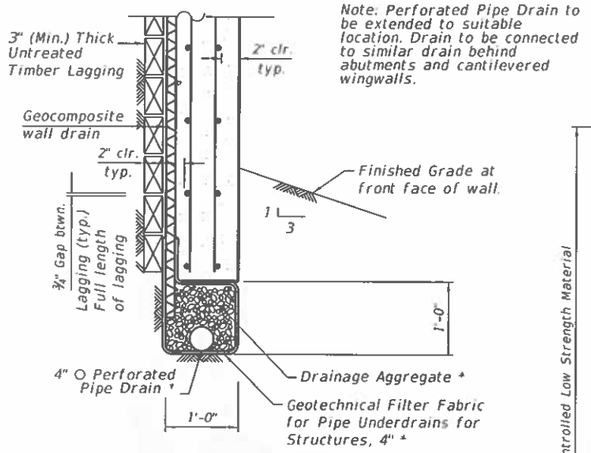

PIPE UNDERDRAIN DETAIL (BETWEEN SOLDIER PILES)

* Included in the cost of Pipe Underdrains for Structures

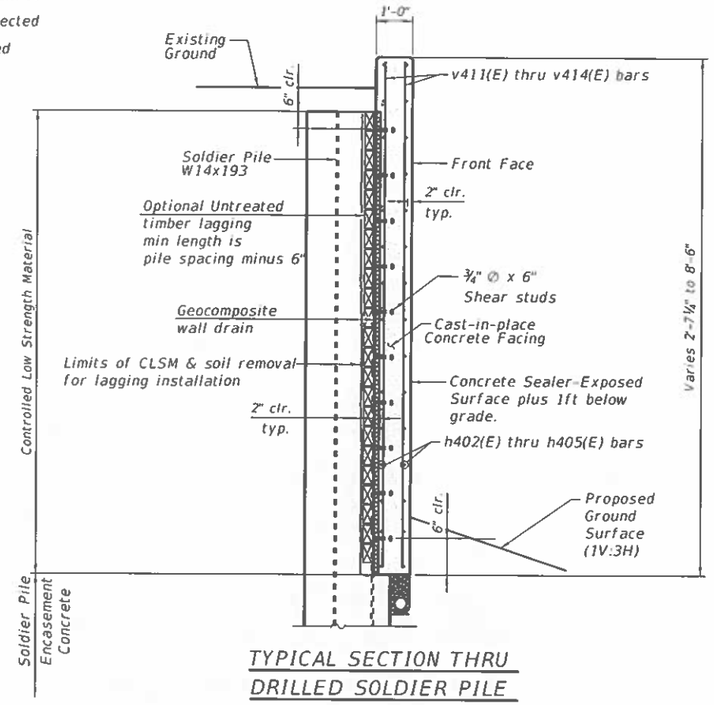

TYPICAL SECTION THRU DRILLED SOLDIER PILE WINGWALL EXTENSION

PILE	PILE STATION	OFFSET	TOP OF PILE ELEVATION	BOTTOM OF WALL ELEVATION	SECTION	HOLE DIAMETER	PILE TIP ELEVATION SEE NOTE 1	FURNISHING SOLDIER PILES (W SECTION)
			(FEET)	(FEET)			(FEET)	(FEET)
SE 1	231+05.26	79.51 LT	647.810	644.31	W14X193	2'-6"	623.700	24.110
SE 2	231+13.26	79.51 LT	650.477	644.31	W14X193	2'-6"	623.700	26.777
SW 1	232+20.24	79.51 LT	649.581	644.31	W14X193	2'-6"	623.700	25.881
SW 2	232+32.74	79.51 LT	647.140	644.31	W14X193	2'-6"	623.700	23.440
NE 1	228+83.69	79.51 RT	652.872	649.29	W14X193	2'-6"	620.800	32.072
NE 2	228+90.69	79.51 RT	654.239	649.29	W14X193	2'-6"	620.800	33.439
NE 3	228+97.69	79.51 RT	655.606	649.29	W14X193	2'-6"	620.800	34.806
NW 1	229+98.94	79.51 RT	654.350	649.29	W14X193	2'-6"	620.800	33.550
NW 2	230+03.94	79.51 RT	652.683	649.29	W14X193	2'-6"	620.800	31.883

Note 1: Minimum socket depth is 4 feet below competent rock.

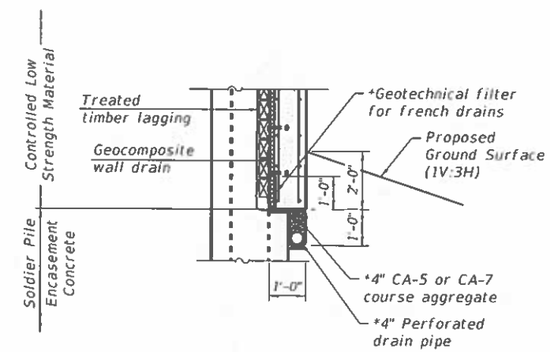

PIPE UNDERDRAIN DETAIL AT SOLDIER PILES

*Included in the cost of Pipe Underdrains for Structures

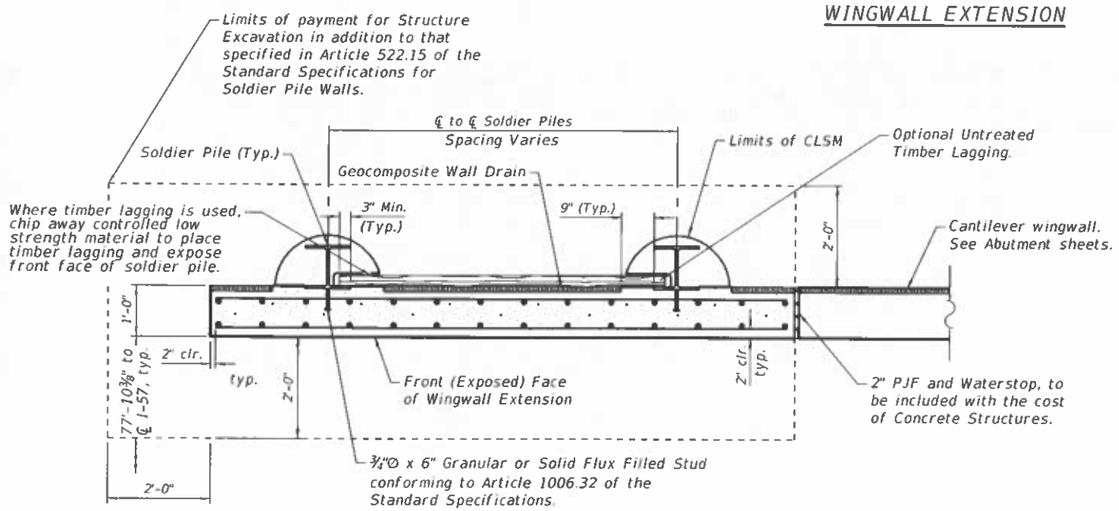

HORIZONTAL SECTION THRU SOLDIER PILE WINGWALL EXTENSION

The Contractor may optionally choose to use timber lagging rather than excavating behind the wall between piles and using traditional formwork. The Contractor is responsible for the design and performance of the lagging using no less than a 3 in. nominal rough-sawn thickness and timber with a minimum allowable bending stress of 1000 psi. This lagging will not be paid for separately but will be included in the cost of Concrete Structures.

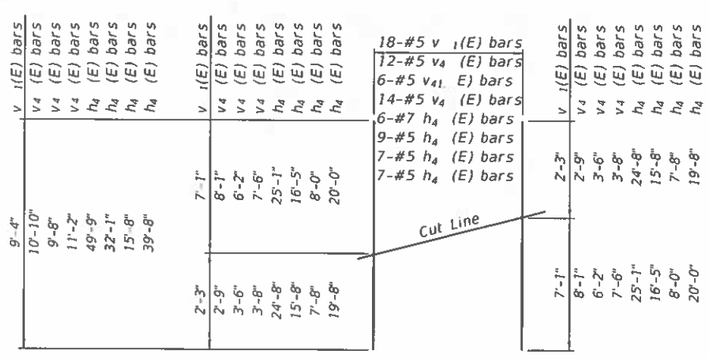

FIELD CUTTING DIAGRAM

Order bars full length. Cut as shown and use remainder of bars in opposite face.

WINGWALL EXTENSION BILL OF MATERIAL

Bar	No.	Size	Length	Shape
h401(E)	6	#7	24'-8"	
h402(E)	6	#7	49'-9"	
h403(E)	9	#5	32'-1"	
h404(E)	7	#5	15'-8"	
h405(E)	7	#5	39'-8"	
v411(E)	18	#5	9'-4"	
v412(E)	12	#5	10'-10"	
v413(E)	6	#5	9'-8"	
v414(E)	14	#5	11'-2"	
Structure Excavation			Cu. Yd.	79
Concrete Structures			Cu. Yd.	14.1
Concrete Sealer			Sq. Ft.	546
Reinforcement Bars, Epoxy Coated			Pound	2,150
Drilling and Setting Soldier Piles (in Soil)			Cu. Ft.	984
Drilling and Setting Soldier Piles (in Rock)			Cu. Ft.	351
Furnishing Soldier Piles (W Section)			Foot	266
Pipe Underdrains for Structures 4"			Foot	159
Stud Shear Connectors			Each	47
Geocomposite Wall Drain			Sq. Yd.	42

See Sheet 3 of 54 for Sequence of Construction.

© Copyright Prairie Engineers, P.C. 2018

Notes:
Space reinforcement in cap to miss anchor bolts.
Pour steps monolithically with cap.
Concrete Sealer shall be applied to all exposed areas of the pier.
See sheet 49 of 54 for bar splicer details.

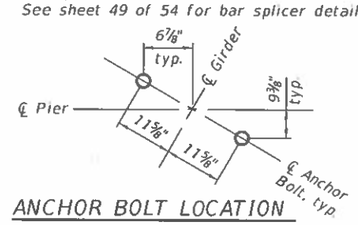

ANCHOR BOLT LOCATION DETAIL

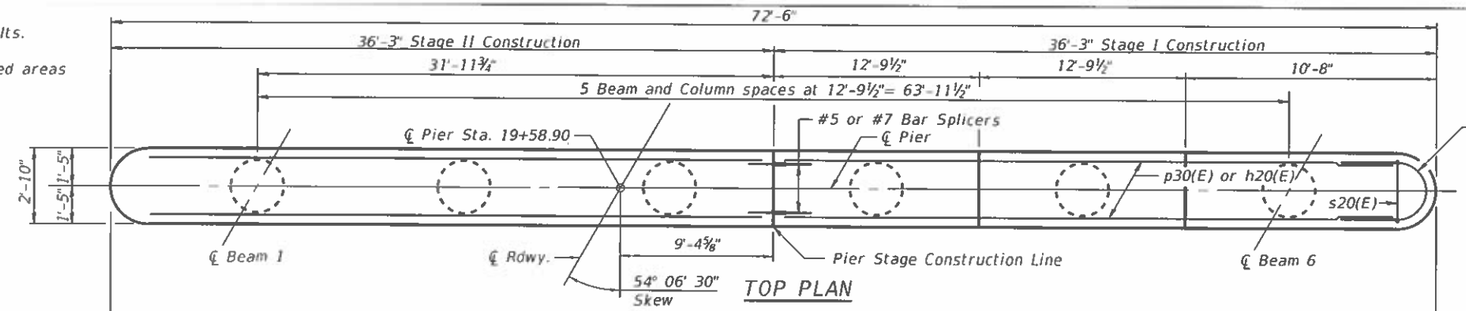

TOP PLAN

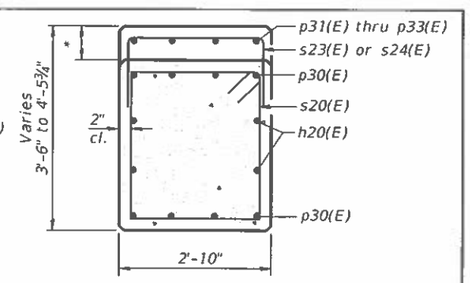

SEC. A-A

*Step heights vary, see Elevation

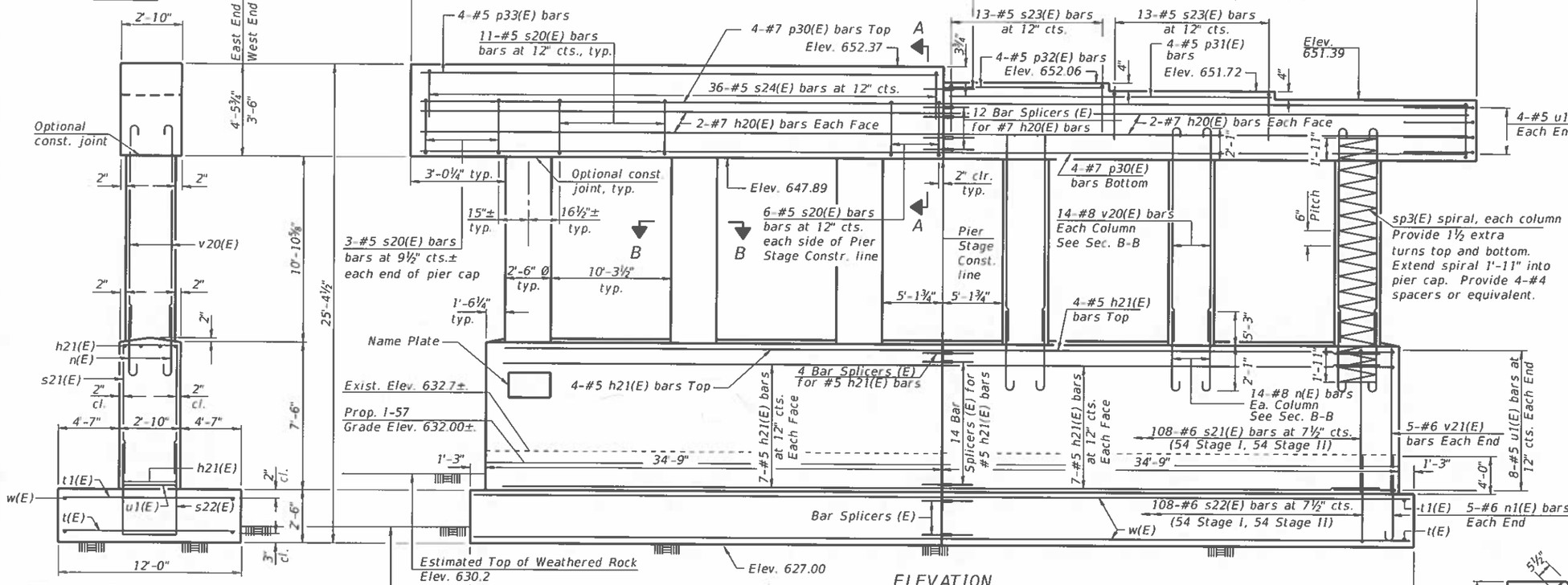

END VIEW

ELEVATION
(Looking South - Upstation Waldron Road)

The bottom of footing elevation(s) shall be adjusted to ensure a minimum embedment of 6 inches in non-weathered rock. The rock excavation shall be made with near-vertical sides at the plan dimensions to allow the sides and base of the embedded portion of the footing to be cast against undisturbed rock surfaces.
Maximum applied service bearing pressure = Qmax = 5.3 ksf.

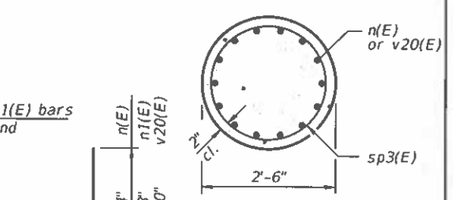

SEC. B-B

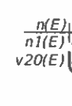

BAR n(E), n1(E), & v20(E)

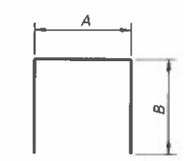

BARS

A & B DIMENSIONS

Bar	A	B
s21(E)	2'-6"	7'-2"
s22(E)	2'-6"	6'-3"
s23(E)	2'-6"	3'-1"
s24(E)	2'-6"	3'-5"

MINIMUM BAR LAP
#5 bar = 3'-7"
#7 bar = 5'-0"

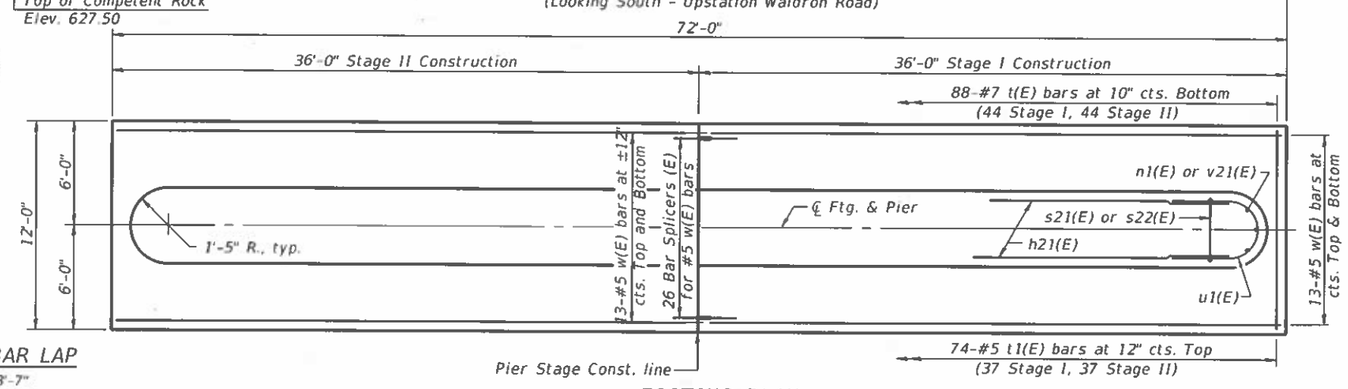

FOOTING PLAN

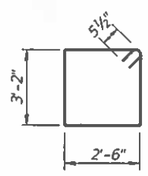

BAR s20(E)

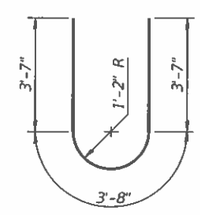

BAR u1(E)

BILL OF MATERIAL

Bar	No.	Size	Length	Shape
h20(E)	8	#7	34'-8"	
h21(E)	36	#5	33'-2"	
n(E)	84	#8	8'-3"	
n1(E)	10	#6	6'-11"	
p30(E)	16	#7	34'-8"	
p31(E)	4	#5	25'-3"	
p32(E)	4	#5	12'-5"	
p33(E)	4	#5	34'-8"	
s20(E)	62	#5	12'-3"	
s21(E)	108	#6	16'-10"	
s22(E)	108	#6	15'-0"	
s23(E)	26	#5	8'-8"	
s24(E)	36	#5	9'-4"	
** sp3(E)	6	#4	14'-9"	
t(E)	88	#7	11'-6"	
t1(E)	74	#5	11'-6"	
u1(E)	24	#5	10'-10"	
v20(E)	84	#8	13'-11"	
v21(E)	10	#6	7'-2"	
w(E)	52	#5	35'-7"	
Structure Excavation			Cu. Yd.	113
Rock Excavation for Structures			Cu. Yd.	102
Concrete Structures			Cu. Yd.	178.1
Reinforcement Bars, Epoxy Coated			Pound	21,160
Concrete Sealer			Sq. Ft.	2,234

** Length is height of spiral.

P-26 2-17-2017

Prairie Engineers, P.C.
www.prairieengineers.com
professional design firm no. 184-005965

© Copyright Prairie Engineers, P.C. 2018

USER NAME =	DESIGNED - SMA	REVISED -
	CHECKED - CMF/TCD	REVISED -
PLOT SCALE =	DRAWN - JLM	REVISED -
PLOT DATE =	CHECKED - SMA	REVISED -

STATE OF ILLINOIS
DEPARTMENT OF TRANSPORTATION

PIER DETAILS
STRUCTURE NO. 046-0153

SHEET 48 OF 54 SHEETS

F.A.I. RTE.	SECTION	COUNTY	TOTAL SHEETS	SHEET NO.
57	139HBR-6	KANKAKEE	202	137

CONTRACT NO. 66997
ILLINOIS FED. AID PROJECT

MODEL: 0460153-66997-048
FILE NAME: I:\Jobs\2019\193.1901 PTB 192-011 District 3 Various Phase III Structure Projects\WO 2 - Waldron Road over I-57\Drawings\bridge substructure\Sheet\0460153-66997-048-PIER.dgn
8/12/2021 9:05:54 AM

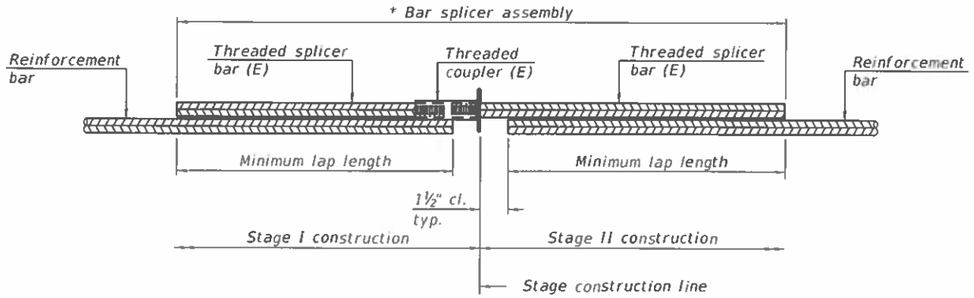

STANDARD BAR SPLICER ASSEMBLY PLAN

(All components shall be provided from one supplier)

Threaded splicer bar length = min. lap length + 1½" + thread length

* Epoxy not required on Bar Splicer Assembly components used in conjunction with black bars.

Location	Bar size	No. assemblies required	Minimum lap length
Deck (top)	#5	572	3'-0"
Deck (bottom)	#5	351	3'-6"
Abutments	#5	6	3'-7"
Abutments	#7	36	5'-0"
Pier	#5	48	3'-7"
Pier	#7	12	5'-0"
Approach Slab	#5	18	3'-0"
Approach Slab	#4	18	2'-5"
Approach Slab Footing	#5	80	3'-0"
Back Face of Diaphragms	#6	22	3'-7"
Bottom of Diaphragms	#4	4	2'-5"

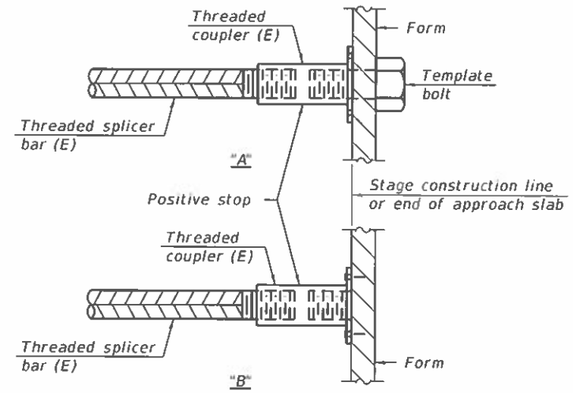

INSTALLATION AND SETTING METHODS

"A" : Set bar splicer assembly by means of a template bolt.
"B" : Set bar splicer assembly by nailing to wood forms or cementing to steel forms.
(E) : Indicates epoxy coating.

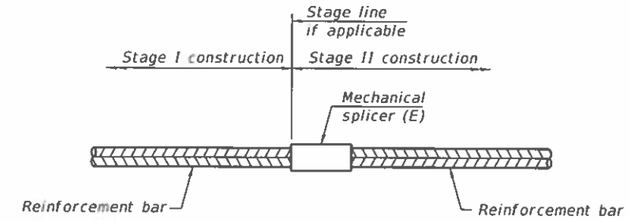

STANDARD MECHANICAL SPLICER

Location	Bar size	No. assemblies required

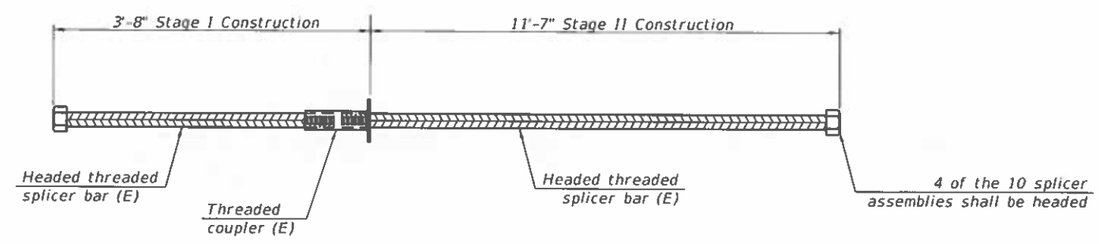

BAR SPLICER BETWEEN BEAMS (10 Required)

Notes:

Splicer bars shall be deformed with threaded ends and have a minimum 60 ksi yield strength.

All reinforcement shall be lapped and tied to the splicer bars.

Bar splicer assemblies shall be epoxy coated according to the requirements for reinforcement bars. See Section 508 of the Standard Specifications.

See approved list of bar splicer assemblies and mechanical splicers for alternatives.

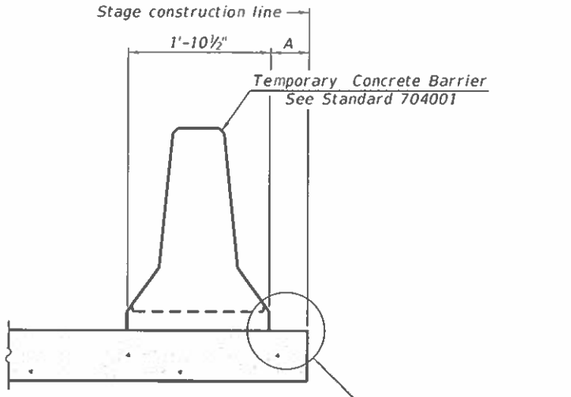

When "A" is 3'-1" or less, the temporary concrete barrier shall be restrained to the new slab according to Detail I, II or III. No restraint is required when "A" is greater than 3'-1".

NEW SLAB OR NEW DECK BEAM

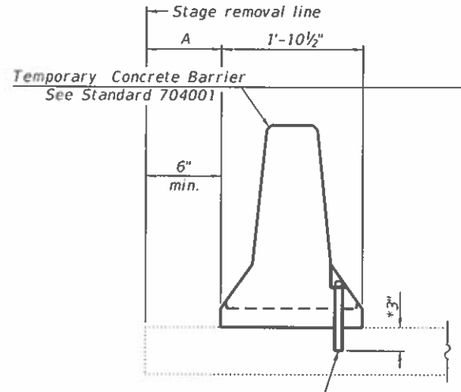

Drill 3-1¼" Ø Holes in existing slab for 1" Ø restraining pins. Traffic side only. Cost of restraining pins are included with Temporary Concrete Barrier. No restraint is required when "A" is greater than 3'-1".

EXISTING SLAB

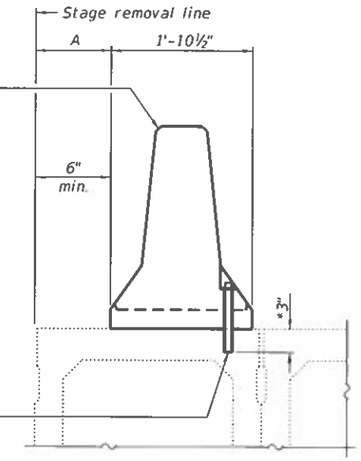

* When hot-mix asphalt wearng surface is present, embedment shall be 3" plus the wearing surface depth.

EXISTING DECK BEAM

SECTIONS THRU SLAB OR DECK BEAM

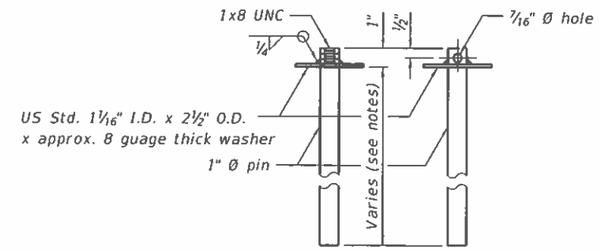

RESTRAINING PIN

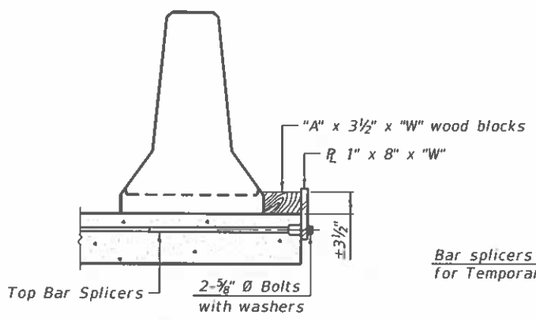

DETAIL I

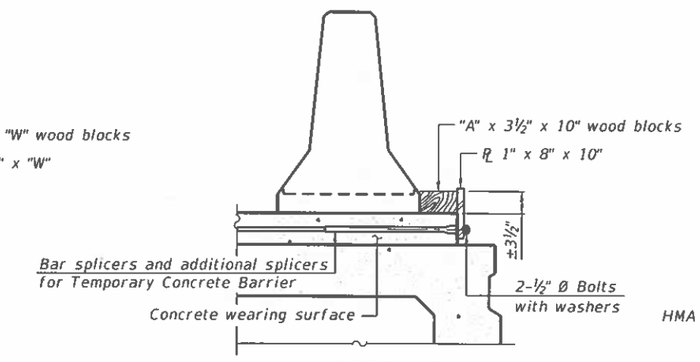

DETAIL II

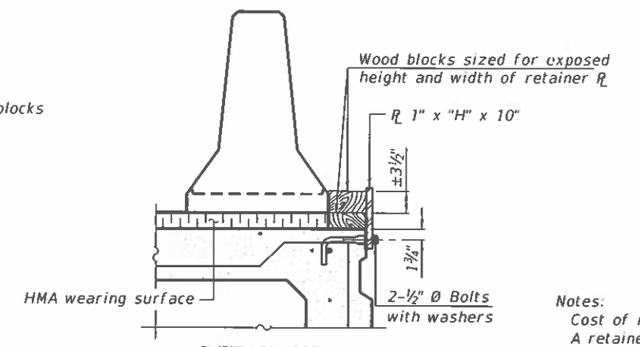

DETAIL III

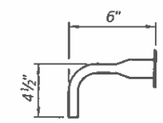

BAR SPLICER FOR #4 BAR - DETAIL III

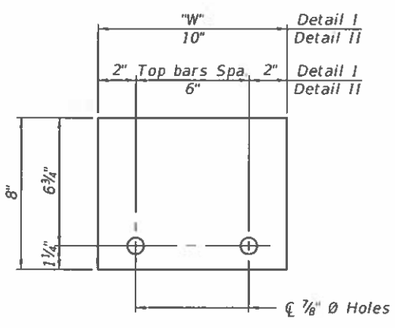

STEEL RETAINER PL 1" x 8" x "W"

(Detail I and II)

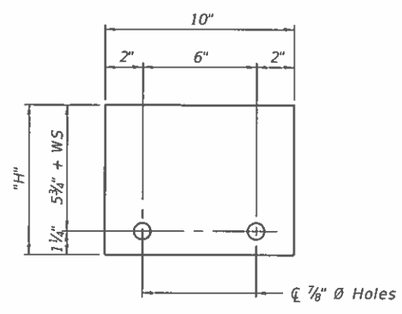

STEEL RETAINER PL 1" x "H" x 10"

(Detail III)

Notes:

Cost of retainer assembly is included with Temporary Concrete Barrier.

A retainer assembly shall be located at the approximate ℄ of each temporary concrete barrier.

The retainer plate shall not be removed until the concrete on the adjacent stage is ready to be poured. For Detail III applications the retainer plate shall not be removed until just prior to placing the adjacent beam.

When the 'A' dimension is less than 1½", the wood block shall be omitted and the barrier shall be placed in direct contact with the steel retainer plate. For deck beam applications the minimum required 'A' distance is 6" to accommodate the shear key clamping device.

Detail I - Installation for a new bridge deck or bridge slab.

Detail II - Installation for a new deck beam with an initial concrete wearing surface. Additional bar splicers shall be provided at 6'-0" centers and paired with the bar splicers of the concrete wearing surface reinforcement to accommodate the installation of the retainer assemblies. The cost of the additional bar splicers is included with the concrete wearing surface.

Detail III - Installation for a new deck beam with no initial wearing surface or with an initial hot-mix asphalt (HMA) wearing surface present. The deck beam directly beneath the temporary concrete barrier shall be fabricated with bar splicer inserts in the side of the beam, as detailed, to accommodate the installation of the retainer assemblies. A pair of bar splicers, 6" apart, shall be placed at 6'-0" centers along the length of the beam. The cost of the bar splicers is included with the deck beam.

R-27

2-17-2017

MODEL: TEMP CONC BARRIER
FILE NAME: G:\users\11\111335-01-Waldron-Road-over-I57-Superstructure\Survey D366997\Consultant_Data\Chamlin_2020\CAD_Sheets\0460153-66997-050-CONC_BARRIER.dgn

Chamlin & Associates

3/2/2021 3:29:56 PM

USER NAME =	DESIGNED - JKC	REVISED -
	CHECKED - AJO	REVISED -
PLOT SCALE =	DRAWN - LAG	REVISED -
PLOT DATE =	CHECKED - JKC	REVISED -

STATE OF ILLINOIS
DEPARTMENT OF TRANSPORTATION

TEMPORARY CONCRETE BARRIER FOR STAGE CONSTRUCTION
STRUCTURE NO. 046-0153

SHEET 50 OF 54 SHEETS

F.A.I. RTE.	SECTION	COUNTY	TOTAL SHEETS	SHEET NO.
57	139HBR-6	KANKAKEE	202	139
		CONTRACT NO. 66997		
		ILLINOIS FED. AID PROJECT		

(Waldron rd.)
18+2.22
12.0' LT

Illinois Department of Transportation
Division of Highways
IDOT

SOIL BORING LOG

Page 1 of 1

Date 3/27/10

ROUTE I-57 (FAI 57) DESCRIPTION Waldron Road over I-57, Retaining Wall Soil Investigation LOGGED BY Larry Myers

SECTION (46-3)R, HBK, 5HBR, 6HBR LOCATION SE 1/4, SEC. 4, TWP. 30N, RNG. 13W, Latitude 41.108482, Longitude -87.835524

COUNTY Kankakee DRILLING METHOD Hollow Stem Auger HAMMER TYPE CME Automatic

STRUCT. NO. 046-0080
Station 230+53.99 (Exist.)

BORING NO. BH 101 (NW Quad.)
Station 229+13.97
Offset 82.1 ft Rt.
Ground Surface Elev. 657.19 ft

Surface Water Elev. ____ ft
Stream Bed Elev. ____ ft

Groundwater Elev.:
First Encounter ____ ft
Upon Completion ____ ft
After ____ Hrs. ____ ft

Description	Elev.	DEPTH (ft)	BLOWS (/6")	UCS Qu (tsf)	MOIST (%)
Augered Bituminous, Sand & Gravel & Black, Gray, Silty Clay Loam Fill	654.69				
Very Stiff to Hard, Gray/Brown/Black, Silty Loam/Silty Clay Loam Till Fill with Rock & Concrete Debris	648.69	-5	4 5 6	3.5 P	23
			3 4 5	3.5 P	18
Hard Gray & Brown Silty Clay/Silty Clay Loam	647.19	-10	3 5 8	4.3 S	22
Hard, Brown, Silty Clay Loam Till	642.19	-15	8 12 14	8.2 S	17
			9 10 11	8.2 S	19
Very Stiff Brown Silty Loam Till with Silt Layers	637.69	-20	3 4 5	3.0 P	20
			3 4 5	3.0 P	18
Hard Brown to Gray Silty Clay/Silty Clay Loam Till *(continued)*	632.19	-25	5 6 7	4.6 S	19
			3 5 7	4.0 S	22
Hard Gray Silty Clay Loam Till with Large Gravel Pieces	629.69	-30	4 8 12	4.0 P	12
Assumed Dolostone Surface, Auger Refusal End of Boring		-40	100/1"	No Recovery	

The Unconfined Compressive Strength (UCS) Failure Mode is indicated by (B-Bulge, S-Shear, P-Penetrometer)
The SPT (N value) is the sum of the last two blow values in each sampling zone (AASHTO T206)

BBS, form 137 (Rev. 8-99)

(Waldron rd.)
18+2.61
5.1' LT

Illinois Department of Transportation
Division of Highways
Illinois Department of Transportation

SOIL BORING LOG

Page 1 of 1

Date 9/7/17

ROUTE I-57 (FAI 57) DESCRIPTION Waldron Road over I-57, 3.4 miles North of US 45/52 LOGGED BY Larry Myers

SECTION (46-3)R, HBK, 5HBR, 6HBR LOCATION SE 1/4, SEC. 4, TWP. 30N, RNG. 13W, 2nd PM, Latitude 41.108486, Longitude -87.835544

COUNTY Kankakee DRILLING METHOD Hollow Stem Auger HAMMER TYPE CME Automatic

STRUCT. NO. 046-0080 (EX)
Station 230+53.99 (EX)

BORING NO. B 219 (N. Abut.)
Station 229+18.36
Offset 87.5 ft Rt.
Ground Surface Elev. 657.30 ft

Surface Water Elev. ____ ft
Stream Bed Elev. ____ ft

Groundwater Elev.:
First Encounter ____ ft
Upon Completion ____ ft
After ____ Hrs. ____ ft

Description	Elev.	DEPTH (ft)	BLOWS (/6")	UCS Qu (tsf)	MOIST (%)
Augered Material - Not Documented		-5 -10 -15 -20			
Augered Material - Not Documented *(continued)*	624.80	-25 -30 -35 -40			
Borehole continued with rock coring					

The Unconfined Compressive Strength (UCS) Failure Mode is indicated by (B-Bulge, S-Shear, P-Penetrometer)
The SPT (N value) is the sum of the last two blow values in each sampling zone (AASHTO T206)

BBS, form 137 (Rev. 8-99)

(Waldron rd.)
18+2.61
5.1' LT

Illinois Department of Transportation
Division of Highways
Illinois Department of Transportation

ROCK CORE LOG

Page 1 of 1

Date 9/7/17

ROUTE I-57 (FAI 57) DESCRIPTION Waldron Road over I-57, 3.4 miles North of US 45/52 LOGGED BY Larry Myers

SECTION (46-3)R, HBK, 5HBR, 6HBR LOCATION SE 1/4, SEC. 4, TWP. 30N, RNG. 13W, 2nd PM, Latitude 41.108486, Longitude -87.835544

COUNTY Kankakee CORING METHOD Split Barrel Wire Line

STRUCT. NO. 046-0080 (EX)
Station 230+53.99 (EX)

CORING BARREL TYPE & SIZE N W/L 2

Core Diameter 1.9 in
Top of Rock Elev. 624.80 ft
Begin Core Elev. 624.80 ft

BORING NO. B 219 (N. Abut.)
Station 229+18.36
Offset 87.5 ft Rt.
Ground Surface Elev. 657.30 ft

Description	Elev.	DEPTH (ft)	CORE (#)	RECOVERY (%)	R.Q.D. (%)	CORE TIME (min/ft)	STRENGTH (tsf)
Dense Gray Limestone with Generally Tight Horizontal Fractures, Interbedded Thin Shale Seams in top 6" Minor Calcite Crystal Vug Fill	624.80		1	97	28	2.2	895.1
		-35					822.2
							732.4
Dense Gray Limestone with Tight Horizontal Fracturing Minor Calcite Crystal Vug Fill	619.80	-40	2	100	55	1.6	1359.7
							1354.8
							1156.4
Dense Gray Limestone with Tight Horizontal Fractures Minor Calcite Crystal Vug Fill	614.80	-45	3	100	83	3.2	1005.9
							1198.5
							598.8
							809.0
End of Boring	609.80	-50					

Color pictures of the cores Yes
Cores will be stored for examination until Construction Complete
The "Strength" column represents the uniaxial compressive strength of the core sample (ASTM D-2938)

BBS, form 138 (Rev. 8-99)

MODEL: 0460153-66997-051-054
FILE NAME: I:\jobs\2019\193.1901 PTB 192-011 District 3 Various Phase III Structure Projects\WO 2 - Waldron Road over I-57\Drawings\bridge substructure\Sheet\0460153-66997-051-054-BORINGS.dgn

Prairie Engineers, P.C.
www.prairieengineers.com
professional design firm no. 184-005965
© Copyright Prairie Engineers, P.C. 2018

USER NAME =	DESIGNED - SMA	REVISED -	
	CHECKED - CMF/TCD	REVISED -	
PLOT SCALE =	DRAWN - JLM	REVISED -	
PLOT DATE =	CHECKED - SMA	REVISED -	

STATE OF ILLINOIS
DEPARTMENT OF TRANSPORTATION

SOIL BORINGS
STRUCTURE NO. 046-0153

SHEET 51 OF 54 SHEETS

F.A.I. RTE.	SECTION	COUNTY	TOTAL SHEETS	SHEET NO.
57	139HBR-6	KANKAKEE	202	140
		CONTRACT NO. 66997		
		ILLINOIS	FED. AID PROJECT	

3/11/2021 4:55:44 PM

(Waldron rd.)
19+26.25
35.0' LT

Illinois Department of Transportation
Division of Highways
IDOT

SOIL BORING LOG

Page 1 of 1

Date 9/4/13

ROUTE I-57 (FAI 57) DESCRIPTION Waldron Road over I-57, 3.4 miles North of US 45/52 LOGGED BY Larry Myers

SECTION (46-3)R, HBK, 5HBR, 6HBR LOCATION SE 1/4, SEC. 4, TWP. 30N, RNG. 13W, 2nd PM, Latitude 41.108251, Longitude -87.835183

COUNTY Kankakee DRILLING METHOD Hollow Stem Auger HAMMER TYPE CME Automatic

STRUCT. NO. 046-0080 (Exist.)
Station 230+53.99 (Exist.)

BORING NO. BH 68 (Pier)
Station 230+00.99
Offset 9.2 ft Lt.
Ground Surface Elev. 632.86 ft

Surface Water Elev. ____ ft
Stream Bed Elev. ____ ft

Groundwater Elev.:
First Encounter Dry ft
Upon Completion Dry ft
After ____ Hrs. ____ ft

Description	Elev.	DEPTH (ft)	BLOWS (/6")	UCS Qu (tsf)	MOIST (%)
Augered Bituminous Shoulder & Brown Fill Sand/Gravel					
Dense Weathered Dolomite	630.36 ~~630.19~~		100/2"		
End of Boring		-5, -10, -15, -20			

The Unconfined Compressive Strength (UCS) Failure Mode is indicated by (B-Bulge, S-Shear, P-Penetrometer)
The SPT (N value) is the sum of the last two blow values in each sampling zone (AASHTO T206)

BBS, form 137 (Rev. 8-99)

SOIL BORING I-57 & IL 17 INTERCHANGE.GPJ IL_DOT.GDT 11-12-14

(Waldron rd.)
20+5.84
31.2' RT

Illinois Department of Transportation
Division of Highways
IDOT

SOIL BORING LOG

Page 1 of 1

Date 9/4/13

ROUTE I-57 (FAI 57) DESCRIPTION Waldron Road over I-57, 3.4 miles North of US 45/52 LOGGED BY Larry Myers

SECTION (46-3)R, HBK, 5HBR, 6HBR LOCATION SE 1/4, SEC. 4, TWP. 30N, RNG. 13W, 2nd PM, Latitude 41.107967, Longitude -87.835197

COUNTY Kankakee DRILLING METHOD Hollow Stem Auger HAMMER TYPE CME Automatic

STRUCT. NO. 046-0080 (Exist.)
Station 230+53.99 (Exist.)

BORING NO. BH 69 (Pier)
Station 231+04.30
Offset 2.2 ft Lt.
Ground Surface Elev. 632.74 ft

Surface Water Elev. ____ ft
Stream Bed Elev. ____ ft

Groundwater Elev.:
First Encounter Dry ft
Upon Completion Dry ft
After ____ Hrs. ____ ft

Description	Elev.	DEPTH (ft)	BLOWS (/6")	UCS Qu (tsf)	MOIST (%)
Augered Bituminous Shoulder & Tan Weathered & Reworked Dolomite	630.24				
Dense Tan Weathered Dolomite	629.24		100/4"		7
Auger Refusal @ 3.5' End of Boring		-5, -10, -15, -20			

The Unconfined Compressive Strength (UCS) Failure Mode is indicated by (B-Bulge, S-Shear, P-Penetrometer)
The SPT (N value) is the sum of the last two blow values in each sampling zone (AASHTO T206)

BBS, form 137 (Rev. 8-99)

SOIL BORING I-57 & IL 17 INTERCHANGE.GPJ IL_DOT.GDT 11-12-14

MODEL: 0460153-66997-051-054
FILE NAME: I:\jobs\2019\193.1901 PTB 192-011 District 3 Various Phase III Structure Projects\WO 2 - Waldron Road over I-57\Drawings\bridge substructure\Sheet\0460153-66997-051-054-BORINGS.dgn

Prairie Engineers, P.C.	USER NAME =	DESIGNED - SMA	REVISED -
www.prairieengineers.com		CHECKED - CMF/TCD	REVISED -
professional design firm no. 184-005965	PLOT SCALE =	DRAWN - JLM	REVISED -
© Copyright Prairie Engineers, P.C. 2018	PLOT DATE =	CHECKED - SMA	REVISED -

STATE OF ILLINOIS
DEPARTMENT OF TRANSPORTATION

SOIL BORINGS
STRUCTURE NO. 046-0153
SHEET 52 OF 54 SHEETS

F.A.I. RTE.	SECTION	COUNTY	TOTAL SHEETS	SHEET NO.
57	139HBR-6	KANKAKEE	202	141
		CONTRACT NO. 66997		
		ILLINOIS FED. AID PROJECT		

3/11/2021 4:56:15 PM

(Waldron rd.)
20+26.17
38.8' RT

Illinois Department of Transportation
Division of Highways
Illinois Department of Transportation

SOIL BORING LOG

Date 10/4/17

ROUTE I-57 (FAI 57) DESCRIPTION Waldron Road over I-57, 3.4 miles North of US 45/52 LOGGED BY Larry Myers

SECTION (46-3)R, HBK, 5HBR, 6HBR LOCATION SE 1/4, SEC. 4, TWP. 30N, RNG. 13W, 2nd PM, Latitude 41.107926, Longitude -87.835174

COUNTY Kankakee DRILLING METHOD Hollow Stem Auger HAMMER TYPE CME Automatic

STRUCT. NO. 046-0080 (EX)
Station 230+53.99 (EX)

BORING NO. B 218 (Pier)
Station 231+25.20
Offset 8.0 ft Lt.
Ground Surface Elev. 632.57 ft

Surface Water Elev. ____ ft
Stream Bed Elev. ____ ft

Groundwater Elev.:
First Encounter ____ ft
Upon Completion ____ ft
After ____ Hrs. ____ ft

Description	Elev.	Depth (ft)	BLOWS (/6")	UCS Qu (tsf)	MOIST (%)
Augered Material - Not Documented	630.07				
Augered Approximately 30" into Rock Before Starting Core	627.57	-5			
Borehole continued with rock coring.		-10, -15, -20			

The Unconfined Compressive Strength (UCS) Failure Mode is indicated by (B-Bulge, S-Shear, P-Penetrometer)
The SPT (N value) is the sum of the last two blow values in each sampling zone (AASHTO T206)

BBS, form 137 (Rev. 8-99)

SOIL BORING I-57 & I-17 INTERCHANGE.GPJ IL_DOT.GDT 2/6/18

(Waldron rd.)
20+26.17
38.8' RT

Illinois Department of Transportation
Division of Highways
Illinois Department of Transportation

ROCK CORE LOG

Date 10/4/17

ROUTE I-57 (FAI 57) DESCRIPTION Waldron Road over I-57, 3.4 miles North of US 45/52 LOGGED BY Larry Myers

SECTION (46-3)R, HBK, 5HBR, 6HBR LOCATION SE 1/4, SEC. 4, TWP. 30N, RNG. 13W, 2nd PM, Latitude 41.107926, Longitude -87.835174

COUNTY Kankakee CORING METHOD Split Barrel Wire Line

STRUCT. NO. 046-0080 (EX)
Station 230+53.99 (EX)

CORING BARREL TYPE & SIZE N W/L 2
Core Diameter 1.9 in
Top of Rock Elev. 630.07 ft
Begin Core Elev. 627.57 ft

BORING NO. B 218 (Pier)
Station 231+25.20
Offset 8.0 ft Lt.
Ground Surface Elev. 632.57 ft

Description	Elev.	Depth (ft)	Core (#)	Recovery (%)	R.Q.D. (%)	Core Time (min/ft)	Strength (tsf)
Dense Gray & Tan Limestone, Horizontal Fractures with Loose Joints	627.57		1	95	26	2.4	535.5, 691.7
Some Vertical Fracturing @ 8.5'	622.57	-10					
Dense Gray Limestone with Tight Joints, Oxidized Tan Color, Horizontal Fractures with some Vertical Fracturing	617.57	-15	2	100	45	3.2	839.7, 770.5, 696.5
Dense Gray Limestone, some Horizontal Fractures with Tight Joints	612.57	-20	3	100	87	2.8	817.2, 1453.7, 1077.7, 1022.4, 866.7, 1086.6
End of Boring		-25					

Color pictures of the cores Yes
Cores will be stored for examination until Construction Complete
The "Strength" column represents the uniaxial compressive strength of the core sample (ASTM D-2938)

BBS, form 138 (Rev. 8-99)

ROCK CORE I-57 & I-17 INTERCHANGE.GPJ IL_DOT.GDT 2/5/18

MODEL: 0460153-66997-051-054
FILE NAME: I:\jobs\2019\193.1901 PTB 192-011 District 3 Various Phase III Structure Projects\WO 2 - Waldron Road over I-57\Drawings\bridge substructure\Sheet\0460153-66997-051-054-BORINGS.dgn

Prairie Engineers, P.C.
www.prairieengineers.com
professional design firm no. 184-005965
© Copyright Prairie Engineers, P.C. 2018

USER NAME =	DESIGNED - SMA	REVISED -
	CHECKED - CMF/TCD	REVISED -
PLOT SCALE =	DRAWN - JLM	REVISED -
PLOT DATE =	CHECKED - SMA	REVISED -

STATE OF ILLINOIS
DEPARTMENT OF TRANSPORTATION

SOIL BORINGS
STRUCTURE NO. 046-0153
SHEET 53 OF 54 SHEETS

F.A.I. RTE.	SECTION	COUNTY	TOTAL SHEETS	SHEET NO.
57	139HBR-6	KANKAKEE	202	142
		CONTRACT NO. 66997		
		ILLINOIS	FED. AID PROJECT	

3/11/2021 4:56:48 PM

(Waldron rd.)
21+78.11
24.4' LT

Illinois Department of Transportation
Division of Highways
IDOT

SOIL BORING LOG

Page 1 of 1

Date 9/12/13

ROUTE I-57 (FAI 57) DESCRIPTION Waldron Road over I-57, 3.4 miles North of US 45/52 LOGGED BY Larry Myers

SECTION (46-3)R, HBK, 5HBR, 6HBR LOCATION SE 1/4, SEC. 4, TWP. 30N, RNG. 13W, 2nd PM, Latitude 41.107686, Longitude -87.834655

COUNTY Kankakee DRILLING METHOD Hollow Stem Auger HAMMER TYPE CME Automatic

STRUCT. NO. 046-0080 (Exist.)
Station 230+53.99 (Exist.)

BORING NO. BH 71 (E. Abut.)
Station 232+11.23
Offset 148.3 ft Lt.
Ground Surface Elev. 647.42 ft

Surface Water Elev. ____ ft
Stream Bed Elev. ____ ft

Groundwater Elev.:
First Encounter Dry ft
Upon Completion Dry ft
After ____ Hrs. ____ ft

Description	Elev.	DEPTH (ft)	BLOWS (/6")	UCS Qu (tsf)	MOIST (%)
Augered Shoulder Stone, Brown Silty Clay Loam Fill	644.92				
Hard Brown Silty Clay Loam Till Fill		-5	3 4 5 3	4.0 P	13
	639.92		2 3	4.0 P	17
Stiff to Very Stiff Brown Silty Clay/Silty Clay Loam	637.92	-10	2 2 2	2.0 P	20
Stiff to Very Stiff Brown Silty Clay Loam Till	634.92		2 2 2	1.5 P	26
Weathered & Reworked Dolomite Surface	632.42	-15	30 15 12		9
Dense Tan/Orange Dolomite	632.17		100/3"		
Auger Refusal End of Boring		-20			

The Unconfined Compressive Strength (UCS) Failure Mode is indicated by (B-Bulge, S-Shear, P-Penetrometer)
The SPT (N value) is the sum of the last two blow values in each sampling zone (AASHTO T206)

BBS, form 137 (Rev. 8-99)

SOIL BORING -I57 & IL 17 INTERCHANGE.GPJ IL_DOT.GDT 11/12/14

(Waldron rd.)
21+70.80
11.3' LT

Illinois Department of Transportation
Division of Highways
Illinois Department of Transportation

SOIL BORING LOG

Page 1 of 1

Date 9/8/17

ROUTE I-57 (FAI 57) DESCRIPTION Waldron Road over I-57, 3.4 miles North of US 45/52 LOGGED BY Larry Myers

SECTION (46-3)R, HBK, 5HBR, 6HBR LOCATION SE 1/4, SEC. 4, TWP. 30N, RNG. 13W, 2nd PM, Latitude 41.107696, Longitude -87.83471

COUNTY Kankakee DRILLING METHOD Hollow Stem Auger HAMMER TYPE CME Automatic

STRUCT. NO. 046-0080 (EX)
Station 230+53.99 (EX)

BORING NO. B 217 (S. Abut.)
Station 232+12.99
Offset 133.4 ft Lt.
Ground Surface Elev. 648.76 ft

Surface Water Elev. ____ ft
Stream Bed Elev. ____ ft

Groundwater Elev.:
First Encounter ____ ft
Upon Completion ____ ft
After ____ Hrs. ____ ft

Description	Elev.	DEPTH (ft)	BLOWS (/6")	UCS Qu (tsf)	MOIST (%)
Augered Material - Not Documented	632.76	-5 -10 -15			
Borehole continued with rock coring.		-20			

The Unconfined Compressive Strength (UCS) Failure Mode is indicated by (B-Bulge, S-Shear, P-Penetrometer)
The SPT (N value) is the sum of the last two blow values in each sampling zone (AASHTO T206)

BBS, form 137 (Rev. 8-99)

SOIL BORING -I57 & IL 17 INTERCHANGE.GPJ IL_DOT.GDT 2/5/18

(Waldron rd.)
21+70.80
11.3' LT

Illinois Department of Transportation
Division of Highways
Illinois Department of Transportation

ROCK CORE LOG

Page 1 of 1

Date 9/8/17

ROUTE I-57 (FAI 57) DESCRIPTION Waldron Road over I-57, 3.4 miles North of US 45/52 LOGGED BY Larry Myers

SECTION (46-3)R, HBK, 5HBR, 6HBR LOCATION SE 1/4, SEC. 4, TWP. 30N, RNG. 13W, 2nd PM, Latitude 41.107696, Longitude -87.83471

COUNTY Kankakee CORING METHOD Split Barrel Wire Line

STRUCT. NO. 046-0080 (EX)
Station 230+53.99 (EX)

CORING BARREL TYPE & SIZE N W/L 2
Core Diameter 1.9 in
Top of Rock Elev. 632.76 ft
Begin Core Elev. 632.76 ft

BORING NO. B 217 (S. Abut.)
Station 232+12.99
Offset 133.4 ft Lt.
Ground Surface Elev. 648.76 ft

Description	Elev.	DEPTH (ft)	CORE (#)	RECOVERY (%)	R.Q.D. (%)	CORE TIME (min/ft)	STRENGTH (tsf)
Tan Dolostone Highly Horizontally Fractured with most Seams Filled with Weathered Shale, Loose Joints	627.76	-20	1	90	0	2.4	
Tan to Gray Dolostone - Horizontally Fractured with Loose Joints, some Vertical Fractures	622.76	-25	2	90	48	3	711.3 766.8 761.6 655.0 798.9
Gray Limestone with some Loose Horizontal Fracturing and Heavy Vertical Fracturing, Horizontal Joints are Oxidized Tan Color	617.76	-30	3	100	22	2.8	875.5 691.3
End of Boring		-35					

Color pictures of the cores Yes
Cores will be stored for examination until Construction Complete
The "Strength" column represents the uniaxial compressive strength of the core sample (ASTM D-2938)

BBS, form 138 (Rev. 8-99)

ROCK CORE -I57 & IL 17 INTERCHANGE.GPJ IL_DOT.GDT 2/5/18

MODEL: 0460153-66997-051-054
FILE NAME: I:\jobs\2019\193.1901 PTB 192-011 District 3 Various Phase III Structure Projects\WO 2 - Waldron Road over I-57\Drawings\bridge substructure\Sheet\0460153-66997-051-054-BORINGS.dgn

Prairie Engineers, P.C. www.prairieengineers.com professional design firm no. 184-005965 © Copyright Prairie Engineers, P.C. 2018	USER NAME =	DESIGNED - SMA	REVISED -
		CHECKED - CMF/TCD	REVISED -
	PLOT SCALE =	DRAWN - JLM	REVISED -
	PLOT DATE =	CHECKED - SMA	REVISED -

STATE OF ILLINOIS
DEPARTMENT OF TRANSPORTATION

SOIL BORINGS
STRUCTURE NO. 046-0153

SHEET 54 OF 54 SHEETS

F.A.I. RTE.	SECTION	COUNTY	TOTAL SHEETS	SHEET NO.
57	139HBR-6	KANKAKEE	202	143
		CONTRACT NO. 66997		
		ILLINOIS	FED. AID PROJECT	

3/11/2021 4:57:19 PM

Bench Mark: BM4 Cut square on North Headwall at entrance to Faith Reformed Church located at 2400 Waldron Road. El. 634.41 Traffic to be maintained utilizing staged construction coordinated with bridge construction.

INDEX OF SHEETS

1. General Plan & Elevation Retaining Wall A
2. General Plan & Elevation Retaining Wall B
3. General Notes, Sequence of Construction, & Total Bill of Material
4-7. Wall A Plan and Enlarged Elevations
8-9. Wall A Table of Pile Lengths and Elevations, Bill of Material
10-12. Wall B Plan and Enlarged Elevations
13. Wall B Table of Pile Lengths and Elevations, Bill of Material
14. Soldier Pile Wall Sections
15. Shear Stud Connector Layout
16-21. Wall A Soil Borings
22-23. Wall B Soil Borings

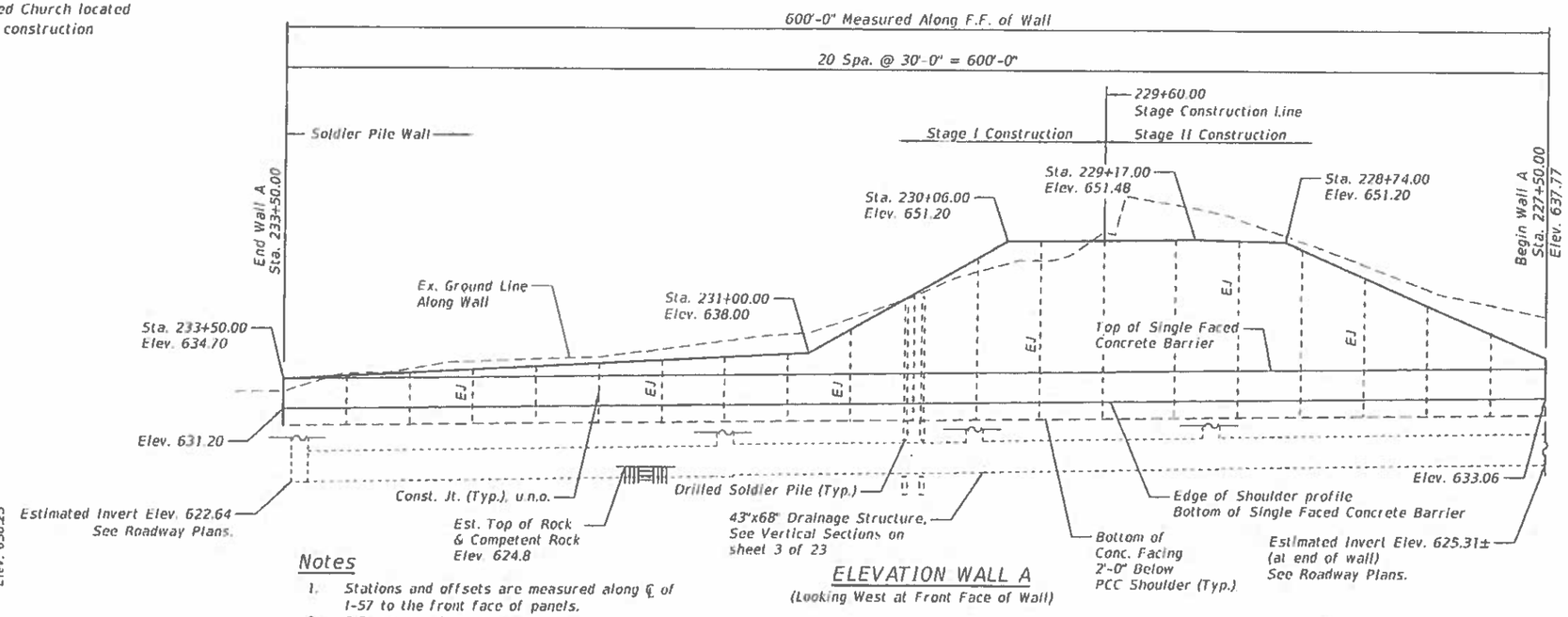

ELEVATION WALL A

(Looking West at Front Face of Wall)

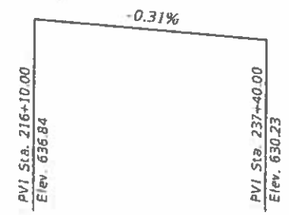

PROFILE GRADE I-57

Notes

1. Stations and offsets are measured along ℄ of I-57 to the front face of panels.
2. F.F. denotes front face.
3. B.F. denotes back face.
4. See Highway Plans for Concrete Barrier, Guardrails, and Transitions.

DESIGN SPECIFICATIONS

2017 AASHTO LRFD Bridge Design Specifications, 8th Edition

DESIGN STRESSES

FIELD UNITS

f'c = 3,500 psi (Cast-in-Place Facing & Soldier Pile Encasement)
fy = 60,000 psi (Reinforcement)
fy = 50,000 psi (AASHTO M270 Gr. 50) (Soldier Piles)

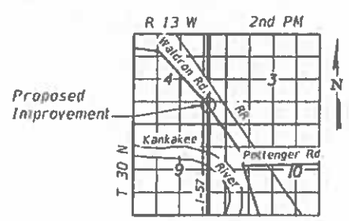

LOCATION SKETCH

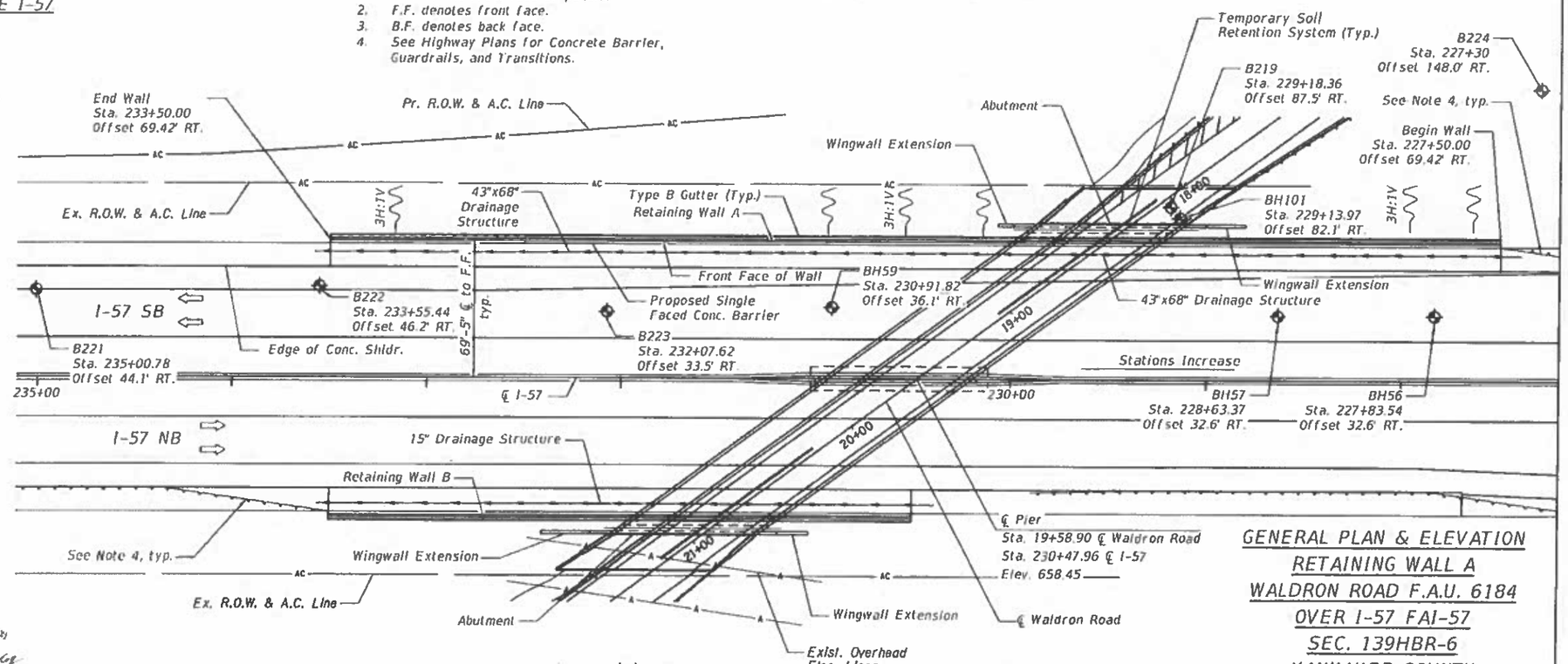

PLAN

LEGEND

Soil Boring Location

GENERAL PLAN & ELEVATION RETAINING WALL A
WALDRON ROAD F.A.U. 6184
OVER I-57 FAI-57
SEC. 139HBR-6
KANKAKEE COUNTY
STATION 227+50.00 TO 233+50.00
STRUCTURE NO. 046-0153

ROBERT H. CURTIS
081-004518
LICENSED
STRUCTURAL
ENGINEER
STATE OF ILLINOIS

Robert H. Curtis 3-18-2021
Robert H. Curtis
Exp: 11/30/2022

APPROVED
For Structural Adequacy Only
Engineer of Bridges & Structures

Prairie Engineers, P.C. www.prairieengineers.com professional design firm no. 184-005965 © Copyright Prairie Engineers, P.C. 2020	USER NAME =	DESIGNED - RHC	REVISED -
		CHECKED - CMF	REVISED -
	PLOT SCALE =	DRAWN - JLM	REVISED -
	PLOT DATE =	CHECKED - SMA	REVISED -

STATE OF ILLINOIS
DEPARTMENT OF TRANSPORTATION

GENERAL PLAN & ELEVATION RETAINING WALL A
STRUCTURE NO. 046-0153

SHEET 1 OF 23 SHEETS

F.A.U. RTE.	SECTION	COUNTY	TOTAL SHEETS	SHEET NO.
57	139HBR-6	KANKAKEE	202	144
		CONTRACT NO. 66997		
		ILLINOIS FED. AID PROJECT		

MODEL: 0460153-66997-001
FILE NAME: J:\data\2019\193.1901 PTB 192-011 District 3 Various Phase III Structure Projects\WO 2 - Waldron Road over I-57\Drawings\wall A\Sheet\0460153-66997-001-wall A GPE.dgn
3/18/2021 2:03:53 PM

Bench Mark: BM4 Cut square on North Headwall at entrance to Faith Reformed Church located at 2400 Waldron Road. El. 634.41 Traffic to be maintained utilizing staged construction coordinated with bridge construction.

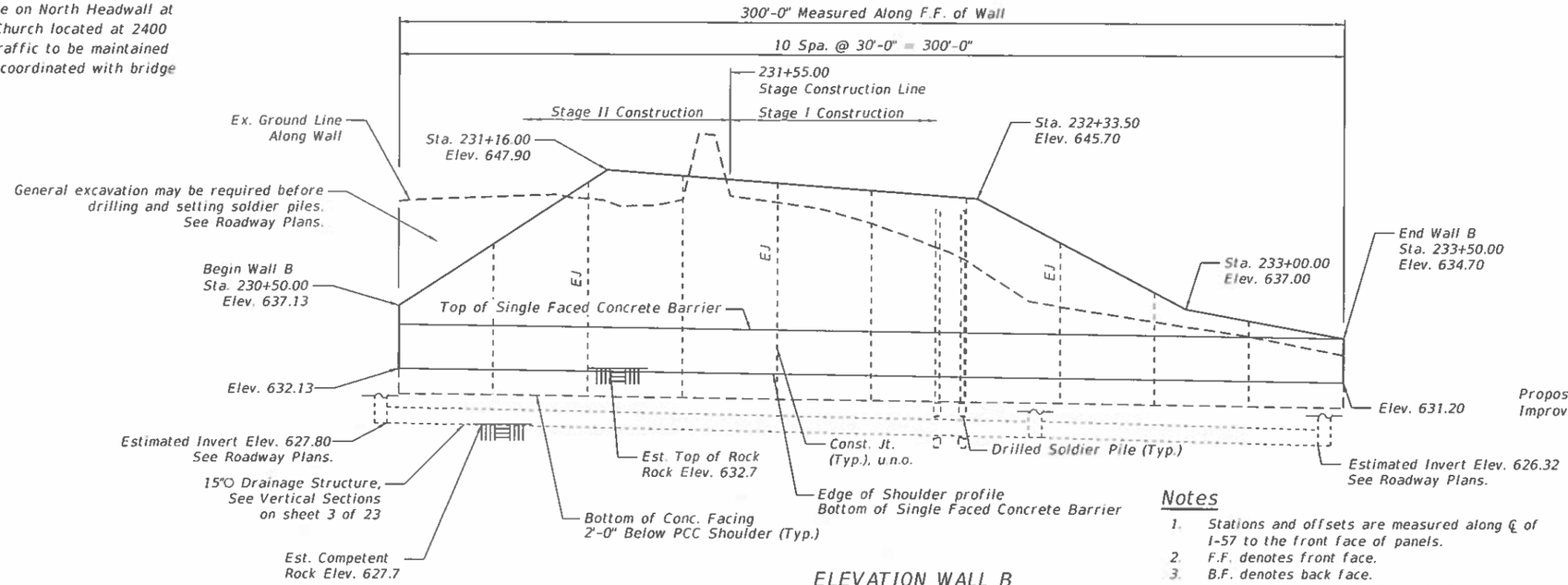

ELEVATION WALL B

(Looking East at Front Face of Wall)

DESIGN SPECIFICATIONS

2017 AASHTO LRFD Bridge Design Specifications, 8th Edition

DESIGN STRESSES

FIELD UNITS

f'c = 3,500 psi (Cast-In-Place Facing & Soldier Pile Encasement)
fy = 60,000 psi (Reinforcement)
fy = 50,000 psi (AASHTO M270 Gr. 50) (Soldier Pile)

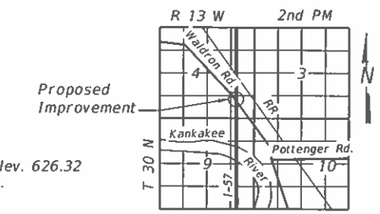

LOCATION SKETCH

Notes

1. Stations and offsets are measured along ℄ of I-57 to the front face of panels.
2. F.F. denotes front face.
3. B.F. denotes back face.
4. See Highway plans for Concrete Barrier, Guardrail, and Transitions.

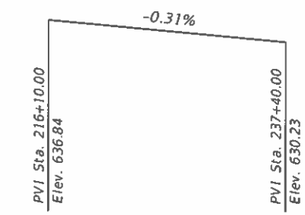

PROFILE GRADE I-57

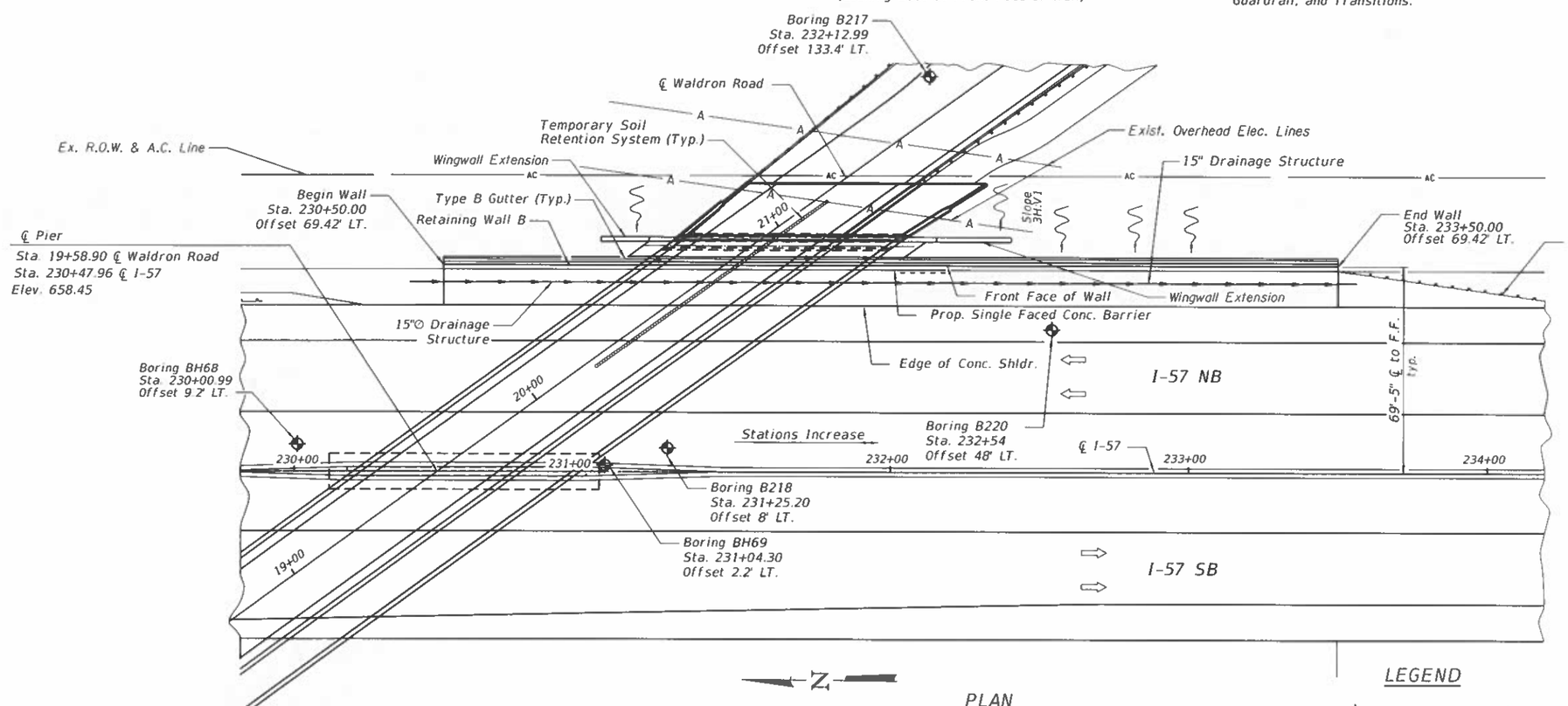

PLAN

LEGEND

Soil Boring Location

GENERAL PLAN & ELEVATION RETAINING WALL B WALDRON ROAD F.A.U. 6184 OVER I-57 FAI-57 SEC. 139HBR-6 KANKAKEE COUNTY STATION 230+50.00 TO 233+50.00 STRUCTURE NO. 046-0153

Prairie Engineers, P.C. www.prairieengineers.com professional design firm no. 184-005965 © Copyright Prairie Engineers, P.C. 2020	USER NAME =	DESIGNED - RHC	REVISED -
		CHECKED - CMF	REVISED -
	PLOT SCALE =	DRAWN - JLM	REVISED -
	PLOT DATE =	CHECKED - SMA	REVISED -

STATE OF ILLINOIS
DEPARTMENT OF TRANSPORTATION

GENERAL PLAN & ELEVATION RETAINING WALL B
STRUCTURE NO. 046-0153

SHEET 2 OF 23 SHEETS

F.A.I. RTE.	SECTION	COUNTY	TOTAL SHEETS	SHEET NO.
57	139HBR-6	KANKAKEE	202	145
		CONTRACT NO. 66997		
		ILLINOIS	FED. AID PROJECT	

MODEL: 0460153-66997-002
FILE NAME: I:\Jobs\2019\193 1901 PTB 192-011 District 3 Various Phase III Structure Projects\WO 2 - Waldron Road over I-57\Drawings\wall B\Sheet\0460153-66997-002-wall B GPE.dgn

3/18/2021 3:58:08 PM

SN 046-0153 SEQUENCE OF WORK

Stage I

1. Erect Waldron Road Stage I traffic control, install temporary soil retention systems behind existing abutments, and remove stage I superstructure and roadway.
2. Erect I-57 Stage I traffic control, remove Stage I of existing middle pier, and construct Stage I of new median pier.
3. Set Stage I soldier piles for Walls A & B.
4. Remove top block of existing abutments down to top of buttresses while installing timber lagging for the soldier pile walls. (The bottom of the "existing block" at the north abutment will be 2" +/- higher than the bottom of the proposed north abutment. The bottom of the "existing block" at the south abutment will be 4" +/- lower than the bottom of the proposed south abutment.)
5. Construct Stage I work for new abutments.
6. Construct Stage I superstructure and approach pavements. (The bottom of the proposed girders will be above the top of pier elevation of the existing outside piers.)

Stage II

1. Erect Waldron Road Stage II traffic control and remove stage II superstructure and roadway.
2. Maintain I-57 Stage I traffic control, remove Stage II of existing middle pier, and construct Stage II of new median pier.
3. Set Stage II soldier piles for Walls A & B.
4. Remove top block of existing abutments down to top of buttresses while installing timber lagging for the soldier pile walls.
5. Construct Stage II work for new abutments.
6. Erect I-57 Stage II traffic control and remove existing outside piers.
7. Remove remainder of existing abutments while installing timber lagging for the soldier pile walls and removing soil between the new soldier pile wall and the existing outside piers.
8. Pour facing for soldier pile walls.
9. Construct Stage II superstructure and approach pavements.

Stage III

1. Erect Waldron Road Stage III traffic control.
2. Construct barrier wall between roadway and shared use path.
3. Install Bridge Fence Railing on outside parapet.
4. Open Waldron Road to normal traffic and continue I-57 work below the bridge. (i.e., storm sewers parallel to soldier pile walls.)

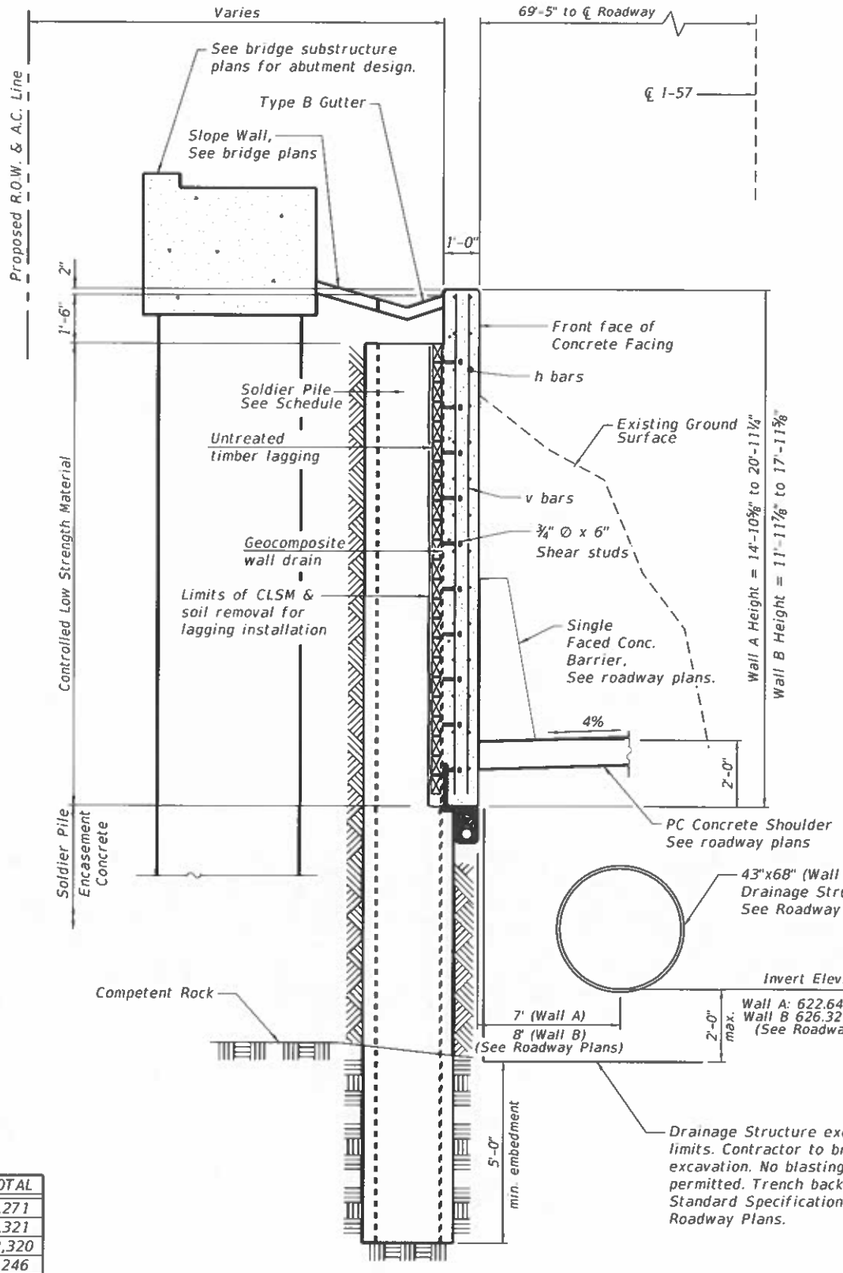

VERTICAL SECTION THRU DRILLED SOLDIER PILE WALL WITH TYPE "B" GUTTER

Wall A Sta. 228+40 to 230+50
Wall B Sta. 230+80 to 232+60

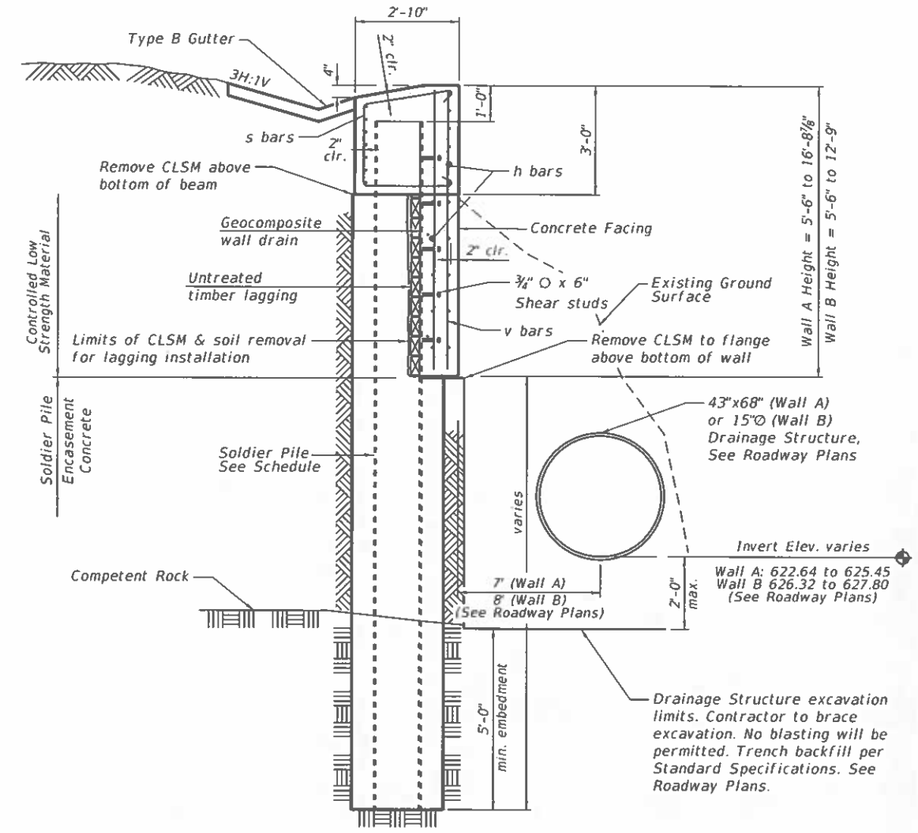

VERTICAL SECTION THRU DRILLED SOLDIER PILE WALL WITH BEAM

Wall A Sta. 227+50 to 228+40 & Sta. 230+50 to 233+50
Wall B Sta. 230+50 to 230+80 & Sta. 232+60 to 233+50

TOTAL BILL OF MATERIAL

ITEM	UNIT	Wall A	Wall B	TOTAL
Structure Excavation	Cu. Yd.	833	438	1,271
Stud Shear Connectors	Each	1,615	706	2,321
Reinforcement Bars, Epoxy Coated	Pound	52,950	29,370	82,320
Furnishing Soldier Piles (W Section)	Foot	2,390	856	3,246
Drilling and Setting Soldier Piles (In Soil)	Cu. Ft.	8,739	1,987	10,726
Drilling and Setting Soldier Piles (In Rock)	Cu. Ft.	3,593	2,488	6,081
Untreated Timber Lagging	Sq. Ft.	6,234	3,345	9,579
Concrete Structures	Cu. Yd.	277.6	146.2	423.8
Concrete Sealer	Sq. Ft.	8,395	4,398	12,793
Geocomposite Wall Drain	Sq. Yd.	473	266	739
Pipe Underdrains for Structures 4 inch	Foot	660	360	1,020

GENERAL NOTES

1. No field welding is permitted except as specified in the contract documents.
2. Reinforcement bars designated (E) shall be epoxy coated.
3. Concrete Sealer shall be applied to all exposed surfaces of the wall, including front face, top and exposed back face, and shall extend 1'-0" minimum below finished grade.
4. Chamfers on vertical surfaces shall be continued a minimum of 2'-0" below finished ground level.
5. The Contractor is responsible for the design and performance of the lagging using no less than 3" nominal rough sawn thickness and timber with an allowable bending stress of 1000 psi.
6. A cantilevered sheet piling design does not appear feasible and additional members or other retention systems may be necessary. The Contractor shall submit a temporary soil retention system design including plan details and calculations for review and acceptance by the Engineer. See bridge plans for S.N. 046-0153 for additional details regarding Temporary Soil Retention Systems including quantity. A single design shall be used for construction of the Bridge and Walls A and B. Connection of retention system to the soldier pile walls if required shall be coordinated in the design.

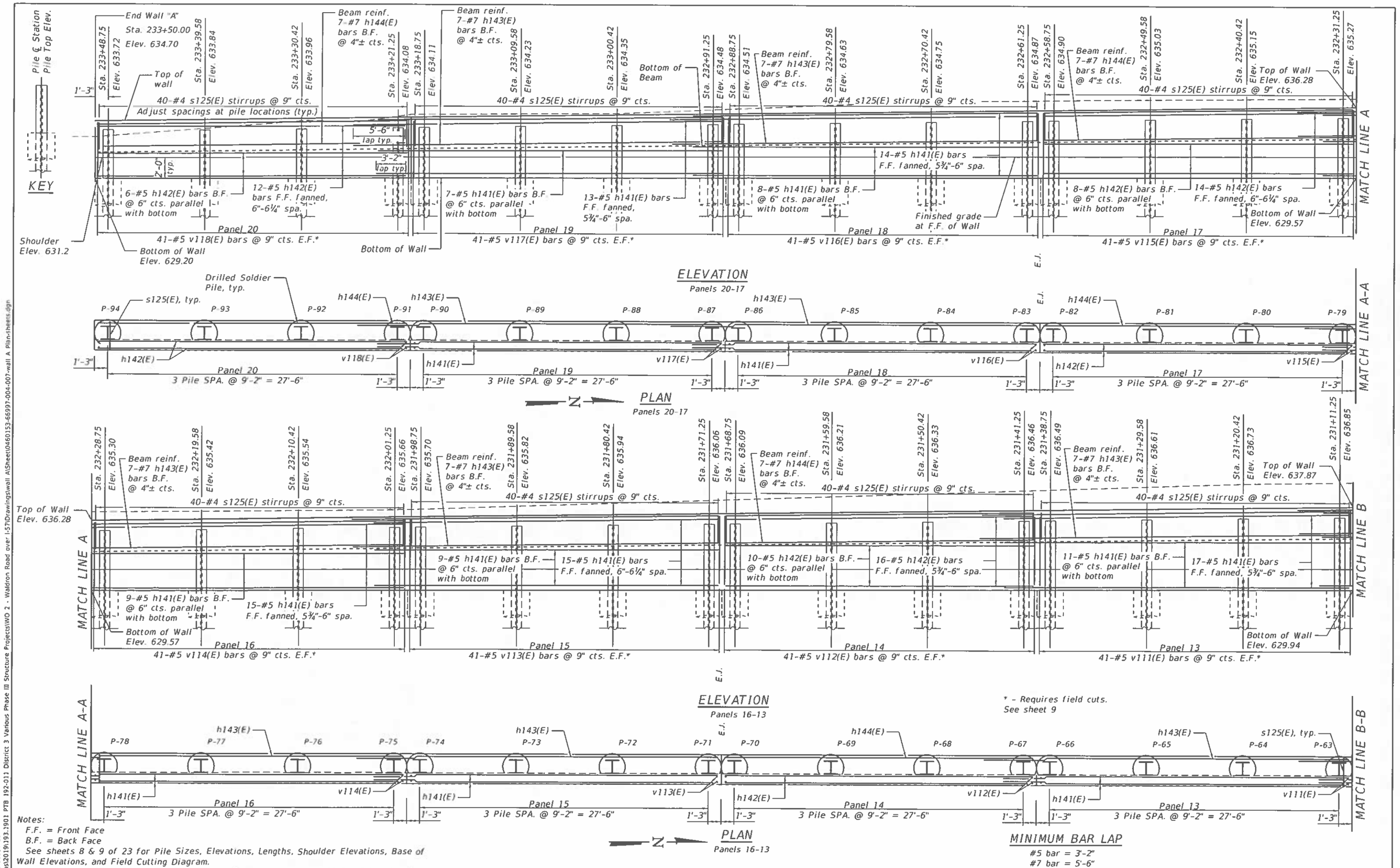

Notes:
F.F. = Front Face
B.F. = Back Face
See sheets 8 & 9 of 23 for Pile Sizes, Elevations, Lengths, Shoulder Elevations, Base of Wall Elevations, and Field Cutting Diagram.
See sheets 14-15 of 23 for Sections and Details. See sheet 5 of 23 for S bar details.

Prairie Engineers, P.C.
www.prairieengineers.com
professional design firm no. 184-005965
© Copyright Prairie Engineers, P.C. 2020

USER NAME =	DESIGNED - RHC	REVISED -	
	CHECKED - CMF	REVISED -	
PLOT SCALE =	DRAWN - JLM	REVISED -	
PLOT DATE =	CHECKED - SMA	REVISED -	

STATE OF ILLINOIS
DEPARTMENT OF TRANSPORTATION

WALL A PLAN AND ENLARGED ELEVATIONS
STRUCTURE NO. 046-0153

SHEET 4 OF 23 SHEETS

F.A.I. RTE.	SECTION	COUNTY	TOTAL SHEETS	SHEET NO.
57	139HBR-6	KANKAKEE	202	147

CONTRACT NO. 66997
ILLINOIS FED. AID PROJECT

MODEL: 0460153-66997-004
FILE NAME: I:\jobs\2019\193.1901 PTB 192-011 District 3 Various Phase III Structure Projects\WO 2 - Waldron Road over I-57\Drawings\wall A\Sheet\0460153-66997-004-wall A Plan-sheets.dgn
3/18/2021 3:31:13 PM

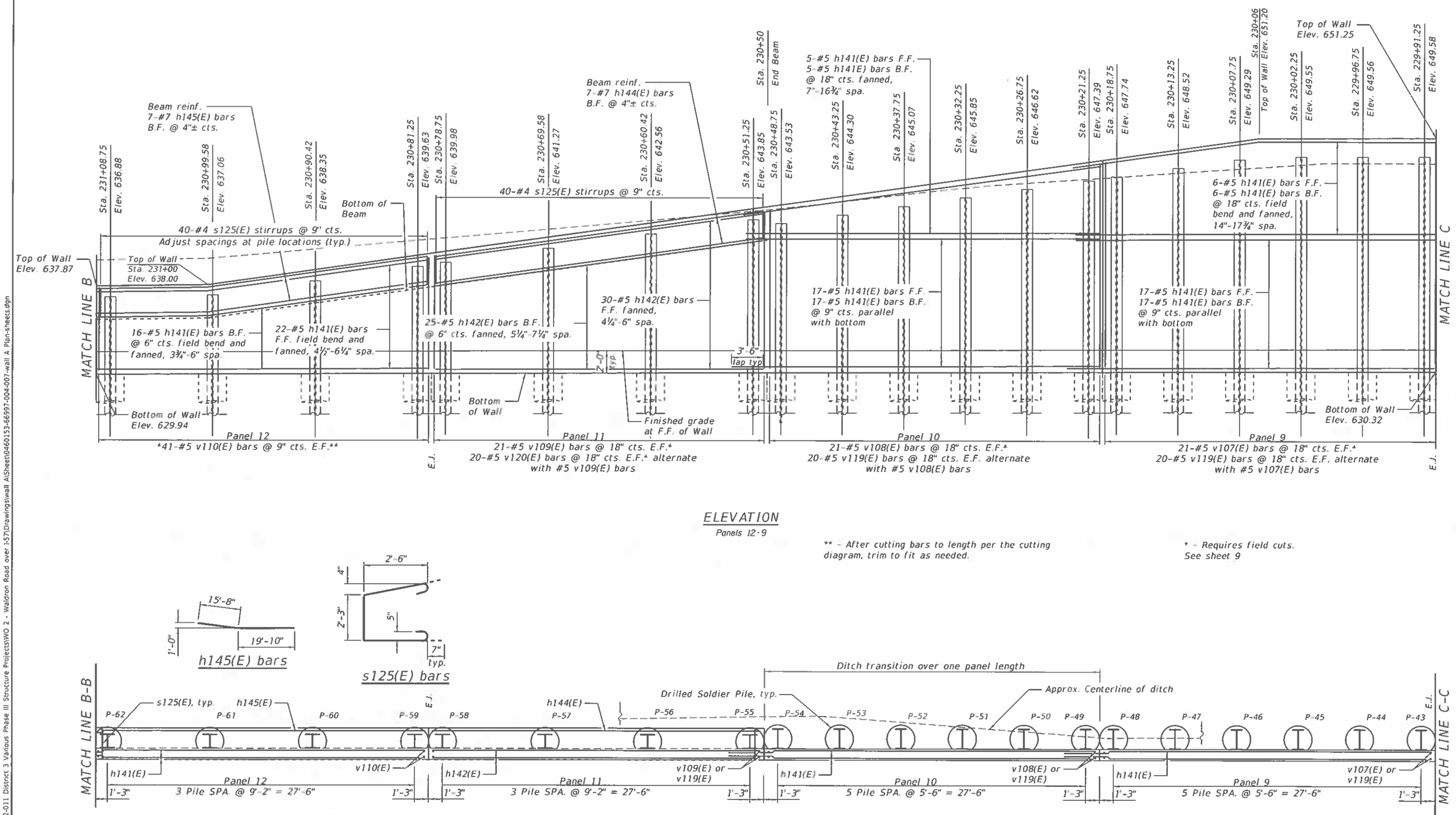

ELEVATION
Panels 12-9

** - After cutting bars to length per the cutting diagram, trim to fit as needed.

* - Requires field cuts. See sheet 9

Notes:
F.F. = Front Face
B.F. = Back Face
See sheets 8 & 9 of 23 for Pile Sizes, Elevations, Lengths, Shoulder Elevations, Base of Wall Elevations, and Field Cutting Diagram.
See sheets 14-15 of 23 for Sections and Details. See sheet 5 of 23 for S bar details.

N

PLAN
Panels 12-9

MINIMUM BAR LAP
#5 bar = 3'-2"
#7 bar = 5'-6"

MODEL: 0460153-66997-005
FILE NAME: I:\jobs\2019\193.1901 PTB 192-011 District 3 Various Phase III Structure Projects\WO 2 - Waldron Road over I-57\Drawings\wall A\Sheet\0460153-66997-004-007-wall A Plan-sheets.dgn

Prairie Engineers, P.C.	USER NAME =	DESIGNED - RHC	REVISED -	STATE OF ILLINOIS DEPARTMENT OF TRANSPORTATION	WALL A PLAN AND ENLARGED ELEVATIONS STRUCTURE NO. 046-0153
www.prairieengineers.com professional design firm no. 184-005965		CHECKED - CMF	REVISED -		
© Copyright Prairie Engineers, P.C. 2020	PLOT SCALE =	DRAWN - JLM	REVISED -		
	PLOT DATE =	CHECKED - SMA	REVISED -		SHEET 5 OF 23 SHEETS

F.A.I. RTE.	SECTION	COUNTY	TOTAL SHEETS	SHEET NO.
57	139HBR-6	KANKAKEE	202	148
		CONTRACT NO. 66997		
		ILLINOIS	FED. AID PROJECT	

3/18/2021 3:39:47 PM

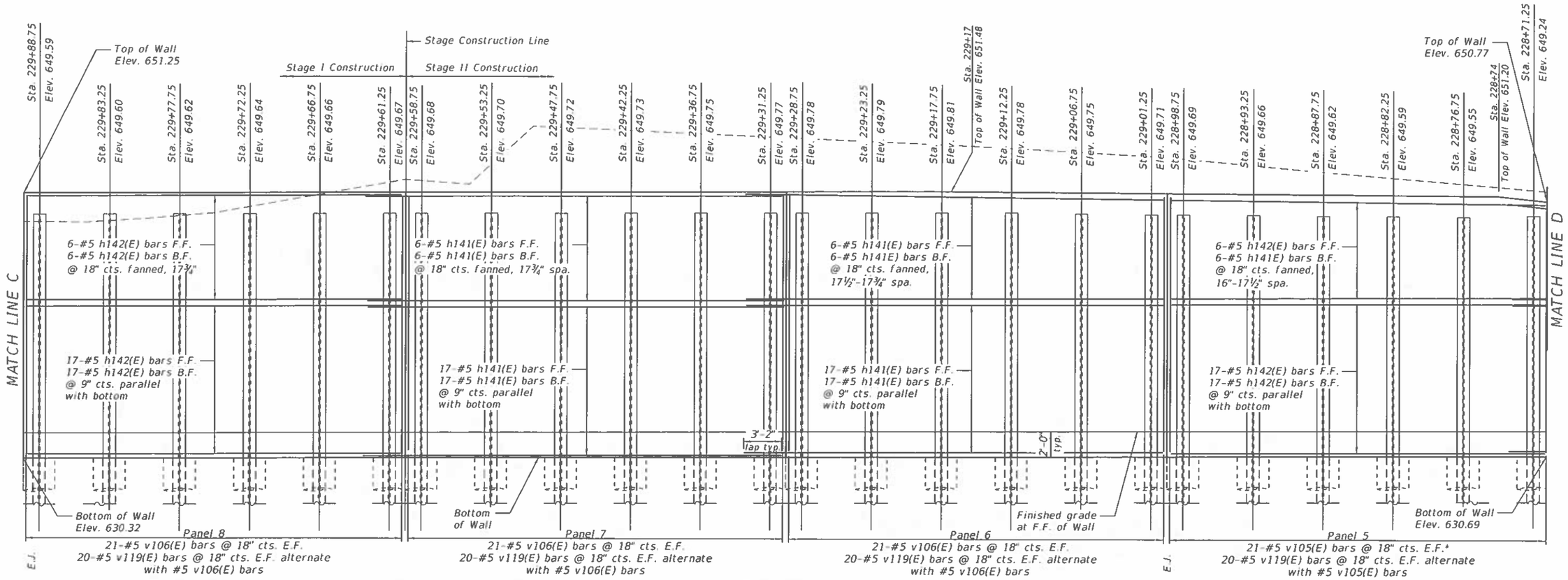

ELEVATION

Panels 8-5

* - Requires field cuts.
See sheet 9

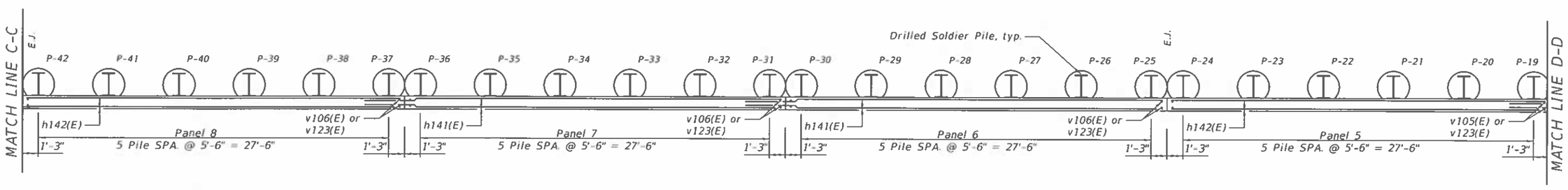

Notes:
F.F. = Front Face
B.F. = Back Face
See sheets 8 & 9 of 23 for Pile Sizes, Elevations, Lengths, Shoulder Elevations, Base of Wall Elevations, and Field Cutting Diagram.
See sheets 14-15 of 23 for Sections and Details. See sheet 5 of 23 for S bar details.

N

PLAN

Panels 8-5

MINIMUM BAR LAP

#5 bar = 3'-2"

Prairie Engineers, P.C. www.prairieengineers.com professional design firm no. 184-005965 © Copyright Prairie Engineers, P.C. 2020	USER NAME =	DESIGNED - RHC	REVISED -	STATE OF ILLINOIS DEPARTMENT OF TRANSPORTATION	WALL A PLAN AND ENLARGED ELEVATIONS STRUCTURE NO. 046-0153	F.A.I. RTE.	SECTION	COUNTY	TOTAL SHEETS / SHEET NO.
		CHECKED - CMF	REVISED -			57	139HBR-6	KANKAKEE	202 / 149
	PLOT SCALE =	DRAWN - JLM	REVISED -					CONTRACT NO. 66997	
	PLOT DATE =	CHECKED - SMA	REVISED -		SHEET 6 OF 23 SHEETS			ILLINOIS FED. AID PROJECT	

MODEL: 0460153-66997-006
FILE NAME: I:\obs\2019\193.1901 PTB 192-011 District 3 Various Phase III Structure Projects\WO 2 - Waldron Road over I-57\Drawings\wall A\Sheet\0460153-66997-004-007-wall A Plan-sheets.dgn
3/18/2021 3:36:14 PM

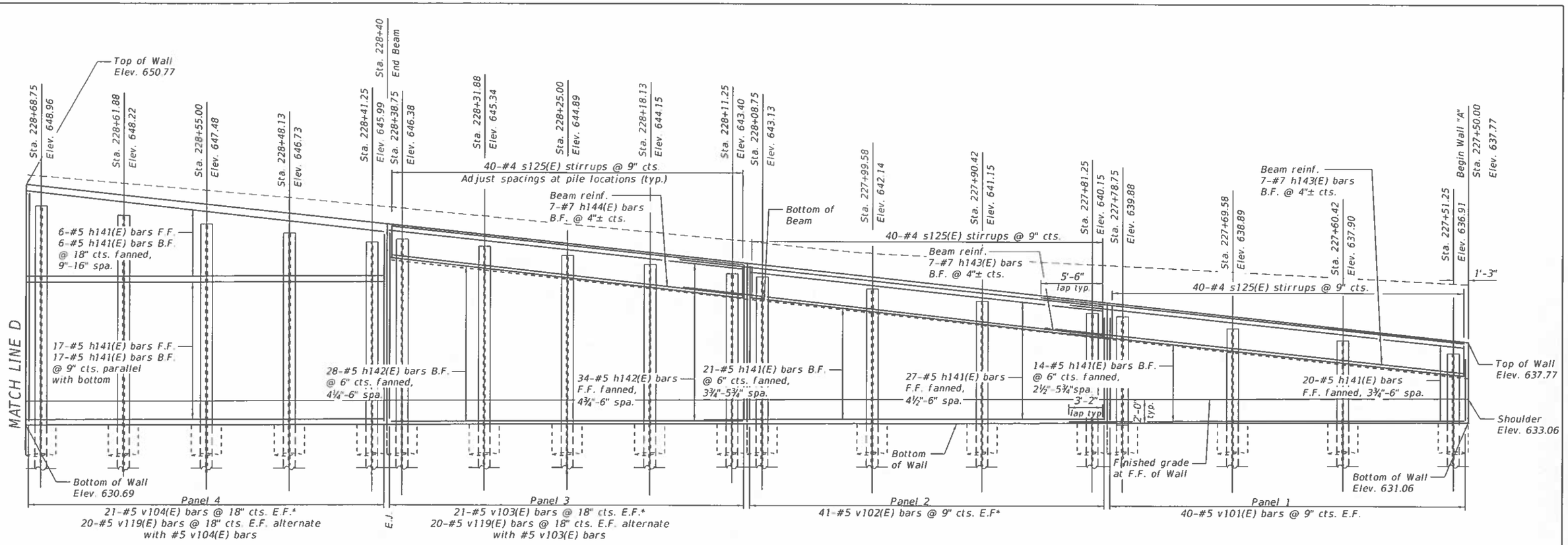

ELEVATION

Panels 4-1

* - Requires field cuts.
See sheet 9

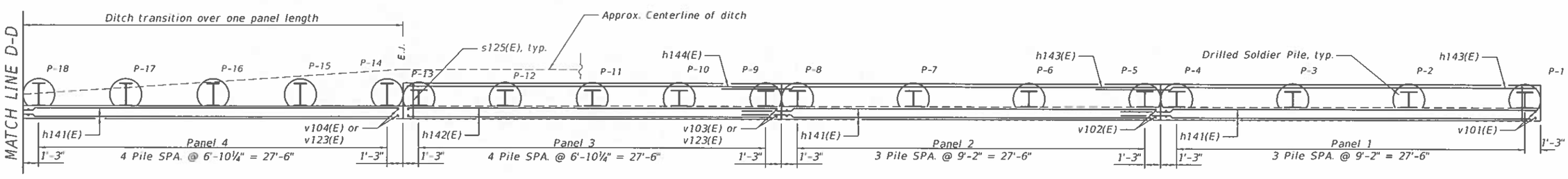

Notes:
F.F. = Front Face
B.F. = Back Face
See sheets 8 & 9 of 23 for Pile Sizes, Elevations, Lengths, Shoulder Elevations, Base of Wall Elevations, and Field Cutting Diagram.
See sheets 14-15 of 23 for Sections and Details. See sheet 5 of 23 for S bar details.

N

PLAN

Panels 4-1

MINIMUM BAR LAP

#5 bar = 3'-2"
#7 bar = 5'-6"

Prairie Engineers, P.C. www.prairieengineers.com professional design firm no. 184-005965 © Copyright Prairie Engineers, P.C. 2020	USER NAME =	DESIGNED - RHC	REVISED -	STATE OF ILLINOIS DEPARTMENT OF TRANSPORTATION	WALL A PLAN AND ENLARGED ELEVATIONS STRUCTURE NO. 046-0153	F.A.I. RTE.	SECTION	COUNTY	TOTAL SHEETS / SHEET NO.
		CHECKED - CMF	REVISED -			57	139HBR-6	KANKAKEE	202 / 150
	PLOT SCALE =	DRAWN - JLM	REVISED -					CONTRACT NO. 66997	
	PLOT DATE =	CHECKED - SMA	REVISED -		SHEET 7 OF 23 SHEETS		ILLINOIS	FED. AID PROJECT	

MODEL: 0460153-66997-007
FILE NAME: I:\Jobs\2019\193-1901 PTB 192-011 District 3 Various Phase III Structure Projects\WO 2 - Waldron Road over I-57\Drawings\wall A\Sheet\0460153-66997-004-007-wall A Plan-sheets.dgn
3/18/2021 3:37:54 PM

SOLDIER PILE NUMBER	SOLDIER PILE STATION	OFFSET	EDGE OF SHOULDER ELEVATION	TOP OF PILE ELEVATION	TOP OF WALL ELEVATION	BOTTOM OF WALL ELEVATION	SECTION	HOLE DIAMETER	ESTIMATED ROCK ELEVATION	BOTTOM OF TRENCH	ESTIMATED PILE TIP ELEVATION	ESTIMATED SOLDIER PILE LENGTH
		(FEET)	(FEET)	(FEET)	(FEET)	(FEET)			(FEET)	(FEET)	(FEET)	(FEET)
P-1	227+51.25	71.07 RT	633.06	636.91	637.91	631.06	W14X193	2'-6"	624.8	623.29	618.29	18.62
P-2	227+60.42	71.07 RT	633.03	637.90	638.90	631.03	W14X193	2'-6"	624.8	623.25	618.25	19.65
P-3	227+69.58	71.07 RT	633.00	638.89	639.89	631.00	W14X193	2'-6"	624.8	623.21	618.21	20.68
P-4	227+78.75	71.07 RT	632.97	639.88	640.88	630.97	W14X193	2'-6"	624.8	623.18	618.18	21.71
P-5	227+81.25	71.07 RT	632.96	640.15	641.15	630.96	W14X193	2'-6"	624.8	623.17	618.17	21.99
P-6	227+90.42	71.07 RT	632.93	641.15	642.15	630.93	W14X193	2'-6"	624.8	623.13	618.13	23.02
P-7	227+99.58	71.07 RT	632.91	642.14	643.14	630.91	W14X193	2'-6"	624.8	623.09	618.09	24.05
P-8	228+08.75	71.07 RT	632.88	643.13	644.13	630.88	W14X193	2'-6"	624.8	623.06	618.06	25.08
P-9	228+11.25	71.07 RT	632.87	643.40	644.40	630.87	W14X193	2'-6"	624.8	623.05	618.05	25.36
P-10	228+18.13	71.07 RT	632.85	644.15	645.15	630.85	W14X193	2'-6"	624.8	623.02	618.02	26.13
P-11	228+25.00	71.07 RT	632.83	644.89	645.89	630.83	W14X193	2'-6"	624.8	622.99	617.99	26.90
P-12	228+31.88	71.07 RT	632.81	645.64	646.64	630.81	W14X193	2'-6"	624.8	622.96	617.96	27.68
P-13	228+38.75	71.07 RT	632.78	646.38	647.38	630.78	W14X193	2'-6"	624.8	622.94	617.94	28.45
P-14	228+41.25	71.33 RT	632.78	645.99	647.65	630.78	W18X283	2'-6"	624.8	622.93	617.93	28.06
P-15	228+48.13	71.33 RT	632.76	646.73	648.40	630.76	W18X283	2'-6"	624.8	622.90	617.90	28.83
P-16	228+55.00	71.33 RT	632.73	647.48	649.14	630.73	W18X283	2'-6"	624.8	622.87	617.87	29.61
P-17	228+61.88	71.33 RT	632.71	648.22	649.89	630.71	W18X283	2'-6"	624.8	622.84	617.84	30.38
P-18	228+68.75	71.33 RT	632.69	648.96	650.63	630.69	W18X283	2'-6"	624.8	622.82	617.82	31.15
P-19	228+71.25	71.33 RT	632.68	649.24	650.90	630.68	W18X283	2'-6"	624.8	622.81	617.81	31.43
P-20	228+76.75	71.33 RT	632.67	649.55	651.22	630.67	W18X283	2'-6"	624.8	622.78	617.78	31.77
P-21	228+82.25	71.33 RT	632.65	649.59	651.25	630.65	W18X283	2'-6"	624.8	622.76	617.76	31.83
P-22	228+87.75	71.33 RT	632.63	649.62	651.29	630.63	W18X283	2'-6"	624.8	622.74	617.74	31.88
P-23	228+93.25	71.33 RT	632.62	649.66	651.33	630.62	W18X283	2'-6"	624.8	622.72	617.72	31.94
P-24	228+98.75	71.33 RT	632.60	649.69	651.36	630.60	W18X283	2'-6"	624.8	622.70	617.70	32.00
P-25	229+01.25	71.33 RT	632.59	649.71	651.38	630.59	W18X283	2'-6"	624.8	622.68	617.68	32.03
P-26	229+06.75	71.33 RT	632.57	649.75	651.41	630.57	W18X283	2'-6"	624.8	622.64	617.64	32.11
P-27	229+12.25	71.33 RT	632.56	649.78	651.45	630.56	W18X283	2'-6"	624.8	622.60	617.60	32.18
P-28	229+17.75	71.33 RT	632.54	649.81	651.48	630.54	W18X283	2'-6"	624.8	622.56	617.56	32.25
P-29	229+23.25	71.33 RT	632.52	649.79	651.46	630.52	W18X283	2'-6"	624.8	622.52	617.52	32.27
P-30	229+28.75	71.33 RT	632.51	649.78	651.44	630.51	W18X283	2'-6"	624.8	622.48	617.48	32.30
P-31	229+31.25	71.33 RT	632.50	649.77	651.44	630.50	W18X283	2'-6"	624.8	622.47	617.47	32.30
P-32	229+36.75	71.33 RT	632.48	649.75	651.42	630.48	W18X283	2'-6"	624.8	622.44	617.44	32.31
P-33	229+42.25	71.33 RT	632.46	649.73	651.40	630.46	W18X283	2'-6"	624.8	622.42	617.42	32.31
P-34	229+47.75	71.33 RT	632.45	649.72	651.38	630.45	W18X283	2'-6"	624.8	622.40	617.40	32.32
P-35	229+53.25	71.33 RT	632.43	649.70	651.37	630.43	W18X283	2'-6"	624.8	622.38	617.38	32.32
P-36	229+58.75	71.33 RT	632.41	649.68	651.35	630.41	W18X283	2'-6"	624.8	622.36	617.36	32.32
P-37	229+61.25	71.33 RT	632.41	649.67	651.34	630.41	W18X283	2'-6"	624.8	622.35	617.35	32.33

See details on sheet 3 of 23 for minimum pile embedment in competent rock.

SOLDIER PILE NUMBER	SOLDIER PILE STATION	OFFSET	EDGE OF SHOULDER ELEVATION	TOP OF PILE ELEVATION	TOP OF WALL ELEVATION	BOTTOM OF WALL ELEVATION	SECTION	HOLE DIAMETER	ESTIMATED ROCK ELEVATION	BOTTOM OF TRENCH	ESTIMATED PILE TIP ELEVATION	ESTIMATED SOLDIER PILE LENGTH
		(FEET)	(FEET)	(FEET)	(FEET)	(FEET)			(FEET)	(FEET)	(FEET)	(FEET)
P38	229+66.75	71.33 RT	632.39	649.66	651.32	630.39	W18X283	2'-6"	624.8	622.33	617.33	32.33
P39	229+72.25	71.33 RT	632.37	649.64	651.31	630.37	W18X283	2'-6"	624.8	622.30	617.30	32.33
P40	229+77.75	71.33 RT	632.35	649.62	651.29	630.35	W18X283	2'-6"	624.8	622.28	617.28	32.34
P41	229+83.25	71.33 RT	632.34	649.60	651.27	630.34	W18X283	2'-6"	624.8	622.26	617.26	32.34
P42	229+88.75	71.33 RT	632.32	649.59	651.25	630.32	W18X283	2'-6"	624.8	622.24	617.24	32.35
P43	229+91.25	71.33 RT	632.31	649.58	651.25	630.31	W18X283	2'-6"	624.8	622.23	617.23	32.35
P44	229+96.75	71.33 RT	632.30	649.56	651.23	630.30	W18X283	2'-6"	624.8	622.21	617.21	32.35
P45	230+02.25	71.33 RT	632.28	649.55	651.21	630.28	W18X283	2'-6"	624.8	622.19	617.19	32.36
P46	230+07.75	71.33 RT	632.26	649.29	650.95	630.26	W18X283	2'-6"	624.8	622.15	617.15	32.14
P47	230+13.25	71.33 RT	632.24	648.52	650.18	630.24	W18X283	2'-6"	624.8	622.09	617.09	31.42
P48	230+18.75	71.33 RT	632.23	647.74	649.41	630.23	W18X283	2'-6"	624.8	622.03	617.03	30.71
P49	230+21.25	71.33 RT	632.22	647.39	649.06	630.22	W18X283	2'-6"	624.8	622.01	617.01	30.38
P50	230+26.75	71.33 RT	632.20	646.62	648.29	630.20	W18X283	2'-6"	624.8	622.00	617.00	29.62
P51	230+32.25	71.33 RT	632.19	645.85	647.51	630.19	W18X283	2'-6"	624.8	621.98	616.98	28.87
P52	230+37.75	71.33 RT	632.17	645.07	646.74	630.17	W18X283	2'-6"	624.8	621.96	616.96	28.11
P52	230+43.25	71.33 RT	632.15	644.30	645.97	630.15	W18X283	2'-6"	624.8	621.94	616.94	27.36
P54	230+48.75	71.33 RT	632.13	643.53	645.20	630.13	W18X283	2'-6"	624.8	621.93	616.93	26.61
P55	230+51.25	71.07 RT	632.13	643.85	644.85	630.13	W14X193	2'-6"	624.8	621.92	616.92	26.93
P56	230+60.42	71.07 RT	632.10	642.56	643.56	630.10	W14X193	2'-6"	624.8	621.89	616.89	25.67
P57	230+69.58	71.07 RT	632.07	641.27	642.27	630.07	W14X193	2'-6"	624.8	621.86	616.86	24.41
P58	230+78.75	71.07 RT	632.04	639.98	640.98	630.04	W14X193	2'-6"	624.8	621.83	616.83	23.15
P59	230+81.25	71.07 RT	632.03	639.63	640.63	630.03	W14X193	2'-6"	624.8	621.82	616.82	22.81
P60	230+90.42	71.07 RT	632.00	638.35	639.35	630.00	W14X193	2'-6"	624.8	621.79	616.79	21.55
P61	230+99.58	71.07 RT	631.98	637.06	638.06	629.98	W14X193	2'-6"	624.8	621.76	616.76	20.30
P62	231+08.75	71.07 RT	631.95	636.88	637.88	629.95	W14X193	2'-6"	624.8	621.73	616.73	20.15
P63	231+11.25	71.07 RT	631.94	636.85	637.85	629.94	W14X193	2'-6"	624.8	621.72	616.72	20.13
P64	231+20.42	71.07 RT	631.91	636.73	637.73	629.91	W14X193	2'-6"	624.8	621.63	616.63	20.10
P65	231+29.58	71.07 RT	631.88	636.61	637.61	629.88	W14X193	2'-6"	624.8	621.53	616.53	20.07
P66	231+38.75	71.07 RT	631.85	636.49	637.49	629.85	W14X193	2'-6"	624.8	621.44	616.44	20.04
P67	231+41.25	71.07 RT	631.85	636.46	637.46	629.85	W14X193	2'-6"	624.8	621.43	616.43	20.03
P68	231+50.42	71.07 RT	631.82	636.33	637.33	629.82	W14X193	2'-6"	624.8	621.39	616.39	19.94
P69	231+59.58	71.07 RT	631.79	636.21	637.21	629.79	W14X193	2'-6"	624.8	621.36	616.36	19.86
P70	231+68.75	71.07 RT	631.76	636.09	637.09	629.76	W14X193	2'-6"	624.8	621.32	616.32	19.77
P71	231+71.25	71.07 RT	631.75	636.06	637.06	629.75	W14X193	2'-6"	624.8	621.31	616.31	19.75
P72	231+80.42	71.07 RT	631.73	635.94	636.94	629.73	W14X193	2'-6"	624.8	621.28	616.28	19.66
P73	231+89.58	71.07 RT	631.70	635.82	636.82	629.70	W14X193	2'-6"	624.8	621.24	616.24	19.57
P74	231+98.75	71.07 RT	631.67	635.70	636.70	629.67	W14X193	2'-6"	624.8	621.21	616.21	19.49
P75	232+01.25	71.07 RT	631.66	635.66	636.66	629.66	W14X193	2'-6"	624.8	621.20	616.20	19.46
P76	232+10.42	71.07 RT	631.63	635.54	636.54	629.63	W14X193	2'-6"	624.8	621.17	616.17	19.38
P77	232+19.58	71.07 RT	631.60	635.42	636.42	629.60	W14X193	2'-6"	624.8	621.13	616.13	19.29
P78	232+28.75	71.07 RT	631.58	635.30	636.30	629.58	W14X193	2'-6"	624.8	621.10	616.10	19.20
P79	232+31.25	71.07 RT	631.57	635.27	636.27	629.57	W14X193	2'-6"	624.8	621.09	616.09	19.18
P80	232+40.42	71.07 RT	631.54	635.15	636.15	629.54	W14X193	2'-6"	624.8	621.05	616.05	19.09
P81	232+49.58	71.07 RT	631.51	635.03	636.03	629.51	W14X193	2'-6"	624.8	621.02	616.02	19.01
P82	232+58.75	71.07 RT	631.48	634.90	635.90	629.48	W14X193	2'-6"	624.8	620.98	615.98	18.92
P83	232+61.25	71.07 RT	631.48	634.87	635.87	629.48	W14X193	2'-6"	624.8	620.97	615.97	18.90
P84	232+70.42	71.07 RT	631.45	634.75	635.75	629.45	W14X193	2'-6"	624.8	620.94	615.94	18.81
P85	232+79.58	71.07 RT	631.42	634.63	635.63	629.42	W14X193	2'-6"	624.8	620.91	615.91	18.72
P86	232+88.75	71.07 RT	631.39	634.51	635.51	629.39	W14X193	2'-6"	624.8	620.87	615.87	18.64
P87	232+91.25	71.07 RT	631.38	634.48	635.48	629.38	W14X193	2'-6"	624.8	620.86	615.86	18.61
P88	233+00.42	71.07 RT	631.35	634.35	635.35	629.35	W14X193	2'-6"	624.8	620.83	615.83	18.53
P89	233+09.58	71.07 RT	631.33	634.23	635.23	629.33	W14X193	2'-6"	624.8	620.79	615.79	18.44
P90	233+18.75	71.07 RT	631.30	634.11	635.11	629.30	W14X193	2'-6"	624.8	620.76	615.76	18.35
P91	233+21.25	71.07 RT	631.29	634.08	635.08	629.29	W14X193	2'-6"	624.8	620.75	615.75	18.33
P92	233+30.42	71.07 RT	631.26	633.96	634.96	629.26	W14X193	2'-6"	624.8	620.71	615.71	18.24
P93	233+39.58	71.07 RT	631.23	633.84	634.84	629.23	W14X193	2'-6"	624.8	620.68	615.68	18.16
P94	233+48.75	71.07 RT	631.20	633.72	634.72	629.20	W14X193	2'-6"	624.8	620.64	615.64	18.07

See details on sheet 3 of 23 for minimum pile embedment in competent rock.

WALL A BAR DIMENSIONS

Bar	No.	A	B
v101(E)	40	9'-9"	6'-4"
v102(E)	41	13'-1"	9'-9"
v103(E)	21	16'-5"	13'-1"
v104(E)	21	19'-9"	16'-5"
v105(E)	21	20'-5"	19'-9"
v107(E)	21	20'-7"	18'-8"
v108(E)	21	18'-8"	14'-7"
v109(E)	21	14'-7"	10'-5"
v110(E)	41	10'-5"	7'-7"
v111(E)	41	7'-7"	7'-3"
v112(E)	41	7'-3"	7'-0"
v113(E)	41	7'-0"	6'-8"
v114(E)	41	6'-8"	6'-5"
v115(E)	41	6'-5"	6'-1"
v116(E)	41	6'-1"	5'-9"
v117(E)	41	5'-9"	5'-6"
v118(E)	41	5'-6"	5'-2"
v120(E)	20	14'-3"	10'-5"

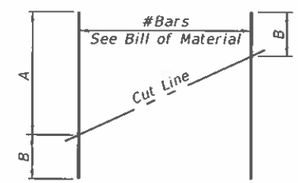

FIELD CUTTING DIAGRAM

Order bars full length. Cut as shown and use remainder of bars in opposite face. See table for lengths.

WALL A BILL OF MATERIAL

	Bar	No.	Size	Length	Shape
	h141(E)	466	#5	33'-2"	
	h142(E)	275	#5	29'-10"	
	h143(E)	49	#7	35'-10"	
	h144(E)	35	#7	29'-10"	
	h145(E)	7	#7	35'-6"	
	s125(E)	520	#4	8'-6"	
*	v101(E)	40	#5	16'-1"	
*	v102(E)	41	#5	22'-10"	
*	v103(E)	21	#5	29'-6"	
*	v104(E)	21	#5	36'-2"	
*	v105(E)	21	#5	40'-2"	
	v106(E)	126	#5	20'-7"	
*	v107(E)	21	#5	39'-3"	
*	v108(E)	21	#5	33'-3"	
*	v109(E)	21	#5	25'-0"	
*	v110(E)	41	#5	18'-0"	
*	v111(E)	41	#5	14'-10"	
*	v112(E)	41	#5	14'-4"	
*	v113(E)	41	#5	13'-8"	
*	v114(E)	41	#5	13'-1"	
*	v115(E)	41	#5	12'-6"	
*	v116(E)	41	#5	11'-10"	
*	v117(E)	41	#5	11'-3"	
*	v118(E)	41	#5	10'-8"	
	v119(E)	320	#5	14'-3"	
*	v120(E)	20	#5	24'-8"	
	Structure Excavation			Cu. Yd.	833
	Stud Shear Connectors			Each	1,615
	Reinforcement Bars, Epoxy Coated			Pound	52,950
	Furnishing Soldier Piles (W Section)			Foot	2,390
	Drilling and Setting Solder Piles (in Soil)			Cu. Ft.	8,739
	Drilling and Setting Solder Piles (in Rock)			Cu. Ft.	3,593
	Untreated Timber Lagging			Sq. Ft.	6,234
	Concrete Structures			Cu. Yd.	277.6
	Concrete Sealer			Sq. Ft.	8,395
	Geocomposite Wall Drain			Sq. Yd.	473
	Pipe Underdrains for Structures 4 inch			Foot	660

* Bars to be field cut

MODEL: 0460153-66997-009
FILE NAME: I:\jobs\2019\193.1901 PTB 192-011 District 3 Various Phase III Structure Projects\WO 2 - Waldron Road over I-57\Submittals\2021.04.20 Final SP Wall Submittal to Chamlin & D3\CAD_Sheets\0460153-66997-009-wall A schedule sheet.dgn

Prairie Engineers, P.C.
www.prairieengineers.com
professional design firm no. 184-005965
© Copyright Prairie Engineers, P.C. 2020

USER NAME =	DESIGNED - RHC	REVISED -	
	CHECKED - CMF	REVISED -	
PLOT SCALE =	DRAWN - JLM	REVISED -	
PLOT DATE =	CHECKED - SMA	REVISED -	

STATE OF ILLINOIS
DEPARTMENT OF TRANSPORTATION

WALL A TABLE OF PILE LENGTHS AND ELEVATIONS, BILL OF MATERIAL
STRUCTURE NO. 046-0153

SHEET 9 OF 23 SHEETS

F.A.I. RTE.	SECTION	COUNTY	TOTAL SHEETS	SHEET NO.
57	139HBR-6	KANKAKEE	202	152

CONTRACT NO. 66997

ILLINOIS FED. AID PROJECT

4/20/2021 11:52:28 AM

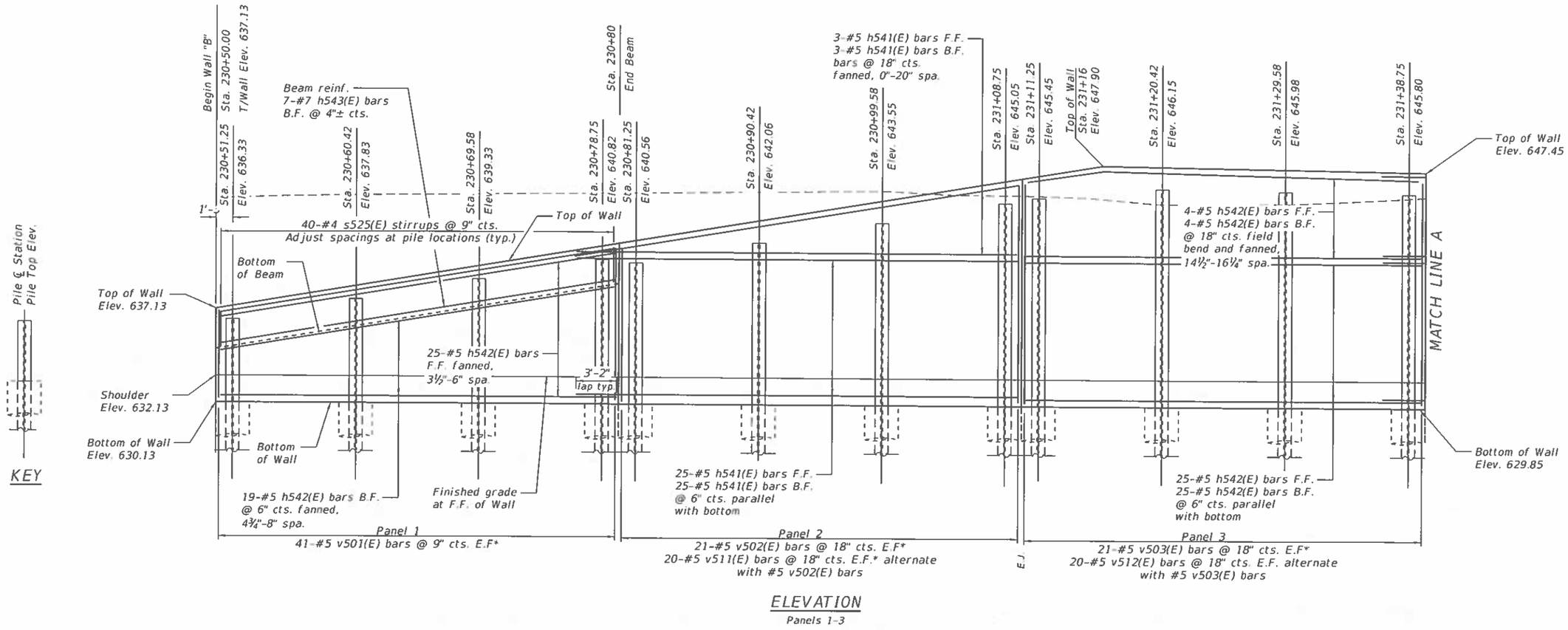

ELEVATION
Panels 1-3

* - Requires field cuts.
See sheet 13

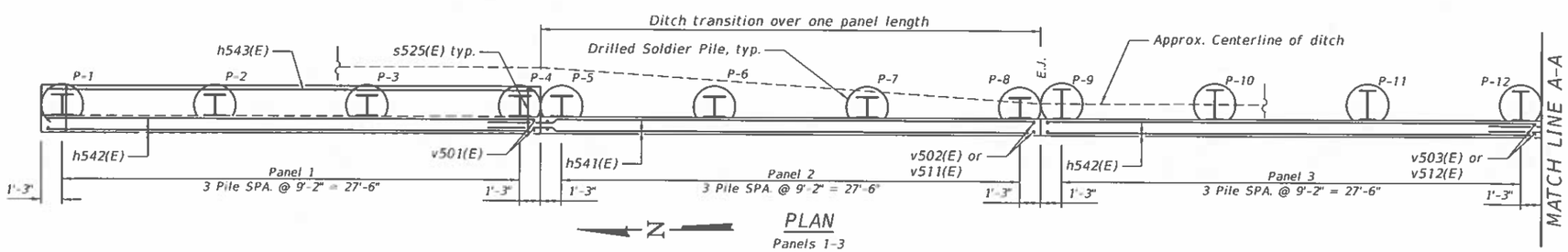

PLAN
Panels 1-3

Notes:
F.F. = Front Face
B.F. = Back Face
See sheets 13 of 23 for Pile Sizes, Elevations, Lengths, Shoulder Elevations, Base of Wall Elevations, and Field Cutting Diagram.
See sheets 14-15 of 23 for Sections and Details. See sheet 5 of 23 for S bar details.

MINIMUM BAR LAP
#5 bar = 3'-2"
#7 bar = 5'-6"

Prairie Engineers, P.C. www.prairieengineers.com professional design firm no. 184-005965 © Copyright Prairie Engineers, P.C. 2020	USER NAME =	DESIGNED - RHC	REVISED -	STATE OF ILLINOIS DEPARTMENT OF TRANSPORTATION	WALL B PLAN AND ENLARGED ELEVATION STRUCTURE NO. 046-0153	F.A.I. RTE.	SECTION	COUNTY	TOTAL SHEETS	SHEET NO.
		CHECKED - CMF	REVISED -			57	139HBR-6	KANKAKEE	202	153
	PLOT SCALE =	DRAWN - JLM	REVISED -					CONTRACT NO. 66997		
	PLOT DATE =	CHECKED - SMA	REVISED -		SHEET 10 OF 23 SHEETS		ILLINOIS	FED. AID PROJECT		

MODEL: 0460153-66997-010
FILE NAME: I:\jobs\2019\193.1901 PTB 192-011 District 3 Various Phase III Structure Projects\WO 2 - Waldron Road over I-57\Drawings\wall B\Sheet\0460153-66997-010-012-wall B Plan-sheets.dgn
3/18/2021 3:58:46 PM

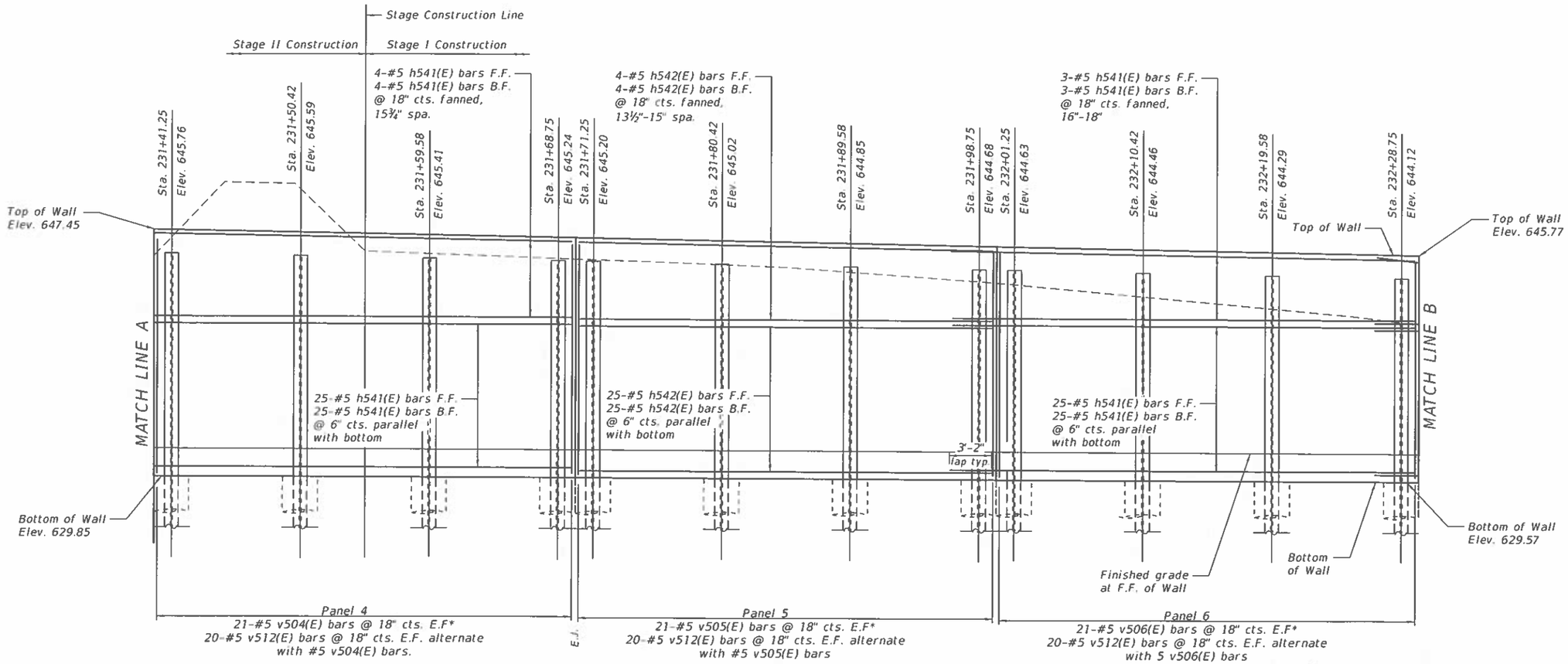

ELEVATION

Panels 4-6

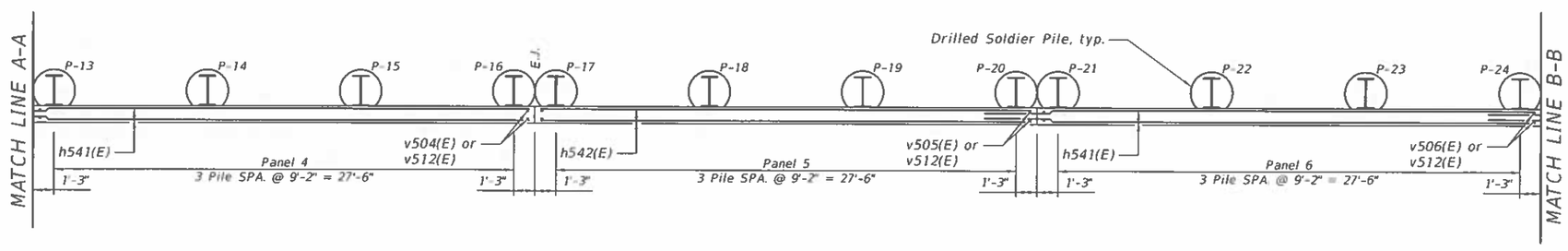

PLAN

Panels 4-6

Notes:

F.F. = Front Face

B.F. = Back Face

See sheets 13 of 23 for Pile Sizes, Elevations, Lengths, Shoulder Elevations, Base of Wall Elevations, and Field Cutting Diagram.

See sheets 14-15 of 23 for Sections and Details. See sheet 5 of 23 for S bar details.

MINIMUM BAR LAP

#5 bar = 3'-2"

MODEL: 0460153-66997-011
FILE NAME: I:\Projects\2019\193.1901 PTB 192-011 District 3 Various Phase III Structure Projects\WO 2 - Waldron Road over I-57\Drawings\wall B\Sheet\0460153-66997-010-012-wall B Plan-sheets.dgn

Prairie Engineers, P.C. www.prairieengineers.com professional design firm no. 184-005965 © Copyright Prairie Engineers, P.C. 2020	USER NAME =	DESIGNED - RHC	REVISED -	STATE OF ILLINOIS DEPARTMENT OF TRANSPORTATION	WALL B PLAN AND ENLARGED ELEVATION STRUCTURE NO. 046-0153	F.A.I. RTE.	SECTION	COUNTY	TOTAL SHEETS / SHEET NO.
		CHECKED - CMF	REVISED -			57	139HBR-6	KANKAKEE	202 / 154
	PLOT SCALE =	DRAWN - JLM	REVISED -					CONTRACT NO. 66997	
	PLOT DATE =	CHECKED - SMA	REVISED -		SHEET 11 OF 23 SHEETS			ILLINOIS FED. AID PROJECT	

3/18/2021 3:59:19 PM

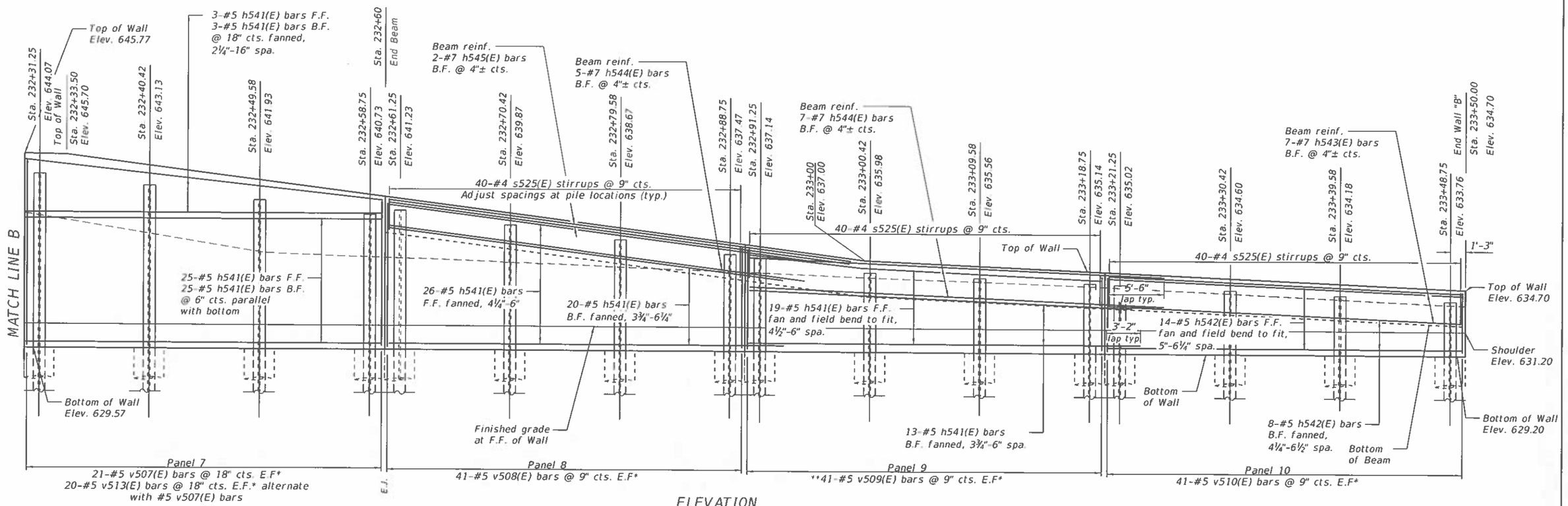

ELEVATION
Panels 7-10

** - After cutting bars to length per the cutting diagram, trim to fit as needed.

* - Requires field cuts.
See sheet 13

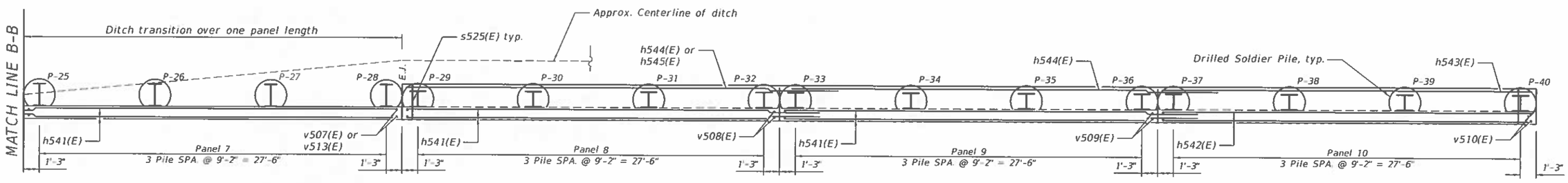

PLAN
Panels 7-10

Notes:
F.F. = Front Face
B.F. = Back Face
See sheets 13 of 23 for Pile Sizes, Elevations, Lengths, Shoulder Elevations, Base of Wall Elevations, and Field Cutting Diagram.
See sheets 14-15 of 23 for Sections and Details. See sheet 5 of 23 for S bar details.

MINIMUM BAR LAP
#5 bar = 3'-2"
#7 bar = 5'-6"

Prairie Engineers, P.C. www.prairieengineers.com professional design firm no. 184-005965 © Copyright Prairie Engineers, P.C. 2020	USER NAME =	DESIGNED - RHC	REVISED -
		CHECKED - CMF	REVISED -
	PLOT SCALE =	DRAWN - JLM	REVISED -
	PLOT DATE =	CHECKED - SMA	REVISED -

STATE OF ILLINOIS
DEPARTMENT OF TRANSPORTATION

WALL B PLAN AND ENLARGED ELEVATION
STRUCTURE NO. 046-0153
SHEET 12 OF 23 SHEETS

F.A.I. RTE.	SECTION	COUNTY	TOTAL SHEETS	SHEET NO.
57	139HBR-6	KANKAKEE	202	155
		CONTRACT NO. 66997		
		ILLINOIS	FED. AID PROJECT	

MODEL: 0460153-66997-012
FILE NAME: I:\jobs\2019\193 1901 PTB 192-011 District 3 Various Phase III Structure Projects\WO 2 - Waldron Road over I-57\Drawings\wall B\Sheet\0460153-66997-Q10-012-wall B Plan-sheets.dgn
3/18/2021 3:59:50 PM

SOLDIER PILE NUMBER	SOLDIER PILE STATION	OFFSET	EDGE OF SHOULDER ELEVATION	TOP OF PILE ELEVATION	TOP OF WALL ELEVATION	BOTTOM OF WALL ELEVATION	SECTION	HOLE DIAMETER	ESTIMATED ROCK ELEVATION	BOTTOM OF TRENCH	ESTIMATED PILE TIP ELEVATION	ESTIMATED SOLDIER PILE LENGTH
		(FEET)	(FEET)	(FEET)	(FEET)	(FEET)			(FEET)	(FEET)	(FEET)	(FEET)
P1	230+51.25	71.07 LT	632.13	636.33	637.33	630.13	W14X193	2'-6"	632.70	625.75	620.75	15.58
P2	230+60.42	71.07 LT	632.10	637.83	638.83	630.10	W14X193	2'-6"	632.70	625.71	620.71	17.12
P3	230+69.58	71.07 LT	632.07	639.33	640.33	630.07	W14X193	2'-6"	632.70	625.67	620.67	18.66
P4	230+78.75	71.07 LT	632.04	640.82	641.82	630.04	W14X193	2'-6"	632.70	625.62	620.62	20.20
P5	230+81.25	71.07 LT	632.03	640.56	642.23	630.03	W14X193	2'-6"	632.70	625.61	620.61	19.95
P6	230+90.42	71.07 LT	632.00	642.06	643.73	630.00	W14X193	2'-6"	632.70	625.56	620.56	21.49
P7	230+99.58	71.07 LT	631.98	643.55	645.22	629.98	W14X193	2'-6"	632.70	625.52	620.52	23.03
P8	231+08.75	71.07 LT	631.95	645.05	646.72	629.95	W14X193	2'-6"	632.70	625.47	620.47	24.57
P9	231+11.25	71.33 LT	631.94	645.45	647.12	629.94	W18X283	2'-6"	632.70	625.46	620.46	24.99
P10	231+20.42	71.33 LT	631.91	646.15	647.82	629.91	W18X283	2'-6"	632.70	625.42	620.42	25.73
P11	231+29.58	71.33 LT	631.88	645.98	647.65	629.88	W18X283	2'-6"	632.70	625.37	620.37	25.60
P12	231+38.75	71.33 LT	631.85	645.80	647.47	629.85	W18X283	2'-6"	632.70	625.33	620.33	25.48
P13	231+41.25	71.33 LT	631.85	645.76	647.43	629.85	W18X283	2'-6"	632.70	625.32	620.32	25.44
P14	231+50.42	71.33 LT	631.82	645.59	647.26	629.82	W18X283	2'-6"	632.70	625.27	620.27	25.32
P15	231+59.58	71.33 LT	631.79	645.41	647.08	629.79	W18X283	2'-6"	632.70	625.23	620.23	25.19
P16	231+68.75	71.33 LT	631.76	645.24	646.91	629.76	W18X283	2'-6"	632.70	625.18	620.18	25.06
P17	231+71.25	71.33 LT	631.75	645.20	646.87	629.75	W18X283	2'-6"	632.70	625.17	620.17	25.03
P18	231+80.42	71.33 LT	631.73	645.02	646.69	629.73	W18X283	2'-6"	632.70	625.12	620.12	24.90
P19	231+89.58	71.33 LT	631.70	644.85	646.52	629.70	W18X283	2'-6"	632.70	625.08	620.08	24.77
P20	231+98.75	71.33 LT	631.67	644.68	646.35	629.67	W18X283	2'-6"	632.70	625.03	620.03	24.65
P21	232+01.25	71.33 LT	631.66	644.63	646.30	629.66	W18X283	2'-6"	632.70	625.02	620.02	24.61
P22	232+10.42	71.33 LT	631.63	644.46	646.13	629.63	W18X283	2'-6"	632.70	624.98	619.98	24.48
P23	232+19.58	71.33 LT	631.60	644.29	645.96	629.60	W18X283	2'-6"	632.70	624.93	619.93	24.36
P24	232+28.75	71.33 LT	631.58	644.12	645.79	629.58	W18X283	2'-6"	632.70	624.89	619.89	24.23
P25	232+31.25	71.33 LT	631.57	644.07	645.74	629.57	W18X283	2'-6"	632.70	624.88	619.88	24.20
P26	232+40.42	71.33 LT	631.54	643.13	644.80	629.54	W18X283	2'-6"	632.70	624.83	619.83	23.29
P27	232+49.58	71.33 LT	631.51	641.93	643.60	629.51	W18X283	2'-6"	632.70	624.79	619.79	22.14
P28	232+58.75	71.33 LT	631.48	640.73	642.40	629.48	W18X283	2'-6"	632.70	624.74	619.74	20.99
P29	232+61.25	71.07 LT	631.48	641.23	642.07	629.48	W14X193	2'-6"	632.70	624.73	619.73	21.50
P30	232+70.42	71.07 LT	631.45	639.87	640.87	629.45	W14X193	2'-6"	632.70	624.68	619.68	20.19
P31	232+79.58	71.07 LT	631.42	638.67	639.67	629.42	W14X193	2'-6"	632.70	624.64	619.64	19.03
P32	232+88.75	71.07 LT	631.39	637.47	638.47	629.39	W14X193	2'-6"	632.70	624.59	619.59	17.88
P33	232+91.25	71.07 LT	631.38	637.14	638.14	629.38	W14X193	2'-6"	632.70	624.58	619.58	17.56
P34	233+00.42	71.07 LT	631.35	635.98	636.98	629.35	W14X193	2'-6"	632.70	624.54	619.54	16.44
P35	233+09.58	71.07 LT	631.33	635.56	636.56	629.33	W14X193	2'-6"	632.70	624.49	619.49	16.07
P36	233+18.75	71.07 LT	631.30	635.14	636.14	629.30	W14X193	2'-6"	632.70	624.45	619.45	15.69
P37	233+21.25	71.07 LT	631.29	635.02	636.02	629.29	W14X193	2'-6"	632.70	624.44	619.44	15.59
P38	233+30.42	71.07 LT	631.26	634.60	635.60	629.26	W14X193	2'-6"	632.70	624.39	619.39	15.21
P39	233+39.58	71.07 LT	631.23	634.18	635.18	629.23	W14X193	2'-6"	632.70	624.35	619.35	14.83
P40	233+48.75	71.07 LT	631.20	633.76	634.76	629.20	W14X193	2'-6"	632.70	624.30	619.30	14.46

See details on sheet 3 of 23 for minimum pile embedment in competent rock.

WALL B BAR DIMENSIONS

Bar	No.	A	B
v501(E)	41	11'-8"	6'-8"
v502(E)	21	16'-8"	11'-8"
v503(E)	21	17'-3"	16'-8"
v504(E)	21	17'-3"	16'-10"
v505(E)	21	16'-10"	16'-4"
v506(E)	21	16'-4"	15'-10"
v507(E)	21	15'-10"	12'-5"
v508(E)	41	12'-5"	8'-7"
v509(E)	41	8'-7"	6'-5"
v510(E)	41	6'-5"	5'-2"
v511(E)	20	14'-3"	11'-8"
v513(E)	20	14'-3"	12'-5"

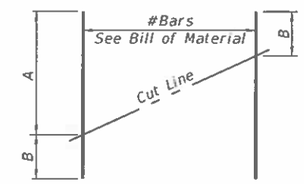

FIELD CUTTING DIAGRAM

Order bars full length. Cut as shown and use remainder of bars in opposite face. See table for lengths.

WALL B BILL OF MATERIAL

	Bar	No.	Size	Length	Shape
	h541(E)	304	#5	33'-2"	
	h542(E)	182	#5	29'-10"	
	h543(E)	14	#7	29'-10"	
	h544(E)	12	#7	35'-10"	
	h545(E)	2	#7	42'-0"	
	s525(E)	160	#4	8'-6"	
*	v501(E)	41	#5	18'-4"	
*	v502(E)	21	#5	28'-4"	
*	v503(E)	21	#5	33'-11"	
*	v504(E)	21	#5	34'-1"	
*	v505(E)	21	#5	33'-2"	
*	v506(E)	21	#5	32'-2"	
*	v507(E)	21	#5	28'-3"	
*	v508(E)	41	#5	21'-0"	
*	v509(E)	41	#5	15'-0"	
*	v510(E)	41	#5	11'-7"	
*	v511(E)	20	#5	25'-11"	
	v512(E)	160	#5	14'-3"	
*	v513(E)	20	#5	26'-8"	

Structure Excavation	Cu. Yd.	438
Stud Shear Connectors	Each	706
Reinforcement Bars, Epoxy Coated	Pound	29,370
Furnishing Soldier Piles (W Section)	Foot	856
Drilling and Setting Solder Piles (in Soil)	Cu. Ft.	1,987
Drilling and Setting Solder Piles (in Rock)	Cu. Ft.	2,488
Untreated Timber Lagging	Sq. Ft.	3,345
Concrete Structures	Cu. Yd.	146.2
Concrete Sealer	Sq. Ft.	4,398
Geocomposite Wall Drain	Sq. Yd.	266
Pipe Underdrains for Structures 4 inch	Foot	360

* Bars to be field cut

MODEL: 0460153-66997-013
FILE NAME: I:\jobs\2019\193.1901 PTB 192-011 District 3 Various Phase III Structure Projects\WO 2 - Waldron Road over I-57\Drawings\wall B\Sheet\0460153-66997-013-wall B schedule sheet.dgn

3/18/2021 4:00:43 PM

Prairie Engineers, P.C.
www.prairieengineers.com
professional design firm no. 184-005965

© Copyright Prairie Engineers, P.C. 2020

USER NAME =	DESIGNED - RHC	REVISED -	
	CHECKED - CMF	REVISED -	
PLOT SCALE =	DRAWN - JLM	REVISED -	
PLOT DATE =	CHECKED - SMA	REVISED -	

STATE OF ILLINOIS
DEPARTMENT OF TRANSPORTATION

WALL B TABLE OF PILE LENGTHS AND ELEVATIONS, BILL OF MATERIAL
STRUCTURE NO. 046-0153

SHEET 13 OF 23 SHEETS

F.A.I. RTE.	SECTION	COUNTY	TOTAL SHEETS	SHEET NO.
57	139HBR-6	KANKAKEE	202	156
		CONTRACT NO. 66997		
		ILLINOIS FED. AID PROJECT		

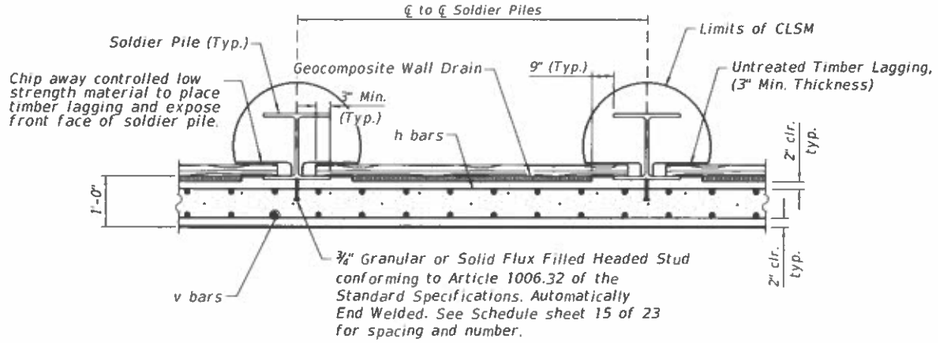

HORIZONTAL SECTION THRU SOLDIER PILE WALL

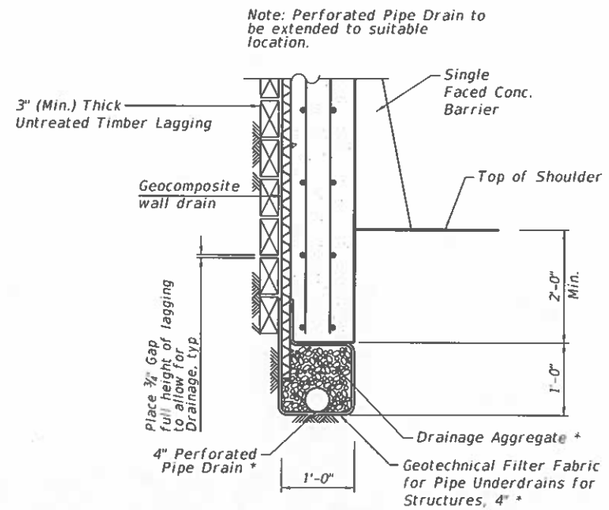

PIPE UNDERDRAIN DETAIL (BETWEEN SOLDIER PILES)

* Included in the cost of Pipe Underdrains for Structures, 4"

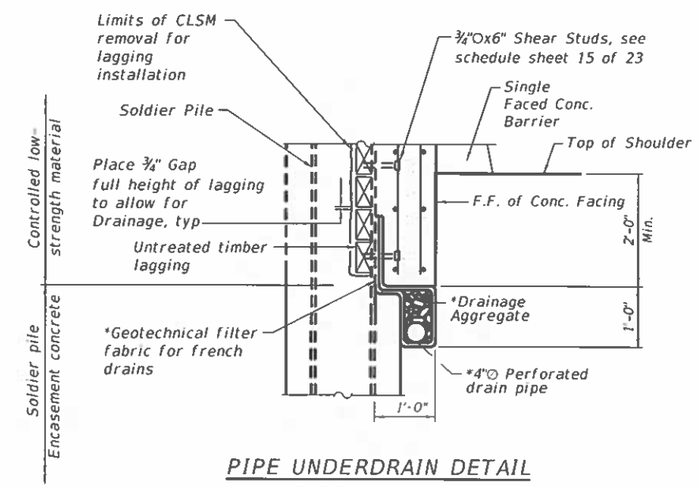

PIPE UNDERDRAIN DETAIL AT SOLDIER PILE

* Included in the cost of Pipe Underdrains for Structures

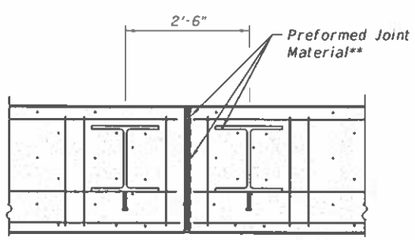

SECTION

(Expansion Joint at Beam)

**Included in the cost of Concrete Structures

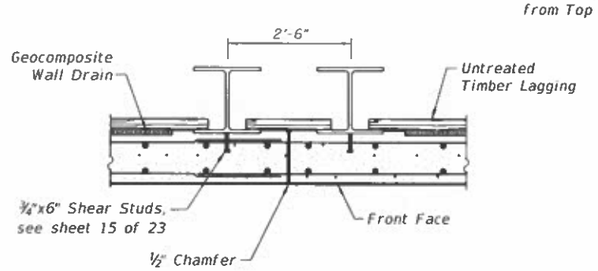

SECTION

(Construction Joint)

Limits of CSLM not shown.

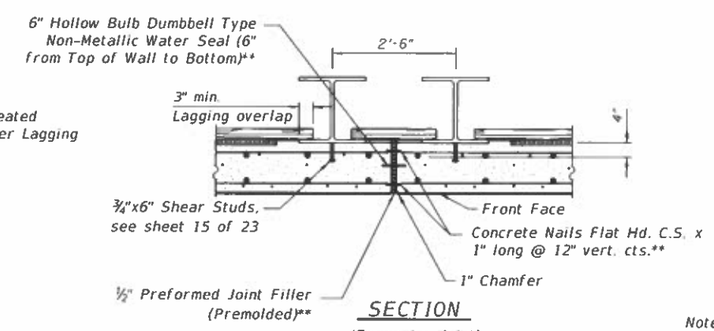

SECTION

(Expansion Joint)

Limits of CSLM not shown.

**Included in the cost of Concrete Structures

Notes:

See sheets 8, 9 and 13 of 23 for Soldier Pile Tables.

See sheet 15 of 23 for Shear Studs and Dowel Bars details and schedules.

Prairie Engineers, P.C. www.prairieengineers.com professional design firm no. 184-005965 © Copyright Prairie Engineers, P.C. 2020	USER NAME =	DESIGNED - RHC	REVISED -	STATE OF ILLINOIS DEPARTMENT OF TRANSPORTATION	SOLDIER PILE WALL SECTIONS STRUCTURE NO. 046-0153	F.A.I. RTE.	SECTION	COUNTY	TOTAL SHEETS	SHEET NO.
		CHECKED - CMF	REVISED -			57	139HBR-6	KANKAKEE	202	157
	PLOT SCALE =	DRAWN - JLM	REVISED -					CONTRACT NO. 66997		
	PLOT DATE =	CHECKED - SMA	REVISED -		SHEET 14 OF 23 SHEETS			ILLINOIS	FED. AID PROJECT	

MODEL: 0460153-66997-014
FILE NAME: I:\jobs\2019\193.1901 PTB 192-011 District 3 Various Phase III Structure Projects\WO 2 - Waldron Road over I-57\Drawings\wall A\Sheet\0460153-66997-014-wall A section.dgn

3/18/2021 3:45:10 PM

* Number of studs at 8" cts. varies depending on height of wall. For short wall heights, 18" spacings at top of wall may not apply. See tables at right.

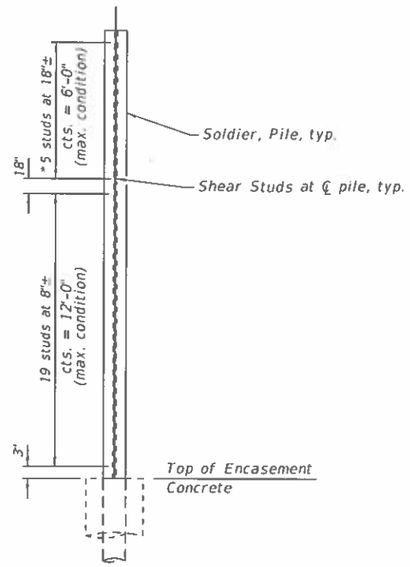

STUD SHEAR CONNECTOR LAYOUT

WALL A STUD SHEAR CONNECTOR TABLE

PILE	STATION	NUMBER OF CONNECTIONS BELOW 12'-3" @ 8"± SPA.	NUMBER OF CONNECTIONS ABOVE 12'-3" @ 18"± SPA.
P1	227+51.25	10	
P2	227+60.42	11	
P3	227+69.58	13	
P4	227+78.75	14	
P5	227+81.25	15	
P6	227+90.42	16	
P7	227+99.58	18	
P8	228+08.75	19	
P9	228+11.25	19	1
P10	228+18.13	19	1
P11	228+25.00	19	2
P12	228+31.88	19	2
P13	228+38.75	19	3
P14	228+41.25	19	3
P15	228+48.13	19	3
P16	228+55.00	19	4
P17	228+61.88	19	4
P18	228+68.75	19	5
P19	228+71.25	19	5
P20	228+76.75	19	5
P21	228+82.25	19	5
P22	228+87.75	19	5
P23	228+93.25	19	5
P24	228+98.75	19	5
P25	229+01.25	19	5
P26	229+06.75	19	5
P27	229+12.25	19	5
P28	229+17.75	19	5
P29	229+23.25	19	5
P30	229+28.75	19	5
P31	229+31.25	19	5
P32	229+36.75	19	5
P33	229+42.25	19	5
P34	229+47.75	19	5
P35	229+53.25	19	5
P36	229+58.75	19	5
P37	229+61.25	19	5
P38	229+66.75	19	5
P39	229+72.25	19	5
P40	229+77.75	19	5
P41	229+83.25	19	5
P42	229+88.75	19	5
P43	229+91.25	19	5
P44	229+96.75	19	5
P45	230+02.25	19	5
P46	230+07.75	19	5
P47	230+13.25	19	5
P48	230+18.75	19	4
P49	230+21.25	19	4
P50	230+26.75	19	3
P51	230+32.25	19	3
P52	230+37.75	19	2
P53	230+43.25	19	2
P54	230+48.75	19	1
P55	230+51.25	19	2
P56	230+60.42	19	1
P57	230+69.58	18	
P58	230+78.75	16	
P59	230+81.25	15	
P60	230+90.42	14	
P61	230+99.58	12	
P62	231+08.75	11	
P63	231+11.25	11	
P64	231+20.42	11	
P65	231+29.58	11	
P66	231+38.75	11	
P67	231+41.25	11	
P68	231+50.42	11	
P69	231+59.58	11	
P70	231+68.75	10	
P71	231+71.25	10	
P72	231+80.42	10	
P73	231+89.58	10	
P74	231+98.75	10	

PILE	STATION	NUMBER OF CONNECTIONS BELOW 12'-3" @ 8"± SPA.	NUMBER OF CONNECTIONS ABOVE 12'-3" @ 18"± SPA.
P75	232+01.25	10	
P76	232+10.42	10	
P77	232+19.58	10	
P78	232+28.75	10	
P79	232+31.25	10	
P80	232+40.42	9	
P81	232+49.58	9	
P82	232+58.75	9	
P83	232+61.25	9	
P84	232+70.42	9	
P85	232+79.58	9	
P86	232+88.75	9	
P87	232+91.25	9	
P88	233+00.42	9	
P89	233+09.58	8	
P90	233+18.75	8	
P91	233+21.25	8	
P92	233+30.42	8	
P93	233+39.58	8	
P94	233+48.75	8	

WALL B STUD SHEAR CONNECTOR TABLE

PILE	STATION	NUMBER OF CONNECTIONS BELOW 12'-3" @ 8"± SPA.	NUMBER OF CONNECTIONS ABOVE 12'-3" @ 18"± SPA.
P1	230+51.25	10	
P2	230+60.42	13	
P3	230+69.58	15	
P4	230+78.75	17	
P5	230+81.25	17	
P6	230+90.42	19	1
P7	230+99.58	19	2
P8	231+08.75	19	3
P9	231+11.25	19	3
P10	231+20.42	19	3
P11	231+29.58	19	3
P12	231+38.75	19	3
P13	231+41.25	19	3
P14	231+50.42	19	3
P15	231+59.58	19	3
P16	231+68.75	19	3
P17	231+71.25	19	3
P18	231+80.42	19	3
P19	231+89.58	19	3
P20	231+98.75	19	3
P21	232+01.25	19	2
P22	232+10.42	19	2
P23	232+19.58	19	2
P24	232+28.75	19	2
P25	232+31.25	19	2
P26	232+40.42	19	2
P27	232+49.58	19	1
P28	232+58.75	18	
P29	232+61.25	19	
P30	232+70.42	17	
P31	232+79.58	15	
P32	232+88.75	13	
P33	232+91.25	13	
P34	233+00.42	11	
P35	233+09.58	10	
P36	233+18.75	10	
P37	233+21.25	10	
P38	233+30.42	9	
P39	233+39.58	8	
P40	233+48.75	8	

Notes:
See sheet 14 of 23 for shear connector size and additional information.

Illinois Department of Transportation
Division of Highways

SOIL BORING LOG

Page 1 of 1

Date 2/28/14

ROUTE I-57 (FAI 57) DESCRIPTION Waldron Road over I-57, 3.4 miles North of US 45/52 LOGGED BY Larry Myers

SECTION (46-3)R, HBK, 5HBR, 6HBR LOCATION SE 1/4

COUNTY Kankakee DRILLING METHOD Hollow Stem Auger HAMMER TYPE CME Automatic

STRUCT. NO. 046-0080 (Exist.)
Station 230+53.99 (Exist.)

BORING NO. BH 56 (West Wall)
Station 227+83.54
Offset 32.6 ft Rt.
Ground Surface Elev. 633.35 ft

Surface Water Elev. ____ ft
Stream Bed Elev. ____ ft

Groundwater Elev.:
First Encounter Dry ft
Upon Completion Dry ft
After ____ Hrs. ____ ft

Description	Elev.	DEPTH (ft)	BLOWS (/6")	UCS Qu (tsf)	MOIST (%)
Augered Bituminous Shoulder, Brown & Gray Silty Clay Loam Till - Fill?	630.9				
Hard Gray Silty Clay Loam Till	628.9		7 8 11	>4.5 P	12
Dense Buff Limestone	628.1	-5	100/3"		6
End of Boring		-10 -15 -20			

The Unconfined Compressive Strength (UCS) Failure Mode is indicated by (B-Bulge, S-Shear, P-Penetrometer)
The SPT (N value) is the sum of the last two blow values in each sampling zone (AASHTO T206)

BBS, form 137 (Rev. 8-99)

Illinois Department of Transportation
Division of Highways
IDOT

SOIL BORING LOG

Page 1 of 1

Date 2/28/14

ROUTE I-57 (FAI 57) DESCRIPTION Waldron Road over I-57, 3.4 miles North of US 45/52 LOGGED BY Larry Myers

SECTION (46-3)R, HBK, 5HBR, 6HBR LOCATION SE 1/4, SEC. 4, TWP. 30N, RNG. 13W, 2nd PM, Latitude 41.108625, Longitude -87.83535

COUNTY Kankakee DRILLING METHOD Hollow Stem Auger HAMMER TYPE CME Automatic

STRUCT. NO. 046-0080 (Exist.)
Station 230+53.99 (Exist.)

BORING NO. BH 57 (West Wall)
Station 228+63.37
Offset 32.6 ft Rt
Ground Surface Elev. 633.60 ft

Surface Water Elev. ____ ft
Stream Bed Elev. ____ ft

Groundwater Elev.:
First Encounter Dry ft
Upon Completion Dry ft
After ____ Hrs. ____ ft

Description	Elev.	DEPTH (ft)	BLOWS (/6")	UCS Qu (tsf)	MOIST (%)
Augered Bituminous Shoulder, Brown Fill Sand	631.10				
Loose Brown Fill Sand, Concrete Pieces - Fill	629.60		3 4 4		16
Note: Stopped Boring at 4' due to unknown trench - moved twice and still in trench. No JULIE markings in area		-5			
End of Boring		-10 -15 -20			

The Unconfined Compressive Strength (UCS) Failure Mode is indicated by (B-Bulge, S-Shear, P-Penetrometer)
The SPT (N value) is the sum of the last two blow values in each sampling zone (AASHTO T206)

BBS, form 137 (Rev. 8-99)

Illinois Department of Transportation
Division of Highways
IDOT

SOIL BORING LOG

Page 1 of 1

Date 2/28/14

ROUTE I-57 (FAI 57) DESCRIPTION Waldron Road over I-57, 3.4 miles North of US 45/52 LOGGED BY Larry Myers

SECTION (46-3)R, HBK, 5HBR, 6HBR LOCATION SE 1/4, SEC. 4, TWP. 30N, RNG. 13W, 2nd PM, Latitude 41.107998, Longitude -87.835337

COUNTY Kankakee DRILLING METHOD Hollow Stem Auger HAMMER TYPE CME Automatic

STRUCT. NO. 046-0080 (Exist.)
Station 230+53.99 (Exist.)

BORING NO. BH 59 (West Wall)
Station 230+91.82
Offset 36.1 ft Rt.
Ground Surface Elev. 632.79 ft

Surface Water Elev. ____ ft
Stream Bed Elev. ____ ft

Groundwater Elev.:
First Encounter Dry ft
Upon Completion Dry ft
After ____ Hrs. ____ ft

Description	Elev.	DEPTH (ft)	BLOWS (/6")	UCS Qu (tsf)	MOIST (%)
Augered Bituminous Shoulder & Buff Weathered Limestone/Silt	630.29				
Buff Limestone - Weathered to 3'	629.71		50		
End of Boring			100/1"		7
		-5 -10 -15 -20			

The Unconfined Compressive Strength (UCS) Failure Mode is indicated by (B-Bulge, S-Shear, P-Penetrometer)
The SPT (N value) is the sum of the last two blow values in each sampling zone (AASHTO T206)

BBS, form 137 (Rev. 8-99)

SOIL BORING I-57 & IL 17 INTERCHANGE.GPJ IL_DOT.GDT 11/12/14

MODEL: 0460153-66997-016-021
FILE NAME: I:\jobs\2019\193-1901 PTB 192-011 District 3 Various Phase III Structure Projects\WO 2 - Waldron Road over I-57\Drawings\wall A\Sheet\0460153-66997-016-021-Wall A-soil boring1.dgn

3/18/2021 3:46:43 PM

Prairie Engineers, P.C.
www.prairieengineers.com
professional design firm no. 184-005965
© Copyright Prairie Engineers, P.C. 2018

USER NAME =	DESIGNED - RHC	REVISED -	
	CHECKED - CMF	REVISED -	
PLOT SCALE =	DRAWN - JLM	REVISED -	
PLOT DATE =	CHECKED - SMA	REVISED -	

STATE OF ILLINOIS
DEPARTMENT OF TRANSPORTATION

WALL A SOIL BORINGS
STRUCTURE NO. 046-0153

SHEET 16 OF 23 SHEETS

F.A.I. RTE.	SECTION	COUNTY	TOTAL SHEETS	SHEET NO.
57	139HBR-6	KANKAKEE	202	159

CONTRACT NO. 66997

ILLINOIS | FED. AID PROJECT

Illinois Department of Transportation
Division of Highways
Illinois Department of Transportation

SOIL BORING LOG

Date 9/25/17

ROUTE I-57 (FAI 57) DESCRIPTION Retaining Wall South of Waldron Road over I-57 on West side of I-57 LOGGED BY Larry Myers

SECTION (46-3)R, HBK, 5HBR, 6HBR LOCATION SE 1/4, SEC. 4, TWP. 30N, RNG. 13W, 2nd PM, Latitude 41.106892, Longitude -87.835321

COUNTY Kankakee DRILLING METHOD Hollow Stem Auger HAMMER TYPE CME Automatic

STRUCT. NO.
Station

BORING NO. B 221
Station 235+00.78
Offset 44.1 ft Rt.
Ground Surface Elev. 630.55 ft

Surface Water Elev. ft
Stream Bed Elev. ft

Groundwater Elev.:
First Encounter ft
Upon Completion ft
After Hrs. ft

Description	Elev.	DEPTH (ft)	BLOWS (/6")	UCS Qu (tsf)	MOIST (%)
Augered Material - Not Documented	628.55				
Rock encountered @ approximately 2' and Augered to 4'	626.55				
Borehole continued with rock coring.		-5			
		-10			
		-15			
		-20			

The Unconfined Compressive Strength (UCS) Failure Mode is indicated by (B-Bulge, S-Shear, P-Penetrometer)
The SPT (N value) is the sum of the last two blow values in each sampling zone (AASHTO T206)

BBS, form 137 (Rev. 8-99)

SOIL BORING I-57 & IL 17 INTERCHANGE.GPJ IL_DOT.GDT 2-5-18

Illinois Department of Transportation
Division of Highways
Illinois Department of Transportation

ROCK CORE LOG

Date 9/25/17

ROUTE I-57 (FAI 57) DESCRIPTION Retaining Wall South of Waldron Road over I-57 on West side of I-57 LOGGED BY Larry Myers

SECTION (46-3)R, HBK, 5HBR, 6HBR LOCATION SE 1/4, SEC. 4, TWP. 30N, RNG. 13W, 2nd PM, Latitude 41.106892, Longitude -87.835321

COUNTY Kankakee CORING METHOD Split Barrel Wire Line

STRUCT. NO.
Station

CORING BARREL TYPE & SIZE N W/L 2

BORING NO. B 221
Station 235+00.78
Offset 44.1 ft Rt.
Ground Surface Elev. 630.55 ft

Core Diameter 1.9 in
Top of Rock Elev. 628.55 ft
Begin Core Elev. 626.55 ft

Description	Elev.	DEPTH (ft)	CORE (#)	RECOVERY (%)	R.Q.D. (%)	CORE TIME (min/ft)	STRENGTH (tsf)
Dense Gray & Tan Limestone with some Vertical Fracturing - Loose Joints	626.55		1	92	8	2.2	
	624.55	-5					711.5
Dense Gray Limestone with Horizontal Fracturing & Loose Joints, some Joint Faces Oxidized Tan	621.55						
Dense Gray Limestone, Tight Joints and Numerous Vertical Fractures	618.55	-10	2	100	13	2.4	611.3
							741.9
End of Boring		-15					
		-20					

Color pictures of the cores Yes
Cores will be stored for examination until Construction Complete
The "Strength" column represents the uniaxial compressive strength of the core sample (ASTM D-2938)

BBS, form 138 (Rev. 8-99)

ROCK CORE I-57 & IL 17 INTERCHANGE.GPJ IL_DOT.GDT 2-5-18

MODEL: 0460153-66997-016-021
FILE NAME: L:\jobs\2019\193.1901 PTB 192-011 District 3 Various Phase III Structure Projects\WO 2 - Waldron Road over I-57\Drawings\wall A\Sheet\0460153-66997-016-021-Wall A-soil borings.dgn

Prairie Engineers, P.C.	USER NAME =	DESIGNED - RHC	REVISED -	STATE OF ILLINOIS DEPARTMENT OF TRANSPORTATION	WALL A SOIL BORINGS STRUCTURE NO. 046-0153	F.A.I. RTE.	SECTION	COUNTY	TOTAL SHEETS	SHEET NO.
www.prairieengineers.com		CHECKED - CMF	REVISED -			57	139HBR-6	KANKAKEE	202	160
professional design firm no. 184-005965	PLOT SCALE =	DRAWN - JLM	REVISED -					CONTRACT NO. 66997		
© Copyright Prairie Engineers, P.C. 2018	PLOT DATE =	CHECKED - SMA	REVISED -		SHEET 17 OF 23 SHEETS		ILLINOIS	FED. AID PROJECT		

3/18/2021 3:49:14 PM

Illinois Department of Transportation
Division of Highways
Illinois Department of Transportation

SOIL BORING LOG

Page 1 of 1

Date 9/25/17

ROUTE I-57 (FAI 57) DESCRIPTION Retaining Wall South of Waldron Road over I-57 on West side of I-57 LOGGED BY Larry Myers

SECTION (46-3)R, HBK, 5HBR, 6HBR LOCATION SE 1/4, SEC. 4, TWP. 30N, RNG. 13W, 2nd PM, Latitude 41.10729, Longitude -87.835345

COUNTY Kankakee DRILLING METHOD Hollow Stem Auger HAMMER TYPE CME Automatic

STRUCT. NO.
Station

BORING NO. B 222
Station 233+55.44
Offset 48.2 ft Rt.
Ground Surface Elev. 630.64 ft

Surface Water Elev. ft
Stream Bed Elev. ft

Groundwater Elev.:
First Encounter ft
Upon Completion ft
After Hrs. ft

Description	Elev.	DEPTH (ft)	BLOWS (/6")	UCS Qu (tsf)	MOIST (%)
Augered Material - Not Documented	628.64				
Rock encountered @ approximately 2' and Augered to 4'	626.64				
Borehole continued with rock coring.		-5			
		-10			
		-15			
		-20			

The Unconfined Compressive Strength (UCS) Failure Mode is indicated by (B-Bulge, S-Shear, P-Penetrometer)
The SPT (N value) is the sum of the last two blow values in each sampling zone (AASHTO T206)

BBS, form 137 (Rev. 8-99)

SOIL BORING I-57 & IL 17 INTERCHANGE.GPJ IL_DOT.GDT 2-5-18

Illinois Department of Transportation
Division of Highways
Illinois Department of Transportation

ROCK CORE LOG

Page 1 of 1

Date 9/25/17

ROUTE I-57 (FAI 57) DESCRIPTION Retaining Wall South of Waldron Road over I-57 on West side of I-57 LOGGED BY Larry Myers

SECTION (46-3)R, HBK, 5HBR, 6HBR LOCATION SE 1/4, SEC. 4, TWP. 30N, RNG. 13W, 2nd PM, Latitude 41.10729, Longitude -87.835345

COUNTY Kankakee CORING METHOD Split Barrel Wire Line

STRUCT. NO.
Station

CORING BARREL TYPE & SIZE N W/L 2
Core Diameter 1.9 in
Top of Rock Elev. 628.64 ft
Begin Core Elev. 626.64 ft

BORING NO. B 222
Station 233+55.44
Offset 48.2 ft Rt.
Ground Surface Elev. 630.64 ft

Description	Elev.	DEPTH (ft)	CORE (#)	RECOVERY (%)	R.Q.D. (%)	CORE TIME (min/ft)	STRENGTH (tsf)
Dense Gray Limestone, some Tan Oxidation at Joints, Horizontal Fractures & Relatively Tight Joints	626.64	-5	1	97	13	2	770.3
	621.64						749.7
Dense Gray Limestone with some Tan Oxidation at Joints, Horizontal Fractures with Relatively Tight Joints		-10	2	100	75	2.8	832.1
							734.6
							765.4
	616.64						
End of Boring		-15					
		-20					

Color pictures of the cores Yes
Cores will be stored for examination until Construction Complete
The "Strength" column represents the uniaxial compressive strength of the core sample (ASTM D-2938)

BBS, form 138 (Rev. 8-99)

ROCK CORE I-57 & IL 17 INTERCHANGE.GPJ IL_DOT.GDT 2-5-18

MODEL: 0460153-66997-016-021
FILE NAME: L:\jobs\2019\193.1901 PTB 192-011 District 3 Various Phase III Structure Projects\WO 2 - Waldron Road over I-57\Drawings\wall A\Sheet\0460153-66997-016-021-Wall A-soil borings.dgn

© Copyright Prairie Engineers, P.C. 2018

USER NAME =	DESIGNED - RHC	REVISED -	
	CHECKED - CMF	REVISED -	
PLOT SCALE =	DRAWN - JLM	REVISED -	
PLOT DATE =	CHECKED - SMA	REVISED -	

STATE OF ILLINOIS
DEPARTMENT OF TRANSPORTATION

WALL A SOIL BORINGS
STRUCTURE NO. 046-0153

SHEET 18 OF 23 SHEETS

F.A.I. RTE.	SECTION	COUNTY	TOTAL SHEETS	SHEET NO.
57	139HBR-6	KANKAKEE	202	161
		CONTRACT NO. 66997		
		ILLINOIS	FED. AID PROJECT	

3/18/2021 3:51:34 PM

Illinois Department of Transportation
Division of Highways
Illinois Department of Transportation

SOIL BORING LOG

Page 1 of 1

Date 9/13/17

ROUTE I-57 (FAI 57) DESCRIPTION Retaining Wall South of Waldron Road over I-57 on West side of I-57 LOGGED BY Larry Myers

SECTION (46-3)R, HBK, 5HBR, 6HBR LOCATION SE 1/4, SEC. 4, TWP. 30N, RNG. 13W, 2nd PM, Latitude 41.107697, Longitude -87.835316

COUNTY Kankakee DRILLING METHOD Hollow Stem Auger HAMMER TYPE CME Automatic

STRUCT. NO.
Station

BORING NO. B 223
Station 232+07.62
Offset 33.5 ft Rt.
Ground Surface Elev. 632.47 ft

Surface Water Elev. ft
Stream Bed Elev. ft

Groundwater Elev.:
First Encounter ft
Upon Completion ft
After ___ Hrs. ft

	DEPTH (ft)	BLOWS (/6")	UCS Qu (tsf)	MOIST (%)
Augered Material - Not Documented				
629.47				
Borehole continued with rock coring.				
	-5			
	-10			
	-15			
	-20			

The Unconfined Compressive Strength (UCS) Failure Mode is indicated by (B-Bulge, S-Shear, P-Penetrometer)
The SPT (N value) is the sum of the last two blow values in each sampling zone (AASHTO T206)

BBS, form 137 (Rev. 8-99)

SOIL BORING I-57 & IL 17 INTERCHANGE GPJ IL_DOT GDT 2-5-18

Illinois Department of Transportation
Division of Highways
Illinois Department of Transportation

ROCK CORE LOG

Page 1 of 1

Date 9/13/17

ROUTE I-57 (FAI 57) DESCRIPTION Retaining Wall South of Waldron Road over I-57 on West side of I-57 LOGGED BY Larry Myers

SECTION (46-3)R, HBK, 5HBR, 6HBR LOCATION SE 1/4, SEC. 4, TWP. 30N, RNG. 13W, 2nd PM, Latitude 41.107697, Longitude -87.835316

COUNTY Kankakee CORING METHOD Split Barrel Wire Line

STRUCT. NO.
Station

CORING BARREL TYPE & SIZE N WL 2

BORING NO. B 223
Station 232+07.62
Offset 33.5 ft Rt.
Ground Surface Elev. 632.47 ft

Core Diameter 1.9 in
Top of Rock Elev. 629.47 ft
Begin Core Elev. 629.47 ft

	DEPTH (ft)	CORE (#)	RECOVERY (%)	R.Q.D. (%)	CORE TIME (min/ft)	STRENGTH (tsf)
Tan to Gray Limestone with some Horizontal Fracturing, Joint Faces Oxidized Tan Color	629.47	1	83	37	2.6	
	-5					744.9 585.6
	624.47					807.1
Gray Limestone with some Horizontal Fracturing, Joint Faces Oxidized Tan Color		2	100	37	2.8	
	-10					872.1
	619.47					803.2 771.2 746.6
End of Boring						
	-15					
	-20					

Color pictures of the cores Yes
Cores will be stored for examination until Construction Complete
The "Strength" column represents the uniaxial compressive strength of the core sample (ASTM D-2938)

BBS, form 138 (Rev. 8-99)

ROCK CORE I-57 & IL 17 INTERCHANGE GPJ IL_DOT GDT 2-5-18

MODEL: 0460153-66997-016-021
FILE NAME: E:\Jobs\2019\193 1901 PTB 192-011 District 3 Various Phase III Structure Projects\WO 2 - Waldron Road over I-57\Drawings\wall A\Sheet\0460153-66997-016-021-Wall A-soil borings.dgn

Prairie Engineers, P.C.
www.prairieengineers.com
professional design firm no. 184-005965
© Copyright Prairie Engineers, P.C. 2018

USER NAME =	DESIGNED - RHC	REVISED -	
	CHECKED - CMF	REVISED -	
PLOT SCALE =	DRAWN - JLM	REVISED -	
PLOT DATE =	CHECKED - SMA	REVISED -	

STATE OF ILLINOIS
DEPARTMENT OF TRANSPORTATION

WALL A SOIL BORINGS
STRUCTURE NO. 046-0153

SHEET 19 OF 23 SHEETS

F.A.I. RTE.	SECTION	COUNTY	TOTAL SHEETS	SHEET NO.
57	139HBR-6	KANKAKEE	202	162
		CONTRACT NO. 66997		
		ILLINOIS	FED. AID PROJECT	

3/18/2021 3:53:09 PM

M. Cleary Engineering
3705 Progress Blvd
Peru, Il 61354
815 780-8486
Solutions You Can Build On

SOIL BORING LOG

Date 12/18/17

ROUTE FAI 57 DESCRIPTION Retaining wall west of I-57, south of K B & S Railroad Crossing LOGGED BY TLM

SECTION (46-3)R,HBK,5HBR,6HBR LOCATION SE 1/4, SEC. 4, TWP. 30N, RNG. 13W, 2nd PM, Latitude 41.108997, Longitude -87.835784

COUNTY Kankakee DRILLING METHOD Hollow Stem Auger HAMMER TYPE CME Automatic

STRUCT. NO.
Station

BORING NO. B-224
Station 227+30
Offset 148.0 ft Rt.
Ground Surface Elev. 650.69 ft

Surface Water Elev. ft
Stream Bed Elev. ft

Groundwater Elev.:
First Encounter dry ft
Upon Completion dry ft
After Hrs. ft

Description	Elev.	DEPTH (ft)	BLOWS (/6")	UCS Qu (tsf)	MOIST (%)
Brown Topsoil, Silty Loam Timber Soil, moist	649.19		4		
Hard brown & gray Silty Clay, dry			10 14 7	4.5 P	18
		-5	11 18	4.5 P	16
Hard brown Silty Clay, dry	645.19		9 15 20	4.5 P	14
Hard brown & dark gray Silty Clay Till	642.69		7 12 19	4.5 P	15
Hard gray Clay, trace fine gravel	640.19	-10	5 9 11	7.0 B	18
			5 5 9	4.7 B	17
Very stiff gray Clay	635.19	-15	3 5 8	3.1 B	19
			3 5 7	2.9 B	21
		-20			

Description	Elev.	DEPTH (ft)	BLOWS (/6")	UCS Qu (tsf)	MOIST (%)
Very stiff gray Clay *(continued)*	629.19		3 6 8	2.5 B 4.5 P	12
Hard drilling, hard gray Clay Till, gravel pieces > 1/2" in dia	626.19		6 18	5.2 B	5
Fractured and very weathered brown & gray Dolostone	620.69	-25	94 85/1" 50/.25"		5 4
Borehole continued with rock coring		-30			
		-35			
		-40			

The Unconfined Compressive Strength (UCS) Failure Mode is indicated by (B-Bulge, S-Shear, P-Penetrometer)
The SPT (N value) is the sum of the last two blow values in each sampling zone (AASHTO T206)

BBS, form 137 (Rev. 8-99)

M. Cleary Engineering
3705 Progress Blvd
Peru, Il 61354
815 780-8486
Solutions You Can Build On

ROCK CORE LOG

Date 12/18/17

ROUTE FAI 57 DESCRIPTION Retaining wall west of I-57, south of K B & S Railroad Crossing LOGGED BY TLM

SECTION (46-3)R,HBK,5HBR,6HBR LOCATION SE 1/4, SEC. 4, TWP. 30N, RNG. 13W, 2nd PM, Latitude 41.108997, Longitude -87.835784

COUNTY Kankakee CORING METHOD Wireline

STRUCT. NO.
Station

CORING BARREL TYPE & SIZE NQ

BORING NO. B-224
Station 227+30
Offset 148.0 ft Rt.
Ground Surface Elev. 650.69 ft

Core Diameter 2 in
Top of Rock Elev. 624.69 ft
Begin Core Elev. 620.69 ft

Description	Elev.	DEPTH (ft)	CORE (#)	RECOVERY (%)	R.Q.D. (%)	CORE TIME (min/ft)	STRENGTH (tsf)
Brown & gray fractured Dolostone with Shale partings	620.69		1	100	0	4	
	619.19						
Gray Dolostone with frequent & thin Shale partings. Crystal lined void approximately 2" wide x 0.5" tall & 1.5" deep. Some pyrite present in void. Void is 2.92' down from top of rock.			2	100	13	2	
		-35					769.0
							796.0
	610.69	-40					235.0
End of Boring							
		-45					
		-50					

Color pictures of the cores Yes
Cores will be stored for examination until
The "Strength" column represents the uniaxial compressive strength of the core sample (ASTM D-2938)

BBS, form 138 (Rev. 8-99)

ROCK CORE I-57 RETAINING WALLS.GPJ IL_DOT.GDT 2018

MODEL: 0460153-66997-016-021
FILE NAME: I:\jobs\2019\193.1901 PTB 192-011 District 3 Various Phase III Structure Projects\WO 2 - Waldron Road over I-57\Drawings\wall A\Sheet\0460153-66997-016-021-Wall A-soil borings.dgn

Illinois Department of Transportation
Division of Highways
IDOT

SOIL BORING LOG

Page 1 of 1

Date 3/27/10

ROUTE I-57 (FAI 57) DESCRIPTION Waldron Road over I-57, Retaining Wall Soil Investigation LOGGED BY Larry Myers

SECTION (46-3)R, HBK, 5HBR, 6HBR LOCATION SE 1/4, SEC. 4, TWP. 30N, RNG. 13W, Latitude 41.108482, Longitude -87.835524

COUNTY Kankakee DRILLING METHOD Hollow Stem Auger HAMMER TYPE CME Automatic

STRUCT. NO. 046-0080
Station 230+53.99 (Exist.)

BORING NO. BH 101 (NW Quad.)
Station 229+13.97
Offset 82.1 ft Rt.
Ground Surface Elev. 657.19 ft

Surface Water Elev. ft
Stream Bed Elev. ft

Groundwater Elev.:
First Encounter ft
Upon Completion ft
After Hrs. ft

Description	Elev.	DEPTH (ft)	BLOWS (/6")	UCS Qu (tsf)	MOIST (%)
Augered Bituminous, Sand & Gravel & Black, Gray, Silty Clay Loam Fill	654.69				
Very Stiff to Hard, Gray/Brown/Black, Silty Loam/Silty Clay Loam Till Fill with Rock & Concrete Debris	648.69	-5	4, 5, 6	3.5 P	23
Hard Gray & Brown Silty Clay/Silty Clay Loam	647.19	-10	3, 4, 5	3.5 P	18
Hard, Brown, Silty Clay Loam Till	642.19	-15	3, 5	4.3 S	22
Very Stiff Brown Silty Loam Till with Silt Layers	637.69	-20	8, 12, 14	8.2 S	17
Hard Brown to Gray Silty Clay/Silty Clay Loam Till *(continued)*	632.19	-25	9, 10, 11	8.2 S	19
Hard Gray Silty Clay Loam Till with Large Gravel Pieces	629.69	-30	3, 4, 5	3.0 P	20
Assumed Dolostone Surface, Auger Refusal End of Boring		-35	3, 4, 5	3.0 P	18
Hard Brown to Gray Silty Clay/Silty Clay Loam Till *(continued)*		-40	5, 6, 7	4.6 S	19
			3, 5, 7	4.0 S	22
			4, 8, 12	4.0 P	12
			100/1"	No Recovery	

The Unconfined Compressive Strength (UCS) Failure Mode is indicated by (B-Bulge, S-Shear, P-Penetrometer)
The SPT (N value) is the sum of the last two blow values in each sampling zone (AASHTO T206)

BBS, form 137 (Rev. 8-99)

SOIL BORING I-57 & IL 17 INTERCHANGE.GPJ IL_DOT.GDT 11-1-18

Illinois Department of Transportation
Division of Highways
Illinois Department of Transportation

SOIL BORING LOG

Page 1 of 1

Date 9/7/17

ROUTE I-57 (FAI 57) DESCRIPTION Waldron Road over I-57, 3.4 miles North of US 45/52 LOGGED BY Larry Myers

SECTION (46-3)R, HBK, 5HBR, 6HBR LOCATION SE 1/4, SEC. 4, TWP. 30N, RNG. 13W, 2nd PM, Latitude 41.108486, Longitude -87.835544

COUNTY Kankakee DRILLING METHOD Hollow Stem Auger HAMMER TYPE CME Automatic

STRUCT. NO. 046-0080 (EX)
Station 230+53.99 (EX)

BORING NO. B 219 (N. Abut.)
Station 229+18.36
Offset 87.5 ft Rt.
Ground Surface Elev. 657.30 ft

Surface Water Elev. ft
Stream Bed Elev. ft

Groundwater Elev.:
First Encounter ft
Upon Completion ft
After Hrs. ft

Description	Elev.	DEPTH (ft)	BLOWS (/6")	UCS Qu (tsf)	MOIST (%)
Augered Material - Not Documented		-5			
		-10			
		-15			
		-20			
		-25			
		-30			
		-35			
		-40			
Augered Material - Not Documented *(continued)*	624.80				
Borehole continued with rock coring.					

The Unconfined Compressive Strength (UCS) Failure Mode is indicated by (B-Bulge, S-Shear, P-Penetrometer)
The SPT (N value) is the sum of the last two blow values in each sampling zone (AASHTO T206)

BBS, form 137 (Rev. 8-99)

SOIL BORING I-57 & IL 17 INTERCHANGE.GPJ IL_DOT.GDT 3-5-18

Illinois Department of Transportation
Division of Highways
Illinois Department of Transportation

ROCK CORE LOG

Page 1 of 1

Date 9/7/17

ROUTE I-57 (FAI 57) DESCRIPTION Waldron Road over I-57, 3.4 miles North of US 45/52 LOGGED BY Larry Myers

SECTION (46-3)R, HBK, 5HBR, 6HBR LOCATION SE 1/4, SEC. 4, TWP. 30N, RNG. 13W, 2nd PM, Latitude 41.108486, Longitude -87.835544

COUNTY Kankakee CORING METHOD Split Barrel Wire Line

STRUCT. NO. 046-0080 (EX)
Station 230+53.99 (EX)

CORING BARREL TYPE & SIZE N W/L 2

Core Diameter 1.9 in
Top of Rock Elev. 624.80 ft
Begin Core Elev. 624.80 ft

BORING NO. B 219 (N. Abut.)
Station 229+18.36
Offset 87.5 ft Rt
Ground Surface Elev. 657.30 ft

Description	Elev.	DEPTH (ft)	CORE (#)	RECOVERY (%)	R.Q.D. (%)	CORE TIME (min/ft)	STRENGTH (tsf)
Dense Gray Limestone with Generally Tight Horizontal Fractures, Interbedded Thin Shale Seams in top 6" Minor Calcite Crystal Vug Fill	624.80		1	97	28	2.2	
		-35					895.1
							822.2
							732.4
Dense Gray Limestone with Tight Horizontal Fracturing Minor Calcite Crystal Vug Fill	619.80		2	100	55	1.6	1359.7
		-40					1354.8
							1156.4
Dense Gray Limestone with Tight Horizontal Fractures Minor Calcite Crystal Vug Fill	614.80		3	100	83	3.2	
		-45					1005.9
							1198.5
							598.8
							809.0
End of Boring	609.80	-50					

Color pictures of the cores Yes
Cores will be stored for examination until Construction Complete
The "Strength" column represents the uniaxial compressive strength of the core sample (ASTM D-2938)

BBS, form 138 (Rev. 8-99)

ROCK CORE I-57 & IL 17 INTERCHANGE.GPJ IL_DOT.GDT 3-5-18

MODEL: 0460153-66997-016-021
FILE NAME: I:\jobs\2019\193 1901 PTB 192-011 District 3 Various Phase III Structure Projects\WO 2 - Waldron Road over I-57\Drawings\wall A\Sheet\0460153-66997-016-021-Wall A-soil borings.dgn

Prairie Engineers, P.C.	USER NAME =	DESIGNED - RHC	REVISED -
www.prairieengineers.com		CHECKED - CMF	REVISED -
professional design firm no. 184-005965	PLOT SCALE =	DRAWN - JLM	REVISED -
© Copyright Prairie Engineers, P.C. 2018	PLOT DATE =	CHECKED - SMA	REVISED -

STATE OF ILLINOIS
DEPARTMENT OF TRANSPORTATION

WALL A SOIL BORINGS
STRUCTURE NO. 046-0153

SHEET 21 OF 23 SHEETS

F.A.I. RTE.	SECTION	COUNTY	TOTAL SHEETS	SHEET NO.
57	139HBR-6	KANKAKEE	202	164

CONTRACT NO. 66997

ILLINOIS | FED. AID PROJECT

3/18/2021 3:55:53 PM

M. Cleary Engineering
3705 Progress Blvd
Peru, Il 61354
815 780-8486

SOIL BORING LOG

Solutions You Can Build On

Date 12/21/17

ROUTE FAI 57 DESCRIPTION Retaining wall east of I-57, south of Waldron Road LOGGED BY TMR

SECTION (46-3)R,HBK,5HBR,6HBR LOCATION SE 1/4, SEC. 4, TWP. 30N, RNG. 13W, 2nd PM, Latitude 41.107577, Longitude -87.835013

COUNTY Kankakee DRILLING METHOD Hollow Stem Auger HAMMER TYPE CME Automatic

STRUCT. NO.
Station

BORING NO. B-220
Station 232+54
Offset 48.0 ft Lt
Ground Surface Elev. 634.83 ft

Surface Water Elev. ft
Stream Bed Elev. ft

Groundwater Elev.:
First Encountor dry ft
Upon Completion dry ft
After Hrs. ft

Description	Elev.	DEPTH (ft)	BLOWS (/6")	UCS Qu (tsf)	MOIST (%)
6" Brown Silty Clay Topsoil	634.33				
Dense Light Brown Silty Sandy Gravel w/ trace Clay			11		
			46	-	11
			21		
			26		
	630.33		23	-	8
Weathered fractured Dolostone		-5	50/2"		
	626.33				
Borehole continued with rock coring.		-10			
		-15			
		-20			

The Unconfined Compressive Strength (UCS) Failure Mode is indicated by (B-Bulge, S-Shear, P-Penetrometer)
The SPT (N value) is the sum of the last two blow values in each sampling zone (AASHTO T206)

BBS, form 137 (Rev. 8-99)

M. Cleary Engineering
3705 Progress Blvd
Peru, Il 61354
815 780-8486

ROCK CORE LOG

Solutions You Can Build On

Date 12/21/17

ROUTE FAI 57 DESCRIPTION Retaining wall east of I-57, south of Waldron Road LOGGED BY TMR

SECTION (46-3)R,HBK,5HBR,6HBR LOCATION SE 1/4, SEC. 4, TWP. 30N, RNG. 13W, 2nd PM, Latitude 41.107577, Longitude -87.835013

COUNTY Kankakee CORING METHOD Wireline

STRUCT. NO.
Station

BORING NO. B-220
Station 232+54
Offset 48.0 ft Lt
Ground Surface Elev. 634.83 ft

CORING BARREL TYPE & SIZE NQ

Core Diameter 2 in
Top of Rock Elev. 630.33 ft
Begin Core Elev. 626.33 ft

Description	Elev.	DEPTH (ft)	CORE (#)	RECOVERY (%)	R.Q.D. (%)	CORE TIME (min/ft)	STRENGTH (tsf)
Gray Dolostone	626.33		1	100	68	1.65	543.0
		-10					
	623.33						
Brown Dolostone	622.33						
Gray Dolostone, Crystal solution void @ 12.66' 3/4" W x 1/2" H							489.0
		-15					
							358.0
	616.33						398.0
End of Boring							
		-20					
		-25					

Color pictures of the cores Yes
Cores will be stored for examination until
The "Strength" column represents the uniaxial compressive strength of the core sample (ASTM D-2938)

BBS, form 138 (Rev. 8-99)

ROCK CORE I-57 RETAINING WALLS GP3 IL DOT GDT 2.1.18

MODEL: 0460153-66997-022-023
FILE NAME: I:\jobs\2019\193.1901 PTB 192-011 District 3 Various Phase III Structure Projects\WO 2 - Waldron Road over I-57\Drawings\wall B\Sheet\0460153-66997-022-023-Wall B-soil borings.dgn

Prairie Engineers, P.C.
www.prairieengineers.com
professional design firm no. 184-005965
© Copyright Prairie Engineers, P.C. 2018

USER NAME =	DESIGNED - RHC	REVISED -	
	CHECKED - CMF	REVISED -	
PLOT SCALE =	DRAWN - JLM	REVISED -	
PLOT DATE =	CHECKED - SMA	REVISED -	

STATE OF ILLINOIS
DEPARTMENT OF TRANSPORTATION

WALL B SOIL BORINGS
STRUCTURE NO. 046-0153

SHEET 22 OF 23 SHEETS

F.A.I. RTE.	SECTION	COUNTY	TOTAL SHEETS	SHEET NO.
57	139HBR-6	KANKAKEE	202	165
		CONTRACT NO. 66997		
		ILLINOIS	FED. AID PROJECT	

3/18/2021 4:01:16 PM

Illinois Department of Transportation
Division of Highways
Illinois Department of Transportation

SOIL BORING LOG

Page 1 of 1

Date 9/8/17

ROUTE I-57 (FAI 57) DESCRIPTION Waldron Road over I-57, 3.4 miles North of US 45/52 LOGGED BY Larry Myers

SECTION (46-3)R, HBK, 5HBR, 6HBR LOCATION SE 1/4, SEC. 4, TWP. 30N, RNG. 13W, 2nd PM, Latitude 41.107696, Longitude -87.83471

COUNTY Kankakee DRILLING METHOD Hollow Stem Auger HAMMER TYPE CME Automatic

STRUCT. NO. 046-0080 (EX)
Station 230+53.99 (EX)

BORING NO. B 217 (S. Abut.)
Station 232+12.99
Offset 133.4 ft Lt.
Ground Surface Elev. 648.76 ft

Surface Water Elev. ft
Stream Bed Elev. ft

Groundwater Elev.:
First Encounter ft
Upon Completion ft
After ___ Hrs. ft

Description	DEPTH (ft)	BLOWS (/6")	UCS Qu (tsf)	MOIST (%)
Augered Material - Not Documented	-5, -10, -15, -20			
632.76 Borehole continued with rock coring.				

The Unconfined Compressive Strength (UCS) Failure Mode is indicated by (B-Bulge, S-Shear, P-Penetrometer)
The SPT (N value) is the sum of the last two blow values in each sampling zone (AASHTO T206)

BBS, form 137 (Rev. 8-99)

SOIL BORING I-57 & IL 17 INTERCHANGE.GPJ IL DOT GDT 2-5-18

Illinois Department of Transportation
Division of Highways
Illinois Department of Transportation

ROCK CORE LOG

Page 1 of 1

Date 9/8/17

ROUTE I-57 (FAI 57) DESCRIPTION Waldron Road over I-57, 3.4 miles North of US 45/52 LOGGED BY Larry Myers

SECTION (46-3)R, HBK, 5HBR, 6HBR LOCATION SE 1/4, SEC. 4, TWP. 30N, RNG. 13W, 2nd PM, Latitude 41.107696, Longitude -87.83471

COUNTY Kankakee CORING METHOD Split Barrel Wire Line

STRUCT. NO. 046-0080 (EX)
Station 230+53.99 (EX)

CORING BARREL TYPE & SIZE N W/L 2
Core Diameter 1.9 in
Top of Rock Elev. 632.76 ft
Begin Core Elev. 632.76 ft

BORING NO. B 217 (S. Abut.)
Station 232+12.99
Offset 133.4 ft Lt.
Ground Surface Elev. 648.76 ft

Description	DEPTH (ft)	CORE (#)	RECOVERY (%)	R.Q.D. (%)	CORE TIME (min/ft)	STRENGTH (tsf)
Tan Dolostone Highly Horizontally Fractured with most Seams Filled with Weathered Shale, Loose Joints	632.76, -20, 627.76	1	90	0	2.4	
Tan to Gray Dolostone - Horizontally Fractured with Loose Joints, some Vertical Fractures	-25, 622.76	2	90	48	3	711.3 766.8 761.6 655.0 798.9
Gray Limestone with some Loose Horizontal Fracturing and Heavy Vertical Fracturing. Horizontal Joints are Oxidized Tan Color	-30, 617.76	3	100	22	2.8	875.5 691.3
End of Boring	-35					

Color pictures of the cores Yes
Cores will be stored for examination until Construction Complete
The "Strength" column represents the uniaxial compressive strength of the core sample (ASTM D-2938)

BBS, form 138 (Rev. 8-99)

ROCK CORE I-57 & IL 17 INTERCHANGE.GPJ IL DOT GDT 2-5-18

MODEL: 046153-66997-022-023
FILE NAME: E:\jobs\2019\193.1901 PTB 192-011 District 3 Various Phase III Structure Projects\WO 2 - Waldron Road over I-57\Drawings\wall B\Sheet\0460153-66997-022-023-Wall B-soil borings.dgn

Prairie Engineers, P.C.
www.prairieengineers.com
professional design firm no. 184-005965
© Copyright Prairie Engineers, P.C. 2018

USER NAME =	DESIGNED - RHC	REVISED -
	CHECKED - CMF	REVISED -
PLOT SCALE =	DRAWN - JLM	REVISED -
PLOT DATE =	CHECKED - SMA	REVISED -

STATE OF ILLINOIS
DEPARTMENT OF TRANSPORTATION

WALL B SOIL BORINGS
STRUCTURE NO. 046-0153

SHEET 23 OF 23 SHEETS

F.A.I. RTE.	SECTION	COUNTY	TOTAL SHEETS	SHEET NO.
57	139HBR-6	KANKAKEE	202	166

CONTRACT NO. 66997
ILLINOIS FED. AID PROJECT

3/18/2021 4:03:05 PM

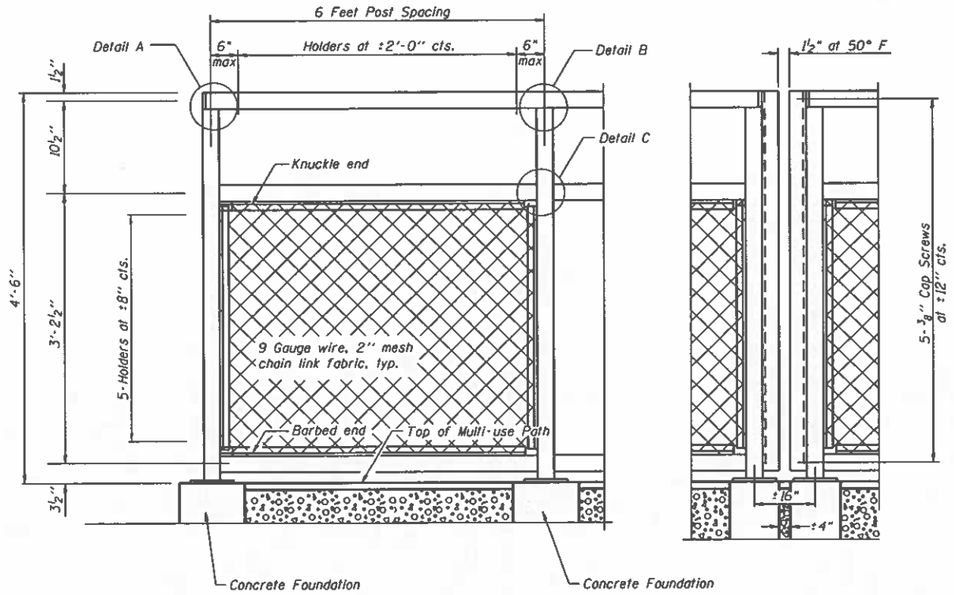

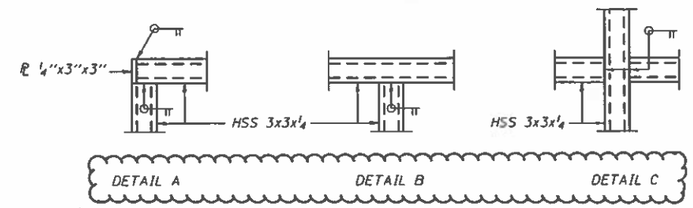

Notes:

1. Field verify joint & light pole locations prior to fabricating.
2. All steel rail elements shall be galvanized according to Article 509.05 of the Standard Specifications.
3. All labor, equipment and materials necessary to furnish and install the concrete foundations for the Bicycle Railing posts shall be included in the contract unit price for BICYCLE RAILING.

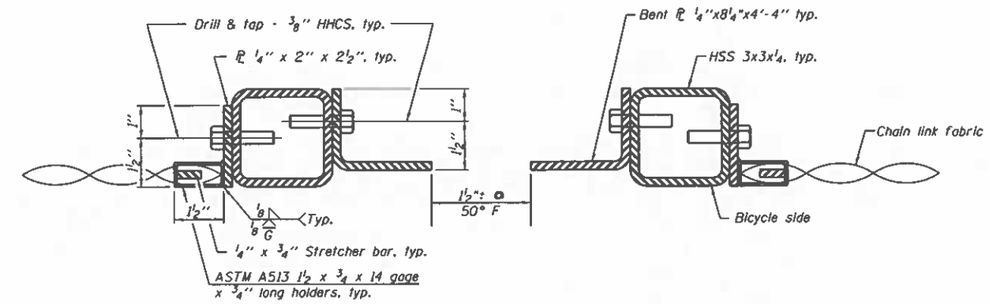

Item	Unit	Quantity
Bicycle Railing	Foot	469

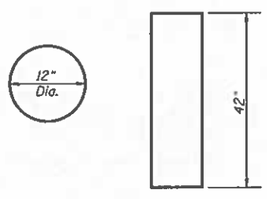

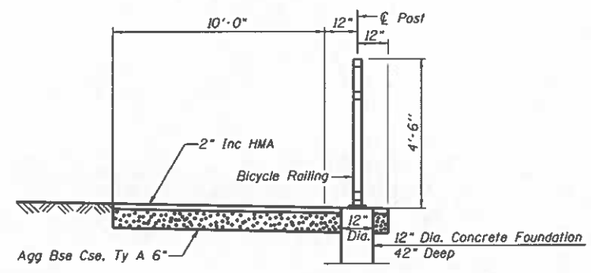

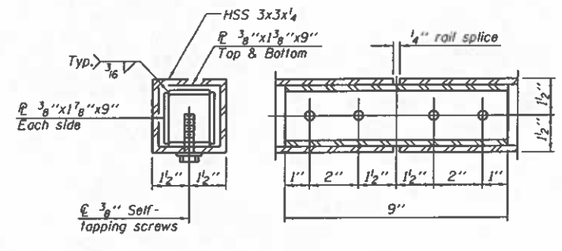

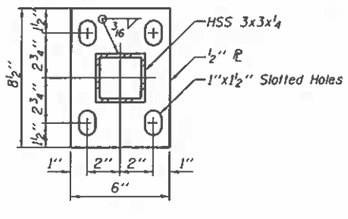

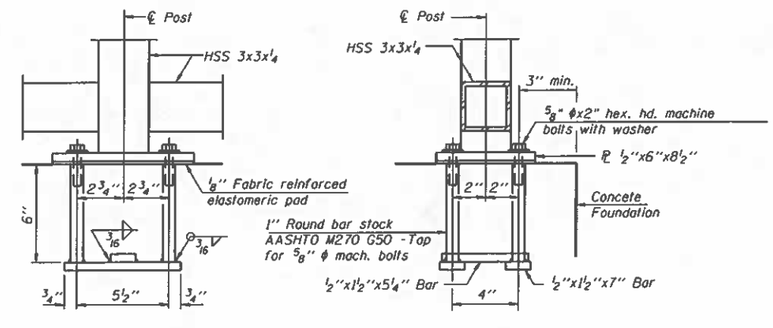

In lieu of the cast-in-place anchor device shown, the Contractor has the option of drilling and setting ⅝" ϕ anchor rods according to Article 509.06 of the Standard Specifications. Embedment shall be according to the manufacturer's specifications.

MODEL: Plan 1
FILE NAME: D305897-Sht-Detail-01.dgn

TranSmart
411 South Wells Street Suite 1000
Chicago, Illinois 60607

USER NAME = malehlan	DESIGNED - BJD	REVISED -	
	DRAWN - BJD	REVISED -	
PLOT SCALE = 0.10000833 ' / in.	CHECKED - TW	REVISED -	
PLOT DATE = 7/9/2021	DATE - 2021/03/26	REVISED -	

STATE OF ILLINOIS
DEPARTMENT OF TRANSPORTATION

BICYCLE RAILING
DETAILS

SCALE: NTS | SHEET OF SHEETS | STA. TO STA.

F.A.I. RTE.	SECTION	COUNTY	TOTAL SHEETS	SHEET NO.
57	139 HBR-6	KANKAKEE	202	187
		CONTRACT NO. 66997		
	ILLINOIS	FED. AID PROJECT		

REV. 08/25/21

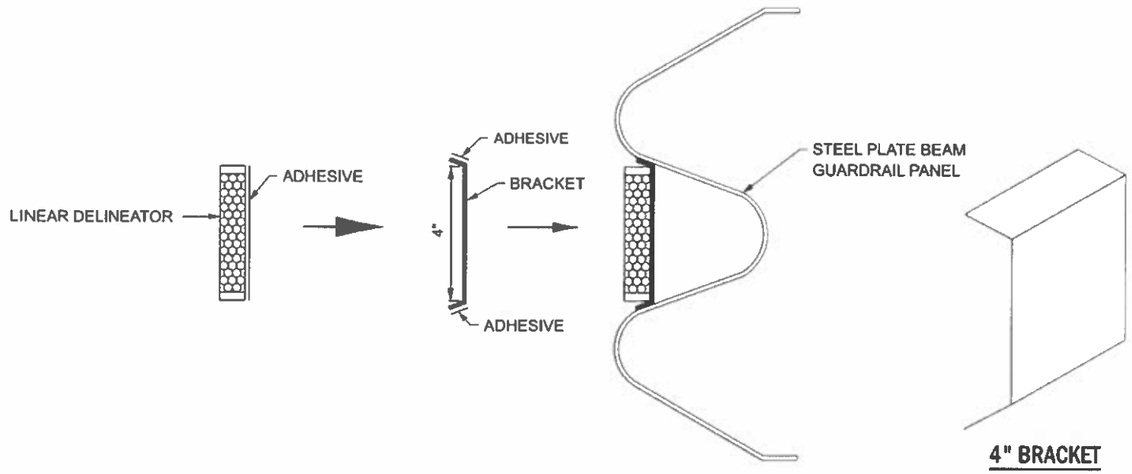

LINEATOR DELINEATOR APPLICATION TO STANDARD GALVANIZED GUARDRAIL

LINEATOR DELINEATOR SHALL BE APLLIED ACCORDING TO THE MANUFACTURER'S RECOMMENDATIONS

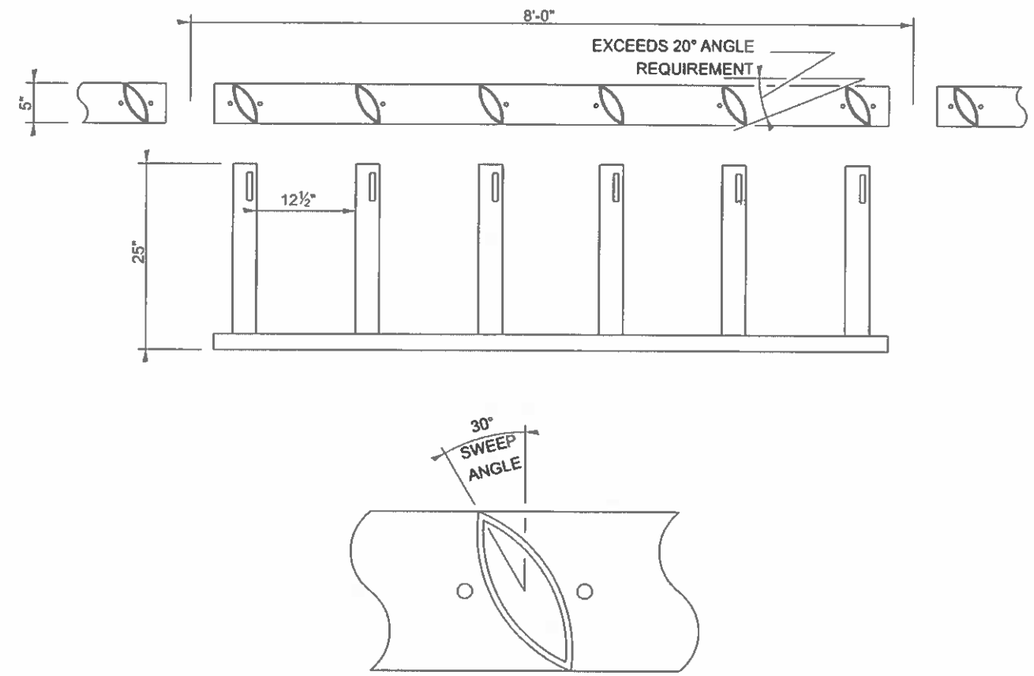

DETAIL DRAWING

MODULAR GLARE SCREEN BLADES

MODEL: Plan 1
FILE NAME: D96665-Sht-Detail-01.dgn

TranSmart
411 South Wells Street Suite 1000
Chicago, Illinois 60607

USER NAME = rsalphian	DESIGNED - NS	REVISED -	STATE OF ILLINOIS DEPARTMENT OF TRANSPORTATION
	DRAWN - NS	REVISED -	
PLOT SCALE = 0.10000533' / in.	CHECKED - TW	REVISED -	
PLOT DATE = 3/29/2021	DATE - 2021/03/26	REVISED -	

ROADWAY DETAILS
LINEAR DELINEATOR, 4" & MODULAR GLARE SCREEN

SCALE: NTS | SHEET OF SHEETS | STA. TO STA.

F.A.I. RTE.	SECTION	COUNTY	TOTAL SHEETS	SHEET NO.
57	139 HBR-6	KANKAKEE	&TOT	168

CONTRACT NO. 66997

ILLINOIS | FED. AID PROJECT

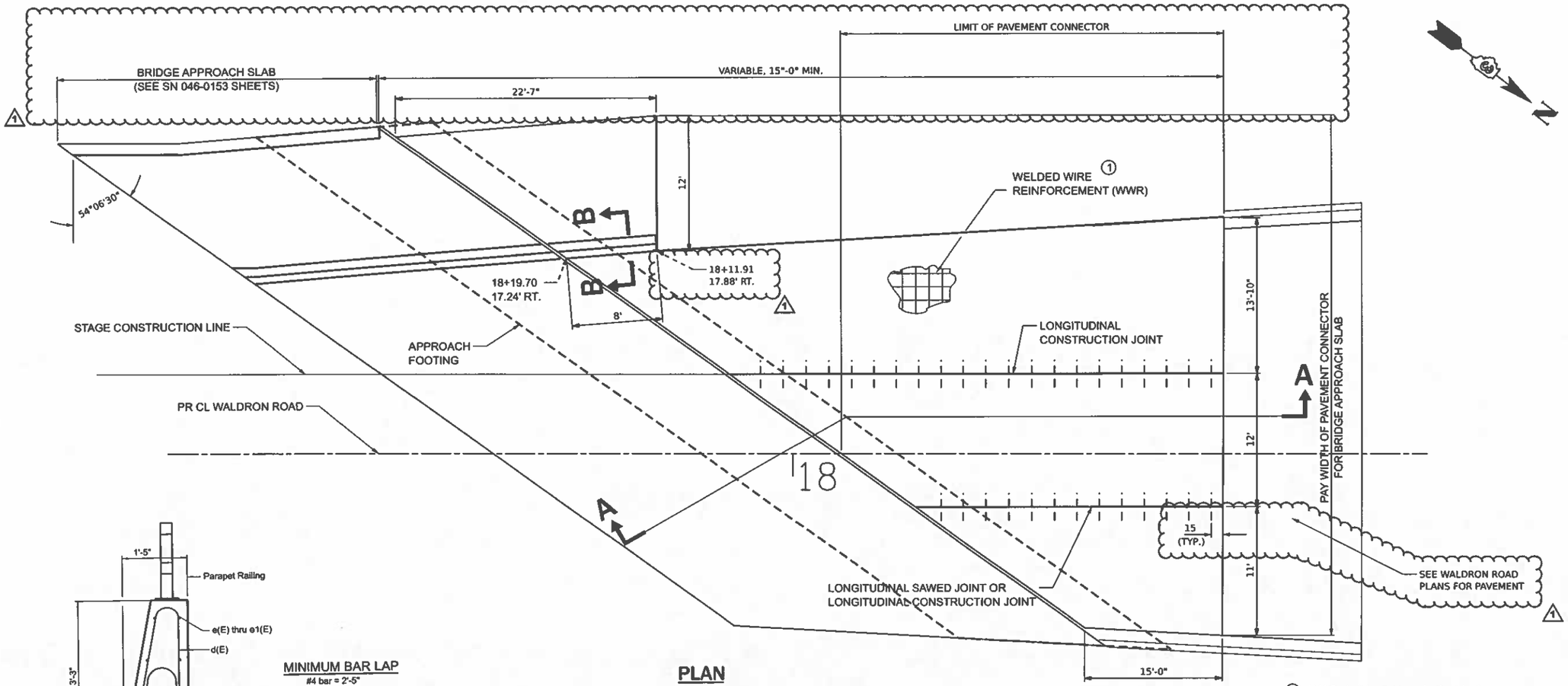

PLAN
NORTH PAVEMENT CONNECTOR

STA 17+60 TO STA 18+26

① WWR shall be 0.11 sq. in./ft. in both directions. Maximum wire spacing shall be 6 . Minimum lap distance shall be two cross wires.

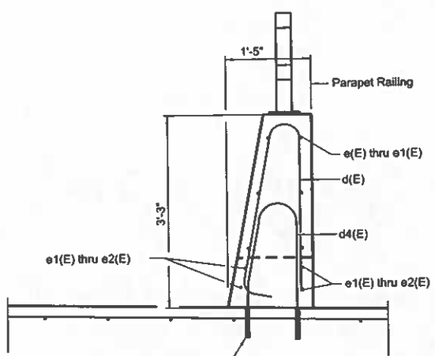

Drill and set #5 d4(E) bars according to Article 584 of the Standard Specifications. Drilled holes shall be roughed or scored per Manufacturer's recommendations. Maximum depth of hole shall not exceed 6". Contractor shall take all necessary precautions to prevent drilled hole interference with welded wire reinforcement.

MINIMUM BAR LAP
#4 bar = 2'-5"

SECTION B-B

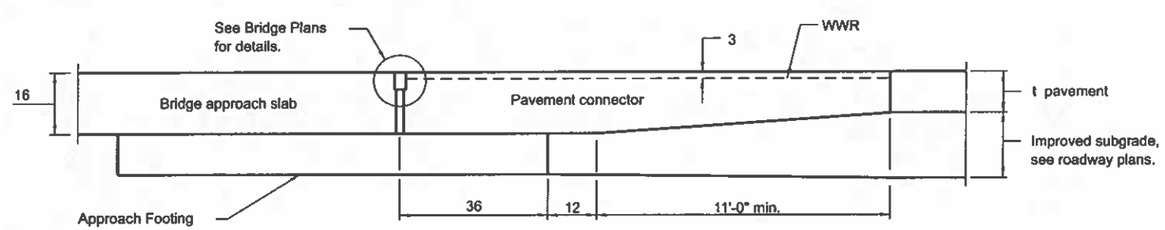

SECTION A-A

GENERAL NOTES

THICKNESS-"t"=Thickness of Pavement.

Concrete barrier, reinforcement bars and parapet railing will be included in the cost of PAVEMENT CONNECTOR FOR BRIDGE APPROACH SLAB.

See Standard 420001 for pavement joint details not shown.

See Standard 610001 for shoulder inlet with curb when required.

See plans for details of bridge approach slab, approach footing and joint treatment.

All dimensions are in inches unless otherwise shown.

TranSmart
411 South Wells Street Suite 1000
Chicago, Illinois 60607

USER NAME = ssh\c	DESIGNED - NS	REVISED -	
	DRAWN - NS	REVISED -	
PLOT SCALE = 0.16666633 ' / in.	CHECKED - TW	REVISED -	
PLOT DATE = 7/9/2021	DATE - 2021/03/26	REVISED -	

STATE OF ILLINOIS
DEPARTMENT OF TRANSPORTATION

PAVEMENT CONNECTOR (PCC)
FOR BRIDGE APPROACH SLAB

SCALE: NTS | SHEET 1 OF 2 SHEETS | STA. | TO STA.

F.A.I. RTE.	SECTION	COUNTY	TOTAL SHEETS	SHEET NO.
57	139 HBR-6	KANKAKEE	202	169

CONTRACT NO. 66997

ILLINOIS | FED. AID PROJECT

MODEL: Plan 1
FILE NAME: D309937-Sht-Detail-03.dgn

1 REV. 08/25/21

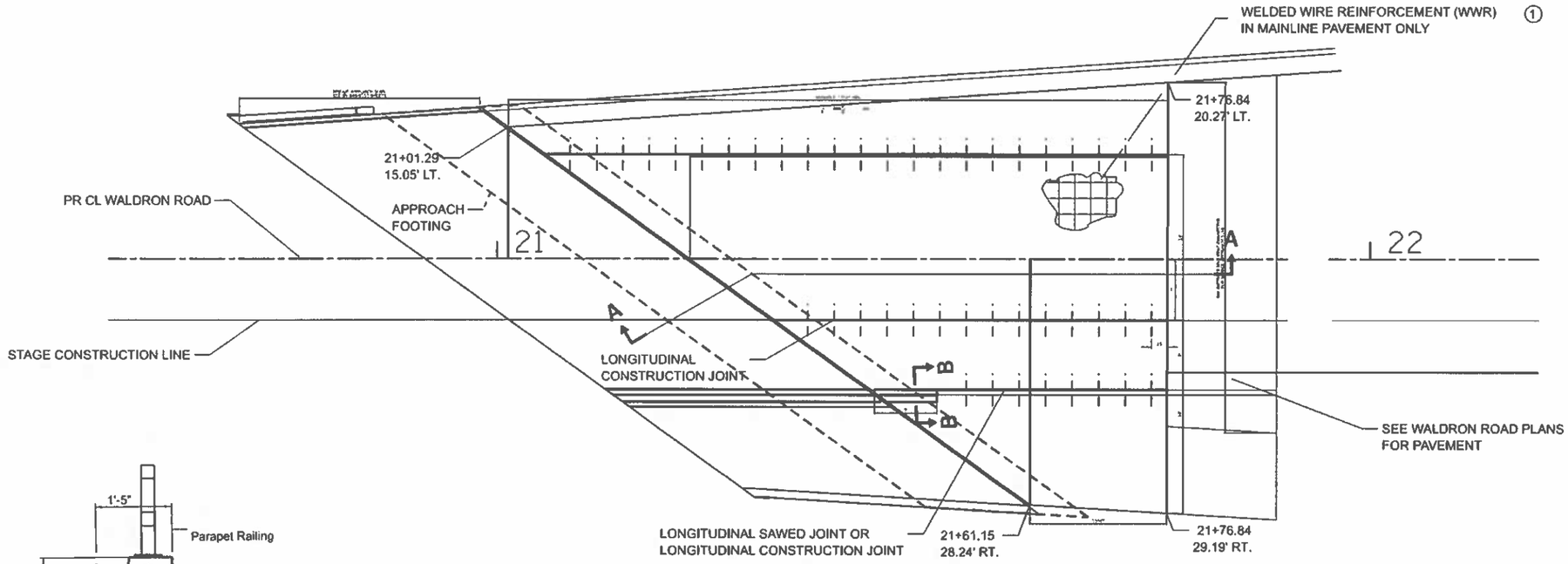

PLAN
SOUTH PAVEMENT CONNECTOR

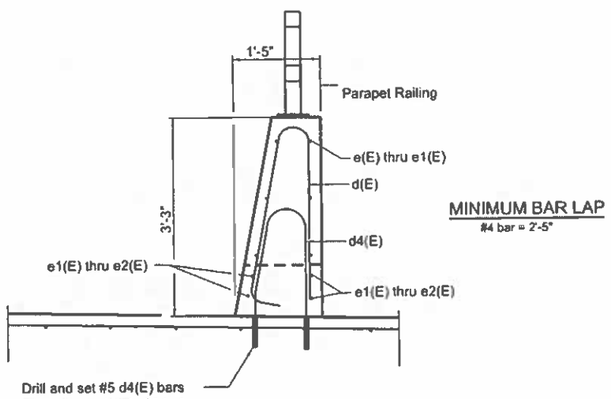

SECTION B-B

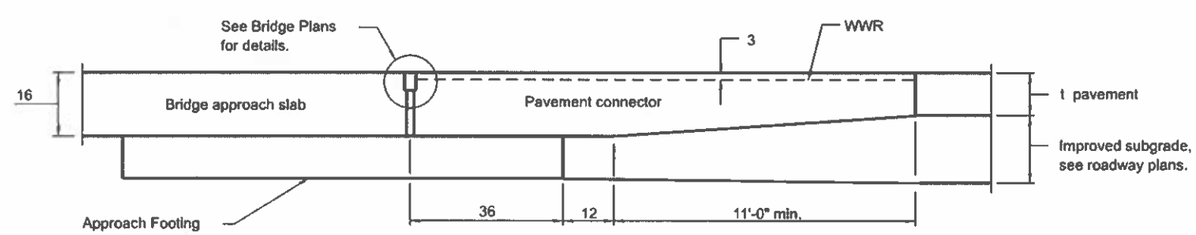

SECTION A-A

① WWR shall be 0.11 sq. in./ft. in both directions. Maximum wire spacing shall be 6 . Minimum lap distance shall be two cross wires.

GENERAL NOTES

THICKNESS-"t"=Thickness of Pavement.

Concrete barrier, reinforcement bars and parapet railing will be included in the cost of PAVEMENT CONNECTOR FOR BRIDGE APPROACH SLAB.

See Standard 420001 for pavement joint details not shown.

See Standard 610001 for shoulder inlet with curb when required.

See plans for details of bridge approach slab, approach footing and joint treatment.

All dimensions are in inches unless otherwise shown.

TranSmart 411 South Wells Street Suite 1000 Chicago, Illinois 60607	USER NAME =	DESIGNED - NS	REVISED -	STATE OF ILLINOIS DEPARTMENT OF TRANSPORTATION	PAVEMENT CONNECTOR (PCC) FOR BRIDGE APPROACH SLAB	F.A.I. RTE.	SECTION	COUNTY	TOTAL SHEETS	SHEET NO.
		DRAWN - NS	REVISED -			57	139 HBR-6	KANKAKEE	202	170
	PLOT SCALE = 0.16666633 / in.	CHECKED - TW	REVISED -					CONTRACT NO. 66997		
	PLOT DATE = 3/29/2021	DATE - 2021/03/26	REVISED -		SCALE: NTS / SHEET 2 OF 2 SHEETS / STA. / TO STA.		ILLINOIS	FED. AID PROJECT		

MODEL: Plan 1
FILE NAME: C:\Users\s.tra.Desktop\d.dgn

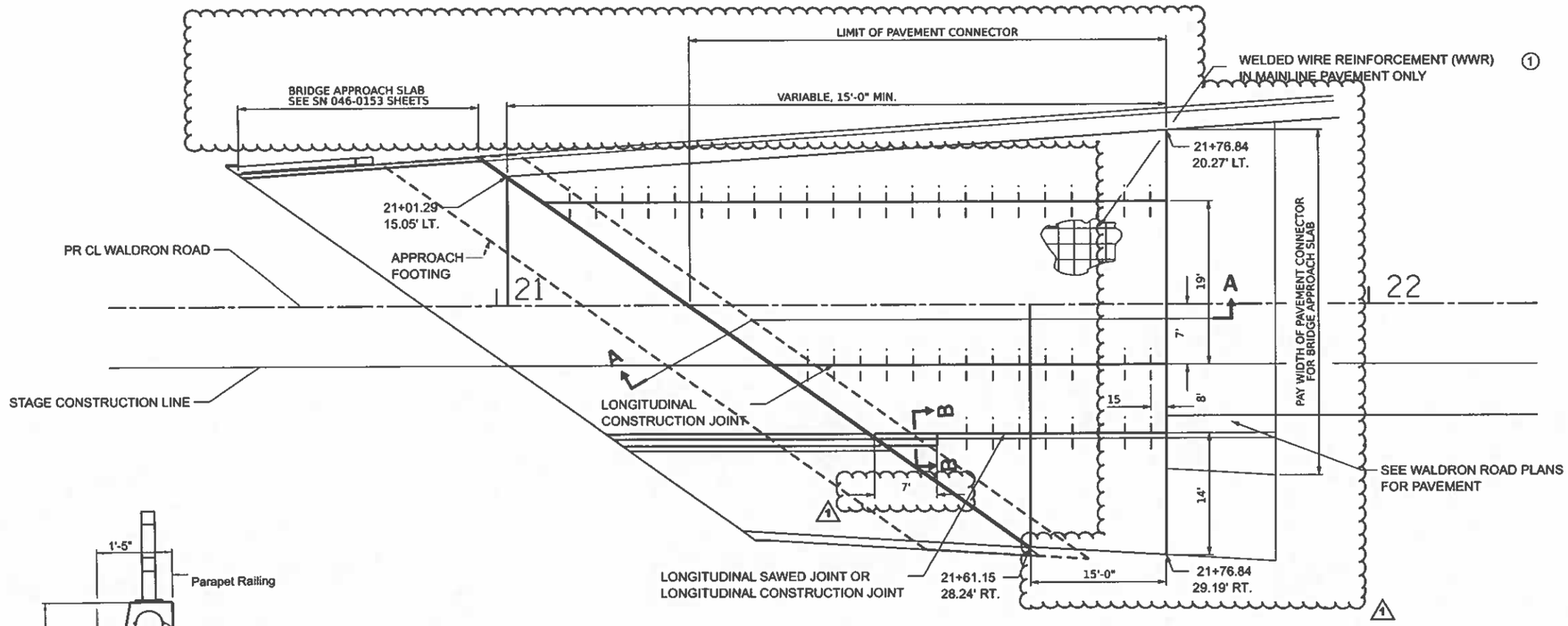

PLAN
SOUTH PAVEMENT CONNECTOR

STA. 21+22 TO STA 21+76

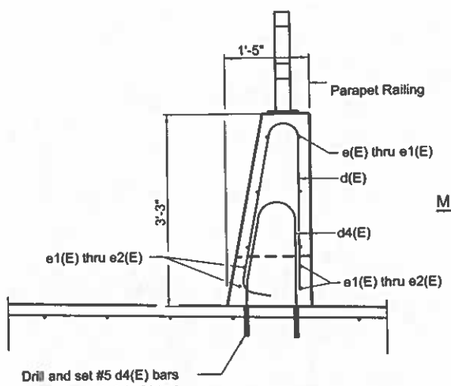

MINIMUM BAR LAP
#4 bar = 2'-5"

SECTION B-B

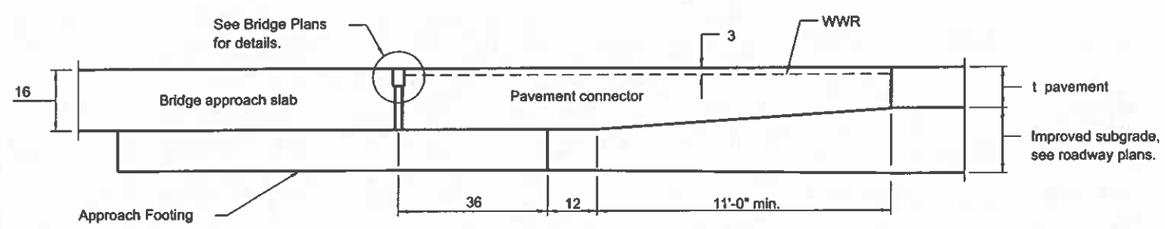

SECTION A-A

(1) WWR shall be 0.11 sq. in./ft. in both directions. Maximum wire spacing shall be 6 . Minimum lap distance shall be two cross wires.

GENERAL NOTES

THICKNESS-"t"=Thickness of Pavement.

Concrete barrier, reinforcement bars and parapet railing will be included in the cost of PAVEMENT CONNECTOR FOR BRIDGE APPROACH SLAB.

See Standard 420001 for pavement joint details not shown.

See Standard 610001 for shoulder inlet with curb when required.

See plans for details of bridge approach slab, approach footing and joint treatment.

All dimensions are in inches unless otherwise shown.

MODEL: Plan 1
FILE NAME: D586997-Sht-Detail-04.dgn

TranSmart 411 South Wells Street Suite 1000 Chicago, Illinois 60607	USER NAME = sahhc	DESIGNED - NS	REVISED -	STATE OF ILLINOIS DEPARTMENT OF TRANSPORTATION	PAVEMENT CONNECTOR (PCC) FOR BRIDGE APPROACH SLAB	F.A.I. RTE.	SECTION	COUNTY	TOTAL SHEETS	SHEET NO.
		DRAWN - NS	REVISED -			57	139 HBR-6	KANKAKEE	202	170A
	PLOT SCALE = 0.18888833' / in.	CHECKED - TW	REVISED -					CONTRACT NO. 66997		
	PLOT DATE = 7/9/2021	DATE - 2021/03/26	REVISED -		SCALE: NTS / SHEET 2 OF 2 SHEETS / STA. / TO STA.		ILLINOIS	FED. AID PROJECT		

1 REV. 08/25/21

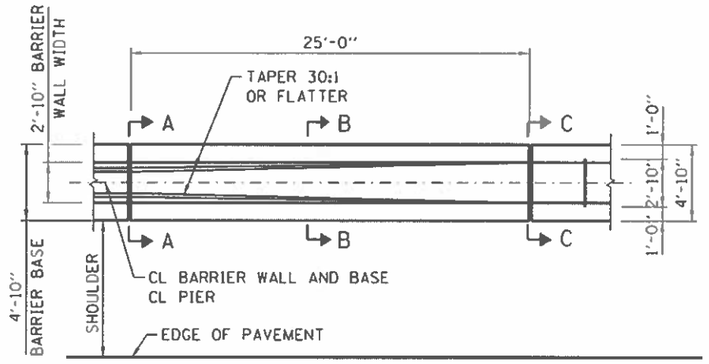

PLAN

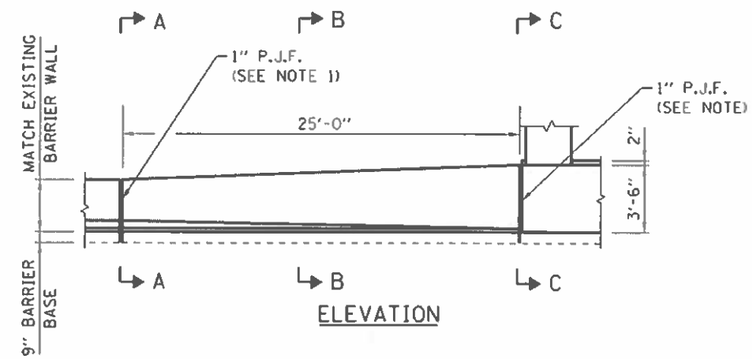

ELEVATION

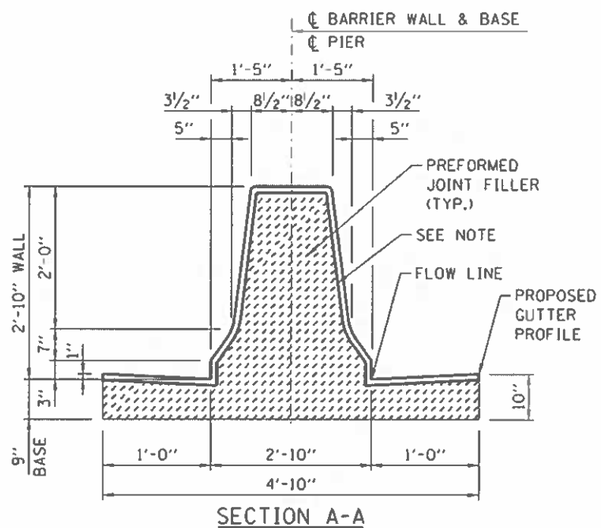

SECTION A-A

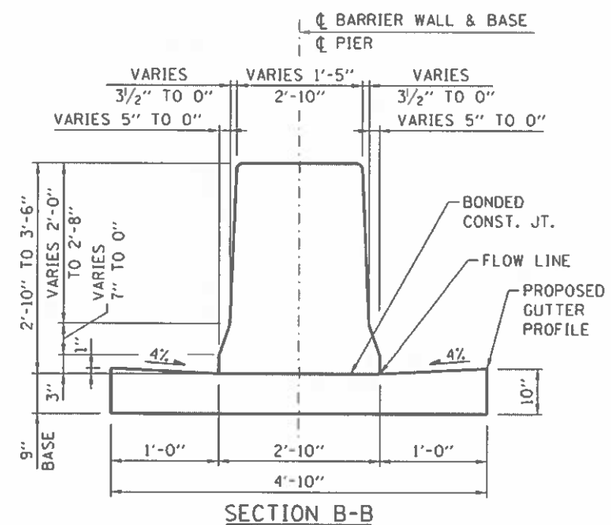

SECTION B-B

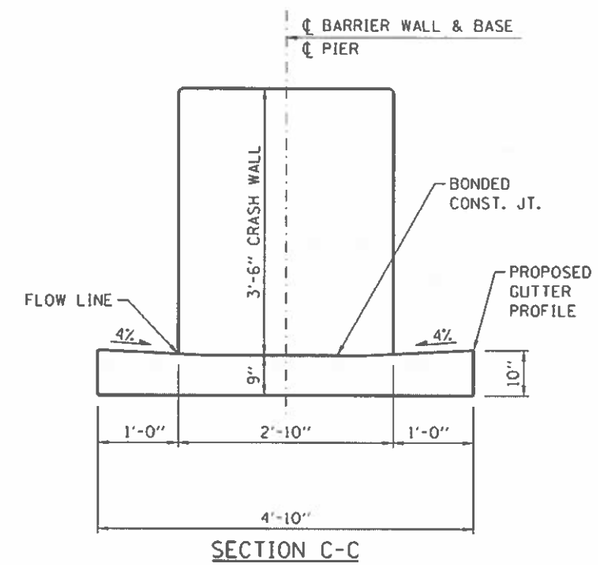

SECTION C-C

NOTE:

1. NON-STAINING GRAY ONE COMPONENT NON-SAG ELASTOMERIC GUN GRADE POLYURETHANE SEALANT MEETING THE REQUIREMENTS OF ASTM C-920, TYPE S, GRADE NS, CLASS 25, USE T WITH A BACKER ROD.

2. COST OF MATERIAL AND INSTALLATION OF PERFORMED JOINT FILLER TO BE INCLUDED IN CONCRETE BARRIER TRANSITION.

CONCRETE BARRIER TRANSITION

MODEL: Plan 1
FILE NAME: D669987-SH-Detail-Sec.dgn

TranSmart 411 South Wells Street Suite 1000 Chicago, Illinois 60607	USER NAME = nsalehian	DESIGNED - NS	REVISED - 5/5/2021	STATE OF ILLINOIS DEPARTMENT OF TRANSPORTATION	CONCRETE BARRIER TRANSITION AT BRIDGE PIERS
		DRAWN - NS	REVISED -		
	PLOT SCALE = 0.16666633 / in.	CHECKED - TW	REVISED -		
	PLOT DATE = 3/29/2021	DATE - 2021/03/26	REVISED -		SCALE: NTS SHEET 1 OF 1 SHEETS STA. TO STA.

F.A.I. RTE.	SECTION	COUNTY	TOTAL SHEETS	SHEET NO.
57	139 HBR-6	KANKAKEE	202	1708
		CONTRACT NO. 66997		
		ILLINOIS FED. AID PROJECT		

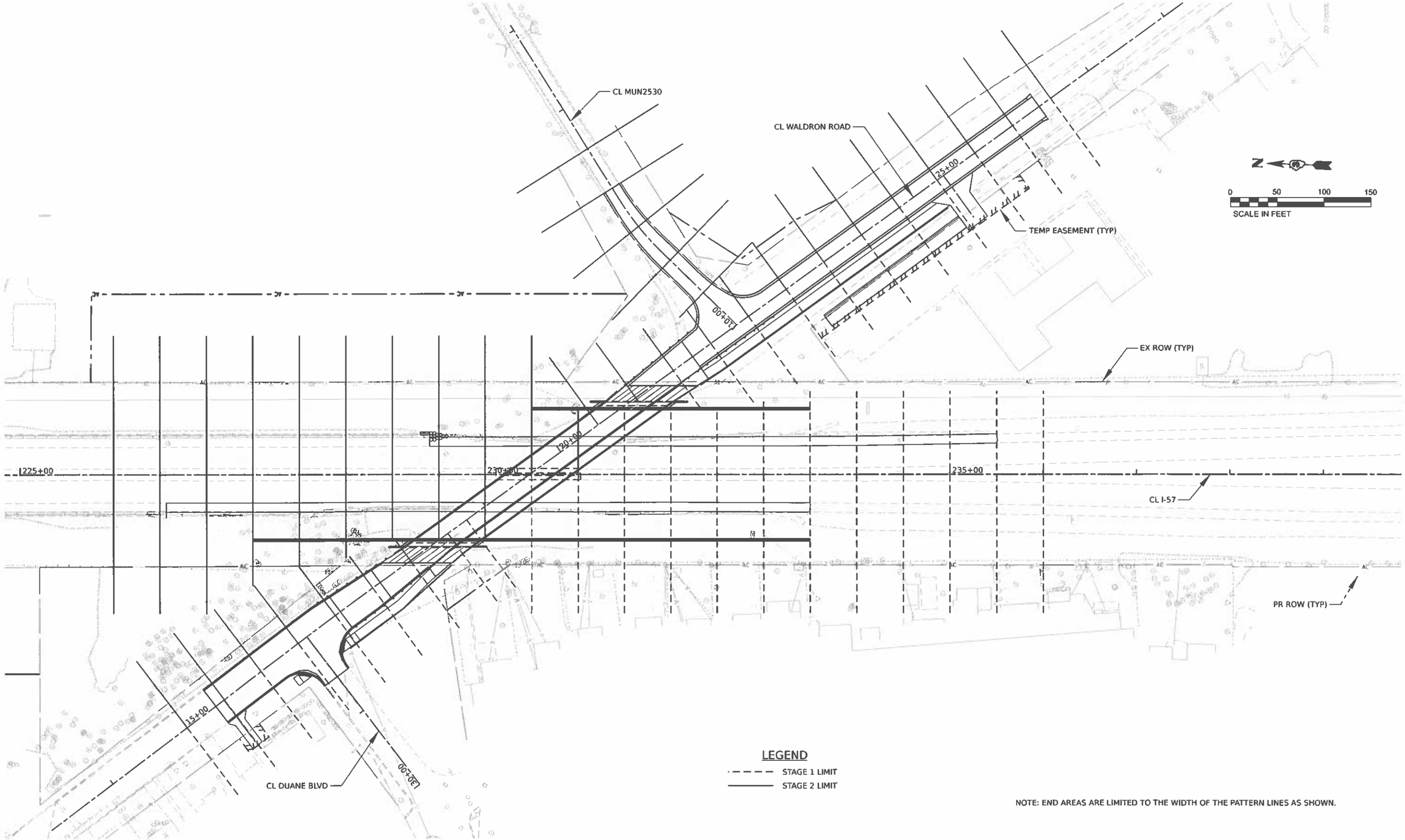

LEGEND

- - - - - STAGE 1 LIMIT

——— STAGE 2 LIMIT

NOTE: END AREAS ARE LIMITED TO THE WIDTH OF THE PATTERN LINES AS SHOWN.

MODEL: Plan 1
FILE NAME: D306663-Sht-Param.dgn

USER NAME = nsalehian	DESIGNED - BJD	REVISED -	STATE OF ILLINOIS DEPARTMENT OF TRANSPORTATION
	DRAWN - BJD	REVISED -	
PLOT SCALE = 0.16666833 ' / In.	CHECKED - TW	REVISED -	
PLOT DATE = 3/29/2021	DATE -	REVISED -	

I-57 & WALDRON ROAD
CROSS SECTION PATTERNS

SCALE: 1" = 50' | SHEET 1 OF 1 SHEETS | STA. | TO STA.

F.A.I. RTE.	SECTION	COUNTY	TOTAL SHEETS	SHEET NO.
57	139 HBR-6	KANKAKEE	202	171
		CONTRACT NO. 66997		
	ILLINOIS	FED. AID PROJECT		

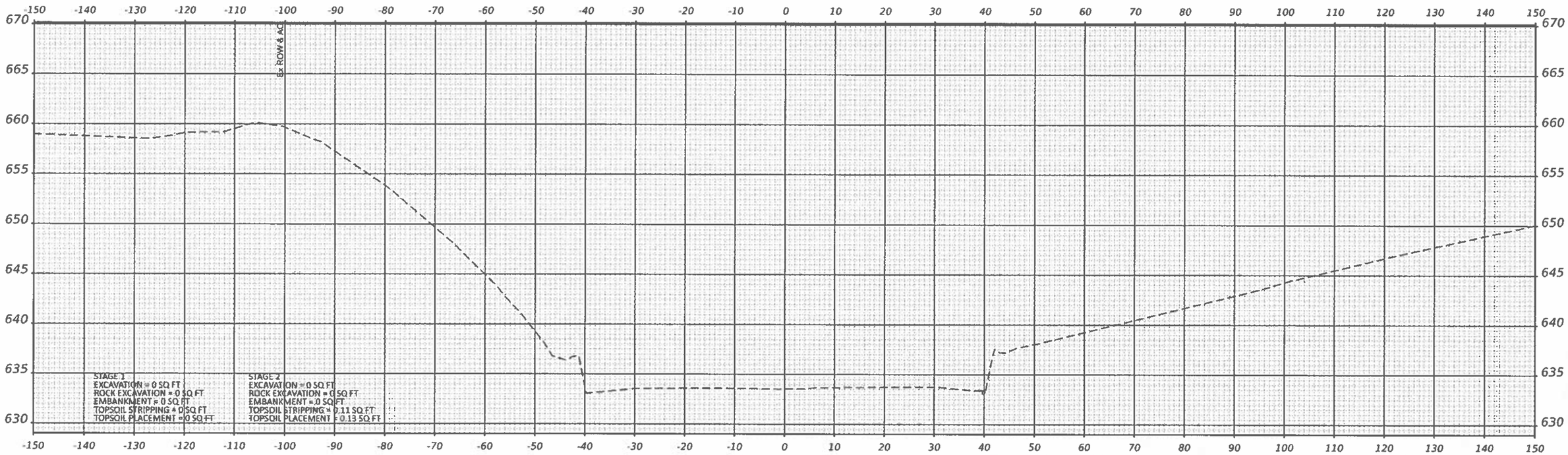

STA 226+50.00

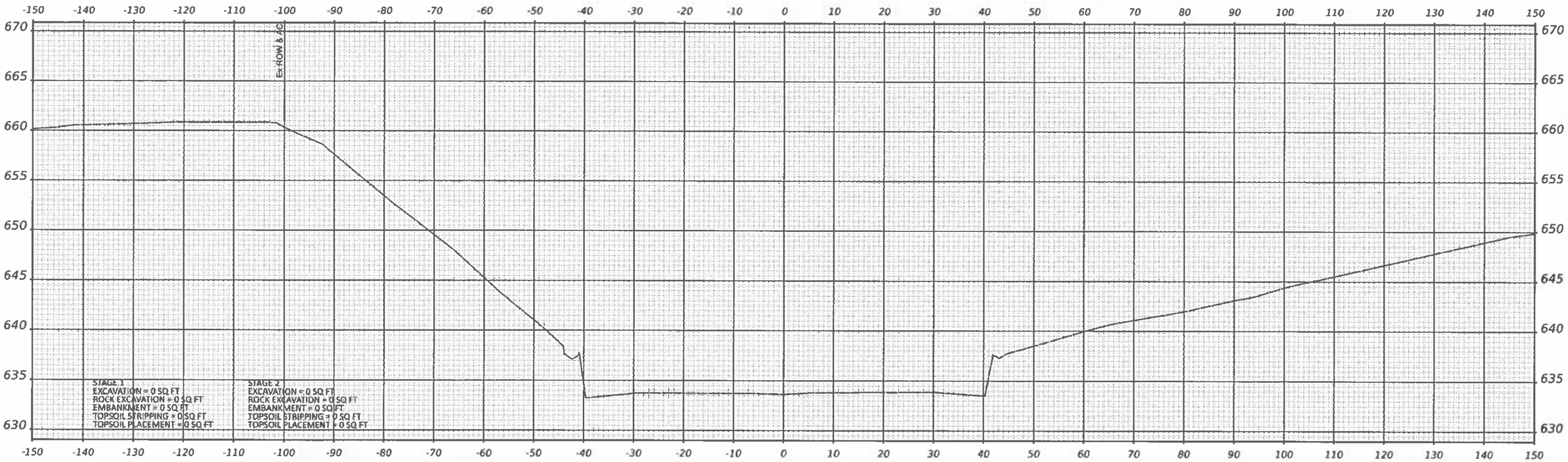

STA 226+00.00

MODEL: PR_ST_XS-1
FILE NAME: rtnp_XS-1.dgn

TranSmart
411 South Wells Street Suite 1000
Chicago, Illinois 60607

USER NAME = rsalehian	DESIGNED - BJD	REVISED -	
	DRAWN - BJD	REVISED -	
PLOT SCALE = 0.15666633 ' / in.	CHECKED - TW	REVISED -	
PLOT DATE = 3/29/2021	DATE - 2021/03/26	REVISED -	

STATE OF ILLINOIS
DEPARTMENT OF TRANSPORTATION

INTERSTATE 57
CROSS SECTIONS

SCALE: 1" = 10' | SHEET 1 OF 13 SHEETS | STA. 226+00 TO STA. 226+50

F.A.I. RTE.	SECTION	COUNTY	TOTAL SHEETS	SHEET NO.
57	139 HBR-6	KANKAKEE	202	172
		CONTRACT NO. 66997		
		ILLINOIS FED. AID PROJECT		

STA 227+00.00

MODEL: PR_57_15-3
FILE NAME: PR57_15-3.dgn

TranSmart
411 South Wells Street Suite 1000
Chicago, Illinois 60607

USER NAME = mcallahan	DESIGNED - BJD	REVISED -	
	DRAWN - BJD	REVISED -	
PLOT SCALE = 0.16666633 ' / in.	CHECKED - TW	REVISED -	
PLOT DATE = 3/29/2021	DATE - 2021/03/26	REVISED -	

STATE OF ILLINOIS
DEPARTMENT OF TRANSPORTATION

INTERSTATE 57
CROSS SECTIONS

SCALE: 1" = 10' | SHEET 2 OF 13 SHEETS | STA. 227+00 TO STA. 227+00

F.A.I. RTE.	SECTION	COUNTY	TOTAL SHEETS	SHEET NO.
57	139 HBR-6	KANKAKEE	202	173

CONTRACT NO. 66997

ILLINOIS | FED. AID PROJECT

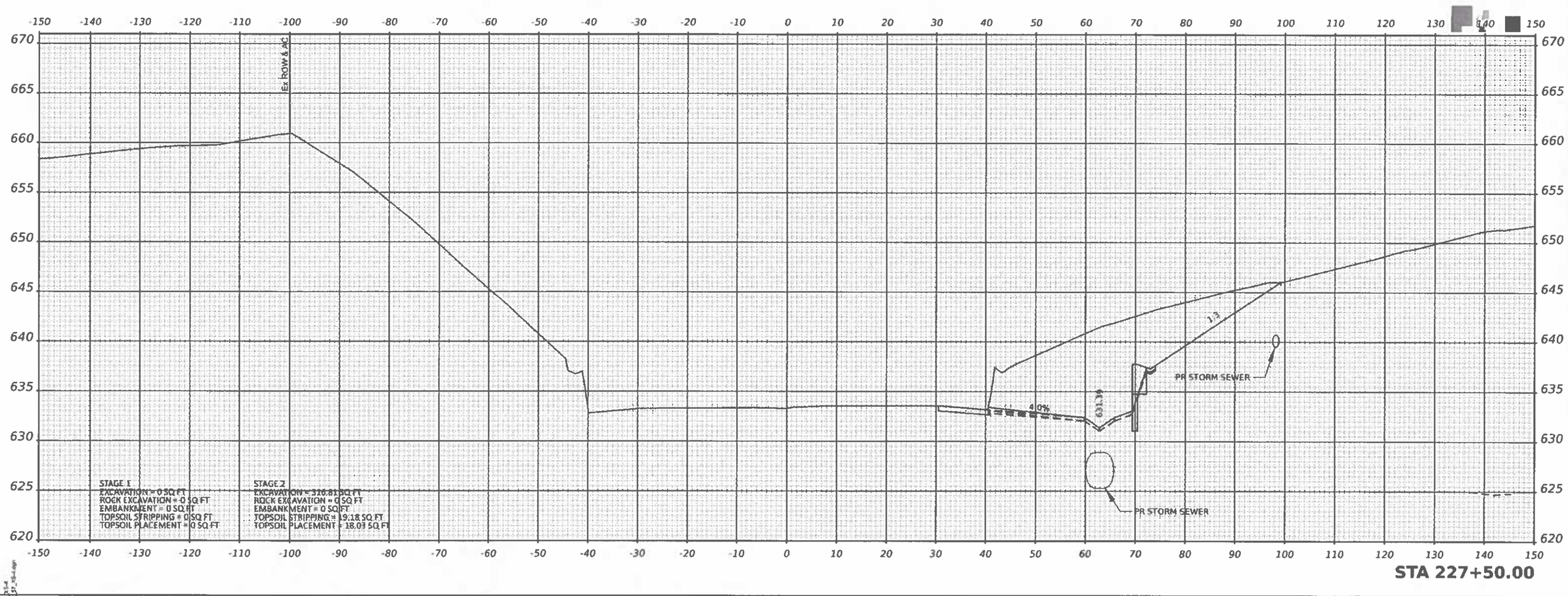

MODEL: PR_ST_57-4
FILE NAME: PR_ST_57_S-4.dgn

TranSmart
411 South Wells Street Suite 1000
Chicago, Illinois 60607

USER NAME = rsalehian	DESIGNED - BJD	REVISED -	
	DRAWN - BJD	REVISED -	
PLOT SCALE = 0.16666633' / in.	CHECKED - TW	REVISED -	
PLOT DATE = 3/29/2021	DATE - 2021/03/26	REVISED -	

STATE OF ILLINOIS
DEPARTMENT OF TRANSPORTATION

INTERSTATE 57
CROSS SECTIONS

SCALE: 1" = 10' | SHEET 3 OF 13 SHEETS | STA. 227+50 TO STA. 227+50

F.A.I. RTE.	SECTION	COUNTY	TOTAL SHEETS	SHEET NO.
57	139 HBR-6	KANKAKEE	202	174
		CONTRACT NO. 66997		
		ILLINOIS	FED. AID PROJECT	

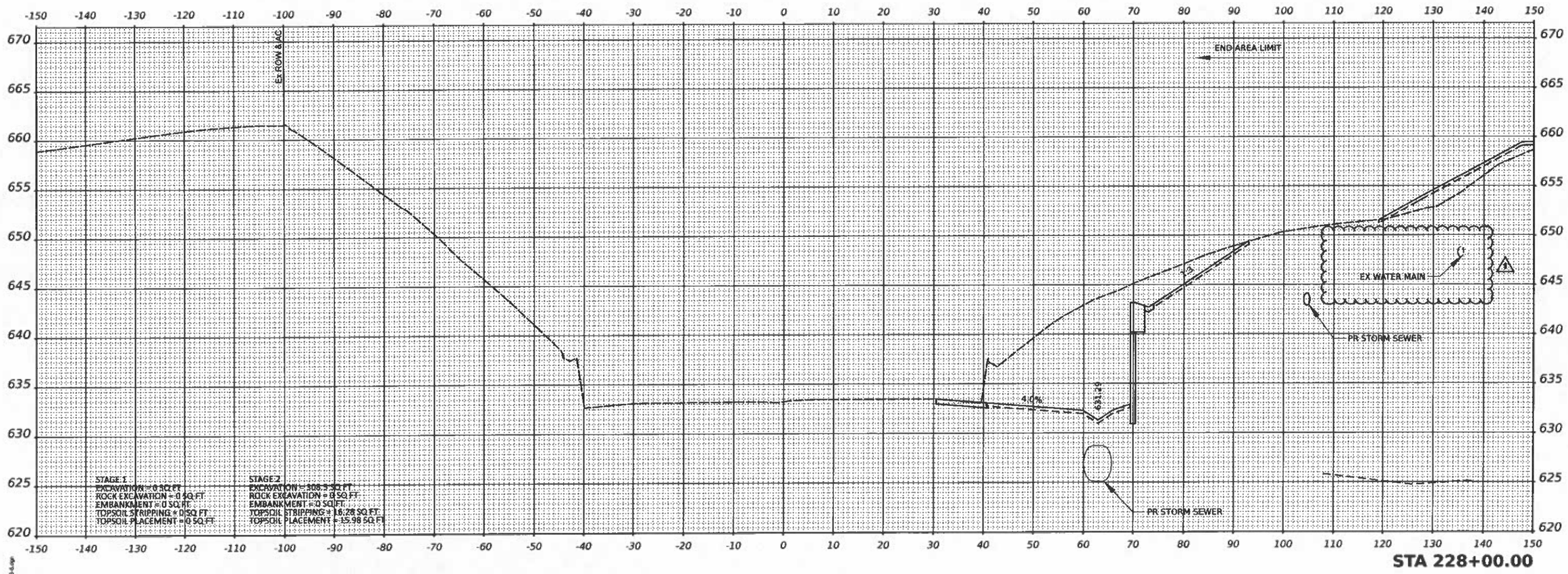

STA 228+00.00

MODEL: PR_57_XS-6
FILE NAME: PR_57_XS-6.dgn

TranSmart
411 South Wells Street Suite 1000
Chicago, Illinois 60607

USER NAME = sstAc	DESIGNED - BJD	REVISED -	
	DRAWN - BJD	REVISED -	
PLOT SCALE = 0.10000833 ' / in.	CHECKED - TW	REVISED -	
PLOT DATE = 7/9/2021	DATE - 2021/03/26	REVISED -	

STATE OF ILLINOIS
DEPARTMENT OF TRANSPORTATION

INTERSTATE 57
CROSS SECTIONS

SCALE: 1" = 10' | SHEET 4 OF 13 SHEETS | STA. 228+00 | TO STA. 228+00

F.A.I. RTE.	SECTION	COUNTY	TOTAL SHEETS	SHEET NO.
57	139 HBR-6	KANKAKEE	202	175

CONTRACT NO. 66997

ILLINOIS | FED. AID PROJECT

1 REV. 08/25/21

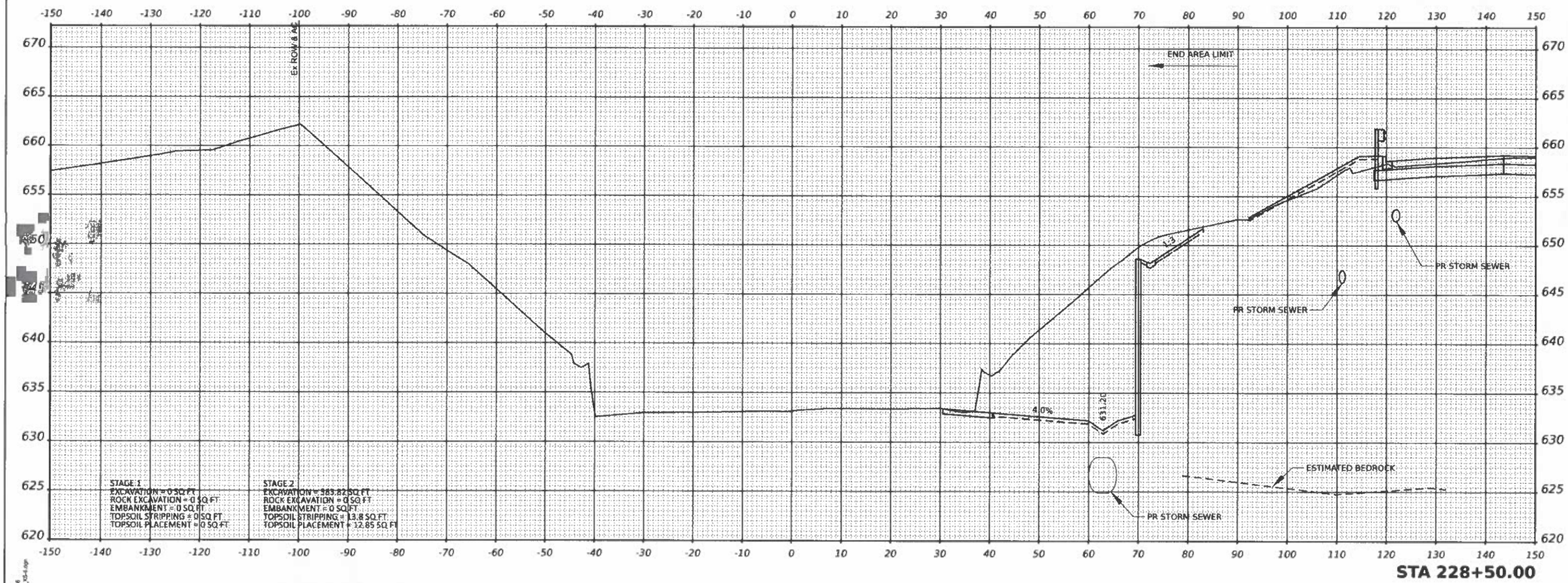

TranSmart
411 South Wells Street Suite 1000
Chicago, Illinois 60607

USER NAME = rsalehian	DESIGNED - BJD	REVISED -
	DRAWN - BJD	REVISED -
PLOT SCALE = 0.16666633 '/in.	CHECKED - TW	REVISED -
PLOT DATE = 3/29/2021	DATE - 2021/03/26	REVISED -

STATE OF ILLINOIS
DEPARTMENT OF TRANSPORTATION

INTERSTATE 57
CROSS SECTIONS

SCALE: 1" = 10' | SHEET 5 OF 13 SHEETS | STA. 228+50 TO STA. 228+50

F.A.I. RTE.	SECTION	COUNTY	TOTAL SHEETS	SHEET NO.
57	139 HBR-6	KANKAKEE	202	176

CONTRACT NO. 66997

ILLINOIS | FED. AID PROJECT

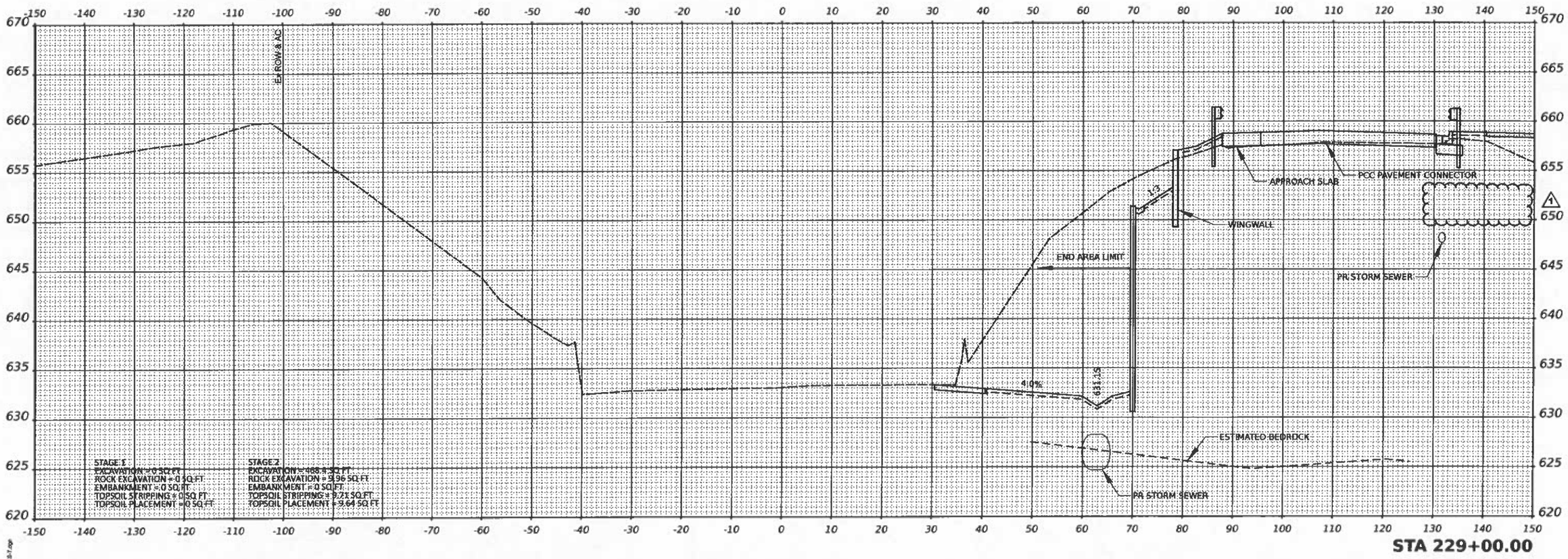

MODEL: PR_ST_58-7
FILE NAME: PR_ST_58-7.dgn

TranSmart
411 South Wells Street Suite 1000
Chicago, Illinois 60607

USER NAME = aahlac	DESIGNED - BJD	REVISED -	
	DRAWN - BJD	REVISED -	
PLOT SCALE = 0.166666633 ' / in.	CHECKED - TW	REVISED -	
PLOT DATE = 7/9/2021	DATE - 2021/03/26	REVISED -	

STATE OF ILLINOIS
DEPARTMENT OF TRANSPORTATION

INTERSTATE 57
CROSS SECTIONS

SCALE: 1" = 10' | SHEET 6 OF 13 SHEETS | STA. 229+00 TO STA. 229+00

F.A.I. RTE.	SECTION	COUNTY	TOTAL SHEETS	SHEET NO.
57	139 HBR-6	KANKAKEE	202	177

CONTRACT NO. 66997

ILLINOIS | FED. AID PROJECT

1 REV. 08/25/21

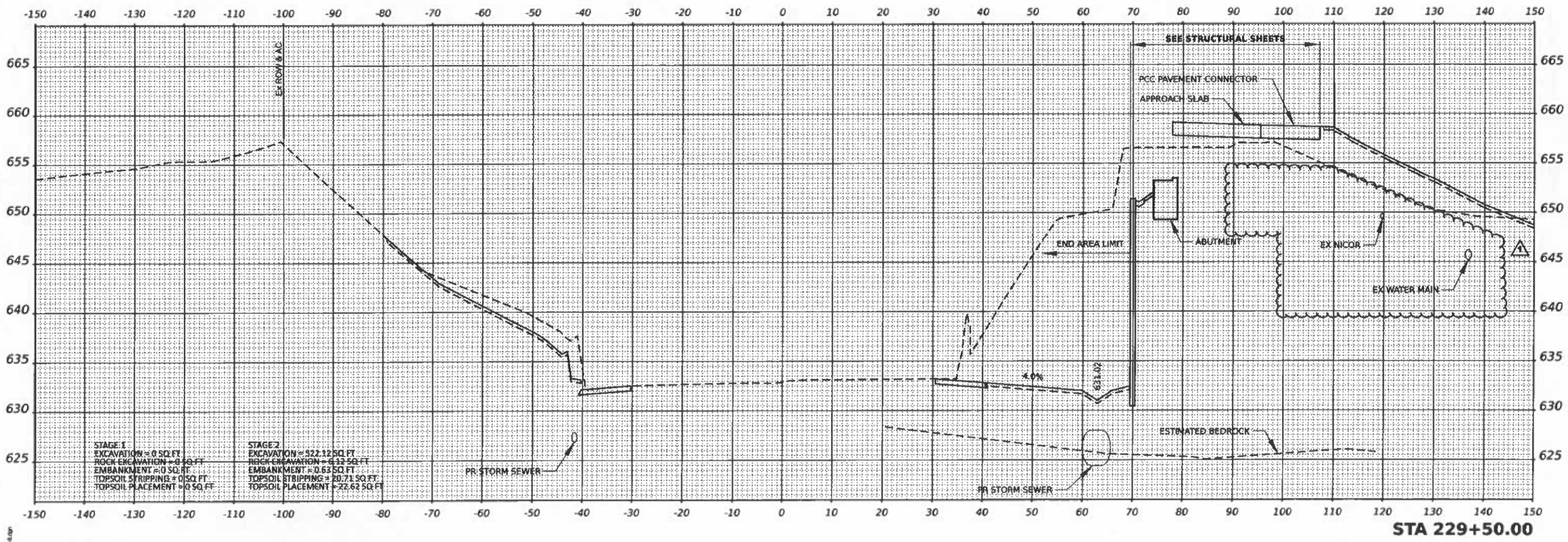

MODEL: PR_57_102-8
FILE NAME: PR_57_103-8.dgn

TranSmart
411 South Wells Street Suite 1000
Chicago, Illinois 60607

USER NAME = aahkc	DESIGNED - BJD	REVISED -	
	DRAWN - BJD	REVISED -	
PLOT SCALE = 0.10000833 ' / in.	CHECKED - TW	REVISED -	
PLOT DATE = 7/9/2021	DATE - 2021/03/26	REVISED -	

STATE OF ILLINOIS
DEPARTMENT OF TRANSPORTATION

INTERSTATE 57
CROSS SECTIONS

SCALE: 1" = 10' | SHEET 7 OF 13 SHEETS | STA. 229+50 TO STA. 229+50

F.A.I. RTE.	SECTION	COUNTY	TOTAL SHEETS	SHEET NO.
57	139 HBR-6	KANKAKEE	202	178

CONTRACT NO. 66997

ILLINOIS | FED. AID PROJECT

1 REV. 08/25/21

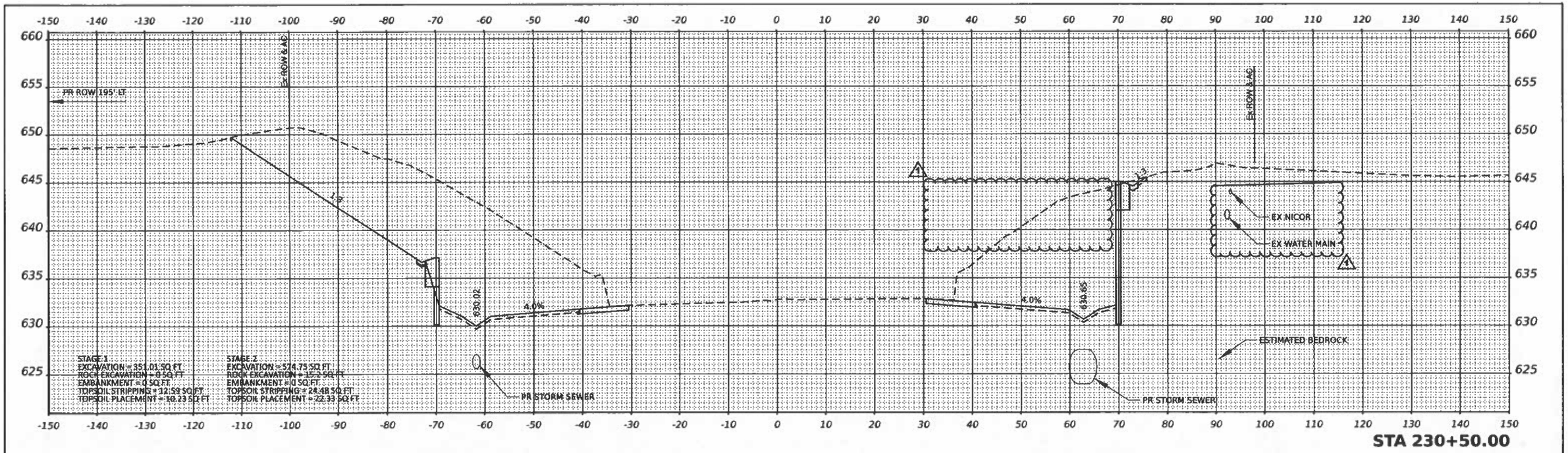

STA 230+50.00

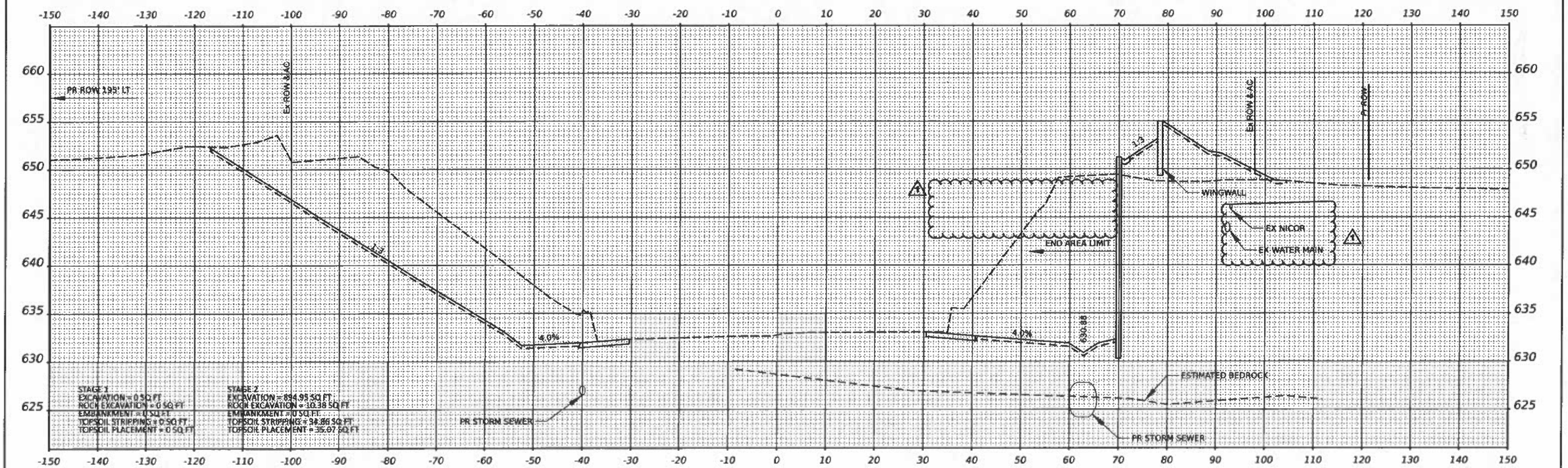

STA 230+00.00

MODEL: PR_57_SS-8
FILE NAME: PR_57_SS-8.dgn

TranSmart
411 South Wells Street Suite 1000
Chicago, Illinois 60607

USER NAME = smhc	DESIGNED - BJD	REVISED - 5/7/2021	
	DRAWN - BJD	REVISED -	
PLOT SCALE = 0.1666667' / in.	CHECKED - TW	REVISED -	
PLOT DATE = 7/9/2021	DATE - 2021/03/26	REVISED -	

STATE OF ILLINOIS
DEPARTMENT OF TRANSPORTATION

INTERSTATE 57
CROSS SECTIONS

SCALE: 1" = 10' | SHEET 8 OF 13 SHEETS | STA. 230+00 TO STA. 230+50

F.A.I. RTE.	SECTION	COUNTY	TOTAL SHEETS	SHEET NO.
57	139 HBR-6	KANKAKEE	202	179
		CONTRACT NO. 68997		
		ILLINOIS FED. AID PROJECT		

1 REV. 08/25/21

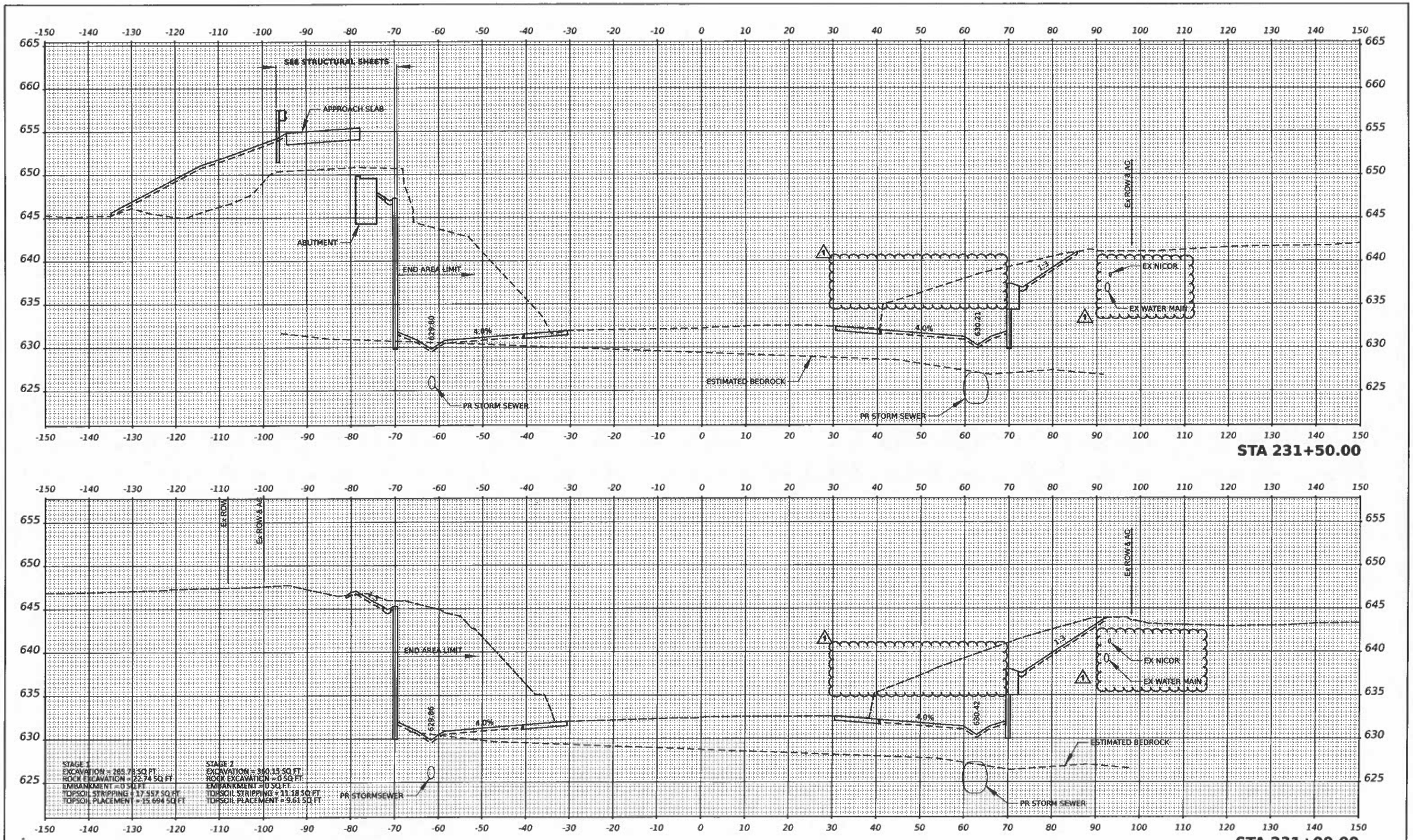

MODEL: PR_57_XS-11
FILE NAME: PR_57_XS-11.dgn

TranSmart
411 South Wells Street Suite 1000
Chicago, Illinois 60607

USER NAME = dshhc	DESIGNED - BJD	REVISED - 5/7/2021	
	DRAWN - BJD	REVISED -	
PLOT SCALE = 0.10000033 ' / in.	CHECKED - TW	REVISED -	
PLOT DATE = 7/6/2021	DATE - 2021/03/26	REVISED -	

STATE OF ILLINOIS
DEPARTMENT OF TRANSPORTATION

INTERSTATE 57
CROSS SECTIONS

SCALE: 1" = 10' | SHEET 9 OF 13 SHEETS | STA. 231+00 TO STA. 231+50

F.A.I. RTE.	SECTION	COUNTY	TOTAL SHEETS	SHEET NO.
57	139 HBR-6	KANKAKEE	202	180
		CONTRACT NO. 66997		
	ILLINOIS	FED. AID PROJECT		

REV. 08/25/21

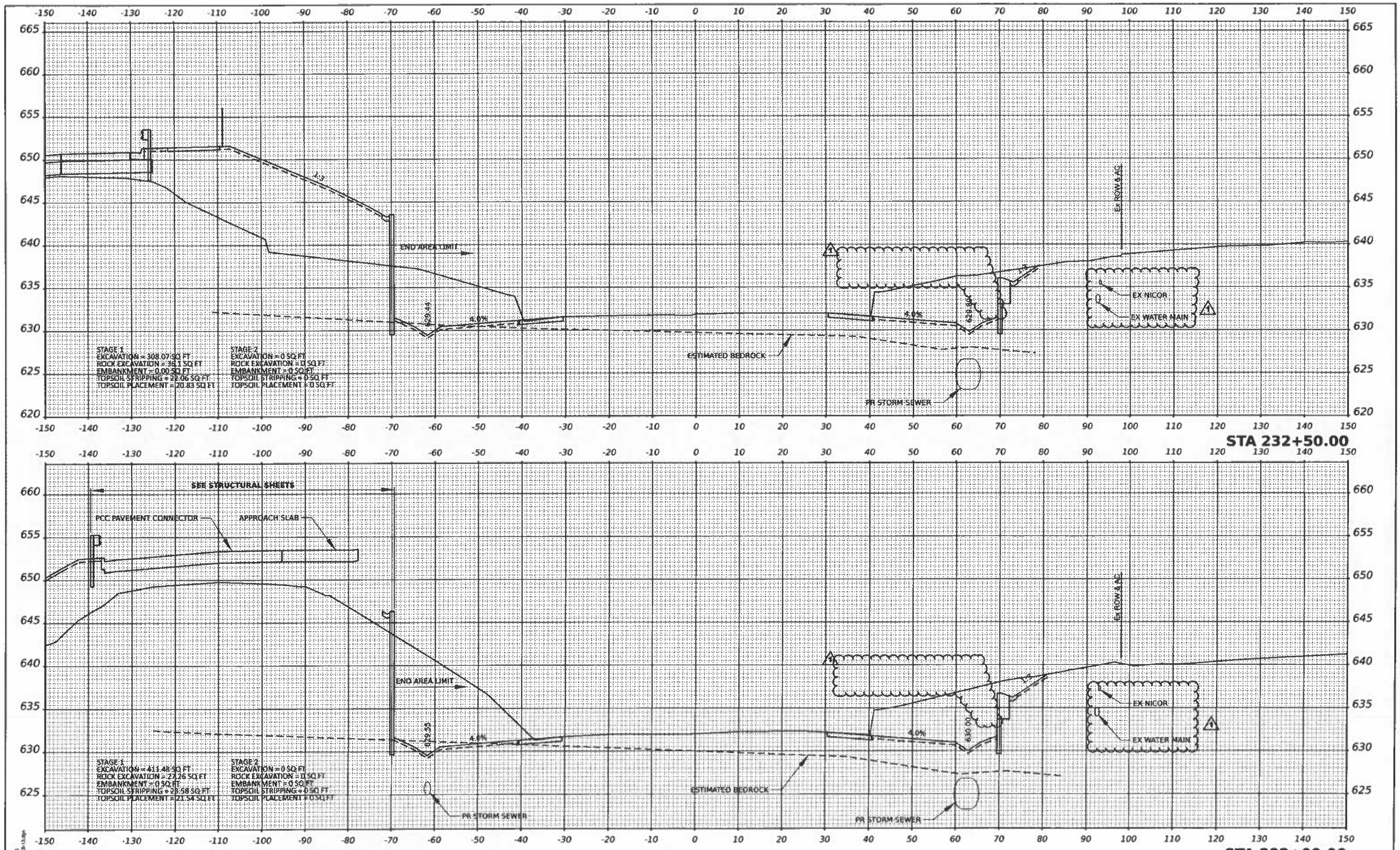

MODEL: PR_57_XS-12
FILE NAME: PR_57_XS-13.dgn

TranSmart
411 South Wells Street Suite 1000
Chicago, Illinois 60607

USER NAME = aslvac	DESIGNED - BJD	REVISED - 5/7/2021	
	DRAWN - BJD	REVISED -	
PLOT SCALE = 0.1666667 ' / in.	CHECKED - TW	REVISED -	
PLOT DATE = 7/9/2021	DATE - 2021/03/26	REVISED -	

STATE OF ILLINOIS
DEPARTMENT OF TRANSPORTATION

INTERSTATE 57
CROSS SECTIONS

SCALE: 1" = 10' | SHEET 10 OF 13 SHEETS | STA. 232+00 TO STA. 232+50

F.A.I. RTE.	SECTION	COUNTY	TOTAL SHEETS	SHEET NO.
57	139 HBR-6	KANKAKEE	202	161
		CONTRACT NO. 66997		
		ILLINOIS FED. AID PROJECT		

1 REV. 08/25/21

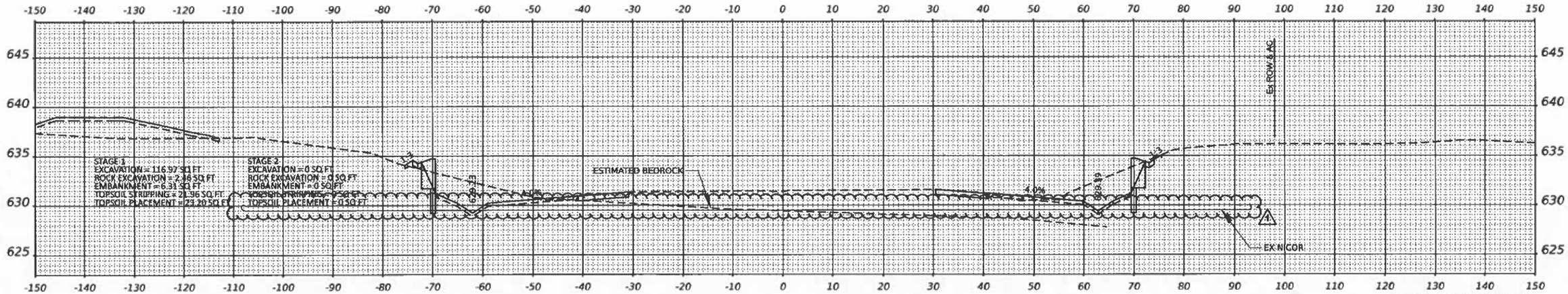

STA 233+50.00

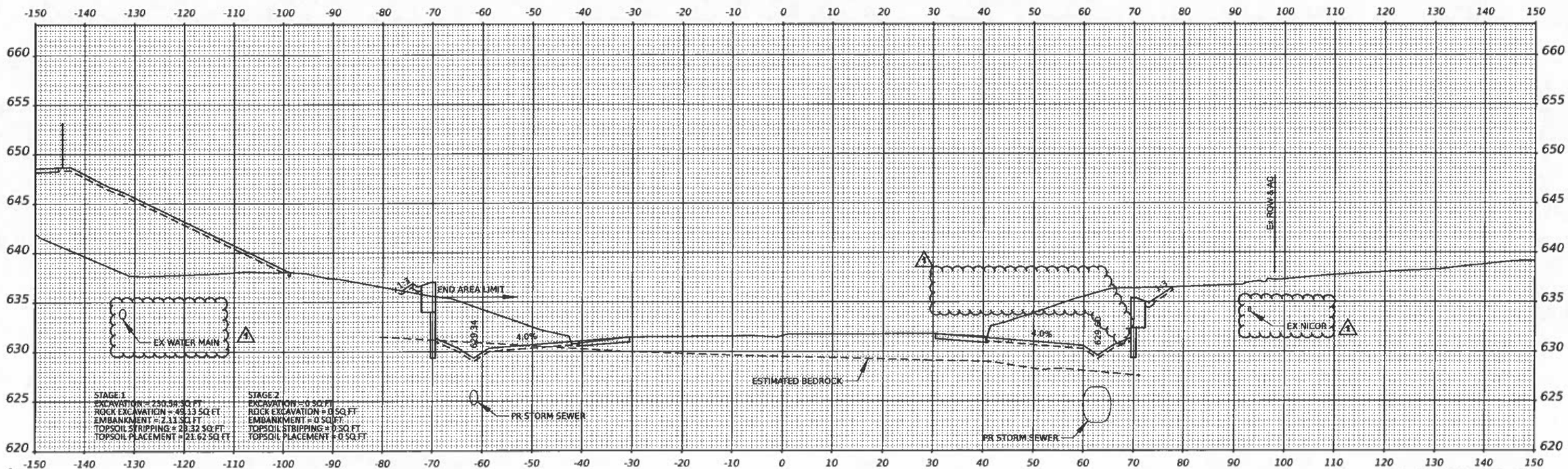

STA 233+00.00

MODEL: PR_57_233-15
FILE NAME: PR_57_233-15.dgn

TranSmart
411 South Wells Street Suite 1000
Chicago, Illinois 60607

USER NAME = ssthc	DESIGNED - BJD	REVISED - 5/7/2021	
	DRAWN - BJD	REVISED -	
PLOT SCALE = 0.10000833 ' / in.	CHECKED - TW	REVISED -	
PLOT DATE = 7/9/2021	DATE - 2021/03/26	REVISED -	

STATE OF ILLINOIS
DEPARTMENT OF TRANSPORTATION

INTERSTATE 57
CROSS SECTIONS

SCALE: 1" = 10' | SHEET 11 OF 13 SHEETS | STA. 233+00 TO STA. 233+50

F.A.I. RTE.	SECTION	COUNTY	TOTAL SHEETS	SHEET NO.
57	139 HBR-6	KANKAKEE	202	182
		CONTRACT NO. 66997		
	ILLINOIS	FED. AID PROJECT		

REV. 08/25/21

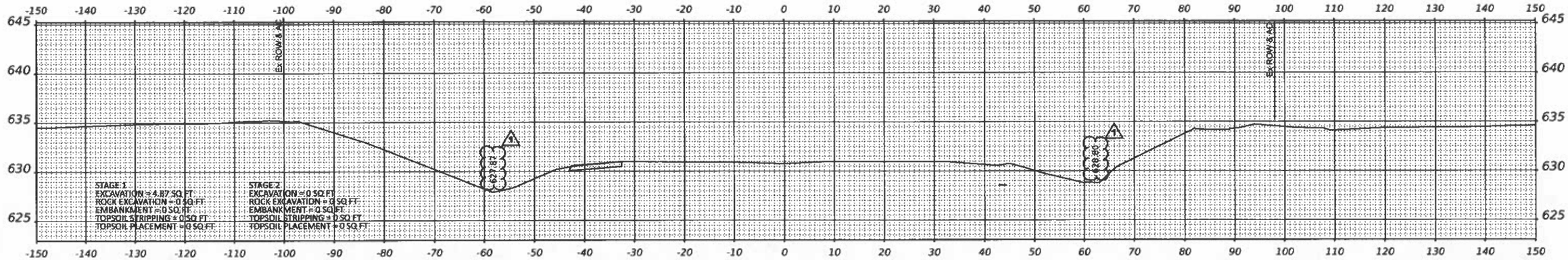

STA 235+00.00

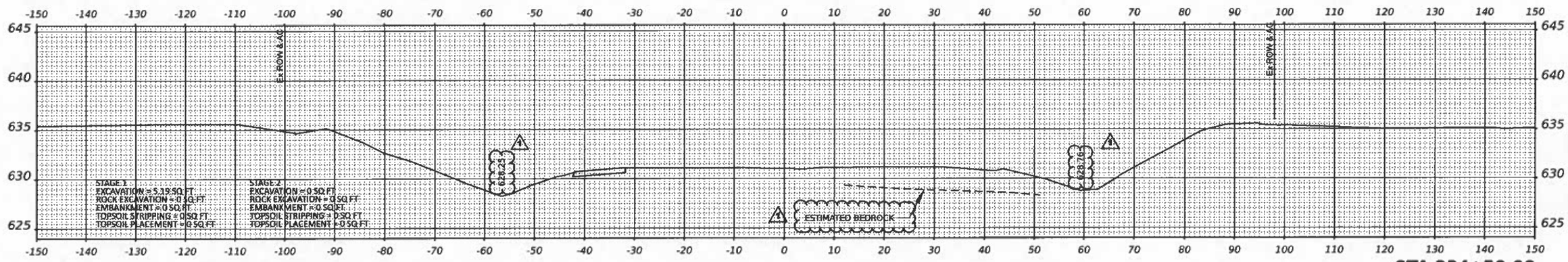

STA 234+50.00

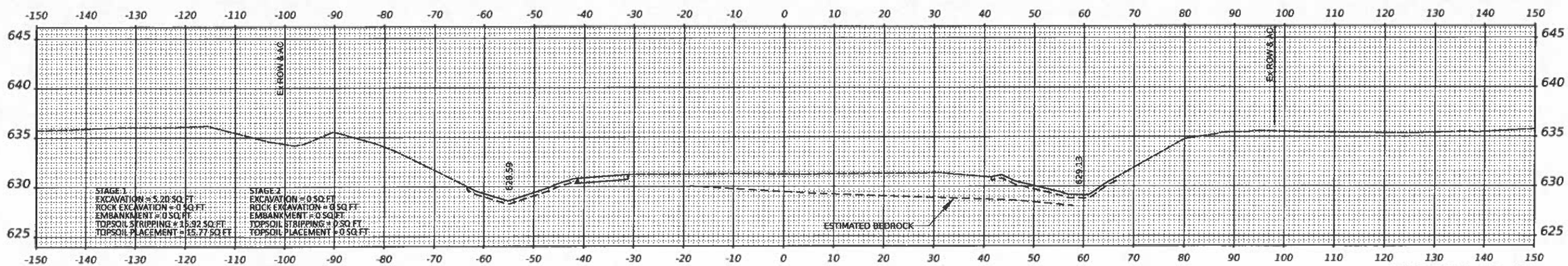

STA 234+00.00

MODEL: PR_57_XS-17
FILE NAME: PR_57_XS-17.dgn

TranSmart
411 South Wells Street Suite 1000
Chicago, Illinois 60607

USER NAME = adhkc	DESIGNED - BJD	REVISED -	
	DRAWN - BJD	REVISED -	
PLOT SCALE = 0.10000833 ' / in.	CHECKED - TW	REVISED -	
PLOT DATE = 7/9/2021	DATE - 2021/03/26	REVISED -	

STATE OF ILLINOIS
DEPARTMENT OF TRANSPORTATION

INTERSTATE 57
CROSS SECTIONS

SCALE: 1" = 10' | SHEET 12 OF 13 SHEETS | STA. 234+00 TO STA. 235+00

F.A.I. RTE.	SECTION	COUNTY	TOTAL SHEETS	SHEET NO.
57	139 HBR-6	KANKAKEE	202	183
		CONTRACT NO. 66997		
		ILLINOIS	FED. AID PROJECT	

1 REV. 08/25/21

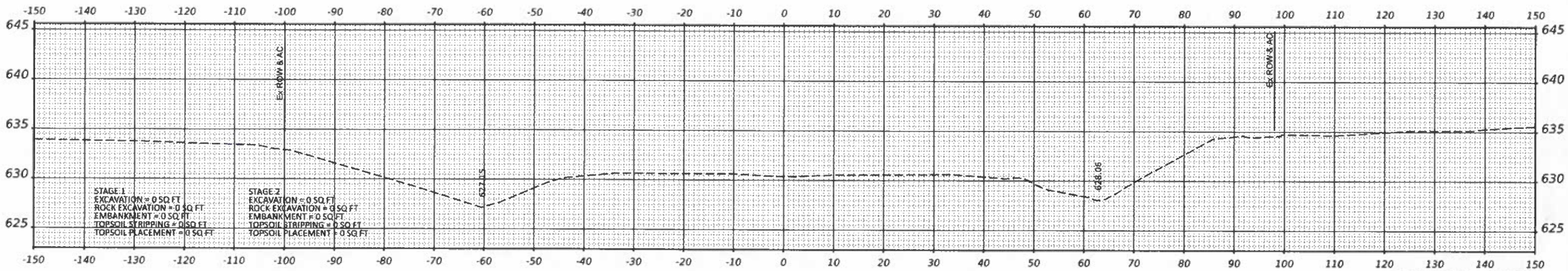

STA 236+00.00

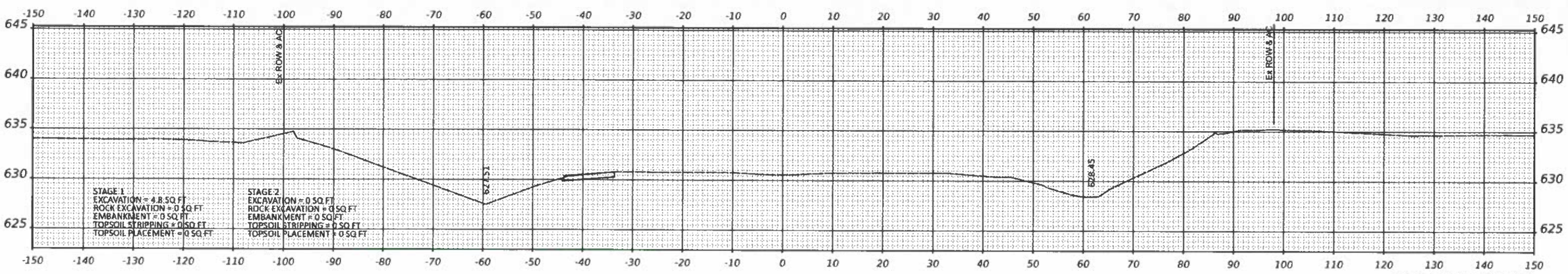

STA 235+50.00

MODEL: PR_57_235-20
FILE NAME: PR_57_235-20.dgn

TranSmart
411 South Wells Street Suite 1000
Chicago, Illinois 60607

USER NAME = mstephan	DESIGNED - BJD	REVISED -	
	DRAWN - BJD	REVISED -	
PLOT SCALE = 0.166666333 ' / in.	CHECKED - TW	REVISED -	
PLOT DATE = 3/29/2021	DATE - 2021/03/26	REVISED -	

STATE OF ILLINOIS
DEPARTMENT OF TRANSPORTATION

INTERSTATE 57
CROSS SECTIONS

SCALE: 1" = 10' | SHEET 13 OF 13 SHEETS | STA. 235+50 TO STA. 236+00

F.A.I. RTE.	SECTION	COUNTY	TOTAL SHEETS	SHEET NO.
57	139 HBR-6	KANKAKEE	202	184
		CONTRACT NO. 66997		
		ILLINOIS	FED. AID PROJECT	

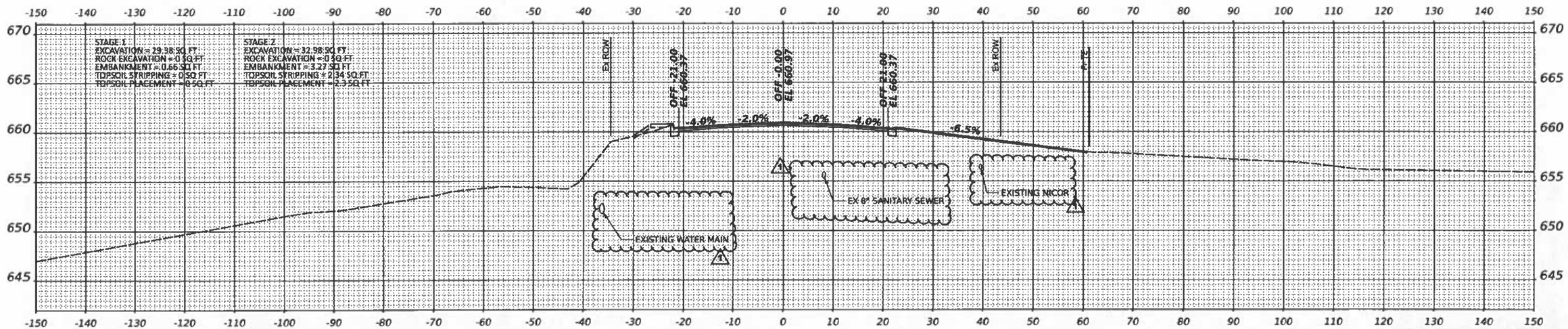

STA 15+50.00

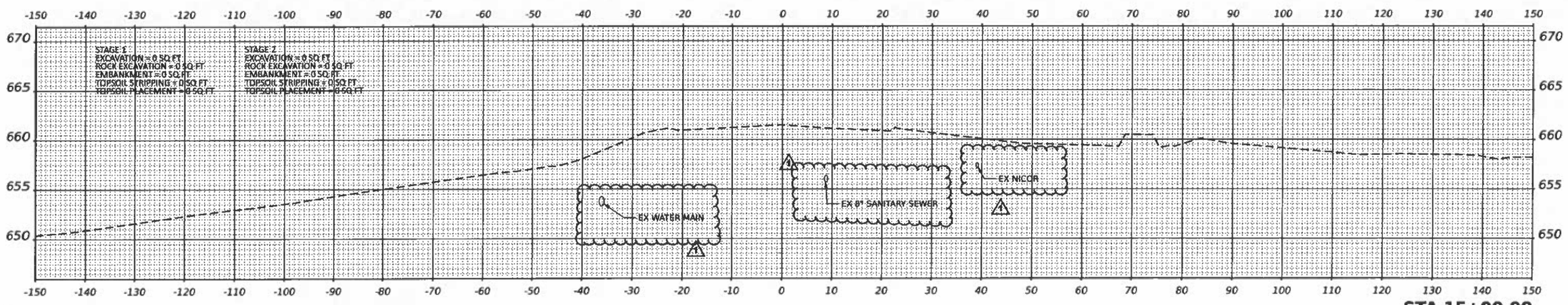

STA 15+00.00

MODEL: 15+00.00
FILE NAME: 15+00.00.dgn

TranSmart
411 South Wells Street Suite 1000
Chicago, Illinois 60607

USER NAME = aahac	DESIGNED - NS	REVISED -
	DRAWN - NS	REVISED -
PLOT SCALE = 0.18860833 ' / in.	CHECKED - TW	REVISED -
PLOT DATE = 7/9/2021	DATE - 2021/07/09	REVISED -

STATE OF ILLINOIS
DEPARTMENT OF TRANSPORTATION

WALDRON ROAD
CROSS SECTIONS

SCALE: | SHEET 1 OF 15 SHEETS | STA. 15+00 | TO STA. 15+50

F.A.I. RTE.	SECTION	COUNTY	TOTAL SHEETS	SHEET NO.
57	139 HBR-6	KANKAKEE	202	185
		CONTRACT NO. 66997		
	ILLINOIS	FED. AID PROJECT		

REV. 08/25/21

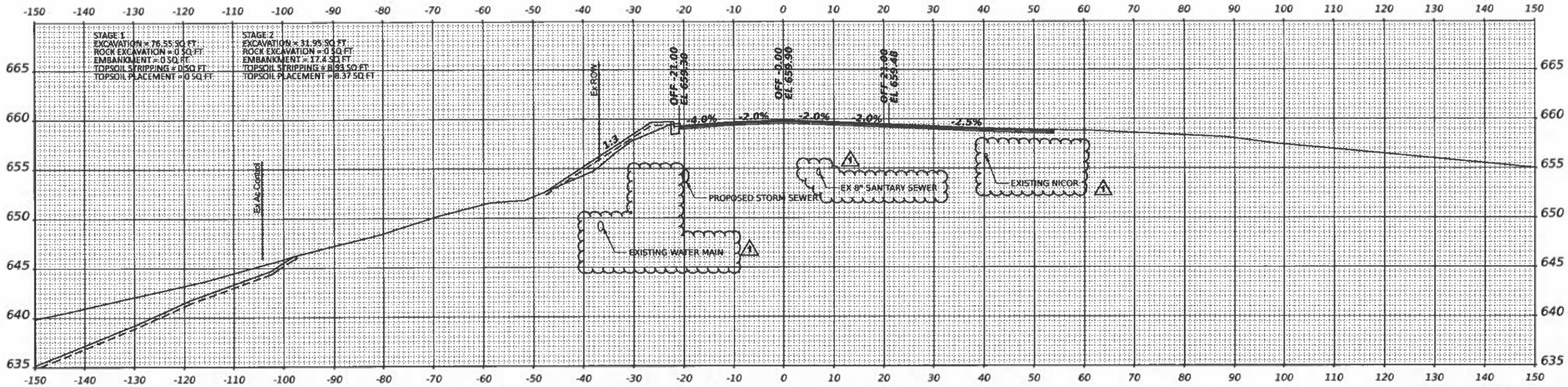

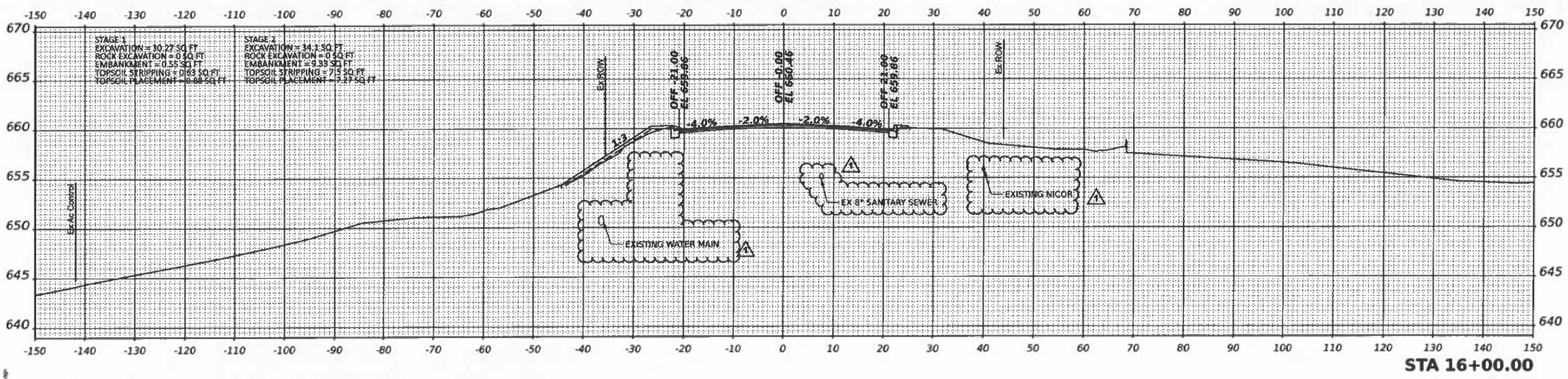

MODEL: 18+00.dgn
FILE NAME: 18+00.00.dgn

TranSmart
411 South Wells Street Suite 1000
Chicago, Illinois 60607

USER NAME = ashkc	DESIGNED - NS	REVISED -	
	DRAWN - NS	REVISED -	
PLOT SCALE = 0.10000333 ' / in.	CHECKED - TW	REVISED -	
PLOT DATE = 7/9/2021	DATE - 2021/07/09	REVISED -	

STATE OF ILLINOIS
DEPARTMENT OF TRANSPORTATION

WALDRON ROAD
CROSS SECTIONS

SCALE: | SHEET 2 OF 15 SHEETS | STA. 16+00 TO STA. 16+50

F.A.I. RTE.	SECTION	COUNTY	TOTAL SHEETS	SHEET NO.
57	139 HBR-6	KANKAKEE	202	186
		CONTRACT NO. 66997		
	ILLINOIS	FED. AID PROJECT		

1 REV. 08/25/21

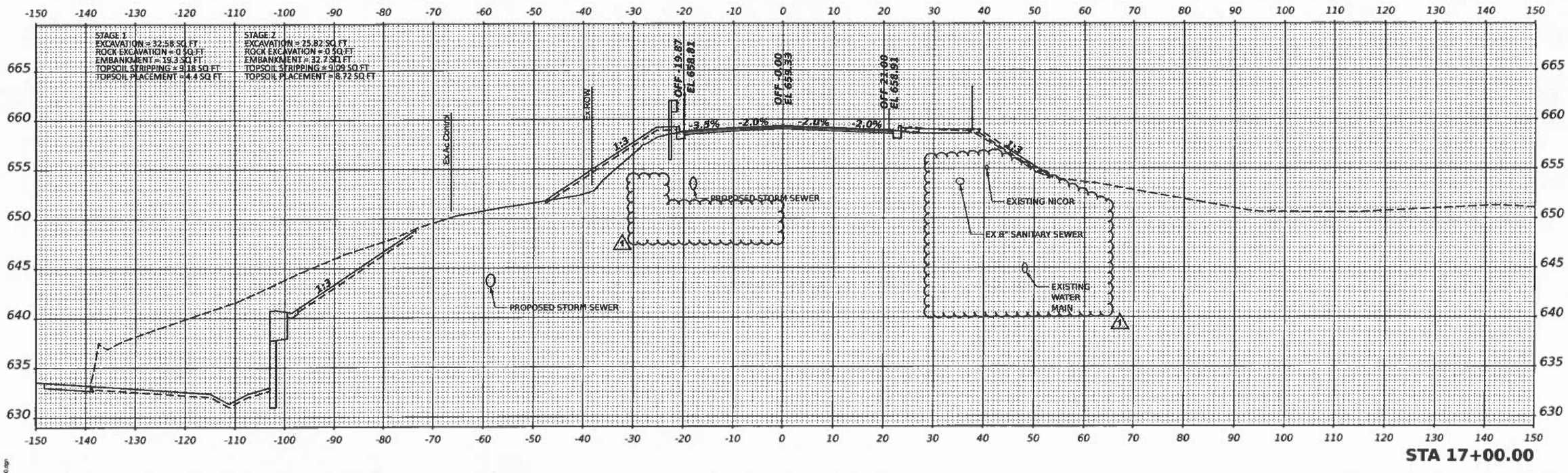

MODEL: 17-00.00
FILE NAME: 17-00.00.dgn

TranSmart
411 South Wells Street Suite 1000
Chicago, Illinois 60607

USER NAME = ashkc	DESIGNED - NS	REVISED -	
	DRAWN - NS	REVISED -	
PLOT SCALE = 0.16666633 ' / in.	CHECKED - TW	REVISED -	
PLOT DATE = 7/9/2021	DATE - 2021/07/09	REVISED -	

STATE OF ILLINOIS
DEPARTMENT OF TRANSPORTATION

WALDRON ROAD
CROSS SECTIONS

SCALE: | SHEET 3 OF 15 SHEETS | STA. 17+00 TO STA. 17+00

F.A.I. RTE.	SECTION	COUNTY	TOTAL SHEETS	SHEET NO.
57	139 HBR-6	KANKAKEE	202	187
		CONTRACT NO. 66997		
	ILLINOIS	FED. AID PROJECT		

REV. 08/25/21

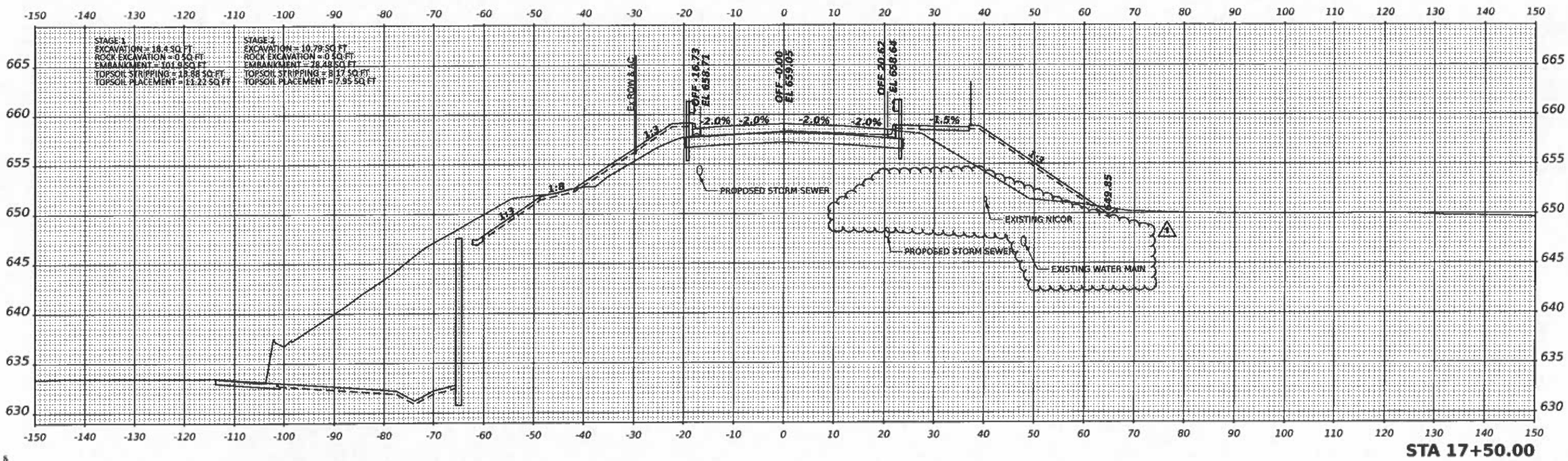

STA 17+50.00

MODEL: 17-50.00
FILE NAME: 17-50.00.dgn

TranSmart
411 South Wells Street Suite 1000
Chicago, Illinois 60607

USER NAME = aphac	DESIGNED - NS	REVISED -	
	DRAWN - NS	REVISED -	
PLOT SCALE = 0.16666633 ' / in.	CHECKED - TW	REVISED -	
PLOT DATE = 7/9/2021	DATE - 2021/03/26	REVISED -	

STATE OF ILLINOIS
DEPARTMENT OF TRANSPORTATION

WALDRON ROAD
CROSS SECTIONS

SCALE: | SHEET 4 OF 15 SHEETS | STA. 17+50 TO STA. 17+50

F.A.I. RTE.	SECTION	COUNTY	TOTAL SHEETS	SHEET NO.
57	139 HBR-6	KANKAKEE	202	188

CONTRACT NO. 66997

ILLINOIS | FED. AID PROJECT

1 REV. 08/25/21

NOTE : SEE STRUCTURAL SHEETS FOR BRIDGE DETAIL

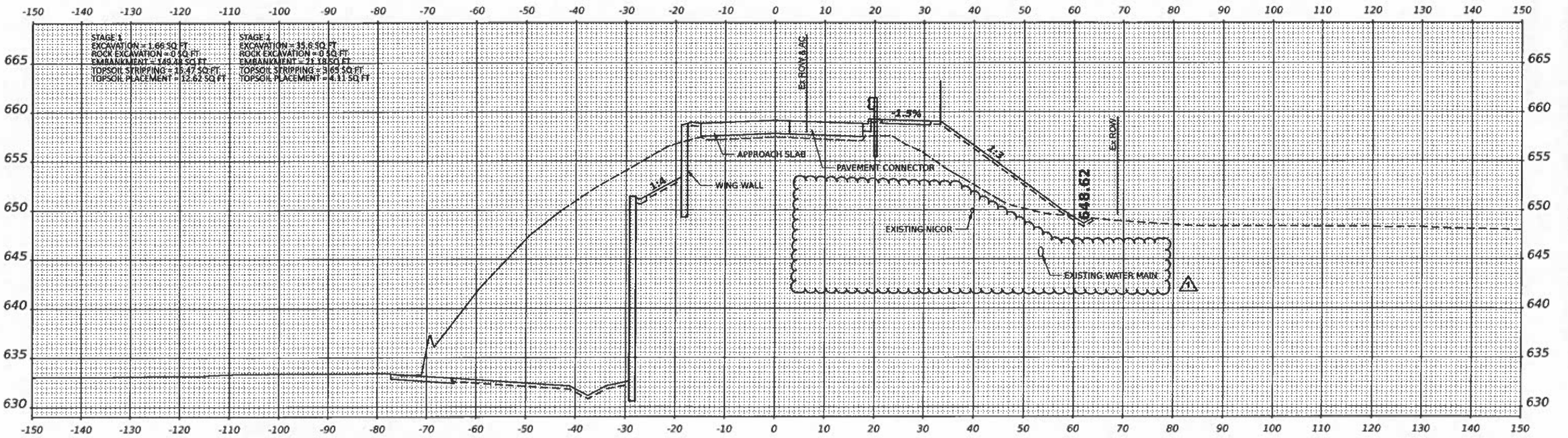

STA 18+00.00

MODEL: 18+00.00
FILE NAME: 18-00.00.dgn

TranSmart
411 South Wells Street Suite 1000
Chicago, Illinois 60607

USER NAME = ssihac	DESIGNED - NS	REVISED -	
	DRAWN - NS	REVISED -	
PLOT SCALE = 0.10000833 ' / in.	CHECKED - TW	REVISED -	
PLOT DATE = 7/9/2021	DATE - 2021/03/26	REVISED -	

STATE OF ILLINOIS
DEPARTMENT OF TRANSPORTATION

WALDRON ROAD
CROSS SECTIONS

SCALE: | SHEET 5 OF 15 SHEETS | STA. 18+00 | TO STA. 18+00

F.A.I. RTE.	SECTION	COUNTY	TOTAL SHEETS	SHEET NO.
57	139 HBR-6	KANKAKEE	202	189
		CONTRACT NO. 66997		
	ILLINOIS	FED. AID PROJECT		

1 REV. 08/25/21

NOTE :SECTION THROUGH WALDRON BRIDGE NOT SHOWN.
SEE STRUCTURAL SHEETS FOR BRIDGE DETAIL

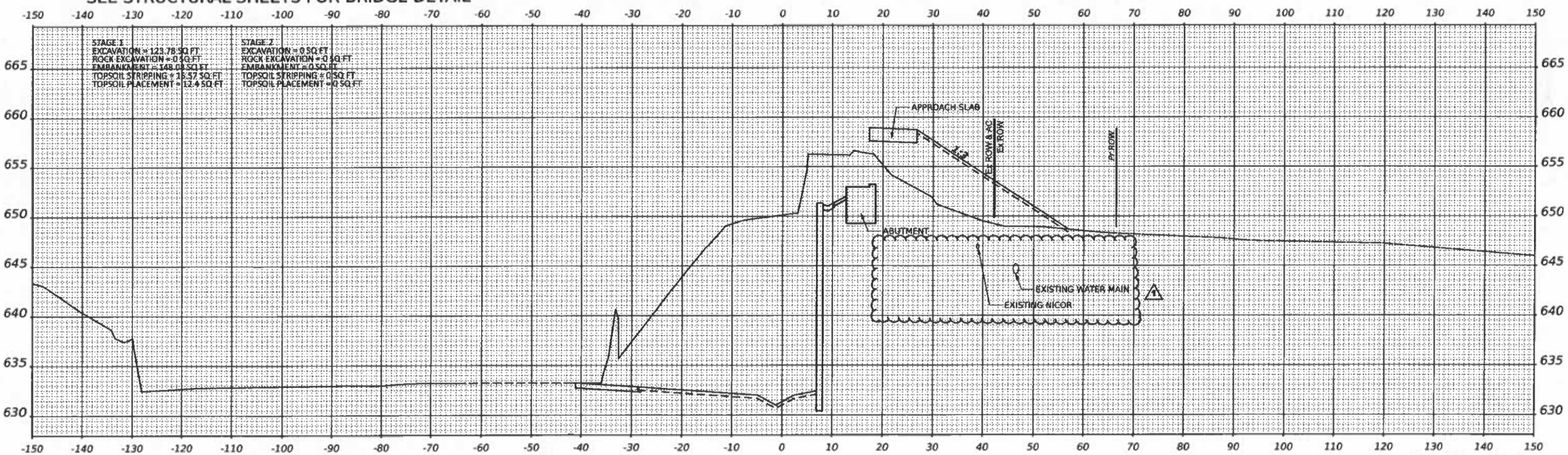

STA 18+50.00

MODEL: 18-50.00
FILE NAME: 18-50.00.dgn

TranSmart
411 South Wells Street Suite 1000
Chicago, Illinois 60607

USER NAME = ashkc	DESIGNED - NS	REVISED -
	DRAWN - NS	REVISED -
PLOT SCALE = 0.16666633 ' / in.	CHECKED - TW	REVISED -
PLOT DATE = 7/9/2021	DATE - 2021/03/26	REVISED -

STATE OF ILLINOIS
DEPARTMENT OF TRANSPORTATION

WALDRON ROAD
CROSS SECTIONS

SCALE: | SHEET 6 OF 15 SHEETS | STA. 18+50 TO STA. 18+50

F.A.I. RTE.	SECTION	COUNTY	TOTAL SHEETS	SHEET NO.
57	139 HBR-6	KANKAKEE	202	190
		CONTRACT NO. 66997		
		ILLINOIS	FED. AID PROJECT	

4 REV. 08/25/21

NOTE :SECTION THROUGH WALDRON BRIDGE NOT SHOWN.
SEE STRUCTURAL SHEETS FOR BRIDGE DETAIL

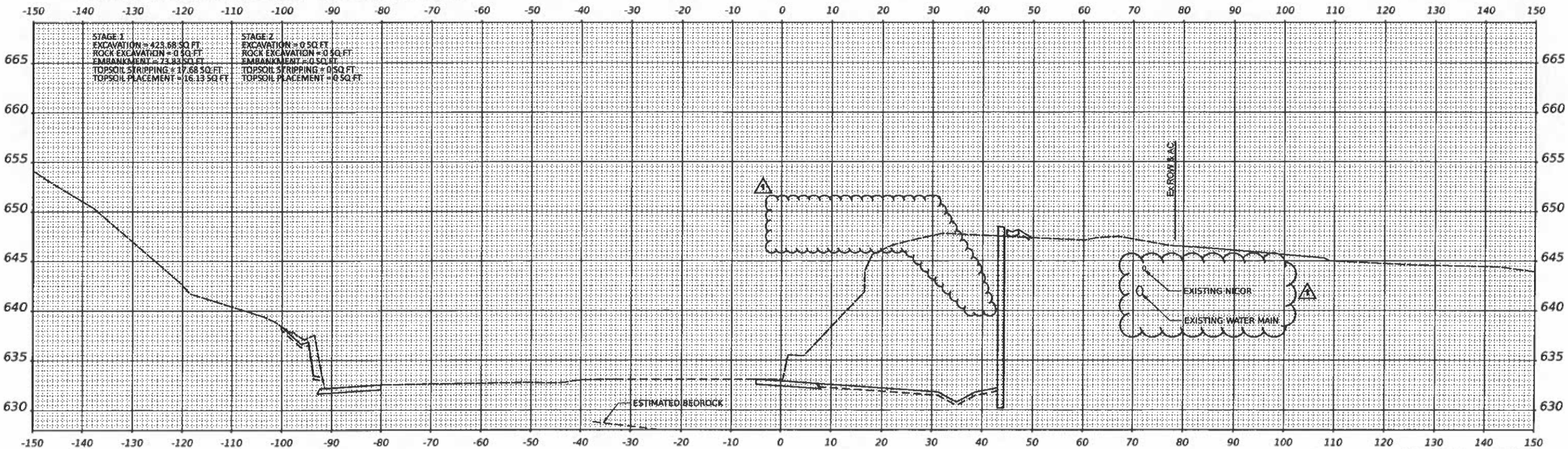

STA 19+00.00

MODEL: 19-00.00
FILE NAME: 19-00.00.dgn

TranSmart
411 South Wells Street Suite 1000
Chicago, Illinois 60607

USER NAME = aahkc	DESIGNED - NS	REVISED -	
	DRAWN - NS	REVISED -	
PLOT SCALE = 0.10000833 ' / in.	CHECKED - TW	REVISED -	
PLOT DATE = 7/9/2021	DATE - 2021/03/26	REVISED -	

STATE OF ILLINOIS
DEPARTMENT OF TRANSPORTATION

WALDRON ROAD
CROSS SECTIONS

SCALE: | SHEET 7 OF 15 SHEETS | STA. 19+00 TO STA. 19+00

F.A.I. RTE.	SECTION	COUNTY	TOTAL SHEETS	SHEET NO.
57	139 HBR-6	KANKAKEE	202	191

CONTRACT NO. 68997

ILLINOIS | FED. AID PROJECT

1 REV. 08/25/21

NOTE :SECTION THROUGH WALDRON BRIDGE NOT SHOWN.
SEE STRUCTURAL SHEETS FOR BRIDGE DETAIL

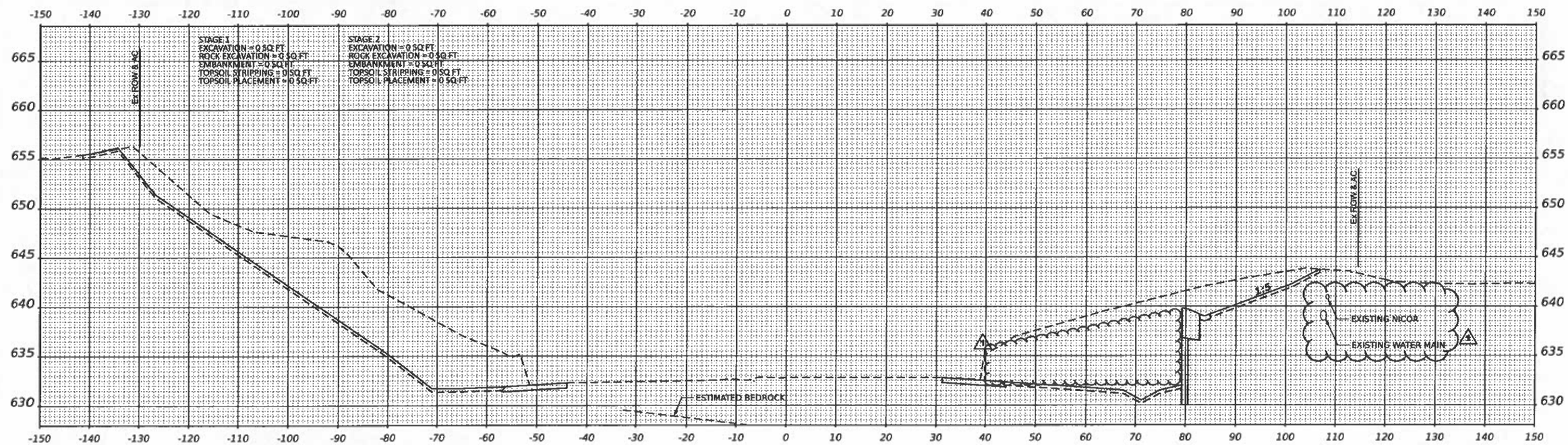

STA 19+50.00

MODEL: 19+50.dgn
FILE NAME: 19+50.05.dgn

TranSmart
411 South Wells Street Suite 1000
Chicago, Illinois 60607

USER NAME = ashkc	DESIGNED - NS	REVISED -	
	DRAWN - NS	REVISED -	
PLOT SCALE = 0.18888833 ' / in.	CHECKED - TW	REVISED -	
PLOT DATE = 7/9/2021	DATE - 2021/03/26	REVISED -	

STATE OF ILLINOIS
DEPARTMENT OF TRANSPORTATION

WALDRON ROAD
CROSS SECTIONS

SCALE: | SHEET 8 OF 15 SHEETS | STA. 19+50 TO STA. 19+50

F.A.I. RTE.	SECTION	COUNTY	TOTAL SHEETS	SHEET NO.
57	139 HBR-6	KANKAKEE	202	192
		CONTRACT NO. 66997		
		ILLINOIS	FED. AID PROJECT	

REV. 08/25/21

NOTE: SECTION THROUGH WALDRON BRIDGE NOT SHOWN.
SEE STRUCTURAL SHEETS FOR BRIDGE DETAIL

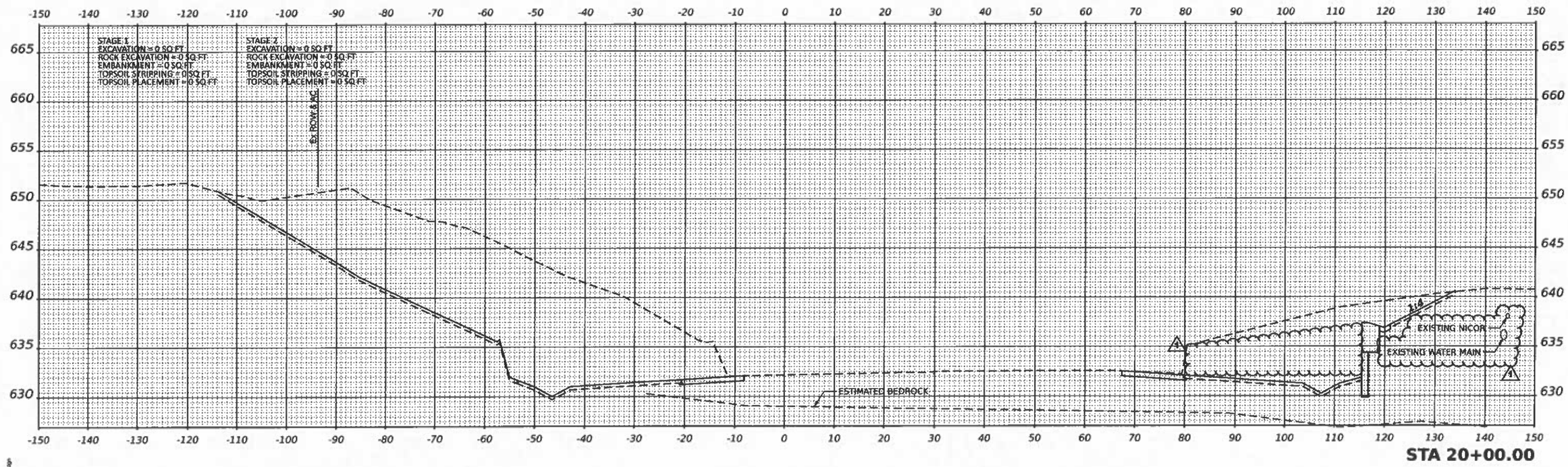

STA 20+00.00

MODEL: 20+00.00
FILE NAME: 20+00.00.dgn

TranSmart
411 South Wells Street Suite 1000
Chicago, Illinois 60607

USER NAME = asfhac	DESIGNED - NS	REVISED -	
	DRAWN - NS	REVISED -	
PLOT SCALE = 0.10000833 ' / in.	CHECKED - TW	REVISED -	
PLOT DATE = 7/9/2021	DATE - 2021/03/26	REVISED -	

STATE OF ILLINOIS
DEPARTMENT OF TRANSPORTATION

WALDRON ROAD
CROSS SECTIONS

SCALE: | SHEET 9 OF 15 SHEETS | STA. 20+00 TO STA. 20+00

F.A.I. RTE.	SECTION	COUNTY	TOTAL SHEETS	SHEET NO.
57	139 HBR-6	KANKAKEE	202	193
		CONTRACT NO. 66997		
		ILLINOIS	FED. AID PROJECT	

1 REV. 08/25/21

NOTE: SECTION THROUGH WALDRON BRIDGE NOT SHOWN.
SEE STRUCTURAL SHEETS FOR BRIDGE DETAIL

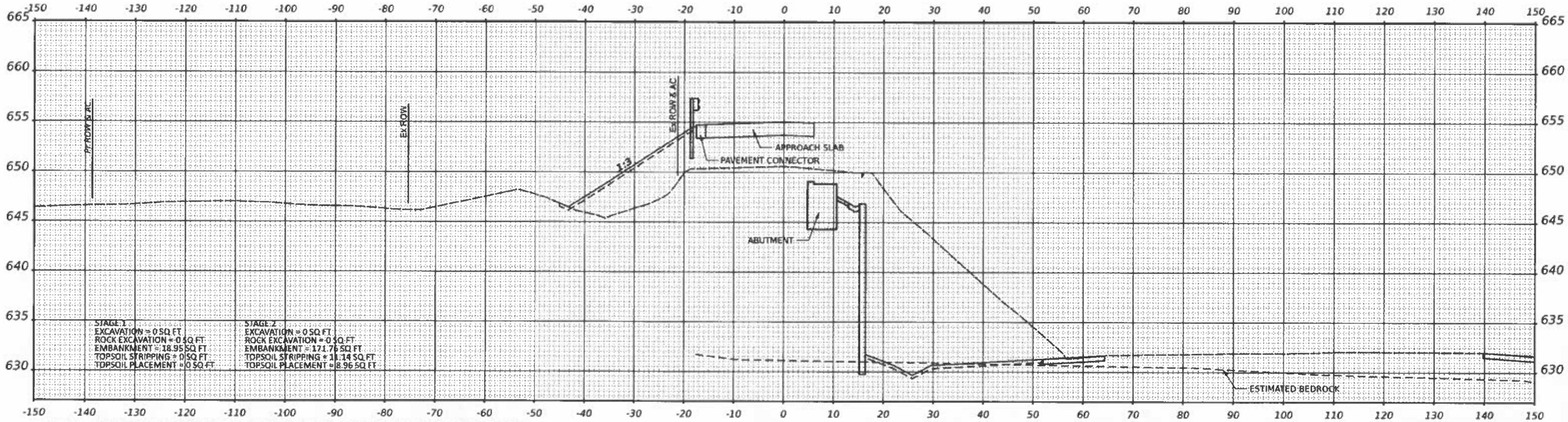

STA 21+00.00

NOTE: SECTION THROUGH WALDRON BRIDGE NOT SHOWN.
SEE STRUCTURAL SHEETS FOR BRIDGE DETAIL

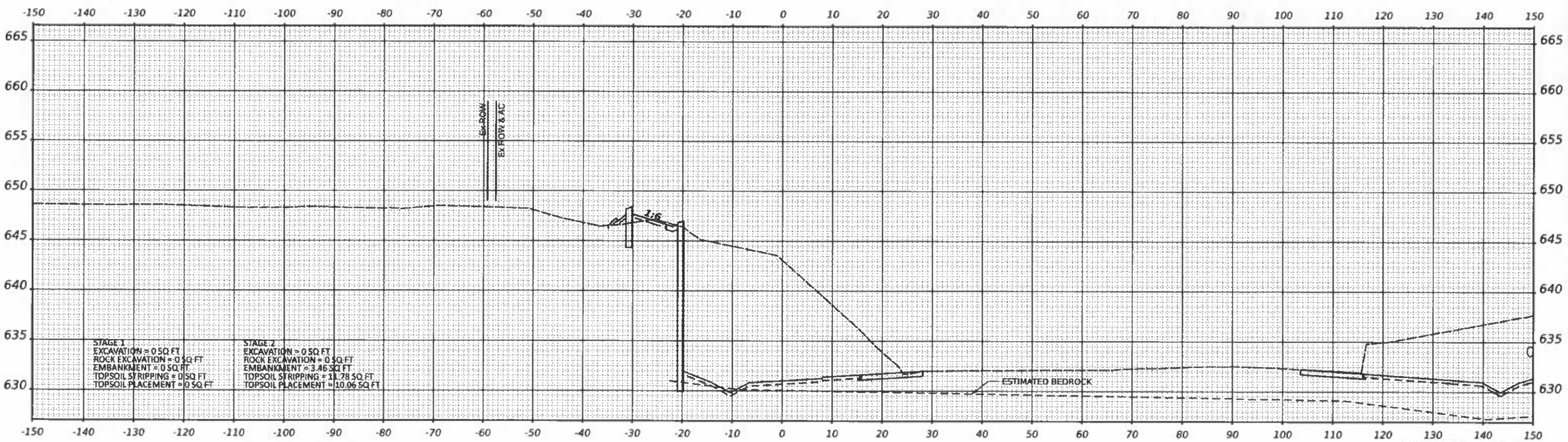

STA 20+50.00

MODEL: 20-50.dgn
FILE NAME: 20-50.00.dgn

TranSmart
411 South Wells Street Suite 1000
Chicago, Illinois 60607

USER NAME = rsalehian	DESIGNED - NS	REVISED -	
	DRAWN - NS	REVISED -	
PLOT SCALE = 0.166666333 ' / in.	CHECKED - TW	REVISED -	
PLOT DATE = 3/29/2021	DATE - 2021/03/26	REVISED -	

STATE OF ILLINOIS
DEPARTMENT OF TRANSPORTATION

WALDRON ROAD
CROSS SECTIONS

SCALE: | SHEET 10 OF 15 SHEETS | STA. 20+50 TO STA. 21+00

F.A.I. RTE	SECTION	COUNTY	TOTAL SHEETS	SHEET NO.
57	139 HBR-6	KANKAKEE	202	194
		CONTRACT NO. 66997		
		ILLINOIS FED. AID PROJECT		

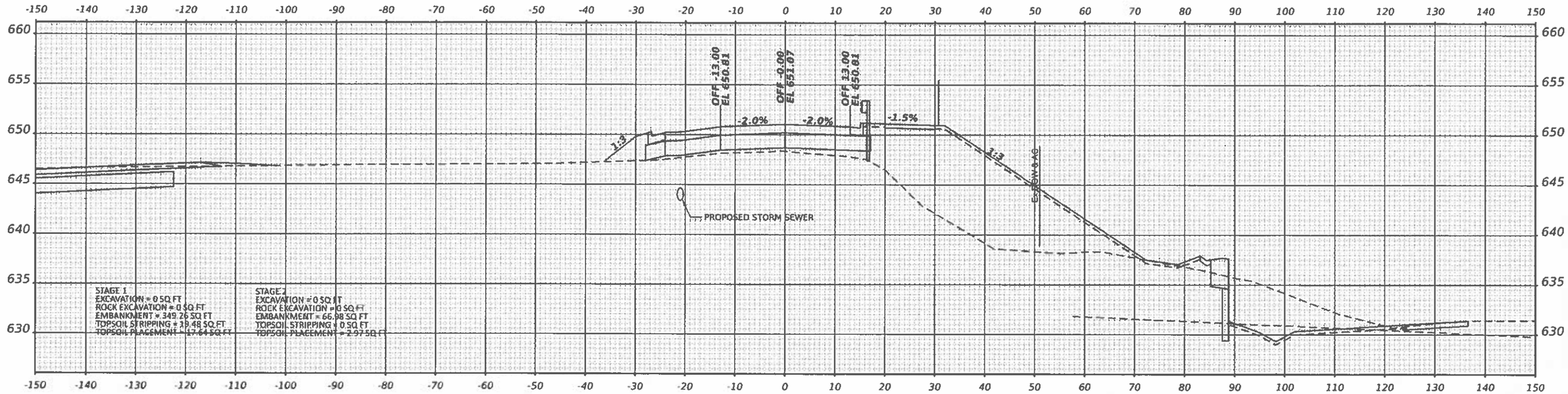

STA 22+00.00

NOTE :SEE STRUCTURAL SHEETS FOR BRIDGE DETAIL

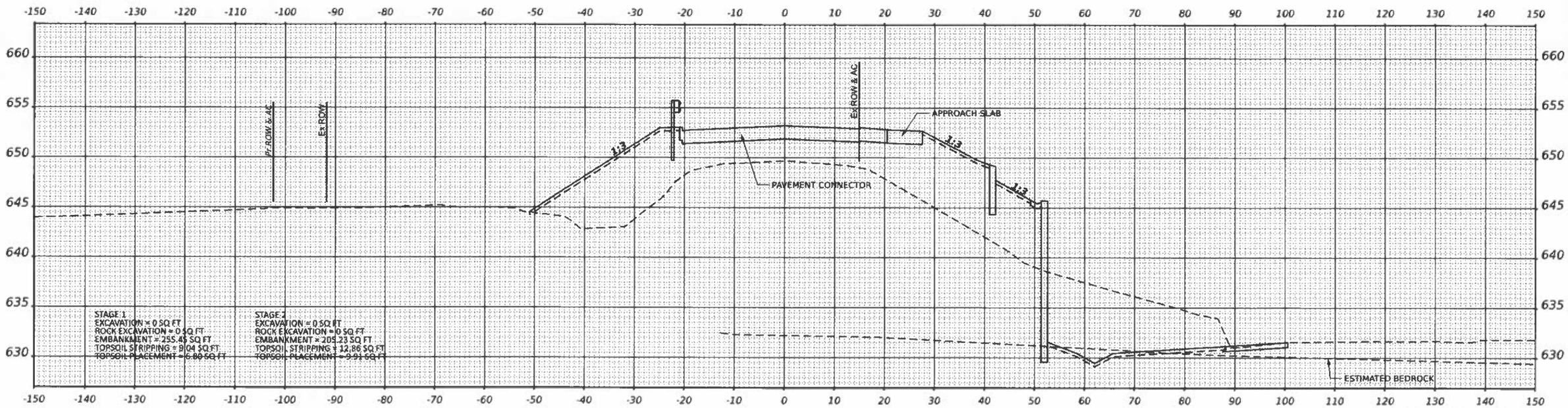

STA 21+50.00

MODEL: 21+50.dgn
FILE NAME: 21+50.00.dgn

TranSmart
411 South Wells Street Suite 1000
Chicago, Illinois 60607

USER NAME = rsalarian	DESIGNED - NS	REVISED - 5/7/2021	
	DRAWN - NS	REVISED -	
PLOT SCALE = 0.166666633 ' / in.	CHECKED - TW	REVISED -	
PLOT DATE = 3/29/2021	DATE - 2021/03/26	REVISED -	

STATE OF ILLINOIS
DEPARTMENT OF TRANSPORTATION

WALDRON ROAD
CROSS SECTIONS

SCALE: | SHEET 11 OF 15 SHEETS | STA. 21+50 TO STA. 22+00

F.A.I. RTE.	SECTION	COUNTY	TOTAL SHEETS	SHEET NO.
57	139 HBR-6	KANKAKEE	202	195

CONTRACT NO. 66997

ILLINOIS | FED. AID PROJECT

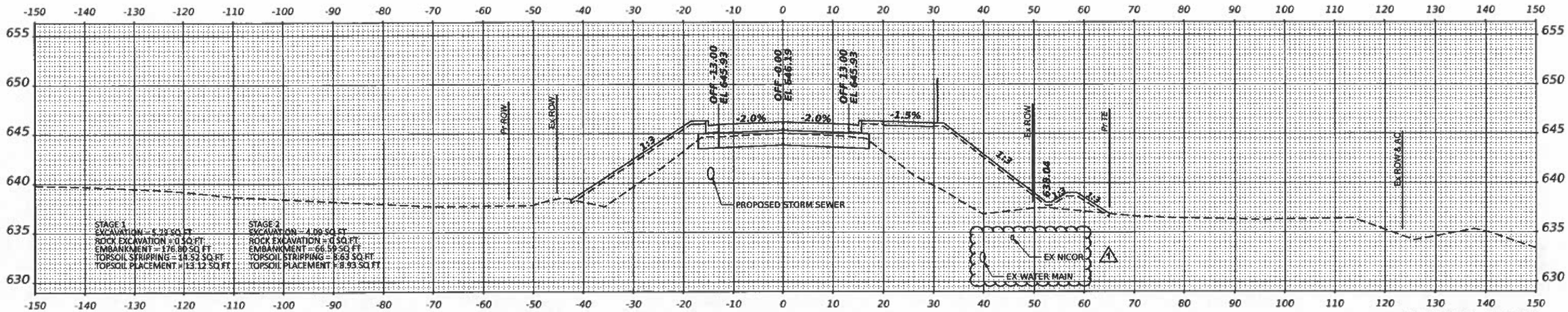

STA 23+00.00

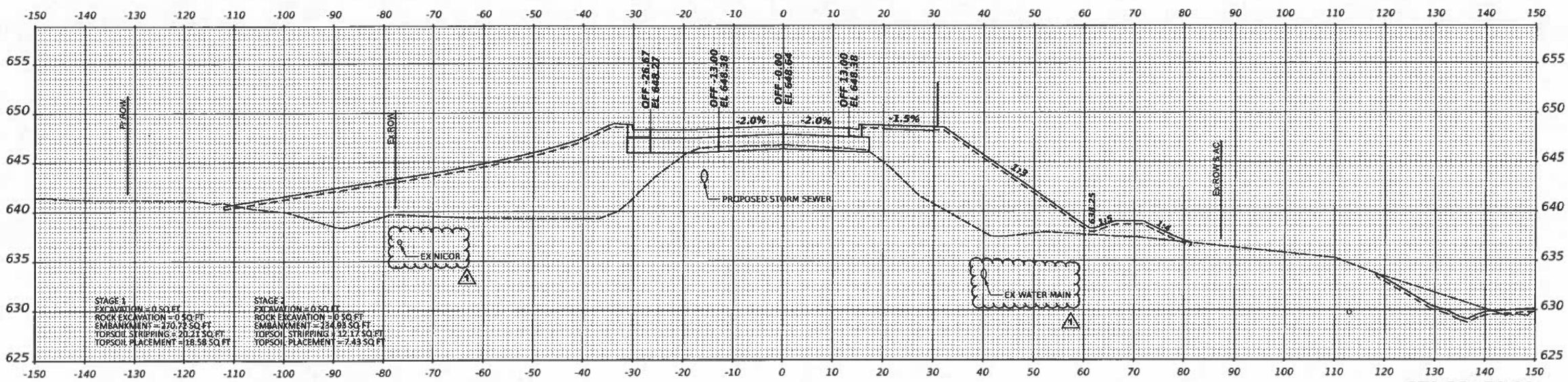

STA 22+50.00

MODEL: 22+50.00
FILE NAME: 22+00.00.dgn

TranSmart
411 South Wells Street Suite 1000
Chicago, Illinois 60607

USER NAME = mMki	DESIGNED - NS	REVISED -
	DRAWN - NS	REVISED -
PLOT SCALE = 0.10000833 ' / in.	CHECKED - TW	REVISED -
PLOT DATE = 7/9/2021	DATE - 2021/03/26	REVISED -

STATE OF ILLINOIS
DEPARTMENT OF TRANSPORTATION

WALDRON ROAD
CROSS SECTIONS

SCALE: | SHEET 12 OF 15 SHEETS | STA. 22+50 TO STA. 23+00

F.A.I. RTE.	SECTION	COUNTY	TOTAL SHEETS	SHEET NO.
57	139 HBR-6	KANKAKEE	202	196
		CONTRACT NO. 66997		
		ILLINOIS	FED. AID PROJECT	

1 REV. 08/25/21

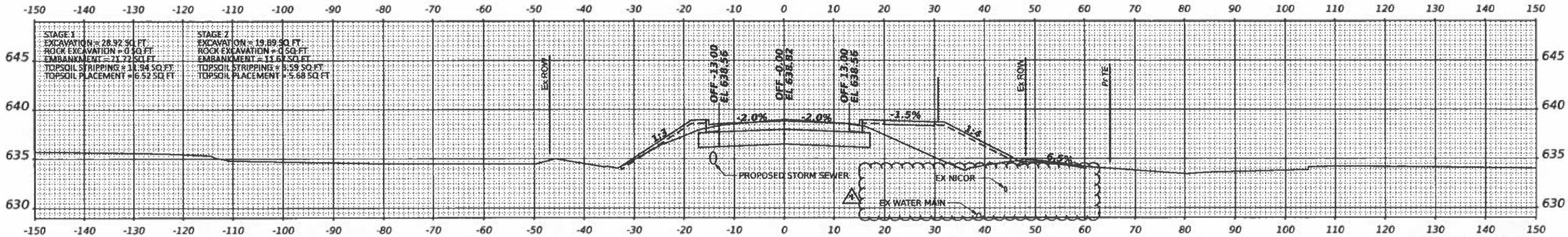

STA 24+50.00

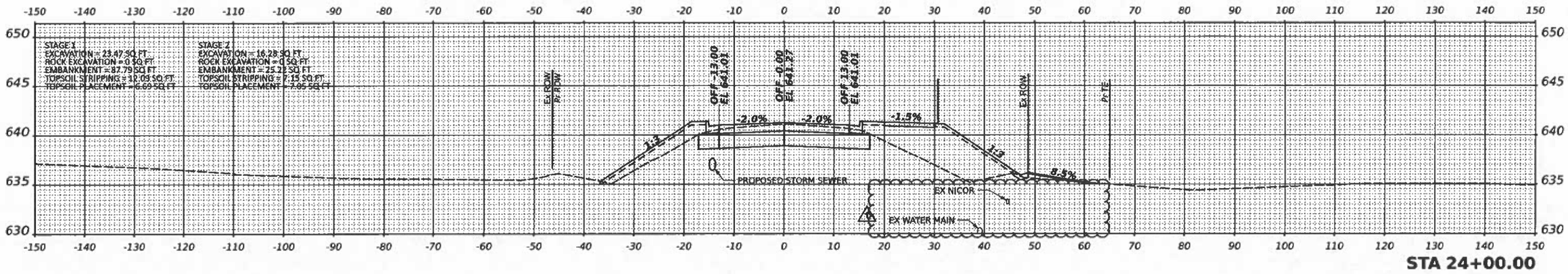

STA 24+00.00

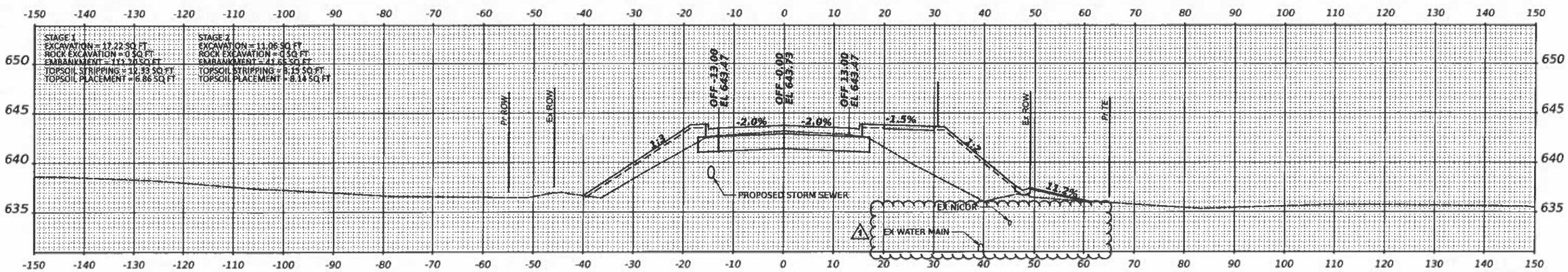

STA 23+50.00

MODEL: 23+50.00
FILE NAME: 2350.00.dgn

TranSmart
411 South Wells Street Suite 1000
Chicago, Illinois 60607

USER NAME = aehkc	DESIGNED - NS	REVISED -	
	DRAWN - NS	REVISED -	
PLOT SCALE = 0.18888833 ' / in.	CHECKED - TW	REVISED -	
PLOT DATE = 7/9/2021	DATE - 2021/03/26	REVISED -	

STATE OF ILLINOIS
DEPARTMENT OF TRANSPORTATION

WALDRON ROAD
CROSS SECTIONS

SCALE: | SHEET 13 OF 15 SHEETS | STA. 23+50 TO STA. 24+50

F.A.I. RTE.	SECTION	COUNTY	TOTAL SHEETS	SHEET NO.
57	139 HBR-6	KANKAKEE	202	197

CONTRACT NO. 66997

ILLINOIS | FED. AID PROJECT

1 REV. 08/25/21

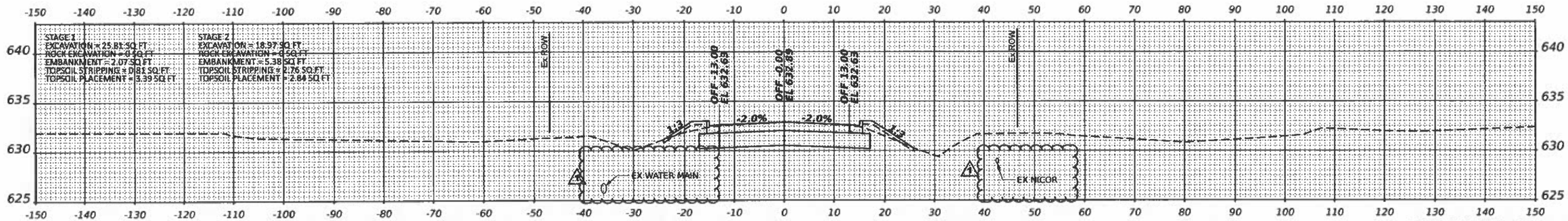

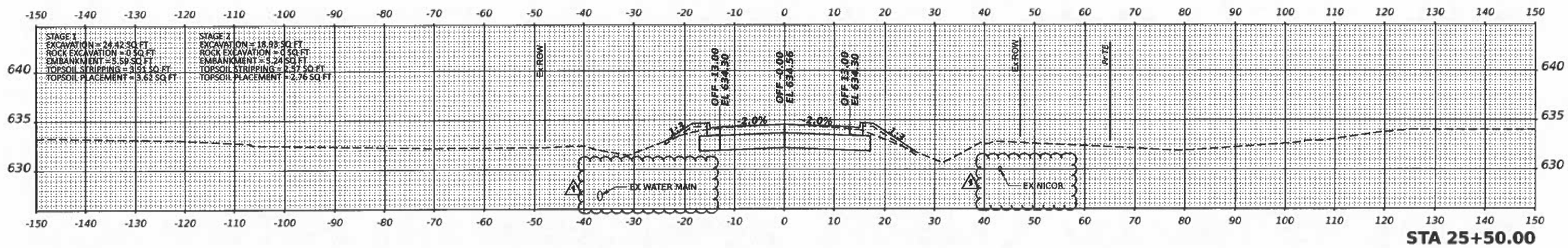

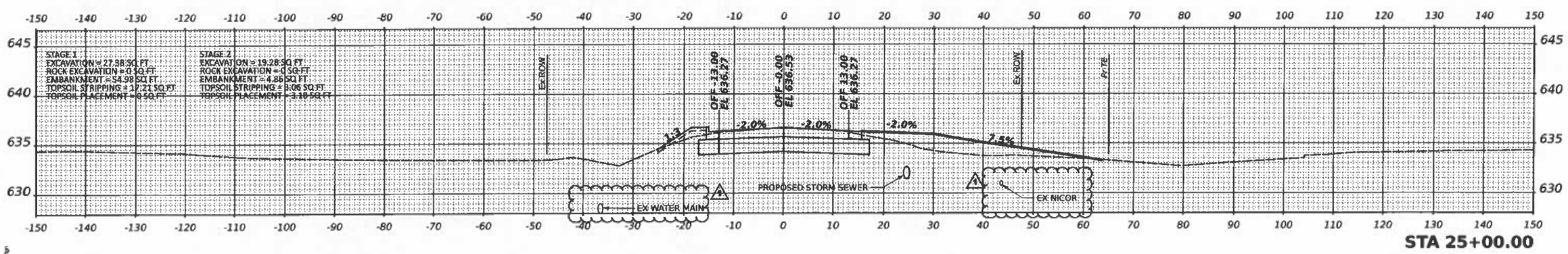

MODEL: 25+00.00
FILE NAME: 25+00.00.dgn

TranSmart
411 South Wells Street Suite 1000
Chicago, Illinois 60607

USER NAME = ashhc	DESIGNED - NS	REVISED -	
	DRAWN - NS	REVISED -	
PLOT SCALE = 0.10000833 ' / in.	CHECKED - TW	REVISED -	
PLOT DATE = 7/9/2021	DATE - 2021/03/26	REVISED -	

STATE OF ILLINOIS
DEPARTMENT OF TRANSPORTATION

WALDRON ROAD
CROSS SECTIONS

SCALE: | SHEET 14 OF 15 SHEETS | STA. 25+00 TO STA. 26+00

F.A.I. RTE.	SECTION	COUNTY	TOTAL SHEETS	SHEET NO.
57	139 HBR-6	KANKAKEE	202	198
		CONTRACT NO. 66863		
	ILLINOIS	FED. AID PROJECT		

REV. 08/25/21

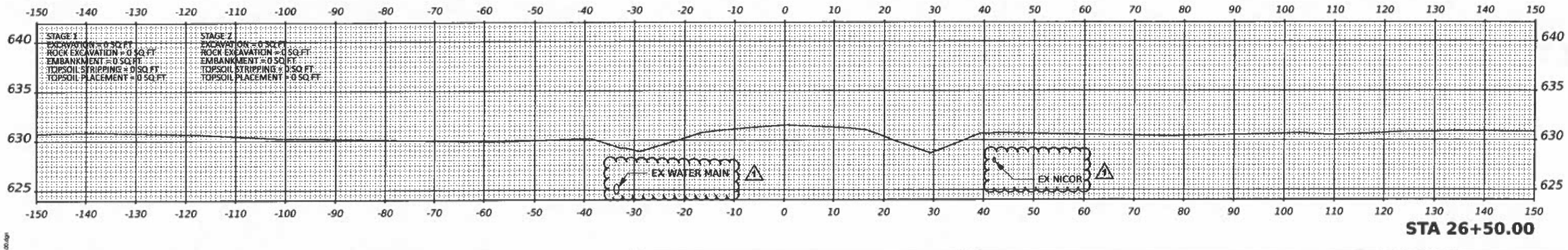

STA 26+50.00

MODEL: 26+50.00
FILE NAME: 26+50.00.dgn

TranSmart
411 South Wells Street Suite 1000
Chicago, Illinois 60607

USER NAME = aslNic	DESIGNED - NS	REVISED -	
	DRAWN - NS	REVISED -	
PLOT SCALE = 0.18888833 ' / in.	CHECKED - TW	REVISED -	
PLOT DATE = 7/9/2021	DATE - 2021/03/26	REVISED -	

STATE OF ILLINOIS
DEPARTMENT OF TRANSPORTATION

WALDRON ROAD
CROSS SECTIONS

SCALE: | SHEET 15 OF 15 SHEETS | STA. 26+50 | TO STA. 26+50

F.A.I. RTE.	SECTION	COUNTY	TOTAL SHEETS	SHEET NO.
57	139 HBR-6	KANKAKEE	202	199
		CONTRACT NO. 68997		
		ILLINOIS FED. AID PROJECT		

REV. 08/25/21

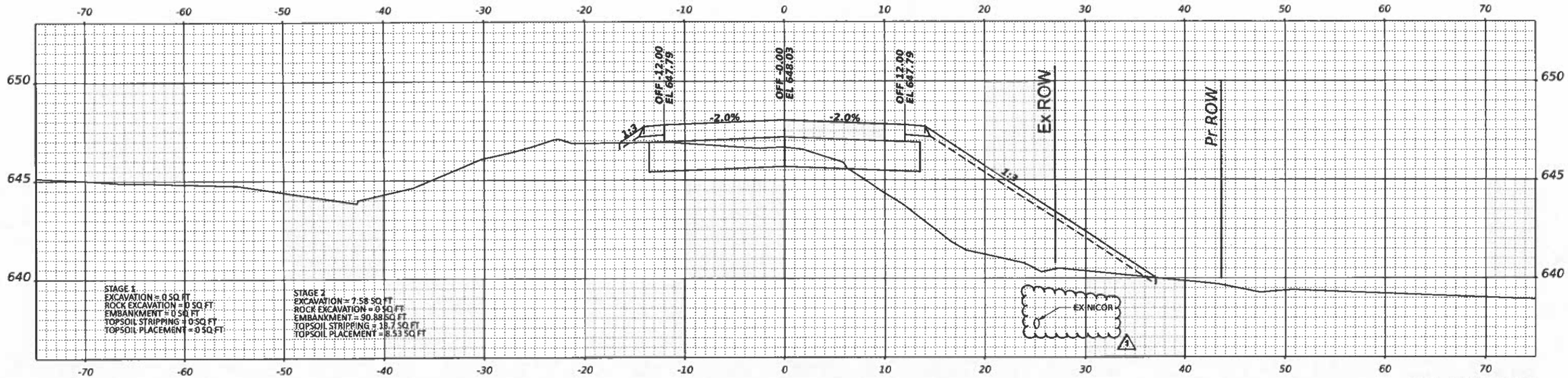

STA 11+00.00

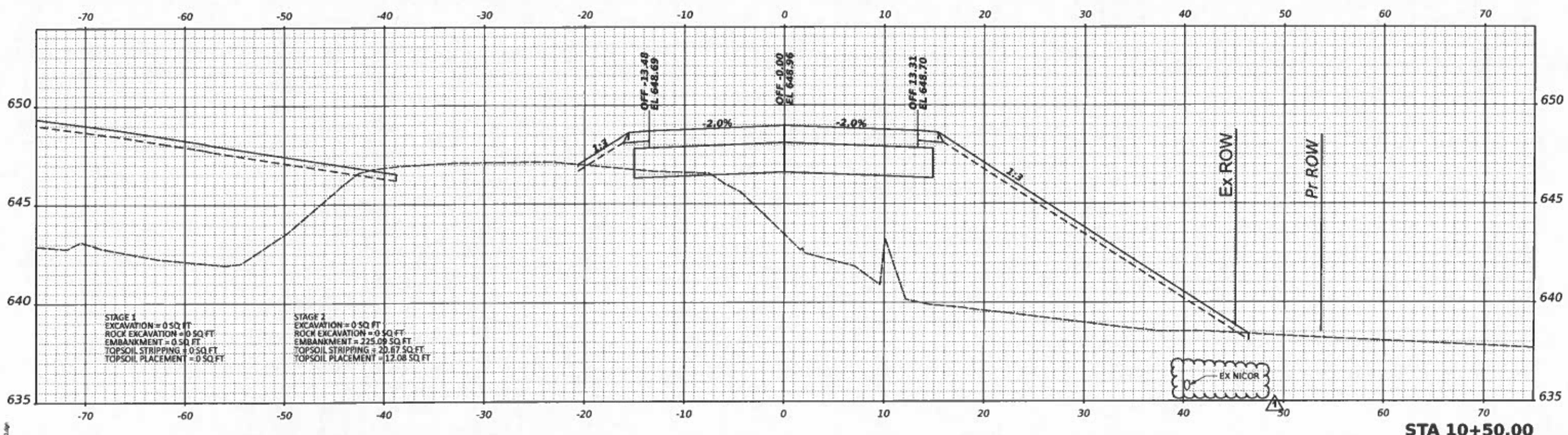

STA 10+50.00

MODEL: 10-50.dgn
FILE NAME: 11-00.00.dgn

TranSmart
411 South Wells Street Suite 1000
Chicago, Illinois 60607

USER NAME = asthac	DESIGNED - NS	REVISED -
	DRAWN - NS	REVISED -
PLOT SCALE = 0.18000833 ' / in.	CHECKED - TW	REVISED -
PLOT DATE = 7/9/2021	DATE - 2021/03/26	REVISED -

STATE OF ILLINOIS
DEPARTMENT OF TRANSPORTATION

MUN 2530
CROSS SECTIONS

SCALE: | SHEET 1 OF 3 SHEETS | STA. 10+50 TO STA. 11+00

F.A.I. RTE.	SECTION	COUNTY	TOTAL SHEETS	SHEET NO.
57	139 HBR-6	KANKAKEE	202	200
		CONTRACT NO. 66997		
		ILLINOIS	FED. AID PROJECT	

1 REV. 08/25/21

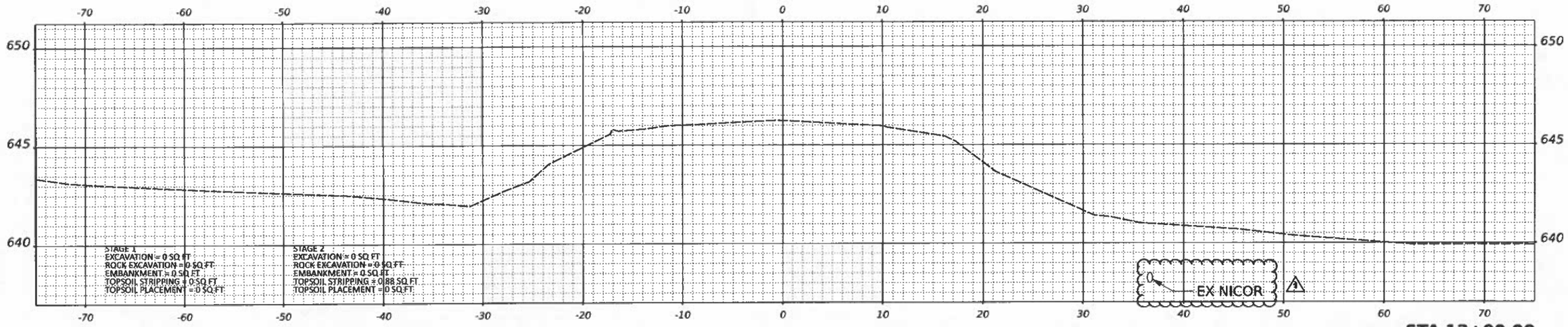

STA 12+00.00

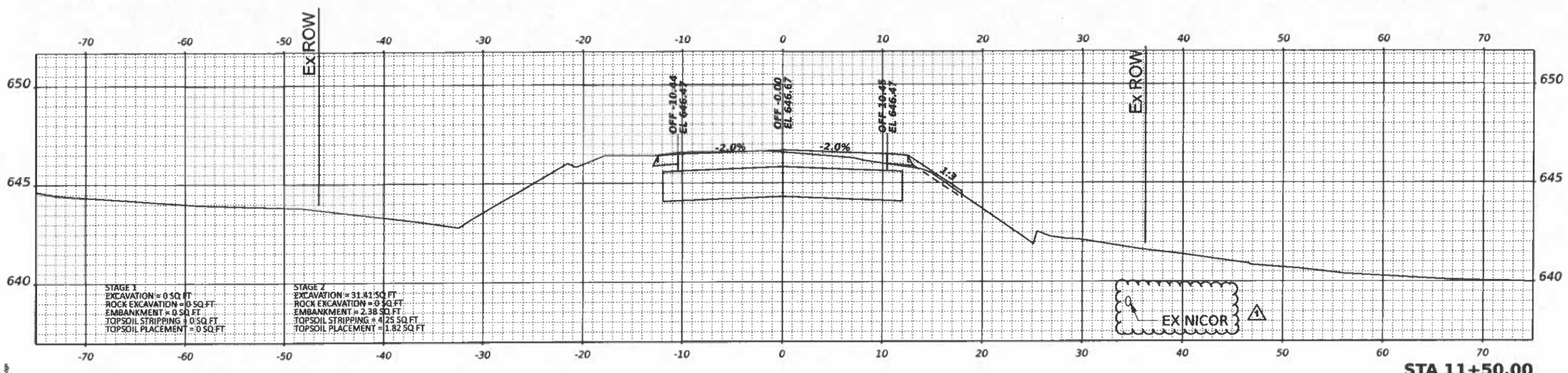

STA 11+50.00

MODEL: 11+50.00
FILE NAME: 11+50.00.dgn

TranSmart
411 South Wells Street Suite 1000
Chicago, Illinois 60607

USER NAME = aahlac	DESIGNED - NS	REVISED -	
	DRAWN - NS	REVISED -	
PLOT SCALE = 0.10000833 ' / in.	CHECKED - TW	REVISED -	
PLOT DATE = 7/9/2021	DATE - 2021/03/26	REVISED -	

STATE OF ILLINOIS
DEPARTMENT OF TRANSPORTATION

MUN 2530
CROSS SECTIONS

SCALE: | SHEET 2 OF 3 SHEETS | STA. 11+50 TO STA. 12+00

F.A.I. RTE.	SECTION	COUNTY	TOTAL SHEETS	SHEET NO.
57	139 HBR-6	KANKAKEE	202	201
		CONTRACT NO. 66997		
		ILLINOIS FED. AID PROJECT		

4 REV. 08/25/21

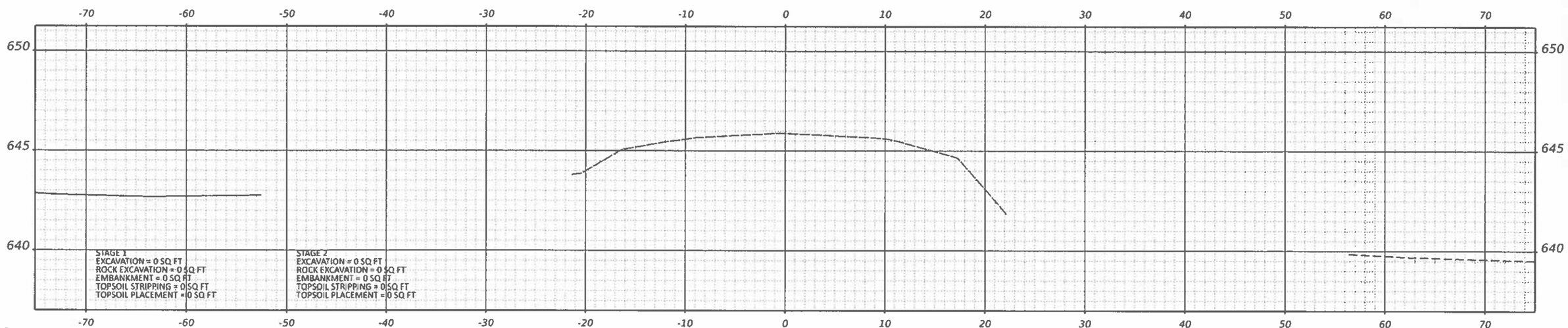

STA 12+50.00

MODEL: 12+50.00
FILE NAME: 12+50.00.dgn

TranSmart
411 South Wells Street Suite 1000
Chicago, Illinois 60607

USER NAME =	DESIGNED - NS	REVISED -	
	DRAWN - NS	REVISED -	
PLOT SCALE = 0.166666667 / in.	CHECKED - TW	REVISED -	
PLOT DATE = 3/29/2021	DATE -	REVISED -	

STATE OF ILLINOIS
DEPARTMENT OF TRANSPORTATION

MUN 2530
CROSS SECTIONS

SCALE: | SHEET 3 OF 3 SHEETS | STA. 12+50 TO STA. 12+50

F.A.I. RTE.	SECTION	COUNTY	TOTAL SHEETS	SHEET NO.
57	139 HBR-6	KANKAKEE	202	202

CONTRACT NO. 66997

ILLINOIS | FED. AID PROJECT