07-31-2026 LETTING ITEM 056

F.A.S RTE.	SECTION	COUNTY	TOTAL SHEETS	SHEET NO.
2585	122(RS-10,BDR-1,I-1)	*	120*	1
	ILLINOIS	CONTRACT NO. 72J44		

*BROWN, PIKE

* 120 + 8 = 128 TOTAL SHEETS

D-96-003-17

STATE OF ILLINOIS
DEPARTMENT OF TRANSPORTATION

PROPOSED HIGHWAY PLANS

FAS ROUTE 2585 (IL 99)
SECTION 122(RS-10,BDR-1,I-1)
PROJECT STP-BR-7 I3Y(868)
HMA OVERLAY, ADA IMPROVEMENTS, AND BR DECK OVERLAY
BROWN & PIKE COUNTY

C-96-003-17

INDEX OF SHEETS

1	COVER SHEET
2	GENERAL NOTES
3-13	SUMMARY OF QUANTITIES
14-15	SURVEY SCHEDULES
16-31	SCHEDULE OF QUANTITIES
32-42	TYPICAL SECTIONS
43-57	PLAN SHEETS
58-63	STAGING PLANS
64-67	DRAINAGE P&P
68-79	ADA RAMP DETAILS
80-94	PAVEMENT MARKING PLANS
95-104	STRUCTURE REPAIR DETAIL SHEETS (SN 075-0129)
105-120D	DETAIL SHEETS
120E-120L	CROSS SECTIONS

ROADWAY CLASSIFICATION

FUNCTIONAL CLASS: MINOR ARTERIAL

AVERAGE DAILY TRAFFIC YEAR 2025

ADT (2025): 1,970 (MU=15.35%, SU=7.08%, PV=77.57%)

PROJECT BEGINS
STA 456+80.00

STATION EQUATION
STA 531+61.37 BK = STA 531+50.18 AH

BRIDGE OMISSION SN 005-0003
STA 621+60.59 TO STA 621+82.65

BRIDGE OMISSION SN 005-0004
STA 693+00.63 TO STA 693+22.63

STATION EQUATION
STA 784+36.36 BK = STA 784+39.92 AH

SN 075-0129 (BR DECK OVERLAY)
STA 793+68.25 TO STA 795+76.49

PROJECT ENDS
STA 797+96.00

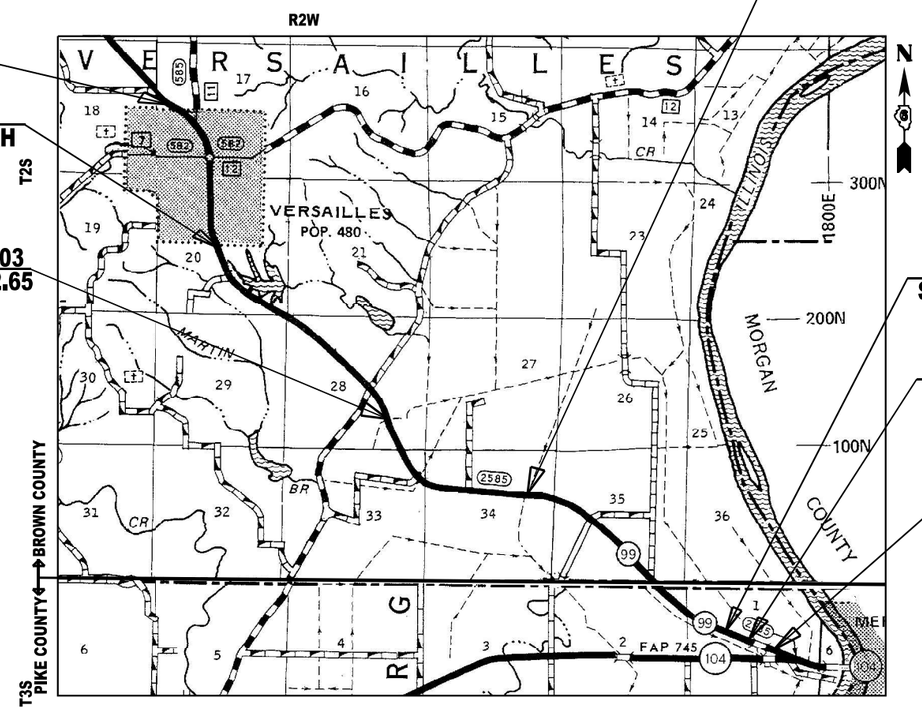

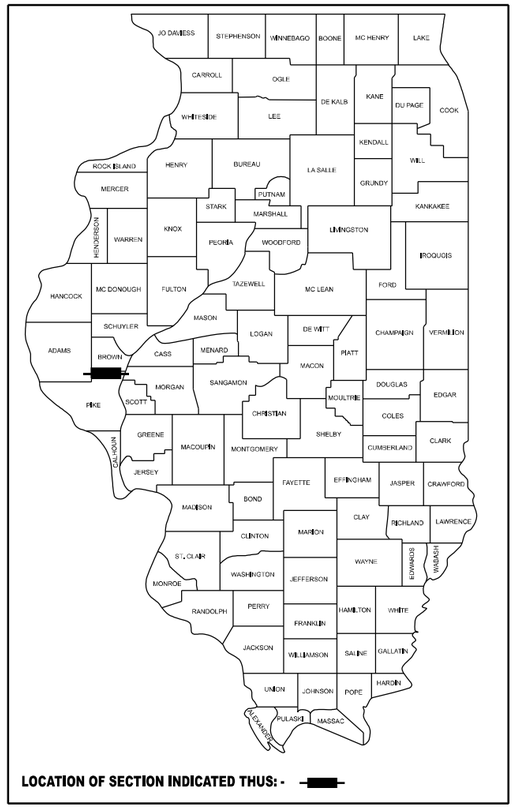

LOCATION OF SECTION INDICATED THUS: -

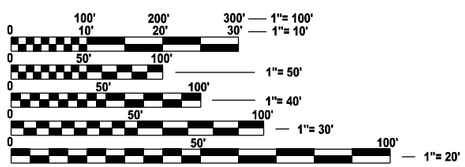

FULL SIZE PLANS HAVE BEEN PREPARED USING STANDARD ENGINEERING SCALES. REDUCED SIZED PLANS WILL NOT CONFORM TO STANDARD SCALES. IN MAKING MEASUREMENTS ON REDUCED PLANS, THE ABOVE SCALES MAY BE USED.

J.U.L.I.E.
JOINT UTILITY LOCATION INFORMATION FOR EXCAVATION
1-800-892-0123
OR 811

STATE OF ILLINOIS
DEPARTMENT OF TRANSPORTATION

SUBMITTED May 18, 20 26
Teresa C. Price
REGIONAL ENGINEER

June 26, 20 26
ENGINEER OF DESIGN AND ENVIRONMENT

June 26, 20 26
DIRECTOR OF HIGHWAYS, PROJECT IMPLEMENTATION

PROJECT ENGINEER JAY EDWARDS (217)785-0597
PROJECT MANAGER SYLVETTE CUEBAS-CANCEL (217) 785-5329
PROJECT DESIGNER MCQUADE JACKSON (217) 557-9062

GROSS LENGTH = 33783.74 FT. = 6.398 MILE
NET LENGTH = 33879.69 FT. = 6.417 MILE

CONTRACT NO. 72J44

PRINTED BY THE AUTHORITY OF THE STATE OF ILLINOIS

REV - MS

GENERAL NOTES

1. ALL ELEVATIONS SHOWN ON THE PLANS ARE BASED ON NAVD '88 LEVEL DATUM.

2. THE FOLLOWING RATES OF APPLICATION HAVE BEEN USED TO CALCULATE THE PLAN QUANTITIES:

BITUMINOUS MATERIALS (TACK COAT)	0.05 LB/SQ. FT. (ON PAVEMENT: MILLED HMA)
BITUMINOUS MATERIALS (TACK COAT)	0.025 LB/SQ. FT. (ON PAVEMENT: LIFTS)
HMA SURFACE/BINDER	0.056 TON/SQ. YD. PER 1"
SEEDING:	
SEEDING FERTILIZER RATIO (NIT:POS:POT)	90:90:90 LBS./AC.
AGGREGATE MATERIAL	1.60 TON/CU. YD.
RIPRAP	1.50 TON/CU. YD.
AGRICULTURAL GROUND LIMESTONE	0.00041 TONS/SQ. YD. (2 TONS/ACRE)

3. THE CONTRACTOR SHALL NOTIFY THE DISTRICT 6 BUREAU OF OPERATIONS AT (217) 785-0494 THREE WEEKS PRIOR TO IMPLEMENTING ANY TRAFFIC CONTROL.

4. LIMITS OF CONSTRUCTION ALONG SIDE ROADS SHALL BE VERIFIED AND APPROVED BY THE ENGINEER BEFORE WORK BEGINS. LIMITS MAY BE ADJUSTED FROM PROPOSED PLAN LAYOUT IF ENGINEER DEEMS NECESSARY.

5. ALL GUARDRAIL SHALL HAVE A PRELIMINARY LAYOUT. GUARDRAIL POSTS SHALL BE ADJUSTED SO AS TO MISS ANY SHOULDER DRAINS, INLETS, PIPE CULVERTS, STORM SEWER OR ANY OTHER HAZARD THAT MAY INTERFERE WITH GUARDRAIL CONSTRUCTION.

6. THE DISTRICT 6 BUREAU OF OPERATIONS SHALL BE NOTIFIED AT LEAST 14 DAYS PRIOR TO PLACEMENT OF FINAL PAVEMENT MARKINGS (PH: 217-785-0494).

7. NO PASSING ZONES TO BE FIELD VERIFIED BY THE RESIDENT ENGINEER. THE RESIDENT ENGINEER SHALL NOTIFY THE DISTRICT 6 TRAFFIC OPERATIONS ENGINEER WITH ANY NO PASSING ZONE CONCERNS AND AT LEAST 14 DAYS PRIOR TO PLACEMENT OF FINAL PERMANENT PAVEMENT MARKING AT (217)-785-0494.

8. THE MATERIAL USED FOR AGGREGATE WEDGE SHOULDERS, TYPE B SHALL BE CRUSHED STONE, CRUSHED CONCRETE, OR RAP.

9. REMOVED GUARDRAIL THAT IS NOT REPLACED ON THE SAME DAY MUST BE DELINEATED WITH LIGHTED BARRICADES. NO LOCATIONS WILL BE LEFT WITHOUT EITHER LIGHTED BARRICADES OR RESTORED GUARDRAIL AT ANY TIME.

10. THE CONTRACTOR SHALL USE TYPE IV PAVEMENT MARKING TAPE AS SHORT-TERM PAVEMENT MARKING ON THE SURFACE LIFT.

11. THE MATERIAL USED FOR AGGREGATE SURFACE COURSE, TYPE B SHALL BE CRUSHED STONE OR CRUSHED CONCRETE.

12. SYNTHETIC FIBERS ARE NOT REQUIRED FOR THE BRIDGE DECK MICROSILICA CONCRETE OVERLAY.

STATE OF ILLINOIS
DEPARTMENT OF TRANSPORTATION
DIVISION OF HIGHWAYS
DISTRICT 6

EXAMINED April 27, 20 26
ENGINEER OF OPERATIONS

EXAMINED April 27, 20 26
ENGINEER OF PROJECT IMPLEMENTATION

EXAMINED May 4, 20 26
ENGINEER OF PROGRAM DEVELOPMENT

MIXTURE REQUIREMENTS

Location(s):	Mainline
Mixture Use(s):	HMA Surface
PG:	PG 64-22
Design Air Voids:	4.0% @ N50
Mixture Composition:	IL-9.5
Friction Aggregate:	Mix "C"
Mixture Weight:	112 lb/sy* in
Quality Management:	QCP
Sublot Size:	1000 TONS
Material Transfer Device Required:	Yes

Location(s):	Mainline
Mixture Use(s):	1.25" HMA Binder
PG:	PG 64-22
Design Air Voids:	4.0% @ N50
Mixture Composition:	IL-9.5FG
Friction Aggregate:	N/A
Mixture Weight:	112 lb/sy* in
Quality Management:	QC/QA
Sublot Size:	N/A
Material Transfer Device Required:	No

Location(s):	Mainline
Mixture Use(s):	2.25" HMA Binder
PG:	PG 64-22
Design Air Voids:	4.0% @ N50
Mixture Composition:	IL-19.0
Friction Aggregate:	N/A
Mixture Weight:	112 lb/sy* in
Quality Management:	QCP
Sublot Size:	1000 TONS
Material Transfer Device Required:	No

Location(s):	HMA Shld (Top Lift) & Incidental
Mixture Use(s):	HMA
PG:	PG 58-28
Design Air Voids:	4.0% @ N50
Mixture Composition:	IL-9.5
Friction Aggregate:	Mix "C"
Mixture Weight:	112 lb/sy* in
Quality Management:	QC/QA
Sublot Size:	N/A
Material Transfer Device Required:	No

Location(s):	HMA Shoulder (lower lifts), Base Course & Patching
Mixture Use(s):	HMA
PG:	PG 58-28
Design Air Voids:	4.0% @ N50
Mixture Composition:	IL-19.0
Friction Aggregate:	N/A
Mixture Weight:	112 lb/sy* in
Quality Management:	QC/QA
Sublot Size:	N/A
Material Transfer Device Required:	No

NOTE: NUCLEAR GUAGE WILL BE USED FOR DENSITY VERIFICATION BY THE ENGINEER ON ALL QC/QA ITEMS.

COMMITMENTS

NO COMMITMENTS

HIGHWAY STANDARDS

NO.	DESCRIPTION
000001-09	STANDARD SYMBOLS, ABBREVIATIONS AND PATTERNS
001006	DECIMAL OF AN INCH AND OF A FOOT
406201-01	MAILBOX TURNOUT
424001-12	PERPENDICULAR CURB RAMPS FOR SIDEWALKS
442201-04	CLASS C AND D PATCHES
542301-03	PRECAST REINFORCED CONCRETE FLARED END SECTION
542306-03	PRECAST REINFORCED CONCRETE ELLIPTICAL FLARED END SECTION
602301-04	INLET, TYPE A
602306-03	INLET, TYPE B
602401-07	PRECAST MANHOLE, TYPE A, 4' (1.22 M) DIAMETER
602601-06	PRECAST REINFORCED FLAT SLAB TOP
602701-02	MANHOLE STEPS
604001-05	FRAME AND LIDS TYPE 1
604006-05	FRAME AND GRATE, TYPE 3
604016-04	FRAME AND GRATE, TYPE 4
604036-03	GRATE TYPE 8
604041-03	FRAME AND GRATE, TYPE 9
606001-09	CONC. CURB TY. B AND COMBINATION CC&G
606006-04	OUTLETS FOR CONCRETE CURB AND GUTTER TYPE B-6.24
606101-05	TYPE A GUTTER (INLET, OUTLET & ENTRANCE)
630001-13	STEEL PLATE BEAM GUARDRAIL
630301-09	SHOULDER WIDENING FOR TYPE 1 (SPECIAL) GUARDRAIL TERMINAL
631031-18	TRAFFIC BARRIER TERMINAL, TYPE 6
635001-02	DELINEATORS
665001-02	WOVEN WIRE FENCE
701001-02	OFF-ROAD OPERATIONS, 2L, 2W, MORE THAN 15' AWAY
701006-05	OFF-ROAD OPERATIONS, 2L, 2W, 15'TO 24" FROM PAVEMENT EDGE
701011-04	OFF-ROAD MOVING OPERATIONS, 2L, 2W, DAY ONLY
701201-05	LANE CLOSURE, 2L, 2W, DAY ONLY,FOR SPEEDS>45 MPH
701301-04	LANE CLOSURE, 2L, 2W, SHORT TIME OPERATIONS
701306-04	LANE CLOSURE, 2L, 2W, SLOW MOVING OPERATIONS DAY ONLY, FOR SPEEDS >45 MPH
701311-03	LANE CLOSURE, 2L, 2W, MOVING OPERATIONS DAY ONLY
701321-19	LANE CLOSURE, 2L, 2W, BRIDGE REPAIR WITH BARRIER
701326-04	LANE CLOSURE, 2L, 2W, PAVEMENT WIDENING 45 MPH OR MORE
701501-06	URBAN LANE CLOSURE, 2L, 2W, UNDIVIDED
701801-06	SIDEWALK, CORNER, OR CROSSWALK CLOSURE
701901-11	TRAFFIC CONTROL DEVICES
704001-08	TEMPORARY CONCRETE BARRIER
725001-01	OBJECT AND TERMINAL MARKERS
780001-05	TYPICAL PAVEMENT MARKINGS
781001-04	TYPICAL APPLICATIONS RAISED REFLECTIVE PAVEMENT MARKERS
782006-01	GUARDRAIL AND BARRIER WALL REFLECTOR MOUNTING DETAILS

REV - MS

CODE NO.	ITEM	UNIT	TOTAL QUANTITY	6-00457-0000 80% FEDERAL 20% STATE BROWN CO. ROADWAY 0005 RURAL	6-00457-0000 80% FEDERAL 20% STATE PIKE CO. ROADWAY 0005 RURAL	6-00457-0000 80% FEDERAL 10% STATE 10% LOCAL PARKING / SS BROWN CO. ROADWAY 0005 RURAL	6-00457-0000 80% FEDERAL 20% CITY PARKING BROWN CO. ROADWAY 0005 RURAL	6-00457-0300 80% FEDERAL 20% STATE PIKE CO. SN 075-0129 BRIDGE 0047 RURAL
20100500	TREE REMOVAL, ACRES	ACRE	0.1	.1				
20200100	EARTH EXCAVATION	CU YD	60	60				
20800150	TRENCH BACKFILL	CU YD	107	107				
21400100	GRADING AND SHAPING DITCHES	FOOT	570	570				
28100205	STONE RIPRAP, CLASS A3	TON	107	107				
28100207	STONE RIPRAP, CLASS A4	TON	2,840	2,840				
28200200	FILTER FABRIC	SQ YD	1,968	1,968				
35101400	AGGREGATE BASE COURSE, TYPE B	TON	18	18				
35101800	AGGREGATE BASE COURSE, TYPE B 6"	SQ YD	13	13				
35650100	BASE COURSE WIDENING 6"	SQ YD	604	604				
40200800	AGGREGATE SURFACE COURSE, TYPE B	TON	15	15				
40600290	BITUMINOUS MATERIALS (TACK COAT)	POUND	73,314	64,136	7,882	855	441	
40600370	LONGITUDINAL JOINT SEALANT	FOOT	33,871	29,965	3,906			
40600405	MATERIAL TRANSFER DEVICE	TON	8,182	7,234	948			

REV - MS

MODEL: Untitled [Sheet]
FILE NAME: c:\pw_work\pwidot\william.rodriguez-mendez@illinois.gov\d0835885\72J44-sht-SOQ.dgn

USER NAME = william.rodriguez-me	DESIGNED -	REVISED -	
	DRAWN -	REVISED -	
	CHECKED -	REVISED -	
PLOT DATE = 5/15/2026	DATE -	REVISED -	

STATE OF ILLINOIS
DEPARTMENT OF TRANSPORTATION

SUMMARY OF QUANTITIES

SCALE: SHEET 1 OF 11 SHEETS STA. TO STA.

F.A.S RTE.	SECTION	COUNTY	TOTAL SHEETS	SHEET NO.
2585	122(RS-10,BDR-1,I-1)	*	120	3

CONTRACT NO. 72J44

ILLINOIS | FED. AID PROJECT

*BROWN, PIKE

CODE NO.	ITEM	UNIT	TOTAL QUANTITY	6-00457-0000 80% FEDERAL 20% STATE BROWN CO. ROADWAY 0005 RURAL	6-00457-0000 80% FEDERAL 20% STATE PIKE CO. ROADWAY 0005 RURAL	6-00457-0000 80% FEDERAL 10% STATE 10% LOCAL PARKING / SS BROWN CO. ROADWAY 0005 RURAL	6-00457-0000 80% FEDERAL 20% CITY PARKING BROWN CO. ROADWAY 0005 RURAL	6-00457-0300 80% FEDERAL 20% STATE PIKE CO. SN 075-0129 BRIDGE 0047 RURAL
40600982	HOT-MIX ASPHALT SURFACE REMOVAL - BUTT JOINT	SQ YD	2,116	1,922	194			
40600985	PORTLAND CEMENT CONCRETE SURFACE REMOVAL - BUTT JOINT	SQ YD	27	27				
40600990	TEMPORARY RAMP	SQ YD	546	434	112			
40602965	HOT-MIX ASPHALT BINDER COURSE, IL-9.5FG, N50	TON	864	864				
40603080	HOT-MIX ASPHALT BINDER COURSE, IL-19.0, N50	TON	10,720	9,298	1,422			
40604050	HOT-MIX ASPHALT SURFACE COURSE, IL-9.5, MIX "C", N50	TON	8,182	7,234	948			
40800029	BITUMINOUS MATERIALS (TACK COAT)	POUND	1,013	926	87			
40800050	INCIDENTAL HOT-MIX ASPHALT SURFACING	TON	359	343	16			
42000300	PORTLAND CEMENT CONCRETE PAVEMENT 8"	SQ YD	90	90				
42001300	PROTECTIVE COAT	SQ YD	478					478
42300200	PORTLAND CEMENT CONCRETE DRIVEWAY PAVEMENT, 6 INCH	SQ YD	94	94				
42400410	PORTLAND CEMENT CONCRETE SIDEWALK, 8 INCH	SQ YD	145	145				
42400800	DETECTABLE WARNINGS	SQ FT	241	241				
44000100	PAVEMENT REMOVAL	SQ YD	162	162				
44000155	HOT-MIX ASPHALT SURFACE REMOVAL, 1 1/2"	SQ YD	89,707	78,226	11,481			

REV - MS

MODEL: Untitled-1 [Sheet]
FILE NAME: c:\pw_work\pwidot\william.rodriguez-mendez@illinois.gov\d0835585\72J44-sht-SOQ.dgn

USER NAME = william.rodriguez-me | DESIGNED - | REVISED -
DRAWN - | REVISED -
CHECKED - | REVISED -
PLOT DATE = 5/15/2026 | DATE - | REVISED -

STATE OF ILLINOIS
DEPARTMENT OF TRANSPORTATION

SUMMARY OF QUANTITIES

SCALE: | SHEET 2 OF 11 SHEETS | STA. TO STA.

F.A.S RTE.	SECTION	COUNTY	TOTAL SHEETS	SHEET NO.
2585	122(RS-10,BDR-1,I-1)	*	120	4

CONTRACT NO. 72J44

ILLINOIS | FED. AID PROJECT

*BROWN, PIKE

CODE NO.	ITEM	UNIT	TOTAL QUANTITY	6-00457-0000 80% FEDERAL 20% STATE BROWN CO. ROADWAY 0005 RURAL	6-00457-0000 80% FEDERAL 20% STATE PIKE CO. ROADWAY 0005 RURAL	6-00457-0000 80% FEDERAL 10% STATE 10% LOCAL PARKING / SS BROWN CO. ROADWAY 0005 RURAL	6-00457-0000 80% FEDERAL 20% CITY PARKING BROWN CO. ROADWAY 0005 RURAL	6-00457-0300 80% FEDERAL 20% STATE PIKE CO. SN 075-0129 BRIDGE 0047 RURAL
44000160	HOT-MIX ASPHALT SURFACE REMOVAL, 2 3/4"	SQ YD	12,997	11,078		1,267	652	
44000200	DRIVEWAY PAVEMENT REMOVAL	SQ YD	137	137				
44000400	GUTTER REMOVAL	FOOT	1,592.0	1,592.0				
44000600	SIDEWALK REMOVAL	SQ FT	3,514	3,514				
44004250	PAVED SHOULDER REMOVAL	SQ YD	32	0	32			
44200099	PAVEMENT PATCHING, TYPE III, 8 INCH	SQ YD	19	19				
44200144	PAVEMENT PATCHING, TYPE II, 12 INCH	SQ YD	141	141				
44200148	PAVEMENT PATCHING, TYPE III, 12 INCH	SQ YD	54	54				
48102100	AGGREGATE WEDGE SHOULDER, TYPE B	TON	1,118	1,001	117			
48203014	HOT-MIX ASPHALT SHOULDERS, 4 1/4"	SQ YD	1,033	838	195			
48203100	HOT-MIX ASPHALT SHOULDERS	TON	1,754	1,376	82	195	101	
50100300	REMOVAL OF EXISTING STRUCTURES NO. 1	EACH	1	1				
50100400	REMOVAL OF EXISTING STRUCTURES NO. 2	EACH	1	1				
50100500	REMOVAL OF EXISTING STRUCTURES NO. 3	EACH	1	1				
50100600	REMOVAL OF EXISTING STRUCTURES NO. 4	EACH	1	1				

REV - MS

CODE NO.	ITEM	UNIT	TOTAL QUANTITY	6-00457-0000 80% FEDERAL 20% STATE BROWN CO. ROADWAY 0005 RURAL	6-00457-0000 80% FEDERAL 20% STATE PIKE CO. ROADWAY 0005 RURAL	6-00457-0000 80% FEDERAL 10% STATE 10% LOCAL PARKING / SS BROWN CO. ROADWAY 0005 RURAL	6-00457-0000 80% FEDERAL 20% CITY PARKING BROWN CO. ROADWAY 0005 RURAL	6-00457-0300 80% FEDERAL 20% STATE PIKE CO. SN 075-0129 BRIDGE 0047 RURAL
50100700	REMOVAL OF EXISTING STRUCTURES NO. 5	EACH	1	1				
50102400	CONCRETE REMOVAL	CU YD	22.3	7.8	1.9			12.6
50104400	CONCRETE HEADWALL REMOVAL	EACH	3	3				
50300225	CONCRETE STRUCTURES	CU YD	4.5	4.5				
50300255	CONCRETE SUPERSTRUCTURE	CU YD	14.4					14.4
50300260	BRIDGE DECK GROOVING	SQ YD	330					330
50300300	PROTECTIVE COAT	SQ YD	478					478
50800105	REINFORCEMENT BARS	POUND	600	300		300		
50800205	REINFORCEMENT BARS, EPOXY COATED	POUND	3,080					3,080
50800515	BAR SPLICERS	EACH	24					24
52000110	PREFORMED JOINT STRIP SEAL	FOOT	98					98
53016001	DECK SLAB REPAIR (FULL DEPTH, TYPE I)	SQ YD	5					5
53101002	BRIDGE DECK SCARIFICATION 3/4"	SQ YD	350					350
53101609	BRIDGE DECK MICROSILICA CONCRETE OVERLAY 2 1/2"	SQ YD	350					350

REV - MS

MODEL: Untitled-3 [Sheet]
FILE NAME: c:\pw_work\pwidot\mcquade.jackson@illinois.gov\d0835885\72J44-sht-SOQ.dgn

USER NAME = mcquade.jackson	DESIGNED -	REVISED -	
	DRAWN -	REVISED -	
	CHECKED -	REVISED -	
PLOT DATE = 4/23/2026	DATE -	REVISED -	

STATE OF ILLINOIS
DEPARTMENT OF TRANSPORTATION

SUMMARY OF QUANTITIES

SCALE: SHEET 4 OF 11 SHEETS STA. TO STA.

F.A.S RTE.	SECTION	COUNTY	TOTAL SHEETS	SHEET NO.
2585	122(RS-10,BDR-1,I-1)	*	118	6

CONTRACT NO. 72J44

ILLINOIS FED. AID PROJECT

*BROWN, PIKE

CODE NO.	ITEM	UNIT	TOTAL QUANTITY	6-00457-0000 80% FEDERAL 20% STATE BROWN CO. ROADWAY 0005 RURAL	6-00457-0000 80% FEDERAL 20% STATE PIKE CO. ROADWAY 0005 RURAL	6-00457-0000 80% FEDERAL 10% STATE 10% LOCAL PARKING / SS BROWN CO. ROADWAY 0005 RURAL	6-00457-0000 80% FEDERAL 20% CITY PARKING BROWN CO. ROADWAY 0005 RURAL	6-00457-0300 80% FEDERAL 20% STATE PIKE CO. SN 075-0129 BRIDGE 0047 RURAL
53212754	STRUCTURAL REPAIR OF CONCRETE (DEPTH EQUAL TO OR LESS THAN 5 INCHES)	SQ FT	61					61
54213663	PRECAST REINFORCED CONCRETE FLARED END SECTIONS 18"	EACH	2	2				
54214719	PRECAST REINFORCED CONCRETE FLARED END SECTIONS - ELLIPTICAL, EQUIVALENT ROUND-SIZE 24"	EACH	1			1		
54248510	CONCRETE COLLAR	CU YD	2.2			2.2		
550A0040	STORM SEWERS, CLASS A, TYPE 1 10"	FOOT	6			6		
550A0050	STORM SEWERS, CLASS A, TYPE 1 12"	FOOT	18			18		
550A0070	STORM SEWERS, CLASS A, TYPE 1 15"	FOOT	14	14				
550A0090	STORM SEWERS, CLASS A, TYPE 1 18"	FOOT	94			94		
550A0340	STORM SEWERS, CLASS A, TYPE 2 12"	FOOT	19			19		
550A0360	STORM SEWERS, CLASS A, TYPE 2 15"	FOOT	6			6		
550A0380	STORM SEWERS, CLASS A, TYPE 2 18"	FOOT	214	173		41		
550A4100	STORM SEWERS, CLASS A, TYPE 1 EQUIVALENT ROUND-SIZE 24"	FOOT	85			85		
550B0090	STORM SEWERS, CLASS B, TYPE 1 18"	FOOT	6			6		
55100100	STORM SEWER REMOVAL 4"	FOOT	6			6		
55100200	STORM SEWER REMOVAL 6"	FOOT	6			6		

REV - MS

MODEL: Untitled-4 [Sheet]
FILE NAME: c:\pw_work\pwidot\william.rodriguez-mendez@illinois.gov\d0835585\72J44-sht-SOQ.dgn

USER NAME = william.rodriguez-me	DESIGNED -	REVISED -	
	DRAWN -	REVISED -	
	CHECKED -	REVISED -	
PLOT DATE = 5/15/2026	DATE -	REVISED -	

STATE OF ILLINOIS
DEPARTMENT OF TRANSPORTATION

SUMMARY OF QUANTITIES

SCALE: | SHEET 5 OF 11 SHEETS | STA. TO STA.

F.A.S RTE.	SECTION	COUNTY	TOTAL SHEETS	SHEET NO.
2585	122(RS-10,BDR-1,I-1)	*	120	7

CONTRACT NO. 72J44

ILLINOIS | FED. AID PROJECT

*BROWN, PIKE

CODE NO.	ITEM	UNIT	TOTAL QUANTITY	6-00457-0000 80% FEDERAL 20% STATE BROWN CO. ROADWAY 0005 RURAL	6-00457-0000 80% FEDERAL 20% STATE PIKE CO. ROADWAY 0005 RURAL	6-00457-0000 80% FEDERAL 10% STATE 10% LOCAL PARKING / SS BROWN CO. ROADWAY 0005 RURAL	6-00457-0000 80% FEDERAL 20% CITY PARKING BROWN CO. ROADWAY 0005 RURAL	6-00457-0300 80% FEDERAL 20% STATE PIKE CO. SN 075-0129 BRIDGE 0047 RURAL
55100500	STORM SEWER REMOVAL 12"	FOOT	25			25		
55100700	STORM SEWER REMOVAL 15"	FOOT	129	46		83		
55100900	STORM SEWER REMOVAL 18"	FOOT	50			50		
60100945	PIPE DRAINS 12"	FOOT	28	6	22			
60100955	PIPE DRAINS 15"	FOOT	7	7				
60218300	MANHOLES, TYPE A, 4'-DIAMETER, TYPE 1 FRAME, OPEN LID	EACH	5	2		3		
60219000	MANHOLES, TYPE A, 4'-DIAMETER, TYPE 8 GRATE	EACH	2			2		
60218400	MANHOLES, TYPE A, 4'-DIAMETER, TYPE 1 FRAME, CLOSED LID	EACH	6	4		2		
60219100	MANHOLES, TYPE A, 4'-DIAMETER, TYPE 9 FRAME AND GRATE	EACH	1			1		
60235700	INLETS, TYPE A, TYPE 3 FRAME AND GRATE	EACH	1	1				
60235800	INLETS, TYPE A, TYPE 4 FRAME AND GRATE	EACH	1		1			
60240220	INLETS, TYPE B, TYPE 3 FRAME AND GRATE	EACH	1	1				
60240303	INLETS, TYPE B, TYPE 9 FRAME AND GRATE	EACH	1	1				
60500040	REMOVING MANHOLES	EACH	3			3		
60500060	REMOVING INLETS	EACH	13	4	1	8		

REV - MS

MODEL: Untitled-5 [Sheet]
FILE NAME: c:\pw_work\pwidot\william.rodriguez-mendez@illinois.gov\d0835885\72J44-sht-SOQ.dgn

USER NAME = william.rodriguez-me	DESIGNED -	REVISED -
	DRAWN -	REVISED -
	CHECKED -	REVISED -
PLOT DATE = 5/15/2026	DATE -	REVISED -

STATE OF ILLINOIS
DEPARTMENT OF TRANSPORTATION

SUMMARY OF QUANTITIES

SCALE: | SHEET 6 OF 11 SHEETS | STA. TO STA.

F.A.S RTE.	SECTION	COUNTY	TOTAL SHEETS	SHEET NO.
2585	122(RS-10,BDR-1,I-1)	*	120	8

CONTRACT NO. 72J44

ILLINOIS | FED. AID PROJECT

*BROWN, PIKE

CODE NO.	ITEM	UNIT	TOTAL QUANTITY	6-00457-0000 80% FEDERAL 20% STATE BROWN CO. ROADWAY 0005 RURAL	6-00457-0000 80% FEDERAL 20% STATE PIKE CO. ROADWAY 0005 RURAL	6-00457-0000 80% FEDERAL 10% STATE 10% LOCAL PARKING / SS BROWN CO. ROADWAY 0005 RURAL	6-00457-0000 80% FEDERAL 20% CITY PARKING BROWN CO. ROADWAY 0005 RURAL	6-00457-0300 80% FEDERAL 20% STATE PIKE CO. SN 075-0129 BRIDGE 0047 RURAL
60600095	CLASS SI CONCRETE (OUTLET)	CU YD	33.5	33.5				
60600605	CONCRETE CURB, TYPE B	FOOT	25	25				
60602500	CONCRETE GUTTER, TYPE A	FOOT	354.5	354.5				
60604400	COMBINATION CONCRETE CURB AND GUTTER, TYPE B-6.18	FOOT	91.5	91.5				
60605000	COMBINATION CONCRETE CURB AND GUTTER, TYPE B-6.24	FOOT	534	534				
60605300	COMBINATION CONCRETE CURB AND GUTTER, TYPE B-6.24 (MODIFIED)	FOOT	107.5				107.5	
60618300	CONCRETE MEDIAN SURFACE, 4 INCH	SQ FT	240	240				
60905305	BOX CULVERTS TO BE CLEANED	FOOT	49	49				
* 63000001	STEEL PLATE BEAM GUARDRAIL, TYPE A, 6 FOOT POSTS	FOOT	1,540	977	563			
* 63000003	STEEL PLATE BEAM GUARDRAIL, TYPE A, 9 FOOT POSTS	FOOT	475	475				
* 63100089	TRAFFIC BARRIER TERMINAL, TYPE 6B	EACH	4		4			
* 63100167	TRAFFIC BARRIER TERMINAL, TYPE 1 (SPECIAL) TANGENT	EACH	14	10	4			
63200310	GUARDRAIL REMOVAL	FOOT	2,666	1,867	799			
63500105	DELINEATORS	EACH	14	10	4			

* SPECIALTY ITEM

REV - MS

MODEL: Untitled-6 [Sheet]
FILE NAME: c:\pw_work\pwidot\william.rodriguez-mendez@illinois.gov\d0835885\72J44-sht-SOQ.dgn

USER NAME = william.rodriguez-me	DESIGNED -	REVISED -	
	DRAWN -	REVISED -	
	CHECKED -	REVISED -	
PLOT DATE = 5/15/2026	DATE -	REVISED -	

STATE OF ILLINOIS
DEPARTMENT OF TRANSPORTATION

SUMMARY OF QUANTITIES

SCALE: SHEET 7 OF 11 SHEETS STA. TO STA.

F.A.S RTE.	SECTION	COUNTY	TOTAL SHEETS	SHEET NO.
2585	122(RS-10,BDR-1,I-1)	*	120	9

CONTRACT NO. 72J44

ILLINOIS | FED. AID PROJECT

*BROWN, PIKE

CODE NO.	ITEM	UNIT	TOTAL QUANTITY	6-00457-0000 80% FEDERAL 20% STATE BROWN CO. ROADWAY 0005 RURAL	6-00457-0000 80% FEDERAL 20% STATE PIKE CO. ROADWAY 0005 RURAL	6-00457-0000 80% FEDERAL 10% STATE 10% LOCAL PARKING / SS BROWN CO. ROADWAY 0005 RURAL	6-00457-0000 80% FEDERAL 20% CITY PARKING BROWN CO. ROADWAY 0005 RURAL	6-00457-0300 80% FEDERAL 20% STATE PIKE CO. SN 075-0129 BRIDGE 0047 RURAL
66500105	WOVEN WIRE FENCE, 4'	FOOT	49	49				
67000400	ENGINEER'S FIELD OFFICE, TYPE A	CAL MO	18	14				4
67100100	MOBILIZATION	L SUM	1	0.7	0.1			0.2
70100405	TRAFFIC CONTROL AND PROTECTION, STANDARD 701321	EACH	1					1
70100450	TRAFFIC CONTROL AND PROTECTION, STANDARD 701201	L SUM	1	1	0			
70100460	TRAFFIC CONTROL AND PROTECTION, STANDARD 701306	L SUM	1	1	0			
70100500	TRAFFIC CONTROL AND PROTECTION, STANDARD 701326	L SUM	1	1				
70102620	TRAFFIC CONTROL AND PROTECTION, STANDARD 701501	L SUM	1	1				
70102640	TRAFFIC CONTROL AND PROTECTION, STANDARD 701801	L SUM	1	1				
70103815	TRAFFIC CONTROL SURVEILLANCE	CAL DAY	20	15	5			
70106500	TEMPORARY BRIDGE TRAFFIC SIGNALS	EACH	1					1
70106700	TEMPORARY RUMBLE STRIPS	EACH	6					6
70107025	CHANGEABLE MESSAGE SIGN	CAL DA	270					270
70300100	SHORT TERM PAVEMENT MARKING	FOOT	12,039	9,432	2,607			

REV - MS

MODEL: Untitled-7 [Sheet]
FILE NAME: c:\pw_work\pwidot\william.rodriguez-mendez@illinois.gov\d0835885\72J44-sht-SOQ.dgn

USER NAME = william.rodriguez-me	DESIGNED -	REVISED -
	DRAWN -	REVISED -
	CHECKED -	REVISED -
PLOT DATE = 5/19/2026	DATE -	REVISED -

STATE OF ILLINOIS
DEPARTMENT OF TRANSPORTATION

SUMMARY OF QUANTITIES

SCALE: | SHEET 8 OF 11 SHEETS | STA. | TO STA.

F.A.S RTE.	SECTION	COUNTY	TOTAL SHEETS	SHEET NO.
2585	122(RS-10,BDR-1,I-1)	*	120	10

CONTRACT NO. 72J44

ILLINOIS | FED. AID PROJECT

*BROWN, PIKE

	CODE NO.	ITEM	UNIT	TOTAL QUANTITY	6-00457-0000 80% FEDERAL 20% STATE BROWN CO. ROADWAY 0005 RURAL	6-00457-0000 80% FEDERAL 20% STATE PIKE CO. ROADWAY 0005 RURAL	6-00457-0000 80% FEDERAL 10% STATE 10% LOCAL PARKING / SS BROWN CO. ROADWAY 0005 RURAL	6-00457-0000 80% FEDERAL 20% CITY PARKING BROWN CO. ROADWAY 0005 RURAL	6-00457-0300 80% FEDERAL 20% STATE PIKE CO. SN 075-0129 BRIDGE 0047 RURAL
	70300150	SHORT TERM PAVEMENT MARKING REMOVAL	SQ FT	4,093	3,144	949			
	70400100	TEMPORARY CONCRETE BARRIER	FOOT	475					475
	70400200	RELOCATE TEMPORARY CONCRETE BARRIER	FOOT	400					400
	70600260	IMPACT ATTENUATORS, TEMPORARY (FULLY REDIRECTIVE, NARROW), TEST LEVEL 3	EACH	2					2
	70600332	IMPACT ATTENUATORS, RELOCATE (FULLY REDIRECTIVE, NARROW), TEST LEVEL 3	EACH	2					2
*	72501000	TERMINAL MARKER - DIRECT APPLIED	EACH	14	10	4			
*	78009005	MODIFIED URETHANE PAVEMENT MARKING - LINE 5"	FOOT	96,752	86,241	10,511			
*	78009006	MODIFIED URETHANE PAVEMENT MARKING - LINE 6"	FOOT	230	230				
*	78009012	MODIFIED URETHANE PAVEMENT MARKING - LINE 12"	FOOT	222	222				
*	78100100	RAISED REFLECTIVE PAVEMENT MARKER	EACH	554	455	99			
*	78200005	GUARDRAIL REFLECTORS, TYPE A	EACH	28	20	8			
	78300200	RAISED REFLECTIVE PAVEMENT MARKER REMOVAL	EACH	554	455	99			
	78300201	PAVEMENT MARKING REMOVAL - GRINDING	SQ FT	541		541			
	X2020060	EXCAVATING AND GRADING EXISTING SHOULDER, (SPECIAL)	UNIT	35	32	3			

* SPECIALTY ITEM

REV - MS

MODEL: Untitled-8 [Sheet]
FILE NAME: c:\pw_work\pwidot\william.rodriguez-mendez@illinois.gov\d0835885\72J44-sht-SOQ.dgn

USER NAME = william.rodriguez-me	DESIGNED -	REVISED -	
	DRAWN -	REVISED -	
	CHECKED -	REVISED -	
PLOT DATE = 5/15/2026	DATE -	REVISED -	

STATE OF ILLINOIS
DEPARTMENT OF TRANSPORTATION

SUMMARY OF QUANTITIES

SCALE: SHEET 9 OF 11 SHEETS STA. TO STA.

F.A.S RTE.	SECTION	COUNTY	TOTAL SHEETS	SHEET NO.
2585	122(RS-10,BDR-1,I-1)	*	120	11

CONTRACT NO. 72J44

ILLINOIS FED. AID PROJECT

*BROWN, PIKE

CODE NO.	ITEM	UNIT	TOTAL QUANTITY	6-00457-0000 80% FEDERAL 20% STATE BROWN CO. ROADWAY 0005 RURAL	6-00457-0000 80% FEDERAL 20% STATE PIKE CO. ROADWAY 0005 RURAL	6-00457-0000 80% FEDERAL 10% STATE 10% LOCAL PARKING / SS BROWN CO. ROADWAY 0005 RURAL	6-00457-0000 80% FEDERAL 20% CITY PARKING BROWN CO. ROADWAY 0005 RURAL	6-00457-0300 80% FEDERAL 20% STATE PIKE CO. SN 075-0129 BRIDGE 0047 RURAL
X2810848	RIPRAP SLURRY	SQ YD	1,968	1,968				
X4240420	PORTLAND CEMENT CONCRETE SIDEWALK 4 INCH (SPECIAL)	SQ FT	3,969	3,969				
X4401198	HOT-MIX ASPHALT SURFACE REMOVAL, VARIABLE DEPTH	SQ YD	2,272.0	2,272.0				
X4406650	PARTIAL DEPTH REMOVAL, TYPE IV, 5"	SQ YD	359	359				
X4406812	PORTLAND CEMENT CONCRETE SURFACE REMOVAL 1 1/2"	SQ YD	337	337				
X4421000	PARTIAL DEPTH PATCHING	TON	101	101				
X5012501	CONCRETE REMOVAL (SPECIAL)	SQ YD	24	24				
X5060601	CONTAINMENT AND DISPOSAL OF NON-LEAD PAINT CLEANING RESIDUES NO. 1	L SUM	1					1
X5090100	FURNISH AND INSTALL HANDRAIL	FOOT	102	102				
X5091770	HANDRAIL REMOVAL	FOOT	98	98				
X5230190	DRAINAGE SCUPPERS, DS-33	EACH	1					1
X6010003	PIPE DRAIN REMOVAL	FOOT	35	13	22			
X6020076	INLETS, SPECIAL, WITH SPECIAL FRAME AND GRATE	EACH	1	1				
X6024240	INLETS (SPECIAL)	EACH	1			1		
X6024502	INLETS, TYPE B, WITH SPECIAL FRAME AND GRATE	EACH	2	2				
X6050206	FILLING EXISTING STORM SEWERS	FOOT	59	59				

REV - MS

CODE NO.	ITEM	UNIT	TOTAL QUANTITY	6-00457-0000 80% FEDERAL 20% STATE BROWN CO. ROADWAY 0005 RURAL	6-00457-0000 80% FEDERAL 20% STATE PIKE CO. ROADWAY 0005 RURAL	6-00457-0000 80% FEDERAL 10% STATE 10% LOCAL PARKING / SS BROWN CO. ROADWAY 0005 RURAL	6-00457-0000 80% FEDERAL 20% CITY PARKING BROWN CO. ROADWAY 0005 RURAL	6-00457-0300 80% FEDERAL 20% STATE PIKE CO. SN 075-0129 BRIDGE 0047 RURAL
X6060097	CLASS SI CONCRETE (OUTLET), SPECIAL	CU YD	5.6	5.6				
X6061005	CONCRETE CURB, TYPE B (SPECIAL)	FOOT	25	25				
X6062700	CONCRETE GUTTER, TYPE A (SPECIAL)	FOOT	793.5	793.5				
X7200201	WIDTH RESTRICTION SIGNING	L SUM	1					1
Z0001800	APPROACH SLAB REPAIR (PARTIAL DEPTH)	SQ YD	23.1					23.1
Z0010501	CLEANING AND PAINTING STEEL BRIDGE NO. 1	L SUM	1					1
Z0013798	CONSTRUCTION LAYOUT	L SUM	1	1	0			
Z0056610	STORM SEWER (WATER MAIN REQUIREMENTS) 15 INCH	FOOT	80	80				
Z0056612	STORM SEWER (WATER MAIN REQUIREMENTS) 18 INCH	FOOT	89	89				
Z0056616	STORM SEWER (WATER MAIN REQUIREMENTS) 24 INCH	FOOT	20	20				
Ø Z0076600	TRAINEES	HOUR	2000	2000				
Ø Z0076604	TRAINEES TRAINING PROGRAM GRADUATE	HOUR	2000	2000				

Ø 0042

REV - MS

MODEL: Untitled-10 [Sheet]
FILE NAME: c:\pw_work\pwidot\mcquade.jackson@illinois.gov\d0835885\72J44-sht-SOQ.dgn

USER NAME = mcquade.jackson	DESIGNED -	REVISED -
	DRAWN -	REVISED -
	CHECKED -	REVISED -
PLOT DATE = 5/19/2026	DATE -	REVISED -

STATE OF ILLINOIS
DEPARTMENT OF TRANSPORTATION

SUMMARY OF QUANTITIES

SCALE: | SHEET 11 OF 11 SHEETS | STA. TO STA.

F.A.S RTE.	SECTION	COUNTY	TOTAL SHEETS	SHEET NO.
2585	122(RS-10,BDR-1,I-1)	*	120	13

CONTRACT NO. 72J44

ILLINOIS | FED. AID PROJECT

*BROWN, PIKE

HORIZONTAL ALIGNMENT CONTROL

NAD83/1997 ADJ - STATE PLANE WEST ZONE

POINT TYPE	STATION	NORTHING	EASTING	RADIUS	LENGTH	TANGENT	DELTA/THETA	ROTATION
ALIGNMENT NAME:		E003						
DESCRIPTION:		IL 99 MAINLINE						
PC	443+67.85	1175310.072	2156686.712					
PI	449+11.90	1174941.762	2157087.136	3811.09	1080.80	544.05	16.249°	LEFT
PT	454+48.65	1174700.206	2157574.622					
PC	458+35.54	1174528.427	2157921.289					
PI	463+88.33	1174282.990	2158416.606	1907.33	1076.10	552.79	32.326°	RIGHT
PT	469+11.64	1173810.727	2158703.916					
PC	478+23.62	1173031.605	2159177.910					
PI	480+29.30	1172855.888	2159284.811	716.89	400.60	205.68	32.017°	RIGHT
PT	482+24.22	1172650.223	2159282.291					
PC	489+06.63	1171967.868	2159273.931					
PI	492+10.92	1171663.593	2159270.203	2851.29	606.30	304.30	12.183°	RIGHT
PT	495+12.93	1171366.958	2159202.344					
PC	499+73.76	1170917.731	2159099.578					
PI	504+68.66	1170435.293	2158989.214	2146.45	972.00	494.90	25.967°	LEFT
PT	509+46.56	1169953.236	2159101.231					
POT	512+85.03	1169623.544	2159177.842					
PC	513+11.58	1169597.691	2159183.850					
PI	518+61.41	1169062.122	2159308.301	13439.54	1099.06	549.84	4.686°	LEFT
PT	524+10.64	1168538.510	2159476.085					
POT STA EQ	531+61.37 BK=	1167823.583	2159705.174					

HORIZONTAL ALIGNMENT CONTROL

NAD83/1997 ADJ - STATE PLANE WEST ZONE

POINT TYPE	STATION	NORTHING	EASTING	RADIUS	LENGTH	TANGENT	DELTA/THETA	ROTATION
ALIGNMENT NAME:		IL99						
DESCRIPTION:		IL 99 MAINLINE						
PC STA EQ	531+50.18 AH	1167823.583	2159705.174					
PI	536+49.15	1167348.413	2159857.435	1078.07	934.64	498.97	49.673°	LEFT
PT	540+84.82	1167156.984	2160318.222					
PC	563+50.50	1166287.755	2162410.532					
PI	568+54.64	1166094.342	2162876.095	2197.62	991.13	504.14	25.841°	RIGHT
PT	573+41.63	1165717.344	2163210.804					
PC	589+71.22	1164498.730	2164292.721					
PI	593+79.17	1164193.666	2164563.565	5013.53	814.10	407.95	9.304°	LEFT
PT	597+85.32	1163936.402	2164880.165					
PC	605+51.33	1163453.334	2165474.648					
PI	610+56.23	1163134.927	2165866.493	1792.53	984.30	504.90	31.462°	RIGHT
PT	615+35.63	1162658.814	2166034.546					
PC	642+81.56	1160069.448	2166948.510					
PI	647+89.26	1159590.696	2167117.495	841.93	913.72	507.70	62.182°	LEFT
PT	651+95.28	1159516.733	2167619.778					
PC	705+21.75	1158740.759	2172889.419					
PI	714+90.00	1158599.703	2173847.334	2877.51	1868.00	968.25	37.195°	RIGHT
PT	723+89.75	1157908.253	2174525.122					
PC	763+06.41	1155111.260	2177266.851					
PI	773+23.04	1154385.259	2177978.507	4903.29	2004.85	1016.63	23.427°	LEFT
PT	783+11.26	1154002.045	2178920.143					
POT STA EQ	784+36.36 BK=	1153954.891	2179036.010					

HORIZONTAL ALIGNMENT CONTROL

NAD83/1997 ADJ - STATE PLANE WEST ZONE

POINT TYPE	STATION	NORTHING	EASTING	RADIUS	LENGTH	TANGENT	DELTA/THETA	ROTATION
ALIGNMENT NAME:		E105						
DESCRIPTION:		IL 99 MAINLINE						
POT STA EQ	784+39.92 AH	1153954.891	2179036.010					
PC	785+35.41	1153918.898	2179124.454					
PI	792+17.76	1153661.688	2179756.470	1348.14	1263.34	682.35	53.692°	RIGHT
PT	797+98.75	1153000.081	2179923.436					
POT	799+77.09	1152827.163	2179967.074					
ALIGNMENT NAME:		S033						
DESCRIPTION:		SIDE RD - CH 11 1330 E ST SOUTH						
POT	8+59.61	1173928.801	2158475.592					
POT	10+00.00	1174061.266	2158522.091					
ALIGNMENT NAME:		S034						
DESCRIPTION:		SIDE RD - CH 11 1330 E ST NORTH						
POT	10+00.00	1174032.600	2158546.198					
POT	11+53.29	1174185.879	2158548.180					
ALIGNMENT NAME:		S035						
DESCRIPTION:		SIDE RD - 4TH ST						
POT	10+00.00	1173227.629	2159058.655					
POT	11+18.56	1173290.759	2159159.011					
ALIGNMENT NAME:		S036						
DESCRIPTION:		SIDE RD - 3RD ST						
POT	8+79.16	1172694.673	2159160.802					
POT	11+13.88	1172688.675	2159395.451					
ALIGNMENT NAME:		S037						
DESCRIPTION:		SIDE RD - 2ND ST						
POT	8+82.09	1172386.518	2159161.142					
POT	11+28.46	1172382.817	2159407.487					
ALIGNMENT NAME:		S038						
DESCRIPTION:		SIDE RD - 1ST ST						
POT	8+85.74	1172083.825	2159161.080					
POT	11+16.03	1172081.382	2159391.362					

HORIZONTAL ALIGNMENT CONTROL

NAD83/1997 ADJ - STATE PLANE WEST ZONE

POINT TYPE	STATION	NORTHING	EASTING	RADIUS	LENGTH	TANGENT	DELTA/THETA	ROTATION
ALIGNMENT NAME:		S039						
DESCRIPTION:		SIDE RD - CHERRY ST						
POT	8+82.13	1171786.188	2159148.022					
POT	11+04.41	1171785.926	2159370.307					
ALIGNMENT NAME:		S040						
DESCRIPTION:		SIDE RD - YATES ST						
POT	8+84.38	1171488.233	2159111.528					
POT	10+00.00	1171487.241	2159227.147					
ALIGNMENT NAME:		S041						
DESCRIPTION:		SIDE RD - MILLER AVE						
POT	8+98.75	1171180.881	2159058.047					
POT	10+00.00	1171178.672	2159159.271					
ALIGNMENT NAME:		S042						
DESCRIPTION:		SIDE RD - HALL AVE						
POT	8+60.92	1170878.513	2158951.381					
POT	10+00.00	1170875.827	2159090.431					
ALIGNMENT NAME:		S043						
DESCRIPTION:		SIDE RD - ELLIOT ST						
POT	8+83.39	1170504.975	2158929.98					
POT	10+00.00	1170496.768	2159046.301					
ALIGNMENT NAME:		S050						
DESCRIPTION:		SIDE RD - 1465 E (NORTH)						
POT	10+00.00	1163446.124	2165483.464					
POT	11+08.26	1163529.807	2165552.149					
ALIGNMENT NAME:		S051						
DESCRIPTION:		SIDE RD - 1465 E (SOUTH)						
POT	10+00.00	1163441.377	2165489.206					
POT	11+16.93	1163330.288	2165452.705					
ALIGNMENT NAME:		S052						
DESCRIPTION:		SIDE RD - 075 N AVE						
POT	10+00.00	1159654.109	2167268.064					
POT	11+01.66	1159588.332	2167190.554					

HORIZONTAL CONTROL STATIONS - NAD83/1997

NAD83/1997 ADJ - STATE PLANE WEST ZONE

POINT	DESCRIPTION	NORTHING	EASTING	STATION	OFFSET	CHAIN
9447	NGS DISK IN	1174906.612	2157146.673	449+76.61	34.52 RT	E003
9926	#4 REBAR	1172803.591	2159294.856	480+75.15	26.70 LT	E003
MM3	MAG NAIL	1172419.496	2159303.917	484+54.66	24.45 LT	E003
MM2	MAG NAIL	1171805.413	2159239.455	490+71.18	27.78 RT	E003
MM1	MAG NAIL	1171015.545	2159139.601	498+69.48	17.20 LT	E003
9928	#4 REBAR	1170434.499	2159028.921	504+61.01	16.61 RT	E003
9929	#4 REBAR	1169306.651	2159236.804	516+06.69	17.54 RT	E003
11817	#4 REBAR	1167340.313	2159956.967	536+87.98	44.49 RT	IL99
11818	#4 REBAR	1166298.371	2162486.820	564+15.70	40.06 LT	IL99
11819	#4 REBAR	1164448.012	2164394.566	590+77.65	41.37 LT	IL99
MW20	#5 REBAR	1160848.260	2166693.446	634+62.26	18.70 LT	IL99
MW21	#5 REBAR	1159879.198	2167024.875	644+84.49	16.12 RT	IL99
MW22	#5 REBAR	1159537.611	2167460.777	650+37.29	17.60 RT	IL99
MW23	#5 REBAR	1159388.865	2168242.869	658+30.36	35.73 RT	IL99
10	#4 REBAR	1153766.134	2179440.960	788+84.10	23.41 LT	E105

HORIZONTAL ALIGNMENT CONTROL

NAD83/1997 ADJ - STATE PLANE WEST ZONE

POINT TYPE	STATION	NORTHING	EASTING	RADIUS	LENGTH	TANGENT	DELTA/THETA	ROTATION
ALIGNMENT NAME:		S053						
DESCRIPTION:		SIDE RD - 1535 E ST						
POT	10+00.00	1159222.246	2169619.639					
POT	11+17.72	1159339.900	2169623.541					
ALIGNMENT NAME:		S054						
DESCRIPTION:		SIDE RD - 1630 E ST						
POT	9+15.16	1158123.376	2174163.091					
POT	10+78.33	1158204.021	2174304.938					
ALIGNMENT NAME:		S055						
DESCRIPTION:		SIDE RD - 1675 E ST						
POT	10+00.00	1155684.067	2176705.362					
POT	11+38.05	1155822.117	2176704.961					
ALIGNMENT NAME:		S204						
DESCRIPTION:		OLD IL99 SPUR						
POT	10+00.00	1153555.238	2179633.231					
PC	11+01.38	1153621.507	2179709.951					
PI	11+62.85	1153661.688	2179756.470	100.39	110.31	61.47	62.961°	RIGHT
PT	12+11.69	1153638.520	2179813.407					
POT	13+52.79	1153505.341	2179944.102					

BENCHMARKS

NAVD-88 VERTICAL DATUM

BENCHMARK	ELEVATION	DESCRIPTION	STATION	OFFSET	CHAIN
PSM9447	591.928	IDOT TABLET IN CONC FOUNDATION +/- 100' WEST OF IL99/ 1300 E RD	449+76.64	34.5 RT	E003
BM 31	589.226	CHSLD 'T' ON NORTH HDWL OF BOX CULVERT	452+99.01	25.2 LT	E003
MW-2	591.296	CHSLD 'T' ON SOUTH SIDE OF HDWL IN SE QUAD OF IL99 / 1330 E RD	467+63.00	20.0 RT	E003
BM 33	610.312	RR SPIKE IN PP	478+22.56	19.0 LT	E003
BM MW 3	630.252	CHSLD 'X' ON WEST FLANGE BOLT OF FH IN NE QUAD OF IL99/ E 2ND ST IN	484+58.00	32.0 LT	E003
BM MW 4	611.924	CHSLD 'T' ON EAST SIDE OF HDWL, +/- 130' SOUTH OF IL99/ YATES AVE IN	495+17.00	25.0 LT	E003
BM MW 5	615.029	CHSLD 'X' ON EAST FLANGE BOLT OF FH IN NW QUAD OF IL99/ ELLIOT ST IN	503+46.00	67.0 RT	E003
BM 36	599.817	RR SPIKE IN PP JUST SOUTH OF VERSAILLES	517+42.24	35.3 LT	E003
BM IL99-7	599.047	CHSLD 'T' ON SE WINGWALL OF BOX CULVERT JUST SOUTH OF VERSAILLES	517+28.10	20.2 LT	E003
BM IL99-6	583.647	CHSLD 'T' ON NORTH END OF CONC DROP INLET FOUNDATION	539+92.30	20.3 LT	IL99
BM IL99-5	581.174	CHSLD 'T' ON TOP CENTER OF N CONC END SECTION FOR PIPE CULVERT	563+18.87	34.9 LT	IL99
BM 41	588.236	RR SPIKE IN PP AT NEAR HILLTOP	586+94.13	37.8 LT	IL99
BM 52	500.954	TOP CENTER OF LEANING ROW MARKER IN NW QUAD OF IL99/ 1465E	605+43.43	40.2 RT	IL99
BM IL99-4	455.001	CHSLD 'T' IN CENTER OF CONC HDWL	612+33.35	29.6 RT	IL99
BM 43	435.742	CHSLD 'T' IN SE WINGWALL OF STR# 005-0003	621+82.02	21.6 LT	IL99
BM 44	438.269	CHSLD 'T' ON SE CORNER OF NORTH HDWL	648+53.38	21.7 LT	IL99
BM IL99-3	432.929	CHSLD 'T' ON TOP CENTER OF BOX CULVERT, +/- 1' SOUTH OF NORTH HDWL	669+58.72	19.0 LT	IL99
BM 46	432.659	CHSLD 'T' ON SE WINGWALL	693+22.08	21.4 LT	IL99
BM 48	435.201	RR SPIKE IN PP	727+29.93	69.0 LT	IL99
BM IL99-2	434.043	RR SPIKE IN PP	733+38.54	83.6 LT	IL99
BM IL99-1	431.708	60D NAIL IN 15" TREE, +/- 60' N OF PIKE/BROWN COUNTY SIGN	756+05.05	50.2 RT	IL99
BM CB 2	431.128	FND CHSLD 'T' IN ABUTMENT @ SW QUAD OF BRIDGE STR # 075-0129	795+08.90	17.9 RT	E105

MODEL: Schedule-1 [Sheet]
FILE NAME: c:\pw_work\pwidot\william.rodriguez-mendez@illinois.gov\d0835885\72J44-sht-schedules.dgn

USER NAME = william.rodriguez-me	DESIGNED -	REVISED -	
	DRAWN -	REVISED -	
	CHECKED -	REVISED -	
PLOT DATE = 5/15/2026	DATE -	REVISED -	

STATE OF ILLINOIS
DEPARTMENT OF TRANSPORTATION

SURVEY SCHEDULES

SCALE: SHEET 2 OF 2 SHEETS STA. TO STA.

F.A.S RTE.	SECTION	COUNTY	TOTAL SHEETS	SHEET NO.
2585	122(RS-10,BDR-1,I-1)	*	120	15

CONTRACT NO. 72J44

ILLINOIS FED. AID PROJECT

*BROWN, PIKE

PAVING SCHEDULE (PART 1 OF 2)

PAY ITEM CODE NUMBER					40600290		40600370	40600405	40602965	40603080	40604050	44000155	44000160
					BIT. MAT. TACK COAT		LONG.	MATERIAL	HMA BIND CSE,	HMA BIND CSE,	HMA SURF CSE, IL-9.5,	HMA SURF REM	HMA SURF REM
LOCATION			LENGTH	WIDTH	AREA	MILLED SURF	LIFT	JOINT SEALANT	TRANSFER DEVICE	IL-9.5FG, N50 (1 1/4")	IL-19.0, N50 (2 1/4")	MIX C, N50 (1 1/2")	1 1/2"	2 3/4"
FAS 2585, IL-99 MAINLINE			(FT)	(FT)	(SQ YD)	(POUND)		(FOOT)	(TON)	(TON)	(TON)	(TON)	(SQ YD)	(SQ YD)
FAS 2585, IL-99 RT													
STA 456+80.00	TO	STA 458+27.00	147.00	13	212.33	95.55	47.78	147.00	17.84	14.86	0.00	17.84	212.33	0.00
STA 458+27.00	TO	STA 463+28.00	501.00	13	723.67	325.65	162.83	501.00	60.79	50.66	0.00	60.79	723.67	0.00
STA 463+28.00	TO	STA 469+86.00	658.00	13	950.44	427.70	213.85	658.00	79.84	66.53	0.00	79.84	0.00	950.44
STA 469+86.00	TO	STA 483+10.00	1324.00	12	1,765.33	794.40	397.20	1,324.00	148.29	123.57	0.00	148.29	0.00	1,765.33
STA 483+10.00	TO	STA 488+17.00	507.00	13	732.33	329.55	164.78	507.00	61.52	51.26	0.00	61.52	0.00	732.33
STA 488+17.00	TO	STA 494+78.00	661.00	12	881.33	396.60	198.30	661.00	74.03	61.69	0.00	74.03	0.00	881.33
STA 494+78.00	TO	STA 501+00.00	622.00	12	829.33	373.20	186.60	622.00	69.66	58.05	0.00	69.66	0.00	829.33
STA 501+00.00	TO	STA 530+33.09	2933.09	13	4,236.69	1,906.51	953.25	2,933.09	355.88	0.00	533.82	355.88	4,236.69	0.00
STA 530+33.09	TO	STA 531+61.37	128.28	13	185.29	83.38	41.69	128.28	15.56	0.00	23.35	15.56	185.29	0.00
STA EQ. 531+61.37 BK = 531+50.18 AH													
STA 531+50.18	TO	STA 542+01.57	1051.39	13	1,518.67	683.40	341.70	1,051.39	127.57	0.00	191.35	127.57	1,518.67	0.00
STA 542+01.57	TO	STA 562+29.21	2027.64	13	2,928.81	1,317.97	658.98	2,027.64	246.02	0.00	369.03	246.02	2,928.81	0.00
STA 562+29.21	TO	STA 574+64.40	1235.19	13	1,784.16	802.87	401.44	1,235.19	149.87	0.00	224.80	149.87	1,784.16	0.00
STA 574+64.40	TO	STA 589+30.00	1465.60	13	2,116.98	952.64	476.32	1,465.60	177.83	0.00	266.74	177.83	2,116.98	0.00
STA 589+30.00	TO	STA 599+03.73	973.73	13	1,406.50	632.92	316.46	973.73	118.15	0.00	177.22	118.15	1,406.50	0.00
STA 599+03.73	TO	STA 604+36.23	532.50	13	769.17	346.13	173.06	532.50	64.61	0.00	96.92	64.61	769.17	0.00
STA 604+36.23	TO	STA 616+53.46	1217.23	13	1,758.22	791.20	395.60	1,217.23	147.69	0.00	221.54	147.69	1,758.22	0.00
STA 616+53.46	TO	STA 621+60.59	507.13	13	732.52	329.63	164.82	507.13	61.53	0.00	92.30	61.53	732.52	0.00
BRIDGE OMISSION (S.N. 005-0003)													
STA 621+82.65	TO	STA 641+39.69	1957.04	13	2,826.84	1,272.08	636.04	1,957.04	237.45	0.00	356.18	237.45	2,826.84	0.00
STA 641+39.69	TO	STA 653+41.54	1201.85	13	1,736.01	781.20	390.60	1,201.85	145.82	0.00	218.74	145.82	1,736.01	0.00
STA 653+41.54	TO	STA 693+00.63	3959.09	13	5,718.69	2,573.41	1,286.70	3,959.09	480.37	0.00	720.55	480.37	5,718.69	0.00
BRIDGE OMISSION (S.N. 005-0004)													
STA 693+22.63	TO	STA 704+05.76	1083.13	13	1,564.52	704.03	352.02	1,083.13	131.42	0.00	197.13	131.42	1,564.52	0.00
STA 704+05.76	TO	STA 725+07.25	2101.49	13	3,035.49	1,365.97	682.98	2,101.49	254.98	0.00	382.47	254.98	3,035.49	0.00
STA 725+07.25	TO	STA 756+77.78	3170.53	13	4,579.65	2,060.84	1,030.42	3,170.53	384.69	0.00	577.04	384.69	4,579.65	0.00
BROWN & PIKE COUNTY LINE													
STA 756+77.78	TO	STA 761+08.02	430.24	13	621.46	279.66	139.83	430.24	52.20	0.00	78.30	52.20	621.46	0.00
STA 761+08.02	TO	STA 784+36.36	2328.34	13	3,363.16	1,513.42	756.71	2,328.34	282.51	0.00	423.76	282.51	3,363.16	0.00
STA EQ. 784+36.36 BK = 784+39.92 AH													
STA 784+39.92	TO	STA 793+68.25	928.33	13	1,340.92	603.41	301.71	928.33	112.64	0.00	168.96	112.64	1,340.92	0.00
BRIDGE OMISSION (S.N. 075-0129)													
STA 795+76.49	TO	STA 797+96.00	219.51	13	317.07	142.68	71.34	219.51	26.63	0.00	39.95	26.63	317.07	0.00
DEGREE OF ACCURACY (ALL TOTALS/GRAN-TOTAL WILL BE ROUNDED UP TO THE NEAREST VALUE)						1		1	1	1	1	1	1	1
SUB-TOTAL 1 (BROWN COUNTY)					42,993	19,347	9,673	29,965	3,611	427	4,649	3,611	37,834	5,159
SUB-TOTAL 1 (PIKE COUNTY)					5,643	2,539	1,270	3,906	474	0	711	474	5,643	0
TOTAL 1					**48,636**	**32,829**		**33,871**	**4,085**	**427**	**5,360**	**4,085**	**43,477**	**5,159**

MODEL: Schedule-2 [Sheet]
FILE NAME: c:\pw_work\pwidot\william.rodriguez-mendez@illinois.gov\d0835885\72J44-sht-schedules.dgn

USER NAME = william.rodriguez-me	DESIGNED -	REVISED -	
	DRAWN -	REVISED -	
	CHECKED -	REVISED -	
PLOT DATE = 5/15/2026	DATE -	REVISED -	

STATE OF ILLINOIS
DEPARTMENT OF TRANSPORTATION

SCHEDULES OF QUANTITIES

SCALE: | SHEET A001 OF 16 SHEETS | STA. | TO STA.

F.A.S RTE.	SECTION	COUNTY	TOTAL SHEETS	SHEET NO.
2585	122(RS-10,BDR-1,I-1)	*	120	16

CONTRACT NO. 72J44

ILLINOIS | FED. AID PROJECT

*BROWN, PIKE

PAVING SCHEDULE (PART 2 OF 2)

PAY ITEM CODE NUMBER					40600290		40600370	40600405	40602965	40603080	40604050	44000155	44000160
					BIT. MAT. TACK COAT		LONG.	MATERIAL	HMA BIND CSE,	HMA BIND CSE,	HMA SURF CSE, IL-9.5,	HMA SURF REM	HMA SURF REM
LOCATION			LENGTH	WIDTH	AREA	MILLED SURF	LIFT	JOINT SEALANT	TRANSFER DEVICE	IL-9.5FG, N50 (1 1/4")	IL-19, N50 (2 1/4")	MIX C, N50 (1 1/2")	1 1/2"	2 3/4"
FAS 2585, IL-99 MAINLINE			(FT)	(FT)	(SQ YD)	(POUND)		(FOOT)	(TON)	(TON)	(TON)	(TON)	(SQ YD)	(SQ YD)
FAS 2585, IL-99 LT													
STA 456+80.00	TO	STA 458+27.00	147.00	13	212.33	95.55	47.78	0.00	17.84	14.06	0.00	17.84	212.33	0.00
STA 458+27.00	TO	STA 463+28.00	501.00	13	723.67	325.65	162.83	0.00	60.79	50.66	0.00	60.79	723.67	0.00
STA 463+28.00	TO	STA 469+86.00	658.00	13	950.44	427.70	213.85	0.00	79.84	66.53	0.00	79.84	0.00	950.44
STA 469+86.00	TO	STA 483+10.00	1324.00	12	1,765.33	794.40	397.20	0.00	148.29	123.57	0.00	148.29	0.00	1,765.33
STA 483+10.00	TO	STA 501+00.00	1790.00	13	2,585.56	1,163.50	581.75	0.00	217.19	180.99	0.00	217.19	0.00	2,585.56
STA 501+00.00	TO	STA 530+33.09	2933.09	13	4,236.69	1,906.51	953.25	0.00	355.88	0.00	533.82	355.88	4,236.69	0.00
STA 530+33.09	TO	STA 531+61.37	128.28	13	185.29	83.38	41.69	0.00	15.56	0.00	23.35	15.56	185.29	0.00
STA EQ. 531+61.37 BK = 531+50.18 AH													
STA 531+50.18	TO	STA 542+01.57	1051.39	13	1,518.67	683.40	341.70	0.00	127.57	0.00	191.35	127.57	1,518.67	0.00
STA 542+01.57	TO	STA 562+29.21	2027.64	13	2,928.81	1,317.97	658.98	0.00	246.02	0.00	369.03	246.02	2,928.81	0.00
STA 562+29.21	TO	STA 574+64.40	1235.19	13	1,784.16	802.87	401.44	0.00	149.87	0.00	224.80	149.87	1,784.16	0.00
STA 574+64.40	TO	STA 589+30.00	1465.60	13	2,116.98	952.64	476.32	0.00	177.83	0.00	266.74	177.83	2,116.98	0.00
STA 589+30.00	TO	STA 599+03.73	973.73	13	1,406.50	632.92	316.46	0.00	118.15	0.00	177.22	118.15	1,406.50	0.00
STA 599+03.73	TO	STA 604+36.23	532.50	13	769.17	346.13	173.06	0.00	64.61	0.00	96.92	64.61	769.17	0.00
STA 604+36.23	TO	STA 616+53.46	1217.23	13	1,758.22	791.20	395.60	0.00	147.69	0.00	221.54	147.69	1,758.22	0.00
STA 616+53.46	TO	STA 621+60.59	507.13	13	732.52	329.63	164.82	0.00	61.53	0.00	92.30	61.53	732.52	0.00
BRIDGE OMISSION (S.N. 005-0003)													
STA 621+82.65	TO	STA 641+39.69	1957.04	13	2,826.84	1,272.08	636.04	0.00	237.45	0.00	356.18	237.45	2,826.84	0.00
STA 641+39.69	TO	STA 653+41.54	1201.85	13	1,736.01	781.20	390.60	0.00	145.82	0.00	218.74	145.82	1,736.01	0.00
STA 653+41.54	TO	STA 693+00.63	3959.09	13	5,718.69	2,573.41	1,286.70	0.00	480.37	0.00	720.55	480.37	5,718.69	0.00
BRIDGE OMISSION (S.N. 005-0004)													
STA 693+22.63	TO	STA 704+05.76	1083.13	13	1,564.52	704.03	352.02	0.00	131.42	0.00	197.13	131.42	1,564.52	0.00
STA 704+05.76	TO	STA 725+07.25	2101.49	13	3,035.49	1,365.97	682.98	0.00	254.98	0.00	382.47	254.98	3,035.49	0.00
STA 725+07.25	TO	STA 756+77.78	3170.53	13	4,579.65	2,060.84	1,030.42	0.00	384.69	0.00	577.04	384.69	4,579.65	0.00
BROWN & PIKE COUNTY LINE													
STA 756+77.78	TO	STA 761+08.02	430.24	13	621.46	279.66	139.83	0.00	52.20	0.00	78.30	52.20	621.46	0.00
STA 761+08.02	TO	STA 784+36.36	2328.34	13	3,363.16	1,513.42	756.71	0.00	282.51	0.00	423.76	282.51	3,363.16	0.00
STA EQ. 784+36.36 BK = 784+39.92 AH													
STA 784+39.92	TO	STA 793+68.25	928.33	13	1,340.92	603.41	301.71	0.00	112.64	0.00	168.96	112.64	1,340.92	0.00
BRIDGE OMISSION (S.N. 075-0129)													
STA 795+76.49	TO	STA 797+96.00	219.51	13	317.07	142.68	71.34	0.00	26.63	0.00	39.95	26.63	317.07	0.00
DEGREE OF ACCURACY (ALL TOTALS WILL BE ROUNDED UP TO THE NEAREST VALUE)					1	1		1	1	1	1	1	1	1
SUB-TOTAL 1 (BROWN COUNTY)					42,993	19,347	9,673	29,965	3,611	427	4,649	3,611	37,834	5,159
SUB-TOTAL 1 (PIKE COUNTY)					5,643	2,539	1,270	3,906	474	0	711	474	5,643	0
TOTAL 1					**48,636**	**32,829**		**33,871**	**4,085**	**427**	**5,360**	**4,085**	**43,477**	**5,159**
SUB-TOTAL 2 (BROWN COUNTY)					43,136	19,411	9,705	0	3,623	437	4,649	3,623	37,834	5,301
SUB-TOTAL 2 (PIKE COUNTY)					5,643	2,539	1,270	0	474	0	711	474	5,643	0
TOTAL 2					**48,779**	**32,926**		**0**	**4,097**	**437**	**5,360**	**4,097**	**43,477**	**5,301**
GRAND-TOTAL					**97,415**	**65,755**		**33,871**	**8,182**	**864**	**10,720**	**8,182**	**86,954**	**10,460**

MODEL: Schedule-3 [Sheet]
FILE NAME: c:\pw_work\pwidot\william.rodriguez-mendez@illinois.gov\d0835885\72J44-sht-schedules.dgn

USER NAME = william.rodriguez-me	DESIGNED -	REVISED -	
	DRAWN -	REVISED -	
	CHECKED -	REVISED -	
PLOT DATE = 5/15/2026	DATE -	REVISED -	

STATE OF ILLINOIS
DEPARTMENT OF TRANSPORTATION

SCHEDULES OF QUANTITIES

SCALE: SHEET A002 OF 16 SHEETS STA. TO STA.

F.A.S RTE.	SECTION	COUNTY	TOTAL SHEETS	SHEET NO.
2585	122(RS-10,BDR-1,I-1)	*	120	17

CONTRACT NO. 72J44

ILLINOIS FED. AID PROJECT

*BROWN, PIKE

HMA SHOULDER SCHEDULE (PART 1 OF 2)

PAY ITEM CODE NUMBER				35650100	40600290		44000155	44000160	44004250	48203014	48203100		50102400	X2020060	X4401198	X4406812
LOCATION FAS 2585, IL-99 MAINLINE	LENGTH (FT)	SHLR WIDTH (HMA) (FT)	AREA (SQ YD)	BASE CSE WIDENING 6" (SQ YD)	BIT. MAT. TACK COAT MILLED SURF (POUND)	LIFT	HMA SURFACE REM 1 1/2" (SQ YD)	HMA SURFACE REM 2 3/4" (SQ YD)	PAVED SHLD REM (SQ YD)	HMA SHLDS 4 1/4" (SQ YD)	HMA SHLDS, 2 3/4" (TON)	HMA SHLDS, 3 3/4" (TON)	CONC. REM (CU YD)	EXC. AND GRADING EXIT. SHLD. SPL. (UNIT)	HMA SURFACE REM., VAR. DEPTH (SQ YD)	PCC SURFACE REM 1 1/2" (SQ YD)
FAS 2585, IL-99 LT																
STA 465+14.67 TO STA 465+59.89	45.22	7	35.17	0.00	15.83	7.91	0.00	35.17	0.00	0.00	5.42	0.00	0.00	0.00	0.00	0.00
STA 466+44.75 TO STA 467+39.73	94.98	7	73.87	0.00	33.24	16.62	0.00	73.87	0.00	0.00	11.38	0.00	0.00	0.00	0.00	0.00
STA 489+29.20 TO STA 490+73.61	144.41	11.0 TO 10	155.83	0.00	70.13	35.06	0.00	155.83	0.00	0.00	24.00	0.00	0.00	0.00	0.00	0.00
STA 492+27.86 TO STA 493+01.35	73.49	5	40.83	0.00	18.37	9.19	0.00	40.83	0.00	0.00	6.29	0.00	0.00	0.00	0.00	0.00
STA 493+01.35 TO STA 494+94.00	192.65	7	149.84	0.00	67.43	33.71	0.00	16.65	0.00	0.00	23.08	0.00	0.00	0.00	0.00	0.00
STA 494+94.00 TO STA 500+27.58	533.58	4.5	266.79	0.00	120.06	60.03	0.00	266.79	0.00	0.00	41.09	0.00	0.00	0.00	0.00	0.00
STA 500+27.58 TO STA 500+80.10	52.52	5	29.18	0.00	13.13	6.57	0.00	29.18	0.00	0.00	4.49	0.00	0.00	0.00	0.00	0.00
STA 500+80.10 TO STA 501+48.52	68.42	5.0 TO 3	30.41	0.00	13.68	6.84	30.41	0.00	0.00	0.00	4.68	0.00	0.00	0.00	0.00	0.00
STA EQ. 531+61.37 BK = 531+50.18 AH																
STA 537+52.40 TO STA 540+48.58	296.18	2.5	82.27	0.00	37.02	18.51	82.27	0.00	0.00	0.00	0.00	17.28	0.00	0.00	0.00	0.00
STA 540+48.58 TO STA 542+01.49	152.91	2.5 TO 3	46.72	0.00	21.03	10.51	46.72	0.00	0.00	0.00	0.00	9.81	0.00	0.00	0.00	0.00
STA 585+43.02 TO STA 585+85.58	42.56	7	30.22	0.00	13.60	6.80	30.22	0.00	0.00	0.00	0.00	6.35	0.00	0.00	0.00	0.00
STA 585+85.58 TO STA 586+26.72	41.14	7 TO 5	27.43	0.00	12.34	6.17	27.43	0.00	0.00	0.00	0.00	5.76	0.00	0.00	0.00	0.00
STA 586+26.72 TO STA 589+30.00	303.28	5 TO 7	202.19	0.00	90.98	45.49	202.19	0.00	0.00	0.00	0.00	42.46	0.00	0.00	0.00	0.00
STA 589+30.00 TO STA 604+36.23	1506.23	7	1,171.51	0.00	527.18	263.59	0.00	0.00	0.00	0.00	0.00	246.02	0.00	0.00	1,171.51	0.00
STA 604+36.23 TO STA 605+40.09	103.86	7	80.78	0.00	36.35	18.18	80.78	0.00	0.00	0.00	0.00	16.96	0.00	0.00	0.00	0.00
STA 605+91.22 TO STA 616+42.23	1051.01	7	817.45	0.00	367.85	183.93	817.45	0.00	0.00	0.00	0.00	171.66	0.00	0.00	0.00	0.00
STA 616+42.23 TO STA 620+32.40	390.17	7.0 TO 7.5	314.30	0.00	141.44	70.72	314.30	0.00	0.00	0.00	0.00	66.00	0.00	0.00	0.00	0.00
STA 620+32.40 TO STA 621+60.39	127.99	7.5	106.65	55.71	47.99	24.00	106.65	0.00	0.00	0.00	0.00	22.40	0.00	1.28	0.00	0.00
BRIDGE OMISSION (S.N. 005-0003)																
STA 621+82.87 TO STA 623+70.93	188.06	7.5	156.71	115.24	70.52	35.26	156.71	0.00	0.00	0.00	0.00	32.91	0.00	1.88	0.00	0.00
STA 642+56.50 TO STA 652+20.27	963.77	4	428.34	0.00	192.75	963.77	0.00	0.00	0.00	428.34	0.00	89.95	0.00	9.64	0.00	0.00
STA 691+62.33 TO STA 693+00.55	138.22	8	122.86	40.01	55.29	276.44	40.01	0.00	0.00	0.00	0.00	25.80	7.83	1.38	0.00	82.85
BRIDGE OMISSION (S.N. 005-0004)																
STA 693+22.61 TO STA 694+98.33	175.72	8	156.20	78.25	70.29	351.44	78.25	0.00	0.00	0.00	0.00	32.80	0.00	1.76	0.00	77.75
STA EQ. 784+36.36 BK = 784+39.92 AH																
STA 792+80.65 TO STA 794+19.16	138.51	4	61.56	0.00	27.70	13.85	0.00	0.00	0.00	61.56	0.00	12.93	0.00	1.39	0.00	0.00
BRIDGE OMISSION (S.N. 075-0129)																
STA 795+54.32 TO STA 797+96.00	241.68	4	108.97	0.00	49.04	24.52	98.63	0.00	10.35	10.35	0.00	22.88	0.00	0.00	0.00	0.00
DEGREE OF ACCURACY (ALL TOTALS/GRAN-TOTALS WILL BE ROUNDED UP TO THE NEAREST VALUE)				1	1		1	1	1	1	1	1	0.1	1	1	1
SUB-TOTAL BROWN COUNTY-1			4,526	289	2,037	2,451	2,013	618	0	428	120	786	7.8	16	1,172	161
SUB-TOTAL PIKE COUNTY-1			171	0	77	38	99	0	10	72	0	36	0	1	0	0
TOTAL-PART 1			**4,696**	**289**	**2,114**	**2,489**	**2,112**	**618**	**10**	**500**	**120**	**822**	**7.8**	**17**	**1,172**	**161**

MODEL: Schedule-4 [Sheet]
FILE NAME: c:\pw_work\pwidot\william.rodriguez-mendez@illinois.gov\d0835885\72J44-sht-schedules.dgn

USER NAME = william.rodriguez-me	DESIGNED -	REVISED -	
	DRAWN -	REVISED -	
	CHECKED -	REVISED -	
PLOT DATE = 5/15/2026	DATE -	REVISED -	

STATE OF ILLINOIS
DEPARTMENT OF TRANSPORTATION

SCHEDULES OF QUANTITIES

SCALE: | SHEET A003 OF 16 SHEETS | STA. TO STA.

F.A.S RTE.	SECTION	COUNTY	TOTAL SHEETS	SHEET NO.
2585	122(RS-10,BDR-1,I-1)	*	120	18

CONTRACT NO. 72J44

ILLINOIS | FED. AID PROJECT

*BROWN, PIKE

HMA SHOULDER SCHEDULE (PART 2 OF 2)

PAY ITEM CODE NUMBER				35650100	40600290		44000155	44000160	44004250	48203014	48203100		50102400	X2020060	X4401198	X4406812
LOCATION FAS 2585, IL-99 MAINLINE	LENGTH (FT)	SHLR WIDTH (HMA) (FT)	AREA (SQ YD)	BASE CSE WIDENING 6" (SQ YD)	BIT. MAT. TACK COAT MILLED SURF (POUND)	BIT. MAT. TACK COAT LIFT (POUND)	HMA SURFACE REM 1 1/2" (SQ YD)	HMA SURFACE REM 2 3/4" (SQ YD)	PAVED SHLD REM (SQ YD)	HMA SHLDS 4 1/4" (SQ YD)	HMA SHLDS, 2 3/4" (TON)	HMA SHLDS, 3 3/4" (TON)	CONC. REM (CU YD)	EXC. AND GRADING EXIT. SHLD. SPL. (UNIT)	HMA SURFACE REM., VAR. DEPTH (SQ YD)	PCC SURFACE REM 1 1/2" (SQ YD)
FAS 2585, IL-99 RT																
STA EQ. 531+50.18 AH = 531+61.37 BK																
STA 587+25.28 TO STA 589+30.00	204.72	3.0 TO 7.0	113.73	0.00	51.18	25.59	113.73	0.00	0.00	0.00	0.00	23.88	0.00	0.00	0.00	0.00
STA 589+30.00 TO STA 602+00.00	1270.00	7	987.78	0.00	444.50	222.25	0.00	0.00	0.00	0.00	0.00	207.43	0.00	0.00	987.78	0.00
STA 602+00.00 TO STA 603+48.82	148.82	7.0 TO 3.0	82.68	0.00	37.20	18.60	0.00	0.00	0.00	0.00	0.00	17.36	0.00	0.00	82.68	0.00
STA 603+48.82 TO STA 604+36.23	87.41	3	29.14	0.00	13.11	6.56	0.00	0.00	0.00	0.00	0.00	6.12	0.00	0.00	29.14	0.00
STA 604+36.23 TO STA 605+57.41	121.18	3	40.39	0.00	18.18	9.09	40.39	0.00	0.00	0.00	0.00	8.48	0.00	0.00	0.00	0.00
STA 619+75.13 TO STA 621+60.42	185.29	8	164.70	125.60	74.12	37.06	164.70	0.00	0.00	0.00	0.00	34.59	0.00	1.85	0.00	0.00
BRIDGE OMISSION (S.N. 005-0003)																
STA 621+82.87 TO STA 623+21.04	138.17	8	122.82	84.28	55.27	27.63	122.82	0.00	0.00	0.00	0.00	25.79	0.00	1.38	0.00	0.00
STA 642+56.47 TO STA 647+83.79	527.32	4	234.36	0.00	105.46	52.73	0.00	0.00	0.00	234.36	0.00	49.22	0.00	5.27	0.00	0.00
STA 648+26.09 TO STA 652+20.31	394.22	4	175.21	0.00	78.84	39.42	0.00	0.00	0.00	175.21	0.00	36.79	0.00	3.94	0.00	0.00
STA 691+15.25 TO STA 693+00.62	185.37	8	164.77	59.21	74.15	37.07	59.21	0.00	0.00	0.00	0.00	34.60	0.00	1.85	0.00	97.00
BRIDGE OMISSION (S.N. 005-0004)																
STA 693+22.87 TO STA 694+60.86	137.99	8	122.66	43.98	55.20	27.60	43.98	0.00	0.00	0.00	0.00	25.76	0.00	1.38	0.00	78.72
STA EQ. 784+39.92 AH = 784+36.36 BK																
STA 791+58.26 TO STA 793+86.85	228.59	4	101.60	0.00	45.72	22.86	0.00	0.00	0.00	101.60	0.00	21.34	0.00	2.29	0.00	0.00
BRIDGE OMISSION (S.N. 075-0129)																
STA 795+27.55 TO STA 797+96.00	268.45	4	119.31	0.00	53.69	26.84	96.49	0.00	21.73	21.73		25.06	1.90	0.00	0.00	0.00
DEGREE OF ACCURACY (ALL TOTALS/GRAN-TOTALS WILL BE ROUNDED UP TO THE NEAREST VALUE)				1	1	1	1	1	1	1	1	1	0.1	1	1	1
SUB-TOTAL BROWN COUNTY-1			4,526	289	2,037	2,451	2,013	618	0	428	120	786	7.8	16	1,172	161
SUB-TOTAL PIKE COUNTY-1			171	0	77	38	99	0	10	72	0	36	0	1	0	0
TOTAL-PART 1			**4,696**	**289**	**2,114**	**2,489**	**2,112**	**618**	**10**	**500**	**120**	**822**	**7.8**	**17**	**1,172**	**161**
SUB-TOTAL BROWN COUNTY-2			2,238	313	1,007	504	545	0	0	410	0	470	0	16	1,100	176
SUB-TOTAL PIKE COUNTY-2			221	0	99	50	96	0	22	123	0	46	1.9	2	0	0
TOTAL-PART 2			**2,459**	**313**	**1,107**	**553**	**641**	**0**	**22**	**533**	**0**	**516**	**1.9**	**18**	**1,100**	**176**
GRAND-TOTAL			**7,155**	**602**	**6,263**		**2,753**	**618**	**32**	**1,033**	**120**	**1,338**	**9.7**	**35**	**2,272**	**337**

HMA PARKING SCHEDULE (PART 1 OF 2)

PAY ITEM CODE NUMBER				40600290		44000160	48203100
LOCATION FAS 2585, IL-99 MAINLINE	LENGTH (FT)	HMA SHLD WIDTH (FT)	AREA FROM CADD MATCHING DRIVING LANE (SQ YD)	BIT. MAT. TACK COAT (MILL) MATCHING DRIVING LANE (POUND)	BIT. MAT. TACK COAT (LIFT) MATCHING DRIVING LANE (POUND)	HMA SURFACE REM. 2 3/4" MATCHING DRIVING LANE (SQ YD)	HMA SHLDS, 2 3/4" MATCHING DRIVING LANE (SQ YD)
FAS 2585, IL-99 LT							
FAS 2585, IL LT							
STA 482+08.60 TO STA 484+55.97	247.37	12.00	321.77	144.80	72.40	321.77	49.55
STA 485+25.82 TO STA 487+69.52	243.70	12.00	316.93	142.62	71.31	316.93	48.81
STA 488+12.25 TO STA 489+28.08	115.83	12.00	147.25	66.26	33.13	147.25	22.68
FAS 2585, IL RT							
STA 483+23.25 TO STA 484+56.07	132.82	11.00	158.97	71.54	35.77	158.97	24.48
STA 485+23.23 TO STA 487+70.99	247.76	12.00	321.63	144.74	72.37	321.63	49.53
SUB-TOTAL PARKING (80% FED / 10% STATE & 10% LOCAL)			**1,267**	**570**	**285**	**1,267**	**195**

HMA PARKING SCHEDULE (PART 2 OF 2)

PAY ITEM CODE NUMBER				40600290		44000160	48203100
LOCATION FAS 2585, IL-99 MAINLINE	LENGTH (FT)	HMA SHLD EXCEEDING DRIVING LANE WIDTH	AREA FROM CADD EXCEEDING DRIVING LANE (SQ YD)	BIT. MAT. TACK COAT (MILL) EXCEEDING DRIVING LANE (POUND)	BIT. MAT. TACK COAT (LIFT) EXCEEDING DRIVING LANE (POUND)	HMA SURFACE REM. 2 3/4" EXCEEDING DRIVING LANE (SQ YD)	HMA SHLDS, 2 3/4" EXCEEDING DRIVING LANE (TON)
FAS 2585, IL-99 LT							
FAS 2585, IL LT							
STA 482+08.60 TO STA 484+55.97	247.37	6.1 TO 10.1	201.51	90.68	45.34	201.51	31.03
STA 485+25.82 TO STA 487+69.52	243.70	6.0 TO 8.5	185.65	83.54	41.77	185.65	28.59
STA 488+12.25 TO STA 489+28.09	115.84	3.9 TO 7.6	77.85	35.03	17.52	77.85	11.99
FAS 2585, IL RT							
STA 485+23.23 TO STA 487+70.99	247.76	4.0 TO 9.4	187.35	84.31	42.15	187.35	28.85
DEGREE OF ACCURACY (ALL GRAN-TOTALS WILL BE ROUNDED UP TO THE NEAREST VALUE)				1		1	1
SUB-TOTAL PARKING (80% FED / 20% LOCAL)			**652**	**294**	**147**	**652**	**100**
SUB-TOTAL PARKING (80% FED / 10% STATE & 10% LOCAL)			**1,267**	**570**	**285**	**1,267**	**195**
GRAND-TOTAL			**1,919**	**1,296**		**1,919**	**295**

MODEL: Schedule-5 [Sheet]
FILE NAME: c:\pw_work\pwidot\william.rodriguez-mendez@illinois.gov\d0835885\72J44-sht-schedules.dgn

USER NAME = william.rodriguez-me	DESIGNED -	REVISED -	
	DRAWN -	REVISED -	
	CHECKED -	REVISED -	
PLOT DATE = 5/15/2026	DATE -	REVISED -	

STATE OF ILLINOIS
DEPARTMENT OF TRANSPORTATION

SCHEDULES OF QUANTITIES

SCALE: SHEET A004 OF 16 SHEETS STA. TO STA.

F.A.S RTE.	SECTION	COUNTY	TOTAL SHEETS	SHEET NO.
2585	122(RS-10,BDR-1,I-1)	*	120	19

CONTRACT NO. 72J44

ILLINOIS FED. AID PROJECT

*BROWN, PIKE

AGGREGATE WEDGE SHOULDERS, TYPE B SCHEDULE (Part 1 of 2)

PAY ITEM CODE NUMBER					48102100
LOCATION FAS 2585, IL-99 MAINLINE			SHLDS LENGTH (FT)	SHLDS WIDTH (FT)	AGGREGATE WEDGE SHOULDERS, TYPE B (TON)
FAS 2585, IL-99 RT					
STA 456+80.00	TO	STA 462+95.81	615.81	3	9.12
STA 500+99.67	TO	STA 503+76.97	277.30	3	4.11
STA 504+16.88	TO	STA 524+87.94	2071.06	3	30.68
STA 525+44.72	TO	STA 531+61.37	616.65	3	9.14
STA EQ. 531+61.37 BK = 531+50.18 AH					
STA 531+50.18	TO	STA 533+73.92	223.74	3	3.31
STA 534+05.79	TO	STA 547+56.47	1350.68	3	20.01
STA 547+84.84	TO	STA 551+64.08	379.24	3	5.62
STA 551+88.66	TO	STA 564+78.48	1289.82	3	19.11
STA 565+22.45	TO	STA 586+02.70	2080.25	3	30.82
STA 586+31.24	TO	STA 587+25.28	94.04	3	1.39
STA 606+02.08	TO	STA 619+37.02	1334.94	3	19.78
STA 619+37.02	TO	STA 619+85.05	48.03	3 TO 11	1.66
STA 619+85.05	TO	STA 621+60.59	175.54	3	2.60
BRIDGE OMISSION (S.N. 005-0003)					
STA 621+82.86	TO	STA 623+21.00	138.14	3	2.05
STA 623+21.00	TO	STA 623+69.02	48.02	11 TO 3	1.66
STA 623+69.02	TO	STA 642+32.42	1863.40	3	27.61
STA 642+32.42	TO	STA 642+56.53	24.11	3 TO 7	0.60
STA 642+56.03	TO	STA 647+85.98	529.95	3	7.85
STA 648+24.01	TO	STA 652+20.27	396.26	3	5.87
STA 652+20.27	TO	STA 652+44.32	24.05	7 TO 3	0.59
STA 652+44.32	TO	STA 690+76.86	3832.54	3	56.78
STA 690+76.86	TO	STA 691+24.87	48.01	3 TO 11	1.66
STA 691+24.87	TO	STA 693+00.63	175.76	3	2.60
BRIDGE OMISSION (S.N. 005-0004)					
STA 693+22.83	TO	STA 694+60.86	138.03	3	2.04
STA 694+60.86	TO	STA 695+08.86	48.00	11 TO 3	1.66
STA 695+08.86	TO	STA 719+69.69	2460.83	3	36.46
STA 720+09.80	TO	STA 756+77.78	3667.98	3	54.34
COUNTY LINE					
STA 756+77.78	TO	STA 784+36.36	2758.58	3	40.87
STA EQ. 784+36.36 BK = 784+39.92 AH					
STA 784+39.92	TO	STA 791+33.97	694.05	3	10.28
STA 791+33.97	TO	STA 791+58.26	24.29	3 TO 7	0.60
STA 791+58.26	TO	STA 794+01.59	243.33	3	3.60
BRIDGE OMISSION (S.N. 075-0129)					
STA 795+09.24	TO	STA 797+96.00	286.76	3	4.25
				SUB-TOTAL (BROWN COUNTY) RT	359
				SUB-TOTAL (PIKE COUNTY) RT	60
			(THICKNESS = 1")	**SUB-TOTAL 1**	**419**

AGGREGATE WEDGE SHOULDERS, TYPE B SCHEDULE (Part 2 of 2)

PAY ITEM CODE NUMBER					48102100
LOCATION FAS 2585, IL-99 MAINLINE			SHLDS LENGTH (FT)	SHLDS WIDTH (FT)	AGGREGATE WEDGE SHOULDERS, TYPE B (TON)
FAS 2585, IL-99 LT					
STA 457+58.27	TO	STA 465+14.74	756.47	3	11.21
STA 467+39.76	TO	STA 468+95.80	156.04	3	2.31
STA 494+73.88	TO	STA 500+27.51	553.63	3	8.20
STA 501+48.53	TO	STA 502+72.74	124.21	3	1.84
STA 503+00.82	TO	STA 506+76.35	375.53	3	5.56
STA 507+40.76	TO	STA 524+21.92	1681.16	3	24.91
STA 524+69.92	TO	STA 531+61.37	691.45	3	10.24
STA EQ. 531+61.37 BK = 531+50.18 AH					
STA 531+50.18	TO	STA 531+60.65	10.47	3	0.16
STA 532+42.61	TO	STA 537+52.31	509.70	3	7.55
STA 542+01.49	TO	STA 547+55.18	553.69	3	8.20
STA 548+06.95	TO	STA 550+68.49	261.54	3	3.87
STA 551+26.04	TO	STA 551+86.59	60.55	3	0.90
STA 552+35.07	TO	STA 559+12.33	677.26	3	10.03
STA 559+56.01	TO	STA 563+76.00	419.99	3	6.22
STA 564+47.87	TO	STA 573+37.20	889.33	3	13.18
STA 573+99.42	TO	STA 585+45.60	1146.18	3	16.98
STA 603+97.62	TO	STA 604+57.84	60.22	3	0.89
STA 604+83.42	TO	STA 605+42.66	59.24	3	0.88
STA 605+88.14	TO	STA 621+60.42	1572.28	3	23.29
BRIDGE OMISSION (S.N. 005-0003)					
STA 621+82.84	TO	STA 623+70.88	188.04	3	2.79
STA 623+70.88	TO	STA 624+27.83	56.95	10.5	2.95
STA 624+27.83	TO	STA 624+44.63	16.80	10.5 TO 3	0.56
STA 624+44.63	TO	STA 642+32.54	1787.91	3	26.49
STA 642+32.54	TO	STA 642+56.44	23.90	3 TO 7	0.59
STA 642+56.44	TO	STA 652+20.31	963.87	3	14.28
STA 652+20.31	TO	STA 652+44.25	23.94	7 TO 3	0.59
STA 652+44.25	TO	STA 671+88.12	1943.87	3	28.80
STA 672+68.42	TO	STA 691+14.33	1845.91	3	27.35
STA 691+14.33	TO	STA 691+62.33	48.00	3 TO 9	1.42
STA 691+62.33	TO	STA 693+00.63	138.30	3	2.05
BRIDGE OMISSION (S.N. 005-0004)					
STA 693+22.89	TO	STA 694+98.33	175.44	3	2.60
STA 694+90.33	TO	STA 695+55.10	56.77	11	3.08
STA 695+55.10	TO	STA 695+62.31	7.21	11 TO 3	0.25
STA 695+62.31	TO	STA 719+97.04	2434.73	3	36.07
STA 720+32.68	TO	STA 754+49.48	3416.80	3	50.62
STA 755+19.33	TO	STA 756+77.78	158.45	3	2.35
COUNTY LINE					
STA 756+77.78	TO	STA 784+36.36	2758.58	3	40.87
STA EQ. 784+36.36 BK = 784+39.92 AH					
STA 784+39.92	TO	STA 790+52.58	612.66	3	9.08
STA 792+44.67	TO	STA 792+56.90	12.23	3	0.18
STA 792+56.90	TO	STA 792+80.69	23.79	3 TO 7	0.59
STA 792+80.69	TO	STA 794+37.51	156.82	3	2.32
BRIDGE OMISSION (S.N. 075-0129)					
STA 795+39.33	TO	STA 797+96.00	256.67	3	3.80
				SUB-TOTAL (BROWN COUNTY) RT	359
				SUB-TOTAL (PIKE COUNTY) RT	60
				SUB-TOTAL 1	**419**
				SUB-TOTAL (BROWN COUNTY) LT	642
				SUB-TOTAL (PIKE COUNTY) LT	57
				SUB-TOTAL 2	**699**
			(THICKNESS = 1")	**GRAND TOTAL**	**1,118**

TEMPORARY RAMP

PAY ITEM CODE NUMBER					40600990
LOCATION FAS 2585 IL-99 MAINLINE			WIDTH FROM THE BACK (FT)	LENGTH (FT)	TEMP RAMP (SQ YD)
STA. 456+80.00	RT	BUTT JOINT	13.0	5	7.2
STA. 456+80.00	LT	BUTT JOINT	13.0	5	7.2
STA. 463+28.00	RT	BUTT JOINT	12.8	4.2	5.9
STA. 463+28.00	LT	BUTT JOINT	12.1	4.2	5.6
STA. 9+61.20	RT	N CHESTNUT ST.	40.5	5	22.5
STA. 10+34.95	LT	N CHESTNUT 1350 ST.	77.6	5	43.1
STA. 10+37.30	LT	4TH ST.	17.4	5	9.7
STA. 9+65.15	RT	3RD ST.	19.3	5	10.7
STA. 10+38.70	LT	3RD ST.	23.9	5	13.3
STA. 9+60.77	RT	2ND ST.	30.0	5	16.7
STA. 10+38.68	LT	2ND ST.	32.5	5	18.1
STA. 9+59.05	RT	1ST ST.	20.1	5	11.2
STA. 10+37.02	LT	1ST ST.	25.1	5	14.0
STA. 9+63.75	RT	CHERRY ST.	19.5	5	10.8
STA. 10+43.54	LT	CHERRY ST.	14.6	5	8.1
STA. 9+71.21	RT	S.E. YATES ST.	27.0	5	15.0
STA. 9+77.02	RT	ELLIOT ST.	28.0	5	15.6
STA. 10+22.56	LT	CR. ROAD 1465 E. ST	45.9	5	25.5
STA. 10+24.86	RT	CR. ROAD 1465 E. ST	31.6	5	17.6
STA. 621+60.63	RT	BUTT JOINT	12.5	5	6.9
STA. 621+60.63	LT	BUTT JOINT	13.0	5	7.2
STA. 621+82.73	RT	BUTT JOINT	11.5	5	6.4
STA. 621+82.73	LT	BUTT JOINT	12.2	5	6.8
STA. 10+23.05	RT	CR. ROAD 075 N.	30.3	5	16.8
STA. 10+21.36	LT	CR 065 N. / 1535 E.	38.3	5	21.3
STA. 693+00.75	RT	BUTT JOINT	13.0	5	7.2
STA. 693+00.75	LT	BUTT JOINT	12.9	5	7.2
STA. 693+22.66	RT	BUTT JOINT	12.7	5	7.1
STA. 693+22.66	LT	BUTT JOINT	13.0	5	7.2
STA. 9+75.05	RT	CR 045 / 1630 E.	30.7	5	17.0
STA. 10+24.85	LT	CR 045 / 1630 E.	25.5	5	14.1
STA. 10+33.34	LT	CR 0.00 / 1675 E.	56.6	5	31.4
STA. 10+23.12	LT	STATE PROPERTY	124.8	5	69.3
STA. 793+68.42	RT	BUTT JOINT	13.4	5	7.4
STA. 793+68.42	LT	BUTT JOINT	12.4	5	6.9
STA. 795+76.51	RT	BUTT JOINT	11.8	5	6.6
STA. 795+76.51	LT	BUTT JOINT	12.3	5	6.8
STA. 797+96.00	RT	BUTT JOINT	13.0	5	7.2
STA. 797+96.00	LT	BUTT JOINT	13.0	5	7.2
				SUB-TOTAL (BROWN COUNTY)	434
				SUB-TOTAL (PIKE COUNTY)	112
				TOTAL	**546**

HANDRAIL SCHEDULE

PAY ITEM NUMBER				X5090100	X5091770
LOCATION FAS 2585, IL-99 MAINLINE STATION	TO	STATION	LOCATION (RT / LT)	FUR & INSTL HANDRAIL (FT)	HANDRAIL REMOVAL (FT)
STA 485+09.61	TO	STA 485+12.91	LT	3.31	3.21
STA 10+43.96	TO	STA 10+97.04	LT	53.08	16.75
STA 485+12.91			LT	5.42	5.42
STA 485+21.86			LT	5.42	5.42
STA 485+20.85	TO	STA 485+41.16	LT	34.70	15.58
STA 485+10.79	TO	STA 485+13.00	LT	0.00	2.21
STA 485+10.79	TO	STA 485+13.00	LT	0.00	4.42
STA 485+20.34	TO	STA 485+41.17	LT	0.00	24.54
STA 485+20.34	TO	STA 485+45.28	LT	0.00	19.50
DEGREE OF ACCURACY (ALL TOTALS WILL BE ROUNDED UP TO THE NEAREST VALUE)				1	1
			TOTAL (BROWN COUNTY)	**102**	**98**

FENCE SCHEDULE

PAY CODE ITEM			66500105
LOCATION FAS 2585, IL-99 MAINLINE			WOVEN WIRE FENCE, 4' (FT)
LT			
STA 496+80.92			14.4
STA 496+80.92	TO	STA 497+01.93	21
STA 497+01.93			13.2
		TOTAL (BROWN COUNTY)	**49**

MODEL: Schedule-7 [Sheet]
FILE NAME: c:\pw_work\pwidot\mcquade.jackson@illinois.gov\d0835885\72J44-sht-schedules.dgn

USER NAME = mcquade.jackson	DESIGNED -	REVISED -
	DRAWN -	REVISED -
	CHECKED -	REVISED -
PLOT DATE = 4/23/2026	DATE -	REVISED -

STATE OF ILLINOIS
DEPARTMENT OF TRANSPORTATION

SCHEDULES OF QUANTITIES

SCALE: | SHEET A006 OF 16 SHEETS | STA. | TO STA.

F.A.S RTE.	SECTION	COUNTY	TOTAL SHEETS	SHEET NO.
2585	122(RS-10,BDR-1,I-1)	*	120	21

CONTRACT NO. 72J44

ILLINOIS | FED. AID PROJECT

*BROWN, PIKE

SIDEROAD SCHEDULE

PAY ITEM CODE NUMBER								40200800	40600982	40800029	40800050	42000300	44000100	60600095
LOCATION FAS 2585, IL-99 MAINLINE		EXISTING SURFACE TYPE	LENGTH FROM EOP (FT)	WIDTH FRONT (FT)	WIDTH BACK (FT)	DEPTH (IN)	AREA FROM CADD (SQ YD)	AGG SURF CSE TYPE B (TON)	HMA SURF REM - BUTT JOINT (SQ YD)	BIT MAT TACK COAT (POUND)	INCIDENTAL HMA SURF. (TON)	PCC PAVEMENT 8" (SQ YD)	PAVEMENT REM FROM CADD (SQ YD)	CLASS SI CONC. (OULET) (CU YD)
CHESTNUT ST.														
STA 466+39.19	LT	HMA	10.00	55.185	40.538	1.5	80.16	0.00	80.16	36.07	6.73	0.00	0.00	0.00
STA 466+01.74	RT	HMA	20.88	55.18	40.5	1.5	80.16	0.00	80.16	18.04	6.73	0.00	0.00	0.00
4TH ST.														
STA 475+94.17	LT	HMA	11.70	39.07	16.28	8.00	22.03	0.00	22.03	9.91	1.85	9.82	9.82	0.00
3TH ST.														
STA 481+82.85	RT	HMA	19.40	40.74	19.34	1.50	44.50	0.00	0.00	0.00	0.00	80.38	44.50	7.97
STA 481+82.85	LT	HMA	28.94	63.28	23.91	1.50	127.55	0.00	127.55	57.40	10.71	0.00	0.00	0.00
2ND ST.														
STA 484+89.68	RT	HMA	25.10	67.21	30.04	1.50	133.15	0.00	133.15	59.92	11.18	0.00	0.00	0.00
STA 484+89.68	LT	HMA	26.77	70.34	32.52	1.50	150.67	0.00	150.67	74.58	12.66	0.00	0.00	0.00
1ST ST.														
STA 487+91.87	RT	HMA	27.43	69.71	20.14	1.50	130.06	0.00	130.06	58.53	10.93	0.00	0.00	0.00
STA 487+91.87	LT	HMA	24.83	66.80	25.15	1.50	117.62	0.00	117.62	52.93	9.88	0.00	0.00	0.00
CHERRY ST.														
STA 490+88.65	RT	HMA	23.57	29.22	19.45	1.50	42.76	0.00	42.76	19.24	3.59	0.00	31.74	7.05
STA 490+88.65	LT	HMA	31.18	42.46	14.57	1.50	79.91	0.00	79.91	35.96	6.71	0.00	0.00	0.00
YATES ST.														
STA 493+93.56	RT	HMA	15.96	34.58	26.96	1.50	29.38	0.00	29.38	13.22	2.47	0.00	0.00	0.00
ELLIOT ST.														
STA 503+98.76	RT	HMA	10.00	45.30	28.05	1.50	41.95	0.00	41.95	18.88	4.99	0.00	0.00	0.00
CO ROAD 1465 E														
STA 605+70.17	RT	HMA	10.00	50.73	31.56	1.50	45.26	0.00	45.26	20.37	5.39	0.00	0.00	0.00
STA 605+70.17	LT	HMA	10.00	64.74	45.87	1.50	61.45	0.00	61.45	27.65	7.31	0.00	0.00	0.00
CO 075 NORTH														
STA 648+14.46	RT	HMA	10.00	48.26	34.52	1.50	43.12	1.49	43.12	19.40	24.15	0.00	0.00	0.00
CO ROAD 1535 E														
STA 672+16.71	LT	HMA	8.20	95.88	57.55	1.50	66.63	1.67	64.67	29.99	7.93	0.00	0.00	0.00
CO ROAD 045 E														
STA 720+03.23	RT	HMA	10.00	44.19	30.66	1.50	41.34	0.00	41.34	18.60	4.92	0.00	0.00	0.00
STA 720+03.23	LT	HMA	10.00	40.45	25.45	1.50	35.99	1.16	35.99	16.20	4.28	0.00	0.00	0.00
CO ROAD 1675 E														
STA 755+04.31	LT	HMA	10.00	75.54	56.58	1.50	73.39	0.00	73.39	36.33	8.73	0.00	0.00	0.00
STATE PROPERTY														
STA 791+66.54	LT	HMA	10.00	215.28	124.75	1.50	193.63	0.00	193.63	87.13	16.26	0.00	0.00	0.00
DEGREE OF ACCURACY (ALL TOTALS WILL BE ROUNDED UP TO THE NEAREST VALUE)								1	1	1	1	1	1	0.1
SUB-TOTAL (BROWN COUNTY)							1,447	4	1,401	623	151	90	86	15.0
SUB-TOTAL (PIKE COUNTY)							194	0	194	87	16	0	0	0
TOTAL							**1,641**	**4**	**1,595**	**710**	**167**	**90**	**86**	**15**

MODEL: Schedule-8 [Sheet]
FILE NAME: c:\pw_work\pwidot\william.rodriguez-mendez@illinois.gov\d0835885\72J44-sht-schedules.dgn

USER NAME = william.rodriguez-me	DESIGNED -	REVISED -	STATE OF ILLINOIS DEPARTMENT OF TRANSPORTATION
	DRAWN -	REVISED -	
	CHECKED -	REVISED -	
PLOT DATE = 5/15/2026	DATE -	REVISED -	

SCHEDULES OF QUANTITIES

SCALE: SHEET A007 OF 16 SHEETS STA. TO STA.

F.A.S RTE.	SECTION	COUNTY	TOTAL SHEETS	SHEET NO.
2585	122(RS-10,BDR-1,I-1)	*	120	22

CONTRACT NO. 72J44

ILLINOIS FED. AID PROJECT

*BROWN, PIKE

GUARDRAIL SCHEDULE

PAY ITEM CODE NUMBER				63000001	63000003	63100089	63100167	63200310	63500105	72501000	78200005
LOCATION FAS 2585, IL-99 MAINLINE			LENGTH	SPBGR TY A 6' POSTS	SPBGR TY A 9' POSTS	TRAF. BAR. TERM. TY 6B	TR. BAR. TERM. TY 1 (SPL) TANGENT (37.5')	GUARDRAIL REMOVAL	DELINEATORS	TERMINAL MARKER D.A.	GUARDRAIL REFLECTORS TY A
STATION	TO	STATION	(FT)	(FT)	(FT)	(EACH)	(EACH)	(FT)	(EACH)	(EACH)	(EACH)
(EXISTING)											
STA. 494+73.79 LT	TO	STA. 500+27.58 LT	553.79	0.0	0.0	0.0	0.0	553.79	0.0	0.0	0.0
(PROPOSED)											
STA. 494+77.58 LT	TO	STA. 500+27.58 LT	550.00	0.0	475.0	0.0	2.0	0.0	2.0	2.0	4.0
SN: 005-0003 (EXISTING)											
STA. 620+57.65 LT	TO	STA. 623+85.58 LT	327.93	0.0	0.0	0.0	0.0	327.93	0.0	0.0	0.0
STA. 619+57.71 LT	TO	STA. 622+85.84 LT	328.13	0.0	0.0	0.0	0.0	328.13	0.0	0.0	0.0
SN: 005-0003 (PROPOSED)											
STA. 620+32.40 LT	TO	STA. 623+60.90 LT	328.50	253.5	0.0	0.0	2.0	0.0	2.0	2.0	4.0
STA. 619+95.04 RT	TO	STA. 623+11.04 RT	316.00	241.0	0.0	0.0	2.0	0.0	2.0	2.0	4.0
SN: 005-0004 (EXISTING)											
STA. 691+97.37 LT	TO	STA. 695+25.96 LT	328.59	0.0	0.0	0.0	0.0	328.59	0.0	0.0	0.0
STA. 690+97.49 LT	TO	STA. 694+25.97 LT	328.48	0.0	0.0	0.0	0.0	328.48	0.0	0.0	0.0
SN: 005-0004 (PROPOSED)											
STA. 691+72.33 LT	TO	STA. 694+88.33 LT	316.00	241.0	0.0	0.0	2.0	0.0	2.0	2.0	4.0
STA. 691+34.86 RT	TO	STA. 694+50.86 RT	316.00	241.0	0.0	0.0	2.0	0.0	2.0	2.0	4.0
BROWN & PIKE COUNTYLINE (STA. 756+77.78)											
SN: 075-0129 (EXISTING)											
STA. 793+00.44 LT	TO	STA. 794+53.07 LT	152.63	0.0	0.0	0.0	0.0	154.55	0.0	0.0	0.0
STA. 795+42.38 LT	TO	STA. 797+66.01 LT	223.63	0.0	0.0	0.0	0.0	226.15	0.0	0.0	0.0
STA. 791+32.46 RT	TO	STA. 794+15.67 RT	283.21	0.0	0.0	0.0	0.0	279.75	0.0	0.0	0.0
STA. 795+08.31 RT	TO	STA. 796+49.30 RT	140.99	0.0	0.0	0.0	0.0	138.32	0.0	0.0	0.0
SN: 075-0129 (PROPOSED)											
STA. 792+91.27 LT	TO	STA. 794+41.27 LT	150.00	100.0	0.0	1.0	1.0	0.0	1.0	1.0	2.0
STA. 795+35.75 LT	TO	STA. 797+48.25 LT	212.50	162.5	0.0	1.0	1.0	0.0	1.0	1.0	2.0
STA. 791+68.39 RT	TO	STA. 794+05.89 RT	237.50	187.5	0.0	1.0	1.0	0.0	1.0	1.0	2.0
STA. 795+05.45 RT	TO	STA. 796+67.95 RT	162.50	112.5	0.0	1.0	1.0	0.0	1.0	1.0	2.0
		SUB-TOTAL (PIKE COUNTY)		563	0	4	4	799	4	4	8
		SUB-TOTAL (BROWN COUNTY)		977	475	0	10	1867	10	10	20
		TOTAL		**1,540**	**475**	**4**	**14**	**2,666**	**14**	**14**	**28**

MODEL: Schedule-9 [Sheet]
FILE NAME: c:\pw_work\pwidot\william.rodriguez-mendez@illinois.gov\d0835985\72J44-sht-schedules.dgn

USER NAME = william.rodriguez-me	DESIGNED -	REVISED -	
	DRAWN -	REVISED -	
	CHECKED -	REVISED -	
PLOT DATE = 5/15/2026	DATE -	REVISED -	

STATE OF ILLINOIS
DEPARTMENT OF TRANSPORTATION

SCHEDULES OF QUANTITIES

SCALE: | SHEET A008 OF 16 SHEETS | STA. | TO STA.

F.A.S RTE.	SECTION	COUNTY	TOTAL SHEETS	SHEET NO.
2585	122(RS-10,BDR-1,I-1)	*	120	23

CONTRACT NO. 72J44

ILLINOIS | FED. AID PROJECT

*BROWN, PIKE

ENTRANCE SCHEDULE

PAY ITEM CODE NUMBER											20200100	35101800	40200800	40600982	40600985	40800029		40800050	42300200	44000100	44000200
LOCATION FAS 2585, IL-99 MAINLINE			EXIST. SURF. TYPE	WIDTH ACROSS FRONT (FT)	WIDTH ACROSS BACK (FT)	LENGTH OF IMPROVEMENT FROM EOP OR EOS (FT)	DEPTH (IN)		AREA ENTRANCE FROM CADD (SQ YD)	AREA MBT FROM CADD (SQ YD)	EARTH EXCAVATION (CU YD)	AGG BASE CSE, TY-B 6" (SQ YD)	AGG SURF CSE, TY-B (TON)	HMA SURF. REMOVAL BUTT-JT (SQ YD)	PCC SURF. REMOVAL BUTT-JT (SQ YD)	BIT. MAT. TACK COAT MILLED SURF (POUND)	BIT. MAT. TACK COAT LIFT (POUND)	INCIDENTAL HMA SURF. (TON)	PCC DRIVEWAY PAVT 6" (SQ YD)	PAVEMENT REMOVAL (SQ YD)	DRIVEWAY PAVEMENT REMOVAL (SQ YD)
STA. 457+17.04	PE/MBT	LT	HMA / AGG	78.1	43.1	8	2.1	8.0	48.0	15.4	3.4	0.0	0.0	48.0	0.0	21.59	3.47	12.61	0.0	0.0	0.0
STA. 469+40.15	PE/MBT	LT	HMA/AGG	61.874	40	8	0.0	8.0	19.1	26.7	7.1	0.0	0.49	0.0	0.0	0.00	10.30	20.50	0.0	0.0	11.0
STA. 476+93.53	PE	LT	AGG	25.995	12	14.038	0.0	6.0	24.5	0.0	0.0	5.7	0.0	0.0	0.0	0.0	0.0	0.0	24.5	28.1	0.0
STA. 477+56.15	MBT	LT	HMA	58.126	32.25	6	0.0	6.0	0.0	15.1	2.5	0.0	0.0	0.0	0.0	0.0	0.0	0.0	15.1	0.0	15.1
STA. 478+97.90	PE W/MBT	LT	HMA	33.035	15.341	15.953	2.1	6.0	30.8	23.4	2.2	6.3	0.0	0.0	0.0	0.0	0.0	0.00	54.2	47.4	0.0
STA. 481+44.64	PE W/MBT	LT	HMA	30.071	16.918	8	0.0	8.0	33.0	18.8	4.8	0.0	0.0	21.1	0.0	14.83	4.23	23.20	0.0	0.0	31.8
STA. 492+16.97	PE	LT	HMA	25.96	15.23	8	0.0	8.0	19.2	0.0	0.0	0.0	0.00	0.0	0.0	0.00	4.31	8.59	0.0	0.0	21.1
STA. 492+88.18	PE	LT	AGG	25.607	14.55	6	2.1	0.0	11.7	0.0	0.0	0.0	0.00	11.7	0.0	5.24	0.00	1.39	0.0	0.0	0.0
STA. 493+41.00	PE	LT	AGG	-	-	-	-	-	0.0	0.0	0.0	0.0	0.91	0.0	0.0	0.0	0.00	0.00	0.0	0.0	9.4
STA. 502+87.32	PE	LT	HMA	33.8	20.59	8	2.6	8.0	23.3	0.0	1.6	0.0	0.68	0.0	0.0	0.00	5.24	3.42	0.0	0.0	16.0
STA. 507+09.70	PE	LT	HMA / CONC	69.0	51.455	8	2.6	0.0	53.7	0.0	0.0	0.0	0.0	27.0	26.66	12.16	0.0	6.39	0.0	0.0	0.0
STA. 524+44.34	MBT	LT	HMA	69.5	19.1	7	0.0	2.6	0.0	33.8	0.0	0.0	0.0	33.8	0.0	15.22	7.61	4.97	0.0	0.0	0.0
STA. 525+24.90	PE	RT	HMA / AGG	64.1	41.7	8.2	2.6	0.0	46.5	0.0	0.0	0.0	1.20	46.5	0.0	20.94	0.00	6.84	0.0	0.0	0.0
STA. 531+92.12	PE W/MBT	LT	HMA / AGG	55.8	38.7	6.5	2.6	0.0	35.8	20.2	0.0	0.0	0.98	56.0	0.0	25.20	0.00	8.23	0.0	0.0	0.0
STA. 533+91.18	PE	RT	HMA	35.5	17.8	10	2.6	0.0	30.4	0.0	0.0	0.0	0.55	30.4	0.0	13.70	0.0	4.48	0.0	0.0	0.0
STA. 547+71.15	PE	RT	HMA	33.8	20.3	8	2.6	0.0	23.7	0.0	0.0	0.0	0.0	23.7	0.0	10.66	0.00	3.48	0.0	0.0	0.0
STA. 547+79.47	MBT	LT	HMA	71.6	22.9	7.32	2.6	0.0	0.0	38.4	0.0	0.0	0.0	38.4	0.0	17.30	0.00	5.65	0.0	0.0	0.0
STA. 551+08.47	PE W/MBT	LT	AGG	42.0	26.0	8	0.0	8.0	30.2	17.8	10.7	0.0	0.66	0.0	0.0	0.0	10.80	21.50	0.0	0.0	0.0
STA. 551+75.74	PE	RT	HMA	29.0	16.0	8	2.6	0.0	20.2	0.0	0.0	0.0	0.0	20.2	0.0	9.09	0.0	2.97	0.0	0.0	0.0
STA. 552+08.24	MBT	LT	HMA	62.6	28.8	8	2.6	0.0	0.0	37.6	0.0	0.0	0.0	37.6	0.0	16.90	0.00	5.52	0.0	0.0	0.0
STA. 559+34.09	PE	LT	AGG	49.7	33.7	8	0.0	8.0	37.0	0.0	8.2	0.0	0.92	0.0	0.0	0.0	8.33	16.60	0.0	0.0	0.0
STA. 563+88.48	PE W/MBT	LT	HMA	40.0	21.6	8.5	2.6	0.0	29.8	24.4	0.0	0.0	0.5	54.2	0.0	24.39	0.00	7.97	0.0	0.0	0.0
STA. 565+09.60	PE	RT	HMA	49.2	35.1	8	2.6	8.0	37.5	0.0	1.5	0.0	1.0	0.0	0.0	0.00	8.43	16.79	0.0	0.0	32.2
STA. 573+56.20	PE W/MBT	LT	HMA	40.1	27.0	7.8	2.6	8.0	28.6	20.2	0.0	0.0	0.7	48.8	0.0	21.96	0.00	7.17	0.0	0.0	0.0
STA. 585+64.00	PE	LT	HMA/AGG	-	-	-	-	-	0.0	0.0	0.0	0.0	0.85	0.0	0.0	0.00	0.00	0.00	0.0	0.0	0.0
STA. 586+15.83	PE	RT	HMA	33.7	17.7	8	2.6	0.0	23.6	0.0	0.0	0.0	0.0	23.6	0.0	10.60	0.0	3.46	0.0	0.0	0.0
STA. 604+70.50	PE	LT	AGG	-	-	-	-	-	0.0	0.0	0.0	0.0	0.86	0.0	0.0	0.00	0.00	0.00	0.0	0.0	0.0
DEGREE OF ACCURACY (ALL TOTALS WILL BE ROUNDED UP TO THE NEAREST VALUE)											5	1	1	1	1	1		1	1	1	1
SUB-TOTAL																240	63				
TOTAL (BROWN COUNTY)											45	12	10	521	27	303		192	94	75	137

SHORT TERM PAVEMENT MARKING (PART 1 OF 2)

PAY ITEM CODE NUMBER					70300100	70300150
LOCATION FAS 2585, IL-99 MAINLINE			LENGTH (FT)	SPACING	NUMBER OF APPLICATIONS	SHORT TERM PAVE. MARK. (FT)	SHORT TERM PM REMOVAL (SQ FT)
DIAGONALS ON HMA SHOULDERS WIDER THAN 4' (LT)							
STA 492+27.86	TO	STA 500+80.10	852.24	4' / 200'	3	60.00	20.00
STA 585+49.99	TO	STA 605+40.09	1990.10	4' / 200'	3	132.00	44.00
STA 605+91.22	TO	STA 621+60.57	1569.35	4' / 200'	3	108.00	36.00
DIAGONALS ON HMA SHOULDERS WIDER THAN 4' (RT)							
STA 588+00.00	TO	STA 603+00.00	1500.00	4' / 200'	3	108.00	36.00
SUB-TOTAL (BROWN COUNTY) DIAGONALS ON HMA SHLDS						408	136

IMPACT ATTENUATORS (TEMPORARY) SCHEDULE

(FULLY REDIRECTIVE, NARROW), TEST LEVEL 3

PAY CODE ITEM	70600260	70600332
LOCATION FAP 2585, IL-99 MAINLINE STATION	IMPACT ATTENUATORS TEMPORARY (EACH)	IMPACT ATTENUATORS RELOCATE (EACH)
S.N. 075-0129		
STAGE I		
STA. 792+50.69 RT	1	
STA. 797+26.19 RT	1	
STAGE II		
STA. 792+50.69 LT		1
STA. 796+74.88 LT		1
TOTAL (PIKE COUNTY)	2	2

SHORT TERM PAVEMENT MARKING (PART 2 OF 2)

PAY ITEM CODE NUMBER					70300100	70300150	78300201
LOCATION FAS 2585, IL-99 MAINLINE			LENGTH (FT)	SPACING	NUMBER OF APPLICATIONS	SHORT TERM PAVE. MARK. (FT)	SHORT TERM PM REMOVAL (SQ FT)	PAVE. MARK. REM. GRINDING (SQ FT)
FAS 2585, IL 99 CENTER LINE							
STA 456+80.00	TO	STA 531+61.37	7481.37	4' / 40'	3	2256.00	752.00	
STA EQ. 531+61.37 BK = 531+50.18 AH							
STA 531+50.18	TO	STA 756+77.78	22527.60	4' / 40'	3	6768.00	2256.00	
BROWN & PIKE COUNTY LINE							
STA 756+77.78	TO	STA 784+36.36	2758.58	4' / 40'	3	840.00	280.00	
STA EQ. 784+36.36 BK = 784+39.92 AH							
STA 784+39.92	TO	STA 797+96.00	1356.08	4' / 40'	3	420.00	140.00	
FAS 2585 IL 99-STAGING STAGE 1-CENTER LINE							
STA 792+25.57	TO	STA 792+75.90	50.33		1	50.33	16.78	20.97
STA 796+63.75	TO	STA 797+58.95	95.20		1	95.20	31.73	39.67
FAS 2585 IL 99-STAGING STAGE 1-EDGE LINE							
STA 792+62.96	TO	STA 796+81.80	418.84		1	418.84	139.61	174.52
FAS 2585 IL 99-STAGING STAGE 2-CENTER LINE							
STA 791+51.83	TO	STA 793+39.63	187.80		1	187.80	62.60	78.25
STA 796+15.17	TO	STA 797+96.00	180.83		1	180.83	60.28	75.35
FAS 2585 IL 99-STAGING STAGE 2-EDGE LINE							
STA 792+90.39	TO	STA 796+56.73	366.34		1	366.34	122.11	152.64
FAS 2585 IL 99-STAGING STOP BAR-STAGE 1							
STA 791+15.79			12.00		1	12.00	24.00	
STA 797+58.95			12.00		1	12.00	24.00	
FAS 2585 IL 99-STAGING STOP BAR-STAGE 2							
STA 791+08.98			12.00		1	12.00	24.00	
STA 798+07.54			12.00		1	12.00	24.00	
DEGREE OF ACCURACY (ALL GRAN-TOTALS WILL BE ROUNDED UP TO THE NEAREST VALUE)						1	1	1
SUB-TOTAL (BROWN COUNTY) CENTER LINE						9024	3008	0
SUB-TOTAL (PIKE COUNTY) CENTER LINE						2607	949	541
SUB-TOTAL CENTER LINE						11631	3957	541
SUB-TOTAL (BROWN COUNTY) DIAGONALS ON HMA SHLDS						408	136	0
GRAND-TOTAL						12039	4093	541

MODEL: Schedule-10 [Sheet]
FILE NAME: c:\pw_work\pwidot\william.rodriguez-mendez@illinois.gov\d0835885\72J44-sht-schedules.dgn

USER NAME = william.rodriguez-me	DESIGNED -	REVISED -	
	DRAWN -	REVISED -	
	CHECKED -	REVISED -	
PLOT DATE = 5/15/2026	DATE -	REVISED -	

STATE OF ILLINOIS
DEPARTMENT OF TRANSPORTATION

SCHEDULES OF QUANTITIES

SCALE: SHEET A009 OF 16 SHEETS STA. TO STA.

F.A.S RTE.	SECTION	COUNTY	TOTAL SHEETS	SHEET NO.
2585	122(RS-10,BDR-1,I-1)	*	120	24

CONTRACT NO. 72J44

ILLINOIS FED. AID PROJECT

*BROWN, PIKE

TRENCH BACKFILL SCHEDULE

PAY CODE ITEM									20800150
FAS 2585, IL-99 MAINLINE			PIPE DIA				TABLE	TRENCH LENGHT	TRENCH BKFILL
LOCATION		DESCRIPTION	(INCHES)	SUBGRADE	INVERT	D	FACTOR	(FT)	(CUYD)
THIRD STREET									
STA 481+70.25 TO STA 482+07.95		CROSS E 3RD. ST	15	626.15	623.36	2.8	0.213	26.70	5.69
STA 482+07.95 TO STA 482+06.65		SE QUADRANT TO E SHOULDER	18	625.40	622.05	3.4	0.281	22.00	6.67
STA 482+06.65 TO STA 482+06.54		CROSS IL 99	18	623.25	619.77	3.5	0.3	26.40	7.92
STA 482+06.54 TO STA 482+03.96		W GUTTER TO SW QUADRANT	18	622.13	619.05	3.1	0.25	18.50	4.63
N SECOND STREET									
STA 484+71.22 TO STA 484+71.64		NE QUADRANT TO E SHOULDER	18	626.91	624.68	2.2		20.30	2.64
STA 484+71.64 TO STA 484+72.59		CROSS IL 99	18	625.43	622.06	3.4	0.248	55.45	14.63
S SECOND STREET									
STA 485+09.58 TO STA 485+09.28		SE QUADRANT TO E SHOULDER	18	627.47	624.73	2.7	0.2	16.80	3.36
STA 485+22.38 TO STA 485+09.28		SE CURB TO E SHOULDER	12	627.23	625.00	2.2	0.152	8.35	1.27
STA 485+22.38		SE CURB	12	628.09	625.00	3.1	0.257	5.00	2.72
STA 485+09.28 TO STA 485+08.74		CROSS IL 99	18	626.49	622.22	4.3	0.408	41.35	16.87
STA 485+21.91 TO STA 485+08.74		SW GUTTER TO W SHOULDER	15	625.46	622.88	2.6	0.19	9.47	1.80
STA 485+08.74 TO STA 485+08.64		W SHOULDER TO SW QUADRANT	18	624.94	622.00	2.9	0.231	14.50	3.56
FIRST STREET									
STA 488+11.67 TO STA 487+72.42		CROSS E 1ST. ST	15	629.92	628.05	1.9	0.121	27.25	3.87
STA 487+72.42 TO STA 487+75.56		CROSS IL 99	24	626.08	624.86	2.1		81.80	8.11
S OF YATES STREET									
STA 495+16.45 TO STA 495+16.43		CROSS IL 99	18	612.67	609.18	3.5	0.307	39.75	13.04
N OF MILLER STREET									
STA 496+90.95 TO STA 496+91.19		CROSS IL 99	18	610.73	607.62	3.1		29.85	7.32
STA 496+91.19 TO STA 496+91.68		E SHOULDER TO E GUTTER	15	610.68	605.38	5.3		1.00	0.75
OUT OF TOWN									
STA 539+83.20 TO STA 539+82.50		N GUTTER TO NW RIPRAP	12					3.50	0.54
SN 075-0129									
STA 795+25.29		SW CORNER	12					2.00	1.10
DEGREE OF ACCURACY (ALL TOTALS WILL BE ROUNDED UP TO THE NEAREST VALUE)									1
TOTAL (BROWN COUNTY)									**107**

TEMPORARY CONCRETE BARRIER SCHEDULE

PAY CODE ITEM	70400100	704000200
LOCATION FAP 2585, IL-99 MAINLINE STATION TO STATION	TEMPORARY CONCRETE BARRIER (FOOT)	RELOCATE TEMPORARY CONCRETE BARRIER (FOOT)
S.N. 075-0129		
STAGE I		
STA 792+50.69 TO STA. 797+26.19 RT	475	
STAGE II		
STA 792+76.45 TO STA. 796+74.88 LT		400
TOTAL (PIKE COUNTY)	**475**	**400**

TREE REMOVAL SCHEDULE

PAY ITEM NUMBER				20100500
LOCATION FAS 2585, IL-99 MAINLINE			LOCATION	TREE REMOVAL
STATION	TO	STATION	(RT / LT)	(ACRE)
STA 495+11.92	TO	STA 495+67.93	LT	0.028
STA 496+83.81	TO	STA 496+98.82	LT	0.003
STA 537+56.44	TO	STA 540+28.63	LT	0.080
STA 570+33.00	TO	STA 572+73.82	RT	0.027
DEGREE OF ACCURACY (ALL TOTALS WILL BE ROUNDED TO THE NEAREST VALUE)				0.1
TOTAL (BROWN COUNTY)				**0.1**

GRADING & SHAPING DITCHES SCHEDULE

PAY ITEM CODE NUMBER				21400100
LOCATION				GRADING & SHAPING
FAS 2585, IL-99 MAINLINE			OFFSET	DITCHES
STATION	TO	STATION	LT / RT	(FT)
STA 467+59.87	TO	STA 467+62.72	LT	14.44
STA 537+56.21	TO	STA 539+79.36	LT	305.1
STA 541+81.85	TO	STA 541+87.35	LT	15.4
STA 570+33.00	TO	STA 572+73.82	RT	234.6
TOTAL (BROWN COUNTY)				**570**

MODEL: Schedule-11 [Sheet]
FILE NAME: c:\pw_work\pwidot\mcquade.jackson@illinois.gov\d0835885\72J44-sht-schedules.dgn

USER NAME = mcquade.jackson	DESIGNED -	REVISED -	
	DRAWN -	REVISED -	
	CHECKED -	REVISED -	
PLOT DATE = 6/25/2026	DATE -	REVISED -	

STATE OF ILLINOIS
DEPARTMENT OF TRANSPORTATION

SCHEDULES OF QUANTITIES

SCALE: | SHEET A010 OF 16 SHEETS | STA. | TO STA.

F.A.S RTE.	SECTION	COUNTY	TOTAL SHEETS	SHEET NO.
2585	122(RS-10,BDR-1,I-1)	*	120	25

CONTRACT NO. 72J44

ILLINOIS | FED. AID PROJECT

*BROWN, PIKE

MODIFIED URETHANE PAVEMENT MARKING - 5" (1 OF 3)

PAY ITEM CODE NUMBER				78009005
LOCATION FAS 2585, IL-99 MAINLINE			LENGTH (FT)	MODIFIED URETHANE PAVEMENT MARKING - LINE 5" (EDGE LINE WHITE) (FT)
FAS 2585, IL-99 LT-STAGING				
STA 456+80.00	TO	STA 465+59.84	879.8	879.8
STA 466+44.78	TO	STA 475+73.11	928.3	928.3
STA 476+12.14	TO	STA 481+57.67	545.5	545.5
STA 482+21.26	TO	STA 484+59.95	238.7	238.7
STA 485+21.14	TO	STA 487+56.56	235.4	235.4
STA 488+25.72	TO	STA 490+64.66	238.9	238.9
STA 491+09.85	TO	STA 531+61.37	4051.5	4051.5
STA EQ. 531+61.37 AH = 531+50.18 BK				
STA 531+50.18	TO	STA 605+33.17	7383.0	7383.0
STA 605+99.48	TO	STA 671+81.41	6581.9	6581.9
STA 672+78.21	TO	STA 719+92.84	4714.6	4714.6
STA 720+34.64	TO	STA 754+47.79	3413.1	3413.1
STA 755+25.23	TO	STA 756+77.78	152.6	152.6
COUNTY LINE				
STA 756+77.78	TO	STA 784+36.36	2758.6	2758.6
STA EQ. 784+36.36 BK = 784+39.92 AH				
STA 784+39.92	TO	STA 790+38.90	599.0	599.0
STA 792+53.84	TO	STA 797+96.00	542.2	542.2
FAS 2585, IL-99 LT				
STA 792+90.39	TO	STA 793+68.42	78.0	78.0
STA 795+79.51	TO	STA 796+56.73	77.2	77.2
		SUB-TOTAL (BROWN COUNTY)		29364
		SUB-TOTAL (PIKE COUNTY)		4055
		SUB-TOTAL 1		**33419**

MODIFIED URETHANE PAVEMENT MARKING - 5" (2 OF 3)

PAY ITEM CODE NUMBER				78009005
LOCATION FAS 2585, IL-99 MAINLINE			LENGTH (FT)	MODIFIED URETHANE PAVEMENT MARKING - LINE 5" (EDGE LINE WHITE) (FT)
FAS 2585, IL-99 RT				
STA 456+80.00	TO	STA 465+95.66	915.7	915.7
STA 466+56.51	TO	STA 481+54.85	1498.3	1498.3
STA 482+05.48	TO	STA 484+59.74	254.3	254.3
STA 485+21.14	TO	STA 487+57.96	236.8	236.8
STA 488+28.92	TO	STA 490+68.02	239.1	239.1
STA 491+13.65	TO	STA 493+65.15	251.5	251.5
STA 494+17.05	TO	STA 496+93.96	276.9	276.9
STA 497+35.46	TO	STA 499+92.40	256.9	256.9
STA 500+40.05	TO	STA 503+74.10	334.0	334.0
STA 504+20.86	TO	STA 531+61.37	2740.5	2740.5
STA EQ. 531+61.37 AH = 531+50.18 BK				
STA 531+50.18	TO	STA 605+53.17	7403.0	7403.0
STA 606+06.30	TO	STA 647+80.62	4174.3	4174.3
STA 648+29.54	TO	STA 719+67.88	7138.3	7138.3
STA 720+13.66	TO	STA 756+77.78	3664.1	3664.1
COUNTY LINE				
STA 756+77.78	TO	STA 784+36.36	2758.6	2758.6
STA EQ. 784+36.36 BK = 784+39.92 AH				
STA 784+39.92	TO	STA 797+96.00	1356.1	1356.1
FAS 2585, IL-99 RT-STAGING				
STA 792+62.96	TO	STA 793+68.42	105.5	105.5
STA 795+79.51	TO	STA 796+81.80	102.3	102.3
		SUB-TOTAL (BROWN COUNTY)		29384
		SUB-TOTAL (PIKE COUNTY)		4322
		SUB-TOTAL 2		**33706**

MODIFIED URETHANE PAVEMENT MARKING - 5" (3 OF 3)

PAY ITEM CODE NUMBER					78009005	
LOCATION FAS 2585, IL-99 MAINLINE			LENGTH (FT)	NO PASSING ZONES (LT/RT/DUAL)	MODIFIED URETHANE PAVEMENT LINE 5" SKIP-DASH YELLOW (FT)	MODIFIED URETHANE PAVEMENT MARKING -LINE 5" (YELLOW) (FT)
CENTER LINE						
STA 456+80.00	TO	STA 460+40.00	360.0	RT SOLID	100.0	360.0
STA 460+80.00	TO	STA 506+17.33	4537.3	DUAL SOLID	0.0	9074.7
STA 506+17.33	TO	STA 512+67.00	649.7	LT SOLID	173.0	649.7
STA 512+67.00	TO	STA 523+16.01	1049.0		273.0	0.0
STA 523+16.01	TO	STA 531+61.37	845.4	RT SOLID	222.0	845.4
STA EQ. 531+61.37 BK = 531+50.18 AH						
STA 531+50.18	TO	STA 532+14.00	63.8	RT SOLID	26.0	63.8
STA 532+14.00	TO	STA 539+15.18	701.2	DUAL SOLID	0.0	1402.4
STA 539+15.18	TO	STA 548+83.61	968.4	LT SOLID	253.0	968.4
STA 548+83.61	TO	STA 556+99.72	816.1		215.0	0.0
STA 556+99.72	TO	STA 567+29.81	1030.1	RT SOLID	268.0	1030.1
STA 567+29.81	TO	STA 569+80.81	251.0	DUAL SOLID	0.0	502.0
STA 569+80.81	TO	STA 576+42.87	662.1	LT SOLID	176.0	662.1
STA 576+42.87	TO	STA 580+31.61	388.7	DUAL SOLID	0.0	777.5
STA 580+31.61	TO	STA 586+64.78	633.2	RT SOLID	169.0	633.2
STA 586+64.78	TO	STA 592+27.69	562.9	DUAL SOLID	0.0	1125.8
STA 592+27.69	TO	STA 599+71.50	743.8	LT SOLID	196.0	743.8
STA 599+71.50	TO	STA 603+04.64	333.1	DUAL SOLID	0.0	666.3
STA 603+04.64	TO	STA 610+11.50	706.9	RT SOLID	187.0	706.9
STA 610+11.50	TO	STA 612+00.00	188.5	DUAL SOLID	0.0	377.0
STA 612+00.00	TO	STA 622+05.00	1005.0	LT SOLID	262.0	1005.0
STA 622+05.00	TO	STA 756+77.78	13472.8		3379.0	0.0
COUNTY LINE						
STA 756+77.78	TO	STA 784+36.36	2758.6		700.0	0.0
STA EQ. 784+36.36 BK = 784+39.92 AH						
STA 784+39.92	TO	STA 794+20.24	980.3		256.0	0.0
STA 794+20.24	TO	STA 797+96.00	375.8	DUAL SOLID	0.0	751.5
CENTER LINE-STAGING						
STA 791+51.83	TO	STA 793+68.42	216.6		65.0	0.0
STA 796+15.17	TO	STA 797+96.00	180.8	DUAL SOLID	0.0	361.7
DEGREE OF ACCURACY (ALL GRAN-TOTALS WILL BE ROUNDED UP TO THE NEAREST VALUE)					1	
				SUB-TOTAL 1	**33419**	
				SUB-TOTAL 2	**33706**	
				SUB-TOTAL (BROWN COUNTY)	5899	21594
				SUB-TOTAL (PIKE COUNTY)	1021	1113
				SUB-TOTAL 3	**6920**	**22707**
				GRAND-TOTAL	**96752**	

MODIFIED URETHANE PAVEMENT MARKING - 6"

PAY ITEM CODE NUMBER			78009006
LOCATION FAS 2585, IL-99 MAINLINE		LENGTH (FT)	MODIFIED URETHANE PAVEMENT MARKING - LINE 6" (WHITE CROSSWALK LINE) (FT)
STA 484+59.86	NORTH SIDE OF 2ND STREET	58.6	58.6
STA 484+66.86	NORTH SIDE OF 2ND STREET	56	56
STA 485+14.13	SOUTH SIDE OF 2ND STREET	59.9	59.9
STA 485+21.13	SOUTH SIDE OF 2ND STREET	55.5	55.5
		TOTAL (BROWN COUNTY)	**230**

MODIFIED URETHANE PAVEMENT MARKING - 12"

PAY ITEM CODE NUMBER				78009012
LOCATION FAS 2585, IL-99 MAINLINE		LENGTH (FT)	NUMBER OF LINES	MODIFIED URETHANE PAVEMENT MARKING - LINE 12" (WHITE CROSSWALK LINE) (FT)
STA 484+63.36	NORTH SIDE OF 2ND STREET	6	18	108
STA 485+17.63	SOUTH SIDE OF 2ND STREET	6	19	114
		TOTAL (BROWN COUNTY)		**222**

MODEL: Untitled [Sheet]
FILE NAME: c:\pw_work\pwidot\william.rodriguez-mendez@illinois.gov\d0835885\72J44-sht-schedules.dgn

USER NAME = william.rodriguez-me	DESIGNED -	REVISED -	
	DRAWN -	REVISED -	
	CHECKED -	REVISED -	
PLOT DATE = 6/30/2026	DATE -	REVISED -	

STATE OF ILLINOIS
DEPARTMENT OF TRANSPORTATION

SCHEDULES OF QUANTITIES

SCALE: SHEET A011 OF 16 SHEETS STA. TO STA.

F.A.S RTE.	SECTION	COUNTY	TOTAL SHEETS	SHEET NO.
2585	122(RS-10,BDR-1,I-1)	*	120	26

CONTRACT NO. 72J44

ILLINOIS FED. AID PROJECT

*BROWN, PIKE

RAISED REFLECTIVE PAVEMENT MARKING SCHEDULE

PAY ITEM CODE NUMBER						78100100	78300200
LOCATION FAS 2585 IL-99 MAINLINE			LENGTH (FT)	DESCRIPTION	SPACING	RAISED REF PM (EACH)	RAISED REF PM REM (EACH)
STA 456+80.00	TO	STA 517+15.98	6035.98	TWO-WAY AMBER	1@40	152	152
STA 517+15.98	TO	STA 531+61.37	1445.39	TWO-WAY AMBER	1@80	20	20
STA EQ. 531+61.37 BK = 531+50.18 AH							
STA 531+50.18	TO	STA 756+77.78	22527.60	TWO-WAY AMBER	1@80	283	283
BROWN & PIKE COUNTY LINE							
STA 756+77.78	TO	STA 762+81.58	603.80	TWO-WAY AMBER	1@80	9	9
STA 762+81.58	TO	STA 784+36.36	2154.78	TWO-WAY AMBER	1@40	55	55
STA EQ. 784+36.36 BK = 784+39.92 AH							
STA 784+39.92	TO	STA 797+96.00	1356.08	TWO-WAY AMBER	1@40	35	35
					SUB-TOTAL (BROWN COUNTY)	455	455
					SUB-TOTAL (PIKE COUNTY)	99	99
					TOTAL	**554**	**554**

STONE RIPRAP SCHEDULE

PAY ITEM CODE NUMBER							28100205	28100207	28200200	X2810848
LOCATION FAS 2585, IL-99 MAINLINE				LENGTH (FT)	WIDTH (FT)	AREA FROM CADD (SQ FT)	AREA FROM CADD (SQ YD)	STONE RIPRAP CLASS, A3 (TON)	STONE RIPRAP CLASS, A4 (TON)	FILTER FABRIC (SQ YD)	RIPRAP SLURRY (SQ YD)
STA 495+11.92	TO	STA 495+67.93	LT	56	26.77	2488.9	276.5	0.0	184.4	276.5	276.5
STA 496+83.81	TO	STA 496+98.82	LT	15	18.4	268.2	29.8	0.0	67.4	29.8	29.8
STA 537+56.44	TO	STA 540+28.63	LT	272	5 TO 33	4998.9	555.4	0.0	1655.4	555.4	555.4
STA 541+81.75	TO	STA 541+95.20	LT	14	13.4	203.9	22.7	7.6	0.0	0.0	0.0
STA 570+33.00	TO	STA 572+73.82	RT	241	39	9156.7	1017.4	0.0	873.8	1017.4	1017.4
STA 576+82.59	TO	STA 577+00.28	LT	18	45	799.4	88.8	0.0	59.2	88.8	88.8
STA 588+49.75	TO	STA 588+62.67	LT	13	34.6	342.7	38.1	12.7	0.0	0.0	0.0
STA 604+83.78	TO	STA 605+04.71	LT	21.00	15	225.0	25.0	8.3	0.0	0.0	0.0
STA 604+95.17	TO	STA 605+45.17	RT	50	15	721.8	80.2	26.7	0.0	0.0	0.0
STA 612+49.03	TO	STA 612+93.14	LT	44	35	889.4	98.8	32.9	0.0	0.0	0.0
STA 612+15.56	TO	STA 612+51.75	RT	36	28	509.2	56.6	18.9	0.0	0.0	0.0
							TOTAL (BROWN COUNTY)	**107**	**2840**	**1968**	**1968**

SIDEWALK SCHEDULE

PAY ITEM CODE NUMBER							42400410	42400800	44000600	50300225	50800105	60618300	X4240420	X5012501	X6061005
LOCATION FAS 2585, IL-99					LENGTH (FT)	WIDTH (FT)	PCC SIDEWALK 8" (SQ FT)	DETECTABLE WARNINGS (SQ FT)	SIDEWALK REMOVAL (SQ FT)	CONCRETE STRUCTURES (CU YD)	REINFORCEMENT BARS (POUND)	CONC. MEDIAN SURF 4 INCH (SQ FT)	PCC SIDEWALK, 4" (SPL) (SQ FT)	CONC. REM. (SPL) (SQ YD)	CONC. CURB TYPE B, (SPECIAL) (FOOT)
STA 475+50.42	TO	STA 475+81.96	LT	NE CORNER	31.42	4		8	120.37				124.92		
STA 476+04.15	TO	STA 476+49.48	LT	SE CORNER	45.34	4		8	167.93				181.39		
STA 481+58.50	TO	STA 481+63.41	LT	NE CORNER	57.66	5		10	202.98				343.05		
STA 481+50.66	TO	STA 481+75.69	LT	NE CORNER	21.03	5		10	70.83				119.17		
STA 481+55.10	TO	STA 481+60.24	RT	NW CORNER	20.80	5		10	37.85				82.46		
STA 481+46.75	TO	STA 481+70.13	RT	NW CORNER	17.57	5		10	67.92				86.93		
STA 481+96.36	TO	STA 482+07.00	RT	SW CORNER	8.00	4		8	36.43				37.73		
STA 481+98.33	TO	STA 482+12.32	LT	SE CORNER	14.00	4		8	56.16				57.46		
STA 484+60.40	TO	STA 484+65.40	RT	NW CORNER	66.12	5		10	456.56				301.24		
STA 484+61.12	TO	STA 484+66.11	LT	NE CORNER	15.00	5		10	81.09				81.09		
STA 484+31.51	TO	STA 484+74.22	RT	NW CORNER	36.51	5		10	164.25				212.90		
STA 484+56.09	TO	STA 484+72.99	LT	NE CORNER	11.43	5		10	50.18				58.69		
STA 485+08.69	TO	STA 486+05.92	RT	SW CORNER	95.42	5		13	640.80				634.42		
STA 485+07.57	TO	STA 485+48.21	LT	SE CORNER				20	463.57				528.83		24.65
STA 485+06.96	TO	STA 485+13.58	LT	SE CORNER			145			4.50	300.00			23.46	
STA 485+07.62	TO	STA 485+14.49	LT	SE CORNER								59.95			
STA 485+20.63	TO	STA 485+23.79	LT	SE CORNER								19.37			
STA 485+20.63	TO	STA 485+45.27	LT	SE CORNER								160.22			
STA 485+15.02	TO	STA 485+20.02	RT	SW CORNER	30.94	5		10	154.68				158.80		
STA 487+67.75	TO	STA 487+78.43	LT	NE CORNER	10.42	4		8	42.02				42.15		
STA 487+68.17	TO	STA 487+81.65	RT	NW CORNER	12.51	5		10.8	68.14				70.18		
STA 488+02.08	TO	STA 488+16.52	RT	SW CORNER	12.50	4		8	52.00				53.88		
STA 488+03.63	TO	STA 488+19.26	LT	SE CORNER	15.20	4		8	84.40				76.93		
STA 490+51.51	TO	STA 490+77.83	LT	NE CORNER	26.30	4		8	78.30				104.22		
STA 490+65.83	TO	STA 490+80.40	RT	NW CORNER	14.00	4		8	46.38				56.10		
STA 491+00.07	TO	STA 491+39.56	RT	SW CORNER	38.86	4		10	128.43				182.34		
STA 490+92.21	TO	STA 491+13.39	LT	SE CORNER	21.00	4		8	102.36				84.54		
STA 493+60.00	TO	STA 493+81.71	RT	NW CORNER	18.88	4		8	62.57				78.93		
STA 494+08.86	TO	STA 494+20.95	RT	SW CORNER	9.00	4		8	77.00				35.69		
DEGREE OF ACCURACY (ALL TOTALS/GRAN-TOTAL WILL BE ROUNDED UP TO THE NEAREST VALUE)								1	1	0.1		1	1	1	1
						TOTAL (BROWN COUNTY)	**145**	**241**	**3514**	**4.5**	**300**	**240**	**3795**	**24**	**25**

MODEL: Untitled-1 [Sheet]
FILE NAME: c:\pw_work\pwidot\mcquade.jackson@illinois.gov\d0835885\72J44-sht-schedules.dgn

USER NAME = mcquade.jackson	DESIGNED -	REVISED -	
	DRAWN -	REVISED -	
	CHECKED -	REVISED -	
PLOT DATE = 6/30/2026	DATE -	REVISED -	

STATE OF ILLINOIS
DEPARTMENT OF TRANSPORTATION

SCHEDULES OF QUANTITIES

SCALE: | SHEET A012 OF 16 SHEETS | STA. | TO STA.

F.A.S RTE.	SECTION	COUNTY	TOTAL SHEETS	SHEET NO.
2585	122(RS-10,BDR-1,I-1)	*	120	27

CONTRACT NO. 72J44

ILLINOIS | FED. AID PROJECT

*BROWN, PIKE

GUTTER/ COMB CONCRETE CURB & GUTTER / OUTLET SCHEDULE

PAY ITEM CODE NUMBER		20200100	35101400	44000400	60600095	60600605	60602500	60604400	60605000	60605300	X6060097	X6062700
LOCATION FAS 2585, IL-99 MAINLINE	LENGTH (FT)	EARTH EXC. CU YD	AGG. BASE CSE, TYPE B (TON)	GUTTER REMOVAL (FT)	CLASS SI CONC (OUTLET) (CU YD)	CONC. CURB, TYPE B (FT)	CONC. GUTTER, TYPE A (FT)	COMB CC&G TY B-6.18 (FT)	COMB CC&G TY B-6.24 (FT)	COMB CC&G TY B-6.24 MOD (FT)	CLASS SI CONC. (OUTLET), SPL (CU YD)	CONC. GUTTER, TY A (SPECIAL) (FT)
FAS 2585, IL-99 LT												
STA 476+12.15 TO STA 478+11.49	199.34	0.00	0.00	199.34	0.00	0.00	0.00	0.00	0.00	0.00	0.00	199.3
STA 478+11.49 TO STA 480+95.79	284.30	16.04	0.00	0.0	0.00	0.00	0.00	0.00	0.00	0.00	0.00	284.3
STA 484+71.06	12.50	0.00	0.00	12.5	0.00	0.00	0.00	0.0	0.00	0.00	0.00	12.50
STA 485+05.44 TO STA 485+25.87	20.43	0.00	0.00	0.0	0.00	0.00	0.00	49.4	0.00	0.00	0.00	0.00
STA 485+20.63 TO STA 485+45.28	24.65	0.00	0.00	0.00	0.00	24.65	0.00	0.00	0.00	0.00	0.00	0.00
STA 494+94.00 TO STA 500+27.65	533.65	0.00	0.00	533.7	0.00	0.00	0.00	0.00	533.65	0.00	0.00	0.00
STA 537+52.25 TO STA 542+01.50	449.25	0.00	0.00	449.25	0.00	0.00	0.00	0.00	0.00	0.00	0.00	0.00
STA 537+52.99 TO STA 538+02.14	49.15	0.00	2.38	0.0	11.22	0.00	0.00	0.00	0.00	0.00	0.00	0.00
STA 538+02.14 TO STA 541+56.88	354.74	0.00	13.58	0.0	0.0	0.0	354.74	0.00	0.00	0.00	0.00	0.00
STA 541+56.88 TO STA 542+00.70	43.82	0.00	2.16	0.0	7.27	0.00	0.00	0.00	0.00	0.00	0.00	0.00
FAS 2585, IL-99 RT												
STA 462+85.63 TO STA 463+33.36	47.73	0.00	0.00	0.00	0.00	0.00	0.00	0.00	0.00	0.00	5.6	0.00
STA 463+33.36 TO STA 465+18.75	185.39	0.00	0.00	205.13	0.00	0.00	0.00	0.00	0.00	0.00	0.00	185.39
STA 467+54.69 TO STA 467+89.67	34.98	0.00	0.00	34.98	0.00	0.00	0.00	0.00	0.00	0.00	0.00	34.98
STA 481+03.62 TO STA 481+54.79	51.17	0.00	0.00	51.17	0.00	0.00	0.00	0.00	0.00	0.00	0.00	51.17
STA 484+56.06 TO STA 484+76.50	20.44	0.00	0.00	0.00	0.00	0.00	0.00	41.77	0.00	0.00	0.00	0.00
STA 485+06.37 TO STA 486+00.96	94.59	0.00	0.00	80.44	0.00	0.00	0.00	0.00		107.44	0.00	0.00
STA 495+09.27 TO STA 495+23.83	14.56	0.00	0.00	14.56	0.00	0.00	0.00	0.00	0.00	0.00	0.00	14.56
STA 496+82.50 TO STA 496+93.95	11.45	0.00	0.00	11.45	0.00	0.00	0.00	0.00	0.00	0.00	0.00	11.45
DEGREE OF ACCURACY (ALL TOTALS WILL BE ROUNDED UP TO THE NEAREST VALUE)		5	1	1	0.1	0.5	0.5	0.5	0.5	0.5	0.1	0.5
TOTAL (BROWN COUNTY)		**15**	**18**	**1592**	**18.5**	**25**	**354.5**	**91.5**	**534.0**	**107.5**	**5.6**	**793.5**

PROPOSED INLENT & MANHOLE SCHEDULE

PAY ITEM CODE NUMBER		60218300	60218400	60219000	60219100	60235700	60235800	60240220	60240303	X6020076	X6024240	X6024502
LOCATION FAS 2585, IL-99 MAINLINE	DESCRIPTION	MAN TA 4'-D T1F, OL EACH	MAN TA 4'-D T1F, CL EACH	MAN TA 4'-D TY 8 G EACH	MAN TA 4'-D TY 9 F&G EACH	INLETS, TY A, TY 3 F&G EACH	INLETS TA T4 F&G EACH	INLETS, TY B, TY 3 F&G EACH	INLETS, TY B, TY 9 F&G EACH	INLETS, SPL, SPL F&G EACH	INLETS (SPL) EACH	INLETS, TB, SPL F&G EACH
S OF CHESTNUT ST												
STA 467+59.34	SW GUTTER									1.0		
THIRD STREET												
STA 481+70.25	NE QUADRANT			1.0								
STA 482+07.95	SE QUADRANT		1.0									
STA 482+06.65	E SHOULDER		1.0									
STA 482+06.54	W GUTTER											1.0
STA 482+03.96	SW QUADRANT		1.0									
N SECOND STREET												
STA 484+71.22	NE QUADRANT				1.0							
STA 484+71.64	E SHOULDER	1.0										
STA 484+72.59	NW QUADRANT	1.0										
S SECOND STREET												
STA 485+04.69	E QUADRANT		1.0									
STA 485+09.28	E SHOULDER										1.00	
STA 485+22.38	SE CURB		1.0									
STA 485+08.74	W SHOULDER		1.0									
STA 485+21.91	SW GUTTER					1.0						
STA 485+08.64	SW QUADRANT	1.0										
FIRST STREET												
STA 488+11.67	SE QUADRANT			1.0								
STA 487+72.42	NE QUADRANT	1.0										
S OF YATES STREET												
STA 495+16.45	W GUTTER	1.0										
N OF MILLER STREET												
STA 496+90.95	W GUTTER											1.00
STA 496+91.19	E SHOULDER							1.0				
OUT OF TOWN												
STA 539+83.20	N GUTTER								1.0			
SN 075-0129												
STA 795+25.29	SW CORNER						1.0					
	DEGREE OF ACCURACY	1	1	1	1		1	1	1	1	1	1
	TOTAL (BROWN COUNTY)	5	6	2	1	1	0	1	1	1	1	2
	TOTAL (PIKE COUNTY)						1					
	GRAND-TOTAL	**5**	**6**	**2**	**1**	**1**	**1**	**1**	**1**	**1**	**1**	**2**

MODEL: Untitled-2 [Sheet]
FILE NAME: c:\pw_work\pwidot\mcquade.jackson@illinois.gov\d0835885\72J44-sht-schedules.dgn

USER NAME = mcquade.jackson	DESIGNED -	REVISED -
	DRAWN -	REVISED -
	CHECKED -	REVISED -
PLOT DATE = 6/25/2026	DATE -	REVISED -

STATE OF ILLINOIS
DEPARTMENT OF TRANSPORTATION

SCHEDULES OF QUANTITIES

SCALE: | SHEET A013 OF 16 SHEETS | STA. | TO STA.

F.A.S RTE.	SECTION	COUNTY	TOTAL SHEETS	SHEET NO.
2585	122(RS-10,BDR-1,I-1)	*	120	28

CONTRACT NO. 72J44

ILLINOIS | FED. AID PROJECT

*BROWN, PIKE

DRAINAGE REMOVAL SCHEDULE

PAY ITEM CODE NUMBER			50100300	50100400	50100500	50100600	50100700	50104400	55100100	55100200	55100500	55100700	55100900	60500040	60500060	X6010003	X6050206
LOCATION FAS 2585, IL-99 MAINLINE	DESCRIPTION	LENGTH (FT)	REM EXIST STRUCT N1 EACH	REM EXIST STRUCT N2 EACH	REM EXIST STRUCT N3 EACH	REM EXIST STRUCT N4 EACH	REM EXIST STRUCT N5 EACH	CONC HEADWALL REMOVAL EACH	STORM SEWER REMOVAL 4" (FT)	STORM SEWER REMOVAL 6" (FT)	STORM SEWER REMOVAL 12" (FT)	STORM SEWER REMOVAL 15" (FT)	STORM SEWER REMOVAL 18" (FT)	REMOVING MANHOLES EACH	REMOVING INLETS EACH	PIPE DRAIN REMOVAL (FT)	FILLING EX STORM SEWER (FT)
THIRD STREET																	
STA 481+70.25	NE QUADRANT	6									6.00				1.0		
STA 481+70.25 TO STA 482+07.95	CROSS E 3RD. ST	38.04										38.04					
STA 482+07.95	SE QUADRANT	6											6.0	1.0			
STA 482+07.95 TO STA 482+06.54	CROSS IL 99	83.3	1.0														
STA 482+03.96	SW QUADRANT	6										6.0		1.0			
N SECOND STREET																	
STA 484+71.22	NE QUADRANT	6							6.0						1.0		
STA 484+71.22 TO STA 484+71.64	NE QUADRANT TO E SHOULDER	2.69											2.69	1.0			
STA 484+71.64 TO STA 484+72.59	CROSS IL 99	81.08		1.0													
STA 484+72.59	NW QUADRANT	12								6.00			6.00		1.00		
S SECOND STREET																	
STA 485+04.69	SE QUADRANT										3.00		23.00		1.00		
STA 485+09.61 TO STA 485+08.64	CROSS IL 99	83.47			1.0												
STA 485+22.38	SE SHOULDER	10									10.00						47.00
STA 485+21.91 TO STA 485+08.74	SW GUTTER TO W SHOULDER	12.3															12.3
STA 485+21.91	SW GUTTER														1.00		
STA 485+08.64	SW QUADRANT	6											6.00		1.00		
FIRST STREET																	
STA 488+11.67	SE QUADRANT	6									6.00				1.00		
STA 488+11.67 TO STA 487+72.42	CROSS E 1ST. ST	38.49										38.49					
STA 487+72.42	NE QUADRANT	6											6.00		1.00		
STA 487+72.42 TO STA 487+75.56	CROSS IL 99	84.8				1.0											
S OF YATES STREET																	
STA 495+16.45	W GUTTER														1.00		
STA 495+16.45 TO STA 495+16.43	CROSS IL 99	47.9					1.0	2.0									
STA 495+16.43	E GUARDRAIL							1.0									
N OF MILLER STREET																	
STA 496+90.95	W GUTTER														1.00		
STA 496+90.95 TO STA 496+91.19	CROSS IL 99	31.41										31.41					
STA 496+91.19	E SHOULDER														1.00		
STA 496+91.19 TO STA 496+91.68	E SHOULDER TO E GUTTER	15.04										15.04					
OUT OF TOWN																	
STA 539+83.20	N GUTTER														1.00		
STA 539+83.20 TO STA 539+82.50	N GUTTER TO NW RIPRAP	6														6.0	
STA 541+87.16 TO STA 541+84.61	NE RIPRAP	7														7.0	
SN 075-0129																	
STA 795+25.29	SW CORNER	22													1.00	22.00	
		DEGREE OF ACCURACY	1	1	1	1	1	1	1	1	1	1	1	1	1	1	1
		TOTAL (BROWN COUNTY)	1	1	1	1	1	3	6	6	25	129	50	3	12	13	59
		TOTAL (PIKE COUNTY)													1	22	
		GRAND-TOTAL	**1**	**1**	**1**	**1**	**1**	**3**	**6**	**6**	**25**	**129**	**50**	**3**	**13**	**35**	**59**

MODEL: Untitled-3 [Sheet]
FILE NAME: c:\pw_work\pwidot\william.rodriguez-mendez@illinois.gov\d0835885\72J44-sht-schedules.dgn

USER NAME = william.rodriguez-me	DESIGNED -	REVISED -	
	DRAWN -	REVISED -	
	CHECKED -	REVISED -	
PLOT DATE = 5/18/2026	DATE -	REVISED -	

STATE OF ILLINOIS
DEPARTMENT OF TRANSPORTATION

SCHEDULES OF QUANTITIES

SCALE: SHEET A014 OF 16 SHEETS STA. TO STA.

F.A.S RTE.	SECTION	COUNTY	TOTAL SHEETS	SHEET NO.
2585	122(RS-10,BDR-1,I-1)	*	120	29

CONTRACT NO. 72J44

ILLINOIS | FED. AID PROJECT

*BROWN, PIKE

PROPOSED DRAINAGE SCHEDULE

PAY ITEM CODE NUMBER			54213663	54214719	54248510	550A0050	550A0050	550A0070	550A0090	550A0340	550A0360	550A0380	550A4100	550B0090	60100945	60100955	60905305
LOCATION FAS 2585, IL-99 MAINLINE	DESCRIPTION	LENGTH (FT)	PRC FLARED END SEC 18" EACH	PRCF END S EL EQRS 24" EACH	CONCRETE COLLAR (CU YD)	SS CL A, TYPE 1 10" (FT)	SS CL A, TYPE 1 12" (FT)	SS CL A, TYPE 1 15" (FT)	SS CL A, TYPE 1 18" (FT)	SS CL A, TYPE 2 12" (FT)	SS CL A, TYPE 2 15" (FT)	SS CL A, TYPE 2 18" (FT)	SS CL A, T1 EQRS 24" (FT)	SS CL B, TYPE 1 18" (FT)	PIPE DRAIN 12" (FT)	PIPE DRAIN 15" (FT)	BOX CULVERT TO BE CLEANED FT
S OF CHESTNUT ST																	
STA 467+59.34	SW GUTTER	49.20															49.2
THIRD STREET																	
STA 481+70.25	NE QUADRANT	6.00			0.15		6.0										
STA 482+07.95	SE QUADRANT	6.00			0.21							6.00					
STA 482+07.95 TO STA 482+06.65	SE QUADRANT TO E SHOULDER	28.73										28.73					
STA 482+06.65 TO STA 482+06.54	CROSS IL 99	31.22										31.22					
STA 482+06.54 TO STA 482+03.96	W GUTTER TO SW QUADRANT	25.07							25.07								
STA 482+03.96	SW QUADRANT	6.00			0.18						6.00						
N SECOND STREET																	
STA 484+71.22	NE QUADRANT	6.00			0.16	6.0											
STA 484+72.59	NW QUADRANT	12.00			0.55					6.00		6.00					
S SECOND STREET																	
STA 485+04.69 TO STA 485+09.52	SE QUADRANT	29.00			0.21				23.00								
STA 485+09.58 TO STA 485+09.28	SE QUADRANT TO E SHOULDER	21.66							21.66								
STA 485+22.38 TO STA 485+09.28	SE CURB TO E SHOULDER	13.18								13.18							
STA 485+22.38	SE CURB	6.00			0.15		6.0										
STA 485+09.28 TO STA 485+08.74	CROSS IL 99	46.19										46.19					
STA 485+21.91 TO STA 485+08.74	SW GUTTER TO W SHOULDER	13.64						13.64									
STA 485+08.74 TO STA 485+08.64	W SHOULDER TO SW QUADRANT	18.14							18.14								
STA 485+08.64	SW QUADRANT	6.00			0.21									6.00			
FIRST STREET																	
STA 488+11.67	SE QUADRANT	6.00			0.21		6.0										
STA 487+72.42	NE QUADRANT	6.00			0.15				6.0								
STA 487+72.42 TO STA 487+75.56	CROSS IL 99	85.02											85.02				
STA 487+75.56	NW QUADRANT			1.0													
S OF YATES STREET																	
STA 495+16.45 TO STA 495+16.43	CROSS IL 99	47.90										47.90					
STA 495+16.43	E GUARDRAIL		1.0														
N OF MILLER STREET																	
STA 496+90.95 TO STA 496+91.19	CROSS IL 99	32.22										32.22					
STA 496+91.19 TO STA 496+91.68	E SHOULDER TO E GUTTER	15.84										15.84					
STA 496+91.68	E GUARDRAIL		1.0														
OUT OF TOWN																	
STA 539+83.20 TO STA 539+82.50	N GUTTER TO NW RIPRAP	6.00													6.00		
STA 541+87.16 TO STA 541+84.61	NE RIPRAP	7.00														7.00	
SN 075-0129																	
STA 795+25.29	SW CORNER	22.00													22.00		
DEGREE OF ACCURACY (ALL TOTALS WILL BE ROUNDED UP TO THE NEAREST VALUE)			1	1	0.1	1	1	1	1	1	1	1	1	1	1	1	1
TOTAL (BROWN COUNTY)			2	1	2.2	6	18	14	94	19	6	214	85	6	6	7	49
TOTAL (PIKE COUNTY)															22		
GRAND-TOTAL			**2**	**1**	**2.2**	**6**	**18**	**14**	**94**	**19**	**6**	**214**	**85**	**6**	**28**	**7**	**49**

PROPOSED STORM SEWER WATER MAIN REQUIREMENTS SCHEDULE

PAY ITEM CODE NUMBER			Z0056610	Z0056612	Z0056616
LOCATION FAS 2585, IL-99 MAINLINE	DESCRIPTION	LENGTH (FT)	SS WM REQ 15 (FOOT)	SS WM REQ 18 (FOOT)	SS WM REQ 24 (FOOT)
THIRD STREET					
STA 481+70.25 TO STA 482+07.95	CROSS E 3RD. ST	40.12	40.1		
N SECOND STREET					
STA 484+71.22 TO STA 484+71.64	NE QUADRANT TO E SHOULDER	31.44		31.4	
STA 484+71.64 TO STA 484+72.59	CROSS IL 99	57.30		57.3	
FIRST STREET					
STA 488+11.67 TO STA 487+72.42	CROSS E 1ST. ST	39.25	39.3		
LOCATION TO BE DETERMINED	LOCATION TO BE DETERMINED	20.00			20.00
DEGREE OF ACCURACY (ALL TOTALS WILL BE ROUNDED UP TO THE NEAREST VALUE)			1	1	1
TOTAL (BROWN COUNTY)			**80**	**89**	**20**

MODEL: Untitled-4 [Sheet]
FILE NAME: c:\pw_work\pwidot\mcquade.jackson@illinois.gov\d0835885\72J44-sht-schedules.dgn

USER NAME = mcquade.jackson	DESIGNED -	REVISED -	
	DRAWN -	REVISED -	
	CHECKED -	REVISED -	
PLOT DATE = 6/25/2026	DATE -	REVISED -	

STATE OF ILLINOIS
DEPARTMENT OF TRANSPORTATION

SCHEDULES OF QUANTITIES

SCALE: | SHEET A015 OF 16 SHEETS | STA. | TO STA.

F.A.S RTE.	SECTION	COUNTY	TOTAL SHEETS	SHEET NO.
2585	122(RS-10,BDR-1,I-1)	*	120	30

CONTRACT NO. 72J44

ILLINOIS | FED. AID PROJECT

*BROWN, PIKE

PAVEMENT PATCHING SCHEDULE

PAY ITEM CODE NUMBER			44200099	44200144	44200148	X4406650	X4421000
LOCATION FAS 2585, IL-99 MAINLINE	DESCRIPTION	LENGTH (FT)	PAVT PATCH T3 8" (SQ YD)	PAVT PATCH T2 12" (SQ YD)	PAVT PATCH T3 12" (SQ YD)	PARTIAL DEPTH REM., T4, 5" (SQ YD)	PARTIAL DEPTH PATCHING (DEPTH = 5") (TON)
THIRD STREET							
STA 481+70.25 TO STA 482+07.95	CROSS E 3RD. ST	40.117		13			
STA 482+07.95 TO STA 482+06.65	SE QUADRANT TO E SHOULDER	28.729		10			
STA 482+06.65 TO STA 482+06.54	CROSS IL 99 (LT)	14.081		9			
STA 482+06.65 TO STA 482+06.54	CROSS IL 99 (RT)	12.305		9			
STA 482+06.54 TO STA 482+03.96	W GUTTER TO SW QUADRANT	25.066		8			
STA 483+00.00 TO STA 491+08.00	EAST SIDE	808.00				359	101
N SECOND STREET							
STA 484+71.21 TO STA 484+71.64	NE QUADRANT TO E SHOULDER	28.038		11			
STA 484+71.64 TO STA 484+72.59	CROSS IL 99 (LT)	15.598		7			
STA 484+71.64 TO STA 484+72.59	CROSS IL 99 (RT)	32.858			16		
S SECOND STREET							
STA 485+01.22 TO STA 485+07.06	SE 2ND. ST	28	19				
STA 485+09.28 TO STA 485+08.74	CROSS IL 99 (LT)	17.687		11			
STA 485+09.28 TO STA 485+08.74	CROSS IL 99 (RT)	23.666		14			
FIRST STREET							
STA 488+11.67 TO STA 487+72.42	CROSS E 1ST. ST	39.25		13			
STA 487+72.42 TO STA 487+75.56	CROSS IL 99 (LT)	32.851			18		
STA 487+72.42 TO STA 487+75.56	CROSS IL 99 (RT)	35.852			20		
S OF YATES STREET							
STA 495+16.45 TO STA 495+16.43	CROSS IL 99 (LT)	15.454		11			
STA 495+16.45 TO STA 495+16.43	CROSS IL 99 (RT)	19.753		7			
N OF MILLER STREET							
STA 496+90.95 TO STA 496+91.19	CROSS IL 99 (LT)	17.318		9			
STA 496+90.95 TO STA 496+91.19	CROSS IL 99 (RT)	13.64		7			
DEGREE OF ACCURACY (ALL TOTALS WILL BE ROUNDED UP TO THE NEAREST VALUE)			1	1	1	1	1
		TOTAL (BROWN COUNTY)	**19**	**141**	**54**	**359**	**101**

MODEL: Untitled-5 [Sheet]
FILE NAME: c:\pw_work\pwidot\mcquade.jackson@illinois.gov\d0935885\72J44-sht-schedules.dgn

USER NAME = mcquade.jackson	DESIGNED -	REVISED -	
	DRAWN -	REVISED -	
	CHECKED -	REVISED -	
PLOT DATE = 6/25/2026	DATE -	REVISED -	

STATE OF ILLINOIS
DEPARTMENT OF TRANSPORTATION

SCHEDULES OF QUANTITIES

SCALE: SHEET A016 OF 16 SHEETS STA. TO STA.

F.A.S RTE.	SECTION	COUNTY	TOTAL SHEETS	SHEET NO.
2585	122(RS-10,BDR-1,I-1)	*	120	31

CONTRACT NO. 72J44

ILLINOIS FED. AID PROJECT

*BROWN, PIKE

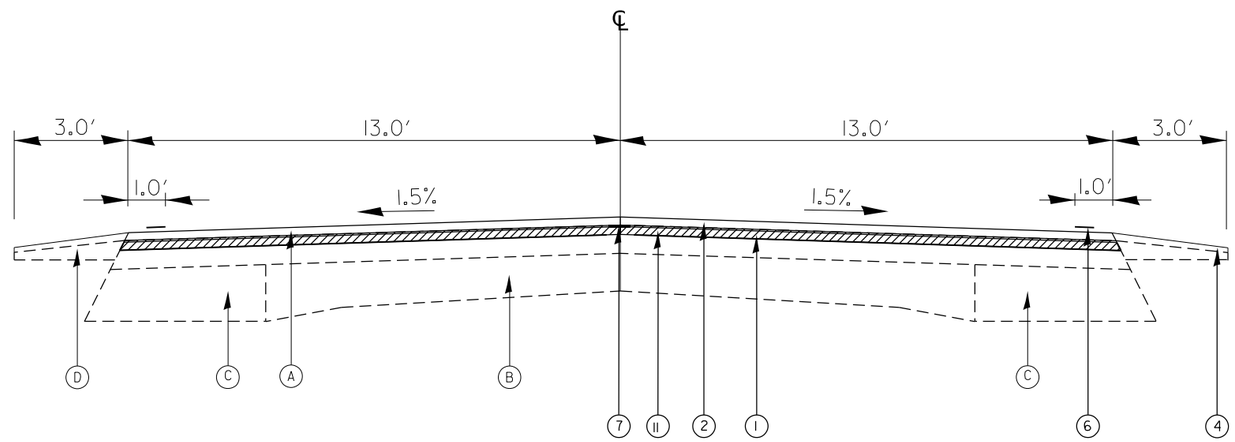

1 TYPICAL SECTION - FAS 2585 (IL. 99)
STA. 456+80.00 TO STA. 458+27.00

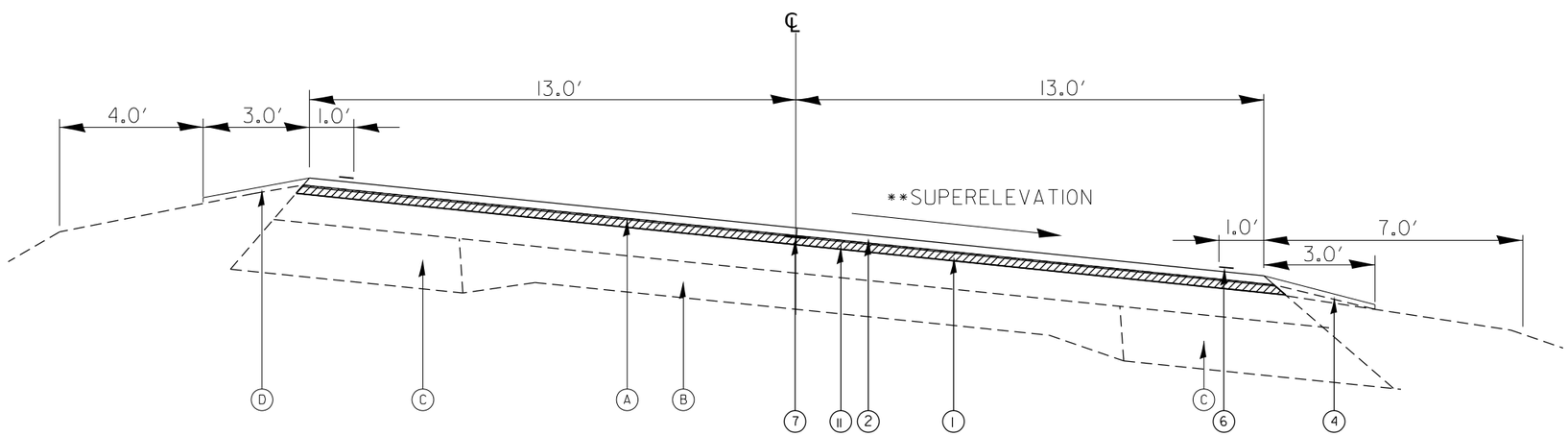

2 TYPICAL SECTION - FAS 2585 (IL. 99)
STA. 458+27 TO STA. 463+28

EXISTING LEGEND

- (A) EX HMA OVERLAY, 4 1/2"
- (B) EX 9-6-9 PCC PAVEMENT
- (C) EX HMA BASE COURSE WIDENING, 9"
- (D) EX AGG. SHOULDER
- (E) EX GUTTER
- (F) EX HMA SHOULDER
- (G) EX HMA PAVEMENT, 6"

PROPOSED LEGEND

- (1) PR HMA SURFACE REMOVAL, 1 1/2"
- (2) PR HMA SURFACE COURSE, MIX"C", IL-9.5 N50, 1 1/2"
- (3) PR BINDER COURSE IL-19.0 N50, 2 1/4"
- (4) PR AGG. WEDGE SHOULDER, TYPE B
- (5) PR TYPE A GUTTER
- (6) PR PAINT PAVEMENT MARKING-LINE 5"
- (7) PR LONGITUDINAL JOINT SEALANT
- (8) PR GUTTER REMOVAL
- (9) PR HMA SHOULDER 2 3/4" (TON)
- (10) PR HMA SURFACE REMOVAL, 2 3/4"
- (11) PR BINDER COURSE IL-9.5FG N50, 1 1/4"
- (12) PR GUARDRAIL REMOVAL
- (13) PR HMA SHOULDER 4 1/4" (SQ YD)
- (14) PARTIAL DEPTH PATCHING 5"
- (15) PR GUARDRAIL
- (16) PR COMB. CURB & GUTTER TYPE B 6.24
- (17) PR PAVED SHOULDER REMOVAL (SPECIAL)
- (18) PR HMA SHOULDER 3 3/4" (TON)
- (19) PR HMA SURFACE REMOVAL, VARIABLE
- (20) PR EXCAVATING AND GRADING EXISTING SHOULDER (SPECIAL)
- (21) PR AGG BASE COUSE TYPE B
- (22) PR BASE COUSE WIDENING 6"

NOTES:
** SUPERELEVATION TO MATCH SLOPE OF EXISTING PAVEMENT

MODEL: Typical 1 [Sheet]
FILE NAME: c:\pw_work\pwidot\william.rodriguez-mendez@illinois.gov\d0835885\72J44-sht-typical.dgn

USER NAME = william.rodriguez-me	DESIGNED -	REVISED -	
	DRAWN -	REVISED -	
	CHECKED -	REVISED -	
PLOT DATE = 5/15/2026	DATE -	REVISED -	

STATE OF ILLINOIS
DEPARTMENT OF TRANSPORTATION

TYPICAL SECTIONS

SCALE: SHEET 1 OF 11 SHEETS STA. TO STA.

F.A.S RTE.	SECTION	COUNTY	TOTAL SHEETS	SHEET NO.
2585	122(RS-10,BDR-1,I-1)	*	120	32

CONTRACT NO. 72J44

ILLINOIS | FED. AID PROJECT

*BROWN, PIKE

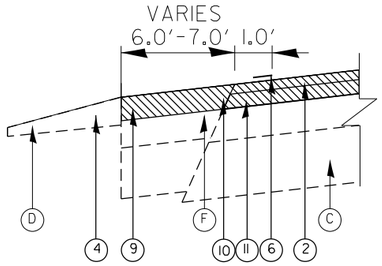

DETAIL A

STA. 465+14.67 TO STA. 465+58.73
STA. 466+44.61 TO STA. 467+39.13

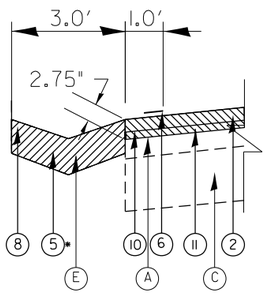

DETAIL B

STA. 475+73.08 TO STA. 483+10.00

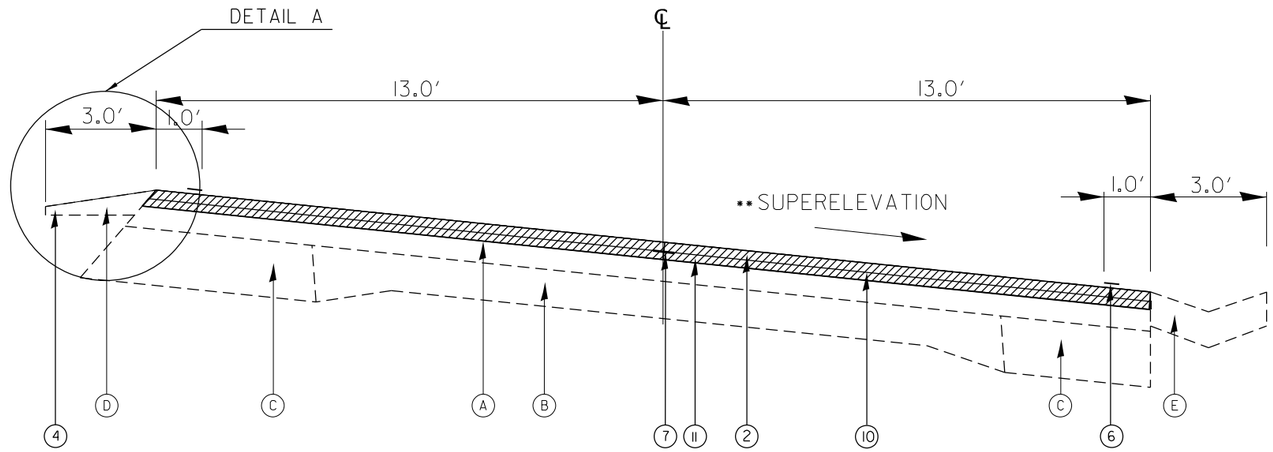

3 TYPICAL SECTION - FAS 2585 (IL. 99)

STA. 463+28.00 TO STA. 469+86.00

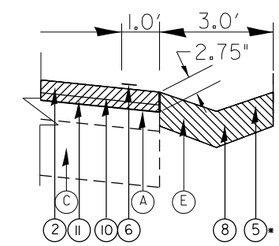

DETAIL C

STA. 463+41.00 TO STA. 468+41.16
STA. 481+31.72 TO STA. 482+05.62

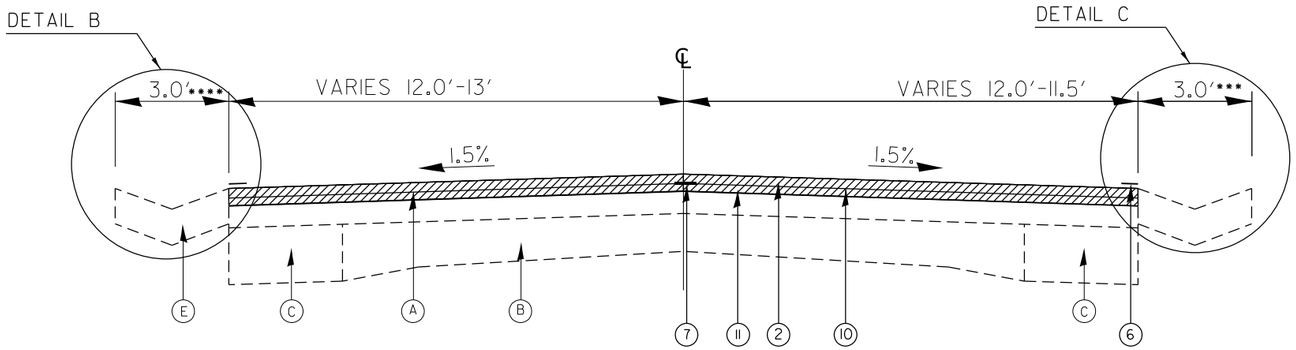

4 TYPICAL SECTION - FAS 2585 (IL. 99)

STA. 469+86.00 TO STA. 483+10.00

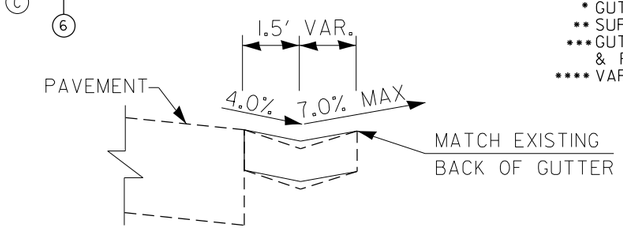

CONCRETE GUTTER
TYPE A (SPECIAL) (MODIFIED)

STA. 481+54.80 TO STA. 481+59.80

EXISTING LEGEND

- (A) EX HMA OVERLAY, 4 1/2"
- (B) EX 9-6-9 PCC PAVEMENT
- (C) EX HMA BASE COURSE WIDENING, 9"
- (D) EX AGG. SHOULDER
- (E) EX GUTTER
- (F) EX HMA SHOULDER
- (G) EX HMA PAVEMENT, 6"

PROPOSED LEGEND

- (1) PR HMA SURFACE REMOVAL, 1 1/2"
- (2) PR HMA SURFACE COURSE, MIX"C", IL-9.5 N50, 1 1/2"
- (3) PR BINDER COURSE IL-19.0 N50, 2 1/4"
- (4) PR AGG. WEDGE SHOULDER, TYPE B
- (5) PR TYPE A GUTTER
- (6) PR PAINT PAVEMENT MARKING-LINE 5"
- (7) PR LONGITUDINAL JOINT SEALANT
- (8) PR GUTTER REMOVAL
- (9) PR HMA SHOULDER 2 3/4" (TON)
- (10) PR HMA SURFACE REMOVAL, 2 3/4"
- (11) PR BINDER COURSE IL-9.5FG N50, 1 1/4"
- (12) PR GUARDRAIL REMOVAL
- (13) PR HMA SHOULDER 4 1/4" (SQ YD)
- (14) PARTIAL DEPTH PATCHING 5"
- (15) PR GUARDRAIL
- (16) PR COMB. CURB & GUTTER TYPE B 6.24
- (17) PR PAVED SHOULDER REMOVAL (SPECIAL)
- (18) PR HMA SHOULDER 3 3/4" (TON)
- (19) PR HMA SURFACE REMOVAL, VARIABLE
- (20) PR EXCAVATING AND GRADING EXISTING SHOULDER (SPECIAL)
- (21) PR AGG BASE COUSE TYPE B
- (22) PR BASE COUSE WIDENING 6"

NOTES:

- * GUTTER TYPE A (SPECIAL)
- ** SUPERELEVATION TO MATCH SLOPE OF EXISTING PAVEMENT
- *** GUTTER REMOVAL FROM STA. 463+41.23 TO STA. 465+15.50 & FROM STA. 467+67.50 TO STA. 468+19.80
- **** VARIABLE PARKING LANE BEGINS AT STA. 482+03.11

NOTES:

STA. 481+03.55 TO 481+54.80 TRANSITIONING FROM CONC. GUTTER TYPE A (SPECIAL) TO CONC. GUTTER TYPE A (SPECIAL) (MOD.)
STA. 481+59.80 TO 482+05.77 TRANSITIONING FROM CONC. GUTTER TYPE A (SPECIAL) (MOD.) TO CONC. GUTTER TYPE A (SPECIAL)

MODEL: Typical 2 [Sheet]
FILE NAME: c:\pw_work\pwidot\william.rodriguez-mendez@illinois.gov\d0835885\72J44-sht-typical.dgn

USER NAME = william.rodriguez-me	DESIGNED -	REVISED -	
	DRAWN -	REVISED -	
	CHECKED -	REVISED -	
PLOT DATE = 5/15/2026	DATE -	REVISED -	

STATE OF ILLINOIS
DEPARTMENT OF TRANSPORTATION

TYPICAL SECTIONS

SCALE: | SHEET 2 OF 11 SHEETS | STA. | TO STA.

F.A.S RTE.	SECTION	COUNTY	TOTAL SHEETS	SHEET NO.
2585	122(RS-10,BDR-1,I-1)	*	120	33

CONTRACT NO. 72J44

ILLINOIS | FED. AID PROJECT

*BROWN, PIKE

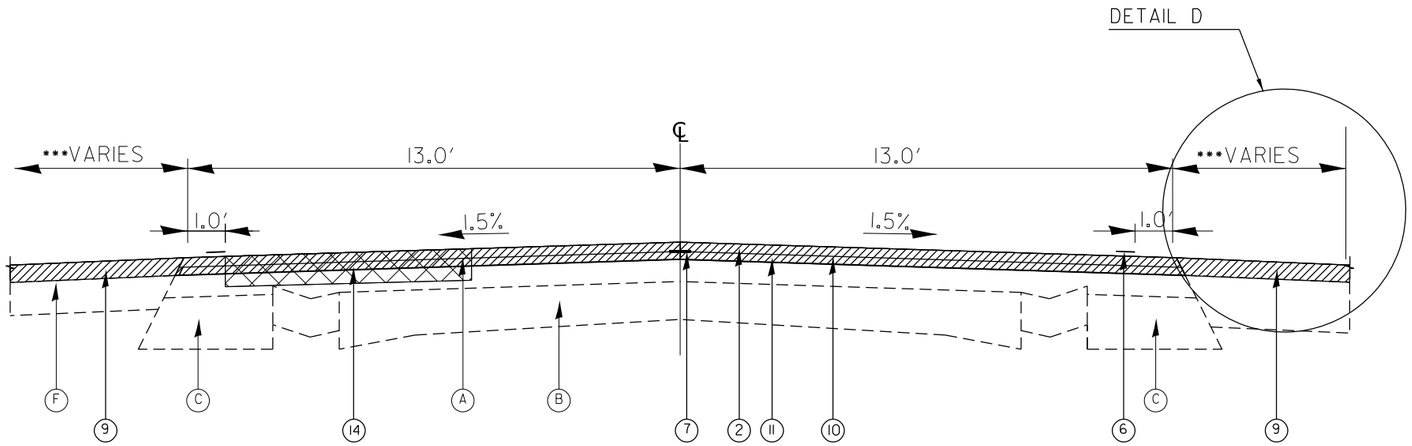

5 TYPICAL SECTION - FAS 2585 (IL. 99)

STA. 483+10 TO STA. 485+06
STA. 486+75 TO STA. 488+17

NOTES:

*FROM STA. 488+17.00 TO STA. 489+28.40 (LT) IS VARIABLE PARKING LANE
&FROM STA. 489+28.40 TO STA. 490+72.55 (LT) HMA SHOULDER IS TRANSITIONING 10.5' TO 9'
&FROM STA. 492+02.29 TO STA. 492+77.50 (LT) HMA SHOULDER IS 3.5'
&FROM STA. 492+77.50 TO STA. 494+94.00 (LT) HMA SHOULDER IS 6.5'
** GUTTER TYPE A (SPECIAL)
*** VARIABLE PARKING LANE ON ON EITHER SIDE OF MAINLINE
**** PARTIAL DEPTH PATCHING 5" ENDS AT STA. 490+50.

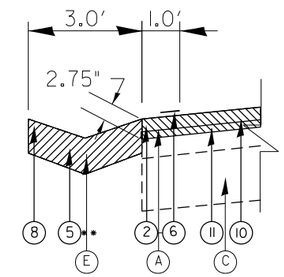

DETAIL D

STA. 483+10.00 TO STA. 484+50.00

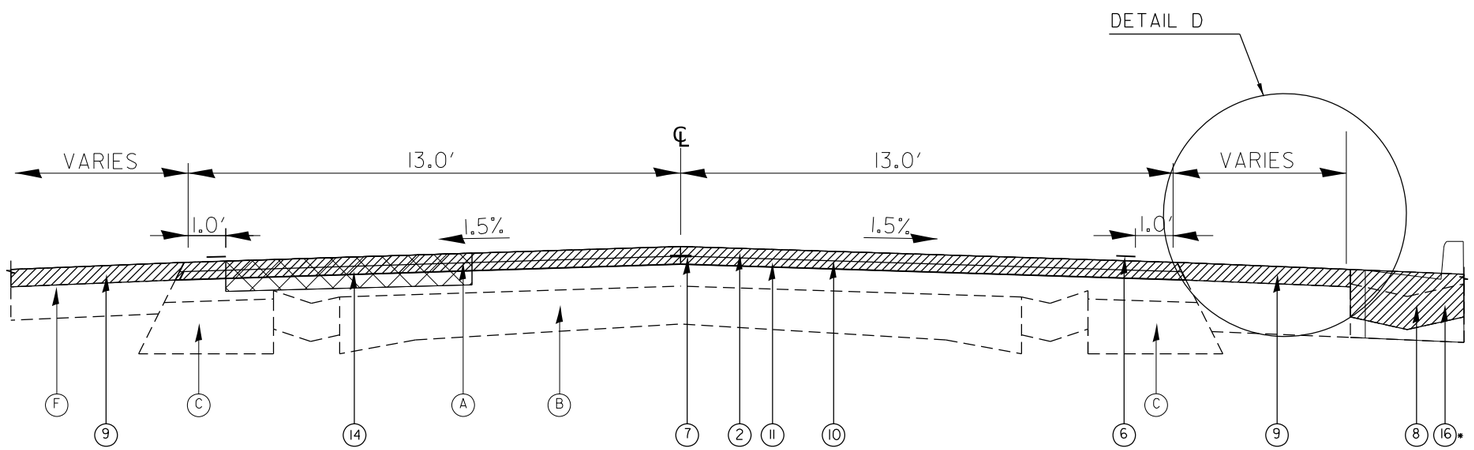

6 TYPICAL SECTION - FAS 2585 (IL. 99)

STA. 485+06 TO STA. 486+75

EXISTING LEGEND

- (A) EX HMA OVERLAY, 4 1/2"
- (B) EX 9-6-9 PCC PAVEMENT
- (C) EX HMA BASE COURSE WIDENING, 9"
- (D) EX AGG. SHOULDER
- (E) EX GUTTER
- (F) EX HMA SHOULDER
- (G) EX HMA PAVEMENT, 6"

PROPOSED LEGEND

- (1) PR HMA SURFACE REMOVAL, 1 1/2"
- (2) PR HMA SURFACE COURSE, MIX"C", IL-9.5 N50, 1 1/2"
- (3) PR BINDER COURSE IL-19.0 N50, 2 1/4"
- (4) PR AGG. WEDGE SHOULDER, TYPE B
- (5) PR TYPE A GUTTER
- (6) PR PAINT PAVEMENT MARKING-LINE 5"
- (7) PR LONGITUDINAL JOINT SEALANT
- (8) PR GUTTER REMOVAL
- (9) PR HMA SHOULDER 2 3/4" (TON)
- (10) PR HMA SURFACE REMOVAL, 2 3/4"
- (11) PR BINDER COURSE IL-9.5FG N50, 1 1/4"
- (12) PR GUARDRAIL REMOVAL
- (13) PR HMA SHOULDER 4 1/4" (SQ YD)
- (14) PARTIAL DEPTH PATCHING 5"
- (15) PR GUARDRAIL
- (16) PR COMB. CURB & GUTTER TYPE B 6.24
- (17) PR PAVED SHOULDER REMOVAL (SPECIAL)
- (18) PR HMA SHOULDER 3 3/4" (TON)
- (19) PR HMA SURFACE REMOVAL, VARIABLE
- (20) PR EXCAVATING AND GRADING EXISTING SHOULDER (SPECIAL)
- (21) PR AGG BASE COUSE TYPE B
- (22) PR BASE COUSE WIDENING 6"

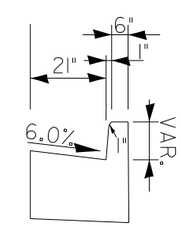

COMB. CC&G TYPE B-6.24(MOD.)

STA. 485+06.38 TO STA. 486+00.82

NOTES: MATCH HIEGHT OF CURB TO ELEVATION OF SIDEWALK

MODEL: Typical 3 [Sheet]
FILE NAME: c:\pw_work\pwidot\william.rodriguez-mendez@illinois.gov\d0835885\72J44-sht-typical.dgn

USER NAME = william.rodriguez-me	DESIGNED -	REVISED -	
	DRAWN -	REVISED -	
	CHECKED -	REVISED -	
PLOT DATE = 5/15/2026	DATE -	REVISED -	

STATE OF ILLINOIS
DEPARTMENT OF TRANSPORTATION

TYPICAL SECTIONS

SCALE: | SHEET 3 OF 11 SHEETS | STA. | TO STA.

F.A.S RTE.	SECTION	COUNTY	TOTAL SHEETS	SHEET NO.
2585	122(RS-10,BDR-1,I-1)	*	120	34

CONTRACT NO. 72J44

ILLINOIS | FED. AID PROJECT

*BROWN, PIKE

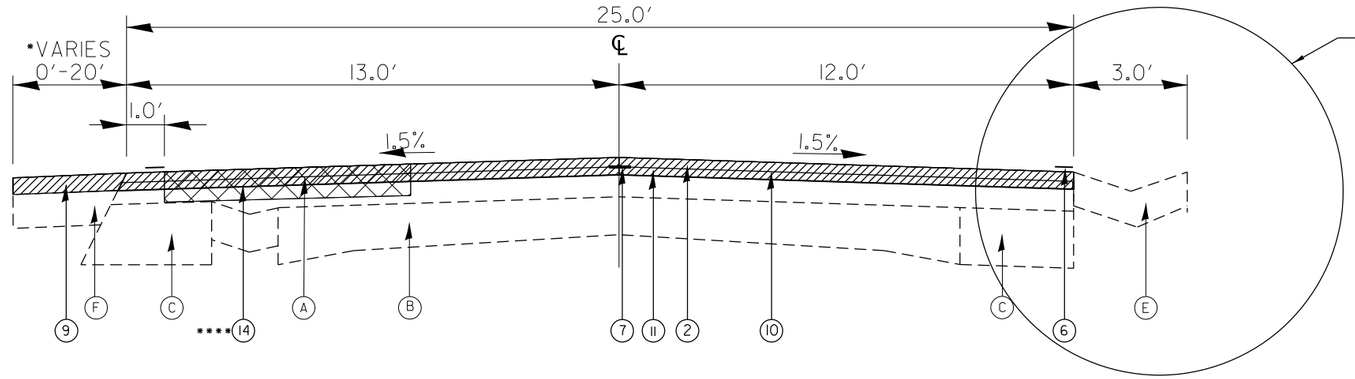

7 TYPICAL SECTION - FAS 2585 (IL. 99)

STA. 488+17 TO STA. 494+78.00

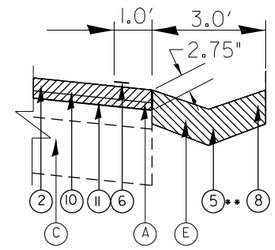

DETAIL E

STA. 490+68.00 TO STA. 491+13.64

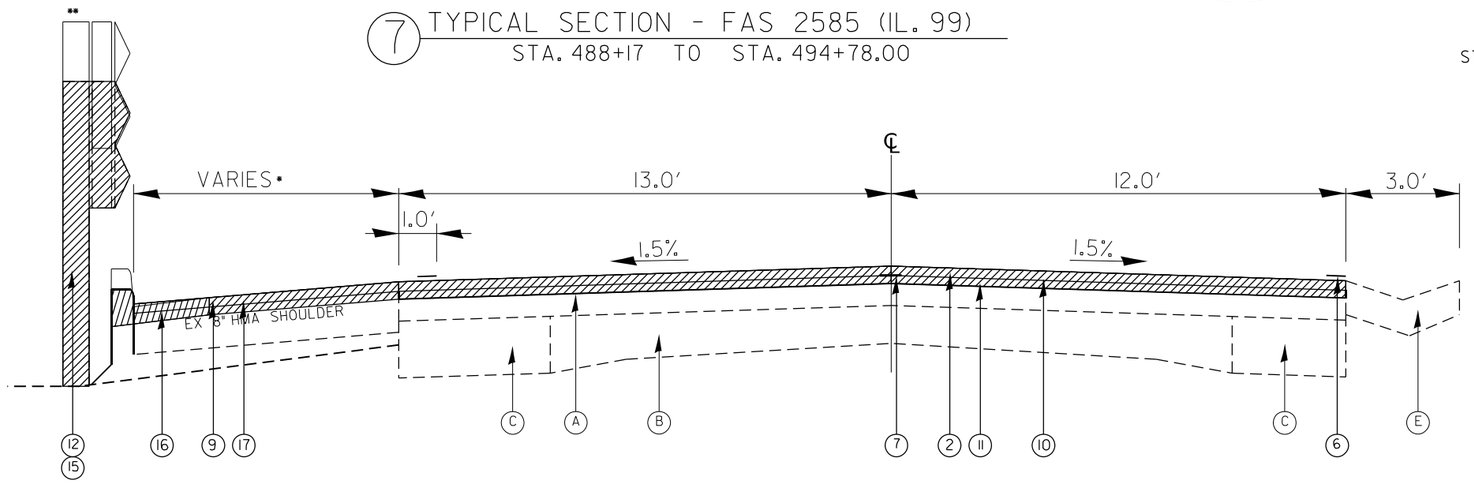

8 TYPICAL SECTION - FAS 2585 (IL. 99)

STA. 494+78.00 TO STA. 501+00

*GUTTER REMOVAL FROM STA. 494+94.00 TO STA. 500+01.00

**GURARDRAIL REMOVAL AND PROPOSED GUARDRAIL FROM STA. 494+78.00 TO STA. 500+27.58

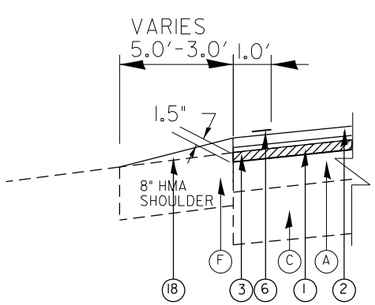

DETAIL F

STA. 501+00 TO STA. 501+46

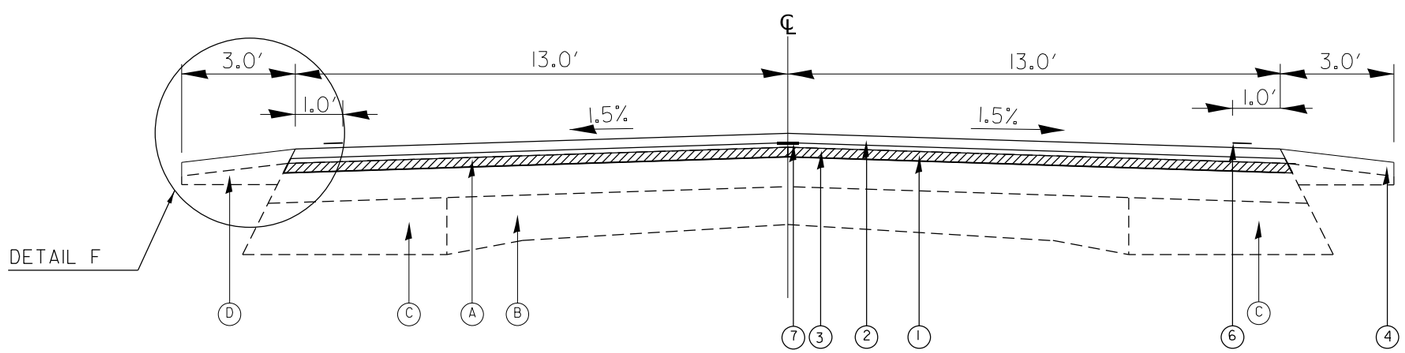

9 TYPICAL SECTION - FAS 2585 (IL. 99)

STA. 501+00.00 TO STA. 518+00.00

EXISTING LEGEND

- (A) EX HMA OVERLAY, 4 1/2"
- (B) EX 9-6-9 PCC PAVEMENT
- (C) EX HMA BASE COURSE WIDENING, 9"
- (D) EX AGG. SHOULDER
- (E) EX GUTTER
- (F) EX HMA SHOULDER
- (G) EX HMA PAVEMENT, 6"

PROPOSED LEGEND

- (1) PR HMA SURFACE REMOVAL, 1 1/2"
- (2) PR HMA SURFACE COURSE, MIX"C", IL-9.5 N50, 1 1/2"
- (3) PR BINDER COURSE IL-19.0 N50, 2 1/4"
- (4) PR AGG. WEDGE SHOULDER, TYPE B
- (5) PR TYPE A GUTTER
- (6) PR PAINT PAVEMENT MARKING-LINE 5"
- (7) PR LONGITUDINAL JOINT SEALANT
- (8) PR GUTTER REMOVAL
- (9) PR HMA SHOULDER 2 3/4" (TON)
- (10) PR HMA SURFACE REMOVAL, 2 3/4"
- (11) PR BINDER COURSE IL-9.5FG N50, 1 1/4"
- (12) PR GUARDRAIL REMOVAL
- (13) PR HMA SHOULDER 4 1/4" (SQ YD)
- (14) PARTIAL DEPTH PATCHING 5"
- (15) PR GUARDRAIL
- (16) PR COMB. CURB & GUTTER TYPE B 6.24
- (17) PR PAVED SHOULDER REMOVAL (SPECIAL)
- (18) PR HMA SHOULDER 3 3/4" (TON)
- (19) PR HMA SURFACE REMOVAL, VARIABLE
- (20) PR EXCAVATING AND GRADING EXISTING SHOULDER (SPECIAL)
- (21) PR AGG BASE COUSE TYPE B
- (22) PR BASE COUSE WIDENING 6"

MODEL: Typical 4 [Sheet]
FILE NAME: c:\pw_work\pwidot\william.rodriguez-mendez@illinois.gov\d0835585\72J44-sht-typical.dgn

USER NAME = william.rodriguez-me	DESIGNED -	REVISED -	
	DRAWN -	REVISED -	
	CHECKED -	REVISED -	
PLOT DATE = 5/15/2026	DATE -	REVISED -	

STATE OF ILLINOIS
DEPARTMENT OF TRANSPORTATION

TYPICAL SECTIONS

SCALE: | SHEET 4 OF 11 SHEETS | STA. | TO STA.

F.A.S RTE.	SECTION	COUNTY	TOTAL SHEETS	SHEET NO.
2585	122(RS-10,BDR-1,I-1)	*	120	35

CONTRACT NO. 72J44

ILLINOIS | FED. AID PROJECT

*BROWN, PIKE

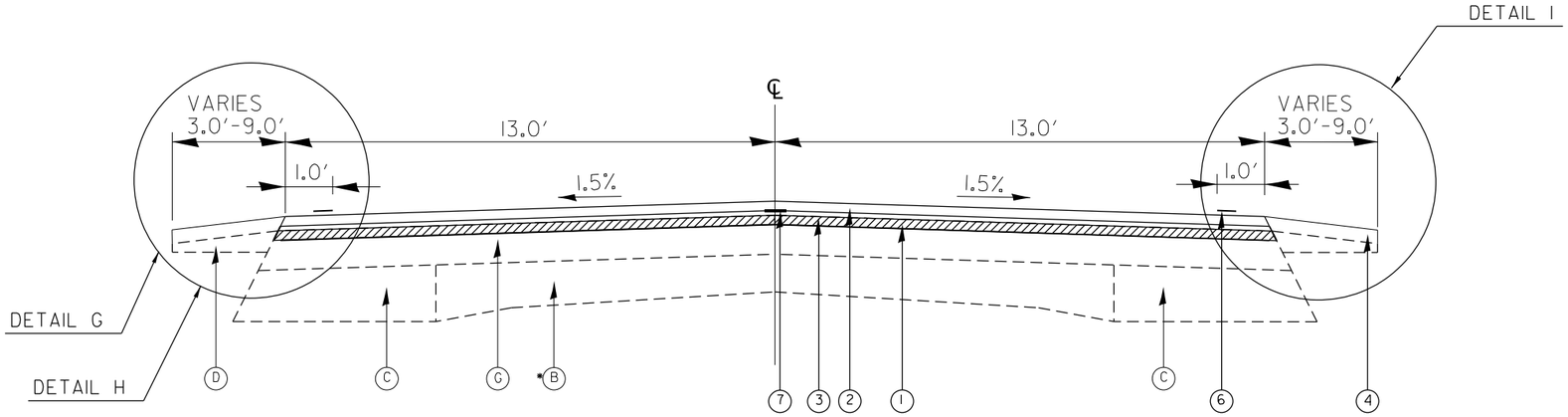

10 TYPICAL SECTION - FAS 2585 (IL. 99)

STA. 518+00.00 TO STA. 530+33.09
STA. 542+01.57 TO STA. 562+29.21
STA. 574+64.40 TO STA. 586+10.00
STA. 623+06.34 TO STA. 641+39.69
STA. 653+41.54 TO STA. 691+52.97
STA. 694+44.12 TO STA. 704+05.76
STA. 725+07.25 TO STA. 761+08.02

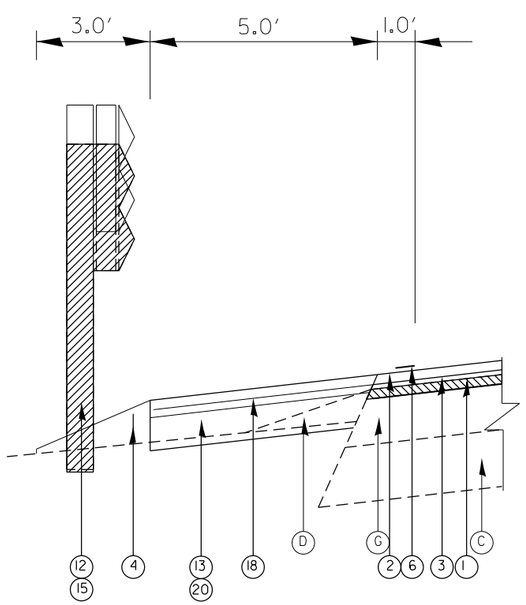

DETAIL H

STA. 623+06.34 TO STA. 623+95.57
STA. 694+44.12 TO STA. 695+35.96

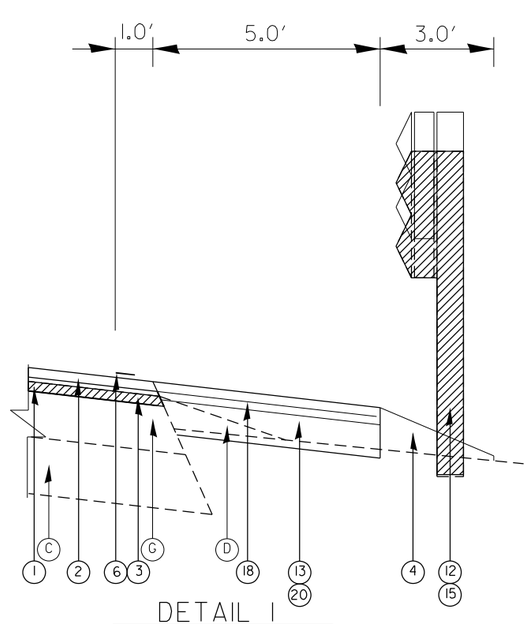

DETAIL I

STA. 690+87.49 TO STA. 691+52.97

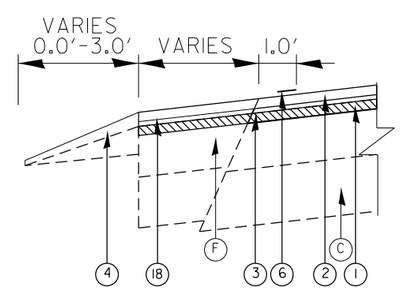

DETAIL G

STA. 585+43.00 TO STA. 586+10.00

EXISTING LEGEND

- (A) EX HMA OVERLAY, 4 1/2"
- (B) EX 9-6-9 PCC PAVEMENT
- (C) EX HMA BASE COURSE WIDENING, 9"
- (D) EX AGG. SHOULDER
- (E) EX GUTTER
- (F) EX HMA SHOULDER
- (G) EX HMA PAVEMENT, 6"

PROPOSED LEGEND

- (1) PR HMA SURFACE REMOVAL, 1 1/2"
- (2) PR HMA SURFACE COURSE, MIX"C", IL-9.5 N50, 1 1/2"
- (3) PR BINDER COURSE IL-19.0 N50, 2 1/4"
- (4) PR AGG. WEDGE SHOULDER, TYPE B
- (5) PR TYPE A GUTTER
- (6) PR PAINT PAVEMENT MARKING-LINE 5"
- (7) PR LONGITUDINAL JOINT SEALANT
- (8) PR GUTTER REMOVAL
- (9) PR HMA SHOULDER 2 3/4" (TON)
- (10) PR HMA SURFACE REMOVAL, 2 3/4"
- (11) PR BINDER COURSE IL-9.5FG N50, 1 1/4"
- (12) PR GUARDRAIL REMOVAL
- (13) PR HMA SHOULDER 4 1/4" (SQ YD)
- (14) PARTIAL DEPTH PATCHING 5"
- (15) PR GUARDRAIL
- (16) PR COMB. CURB & GUTTER TYPE B 6.24
- (17) PR PAVED SHOULDER REMOVAL (SPECIAL)
- (18) PR HMA SHOULDER 3 3/4" (TON)
- (19) PR HMA SURFACE REMOVAL, VARIABLE
- (20) PR EXCAVATING AND GRADING EXISTING SHOULDER (SPECIAL)
- (21) PR AGG BASE COUSE TYPE B
- (22) PR BASE COUSE WIDENING 6"

NOTES:

- EXISTING HMA PAVEMENT IS 8" FROM STA. 652+50 TO STA. 691+50

MODEL: Typical 5 [Sheet]
FILE NAME: c:\pw_work\pwidot\william.rodriguez-mendez@illinois.gov\d0835885\72J44-sht-typical.dgn

USER NAME = william.rodriguez-me	DESIGNED -	REVISED -	
	DRAWN -	REVISED -	
	CHECKED -	REVISED -	
PLOT DATE = 5/15/2026	DATE -	REVISED -	

STATE OF ILLINOIS
DEPARTMENT OF TRANSPORTATION

TYPICAL SECTIONS

SCALE: | SHEET 5 OF 11 SHEETS | STA. | TO STA.

F.A.S RTE.	SECTION	COUNTY	TOTAL SHEETS	SHEET NO.
2585	122(RS-10,BDR-1,I-1)	*	120	36

CONTRACT NO. 72J44

ILLINOIS | FED. AID PROJECT

*BROWN,PIKE

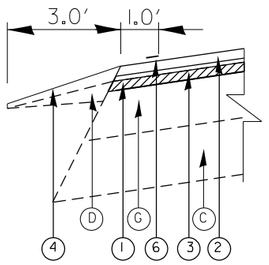

DETAIL J

STA. 530+33.09 TO STA. 531+59.66
STA. 532+48.05 TO STA. 537+52.44

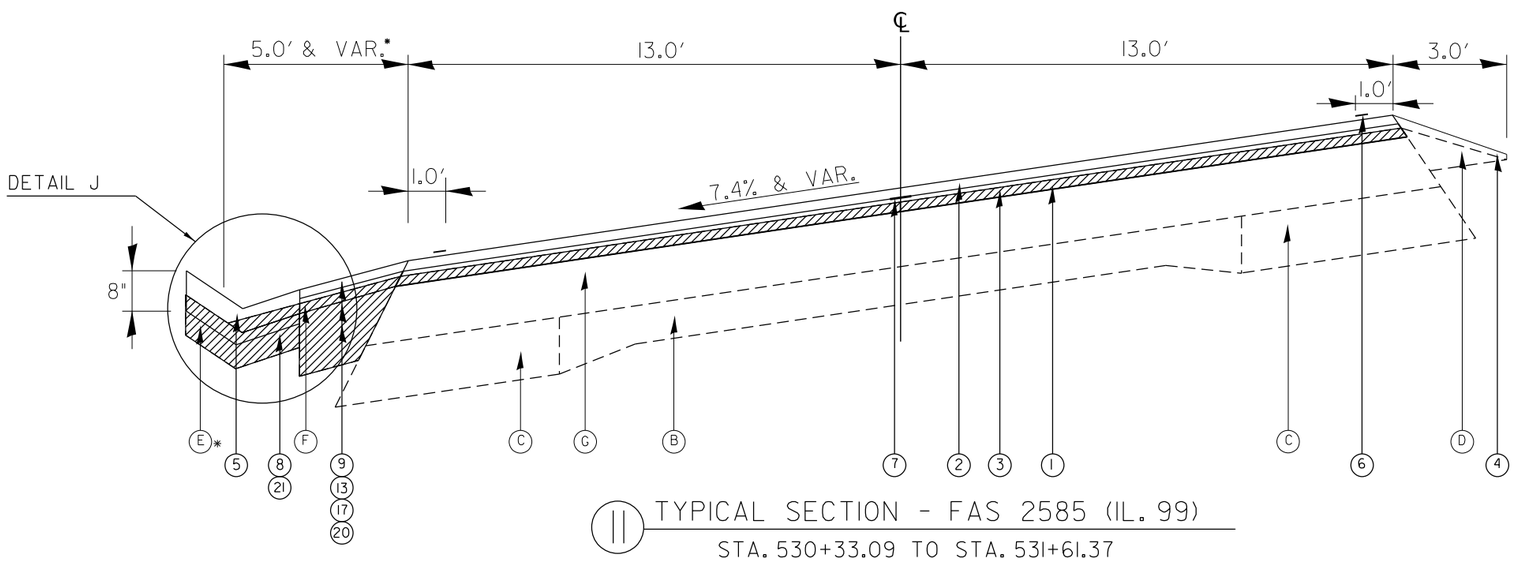

TYPICAL SECTION - FAS 2585 (IL. 99)

STA. 530+33.09 TO STA. 531+61.37
STA. EQ.: 531+61.37 BK = 531+50.18 AH
STA. 531+50.18 TO STA. 542+01.57

EXISTING LEGEND

- (A) EX HMA OVERLAY, 4 1/2"
- (B) EX 9-6-9 PCC PAVEMENT
- (C) EX HMA BASE COURSE WIDENING, 9"
- (D) EX AGG. SHOULDER
- (E) EX GUTTER
- (F) EX HMA SHOULDER
- (G) EX HMA PAVEMENT, 6"

PROPOSED LEGEND

- (1) PR HMA SURFACE REMOVAL, 1 1/2"
- (2) PR HMA SURFACE COURSE, MIX"C", IL-9.5 N50, 1 1/2"
- (3) PR BINDER COURSE IL-19.0 N50, 2 1/4"
- (4) PR AGG. WEDGE SHOULDER, TYPE B
- (5) PR TYPE A GUTTER
- (6) PR PAINT PAVEMENT MARKING-LINE 5"
- (7) PR LONGITUDINAL JOINT SEALANT
- (8) PR GUTTER REMOVAL
- (9) PR HMA SHOULDER 2 3/4" (TON)
- (10) PR HMA SURFACE REMOVAL, 2 3/4"
- (11) PR BINDER COURSE IL-9.5FG N50, 1 1/4"
- (12) PR GUARDRAIL REMOVAL
- (13) PR HMA SHOULDER 4 1/4" (SQ YD)
- (14) PARTIAL DEPTH PATCHING 5"
- (15) PR GUARDRAIL
- (16) PR COMB. CURB & GUTTER TYPE B 6.24
- (17) PR PAVED SHOULDER REMOVAL (SPECIAL)
- (18) PR HMA SHOULDER 3 3/4" (TON)
- (19) PR HMA SURFACE REMOVAL, VARIABLE
- (20) PR EXCAVATING AND GRADING EXISTING SHOULDER (SPECIAL)
- (21) PR AGG BASE COUSE TYPE B
- (22) PR BASE COUSE WIDENING 6"

NOTES:

- TYPE A GUTTER (PARTIALY OVERLAYED), FROM STA. 537+64 TO STA. 542+13

MODEL: Typical 6 [Sheet]
FILE NAME: c:\pw_work\pwidot\william.rodriguez-mendez@illinois.gov\d0835885\72J44-sht-typical.dgn

USER NAME = william.rodriguez-me	DESIGNED -	REVISED -	
	DRAWN -	REVISED -	
	CHECKED -	REVISED -	
PLOT DATE = 5/15/2026	DATE -	REVISED -	

STATE OF ILLINOIS
DEPARTMENT OF TRANSPORTATION

TYPICAL SECTIONS

SCALE: | SHEET 6 OF 11 SHEETS | STA. | TO STA.

F.A.S RTE.	SECTION	COUNTY	TOTAL SHEETS	SHEET NO.
2585	122(RS-10,BDR-1,I-1)	*	120	37

CONTRACT NO. 72J44

ILLINOIS | FED. AID PROJECT

*BROWN, PIKE

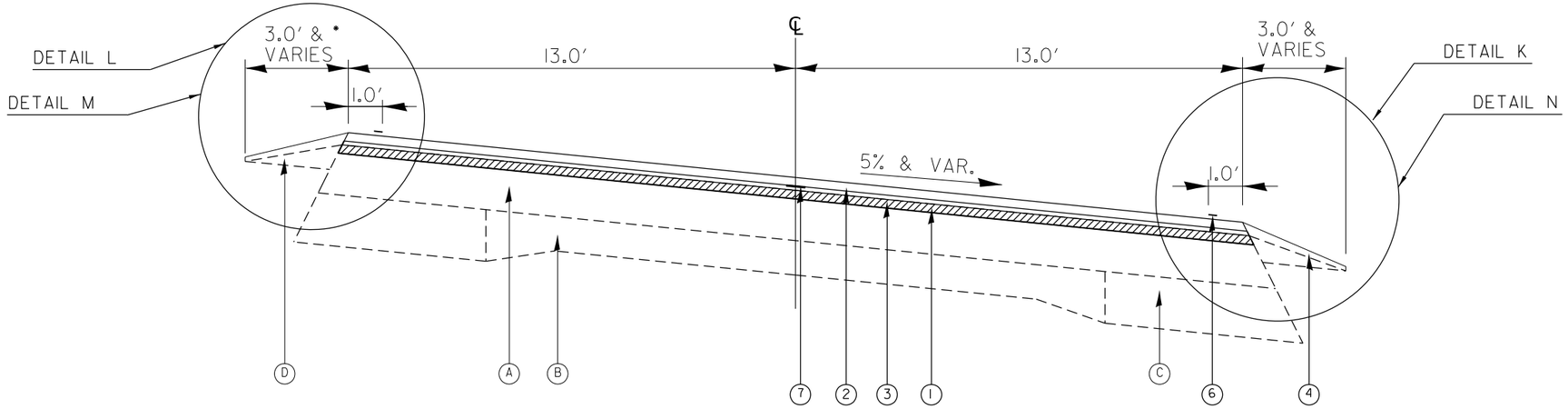

12 TYPICAL SECTION - FAS 2585 (IL. 99)

STA 562+29.21 TO STA 574+64.40
STA 704+05.76 TO STA 725+07.25
STA 784+18.14 TO STA 784+36.36
STA EQ.: 784+36.36 BK + 784+39.92 AH
STA 784+39.92 TO STA 793+67.90
BRIDGE OMISSION 793+67.90 - 795+76.10
STA 795+76.10 TO STA 797+96.00

NOTES:

* FROM STA. 791+33.97 TO STA. 791+58.26 (RT) AGG SHOULDER IS TRANSITIONING 3' TO 7'
FROM STA. 792+56.90 TO STA. 792+80.69 (LT) AGG SHOULDER IS TRANSITIONING 3' TO 7'
SEE DETAILS BELOW

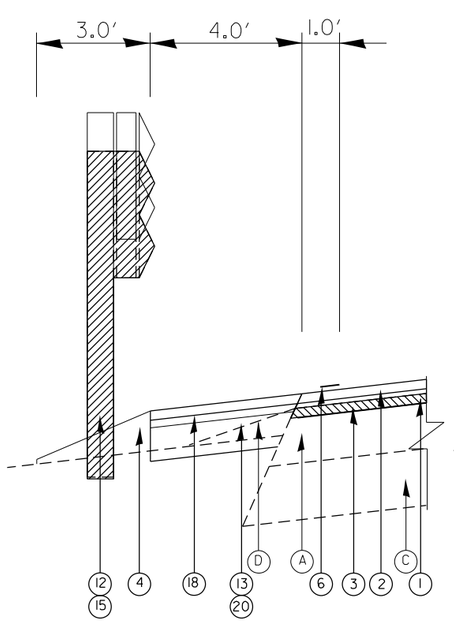

DETAIL L
STA. 792+90.54 TO STA. 793+67.90

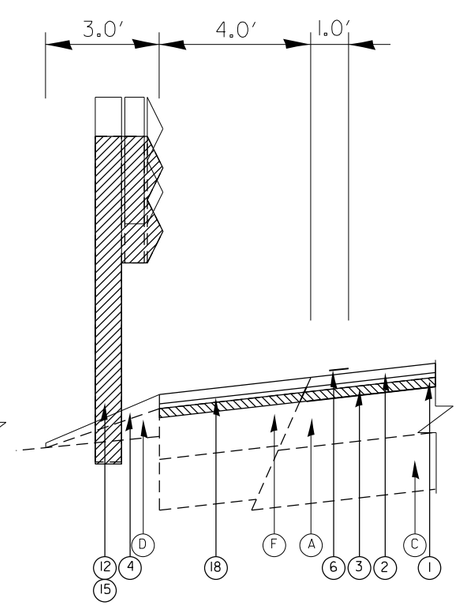

DETAIL M
STA. 795+76.10 TO STA. 797+75.65

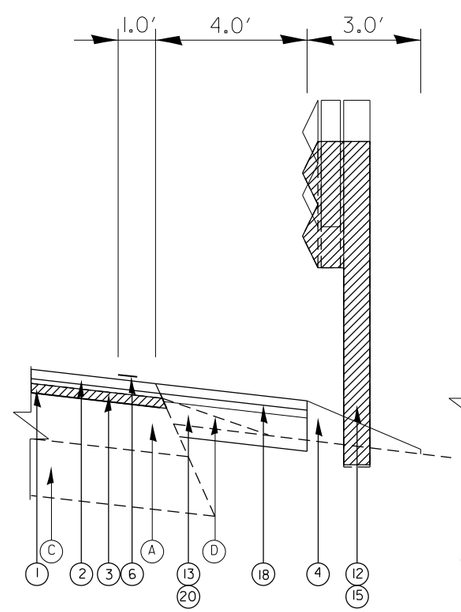

DETAIL K
STA. 791+22.25 TO STA. 793+67.90

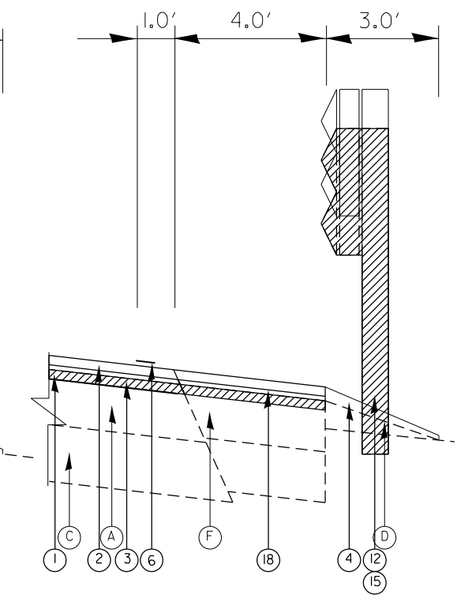

DETAIL N
STA. 795+76.10 TO STA. 797+75.65

EXISTING LEGEND

- (A) EX HMA OVERLAY, 4 1/2"
- (B) EX 9-6-9 PCC PAVEMENT
- (C) EX HMA BASE COURSE WIDENING, 9"
- (D) EX AGG. SHOULDER
- (E) EX GUTTER
- (F) EX HMA SHOULDER
- (G) EX HMA PAVEMENT, 6"

PROPOSED LEGEND

- (1) PR HMA SURFACE REMOVAL, 1 1/2"
- (2) PR HMA SURFACE COURSE, MIX"C", IL-9.5 N50, 1 1/2"
- (3) PR BINDER COURSE IL-19.0 N50, 2 1/4"
- (4) PR AGG. WEDGE SHOULDER, TYPE B
- (5) PR TYPE A GUTTER
- (6) PR PAINT PAVEMENT MARKING-LINE 5"
- (7) PR LONGITUDINAL JOINT SEALANT
- (8) PR GUTTER REMOVAL
- (9) PR HMA SHOULDER 2 3/4" (TON)
- (10) PR HMA SURFACE REMOVAL, 2 3/4"
- (11) PR BINDER COURSE IL-9.5FG N50, 1 1/4"
- (12) PR GUARDRAIL REMOVAL
- (13) PR HMA SHOULDER 4 1/4" (SQ YD)
- (14) PARTIAL DEPTH PATCHING 5"
- (15) PR GUARDRAIL
- (16) PR COMB. CURB & GUTTER TYPE B 6.24
- (17) PR PAVED SHOULDER REMOVAL (SPECIAL)
- (18) PR HMA SHOULDER 3 3/4" (TON)
- (19) PR HMA SURFACE REMOVAL, VARIABLE
- (20) PR EXCAVATING AND GRADING EXISTING SHOULDER (SPECIAL)
- (21) PR AGG BASE COUSE TYPE B
- (22) PR BASE COUSE WIDENING 6"

MODEL: Typical 7 [Sheet]
FILE NAME: c:\pw_work\pwidot\william.rodriguez-mendez@illinois.gov\d0835885\72J44-sht-typical.dgn

USER NAME = william.rodriguez-me	DESIGNED -	REVISED -	
	DRAWN -	REVISED -	
	CHECKED -	REVISED -	
PLOT DATE = 5/15/2026	DATE -	REVISED -	

STATE OF ILLINOIS
DEPARTMENT OF TRANSPORTATION

TYPICAL SECTIONS

SCALE: | SHEET 7 OF 11 SHEETS | STA. | TO STA.

F.A.S RTE.	SECTION	COUNTY	TOTAL SHEETS	SHEET NO.
2585	122(RS-10,BDR-1,I-1)	*	120	38

CONTRACT NO. 72J44

ILLINOIS | FED. AID PROJECT

*BROWN, PIKE

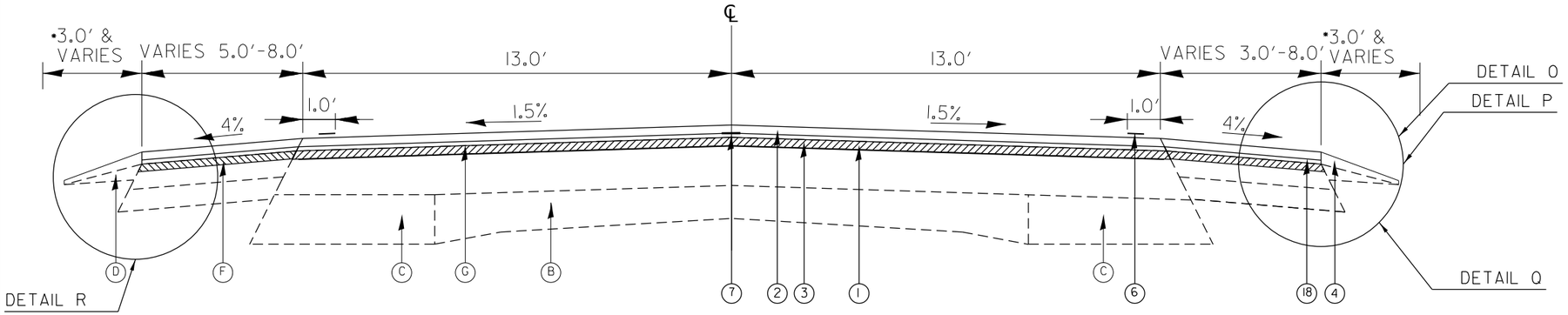

13 TYPICAL SECTION - FAS 2585 (IL. 99)

STA. 586+10.00 TO STA. 589+30.00
STA. 616+53.46 TO STA. 621+60.59
BRIDGE OMISSION 621+60.59-621+82.65
STA. 621+82.65 TO STA. 623+06.34
STA. 691+52.97 TO STA. 693+00.63
BRIDGE OMISSION 693+00.63 - 693+22.63
STA. 693+22.63 TO STA. 694+44.12

NOTES:

*FROM STA. 619+37.02 TO STA. 619+85.05 (RT) AGG SHOULDER IS TRANSITIONING 3' TO 11'

FROM STA. 623+21.00 TO STA. 623+69.02 (RT) AGG SHOULDER IS TRANSITIONING 11' TO 3'
FROM STA. 624+27.83 TO STA. 624+44.63 (LT) AGG SHOULDER IS TRANSITIONING 10.5' TO 3'

FROM STA. 690+76.86 TO STA. 691+24.87 (RT) AGG SHOULDER IS TRANSITIONING 3' TO 11'
FROM STA. 691+14.33 TO STA. 691+62.33 (LT) AGG SHOULDER IS TRANSITIONING 3' TO 11'

FROM STA. 694+60.86 TO STA. 695+08.86 (RT) AGG SHOULDER IS TRANSITIONING 11' TO 3'
FROM STA. 695+55.10 TO STA. 695+62.31 (LT) AGG SHOULDER IS TRANSITIONING 11' TO 3'
SEE DETAILS BELOW

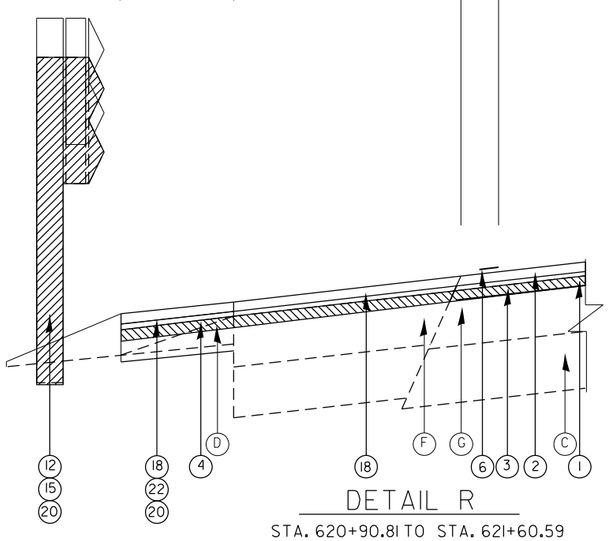

DETAIL R

STA. 620+90.81 TO STA. 621+60.59
STA. 621+82.65 TO STA. 623+95.57
STA. 691+87.29 TO STA. 693+00.63
STA. 693+22.61 TO STA. 694+42.12

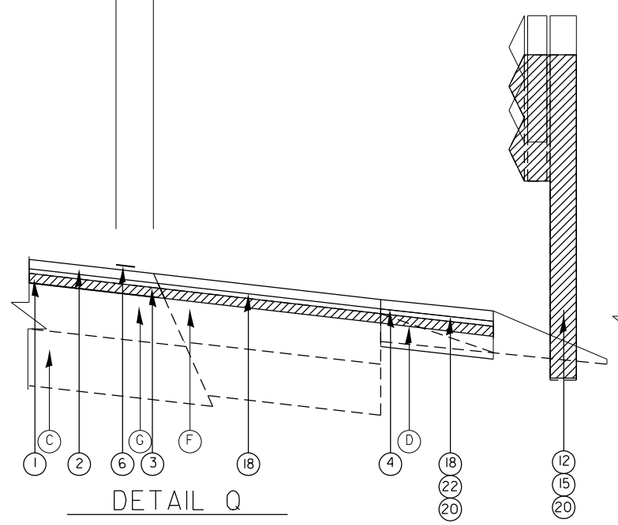

DETAIL Q

STA. 620+43.32 TO STA. 621+60.59
STA. 621+82.65 TO STA. 622+84.47
STA. 691+52.97 TO STA. 693+00.63
STA. 693+22.63 TO STA. 694+35.97

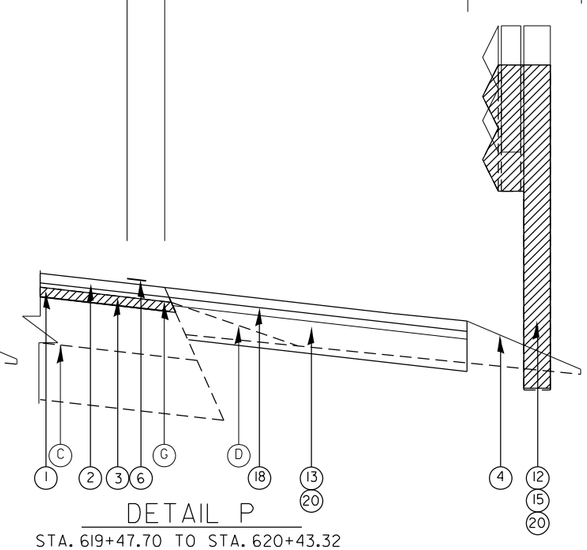

DETAIL P

STA. 619+47.70 TO STA. 620+43.32
STA. 622+84.47 TO STA. 623+05.87

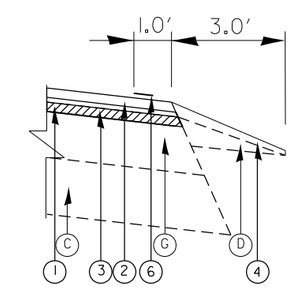

DETAIL O

STA. 586+10.00 TO STA. 587+36.40
STA. 616+53.46 TO STA. 619.47.70

EXISTING LEGEND

- (A) EX HMA OVERLAY, 4 1/2"
- (B) EX 9-6-9 PCC PAVEMENT
- (C) EX HMA BASE COURSE WIDENING, 9"
- (D) EX AGG. SHOULDER
- (E) EX GUTTER
- (F) EX HMA SHOULDER
- (G) EX HMA PAVEMENT, 6"

PROPOSED LEGEND

- (1) PR HMA SURFACE REMOVAL, 1 1/2"
- (2) PR HMA SURFACE COURSE, MIX"C", IL-9.5 N50, 1 1/2"
- (3) PR BINDER COURSE IL-19.0 N50, 2 1/4"
- (4) PR AGG. WEDGE SHOULDER, TYPE B
- (5) PR TYPE A GUTTER
- (6) PR PAINT PAVEMENT MARKING-LINE 5"
- (7) PR LONGITUDINAL JOINT SEALANT
- (8) PR GUTTER REMOVAL
- (9) PR HMA SHOULDER 2 3/4" (TON)
- (10) PR HMA SURFACE REMOVAL, 2 3/4"
- (11) PR BINDER COURSE IL-9.5FG N50, 1 1/4"
- (12) PR GUARDRAIL REMOVAL
- (13) PR HMA SHOULDER 4 1/4" (SQ YD)
- (14) PARTIAL DEPTH PATCHING 5"
- (15) PR GUARDRAIL
- (16) PR COMB. CURB & GUTTER TYPE B 6.24
- (17) PR PAVED SHOULDER REMOVAL (SPECIAL)
- (18) PR HMA SHOULDER 3 3/4" (TON)
- (19) PR HMA SURFACE REMOVAL, VARIABLE
- (20) PR EXCAVATING AND GRADING EXISTING SHOULDER (SPECIAL)
- (21) PR AGG BASE COUSE TYPE B
- (22) PR BASE COUSE WIDENING 6"

MODEL: Typical 8 [Sheet]
FILE NAME: c:\pw_work\pwidot\william.rodriguez-mendez@illinois.gov\d0835885\72J44-sht-typical.dgn

USER NAME = william.rodriguez-me	DESIGNED -	REVISED -	
	DRAWN -	REVISED -	
	CHECKED -	REVISED -	
PLOT DATE = 5/15/2026	DATE -	REVISED -	

STATE OF ILLINOIS
DEPARTMENT OF TRANSPORTATION

TYPICAL SECTIONS

SCALE: | SHEET 8 OF 11 SHEETS | STA. | TO STA.

F.A.S RTE.	SECTION	COUNTY	TOTAL SHEETS	SHEET NO.
2585	122(RS-10,BDR-1,I-1)	*	120	39

CONTRACT NO. 72J44

ILLINOIS | FED. AID PROJECT

*BROWN, PIKE

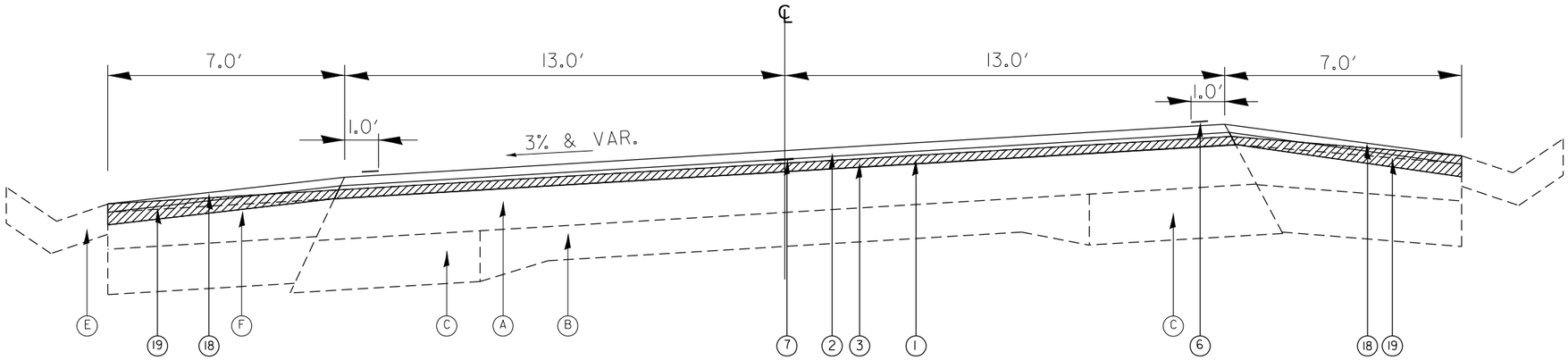

14 TYPICAL SECTION - FAS 2585 (IL. 99)
STA. 589+30.00 TO STA. 599+03.73

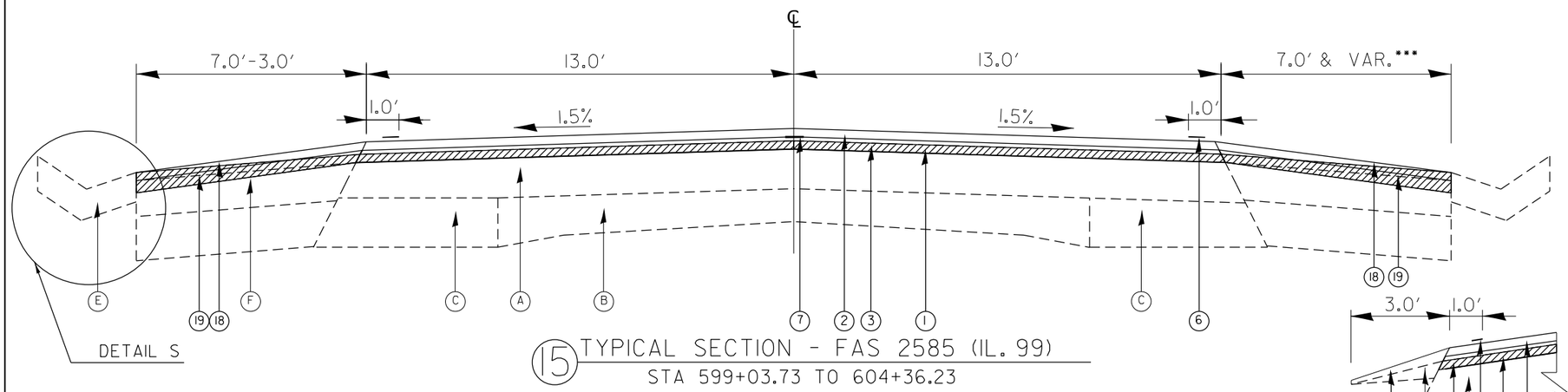

15 TYPICAL SECTION - FAS 2585 (IL. 99)
STA 599+03.73 TO 604+36.23

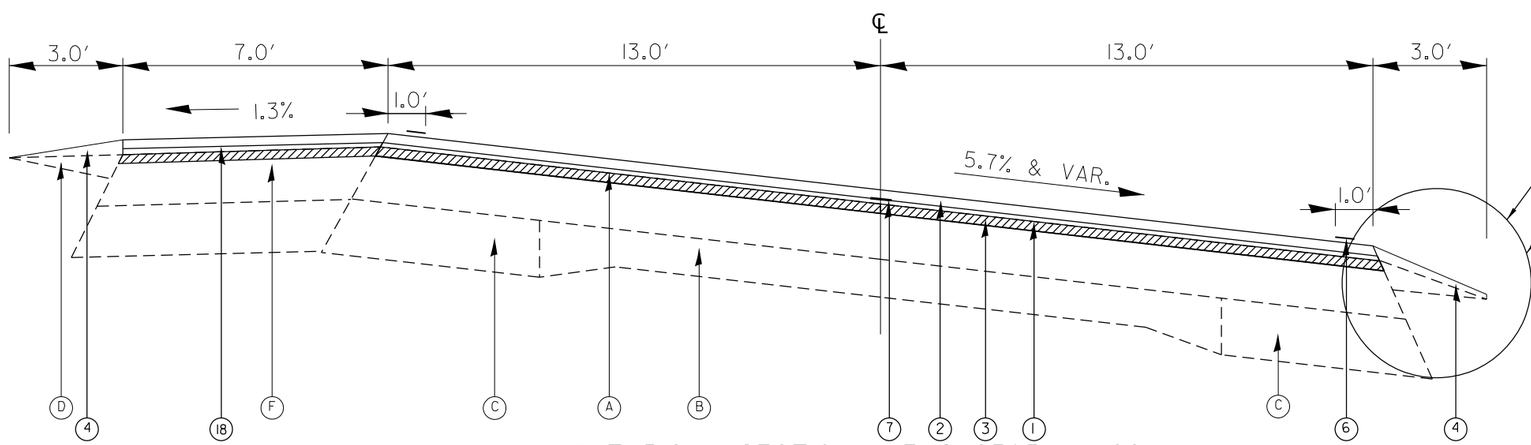

16 TYPICAL SECTION - FAS 2585 (IL. 99)
STA 604+36.23 TO 616+53.46

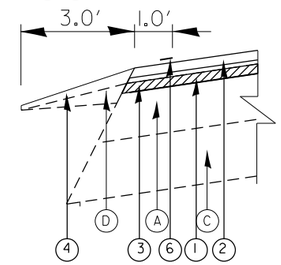

DETAIL S
STA. 604+29.19 TO STA. 604+36.23

DETAIL T

DETAIL U

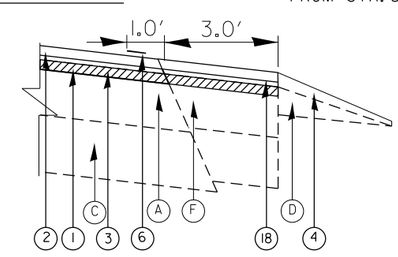

DETAIL T
STA. 604+88.00 TO STA. 605+53.56

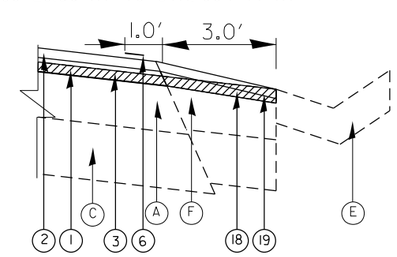

DETAIL U
STA. 604+36.23 TO STA. 604+88.00

EXISTING LEGEND

- (A) EX HMA OVERLAY, 4 1/2"
- (B) EX 9-6-9 PCC PAVEMENT
- (C) EX HMA BASE COURSE WIDENING, 9"
- (D) EX AGG. SHOULDER
- (E) EX GUTTER
- (F) EX HMA SHOULDER
- (G) EX HMA PAVEMENT, 6"

PROPOSED LEGEND

- (1) PR HMA SURFACE REMOVAL, 1 1/2"
- (2) PR HMA SURFACE COURSE, MIX"C", IL-9.5 N50, 1 1/2"
- (3) PR BINDER COURSE IL-19.0 N50, 2 1/4"
- (4) PR AGG. WEDGE SHOULDER, TYPE B
- (5) PR TYPE A GUTTER
- (6) PR PAINT PAVEMENT MARKING-LINE 5"
- (7) PR LONGITUDINAL JOINT SEALANT
- (8) PR GUTTER REMOVAL
- (9) PR HMA SHOULDER 2 3/4" (TON)
- (10) PR HMA SURFACE REMOVAL, 2 3/4"
- (11) PR BINDER COURSE IL-9.5FG N50, 1 1/4"
- (12) PR GUARDRAIL REMOVAL
- (13) PR HMA SHOULDER 4 1/4" (SQ YD)
- (14) PARTIAL DEPTH PATCHING 5"
- (15) PR GUARDRAIL
- (16) PR COMB. CURB & GUTTER TYPE B 6.24
- (17) PR PAVED SHOULDER REMOVAL (SPECIAL)
- (18) PR HMA SHOULDER 3 3/4" (TON)
- (19) PR HMA SURFACE REMOVAL, VARIABLE
- (20) PR EXCAVATING AND GRADING EXISTING SHOULDER (SPECIAL)
- (21) PR AGG BASE COUSE TYPE B
- (22) PR BASE COUSE WIDENING 6"

NOTES:
THE PROPOSED HMA SHOULDER MUST MATCH
THE EXISTING EDGE-HUTTER ELEVATION
FROM STA. 589+28 LT TO STA. 603+96.57 LT
FROM STA. 589+28.56 RT TO STA. 604+77 RT

MODEL: Typical 9 [Sheet]
FILE NAME: c:\pw_work\pwidot\william.rodriguez-mendez@illinois.gov\d0835885\72J44-sht-typical.dgn

USER NAME = william.rodriguez-me	DESIGNED -	REVISED -	
	DRAWN -	REVISED -	
	CHECKED -	REVISED -	
PLOT DATE = 5/15/2026	DATE -	REVISED -	

STATE OF ILLINOIS
DEPARTMENT OF TRANSPORTATION

TYPICAL SECTIONS

SCALE: | SHEET 9 OF 11 SHEETS | STA. | TO STA.

F.A.S RTE.	SECTION	COUNTY	TOTAL SHEETS	SHEET NO.
2585	122(RS-10,BDR-1,I-1)	*	120	40

CONTRACT NO. 72J44

ILLINOIS | FED. AID PROJECT

*BROWN, PIKE

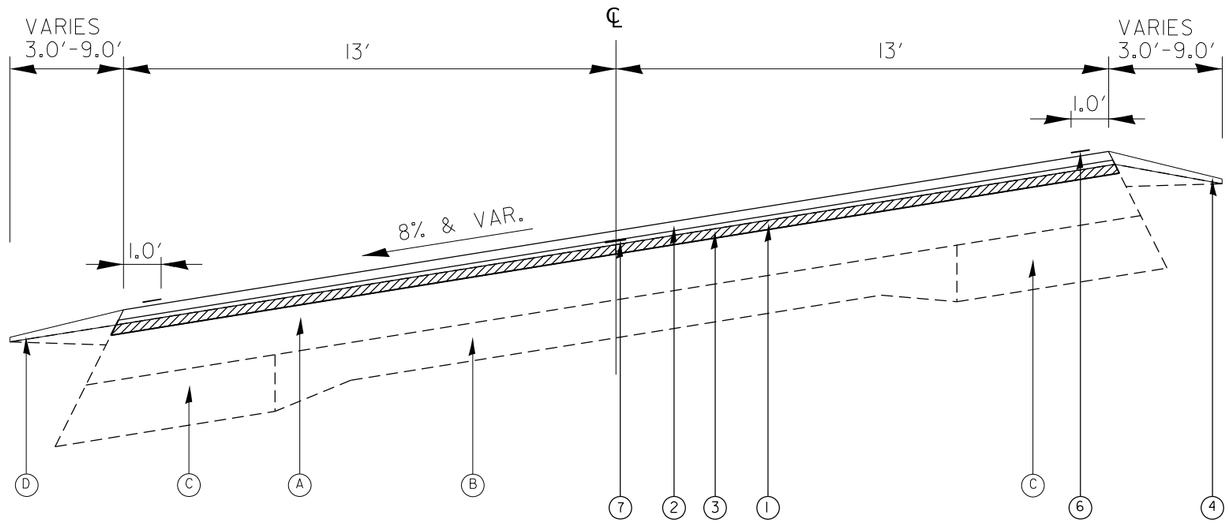

17 TYPICAL SECTION - FAS 2585 (IL. 99)

STA 641+39.69 TO STA 646+25.59

STA 650+30.60 TO STA 653+41.54

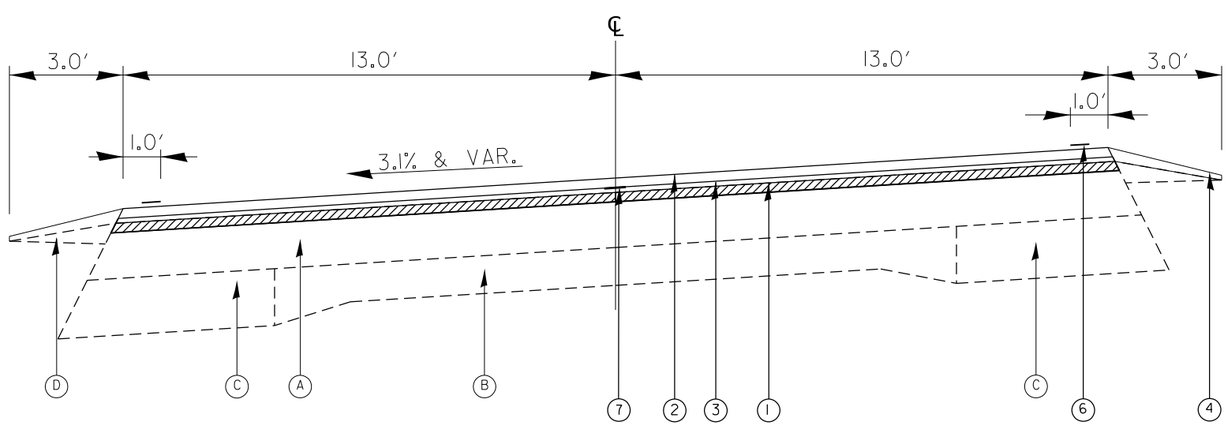

18 TYPICAL SECTION - FAS 2585 (IL. 99)

STA 761+08.02 TO STA 784+18.14

EXISTING LEGEND

- (A) EX HMA OVERLAY, 4 1/2"
- (B) EX 9-6-9 PCC PAVEMENT
- (C) EX HMA BASE COURSE WIDENING, 9"
- (D) EX AGG. SHOULDER
- (E) EX GUTTER
- (F) EX HMA SHOULDER
- (G) EX HMA PAVEMENT, 6"

PROPOSED LEGEND

- (1) PR HMA SURFACE REMOVAL, 1 1/2"
- (2) PR HMA SURFACE COURSE, MIX"C", IL-9.5 N50, 1 1/2"
- (3) PR BINDER COURSE IL-19.0 N50, 2 1/4"
- (4) PR AGG. WEDGE SHOULDER, TYPE B
- (5) PR TYPE A GUTTER
- (6) PR PAINT PAVEMENT MARKING-LINE 5"
- (7) PR LONGITUDINAL JOINT SEALANT
- (8) PR GUTTER REMOVAL
- (9) PR HMA SHOULDER 2 3/4" (TON)
- (10) PR HMA SURFACE REMOVAL, 2 3/4"
- (11) PR BINDER COURSE IL-9.5FG N50, 1 1/4"
- (12) PR GUARDRAIL REMOVAL
- (13) PR HMA SHOULDER 4 1/4" (SQ YD)
- (14) PARTIAL DEPTH PATCHING 5"
- (15) PR GUARDRAIL
- (16) PR COMB. CURB & GUTTER TYPE B 6.24
- (17) PR PAVED SHOULDER REMOVAL (SPECIAL)
- (18) PR HMA SHOULDER 3 3/4" (TON)
- (19) PR HMA SURFACE REMOVAL, VARIABLE
- (20) PR EXCAVATING AND GRADING EXISTING SHOULDER (SPECIAL)
- (21) PR AGG BASE COUSE TYPE B
- (22) PR BASE COUSE WIDENING 6"

MODEL: Typical 10 [Sheet]
FILE NAME: c:\pw_work\pwidot\william.rodriguez-mendez@illinois.gov\d0835885\72J44-sht-typical.dgn

USER NAME = william.rodriguez-me	DESIGNED -	REVISED -	
	DRAWN -	REVISED -	
	CHECKED -	REVISED -	
PLOT DATE = 5/15/2026	DATE -	REVISED -	

STATE OF ILLINOIS
DEPARTMENT OF TRANSPORTATION

TYPICAL SECTIONS

SCALE: | SHEET 10 OF 11 SHEETS | STA. | TO STA.

F.A.S RTE.	SECTION	COUNTY	TOTAL SHEETS	SHEET NO.
2585	122(RS-10,BDR-1,I-1)	*	120	41

CONTRACT NO. 72J44

ILLINOIS | FED. AID PROJECT

*BROWN, PIKE

EXISTING LEGEND

- (A) EX HMA OVERLAY, 4 1/2"
- (B) EX 9-6-9 PCC PAVEMENT
- (C) EX HMA BASE COURSE WIDENING, 9"
- (D) EX AGG. SHOULDER
- (E) EX GUTTER
- (F) EX HMA SHOULDER
- (G) EX HMA PAVEMENT, 6"

PROPOSED LEGEND

- (1) PR HMA SURFACE REMOVAL, 1 1/2"
- (2) PR HMA SURFACE COURSE, MIX"C", IL-9.5 N50, 1 1/2"
- (3) PR BINDER COURSE IL-19.0 N50, 2 1/4"
- (4) PR AGG. WEDGE SHOULDER, TYPE B
- (5) PR TYPE A GUTTER
- (6) PR PAINT PAVEMENT MARKING-LINE 5"
- (7) PR LONGITUDINAL JOINT SEALANT
- (8) PR GUTTER REMOVAL
- (9) PR HMA SHOULDER 2 3/4" (TON)
- (10) PR HMA SURFACE REMOVAL, 2 3/4"
- (11) PR BINDER COURSE IL-9.5FG N50, 1 1/4"

PROPOSED LEGEND

- (12) PR GUARDRAIL REMOVAL
- (13) PR HMA SHOULDER 4 1/4" (SQ YD)
- (14) PARTIAL DEPTH PATCHING 5"
- (15) PR GUARDRAIL
- (16) PR COMB. CURB & GUTTER TYPE B 6.24
- (17) PR PAVED SHOULDER REMOVAL (SPECIAL)
- (18) PR HMA SHOULDER 3 3/4" (TON)
- (19) PR HMA SURFACE REMOVAL, VARIABLE
- (20) PR EXCAVATING AND GRADING EXISTING SHOULDER (SPECIAL)
- (21) PR AGG BASE COUSE TYPE B
- (22) PR BASE COUSE WIDENING 6"

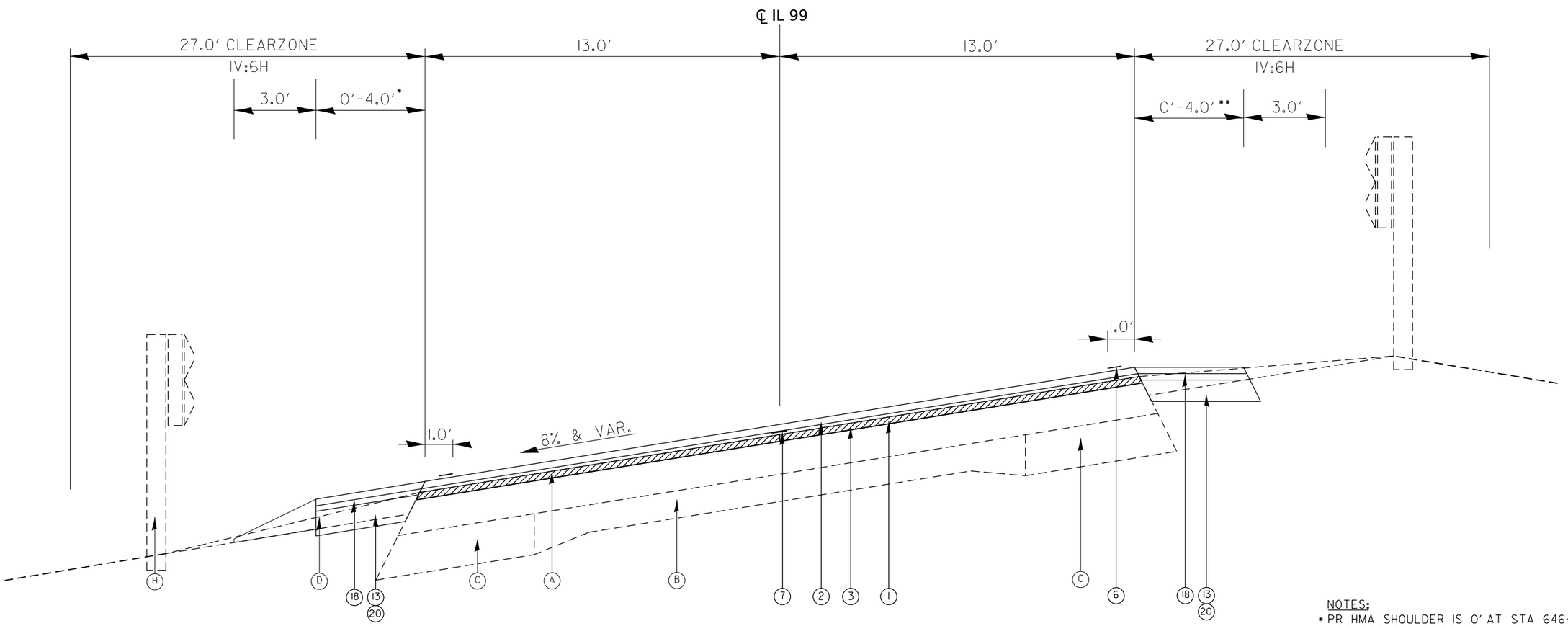

NOTES:

* PR HMA SHOULDER IS 0' AT STA 646+25.59 LT TO STA 647+74.35 LT

**PR HMA SHOULDER IS 0' AT STA 647+55.43 RT TO STA 648+24.69 RT AND STA 649+39.11 RT TO STA 650+30.60 RT

EXISTING GUARDRAIL IS OFFSET 22.5' FROM CENTERLINE

19 TYPICAL SECTION - FAS 2585 (IL. 99)

STA 646+25.59 TO STA 650+30.60

MODEL: Typical 11 [Sheet]
FILE NAME: c:\pw_work\pwidot\william.rodriguez-mendez@illinois.gov\d0835885\72J44-sht-typical.dgn

USER NAME = william.rodriguez-me	DESIGNED -	REVISED -	
	DRAWN -	REVISED -	
	CHECKED -	REVISED -	
PLOT DATE = 5/15/2026	DATE -	REVISED -	

STATE OF ILLINOIS
DEPARTMENT OF TRANSPORTATION

TYPICAL SECTIONS

SCALE: | SHEET 11 OF 11 SHEETS | STA. | TO STA.

F.A.S RTE.	SECTION	COUNTY	TOTAL SHEETS	SHEET NO.
2585	122(RS-10,BDR-1,I-1)	*	120	42

CONTRACT NO. 72J44

ILLINOIS | FED. AID PROJECT

*BROWN, PIKE

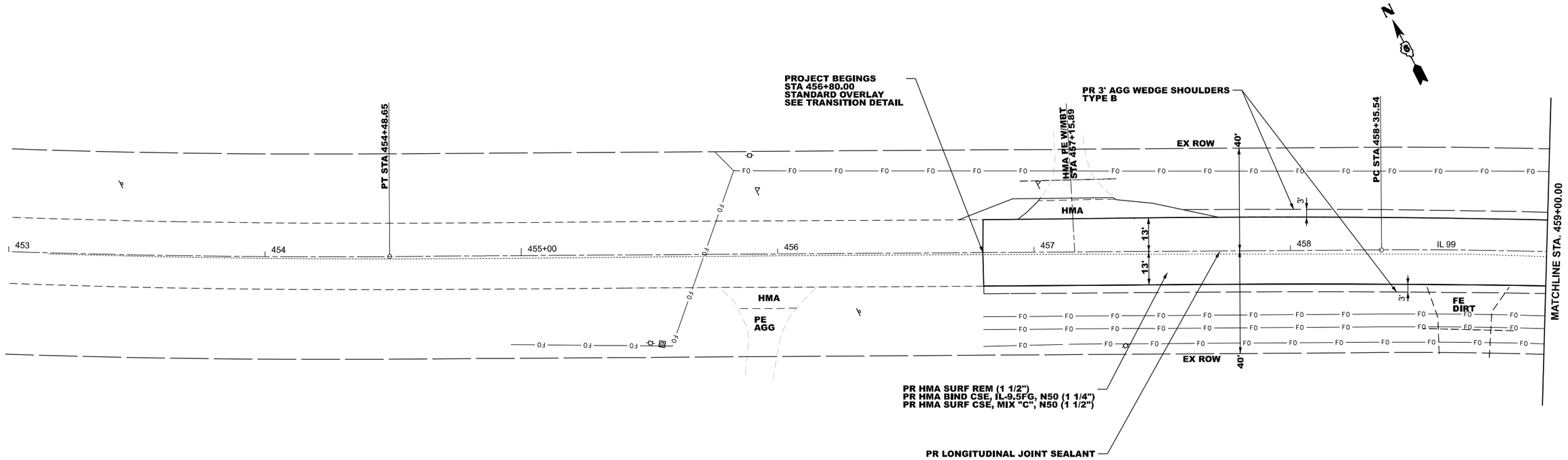

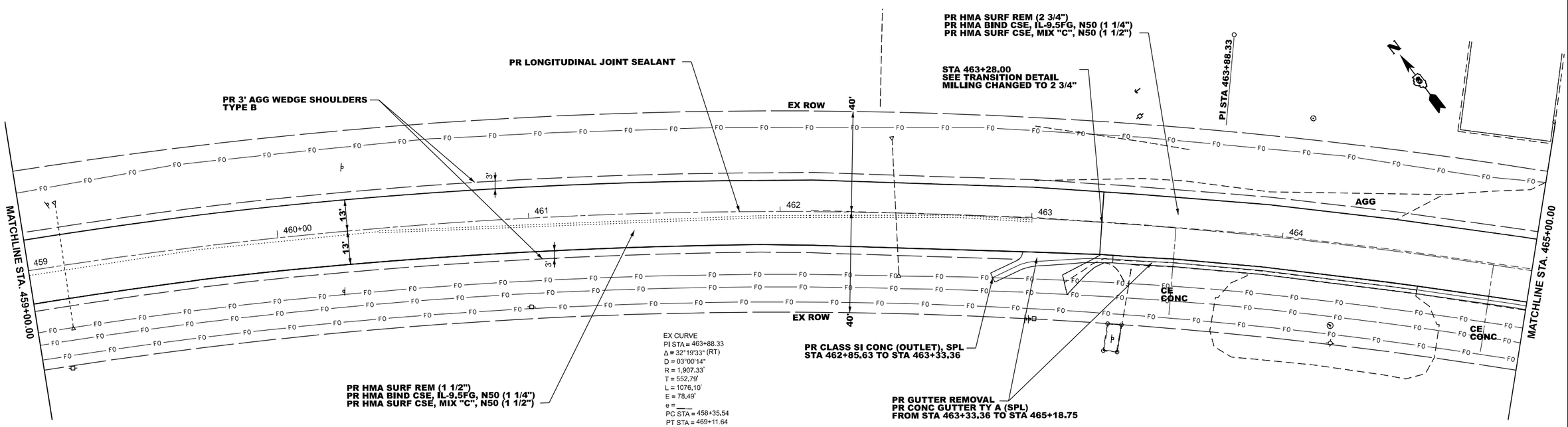

MODEL: plan sheets 20 scale - Plan 1 [Sheet]
FILE NAME: c:\pw_work\pwidot\mcquade.jackson@illinois.gov\d0983066\D672J44 sht-Plan-20-phase 2.dgn

USER NAME = william.rodriguez-me	DESIGNED -	REVISED -	
	DRAWN -	REVISED -	
	CHECKED -	REVISED -	
PLOT DATE = 5/15/2026	DATE -	REVISED -	

STATE OF ILLINOIS
DEPARTMENT OF TRANSPORTATION

PLAN SHEETS
FAS 2585 (ILL 99)

SCALE: 1"=20' | SHEET 1 OF 15 SHEETS | STA. 453+00.00 TO STA. 465+00.00

F.A.S RTE.	SECTION	COUNTY	TOTAL SHEETS	SHEET NO.
2585	122(RS-10,BDR-1,I-1)	*	120	43

CONTRACT NO. 72J44

ILLINOIS | FED. AID PROJECT

*BROWN, PIKE

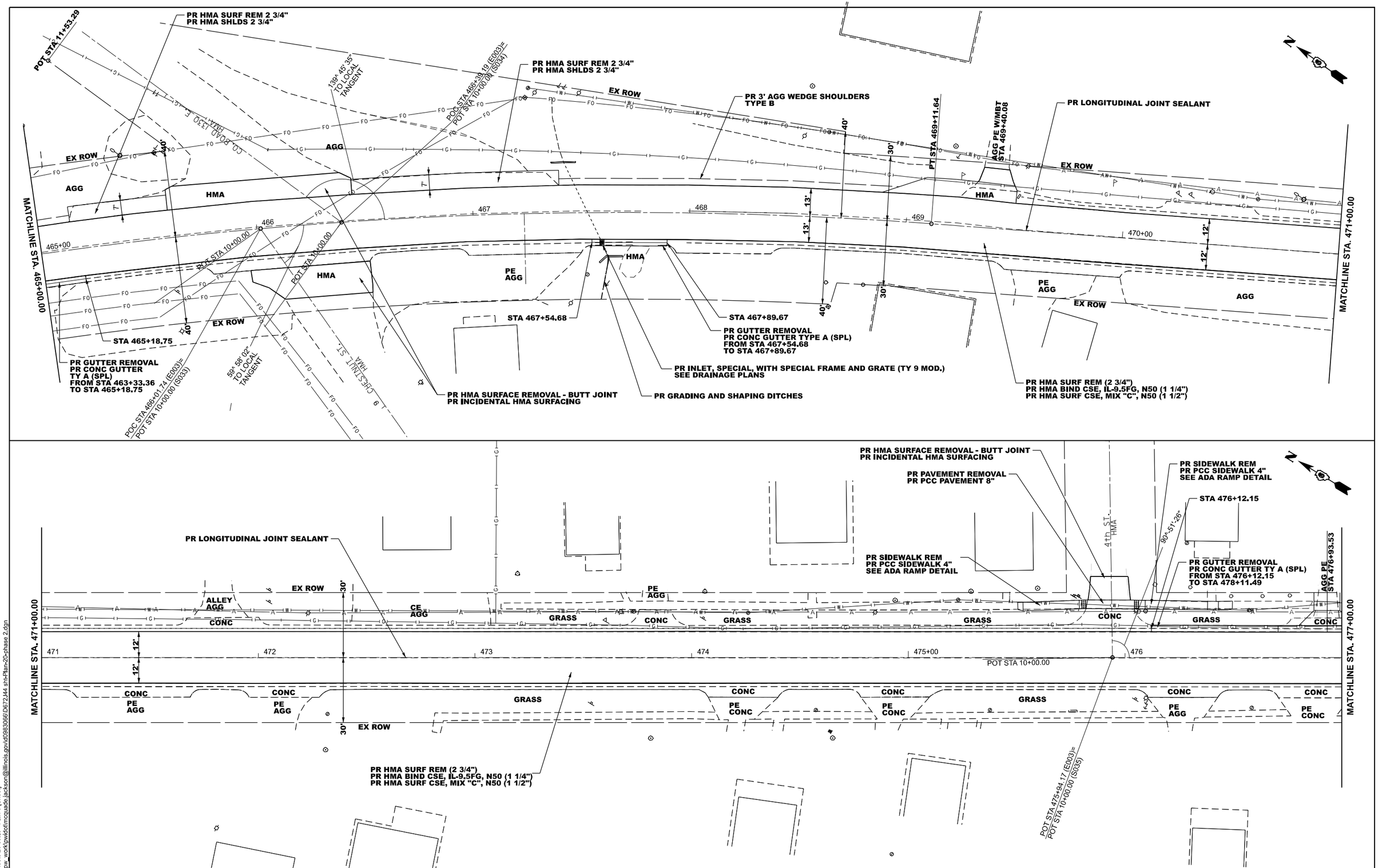

MODEL: plan sheets 20 scale - Plan 3 [Sheet]
FILE NAME: c:\pw_work\pwidot\mcquade.jackson@illinois.gov\d0983066\D672J44 sht-Plan-20-phase 2.dgn

USER NAME = Sylvette.Cancel	DESIGNED -	REVISED -	
	DRAWN -	REVISED -	
	CHECKED -	REVISED -	
PLOT DATE = 6/25/2026	DATE -	REVISED -	

STATE OF ILLINOIS
DEPARTMENT OF TRANSPORTATION

PLAN SHEETS
FAS 2585 (ILL 99)

SCALE: 1"=20' | SHEET 2 OF 15 SHEETS | STA. 465+00.00 TO STA. 477+00.00

F.A.S RTE.	SECTION	COUNTY	TOTAL SHEETS	SHEET NO.
2585	122(RS-10,BDR-1,I-1)	*	120	44

CONTRACT NO. 72J44

ILLINOIS | FED. AID PROJECT

*BROWN, PIKE

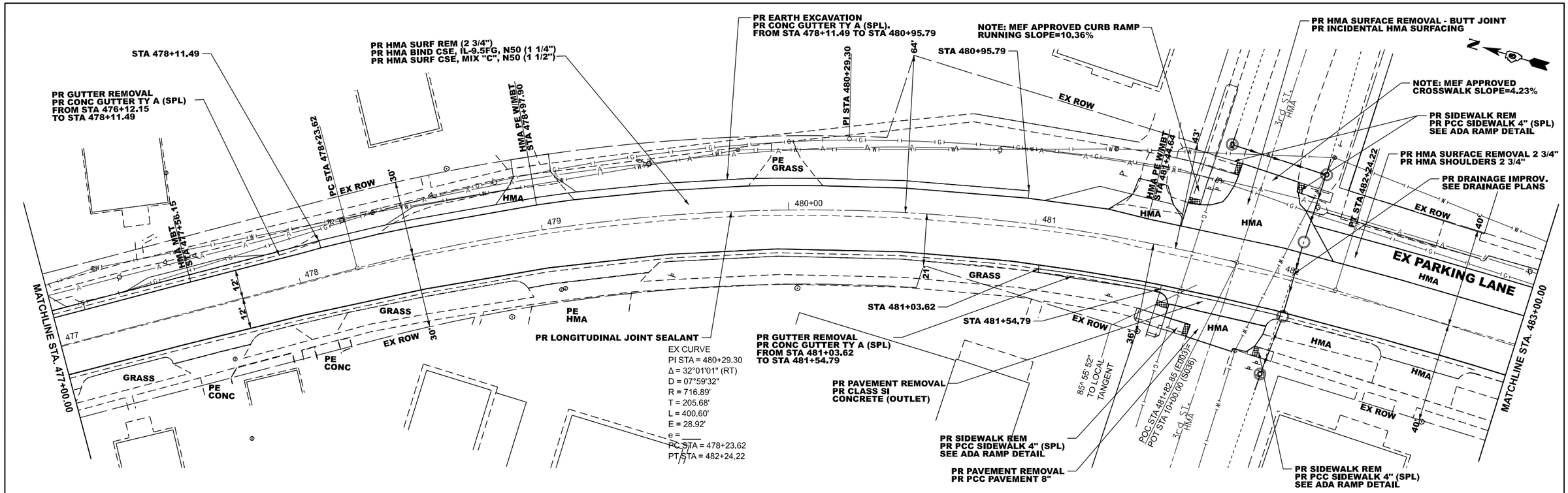

MODEL: plan sheets 20 scale - Plan 5 [Sheet]
FILE NAME: c:\pw_work\pwidot\mcquade.jackson@illinois.gov\d0983066\D672J44 sht-Plan-20-phase 2.dgn

USER NAME = mcquade.jackson	DESIGNED -	REVISED -	
	DRAWN -	REVISED -	
	CHECKED -	REVISED -	
PLOT DATE = 6/25/2026	DATE -	REVISED -	

STATE OF ILLINOIS
DEPARTMENT OF TRANSPORTATION

PLAN SHEETS
FAS 2585 (ILL 99)

SCALE: 1"=20' | SHEET 3 OF 15 SHEETS | STA. 477+00.00 TO STA. 489+00.00

F.A.S RTE.	SECTION	COUNTY	TOTAL SHEETS	SHEET NO.
2585	122(RS-10,BDR-1,I-1)	*	120	45

CONTRACT NO. 72J44

ILLINOIS | FED. AID PROJECT

*BROWN, PIKE

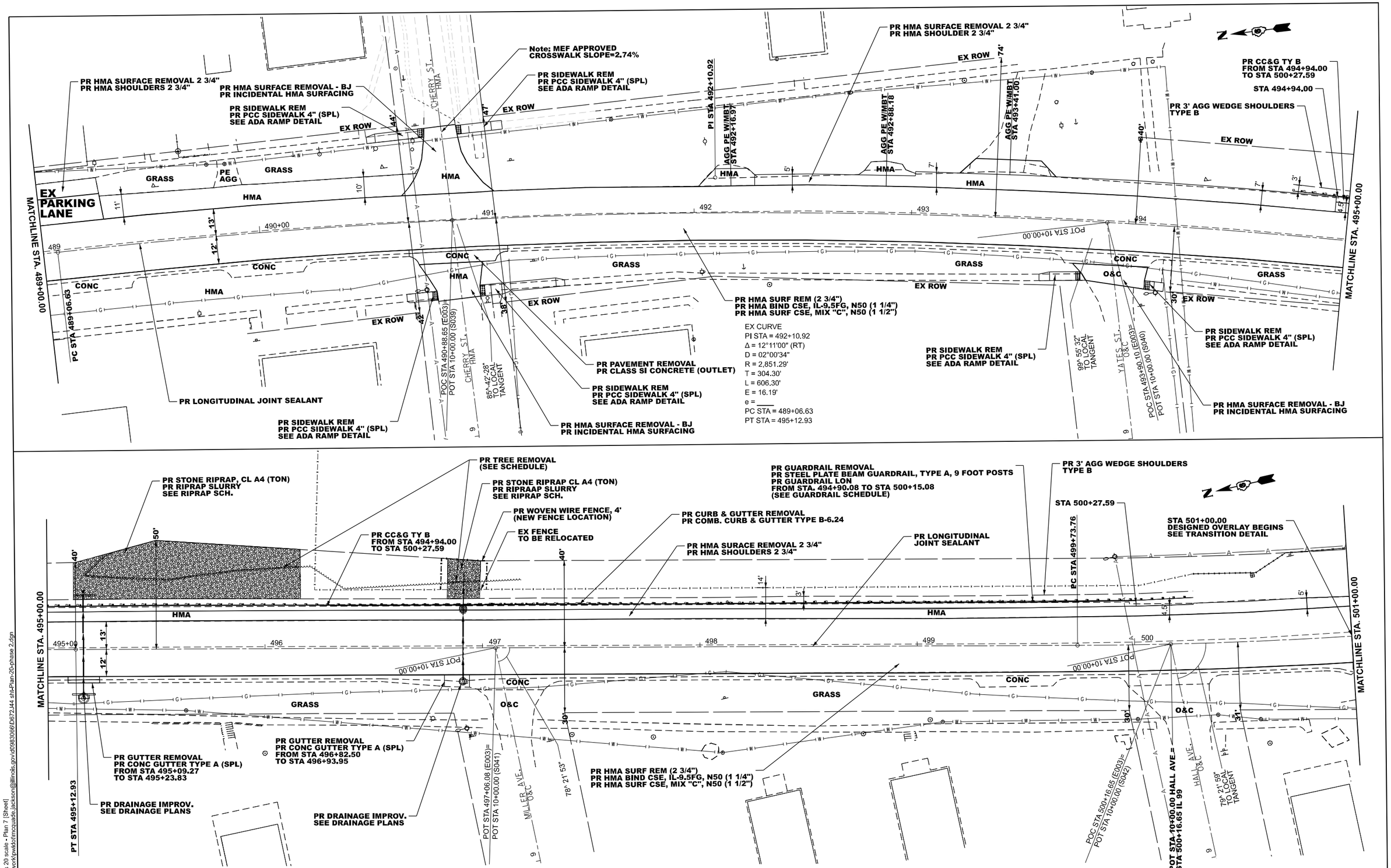

MODEL: plan sheets 20 scale - Plan 7 [Sheet]
FILE NAME: c:\pw_work\pwidot\mcquade.jackson\d0983066\D672J44 sht-Plan-20-phase 2.dgn

USER NAME = mcquade,jackson	DESIGNED -	REVISED -	
	DRAWN -	REVISED -	
	CHECKED -	REVISED -	
PLOT DATE = 6/25/2026	DATE -	REVISED -	

STATE OF ILLINOIS
DEPARTMENT OF TRANSPORTATION

PLAN SHEETS
FAS 2585 (ILL 99)

SCALE: 1"=20' | SHEET 4 OF 15 SHEETS | STA. 489+00.00 TO STA. 501+00.00

F.A.S RTE.	SECTION	COUNTY	TOTAL SHEETS	SHEET NO.
2585	122(RS-10,BDR-1,I-1)	*	120	46

CONTRACT NO. 72J44

ILLINOIS | FED. AID PROJECT

*BROWN, PIKE

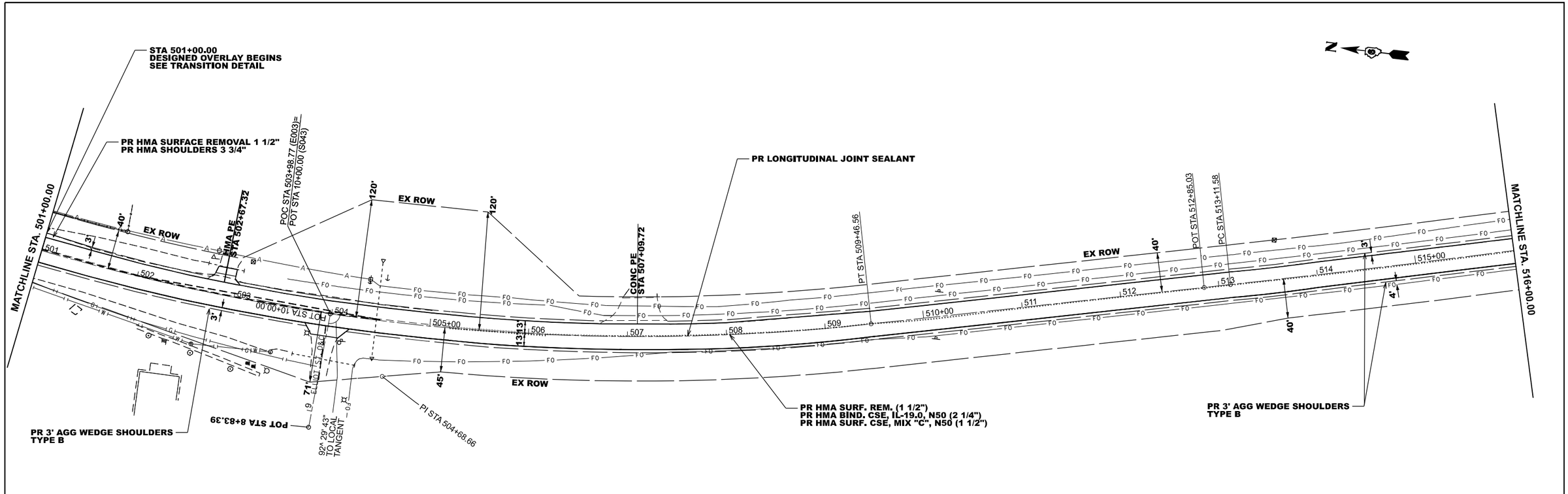

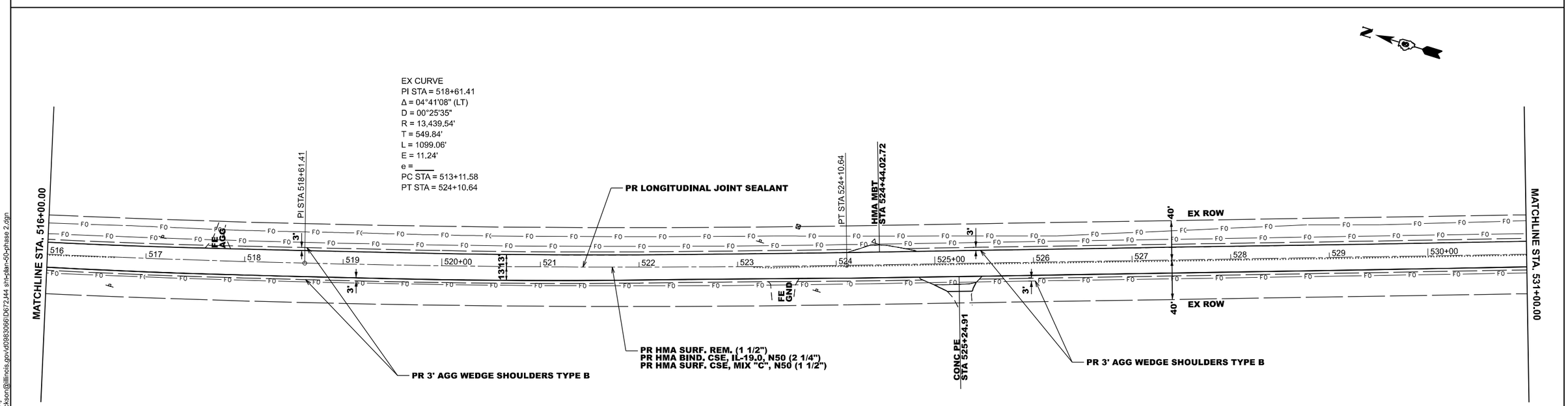

MODEL: Plan sheets 50 scale - Plan 1 [Sheet]
FILE NAME: c:\pw_work\pwidot\mcquade.jackson@illinois.gov\d0983066\D672J44 sht-plan-50-phase 2.dgn

USER NAME = william.rodriguez-me	DESIGNED -	REVISED -	STATE OF ILLINOIS DEPARTMENT OF TRANSPORTATION
	DRAWN -	REVISED -	
	CHECKED -	REVISED -	
PLOT DATE = 5/15/2026	DATE -	REVISED -	

PLAN SHEETS
FAS 2585 (ILL 99)

SCALE: 1"=50' | SHEET 5 OF 15 SHEETS | STA. 501+00.00 TO STA. 531+00.00

F.A.S RTE.	SECTION	COUNTY	TOTAL SHEETS	SHEET NO.
2585	122(RS-10,BDR-1,I-1)	*	120	47

CONTRACT NO. 72J44

ILLINOIS | FED. AID PROJECT

*BROWN, PIKE

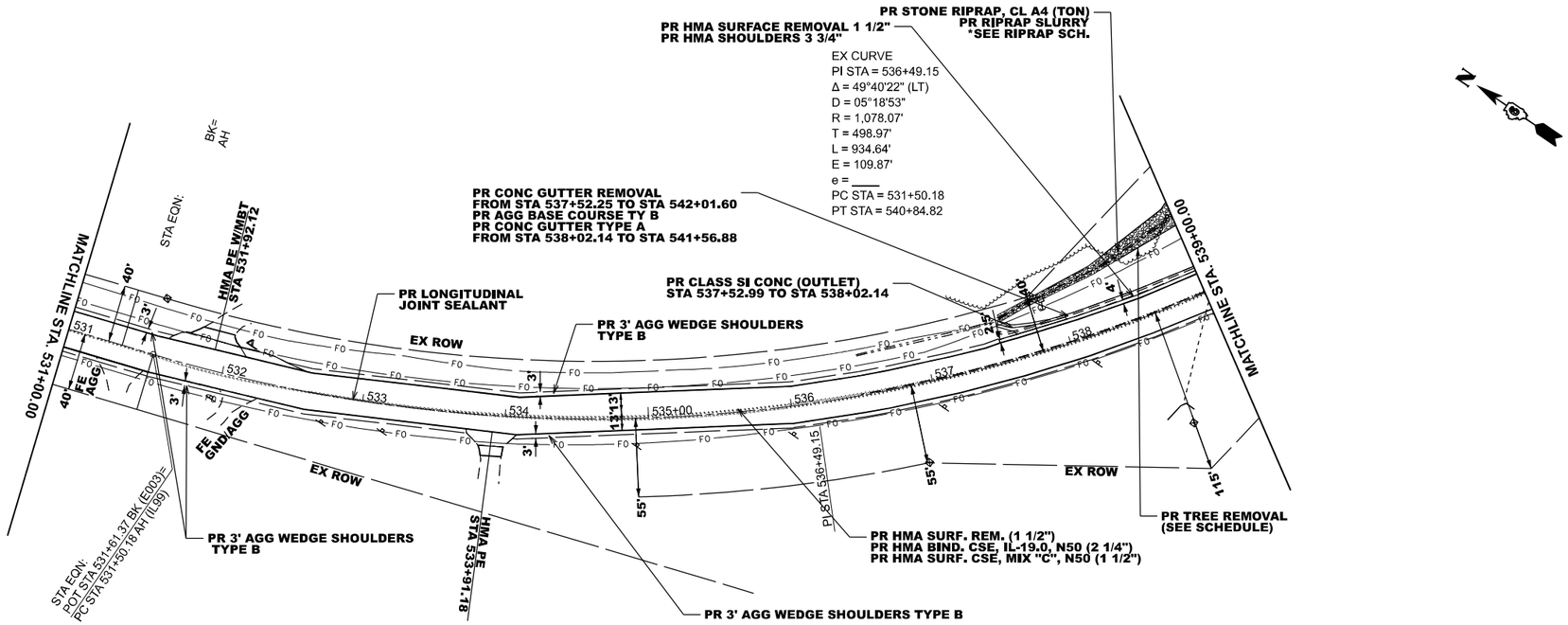

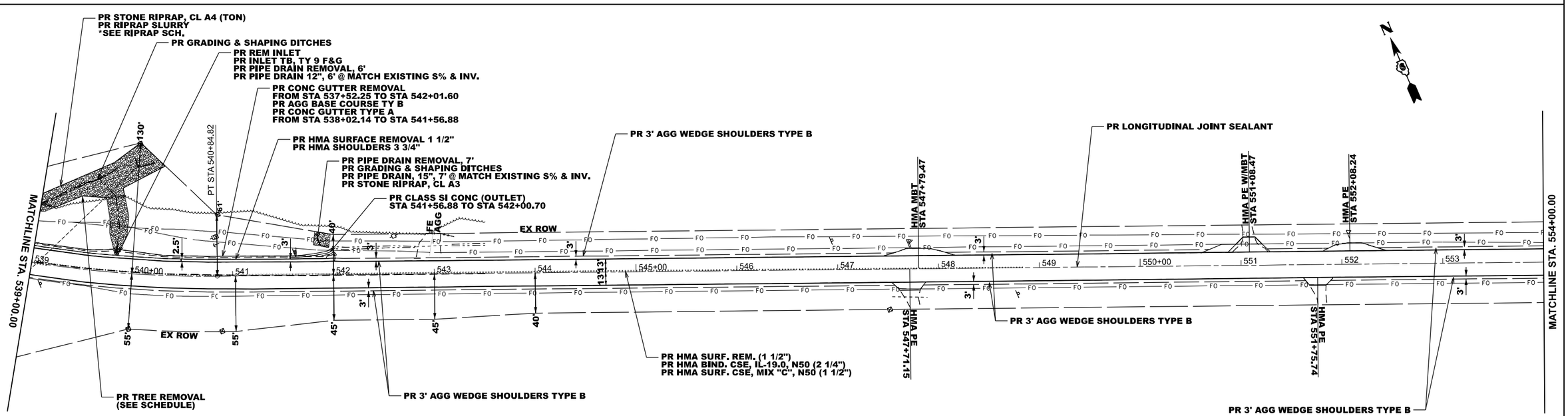

MODEL: Plan sheets 50 scale - Plan 3 [Sheet]
FILE NAME: c:\pw_work\pwidot\william.rodriguez-mendez@illinois.gov\d0983066\D672.44 sht-plan-50-phase 2.dgn

USER NAME = william.rodriguez-me	DESIGNED -	REVISED -	
	DRAWN -	REVISED -	
	CHECKED -	REVISED -	
PLOT DATE = 5/15/2026	DATE -	REVISED -	

STATE OF ILLINOIS
DEPARTMENT OF TRANSPORTATION

PLAN SHEETS
FAS 2585 (ILL 99)

SCALE: 1"=50' | SHEET 6 OF 15 SHEETS | STA. 531+00.00 TO STA. 546+00.00

F.A.S RTE.	SECTION	COUNTY	TOTAL SHEETS	SHEET NO.
2585	122(RS-10,BDR-1,I-1)	*	120	48
		CONTRACT NO. 72J44		
	ILLINOIS	FED. AID PROJECT		

*BROWN, PIKE

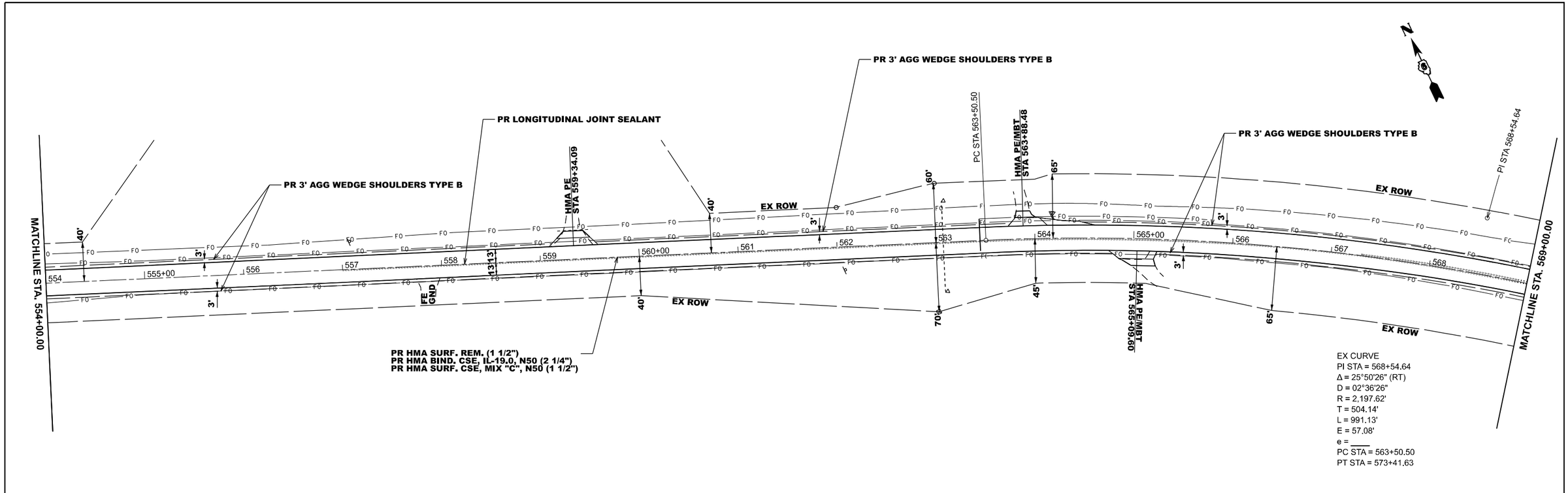

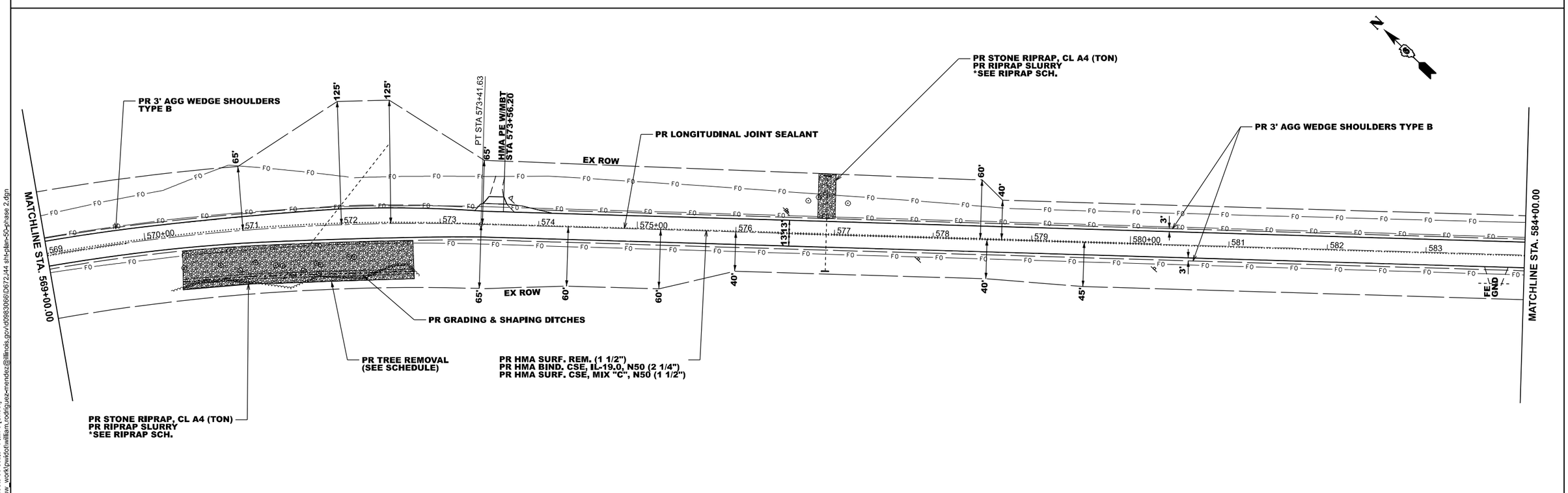

MODEL: Plan sheets 50 scale - Plan 5 [Sheet]
FILE NAME: c:\pw_work\pwidot\william.rodriguez-mendez@illinois.gov\d0983065\D672J44 sht-plan-50-phase 2.dgn

USER NAME = william.rodriguez-me	DESIGNED -	REVISED -	
	DRAWN -	REVISED -	
	CHECKED -	REVISED -	
PLOT DATE = 5/15/2026	DATE -	REVISED -	

STATE OF ILLINOIS
DEPARTMENT OF TRANSPORTATION

PLAN SHEETS
FAS 2585 (ILL 99)

SCALE: 1"=50' | SHEET 7 OF 15 SHEETS | STA. 554+00.00 TO STA. 584+00.00

F.A.S RTE.	SECTION	COUNTY	TOTAL SHEETS	SHEET NO.
2585	122(RS-10,BDR-1,I-1)	*	120	49

CONTRACT NO. 72J44

ILLINOIS | FED. AID PROJECT

*BROWN, PIKE

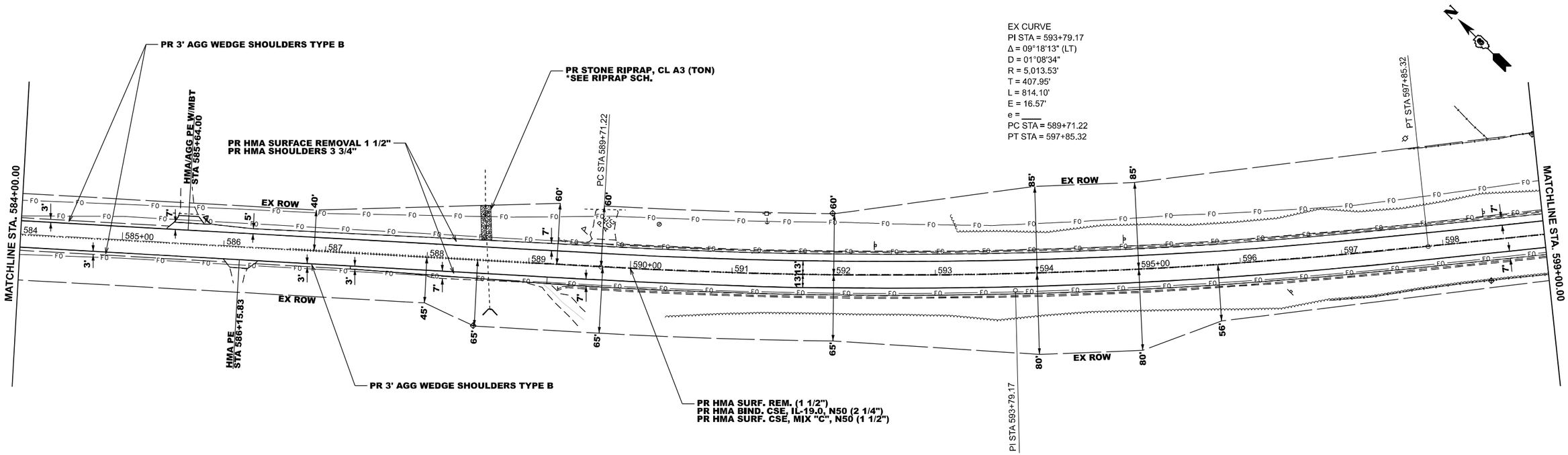

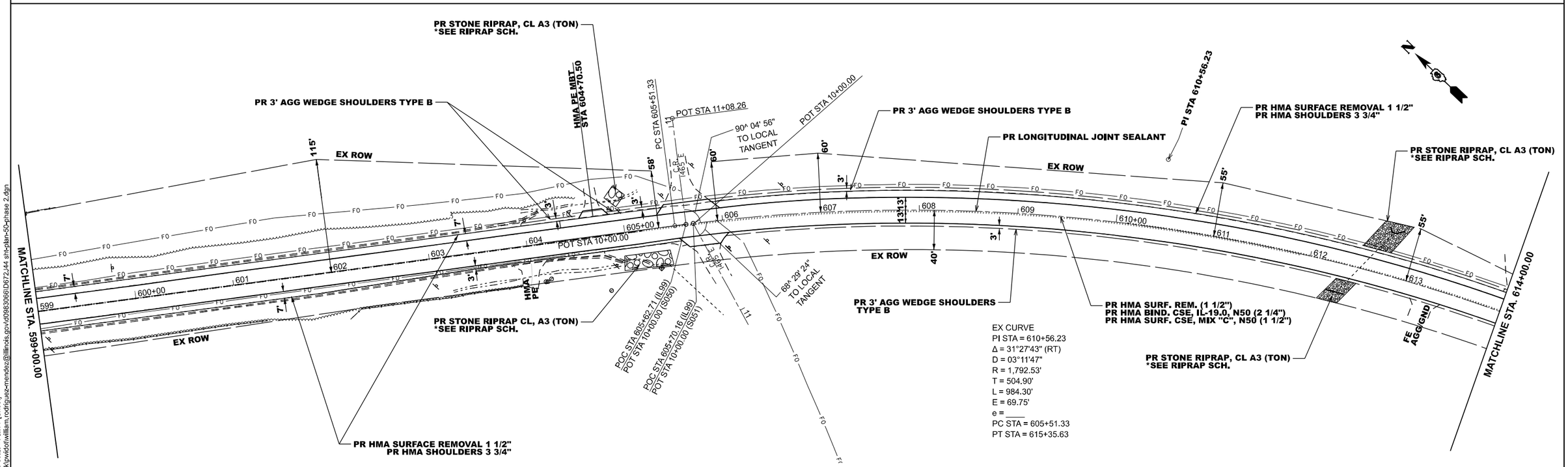

MODEL: Plan sheets 50 scale - Plan 7 [Sheet]
FILE NAME: c:\pw_work\pwidot\william.rodriguez-mendez@illinois.gov\d0983065\D672J44 sht-plan-50-phase 2.dgn

USER NAME = william.rodriguez-me	DESIGNED -	REVISED -	
	DRAWN -	REVISED -	
	CHECKED -	REVISED -	
PLOT DATE = 5/15/2026	DATE -	REVISED -	

STATE OF ILLINOIS
DEPARTMENT OF TRANSPORTATION

PLAN SHEETS
FAS 2585 (ILL 99)

SCALE: 1"=50' | SHEET 8 OF 15 SHEETS | STA. 584+00.00 TO STA. 614+00.00

F.A.S RTE.	SECTION	COUNTY	TOTAL SHEETS	SHEET NO.
2585	122(RS-10,BDR-1,I-1)	*	120	50

CONTRACT NO. 72J44

ILLINOIS | FED. AID PROJECT

*BROWN, PIKE

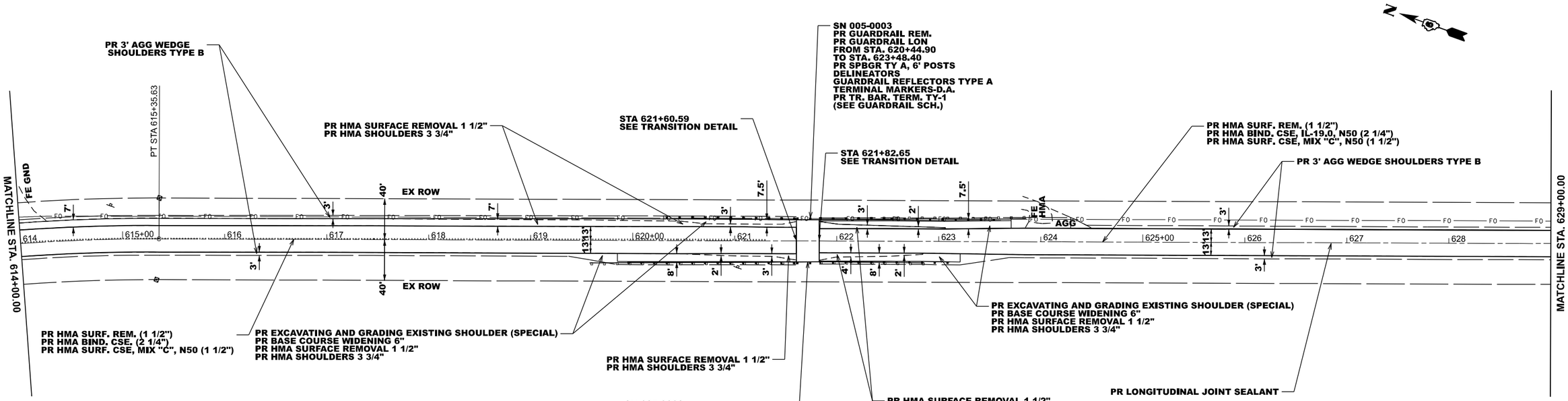

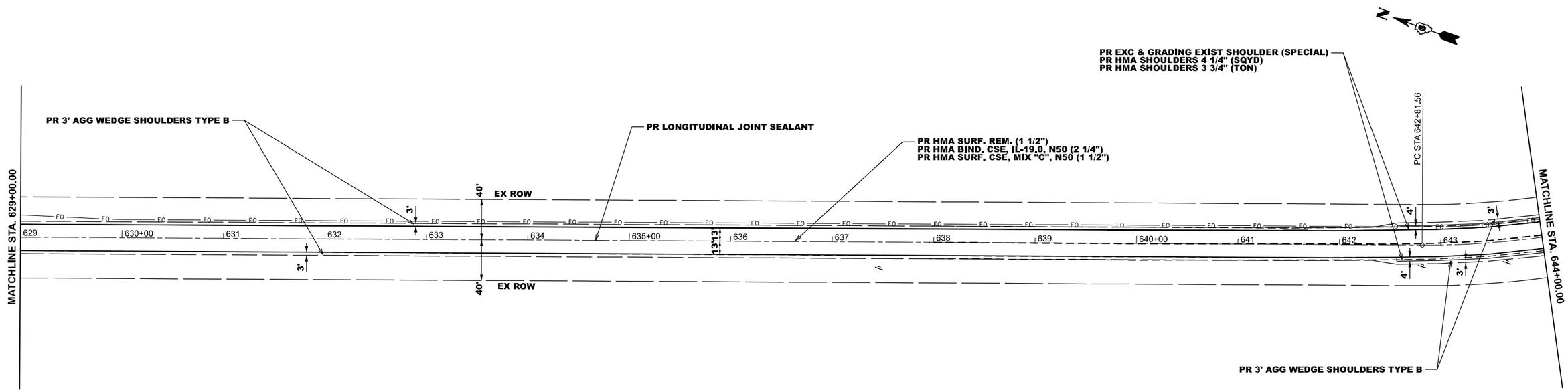

MODEL: Plan sheets 50 scale - Plan 9 [Sheet]
FILE NAME: c:\pw_work\pwidot\william.rodriguez-mendez@illinois.gov\d0983065\D672J44 sht-plan-50-phase 2.dgn

USER NAME = william.rodriguez-me	DESIGNED -	REVISED -	
	DRAWN -	REVISED -	
	CHECKED -	REVISED -	
PLOT DATE = 5/15/2026	DATE -	REVISED -	

STATE OF ILLINOIS
DEPARTMENT OF TRANSPORTATION

PLAN SHEETS
FAS 2585 (ILL 99)

SCALE: 1"=50' | SHEET 9 OF 15 SHEETS | STA. 614+00.00 TO STA. 644+00.00

F.A.S RTE.	SECTION	COUNTY	TOTAL SHEETS	SHEET NO.
2585	122(RS-10,BDR-1,I-1)	*	120	51

CONTRACT NO. 72J44

ILLINOIS | FED. AID PROJECT

*BROWN, PIKE

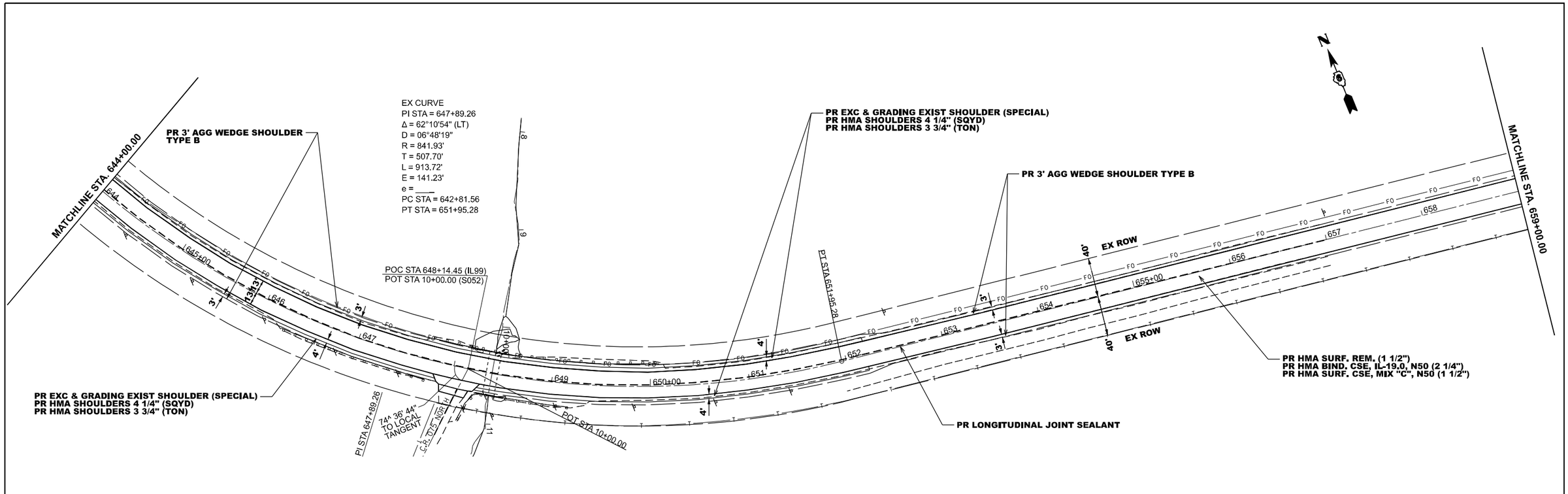

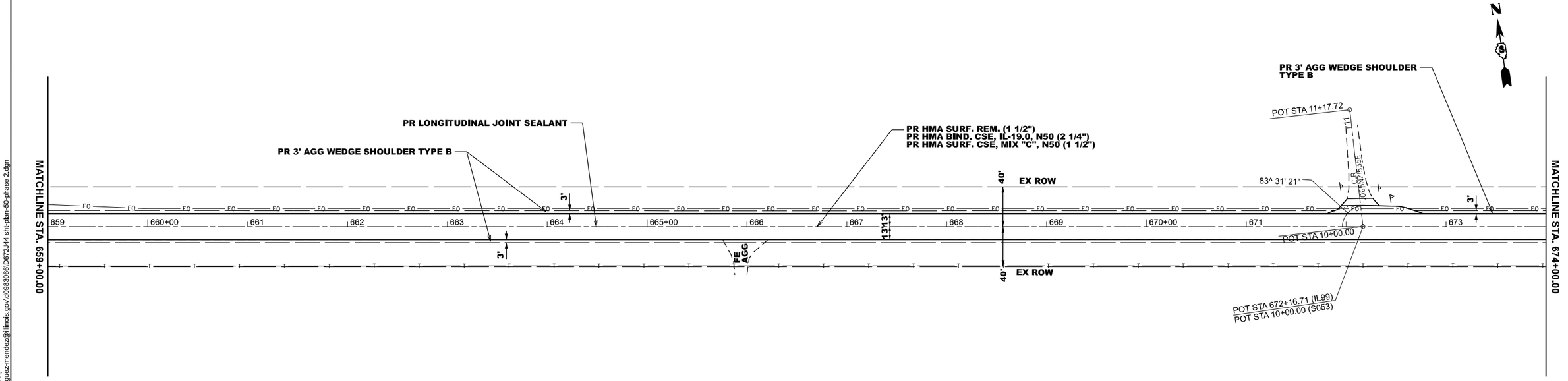

MODEL: Plan sheets 50 scale - Plan 11 [Sheet]
FILE NAME: c:\pw_work\pwidot\william.rodriguez-mendez@illinois.gov\d0983065\D672J44 sht-plan-50-phase 2.dgn

USER NAME = william.rodriguez-me	DESIGNED -	REVISED -	
	DRAWN -	REVISED -	
	CHECKED -	REVISED -	
PLOT DATE = 5/15/2026	DATE -	REVISED -	

STATE OF ILLINOIS
DEPARTMENT OF TRANSPORTATION

PLAN SHEETS
FAS 2585 (ILL 99)

SCALE: 1"=50' | SHEET 10 OF 15 SHEETS | STA. 644+00.00 TO STA. 674+00.00

F.A.S RTE.	SECTION	COUNTY	TOTAL SHEETS	SHEET NO.
2585	122(RS-10,BDR-1,I-1)	*	120	52

CONTRACT NO. 72J44

ILLINOIS | FED. AID PROJECT

*BROWN, PIKE

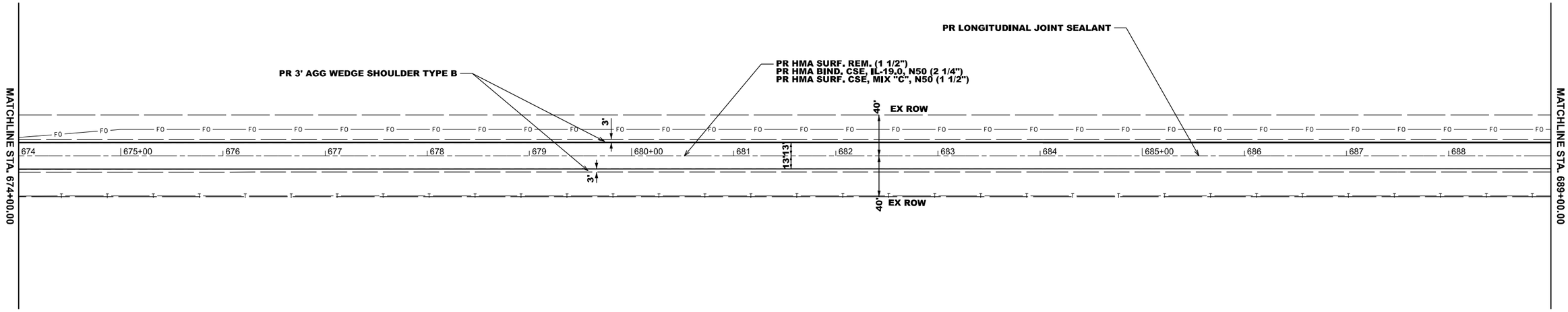

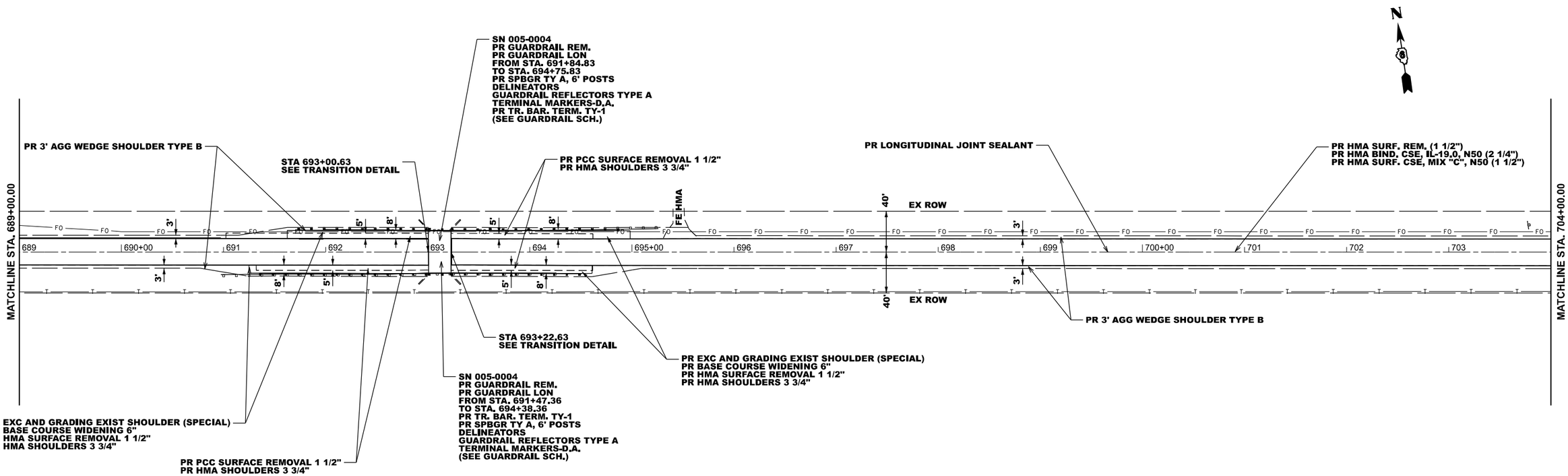

MODEL: Plan sheets 50 scale - Plan 13 [Sheet]
FILE NAME: c:\pw_work\pwidot\william.rodriguez-mendez@illinois.gov\d0983065\D672J44 sht-plan-50-phase 2.dgn

USER NAME = william.rodriguez-me	DESIGNED -	REVISED -	
	DRAWN -	REVISED -	
	CHECKED -	REVISED -	
PLOT DATE = 5/15/2026	DATE -	REVISED -	

STATE OF ILLINOIS
DEPARTMENT OF TRANSPORTATION

PLAN SHEETS
FAS 2585 (ILL 99)

SCALE: 1"=50' | SHEET 11 OF 15 SHEETS | STA. 674+00.00 TO STA. 704+00.00

F.A.S RTE.	SECTION	COUNTY	TOTAL SHEETS	SHEET NO.
2585	122(RS-10,BDR-1,I-1)	*	120	53

CONTRACT NO. 72J44

ILLINOIS | FED. AID PROJECT

*BROWN, PIKE

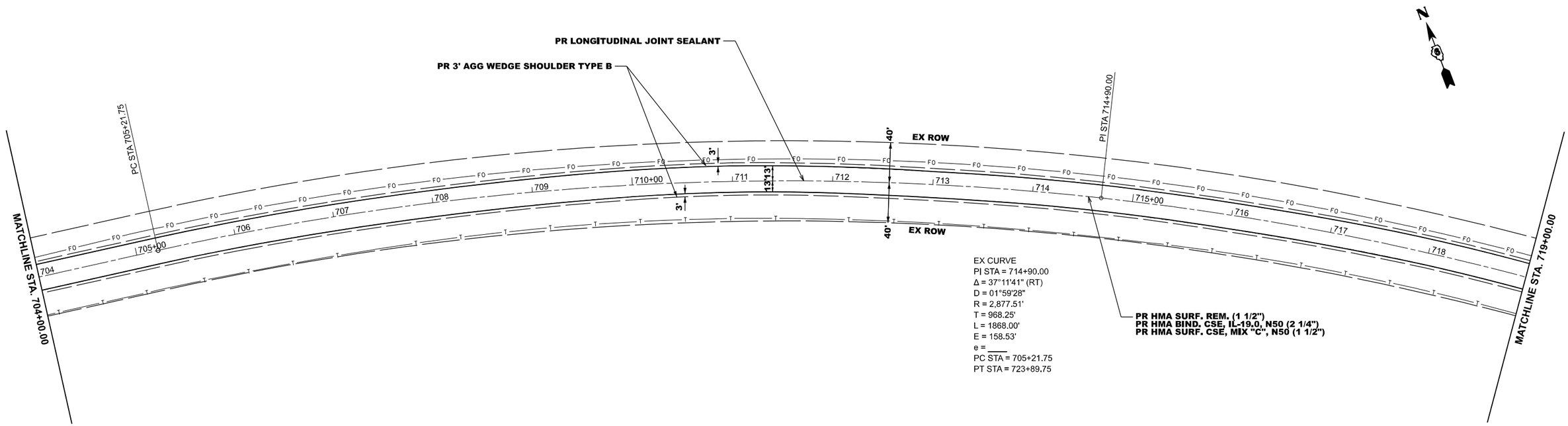

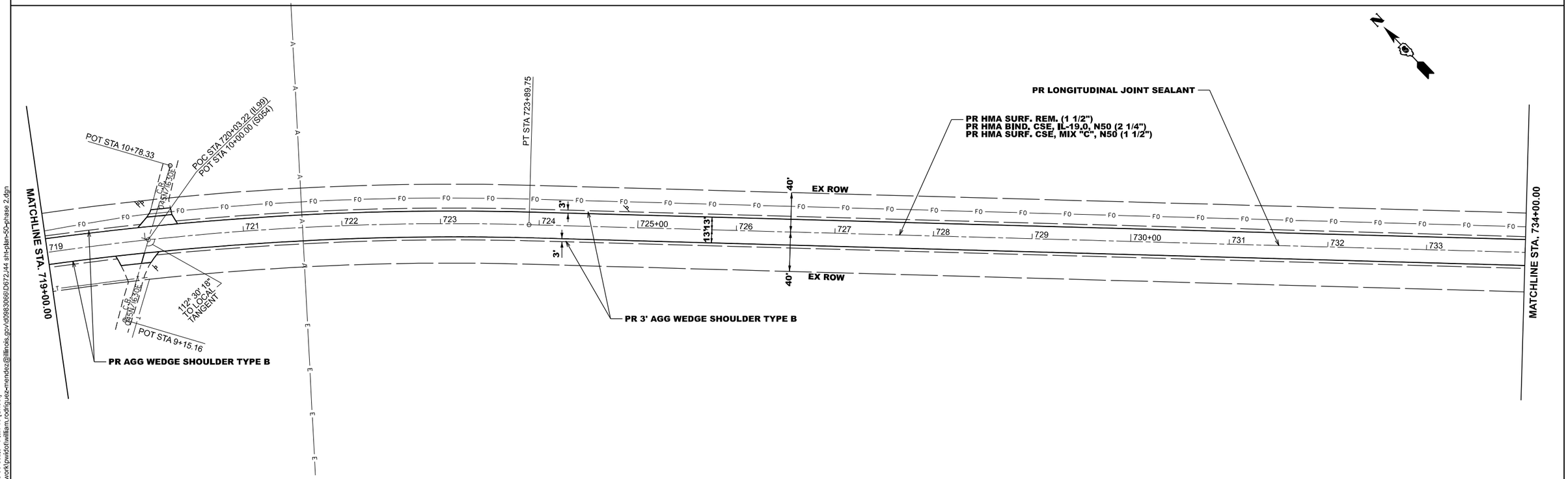

MODEL: Plan sheets 50 scale - Plan 15 [Sheet]
FILE NAME: c:\pw_work\pwidot\william.rodriguez-mendez@illinois.gov\d0983066\D672J44 sht-plan-50-phase 2.dgn

USER NAME = william.rodriguez-me	DESIGNED -	REVISED -	
	DRAWN -	REVISED -	
	CHECKED -	REVISED -	
PLOT DATE = 5/15/2026	DATE -	REVISED -	

STATE OF ILLINOIS
DEPARTMENT OF TRANSPORTATION

PLAN SHEETS
FAS 2585 (ILL 99)

SCALE: 1"=50' | SHEET 12 OF 15 SHEETS | STA. 704+00.00 TO STA. 734+00.00

F.A.S RTE.	SECTION	COUNTY	TOTAL SHEETS	SHEET NO.
2585	122(RS-10,BDR-1,I-1)	*	120	54
		CONTRACT NO. 72J44		
		ILLINOIS FED. AID PROJECT		

*BROWN, PIKE

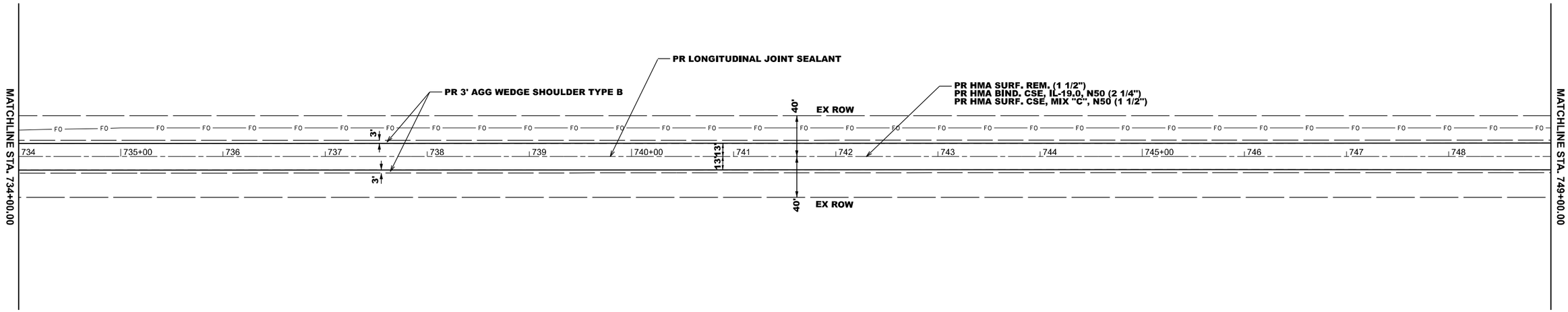

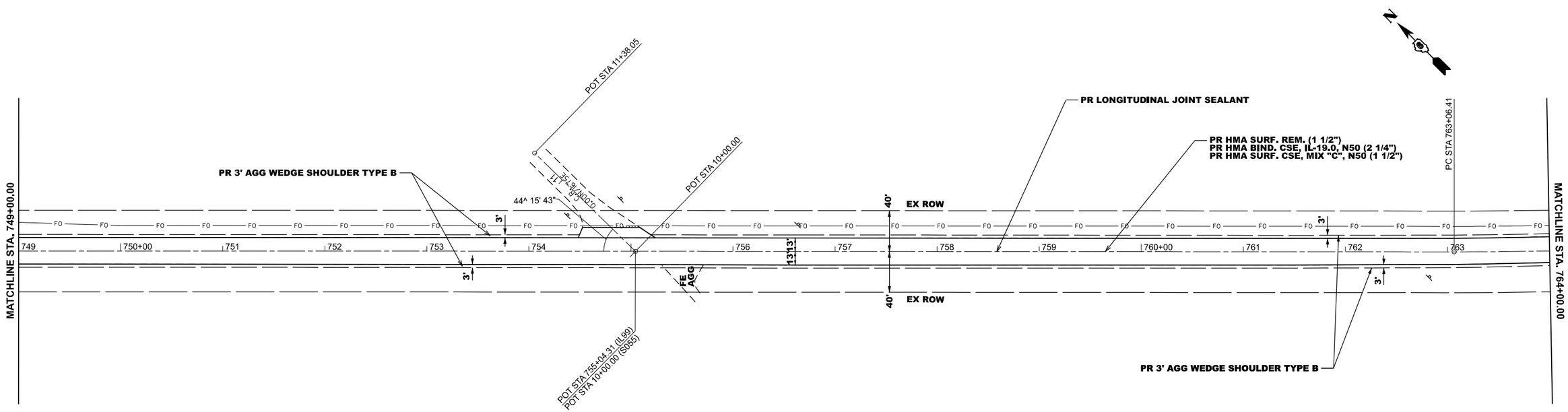

MODEL: Plan sheets 50 scale - Plan 17 [Sheet]
FILE NAME: c:\pw_work\pwidot\william.rodriguez-mendez@illinois.gov\d0983066\D672J44 sht-plan-50-phase 2.dgn

USER NAME = william.rodriguez-me	DESIGNED -	REVISED -	
	DRAWN -	REVISED -	
	CHECKED -	REVISED -	
PLOT DATE = 5/15/2026	DATE -	REVISED -	

STATE OF ILLINOIS
DEPARTMENT OF TRANSPORTATION

PLAN SHEETS
FAS 2585 (ILL 99)

SCALE: 1"=50' | SHEET 13 OF 15 SHEETS | STA. 734+00.00 TO STA. 764+00.00

F.A.S RTE.	SECTION	COUNTY	TOTAL SHEETS	SHEET NO.
2585	122(RS-10,BDR-1,I-1)	*	120	55

CONTRACT NO. 72J44

ILLINOIS | FED. AID PROJECT

*BROWN, PIKE

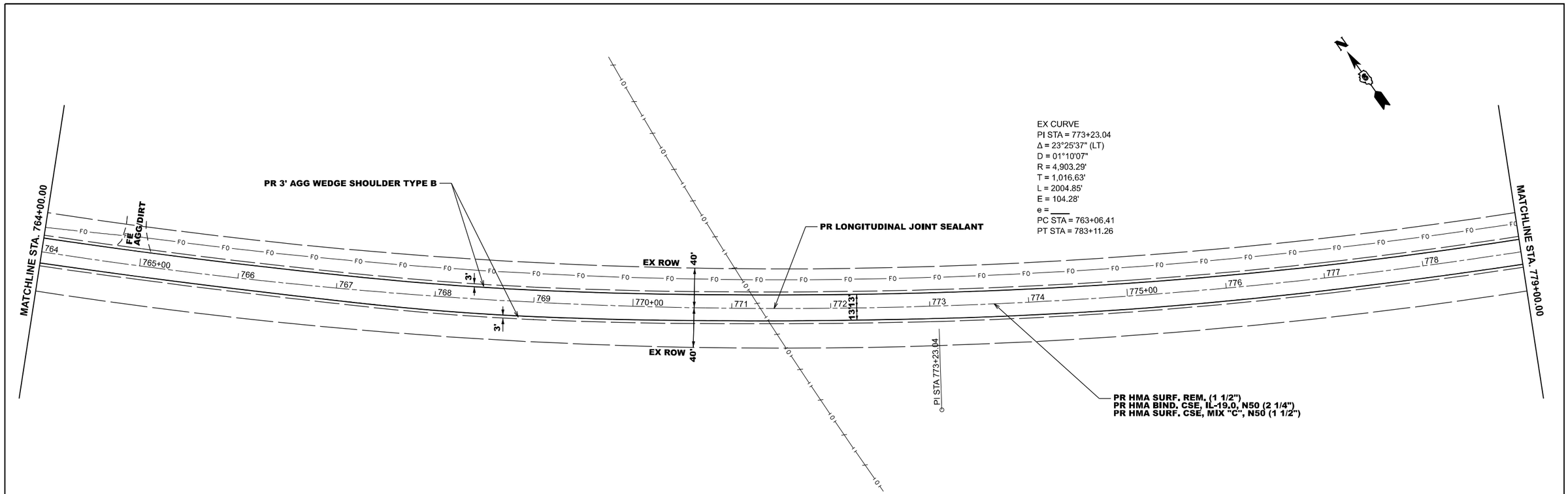

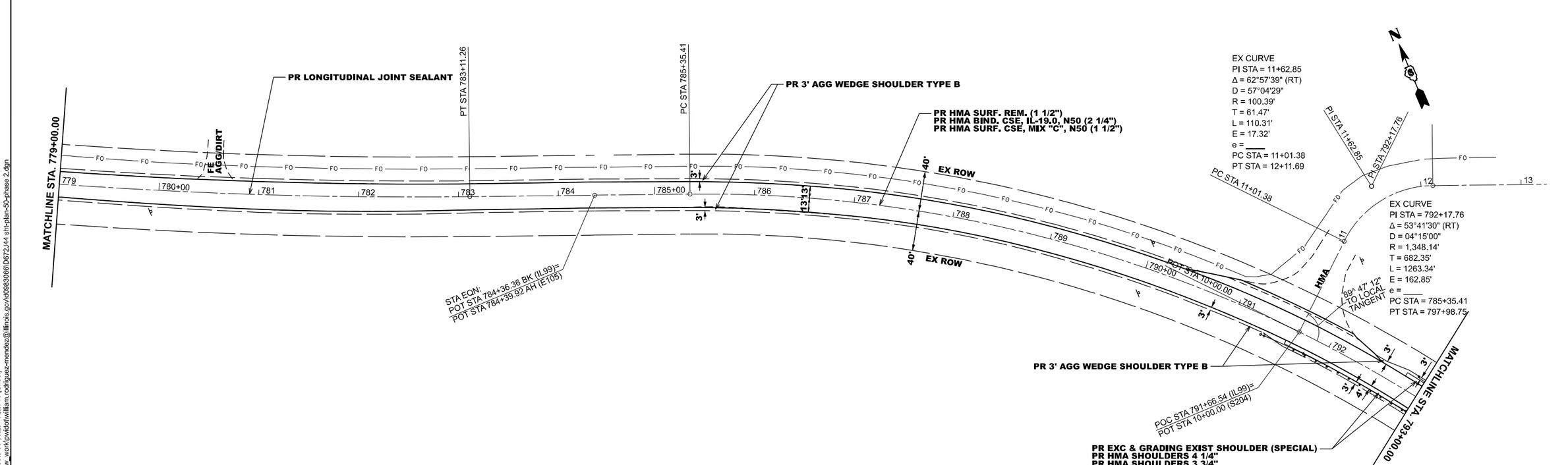

MODEL: Plan sheets 50 scale - Plan 19 [Sheet]
FILE NAME: c:\pw_work\pwidot\william.rodriguez-mendez@illinois.gov\d0983065\D672J44 sht-plan-50-phase 2.dgn

USER NAME = william.rodriguez-me	DESIGNED -	REVISED -	
	DRAWN -	REVISED -	
	CHECKED -	REVISED -	
PLOT DATE = 5/15/2026	DATE -	REVISED -	

STATE OF ILLINOIS
DEPARTMENT OF TRANSPORTATION

PLAN SHEETS
FAS 2585 (ILL 99)

SCALE: 1"=50' | SHEET 14 OF 15 SHEETS | STA. 764+00.00 TO STA. 794+00.00

F.A.S RTE.	SECTION	COUNTY	TOTAL SHEETS	SHEET NO.
2585	122(RS-10,BDR-1,I-1)	*	120	56

CONTRACT NO. 72J44

ILLINOIS | FED. AID PROJECT

*BROWN, PIKE

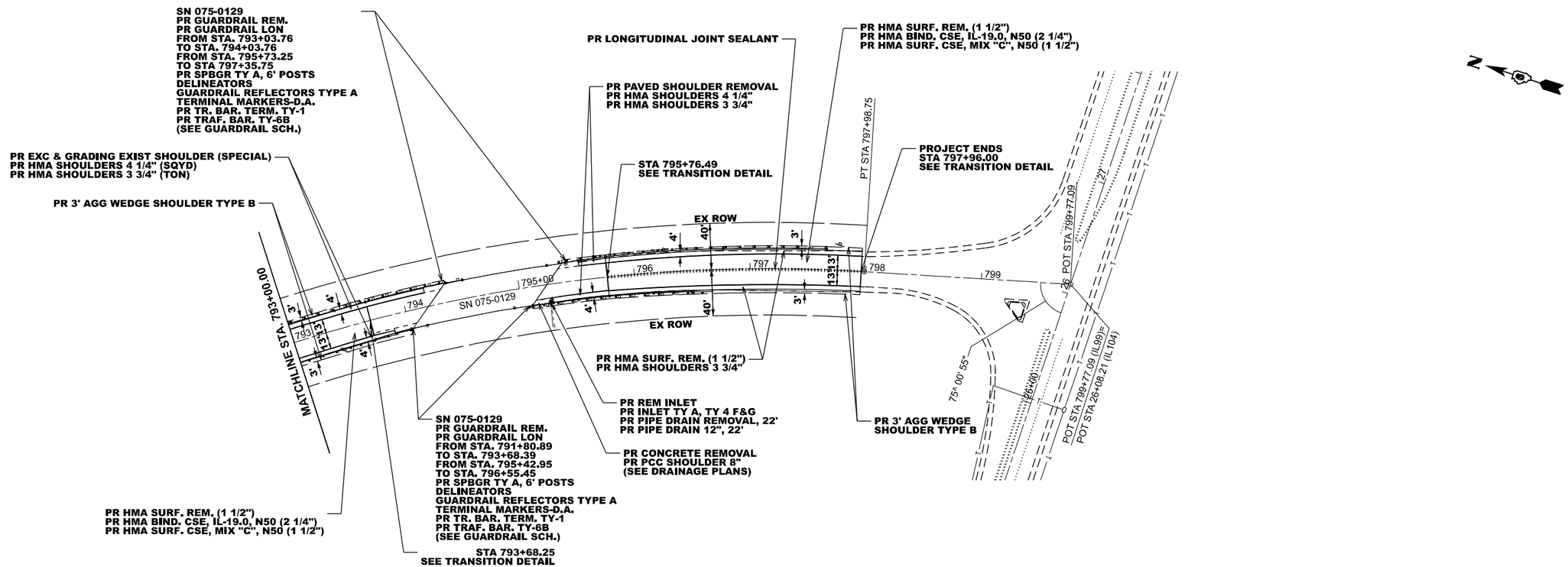

MODEL: Plan sheets 50 scale - Plan 21 [Sheet]
FILE NAME: c:\pw_work\pwidot\william.rodriguez-mendez@illinois.gov\d0983065\D672J44 sht-plan-50-phase 2.dgn

USER NAME = william.rodriguez-me	DESIGNED -	REVISED -	
	DRAWN -	REVISED -	
	CHECKED -	REVISED -	
PLOT DATE = 5/15/2026	DATE -	REVISED -	

STATE OF ILLINOIS
DEPARTMENT OF TRANSPORTATION

PLAN SHEETS
FAS 2585 (ILL 99)

SCALE: 1"=50' | SHEET 15 OF 15 SHEETS | STA. 793+00.00 TO STA. 808+00.00

F.A.S RTE.	SECTION	COUNTY	TOTAL SHEETS	SHEET NO.
2585	122(RS-10,BDR-1,I-1)	*	120	57

CONTRACT NO. 72J44

ILLINOIS | FED. AID PROJECT

*BROWN, PIKE

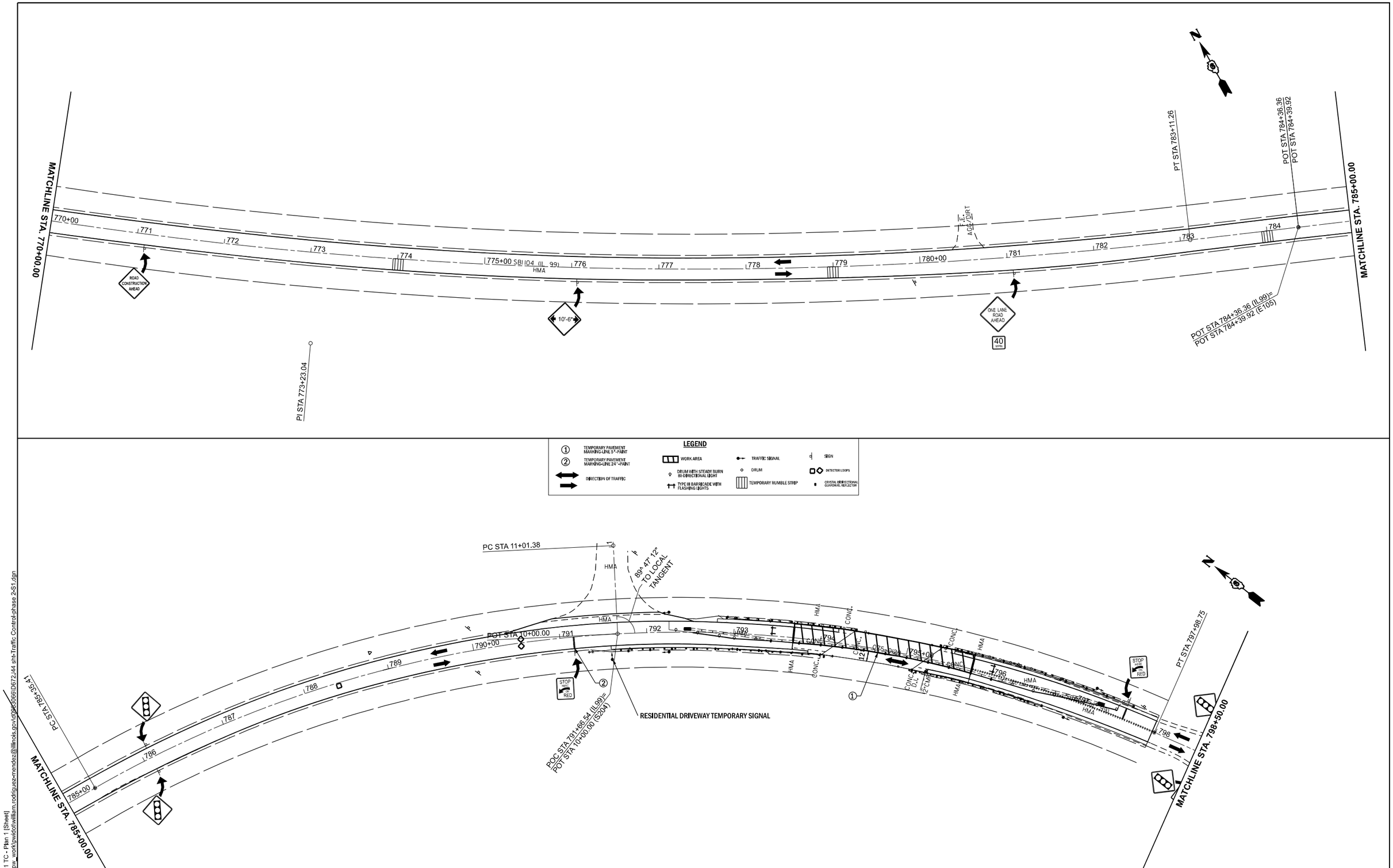

MODEL: Stage 1 TC - Plan 1 [Sheet]
FILE NAME: c:\pw_work\pwidot\william.rodriguez-mendez@illinois.gov\d0\pw3066\D672J44 sht-Traffic Control-phase 2-S1.dgn

USER NAME = william.rodriguez-me	DESIGNED -	REVISED -	
	DRAWN -	REVISED -	
	CHECKED -	REVISED -	
PLOT DATE = 5/15/2026	DATE -	REVISED -	

STATE OF ILLINOIS
DEPARTMENT OF TRANSPORTATION

Traffic Control Stage 1
FAS 2585 (ILL 99)

SCALE: 1"=50' | SHEET 1 OF 6 SHEETS | STA. 770+00.00 TO STA. 785+00.00

F.A.S RTE.	SECTION	COUNTY	TOTAL SHEETS	SHEET NO.
2585	122(RS-10,BDR-1,I-1)	*	120	58

CONTRACT NO. 72J44

ILLINOIS | FED. AID PROJECT

*BROWN, PIKE

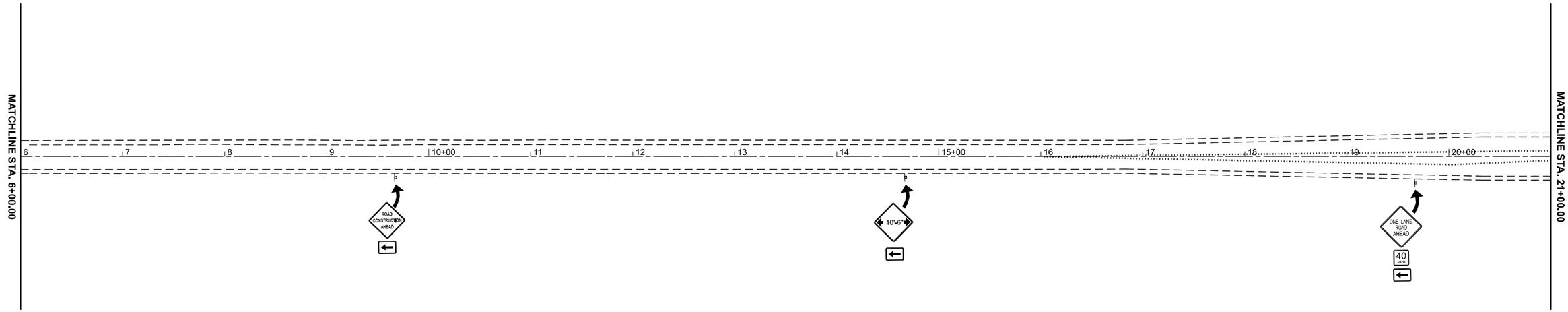

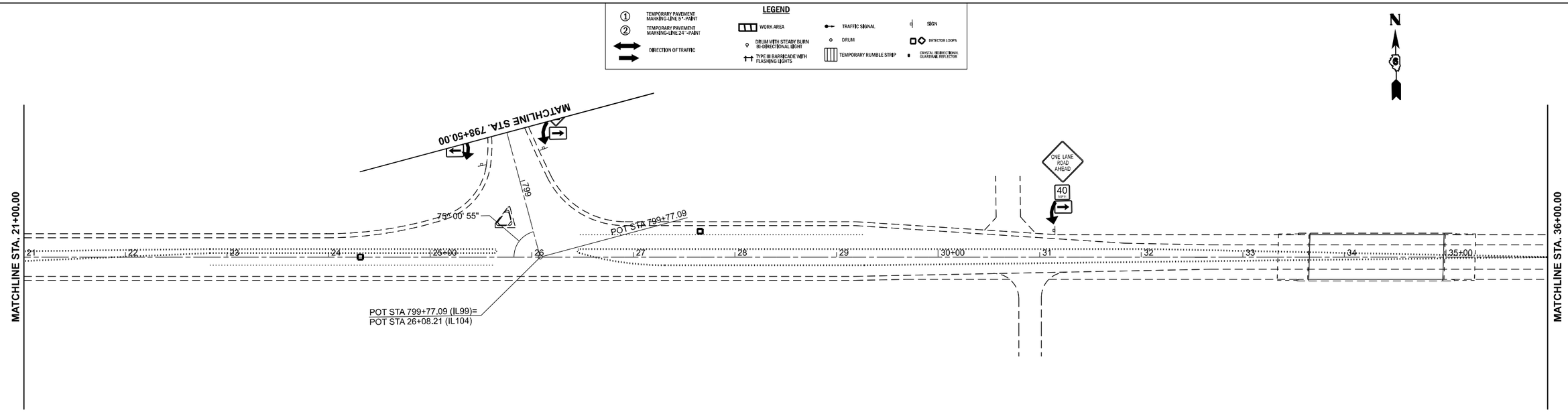

MODEL: Stage 1 TC - Plan 3 [Sheet]
FILE NAME: c:\pw_work\pwidot\william.rodriguez-mendez@illinois.gov\d0983066\D672J44 sht-Traffic Control-phase 2-S1.dgn

USER NAME = william.rodriguez-me	DESIGNED -	REVISED -	
	DRAWN -	REVISED -	
	CHECKED -	REVISED -	
PLOT DATE = 5/15/2026	DATE -	REVISED -	

STATE OF ILLINOIS
DEPARTMENT OF TRANSPORTATION

Traffic Control Stage 1
IL 104

SCALE: 1"=50' | SHEET 2 OF 6 SHEETS | STA. 6+00.00 TO STA. 36+00.00

F.A.S RTE.	SECTION	COUNTY	TOTAL SHEETS	SHEET NO.
2585	122(RS-10,BDR-1,I-1)	*	120	59

CONTRACT NO. 72J44

ILLINOIS | FED. AID PROJECT

*BROWN, PIKE

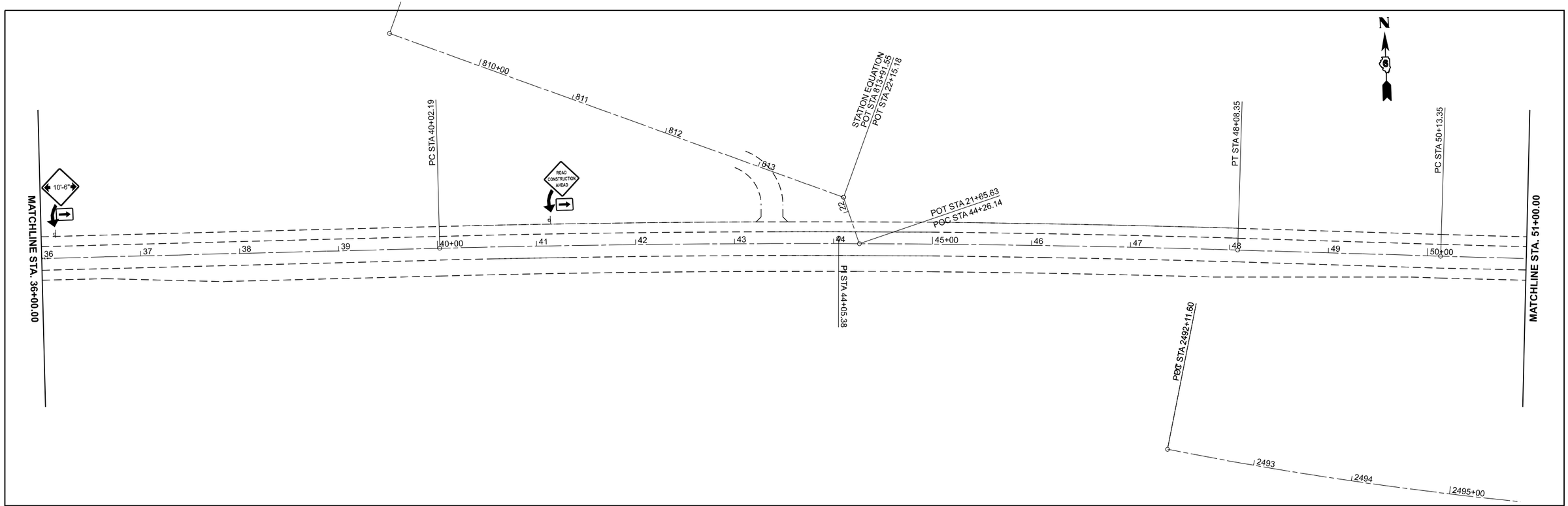

LEGEND

①	TEMPORARY PAVEMENT MARKING-LINE 5"-PAINT
②	TEMPORARY PAVEMENT MARKING-LINE 24"-PAINT
	DIRECTION OF TRAFFIC
	WORK AREA
	DRUM WITH STEADY BURN BI-DIRECTIONAL LIGHT
	TYPE III BARRICADE WITH FLASHING LIGHTS
	TRAFFIC SIGNAL
	DRUM
	TEMPORARY RUMBLE STRIP
	SIGN
	DETECTOR LOOPS
	CRYSTAL BIDIRECTIONAL GUARDRAIL REFLECTOR

MODEL: Stage 1 TC - Plan 5 [Sheet]
FILE NAME: c:\pw_work\pwidot\william.rodriguez-mendez@illinois.gov\d0983066\D672J44 sht-Traffic Control-phase 2-S1.dgn

USER NAME = william.rodriguez-me	DESIGNED -	REVISED -	
	DRAWN -	REVISED -	
	CHECKED -	REVISED -	
PLOT DATE = 5/15/2026	DATE -	REVISED -	

STATE OF ILLINOIS
DEPARTMENT OF TRANSPORTATION

Traffic Control Stage 1
IL 104

SCALE: 1"=50' | SHEET 3 OF 6 SHEETS | STA. 36+00.00 TO STA. 51+00.00

F.A.S RTE.	SECTION	COUNTY	TOTAL SHEETS	SHEET NO.
2585	122(RS-10,BDR-1,I-1)	*	120	60

CONTRACT NO. 72J44

ILLINOIS | FED. AID PROJECT

*BROWN, PIKE

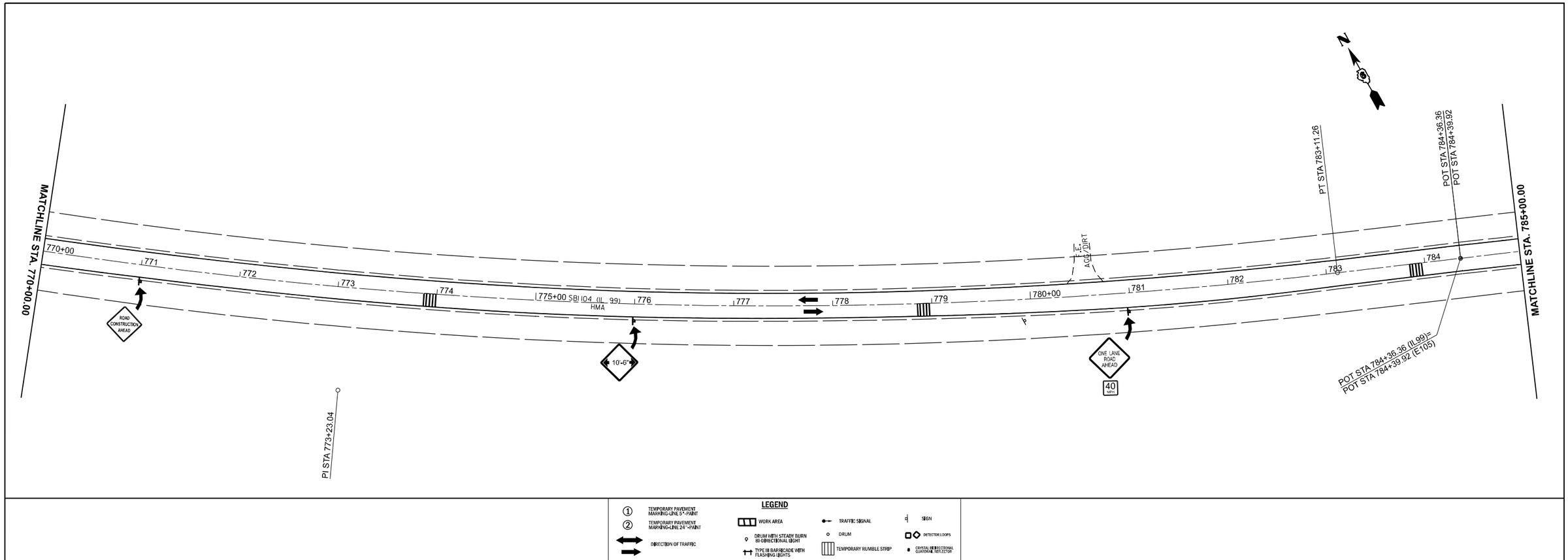

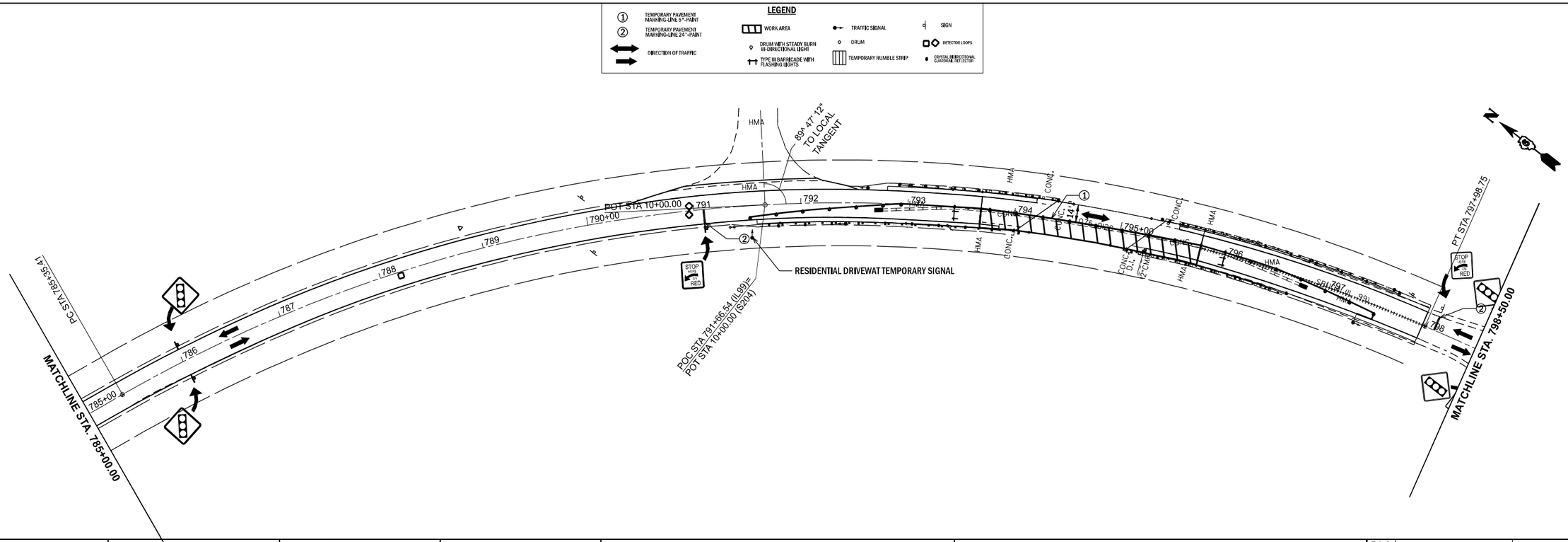

USER NAME = william.rodriguez-me	DESIGNED -	REVISED -
	DRAWN -	REVISED -
	CHECKED -	REVISED -
PLOT DATE = 5/15/2026	DATE -	REVISED -

STATE OF ILLINOIS
DEPARTMENT OF TRANSPORTATION

Traffic Control Stage 2
FAS 2585 (ILL 99)

SCALE: 1"=50' | SHEET 4 OF 6 SHEETS | STA. 770+00.00 TO STA. 785+00.00

F.A.S RTE.	SECTION	COUNTY	TOTAL SHEETS	SHEET NO.
2585	122(RS-10,BDR-1,I-1)	*	120	61

CONTRACT NO. 72J44

ILLINOIS | FED. AID PROJECT

*BROWN, PIKE

MODEL: Stage 2 TC - Plan 1 [Sheet]
FILE NAME: c:\pw_work\pwidot\william.rodriguez-mendez@illinois.gov\d0983066\D672J44 sht-Traffic Control-phase 2-S2.dgn

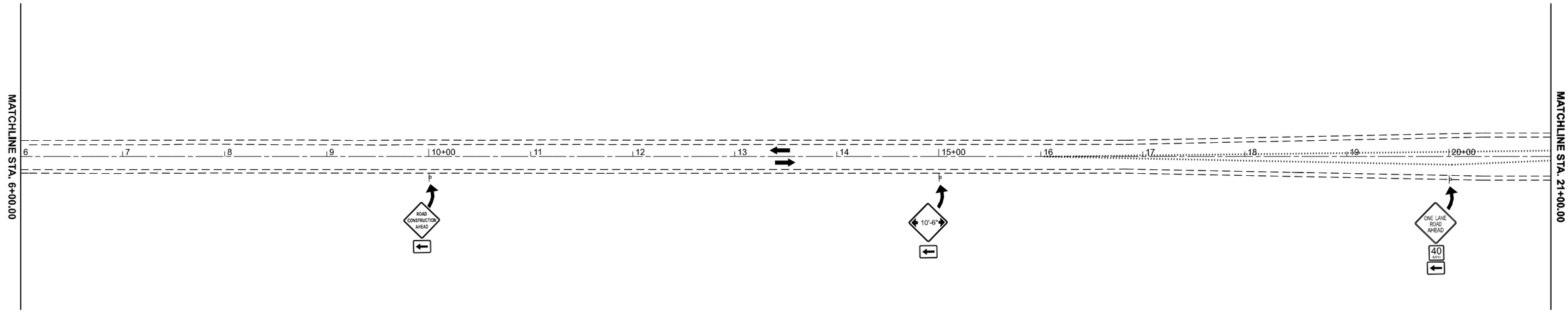

LEGEND

①	TEMPORARY PAVEMENT MARKING-LINE 5"-PAINT
②	TEMPORARY PAVEMENT MARKING-LINE 24"-PAINT
	DIRECTION OF TRAFFIC
	WORK AREA
	DRUM WITH STEADY BURN BI-DIRECTIONAL LIGHT
	TYPE III BARRICADE WITH FLASHING LIGHTS
	TRAFFIC SIGNAL
	DRUM
	TEMPORARY RUMBLE STRIP
	SIGN
	DETECTOR LOOPS
	CRYSTAL BI-DIRECTIONAL GUIDERAIL REFLECTOR

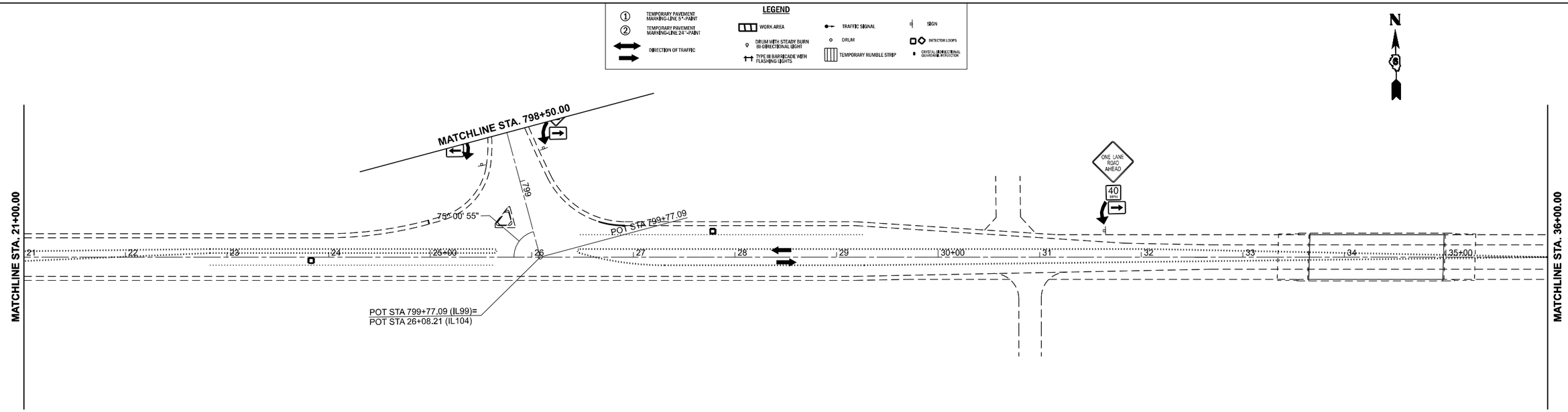

MODEL: Stage 2 TC - Plan 3 [Sheet]
FILE NAME: c:\pw_work\pwidot\william.rodriguez-mendez@illinois.gov\d0983066\D672J44 sht-Traffic Control-phase 2-S2.dgn

USER NAME = william.rodriguez-me	DESIGNED -	REVISED -	
	DRAWN -	REVISED -	
	CHECKED -	REVISED -	
PLOT DATE = 5/15/2026	DATE -	REVISED -	

STATE OF ILLINOIS
DEPARTMENT OF TRANSPORTATION

Traffic Control Stage 2
IL 104

SCALE: 1"=50' | SHEET 5 OF 6 SHEETS | STA. 6+00.00 TO STA. 36+00.00

F.A.S RTE.	SECTION	COUNTY	TOTAL SHEETS	SHEET NO.
2585	122(RS-10,BDR-1,I-1)	*	120	62

CONTRACT NO. 72J44

ILLINOIS | FED. AID PROJECT

*BROWN, PIKE

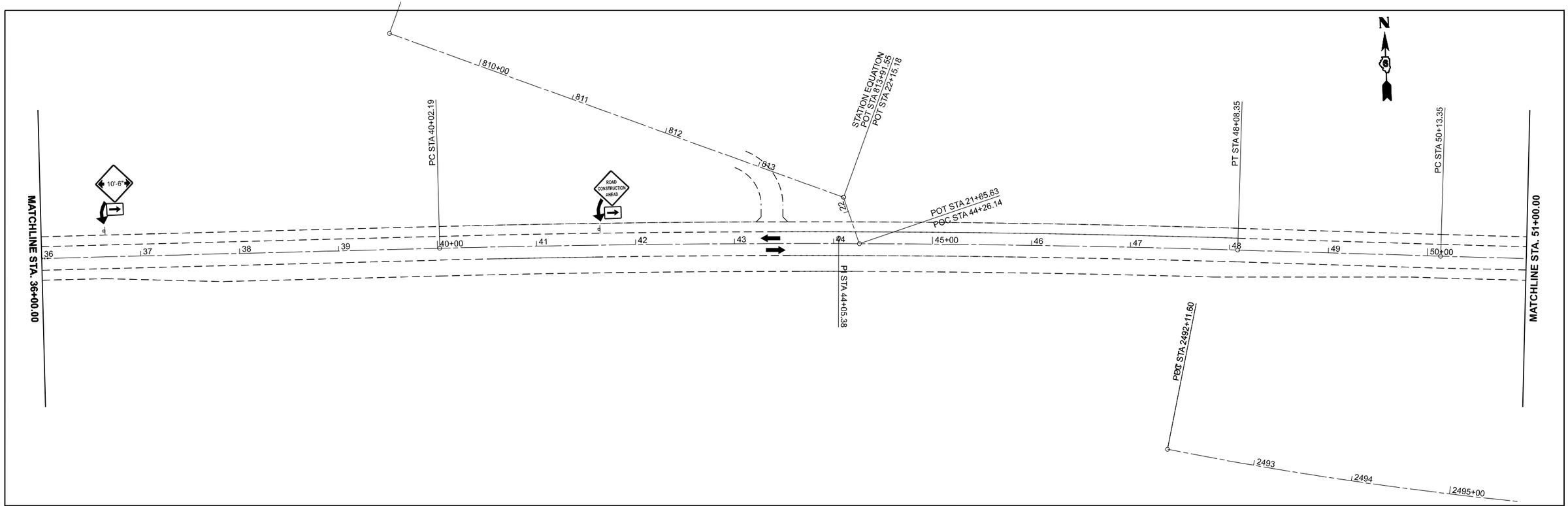

LEGEND

① TEMPORARY PAVEMENT MARKING-LINE 5"-PAINT

② TEMPORARY PAVEMENT MARKING-LINE 24"-PAINT

DIRECTION OF TRAFFIC

WORK AREA

DRUM WITH STEADY BURN BI-DIRECTIONAL LIGHT

TYPE III BARRICADE WITH FLASHING LIGHTS

TRAFFIC SIGNAL

DRUM

TEMPORARY RUMBLE STRIP

SIGN

DETECTOR LOOPS

CRYSTAL BIDIRECTIONAL GUARDRAIL REFLECTOR

MODEL: Stage 2 TC - Plan 5 [Sheet]
FILE NAME: c:\pw_work\pwidot\william.rodriguez-mendez@illinois.gov\d0983066\D672J44 sht-Traffic Control-phase 2-S2.dgn

USER NAME = william.rodriguez-me	DESIGNED -	REVISED -	
	DRAWN -	REVISED -	
	CHECKED -	REVISED -	
PLOT DATE = 5/15/2026	DATE -	REVISED -	

STATE OF ILLINOIS
DEPARTMENT OF TRANSPORTATION

Traffic Control Stage 2
IL 104

SCALE: 1"=50' | SHEET 6 OF 6 SHEETS | STA. 36+00.00 TO STA. 51+00.00

F.A.S RTE.	SECTION	COUNTY	TOTAL SHEETS	SHEET NO.
2585	122(RS-10,BDR-1,I-1)	*	120	63

CONTRACT NO. 72J44

ILLINOIS | FED. AID PROJECT

*BROWN, PIKE

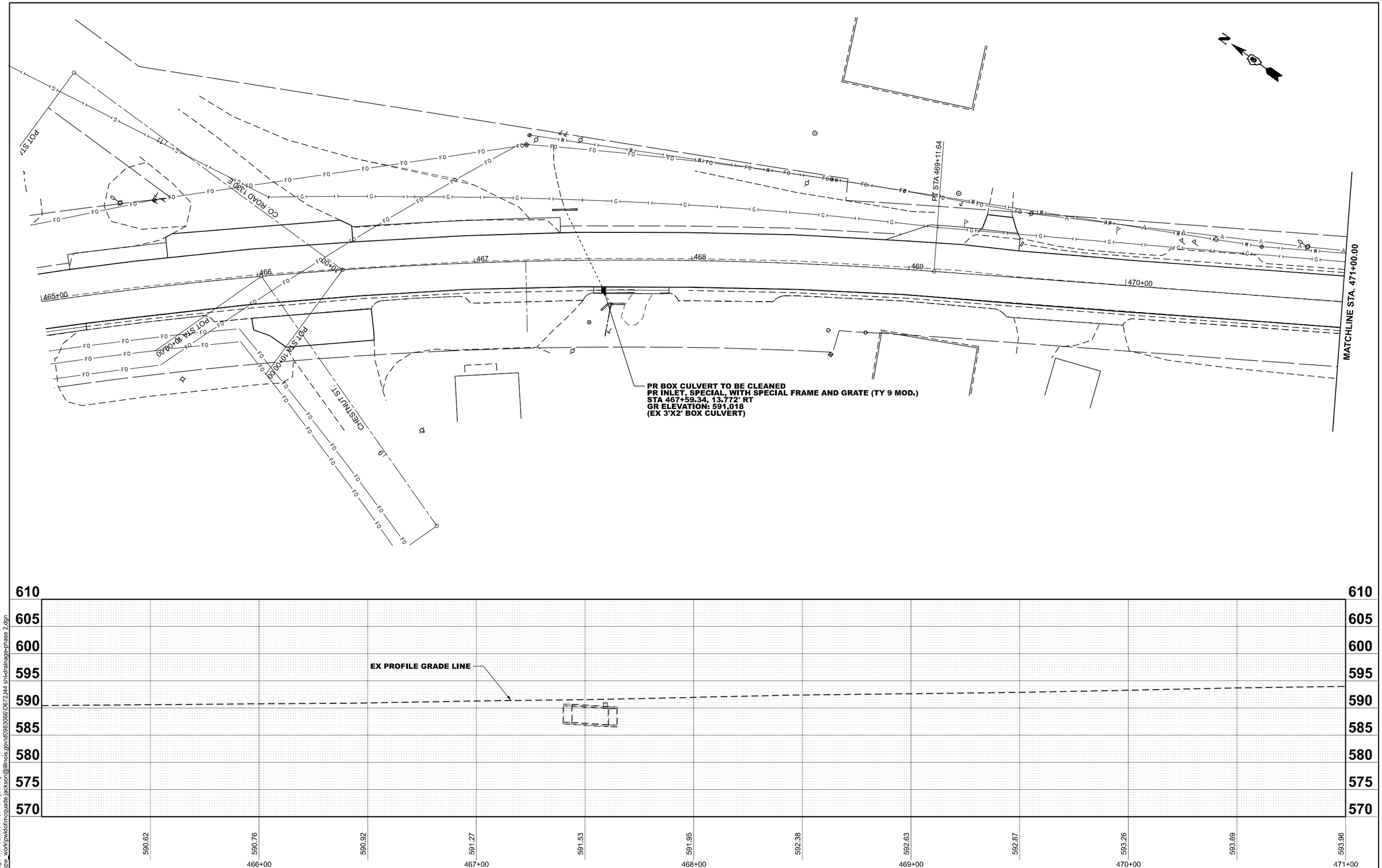

MODEL: Drainage and Utilities - Plan 3-1 [Sheet]
FILE NAME: c:\pw_work\pwidot\mcquade.jackson@illinois.gov\d0983056\D672J44 sht-drainage-phase 2.dgn

USER NAME = mcquade.jackson	DESIGNED -	REVISED -	
	DRAWN -	REVISED -	
	CHECKED -	REVISED -	
PLOT DATE = 6/25/2026	DATE -	REVISED -	

STATE OF ILLINOIS
DEPARTMENT OF TRANSPORTATION

DRAINAGE PLAN & PROFILE SHEETS

SCALE:1"=20' | SHEET 1 OF 4 SHEETS | STA. 465+00.00 TO STA. 471+00.00

F.A.S RTE.	SECTION	COUNTY	TOTAL SHEETS	SHEET NO.
2585	122(RS-10,BDR-1,I-1)	*	120	64

CONTRACT NO. 72J44

ILLINOIS | FED. AID PROJECT

*BROWN, PIKE

PR STORM SEWER REM. 15"
PR STORM SEWER (WMR), 15"X40.12' @ 1.55%
(EX 15" CLAY & POSSIBLY CMP)

PR STORM SEWER REM. 12"
PR STORM SEWER CL A, TY 1' 12"X6' @ MATCH EXISTING S%
PR CONCRETE COLLAR
(EX 12" CLAY)

① PR REM. INLET
PR MANHOLE TA, 4' DIA, T8 GRATE
STA 481+70.31, 45.686' LT
GR ELEVATION: 626.58
E PIPE INV: 624.29
S PIPE INV: 623.67

PR STORM SEWER REM. 18"
PR STORM SEWER CL A,
TY 2, 18"X6' @ MATCH EXISTING S%
PR CONCRETE COLLAR
(EX 18" CLAY)

② PR REM. MANHOLE
PR MANHOLE TA, 4' DIA, T1 F&CL
STA 482+07.95, 43.693' LT
GR ELEVATION: 627.743
E PIPE INV: 623.78
N PIPE INV: 623.05
W PIPE INV: 622.92

PR REM. EX STRUCTURE #1
PR STORM SEWER CL A,
TY 2, 18"X28.73' @ 6.08%
(EX 3'HX2'W CONC BOX)

③ PR MANHOLE TA, 4' DIA, T1 F&CL
STA 482+06.65, 15.0' LT
GR ELEVATION: 625.192
E PIPE INV: 621.17
W PIPE INV: 619.89

PR STORM SEWER CL A, TY 2, 18"X31.22' @ 0.78%
(EX 3HX2W CONC BOX)

④ PR INLET TB, SPECIAL F&G
STA 482+06.54, 16.2' RT
GR ELEVATION: 623.17
E PIPE INV: 619.64
W PIPE INV: 619.14

PR STORM SEWER CL A, TY 1, 18"X25.07' @ 0.71%
(EX 3'HX2'W CONC BOX)

PR REM. MANHOLE
⑤ PR MANHOLE TA, 4' DIA, T1 F&CL
STA 482+03.96, 41.166' RT
GR ELEVATION:623.87
E PIPE INV: 618.96
W PIPE INV: 617.26

PR STORM SEWER REM. 15"
PR STORM SEWER CL A, TY 2, 15"X6' @ MATCH EXISTING S%
PR CONCRETE COLLAR
(EX 15" CMP)

POT STA 11+13.89
POT STA 8+79.16
PI STA 480+29.30
PC STA 478+23.62
PT STA 482+24.22
FORD ST.
3RD ST.
MATCHLINE STA. 477+00.00
MATCHLINE STA. 483+00.00
477
478
479
480+00
481
482
10+00
11
9
8

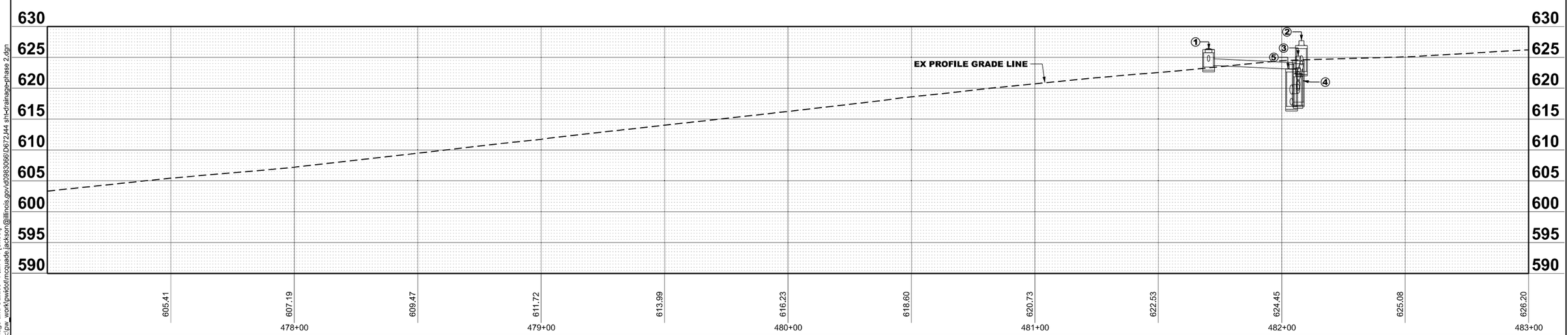

MODEL: Drainage and Utilities - Plan 5-1 [Sheet]
FILE NAME: c:\pw_work\pwidot\mcquade.jackson@illinois.gov\d0983065\D672J44 sht-drainage-phase 2.dgn

USER NAME = mcquade.jackson	DESIGNED -	REVISED -	STATE OF ILLINOIS DEPARTMENT OF TRANSPORTATION
	DRAWN -	REVISED -	
	CHECKED -	REVISED -	
PLOT DATE = 6/26/2026	DATE -	REVISED -	

DRAINAGE PLAN & PROFILE SHEETS

SCALE:1"=20' | SHEET 2 OF 4 SHEETS | STA. 477+00.00 TO STA. 483+00.00

F.A.S RTE.	SECTION	COUNTY	TOTAL SHEETS	SHEET NO.
2585	122(RS-10,BDR-1,I-1)	*	120	65

CONTRACT NO. 72J44

ILLINOIS | FED. AID PROJECT

*BROWN, PIKE

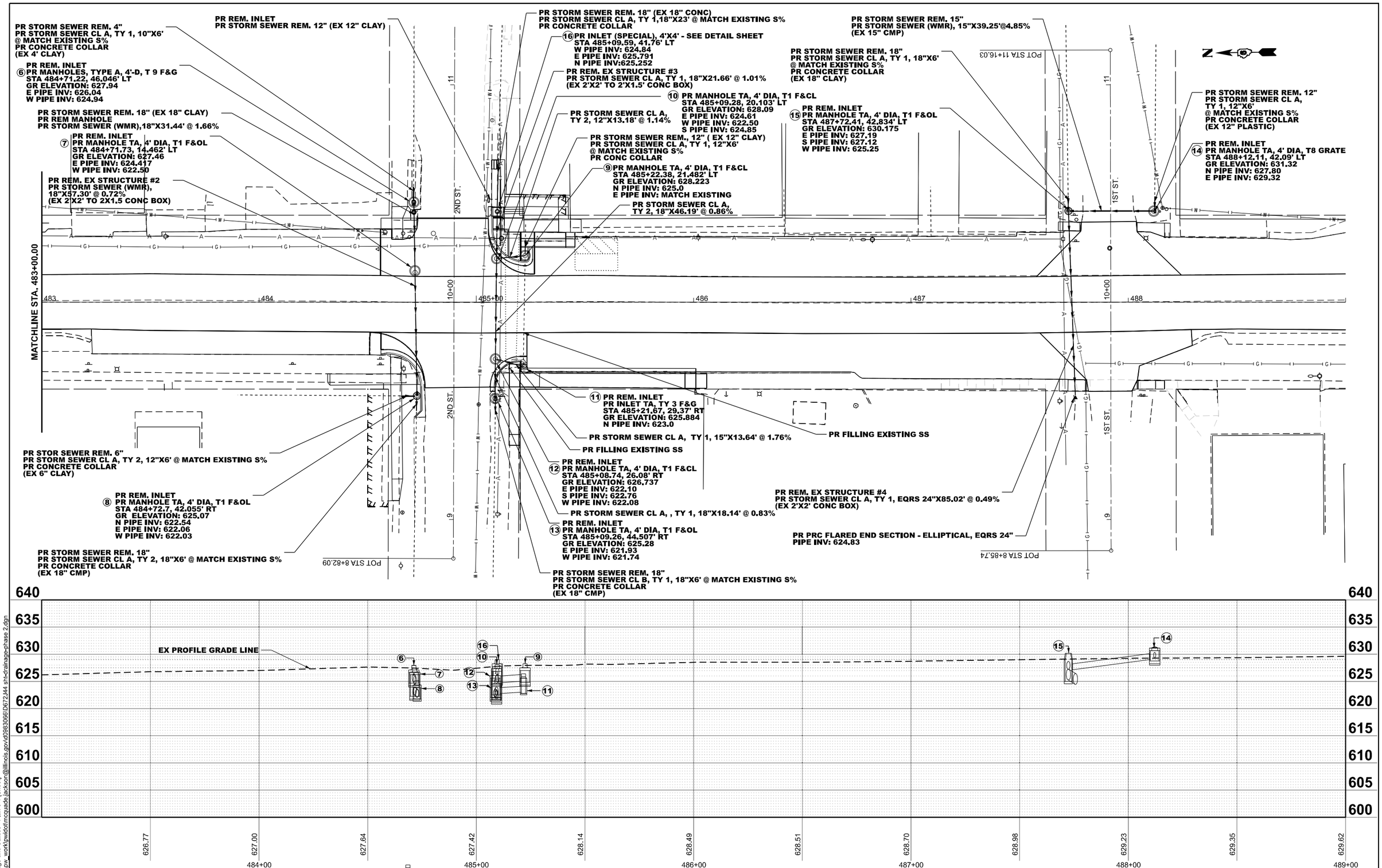

MODEL: Drainage and Utilities - Plan 6-1 [Sheet]
FILE NAME: c:\pw_work\pwidot\mcquade.jackson@illinois.gov\d0983066\D672J44 sht-drainage-phase 2.dgn

USER NAME = mcquade.jackson	DESIGNED -	REVISED -	
	DRAWN -	REVISED -	
	CHECKED -	REVISED -	
PLOT DATE = 6/26/2026	DATE -	REVISED -	

STATE OF ILLINOIS
DEPARTMENT OF TRANSPORTATION

DRAINAGE PLAN & PROFILE SHEETS

SCALE:1"=20' | SHEET 3 OF 4 SHEETS | STA. 483+00.00 TO STA. 489+00.00

F.A.S RTE.	SECTION	COUNTY	TOTAL SHEETS	SHEET NO.
2585	122(RS-10,BDR-1,I-1)	*	120	66

CONTRACT NO. 72J44

ILLINOIS | FED. AID PROJECT

*BROWN, PIKE

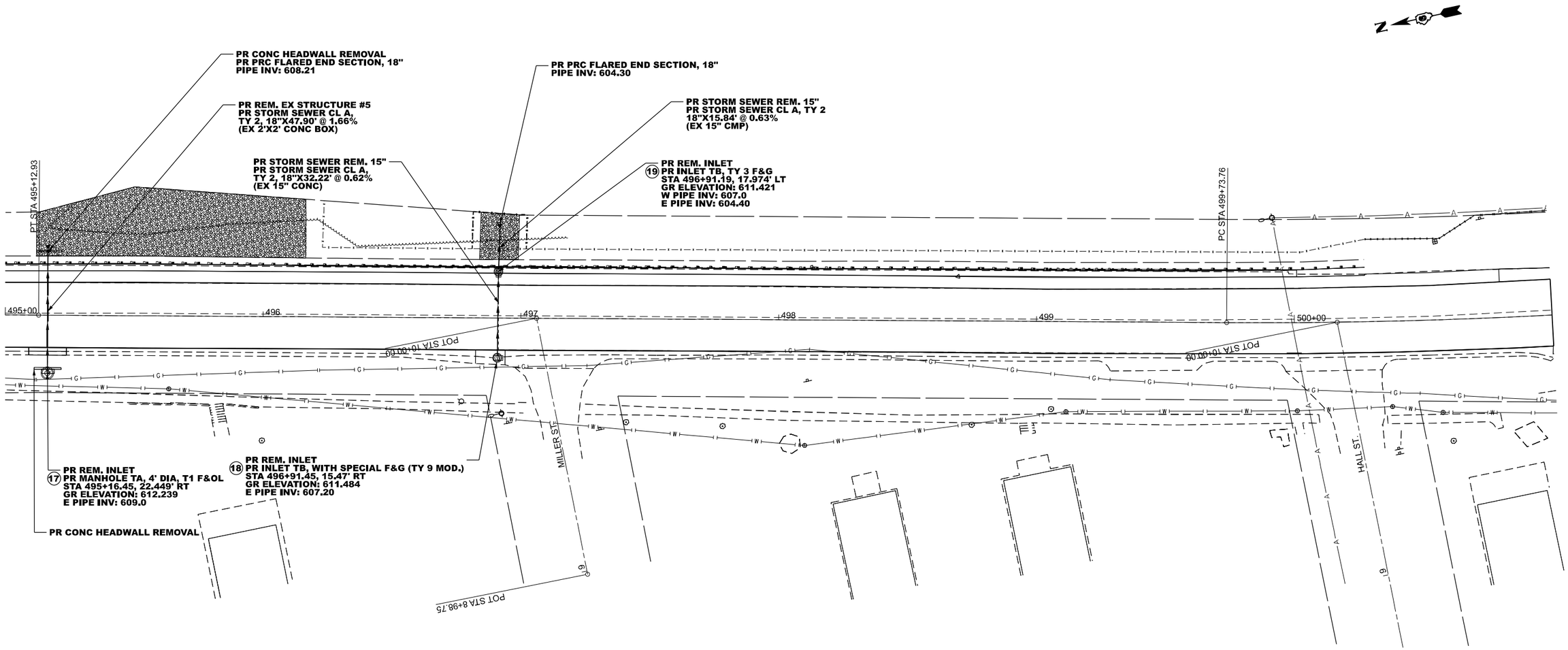

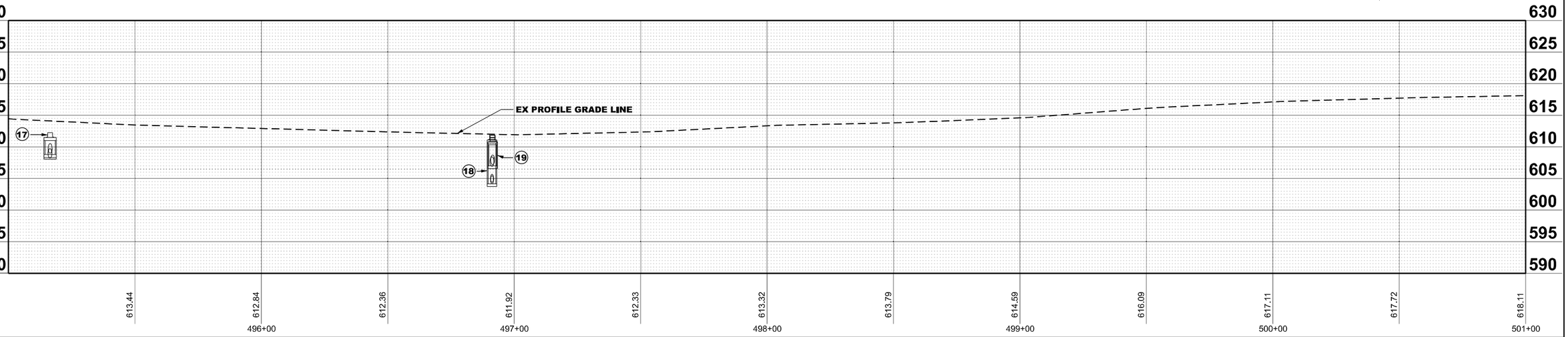

MODEL: Drainage and Utilities - Plan 8-1 [Sheet]
FILE NAME: c:\pw_work\pwidot\mcquade.jackson@illinois.gov\d0983066\D672J44 sh-drainage-phase 2.dgn

USER NAME = mcquade.jackson	DESIGNED -	REVISED -	
	DRAWN -	REVISED -	
	CHECKED -	REVISED -	
PLOT DATE = 6/26/2026	DATE -	REVISED -	

STATE OF ILLINOIS
DEPARTMENT OF TRANSPORTATION

DRAINAGE PLAN & PROFILE SHEETS

SCALE:1"=20' | SHEET 4 OF 4 SHEETS | STA. 495+00.00 TO STA. 501+00.00

F.A.S RTE.	SECTION	COUNTY	TOTAL SHEETS	SHEET NO.
2585	122(RS-10,BDR-1,I-1)	*	120	67

CONTRACT NO. 72J44

ILLINOIS | FED. AID PROJECT

*BROWN, PIKE

LEGEND

- DETECTABLE WARNINGS
- TURNING SPACE
- ( ) EXISTING ELEVATION
- * SIDE CURB (0"<HEIGHT≤9")
- TYPE B CURB SPL. (9"<HEIGHT≤18")
- CONCRETE SLOPE

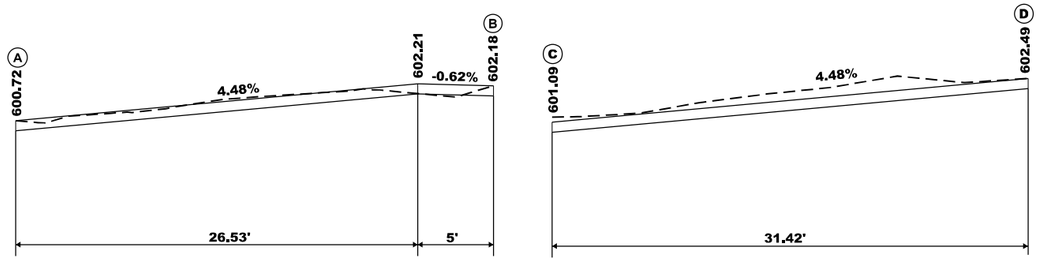

NE QUADRANT

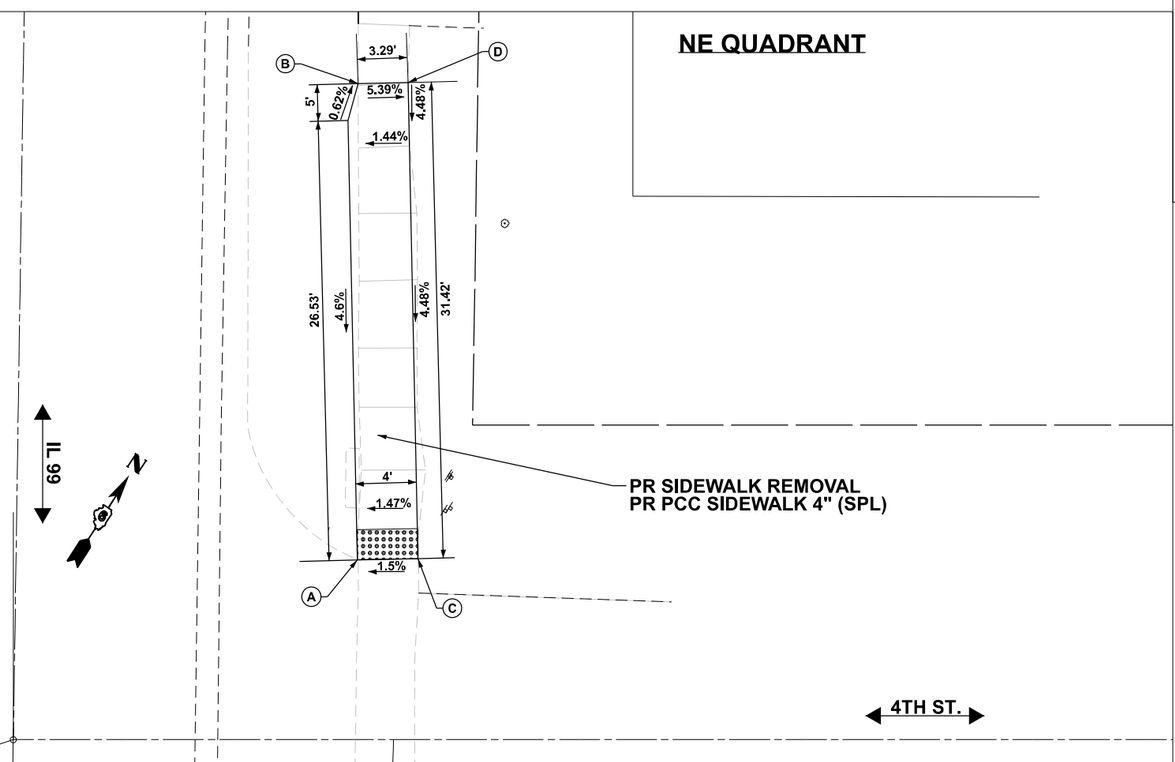

SE QUADRANT

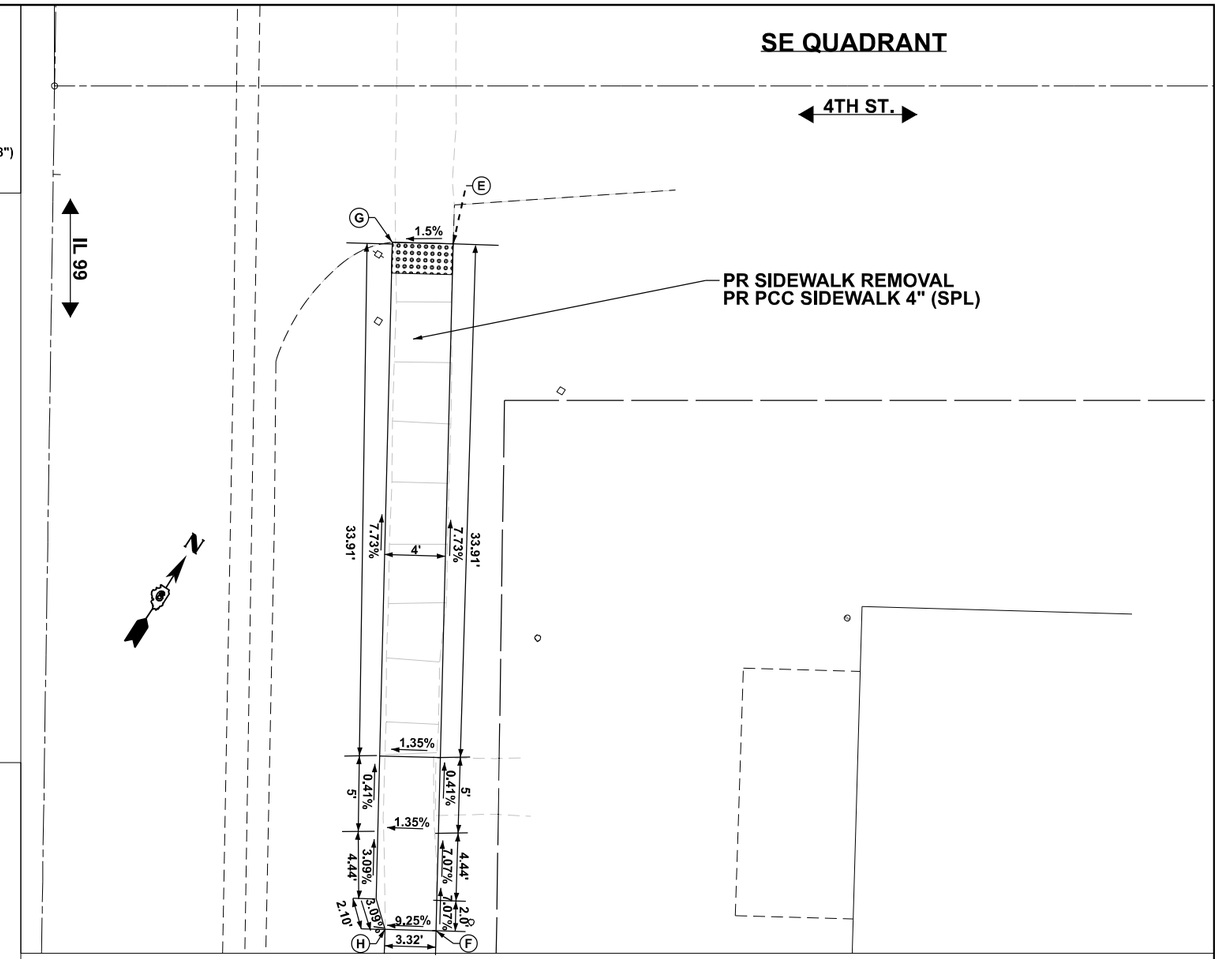

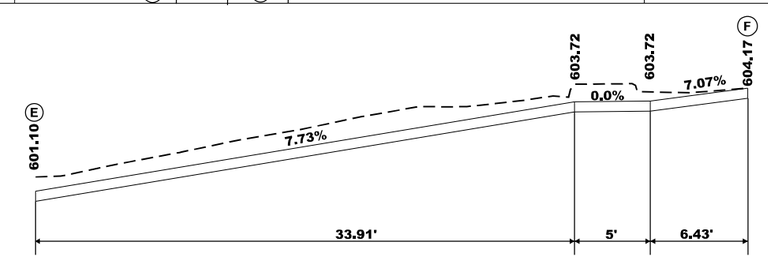

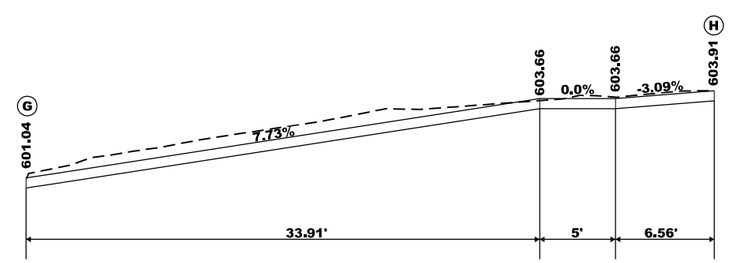

MODEL: 4th St ADA Detail [Sheet]
FILE NAME: c:\pw_work\pwidot\william.rodriguez-mendez@illinois.gov\d0983066\D672J44-sht-ADA details.dgn

USER NAME = william.rodriguez-me	DESIGNED -	REVISED -	
	DRAWN -	REVISED -	
	CHECKED -	REVISED -	
PLOT DATE = 5/15/2026	DATE -	REVISED -	

STATE OF ILLINOIS
DEPARTMENT OF TRANSPORTATION

4TH STREET ADA RAMP DETAIL SHEET

SCALE: SHEET 1 OF 12 SHEETS STA. TO STA.

F.A.S RTE.	SECTION	COUNTY	TOTAL SHEETS	SHEET NO.
2585	122(RS-10,BDR-1,I-1)	*	120	68

CONTRACT NO. 72J44

ILLINOIS FED. AID PROJECT

*BROWN, PIKE

NW QUADRANT

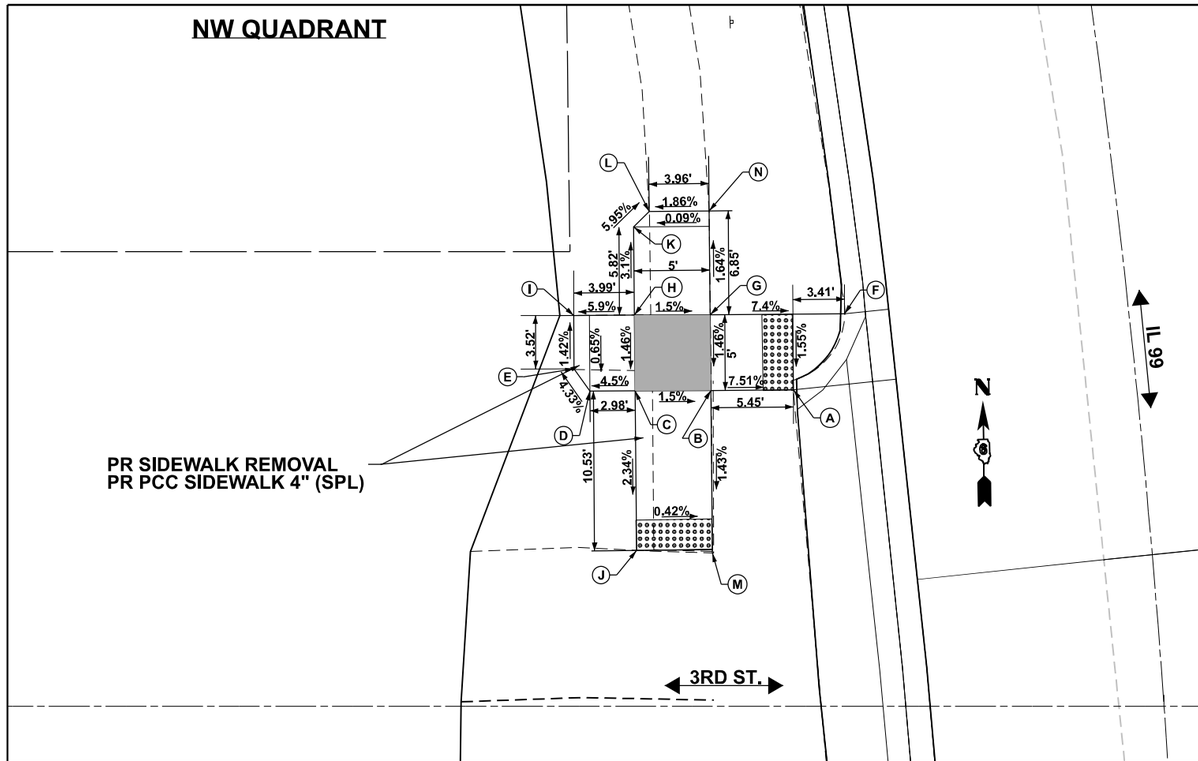

LEGEND

- DETECTABLE WARNINGS
- TURNING SPACE
- ( ) EXISTING ELEVATION
- * SIDE CURB (0"<HEIGHT≤9")
- TYPE B CURB SPL. (9"<HEIGHT≤18")
- CONCRETE SLOPE

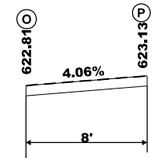

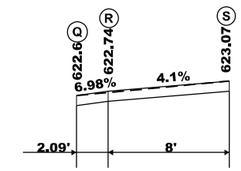

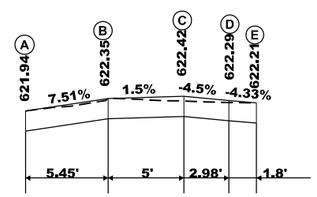

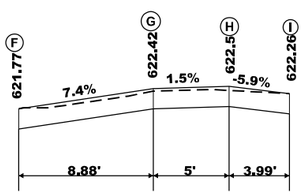

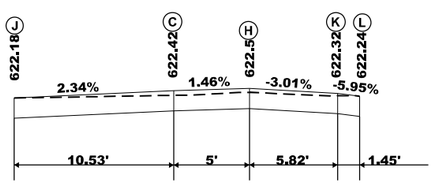

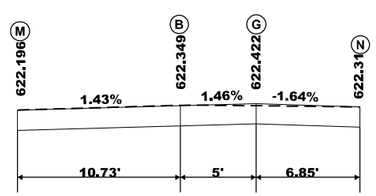

SW QUADRANT

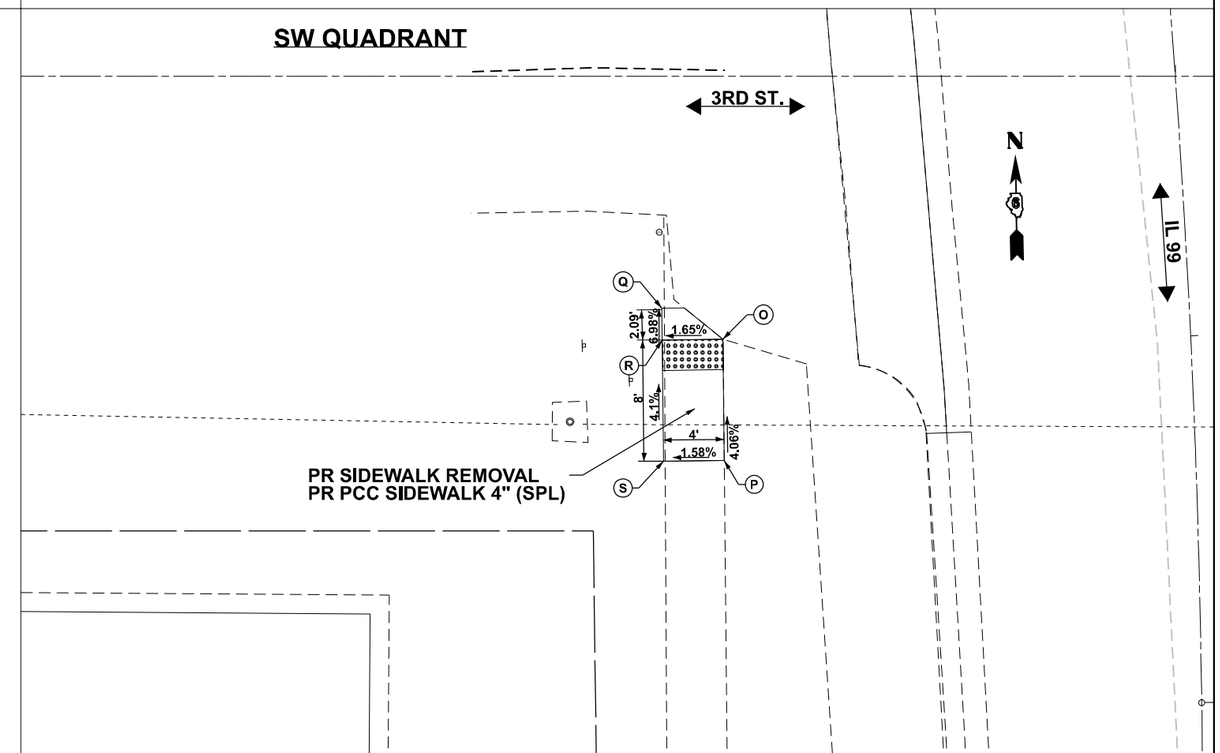

MODEL: W 3RD ST ADA DETAILS [Sheet]
FILE NAME: c:\pw_work\pwidot\william.rodriguez-mendez@illinois.gov\d0983066\D672J44-sht-ADA details.dgn

USER NAME = william.rodriguez-me	DESIGNED -	REVISED -	
	DRAWN -	REVISED -	
	CHECKED -	REVISED -	
PLOT DATE = 5/15/2026	DATE -	REVISED -	

STATE OF ILLINOIS
DEPARTMENT OF TRANSPORTATION

W 3RD STREET ADA RAMP DETAIL SHEET

SCALE: | SHEET 2 OF 12 SHEETS | STA. | TO STA.

F.A.S RTE.	SECTION	COUNTY	TOTAL SHEETS	SHEET NO.
2585	122(RS-10,BDR-1,I-1)	*	120	69

CONTRACT NO. 72J44

ILLINOIS | FED. AID PROJECT

*BROWN, PIKE

NE QUADRANT

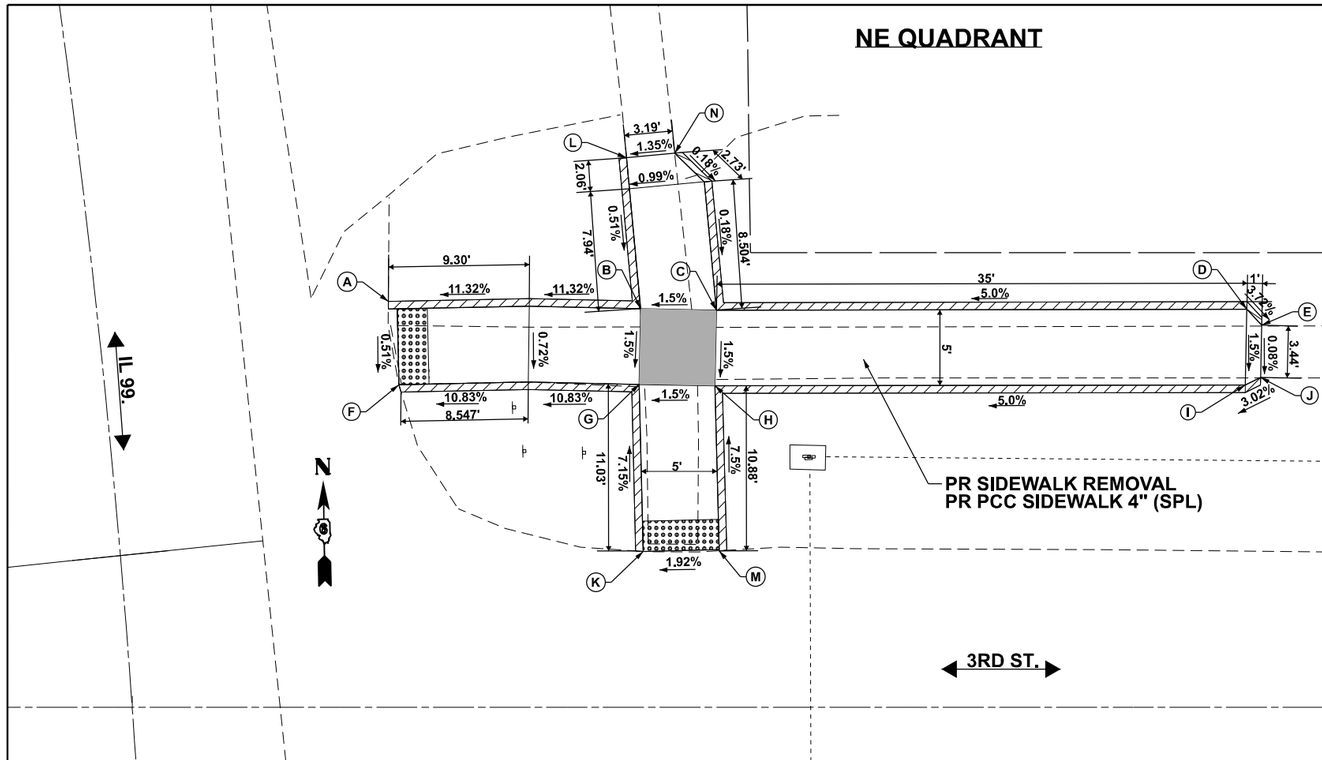

LEGEND

- DETECTABLE WARNINGS
- TURNING SPACE
- ( ) EXISTING ELEVATION
- * SIDE CURB (0"<HEIGHT≤9")
- TYPE B CURB SPL. (9"<HEIGHT≤18")
- CONCRETE SLOPE

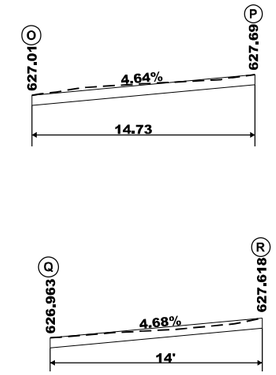

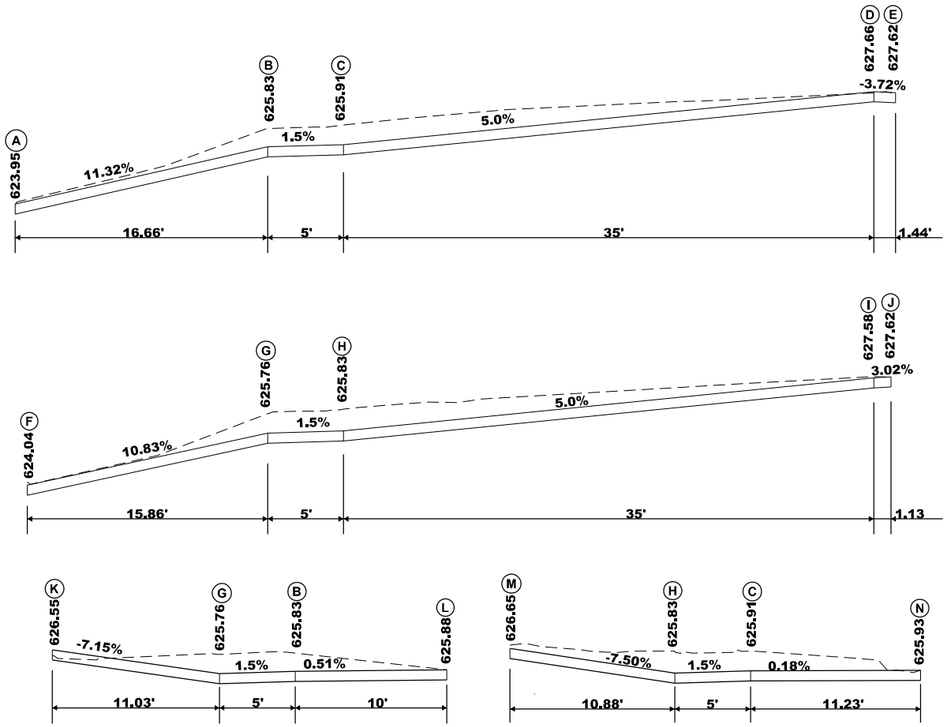

SE QUADRANT

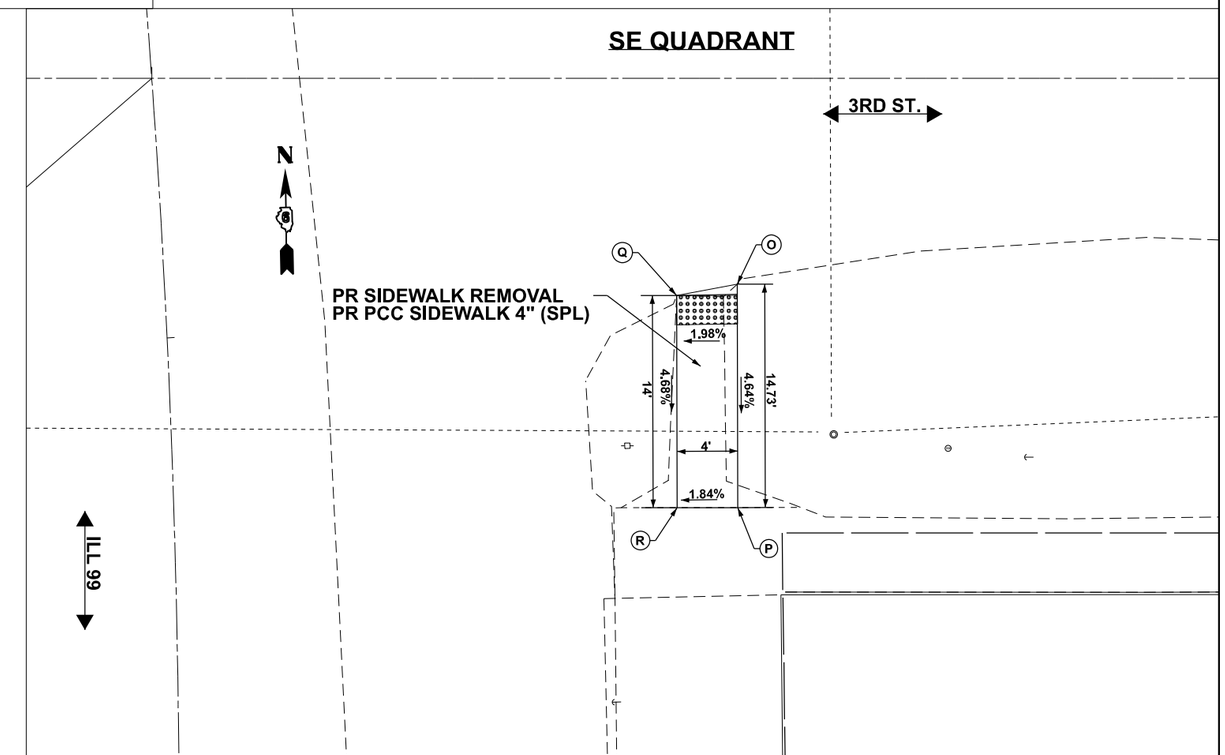

MODEL: E 3RD ST ADA DETAILS-3 [Sheet]
FILE NAME: c:\pw_work\pwidot\william.rodriguez-mendez@illinois.gov\d0983066\D672J44-sht-ADA details.dgn

USER NAME = william.rodriguez-me	DESIGNED -	REVISED -	
	DRAWN -	REVISED -	
	CHECKED -	REVISED -	
PLOT DATE = 5/15/2026	DATE -	REVISED -	

STATE OF ILLINOIS
DEPARTMENT OF TRANSPORTATION

E 3RD STREET ADA RAMP DETAIL SHEET

SCALE: | SHEET 3 OF 12 SHEETS | STA. | TO STA.

F.A.S RTE.	SECTION	COUNTY	TOTAL SHEETS	SHEET NO.
2585	122(RS-10,BDR-1,I-1)	*	120	70
		CONTRACT NO. 72J44		
		ILLINOIS	FED. AID PROJECT	

*BROWN, PIKE

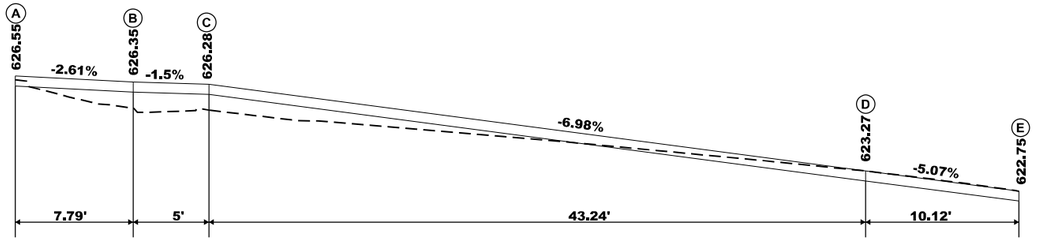

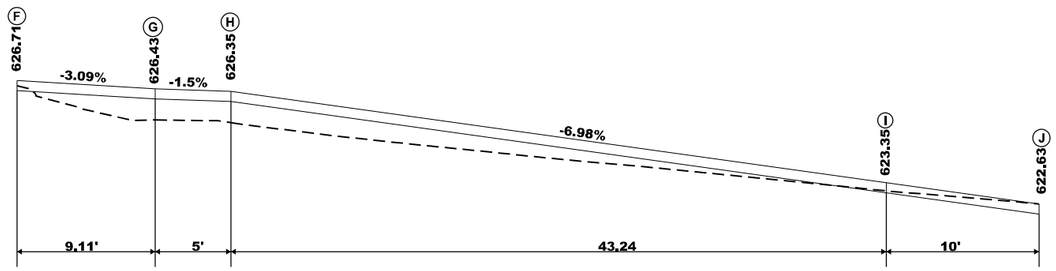

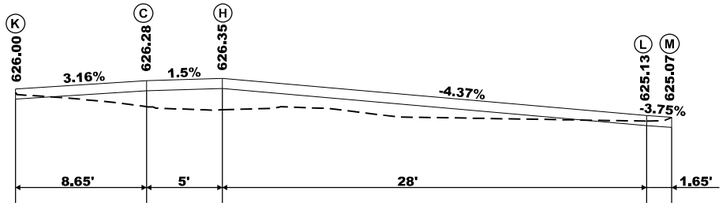

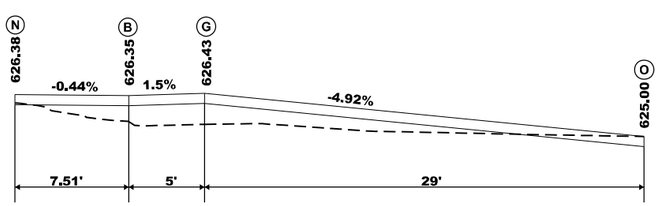

NOTE: THE PROFILE OF THE NORTHERN EDGE OF THE SIDE ROAD IS BEING RASIED, STARTING AT THE FRONT OF THE CROSSWALK TO PROVIDE A 2% CROSS-SLOPE FOR THE CROSSING, BEFORE TRANISTIONING BACK TO EXISTING OVER APPROXIAMTELY 13.5' WITH A 5.12% SLOPE.

NW QUADRANT

A	484+65.42, 25.154' RT, 626.553
B	484+65.51, 32.943' RT, 626.350
C	484+65.57, 37.943' RT, 626.275
D	484+66.10, 81.269' RT, 623.268
E	484+64.51, 91.344' RT, 622.751
F	484+60.40, 23.893' RT, 626.707
G	484+60.51, 33.005' RT, 626.425
H	484+60.57, 38.004' RT, 626.350
I	484+61.10, 81.330' RT, 623.348
J	484+61.23, 91.329' RT, 622.628
K	484+74.22, 37.837' RT, 626.002
L	484+32.57, 38.168' RT, 625.127
M	484+31.53, 36.883' RT, (625.065)
N	484+73.02, 32.851' RT, 626.383
O	484+31.51, 33.012' RT, (624.998)
P	484+76.50, 52.859' RT, 625.533
Q	484+76.30, 37.706' RT, 626.005
R	484+74.93, 32.024' RT, 626.386
S	484+66.27, 23.252' RT, 626.556
T	484+60.55, 21.815' RT, 626.710
U	484+56.04, 21.810' RT, 626.742

LEGEND

- DETECTABLE WARNINGS
- TURNING SPACE
- ( ) EXISTING ELEVATION
- * SIDE CURB (0"<HEIGHT≤9")
- TYPE B CURB SPL. (9"<HEIGHT≤18")
- CONCRETE SLOPE

NW QUADRANT

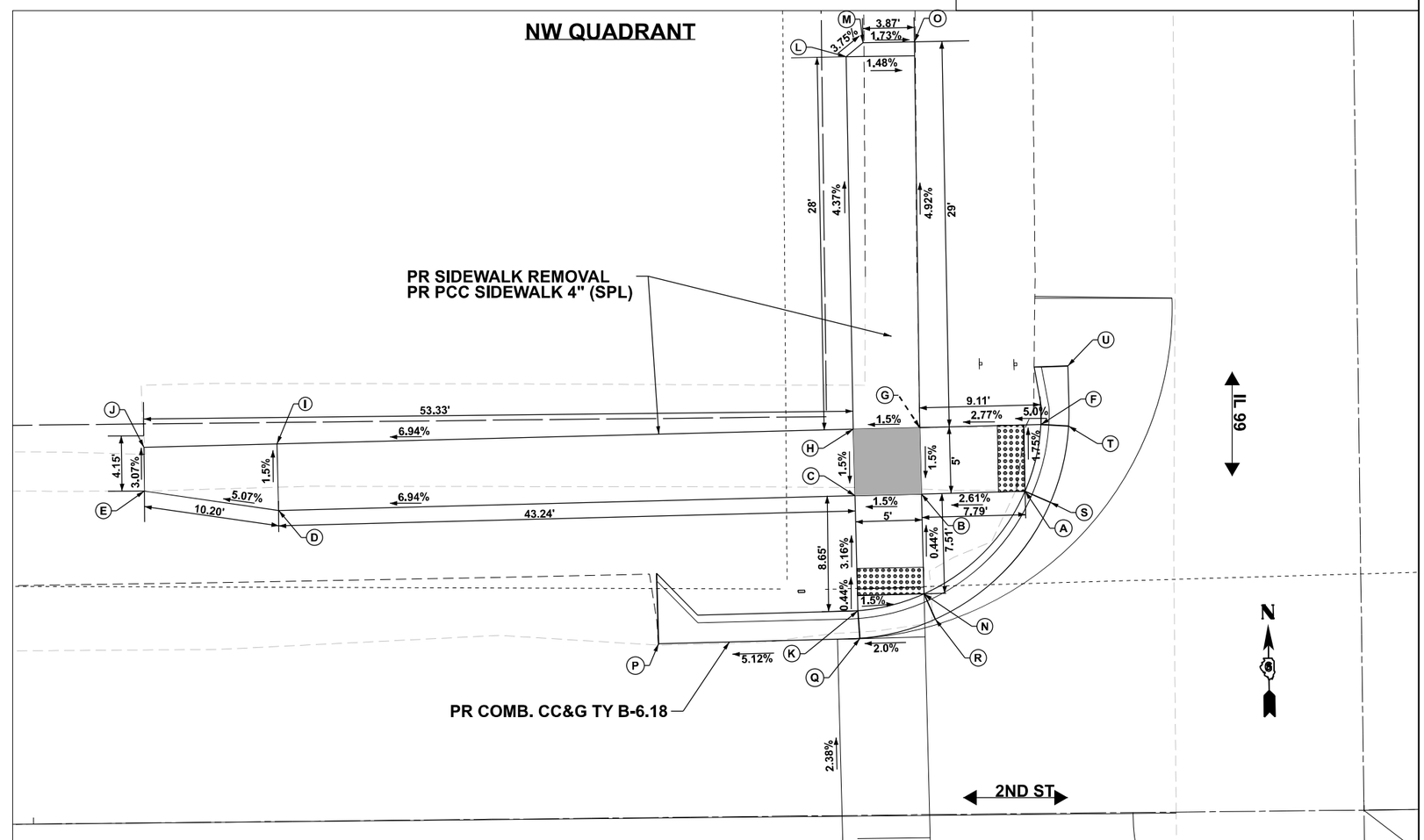

MODEL: NW 2nd Street ADA Ramp detail-2 [Sheet]
FILE NAME: c:\pw_work\pwidot\william.rodriguez-mendez@illinois.gov\d0983065\D672J44-sht-ADA details.dgn

USER NAME = william.rodriguez-me	DESIGNED -	REVISED -	
	DRAWN -	REVISED -	
	CHECKED -	REVISED -	
PLOT DATE = 5/15/2026	DATE -	REVISED -	

STATE OF ILLINOIS
DEPARTMENT OF TRANSPORTATION

NW 2ND STREET ADA RAMP DETAIL SHEET

SCALE: | SHEET 4 OF 12 SHEETS | STA. TO STA.

F.A.S RTE.	SECTION	COUNTY	TOTAL SHEETS	SHEET NO.
2585	122(RS-10,BDR-1,I-1)	*	120	71

CONTRACT NO. 72J44

ILLINOIS | FED. AID PROJECT

*BROWN, PIKE

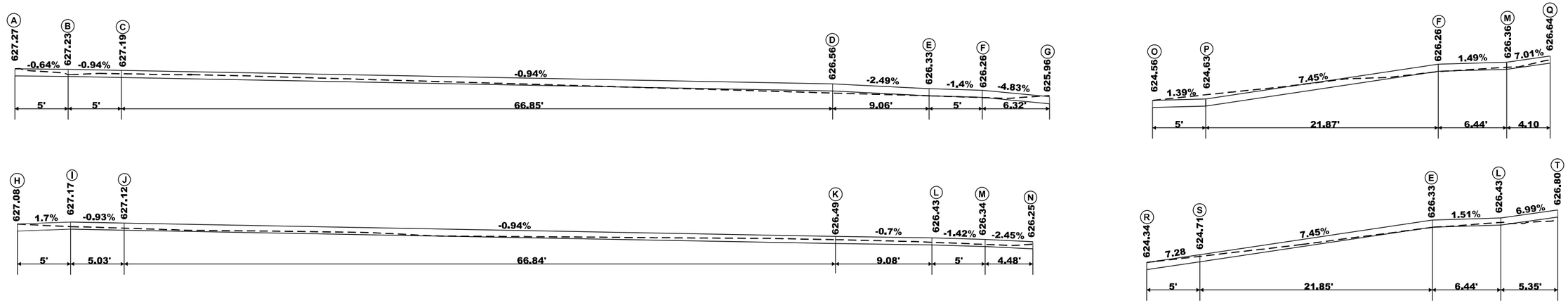

SW QUADRANT

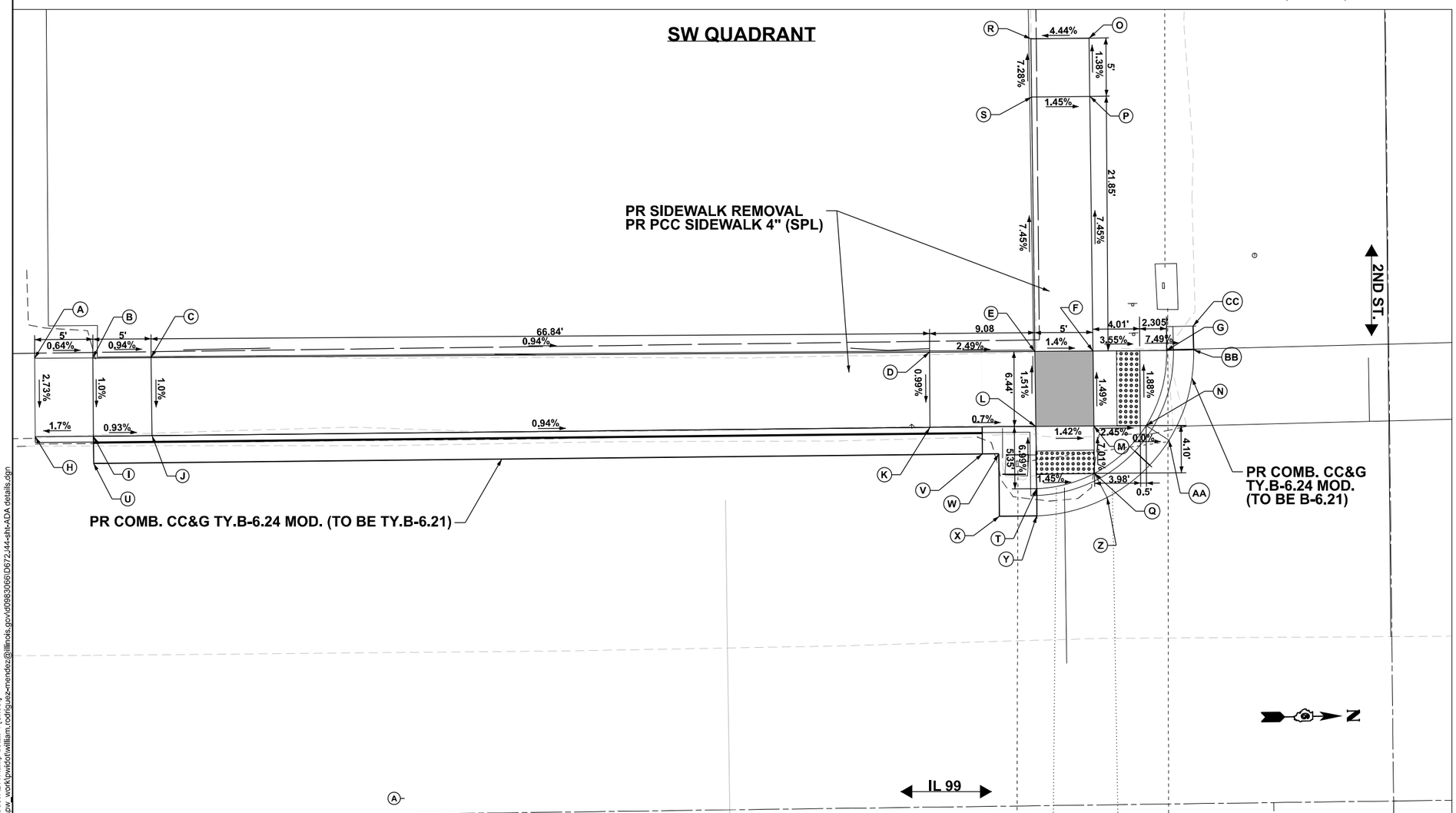

LEGEND

- DETECTABLE WARNINGS
- TURNING SPACE
- ( ) EXISTING ELEVATION
- * SIDE CURB (0"<HEIGHT≤9")
- TYPE B CURB SPL. (9"<HEIGHT≤18")
- CONCRETE SLOPE

SW QUADRANT

A	486+05.92, 39.564' RT, (627.266)
B	486+00.92, 39.532' RT, 627.234
C	485+95.92, 39.500' RT, 627.187
D	485+29.05, 39.070' RT, 626.559
E	485+20.01, 39.011' RT, 626.333
F	485+15.01, 38.979' RT, 626.263
G	485+08.69, 38.938' RT, 625.956
H	486+05.96, 32.826' RT, (627.082)
I	486+00.96, 32.812' RT, 627.167
J	485+95.94, 32.799' RT, 627.120
K	485+29.10, 32.617' RT, 626.494
L	485+20.02, 32.575' RT, 626.430
M	485+15.02, 32.543' RT, 626.359
N	485+10.54, 32.514' RT, 626.249
O	485+14.98, 65.851' RT, (624.564)
P	485+14.99, 60.851' RT, 624.633
Q	485+15.02, 28.475' RT, 626.644
R	485+19.98, 65.856' RT, (624.342)
S	485+19.99, 60.856' RT, 624.708
T	485+20.02, 27.225' RT, 626.804
U	486+00.97, 30.479' RT, (626.895)
V	485+24.63, 30.272' RT, (626.392)
W	485+23.23, 30.268' RT, (626.047)
X	485+23.24, 24.901' RT, (626.884)
Y	485+20.03, 24.892' RT, (626.850)
Z	485+13.96, 26.394' RT, (626.690)
AA	485+08.58, 31.252' RT, (626.295)
BB	485+06.37, 38.973' RT, (626.001)
CC	485+06.38, 41.007' RT, (625.896)

MODEL: 2nd Street ADA Ramp detail-4 [Sheet]
FILE NAME: c:\pw_work\pwidot\william.rodriguez-mendez@illinois.gov\d0983066\D672J44-sht-ADA details.dgn

USER NAME = william.rodriguez-me	DESIGNED -	REVISED -	
	DRAWN -	REVISED -	
	CHECKED -	REVISED -	
PLOT DATE = 5/15/2026	DATE -	REVISED -	

STATE OF ILLINOIS
DEPARTMENT OF TRANSPORTATION

SW 2ND STREET ADA RAMP DETAIL SHEET

SCALE: SHEET 5 OF 12 SHEETS STA. TO STA.

F.A.S RTE.	SECTION	COUNTY	TOTAL SHEETS	SHEET NO.
2585	122(RS-10,BDR-1,I-1)	*	120	72

CONTRACT NO. 72J44

ILLINOIS | FED. AID PROJECT

*BROWN, PIKE

LEGEND

- DETECTABLE WARNINGS
- TURNING SPACE
- ( ) EXISTING ELEVATION
- * SIDE CURB (0"<HEIGHT≤9")
- TYPE B CURB SPL. (9"<HEIGHT≤18")
- CONCRETE SLOPE

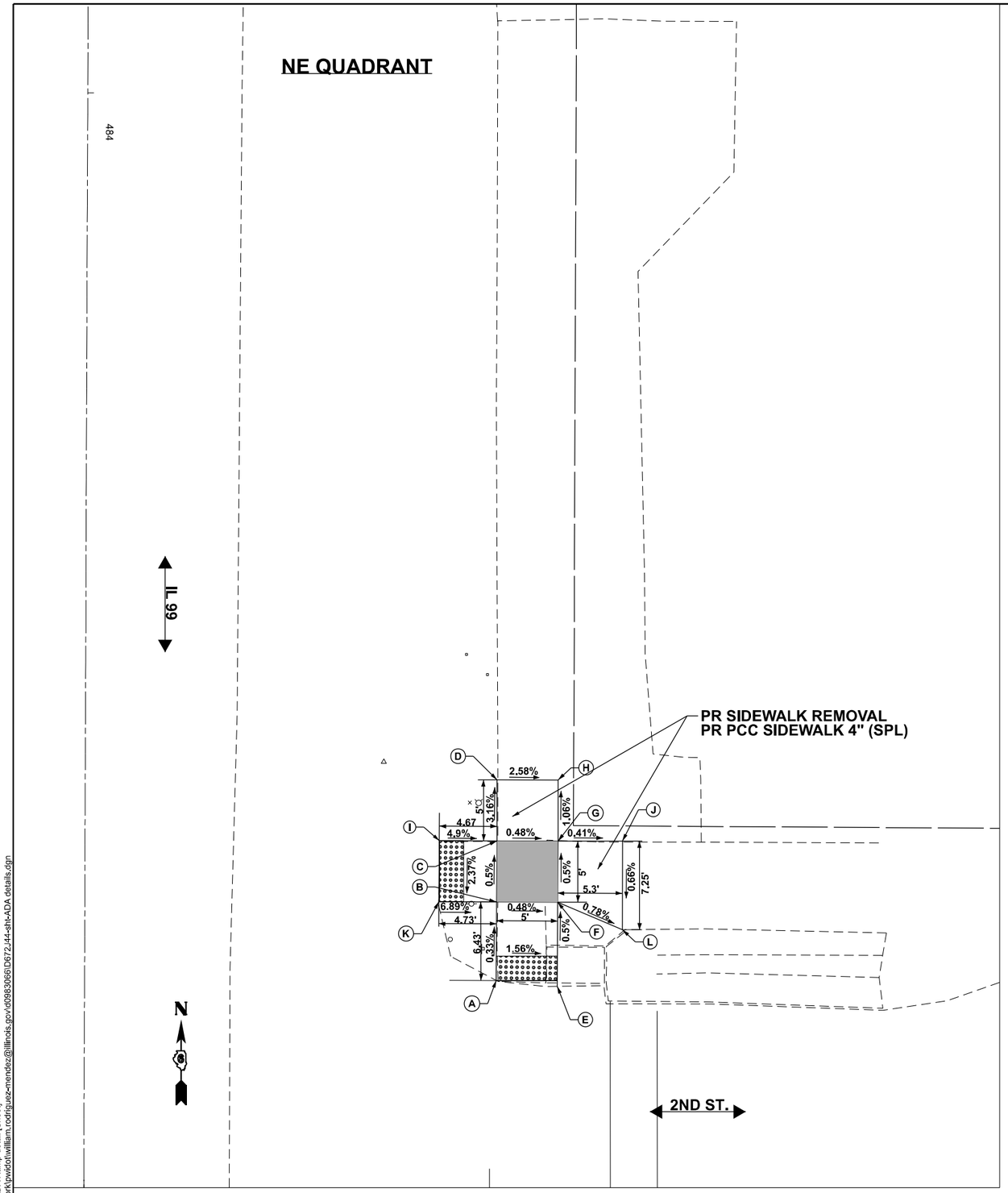

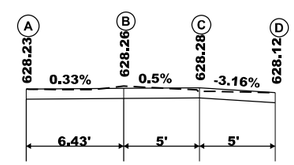

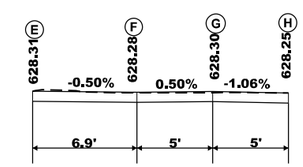

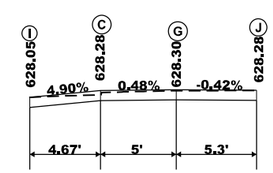

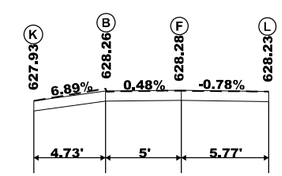

MODEL: NE 2nd ST ADA Ramp detail [Sheet]
FILE NAME: c:\pw_work\pwidot\william.rodriguez-mendez@illinois.gov\d0983066\D672J44-sht-ADA details.dgn

USER NAME = william.rodriguez-me	DESIGNED -	REVISED -	
	DRAWN -	REVISED -	
	CHECKED -	REVISED -	
PLOT DATE = 5/15/2026	DATE -	REVISED -	

STATE OF ILLINOIS
DEPARTMENT OF TRANSPORTATION

NE 2ND STREET ADA RAMP DETAIL SHEET

SCALE: | SHEET 6 OF 12 SHEETS | STA. | TO STA.

F.A.S RTE.	SECTION	COUNTY	TOTAL SHEETS	SHEET NO.
2585	122(RS-10,BDR-1,I-1)	*	120	73

CONTRACT NO. 72J44

ILLINOIS | FED. AID PROJECT

*BROWN, PIKE

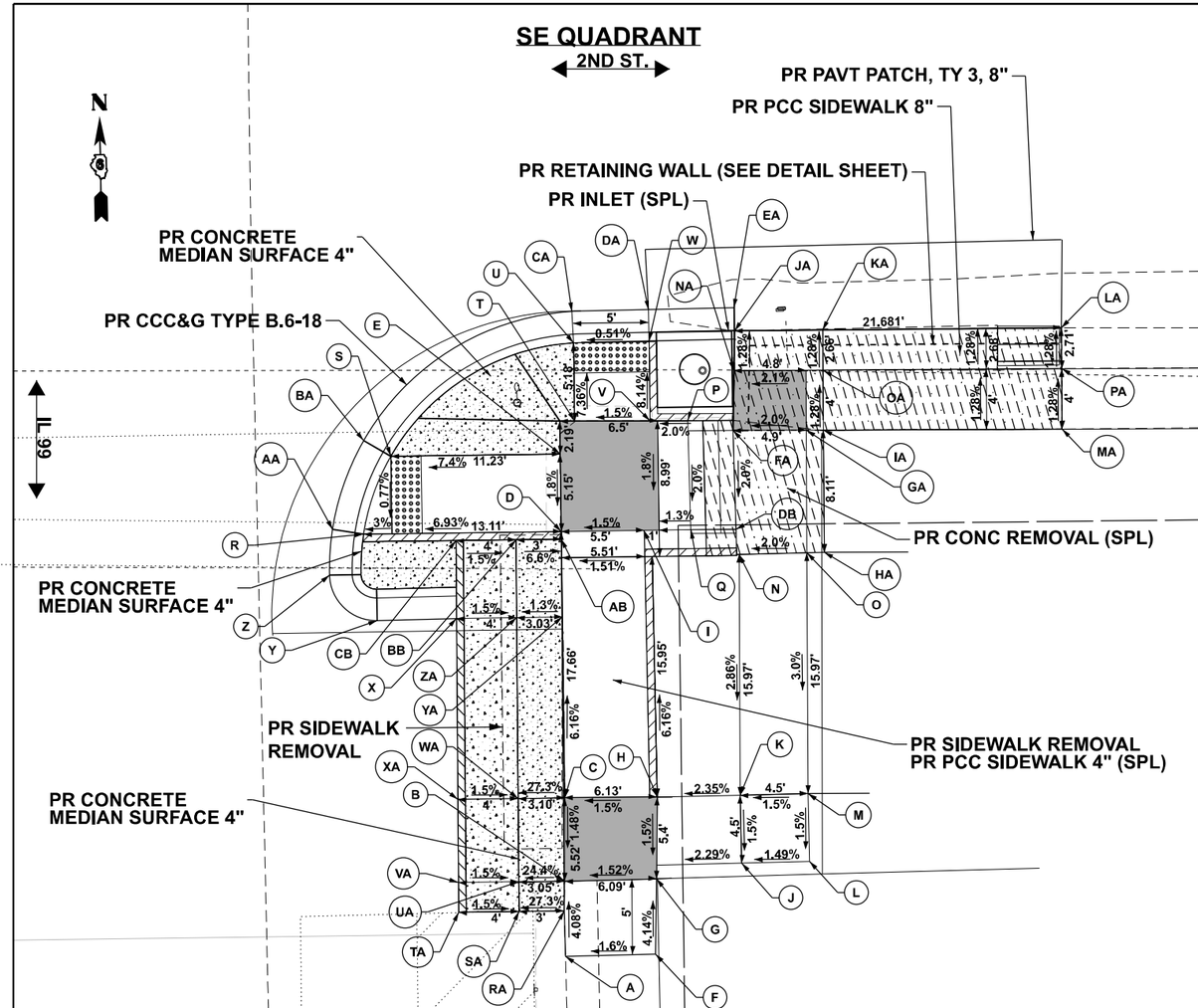

SE QUADRANT

A	485+48.31, 32.141' LT, (630.006)
B	485+43.31, 32.157' LT, 629.803
C	485+37.79, 32.237' LT, 629.884
D	485+20.13, 32.238' LT, 628.797
E	485+14.98, 32.239' LT, 628.89
F	485+48.22, 38.119' LT, (630.102)
G	485+43.23, 38.251' LT, 629.895
H	485+37.81, 38.369' LT, 629.976
I	485+20.12, 37.745' LT, 628.879
J	485+42.27, 43.924' LT, 630.038
K	485+37.77, 43.869' LT, 630.105
L	485+42.22, 48.423' LT, 630.105
M	485+37.72, 48.368' LT, 630.172
N	485+21.8, 44.017' LT, 630.561
O	485+21.75, 48.516' LT, 630.651
P	485+13.56, 40.726' LT, 629.066
Q	485+20.11, 40.834' LT, 628.922
R	485+20.13, 19.127' LT, 627.962
S	485+14.98, 21.080' LT, 628.058
T	485+12.81, 33.729' LT, 628.944
U	485+07.62, 33.736' LT, 628.563
V	485+12.87, 38.729' LT, 629.019
W	485+07.57, 38.729' LT, 628.588
X	485+25.8, 25.209' LT, 629.061
Y	485+25.87, 19.958' LT, (628.189)
Z	485+22.82, 16.838' LT, (627.975)
AA	485+19.79, 17.072' LT, (627.966)
BA	485+13.92, 19.215' LT, (628.062)
CA	485+05.55, 33.133 LT, (628.581)
DA	485+05.49, 38.210' LT, (628.607)
EA	485+05.44, 43.894' LT, (628.687)
FA	485+13.58, 43.728' LT, 630.722
GA	485+13.65, 48.576' LT, 630.82
HA	485+21.74, 49.662' LT, 630.686
IA	485+13.63, 49.713' LT, 630.852
JA	485+06.96, 43.909' LT, 630.634
KA	485+06.99, 49.743' LT, 630.766
LA	485+07.06, 65.579' LT, 630.940
MA	485+13.77, 65.554' LT, 631.026
NA	485+09.61, 43.824' LT, 630.668
OA	485+09.65, 49.731' LT, 630.801
PA	485+09.75, 65.569' LT, 630.978
RA	485+45.28, 32.098' LT, 629.883
SA	485+45.28, 29.098' LT, 629.065
TA	485+45.28, 25.098' LT, 629.125
UA	485+43.31, 29.109' LT, 629.059
VA	485+43.3, 25.109' LT, 629.119
WA	485+37.79, 29.141' LT, 629.041
XA	485+37.79, 25.141' LT, 629.101
YA	485+25.79, 32.238' LT, 629.041
ZA	485+25.8, 29.209' LT, 629.001
AB	485+20.63, 32.238' LT, 628.788
BB	485+20.63, 29.238' LT, 628.984
CB	485+20.63, 25.238' LT, 629.044
DB	485+20.13, 43.826' LT, 630.591

LEGEND

- DETECTABLE WARNINGS
- TURNING SPACE
- ( ) EXISTING ELEVATION
- * SIDE CURB (0"<HEIGHT≤9")
- TYPE B CURB SPL. (9"<HEIGHT≤18")
- CONCRETE SLOPE

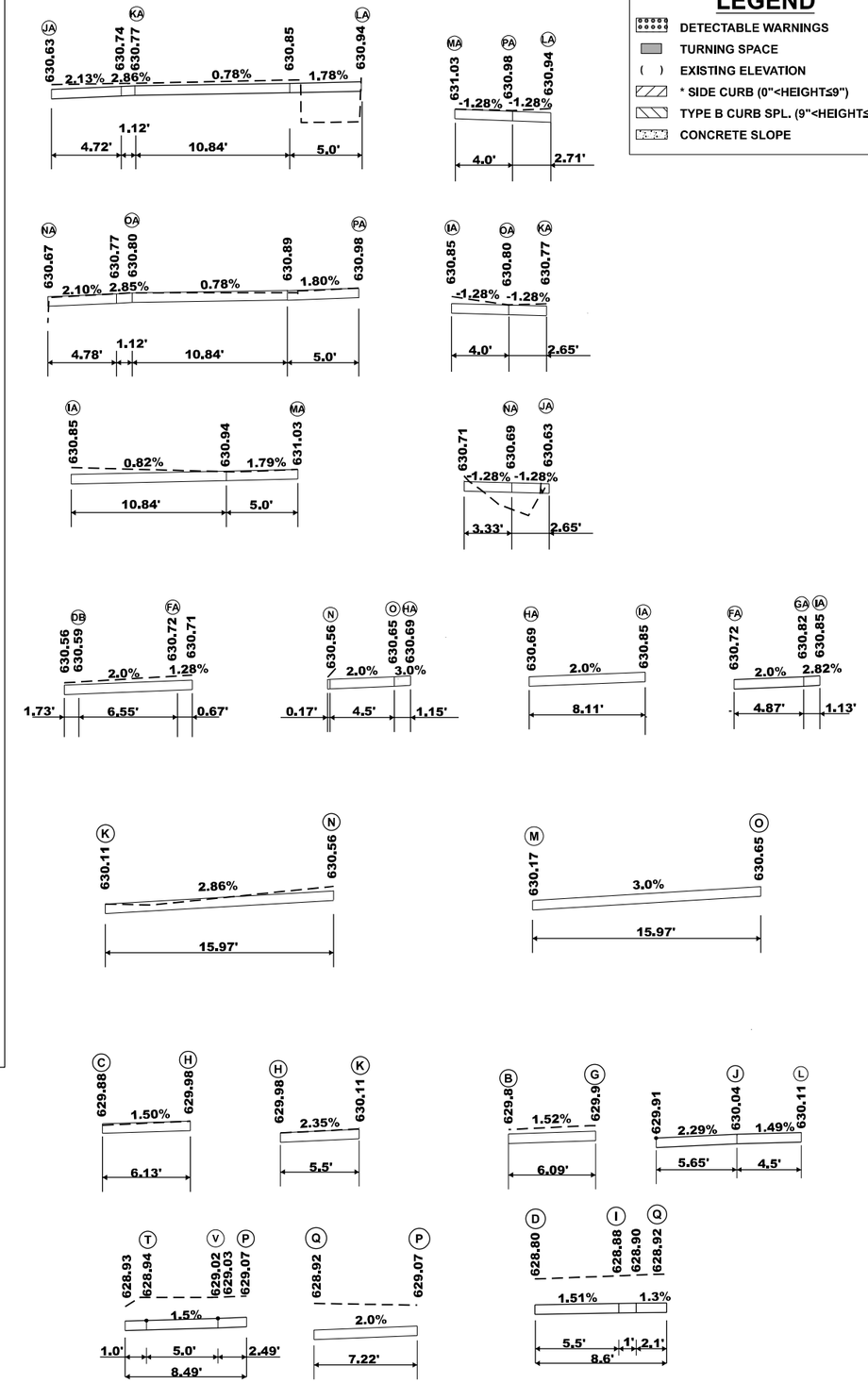

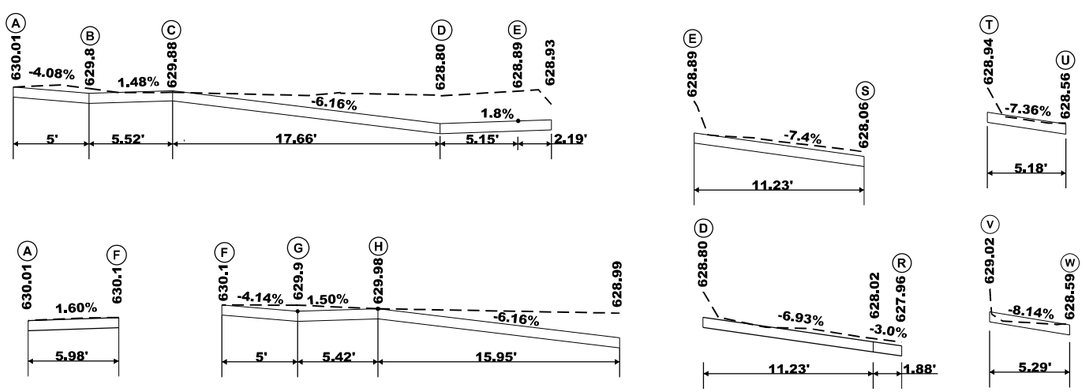

MODEL: SE 2nd Street ADA Ramp detail-3 [Sheet]
FILE NAME: c:\pw_work\pwidot\mcquade.jackson\d0983056\D672J44-sht-ADA details.dgn

USER NAME = mcquade.jackson	DESIGNED -	REVISED -	
	DRAWN -	REVISED -	
	CHECKED -	REVISED -	
PLOT DATE = 6/30/2026	DATE -	REVISED -	

STATE OF ILLINOIS
DEPARTMENT OF TRANSPORTATION

SE 2ND STREET ADA RAMP DETAIL SHEET

SCALE: | SHEET 7 OF 12 SHEETS | STA. | TO STA.

F.A.S RTE.	SECTION	COUNTY	TOTAL SHEETS	SHEET NO.
2585	122(RS-10,BDR-1,I-1)	*	120	74

CONTRACT NO. 72J44

ILLINOIS | FED. AID PROJECT

*BROWN, PIKE

NW QUADRANT

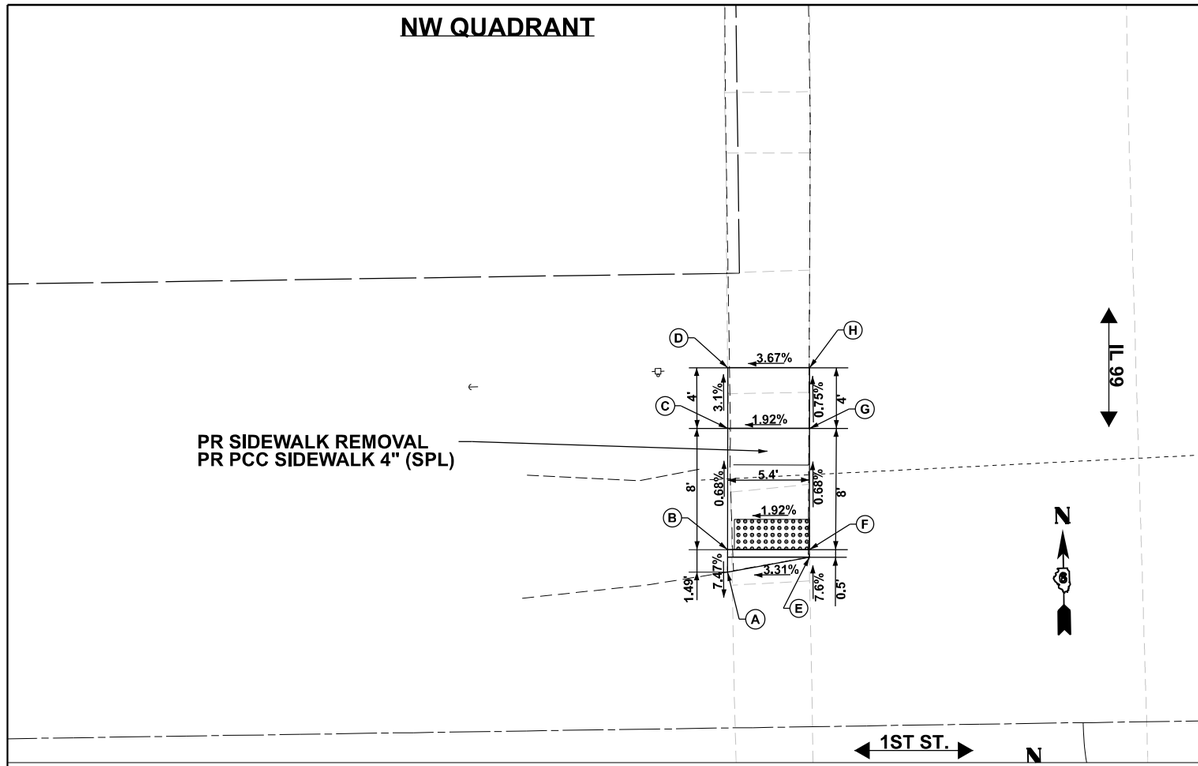

LEGEND

- DETECTABLE WARNINGS
- TURNING SPACE
- ( ) EXISTING ELEVATION
- * SIDE CURB (0"<HEIGHT≤9")
- TYPE B CURB SPL. (9"<HEIGHT≤18")
- CONCRETE SLOPE

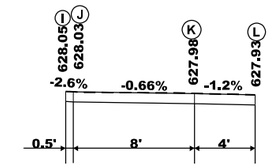

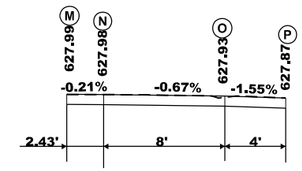

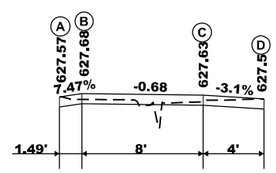

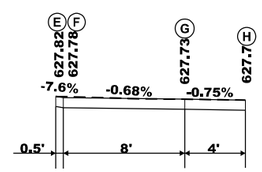

SW QUADRANT

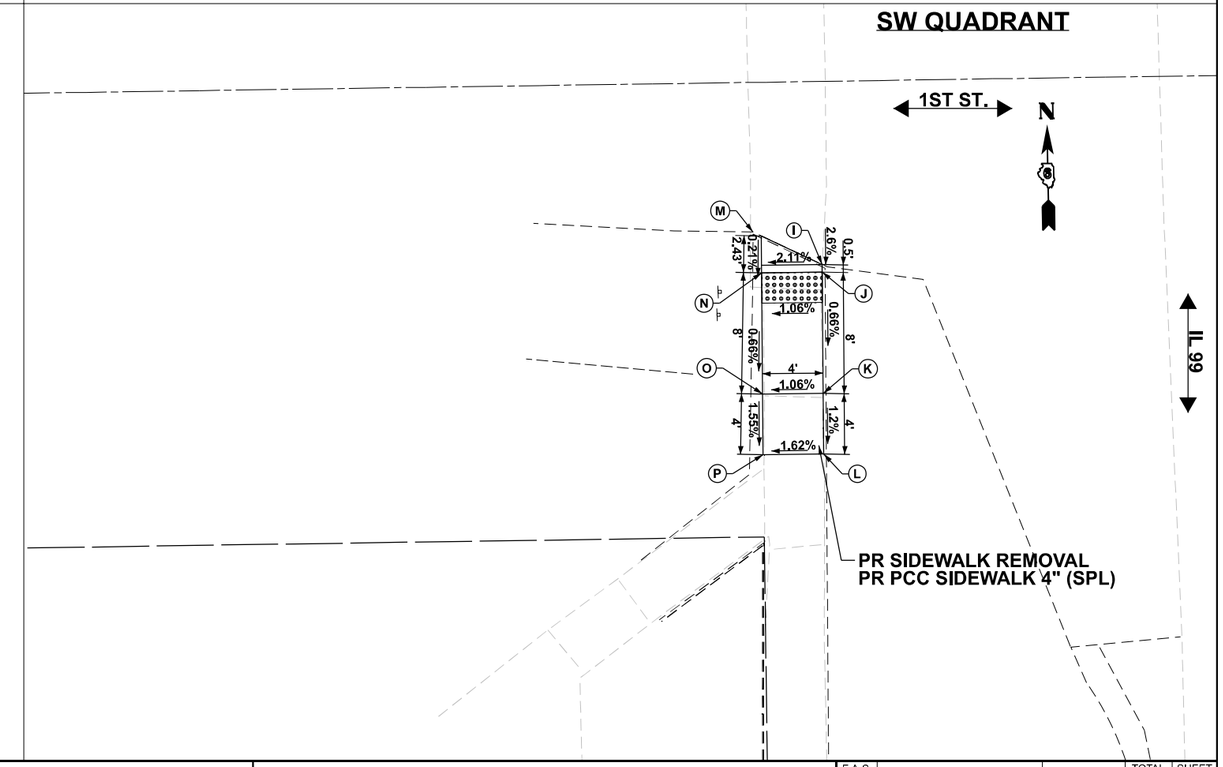

MODEL: W 1ST ST ADA DETAILS [Sheet]
FILE NAME: c:\pw_work\pwidot\william.rodriguez-mendez@illinois.gov\d0983065\D672J44-sht-ADA details.dgn

USER NAME = william.rodriguez-me	DESIGNED -	REVISED -	
	DRAWN -	REVISED -	
	CHECKED -	REVISED -	
PLOT DATE = 5/15/2026	DATE -	REVISED -	

STATE OF ILLINOIS
DEPARTMENT OF TRANSPORTATION

W 1ST STREET ADA RAMP DETAIL SHEET

SCALE: | SHEET 8 OF 12 SHEETS | STA. | TO STA.

F.A.S RTE.	SECTION	COUNTY	TOTAL SHEETS	SHEET NO.
2585	122(RS-10,BDR-1,I-1)	*	120	75

CONTRACT NO. 72J44

ILLINOIS | FED. AID PROJECT

*BROWN, PIKE

NE QUADRANT

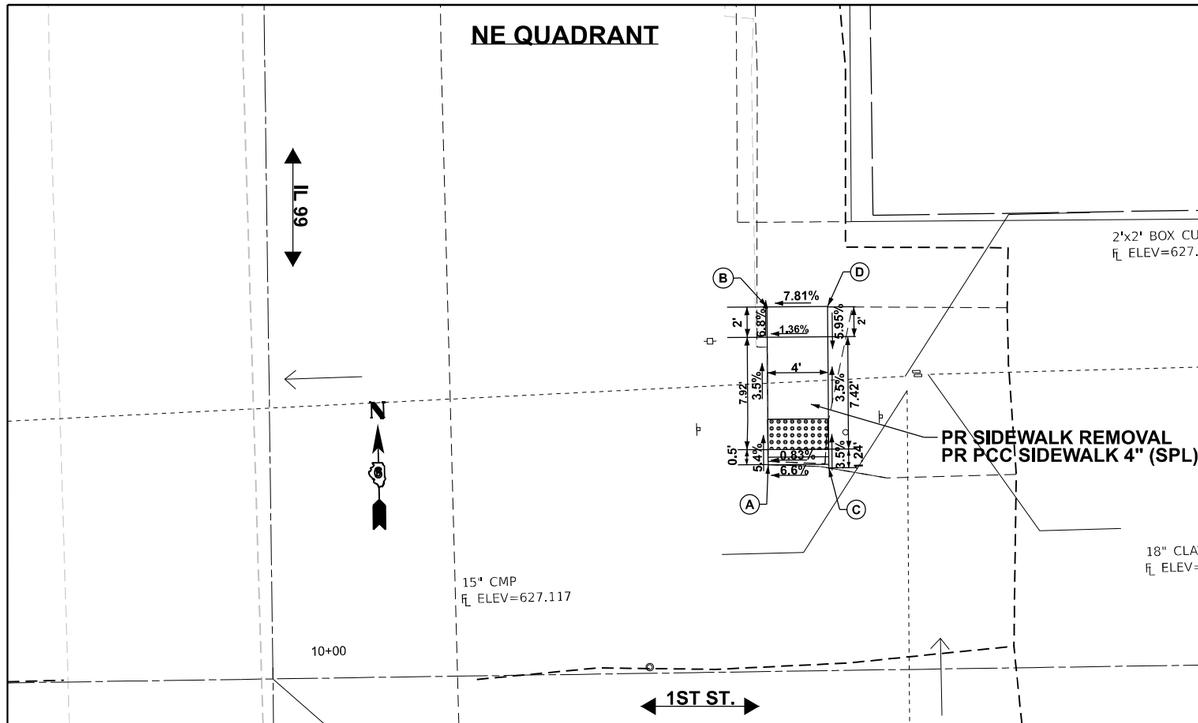

LEGEND

- DETECTABLE WARNINGS
- TURNING SPACE
- ( ) EXISTING ELEVATION
- * SIDE CURB (0"<HEIGHT≤9")
- TYPE B CURB SPL. (9"<HEIGHT≤18")
- CONCRETE SLOPE

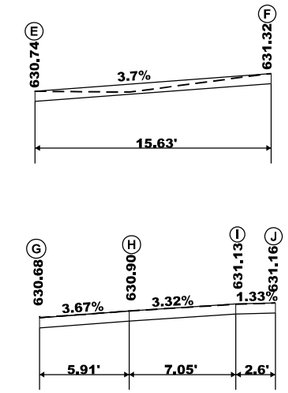

SE QUADRANT

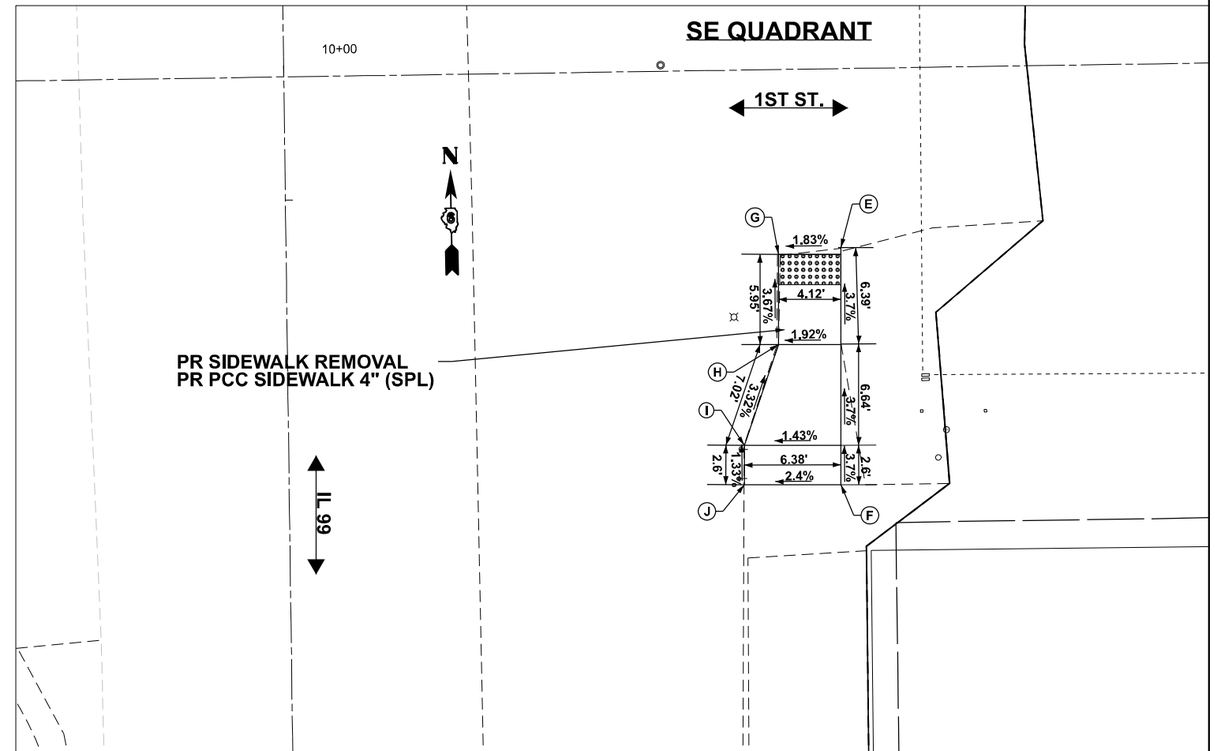

MODEL: E 1st Street ADA Ramp detail [Sheet]
FILE NAME: c:\pw_work\pwidot\william.rodriguez-mendez@illinois.gov\d0983066\D672J44-sht-ADA details.dgn

USER NAME = william.rodriguez-me	DESIGNED -	REVISED -	STATE OF ILLINOIS DEPARTMENT OF TRANSPORTATION
	DRAWN -	REVISED -	
	CHECKED -	REVISED -	
PLOT DATE = 5/15/2026	DATE -	REVISED -	

E 1ST STREET ADA RAMP DETAIL SHEET

SCALE: | SHEET 9 OF 12 SHEETS | STA. | TO STA.

F.A.S RTE.	SECTION	COUNTY	TOTAL SHEETS	SHEET NO.
2585	122(RS-10,BDR-1,I-1)	*	120	76

CONTRACT NO. 72J44

ILLINOIS | FED. AID PROJECT

*BROWN, PIKE

NW QUADRANT

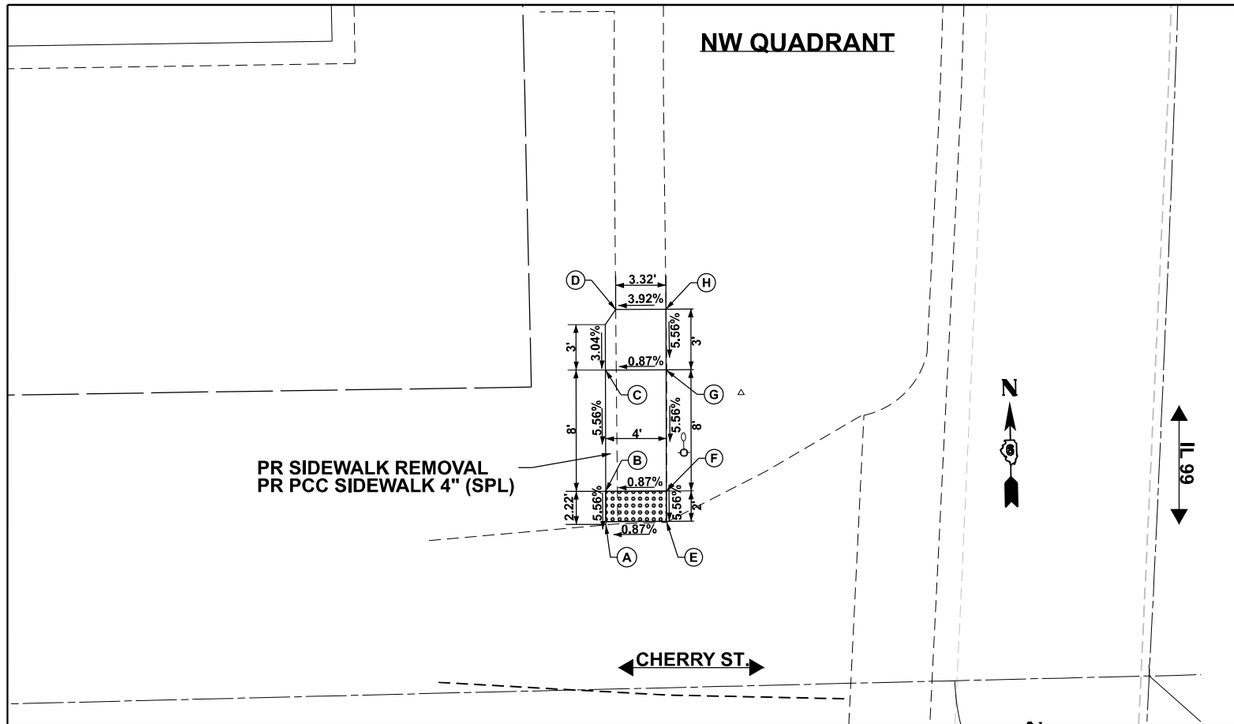

LEGEND

- DETECTABLE WARNINGS
- TURNING SPACE
- ( ) EXISTING ELEVATION
- * SIDE CURB (0"<HEIGHT≤9")
- TYPE B CURB SPL. (9"<HEIGHT≤18")
- CONCRETE SLOPE

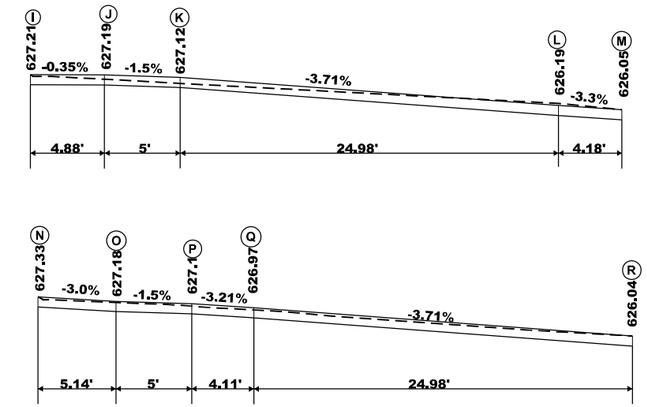

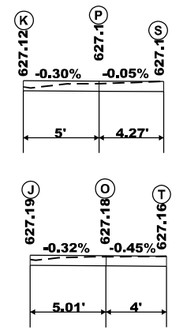

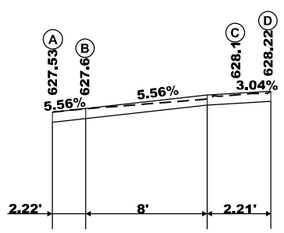

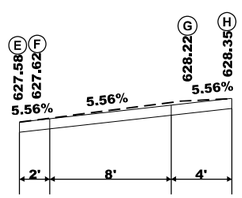

SW QUADRANT

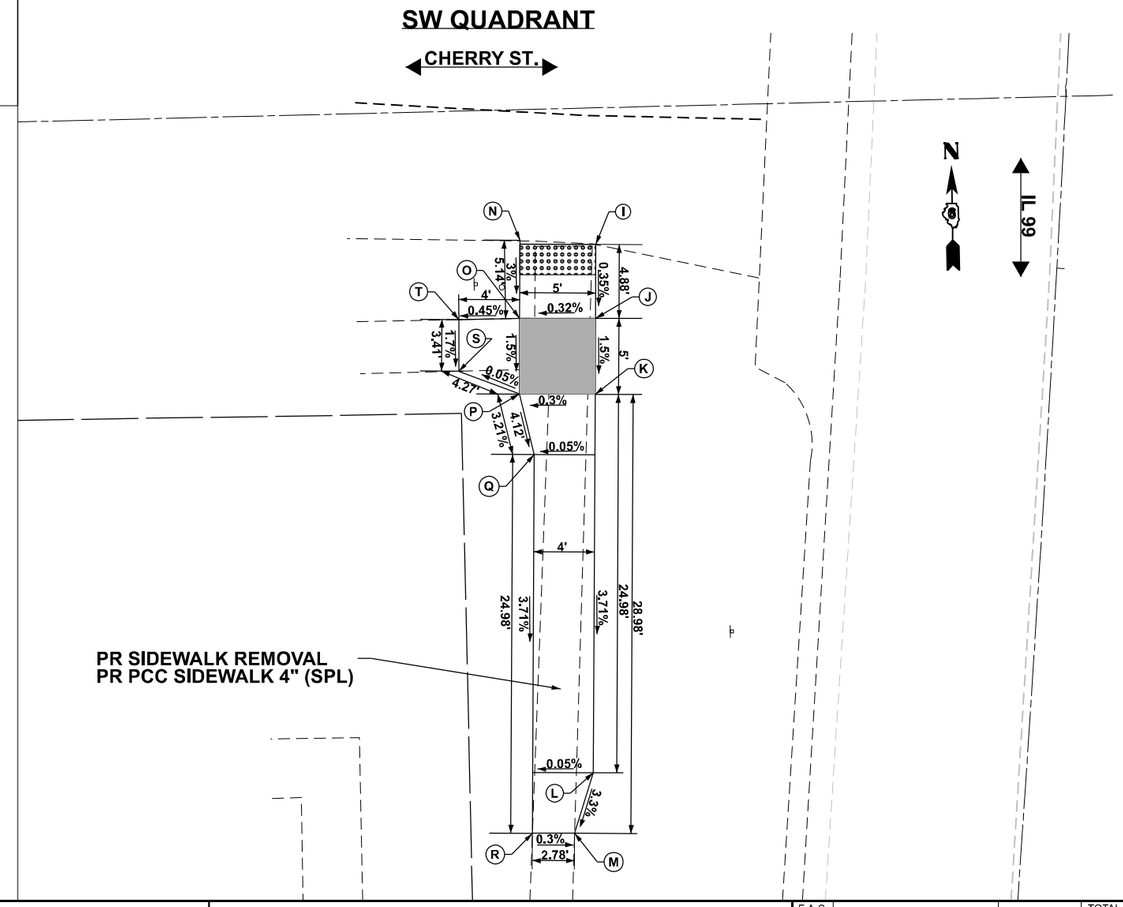

MODEL: W Cherry Street ADA Ramp detail [Sheet]
FILE NAME: c:\pw_work\pwidot\william.rodriguez-mendez@illinois.gov\d0983066\D672J44-sht-ADA details.dgn

USER NAME = william.rodriguez-me	DESIGNED -	REVISED -	STATE OF ILLINOIS DEPARTMENT OF TRANSPORTATION
	DRAWN -	REVISED -	
	CHECKED -	REVISED -	
PLOT DATE = 5/15/2026	DATE -	REVISED -	

W CHERRY STREET ADA RAMP DETAIL SHEET

SCALE: | SHEET 10 OF 12 SHEETS | STA. | TO STA.

F.A.S RTE.	SECTION	COUNTY	TOTAL SHEETS	SHEET NO.
2585	122(RS-10,BDR-1,I-1)	*	120	77

CONTRACT NO. 72J44

ILLINOIS | FED. AID PROJECT

*BROWN, PIKE

NE QUADRANT

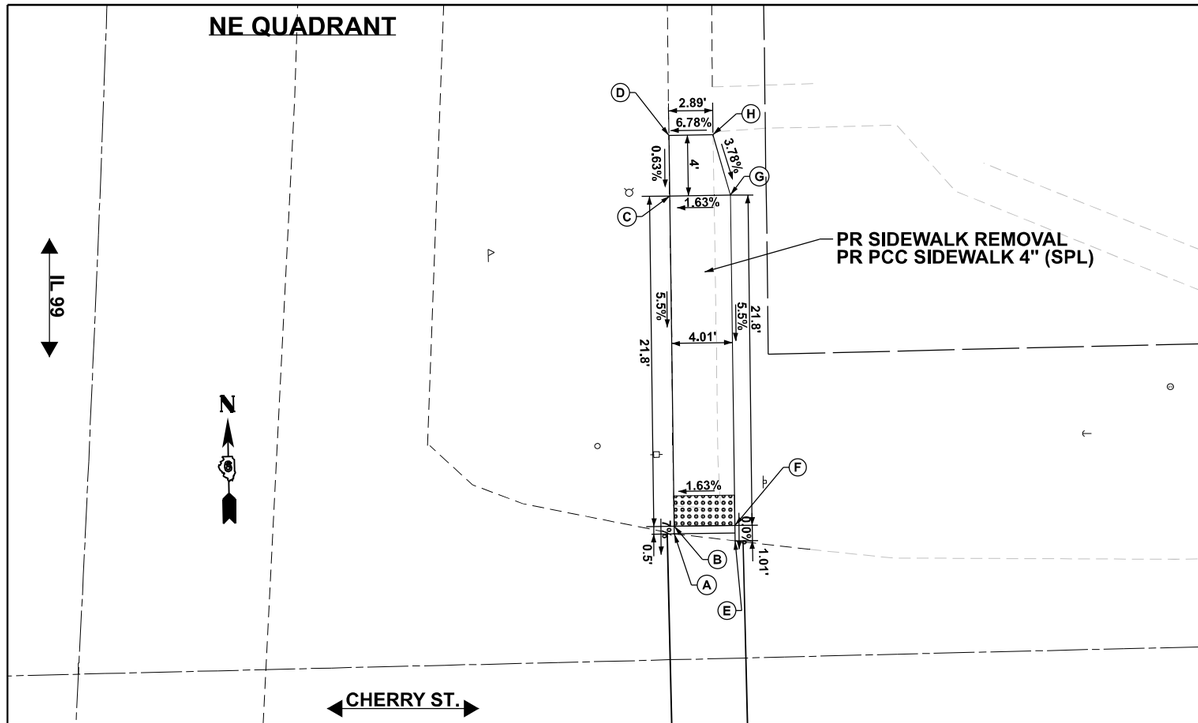

LEGEND

- DETECTABLE WARNINGS
- TURNING SPACE
- ( ) EXISTING ELEVATION
- * SIDE CURB (0"<HEIGHT≤9")
- TYPE B CURB SPL. (9"<HEIGHT≤18")
- CONCRETE SLOPE

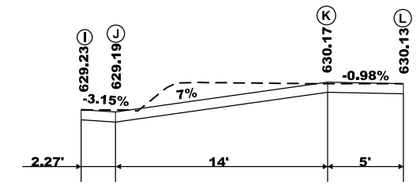

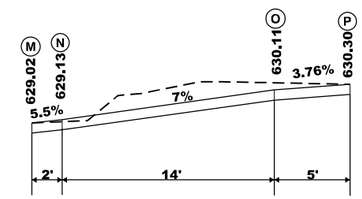

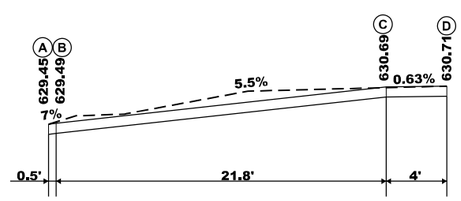

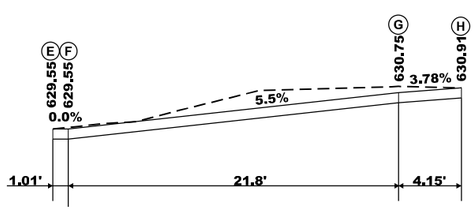

SE QUADRANT

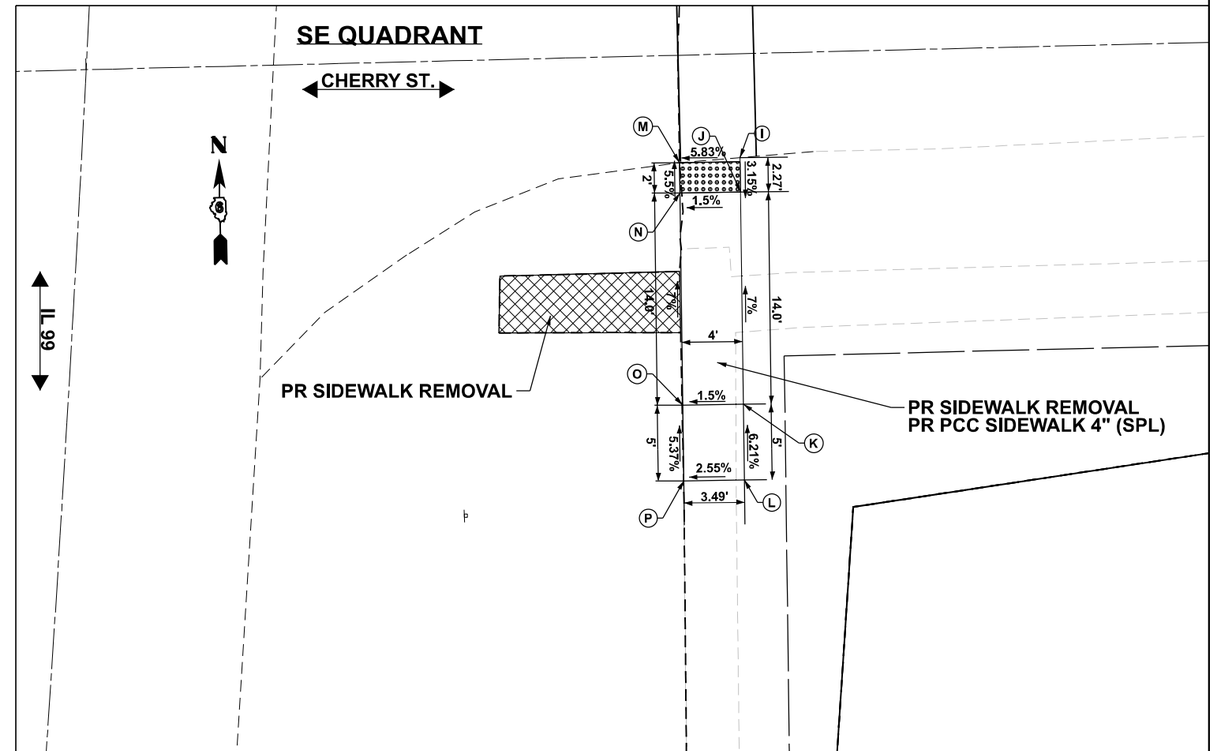

USER NAME = Sylvette.Cancel	DESIGNED -	REVISED -
	DRAWN -	REVISED -
	CHECKED -	REVISED -
PLOT DATE = 6/25/2026	DATE -	REVISED -

STATE OF ILLINOIS
DEPARTMENT OF TRANSPORTATION

E CHERRY STREET ADA RAMP DETAIL SHEET

SCALE: | SHEET 11 OF 12 SHEETS | STA. | TO STA.

F.A.S RTE.	SECTION	COUNTY	TOTAL SHEETS	SHEET NO.
2585	122(RS-10,BDR-1,I-1)	*	120	78

CONTRACT NO. 72J44

ILLINOIS | FED. AID PROJECT

*BROWN, PIKE

MODEL: E Cherry Street ADA Ramp detail [Sheet]
FILE NAME: c:\pw_work\pwidot\cancelsld\D383066\D672J44-sht-ADA details.dgn

NW QUADRANT

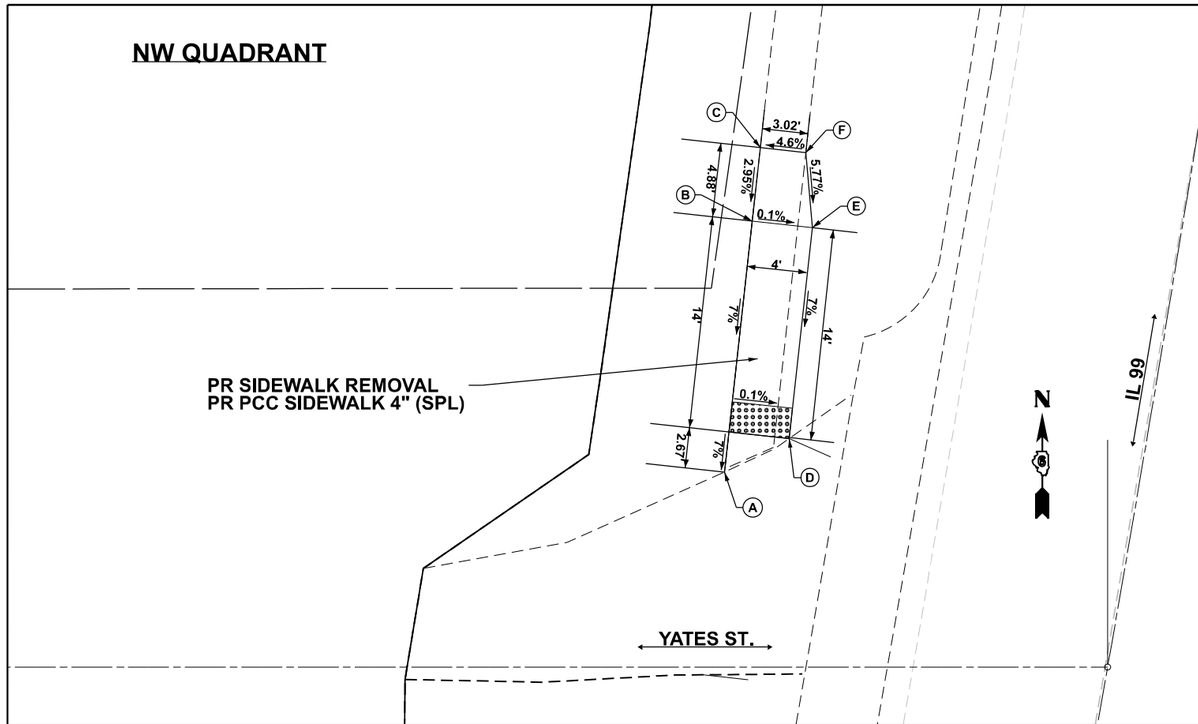

LEGEND

- DETECTABLE WARNINGS
- TURNING SPACE
- ( ) EXISTING ELEVATION
- * SIDE CURB (0"<HEIGHT≤9")
- TYPE B CURB SPL. (9"<HEIGHT≤18")
- CONCRETE SLOPE

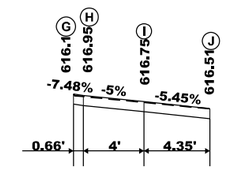

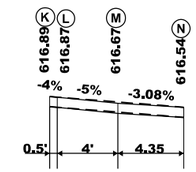

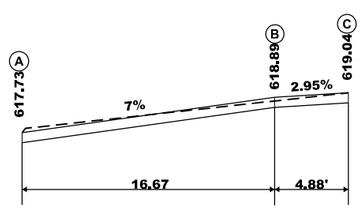

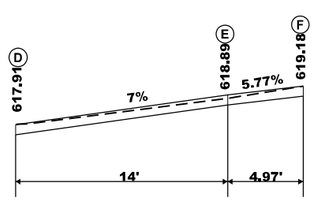

SW QUADRANT

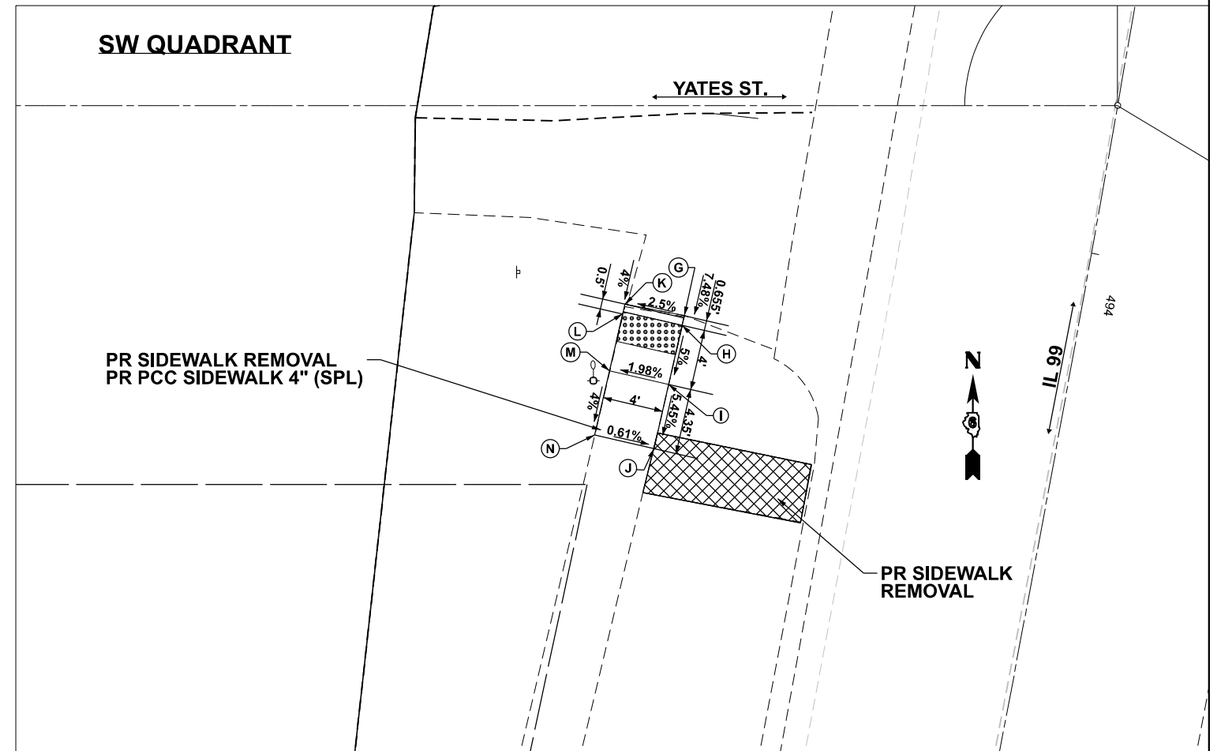

MODEL: Yates Street ADA Ramp detail [Sheet]
FILE NAME: c:\pw_work\pwidot\cancelsid\D983066\D672J44-sht-ADA details.dgn

USER NAME = Sylvette.Cancel	DESIGNED -	REVISED -	
	DRAWN -	REVISED -	
	CHECKED -	REVISED -	
PLOT DATE = 6/25/2026	DATE -	REVISED -	

STATE OF ILLINOIS
DEPARTMENT OF TRANSPORTATION

YATES STREET ADA RAMP DETAIL SHEET

SCALE: | SHEET 12 OF 12 SHEETS | STA. | TO STA.

F.A.S RTE.	SECTION	COUNTY	TOTAL SHEETS	SHEET NO.
2585	122(RS-10,BDR-1,I-1)	*	120	79

CONTRACT NO. 72J44

ILLINOIS | FED. AID PROJECT

*BROWN, PIKE

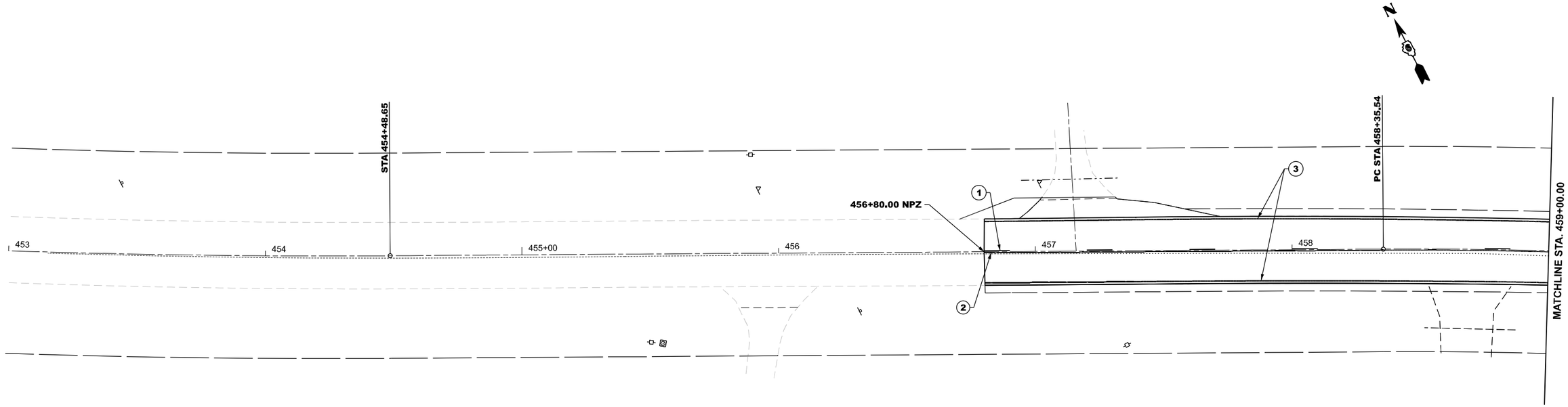

① MODIFIED URETHANE PAVEMENT MARKING-LINE 5" (YELLOW SKIP-DASH)
② MODIFIED URETHANE PAVEMENT MARKING-LINE 5" (YELLOW SOLID)
③ MODIFIED URETHANE PAVEMENT MARKING-LINE 5" (WHITE)
④ MODIFIED URETHANE PAVEMENT MARKING-LINE 5" (DOUBLE YELLOW)
⑤ MODIFIED URETHANE PAVEMENT MARKING-LINE 6" (WHITE)
⑥ MODIFIED URETHANE PAVEMENT MARKING-LINE 12" (WHITE)

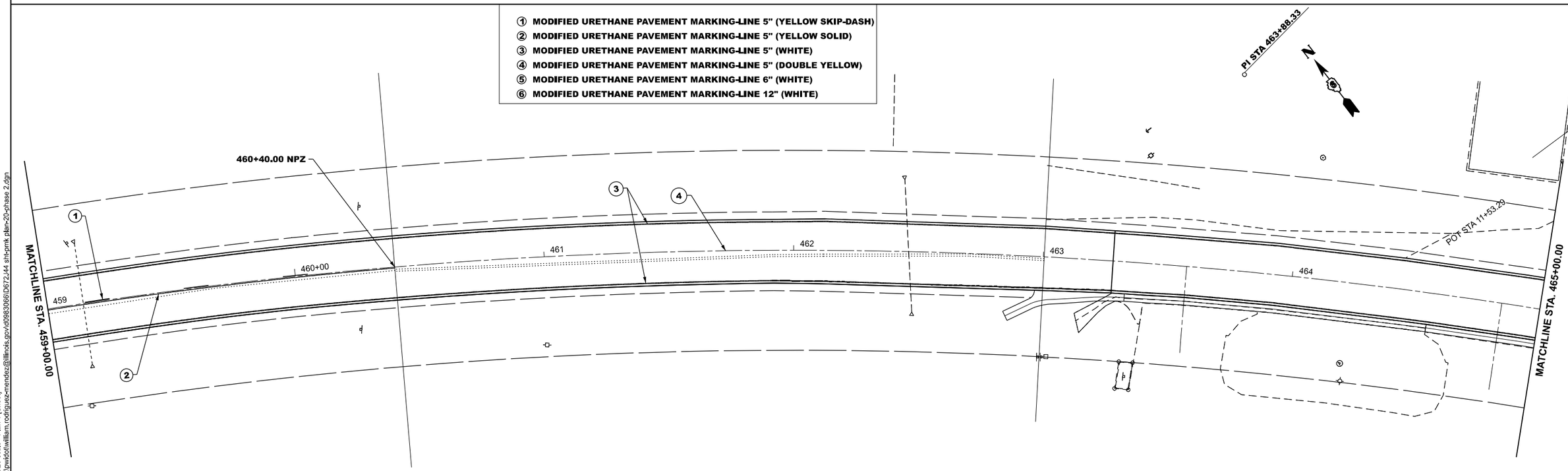

MODEL: pmk plan sheet 20 scale - Plan 1 [Sheet]
FILE NAME: c:\pw_work\pwidot\william.rodriguez-mendez@illinois.gov\d0983066\D672J44 sht-pmk plan-20-phase 2.dgn

USER NAME = william.rodriguez-me	DESIGNED -	REVISED -	
	DRAWN -	REVISED -	
	CHECKED -	REVISED -	
PLOT DATE = 5/15/2026	DATE -	REVISED -	

STATE OF ILLINOIS
DEPARTMENT OF TRANSPORTATION

PAVEMENT MARKING
FAS 2585 (ILL 99)

SCALE: 1"=20' | SHEET 1 OF 15 SHEETS | STA. 453+00.00 TO STA. 465+00.00

F.A.S RTE.	SECTION	COUNTY	TOTAL SHEETS	SHEET NO.
2585	122(RS-10,BDR-1,I-1)	*	120	80

CONTRACT NO. 72J44

ILLINOIS | FED. AID PROJECT

*BROWN, PIKE

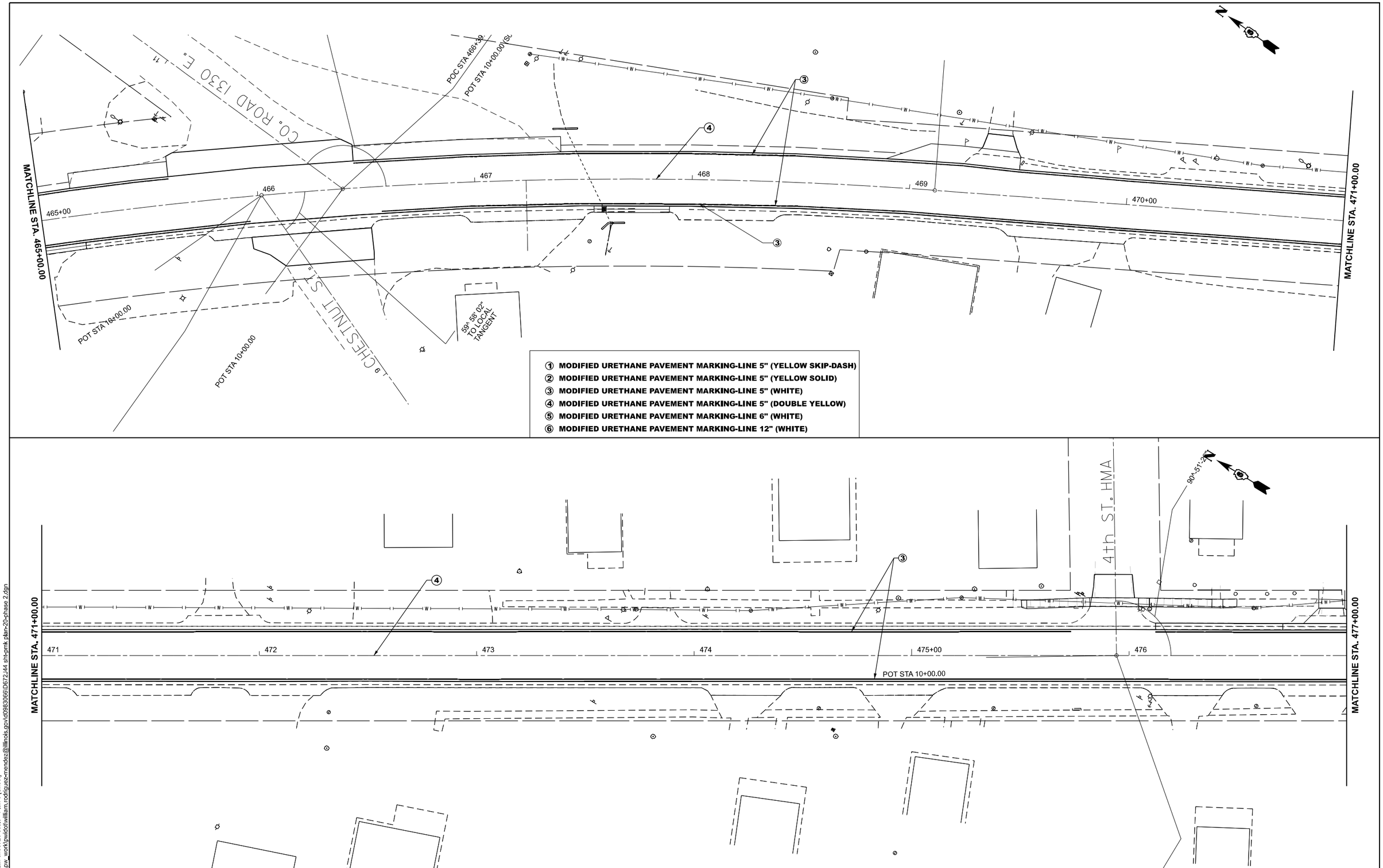

MODEL: pmk plan sheet 20 scale - Plan 3 [Sheet]
FILE NAME: c:\pw_work\pwidot\william.rodriguez-mendez@illinois.gov\d0983066\D672J44 sht-pmk plan-20-phase 2.dgn

USER NAME = william.rodriguez-me	DESIGNED -	REVISED -
	DRAWN -	REVISED -
	CHECKED -	REVISED -
PLOT DATE = 5/15/2026	DATE -	REVISED -

STATE OF ILLINOIS
DEPARTMENT OF TRANSPORTATION

PAVEMENT MARKING
FAS 2585 (ILL 99)

SCALE: 1"=20' | SHEET 2 OF 15 SHEETS | STA. 465+00.00 TO STA. 477+00.00

F.A.S RTE.	SECTION	COUNTY	TOTAL SHEETS	SHEET NO.
2585	122(RS-10,BDR-1,I-1)	*	120	81

CONTRACT NO. 72J44

ILLINOIS | FED. AID PROJECT

*BROWN, PIKE

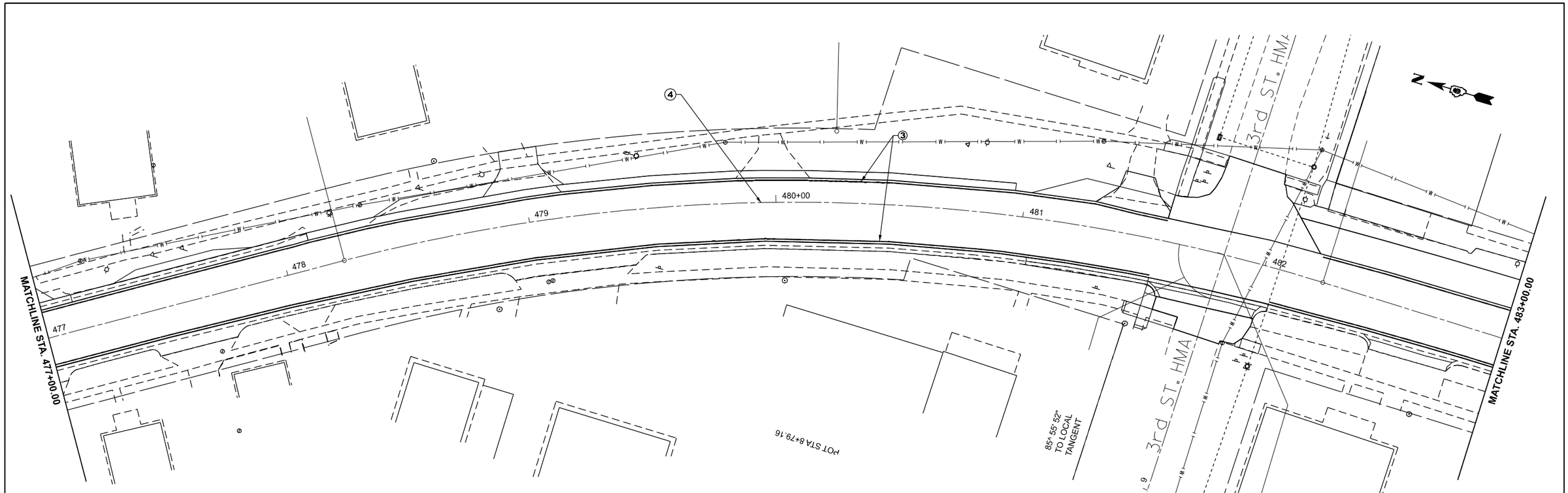

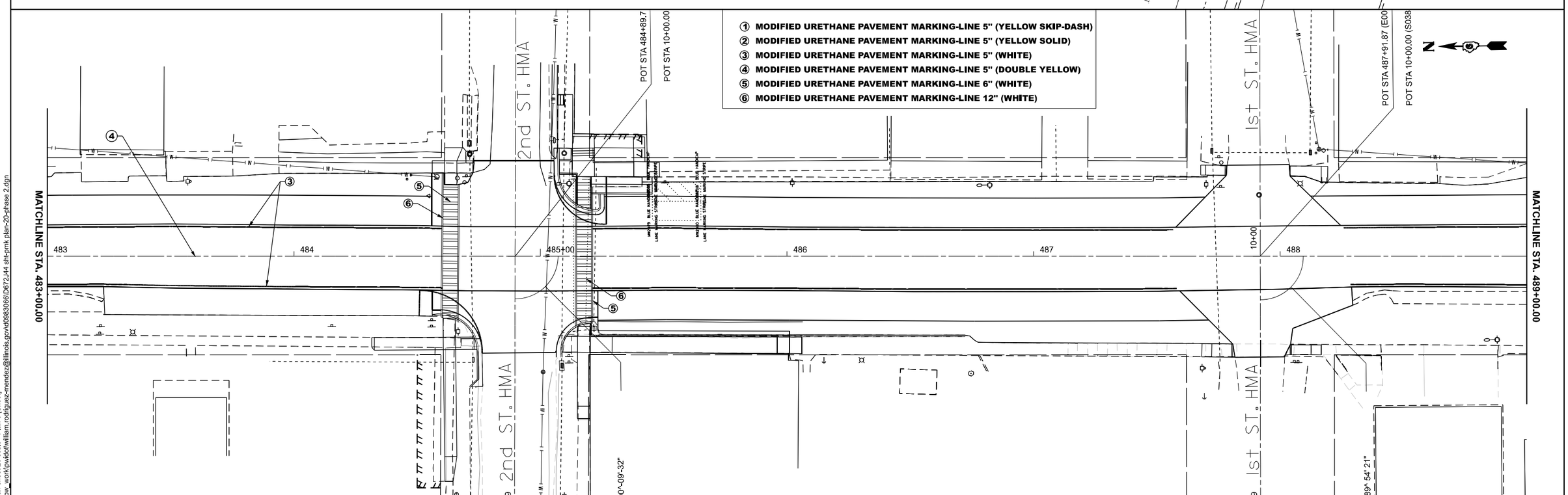

MODEL: pmk plan sheet 20 scale - Plan 5 [Sheet]
FILE NAME: c:\pw_work\pwidot\william.rodriguez-mendez@illinois.gov\d0983066\D672J44 sht-pmk plan-20-phase 2.dgn

USER NAME = william.rodriguez-me	DESIGNED -	REVISED -	
	DRAWN -	REVISED -	
	CHECKED -	REVISED -	
PLOT DATE = 5/15/2026	DATE -	REVISED -	

STATE OF ILLINOIS
DEPARTMENT OF TRANSPORTATION

PAVEMENT MARKING
FAS 2585 (ILL 99)

SCALE: 1"=20' | SHEET 3 OF 15 SHEETS | STA. 477+00.00 TO STA. 489+00.00

F.A.S RTE.	SECTION	COUNTY	TOTAL SHEETS	SHEET NO.
2585	122(RS-10,BDR-1,I-1)	*	120	82

CONTRACT NO. 72J44

ILLINOIS | FED. AID PROJECT

*BROWN, PIKE

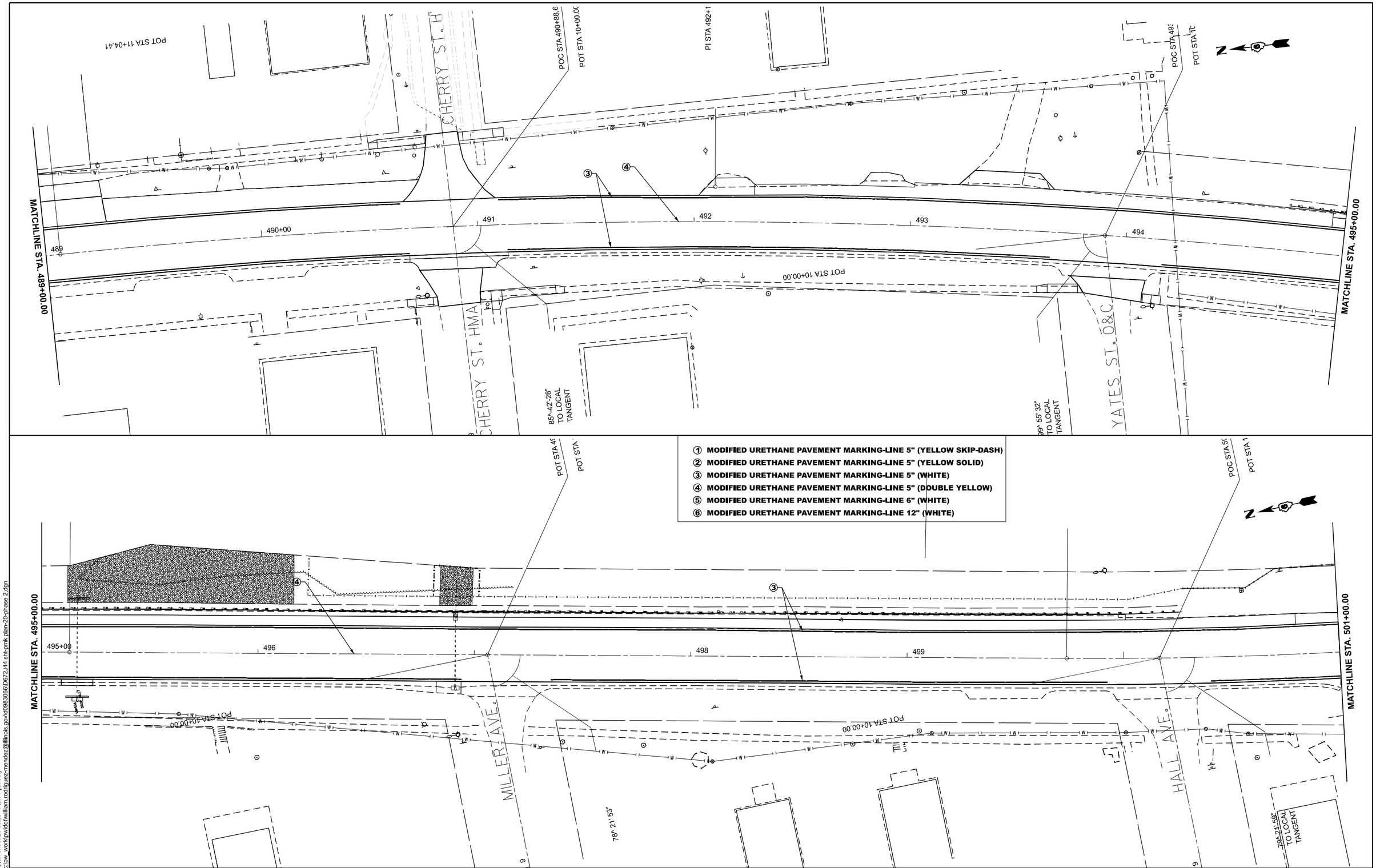

MODEL: pmk plan sheet 20 scale - Plan 7 [Sheet]
FILE NAME: c:\pw_work\pwidot\william.rodriguez-mendez@illinois.gov\d0983066\D672J44 sht-pmk plan-20-phase 2.dgn

USER NAME = william.rodriguez-me	DESIGNED -	REVISED -
	DRAWN -	REVISED -
	CHECKED -	REVISED -
PLOT DATE = 5/15/2026	DATE -	REVISED -

STATE OF ILLINOIS
DEPARTMENT OF TRANSPORTATION

PAVEMENT MARKING
FAS 2585 (ILL 99)

SCALE: 1"=20' | SHEET 4 OF 15 SHEETS | STA. 489+00.00 TO STA. 501+00.00

F.A.S RTE.	SECTION	COUNTY	TOTAL SHEETS	SHEET NO.
2585	122(RS-10,BDR-1,I-1)	*	120	83
		CONTRACT NO. 72J44		
		ILLINOIS FED. AID PROJECT		

*BROWN, PIKE

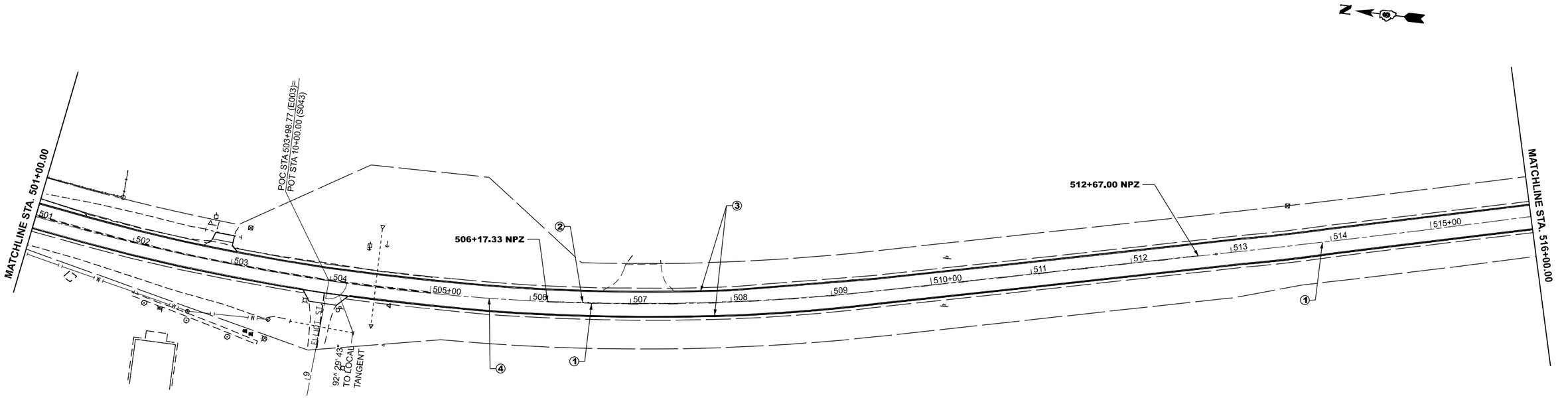

① MODIFIED URETHANE PAVEMENT MARKING-LINE 5" (YELLOW SKIP-DASH)
② MODIFIED URETHANE PAVEMENT MARKING-LINE 5" (YELLOW SOLID)
③ MODIFIED URETHANE PAVEMENT MARKING-LINE 5" (WHITE)
④ MODIFIED URETHANE PAVEMENT MARKING-LINE 5" (DOUBLE YELLOW)
⑤ MODIFIED URETHANE PAVEMENT MARKING-LINE 6" (WHITE)
⑥ MODIFIED URETHANE PAVEMENT MARKING-LINE 12" (WHITE)

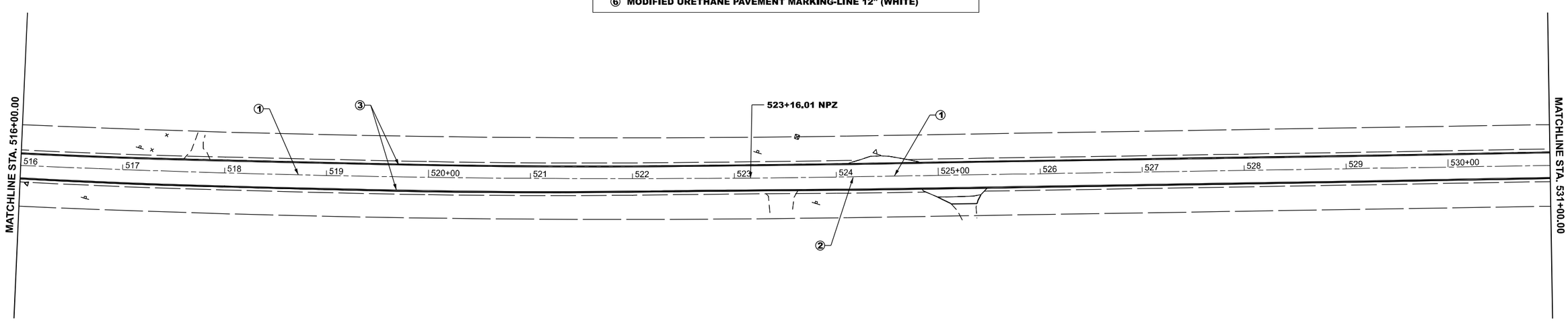

MODEL: pmk plan sheet 50 scale - Plan 1 [Sheet]
FILE NAME: c:\pw_work\pwidot\william.rodriguez-mendez@illinois.gov\d0983066\D672J44 sht-pmk plan-50-phase 2.dgn

USER NAME = william.rodriguez-me	DESIGNED -	REVISED -	
	DRAWN -	REVISED -	
	CHECKED -	REVISED -	
PLOT DATE = 5/15/2026	DATE -	REVISED -	

STATE OF ILLINOIS
DEPARTMENT OF TRANSPORTATION

PAVEMENT MARKING
FAS 2585 (ILL 99)

SCALE: 1"=50' | SHEET 5 OF 15 SHEETS | STA. 501+00.00 TO STA. 531+00.00

F.A.S RTE.	SECTION	COUNTY	TOTAL SHEETS	SHEET NO.
2585	122(RS-10,BDR-1,I-1)	*	120	84

CONTRACT NO. 72J44

ILLINOIS | FED. AID PROJECT

*BROWN, PIKE

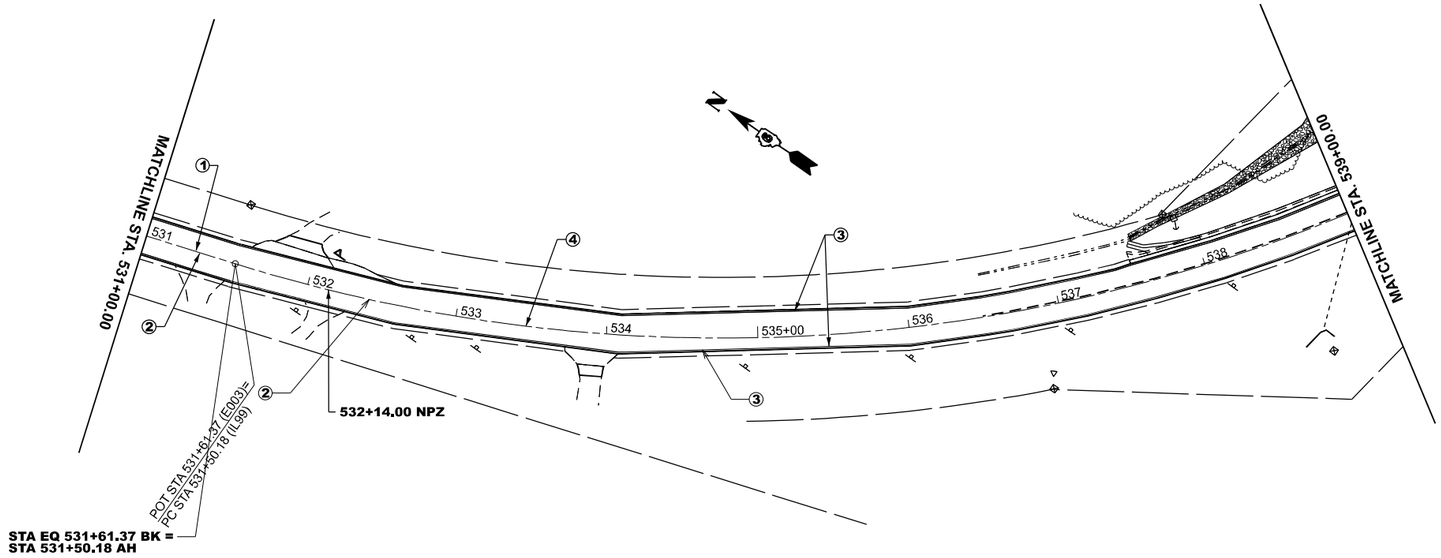

① MODIFIED URETHANE PAVEMENT MARKING-LINE 5" (YELLOW SKIP-DASH)
② MODIFIED URETHANE PAVEMENT MARKING-LINE 5" (YELLOW SOLID)
③ MODIFIED URETHANE PAVEMENT MARKING-LINE 5" (WHITE)
④ MODIFIED URETHANE PAVEMENT MARKING-LINE 5" (DOUBLE YELLOW)
⑤ MODIFIED URETHANE PAVEMENT MARKING-LINE 6" (WHITE)
⑥ MODIFIED URETHANE PAVEMENT MARKING-LINE 12" (WHITE)

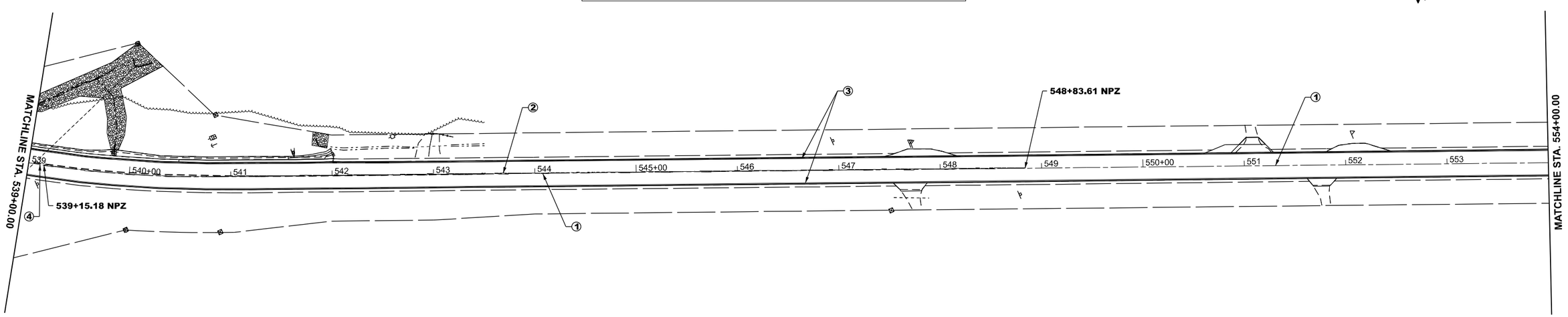

MODEL: pmk plan sheet 50 scale - Plan 3 [Sheet]
FILE NAME: c:\pw_work\pwidot\william.rodriguez-mendez@illinois.gov\d0983066\D672J44 sht-pmk plan-50-phase 2.dgn

USER NAME = william.rodriguez-me	DESIGNED -	REVISED -	
	DRAWN -	REVISED -	
	CHECKED -	REVISED -	
PLOT DATE = 5/15/2026	DATE -	REVISED -	

STATE OF ILLINOIS
DEPARTMENT OF TRANSPORTATION

PAVEMENT MARKING
FAS 2585 (ILL 99)

SCALE: 1"=50' | SHEET 6 OF 15 SHEETS | STA. 531+00.00 TO STA. 546+00.00

F.A.S RTE.	SECTION	COUNTY	TOTAL SHEETS	SHEET NO.
2585	122(RS-10,BDR-1,I-1)	*	120	85

CONTRACT NO. 72J44

ILLINOIS | FED. AID PROJECT

*BROWN, PIKE

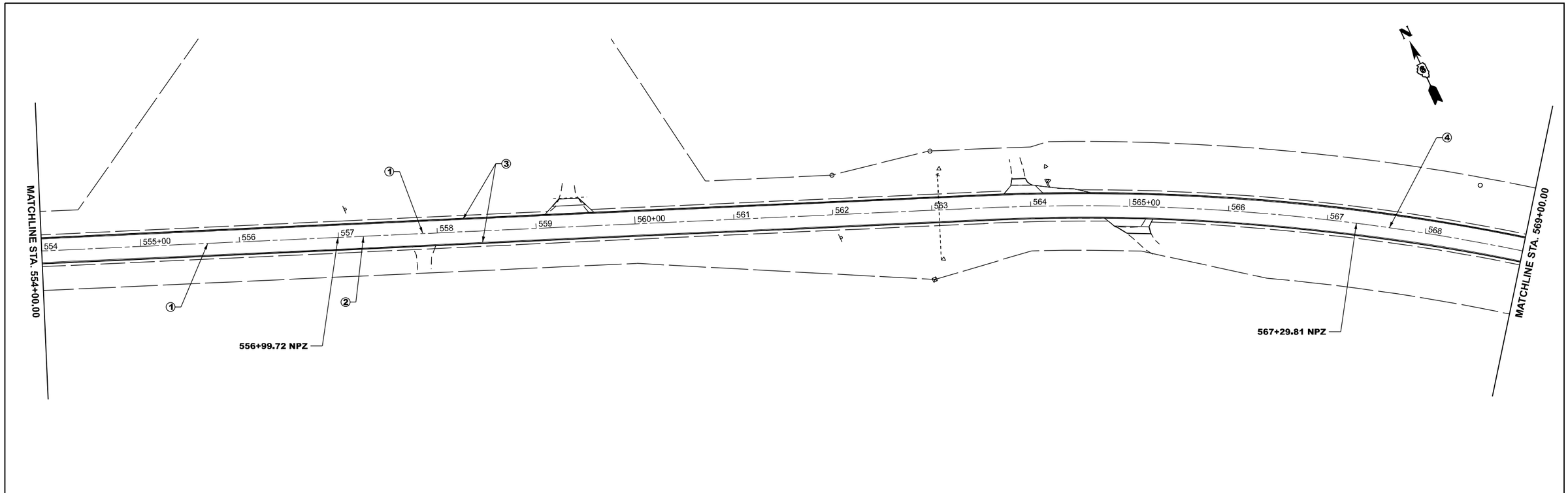

① MODIFIED URETHANE PAVEMENT MARKING-LINE 5" (YELLOW SKIP-DASH)
② MODIFIED URETHANE PAVEMENT MARKING-LINE 5" (YELLOW SOLID)
③ MODIFIED URETHANE PAVEMENT MARKING-LINE 5" (WHITE)
④ MODIFIED URETHANE PAVEMENT MARKING-LINE 5" (DOUBLE YELLOW)
⑤ MODIFIED URETHANE PAVEMENT MARKING-LINE 6" (WHITE)
⑥ MODIFIED URETHANE PAVEMENT MARKING-LINE 12" (WHITE)

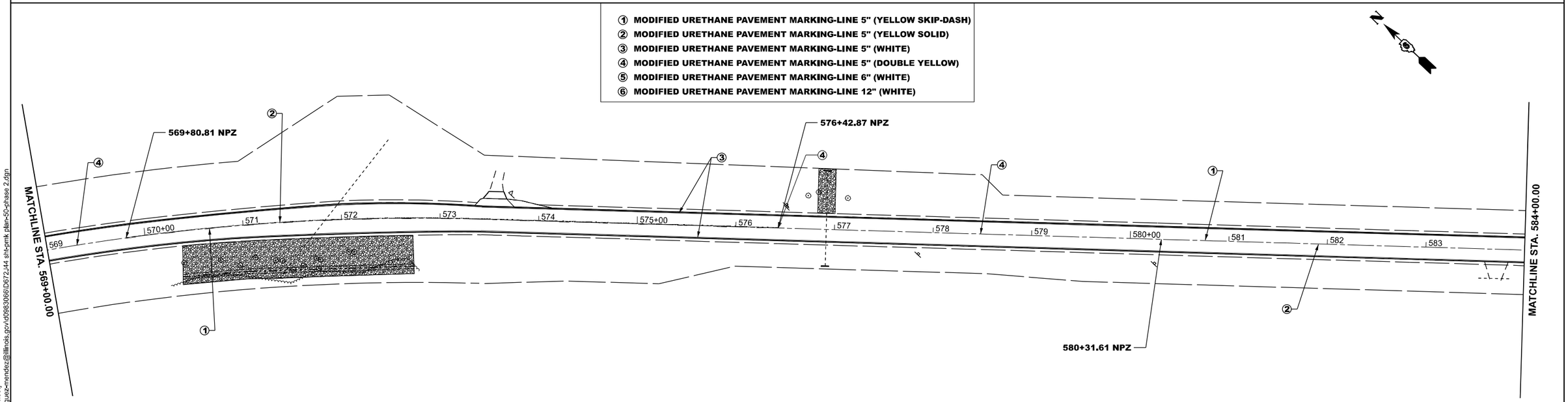

MODEL: pmk plan sheet 50 scale - Plan 5 [Sheet]
FILE NAME: c:\pw_work\pwidot\william.rodriguez-mendez@illinois.gov\d0983066\D672J44 sht-pmk plan-50-phase 2.dgn

USER NAME = william.rodriguez-me	DESIGNED -	REVISED -	
	DRAWN -	REVISED -	
	CHECKED -	REVISED -	
PLOT DATE = 5/15/2026	DATE -	REVISED -	

STATE OF ILLINOIS
DEPARTMENT OF TRANSPORTATION

PAVEMENT MARKING
FAS 2585 (ILL 99)

SCALE: 1"=50' | SHEET 7 OF 15 SHEETS | STA. 554+00.00 TO STA. 584+00.00

F.A.S RTE.	SECTION	COUNTY	TOTAL SHEETS	SHEET NO.
2585	122(RS-10,BDR-1,I-1)	*	120	86

CONTRACT NO. 72J44

ILLINOIS | FED. AID PROJECT

*BROWN, PIKE

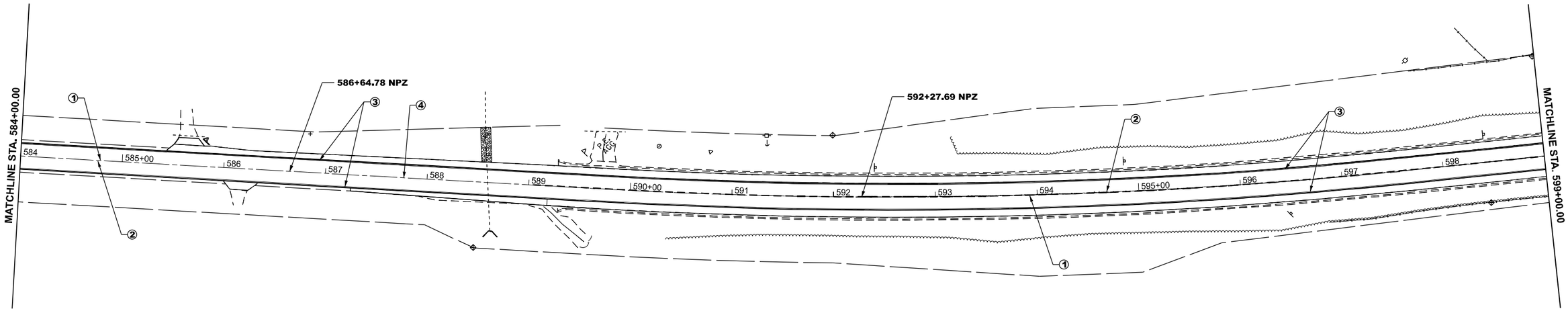

① MODIFIED URETHANE PAVEMENT MARKING-LINE 5" (YELLOW SKIP-DASH)
② MODIFIED URETHANE PAVEMENT MARKING-LINE 5" (YELLOW SOLID)
③ MODIFIED URETHANE PAVEMENT MARKING-LINE 5" (WHITE)
④ MODIFIED URETHANE PAVEMENT MARKING-LINE 5" (DOUBLE YELLOW)
⑤ MODIFIED URETHANE PAVEMENT MARKING-LINE 6" (WHITE)
⑥ MODIFIED URETHANE PAVEMENT MARKING-LINE 12" (WHITE)

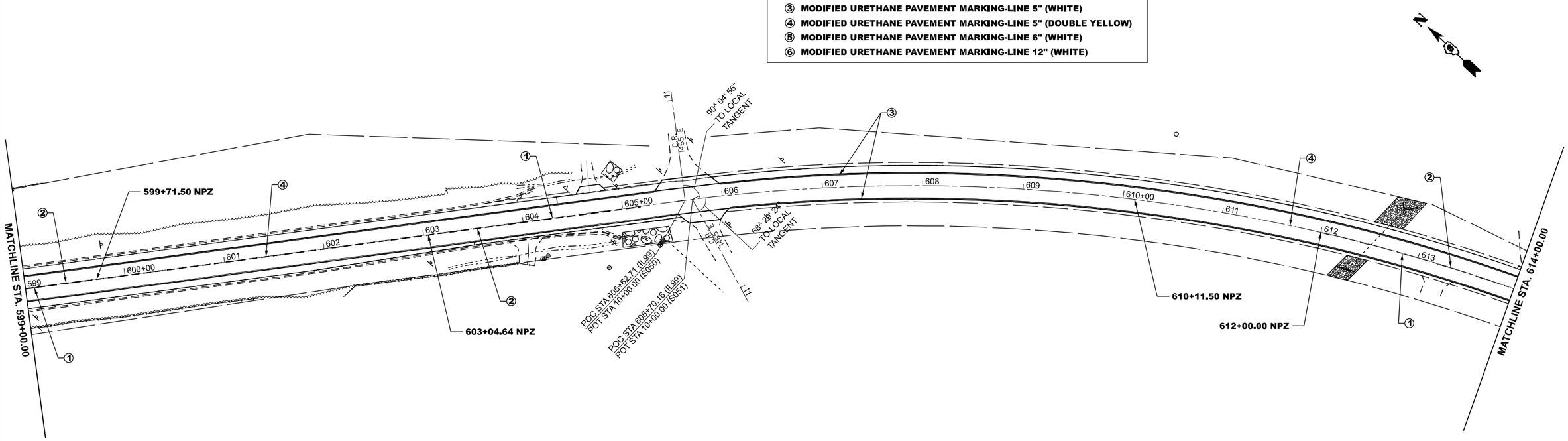

MODEL: pmk plan sheet 50 scale - Plan 7 [Sheet]
FILE NAME: c:\pw_work\pwidot\william.rodriguez-mendez@illinois.gov\d0983066\D672J44 sht-pmk plan-50-phase 2.dgn

USER NAME = william.rodriguez-me	DESIGNED -	REVISED -	
	DRAWN -	REVISED -	
	CHECKED -	REVISED -	
PLOT DATE = 5/15/2026	DATE -	REVISED -	

STATE OF ILLINOIS
DEPARTMENT OF TRANSPORTATION

PAVEMENT MARKING
FAS 2585 (ILL 99)

SCALE: 1"=50' | SHEET 8 OF 15 SHEETS | STA. 584+00.00 TO STA. 614+00.00

F.A.S RTE.	SECTION	COUNTY	TOTAL SHEETS	SHEET NO.
2585	122(RS-10,BDR-1,I-1)	*	120	87

CONTRACT NO. 72J44

ILLINOIS | FED. AID PROJECT

*BROWN, PIKE

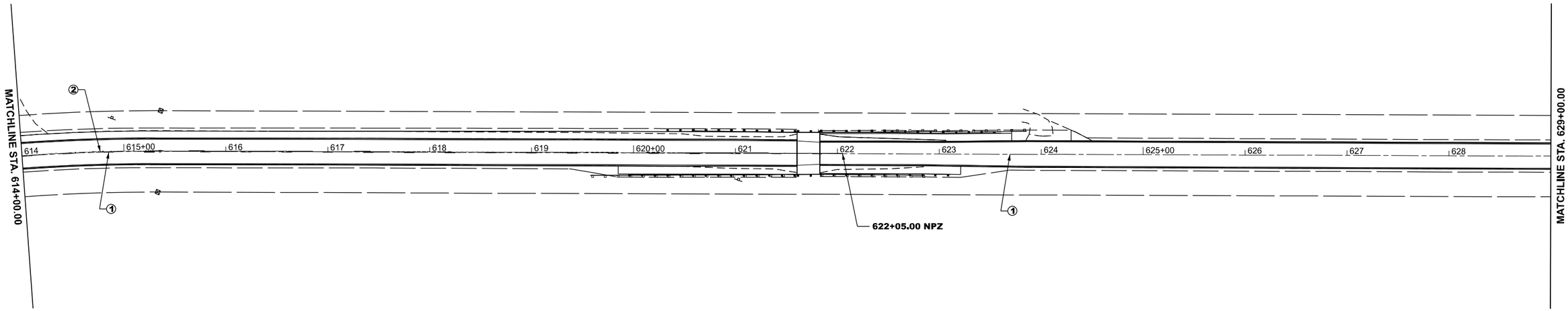

① MODIFIED URETHANE PAVEMENT MARKING-LINE 5" (YELLOW SKIP-DASH)
② MODIFIED URETHANE PAVEMENT MARKING-LINE 5" (YELLOW SOLID)
③ MODIFIED URETHANE PAVEMENT MARKING-LINE 5" (WHITE)
④ MODIFIED URETHANE PAVEMENT MARKING-LINE 5" (DOUBLE YELLOW)
⑤ MODIFIED URETHANE PAVEMENT MARKING-LINE 6" (WHITE)
⑥ MODIFIED URETHANE PAVEMENT MARKING-LINE 12" (WHITE)

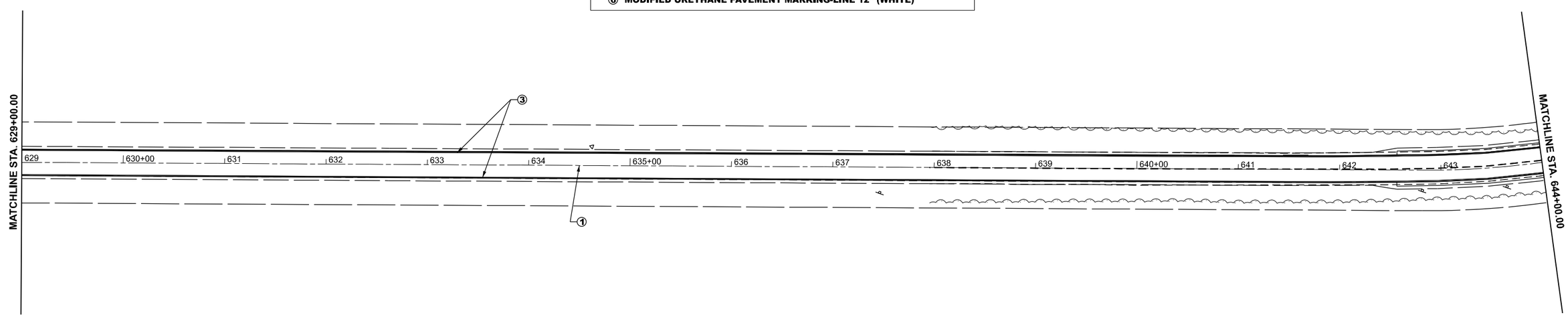

MODEL: pmk plan sheet 50 scale - Plan 9 [Sheet]
FILE NAME: c:\pw_work\pwidot\william.rodriguez-mendez@illinois.gov\d0983066\D672J44 sht-pmk plan-50-phase 2.dgn

USER NAME = william.rodriguez-me	DESIGNED -	REVISED -	
	DRAWN -	REVISED -	
	CHECKED -	REVISED -	
PLOT DATE = 5/15/2026	DATE -	REVISED -	

STATE OF ILLINOIS
DEPARTMENT OF TRANSPORTATION

PAVEMENT MARKING
FAS 2585 (ILL 99)

SCALE: 1"=50' | SHEET 9 OF 15 SHEETS | STA. 614+00.00 TO STA. 644+00.00

F.A.S RTE.	SECTION	COUNTY	TOTAL SHEETS	SHEET NO.
2585	122(RS-10,BDR-1,I-1)	*	120	88

CONTRACT NO. 72J44

ILLINOIS | FED. AID PROJECT

*BROWN, PIKE

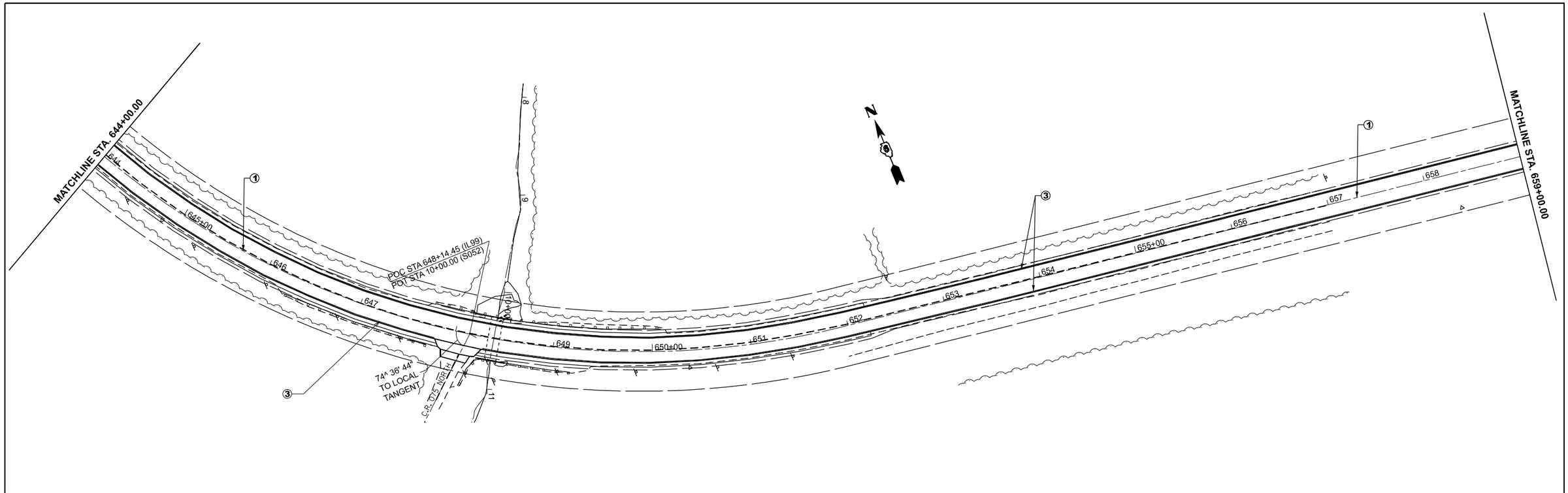

① MODIFIED URETHANE PAVEMENT MARKING-LINE 5" (YELLOW SKIP-DASH)
② MODIFIED URETHANE PAVEMENT MARKING-LINE 5" (YELLOW SOLID)
③ MODIFIED URETHANE PAVEMENT MARKING-LINE 5" (WHITE)
④ MODIFIED URETHANE PAVEMENT MARKING-LINE 5" (DOUBLE YELLOW)
⑤ MODIFIED URETHANE PAVEMENT MARKING-LINE 6" (WHITE)
⑥ MODIFIED URETHANE PAVEMENT MARKING-LINE 12" (WHITE)

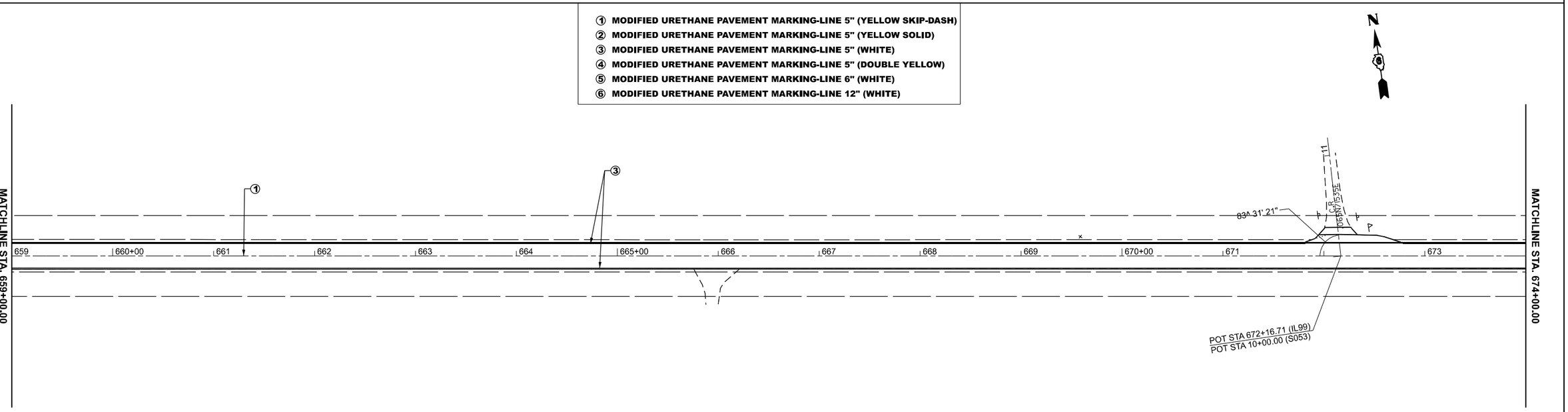

MODEL: pmk plan sheet 50 scale - Plan 11 [Sheet]
FILE NAME: c:\pw_work\pwidot\william.rodriguez-mendez@illinois.gov\d0983066\D672J44 sht-pmk plan-50-phase 2.dgn

USER NAME = william.rodriguez-me	DESIGNED -	REVISED -	
	DRAWN -	REVISED -	
	CHECKED -	REVISED -	
PLOT DATE = 5/15/2026	DATE -	REVISED -	

STATE OF ILLINOIS
DEPARTMENT OF TRANSPORTATION

PAVEMENT MARKING
FAS 2585 (ILL 99)

SCALE: 1"=50' | SHEET 10 OF 15 SHEETS | STA. 644+00.00 TO STA. 674+00.00

F.A.S RTE.	SECTION	COUNTY	TOTAL SHEETS	SHEET NO.
2585	122(RS-10,BDR-1,I-1)	*	120	89

CONTRACT NO. 72J44

ILLINOIS | FED. AID PROJECT

*BROWN, PIKE

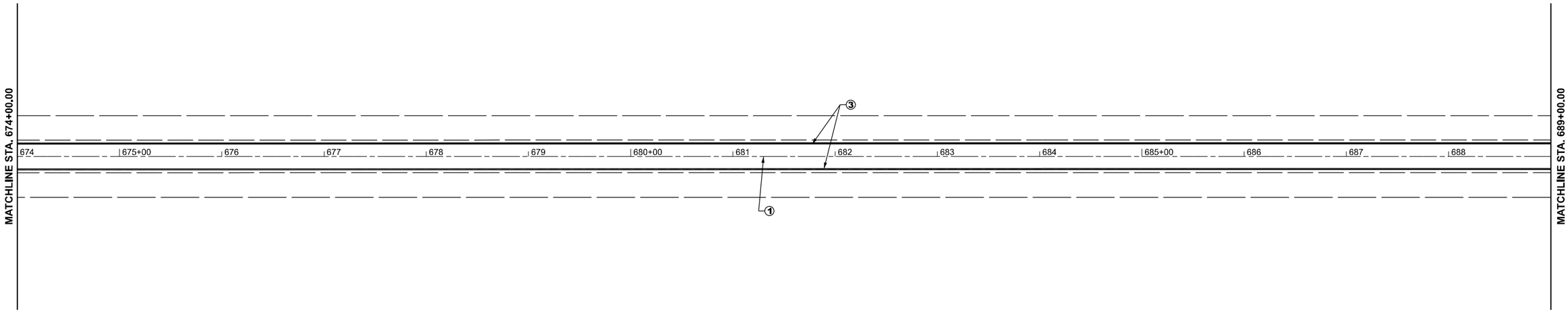

① MODIFIED URETHANE PAVEMENT MARKING-LINE 5" (YELLOW SKIP-DASH)
② MODIFIED URETHANE PAVEMENT MARKING-LINE 5" (YELLOW SOLID)
③ MODIFIED URETHANE PAVEMENT MARKING-LINE 5" (WHITE)
④ MODIFIED URETHANE PAVEMENT MARKING-LINE 5" (DOUBLE YELLOW)
⑤ MODIFIED URETHANE PAVEMENT MARKING-LINE 6" (WHITE)
⑥ MODIFIED URETHANE PAVEMENT MARKING-LINE 12" (WHITE)

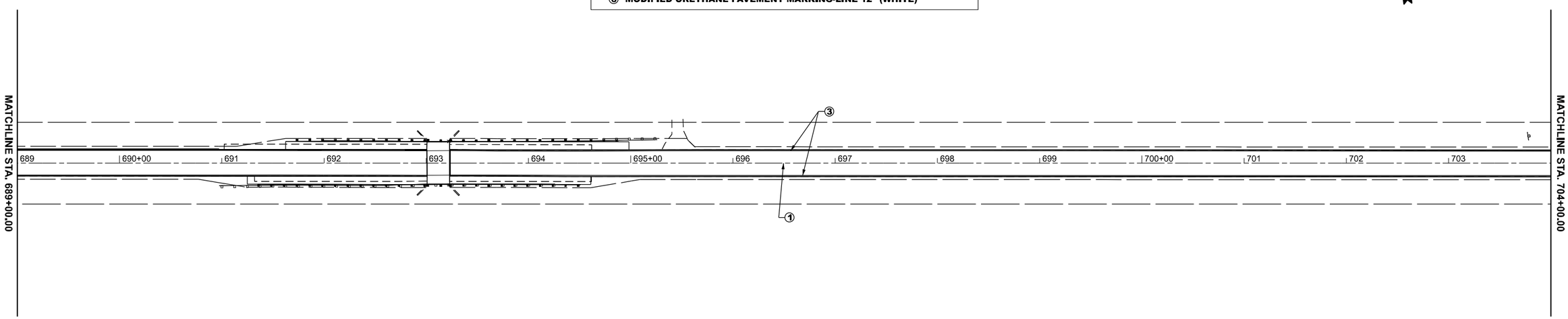

MODEL: pmk plan sheet 50 scale - Plan 13 [Sheet]
FILE NAME: c:\pw_work\pwidot\william.rodriguez-mendez@illinois.gov\d0983066\D672J44 sht-pmk plan-50-phase 2.dgn

USER NAME = william.rodriguez-me	DESIGNED -	REVISED -	
	DRAWN -	REVISED -	
	CHECKED -	REVISED -	
PLOT DATE = 5/15/2026	DATE -	REVISED -	

STATE OF ILLINOIS
DEPARTMENT OF TRANSPORTATION

PAVEMENT MARKING
FAS 2585 (ILL 99)

SCALE: 1"=50' | SHEET 11 OF 15 SHEETS | STA. 674+00.00 TO STA. 704+00.00

F.A.S RTE.	SECTION	COUNTY	TOTAL SHEETS	SHEET NO.
2585	122(RS-10,BDR-1,I-1)	*	120	90

CONTRACT NO. 72J44

ILLINOIS | FED. AID PROJECT

*BROWN, PIKE

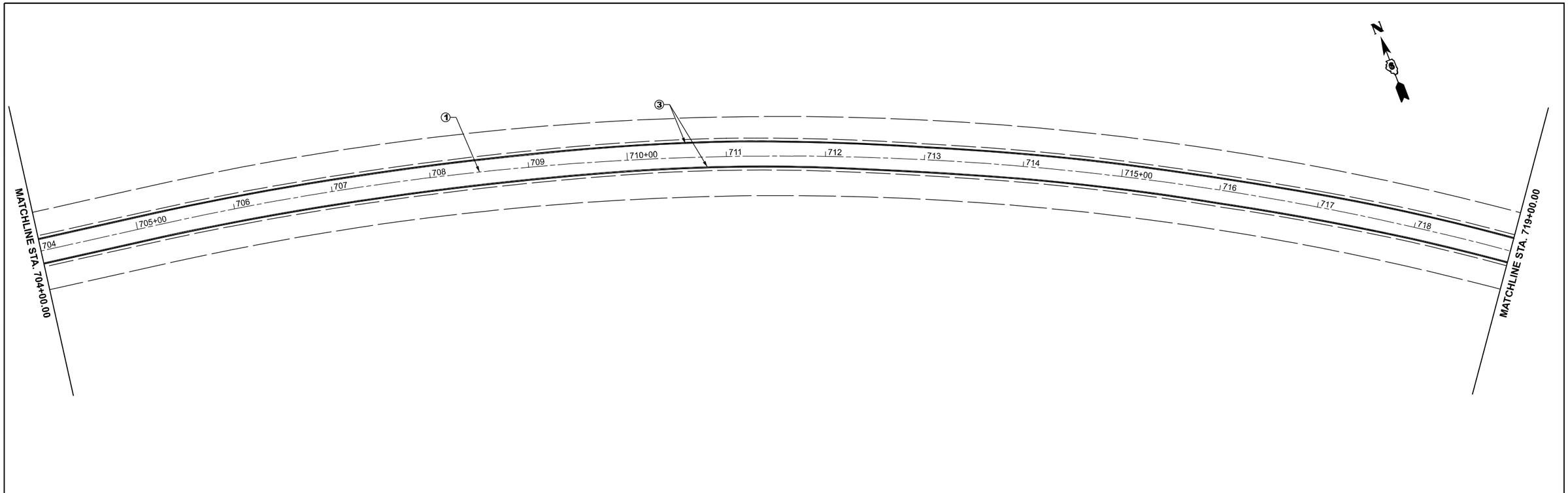

① MODIFIED URETHANE PAVEMENT MARKING-LINE 5" (YELLOW SKIP-DASH)
② MODIFIED URETHANE PAVEMENT MARKING-LINE 5" (YELLOW SOLID)
③ MODIFIED URETHANE PAVEMENT MARKING-LINE 5" (WHITE)
④ MODIFIED URETHANE PAVEMENT MARKING-LINE 5" (DOUBLE YELLOW)
⑤ MODIFIED URETHANE PAVEMENT MARKING-LINE 6" (WHITE)
⑥ MODIFIED URETHANE PAVEMENT MARKING-LINE 12" (WHITE)

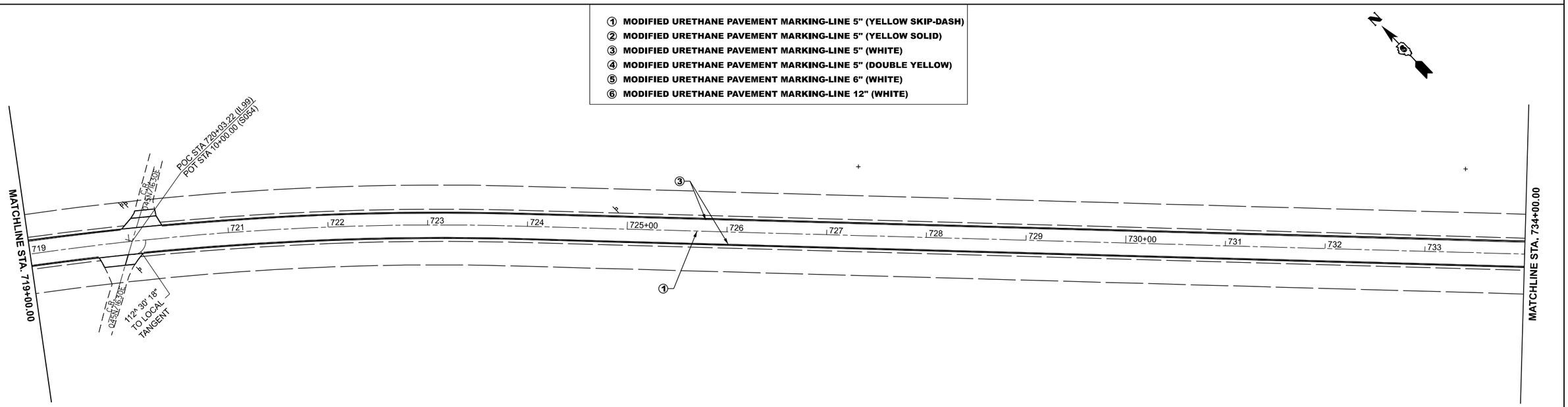

MODEL: pmk plan sheet 50 scale - Plan 15 [Sheet]
FILE NAME: c:\pw_work\pwidot\william.rodriguez-mendez@illinois.gov\d0983066\D672J44 sht-pmk plan-50-phase 2.dgn

USER NAME = william.rodriguez-me	DESIGNED -	REVISED -	
	DRAWN -	REVISED -	
	CHECKED -	REVISED -	
PLOT DATE = 5/15/2026	DATE -	REVISED -	

STATE OF ILLINOIS
DEPARTMENT OF TRANSPORTATION

PAVEMENT MARKING
FAS 2585 (ILL 99)

SCALE: 1"=50' | SHEET 12 OF 15 SHEETS | STA. 704+00.00 TO STA. 734+00.00

F.A.S RTE.	SECTION	COUNTY	TOTAL SHEETS	SHEET NO.
2585	122(RS-10,BDR-1,I-1)	*	120	91

CONTRACT NO. 72J44

ILLINOIS | FED. AID PROJECT

*BROWN, PIKE

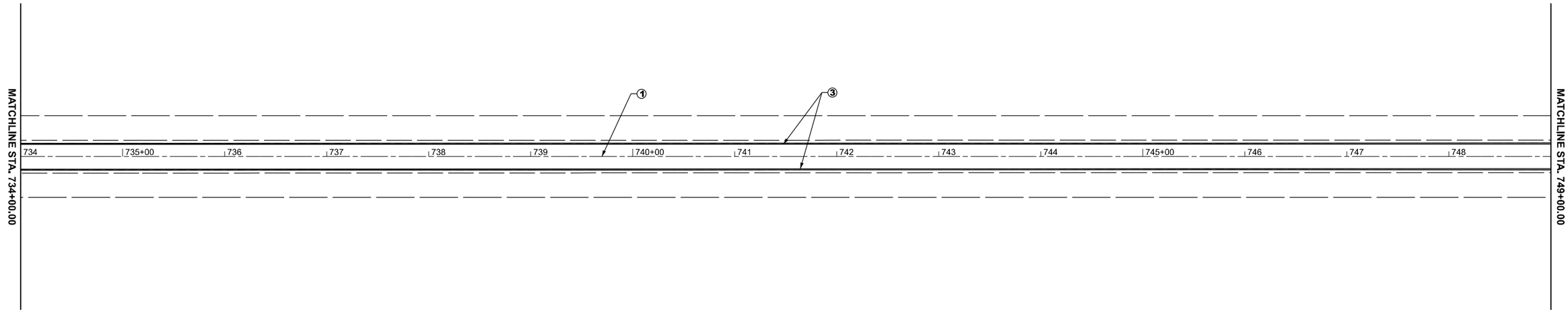

① MODIFIED URETHANE PAVEMENT MARKING-LINE 5" (YELLOW SKIP-DASH)
② MODIFIED URETHANE PAVEMENT MARKING-LINE 5" (YELLOW SOLID)
③ MODIFIED URETHANE PAVEMENT MARKING-LINE 5" (WHITE)
④ MODIFIED URETHANE PAVEMENT MARKING-LINE 5" (DOUBLE YELLOW)
⑤ MODIFIED URETHANE PAVEMENT MARKING-LINE 6" (WHITE)
⑥ MODIFIED URETHANE PAVEMENT MARKING-LINE 12" (WHITE)

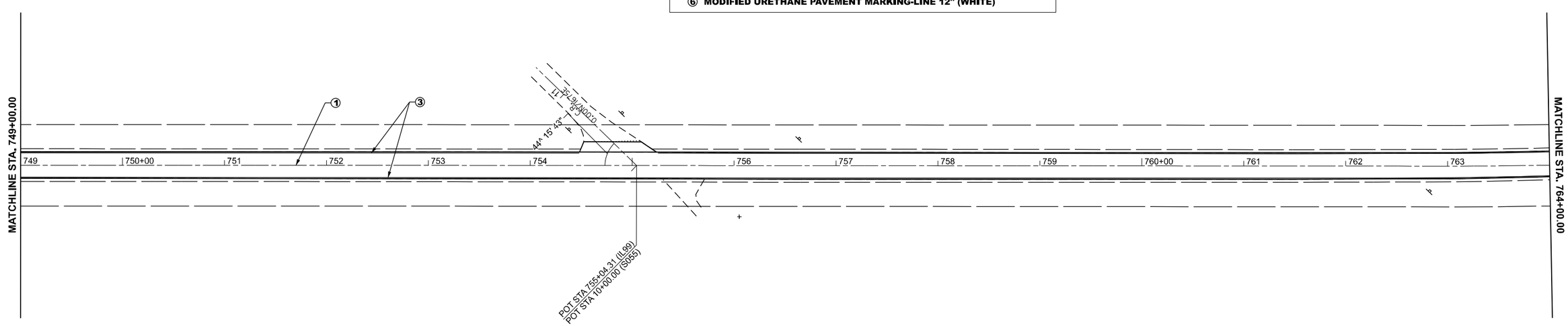

MODEL: pmk plan sheet 50 scale - Plan 17 [Sheet]
FILE NAME: c:\pw_work\pwidot\william.rodriguez-mendez@illinois.gov\d0983066\D672J44 sh-pmk plan-50-phase 2.dgn

USER NAME = william.rodriguez-me	DESIGNED -	REVISED -	
	DRAWN -	REVISED -	
	CHECKED -	REVISED -	
PLOT DATE = 5/15/2026	DATE -	REVISED -	

STATE OF ILLINOIS
DEPARTMENT OF TRANSPORTATION

PAVEMENT MARKING
FAS 2585 (ILL 99)

SCALE: 1"=50' | SHEET 13 OF 15 SHEETS | STA. 734+00.00 TO STA. 764+00.00

F.A.S RTE.	SECTION	COUNTY	TOTAL SHEETS	SHEET NO.
2585	122(RS-10,BDR-1,I-1)	*	120	92

CONTRACT NO. 72J44

ILLINOIS | FED. AID PROJECT

*BROWN, PIKE

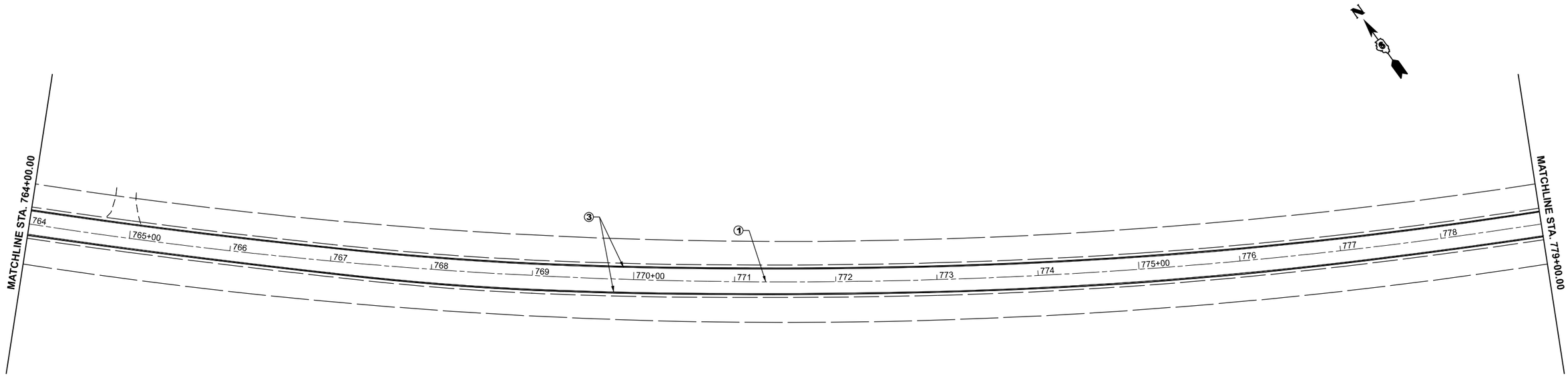

① MODIFIED URETHANE PAVEMENT MARKING-LINE 5" (YELLOW SKIP-DASH)
② MODIFIED URETHANE PAVEMENT MARKING-LINE 5" (YELLOW SOLID)
③ MODIFIED URETHANE PAVEMENT MARKING-LINE 5" (WHITE)
④ MODIFIED URETHANE PAVEMENT MARKING-LINE 5" (DOUBLE YELLOW)
⑤ MODIFIED URETHANE PAVEMENT MARKING-LINE 6" (WHITE)
⑥ MODIFIED URETHANE PAVEMENT MARKING-LINE 12" (WHITE)

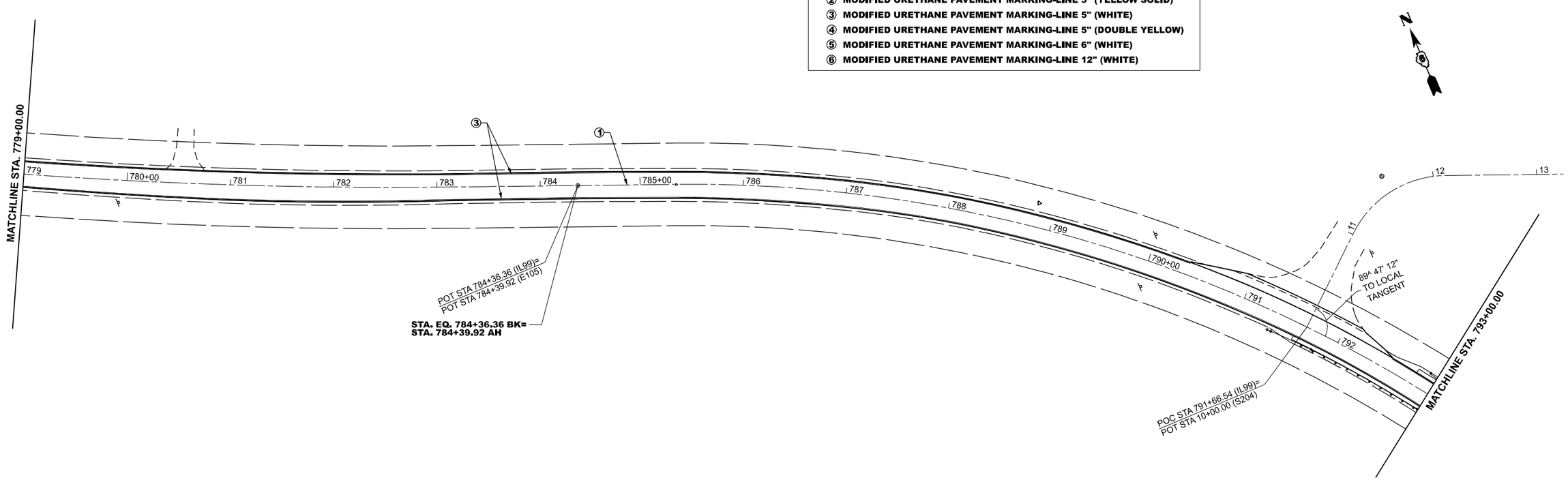

MODEL: pmk plan sheet 50 scale - Plan 19 [Sheet]
FILE NAME: c:\pw_work\pwidot\william.rodriguez-mendez@illinois.gov\d0983066\D672J44 sht-pmk plan-50-phase 2.dgn

USER NAME = william.rodriguez-me	DESIGNED -	REVISED -	
	DRAWN -	REVISED -	
	CHECKED -	REVISED -	
PLOT DATE = 5/15/2026	DATE -	REVISED -	

STATE OF ILLINOIS
DEPARTMENT OF TRANSPORTATION

PAVEMENT MARKING
FAS 2585 (ILL 99)

SCALE: 1"=50' | SHEET 14 OF 15 SHEETS | STA. 764+00.00 TO STA. 794+00.00

F.A.S RTE.	SECTION	COUNTY	TOTAL SHEETS	SHEET NO.
2585	122(RS-10,BDR-1,I-1)	*	120	93

CONTRACT NO. 72J44

ILLINOIS | FED. AID PROJECT

*BROWN, PIKE

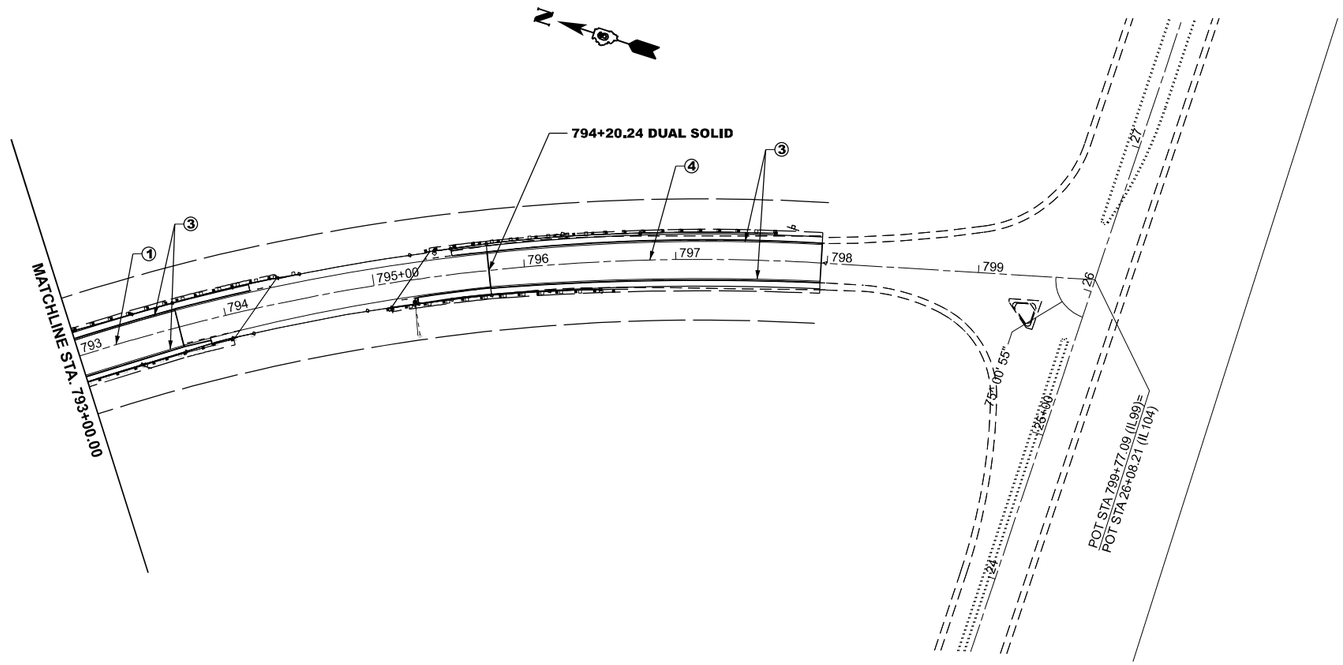

① MODIFIED URETHANE PAVEMENT MARKING-LINE 5" (YELLOW SKIP-DASH))
② MODIFIED URETHANE PAVEMENT MARKING-LINE 5" (YELLOW SOLID)
③ MODIFIED URETHANE PAVEMENT MARKING-LINE 5" (WHITE)
④ MODIFIED URETHANE PAVEMENT MARKING-LINE 5" (DOUBLE YELLOW)
⑤ MODIFIED URETHANE PAVEMENT MARKING-LINE 6" (WHITE)
⑥ MODIFIED URETHANE PAVEMENT MARKING-LINE 12" (WHITE)

MODEL: pmk plan sheet 50 scale - Plan 21 [Sheet]
FILE NAME: c:\pw_work\pwidot\william.rodriguez-mendez@illinois.gov\d0983066\D672J44 sht-pmk plan-50-phase 2.dgn

USER NAME = william.rodriguez-me	DESIGNED -	REVISED -	STATE OF ILLINOIS DEPARTMENT OF TRANSPORTATION
	DRAWN -	REVISED -	
	CHECKED -	REVISED -	
PLOT DATE = 5/15/2026	DATE -	REVISED -	

PAVEMENT MARKING
FAS 2585 (ILL 99)

SCALE: 1"=50' | SHEET 15 OF 15 SHEETS | STA. 793+00.00 TO STA. 808+00.00

F.A.S RTE.	SECTION	COUNTY	TOTAL SHEETS	SHEET NO.
2585	122(RS-10,BDR-1,I-1)	*	120	94

CONTRACT NO. 72J44

ILLINOIS | FED. AID PROJECT

*BROWN, PIKE

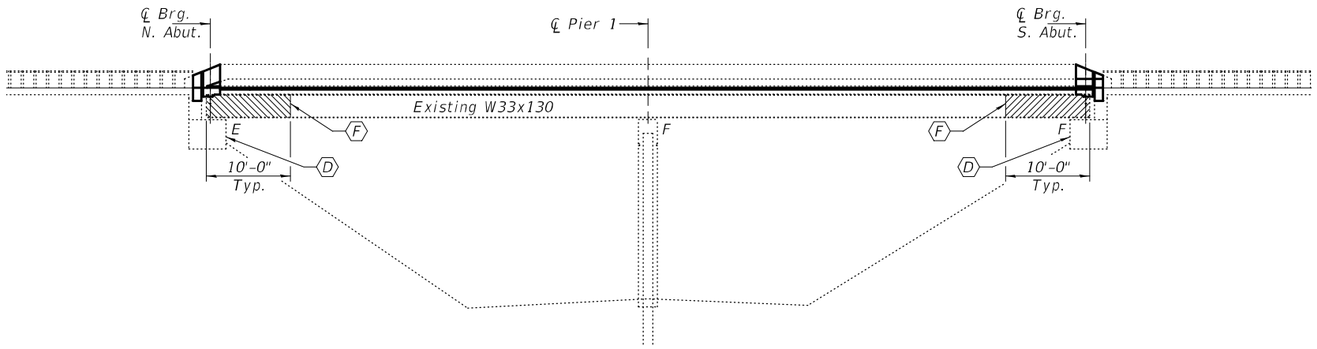

ELEVATION

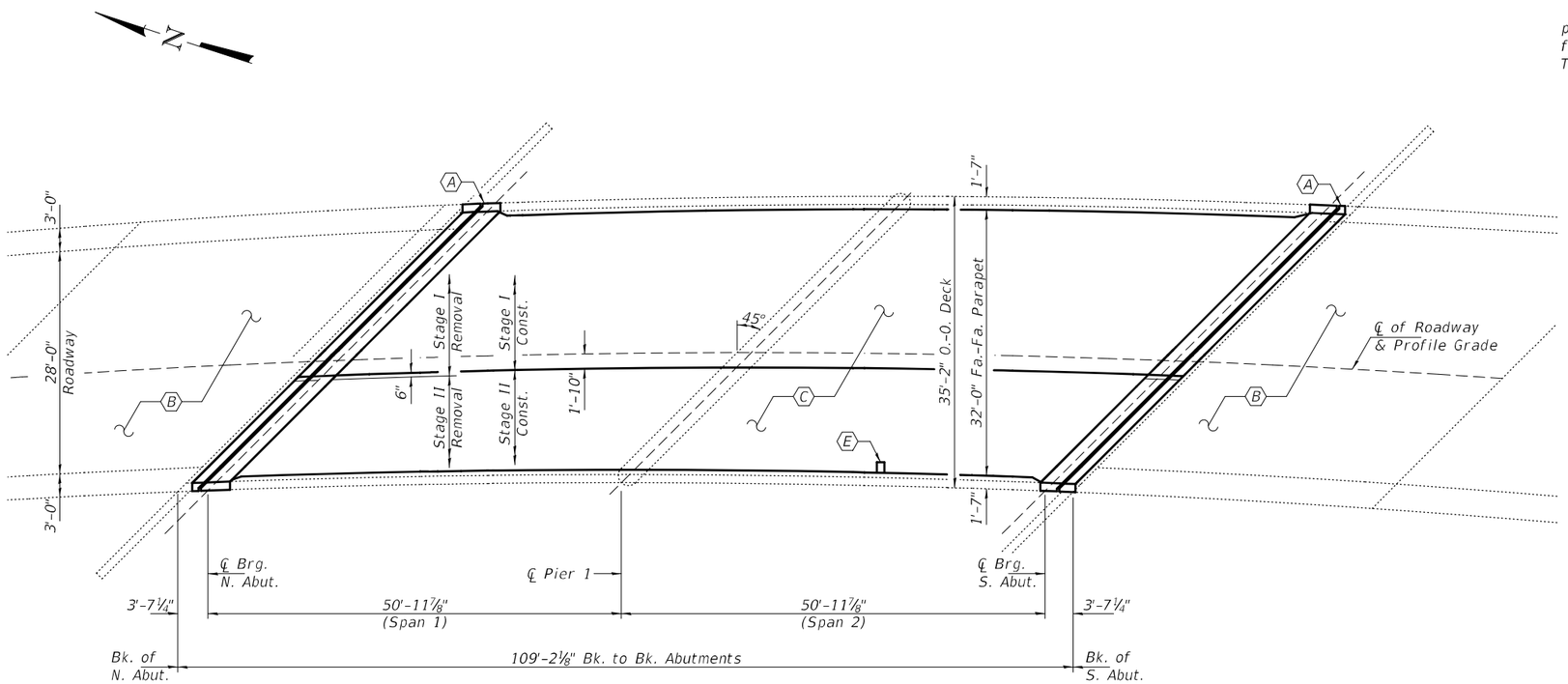

PLAN

GENERAL NOTES

All structural steel shall conform to AASHTO Classification M-270 Gr. 36, unless otherwise noted.

Plan dimensions and details relative to existing plans are subject to nominal construction variations. The Contractor shall field verify existing dimensions and details affecting new construction and make necessary approved adjustments prior to construction or ordering of materials. Such variations shall not be cause for additional compensation for a change in scope of the work, however, the Contractor will be paid for the quantity actually furnished at the unit price bid for the work.

Prior to pouring the new concrete deck, all heavy or loose rust, loose mill scale, and other loose or potentially detrimental foreign material shall be removed from the surfaces in contact with concrete. Tightly adhered paint may remain unless otherwise noted. Removal shall be accomplished by methods that will not damage the steel and the cost will be included in the pay item covering removal of the existing concrete.

Reinforcement bars designated (T) shall be textured epoxy coated.

Existing reinforcement bars extending into the removal area shall be cleaned, straightened and incorporated into the new construction. Any reinforcement bars that are damaged during concrete removal shall be replaced with an approved bar splicer or anchorage system. Cost included with Concrete Removal.

Joint openings shall be adjusted according to Article 520.04 of the Standard Specifications when the deck is poured at an ambient temperature other than 50° F.

Traffic will be maintained using stage construction.

Cleaning and painting of the existing structural steel shall be specified in the special provision for "Cleaning and Painting Existing Steel Structures". Clean and paint all structural steel within 10 ft. of the beam ends (beams, diaphragms, bearings, etc.) per Near White Blast Cleaning (SSPC-SP10).

The designated areas cleaned per Near White Blast Cleaning (SSPC-SP10) shall be painted according to the requirements of Paint System 1 (OZ/E/U). The color of the final finish coat for all steel surfaces shall be Interstate Green, Munsell No. 7.5G 4/8. The 6" drain tail below the beam should match the exterior face of the fascia girder.

A minimum of one (1) air monitor is required for this project.

TOTAL BILL OF MATERIAL

	ITEM	UNIT	QUANTITY
	Bridge Deck Scarification ¾"	Sq. Yd.	350
*	Protective Coat	Sq. Yd.	478
	Bridge Deck Microsilica Concrete Overlay, 2½"	Sq. Yd.	350
	Reinforcement Bars, Textured Epoxy Coated	Pound	3080
**	Deck Slab Repair (Full Depth, Type I)	Sq. Yd.	5
	Concrete Removal	Cu. Yd.	12.6
**	Approach Slab Repair (Partial Depth)	Sq. Yd.	23.1
	Bridge Deck Grooving	Sq. Yd.	330
	Concrete Superstructure	Cu. Yd.	14.4
	Cleaning and Painting Steel Bridge No. 1	L. Sum	1
**	Structural Repair of Concrete (Depth ≤ 5")	Sq. Ft.	61
	Containment and Disposal of Non-Lead Paint Residues No. 1	L. Sum	1
	Drainage Scuppers, DS-33	Each	1
	Preformed Joint Strip Seal	Foot	98
	Bar Splicers	Each	24

* Apply to new concrete only.
** Quantity is estimated. Location and size of patches to be determined in the field by the Engineer.

(A) - Remove existing Joints and install New Preformed Joint Strip Seal.

** (B) - Deck Patching on Approaches (Partial Depth).

(C) - ¾" Bridge Deck Scarification, 2½" min. Microsilica Concrete Overlay & ¼" Diamond Grinding.

(D) - Substructure Repairs.

(E) - Replace Drainage Scupper.

(F) - Clean and paint Beam Ends up to 10ft. See General Notes.

LICENSED STRUCTURAL ENGINEER
MARK D. SHAFFER
081-006508
STATE OF ILLINOIS

EXPIRES 11-30-2026

DESIGNED - Stephen M. Ryan	EXAMINED	DATE - JUNE 24, 2026	STATE OF ILLINOIS DEPARTMENT OF TRANSPORTATION
CHECKED - Chi-Cheung Chau	ENGINEER OF STRUCTURAL SERVICES		
DRAWN - VRR / daburdell	PASSED	REVISED -	
CHECKED - SMR CCC	ENGINEER OF BRIDGES AND STRUCTURES	REVISED -	

GENERAL PLAN AND ELEVATION
IL RTE. - 99 OVER MCGEE DRAINAGE DITCH
SN 075 - 0129
SHEET NO. 1 OF 10 SHEETS

F.A.S. RTE.	SECTION	COUNTY	TOTAL SHEETS	SHEET NO.
2585	122(RS-10,BDR-1,-1)	PIKE	120	95
		CONTRACT NO. 72J44		
		ILLINOIS	FED. AID PROJECT	

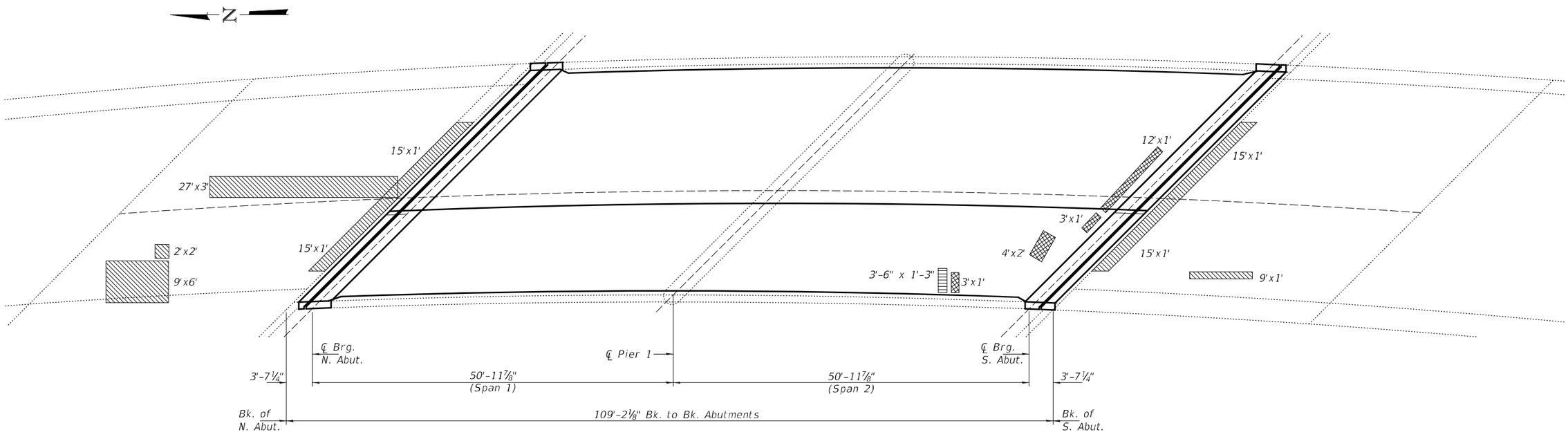

PLAN

Approach Slab Repair (Partial Depth)

Deck Slab Repair (Partial Depth)
(For Information Only)

Deck Slab Repair (Full Depth, Type I)

BILL OF MATERIAL

	Item	Unit	Total
*	Deck Slab Repair (Full Depth, Type I)	Sq. Yd.	5
	Approach Slab Repair (Partial Depth)	Sq. Yd.	23.1

* Quantity included area for scupper replacement and an estimated nominal area.

DESIGNED - SMR	EXAMINED	DATE - JUNE 24, 2026	STATE OF ILLINOIS DEPARTMENT OF TRANSPORTATION
CHECKED - CCC	ENGINEER OF STRUCTURAL SERVICES		
DRAWN - VRR / daburdell	PASSED	REVISED -	
CHECKED - SMR CCC	ENGINEER OF BRIDGES AND STRUCTURES	REVISED -	

DECK & APPROACH SLAB REPAIR DETAILS
SN 075-0129

SHEET NO. 2 OF 10 SHEETS

F.A.S. RTE.	SECTION	COUNTY	TOTAL SHEETS	SHEET NO.
2585	122(RS-10,BDR-1,-1)	PIKE	120	96

CONTRACT NO. 72J44

ILLINOIS | FED. AID PROJECT

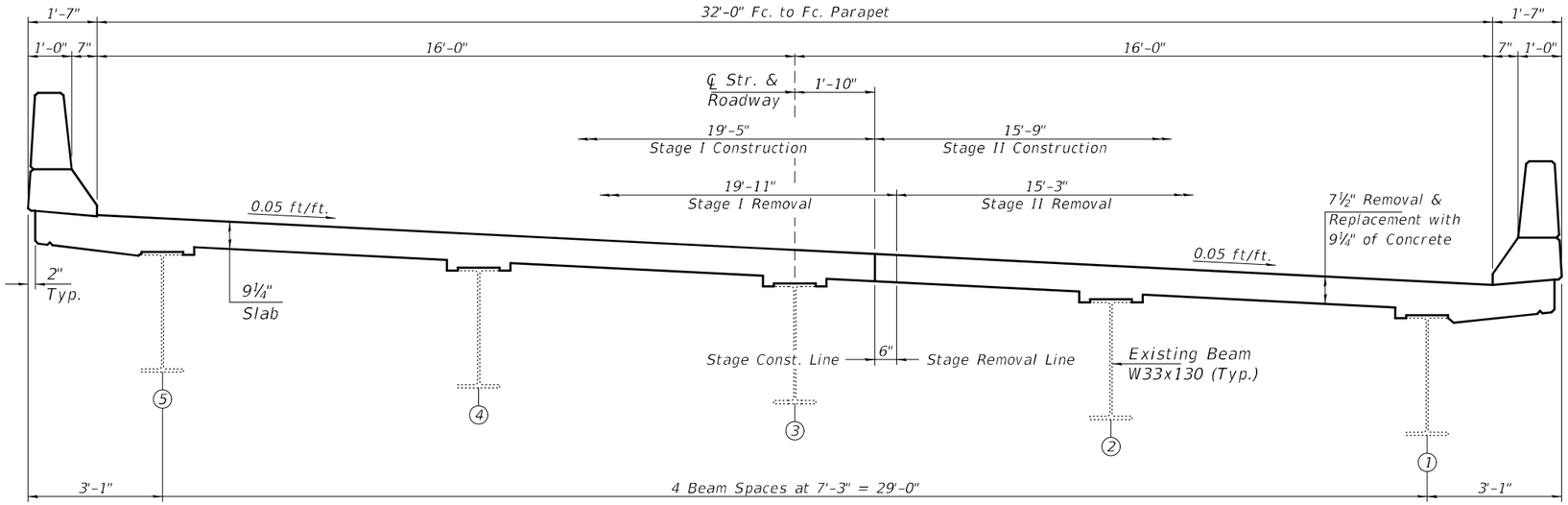

CROSS SECTION AT ABUTMENTS

(Looking South)

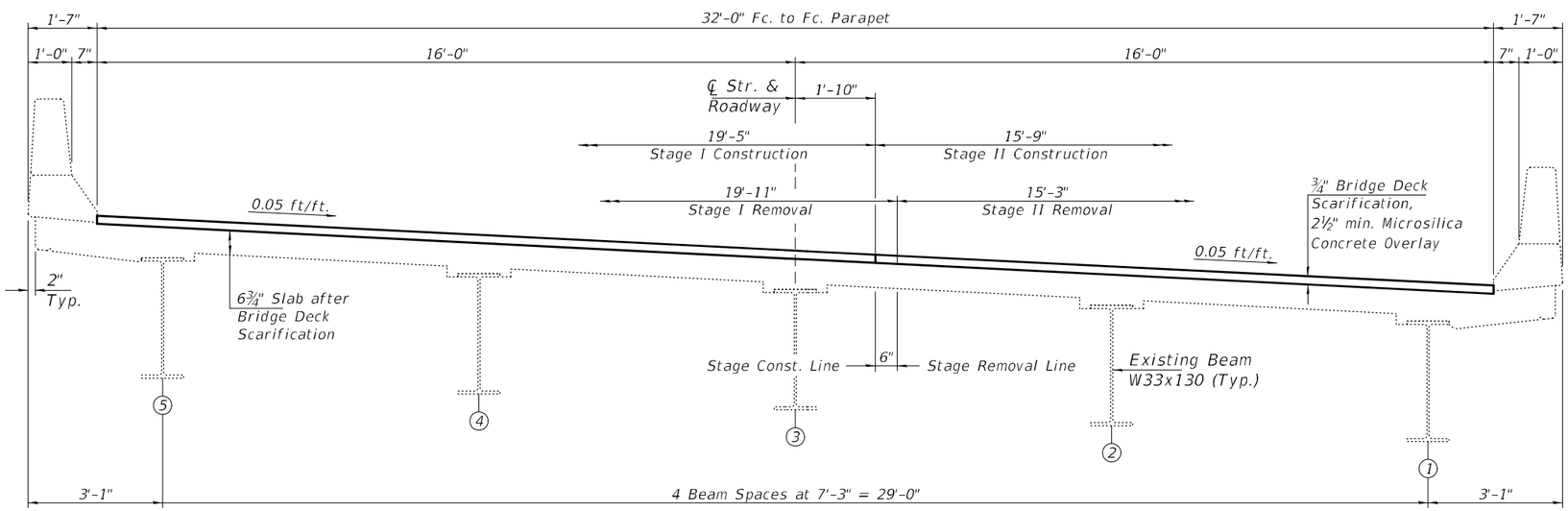

CROSS SECTION AT MID SPAN

(Looking South)

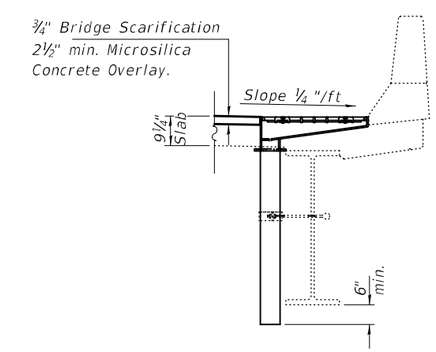

SECTION THRU PARAPET

(at drain)

DESIGNED - SMR	EXAMINED	DATE - JUNE 24, 2026	STATE OF ILLINOIS DEPARTMENT OF TRANSPORTATION
CHECKED - CCC	ENGINEER OF STRUCTURAL SERVICES		
DRAWN - VRR / daburdell	PASSED	REVISED -	
CHECKED - SMR CCC	ENGINEER OF BRIDGES AND STRUCTURES	REVISED -	

CROSS SECTIONS & STAGING DETAILS
SN 075-0129

SHEET NO. 3 OF 10 SHEETS

F.A.S. RTE.	SECTION	COUNTY	TOTAL SHEETS	SHEET NO.
2585	122(RS-10,BDR-1,-1)	PIKE	120	97
		CONTRACT NO. 72J44		
		ILLINOIS	FED. AID PROJECT	

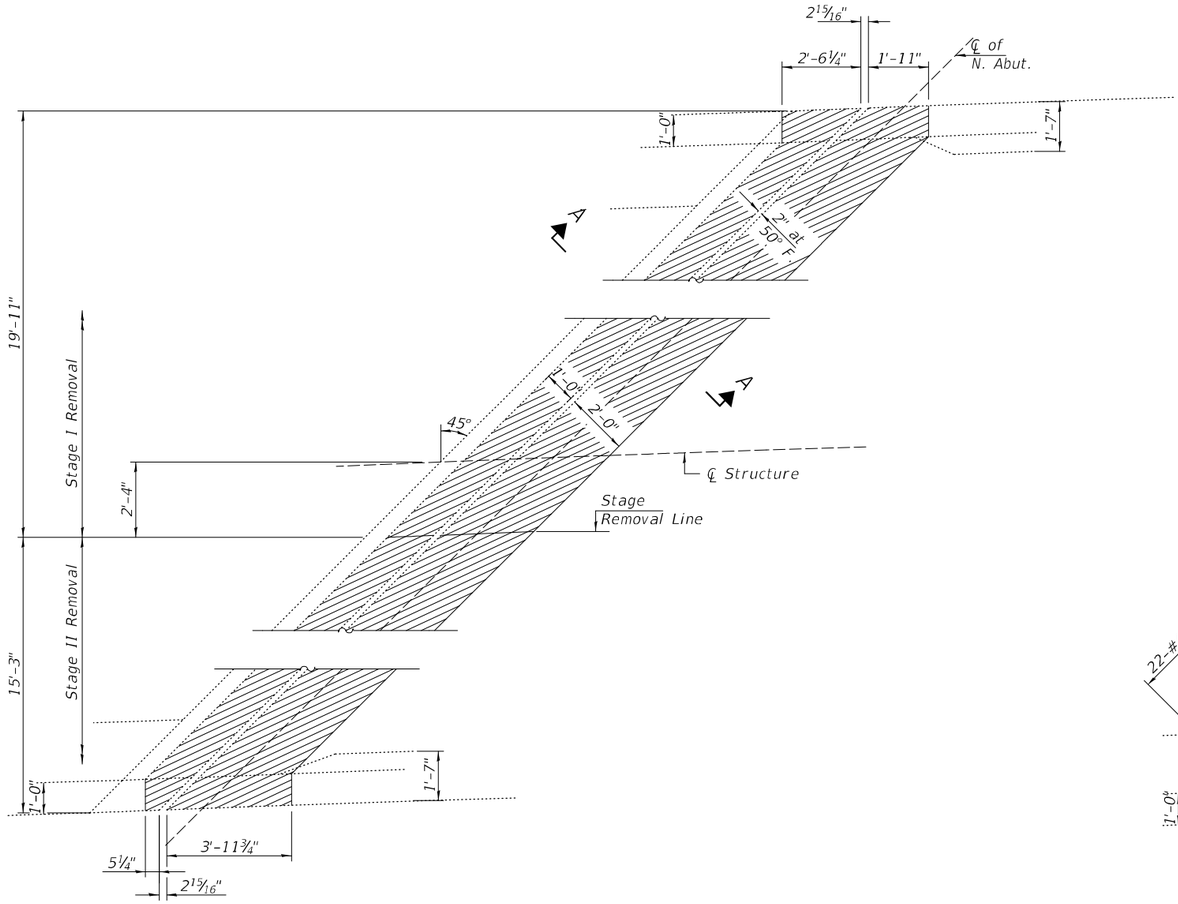

REMOVAL PLAN

(North Abutment)

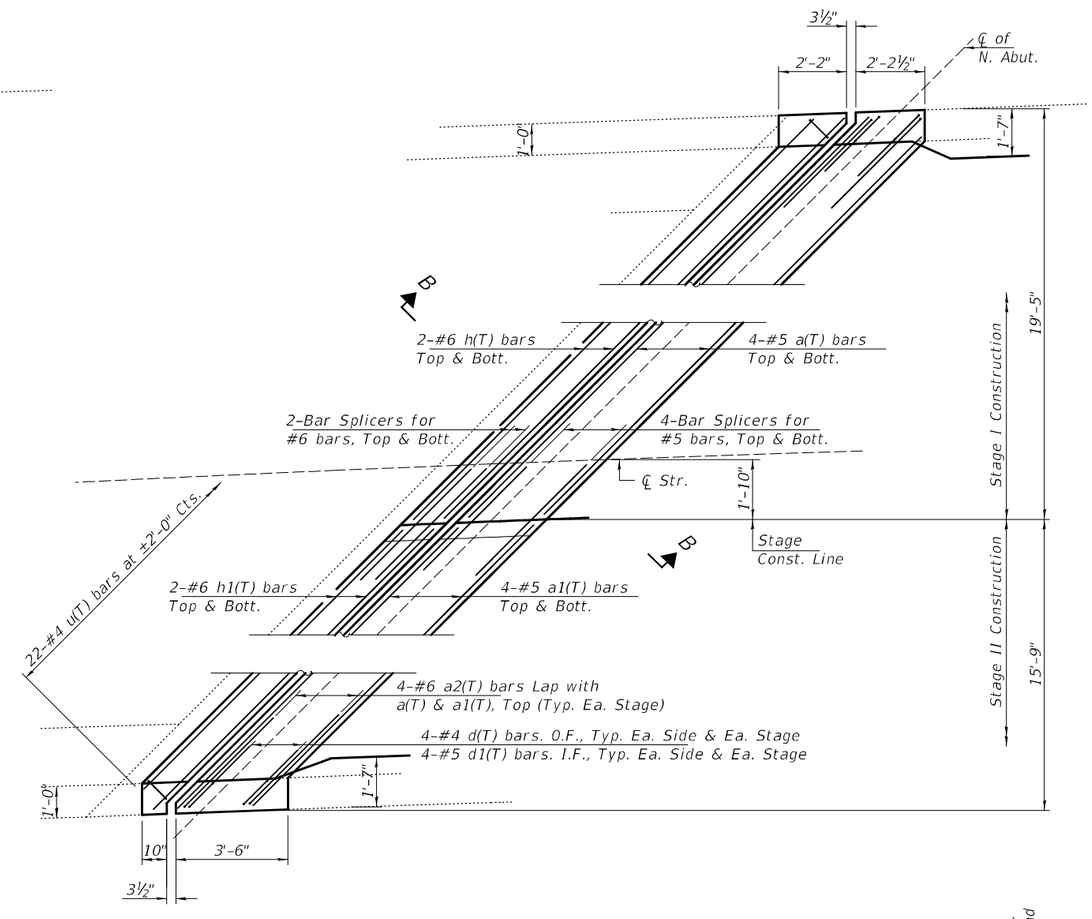

REPLACEMENT PLAN

(North Abutment)

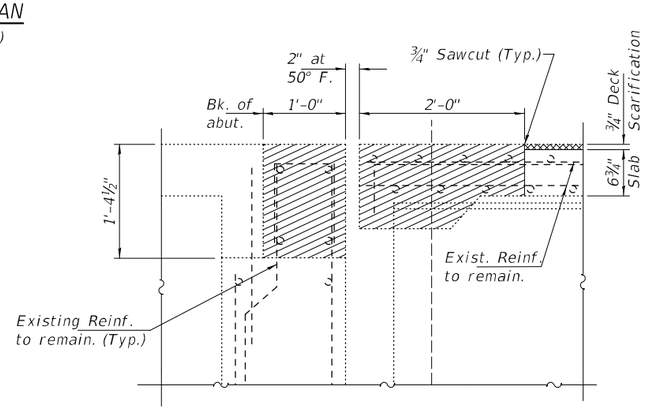

SECTION A-A

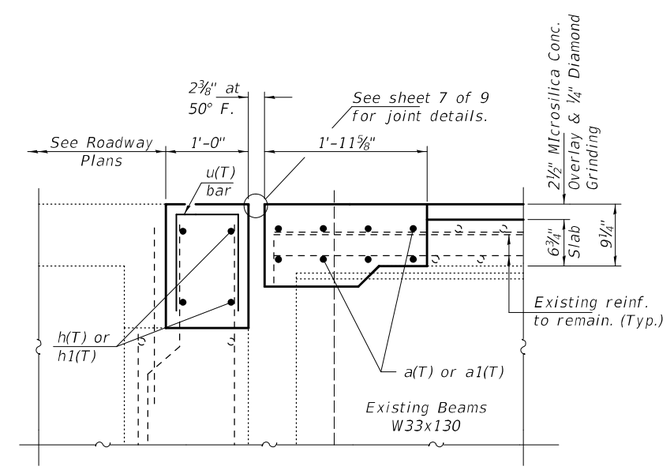

SECTION B-B

DESIGNED - SMR	EXAMINED	ENGINEER OF STRUCTURAL SERVICES	DATE - JUNE 24, 2026	STATE OF ILLINOIS DEPARTMENT OF TRANSPORTATION	N. ABUT. JOINT REMOVAL & REPLACEMENT DETAILS SN 075-0129	F.A.S. RTE.	SECTION	COUNTY	TOTAL SHEETS / SHEET NO.
CHECKED - CCC						2585	122(RS-10,BDR-1,-1)	PIKE	120 / 98
DRAWN - VRR / daburdell	PASSED	ENGINEER OF BRIDGES AND STRUCTURES	REVISED -		SHEET NO. 4 OF 10 SHEETS			CONTRACT NO. 72J44	
CHECKED - SMR CCC			REVISED -				ILLINOIS	FED. AID PROJECT	

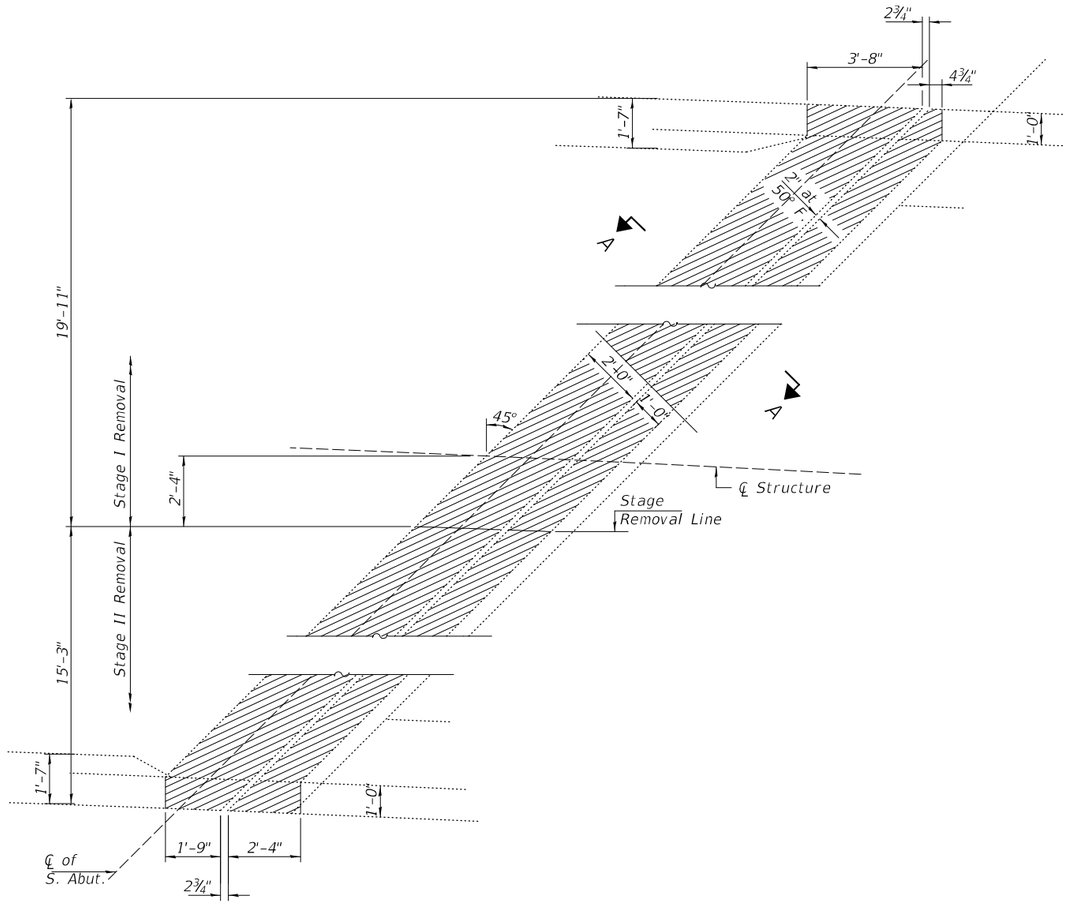

REMOVAL PLAN

(South Abutment)

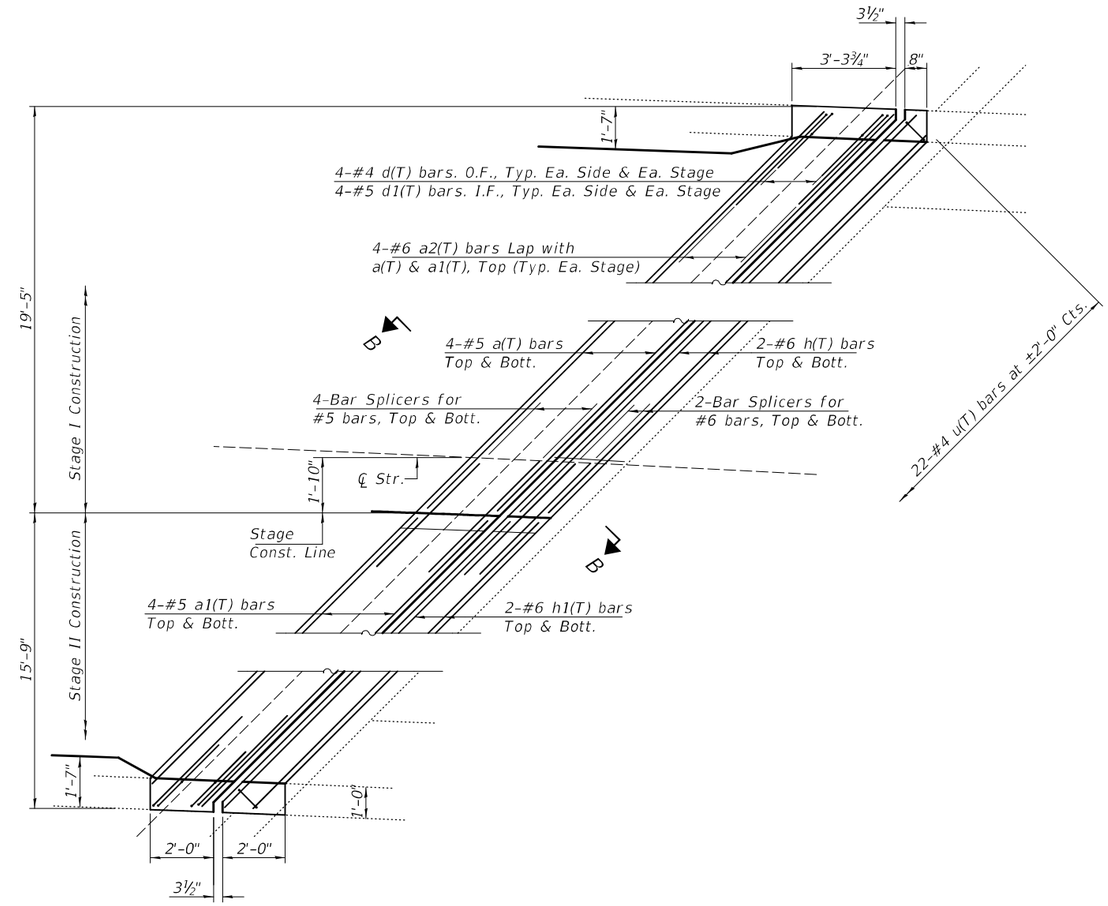

REPLACEMENT PLAN

(South Abutment)

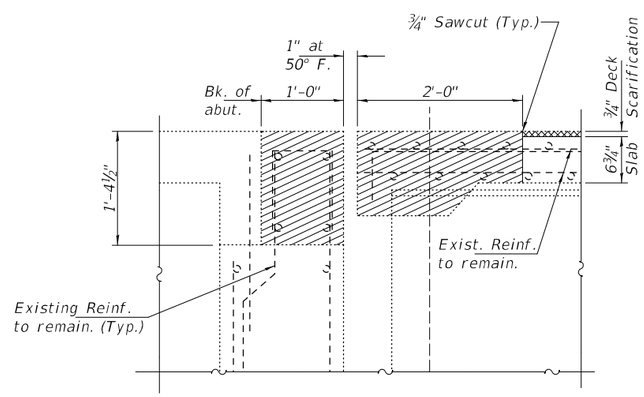

SECTION A-A

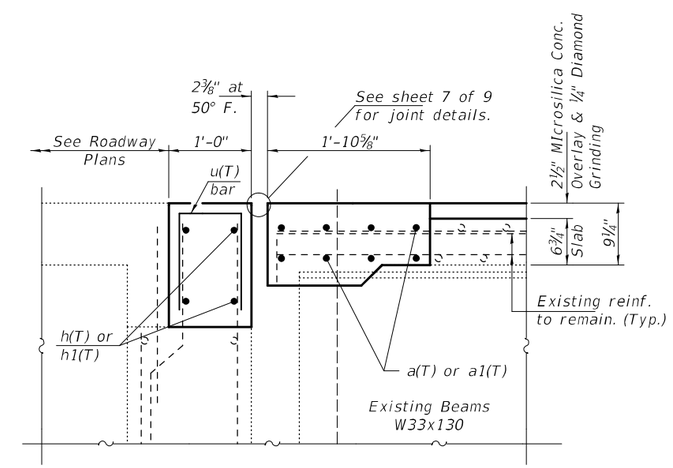

SECTION B-B

DESIGNED - SMR	EXAMINED	DATE - JUNE 24, 2026	STATE OF ILLINOIS DEPARTMENT OF TRANSPORTATION
CHECKED - CCC	ENGINEER OF STRUCTURAL SERVICES		
DRAWN - VRR / daburdell	PASSED	REVISED -	
CHECKED - SMR CCC	ENGINEER OF BRIDGES AND STRUCTURES	REVISED -	

S. ABUT. JOINT REMOVAL & REPLACEMENT DETAILS
SN 075-0129

SHEET NO. 5 OF 10 SHEETS

F.A.S. RTE.	SECTION	COUNTY	TOTAL SHEETS	SHEET NO.
2585	122(RS-10,BDR-1,-1)	PIKE	120	99

CONTRACT NO. 72J44

ILLINOIS | FED. AID PROJECT

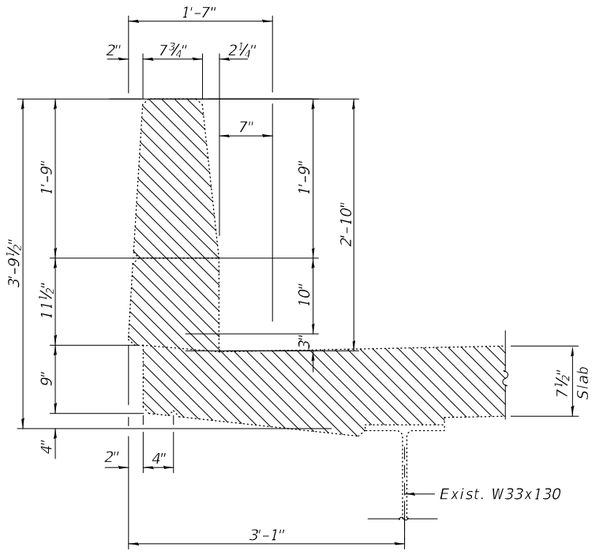

REMOVAL DETAILS

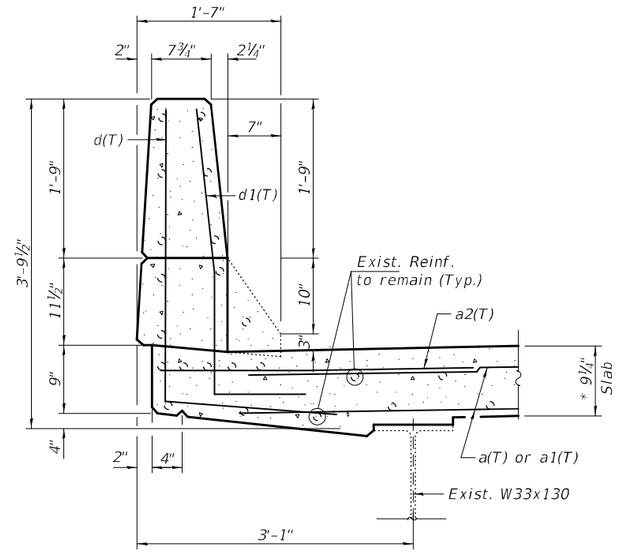

REPLACEMENT DETAILS

* Prior to ¼" Grinding

SECTION THRU BRIDGE PARAPET AT BOTH ABUTMENTS

Concrete Replacement

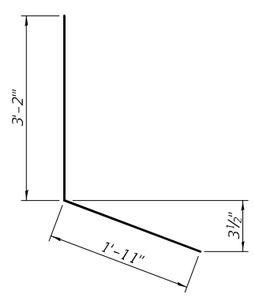

BAR d(T)

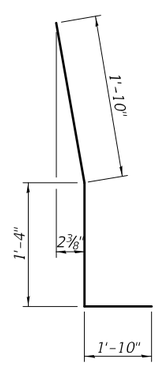

BAR d1(T)

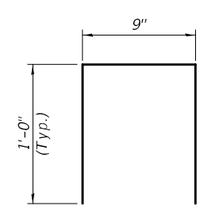

BAR u(T)

BILL OF MATERIAL

Bar	No.	Size	Length	Shape
a(T)	32	#5	26'-0"	
a1(T)	32	#5	21'-7"	
a2(T)	16	#6	4'-0"	
d(T)	16	#4	5'-1"	
d1(T)	16	#5	5'-0"	
h(T)	16	#6	27'-0"	
h1(T)	16	#6	21'-10"	
u(T)	44	#4	2'-9"	
Concrete Removal			Cu. Yd.	12.6
Concrete Superstructure			Cu. Yd.	14.2
Bar Splicers			Each	24
Reinforcement Bars, Textured Epoxy Coated			Pound	3070

DESIGNED - SMR	EXAMINED	DATE - JUNE 24, 2026	STATE OF ILLINOIS DEPARTMENT OF TRANSPORTATION
CHECKED - CCC	ENGINEER OF STRUCTURAL SERVICES		
DRAWN - VRR / daburdell	PASSED	REVISED -	
CHECKED - SMR CCC	ENGINEER OF BRIDGES AND STRUCTURES	REVISED -	

JOINT REMOVAL & REPLACEMENT DETAILS
SN 075-0129

SHEET NO. 6 OF 10 SHEETS

F.A.S. RTE.	SECTION	COUNTY	TOTAL SHEETS	SHEET NO.
2585	122(RS-10,BDR-1,-1)	PIKE	120	100

CONTRACT NO. 72J44

ILLINOIS FED. AID PROJECT

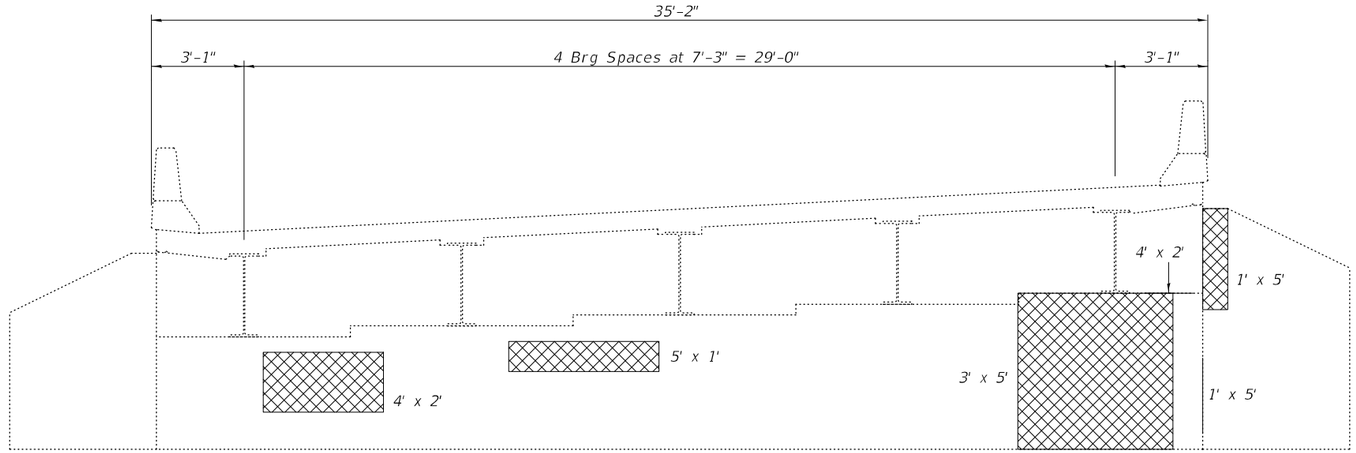

ELEVATION - NORTH ABUTMENT
(Looking North)

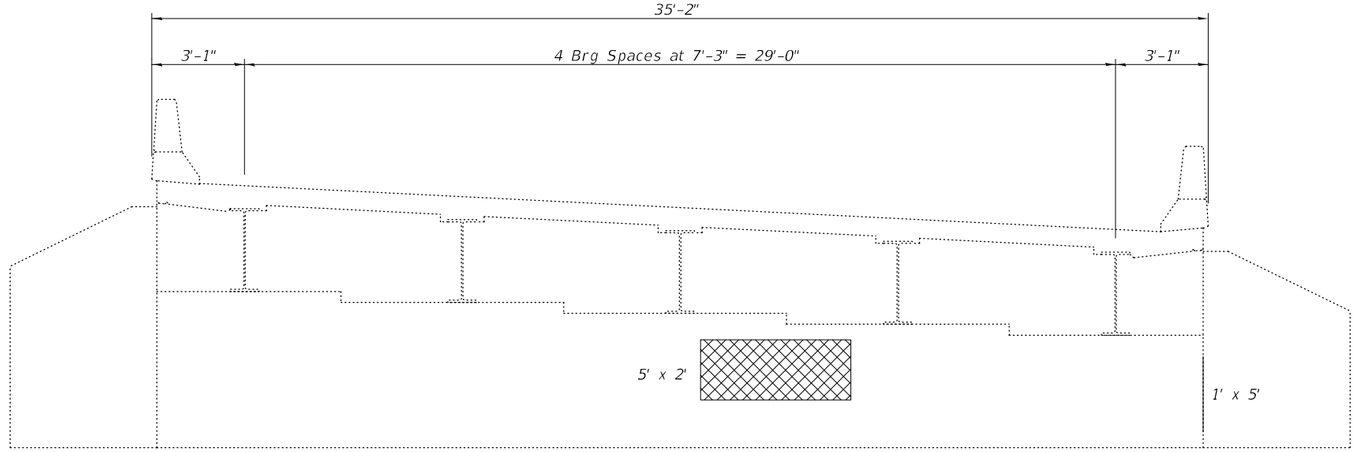

ELEVATION - SOUTH ABUTMENT
(Looking South)

Structural Repair of Concrete (Depth ≤ 5")

BILL OF MATERIAL

Item	Unit	Quantity
Structural Repair of Concrete (Depth ≤ 5")	Sq. Ft.	61

DESIGNED - SMR	EXAMINED	ENGINEER OF STRUCTURAL SERVICES	DATE - JUNE 24, 2026
CHECKED - CCC			
DRAWN - VRR / daburdell	PASSED	ENGINEER OF BRIDGES AND STRUCTURES	REVISED -
CHECKED - SMR CCC			REVISED -

STATE OF ILLINOIS
DEPARTMENT OF TRANSPORTATION

ABUTMENTS REPAIR DETAILS
SN 075-0129

SHEET NO. 7 OF 10 SHEETS

F.A.S. RTE.	SECTION	COUNTY	TOTAL SHEETS	SHEET NO.
2585	122(RS-10,BDR-1,-1)	PIKE	120	101
		CONTRACT NO. 72J44		
		ILLINOIS	FED. AID PROJECT	

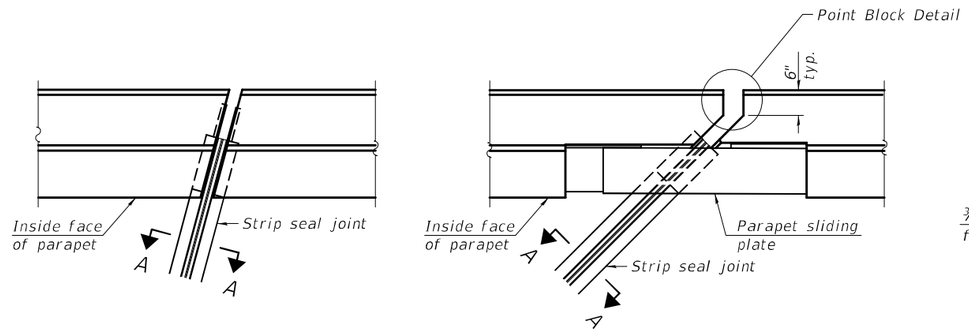

FOR SKEWS ≤ 30°

FOR SKEWS > 30°

PLAN AT PARAPET

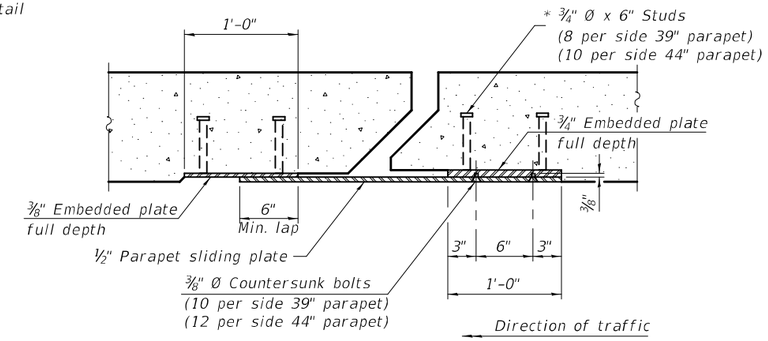

SECTION B-B

Notes:

The strip seal shall be made continuous and shall have a minimum thickness of ¼". The configuration of the strip seal shall match the configuration of the locking edge rails. Open or "webbed" strip seal gland configurations are not permitted. The gland shall be sized for a maximum rated movement of 4 inches.

The locking edge rails depicted are configured for typical applications and are conceptual only. The actual configuration of the locking edge rails and matching strip seal may vary from manufacturer to manufacturer provided they fit the application and meet the minimum anchorage shown. Flanged edge rails, however, will not be allowed. Locking edge rails may exceed the 4½" maximum depth provided the anchorage system is revised according to the manufacturer's recommendation.

The manufacturer's recommended installation methods shall be followed.

All steel components shall be galvanized after fabrication according to Article 520.03 of the Standard Specifications.

The Maximum space between locking edge rail segments shall be 3/16" and sealed with a suitable sealant; however, any rail joint within 10' measured perpendicular to the face of the curb or parapet shall be welded as shown in the locking edge rail splice detail.

Cost of parapet sliding plates, embedded plates, and anchorage studs included with Preformed Joint Strip Seal.

39" constant slope barrier shown, 44" constant slope barrier similar as noted.

The concrete opening below the strip seal will vary based on the locking edge rail chosen by the Contractor. Deck and parapet lengths shown elsewhere in the plans are dimensioned to the concrete opening, not the joint opening, and are based on the rolled locking edge rail. If the Contractor elects to use a different locking edge rail, dimensional adjustments may be required. One exception to this would be the strip seal joint at the end of the precast bridge approach slab. For these cases the pavement connector length shall be adjusted, not the length of the bridge approach slab.

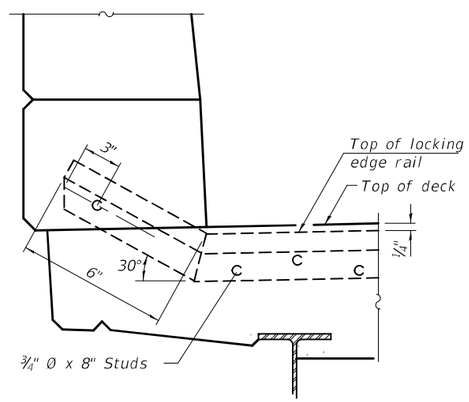

SECTION AT PARAPET

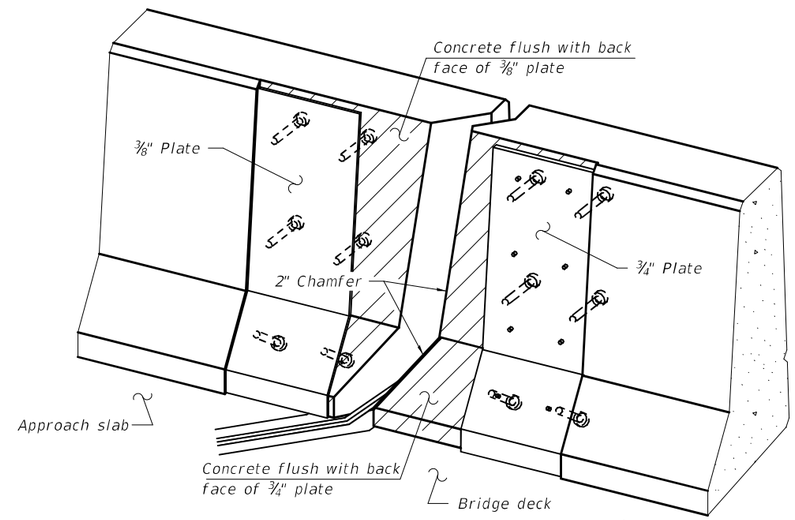

TRIMETRIC VIEW

(Showing back plates only)

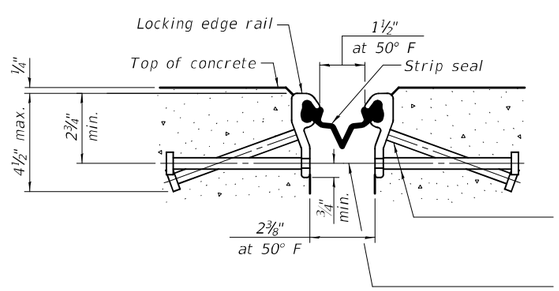

SHOWING ROLLED RAIL JOINT

* ⅝" Ø x 6" studs @ 6" cts. (alternate angled/bent studs with horizontal studs)

⅜" ϕ threaded rods in 7/16" ϕ holes at ±4'-0" cts. for holding the proper joint opening based on the temperature during the deck pour. Place to miss studs. All rods shall be burned, or sawed off flush with the plates after concrete is set.

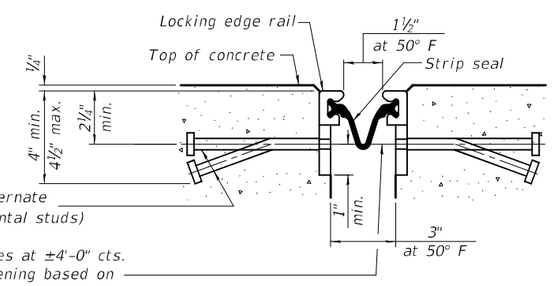

SHOWING WELDED RAIL JOINT

SECTION A-A

* Granular or solid flux filled headed studs conforming to Article 1006.32 of the Std. Specs., automatically end welded.

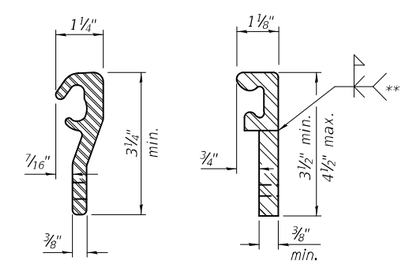

ROLLED (EXTRUDED) RAIL

WELDED RAIL

LOCKING EDGE RAILS

** Back gouge not required if complete joint penetration is verified by mock-up.

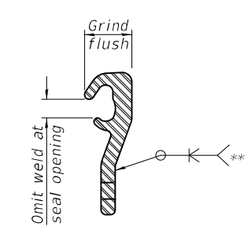

LOCKING EDGE RAIL SPLICE

The inside of the locking edge rail groove shall be free of weld residue. Rolled rail shown, welded rail similar.

BILL OF MATERIAL

Item	Unit	Total
Preformed Joint Strip Seal	Foot	98

DESIGNED - SMR	EXAMINED	DATE - JUNE 24, 2026	STATE OF ILLINOIS DEPARTMENT OF TRANSPORTATION
CHECKED - CCC	ENGINEER OF STRUCTURAL SERVICES		
DRAWN - VRR / daburdell	PASSED	REVISED -	
CHECKED - SMR CCC	ENGINEER OF BRIDGES AND STRUCTURES	REVISED -	

PREFORMED JOINT STRIP SEAL
SN 075-0129

SHEET NO. 8 OF 10 SHEETS

F.A.S. RTE.	SECTION	COUNTY	TOTAL SHEETS	SHEET NO.
2585	122(RS-10,BDR-1,-1)	PIKE	120	102
		CONTRACT NO. 72J44		
		ILLINOIS FED. AID PROJECT		

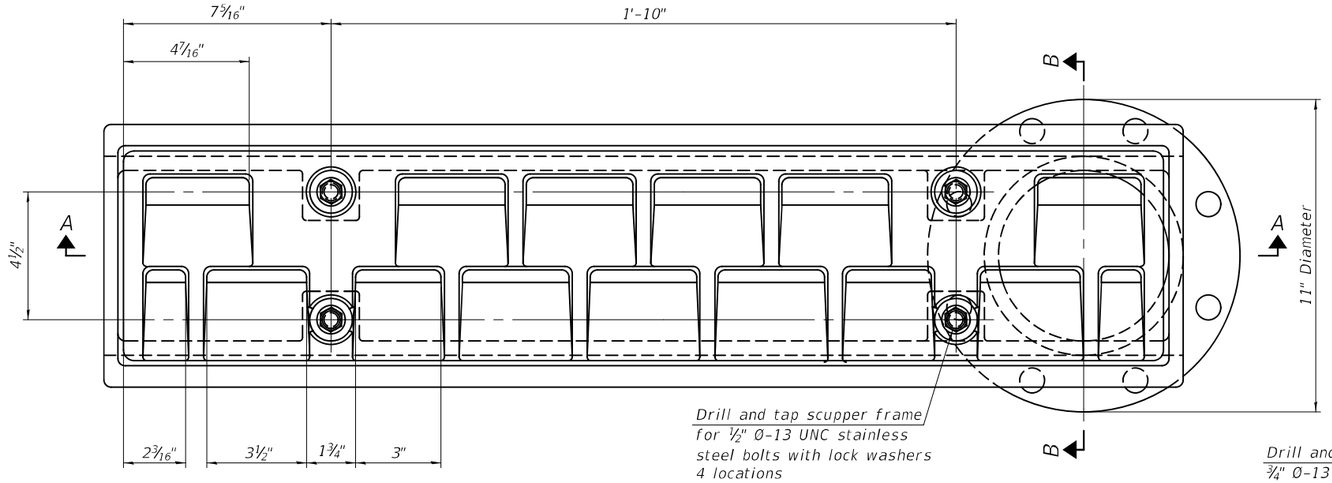

PLAN

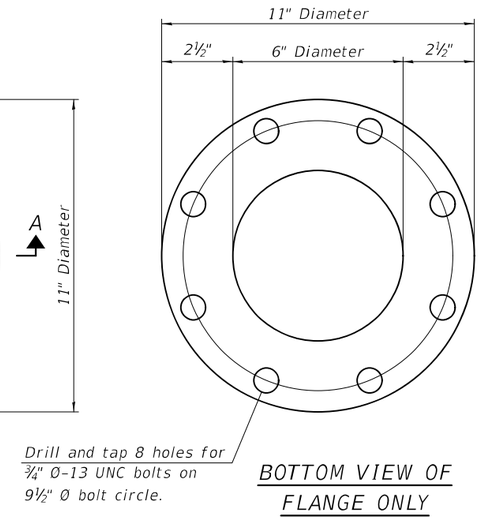

BOTTOM VIEW OF FLANGE ONLY

Notes:

All cast iron parts shall be gray iron conforming to the requirements of AASHTO M105, Class 35B and AASHTO M306.

Bolts, nuts and washers shall be according to ASTM A307 and shall be galvanized according to AASHTO M232. As an alternate stainless steel may be used.

Stainless steel hardware shall be according to Article 1006.29(d) of the Standard Specifications.

Structural steel weldments of equal sections and of the same configuration may be substituted for the cast iron scupper frames and downspouts; however, the scupper grates shall remain cast iron. Fillet or full penetration welds shall be used for the weldments. Details shall be submitted to the Engineer for approval.

Structural steel scupper frames and downspouts, when utilized, shall be galvanized according to AASHTO M111.

As an alternate, fiberglass may be used for downspouts according to ASTM D2996 with a short-time rupture strength hoop tensile stress of 30,000 psi min. in lieu of the cast iron or structural steel.

Exterior surfaces of downspouts and exterior exposed surfaces of the scupper frame below deck shall be treated as specified on sheet 1 of 10.

The Contractor shall take appropriate measures to assure that Protective Coat is not applied to the scupper.

Cost of the grate, frame, downspout, nuts and washers including complete installation of the scupper shall be paid for at the contract unit price for Drainage Scuppers, DS-33.

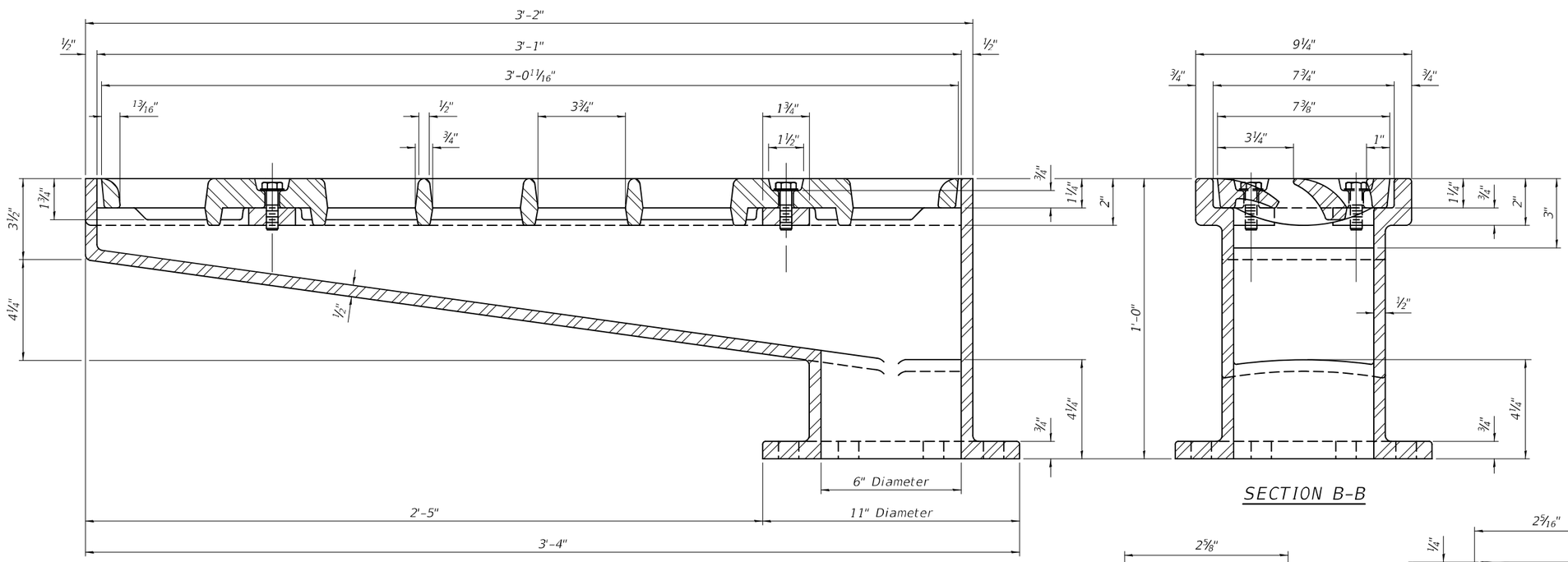

SECTION A-A

See sheet of for scupper location relative to parapet.

SECTION B-B

DOWNSPOUT

BILL OF MATERIAL

ITEM	UNIT	QUANTITY
Drainage Scuppers, DS-33	Each	1

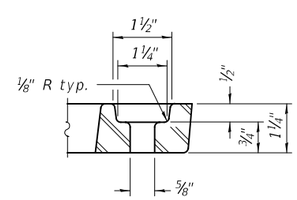

GRATE BOLT HOLE DETAIL

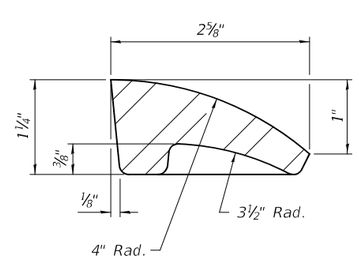

FIRST VANE DETAIL

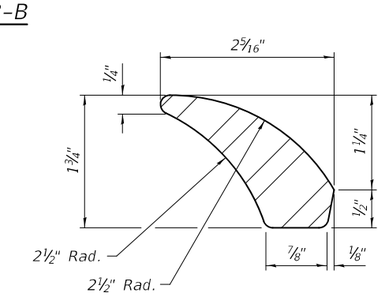

SECOND VANE DETAIL

DS-33 2-1-2023

DESIGNED - SMR	EXAMINED	DATE - JUNE 24, 2026	STATE OF ILLINOIS DEPARTMENT OF TRANSPORTATION
CHECKED - CCC	ENGINEER OF STRUCTURAL SERVICES		
DRAWN - VRR / daburdell	PASSED	REVISED -	
CHECKED - SMR CCC	ENGINEER OF BRIDGES AND STRUCTURES	REVISED -	

SCUPPER REPLACEMENT DETAILS
SN 075-0129

SHEET NO. 9 OF 10 SHEETS

F.A.S. RTE.	SECTION	COUNTY	TOTAL SHEETS	SHEET NO.
2585	122(RS-10,BDR-1,-1)	PIKE	120	103

CONTRACT NO. 72J44

ILLINOIS FED. AID PROJECT

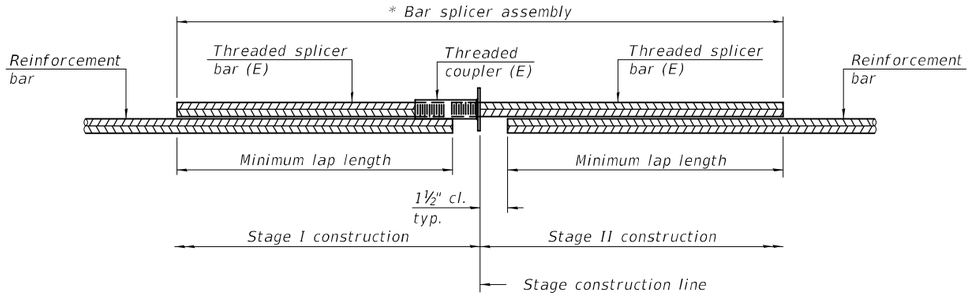

STANDARD BAR SPLICER ASSEMBLY PLAN

Only bar splicer assemblies as presented on the approved QPL list may be used.

Threaded splicer bar length = min. lap length + 1½" + thread length

* Epoxy not required on Bar Splicer Assembly components used in conjunction with black bars.

Location	Bar size	No. assemblies required	Minimum lap length
Deck	#5	16	3'-6"
Abutment	#6	8	4'-0"

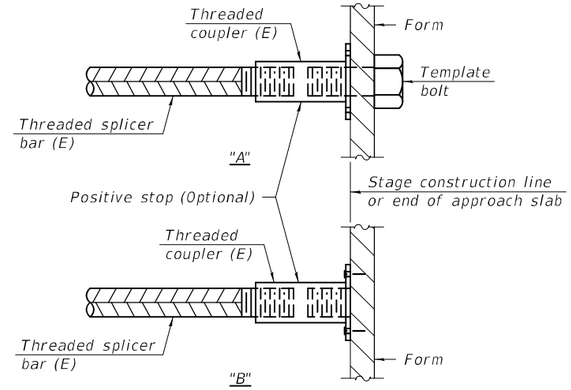

INSTALLATION AND SETTING METHODS

"A" : Set bar splicer assembly by means of a template bolt.
"B" : Set bar splicer assembly by nailing to wood forms or cementing to steel forms.
(E) : Indicates epoxy coating.

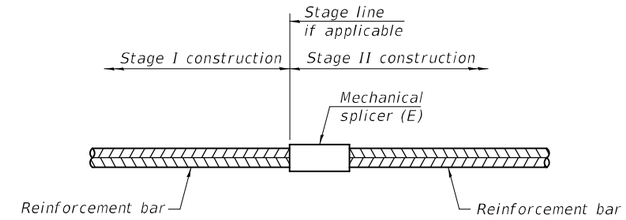

STANDARD MECHANICAL SPLICER

Location	Bar size	No. assemblies required

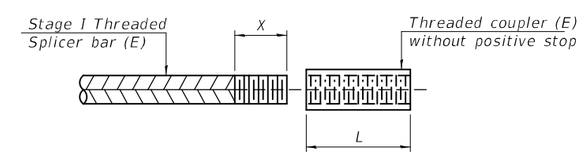

THREADING OF ASSEMBLIES

The threaded length "X" shall be no more than L/2. The bar should be tightened until 0-1 thread(s) is/are exposed.

Notes:

Splicer bars shall be deformed with threaded ends and have a minimum 60 ksi yield strength.

All reinforcement shall be lapped and tied to the splicer bars.

Bar splicer assemblies shall be epoxy coated according to the requirements for reinforcement bars. See Section 508 of the Standard Specifications.

See approved list of bar splicer assemblies and mechanical splicers for alternatives.

BSD-1 4-4-2025

DESIGNED - SMR	EXAMINED	DATE - JUNE 24, 2026	STATE OF ILLINOIS DEPARTMENT OF TRANSPORTATION
CHECKED - CCC	ENGINEER OF STRUCTURAL SERVICES		
DRAWN - VRR / daburdell	PASSED	REVISED -	
CHECKED - SMR CCC	ENGINEER OF BRIDGES AND STRUCTURES	REVISED -	

BAR SPLICER ASSEMBLY AND MECHANICAL SPLICER DETAILS
SN 075-0129

SHEET NO. 10 OF 10 SHEETS

F.A.S. RTE.	SECTION	COUNTY	TOTAL SHEETS	SHEET NO.
2585	122(RS-10,BDR-1,-1)	PIKE	120	104
		CONTRACT NO. 72J44		
	ILLINOIS	FED. AID PROJECT		

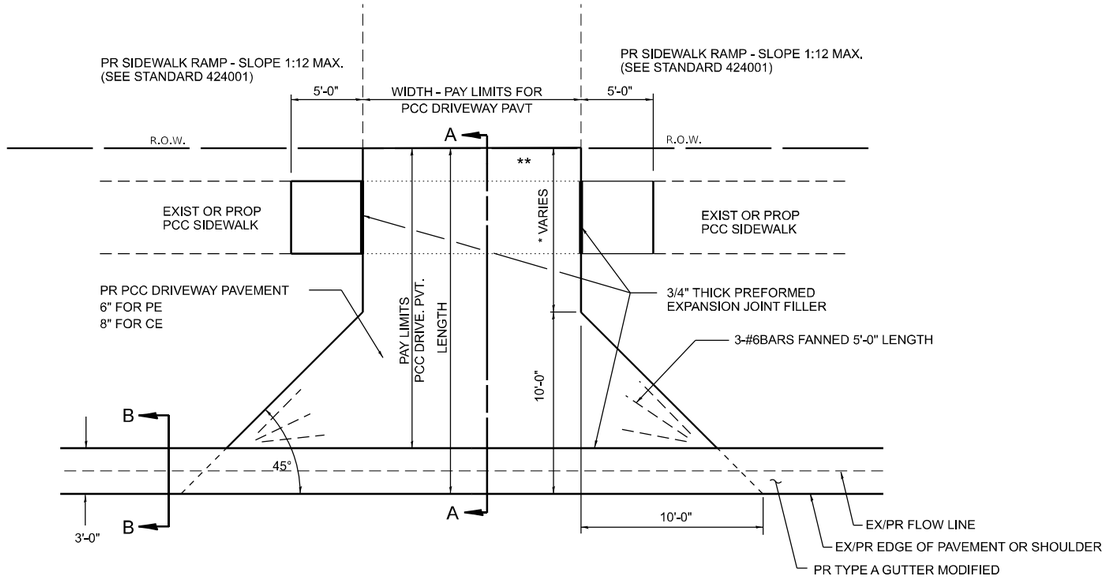

PLAN - URBAN PE & CE

** MATCH IN KIND BEHIND SIDEWALK
FOR EX EARTH OR AGGREGATE SURFACES :
PR AGGREGATE BASE COURSE, TYPE B 6" - PE/FE
PR PCC DRIVEWAY PAVT. 8" - CE

FOR EX HMA CONC. SURFACES :
PR INCIDENTAL HMA SURFACING 6"- PE
PR INCIDENTAL HMA SURFACING 8"- CE

FOR EX PCC SURFACES :
PR PCC DRIVEWAY PAVT. 6"- PE
PR PCC DRIVEWAY PAVT. 8"- CE

* NOTE : IN AREAS WITH NO SIDEWALK, MATCH IN KIND BEHIND 10' FLARE

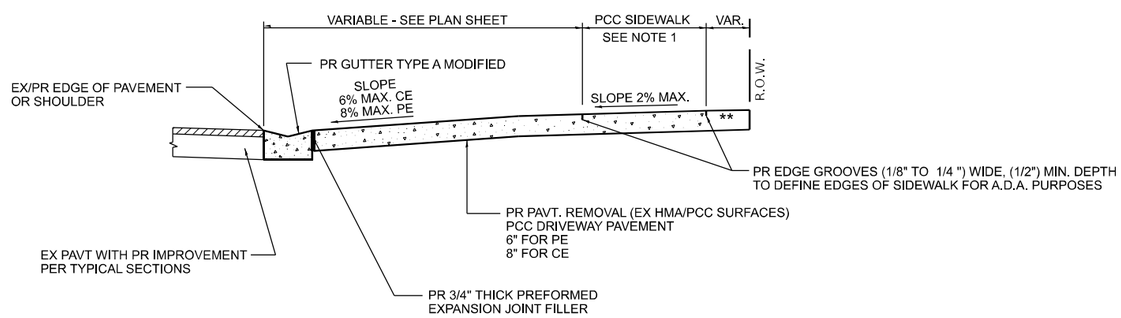

SECTION A - A

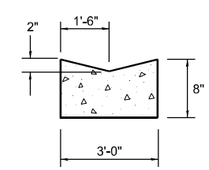

SECTION B - B

NOTES:

1. SEE PLAN SHEET / ENTRANCE PROFILE FOR LOCATION OF SIDEWALK.
2. THE COST OF FURNISHING AND INSTALLING THE 3/4" PREFORMED EXPANSION JOINT FILLER AND REINFORCEMENT BARS SHALL BE INCLUDED IN THE COST OF P.C.C. DRIVEWAY PAVEMENT.

SHEET 1 OF 3
UPDATED 7/30/2025

MODEL: District Standard-7 [Sheet]
FILE NAME: c:\pw_work\pwidot\mcquade.jackson@illinois.gov\d0983066\D672J44 D6 Detail Sheet.dgn

USER NAME = mcquade.jackson	DESIGNED -	REVISED -	STATE OF ILLINOIS DEPARTMENT OF TRANSPORTATION
	DRAWN -	REVISED -	
	CHECKED -	REVISED -	
PLOT DATE = 5/19/2026	DATE -	REVISED -	

DIST. 6 DETAILS FOR ENTRANCE & MAILBOX TURNOUT IN TYPE A GUTTER MODIFIED SECT. (3R PROJ.) URBA

SCALE: SHEET OF 16 SHEETS STA. TO STA.

F.A.S RTE.	SECTION	COUNTY	TOTAL SHEETS	SHEET NO.
2585	122(RS-10,BDR-1,I-1)	*	120	105
		CONTRACT NO. 72J44		
		ILLINOIS	FED. AID PROJECT	

*BROWN, PIKE

DETAILS OF MAILBOX TURNOUTS

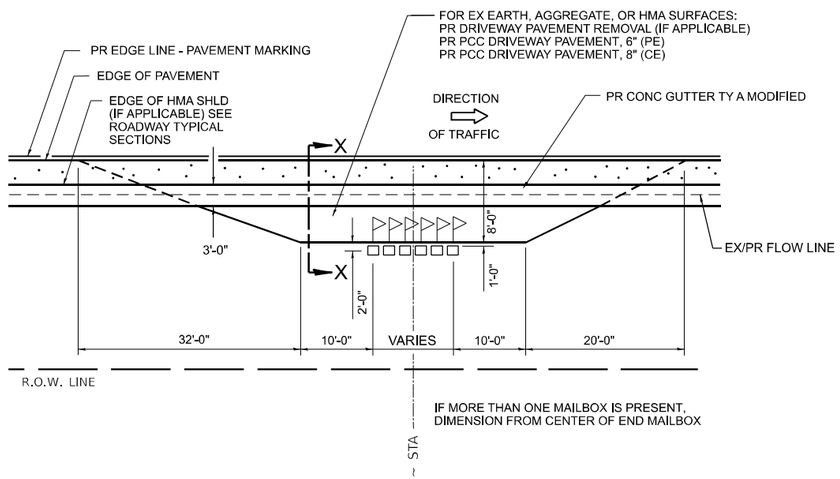

PLAN - MAILBOX TURNOUTS

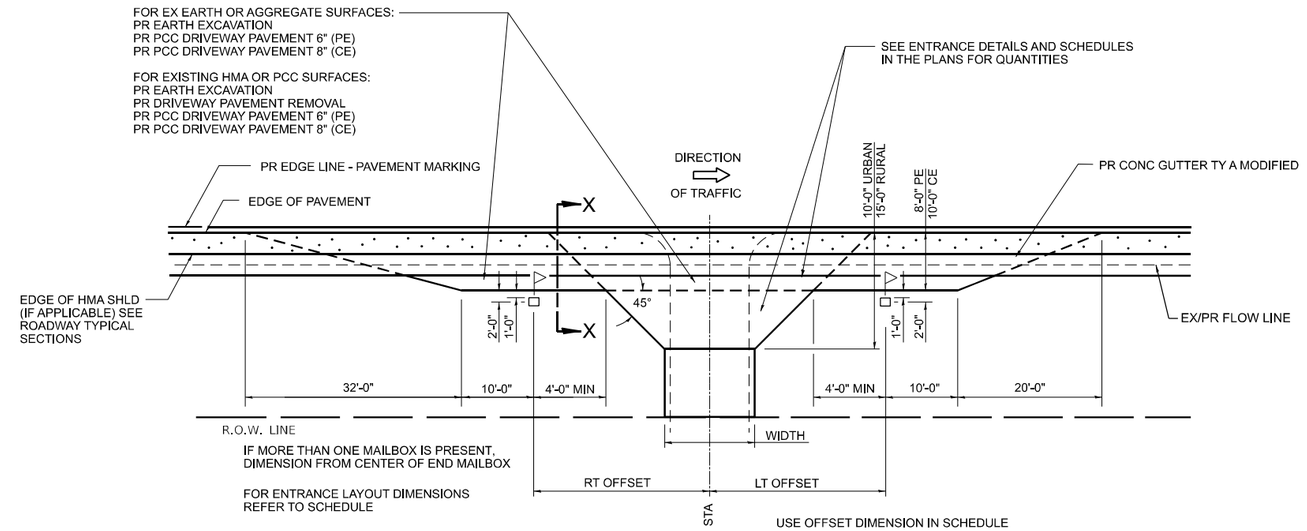

PLAN - MAILBOX TURNOUTS
PLAN - COMBINED MAILBOX TURNOUT WITH TRAILING OR LEADING ENTRANCE

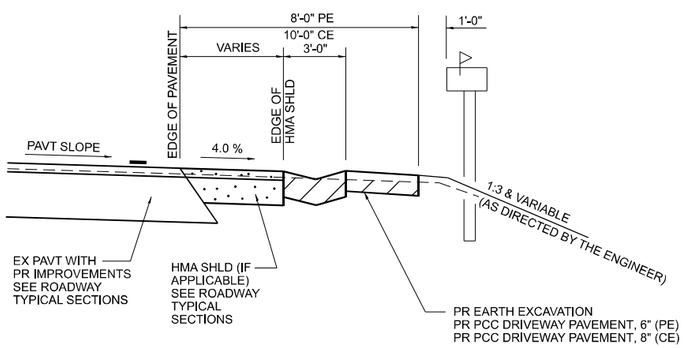

SECTION X-X THRU MAILBOX TURNOUT
APPLIES TO MAILBOX TURNOUTS OF EX EARTH OR AGGREGATE

(DETAIL APPLIES WHEN MAILBOX TURNOUT DOES NOT EXIST. IF EXISTING, TREAT SAME AS ENTRANCE)

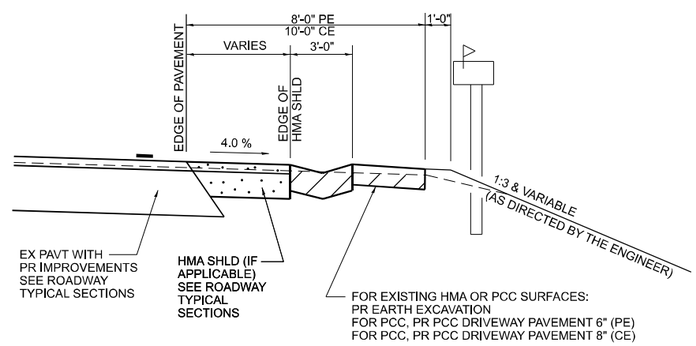

SECTION X-X THRU MAILBOX TURNOUT
APPLIES TO MAILBOX TURNOUTS COMBINED WITH EX HMA & PCC PE & CE WITH NEW HMA SHLD

(DETAIL APPLIES WHEN MAILBOX TURNOUT DOES NOT EXIST. IF EXISTING, TREAT SAME AS ENTRANCE)

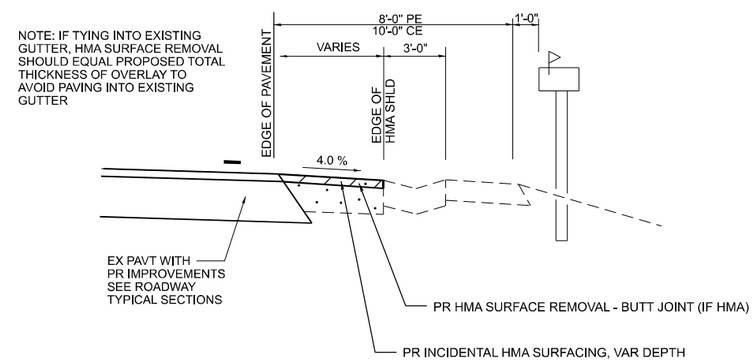

SECTION X-X THRU MAILBOX TURNOUT
APPLIES TO MAILBOX TURNOUTS COMBINED WITH EX HMA & PCC PE & CE W/O NEW HMA SHLD

NOTE: IF THERE IS A NEW HMA SHOULDER PROPOSED, THEN THE ENTIRE EXISTING MB TURNOUT WILL BE REPLACED. IF THERE IS NO PROPOSED NEW HMA SHOULDER, THE EXISTING MB TURNOUT WILL BE MILLED AND RESURFACED.

SHEET 2 OF 3
UPDATED 3/5/2026

MODEL: District Standard-1-1 [Sheet]
FILE NAME: c:\pw_work\pwidot\mcquade.jackson@illinois.gov\d0383066\D672J44 D6 Detail Sheet.dgn

USER NAME = mcquade.jackson	DESIGNED -	REVISED -	STATE OF ILLINOIS DEPARTMENT OF TRANSPORTATION
	DRAWN -	REVISED -	
	CHECKED -	REVISED -	
PLOT DATE = 5/19/2026	DATE -	REVISED -	

DIST. 6 DETAILS FOR ENTRANCE & MAILBOX TURNOUT IN TYPE A GUTTER MODIFIED SECT. (3R PROJ.) URBAN

SCALE: SHEET OF 16 SHEETS STA. TO STA.

F.A.S RTE.	SECTION	COUNTY	TOTAL SHEETS	SHEET NO.
2585	122(RS-10,BDR-1,I-1)	*	120	106

CONTRACT NO. 72J44

ILLINOIS | FED. AID PROJECT

*BROWN, PIKE

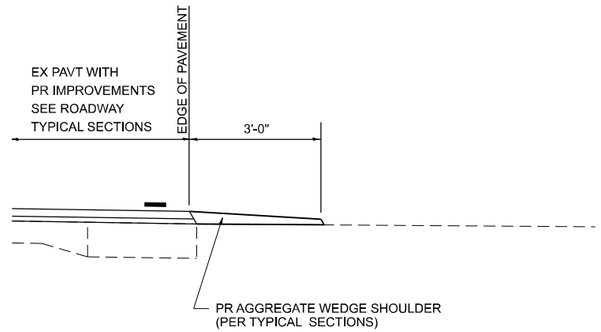

SECTION A-A FOR EX EARTH/ AGGREGATE FE

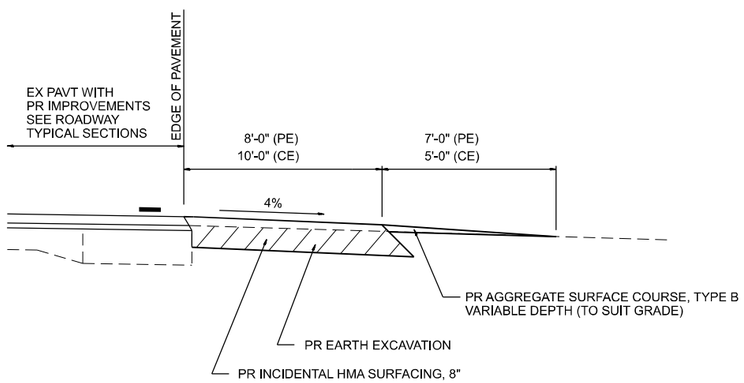

SECTION A-A FOR EX EARTH/AGGREGATE PE & CE

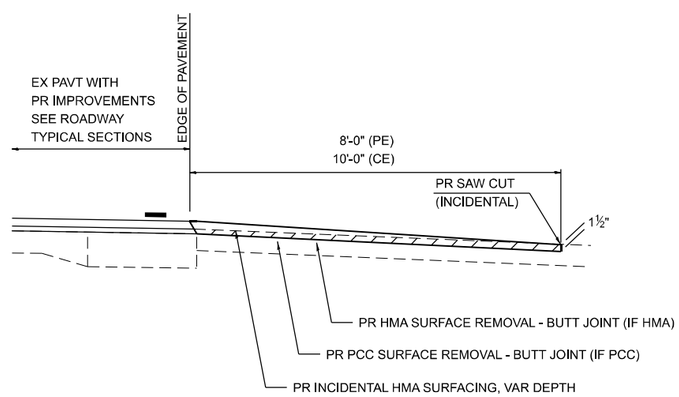

SECTION A-A FOR EX BITUMINOUS/ PC CONCRETE PE & CE

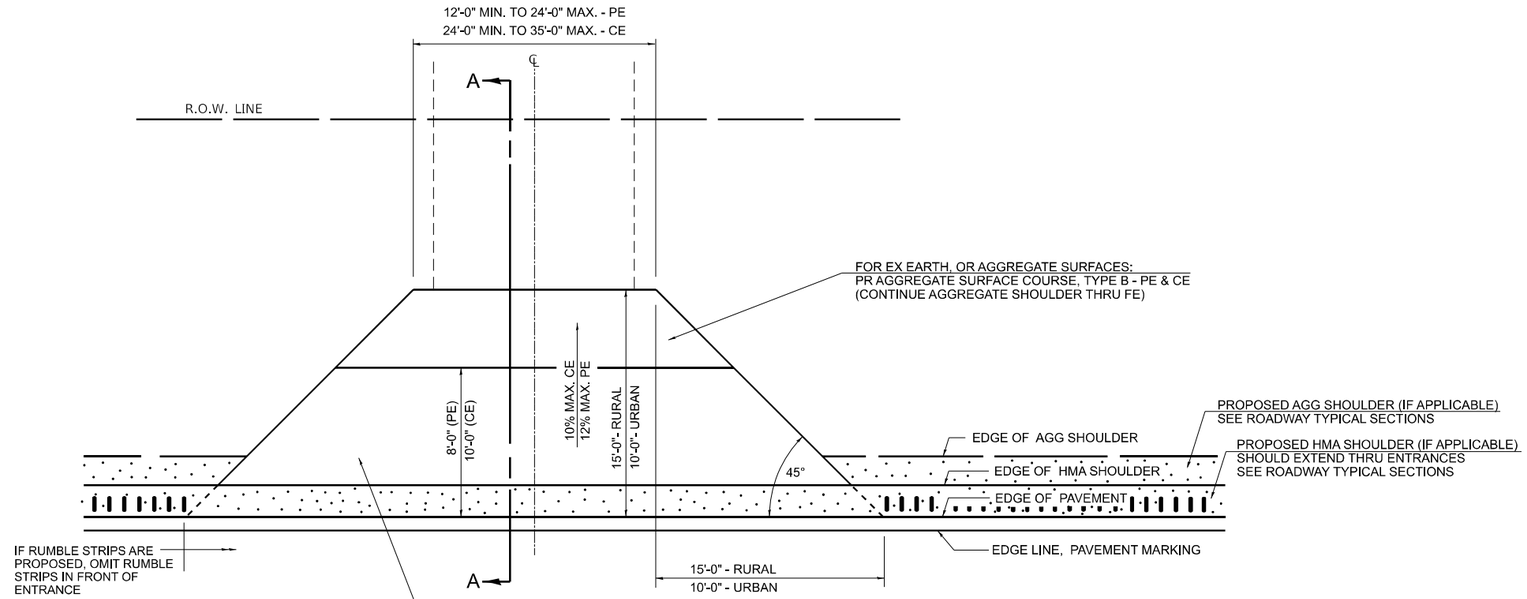

FOR EX EARTH OR AGGREGATE SURFACES:
PR AGGREGATE SHOULDER THRU FE
PR INCIDENTAL HMA SURFACING, 8" (PE & CE)

FOR EX HMA CONCRETE SURFACES:
PR HMA SURFACE REMOVAL - BUTT JOINT

FOR EX PCC SURFACES:
PR PCC SURFACE REMOVAL - BUTT JOINT

FOR ENTRANCE LAYOUT DIMENSIONS
AND SECTION A-A, REFER TO THE
SCHEDULES IN THE PLANS

PLAN - ENTRANCE

GENERAL NOTES:

THE RESIDENT ENGINEER WILL DETERMINE THE EXACT TYPE OF IMPROVEMENT TO BE COMPLETED FOR ALL ENTRANCES, SIDEROADS, AND MAILBOX TURNOUTS ON THIS PROJECT.

THE PLAN DETAILS AND SCHEDULES SHOULD BE USED AS A GUIDE FOR THE ENGINEER TO IMPLEMENT THE FINAL DESIGN. THE ENGINEER MAY DECIDE TO SALVAGE PORTIONS OF THE EXISTING ENTRANCE PAVEMENT STRUCTURE, THEREBY REDUCING PAY ITEM QUANTITIES. NO ADDITIONAL PAYMENT WILL BE ALLOWED FOR THIS REDUCTION IN QUANTITIES.

ANY WORK THE ENGINEER REQUIRES WHICH IS NOT COVERED BY A PAY ITEM CONTAINED IN THE PLANS WILL BE PAID FOR ACCORDING TO ARTICLE 109.04 OF THE STANDARD SPECIFICATIONS.

INCIDENTAL HMA SURFACING REQUIRED TO CONSTRUCT THE ENTRANCES SHALL BE PLACED ACCORDING TO THE APPLICABLE PORTIONS OF SECTION 406 AND 408 OF THE STANDARD SPECIFICATIONS AND AS DIRECTED BY THE ENGINEER.

WHEN THE INCIDENTAL HMA SURFACING PROPOSED FOR THE IMPROVEMENT IS THICKER THAN 3 INCHES,THE CONTRACTOR WILL BE REQUIRED TO PLACE MORE THAN ONE LIFT. THE BOTTOM LIFT(S) SHALL MEET THE REQUIREMENTS OF HMA BASE COURSE IN SECTION 406 OF THE STANDARD SPECIFICATIONS AND THE TOP LIFT OF 1 1/2" INCHES SHALL MEET THE REQUIREMENTS OF HMA INCIDENTAL SURFACING.

THIS WORK WILL BE PAID FOR ACCORDING TO SECTIONS 351, 358, 408, 423 AND 440 OF THE STANDARD SPECIFICATIONS.

FOR SMART OVERLAYS (1 1/2" MILLING AND 1 1/2" RESURFACING PROJECTS), USE THE SAME STANDARDS AS SHOWN, OMITTING THE BINDER COURSE.

SHEET 1 OF 3
UPDATED 3/5/2026

MODEL: District Standard-2-1 [Sheet]
FILE NAME: c:\pw_work\pwidot\mcquade.jackson@illinois.gov\d0983066\D672J44 D6 Detail Sheet.dgn

USER NAME = mcquade.jackson	DESIGNED -	REVISED -	
	DRAWN -	REVISED -	
	CHECKED -	REVISED -	
PLOT DATE = 5/19/2026	DATE -	REVISED -	

STATE OF ILLINOIS
DEPARTMENT OF TRANSPORTATION

DIST. 6 DETAILS FOR ENTRANCE & MAILBOX TURNOUT IN TYPE A GUTTER MODIFIED SECT. (3R PROJ.) URBAN

SCALE: SHEET OF 16 SHEETS STA. TO STA.

F.A.S RTE.	SECTION	COUNTY	TOTAL SHEETS	SHEET NO.
2585	122(RS-10,BDR-1,I-1)	*	120	107
		CONTRACT NO. 72J44		
		ILLINOIS FED. AID PROJECT		

*BROWN, PIKE

DETAILS OF MAILBOX TURNOUTS

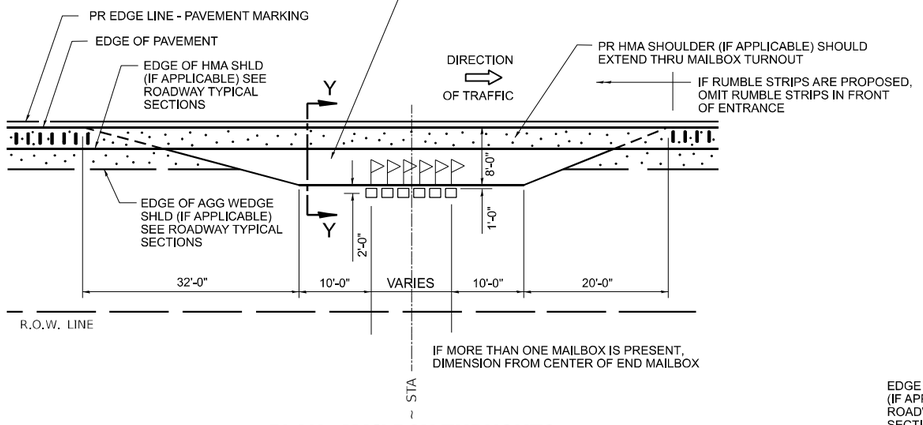

PLAN - MAILBOX TURNOUTS

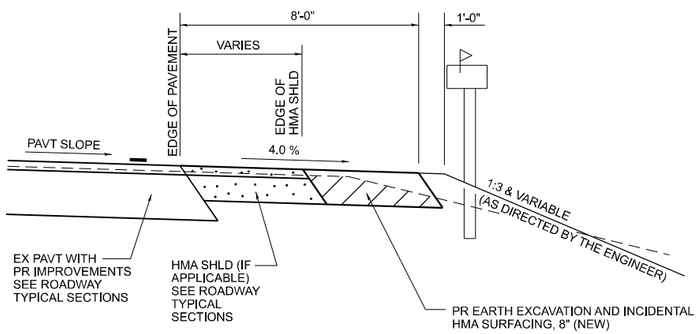

SECTION Y-Y THRU MAILBOX TURNOUT
APPLIES TO EX EARTH OR AGGREGATE STAND-ALONE MAILBOX TURNOUTS

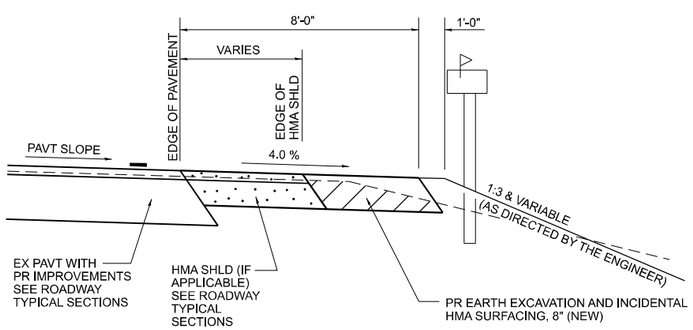

SECTION X-X THRU MAILBOX TURNOUT
APPLIES TO MAILBOX TURNOUTS COMBINED WITH EX EARTH OR AGGREGATE PE & FE

(DETAIL APPLIES WHEN MAILBOX TURNOUT DOES NOT EXIST. IF EXISTING, TREAT SAME AS ENTRANCE)

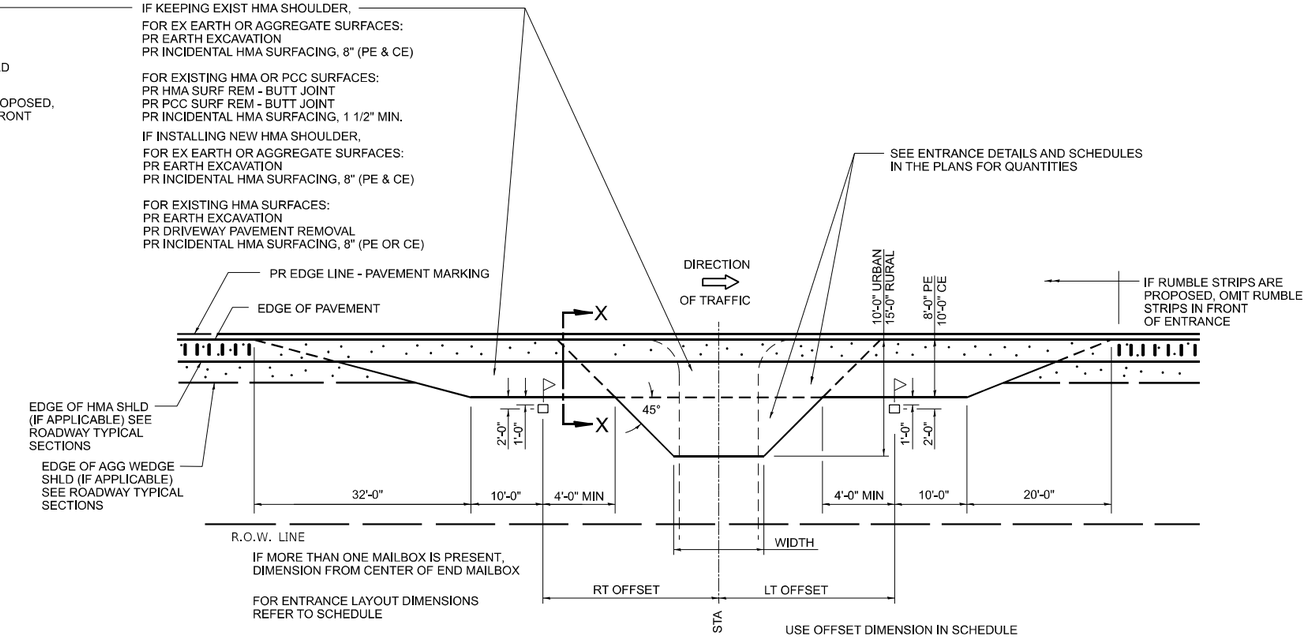

PLAN - MAILBOX TURNOUTS
PLAN - COMBINED MAILBOX TURNOUT WITH TRAILING OR LEADING ENTRANCE

NOTE: IF THERE IS A NEW HMA SHOULDER PROPOSED, THEN THE ENTIRE EXISTING MB TURNOUT WILL BE REPLACED. IF THERE IS NO PROPOSED NEW HMA SHOULDER, THE EXISTING MB TURNOUT WILL BE MILLED AND RESURFACED.

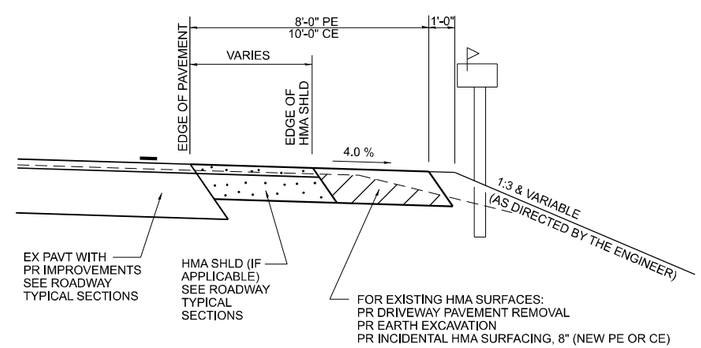

SECTION X-X THRU MAILBOX TURNOUT
APPLIES TO MAILBOX TURNOUTS COMBINED WITH EX HMA PE & CE WITH NEW HMA SHLD

(DETAIL APPLIES WHEN MAILBOX TURNOUT DOES NOT EXIST. IF EXISTING, TREAT SAME AS ENTRANCE)

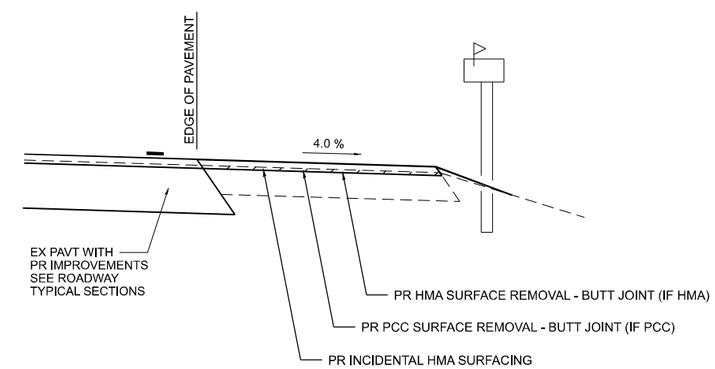

SECTION X-X THRU MAILBOX TURNOUT
APPLIES TO MAILBOX TURNOUTS COMBINED WITH EX HMA & PCC PE & CE W/O NEW HMA SHLD AND HMA & PCC STAND-ALONE MAILBOX TURNOUTS

SHEET 2 OF 3
UPDATED 3/5/2026

MODEL: District Standard-3-1 [Sheet]
FILE NAME: c:\pw_work\pwidot\mcquade.jackson@illinois.gov\d0983066\D672J44 D6 Detail Sheet.dgn

USER NAME = mcquade.jackson	DESIGNED -	REVISED -	STATE OF ILLINOIS DEPARTMENT OF TRANSPORTATION
	DRAWN -	REVISED -	
	CHECKED -	REVISED -	
PLOT DATE = 5/19/2026	DATE -	REVISED -	

DIST. 6 DETAILS FOR RURAL/URBAN ENT., MAILBOX TURNOUT & SIDEROADS W/O CONC. GUTTER (3P-PROJ.)

SCALE: SHEET OF 16 SHEETS STA. TO STA.

F.A.S RTE.	SECTION	COUNTY	TOTAL SHEETS	SHEET NO.
2585	122(RS-10,BDR-1,I-1)	*	120	108
		CONTRACT NO. 72J44		
		ILLINOIS	FED. AID PROJECT	

*BROWN, PIKE

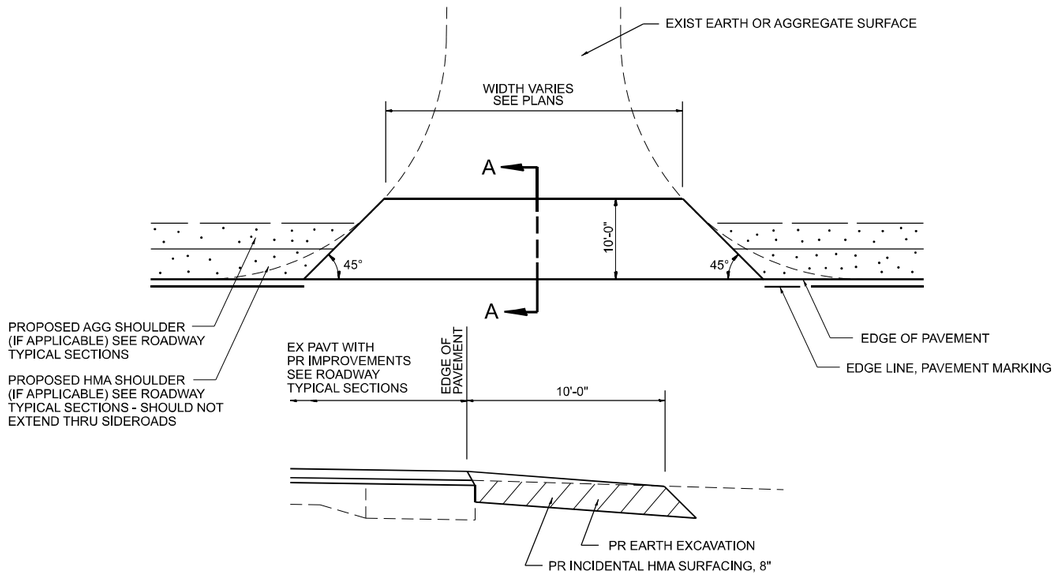

SECTION A-A

EXIST AGGREGATE SIDEROAD DETAIL (NEW HMA APRON)

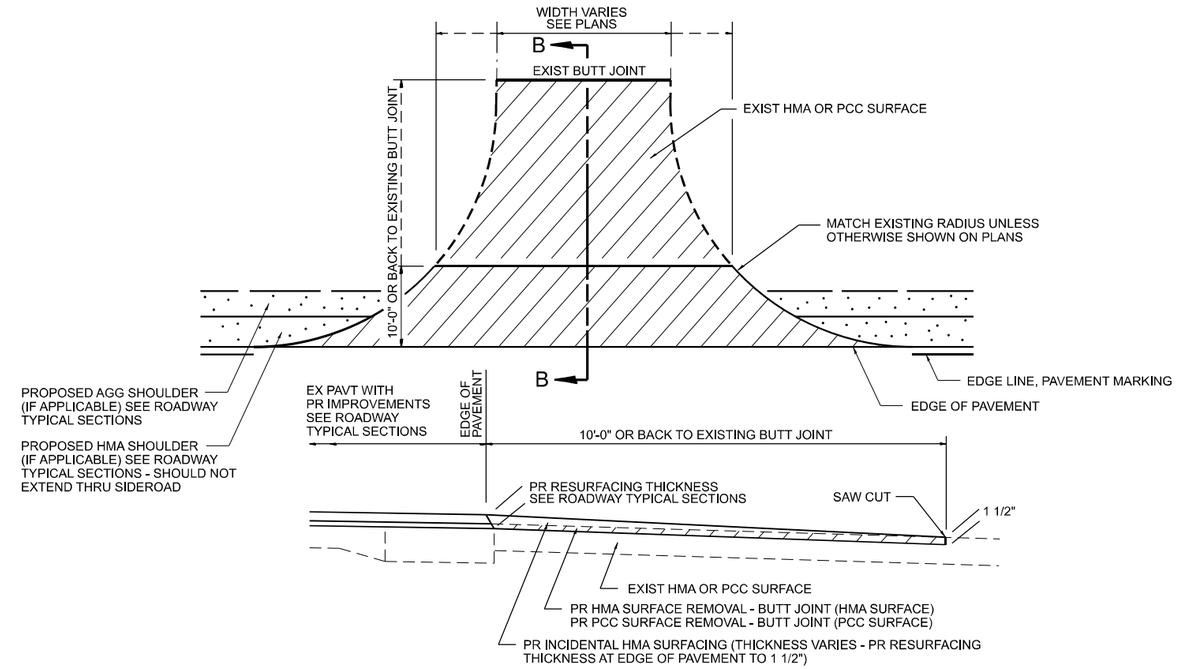

SECTION B-B

EXIST HMA OR PCC SIDEROAD DETAIL W/O CC&G (TO BE RESURFACED)

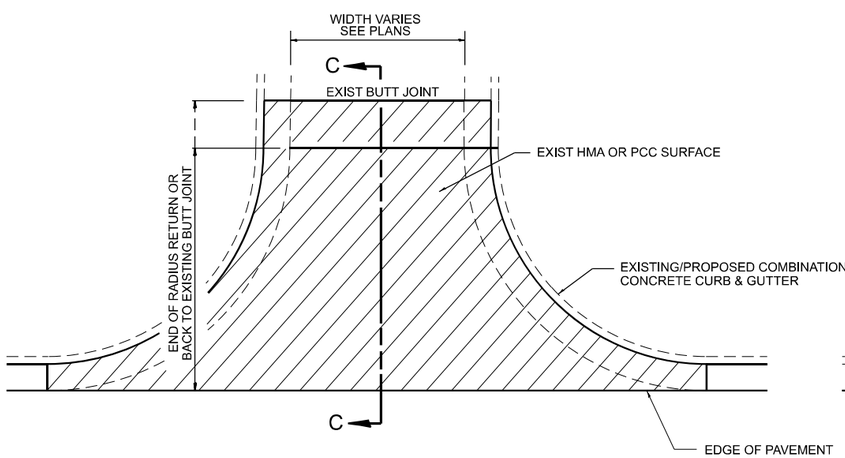

EXIST HMA SIDEROAD DETAIL W/CC&G (TO BE RESURFACED)

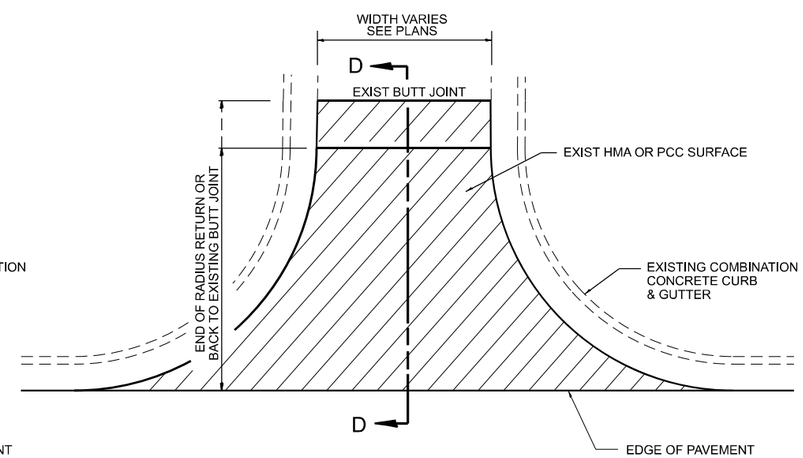

EXIST HMA OR PCC SIDEROAD DETAIL W/CC&G (TO BE RESURFACED - MILL AND FILL ONLY)

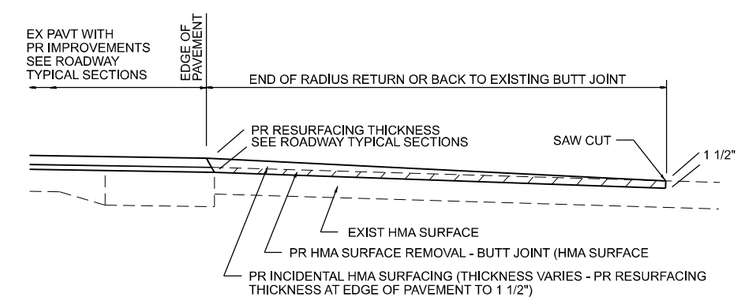

SECTION C-C

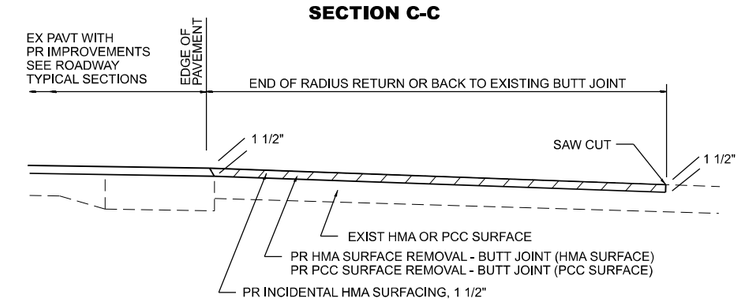

SECTION D-D

NOTES:

1. IF HMA SHOULDERS ARE PROPOSED, THEY SHOULD NOT EXTEND THROUGH SIDEROADS.
2. THE COST OF SAW CUTS SHALL BE INCLUDED IN THE COST OF THE HMA SURFACE REMOVAL - BUTT JOINT OR PCC SURFACE REMOVAL - BUTT JOINT PAY ITEMS

SHEET 1 OF 3
UPDATED 3/5/2026

MODEL: District Standard-4-1 [Sheet]
FILE NAME: c:\pw_work\pwidot\mcquade.jackson@illinois.gov\d0983066\D672J44 D6 Detail Sheet.dgn

USER NAME = mcquade.jackson	DESIGNED -	REVISED -	STATE OF ILLINOIS DEPARTMENT OF TRANSPORTATION
	DRAWN -	REVISED -	
	CHECKED -	REVISED -	
PLOT DATE = 5/19/2026	DATE -	REVISED -	

DIST. 6 DETAILS FOR SIDEROADS (3P-PROJ.)

SCALE: SHEET OF 16 SHEETS STA. TO STA.

F.A.S RTE.	SECTION	COUNTY	TOTAL SHEETS	SHEET NO.
2585	122(RS-10,BDR-1,I-1)	*	120	109

CONTRACT NO. 72J44

ILLINOIS | FED. AID PROJECT

*BROWN, PIKE

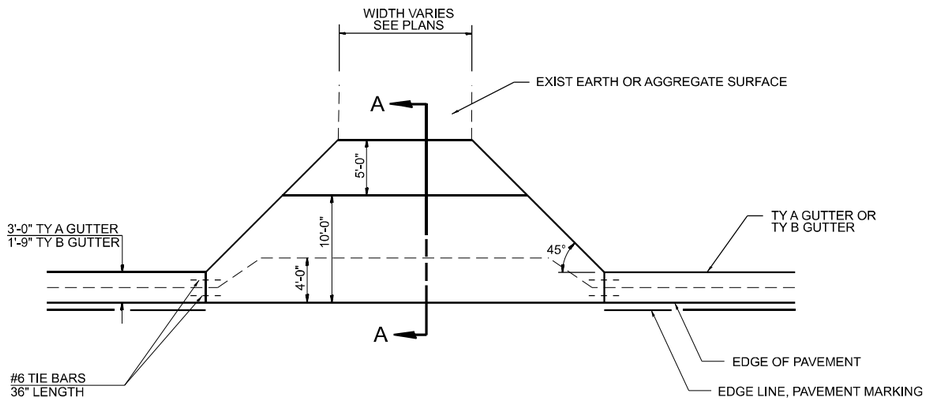

EXIST AGGREGATE SIDEROAD DETAIL
TY A GUTTER THRU SIDEROAD

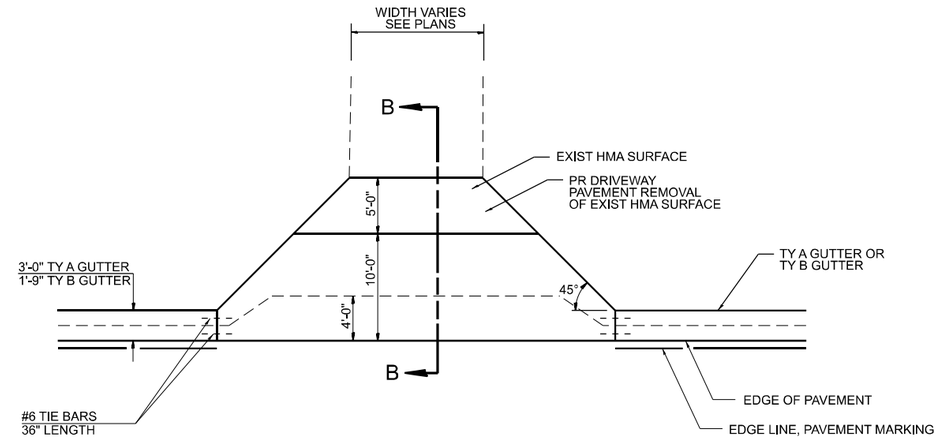

EXIST HMA SIDEROAD DETAIL
TY A GUTTER THRU SIDEROAD

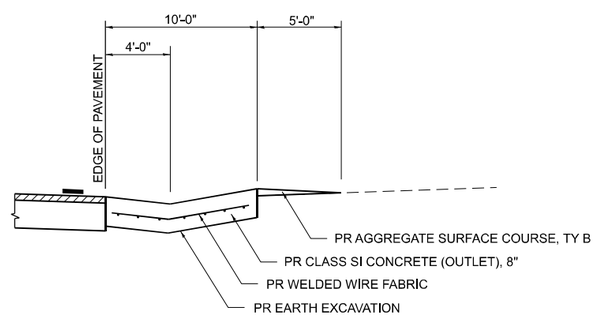

SECTION A - A

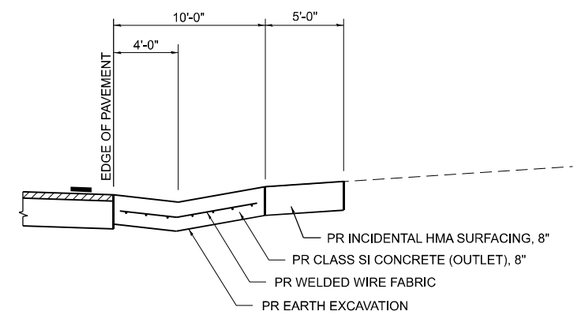

SECTION B - B

NOTES:

1. THE COST OF FURNISHING AND INSTALLING REINFORCEMENT BARS AND WELDED WIRE FABRIC SHALL BE INCLUDED IN THE COST OF CLASS SI CONCRETE (OUTLET)

SHEET 2 OF 3
UPDATED 3/5/2026

MODEL: District Standard-5-1 [Sheet]
FILE NAME: c:\pw_work\pwidot\mcquade.jackson@illinois.gov\d0983065\D672J44 D6 Detail Sheet.dgn

USER NAME = mcquade.jackson	DESIGNED -	REVISED -	
	DRAWN -	REVISED -	
	CHECKED -	REVISED -	
PLOT DATE = 5/19/2026	DATE -	REVISED -	

STATE OF ILLINOIS
DEPARTMENT OF TRANSPORTATION

DIST. 6 DETAILS FOR SIDEROADS (3P-PROJ.)

SCALE: SHEET OF 16 SHEETS STA. TO STA.

F.A.S RTE.	SECTION	COUNTY	TOTAL SHEETS	SHEET NO.
2585	122(RS-10,BDR-1,I-1)	*	120	110

CONTRACT NO. 72J44

ILLINOIS FED. AID PROJECT

*BROWN, PIKE

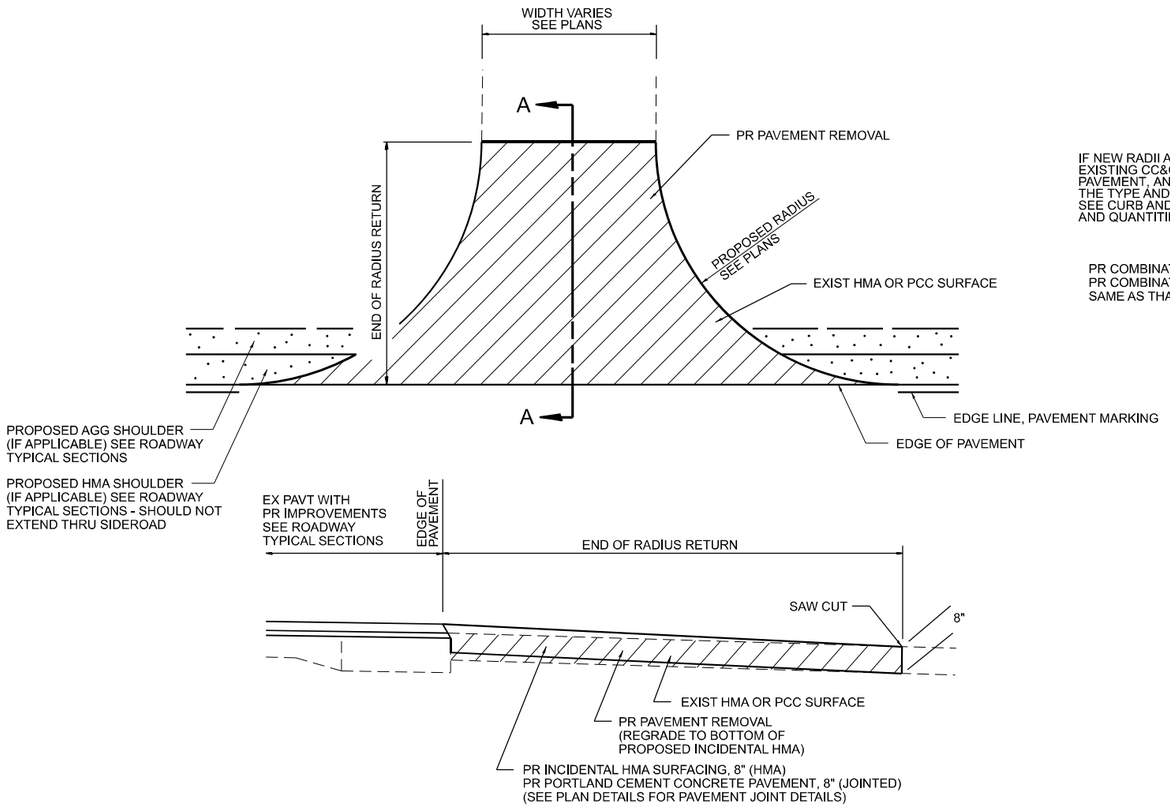

SECTION A-A

EXIST HMA OR PCC SIDEROAD DETAIL W/O CC&G (RECONSTRUCTION)

IF NEW RADII ARE PROPOSED FOR THE SIDEROAD, EXISTING CC&G WILL BE REMOVED ALONG WITH THE PAVEMENT, AND THE PROPOSED CC&G SHALL MATCH THE TYPE AND KIND OF THE CC&G TO REMAIN IN PLACE. SEE CURB AND GUTTER SCHEDULES FOR LOCATIONS AND QUANTITIES.

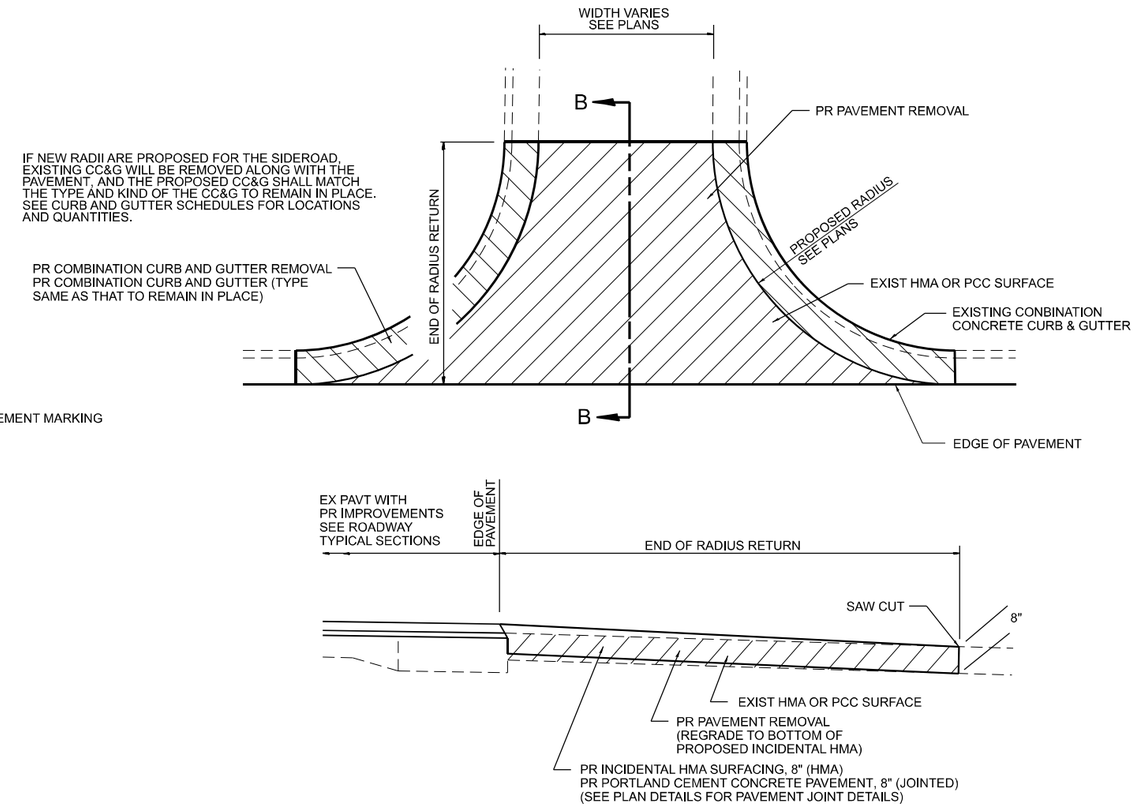

SECTION B-B

EXIST HMA OR PCC SIDEROAD DETAIL W/CC&G (RECONSTRUCTION)

NOTES:

1. IF HMA SHOULDERS ARE PROPOSED, THEY SHOULD NOT EXTEND THROUGH SIDEROADS.
2. THE COST OF SAW CUTS SHALL BE INCLUDED IN THE COST OF THE REMOVAL ITEMS.

SHEET 3 OF 3
UPDATED 3/5/2026

MODEL: District Standard-6-1 [Sheet]
FILE NAME: c:\pw_work\pwidot\mcquade.jackson@illinois.gov\d0983056\D672J44 D6 Detail Sheet.dgn

USER NAME = mcquade.jackson	DESIGNED -	REVISED -	
	DRAWN -	REVISED -	
	CHECKED -	REVISED -	
PLOT DATE = 5/19/2026	DATE -	REVISED -	

STATE OF ILLINOIS
DEPARTMENT OF TRANSPORTATION

DIST. 6 DETAILS FOR SIDEROADS (3R-PROJ.)

SCALE: | SHEET OF 16 SHEETS | STA. TO STA.

F.A.S RTE.	SECTION	COUNTY	TOTAL SHEETS	SHEET NO.
2585	122(RS-10,BDR-1,I-1)	*	120	111

CONTRACT NO. 72J44

ILLINOIS | FED. AID PROJECT

*BROWN, PIKE

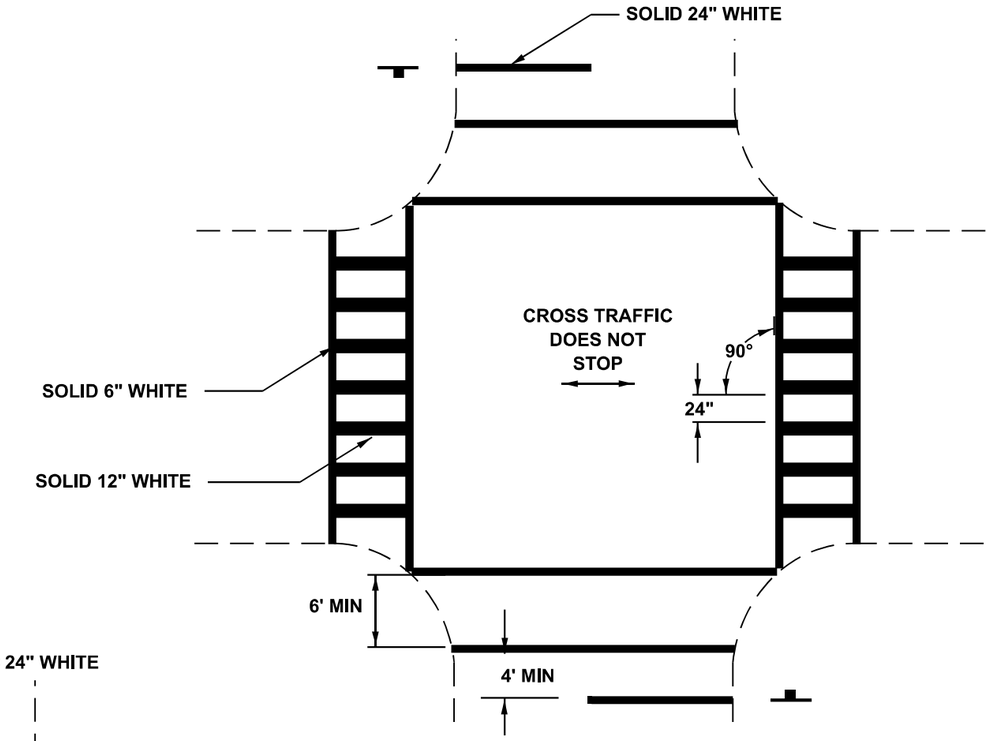

NON-SIGNALIZED INTERSECTION
OR
MID-BLOCK CROSSING

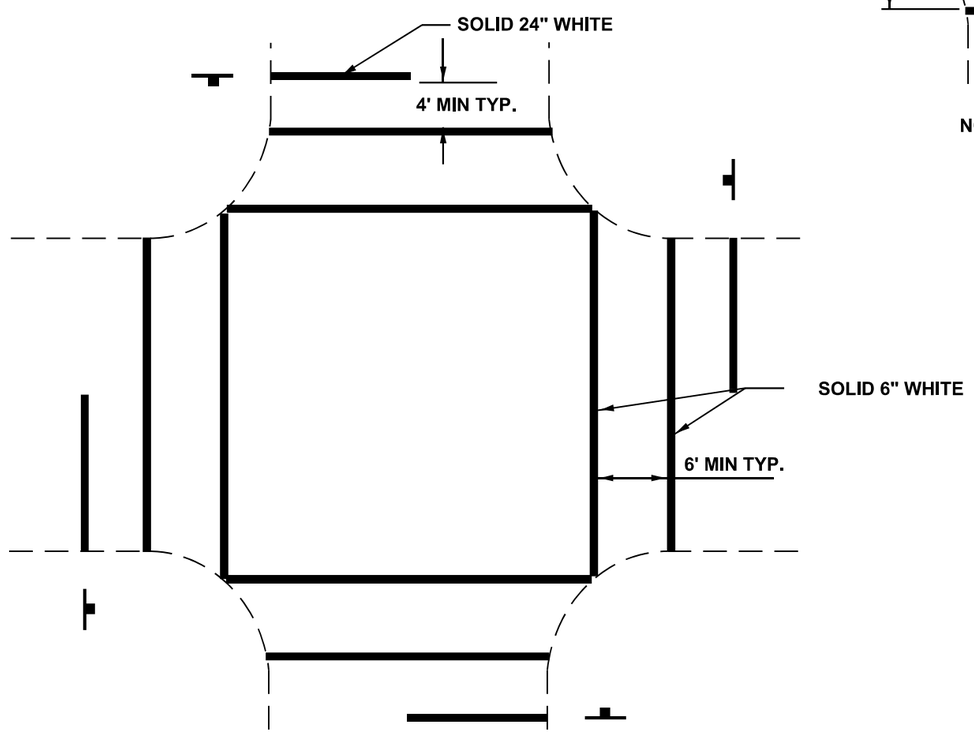

ALL WAY STOP CONTROLLED
OR
SIGNALIZED INTERSECTION

NOTES:

1. GROOVING PAY ITEMS SHALL BE ONE (1) INCH WIDER THAN PAVEMENT MARKING LINE WIDTH
2. SEE TRA-23: GUIDELINES FOR ESTABLISHING PEDESTRIAN CROSSINGS

   CONSULT THE GEOMETRICS ENGINEER FOR QUESTIONS ON WHETHER A CROSSWALK IS WARRANTED AND WHICH TYPE SHOULD BE USED
3. CROSSWALK MARKINGS SHOULD NOT BE USED INDISCRIMINATELY. AN ENGINEERING STUDY IS REQUIRED BEFORE THEY ARE INSTALLED AT LOCATIONS AWAY FROM TRAFFIC SIGNALS OR STOP SIGNS.
4. CROSSWALK SHALL CONNECT TO CURB CUTS OR SIDEWALKS. CROSSWALKS MAY BE INSTALLED AT A SKEW TO PERMIT THIS CONNECTION.

780-PMK-CW

DATE 12-01-2024

NOT TO SCALE

MODEL: District Standard 8 [Sheet]
FILE NAME: c:\pw_work\pwidot\mcquade.jackson@illinois.gov\d0983066\D672J44 D6 Detail Sheet.dgn

USER NAME = mcquade.jackson	DESIGNED -	REVISED -	STATE OF ILLINOIS DEPARTMENT OF TRANSPORTATION
	DRAWN -	REVISED -	
	CHECKED -	REVISED -	
PLOT DATE = 5/19/2026	DATE -	REVISED -	

DIST. 6 DETAILS FOR PAVEMENT MARKING STANDARDS
CROSSWALKS STANDARD

SCALE: SHEET OF 16 SHEETS STA. TO STA.

F.A.S RTE.	SECTION	COUNTY	TOTAL SHEETS	SHEET NO.
2585	122(RS-10, BDR-1,I-1)	*	120	112

CONTRACT NO. 72J44

ILLINOIS FED. AID PROJECT

*BROWN, PIKE

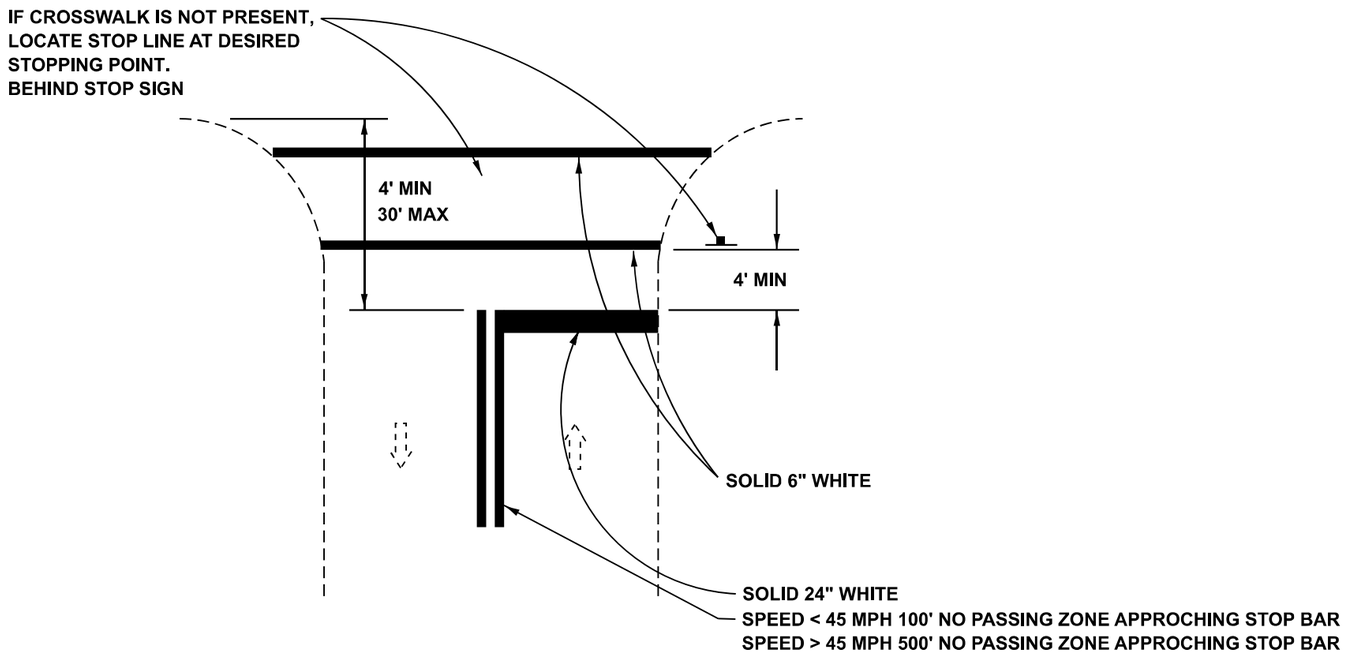

RURAL

DATE 12-01-2024

NOT TO SCALE

780-PMK-StopBars

MODEL: District Standard 9 [Sheet]
FILE NAME: c:\pw_work\pwidot\mcquade.jackson@illinois.gov\d0983066\D672J44 D6 Detail Sheet.dgn

USER NAME = mcquade.jackson	DESIGNED -	REVISED -	
	DRAWN -	REVISED -	
	CHECKED -	REVISED -	
PLOT DATE = 5/19/2026	DATE -	REVISED -	

STATE OF ILLINOIS
DEPARTMENT OF TRANSPORTATION

DIST. 6 DETAILS FOR PAVEMENT MARKING STANDARDS
STOP BAR DETAILS

SCALE: SHEET OF 16 SHEETS STA. TO STA.

F.A.S RTE.	SECTION	COUNTY	TOTAL SHEETS	SHEET NO.
2585	122(RS-10,BDR-1,I-1)	*	120	113

CONTRACT NO. 72J44

ILLINOIS FED. AID PROJECT

*BROWN, PIKE

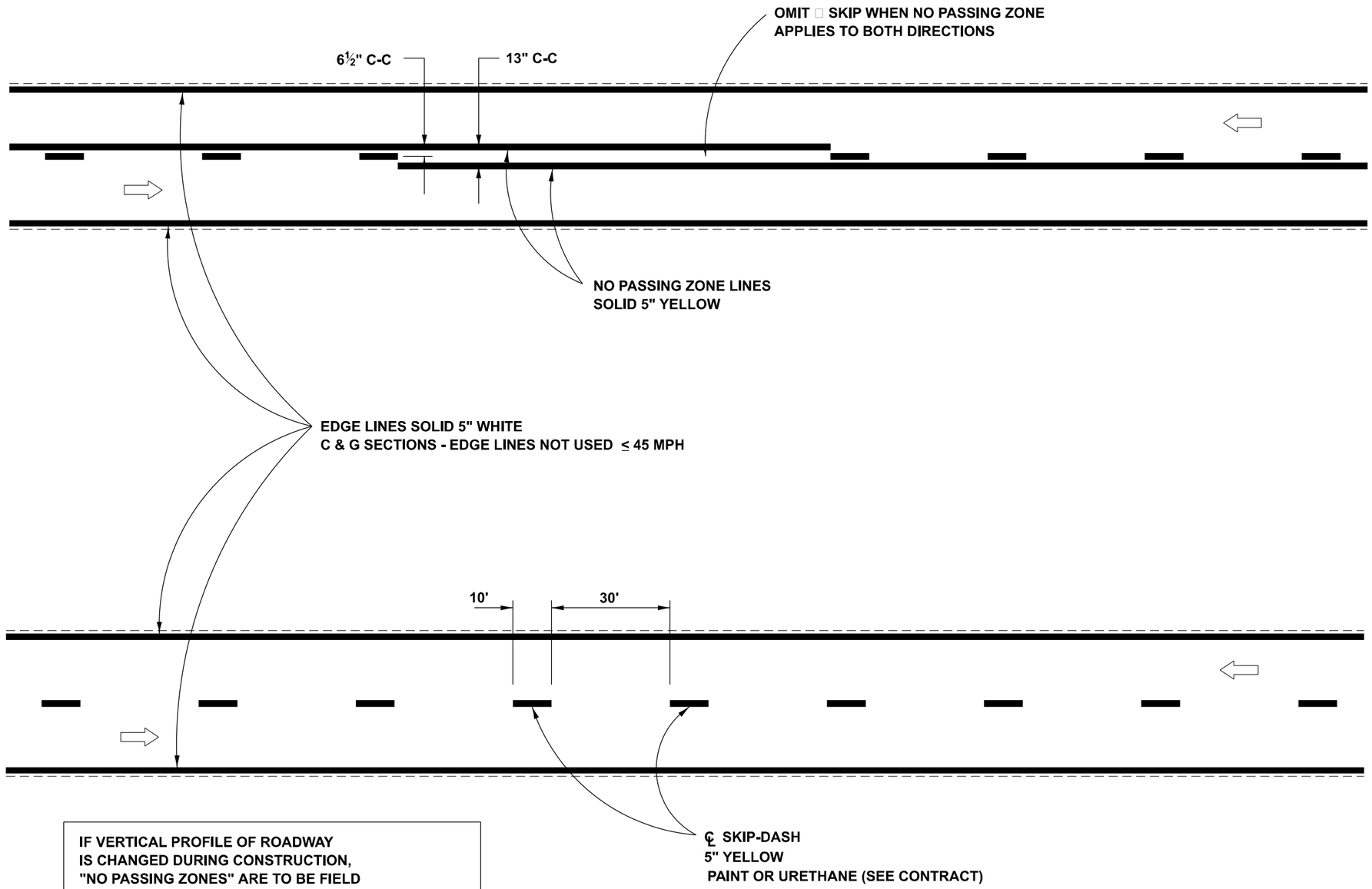

IF VERTICAL PROFILE OF ROADWAY
IS CHANGED DURING CONSTRUCTION,
"NO PASSING ZONES" ARE TO BE FIELD
VERIFIED BY THE RESIDENT ENGINEER
THE RESIDENT ENGINEER SHALL NOTIFY
THE BUREAU OF OPERATIONS WITH ANY CONCERNS
14 DAYS PRIOR TO PERMANENT PAVEMENT MARKINGS.

DATE 12-01-2024

NOT TO SCALE

780-PMK-2LPAV

USER NAME = mcquade.jackson	DESIGNED -	REVISED -	STATE OF ILLINOIS DEPARTMENT OF TRANSPORTATION
	DRAWN -	REVISED -	
	CHECKED -	REVISED -	
PLOT DATE = 5/19/2026	DATE -	REVISED -	

DIST. 6 DETAILS FOR PAVEMENT MARKING STANDARDS
2 LANE PAVEMENT DETAILS

SCALE: SHEET OF 16 SHEETS STA. TO STA.

F.A.S RTE.	SECTION	COUNTY	TOTAL SHEETS	SHEET NO.
2585	122(RS-10,BDR-1,I-1)	*	120	114

CONTRACT NO. 72J44

ILLINOIS FED. AID PROJECT

*BROWN, PIKE

MODEL: District Standard 10 [Sheet]
FILE NAME: c:\pw_work\pwidot\mcquade.jackson@illinois.gov\d0983056\D672J44 D6 Detail Sheet.dgn

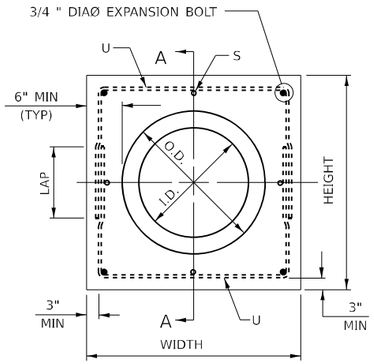

PIPE CULVERT EXTENSION COLLAR

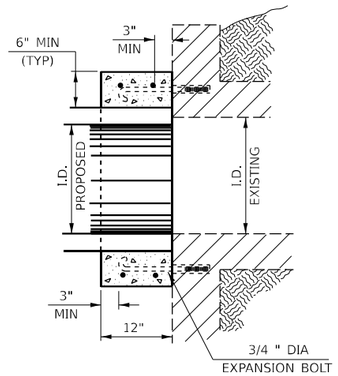

SECTION TYPE A
(BOX END EXTENSION)

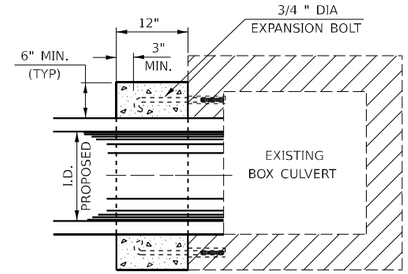

SECTION TYPE B
(PIPE IN SIDE EXTENSION)

SECTION A – A

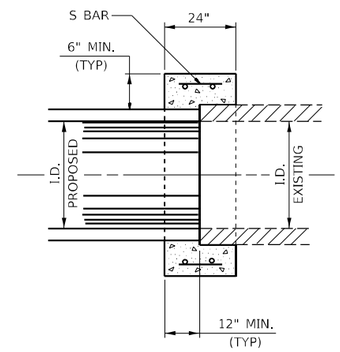

SECTION TYPE C
(PIPE END TO PIPE END EXTENSION
NO EXPANSION BOLTS REQUIRED)

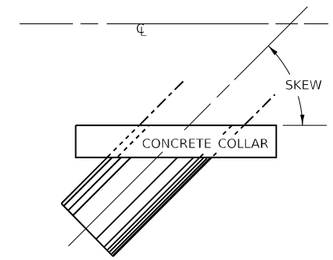

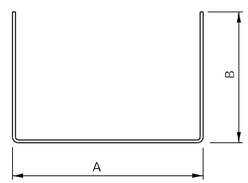

#4 U – BAR

NOTES:

1. EXPANSION BOLTS SHALL CONSIST OF SELF DRILLING EXPANSION SHIELDS AND ¾" DIAØ HOOKED BOLTS. HOOKED BOLTS SHALL EXTEND A MINIMUM OF 9" INTO NEW CONCRETE. MINIMUM CERTIFIED PROOF LOAD - 4,080 LBS.

2. USE MINIMUM OF 1 (ONE) EXPANSION BOLT AT EACH CORNER.

CONCRETE COLLAR

STR NO.	Station	Type	Skew	Existing Culvert Size	Proposed Culvert I.D. (in)	Proposed Culvert O.D. (in)	Collar Height (in)	Collar Width (in)	Reinforcement Bars S Bar No.	S Bar Size	S Bar Length	U Bar No.	U Bar Size	U Bar A (in)	U Bar B (in)	U Bar Lap (in)	U Bar Length (in)	(lb) 50800105	Concrete Collar cu yd 54248510
FAS 2585 IL 99 Third ST																			
1	STA. 481+70.31 (LT)	A	NA	12"	12	16	28	28	8	#5	20	4	#5	22	20	18	62	21.6	0.15
2	STA 482+07.25 (LT)	A	NA	18"	18	23	35	35	8	#5	20	4	#5	29	24	18	77	26.8	0.21
3	STA 482+03.96 (RT)	A	NA	15"	15	19.5	31.5	31.5	8	#5	20	4	#5	25.5	22	18	69.5	24.2	0.18
FAS 2585 IL 99 N Second ST																			
4	STA. 484+71.22 (LT)	A	NA	4"	10	13.7	25.7	25.7	8	#5	20	4	#5	20	19	18	58	20.1	0.16
5	STA 484+65.69 (RT)	A	NA	6"	12	16	28	28	8	#5	20	4	#5	22	20	18	62	35.6	0.19
6	STA. 484+72.41 (RT)	A	NA	18"	18	23	35	35	8	#5	20	4	#5	29	24	18	77	40.8	0.36
FAS 2585 IL 99 S Second ST																			
7	STA. 485+09.52 (LT)	A	NA	18"	18	23	35	35	8	#5	20	4	#5	29	24	18	77	26.8	0.21
7	STA. 485+22.53 (LT)	A	NA	12"	12	16	28	28	8	#5	20	4	#5	22	20	18	62	21.6	0.15
8	STA. 485+09.26 (RT)	A	NA	18"	18	23	35	35	8	#5	20	4	#5	29	24	18	77	26.8	0.21
FAS 2585 IL 99 First ST																			
9	STA. 487+72.41 (LT)	A	NA	18"	18	23	35	35	8	#5	20	4	#5	29	24	18	77	26.8	0.21
10	STA. 488+12.11 (LT)	A	NA	12"	12	16	28	28	8	#5	20	4	#5	22	20	18	62	21.6	0.15
																	TOTAL	300	2.2

MODEL: District Standard 13 [Sheet]
FILE NAME: c:\pw_work\pwidot\cancels\d0983066\D672J44 D6 Detail Sheet.dgn

USER NAME = Sylvette.Cancel	DESIGNED -	REVISED -	STATE OF ILLINOIS DEPARTMENT OF TRANSPORTATION
	DRAWN -	REVISED -	
	CHECKED -	REVISED -	
PLOT DATE = 6/25/2026	DATE -	REVISED -	

DIST. 6 DETAILS FOR CONCRETE COLLAR AND CULVERT EXTENSION

SCALE: SHEET OF 16 SHEETS STA. TO STA.

F.A.S RTE.	SECTION	COUNTY	TOTAL SHEETS	SHEET NO.
2585	122(RS-10,BDR-1,I-1)	*	120	115

CONTRACT NO. 72J44

ILLINOIS FED. AID PROJECT

*BROWN, PIKE

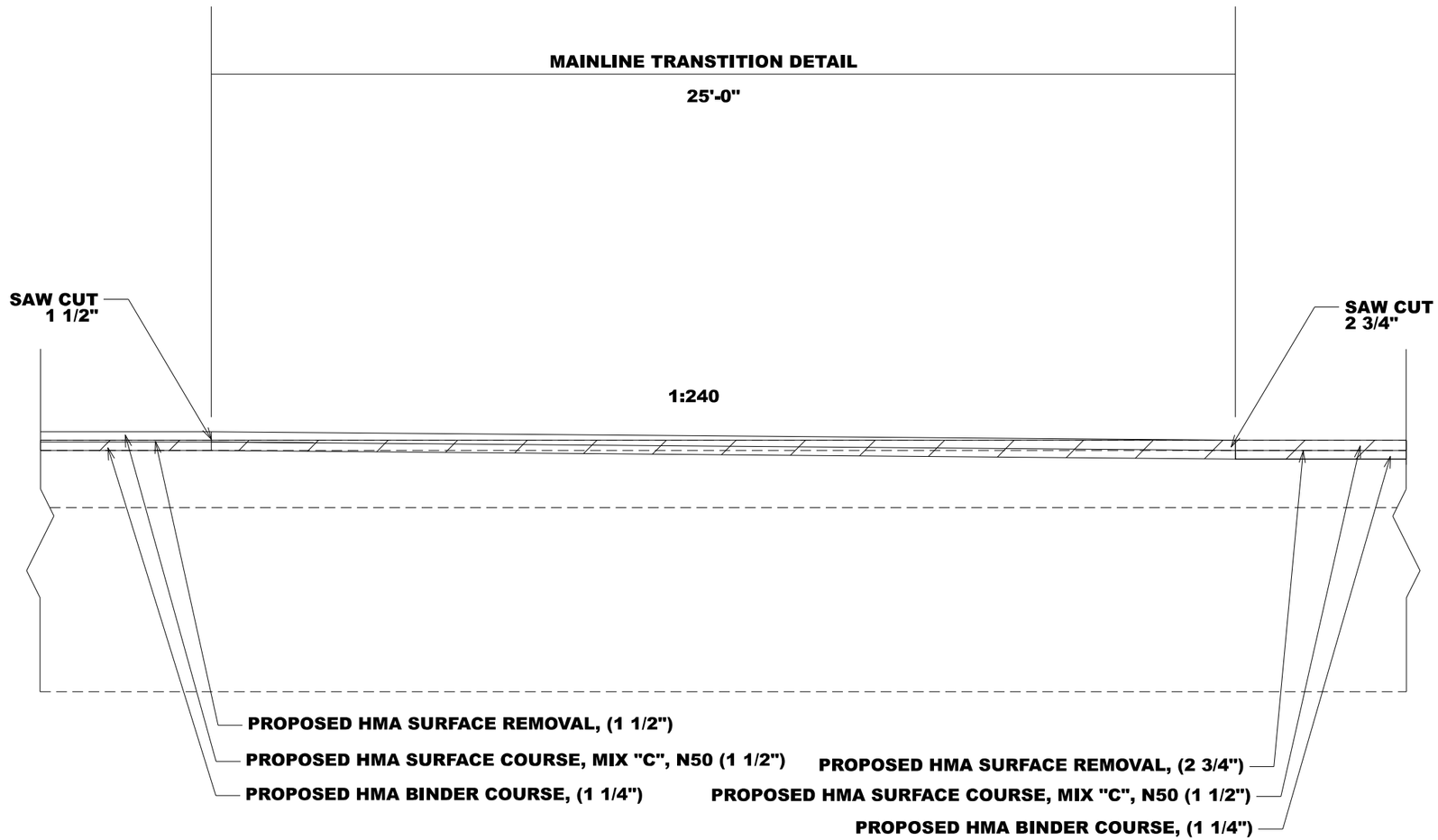

MAINLINE TRANSITION DETAIL
STANDARD OVERLAY TO MILL AND FILL

***STA.456+80.00 TO STA 457+05.00**
STA.463+03.00 TO STA 463+28.00

***NOTE: THIS TRANSISTION IS REVERSED GOING FROM A MILL AND FILL TO A STANDARD OVERLAY.**

MODEL: transition detail [Sheet]
FILE NAME: c:\pw_work\pwidot\william.rodriguez-mendez@illinois.gov\d0983066\D672J44 D6 Detail Sheet.dgn

USER NAME = william.rodriguez-me	DESIGNED -	REVISED -	STATE OF ILLINOIS DEPARTMENT OF TRANSPORTATION
	DRAWN -	REVISED -	
	CHECKED -	REVISED -	
PLOT DATE = 5/15/2026	DATE -	REVISED -	

MAINLINE TRANSITION DETAIL (IL 99)
STANDARD OVERLAY TO MILL AND FILL

SCALE: SHEET OF 16 SHEETS STA. TO STA.

F.A.S RTE.	SECTION	COUNTY	TOTAL SHEETS	SHEET NO.
2585	122(RS-10,BDR-1,I-1)	*	120	116

CONTRACT NO. 72J44

ILLINOIS FED. AID PROJECT

*BROWN, PIKE

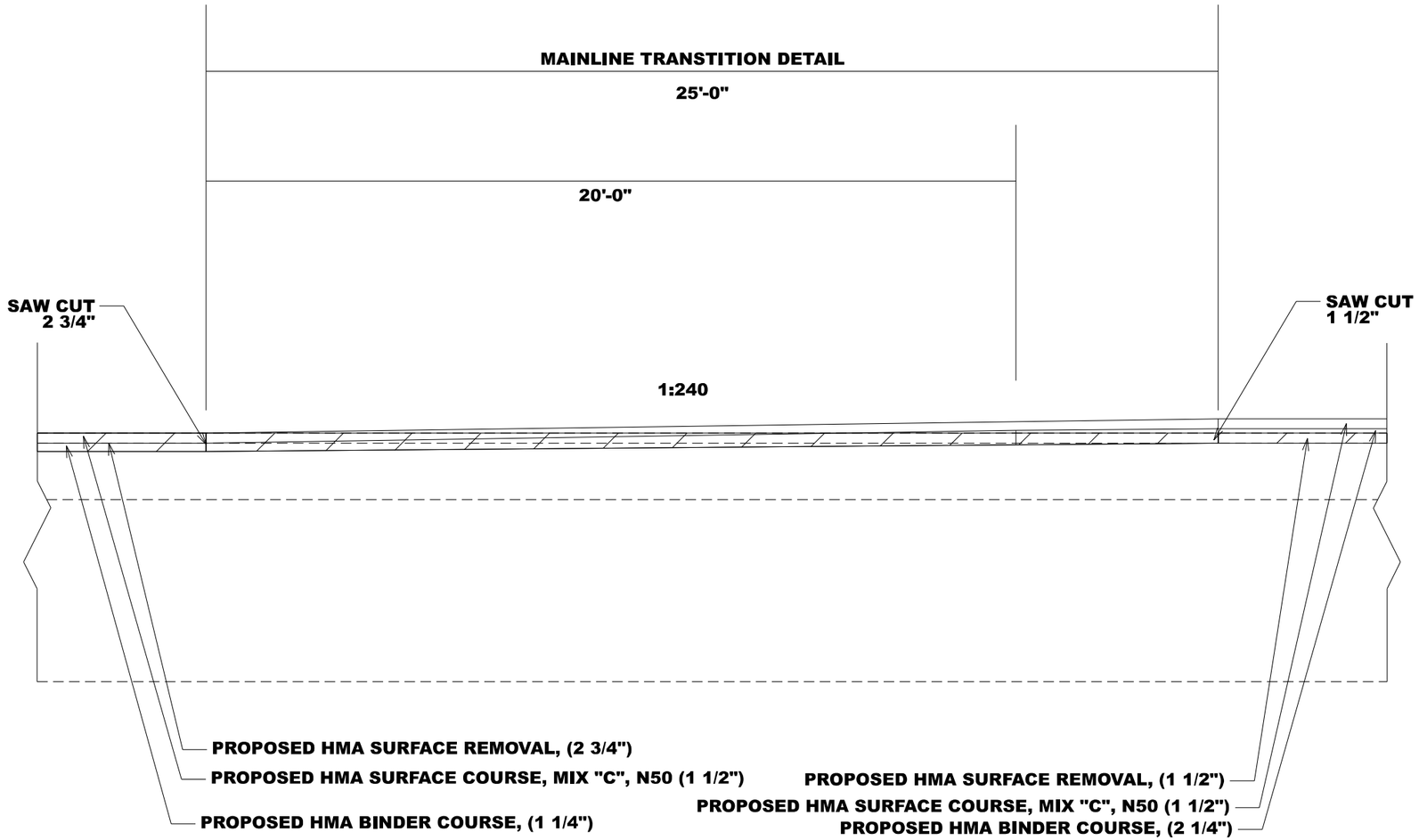

MAINLINE TRANSITION DETAIL
MILL AND FILL TO DESIGN OVERLAY

STA. 501+00.00 TO STA. 501+25.00
*STA. 621+35.59 TO STA. 621+60.59
STA. 621+82.65 TO STA. 622+07.65
*STA. 692+75.63 TO STA. 693+00.63
STA. 693+22.63 TO STA. 693+47.63
*STA. 797+71.00 TO STA. 797+96.00

*NOTE: THIS TRANSISTION IS REVERSED GOING FROM A DESIGNED OVERLAY TO A MILL AND FILL.

MODEL: transition detail-1 [Sheet]
FILE NAME: c:\pw_work\pwidot\william.rodriguez-mendez@illinois.gov\d0983066\D672J44 D6 Detail Sheet.dgn

USER NAME = william.rodriguez-me	DESIGNED -	REVISED -	STATE OF ILLINOIS DEPARTMENT OF TRANSPORTATION
	DRAWN -	REVISED -	
	CHECKED -	REVISED -	
PLOT DATE = 5/15/2026	DATE -	REVISED -	

MAINLINE TRANSITION DETAIL (IL 99)
MILL AND FILL TO DESIGN OVERLAY

SCALE: SHEET OF 16 SHEETS STA. TO STA.

F.A.S RTE.	SECTION	COUNTY	TOTAL SHEETS	SHEET NO.
2585	122(RS-10,BDR-1,I-1)	*	120	117

CONTRACT NO. 72J44

ILLINOIS FED. AID PROJECT

*BROWN, PIKE

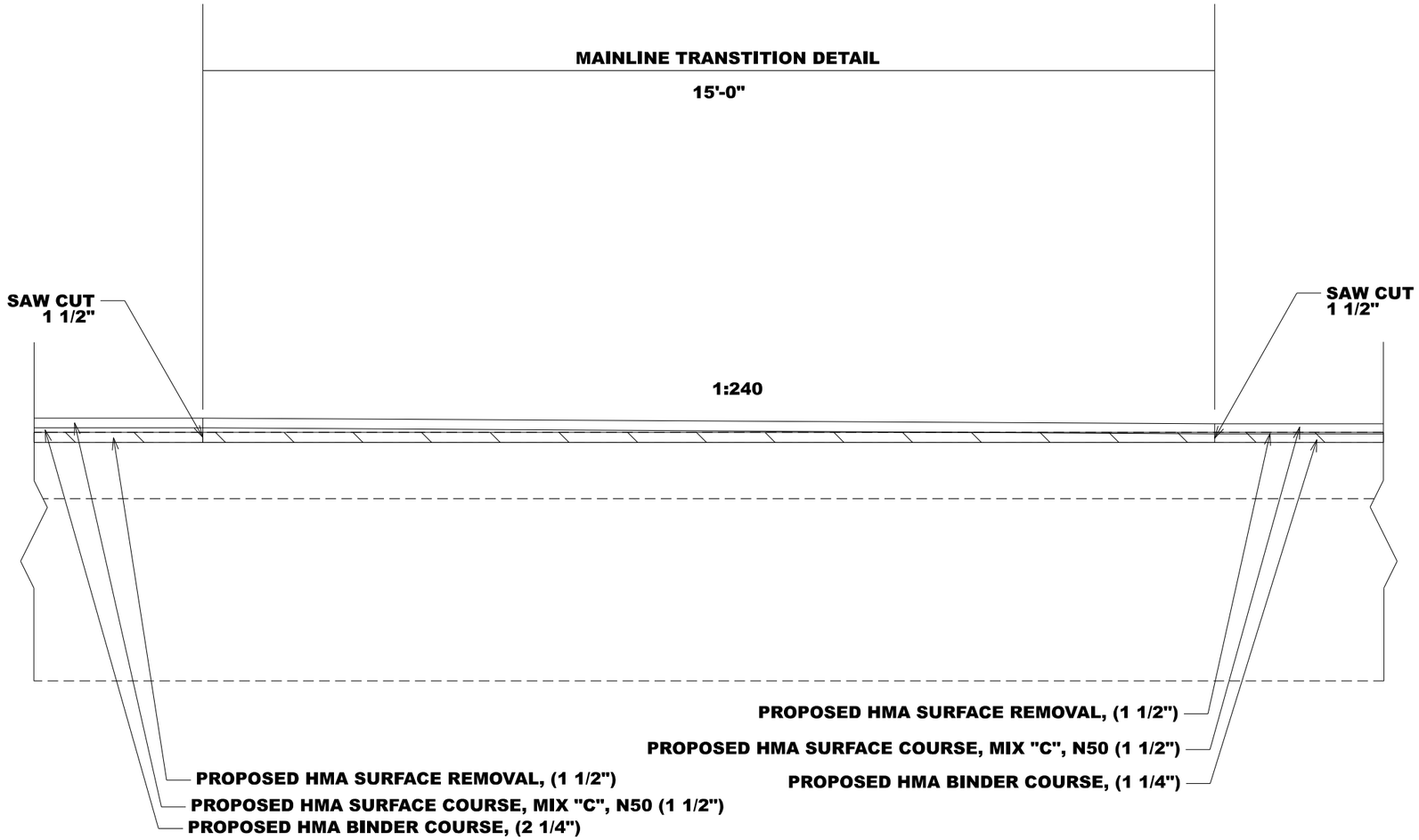

MAINLINE TRANSITION DETAIL
DESIGN OVERLAY TO STANDARD OVERLAY

STA. 793+53.25 TO STA. 793+68.25
***STA. 795+76.49 TO STA. 795+81.49**

*** NOTE: THIS TRANSISTION IS REVERSED GOING FROM A DESIGNED OVERLAY TO A MILL AND FILL.**

MODEL: transition detail-2 [Sheet]
FILE NAME: c:\pw_work\pwidot\william.rodriguez-mendez@illinois.gov\d0983066\D672J44 D6 Detail Sheet.dgn

USER NAME = william.rodriguez-me	DESIGNED -	REVISED -	
	DRAWN -	REVISED -	
	CHECKED -	REVISED -	
PLOT DATE = 5/15/2026	DATE -	REVISED -	

STATE OF ILLINOIS
DEPARTMENT OF TRANSPORTATION

MAINLINE TRANSITION DETAIL (IL 99)
DESIGN OVERLAY TO STANDARD OVERLAY

SCALE: | SHEET 14 OF 16 SHEETS | STA. | TO STA.

F.A.S RTE.	SECTION	COUNTY	TOTAL SHEETS	SHEET NO.
2585	122(RS-10,BDR-1,C,I-1)		120	118

CONTRACT NO. 72J44

ILLINOIS | FED. AID PROJECT

BROWN, PIKE

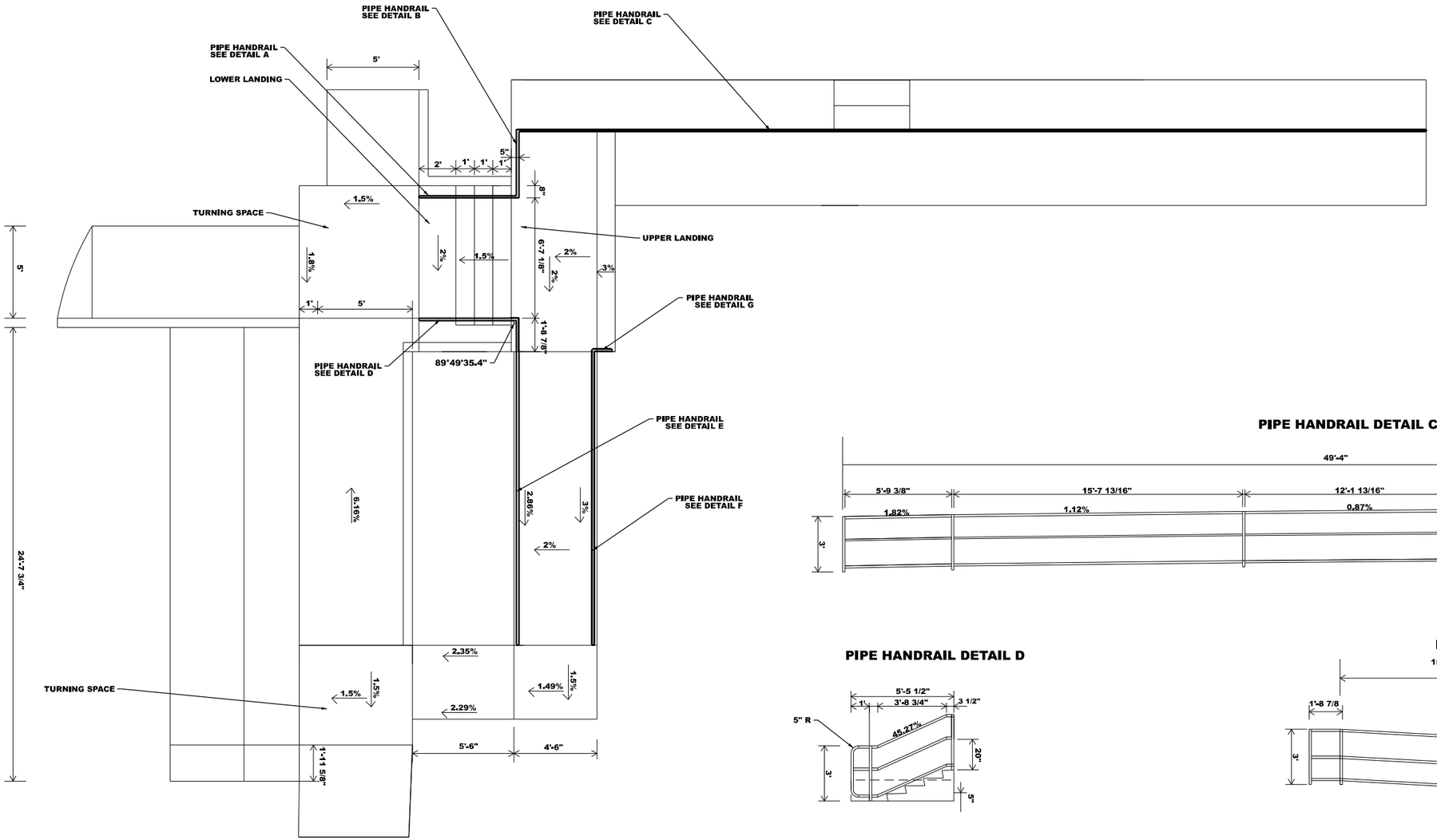

PIPE HANDRAIL DETAIL A

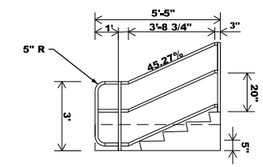

PIPE HANDRAIL DETAIL B

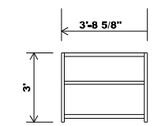

PIPE HANDRAIL DETAIL C

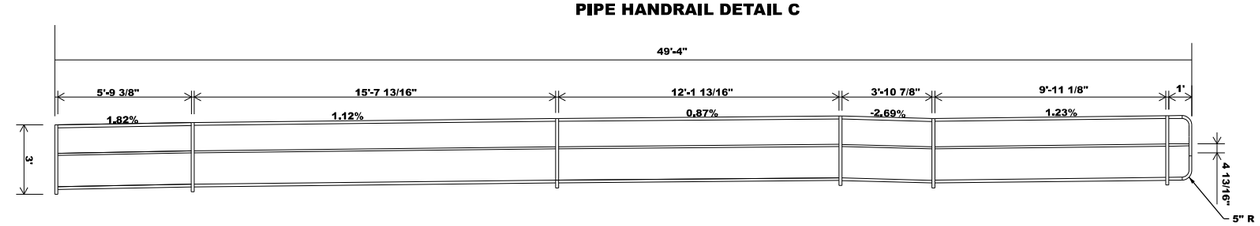

PIPE HANDRAIL DETAIL D

PIPE HANDRAIL DETAIL E

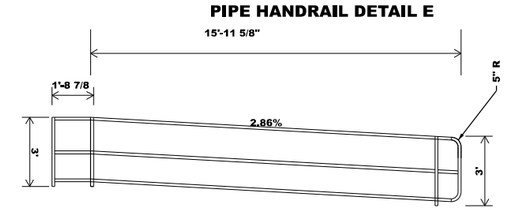

PIPE HANDRAIL DETAIL F

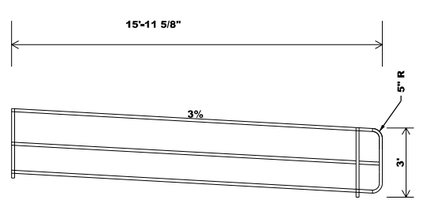

PIPE HANDRAIL DETAIL G

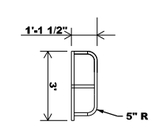

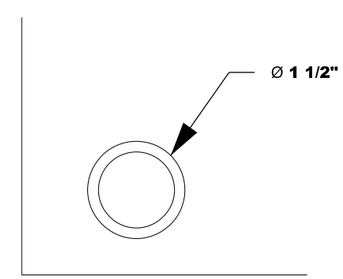

HANDRAIL CROSS SECTION

MODEL: Untitled [Sheet]
FILE NAME: c:\pw_work\pwidot\mcquade.jackson@illinois.gov\d0983065\D672J44 D6 Detail Sheet.dgn

USER NAME = mcquade.jackson	DESIGNED -	REVISED -	
	DRAWN -	REVISED -	
	CHECKED -	REVISED -	
PLOT DATE = 6/25/2026	DATE -	REVISED -	

STATE OF ILLINOIS
DEPARTMENT OF TRANSPORTATION

2ND STREET POST OFFICE
HANDRAIL DETAIL

SCALE: | SHEET 15 OF 16 SHEETS | STA. | TO STA.

F.A.S RTE.	SECTION	COUNTY	TOTAL SHEETS	SHEET NO.
2585	122(RS-10,BDR-1,C,I-1)		120	119

CONTRACT NO. 72J44

ILLINOIS | FED. AID PROJECT

BROWN, PIKE

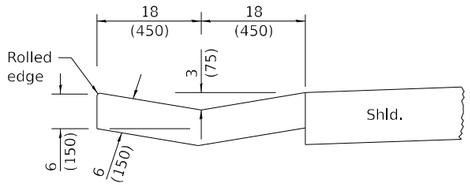

SECTION A-A

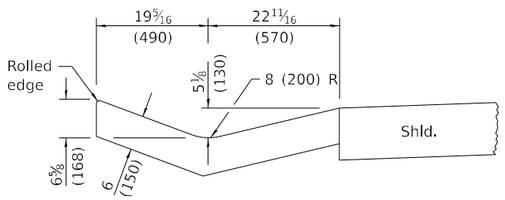

SECTION B-B

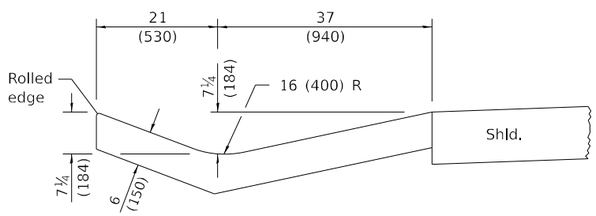

SECTION C-C

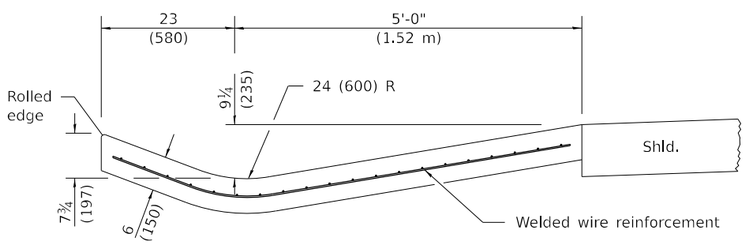

SECTION D-D

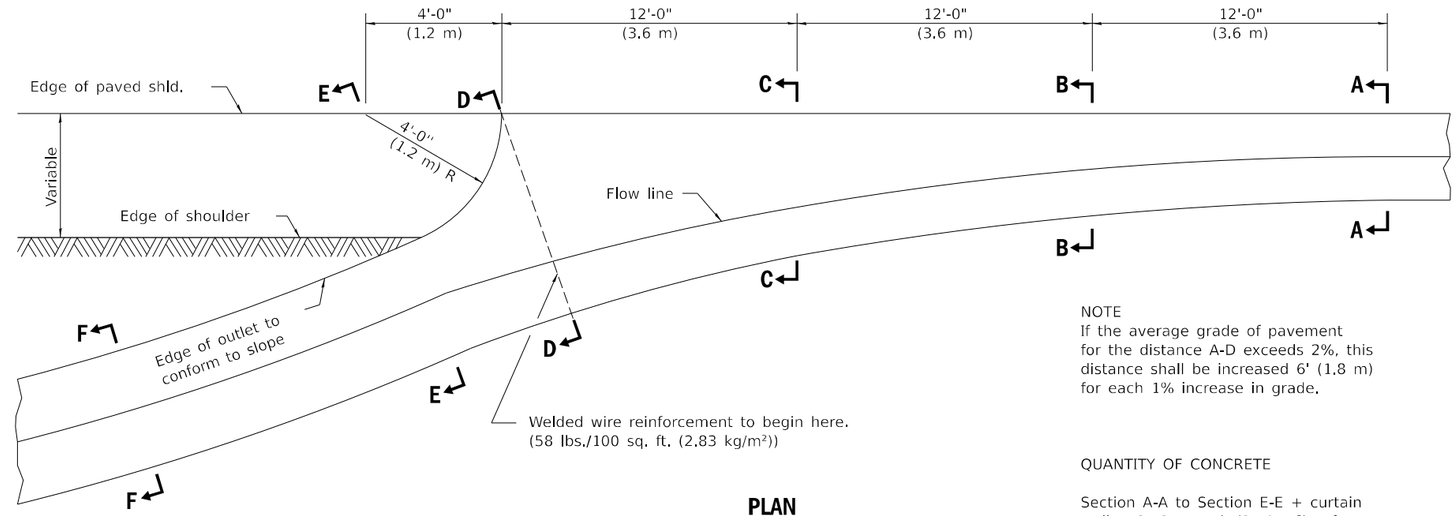

PLAN

OUTLET

NOTE
If the average grade of pavement for the distance A-D exceeds 2%, this distance shall be increased 6' (1.8 m) for each 1% increase in grade.

QUANTITY OF CONCRETE

Section A-A to Section E-E + curtain wall = 3.53 cu. yd. (2.70 m³) of concrete.
Section F-F = 0.079 cu. yd./ft. (0.2 m³/m).

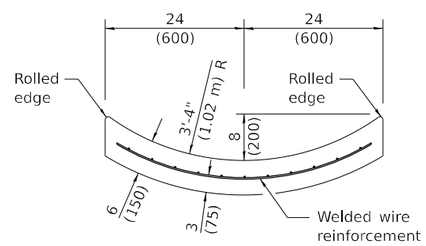

SECTION F-F

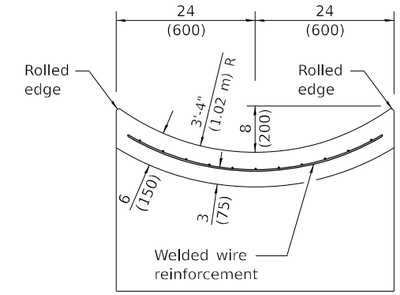

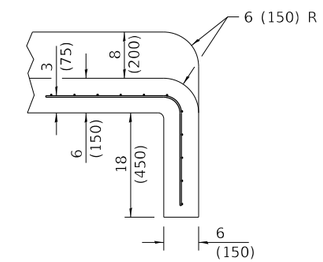

SECTIONS AT END OF OUTLET

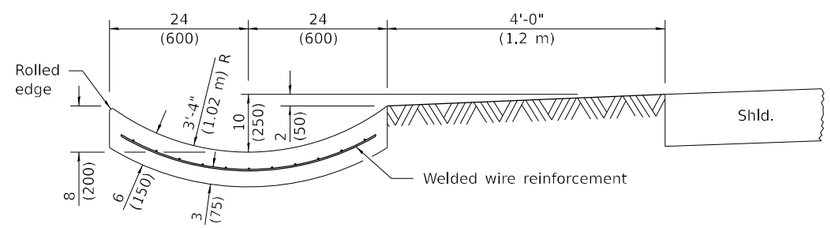

SECTION E-E

LOCTATED:

STA. 462+85.63 TO STA. 463+33.36

MODEL: Outlet detail [Sheet]
FILE NAME: c:\pw_work\pwidot\mcquade.jackson@illinois.gov\d0983066\D672J44 D6 Detail Sheet.dgn

USER NAME = mcquade.jackson	DESIGNED -	REVISED -	
	DRAWN -	REVISED -	
	CHECKED -	REVISED -	
PLOT DATE = 6/25/2026	DATE -	REVISED -	

STATE OF ILLINOIS
DEPARTMENT OF TRANSPORTATION

TYPE A GUTTER (SPECIAL)
OUTLET DETAIL

SCALE: | SHEET 16 OF 16 SHEETS | STA. | TO STA.

F.A.S RTE.	SECTION	COUNTY	TOTAL SHEETS	SHEET NO.
2585	122(RS-10,BDR-1,C,I-1)		120	120

CONTRACT NO. 72J44

ILLINOIS | FED. AID PROJECT

BROWN, PIKE

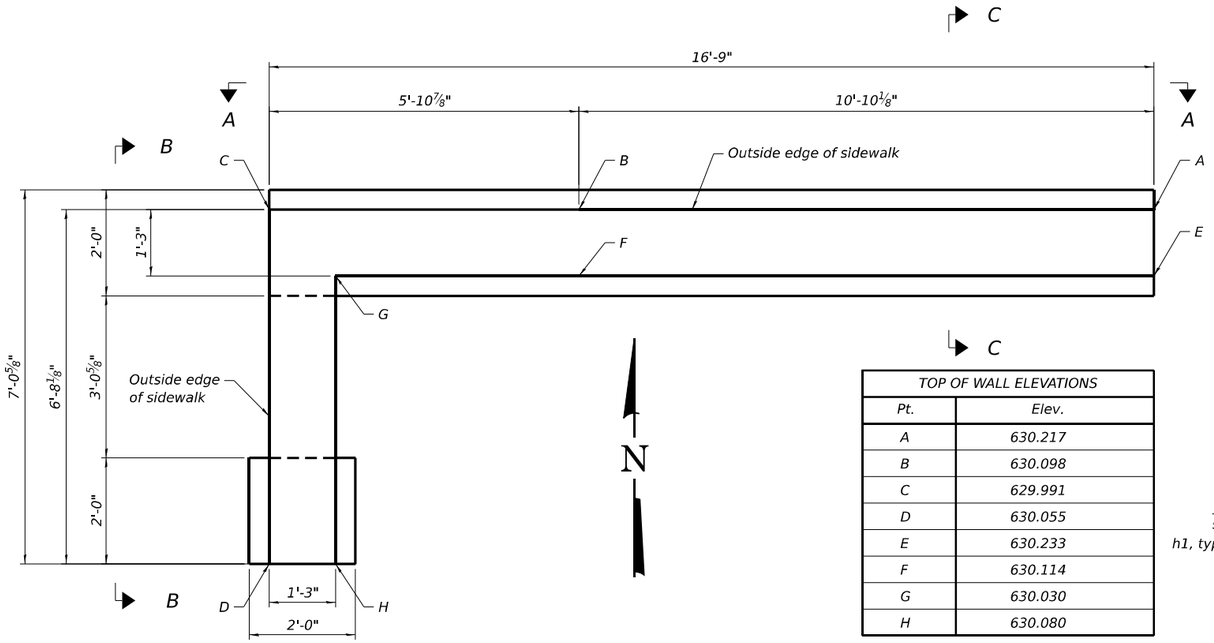

TOP OF WALL ELEVATIONS	
Pt.	Elev.
A	630.217
B	630.098
C	629.991
D	630.055
E	630.233
F	630.114
G	630.030
H	630.080

PLAN OF WALL AND FOOTING

Notes:
See ADA ramp details (sheet 74) for sidewalk stationing, offsets, and elevations.
Cost of excavation required for retaining wall included with Concrete Removal (Special).

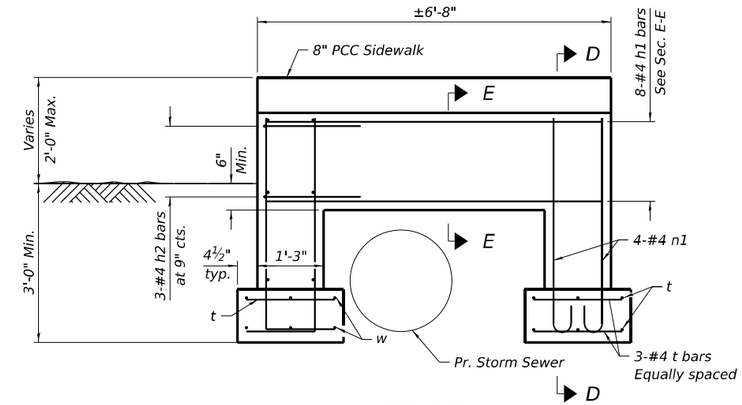

VIEW B-B

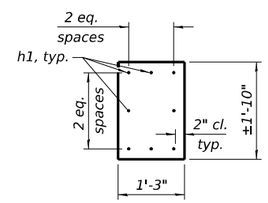

SECTION E-E

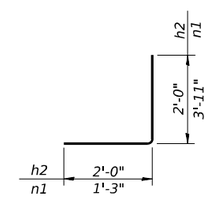

BARS h2 & n

BAR n1

BILL OF MATERIAL

	Bar	No.	Size	Length	Shape
	h	6	#4	16'-4"	
	h1	8	#4	6'-4"	
	h2	3	#4	4'-0"	
*	n	24	#4	5'-2"	
*	n1	4	#4	4'-5"	
	t	24	#4	1'-8"	
	w	6	#4	16'-4"	
	Concrete Structures			Cu. Yd.	4.5
	Reinforcement Bars			Pound	300

*Cut vertical leg in field as necessary to fit.

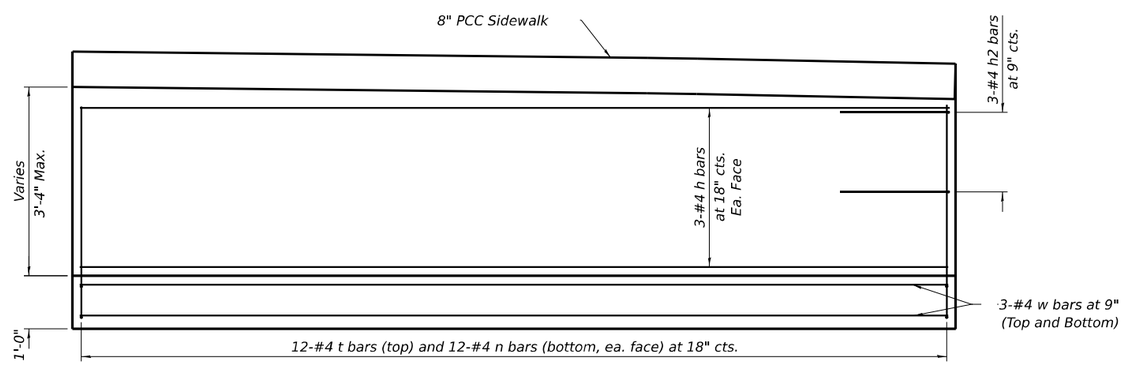

VIEW A-A

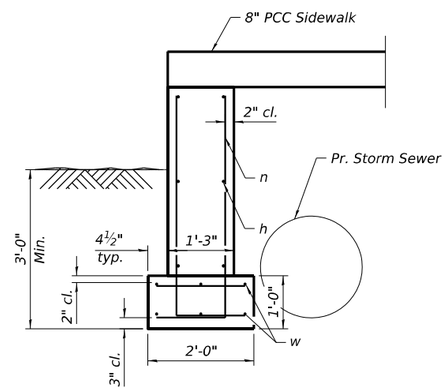

SECTION C-C

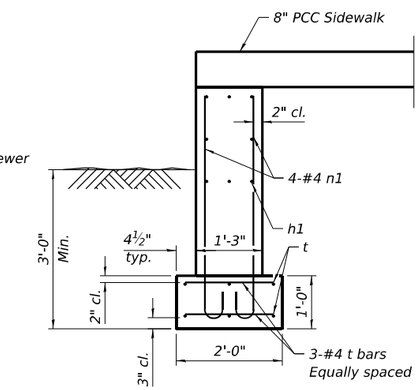

SECTION D-D

MODEL: Retaining Wall Detail [Sheet]
FILE NAME: c:\pw_work\pwidot\mcquade.jackson\d0983066\D672J44 Retaining Wall Detail.dgn

USER NAME = mcquade.jackson	DESIGNED -	REVISED -	STATE OF ILLINOIS DEPARTMENT OF TRANSPORTATION
	DRAWN -	REVISED -	
	CHECKED -	REVISED -	
PLOT DATE = 6/25/2026	DATE -	REVISED -	

RETAINING WALL DETAIL

SCALE: SHEET Retaining Wall Detail [Sheet] OF TOTAL SHEETS STA. TO STA.

F.A.S RTE.	SECTION	COUNTY	TOTAL SHEETS	SHEET NO.
2585	122(RS-10,BDR-1,C,I-1)		120	120A

CONTRACT NO. 72J44

ILLINOIS FED. AID PROJECT

BROWN, PIKE

NOTES:

1. THE CONTRACT UNIT PRICE OF EACH FOR INLET, (SPECIAL) SHALL INCLUDE ALL LABOR AND MATERIALS NECESSARY TO CONSTRUCT THE INLET IN ACCORDANCE WITH ARTICLE 602 OF THE STANDARD SPECIFICATIONS AND AND AS SHOWN HEREIN.

2. CLASS SI CONCRETE SHALL BE USED THROUGHOUT.

3. THE FRONT EDGE OF THE TOP SLAB SHALL BE EITHER STRAIGHT OR RADIUSED AS NEEDED TO CONFORM WITH THE SHAPE OF THE ADJACENT CURB AND GUTTER.

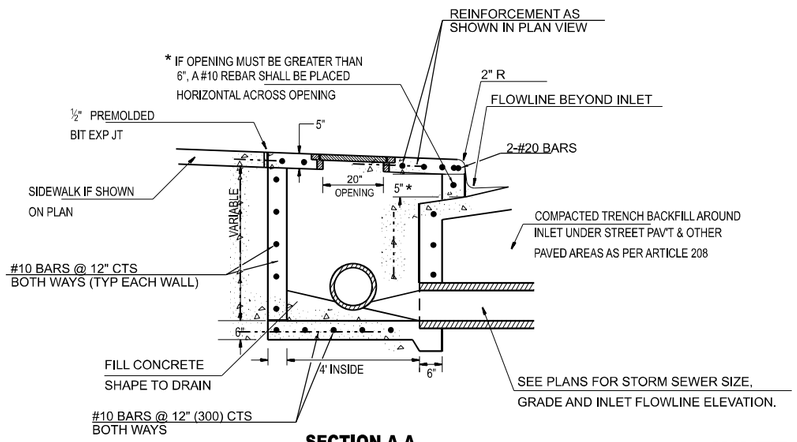

SECTION A-A

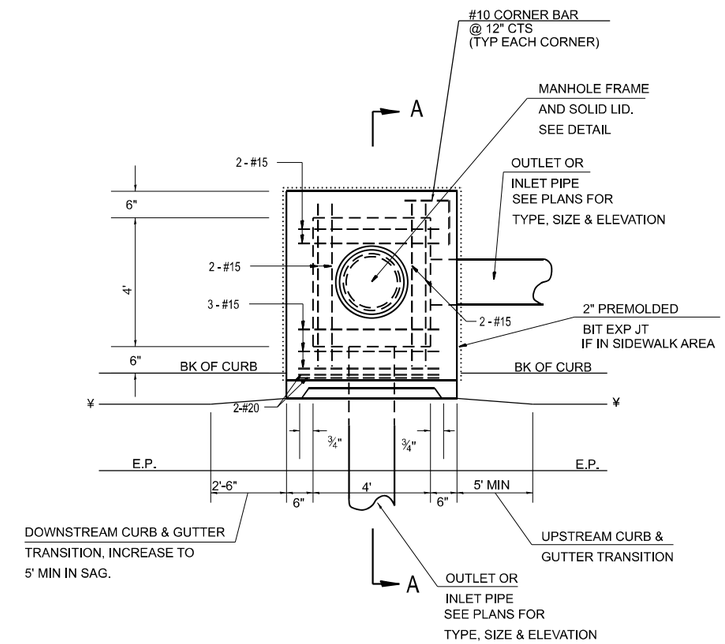

PLAN

INLET (SPECIAL)

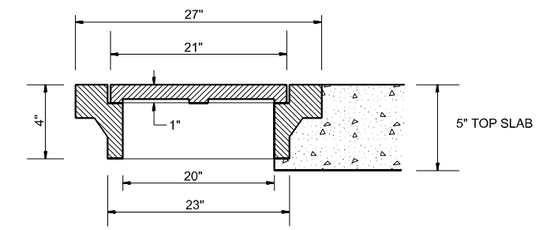

TYPICAL DETAIL OF

MANHOLE FRAME AND SOLID LID

NEENAH R-6020 OR APPROVED EQUAL

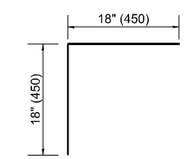

CORNER BAR

MODEL: Untitled-2 [Sheet]
FILE NAME: c:\pw_work\pwidot\cancel\d0983066\D672J44 D6 Detail Sheet.dgn

USER NAME = Sylvette.Cancel	DESIGNED -	REVISED -	STATE OF ILLINOIS DEPARTMENT OF TRANSPORTATION
	DRAWN -	REVISED -	
	CHECKED -	REVISED -	
PLOT DATE = 6/26/2026	DATE -	REVISED -	

SPECIAL INLET STANDARD

SCALE: SHEET Untitled-2 OF Sheets SHEETS STA. TO STA.

F.A.S RTE.	SECTION	COUNTY	TOTAL SHEETS	SHEET NO.
2585	122(RS-10,BDR-1,C,I-1)		120	120B

CONTRACT NO. 72J44

ILLINOIS FED. AID PROJECT

BROWN, PIKE

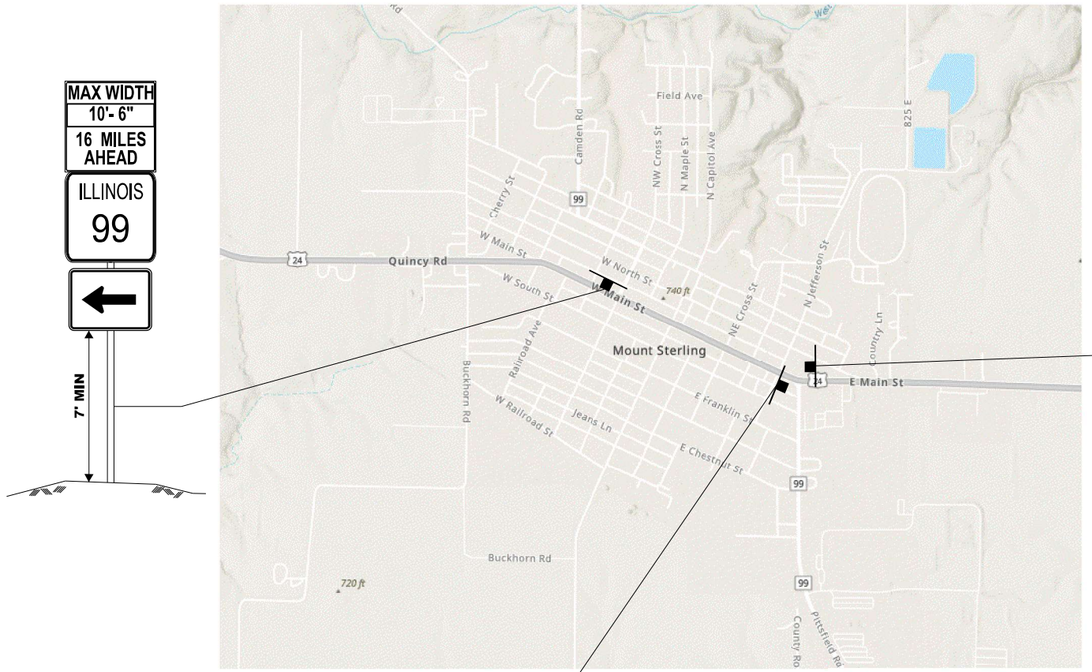

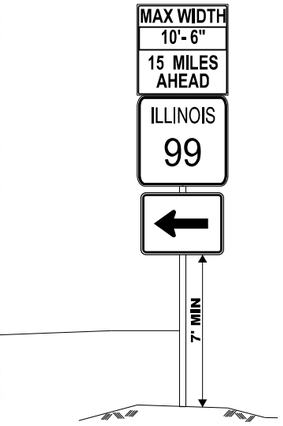

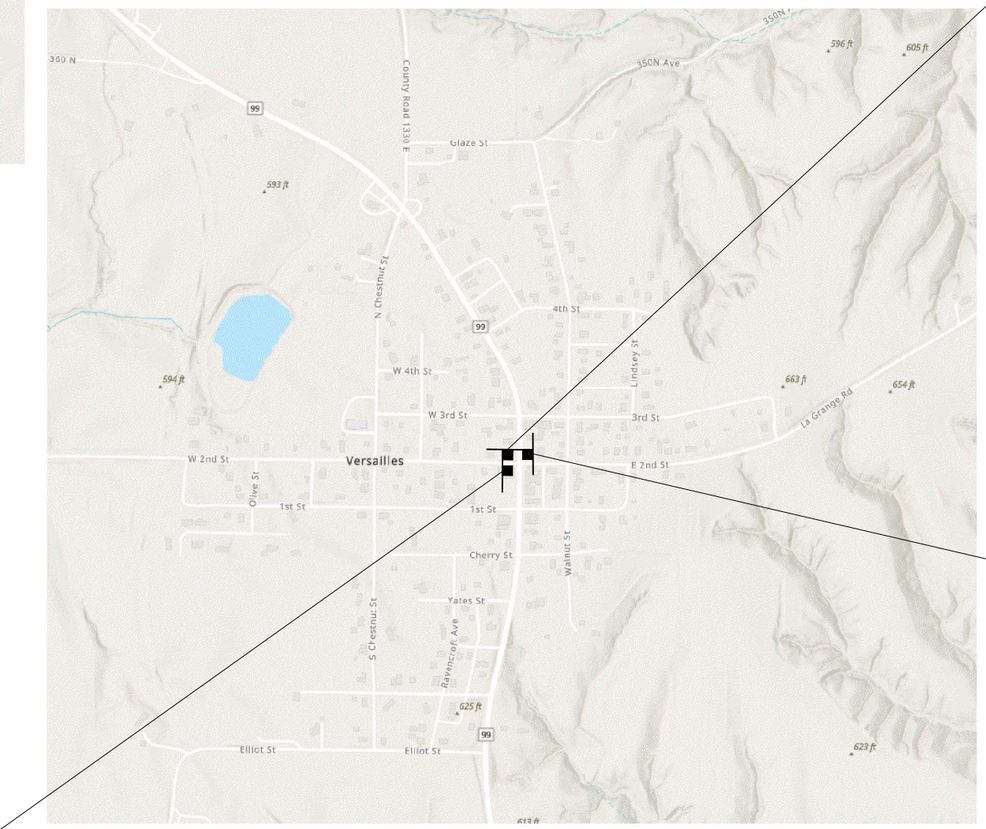

MODEL: District Standard 11 [Sheet]
FILE NAME: c:\pw_work\pwidot\mcquade.jackson@illinois.gov\d0983066\D672J44 D6 Detail Sheet.dgn

USER NAME = mcquade.jackson	DESIGNED -	REVISED -	
	DRAWN -	REVISED -	
	CHECKED -	REVISED -	
PLOT DATE = 6/26/2026	DATE -	REVISED -	

STATE OF ILLINOIS
DEPARTMENT OF TRANSPORTATION

MAX WIDTH SIGN DETAIL-IL 99

SCALE: | SHEET OF 16 SHEETS | STA. | TO STA.

F.A.S RTE.	SECTION	COUNTY	TOTAL SHEETS	SHEET NO.
2585	122(RS-10,BDR-1,I-1)	*	120	120C

CONTRACT NO. 72J44

ILLINOIS | FED. AID PROJECT

*BROWN, PIKE

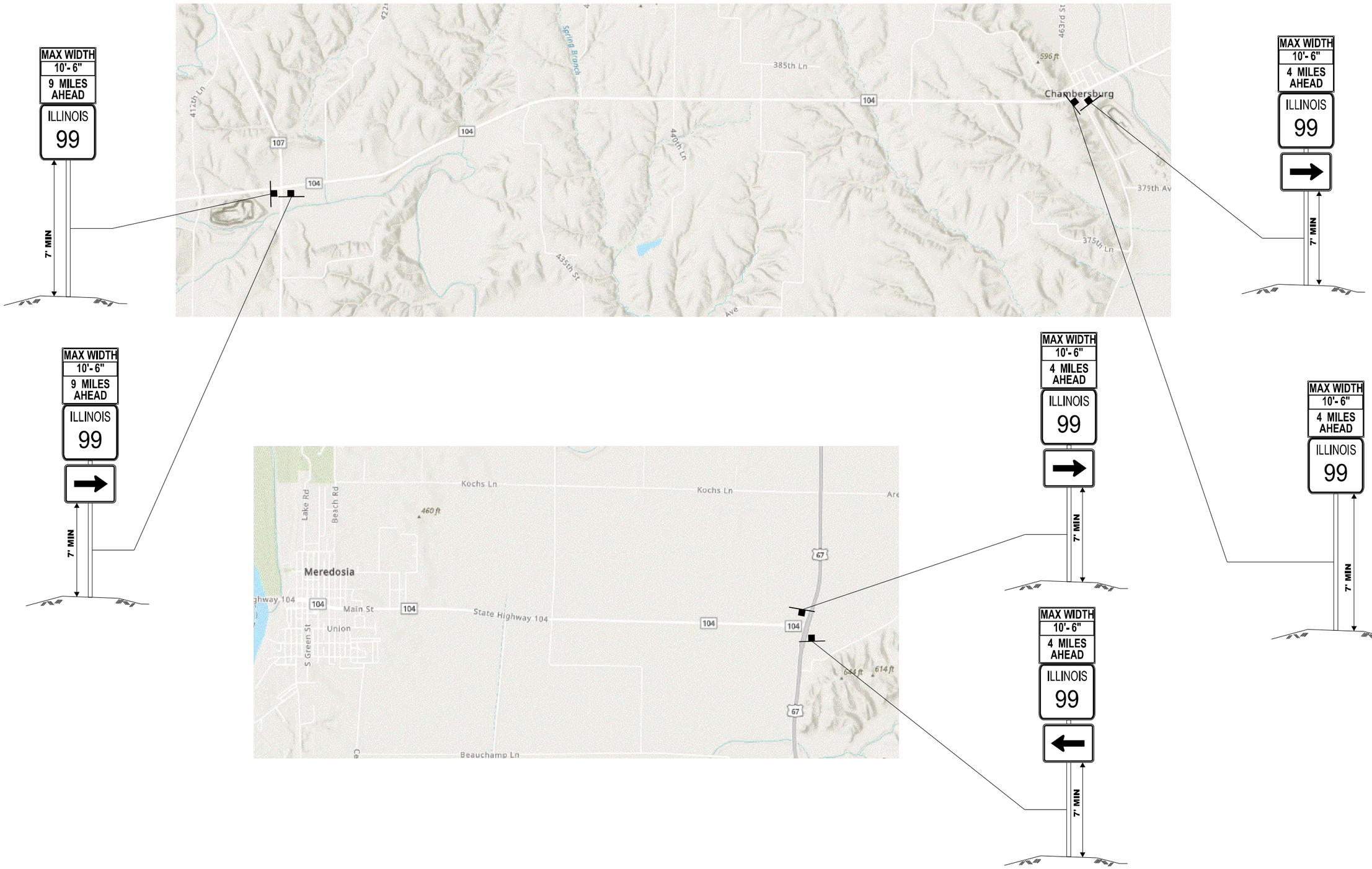

MODEL: Untitled-1 [Sheet]
FILE NAME: c:\pw_work\pwidot\mcquade.jackson@illinois.gov\d0983066\D672J44 D6 Detail Sheet.dgn

USER NAME = mcquade.jackson	DESIGNED -	REVISED -	
	DRAWN -	REVISED -	
	CHECKED -	REVISED -	
PLOT DATE = 6/26/2026	DATE -	REVISED -	

STATE OF ILLINOIS
DEPARTMENT OF TRANSPORTATION

MAX WIDTH SIGN DETAIL-IL 99

SCALE: | SHEET Untitled-1 OF Sheet6 | SHEETS | STA. | TO STA.

F.A.S RTE.	SECTION	COUNTY	TOTAL SHEETS	SHEET NO.
2585	122(RS-10,BDR-1,C,I-1)		120	120D

CONTRACT NO. 72J44

ILLINOIS | FED. AID PROJECT

BROWN, PIKE

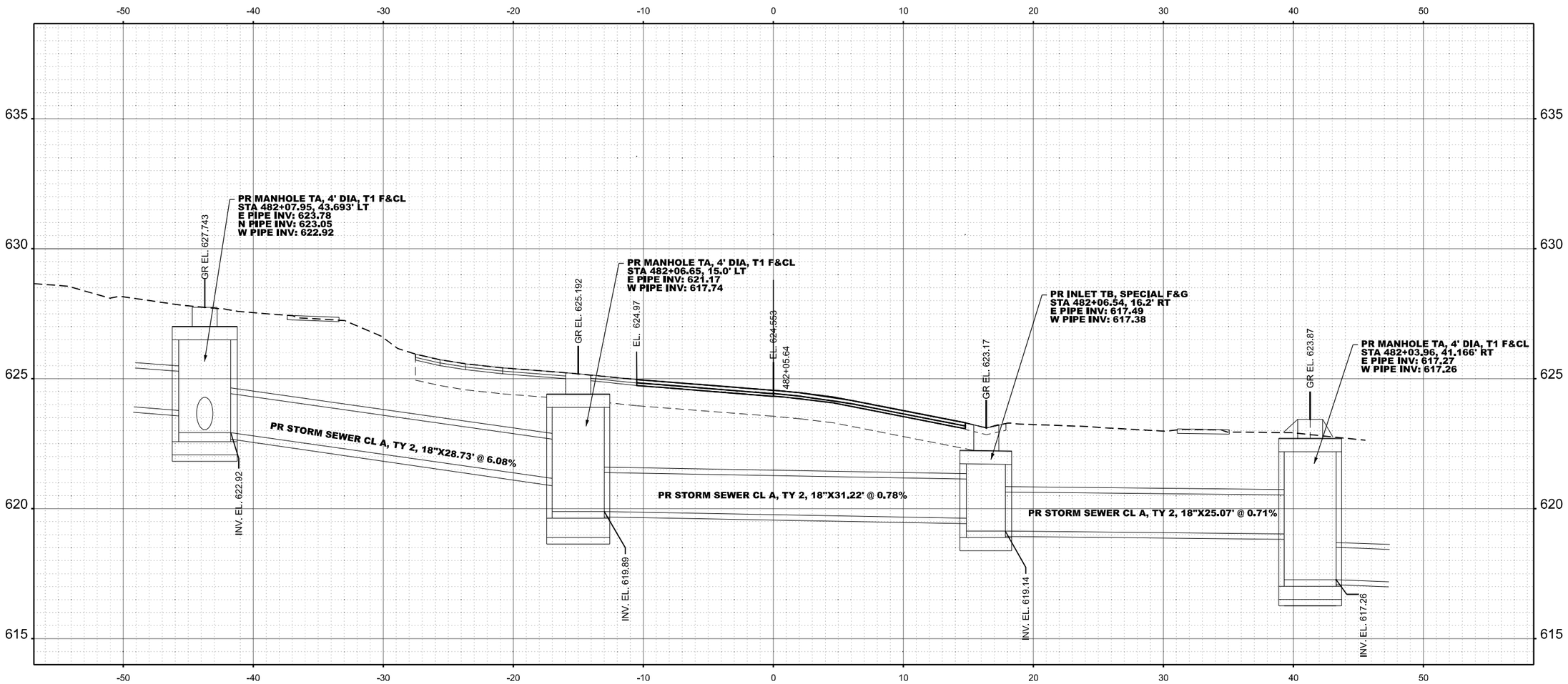

STA 482+05.64

MODEL: E003 - 482+05.64 [Sheet]
FILE NAME: c:\pw_work\pwidot\mcquade.jackson@illinois.gov\d0835885\D6 72J44 XS-Sheets.dgn

USER NAME = mcquade.jackson	DESIGNED -	REVISED -	
	DRAWN -	REVISED -	
	CHECKED -	REVISED -	
PLOT DATE = 6/26/2026	DATE -	REVISED -	

STATE OF ILLINOIS
DEPARTMENT OF TRANSPORTATION

SS IL 99 CROSS SECTION

SCALE: 1:50 | SHEET E003 - 482+05.64 [Sheet] OF SHEETS | STA. | TO STA.

F.A.S RTE.	SECTION	COUNTY	TOTAL SHEETS	SHEET NO.
2585	122(RS-10,BDR-1,C,I-1)		120	120E
		CONTRACT NO. 72J44		
		ILLINOIS FED. AID PROJECT		

BROWN, PIKE

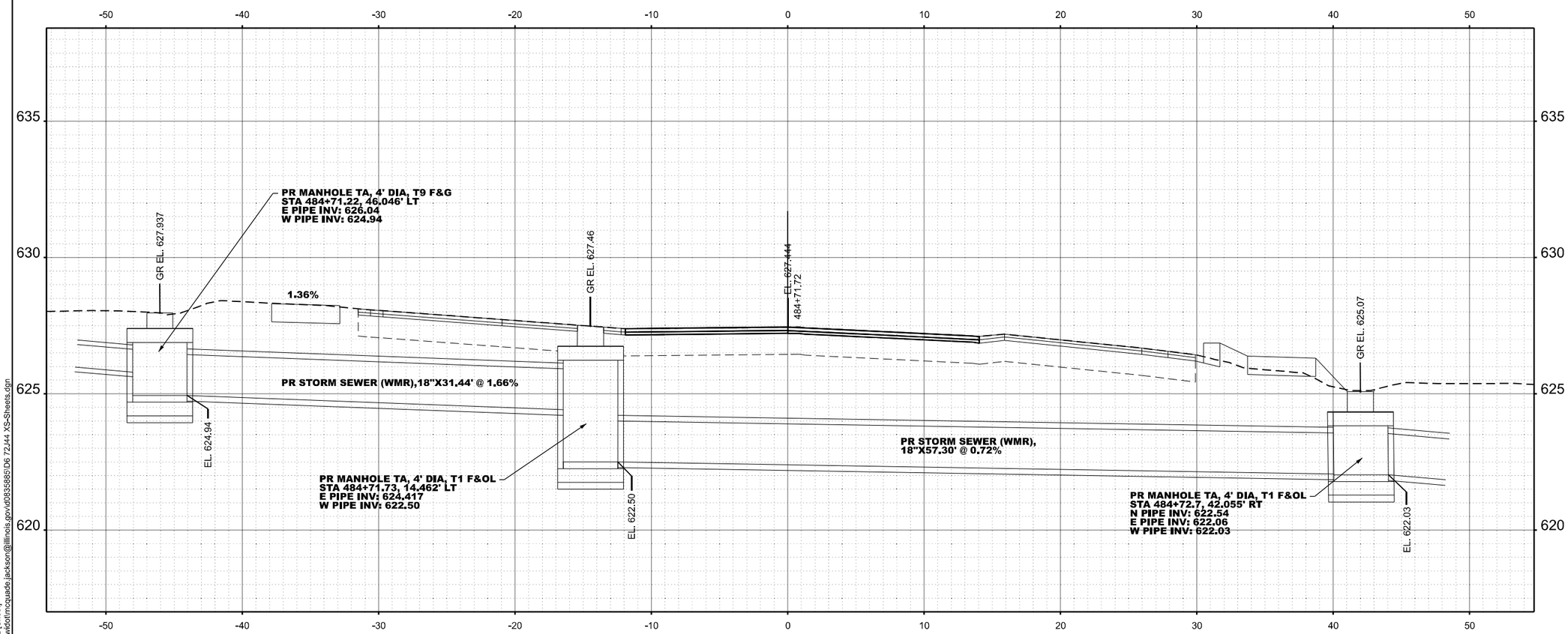

STA 484+71.72

MODEL: ExCL - 484+71.72 [Sheet]
FILE NAME: c:\pw_work\pwidot\mcquade.jackson@illinois.gov\d0835885\D6 72J44 XS-Sheets.dgn

USER NAME = mcquade.jackson	DESIGNED -	REVISED -	
	DRAWN -	REVISED -	
	CHECKED -	REVISED -	
PLOT DATE = 6/26/2026	DATE -	REVISED -	

STATE OF ILLINOIS
DEPARTMENT OF TRANSPORTATION

SS IL 99 CROSS SECTION

SCALE: 1:50 | SHEET ExCL - 484+71.72 [Sheet] | OF SHEETS | STA. | TO STA.

F.A.S RTE.	SECTION	COUNTY	TOTAL SHEETS	SHEET NO.
2585	122(RS-10,BDR-1,C,I-1)		120	120F
		CONTRACT NO. 72J44		
	ILLINOIS	FED. AID PROJECT		

BROWN, PIKE

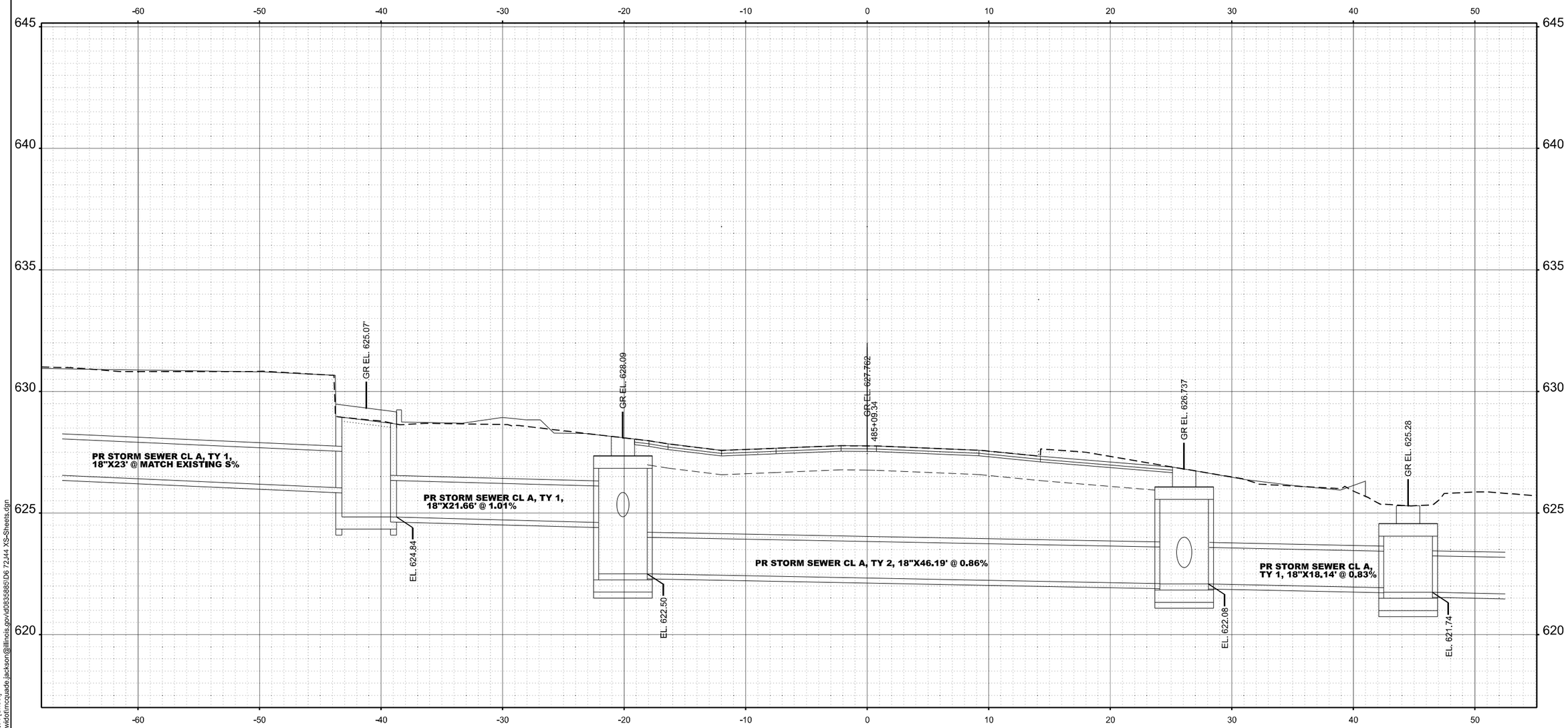

STA 485+09.34

MODEL: ExCL-1 - 485+09.34 [Sheet]
FILE NAME: c:\pw_work\pwidot\mcquade.jackson@illinois.gov\d0835885\D6 72J44 XS-Sheets.dgn

USER NAME = mcquade.jackson	DESIGNED -	REVISED -	
	DRAWN -	REVISED -	
	CHECKED -	REVISED -	
PLOT DATE = 6/26/2026	DATE -	REVISED -	

STATE OF ILLINOIS
DEPARTMENT OF TRANSPORTATION

SS IL 99 CROSS SECTION

SCALE: 1:50 | SHEET ExCL-1 - 485+09.34 [Sheet] | SHEETS | STA. | TO STA.

F.A.S RTE.	SECTION	COUNTY	TOTAL SHEETS	SHEET NO.
2585	122(RS-10,BDR-1,C,I-1)		120	120G
		CONTRACT NO. 72J44		
		ILLINOIS FED. AID PROJECT		

BROWN, PIKE

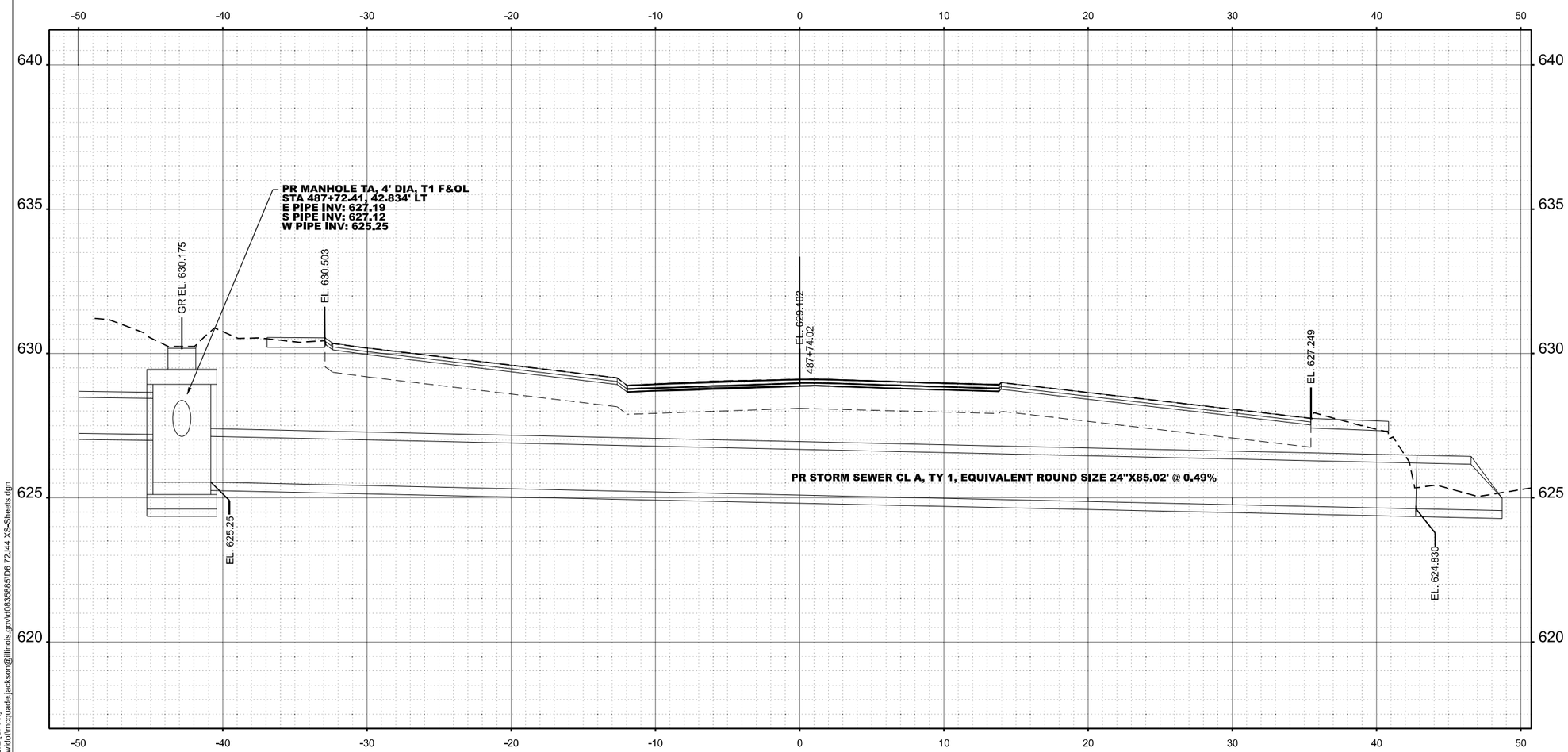

STA 487+74.02

MODEL: ExCL-2 - 487+74.02 [Sheet]
FILE NAME: c:\pw_work\pwidot\mcquade.jackson@illinois.gov\d0835885\D6 72J44 XS-Sheets.dgn

USER NAME = mcquade.jackson	DESIGNED -	REVISED -	
	DRAWN -	REVISED -	
	CHECKED -	REVISED -	
PLOT DATE = 6/26/2026	DATE -	REVISED -	

STATE OF ILLINOIS
DEPARTMENT OF TRANSPORTATION

SS IL 99 CROSS SECTION

SCALE: 1:50 | SHEET ExCL-2 - 487+74.02 [Sheet] | STA. | TO STA.

F.A.S RTE.	SECTION	COUNTY	TOTAL SHEETS	SHEET NO.
2585	122(RS-10,BDR-1,C,I-1)		120	120H
		CONTRACT NO. 72J44		
	ILLINOIS	FED. AID PROJECT		

BROWN, PIKE