INDEX OF SHEETS

1	COVER
2	INDEX, HIGHWAY STANDARDS, SEALS AND SIGNATURES
3	GENERAL NOTES
4-10	SUMMARY OF QUANTITIES
11-13	EXISTING TYPICAL SECTIONS
14-16	PROPOSED TYPICAL SECTIONS
17	PROPOSED SUPERELEVATION TABLES
18-34	SCHEDULES
35-41	ALIGNMENT CONTROL PLAN
42-80	REMOVAL PLANS
81-88	REMOVAL PLANS - RAMPS
89-127	ROADWAY PLANS
128-135	ROADWAY PLAN AND PROFILE - RAMPS
136	ROADWAY JOINTING PLAN - RAMP C
137	ROADWAY PROFILE DETAILS
138-157	ROADWAY PROFILE EASTBOUND
158-177	ROADWAY PROFILE WESTBOUND
178-180	ROADWAY DETAILS
181	MAINTENANCE OF TRAFFIC - GENERAL NOTES
182	MAINTENANCE OF TRAFFIC TYPICAL SECTION - PRE-STAGE
183-184	MAINTENANCE OF TRAFFIC TYPICAL SECTION - STAGE 1
185-187	MAINTENANCE OF TRAFFIC TYPICAL SECTION - STAGE 2
188-190	MAINTENANCE OF TRAFFIC TYPICAL SECTION - STAGE 3
191-231	MAINTENANCE OF TRAFFIC - PRE-STAGE
232	CROSSOVER 1 -DETAIL
233	CROSSOVER 2 -DETAIL
234	CROSSOVER 3 -DETAIL
235	CROSSOVER 4 -DETAIL
236-272	MAINTENANCE OF TRAFFIC - STAGE 1
273-312	MAINTENANCE OF TRAFFIC - STAGE 2A
313-317	MAINTENANCE OF TRAFFIC - STAGE 2A RAMPS
318-322	MAINTENANCE OF TRAFFIC - STAGE 2B
323-326	MAINTENANCE OF TRAFFIC - STAGE 2B RAMPS
327-366	MAINTENANCE OF TRAFFIC - STAGE 3A
367-370	MAINTENANCE OF TRAFFIC - STAGE 3A RAMPS
371-375	MAINTENANCE OF TRAFFIC - STAGE 3B
376-379	MAINTENANCE OF TRAFFIC - STAGE 3B RAMPS
380-418	DRAINAGE, LANDSCAPING AND EROSION CONTROL
419	CONCRETE HEADWALL (SPECIAL) DETAIL
420-462	PAVEMENT MARKING & SIGNING
463	LIGHTING GENERAL NOTES
464	GENERAL NOTES, SUMMARY OF QUANTITIES AND INDEX OF SHEETS
465-469	EXISTING LIGHTING AND REMOVAL PLAN
470-473	PROPOSED TEMPORARY LIGHTING PLAN MAINLINE
474-475	WIRING DIAGRAMS
476-478	PROPOSED LIGHTING PLAN
479-480	PROPOSED LIGHTING PLAN RAMPS A AND C
481-592	EASTBOUND CROSS SECTIONS
593-698	WESTBOUND CROSS SECTIONS
699-712	RAMP A CROSS SECTIONS
713-724	RAMP B CROSS SECTIONS
725-737	RAMP C CROSS SECTIONS
738-751	RAMP D CROSS SECTIONS
752-756	CROSSOVER 1 CROSS SECTIONS
757-765	CROSSOVER 2 CROSS SECTIONS
766-770	CROSSOVER 3 CROSS SECTIONS
771-775	CROSSOVER 4 CROSS SECTIONS

IDOT HIGHWAY STANDARDS

000001-09	STANDARD SYMBOLS, ABBREVIATIONS AND PATTERNS
001001-02	AREAS OF REINFORCEMENT BARS
001006	DECIMAL OF AN INCH AND OF A FOOT
280001-07	TEMPORARY EROSION CONTROL SYSTEMS
406001-06	ENTRANCE RAMP TERMINAL
406101-05	EXIT RAMP TERMINAL
420001-11	PAVEMENT JOINTS
442101-09	CLASS B PATCHES
482001-02	HMA SHOULDER ADJACENT TO FLEXIBLE PAVEMENT
542401-04	METAL FLARED END SECTION FOR PIPE CULVERTS
542411	SLOPED METAL END SECTIONS FOR PIPE CULVERTS 15" (375 mm) THRU (1500 mm) DIAMETER 1
601001-05	PIPE UNDERDRAINS
601101-02	CONCRETE HEADWALL FOR PIPE UNDERDRAIN
606001-09	CONCRETE CURB TYPE B AND COMBINATION CONCRETE CURB AND GUTTER
630001-13	STEEL PLATE BEAM GUARDRAIL
630301-09	SHOULDER WIDENING FOR TYPE 1 GUARDRAIL TERMINALS
631011-10	TRAFFIC BARRIER TERMINAL TYPE 2
631031-18	TRAFFIC BARRIER TERMINAL TYPE 6
635001-02	DELINEATORS
642001-03	SHOULDER RUMBLE STRIPS 16"
701101-05	OFF-ROAD OPERATIONS, MULTILANE, 15' (4.5m) TO 24" (600mm) FROM PAVEMENT EDGE
701106-02	OFF-ROAD OPERATIONS, MULTILANE, MORE THAN 15' (4.5 m) AWAY
701400-12	APPROACH TO LANE CLOSURE FREEWAY EXPRESSWAY
701401-13	LANE CLOSURE FREEWAY EXPRESSWAY
701402-12	LANE CLOSURE FREEWAY EXPRESSWAY WITH BARRIER
701406-13	LANE CLOSURE FREEWAY EXPRESSWAY DAY OPERATIONS ONLY
701411-09	LANE CLOSURE MULTILANE ENTRANCE OR EXIT RAMP 45MPH OR MORE
701423-10	LANE CLOSURE, MULTILANE, WITH BARRIER, FOR SPEEDS ≥ 45 MPH TO 55 MPH
701426-09	LANE CLOSURE MULTILANE INTERMITTENT OR MOVING OPERATIONS 45MPH OR MORE
701428-01	TRAFFIC CONTROL SETUP REMOVAL FREEWAY EXPRESSWAY
701446-11	TWO LANE CLOSURE, FREEWAY/EXPRESSWAY
701456-05	PARTIAL EXIT RAMP CLOSURE FREEWAY EXPRESSWAY
701701-10	URBAN LANE CLOSURE, MULTILANE INTERSECTION
701901-11	TRAFFIC CONTROL DEVICES
704001-08	TEMPORARY CONCRETE BARRIER
720001-01	SIGN PANEL MOUNTING DETAILS
720006-04	SIGN PANEL ERECTION DETAILS
720011-01	METAL POSTS FOR SIGNS MARKERS AND DELINEATORS
725001-01	OBJECT AND TERMINAL MARKERS
728001-01	TELESCOPING STEEL SIGN SUPPORT
729001-01	APPLICATIONS OF TYPE A AND B METAL POSTS
780001-05	TYPICAL PAVEMENT MARKINGS
781001-04	TYPICAL APPLICATIONS RAISED REFLECTIVE PAVEMENT MARKERS
782006-01	GUARDRAIL AND BARRIER WALL REFLECTOR MOUNTING DETAILS
805001-01	ELECTRICAL SERVICE INSTALLATION DETAILS
814001-03	HANDHOLES
821101-03	LUMINAIRE WIRING IN POLE
825011-04	LIGHTING CONTROLLER PEDESTAL MOUNTED, 240V
830001-03	LIGHT POLE ALUMINUM MAST ARM
836001-05	LIGHT POLE FOUNDATION
838001-01	BREAKAWAY DEVICES

LICENSED PROFESSIONAL ENGINEER
MATTHEW T. VORDERER
062.074291
11/30/27
EXPIRES
OF ILLINOIS

D'ESCOTO, INC.
COMPANY NAME

MATTHEW T VORDERER — 6/2/2026 DATE

APPLIES TO THE FOLLOWING DRAWINGS:

1-12, 14-15, 17-80, 89-127, 137-177, 179-181, 185-186, 188-189, 273-312, 318-322, 327-366, 371-375, 380-419, 481-698

LICENSED PROFESSIONAL ENGINEER
SEAN D. MAXWELL
062.071986
11/30/27
EXPIRES
OF ILLINOIS

QUIGG ENGINEERING, INC.
COMPANY NAME

SEAN D MAXWELL — 6/2/2026 DATE

APPLIES TO THE FOLLOWING DRAWINGS:

13, 16, 81-88, 128-136, 178, 182-184, 187, 190-272, 313-317, 323-326, 367-370, 376-379, 420-462, 699-775

LICENSED PROFESSIONAL ENGINEER
11/30/27
EXPIRES
SARAH L DORLAC
062-077405
OF ILLINOIS

GONZALEZ COMPANIES, LLC
COMPANY NAME

(SEE LEFT) — 6/2/2026
SARAH L DORLAC — DATE

APPLIES TO THE FOLLOWING DRAWINGS:

463, 465-469, 476-480

MODEL: SHEET INDEX 1 [SHEET]
FILE NAME: D876M95_sht_general notes-SOQ.dgn

55 W Van Buren St, Ste 200
Chicago, IL 60605
TEL: 312.787.0707 FAX: 312.787.7322
www.descotoinc.com
IL Professional Engineering Design Firm No. 184001609-0002
d'Escoto, Inc.

Copyright © 2026

USER NAME = mgesior	DESIGNED - MEG	REVISED -	
	DRAWN - MEG	REVISED -	
	CHECKED - MTV	REVISED -	
PLOT DATE = 6/2/2026	DATE - 6/1/2026	REVISED -	

STATE OF ILLINOIS
DEPARTMENT OF TRANSPORTATION

INDEX, HIGHWAY STANDARDS, SEALS AND SIGNATURES
I-64

SCALE: SHEET 1 OF 1 SHEETS STA. TO STA.

F.A.I RTE.	SECTION	COUNTY	TOTAL SHEETS	SHEET NO.
64	95-(3,4)RS-2	WASHINGTON	775	2
		CONTRACT NO. 76M95		
		ILLINOIS	FED. AID PROJECT	

1. HOT-MIX ASPHALT (HMA) SURFACE REMOVAL. THE INTENT OF THIS PAY ITEM IS TO REMOVE THE EXISTING HMA SURFACE IN PREPARATION OF A NEW HMA SURFACE

   CONCRETE PAVEMENT SCARIFICATION. THE INTENT OF THIS PAY ITEM IS TO SCARIFY THE EXISTING UNDERLYING CONTINUOUSLY REINFORCED PORTLAND CEMENT CONCRETE (CRPCC) 1/8". THE PURPOSE OF SCARIFICATION IS FOR BETTER ADHESION BETWEEN THE EXISTING CRPCC AND PROPOSED HMA LIFTS.

2. NO TRAFFIC SHALL BE ALLOWED TO DRIVE ON THE EXISTING CONCRETE PAVEMENT.

3. THE CONTRACTOR SHALL PROVIDE POSITIVE AND ADEQUATE DRAINAGE AT ALL LOCATIONS AT ALL TIMES. THIS MAY INCLUDE, BUT IS NOT LIMITED TO, REPLACEMENT OR RECONSTRUCTION OF EXISTING DRAINAGE STRUCTURES THAT HAVE BEEN DAMAGED OR REMOVED, REGRADING, PLUGGING ABANDONED PIPES, OR OTHER ACTIVITIES REQUIRED BY THE ENGINEER.

4. THE DEPARTMENT STRONGLY ENCOURAGES THE PRIME CONTRACTOR AND THEIR APPROVED SUB-CONTRACTORS TO HIRE MINORITY, WOMEN AND DISADVANTAGED INDIVIDUALS FROM ITS FEDERALLY FUNDED HIGHWAY CONSTRUCTION CAREERS TRAINING PROGRAM (HCCTP) TO HELP MEET WORKFORCE AND TRAINEE GOALS. THIS PROGRAM IS TRAINING MINORITIES, WOMAN AND DISADVANTAGED INDIVIDUALS IN HIGHWAY CONSTRUCTION - RELATED SKILLS, E.G., MATH FOR THE TRADES. JOB READINESS, TECHNICAL SKILLS COURSEWORK (CARPENTRY, CONCRETE FLATWORK, BLUEPRINT READING, SITE PLANS, SITE WORK TOOLS USE, ETC.) AND OSHA 10 HOUR CERTIFICATION. TO PREPARE THEM FOR A CAREER IN THE HIGHWAY CONSTRUCTION TRADES. GRADUATES ARE WELL-TRAINED AND READY TO BECOME PRODUCTIVE ENRTY-LEVEL CONSTRUCTION WORKERS. CONTACT THE DISTRICT 8 EEO OFFICE AT 618-346-3360 AND/OR THE HCCTP COORDINATOR AT 618-874-6528 TO LEARN MORE ABOUT THE PROGRAM AND FOR ASSISTANCE IN MEETING WORKFORCE AND TRAINEE GOALS.

5. STRUCTURES WITHIN THE PROJECT LIMITS MAY BE CROSSED WITH AN EMPTY MATERIAL TRANSFER DEVICE (MTD) WITH 40 TONS MAXIMUM GROSS WEIGHT RESTRICTIONS.

6. FOUR (4) CHANGEABLE MESSAGE SIGNS SHALL BE REQUIRED FOR THIS PROJECT. THEY SHALL BE PLACED TWO WEEKS PRIOR TO ANY LANE CLOSURE. THE CHANGEABLE MESSAGE SIGNS SHALL BE PLACE ALONG I-64 AND IL-127, OR AS DIRECTED BY THE ENGINEER.

7. IF THE CONTRACTOR, DURING CONSTRUCTION ACTIVITY, REMOVES TREES WITHIN THE RIGHT-OF-WAY LIMITS WHICH ARE NOT DESIGNATED ON THE PLANS FOR REMOVAL. IT WILL BE THE CONTRACTOR'S RESPONSIBILITY TO REPLACE THE TREES AT A 1 :1 RATIO. THE TREES WILL BE REPLACED WITH A 1 GALLON NATIVE ILLINOIS TREE SPECIES AND SHALL BE APPROVED BY THE ENGINEER. THE TREE REMOVAL AND TREE REPLACEMENT WILL BE AT THE CONTRACTOR'S EXPENSE, AND NO ADDITIONAL COMPENSATION WILL BE ALLOWED.

8. THE RESIDENT ENGINEER SHALL VERIFY THE EXISTANCE OF HIGHWAY LIGHTING, INTELLIGENT TRANSPORTATION SYSTEM (I.T.S.) UTILITIES, AND/OR ELECTRICAL CABLES ASSOCIATED WITH TRAFFIC SIGNALS WITHIN THE PROJECT LIMITS. IF ANY OF THESE EXIST WITHIN THE PROJECT LIMITS, AND IF THESE ITEMS REQUIRE LOCATING, THE CONTRACTOR SHALL BE DIRECTED TO DO SO ACCORDING TO SECTION 803 OF THE STANDARD SPECIFICATIONS. THIS WORK SHALL BE PAID FOR ACCORDING TO ARTICLE 109.04 OF THE STANDARD SPECIFICATIONS.

9. FACTORS FOR ESTIMATING PLAN QUANTITIES ARE AS FOLLOWS AND SHALL NOT BE USED FOR THE BASIS OF FINAL QUANTITIES:

   AGGREGATE (SURFACE, BASE, & BACKFILL) 2.05 TON/CU YD

   BITUMINOUS MATERIALS CY (POLYMERIZED AND NON-POLY): 0.056*SQ YD*THICKNESS (IN)

   TACK COAT (POLYMERIZED AND NON-POLY) 0.25 LBS/SQ YD

   RIP RAP 1.5 TON/CU YD

10. THE CONTRACTOR SHALL VERIFY ALL DIMENSIONS AND CONDITIONS IN THE FIELD PRIOR TO CONSTRUCTION AND ORDERING MATERIALS.

11. THE CONTRACTOR SHALL BE AWARE THAT LIMITED SURVEY WAS PERFORMED FOR THIS PROJECT AND THE PLANS WERE CREATED USING MICROFILM AND FIELD MEASUREMENTS.

12. ANY EXISTING PAVEMENT DETERMINED UNSUITABLE BY THE ENGINEER IN THE FIELD SHALL BE PATCHED PRIOR TO RESURFACING. THIS PATCHING SHALL BE PAID FOR PER ARTICLE 109.04 OF THE STANDARD SPECIFICATIONS FOR ROAD AND BRIDGE CONSTRUCTION.

13. EXISTING BRIDGE PLANS ARE AVAILABLE FOR REVIEW UPON REQUEST AT THE DISTRICT OFFICE.

14. AREAS DISTURBED FOR ANY REASON SHALL BE PERMANENTLY SEEDED AS DIRECTED BY THE ENGINEER. ALL AREAS DISTURBED BY THE CONTRACTOR OUTSIDE THE PROPOSED CONSTRUCTION LIMITS SHALL BE SEEDED AS STATED ABOVE AT THE CONTRACTOR'S EXPENSE, AND NO ADDITIONAL COMPENSATION WILL BE ALLOWED.

15. CONNECTING OF NEW OR EXISTING PIPE DRAINS TO NEW OR EXISTING DRAINAGE STRUCTURES SHALL BE MADE IN A MANNER WHICH RESULTS IN A NEAT AND WATERTIGHT JOINT. WHEN PLACED THROUGH THE WALL OF A DRAINAGE STRUCTURE, PIPE DRAINS SHALL BE PLACED OR CUT FLUSH WITH THE FACE OF THE WALL AND DRESSED WITH MORTOR TO PROVIDE A SMOOTH, ROUNDED, OR BEVELED EDGE. THIS WORK WILL NOT BE PAID FOR SEPERATELY, BUT SHALL BE INCLUDED IN THE COST OF THE PIPE DRAINS AND DRAINAGE STRUCTURES INVOLVED.

16. SHOULDER WIDENING FOR THE TRAFFIC BARRIER TERMINAL, TYPE 1 (SPECIAL) TANGENT SHALL BE INCLUDED IN THE UNIT PRICE OF THE TRAFFIC BARRIER TERMINAL, TYPE 1 (SPECIAL) TANGENT AND CONSTRUCTED ACCORDING TO STANDARD 630301.

HOT-MIX ASPHALT MIXTURE AND LIFT DETAILS

MIXTURE TYPE	AIR VOIDS @NDES	QMP
I-64 PAVEMENT RECONSTRUCTION (TANGENT AND SUPERELEVATED SECTIONS MINIMUM)		
POLYMERIZED HOT-MIX ASPHALT, SURFACE COURSE, STONE MATRIX ASPHALT,12.5, MIX "E" N80 (5.0) POLYMERIZED HOT-MIX BINDER SURFACE COURSE, STONE MATRIX ASPHALT, N80 (0") [LOWER LIFT OF 2.5", UPPER LIFT 2.5" (TOTAL 5.0")]	4.0% @ 80 GYR	PFP
I-64 PAVEMENT RECONSTRUCTION (TANGENT AND SUPERELEVATED SECTIONS TYPICAL)		
POLYMERIZED HOT-MIX ASPHALT, SURFACE COURSE, STONE MATRIX ASPHALT,12.5, MIX "E" N80 (5.0) POLYMERIZED HOT-MIX ASPHALT BINDER, STONE MATRIX ASPHALT, N80 (0"-2.5") [LOWER LIFT OF 1.75"-2.5", MIDDLE LIFT 1.75"-2.5", UPPER LIFT 1.5"-2.5" (TOTAL 5.0"-7.5")]	4.0% @ 80 GYR	PFP
I-64 PAVEMENT RECONSTRUCTION (TANGENT AND SUPERELEVATED SECTIONS 1 ADDITIONAL LIFT)		
POLYMERIZED HOT-MIX ASPHALT, SURFACE COURSE, STONE MATRIX ASPHALT,12.5, MIX "E" N80 (5.0) POLYMERIZED HOT-MIX ASPHALT BINDER, STONE MATRIX ASPHALT, N80 (2.5"-4.0") [LOWER LIFT OF 2.0"-2.5", MIDDLE LIFT 2.0"-2.5", MIDDLE LIFT 1.75"-2.5", UPPER LIFT 1.75"-2.5" (TOTAL 7.5"-9.0")]	4.0% @ 80 GYR	PFP
I-64 FULL-DEPTH SHOULDER (TANGENT AND SUPERELEVATED SECTIONS MINIMUM)		
HOT-MIX ASPHALT SHOULDERS (SPECIAL) (10.0") HOT-MIX ASPHALT SHOULDERS (SPECIAL) (0") [LOWEST LIFT OF 2.5", MIDDLE LIFT 2.5", MIDDLE LIFT 2.5", UPPER LIFT 2.5" (TOTAL 10")] AGGREGATE BASE COURSE, TYPE A (7")	4.0% @ 90 GYR	QCP
I-64 FULL-DEPTH SHOULDER (TANGENT AND SUPERELEVATED SECTIONS TYPICAL)		
HOT-MIX ASPHALT SHOULDERS (SPECIAL) (10.0") HOT-MIX ASPHALT SHOULDERS (SPECIAL) (0"-2.5") [LOWEST LIFT OF 2.0"-2.5", MIDDLE LIFT 2.0"-2.5", MIDDLE LIFT 2.0"-2.5", MIDDLE LIFT 2.0"-2.5", UPPER LIFT 2.0"-2.5" (TOTAL 10"-12.5")] AGGREGATE BASE COURSE, TYPE A (7")	4.0% @ 90 GYR	QCP
I-64 FULL-DEPTH SHOULDER (TANGENT AND SUPERELEVATED SECTIONS 1 ADDITIONAL LIFT)		
HOT-MIX ASPHALT SHOULDERS (SPECIAL) (10.0") HOT-MIX ASPHALT SHOULDERS (SPECIAL) (2.5"-5") [LOWEST LIFT OF 2.5", MIDDLE LIFT 2.0"-2.5", MIDDLE LIFT 2.0"-2.5", MIDDLE LIFT 2.0"-2.5", MIDDLE LIFT 2.0"-2.5" UPPER LIFT 2.0"-2.5" (TOTAL 12.5"-15")] AGGREGATE BASE COURSE, TYPE A (7")	4.0% @ 90 GYR	QCP
I-64 FULL-DEPTH SHOULDER (TANGENT AND SUPERELEVATED SECTIONS 2 ADDITIONAL LIFT)		
HOT-MIX ASPHALT SHOULDERS (SPECIAL) (10.0") HOT-MIX ASPHALT SHOULDERS (SPECIAL) (5"-7") [LOWEST LIFT OF 2.5', MIDDLE LIFT 2.0"-2.5", MIDDLE LIFT 2.0"-2.5", MIDDLE LIFT 2.0"-2.5", MIDDLE LIFT 2.0"-2.5, UPPER LIFT 2.0"-2.5" (TOTAL 15"-17")] AGGREGATE BASE COURSE, TYPE A (7")	4.0% @ 90 GYR	QCP
I-64 RESURFACING 1		
POLYMERIZED HOT-MIX ASPHALT, SURFACE COURSE, STONE MATRIX ASPHALT, 12.5, MIX "E" N80 (2.0")	4.0% @ 80 GYR	PFP
I-64 SHOULDER RESURFACING		
HOT-MIX ASPHALT SHOULDERS (SPECIAL) (2")	4.0% @ 90 GYR	QCP
RAMPS 1		
POLYMERIZED HOT-MIX ASPHALT, SURFACE COURSE, STONE MATRIX ASPHALT, 12.5, MIX "E", N80 (2.5") POLYMERIZED HOT-MIX ASPHALT, BINDER COURSE, STONE MATRIX ASPHALT, 12.5 MIX "E", N80 (VARIABLE DEPTH)	4.0% @ 80 GYR	PFP
RAMPS - SHOULDER WIDENING		
POLYMERIZED HOT-MIX ASPHALT, SURFACE COURSE, STONE MATRIX ASPHALT, 12.5, MIX "E", N80 (2.5") POLYMERIZED HOT-MIX ASPHALT, BINDER COURSE, STONE MATRIX ASPHALT, 12.5 MIX "E", N80 (VARIABLE DEPTH) HOT-MIX ASPHALT BASE COURSE WIDENING (5") AGGREGATE BASE COURSE, TYPE B (4")	4.0% @ 80 GYR	QCP

COMMITMENTS

NONE AT THIS TIME

STATUS OF UTILITIES

THE FOLLOWING UTILITY COMPANIES HAVE FACILITIES LOCATED ALONG I-64 WITHIN THE PROJECT LIMITS:

- AT&T ILLINOIS
- CITY OF NASHIVILLE WATER & SANITARY SEWER
- CLEARWAVE COMMUNICATIONS
- CITY OF NASHIVILLE GAS
- COUNTRYMARK COOPERATIVE, LLP
- SUNOCO LOGISTICS
- FRONTIER COMMUNICATIONS
- TRI-COUNTY ELECTRIC COOPERATIVE, INC.
- VILLAGE OF HOYLETON WATER & SANITARY SEWER
- WASHINGTON COUNTY WATER
- KINDER MORGAN

UTILITY ADJUSTMENTS ARE NOT ANTICIPATED. THE COST ASSOCIATED WITH ANY UTILITY RELOCATION OR ADJUSTMENT WILL BE IN ACCORDANCE WITH CURRENT POLICY AND AGREEMENTS.

HOT-MIX ASPHALT MIXTURE REQUIREMENTS

	POLY SURFACE	POLY BINDER	HMA BASE COURSE WIDENING 1	SHOULDER > 8 FEET		SHOULDER ≤ 8 FEET	
				SHOULDER (lower)	SHOULDER (surface)	SHOULDER (lower)	SHOULDER (surface)
AC/PG	SBS PG 70-28	SBS PG 70-28	PG 64-22	PG 64-22	PG 64-22	PG 64-22	PG 64-22
RAP % (MAX)							
DESIGN AIR VOIDS:	4.0% @ NDES=80	4.0% @ NDES=80	4.0% @ NDES=90	4.0% @ NDES=90	4.0% @ NDES=90	4.0% @ NDES=90	4.0% @ NDES=90
MIXTURE COMPOSITION: (GRADATION MIXTURE)	SMA 12.5	SMA 12.5	IL 19.0	IL 19.0	IL 9.5	IL 19.0	IL 9.5
FRICTION AGGREGATE:	MIX "E"	MIX "E"			MIX "E"		MIX "E"
QUALITY MANAGEMENT PROGRAM	PFP	PFP	QC/QA	QCP	QCP	QC/QA	QCP/QA
MATERIAL TRANSFER DEVICE (REQUIRED)?	YES	YES	YES	YES	YES	YES	YES

MATERIAL TRANSFER DEVICE SCHEDULE

MAINLINE/ RAMP	TRAFFIC LANES/ SHOULDER	SURFACE/ BINDER COURSE	MTD USED	QUANTITY
MAINLINE	TRAFFIC LANES	SURFACE COURSE	YES	80,500
		BINDER COURSE	YES	17,625
	SHOULDER	SURFACE COURSE	YES	30,807.66
		BINDER COURSE	YES	117,255.64
		HOT-MIX ASPHALT SHOULDERS	YES	11,144
RAMPS	TRAFFIC LANES	SURFACE COURSE	YES	1,922
		BINDER COURSE	YES	NO
	SHOULDER	SURFACE COURSE	NO	NO
		BINDER COURSE	NO	NO
		HMA BASE COURSE WIDENING	YES	2129
TOTAL				259,889

MODEL: General Notes 1 [SHEET]
FILE NAME: D876M95_sht_general notes-SOQ.dgn

d'Escoto, Inc.
55 W Van Buren St, Ste 200
Chicago, IL 60605
TEL: 312.787.0707 FAX: 312.787.7322
www.descotoinc.com
IL Professional Engineering Design Firm No. 184001609-0002
Copyright © 2026

USER NAME = mgesior	DESIGNED - MEG	REVISED - 1 6/01/2026-ADDENDUM 1	
	DRAWN - MEG	REVISED -	
	CHECKED - MTV	REVISED -	
PLOT DATE = 6/4/2026	DATE - 6/1/2026	REVISED -	

STATE OF ILLINOIS
DEPARTMENT OF TRANSPORTATION

GENERAL NOTES
I-64

SCALE: SHEET 1 OF 1 SHEETS STA. TO STA.

F.A.I RTE.	SECTION	COUNTY	TOTAL SHEETS	SHEET NO.
64	95-(3,4)RS-2	WASHINGTON	775	3
		CONTRACT NO. 76M95		
	ILLINOIS	FED. AID PROJECT		

	CODE NO.	ITEM	UNIT	TOTAL QUANTITY	CONSTRUCTION CODE 90% FED 10% STATE ROADWAY 0005 RURAL
	20200100	EARTH EXCAVATION	CU YD	29,793	29,793
	20400800	FURNISHED EXCAVATION	CU YD	32,070	32,070
	21400100	GRADING AND SHAPING DITCHES	FOOT	310	310
	25000210	SEEDING, CLASS 2A	ACRE	2	2
	25000400	NITROGEN FERTILIZER NUTRIENT	POUND	181	181
	25000500	PHOSPHORUS FERTILIZER NUTRIENT	POUND	181	181
	25000600	POTASSIUM FERTILIZER NUTRIENT	POUND	181	181
	25100630	EROSION CONTROL BLANKET	SQ YD	9,705	9,705
	28000400	PERIMETER EROSION BARRIER	FOOT	207,282	207,282
	28100107	STONE RIPRAP, CLASS A4	SQ YD	125	125
	31200500	STABILIZED SUBBASE - HOT-MIX ASPHALT, 4"	SQ YD	637	637
	35100600	AGGREGATE BASE COURSE, TYPE A 7"	SQ YD	223,470	223,470
	35101100	AGGREGATE BASE COURSE, TYPE A 12"	SQ YD	23,019	23,019
	35101600	AGGREGATE BASE COURSE, TYPE B 4"	SQ YD	1,447	1,447
	35600670	HOT-MIX ASPHALT BASE COURSE WIDENING, 5"	SQ YD	1,575	1,575
	40600290	BITUMINOUS MATERIALS (TACK COAT)	POUND	40518	40518
	40600295	POLYMERIZED BITUMINOUS MATERIALS (TACK COAT)	POUND	302123	302123
	40600370	LONGITUDINAL JOINT SEALANT	FOOT	633600	633600
	40600405	MATERIAL TRANSFER DEVICE	TON	259889	259889
	40600982	HOT-MIX ASPHALT SURFACE REMOVAL - BUTT JOINT	SQ YD	436	436

Δ INDICATES SPECIALTY ITEM

REV - MS

MODEL: SOQ 1 [SHEET]
FILE NAME: D876M95_sht_general notes-SOQ.dgn

d'Escoto, Inc.
55 W Van Buren St, Ste 200
Chicago, IL 60605
TEL: 312.787.0707 FAX: 312.787.7322
www.descotoinc.com
IL Professional Engineering Design Firm No. 184001629-0002
Copyright © 2026

USER NAME = mgesior	DESIGNED - MEG	REVISED -	
	DRAWN - MEG	REVISED -	
	CHECKED - MTV	REVISED -	
PLOT DATE = 5/6/2026	DATE - 5/6/2026	REVISED -	

STATE OF ILLINOIS
DEPARTMENT OF TRANSPORTATION

SUMMARY OF QUANTITIES
I-64

SCALE: | SHEET 1 OF 7 SHEETS | STA. | TO STA.

F.A.I RTE.	SECTION	COUNTY	TOTAL SHEETS	SHEET NO.
64	95-(3,4)RS-2	WASHINGTON	775	4

CONTRACT NO. 76M95

ILLINOIS | FED. AID PROJECT

	CODE NO.	ITEM	UNIT	TOTAL QUANTITY	CONSTRUCTION CODE 90% FED 10% STATE ROADWAY 0005 RURAL
	40600990	TEMPORARY RAMP	SQ YD	436	436
	40605015	POLYMERIZED HOT-MIX ASPHALT BINDER COURSE, STONE MATRIX ASPHALT 12.5, N80	TON	17625	17625
	40605034	POLYMERIZED HOT-MIX ASPHALT SURFACE COURSE, STONE MATRIX ASPHALT, 12.5, MIX "E", N80	TON	80500	80500
	42000401	PORTLAND CEMENT CONCRETE PAVEMENT 9" (JOINTED)	SQ YD	640	640
	42000501	PORTLAND CEMENT CONCRETE PAVEMENT 10" (JOINTED)	SQ YD	22,393	22,393
	44000100	PAVEMENT REMOVAL	SQ YD	628	628
	44000157	HOT-MIX ASPHALT SURFACE REMOVAL, 2"	SQ YD	33,285	33,285
	44000162	HOT-MIX ASPHALT SURFACE REMOVAL, 3 1/4"	SQ YD	18935	18935
	44000175	HOT-MIX ASPHALT SURFACE REMOVAL, 6 1/2"	SQ YD	268,152	268,152
	44000300	CURB REMOVAL	FOOT	254	254
	44003100	MEDIAN REMOVAL	SQ FT	1,838	1,838
	44004250	PAVED SHOULDER REMOVAL	SQ YD	195333	195333
	44200050	WELDED WIRE REINFORCEMENT	SQ YD	263	263
	44200632	CLASS A PATCHES, TYPE IV, 15 INCH	SQ YD	7,089	7,089
	44200994	CLASS B PATCHES, TYPE II, 12 INCH	SQ YD	81	81
	44200998	CLASS B PATCHES, TYPE III, 12 INCH	SQ YD	98	98
	44201000	CLASS B PATCHES, TYPE IV, 12 INCH	SQ YD	263	263
	44201299	DOWEL BARS 1 1/2"	EACH	595	595
	44213000	PATCHING REINFORCEMENT	SQ YD	7089	7089
	44213200	SAW CUTS	FOOT	18294	18294
	44213204	TIE BARS 3/4"	EACH	1504	1504
	48101200	AGGREGATE SHOULDERS, TYPE B	TON	31,060	31,060

Δ INDICATES SPECIALTY ITEM

REV - MS

MODEL: SOQ 2 [SHEET]
FILE NAME: D876M95_sht_general notes-SOQ.dgn

d'Escoto, Inc.
55 W Van Buren St, Ste 200
Chicago, IL 60605
TEL: 312.787.0707 FAX: 312.787.7322
www.descotoinc.com
IL Professional Engineering Design Firm No. 184001639-0002
Copyright © 2026

USER NAME = mgesior	DESIGNED - MEG	REVISED -	
	DRAWN - MEG	REVISED -	
	CHECKED - MTV	REVISED -	
PLOT DATE = 5/6/2026	DATE - 5/6/2026	REVISED -	

81

98

STATE OF ILLINOIS
DEPARTMENT OF TRANSPORTATION

SUMMARY OF QUANTITIES
I-64

SCALE: | SHEET 2 OF 7 SHEETS | STA. | TO STA.

F.A.I RTE.	SECTION	COUNTY	TOTAL SHEETS	SHEET NO.
64	95-(3,4)RS-2	WASHINGTON	775	5

CONTRACT NO. 76M95

ILLINOIS | FED. AID PROJECT

	CODE NO.	ITEM	UNIT	TOTAL QUANTITY	CONSTRUCTION CODE 90% FED 10% STATE ROADWAY 0005 RURAL
	48101500	AGGREGATE SHOULDERS, TYPE B 6"	SQ YD	1504	1504
	48102100	AGGREGATE WEDGE SHOULDER, TYPE B	TON	28,118	28,118
	48203100	HOT-MIX ASPHALT SHOULDERS	TON	11144	11144
	50300225	CONCRETE STRUCTURES	CU YD	3	3
	50800205	REINFORCEMENT BARS, EPOXY COATED	POUND	232	232
	542D0229	PIPE CULVERTS, CLASS D, TYPE 1 24"	FOOT	571	571
	542D0235	PIPE CULVERTS, CLASS D, TYPE 1 30"	FOOT	608	608
	54260724	SLOPED METAL END SECTION WITH GRATE, STANDARD 542411, 24", 1:6	EACH	3	3
	54260730	SLOPED METAL END SECTION WITH GRATE, STANDARD 542411, 30", 1:6	EACH	2	2
	59300100	CONTROLLED LOW-STRENGTH MATERIAL	CU YD	35	35
	60108106	PIPE UNDERDRAINS, TYPE 1, 6"	FOOT	193,658	193,658
	60108200	PIPE UNDERDRAINS 6" (SPECIAL)	FOOT	6,670	6,670
	60600605	CONCRETE CURB, TYPE B	FOOT	255	255
	60618300	CONCRETE MEDIAN SURFACE, 4 INCH	SQ FT	1,728	1,728
	60905305	BOX CULVERTS TO BE CLEANED	FOOT	849	849
	60920024	PIPE CULVERTS TO BE CLEANED 24"	FOOT	1,284	1,284
	60920030	PIPE CULVERTS TO BE CLEANED 30"	FOOT	312	312
	60920036	PIPE CULVERTS TO BE CLEANED 36"	FOOT	792	792
	60920042	PIPE CULVERTS TO BE CLEANED 42"	FOOT	111	111
	60920060	PIPE CULVERTS TO BE CLEANED 60"	FOOT	526	526
Δ	63000001	STEEL PLATE BEAM GUARDRAIL, TYPE A, 6 FOOT POSTS	FOOT	6,374	6,374

Δ INDICATES SPECIALTY ITEM

REV - MS

MODEL: SOQ 3 [SHEET]
FILE NAME: D876M95_sht_general notes-SOQ.dgn

d'Escoto, Inc.
55 W Van Buren St, Ste 200
Chicago, IL 60605
TEL: 312.787.0707 FAX: 312.787.7322
www.DESCOTOINC.com
IL Professional Engineering Design Firm No. 184001609-0002
Copyright © 2026

USER NAME = mgesior	DESIGNED - MEG	REVISED -	
	DRAWN - MEG	REVISED -	
	CHECKED - MTV	REVISED -	
PLOT DATE = 5/6/2026	DATE - 5/6/2026	REVISED -	

STATE OF ILLINOIS
DEPARTMENT OF TRANSPORTATION

SUMMARY OF QUANTITIES
I-64

SCALE: SHEET 3 OF 7 SHEETS STA. TO STA.

F.A.I RTE.	SECTION	COUNTY	TOTAL SHEETS	SHEET NO.
64	95-(3,4)RS-2	WASHINGTON	775	6

CONTRACT NO. 76M95

ILLINOIS FED. AID PROJECT

	CODE NO.	ITEM	UNIT	TOTAL QUANTITY	CONSTRUCTION CODE 90% FED 10% STATE ROADWAY 0005 RURAL
Δ	70400200	RELOCATE TEMPORARY CONCRETE BARRIER	FOOT	6,688	6,688
Δ	70600270	IMPACT ATTENUATORS, TEMPORARY (FULLY REDIRECTIVE, WIDE), TEST LEVEL 3	EACH	15	15
Δ	70600327	IMPACT ATTENUATORS, RELOCATE (FULLY REDIRECTIVE, WIDE), TEST LEVEL 3	EACH	7	7
Δ	72000100	SIGN PANEL - TYPE 1	SQ FT	1,036	1,036
Δ	72000200	SIGN PANEL - TYPE 2	SQ FT	96	96
Δ	72000300	SIGN PANEL - TYPE 3	SQ FT	64	64
Δ	72400310	REMOVE SIGN PANEL - TYPE 1	SQ FT	325	325
Δ	72400320	REMOVE SIGN PANEL - TYPE 2	SQ FT	96	96
Δ	72400330	REMOVE SIGN PANEL - TYPE 3	SQ FT	64	64
Δ	72501000	TERMINAL MARKER - DIRECT APPLIED	EACH	20	20
Δ	72900100	METAL POST - TYPE A	FOOT	1,426	1,426
Δ	73000100	WOOD SIGN SUPPORT	FOOT	90	90
	73700100	REMOVE GROUND MOUNTED SIGN SUPPORT	EACH	3	3
Δ	78004600	PREFORMED PLASTIC PAVEMENT MARKING, TYPE D - STANDARD - LETTERS AND SYMBOLS	SQ FT	144	144
Δ	78004630	PREFORMED PLASTIC PAVEMENT MARKING, TYPE D - STANDARD - LINE 6"	FOOT	260,956	260,956
Δ	78004640	PREFORMED PLASTIC PAVEMENT MARKING, TYPE D - STANDARD - LINE 8"	FOOT	3,378	3,378
Δ	78004660	PREFORMED PLASTIC PAVEMENT MARKING, TYPE D - STANDARD - LINE 12"	FOOT	220	220
Δ	78004720	PREFORMED PLASTIC PAVEMENT MARKING, TYPE D - STANDARD - LINE 24"	FOOT	120	120
Δ	78011000	GROOVING FOR RECESSED PAVEMENT MARKING, LETTERS AND SYMBOLS	SQ FT	144	144
Δ	78011035	GROOVING FOR RECESSED PAVEMENT MARKING 7"	FOOT	260,956	260,956

Δ INDICATES SPECIALTY ITEM

REV - MS

MODEL: SOQ 5 [SHEET]
FILE NAME: D876M95_sht_general notes-SOQ.dgn

d'Escoto, Inc.
55 W Van Buren St, Ste 200
Chicago, IL 60605
TEL: 312.787.0707 FAX: 312.787.7322
www.descotoinc.com
IL Professional Engineering Design Firm No. 184001609-0002
Copyright © 2026

USER NAME = mgesior	DESIGNED - MEG	REVISED -	
	DRAWN - MEG	REVISED -	
	CHECKED - MTV	REVISED -	
PLOT DATE = 5/6/2026	DATE - 5/6/2026	REVISED -	

STATE OF ILLINOIS
DEPARTMENT OF TRANSPORTATION

SUMMARY OF QUANTITIES
I-64

SCALE: SHEET 5 OF 7 SHEETS STA. TO STA.

F.A.I RTE.	SECTION	COUNTY	TOTAL SHEETS	SHEET NO.
64	95-(3,4)RS-2	WASHINGTON	775	8

CONTRACT NO. 76M95

ILLINOIS FED. AID PROJECT

	CODE NO.	ITEM	UNIT	TOTAL QUANTITY	CONSTRUCTION CODE 90% FED 10% STATE ROADWAY 0005 RURAL
	X4401198	HOT-MIX ASPHALT SURFACE REMOVAL, VARIABLE DEPTH	SQ YD	132667	132667 Δ
	X4402805	ISLAND REMOVAL	SQ FT	224	224
	~~X4404264~~	~~SHOULDER REMOVAL AND REPLACEMENT (SPECIAL)~~	~~FOOT~~	~~209,476~~	~~209,476~~ Δ
	X4404400	PAVEMENT REMOVAL (SPECIAL)	SQ YD	758	758
	X4810200	AGGREGATE SHOULDER REMOVAL	CU YD	12	12
	X5036003	CONCRETE HEADWALL (SPECIAL)	EACH	459	459
	X6013700	PIPE UNDERDRAIN REMOVAL (SPECIAL)	FOOT	201,880	201,880
	X6015000	REMOVE CONCRETE HEADWALLS FOR PIPE DRAINS	EACH	29	29
	X6050700	REMOVE INLET BOX	EACH	1	1
	X7010216	TRAFFIC CONTROL AND PROTECTION, (SPECIAL)	L SUM	1	1
	X7010234	TRAFFIC CONTROL AND PROTECTION, STANDARD 701701 (SPECIAL)	L SUM	1	1
	X7200062	TEMPORARY SIGNING	EACH	2,255	2,255
	X8410102	TEMPORARY LIGHTING SYSTEM	L SUM	1	1
	Z0012800	CONCRETE PAVEMENT SCARIFICATION	SQ YD	269,306	269,306
	Z0013798	CONSTRUCTION LAYOUT	L SUM	1	1
	Z0018400	DRAINAGE STRUCTURES TO BE ADJUSTED	EACH	3	3
	Z0021400	EXPANSION JOINT (SPECIAL)	FOOT	190	190 Δ
	Z0024475	TUBULAR MARKER	EACH	62	62
	Z0065775	SLOTTED DRAIN 24" WITH VARIABLE SLOT	FOOT	273	273
	X4823105	HOT MIX ASPHALT SHOULDERS (SPECIAL)	TONS	146568	146568 Δ
	Z0065780	SLOTTED DRAIN 30" WITH VARIABLE SLOT	FOOT	142	142
Ø	Z0076600	TRAINEES	HOUR	4000	4000
	~~X4823107~~	~~HOT-MIX ASPHALT SHOULDER (SPECIAL)~~	~~SQ YD~~	~~368,672~~	~~368,672~~ Δ
Ø	Z0076604	TRAINEES TRAINING PROGRAM GRADUATE	HOUR	4000	4000

Δ INDICATES SPECIALTY ITEM

Ø 0042

REV - MS

MODEL: SOQ 7 [SHEET]
FILE NAME: D876M95_sht_general notes-SOQ.dgn

d'Escoto, Inc.
55 W Van Buren St, Ste 200
Chicago, IL 60605
TEL: 312.787.0707 FAX: 312.787.7322
www.descotoinc.com
IL Professional Engineering Design Firm No. 184001609-0002
Copyright © 2026

USER NAME = mgesior	DESIGNED - MEG	REVISED -	
	DRAWN - MEG	REVISED -	
	CHECKED - MTV	REVISED -	
PLOT DATE = 5/6/2026	DATE - 5/6/2026	REVISED -	

STATE OF ILLINOIS
DEPARTMENT OF TRANSPORTATION

SUMMARY OF QUANTITIES
I-64

SCALE: | SHEET 7 OF 7 SHEETS | STA. | TO STA.

F.A.I RTE.	SECTION	COUNTY	TOTAL SHEETS	SHEET NO.
64	95-(3,4)RS-2	WASHINGTON	775	10

CONTRACT NO. 76M95

ILLINOIS | FED. AID PROJECT

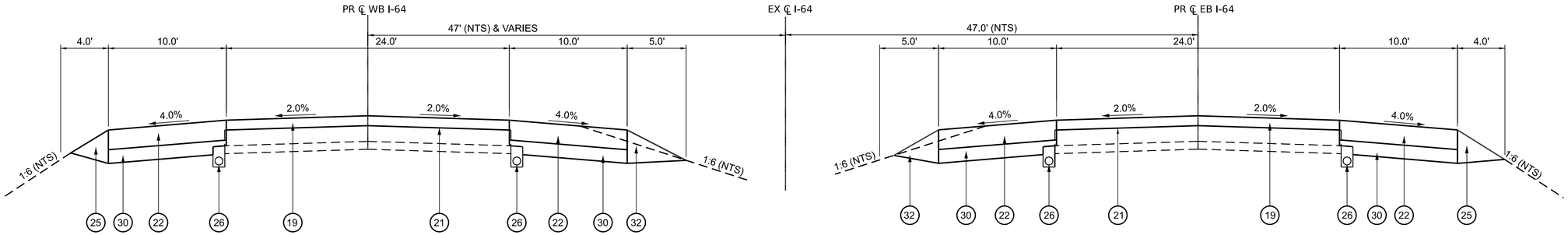

WESTBOUND STATIONS
STA 3406+02 TO 3467+91
STA 3492+57 TO 3530+49
STA 3558+65 TO 3564+09
STA 3585+66 TO 3590+12
STA 3609+83 TO 3617+96
STA 3653+46 TO 3779+90
STA 13809+90 TO 13817+54
STA 13843+07 TO 13850+98
STA 13879+98 TO 13913+00

EASTBOUND STATIONS
STA 5405+74 TO 5529+63
STA 5558+53 TO 5564+27
STA 5580+66 TO 5589+94
STA 5612+03 TO 5616+29
STA 5649+52 TO 5780+72
STA 5808+28 TO 5816+19
STA 5842+71 TO 5848+45
STA 5877+13 TO 5912+46

TANGENT SECTION

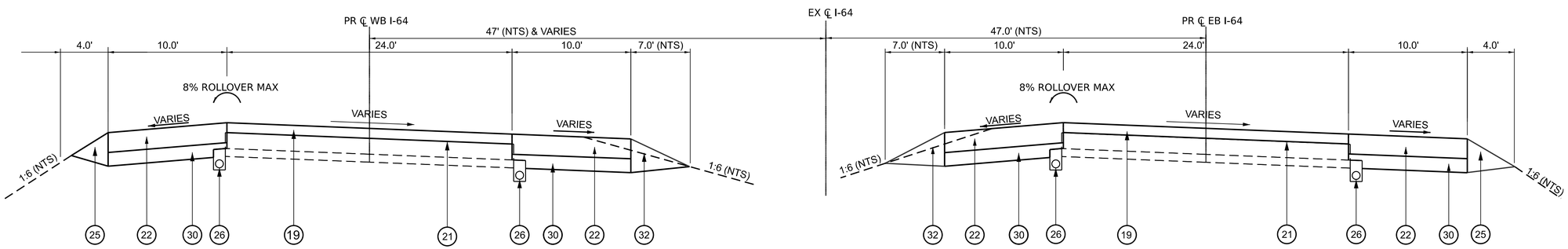

WESTBOUND STATIONS
STA 3530+49 TO 3558+65
STA 3590+12 TO 3609+83
STA 13817+53 TO 13843+07

EASTBOUND STATIONS
STA 5529+63 TO 5558+53
STA 5591+20 TO 5610+77
STA 5816+19 TO 5842+71

SUPERELEVATED SECTION

TYPICAL SECTION LEGEND

17. POLYMERIZED HOT-MIX ASPHALT, SURFACE COURSE STONE MATRIX ASPHALT, 12.5, MIX "E" N80 (2.5")
18. HOT-MIX ASPHALT BASE COURSE WIDENING, 5.0"
19. POLYMERIZED HOT-MIX ASPHALT, SURFACE COURSE STONE MATRIX ASPHALT, 12.5, MIX "E" N80 (5.0")
20. POLYMERIZED HOT-MIX ASPHALT, BINDER COURSE STONE MATRIX ASPHALT, 12.5, MIX "E" N80 (2.5")
21. POLYMERIZED HOT-MIX ASPHALT, STONE MATRIX ASPHALT, BINDER COURSE, VARIABLE DEPTH
22. HOT-MIX ASPHALT SHOULDERS (SPECIAL)
23. PORTLAND CEMENT CONCRETE PAVEMENT 9" (JOINTED) 1
24. AGGREGATE BASE COURSE, TYPE B (4")
25. AGGREGATE WEDGE SHOULDER, TYPE B
26. PIPE UNDERDRAINS, TYPE 1, 6"
27. STABILIZED SUBBASE - HOT-MIX ASPHALT, 4"
28. HOT-MIX ASPHALT SHOULDERS, SURFACE COURSE IL 9.5, MIX "E", N90 (2")
29. POLYMERIZED HOT-MIX ASPHALT, SURFACE COURSE STONE MATRIX ASPHALT, 12.5, MIX "E" N80 (2")
30. AGGREGATE BASE COURSE, TYPE A (7")
31. AGGREGATE BASE COURSE, TYPE A (12")
32. AGGREGATE SHOULDERS, TYPE B
33. AGGREGATE SHOULDERS, TYPE B, 6"

BRIDGE OMISSIONS

	PR WB STATION LIMITS		PR EB STATION LIMITS	
BEAVER POND CREEK	3433+09.20	3434+16.00	5432+91.73	5433+98.97
LITTLE CROOKED CREEK	3492+81.46	3494+88.30	5492+94.63	5495+01.28
NORTH CREEK	3599+04.74	3600+29.10	5597+83.71	5599+17.65
ALABAMA ROAD AND UP RR	3770+90.30	3773+23.62	5771+39.51	5773+73.45
MIDDLE CREEK	13799+07.17	13800+50.06	5798+50.54	5799+92.75
MIDDLE CREEK	13860+86.16	13862+70.76	5860+13.10	5862+01.00

d'Escoto, Inc.
55 W Van Buren St, Ste 200
Chicago, IL 60605
TEL: 312.787.0707 FAX: 312.787.7322
www.descotoinc.com
IL Professional Engineering Design Firm No. 184001629-0002
Copyright © 2026

USER NAME = mgesior	DESIGNED - MEG	REVISED - 1 6/01/2026-ADDENDUM 1	
	DRAWN - MEG	REVISED -	
	CHECKED - MTV	REVISED -	
PLOT DATE = 6/4/2026	DATE - 6/1/2026	REVISED -	

STATE OF ILLINOIS
DEPARTMENT OF TRANSPORTATION

PROPOSED TYPICAL SECTIONS
I-64

SCALE: 1"=5' | SHEET 1 OF 2 SHEETS | STA. TO STA.

F.A.I RTE.	SECTION	COUNTY	TOTAL SHEETS	SHEET NO.
64	95-(3,4)RS-2	WASHINGTON	775	14
		CONTRACT NO. 76M95		
		ILLINOIS	FED. AID PROJECT	

MODEL: Pr_Typicals_Revised [Sheet]
FILE NAME: D876M95_sht_Proposed Typicals.dgn

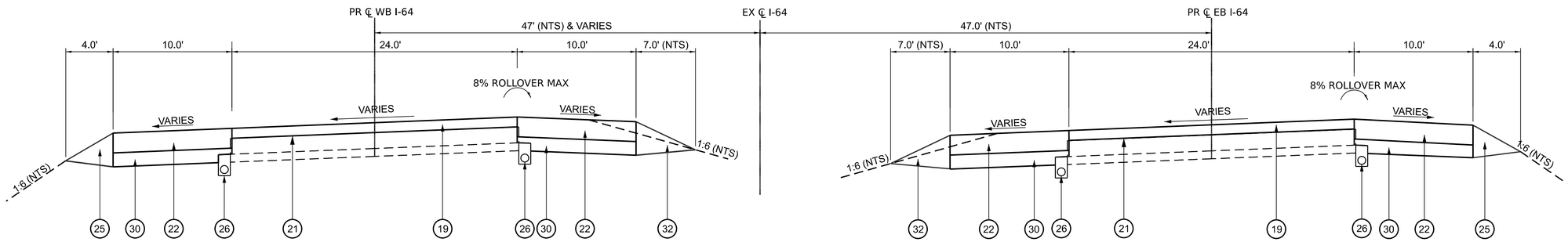

WESTBOUND STATIONS
STA 3468+10 TO 3491+31
STA 3565+35 TO 3584+40
STA 3609+82 TO 3652+20
STA 3780+93 TO 13808+63
STA 13816+28 TO 13844+33
STA 13852+24 TO 13878+71

SUPERELEVATED SECTION

EASTBOUND STATIONS
STA 5564+27 TO 5580+66
STA 5616+29 TO 5649+52
STA 5780+00 TO 5808+28
STA 5848+45 TO 5877+13

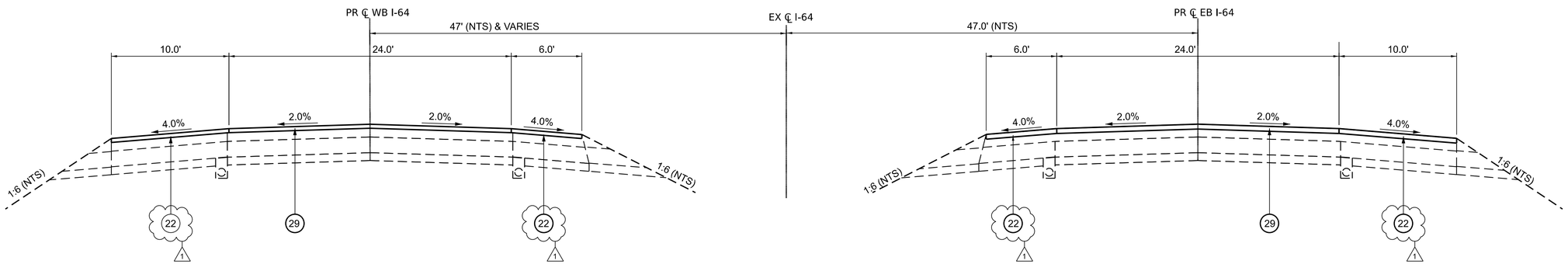

WESTBOUND STATIONS
STA 3397+29 TO 3406+02
STA 13913+01 TO 13933+65

TANGENT SECTION RESURFACING

EASTBOUND STATIONS
STA 5397+07 TO 5405+74
STA 5912+47 TO 5933+00

TYPICAL SECTION LEGEND

- 17 POLYMERIZED HOT-MIX ASPHALT, SURFACE COURSE STONE MATRIX ASPHALT, 12.5, MIX "E" N80 (2.5")
- 18 HOT-MIX ASPHALT BASE COURSE WIDENING, 5.0"
- 19 POLYMERIZED HOT-MIX ASPHALT, SURFACE COURSE STONE MATRIX ASPHALT, 12.5, MIX "E" N80 (5.0")
- 20 POLYMERIZED HOT-MIX ASPHALT, BINDER COURSE STONE MATRIX ASPHALT, 12.5, MIX "E" N80 (2.5")
- 21 POLYMERIZED HOT-MIX ASPHALT, STONE MATRIX ASPHALT, BINDER COURSE, VARIABLE DEPTH
- 22 HOT-MIX ASPHALT SHOULDERS (SPECIAL)
- 23 PORTLAND CEMENT CONCRETE PAVEMENT 9" (JOINTED) 1
- 24 AGGREGATE BASE COURSE, TYPE B (4")
- 25 AGGREGATE WEDGE SHOULDER, TYPE B
- 26 PIPE UNDERDRAINS, TYPE 1, 6"
- 27 STABILIZED SUBBASE - HOT-MIX ASPHALT, 4"
- 28 HOT-MIX ASPHALT SHOULDERS, SURFACE COURSE IL 9.5, MIX "E", N90 (2")
- 29 POLYMERIZED HOT-MIX ASPHALT, SURFACE COURSE STONE MATRIX ASPHALT, 12.5, MIX "E" N80 (2")
- 30 AGGREGATE BASE COURSE, TYPE A (7")
- 31 AGGREGATE BASE COURSE, TYPE A (12")
- 32 AGGREGATE SHOULDERS, TYPE B
- 33 AGGREGATE SHOULDERS, TYPE B, 6"

BRIDGE OMISSIONS

	PR WB STATION LIMITS		PR EB STATION LIMITS	
BEAVER POND CREEK	3433+09.20	3434+16.00	5432+91.73	5433+98.97
LITTLE CROOKED CREEK	3492+81.46	3494+88.30	5492+94.63	5495+01.28
NORTH CREEK	3599+04.74	3600+29.10	5597+83.71	5599+17.65
ALABAMA ROAD AND UP RR	3770+90.30	3773+23.62	5771+39.51	5773+73.45
MIDDLE CREEK	13799+07.17	13800+50.06	5798+50.54	5799+92.75
MIDDLE CREEK	13860+86.16	13862+70.76	5860+13.10	5862+01.00

d'Escoto, Inc.
55 W Van Buren St, Ste 200
Chicago, IL 60605
TEL: 312.787.0707 FAX: 312.787.7322
www.descotoinc.com
IL Professional Engineering Design Firm No. 184001639-0002
Copyright © 2026

USER NAME = mgesior	DESIGNED - MEG	REVISED - 1 6/01/2026-ADDENDUM 1	
	DRAWN - MEG	REVISED -	
	CHECKED - MTV	REVISED -	
PLOT DATE = 6/4/2026	DATE - 6/1/2026	REVISED -	

STATE OF ILLINOIS
DEPARTMENT OF TRANSPORTATION

PROPOSED TYPICAL SECTIONS
I-64

SCALE: 1"=5' | SHEET 2 OF 2 SHEETS | STA. | TO STA.

F.A.I RTE.	SECTION	COUNTY	TOTAL SHEETS	SHEET NO.
64	95-(3,4)RS-2	WASHINGTON	775	15
		CONTRACT NO. 76M95		
		ILLINOIS	FED. AID PROJECT	

MODEL: Pr_Typicals_1_Revised [Sheet]
FILE NAME: D876M95_sht_Proposed Typicals.dgn

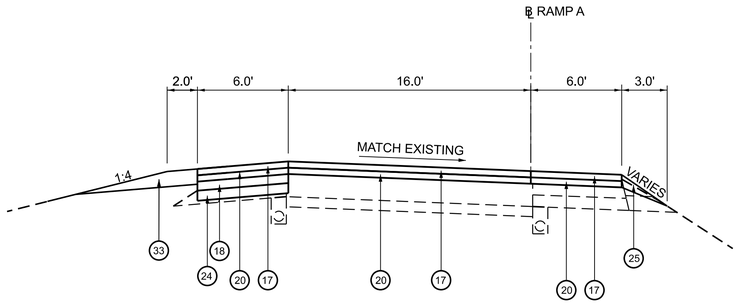

RAMP A

STA 143+07.49 TO STA 165+62.83
(LOOKING WEST)

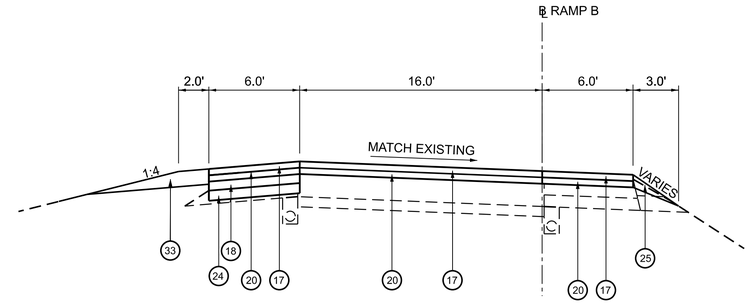

RAMP B

STA 269+76.92 TO STA 289+60.49
(LOOKING WEST)

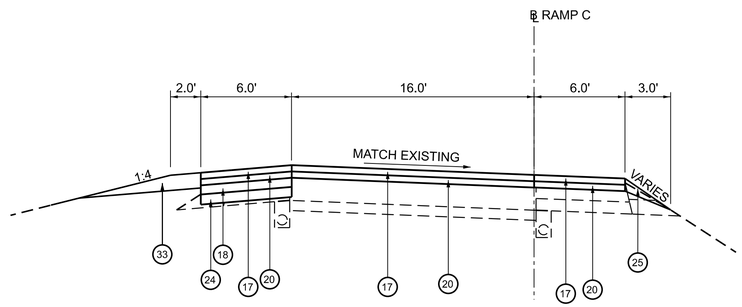

RAMP C

STA 353+12.92 TO STA 371+41.96
(LOOKING EAST)

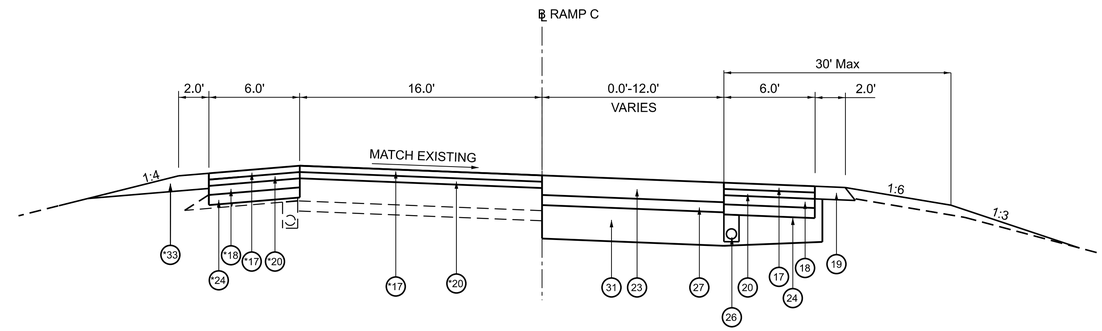

RAMP C

STA 371+41.96 TO STA 375+07.29
(LOOKING EAST)

* STOPS AT STA 372+79.90

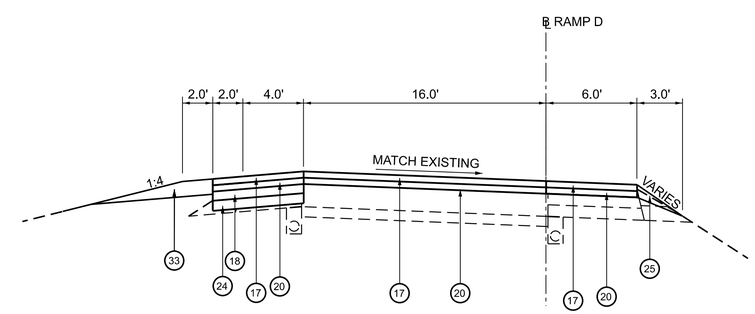

RAMP D

STA 471+84.29 TO STA 495+44.79
(LOOKING EAST)

TYPICAL SECTION LEGEND

- (17) POLYMERIZED HOT-MIX ASPHALT, SURFACE COURSE STONE MATRIX ASPHALT, 12.5, MIX "E" N80 (2.5")
- (18) HOT-MIX ASPHALT BASE COURSE WIDENING 5.0"
- (19) POLYMERIZED HOT-MIX ASPHALT, SURFACE COURSE STONE MATRIX ASPHALT, 12.5, MIX "E" N80 (5.0")
- (20) POLYMERIZED HOT-MIX ASPHALT, BINDER COURSE STONE MATRIX ASPHALT, 12.5, MIX "E" N80 (2.5")
- (21) POLYMERIZED HOT-MIX ASPHALT, STONE MATRIX ASPHALT, BINDER COURSE, VARIABLE DEPTH
- (22) HOT-MIX ASPHALT SHOULDERS (SPECIAL) 1
- (23) PORTLAND CEMENT CONCRETE PAVEMENT 9" (JOINTED)
- (24) AGGREGATE BASE COURSE, TYPE B (4")
- (25) AGGREGATE WEDGE SHOULDER, TYPE B
- (26) PIPE UNDERDRAINS, TYPE 1, 6"
- (27) STABILIZED SUBBASE - HOT-MIX ASPHALT, 4"
- (28) HOT-MIX ASPHALT SHOULDERS, SURFACE COURSE IL 9.5, MIX "E", N90 (2")
- (29) POLYMERIZED HOT-MIX ASPHALT, SURFACE COURSE STONE MATRIX ASPHALT, 12.5, MIX "E" N80 (2")
- (30) AGGREGATE BASE COURSE, TYPE A (7")
- (31) AGGREGATE BASE COURSE, TYPE A (12")
- (32) AGGREGATE SHOULDERS, TYPE B
- (33) AGGREGATE SHOULDERS, TYPE B, 6"

MODEL: TYPICALS - Plan 2 [Sheet]
FILE NAME: c:\pwworkingdir\des-pw-01\sean maxwell\dms02488\D876M95_sht_Typicals_RAMPS_QEI.dgn

QUIGG ENGINEERING INC

USER NAME = SMaxwell	DESIGNED - TNS	REVISED - 1 6/01/2026-ADDENDUM 1	
	DRAWN - TNS	REVISED -	
	CHECKED - SDM	REVISED -	
PLOT DATE = 6/4/2026	DATE - 6/1/2026	REVISED -	

STATE OF ILLINOIS
DEPARTMENT OF TRANSPORTATION

PROPOSED TYPICAL SECTIONS
RAMPS A, B, C, & D

SCALE: 1"=5' | SHEET 2 OF 2 SHEETS | STA. | TO STA.

F.A.I. RTE.	SECTION	COUNTY	TOTAL SHEETS	SHEET NO.
64	95-(3,4)RS-2	WASHINGTON	775	16
		CONTRACT NO. 76M95		
	ILLINOIS	FED. AID PROJECT		

EARTHWORK SCHEDULE

1	2	3	4	5
LOCATION	EARTH EXCAVATION	EXCAVATION ADJUSTED FOR SHRINKAGE (25%)	EMBANKMENT	FURNISHED EXCAVATION
	(CU YD)	(CU YD)	(CU YD)	(CU YD)
CROSSOVER 1				
STA 2397+26.97 TO STA 2406+00	984.27	738.00	712.89	47.35
CROSSOVER 2				
STA 2624+69.85 TO STA 2638+55.16	851.63	639.00	13,452.47	-12,894.97
CROSSOVER 3				
STA 2707+14.44 TO 2715+72.06	703.40	528.00	881.77	-380.11
CROSSOVER 4				
STA 2903+95.85 TO 2912+46.47	745.80	559.00	1,015.05	-481.74
RAMP A				
STA 143+07.49 TO 165+62.83	171.89	129.00	26.05	110.16
RAMP B				
STA 269+76.92 TO 289+60.49	197.10	148.00	6.43	145.70
RAMP C				
STA 353+12.92 TO 374+83.13	768.03	576.00	353.39	251.91
RAMP D				
STA 471+84.29 TO 495+44.79	187.77	141.00	8.54	137.10
TOTALS	**4,609.89**	**3,458.00**	**16,456.59**	**-13,064.60**
USE	**4,610**	**3,458**	**16,457**	**-13,064**

NOTES:

COLUMNS 1, 2, & 4 — LOCATION AND QUANTITIES FROM CROSS SECTIONS:
CUT = EARTH EXCAVATION FILL = EMBANKMENT

COLUMN 3 — QUANTITIES OF EARTH EXCAVATION (CUT) ADJUSTED FOR A SHRINKAGE FACTOR OF 25%

COLUMN 5 — EARTHWORK REQUIRED:
(-) = QUANTITY OF FILL OR ENBANKMENT NEEDED (FURNISHED EXCAVATION).
(+) = QUNATITY TO BE WASTED.

1

EARTHWORK SCHEDULE MAINLINE

LOCATION				EARTH EXCAVATION	EXCAVATION ADJUSTED FOR SHRINKAGE (25%)	EMBANKMENT	FUNISHED EXCAVATION
ROADWAY	STA	STA	REMARKS	CU YD	CU YD	CU YD	CU YD
I-64	5397+07.00	5406+00.00	EB	33.86	25.40	0.00	-25.40
I-64	5406+00.00	5420+00.00	EB	363.72	272.79	0.00	-295.32
I-64	5420+00.00	5434+00.00	EB	343.62	257.71	0.00	-279.43
I-64	5434+00.00	5448+00.00	EB	343.38	257.53	0.00	-278.09
I-64	5448+00.00	5462+00.00	EB	398.46	298.85	0.00	-322.91
I-64	5462+00.00	5476+00.00	EB	400.86	300.65	0.00	-316.88
I-64	5476+00.00	5490+00.00	EB	360.93	270.70	0.00	-286.83
I-64	5490+00.00	5504+00.00	EB	276.75	207.57	37.66	-183.36
I-64	5504+00.00	5518+00.00	EB	341.46	256.09	0.00	-266.03
I-64	5518+00.00	5532+00.00	EB	387.62	290.72	0.00	-301.16
I-64	5532+00.00	5546+00.00	EB	396.67	297.50	0.00	-312.32
I-64	5546+00.00	5560+00.00	EB	347.96	260.97	0.00	-283.67
I-64	5560+00.00	5574+00.00	EB	367.66	275.75	0.00	-290.56
I-64	5574+00.00	5588+00.00	EB	379.65	284.73	0.00	-296.22
I-64	5588+00.00	5602+00.00	EB	293.50	220.12	127.56	-104.27
I-64	5602+00.00	5616+00.00	EB	430.33	322.75	0.00	-336.15
I-64	5616+00.00	5630+00.00	EB	353.38	265.03	0.02	-277.36
I-64	5630+00.00	5644+00.00	EB	195.98	146.98	0.00	-156.85
I-64	5644+00.00	5658+00.00	EB	323.21	242.41	0.00	-261.78
I-64	5658+00.00	5672+00.00	EB	319.61	239.71	0.00	-258.46
I-64	5672+00.00	5686+00.00	EB	350.44	262.83	0.00	-272.82
I-64	5686+00.00	5700+00.00	EB	266.99	200.24	0.00	-212.70
I-64	5700+00.00	5714+00.00	EB	248.81	186.61	0.00	-196.49
I-64	5714+00.00	5728+00.00	EB	308.07	231.05	0.00	-245.87
I-64	5728+00.00	5742+00.00	EB	361.71	271.29	0.00	-286.10
I-64	5742+00.00	5756+00.00	EB	357.85	268.39	0.00	-283.20
I-64	5756+00.00	5770+00.00	EB	335.68	251.76	0.00	-261.64
I-64	5770+00.00	5784+00.00	EB	300.78	225.59	107.95	-132.45
I-64	5784+00.00	5798+00.00	EB	413.58	310.18	6.26	-318.74
I-64	5798+00.00	5812+00.00	EB	359.90	269.93	112.35	-172.40
I-64	5812+00.00	5826+00.00	EB	352.95	264.71	0.00	-279.53
I-64	5826+00.00	5840+00.00	EB	388.28	291.21	0.00	-296.15
I-64	5840+00.00	5854+00.00	EB	322.95	242.21	0.01	-252.08
I-64	5854+00.00	5868+00.00	EB	409.68	307.26	254.83	-67.24
I-64	5868+00.00	5882+00.00	EB	384.64	288.48	0.00	-303.29
I-64	5882+00.00	5896+00.00	EB	360.12	270.09	0.00	-284.90
I-64	5896+00.00	5910+00.00	EB	225.79	169.34	0.00	-179.22
I-64	5910+00.00	5912+46.81	EB	2.02	1.51	0.00	-6.45
I-64	**5397+07.00**	**5912+46.81**	**EB**	**12408.85**	**9306.64**	**646.65**	**-9184.31**
I-64	3397+29.00	3406+00.00	WB	26.78	20.09	0.00	-20.09
I-64	3406+00.00	3420+00.00	WB	602.61	451.96	0.00	-477.52
I-64	3420+00.00	3434+00.00	WB	647.36	485.52	0.03	-500.35
I-64	3434+00.00	3448+00.00	WB	606.18	454.64	172.39	-303.39
I-64	3448+00.00	3462+00.00	WB	642.11	481.58	0.00	-507.59
I-64	3462+00.00	3476+00.00	WB	457.96	343.47	0.00	-360.28
I-64	3476+00.00	3490+00.00	WB	315.71	236.78	0.00	-257.47
I-64	3490+00.00	3504+00.00	WB	288.21	216.16	7.35	-227.08
I-64	3504+00.00	3518+00.00	WB	310.52	232.89	0.00	-250.46
I-64	3518+00.00	3532+00.00	WB	328.49	246.37	0.00	-267.70
I-64	3532+00.00	3546+00.00	WB	357.37	268.03	0.00	-278.59
I-64	3546+00.00	3560+00.00	WB	393.74	295.31	0.00	-317.61
I-64	3560+00.00	3574+00.00	WB	270.54	202.91	0.00	-221.80
I-64	3574+00.00	3588+00.00	WB	346.94	260.20	0.15	-279.08
I-64	3588+00.00	3602+00.00	WB	389.62	292.22	146.92	-155.26
I-64	3602+00.00	3616+00.00	WB	346.61	259.96	0.00	-279.76
I-64	3616+00.00	3630+00.00	WB	244.11	183.08	0.92	-192.62
I-64	3630+00.00	3644+00.00	WB	192.56	144.42	0.00	-151.83
I-64	3644+00.00	3658+00.00	WB	224.03	168.02	0.00	-185.45
I-64	3658+00.00	3672+00.00	WB	333.04	249.78	0.00	-270.71
I-64	3672+00.00	3686+00.00	WB	366.29	274.71	0.00	-287.15
I-64	3686+00.00	3700+00.00	WB	291.33	218.50	0.00	-233.31
I-64	3700+00.00	3714+00.00	WB	245.11	183.83	0.00	-193.71
I-64	3714+00.00	3728+00.00	WB	281.27	210.95	0.00	-225.76
I-64	3728+00.00	3742+00.00	WB	338.98	254.24	0.00	-269.05
I-64	3742+00.00	3756+00.00	WB	313.77	235.32	0.00	-250.14
I-64	3756+00.00	3770+00.00	WB	315.29	236.47	0.00	-251.28
I-64	3770+00.00	3782+00.00	WB	241.97	181.48	0.00	-191.36
I-64	3782+00.00	3784+00.00	WB	0.00	0.00	0.00	0.00
I-64	13784+00.00	13798+00.00	WB	348.22	261.17	0.00	-275.98
I-64	13798+00.00	13812+00.00	WB	345.14	258.85	0.00	-273.67
I-64	13812+00.00	13826+00.00	WB	326.11	244.58	0.00	-259.40
I-64	13826+00.00	13840+00.00	WB	357.38	268.04	0.00	-282.85
I-64	13840+00.00	13854+00.00	WB	375.75	281.81	0.00	-291.69
I-64	13854+00.00	13868+00.00	WB	438.35	328.76	0.00	-343.57
I-64	13868+00.00	13882+00.00	WB	327.09	245.32	0.00	-260.14
I-64	13882+00.00	13896+00.00	WB	308.09	231.07	0.00	-245.88
I-64	13896+00.00	13910+00.00	WB	229.32	171.99	0.00	-181.86
I-64	13910+00.00	13913+01.00	WB	0.03	0.02	0.00	-0.02
I-64	**3397+29.00**	**12913+01.00**	**WB**	**12773.98**	**9580.48**	**327.76**	**-9821.480**
SUBTOTALS				**25182.83**	**18887.12**	**974.41**	**-19005.79**
USE				**25183**	**18888**	**975**	**-19006**

MODEL: Earthwork Schedule 1 [SHEET]
FILE NAME: D876M95_sht_schedules.dgn

d'Escoto, Inc.
55 W Van Buren St, Ste 200
Chicago, IL 60605
TEL: 312.787.0707 FAX: 312.787.7322
www.descotoinc.com
IL Professional Engineering Design Firm No. 184001609-0002

Copyright © 2026

USER NAME = mgesior	DESIGNED - MEG	REVISED - 1 6/01/2026-ADDENDUM 1	
	DRAWN - MEG	REVISED -	
	CHECKED - MTV	REVISED -	
PLOT DATE = 6/2/2026	DATE - 6/1/2026	REVISED -	

STATE OF ILLINOIS
DEPARTMENT OF TRANSPORTATION

EARTHWORK SCHEDULE
I-64

SCALE: SHEET 1 OF 1 SHEETS STA. TO STA.

F.A.I RTE.	SECTION	COUNTY	TOTAL SHEETS	SHEET NO.
64	95-(3,4)RS-2	WASHINGTON	775	18
		CONTRACT NO. 76M95		
		ILLINOIS	FED. AID PROJECT	

REMOVAL SCHEDULE CROSSOVERS AND RAMPS

LOCATION			HOT-MIX ASPHALT SURFACE REMOVAL - BUTT JOINT	HOT-MIX ASPHALT SURFACE REMOVAL, 3 1/4"	PAVED SHOULDER REMOVAL	PAVEMENT REMOVAL	CURB REMOVAL	MEDIAN REMOVAL	ISLAND REMOVAL	AGGREGATE SHOULDER REMOVAL
ROADWAY	STATION	REMARKS	SQ YD	SQ YD	SQ YD	SQ YD	FOOT	SQ FT	SQ FT	CU YD
I-64	143+07.49 TO 165+62.92	RAMP A	108.89	4,967.40	863.80	106.67				
I-64	269+76.92 TO 289+60.49	RAMP B	108.89	4,575.40	987.00	90.68				
I-64	353+12.92 TO 372+79.90	RAMP C	108.89	4,424.40	1,002.70	80.01			223.21	
I-64	371+41.96 TO 375+07.33	RAMP C RT TURN			427.10	274.98				11.77
I-64	471+84.29 TO 495+44.79	RAMP D	108.89	4,967.50	819.10	74.68				
I-64	2397+26.97 TO 2406+00.00	CROSSOVER 1			1,139.10					
I-64	2624+69.95 TO 2638+55.16	CROSSOVER 2			2,320.90					
I-64	2707+14.44 TO 2715+72.06	CROSSOVER 3			1,380.50					
I-64	2903+95.85 TO 2912+46.47	CROSSOVER 4			985.90					
IL 127	58+02.84 TO 60+56.30	MEDIAN					253.46	1837.42		
SUBTOTALS			**435.56**	**18,934.70**	**9,926.10**	**627.02**	**253.46**	**1,837.42**	**223.21**	**11.77**
USE			**436**	**18,935**	**9,927**	**628**	**254**	**1,838**	**224**	**12**

1

REMOVAL SCHEDULE MAINLINE

LOCATION				CONCRETE PAVEMENT SCARIFICATION	HOT-MIX ASPHALT SURFACE REMOVAL, 2.0" (ROADWAY)	HOT-MIX ASPHALT SURFACE REMOVAL, 2.0" (SHOULDER)	HOT-MIX ASPHALT SURFACE REMOVAL, 6.5"	PAVEMENT REMOVAL (SPECIAL)	PAVED SHOULDER REMOVAL
ROADWAY	STA	STA	REMARKS	SQ YD	SQ YD	SQ YD	SQ YD	SQ YD	SQ YD
I-64	5397+07.00	5406+00.00	EB	0.00	2260.58	1575.64	0.00		0.00
I-64	5406+00.00	5420+00.00	EB	3672.09			3672.09		2528.38
I-64	5420+00.00	5434+00.00	EB	3403.20			3250.95		2239.78
I-64	5434+00.00	5448+00.00	EB	3953.30			3954.41		2550.07
I-64	5448+00.00	5462+00.00	EB	3928.61			3928.61	107.45	2829.69
I-64	5462+00.00	5476+00.00	EB	3948.56			3948.56		2755.59
I-64	5476+00.00	5490+00.00	EB	3951.04			3951.04		2660.25
I-64	5490+00.00	5504+00.00	EB	3219.91			3108.26		1966.12
I-64	5504+00.00	5518+00.00	EB	4009.15			4009.15		2664.04
I-64	5518+00.00	5532+00.00	EB	4003.46			4003.46		2612.68
I-64	5532+00.00	5546+00.00	EB	3979.50			3979.50		2631.65
I-64	5546+00.00	5560+00.00	EB	3365.07			3365.07		2674.37
I-64	5560+00.00	5574+00.00	EB	3997.79			3997.79		2712.51
I-64	5574+00.00	5588+00.00	EB	3943.64			3943.64		2613.81
I-64	5588+00.00	5602+00.00	EB	3936.39			3326.80		2206.41
I-64	5602+00.00	5616+00.00	EB	3977.82			3977.82		2770.81
I-64	5616+00.00	5630+00.00	EB	3994.70			3994.70		2949.88
I-64	5630+00.00	5644+00.00	EB	3977.84			3977.84	73.56	2721.01
I-64	5644+00.00	5658+00.00	EB	3909.69			3909.69		2731.75
I-64	5658+00.00	5672+00.00	EB	3957.74			3957.74		2645.29
I-64	5672+00.00	5686+00.00	EB	3969.09			3969.09		2661.22
I-64	5686+00.00	5700+00.00	EB	3943.39			3943.39		3951.55
I-64	5700+00.00	5714+00.00	EB	3938.87			3938.87	117.28	2709.08
I-64	5714+00.00	5728+00.00	EB	3967.89			3967.89		2668.99
I-64	5728+00.00	5742+00.00	EB	3923.88			3923.88		2720.55
I-64	5742+00.00	5756+00.00	EB	3959.05			3959.05		2617.24
I-64	5756+00.00	5770+00.00	EB	3968.59			3968.59		2715.33
I-64	5770+00.00	5784+00.00	EB	3125.94			2975.76		1996.47
I-64	5784+00.00	5798+00.00	EB	3934.52			3934.52		2634.11
I-64	5798+00.00	5812+00.00	EB	3355.15			3355.15		2189.69
I-64	5812+00.00	5826+00.00	EB	3823.31			3823.31		2747.61
I-64	5826+00.00	5840+00.00	EB	3836.45			3836.45		2666.18
I-64	5840+00.00	5854+00.00	EB	3827.16			3827.16		2684.59
I-64	5854+00.00	5868+00.00	EB	3096.20			3209.97		2267.03
I-64	5868+00.00	5882+00.00	EB	3588.85			3588.85		2514.31
I-64	5882+00.00	5896+00.00	EB	3574.77			3574.77		2485.82
I-64	5896+00.00	5910+00.00	EB	2064.94	1579.94	1069.24	2064.94		1406.88
I-64	5910+00.00	5912+46.81	EB	0.00	676.93	409.54	0.00		0.00
I-64	5912+46.81	5924+00.00	EB	0.00	3265.56	1835.79	0.00		0.00
I-64	5924+00.00	5933+00.00	EB	0.00	2535.13	1441.73	0.00		0.00
I-64	**5397+07.00**	**5933+00.00**	**EB**	**135027.56**	**10318.15**	**6331.94**	**134118.76**	**298.28**	**93100.72**

REMOVAL SCHEDULE MAINLINE CONTINUED

LOCATION				CONCRETE PAVEMENT SCARIFICATION	HOT-MIX ASPHALT SURFACE REMOVAL, 2.0" (ROADWAY)	HOT-MIX ASPHALT SURFACE REMOVAL, 2.0" (SHOULDER)	HOT-MIX ASPHALT SURFACE REMOVAL, 6.5"	PAVEMENT REMOVAL (SPECIAL)	PAVED SHOULDER REMOVAL
ROADWAY	STA	STA	REMARKS	SQ YD	SQ YD	SQ YD	SQ YD	SQ YD	SQ YD
I-64	3392+00.00	3406+00.00	WB	0.00	2293.26	1551.41	0.00		0.00
I-64	3406+00.00	3420+00.00	WB	3716.38			3716.38		2540.38
I-64	3420+00.00	3434+00.00	WB	3503.47			3459.96		2326.10
I-64	3434+00.00	3448+00.00	WB	3985.62			3688.62		2510.39
I-64	3448+00.00	3462+00.00	WB	4012.18			4012.18	99.23	2789.65
I-64	3462+00.00	3476+00.00	WB	4022.10			4022.10		2662.06
I-64	3476+00.00	3490+00.00	WB	3970.54			3970.54		2613.10
I-64	3490+00.00	3504+00.00	WB	3067.29			2960.35		2099.88
I-64	3504+00.00	3518+00.00	WB	3847.76			3847.76		2833.70
I-64	3518+00.00	3532+00.00	WB	3981.61			3981.61		2889.62
I-64	3532+00.00	3546+00.00	WB	4205.28			4205.28		2785.20
I-64	3546+00.00	3560+00.00	WB	3945.71			3945.71		2591.71
I-64	3560+00.00	3574+00.00	WB	3818.45			3818.45		2612.41
I-64	3574+00.00	3588+00.00	WB	4030.07			4030.07		2768.60
I-64	3588+00.00	3602+00.00	WB	3450.54			3404.74		2330.92
I-64	3602+00.00	3616+00.00	WB	3906.27			3906.27		2597.38
I-64	3616+00.00	3630+00.00	WB	3928.45			3928.45		2874.22
I-64	3630+00.00	3644+00.00	WB	4051.14			4051.14	243.51	2750.97
I-64	3644+00.00	3658+00.00	WB	3990.53			3990.53		2688.86
I-64	3658+00.00	3672+00.00	WB	4000.04			4000.04		2857.54
I-64	3672+00.00	3686+00.00	WB	3977.89			3977.89		2699.61
I-64	3686+00.00	3700+00.00	WB	3968.01			3968.01		2838.51
I-64	3700+00.00	3714+00.00	WB	3957.39			3957.39	116.06	2739.35
I-64	3714+00.00	3728+00.00	WB	3944.86			3944.86		2754.78
I-64	3728+00.00	3742+00.00	WB	3970.48			3970.48		2729.44
I-64	3742+00.00	3756+00.00	WB	3955.83			3955.83		2635.58
I-64	3756+00.00	3770+00.00	WB	3886.37			3886.37		2653.80
I-64	3770+00.00	3782+00.00	WB	3113.08			3113.08		1917.37
I-64	3782+00.00	3784+00.00	WB	3113.08			3113.08		1917.37
I-64	13784+00.00	13798+00.00	WB	1.00			0.00		0.00
I-64	13798+00.00	13812+00.00	WB	3269.78			3269.78		2171.07
I-64	13812+00.00	13826+00.00	WB	3924.11			3924.11		2610.91
I-64	13826+00.00	13840+00.00	WB	3731.20			3731.20		2729.59
I-64	13840+00.00	13854+00.00	WB	3742.76			3742.76		2827.75
I-64	13854+00.00	13868+00.00	WB	3030.07			3279.26		2368.62
I-64	13868+00.00	13882+00.00	WB	3432.36			3432.36		2684.92
I-64	13882+00.00	13896+00.00	WB	3685.28			3685.28		2475.78
I-64	13896+00.00	13910+00.00	WB	2141.36	1588.46	1042.30	2141.36		1427.89
I-64	13910+00.00	13913+01.00	WB	0.00	649.34	395.99	0.00		0.00
I-64	13913+00.00	13924+00.00	WB	0.00	3236.88	1903.02	0.00		0.00
I-64	13924+00.00	13933+65.23	WB	0.00	2518.59	1455.36	0.00		0.00
I-64	**3392+00.00**	**13933+62.23**	**WB**	**134278.31**	**10286.53**	**6348.09**	**134033.24**	**458.79**	**92305.04**
SUBTOTALS				**269305.87**	**20604.68**	**12680.03**	**268152.00**	**757.08**	**185405.76**
					33284.70				
USE				**269306**	**33285**		**268152**	**758**	**185406**

MODEL: Removal Schedule 1 [SHEET]
FILE NAME: D876M95_sht_schedules.dgn

d'Escoto, Inc.
55 W Van Buren St, Ste 200
Chicago, IL 60605
TEL: 312.787.0707 FAX: 312.787.7322
www.descotoinc.com
IL Professional Engineering Design Firm No. 184001609-0002

Copyright © 2026

USER NAME = mgesior	DESIGNED - MEG	REVISED - 1 6/01/2026-ADDENDUM 1	
	DRAWN - MEG	REVISED -	
	CHECKED - MTV	REVISED -	
PLOT DATE = 6/4/2026	DATE - 6/1/2026	REVISED -	

STATE OF ILLINOIS
DEPARTMENT OF TRANSPORTATION

REMOVAL SCHEDULE
I-64

SCALE: SHEET 1 OF 1 SHEETS STA. TO STA.

F.A.I RTE.	SECTION	COUNTY	TOTAL SHEETS	SHEET NO.
64	95-(3,4)RS-2	WASHINGTON	775	19
		CONTRACT NO. 76M95		
	ILLINOIS	FED. AID PROJECT		

PAVING SCHEDULE CROSSOVERS AND RAMPS

LOCATION			AGGREGATE BASE COURSE, TYPE A 12"	STABILIZED SUBBASE - HOT-MIX ASPHALT, 4"	AGGREGATE BASE COURSE, TYPE B 4"	TEMPORARY RAMP	POLYMERIZED HOT-MIX ASPHALT BINDER COURSE, STONE MATRIX ASPHALT, 12.5, N80	POLYMERIZED HOT-MIX ASPHALT SURFACE COURSE, STONE MATRIX ASPHALT, 12.5, MIX "E", N80	POLYMERIZED BITUMINOUS MATERIALS (TACK COAT)	PORTLAND CEMENT CONCRETE PAVEMENT 9" (JOINTED)	PORTLAND CEMENT CONCRETE PAVEMENT 10" (JOINTED)	AGGREGATE SHOULDERS, TYPE B	AGGREGATE WEDGE SHOULDERS, TYPE B	HOT-MIX ASPHALT BASE COURSE WIDENING, 5"	SAW CUTS	CONCRETE CURB, TYPE B	CONCRETE MEDIAN SURFACE, 4 INCH
ROADWAY	STATION	REMARKS	SQ YD	SQ YD	SQ YD	SQ YD	TON	TON	POUND	SQ YD	SQ YD	TON	TON	SQ YD	FOOT	FOOT	SQ FT
I-64	2397+26.97 TO 2406+00.00	CROSSOVER 1	3,738.95								3738.95				1767.67		
I-64	2624+69.95 TO 2638+55.16	CROSSOVER 2	11,038.02								11038.02				2737.19		
I-64	2707+14.44 TO 2715+72.06	CROSSOVER 3	3,836.52								3836.52				1762.80		
I-64	2903+95.85 TO 2912+46.47	CROSSOVER 4	3,778.62								3778.62				1752.76		
I-64	143+07.42 TO 165+62.92	RAMP A			808.77	108.89	870.55	870.55	17512.78			115.09	256.78	837.08	1242.71		
I-64	276+47.50 TO 289+60.49	RAMP B			877.58	108.89	838.10	838.10	17,314.98			124.9	225.7	908.30	1341.66		
I-64	360+04.38 TO 372+79.91	RAMP C			851.87	108.89	822.94	822.94	16,956.59			121.18	207.93	881.69	1294.00		
I-64	371+41.96 TO 375+16.29	RAMP C RT TURN	626.24	636.26	334.19		46.92	46.92	2,261.91	639.83		47.44		344.85	434.85		
I-64	374+55.26 TO 374+76.90	RAMP C ISLAND															
I-64	471+84.29 TO 495+44.79	RAMP D			800.97	108.89	877.95	877.95	17,591.16			113.81	268.84	829.00	1224.49		
IL 127	58+02.84 TO 60+56.30	MEDIAN														254.53	1,728.00
25% CONTINGENCY																	
SUBTOTALS			23,018.35	636.26	3,673.38	435.56	3,456.46	3,456.46	71,637.42	639.83	22,392.11	522.42	959.25	3,800.92	13,558.13	254.53	1,728.00
USE			23,019	637	3,674	436	3,457	3,457	71,638	640	22,393	523	960	3,801	13,559	255	1,728

NOTE: SEE ROADWAY PLANS FOR BRIDGE LOCATION OMISSIONS AND STATION EQUATIONS.

1 1 1

PAVING SCHEDULE MAINLINE

LOCATION				POLYMERIZED BITUMINOUS MATERIALS (TACK COAT)	LONGITUDINAL JOINT SEALANT	POLYMERIZED HOT-MIX ASPHALT SURFACE COURSE, STONE MATRIX ASPHALT 5"	POLYMERIZED HOT-MIX ASPHALT SURFACE COURSE, STONE MATRIX ASPHALT 2"	AGGREGATE BASE COURSE, TYPE A 7"	SHOULDER RUMBLE STRIPS, 16 INCH	AGGREGATE WEDGE SHOULDER, TYPE B	AGGREGATE SHOULDERS, TYPE B	BITUMINOUS MATERIALS (TACK COAT)	POLYMERIZED HOT-MIX ASPHALT, STONE MATRIX ASPHALT BINDER COURSE
ROADWAY	STA	STA	REMARKS	POUND	FOOT	TON	TON	SQ YD	FOOT	TON	TON	POUND	TON
I-64	5397+07.00	5406+00.00	EB	0.00	2679	665.44	107.98	1984.44	1786	0.00	0.00	1091	0.00
I-64	5406+00.00	5420+00.00	EB	3100.24	8400	1045.33		3111.11	2800	530.86	575.31		205.86
I-64	5420+00.00	5434+00.00	EB	2745.36	8400	1045.33		3111.11	2800	530.86	575.31		205.86
I-64	5434+00.00	5448+00.00	EB	3252.24	8400	1045.33		3111.11	2800	530.86	575.31		205.86
I-64	5448+00.00	5462+00.00	EB	3379.15	8400	1045.33		3111.11	2800	530.86	575.31		205.86
I-64	5462+00.00	5476+00.00	EB	3352.08	8400	1045.33		3111.11	2800	530.86	575.31		205.86
I-64	5476+00.00	5490+00.00	EB	3305.65	8400	1045.33		3111.11	2800	530.86	575.31		205.86
I-64	5490+00.00	5504+00.00	EB	2537.19	8400	1045.33		3111.11	2800	530.86	575.31		205.86
I-64	5504+00.00	5518+00.00	EB	3336.59	8400	1045.33		3111.11	2800	530.86	575.31		205.86
I-64	5518+00.00	5532+00.00	EB	3308.07	8400	1045.33		3111.11	2800	530.86	575.31		205.86
I-64	5532+00.00	5546+00.00	EB	3305.57	8400	1045.33		3111.11	2800	530.86	575.31		205.86
I-64	5546+00.00	5560+00.00	EB	3019.72	8400	1045.33		3111.11	2800	530.86	575.31		205.86
I-64	5560+00.00	5574+00.00	EB	3355.15	8400	1045.33		3111.11	2800	530.86	575.31		205.86
I-64	5574+00.00	5588+00.00	EB	3278.73	8400	1045.33		3111.11	2800	530.86	575.31		205.86
I-64	5588+00.00	5602+00.00	EB	2766.60	8400	1045.33		3111.11	2800	530.86	575.31		205.86
I-64	5602+00.00	5616+00.00	EB	3374.32	8400	1045.33		3111.11	2800	530.86	575.31		205.86
I-64	5616+00.00	5630+00.00	EB	3472.29	8400	1045.33		3111.11	2800	530.86	575.31		205.86
I-64	5630+00.00	5644+00.00	EB	3349.43	8400	1045.33		3111.11	2800	530.86	575.31		205.86
I-64	5644+00.00	5658+00.00	EB	3320.72	8400	1045.33		3111.11	2800	530.86	575.31		205.86
I-64	5658+00.00	5672+00.00	EB	3301.51	8400	1045.33		3111.11	2800	530.86	575.31		205.86
I-64	5672+00.00	5686+00.00	EB	3315.16	8400	1045.33		3111.11	2800	530.86	575.31		205.86
I-64	5686+00.00	5700+00.00	EB	3947.47	8400	1045.33		3111.11	2800	530.86	575.31		205.86
I-64	5700+00.00	5714+00.00	EB	3323.97	8400	1045.33		3111.11	2800	530.86	575.31		205.86
I-64	5714+00.00	5728+00.00	EB	3318.44	8400	1045.33		3111.11	2800	530.86	575.31		205.86
I-64	5728+00.00	5742+00.00	EB	3322.22	8400	1045.33		3111.11	2800	530.86	575.31		205.86
I-64	5742+00.00	5756+00.00	EB	3288.15	8400	1045.33		3111.11	2800	530.86	575.31		205.86
I-64	5756+00.00	5770+00.00	EB	3341.96	8400	1045.33		3111.11	2800	530.86	575.31		205.86
I-64	5770+00.00	5784+00.00	EB	2486.11	8400	1045.33		3111.11	2800	530.86	575.31		205.86
I-64	5784+00.00	5798+00.00	EB	3284.31	8400	1045.33		3111.11	2800	530.86	575.31		205.86
I-64	5798+00.00	5812+00.00	EB	2772.42	8400	1045.33		3111.11	2800	530.86	575.31		205.86
I-64	5812+00.00	5826+00.00	EB	3285.46	8400	1045.33		3111.11	2800	530.86	575.31		205.86
I-64	5826+00.00	5840+00.00	EB	3251.32	8400	1045.33		3111.11	2800	530.86	575.31		205.86
I-64	5840+00.00	5854+00.00	EB	3255.88	8400	1045.33		3111.11	2800	530.86	575.31		205.86
I-64	5854+00.00	5868+00.00	EB	2738.50	8400	1045.33		3111.11	2800	530.86	575.31		205.86
I-64	5868+00.00	5882+00.00	EB	3051.58	8400	1045.33		3111.11	2800	530.86	575.31		205.86
I-64	5882+00.00	5896+00.00	EB	3030.30	8400	1045.33		3111.11	2800	530.86	575.31		205.86
I-64	5896+00.00	5910+00.00	EB	3060.51	8400	594.44	180.36	1769.18	2800	301.88	327.16		117.07
I-64	5910+00.00	5912+46.81	EB	543.24	1480.86	0.00	73.71	0.00	493.62	0.00	0.00		0.00
I-64	5912+46.81	5924+00.00	EB	0.00	3459.57	0.00	283.21	0.00	2306.38	0.00	0.00	1275.34	0.00
I-64	5924+00.00	5933+00.00	EB	0.00	2700	0.00	223.92	0.00	1800	0.00	0.00	994.22	0.00
I-64	**5397+07.00**	**5933+00.00**	**EB**	**115477.57**	**312719.43**	**37846.55**	**869.18**	**112642.51**	**103079.62**	**18882.00**	**20463.00**	**3360.56**	**7322.24**

1

PAVING SCHEDULE MAINLINE CONTINUED

LOCATION				POLYMERIZED BITUMINOUS MATERIALS (TACK COAT)	LONGITUDINAL JOINT SEALANT	POLYMERIZED HOT-MIX ASPHALT SURFACE COURSE, STONE MATRIX ASPHALT 5"	POLYMERIZED HOT-MIX ASPHALT SURFACE COURSE, STONE MATRIX ASPHALT 2"	AGGREGATE BASE COURSE, TYPE A 7"	SHOULDER RUMBLE STRIPS, 16 INCH	AGGREGATE WEDGE SHOULDER, TYPE B	AGGREGATE SHOULDERS, TYPE B	BITUMINOUS MATERIALS (TACK COAT)	POLYMERIZED HOT-MIX ASPHALT BINDER, STONE MATRIX ASPHALT BINDER
ROADWAY	STA	STA	REMARKS	POUND	FOOT	TON	TON	SQ YD	FOOT	TON	TON	POUND	TON
I-64	3392+00.00	3406+00.00	WB	0.00	4200	0.00	108.64	0.00	2800	0.00	0.00	1711	186.92
I-64	3406+00.00	3420+00.00	WB	3128.38	8400	1045.33		3111.11	2800	232.29	282.78		186.92
I-64	3420+00.00	3434+00.00	WB	2893.03	8400	1045.33		3111.11	2800	232.29	282.78		186.92
I-64	3434+00.00	3448+00.00	WB	3099.50	8400	1045.33		3111.11	2800	232.29	282.78		186.92
I-64	3448+00.00	3462+00.00	WB	3400.91	8400	1045.33		3111.11	2800	232.29	282.78		186.92
I-64	3462+00.00	3476+00.00	WB	3342.08	8400	1045.33		3111.11	2800	232.29	282.78		186.92
I-64	3476+00.00	3490+00.00	WB	3291.82	8400	1045.33		3111.11	2800	232.29	282.78		186.92
I-64	3490+00.00	3504+00.00	WB	2530.12	8400	1045.33		3111.11	2800	232.29	282.78		186.92
I-64	3504+00.00	3518+00.00	WB	3340.73	8400	1045.33		3111.11	2800	232.29	282.78		186.92
I-64	3518+00.00	3532+00.00	WB	3435.62	8400	1045.33		3111.11	2800	232.29	282.78		186.92
I-64	3532+00.00	3546+00.00	WB	3495.24	8400	1045.33		3111.11	2800	232.29	282.78		186.92
I-64	3546+00.00	3560+00.00	WB	3268.71	8400	1045.33		3111.11	2800	232.29	282.78		186.92
I-64	3560+00.00	3574+00.00	WB	3215.43	8400	1045.33		3111.11	2800	232.29	282.78		186.92
I-64	3574+00.00	3588+00.00	WB	3399.34	8400	1045.33		3111.11	2800	232.29	282.78		186.92
I-64	3588+00.00	3602+00.00	WB	2867.83	8400	1045.33		3111.11	2800	232.29	282.78		186.92
I-64	3602+00.00	3616+00.00	WB	3251.83	8400	1045.33		3111.11	2800	232.29	282.78		186.92
I-64	3616+00.00	3630+00.00	WB	3401.33	8400	1045.33		3111.11	2800	232.29	282.78		186.92
I-64	3630+00.00	3644+00.00	WB	3401.06	8400	1045.33		3111.11	2800	232.29	282.78		186.92
I-64	3644+00.00	3658+00.00	WB	3339.69	8400	1045.33		3111.11	2800	232.29	282.78		186.92
I-64	3658+00.00	3672+00.00	WB	3428.79	8400	1045.33		3111.11	2800	232.29	282.78		186.92
I-64	3672+00.00	3686+00.00	WB	3338.75	8400	1045.33		3111.11	2800	232.29	282.78		186.92
I-64	3686+00.00	3700+00.00	WB	3403.26	8400	1045.33		3111.11	2800	232.29	282.78		186.92
I-64	3700+00.00	3714+00.00	WB	3348.37	8400	1045.33		3111.11	2800	232.29	282.78		186.92
I-64	3714+00.00	3728+00.00	WB	3349.82	8400	1045.33		3111.11	2800	232.29	282.78		186.92
I-64	3728+00.00	3742+00.00	WB	3349.96	8400	1045.33		3111.11	2800	232.29	282.78		186.92
I-64	3742+00.00	3756+00.00	WB	3295.71	8400	1045.33		3111.11	2800	232.29	282.78		186.92
I-64	3756+00.00	3770+00.00	WB	3270.08	8400	1045.33		3111.11	2800	232.29	282.78		186.92
I-64	3770+00.00	3782+00.00	WB	2515.23	7200	896.00		2666.67	2400	199.11	242.38		160.22
I-64	3782+00.00	3784+00.00	WB	2515.23	1200	149.33		444.44	400	33.18	40.40		26.70
I-64	13784+00.00	13798+00.00	WB	0.00	8400	1045.33		3111.11	2800	232.29	282.78		186.92
I-64	13798+00.00	13812+00.00	WB	2720.42	8400	1045.33		3111.11	2800	232.29	282.78		186.92
I-64	13812+00.00	13826+00.00	WB	3267.51	8400	1045.33		3111.11	2800	232.29	282.78		186.92
I-64	13826+00.00	13840+00.00	WB	3230.39	8400	1045.33		3111.11	2800	232.29	282.78		186.92
I-64	13840+00.00	13854+00.00	WB	3285.26	8400	1045.33		3111.11	2800	232.29	282.78		186.92
I-64	13854+00.00	13868+00.00	WB	2823.94	8400	1045.33		3111.11	2800	232.29	282.78		186.92
I-64	13868+00.00	13882+00.00	WB	3058.64	8400	1045.33		3111.11	2800	232.29	282.78		186.92
I-64	13882+00.00	13896+00.00	WB	3080.53	8400	1045.33		3111.11	2800	232.29	282.78		186.92
I-64	13896+00.00	13910+00.00	WB	3100.00	8400	651.37	157.59	1938.60	2800	144.75	176.21		116.48
I-64	13910+00.00	13913+00.00	WB	522.67	1800	224.00	89.60	0.00	600	0.00	0.00		0.00
I-64	13913+00.00	13924+00.00	WB	0.00	3300	0.00	284.65	0.00	2200	0.00	0.00	1284.98	0.00
I-64	13924+00.00	13933+65.23	WB	0.00	2895.69	0.00	223.92	0.00	1930.46	0.00	0.00	993.48	0.00
I-64	**3397+29.00**	**13933+65.23**	**WB**	**115007.18**	**314595.69**	**37462.036**	**864.395**	**110827.49**	**104200.00**	**8275.01**	**10073.45**	**3989.46**	**6845.76**
SUBTOTALS				230484.75	627315.12	75308.59	1733.58	223470.00	207279.62	27157.01	30536.45	7350.02	14168.00
						77042.16							
USE				230485	627316	77043		223470	207280	27158	30537	7351	14168

1

MODEL: Paving Schedule 1 [SHEET]
FILE NAME: D876M95_sht_schedules.dgn

d'Escoto, Inc.
55 W Van Buren St, Ste 200
Chicago, IL 60605
TEL: 312.787.0707 FAX: 312.787.7322
www.descotoinc.com
IL Professional Engineering Design Firm No. 184001609-0002

Copyright © 2026

USER NAME = mgesior	DESIGNED - MEG	REVISED - 1 6/01/2026-ADDENDUM 1	
	DRAWN - MEG	REVISED -	
	CHECKED - MTV	REVISED -	
PLOT DATE = 6/2/2026	DATE - 6/1/2026	REVISED -	

STATE OF ILLINOIS
DEPARTMENT OF TRANSPORTATION

PAVING SCHEDULE
I-64

SCALE: SHEET 1 OF 2 SHEETS STA. TO STA.

F.A.I RTE.	SECTION	COUNTY	TOTAL SHEETS	SHEET NO.
64	95-(3,4)RS-2	WASHINGTON	775	20
		CONTRACT NO. 76M95		
		ILLINOIS	FED. AID PROJECT	

HOT-MIX ASPHALT SHOULDER, VARIABLE DEPTH EASTBOUND SCHEDULE MAINLINE

LOCATION / LT (10 – 12.25)

ROADWAY	STA	STA	REMARKS	LEN	LT 10	LT 10.25	LT 10.50	LT 10.75	LT 11	LT 11.25	LT 11.50	LT 11.75	LT 12	LT 12.25
ADDITIONAL LIFT					-	-	-	-	-	-	-	-	-	-
					SQ YD	SQ YD	SQ YD	SQ YD	SQ YD	SQ YD	SQ YD	SQ YD	SQ YD	SQ YD
I-64	5397+00.00	5406+00.00	EB	900.00	-	-	55.6	277.8	250.0	250.0	83.3	55.6	27.8	-
I-64	5406+00.00	5420+00.00	EB	1400.00	-	194.4	138.9	388.9	333.3	250.0	194.4	55.6	-	-
I-64	5420+00.00	5434+00.00	EB	1400.00	-	27.8	83.3	250.0	222.2	194.4	250.0	277.8	111.1	-
I-64	5434+00.00	5448+00.00	EB	1400.00	27.8	-	111.1	500.0	638.9	250.0	-	-	-	-
I-64	5448+00.00	5462+00.00	EB	1400.00	-	55.6	416.7	666.7	361.1	55.6	-	-	-	-
I-64	5462+00.00	5476+00.00	EB	1400.00	-	-	194.4	361.1	333.3	277.8	222.2	111.1	55.6	-
I-64	5476+00.00	5490+00.00	EB	1400.00	-	-	250.0	250.0	305.6	527.8	194.4	27.8	-	-
I-64	5490+00.00	5504+00.00	EB	1400.00	-	27.8	166.7	444.4	277.8	222.2	83.3	55.6	-	-
I-64	5504+00.00	5518+00.00	EB	1400.00	-	55.6	55.6	500.0	500.0	305.6	83.3	55.6	-	-
I-64	5518+00.00	5532+00.00	EB	1400.00	-	27.8	305.6	444.4	388.9	111.1	27.8	55.6	-	27.8
I-64	5532+00.00	5546+00.00	EB	1400.00	-	-	-	-	-	-	-	-	-	-
I-64	5546+00.00	5560+00.00	EB	1400.00	-	-	27.8	27.8	83.3	27.8	27.8	55.6	27.8	-
I-64	5560+00.00	5574+00.00	EB	1400.00	55.6	111.1	222.2	444.4	472.2	138.9	27.8	27.8	27.8	27.8
I-64	5574+00.00	5588+00.00	EB	1400.00	-	-	55.6	250.0	83.3	250.0	166.7	83.3	-	111.1
I-64	5588+00.00	5602+00.00	EB	1400.00	-	-	-	-	-	-	111.1	27.8	27.8	55.6
I-64	5602+00.00	5616+00.00	EB	1400.00	-	55.6	27.8	111.1	166.7	55.6	55.6	-	83.3	-
I-64	5616+00.00	5630+00.00	EB	1400.00	-	83.3	333.3	500.0	361.1	111.1	83.3	55.6	27.8	-
I-64	5630+00.00	5644+00.00	EB	1400.00	-	-	305.6	361.1	333.3	388.9	111.1	55.6	-	-
I-64	5644+00.00	5658+00.00	EB	1400.00	-	27.8	111.1	305.6	333.3	388.9	83.3	111.1	111.1	55.6
I-64	5658+00.00	5672+00.00	EB	1400.00	-	55.6	305.6	361.1	444.4	277.8	111.1	-	-	-
I-64	5672+00.00	5686+00.00	EB	1400.00	-	27.8	222.2	416.7	472.2	166.7	138.9	83.3	27.8	-
I-64	5686+00.00	5700+00.00	EB	1400.00	-	55.6	111.1	388.9	361.1	250.0	305.6	55.6	27.8	-
I-64	5700+00.00	5714+00.00	EB	1400.00	-	-	83.3	722.2	388.9	333.3	27.8	-	-	-
I-64	5714+00.00	5728+00.00	EB	1400.00	-	-	416.7	722.2	305.6	111.1	-	-	-	-
I-64	5728+00.00	5742+00.00	EB	1400.00	-	55.6	333.3	666.7	444.4	55.6	-	-	-	-
I-64	5742+00.00	5756+00.00	EB	1400.00	-	111.1	472.2	444.4	388.9	138.9	-	-	-	-
I-64	5756+00.00	5770+00.00	EB	1400.00	-	-	222.2	611.1	638.9	83.3	-	-	-	-
I-64	5770+00.00	5784+00.00	EB	1400.00	-	-	111.1	222.2	333.3	166.7	83.3	166.7	111.1	-
I-64	5784+00.00	5798+00.00	EB	1400.00	-	27.8	250.0	611.1	611.1	55.6	-	-	-	-
I-64	5798+00.00	5812+00.00	EB	1400.00	27.8	27.8	27.8	444.4	166.7	277.8	111.1	111.1	111.1	55.6
I-64	5812+00.00	5826+00.00	EB	1400.00	-	-	-	83.3	55.6	138.9	83.3	111.1	55.6	-
I-64	5826+00.00	5840+00.00	EB	1400.00	-	-	-	-	-	-	-	-	-	-
I-64	5840+00.00	5854+00.00	EB	1400.00	-	-	83.3	222.2	250.0	83.3	166.7	333.3	166.7	27.8
I-64	5854+00.00	5868+00.00	EB	1400.00	55.6	55.6	166.7	361.1	500.0	138.9	27.8	-	-	-
I-64	5868+00.00	5882+00.00	EB	1400.00	-	27.8	166.7	555.6	555.6	222.2	-	-	-	-
I-64	5882+00.00	5896+00.00	EB	1400.00	-	-	-	222.2	833.3	361.1	111.1	27.8	-	-
I-64	5896+00.00	5910+00.00	EB	1400.00	83.3	83.3	83.3	388.9	527.8	333.3	55.6	-	-	-
I-64	5910+00.00	5912+46.81	EB	246.81	-	27.8	27.8	-	222.2	-	-	-	-	-
I-64	**5397+00.00**	**5912+46.81**	**EB**	**51546.81**	250.0	1222.2	5944.4	13527.8	12694.4	6750.0	2944.4	1944.4	972.2	361.1

LT (12.50 – 17) and LT SUBTOTALS

STA	LT 12.50	LT 12.75	LT 13	LT 13.25	LT 13.50	LT 13.75	LT 14	LT 14.25	LT 14.50	LT 14.75	LT 15	LT 15.25	LT 15.50	LT 15.75	LT 16	LT 16.25	LT 16.50	LT 16.75	LT 17	SUBTOTALS SQ YD	SUBTOTALS TONS
ADDITIONAL LIFT	1x	1x	1x	1x	1x	1x	1x	1x	1x	1x	2x	2x	2x	2x	2x	2x	2x	2x	2x		
	SQ YD	SQ YD	SQ YD	SQ YD	SQ YD	SQ YD	SQ YD	SQ YD	SQ YD	SQ YD	SQ YD	SQ YD	SQ YD	SQ YD	SQ YD	SQ YD	SQ YD	SQ YD	SQ YD	SQ YD	TONS
5397+00.00	-	-	-	-	-	-	-	-	-	-	-	-	-	-	-	-	-	-	-	1000.0	620.3
5406+00.00	-	-	-	-	-	-	-	-	-	-	-	-	-	-	-	-	-	-	-	1555.6	952.0
5420+00.00	-	-	-	-	-	-	-	-	-	-	-	-	-	-	-	-	-	-	-	1416.7	893.3
5434+00.00	-	-	-	-	-	-	-	-	-	-	-	-	-	-	-	-	-	-	-	1527.8	932.9
5448+00.00	-	-	-	-	-	-	-	-	-	-	-	-	-	-	-	-	-	-	-	1555.6	935.7
5462+00.00	-	-	-	-	-	-	-	-	-	-	-	-	-	-	-	-	-	-	-	1555.6	965.6
5476+00.00	-	-	-	-	-	-	-	-	-	-	-	-	-	-	-	-	-	-	-	1555.6	961.7
5490+00.00	-	-	-	-	-	-	-	-	-	-	-	-	-	-	-	-	-	-	-	1277.8	782.8
5504+00.00	-	-	-	-	-	-	-	-	-	-	-	-	-	-	-	-	-	-	-	1555.6	956.3
5518+00.00	27.8	-	27.8	-	-	-	-	-	55.6	-	27.8	-	-	-	-	-	27.8	-	-	1555.6	980.0
5532+00.00	-	-	-	27.8	194.4	222.2	222.2	277.8	250.0	166.7	138.9	-	-	55.6	-	-	-	-	-	1555.6	1240.9
5546+00.00	27.8	-	194.4	55.6	55.6	55.6	55.6	138.9	83.3	111.1	166.7	222.2	55.6	27.8	-	-	-	-	-	1527.8	1178.3
5560+00.00	-	-	-	-	-	-	-	-	-	-	-	-	-	-	-	-	-	-	-	1555.6	945.4
5574+00.00	111.1	27.8	194.4	55.6	83.3	-	55.6	27.8	-	-	-	-	-	-	-	-	-	-	-	1555.6	1039.5
5588+00.00	55.6	55.6	27.8	-	-	138.9	166.7	305.6	111.1	111.1	55.6	83.3	55.6	-	-	-	-	-	-	1388.9	1074.9
5602+00.00	-	27.8	83.3	27.8	250.0	166.7	333.3	83.3	27.8	-	-	-	-	-	-	-	-	-	-	1555.6	1113.4
5616+00.00	-	-	-	-	-	-	-	-	-	-	-	-	-	-	-	-	-	-	-	1555.6	946.2
5630+00.00	-	-	-	-	-	-	-	-	-	-	-	-	-	-	-	-	-	-	-	1555.6	955.5
5644+00.00	27.8	-	-	-	-	-	-	-	-	-	-	-	-	-	-	-	-	-	-	1555.6	974.6
5658+00.00	-	-	-	-	-	-	-	-	-	-	-	-	-	-	-	-	-	-	-	1555.6	949.3
5672+00.00	-	-	-	-	-	-	-	-	-	-	-	-	-	-	-	-	-	-	-	1555.6	956.3
5686+00.00	-	-	-	-	-	-	-	-	-	-	-	-	-	-	-	-	-	-	-	1555.6	963.3
5700+00.00	-	-	-	-	-	-	-	-	-	-	-	-	-	-	-	-	-	-	-	1555.6	951.2
5714+00.00	-	-	-	-	-	-	-	-	-	-	-	-	-	-	-	-	-	-	-	1555.6	938.0
5728+00.00	-	-	-	-	-	-	-	-	-	-	-	-	-	-	-	-	-	-	-	1555.6	938.0
5742+00.00	-	-	-	-	-	-	-	-	-	-	-	-	-	-	-	-	-	-	-	1555.6	936.1
5756+00.00	-	-	-	-	-	-	-	-	-	-	-	-	-	-	-	-	-	-	-	1555.6	944.6
5770+00.00	27.8	-	-	-	-	-	-	-	-	-	-	-	-	-	-	-	-	-	-	1222.2	766.9
5784+00.00	-	-	-	-	-	-	-	-	-	-	-	-	-	-	-	-	-	-	-	1555.6	942.3
5798+00.00	-	-	-	-	-	-	-	-	-	-	-	-	-	-	-	-	-	-	-	1361.1	850.5
5812+00.00	27.8	-	27.8	-	55.6	-	-	55.6	111.1	138.9	194.4	55.6	83.3	138.9	55.6	-	27.8	27.8	27.8	1555.6	1200.5
5826+00.00	-	-	-	-	-	27.8	138.9	305.6	388.9	305.6	194.4	-	111.1	55.6	-	-	-	-	-	1527.8	1251.1
5840+00.00	27.8	27.8	27.8	27.8	-	-	-	27.8	-	-	-	27.8	27.8	27.8	-	-	-	-	-	1555.6	1021.6
5854+00.00	-	-	-	-	-	-	-	-	-	-	-	-	-	-	-	-	-	-	-	1305.6	791.8
5868+00.00	-	-	-	-	-	-	-	-	-	-	-	-	-	-	-	-	-	-	-	1527.8	930.6
5882+00.00	-	-	-	-	-	-	-	-	-	-	-	-	-	-	-	-	-	-	-	1555.6	964.4
5896+00.00	-	-	-	-	-	-	-	-	-	-	-	-	-	-	-	-	-	-	-	1555.6	948.5
5910+00.00	-	-	-	-	-	-	-	-	-	-	-	-	-	-	-	-	-	-	-	277.8	169.2
5397+00.00	333.3	138.9	583.3	194.4	638.9	611.1	972.2	1222.2	1027.8	833.3	777.8	388.9	333.3	305.6	55.6	-	55.6	27.8	27.8	55805.6	35863.3

RT (10 – 12.25)

STA	RT 10	RT 10.25	RT 10.50	RT 10.75	RT 11	RT 11.25	RT 11.50	RT 11.75	RT 12	RT 12.25
ADDITIONAL LIFT	-	-	-	-	-	-	-	-	-	-
	SQ YD	SQ YD	SQ YD	SQ YD	SQ YD	SQ YD	SQ YD	SQ YD	SQ YD	SQ YD
5397+00.00	27.8	27.8	250.0	222.2	250.0	166.7	27.8	27.8	-	-
5406+00.00	55.6	55.6	55.6	166.7	444.4	472.2	222.2	55.6	27.8	-
5420+00.00	-	-	-	111.1	166.7	111.1	222.2	444.4	250.0	83.3
5434+00.00	-	-	-	277.8	583.3	638.9	27.8	-	-	-
5448+00.00	-	27.8	83.3	277.8	277.8	388.9	416.7	83.3	-	-
5462+00.00	-	-	-	194.4	444.4	194.4	222.2	388.9	83.3	27.8
5476+00.00	55.6	55.6	55.6	138.9	138.9	555.6	222.2	222.2	111.1	-
5490+00.00	83.3	-	55.6	-	83.3	111.1	111.1	166.7	83.3	194.4
5504+00.00	-	-	55.6	166.7	166.7	222.2	388.9	277.8	27.8	55.6
5518+00.00	-	27.8	-	416.7	333.3	388.9	250.0	83.3	55.6	-
5532+00.00	-	-	250.0	555.6	361.1	305.6	55.6	27.8	-	-
5546+00.00	-	-	138.9	361.1	277.8	222.2	222.2	277.8	55.6	-
5560+00.00	-	27.8	27.8	83.3	83.3	111.1	27.8	27.8	27.8	-
5574+00.00	-	55.6	111.1	111.1	166.7	55.6	83.3	111.1	83.3	27.8
5588+00.00	-	-	222.2	555.6	444.4	138.9	-	-	27.8	-
5602+00.00	-	27.8	27.8	361.1	444.4	305.6	166.7	138.9	27.8	27.8
5616+00.00	-	-	-	-	-	-	-	-	-	-
5630+00.00	-	-	-	-	-	-	-	-	-	-
5644+00.00	27.8	111.1	83.3	83.3	83.3	138.9	194.4	194.4	-	27.8
5658+00.00	27.8	55.6	111.1	361.1	138.9	222.2	194.4	222.2	111.1	111.1
5672+00.00	-	-	55.6	55.6	388.9	194.4	388.9	305.6	111.1	55.6
5686+00.00	-	-	111.1	250.0	333.3	333.3	250.0	138.9	83.3	55.6
5700+00.00	-	-	-	55.6	305.6	277.8	638.9	194.4	83.3	-
5714+00.00	-	-	55.6	305.6	472.2	444.4	250.0	27.8	-	-
5728+00.00	27.8	-	-	361.1	333.3	388.9	222.2	111.1	111.1	-
5742+00.00	-	-	-	194.4	194.4	361.1	416.7	222.2	166.7	-
5756+00.00	-	-	27.8	111.1	250.0	361.1	611.1	83.3	111.1	-
5770+00.00	-	27.8	27.8	361.1	166.7	83.3	27.8	-	-	55.6
5784+00.00	-	-	-	-	-	-	-	-	-	-
5798+00.00	-	-	27.8	111.1	83.3	55.6	27.8	83.3	-	-
5812+00.00	27.8	83.3	194.4	527.8	305.6	166.7	250.0	-	-	-
5826+00.00	-	166.7	361.1	472.2	416.7	138.9	-	-	-	-
5840+00.00	27.8	27.8	27.8	138.9	222.2	166.7	194.4	55.6	-	-
5854+00.00	-	-	-	-	-	-	-	-	-	-
5868+00.00	-	-	27.8	138.9	194.4	27.8	27.8	-	-	27.8
5882+00.00	-	55.6	305.6	555.6	555.6	83.3	-	-	-	-
5896+00.00	-	-	27.8	416.7	277.8	527.8	111.1	166.7	27.8	-
5910+00.00	-	-	-	-	-	-	-	-	27.8	222.2
5397+00.00	361.1	833.3	2777.8	8500.0	9138.9	8194.4	6444.4	4111.1	1694.4	972.2

RT (12.50 – 17), RT SUBTOTALS and USE

STA	RT 12.50	RT 12.75	RT 13	RT 13.25	RT 13.50	RT 13.75	RT 14	RT 14.25	RT 14.50	RT 14.75	RT 15	RT 15.25	RT 15.50	RT 15.75	RT 16	RT 16.25	RT 16.50	RT 16.75	RT 17	SUBTOTALS SQ YD	SUBTOTALS TONS	USE SQ YD	USE TON
ADDITIONAL LIFT	1x	1x	1x	1x	1x	1x	1x	1x	1x	1x	2x	2x	2x	2x	2x	2x	2x	2x	2x				
	SQ YD	SQ YD	SQ YD	SQ YD	SQ YD	SQ YD	SQ YD	SQ YD	SQ YD	SQ YD	SQ YD	SQ YD	SQ YD	SQ YD	SQ YD	SQ YD	SQ YD	SQ YD	SQ YD	SQ YD	TONS	SQ YD	TON
5397+00.00	-	-	-	-	-	-	-	-	-	-	-	-	-	-	-	-	-	-	-	1000.0	607.4	**2000.0**	**1227.7**
5406+00.00	-	-	-	-	-	-	-	-	-	-	-	-	-	-	-	-	-	-	-	1555.6	965.6	**3111.1**	**1917.6**
5420+00.00	-	-	-	-	-	-	-	-	-	-	-	-	-	-	-	-	-	-	-	1388.9	900.3	**2805.6**	**1793.6**
5434+00.00	-	-	-	-	-	-	-	-	-	-	-	-	-	-	-	-	-	-	-	1527.8	946.9	**3055.6**	**1879.9**
5448+00.00	-	-	-	-	-	-	-	-	-	-	-	-	-	-	-	-	-	-	-	1555.6	971.4	**3111.1**	**1907.1**
5462+00.00	-	-	-	-	-	-	-	-	-	-	-	-	-	-	-	-	-	-	-	1555.6	987.4	**3111.1**	**1953.0**
5476+00.00	-	-	-	-	-	-	-	-	-	-	-	-	-	-	-	-	-	-	-	1555.6	978.8	**3111.1**	**1940.6**
5490+00.00	138.9	83.3	83.3	27.8	-	-	-	-	-	-	-	-	-	-	-	-	-	-	-	1222.2	809.3	**2500.0**	**1592.1**
5504+00.00	-	-	27.8	27.8	-	-	55.6	-	27.8	27.8	27.8	-	-	-	-	-	-	-	-	1555.6	1018.9	**3111.1**	**1975.2**
5518+00.00	-	-	-	-	-	-	-	-	-	-	-	-	-	-	-	-	-	-	-	1555.6	970.3	**3111.1**	**1950.3**
5532+00.00	-	-	-	-	-	-	-	-	-	-	-	-	-	-	-	-	-	-	-	1555.6	950.4	**3111.1**	**2191.4**
5546+00.00	-	-	-	-	-	-	-	-	-	-	-	-	-	-	-	-	-	-	-	1555.6	973.4	**3083.3**	**2151.7**
5560+00.00	27.8	-	27.8	55.6	55.6	55.6	111.1	138.9	138.9	138.9	138.9	-	111.1	111.1	27.8	-	-	-	-	1555.6	1185.7	**3111.1**	**2131.1**
5574+00.00	27.8	-	55.6	27.8	55.6	83.3	55.6	-	27.8	27.8	83.3	111.1	83.3	83.3	27.8	-	-	-	-	1555.6	1114.9	**3111.1**	**2154.4**
5588+00.00	-	-	-	-	-	-	-	-	-	-	-	-	-	-	-	-	-	-	-	1388.9	845.1	**2777.8**	**1919.9**
5602+00.00	27.8	-	-	-	-	-	-	-	-	-	-	-	-	-	-	-	-	-	-	1555.6	971.8	**3111.1**	**2085.2**
5616+00.00	-	55.6	-	27.8	166.7	166.7	333.3	361.1	333.3	111.1	-	-	-	-	-	-	-	-	-	1555.6	1226.6	**3111.1**	**2172.7**
5630+00.00	-	-	-	27.8	27.8	111.1	250.0	194.4	111.1	166.7	194.4	166.7	222.2	55.6	27.8	-	-	-	-	1555.6	1278.7	**3111.1**	**2234.2**
5644+00.00	-	-	-	27.8	-	27.8	-	138.9	111.1	27.8	166.7	83.3	27.8	-	-	-	-	-	-	1555.6	1090.8	**3111.1**	**2065.4**
5658+00.00	-	-	-	-	-	-	-	-	-	-	-	-	-	-	-	-	-	-	-	1555.6	978.1	**3111.1**	**1927.3**
5672+00.00	-	-	-	-	-	-	-	-	-	-	-	-	-	-	-	-	-	-	-	1555.6	992.4	**3111.1**	**1948.7**
5686+00.00	-	-	-	-	-	-	-	-	-	-	-	-	-	-	-	-	-	-	-	1555.6	977.7	**3111.1**	**1940.9**
5700+00.00	-	-	-	-	-	-	-	-	-	-	-	-	-	-	-	-	-	-	-	1555.6	992.1	**3111.1**	**1943.3**
5714+00.00	-	-	-	-	-	-	-	-	-	-	-	-	-	-	-	-	-	-	-	1555.6	966.8	**3111.1**	**1904.8**
5728+00.00	-	-	-	-	-	-	-	-	-	-	-	-	-	-	-	-	-	-	-	1555.6	974.2	**3111.1**	**1912.2**
5742+00.00	-	-	-	-	-	-	-	-	-	-	-	-	-	-	-	-	-	-	-	1555.6	990.9	**3111.1**	**1926.9**
5756+00.00	-	-	-	-	-	-	-	-	-	-	-	-	-	-	-	-	-	-	-	1555.6	987.8	**3111.1**	**1932.4**
5770+00.00	-	55.6	-	-	27.8	-	-	55.6	55.6	27.8	27.8	55.6	27.8	-	27.8	-	55.6	27.8	27.8	1222.2	857.5	**2444.4**	**1624.4**
5784+00.00	-	-	-	-	-	194.4	305.6	388.9	416.7	222.2	27.8	-	-	-	-	-	-	-	-	1555.6	1244.8	**3111.1**	**2187.1**
5798+00.00	27.8	-	27.8	-	166.7	166.7	222.2	222.2	111.1	27.8	-	-	-	-	-	-	-	-	-	1361.1	1001.0	**2722.2**	**1851.5**
5812+00.00	-	-	-	-	-	-	-	-	-	-	-	-	-	-	-	-	-	-	-	1555.6	949.7	**3111.1**	**2150.2**
5826+00.00	-	-	-	-	-	-	-	-	-	-	-	-	-	-	-	-	-	-	-	1555.6	936.4	**3083.3**	**2187.5**
5840+00.00	-	27.8	-	-	-	27.8	83.3	111.1	194.4	83.3	111.1	55.6	-	-	-	-	-	-	-	1555.6	1097.8	**3111.1**	**2119.4**
5854+00.00	-	-	27.8	138.9	138.9	111.1	138.9	333.3	194.4	83.3	55.6	55.6	27.8	-	-	-	-	-	-	1305.6	1033.7	**2611.1**	**1825.4**
5868+00.00	27.8	-	27.8	-	194.4	527.8	277.8	55.6	-	-	-	-	-	-	-	-	-	-	-	1555.6	1129.3	**3083.3**	**2059.9**
5882+00.00	-	-	-	-	-	-	-	-	-	-	-	-	-	-	-	-	-	-	-	1555.6	940.7	**3111.1**	**1905.2**
5896+00.00	-	-	-	-	-	-	-	-	-	-	-	-	-	-	-	-	-	-	-	1555.6	970.7	**3111.1**	**1919.2**
5910+00.00	27.8	-	-	-	-	-	-	-	-	-	-	-	-	-	-	-	-	-	-	277.8	190.6	**555.6**	**359.7**
5397+00.00	305.6	222.2	277.8	361.1	833.3	1472.2	1833.3	2000.0	1722.2	944.4	833.3	527.8	500.0	250.0	111.1	-	55.6	27.8	27.8	55805.6	37005.9	**111611.1**	**72869.2**

HOT-MIX ASPHALT SHOULDER, VARIABLE DEPTH WESTBOUND SCHEDULE MAINLINE

LOCATION / LT (10 – 12.25)

ROADWAY	STA	STA	REMARKS	LEN	LT 10	LT 10.25	LT 10.50	LT 10.75	LT 11	LT 11.25	LT 11.50	LT 11.75	LT 12	LT 12.25
Additional Lift					-	-	-	-	-	-	-	-	-	-
					SQ YD	SQ YD	SQ YD	SQ YD	SQ YD	SQ YD	SQ YD	SQ YD	SQ YD	SQ YD
I-64	3392+00.00	3406+00.00	WB	1400.00	-	-	83.3	166.7	305.6	277.8	111.1	55.6	-	-
I-64	3406+00.00	3420+00.00	WB	1400.00	27.8	194.4	361.1	388.9	277.8	166.7	-	83.3	55.6	-
I-64	3420+00.00	3434+00.00	WB	1400.00	-	-	-	138.9	250.0	416.7	250.0	250.0	83.3	27.8
I-64	3434+00.00	3448+00.00	WB	1400.00	-	-	-	-	27.8	111.1	166.7	194.4	250.0	388.9
I-64	3448+00.00	3462+00.00	WB	1400.00	-	27.8	55.6	194.4	305.6	361.1	444.4	166.7	-	-
I-64	3462+00.00	3476+00.00	WB	1400.00	-	-	-	111.1	138.9	444.4	361.1	194.4	166.7	55.6
I-64	3476+00.00	3490+00.00	WB	1400.00	-	-	-	83.3	83.3	361.1	472.2	333.3	166.7	55.6
I-64	3490+00.00	3504+00.00	WB	1400.00	27.8	-	111.1	166.7	166.7	305.6	166.7	111.1	111.1	27.8
I-64	3504+00.00	3518+00.00	WB	1400.00	-	-	-	-	166.7	166.7	361.1	166.7	250.0	277.8
I-64	3518+00.00	3532+00.00	WB	1400.00	-	55.6	166.7	83.3	138.9	305.6	111.1	194.4	111.1	111.1
I-64	3532+00.00	3546+00.00	WB	1400.00	-	-	-	-	-	-	-	-	-	-
I-64	3546+00.00	3560+00.00	WB	1400.00	-	-	-	-	-	27.8	-	27.8	-	27.8
I-64	3560+00.00	3574+00.00	WB	1400.00	-	27.8	83.3	305.6	527.8	305.6	277.8	27.8	-	-
I-64	3574+00.00	3588+00.00	WB	1400.00	27.8	55.6	138.9	444.4	611.1	111.1	111.1	55.6	-	-
I-64	3588+00.00	3602+00.00	WB	1400.00	-	-	55.6	27.8	27.8	55.6	-	27.8	-	-
I-64	3602+00.00	3616+00.00	WB	1400.00	-	-	-	55.6	83.3	194.4	55.6	111.1	55.6	27.8
I-64	3616+00.00	3630+00.00	WB	1400.00	-	-	-	83.3	111.1	361.1	305.6	194.4	222.2	250.0
I-64	3630+00.00	3644+00.00	WB	1400.00	-	-	-	27.8	83.3	527.8	555.6	138.9	138.9	27.8
I-64	3644+00.00	3658+00.00	WB	1400.00	-	-	-	55.6	194.4	111.1	222.2	194.4	111.1	111.1
I-64	3658+00.00	3672+00.00	WB	1400.00	-	-	55.6	416.7	361.1	333.3	277.8	83.3	27.8	-
I-64	3672+00.00	3686+00.00	WB	1400.00	55.6	111.1	138.9	472.2	500.0	194.4	83.3	-	-	-
I-64	3686+00.00	3700+00.00	WB	1400.00	-	-	-	83.3	222.2	416.7	527.8	166.7	111.1	27.8
I-64	3700+00.00	3714+00.00	WB	1400.00	-	-	250.0	361.1	388.9	333.3	138.9	83.3	-	-
I-64	3714+00.00	3728+00.00	WB	1400.00	-	27.8	361.1	555.6	361.1	138.9	111.1	-	-	-
I-64	3728+00.00	3742+00.00	WB	1400.00	-	27.8	361.1	777.8	305.6	83.3	-	-	-	-
I-64	3742+00.00	3756+00.00	WB	1400.00	-	55.6	222.2	611.1	416.7	111.1	138.9	-	-	-
I-64	3756+00.00	3770+00.00	WB	1400.00	-	27.8	250.0	500.0	583.3	138.9	-	55.6	-	-
I-64	3770+00.00	3782+00.00	WB	1200.00	-	-	55.6	111.1	361.1	111.1	222.2	-	55.6	-
I-64	3782+00.00	3784+00.00	WB	200.00	-	-	-	-	-	-	-	-	-	-
I-64	13784+00.00	13798+00.00	WB	1400.00	-	27.8	83.3	138.9	388.9	750.0	111.1	55.6	-	-
I-64	13798+00.00	13812+00.00	WB	1400.00	-	-	27.8	83.3	55.6	305.6	472.2	388.9	-	83.3
I-64	13812+00.00	13826+00.00	WB	1400.00	-	-	-	-	-	27.8	-	-	27.8	55.6
I-64	13826+00.00	13840+00.00	WB	1400.00	-	-	-	-	-	-	-	-	-	-
I-64	13840+00.00	13854+00.00	WB	1400.00	-	-	-	194.4	111.1	138.9	111.1	83.3	138.9	27.8
I-64	13854+00.00	13868+00.00	WB	1400.00	27.8	27.8	138.9	194.4	444.4	333.3	83.3	27.8	27.8	-
I-64	13868+00.00	13882+00.00	WB	1400.00	-	27.8	138.9	388.9	388.9	166.7	277.8	55.6	55.6	55.6
I-64	13882+00.00	13896+00.00	WB	1400.00	-	-	83.3	333.3	527.8	388.9	166.7	27.8	27.8	-
I-64	13896+00.00	13910+00.00	WB	1400.00	-	-	-	27.8	-	111.1	111.1	305.6	277.8	305.6
I-64	13910+00.00	13913+01.00	WB	301.00	-	-	-	-	-	-	-	361.1	-	-
I-64	**3397+29.00**	**12913+01.00**	**WB**	**52101**	166.7	694.4	3222.2	7583.3	8611.1	8416.7	6694.4	4166.7	2472.2	1944.4

LT (12.50 – 17) and LT SUBTOTALS

STA	LT 12.50	LT 12.75	LT 13	LT 13.25	LT 13.50	LT 13.75	LT 14	LT 14.25	LT 14.50	LT 14.75	LT 15	LT 15.25	LT 15.50	LT 15.75	LT 16	LT 16.25	LT 16.50	LT 16.75	LT 17	SUBTOTALS SQ YD	SUBTOTALS TONS
Additional Lift	1x	1x	1x	1x	1x	1x	1x	1x	1x	1x	2x	2x	2x	2x	2x	2x	2x	2x	2x		
	SQ YD	SQ YD	SQ YD	SQ YD	SQ YD	SQ YD	SQ YD	SQ YD	SQ YD	SQ YD	SQ YD	SQ YD	SQ YD	SQ YD	SQ YD	SQ YD	SQ YD	SQ YD	SQ YD	SQ YD	TONS
3392+00.00	-	-	-	-	-	-	-	-	-	-	-	-	-	-	-	-	-	-	-	1000.0	620.7
3406+00.00	-	-	-	-	-	-	-	-	-	-	-	-	-	-	-	-	-	-	-	1555.6	941.9
3420+00.00	27.8	-	-	-	-	-	-	-	-	-	-	-	-	-	-	-	-	-	-	1444.4	920.1
3434+00.00	250.0	111.1	-	-	-	-	-	-	-	-	-	-	-	-	-	-	-	-	-	1500.0	1011.5
3448+00.00	-	-	-	-	-	-	-	-	-	-	-	-	-	-	-	-	-	-	-	1555.6	977.3
3462+00.00	27.8	27.8	27.8	-	-	-	-	-	-	-	-	-	-	-	-	-	-	-	-	1555.6	1002.6
3476+00.00	-	-	-	-	-	-	-	-	-	-	-	-	-	-	-	-	-	-	-	1555.6	1002.6
3490+00.00	-	-	-	-	-	-	-	-	-	-	-	-	-	-	-	-	-	-	-	1194.4	750.6
3504+00.00	138.9	27.8	-	-	-	-	-	-	-	-	-	-	-	-	-	-	-	-	-	1555.6	1025.5
3518+00.00	83.3	83.3	-	55.6	55.6	-	-	-	-	-	-	-	-	-	-	-	-	-	-	1555.6	1009.6
3532+00.00	-	-	27.8	250.0	416.7	305.6	388.9	55.6	55.6	27.8	27.8	-	-	-	-	-	-	-	-	1555.6	1196.6
3546+00.00	27.8	-	27.8	-	-	138.9	305.6	444.4	250.0	194.4	55.6	27.8	-	-	-	-	-	-	-	1555.6	1229.3
3560+00.00	-	-	-	-	-	-	-	-	-	-	-	-	-	-	-	-	-	-	-	1555.6	963.7
3574+00.00	-	-	-	-	-	-	-	-	-	-	-	-	-	-	-	-	-	-	-	1555.6	951.2
3588+00.00	27.8	27.8	-	83.3	83.3	138.9	138.9	305.6	138.9	55.6	111.1	83.3	-	-	-	-	-	-	-	1388.9	1065.6
3602+00.00	27.8	-	27.8	-	27.8	-	27.8	55.6	222.2	138.9	250.0	138.9	27.8	27.8	-	-	-	-	-	1555.6	1167.8
3616+00.00	-	27.8	-	-	-	-	-	-	-	-	-	-	-	-	-	-	-	-	-	1555.6	1011.5
3630+00.00	27.8	27.8	-	-	-	-	-	-	-	-	-	-	-	-	-	-	-	-	-	1555.6	1001.4
3644+00.00	166.7	166.7	138.9	55.6	27.8	-	-	-	-	-	-	-	-	-	-	-	-	-	-	1555.6	1044.2
3658+00.00	-	-	-	-	-	-	-	-	-	-	-	-	-	-	-	-	-	-	-	1555.6	968.3
3672+00.00	-	-	-	-	-	-	-	-	-	-	-	-	-	-	-	-	-	-	-	1555.6	945.0
3686+00.00	-	-	-	-	-	-	-	-	-	-	-	-	-	-	-	-	-	-	-	1555.6	992.8
3700+00.00	-	-	-	-	-	-	-	-	-	-	-	-	-	-	-	-	-	-	-	1555.6	958.2
3714+00.00	-	-	-	-	-	-	-	-	-	-	-	-	-	-	-	-	-	-	-	1555.6	944.2
3728+00.00	-	-	-	-	-	-	-	-	-	-	-	-	-	-	-	-	-	-	-	1555.6	937.2
3742+00.00	-	-	-	-	-	-	-	-	-	-	-	-	-	-	-	-	-	-	-	1555.6	946.6
3756+00.00	-	-	-	-	-	-	-	-	-	-	-	-	-	-	-	-	-	-	-	1555.6	947.3
3770+00.00	-	-	-	-	-	-	-	-	-	-	-	-	-	-	-	-	-	-	-	916.7	572.4
3782+00.00	-	-	-	-	-	-	-	-	-	-	-	-	-	-	-	-	-	-	-	-	-
13784+00.00	-	-	-	-	-	-	-	-	-	-	-	-	-	-	-	-	-	-	-	1555.6	968.7
13798+00.00	-	-	-	-	-	-	-	-	-	-	-	-	-	-	-	-	-	-	-	1416.7	910.4
13812+00.00	138.9	138.9	138.9	-	55.6	27.8	27.8	55.6	-	-	-	-	27.8	250.0	138.9	138.9	27.8	55.6	111.1	1444.4	1163.9
13826+00.00	-	-	-	-	-	-	-	-	-	-	-	-	55.6	55.6	194.4	277.8	388.9	305.6	194.4	1472.2	1323.8
13840+00.00	55.6	83.3	55.6	111.1	-	55.6	27.8	-	-	27.8	-	27.8	-	-	-	55.6	27.8	-	27.8	1361.1	945.0
13854+00.00	-	-	-	-	-	-	-	-	-	-	-	-	-	-	-	-	-	-	-	1305.6	804.6
13868+00.00	-	-	-	-	-	-	-	-	-	-	-	-	-	-	-	-	-	-	-	1555.6	967.2
13882+00.00	-	-	-	-	-	-	-	-	-	-	-	-	-	-	-	-	-	-	-	1555.6	964.1
13896+00.00	361.1	27.8	27.8	-	-	-	-	-	-	-	-	-	-	-	-	-	-	-	-	1555.6	1048.4
13910+00.00	-	-	-	-	-	-	-	-	-	-	-	-	-	-	-	-	-	-	-	361.1	237.6
3397+29.00	1361.1	750.0	472.2	555.6	666.7	666.7	916.7	916.7	666.7	444.4	444.4	277.8	111.1	333.3	333.3	472.2	444.4	361.1	333.3	55250.0	36439.3

RT (10 – 12.25)

STA	RT 10	RT 10.25	RT 10.50	RT 10.75	RT 11	RT 11.25	RT 11.50	RT 11.75	RT 12	RT 12.25
Additional Lift	-	-	-	-	-	-	-	-	-	-
	SQ YD	SQ YD	SQ YD	SQ YD	SQ YD	SQ YD	SQ YD	SQ YD	SQ YD	SQ YD
3392+00.00	-	-	-	194.4	138.9	250.0	277.8	83.3	55.6	-
3406+00.00	-	27.8	83.3	250.0	361.1	277.8	166.7	250.0	138.9	-
3420+00.00	-	-	-	27.8	55.6	361.1	361.1	250.0	250.0	111.1
3434+00.00	-	-	-	166.7	222.2	222.2	277.8	333.3	194.4	83.3
3448+00.00	-	27.8	138.9	222.2	583.3	388.9	194.4	-	-	-
3462+00.00	-	-	27.8	83.3	166.7	166.7	-	111.1	305.6	416.7
3476+00.00	-	-	-	-	-	-	55.6	55.6	55.6	277.8
3490+00.00	-	138.9	194.4	277.8	222.2	111.1	27.8	-	-	-
3504+00.00	-	-	111.1	416.7	305.6	305.6	250.0	138.9	27.8	-
3518+00.00	-	55.6	222.2	305.6	500.0	250.0	138.9	83.3	-	-
3532+00.00	-	-	194.4	361.1	583.3	222.2	111.1	55.6	27.8	-
3546+00.00	-	55.6	194.4	388.9	388.9	222.2	27.8	166.7	55.6	27.8
3560+00.00	-	-	-	222.2	27.8	55.6	27.8	83.3	55.6	83.3
3574+00.00	-	-	-	111.1	83.3	83.3	27.8	-	27.8	-
3588+00.00	-	55.6	166.7	388.9	500.0	250.0	27.8	-	-	-
3602+00.00	-	-	55.6	305.6	333.3	250.0	250.0	138.9	83.3	83.3
3616+00.00	-	-	-	-	55.6	27.8	55.6	83.3	27.8	55.6
3630+00.00	-	-	-	-	-	-	-	-	-	-
3644+00.00	-	-	-	138.9	166.7	138.9	55.6	27.8	-	-
3658+00.00	-	-	27.8	166.7	333.3	500.0	277.8	138.9	83.3	27.8
3672+00.00	-	-	83.3	194.4	472.2	333.3	250.0	111.1	83.3	27.8
3686+00.00	-	-	-	194.4	500.0	277.8	277.8	250.0	55.6	-
3700+00.00	-	-	55.6	222.2	500.0	722.2	55.6	-	-	-
3714+00.00	-	-	83.3	361.1	472.2	416.7	83.3	27.8	111.1	-
3728+00.00	-	-	27.8	83.3	222.2	444.4	444.4	138.9	83.3	83.3
3742+00.00	-	-	-	111.1	222.2	83.3	388.9	194.4	222.2	222.2
3756+00.00	-	-	-	-	-	27.8	250.0	277.8	416.7	250.0
3770+00.00	-	-	55.6	194.4	250.0	83.3	138.9	-	-	-
3782+00.00	-	-	-	-	-	-	-	-	-	-
13784+00.00	-	-	-	-	-	-	-	-	-	-
13798+00.00	-	-	-	27.8	138.9	55.6	27.8	27.8	-	-
13812+00.00	-	-	-	111.1	277.8	361.1	361.1	277.8	83.3	27.8
13826+00.00	-	-	-	-	-	83.3	138.9	250.0	444.4	416.7
13840+00.00	-	27.8	-	111.1	111.1	250.0	388.9	111.1	166.7	83.3
13854+00.00	-	-	-	-	-	-	-	-	111.1	111.1
13868+00.00	-	27.8	-	83.3	83.3	55.6	-	-	-	27.8
13882+00.00	-	27.8	277.8	444.4	416.7	138.9	222.2	27.8	-	-
13896+00.00	-	-	-	222.2	527.8	388.9	166.7	194.4	55.6	-
13910+00.00	-	-	-	-	361.1	-	-	-	-	-
3397+29.00	-	444.4	2000.0	6388.9	9444.4	7555.6	5527.8	3805.6	3166.7	2416.7

RT (12.50 – 17), RT SUBTOTALS and USE

STA	RT 12.50	RT 12.75	RT 13	RT 13.25	RT 13.50	RT 13.75	RT 14	RT 14.25	RT 14.50	RT 14.75	RT 15	RT 15.25	RT 15.50	RT 15.75	RT 16	RT 16.25	RT 16.5	RT 16.75	RT 17	SUBTOTALS SQ YD	SUBTOTALS TONS	USE SQ YD	USE TONS
Additional Lift	1x	1x	1x	1x	1x	1x	1x	1x	1x	1x	2x	2x	2x	2x	2x	2x	2x	2x	2x				
	SQ YD	SQ YD	SQ YD	SQ YD	SQ YD	SQ YD	SQ YD	SQ YD	SQ YD	SQ YD	SQ YD	SQ YD	SQ YD	SQ YD	SQ YD	SQ YD	SQ YD	SQ YD	SQ YD	SQ YD	TONS	SQ YD	TONS
3392+00.00	-	-	-	-	-	-	-	-	-	-	-	-	-	-	-	-	-	-	-	1000.0	631.2	**2000.0**	**1251.8**
3406+00.00	-	-	-	-	-	-	-	-	-	-	-	-	-	-	-	-	-	-	-	1555.6	978.1	**3111.1**	**1919.9**
3420+00.00	-	27.8	-	-	-	-	-	-	-	-	-	-	-	-	-	-	-	-	-	1444.4	939.6	**2888.9**	**1859.7**
3434+00.00	-	-	-	-	-	-	-	-	-	-	-	-	-	-	-	-	-	-	-	1500.0	963.3	**3000.0**	**1974.8**
3448+00.00	-	-	-	-	-	-	-	-	-	-	-	-	-	-	-	-	-	-	-	1555.6	960.9	**3111.1**	**1938.2**
3462+00.00	138.9	55.6	55.6	-	-	-	27.8	-	-	-	-	-	-	-	-	-	-	-	-	1555.6	1037.6	**3111.1**	**2040.1**
3476+00.00	444.4	305.6	250.0	55.6	27.8	-	-	-	-	-	-	-	-	-	27.8	-	-	-	-	1555.6	1098.6	**3111.1**	**2101.2**
3490+00.00	-	27.8	-	-	55.6	27.8	55.6	-	-	-	55.6	-	-	-	-	-	-	-	-	1194.4	759.5	**2388.9**	**1510.1**
3504+00.00	-	-	-	-	-	-	-	-	-	-	-	-	-	-	-	-	-	-	-	1555.6	967.9	**3111.1**	**1993.4**
3518+00.00	-	-	-	-	-	-	-	-	-	-	-	-	-	-	-	-	-	-	-	1555.6	956.3	**3111.1**	**1965.8**
3532+00.00	-	-	-	-	-	-	-	-	-	-	-	-	-	-	-	-	-	-	-	1555.6	957.8	**3111.1**	**2154.4**
3546+00.00	27.8	-	-	-	-	-	-	-	-	-	-	-	-	-	-	-	-	-	-	1555.6	963.3	**3111.1**	**2192.6**
3560+00.00	55.6	-	27.8	-	-	55.6	305.6	194.4	111.1	55.6	111.1	55.6	27.8	-	-	-	-	-	-	1555.6	1149.2	**3111.1**	**2112.8**
3574+00.00	27.8	27.8	27.8	27.8	55.6	55.6	305.6	333.3	277.8	55.6	27.8	-	-	-	-	-	-	-	-	1555.6	1172.5	**3111.1**	**2123.7**
3588+00.00	-	-	-	-	-	-	-	-	-	-	-	-	-	-	-	-	-	-	-	1388.9	847.4	**2777.8**	**1912.9**
3602+00.00	55.6	-	-	-	-	-	-	-	-	-	-	-	-	-	-	-	-	-	-	1555.6	983.9	**3111.1**	**2151.7**
3616+00.00	83.3	-	-	-	27.8	-	-	111.1	194.4	277.8	138.9	277.8	111.1	27.8	-	-	-	-	-	1555.6	1221.1	**3111.1**	**2232.6**
3630+00.00	-	-	-	-	-	-	83.3	194.4	277.8	500.0	333.3	111.1	55.6	-	-	-	-	-	-	1555.6	1279.1	**3111.1**	**2280.4**
3644+00.00	27.8	27.8	55.6	-	55.6	138.9	83.3	111.1	83.3	55.6	83.3	166.7	55.6	27.8	-	27.8	27.8	-	-	1555.6	1153.8	**3111.1**	**2198.0**
3658+00.00	-	-	-	-	-	-	-	-	-	-	-	-	-	-	-	-	-	-	-	1555.6	982.3	**3111.1**	**1950.7**
3672+00.00	-	-	-	-	-	-	-	-	-	-	-	-	-	-	-	-	-	-	-	1555.6	976.1	**3111.1**	**1921.1**
3686+00.00	-	-	-	-	-	-	-	-	-	-	-	-	-	-	-	-	-	-	-	1555.6	980.8	**3111.1**	**1973.6**
3700+00.00	-	-	-	-	-	-	-	-	-	-	-	-	-	-	-	-	-	-	-	1555.6	965.2	**3111.1**	**1923.4**
3714+00.00	-	-	-	-	-	-	-	-	-	-	-	-	-	-	-	-	-	-	-	1555.6	966.4	**3111.1**	**1910.6**
3728+00.00	27.8	-	-	-	-	-	-	-	-	-	-	-	-	-	-	-	-	-	-	1555.6	993.6	**3111.1**	**1930.8**
3742+00.00	111.1	-	-	-	-	-	-	-	-	-	-	-	-	-	-	-	-	-	-	1555.6	1014.2	**3111.1**	**1960.8**
3756+00.00	83.3	111.1	138.9	-	-	-	-	-	-	-	-	-	-	-	-	-	-	-	-	1555.6	1051.6	**3111.1**	**1998.9**
3770+00.00	55.6	-	27.8	-	-	-	-	-	-	27.8	-	-	-	27.8	-	27.8	-	-	27.8	916.7	602.4	**1833.3**	**1174.8**
3782+00.00	-	-	-	-	-	-	-	-	-	-	-	-	-	-	-	-	-	-	-	-	-	**-**	**-**
13784+00.00	-	-	-	-	-	83.3	27.8	305.6	277.8	333.3	166.7	166.7	83.3	111.1	-	-	-	-	-	1555.6	1274.0	**3111.1**	**2242.7**
13798+00.00	-	27.8	-	27.8	27.8	27.8	-	111.1	416.7	361.1	111.1	-	-	-	-	27.8	-	-	-	1416.7	1099.8	**2833.3**	**2010.2**
13812+00.00	27.8	27.8	-	-	-	-	-	-	-	-	-	-	-	-	-	-	-	-	-	1555.6	995.2	**3000.0**	**2159.1**
13826+00.00	166.7	55.6	-	-	-	-	-	-	-	-	-	-	-	-	-	-	-	-	-	1555.6	1047.3	**3027.8**	**2371.1**
13840+00.00	111.1	83.3	83.3	-	27.8	-	-	-	-	-	-	-	-	-	-	-	-	-	-	1555.6	1020.4	**2916.7**	**1965.4**
13854+00.00	138.9	305.6	277.8	83.3	83.3	83.3	27.8	27.8	-	-	27.8	-	-	-	27.8	-	-	-	-	1305.6	949.7	**2611.1**	**1754.3**
13868+00.00	-	-	27.8	138.9	250.0	83.3	333.3	166.7	222.2	55.6	-	-	-	-	-	-	-	-	-	1555.6	1168.6	**3111.1**	**2135.8**
13882+00.00	-	-	-	-	-	-	-	-	-	-	-	-	-	-	-	-	-	-	-	1555.6	952.4	**3111.1**	**1916.4**
13896+00.00	-	-	-	-	-	-	-	-	-	-	-	-	-	-	-	-	-	-	-	1555.6	976.5	**3111.1**	**2024.9**
13910+00.00	-	-	-	-	-	-	-	-	-	-	-	-	-	-	-	-	-	-	-	361.1	222.4	**722.2**	**460.1**
3397+29.00	1583.3	1083.3	972.2	333.3	611.1	555.6	1250.0	1555.6	1861.1	1722.2	1055.6	777.8	333.3	194.4	55.6	83.3	27.8	-	27.8	55638.9	37259.8	**110888.9**	**73699.1**

d'Escoto, Inc.
55 W Van Buren St, Ste 200
Chicago, IL 60605
TEL: 312.787.0707 FAX: 312.787.7322
www.descotoinc.com
IL Professional Engineering Design Firm No. 184001609-0002
Copyright © 2026

USER NAME = mgesior	DESIGNED - MEG	REVISED - 1 6/01/2026-ADDENDUM 1	STATE OF ILLINOIS DEPARTMENT OF TRANSPORTATION
	DRAWN - MEG	REVISED -	
	CHECKED - MTV	REVISED -	
PLOT DATE = 6/2/2026	DATE - 6/1/2026	REVISED -	

PAVING SCHEDULE
I-64

SCALE: | SHEET 2 OF 2 SHEETS | STA. | TO STA.

F.A.I RTE.	SECTION	COUNTY	TOTAL SHEETS	SHEET NO.
64	95-(3,4)RS-2	WASHINGTON	775	21
		CONTRACT NO. 76M95		
	ILLINOIS	FED. AID PROJECT		

MODEL: Paving Schedule 2 [SHEET]
FILE NAME: D876M95_sht_schedules.dgn

TRAFFIC CONTROL SCHEDULE

LOCATION			TEMPORARY CONCRETE BARRIER	RELOCATE TEMPORARY CONCRETE BARRIER	TRAFFIC CONTROL AND PROTECTION, STANDARD 701402	TRAFFIC CONTROL AND PROTECTION, STANDARD 701411	TRAFFIC CONTROL AND PROTECTION, STANDARD 701401	TRAFFIC CONTROL SURVEILLANCE	CHANGEABLE MESSAGE SIGN	MODULAR GLARE SCREEN, TEMPORARY	IMPACT ATTENUATORS, TEMPORARY (FULLY REDIRECTIVE, WIDE), TEST LEVEL 3	IMPACT ATTENUATORS, RELOCATE (FULLY REDIRECTIVE, WIDE), TEST LEVEL 3	BITUMINOUS MATERIALS (TACK COAT)	HOT-MIX ASPHALT SHOULDERS	HOT-MIX ASPHALT SURFACE REMOVAL, VARIABLE DEPTH	TEMPORARY SIGNING		TUBULAR MARKER	TRAFFIC CONTROL AND PROTECTION, STANDARD 701406	TRAFFIC CONTROL AND PROTECTION, STANDARD 701456	TRAFFIC CONTROL AND PROTECTION, STANDARD 701701 (SPECIAL)	TRAFFFIC CONTROL AND PROTECTION, (SPECIAL)
																CROSSOVER SIGNING	VERTICAL PANELS					
ROADWAY	STATION	REMARKS	FOOT	FOOT	EACH	EACH	L SUM	CAL DA	CAL DA	FOOT	EACH	EACH	POUND	TON	SQ YD	EACH	EACH	EACH	L SUM	L SUM	L SUM	L SUM
I-64 EB MAINLINE	2404+75.00 TO 2655+49.31	PRESTAGE																				
I-64 EB MAINLINE	2656+20.09 TO 2688+66.46	PRESTAGE			1.00	2.00					1											
I-64 EB MAINLINE	2690+70.11 TO 2904+26.97	PRESTAGE																				
I-64 WB MAINLINE	2405+26.78 TO 2651+82.15	PRESTAGE																				
I-64 WB MAINLINE	2654+21.38 TO 2685+79.71	PRESTAGE			1.00	2.00					1											
I-64 WB MAINLINE	2688+57.56 TO 2905+01.79	PRESTAGE																				
I-64 RAMP A	142+84.18 TO 159+78.56	PRESTAGE	1,700.00	1,700.00							1											
I-64 RAMP B	274+18.92 TO 289+86.07	PRESTAGE	1,575.00	1,575.00																		
I-64 RAMP C	356+18.55 TO 373+05.21	PRESTAGE	1700.00	1700.00																		
I-64 RAMP D	471+58.77 TO 488+67.56	PRESTAGE	1712.50	1712.50							1											
I-64 EB MAINLINE	2395+91.86 TO 2406+36.96	STAGE 1	1,037.50		1.00						1	1										
I-64 EB MAINLINE	2622+99.40 TO 2638+79.95	STAGE 1	1,587.50								1	1										
I-64 EB MAINLINE	2705+04.94 TO 2715+75.66	STAGE 1	1,137.50								1											
I-64 EB MAINLINE	2902+52.27 TO 2912+71.45	STAGE 1	1,025.00								1											
I-64 WB MAINLINE	2397+01.97 TO 2407+40.29	STAGE 1	1,050.00		1.00						1	1										
I-64 WB MAINLINE	2624+17.56 TO 2640+12.73	STAGE 1	1,700.00								1	1										
I-64 WB MAINLINE	2706+70.50 TO 2717+64.17	STAGE 1	1,100.00								1											
I-64 WB MAINLINE	2903+51.84 TO 2913+80.98	STAGE 1	1,037.50								1											
I-64 RAMP C	370+33.00 TO 374+56.10	STAGE 2A - SUBSTAGE 1	375																			
I-64 RAMP C	370+33.00 TO 374+56.11	STAGE 2A - SUBSTAGE 2									1	1										
I-64 EB MAINLINE	2396+27.00 TO 2913+81.00	STAGE 2A	51760			2				51760	1	1	5444.43	1829.33	21777.7		1094					
I-64 EB MAINLINE	2625+08.00 TO 2713+98.00	STAGE 2B																				
I-64 WB MAINLINE	2396+55.00 TO 2913+46.00	STAGE 3A	51800			2				51800	1	1	27722.23	9314.67	110888.9		1095					
I-64 WB MAINLINE	2625+79.00 TO 2713+62.00	STAGE 3B																				
CROSSOVER #1	2401+00.60 TO 2402+35.80	CONSTRUCTION														14		12				
CROSSOVER #2	2631+27.59 TO 2632+69.60	CONSTRUCTION														23		13				
CROSSOVER #3	2710+54.63 TO 2711+92.06	CONSTRUCTION														13		12				
CROSSOVER #4	2907+35.98 TO 2908+73.78	CONSTRUCTION														16		12				
SUBTOTALS			120297.50	6687.50	4.00	8.00	1.00	83.30	2072.00	103560.00	15.00	7.00	33166.66	11144.00	132666.60	66.00	2189.00	49.00	1.00	1.00	1.00	1.00
USE			120300.0	6688	4	8	1	90	2072	103560	15	7	33167	11144	132667	2255		49	1	1	1	1

NOTE: SEE ROADWAY PLANS FOR BRIDGE LOCATION OMISSIONS AND STATION EQUATIONS.

1

MODEL: Traffic Control Schedule [SHEET]-2
FILE NAME: D876M95_sht_schedules.dgn

d'Escoto, Inc.
55 W Van Buren St, Ste 200
Chicago, IL 60605
TEL: 312.787.0707 FAX: 312.787.7322
www.descotoinc.com
IL Professional Engineering Design Firm No. 184001609-0002

Copyright © 2026

USER NAME = mgesior	DESIGNED - MEG	REVISED - 1 6/01/2026-ADDENDUM 1	STATE OF ILLINOIS DEPARTMENT OF TRANSPORTATION
	DRAWN - MEG	REVISED -	
	CHECKED - MTV	REVISED -	
PLOT DATE = 6/2/2026	DATE - 6/1/2026	REVISED -	

TRAFFIC CONTROL SCHEDULE
I-64

SCALE: SHEET 1 OF 1 SHEETS STA. TO STA.

F.A.I RTE.	SECTION	COUNTY	TOTAL SHEETS	SHEET NO.
64	95-(3,4)RS-2	WASHINGTON	775	22
		CONTRACT NO. 76M95		
	ILLINOIS	FED. AID PROJECT		

TEMPORARY PAVEMENT MARKING SCHEDULE

LOCATION					TEMPORARY PAVEMENT MARKING - LINE 6" - PAINT (SOLID WHITE)	TEMPORARY PAVEMENT MARKING - LINE 6" - PAINT (SOLID YELLOW)	TEMPORARY PAVEMENT MARKING - LINE 8" - PAINT (WHITE SKIP-DASH 9/3)	TEMPORARY PAVEMENT MARKING - LINE 24" - PAINT	TEMPORARY PAVEMENT MARKING LETTERS AND SYMBOLS - PAINT	PAVEMENT MARKING REMOVAL - GRINDING
ROADWAY	STA	STA	LENGTH	REMARKS	FOOT	FOOT	FOOT	FOOT	SQ FT	SF
I-64 MAINLINE EB	2390+61.00	2904+27.00	51366	-		51,433.84				64,231.18
I-64 MAINLINE WB	2405+27.00	2919+50.00	51423	-		51,538.37				
I-64 RAMP A	141+14.00	162+30.00	2116	-		2,020.50				3,862.47
I-64 RAMP B	271+52.00	291+50.00	1998	-		1,837.05				
I-64 RAMP C	355+29.00	374+57.00	1928	-		1,778.06				
I-64 RAMP D	469+88.00	490+82.00	2094	-		1,995.99				
PRE-STAGE					**0.00**	**110,603.81**	**0.00**	**0.00**	**0.00**	**68,093.65**
I-64 MAINLINE EB	2380+69.00	2912+71.00	53202	-	8,313.40	52,224.61				62,114.51
I-64 MAINLINE WB	2387+02.00	2929+04.00	54202	-	8,436.42	53,254.53				
STAGE 1					**16,749.82**	**105,479.14**	**0.00**	**0.00**	**0.00**	**62,114.51**
I-64	2651+00.00	2653+14.65	214.65	-	214.18	95.64				4,868.05
I-64	2695+47.76	2697+64.77	217.01	-	191.41	217.56				
I-64 RAMP C	352+38.00	374+53.00	2215	-	1,832.08	2,148.52				
I-64 RAMP C -SUBSTAGE 1	371+41.96	375+49.51	407.55	-		312.75		49		
IL 127 - SUBSTAGE 1	58+02.84	60+56.28	253.44	-		514.88				
I-64 RAMP C - SUBSTAGE 2	371+41.96	375+51.81	409.85	-	505.16	203.56				
IL 127 - SUBSTAGE 2	58+07.04	60+56.31	249.27	-	104.79	247.94				
I-64 RAMP D	469+90.00	497+70.00	2780	-	2,467.95	2,568.76				
I-64	2390+68.00	2911+58.00	52090	OUTSIDE LANE LINE	53,185.00					26592.5
I-64	2396+11.00	2929+03.00	53292	TCB LANE LINE		53,370.00				26685
I-64	2396+13.00	2913+81.00	51768	OUTSIDE LANE LINE						26,200.00
I-64	2397+03.00	2903+76.00	50673	OUTSIDE LANE LINE	50,855.00					25,427.50
I-64	2398+38.00	2400+00.00	162	CROSSOVER 1						75.00
I-64	2398+38.00	2404+95.00	657	CROSSOVER 1		670.00				335.00
I-64	2401+08.00	2404+95.00	387	CROSSOVER 1		370.00				185.00
I-64	2403+59.00	2404+95.00	136	CROSSOVER 1						80.00
I-64	2404+95.00	2904+80.00	49965	OUTSIDE LANE LINE						25,750.00
I-64	2404+95.00	2904+80.00	49985	TCB LANE LINE		50,840.00				25,420.00
I-64	2625+08.00	2638+50.00	1342	CROSSOVER 2	1,350.00					675.00
I-64	2625+21.00	2626+56.00	135	CROSSOVER 2			150.00			75.00
I-64	2626+56.00	2637+75.00	1119	CROSSOVER 2		1,130.00				565.00
I-64	2637+75.00	2651+00.00	1325	CROSSOVER 2 TO RAMP C	1,330.00					665.00
I-64	2638+50.00	2651+00.00	1250	CROSSOVER 2 TO RAMP C		1,260.00				630.00
I-64	2697+75.00	2706+98.00	923	RAMP D TO CROSSOVER 3		925.00				462.50
I-64	2697+75.00	2707+47.00	972	RAMP D TO CROSSOVER 3	980.00					490.00
I-64	2706+98.00	2713+16.00	618	CROSSOVER 3	580.00					290.00
I-64	2707+47.00	2709+32.00	185	CROSSOVER 3						95.00
I-64	2707+47.00	2714+76.00	729	CROSSOVER 3		780.00				390.00
I-64	2713+15.00	2714+77.00	162	CROSSOVER 3			160.00			80.00
I-64	2904+60.00	2911+58.00	698	CROSSOVER 4	705.00					352.50
I-64	2904+60.00	2906+34.00	174	CROSSOVER 4						90.00
I-64	2904+80.00	2912+40.00	760	CROSSOVER 4		772.00				386.00
I-64	2909+78.00	2911+43.00	165	CROSSOVER 4						85.00
I-64	2396+27.00	2913+81.00	51754	-						
STAGE 2A					**114,300.57**	**116,426.61**	**310.00**	**49.00**	**0.00**	**166,949.05**
I-64	2651+00.00	2653+13.86	213.86	-	213.80	213.80				5,082.04
I-64	2695+48.17	2879+75.00	1573.17	-		227.54				
I-64 RAMP C	351+61.00	375+07.00	2346	-	2,194.86	2,244.62		97.00	28.00	
I-64 RAMP D	469+83.00	499+42.00	2959	-	2,562.71	2,468.09				
I-64	2625+08.00	2638+50.00	1342	CROSSOVER 2 - STAGE 2A						675.00
I-64	2625+21.00	2636+71.00	1159	CROSSOVER 2		1,160.00				580.00
I-64	2625+21.00	2626+60.00	139	CROSSOVER 2			140.00			70.00
I-64	2626+56.00	2637+75.00	1119	CROSSOVER 2 - STAGE 2A						565.00
I-64	2626+61.00	2636+62.00	1001	CROSSOVER 2	1,010.00					505.00
I-64	2634+66.00	2635+52.00	86	CROSSOVER 2						45.00
I-64	2636+60.00	2652+03.00	1543	CROSSOVER 2 TO RAMP C	1,550.00					775.00
I-64	2636+68.00	2652+03.00	1535	CROSSOVER 2 TO RAMP C		1,560.00				780.00
I-64	2699+50.00	2707+76.00	826	RAMP D TO CROSSOVER 3	825.00					412.50
I-64	2699+50.00	2707+76.00	826	RAMP D TO CROSSOVER 3		825.00				412.50
I-64	2706+98.00	2713+16.00	618	CROSSOVER 3 - STAGE 2A						290.00
I-64	2707+47.00	2714+76.00	729	CROSSOVER 3 - STAGE 2A						390.00
I-64	2707+76.00	2712+56.00	480	CROSSOVER 3		480.00				240.00
I-64	2707+76.00	2713+99.00	623	CROSSOVER 3	630.00					315.00
I-64	2709+52.00	2710+15.00	63	CROSSOVER 3						40.00
I-64	2712+56.00	2713+98.00	142	CROSSOVER 3			140			70.00
I-64	2712+56.00	2713+98.00	142	CROSSOVER 3						
STAGE 2B					**9,213.91**	**9,179.05**	**280.00**	**97.00**	**28.00**	**11,247.04**

1

TEMPORARY PAVEMENT MARKING SCHEDULE CONTINUED

LOCATION					TEMPORARY PAVEMENT MARKING - LINE 6" - PAINT (SOLID WHITE)	TEMPORARY PAVEMENT MARKING - LINE 6" - PAINT (SOLID YELLOW)	TEMPORARY PAVEMENT MARKING - LINE 8" - PAINT (WHITE SKIP-DASH 9/3)	TEMPORARY PAVEMENT MARKING - LINE 24" - PAINT	TEMPORARY PAVEMENT MARKING LETTERS AND SYMBOLS - PAINT	PAVEMENT MARKING REMOVAL - GRINDING
ROADWAY	STA	STA	LENGTH	REMARKS	FOOT	FOOT	FOOT	FOOT	SQ FT	SF
I-64	2690+23.32	2691+50.00	126.68	-	126.73	111.29				4,530.17
I-64 RAMP A	141+20.00	166+63.00	2543	-	2,553.93	2,099.03				1,276.97
I-64 RAMP B	268+67.00	291+45.00	2278	-	2,032.83	2,185.82		53.00		1,016.42
I-64	2380+69.00	2913+60.00	53291	TCB LANE LINE		53,315.00				26,657.50
I-64	2397+33.00	2904+85.00	50752	TCB LANE LINE		50,780.00				25,390.00
I-64	2397+33.00	2903+79.00	50646	OUTSIDE LANE LINE	50,650.00					25,325.00
I-64	2397+25.00	2912+47.00	51522	OUTSIDE LANE LINE	51,520.00					25,760.00
I-64	2397+87.00	2399+75.00	188	CROSSOVER 1						95.00
I-64	2397+87.00	2404+55.00	668	CROSSOVER 1		750.00				375.00
I-64	2398+38.00	2404+95.00	657	CROSSOVER 1 - STAGE 2A						335.00
I-64	2401+07.00	2404+30.00	323	CROSSOVER 1		330.00				165.00
I-64	2401+08.00	2404+95.00	387	CROSSOVER 1 - STAGE 2A						185.00
I-64	2401+08.00	2404+55.00	347	CROSSOVER 1						165.00
I-64	2403+41.00	2404+39.00	98	CROSSOVER 1						60.00
I-64	2625+21.00	2636+71.00	1150	CROSSOVER 2 - STAGE 2B						580.00
I-64	2625+79.00	2638+68.00	1289	CROSSOVER 2		1,290.00				645.00
I-64	2625+79.00	2628+69.00	290	CROSSOVER 2			260.00			130.00
I-64	2626+61.00	2636+62.00	1001	CROSSOVER 2 - STAGE 2B						505.00
I-64	2628+69.00	2637+70.00	901	CROSSOVER 2	910.00					455.00
I-64	2637+70.00	2647+34.00	964	CROSSOVER 2 TO RAMP A	960.00					480.00
I-64	2638+68.00	2647+34.00	866	CROSSOVER 2 TO RAMP A		870.00				435.00
I-64	2691+50.00	2707+97.00	1647	RAMP B TO CROSSOVER 2	1,650.00					825.00
I-64	2691+50.00	2707+97.00	1647	RAMP B TO CROSSOVER 3		1,650.00				825.00
I-64	2707+76.00	2712+56.00	480	CROSSOVER 3 - STAGE 2B						240.00
I-64	2707+76.00	2713+99.00	623	CROSSOVER 3 - STAGE 2B						315.00
I-64	2707+97.00	2709+64.00	167	CROSSOVER 3						85.00
I-64	2707+97.00	2712+20.00	423	CROSSOVER 3		430.00				215.00
I-64	2707+97.00	2713+58.00	561	CROSSOVER 3	580.00					290.00
I-64	2712+20.00	2713+58.00	138	CROSSOVER 3			160.00			80.00
I-64	2904+21.00	2908+68.00	447	CROSSOVER 4		450.00				225.00
I-64	2904+60.00	2911+58.00	698	CROSSOVER 4 - STAGE 2A						352.00
I-64	2904+70.00	2906+18.00	148	CROSSOVER 4						75.00
I-64	2904+80.00	2912+40.00	760	CROSSOVER 4 - STAGE 2A						386.00
I-64	2904+85.00	2911+44.00	659	CROSSOVER 4		660.00				330.00
I-64	2909+84.00	2911+44.00	160	CROSSOVER 4						80.00
I-64	2396+55.00	2913+46.00	51691							
STAGE 3A					**110,983.49**	**114,921.14**	**420.00**	**53.00**	**0.00**	**118,889.05**
I-64	2690+23.37	2692+00.00	176.63	-	137.51	153.32				4,667.40
I-64 RAMP A	141+10.00	165+02.00	2392	-	2,376.40	2,562.02				1,188.20
I-64 RAMP B	268+25.00	291+60.00	2335	-	2,153.66	2,117.50				1,076.83
I-64	2625+79.00	2638+68.00	1289	CROSSOVER 2 - STAGE 3A						645.00
I-64	2627+28.00	2639+11.00	1183	CROSSOVER 2	1,100.00					550.00
I-64	2627+28.00	2629+62.00	234	CROSSOVER 2			250.00			125.00
I-64	2628+69.00	2637+70.00	901	CROSSOVER 2 - STAGE 3A						455.00
I-64	2629+46.00	2638+19.00	873	CROSSOVER 2		880.00				440.00
I-64	2635+74.00	2636+48.00	74	CROSSOVER 2						40.00
I-64	2638+19.00	2647+33.00	914	CROSSOVER 2 TO RAMP A	900.00					450.00
I-64	2638+19.00	2647+33.00	914	CROSSOVER 2 TO RAMP A		900.00				450.00
I-64	2691+50.00	2708+61.00	1711	RAMP B TO CROSSOVER 3	1,710.00					855.00
I-64	2691+50.00	2708+64.00	1714	RAMP B TO CROSSOVER 3		1,710.00				855.00
I-64	2707+97.00	2712+20.00	423	CROSSOVER 3 - STAGE 3A						215.00
I-64	2707+97.00	2713+58.00	561	CROSSOVER 3 -STAGE 3A						290.00
I-64	2708+61.00	2713+56.00	495	CROSSOVER 3	520.00					260.00
I-64	2708+61.00	2712+45.00	384	CROSSOVER 3		400.00				200.00
I-64	2709+95.00	2710+50.00	55	CROSSOVER 3						30.00
I-64	2712+43.00	2713+62.00	119	CROSSOVER 3			160.00			80.00
STAGE 3B					**8,897.57**	**8,722.84**	**410.00**	**0.00**	**0.00**	**12,872.43**
SUBTOTALS					**260,145.36**	**465,332.59**	**1,420.00**	**199.00**	**28.00**	**440,165.73**
					725,477.95					
USE					**726,478**		**1,420**	**199**	**28**	**440,166**

NOTE: CONTRACTOR WILL NOT BE COMPENSATED FOR WATER BLASTING ANY TEMPORARY PAVEMENT MARKING THAT WAS PLACED PER THE STANDARDS REFERENCED IN THE MOT PLANS.

1

PAVEMENT MARKING SCHEDULE

LOCATION			PREFORMED PLASTIC PAVEMENT MARKING, TYPE D - STANDARD - LETTERS AND SYMBOLS	PREFORMED PLASTIC PAVEMENT MARKING, TYPE D - STANDARD - LINE 6"	PREFORMED PLASTIC PAVEMENT MARKING, TYPE D - STANDARD - LINE 8"	PREFORMED PLASTIC PAVEMENT MARKING, TYPE D - STANDARD - LINE 12"	PREFORMED PLASTIC PAVEMENT MARKING, TYPE D - STANDARD - LINE 24"	GROOVING FOR RECESSED PAVEMENT MARKING, LETTERS AND SYMBOLS	GROOVING FOR RECESSED PAVEMENT MARKING 7"	GROOVING FOR RECESSED PAVEMENT MARKING 9"	GROOVING FOR RECESSED PAVEMENT MARKING 13"	GROOVING FOR RECESSED PAVEMENT MARKING 25"	RAISED REFLECTIVE PAVEMENT MARKER	RAISED REFLECTIVE PAVEMENT MARKER REMOVAL
ROADWAY	STATION	REMARKS	SQ FT	FOOT	FOOT	FOOT	FOOT	SQ FT	FOOT	FOOT	FOOT	FOOT	EACH	EACH
I-64 EB	2380+69.00 TO 2933+00.00	MAINLINE		122391.05	829.00				122391.05	829.00			702.00	677.00
I-64 WB	2397+02.00 TO 2933+00.00	MAINLINE		122512.29	810.00				122512.29	810.00			699.00	676.00
I-64	141+18.00 TO 164+66.00	RAMP A		3813.71	423.05				3813.71	423.05				
I-64	269+58.00 TO 291+48.00	RAMP B		4426.90	435.71		51.46		4426.90	435.71		51.46	62.00	10.00
I-64	352+94.00 TO 375+26.00	RAMP C	144.00	3745.83	457.23	220.00	68.00	144.00	3745.83	457.23	220.00	68.00	59.00	10.00
I-64	368+97.00 TO 372+68.00	RAMP C RT TURN												
I-64	469+90.00 TO 495+94.00	RAMP D		4066.17	422.09				4066.17	422.09				
SUBTOTALS			**144.00**	**260,955.95**	**3,377.08**	**220.00**	**119.46**	**144.00**	**260,955.95**	**3,377.08**	**220.00**	**119.46**	**1,522.00**	**1,373.00**
USE			**144**	**260,956**	**3,378**	**220**	**120**	**144**	**260,956**	**3,378**	**220**	**120**	**1,522**	**1,373**

NOTE: SEE ROADWAY PLANS FOR BRIDGE LOCATION OMISSIONS AND STATION EQUATIONS.

MODEL: Temporary Pavement Marking Schedule 1 [SHEET]
FILE NAME: D876M95_sht_schedules.dgn

d'Escoto, Inc.
55 W Van Buren St, Ste 200
Chicago, IL 60605
TEL: 312.787.0707 FAX: 312.787.7322
www.descotoinc.com
IL Professional Engineering Design Firm No. 184001609-0002

Copyright © 2026

USER NAME = mgesior	DESIGNED - MEG	REVISED - 1 6/01/2026-ADDENDUM 1	
	DRAWN - MEG	REVISED -	
	CHECKED - MTV	REVISED -	
PLOT DATE = 6/4/2026	DATE - 6/1/2026	REVISED -	

STATE OF ILLINOIS
DEPARTMENT OF TRANSPORTATION

TEMPORARY AND PERMANENT PAVEMENT MARKING SCHEDULE
I-64

SCALE: SHEET 1 OF 1 SHEETS STA. TO STA.

F.A.I RTE.	SECTION	COUNTY	TOTAL SHEETS	SHEET NO.
64	95-(3,4)RS-2	WASHINGTON	775	23
		CONTRACT NO. 76M95		
	ILLINOIS	FED. AID PROJECT		

PATCHING SCHEDULE

Patch #	Ramp	Station	Length	Width	CLASS A PATCHES, 15 INCH TYPE IV (1)	CLASS B PATCHES, 12 INCH Type II	Type III	Type IV	EXPANSION JOINT (SPECIAL)	PATCHING REINFORCEMENT	DOWEL BARS, 1-1/2"	WELDED WIRE REINFORCEMENT	SAWCUTS	TIE BARS 3/4"
			FOOT	FOOT	SQ YD	SQ YD	SQ YD	SQ YD	FOOT	SQ YD	SQ YD	SQ YD	FOOT	EACH
1	A	147+59	12	16			21.3				28		84	
2	A	148+59	15	16				26.7 (1)			28	26.7	93	
3	A	149+69	6	16		10.7					28		66	
4	A	151+52	12	16			21.3				28		84	
5	A	153+49	15	16				26.7			28	26.7	93	
6	B	275+84	6	16		10.7					28		66	
7	B	276+54	18	16				32.0			28	32.0	102	
8	B	278+15	6	16		10.7					28		66	
9	B	280+29	6	16		10.7					28		66	
10	B	284+74	15	16				26.7			28	26.7	93	
11	C	360+13	10	16			17.8				28		78	
12	C	364+03	15	16				26.7			28	26.7	93	
13	C	367+03	20	16				35.6			28	35.6	108	7
14	D	476+16	20	16				35.6			28	35.6	108	7
15	D	476+86	6	16		10.7					28		66	
16	D	477+16	6	16		10.7					28		66	
17	D	483+96	10	16			17.8				28		78	
18	EB	CH-27	280	44	1368.9				38.0	1,368.9			560.0	280.0
19	EB	IL-127	280	44	1368.9				38.0	1,368.9			560.0	280.0
20	WB	CH-27	300	44	1466.7				38.0	1,466.7			632.0	316.0
21	WB	IL-127	300	44	1466.7				38.0	1,466.7			626.0	313.0
				SUBTOTAL	5671.1	64.2	78.2	209.8	152.0	5671.1	476.0	209.8	3788.0	1203.0
				25% Contingency	1417.8	16.1	19.6	52.4	38.0	1417.8	119.0	52.4	947.0	300.8
				USE	7089	81	98	263	190	7089	595	263	4735	1504 (1)

GUARDRAIL SCHEDULE

STRUCTURE NUMBER	EB/WB	LT/RT	Stepped Parapet	REMARKS	AGGREGATE SHOULDER, TYPE B 6"	STEEL PLATE BEAM GUARDRAIL, TYPE A, 6 FOOT POSTS	TRAFFIC BARRIER TERMINAL, TYPE 1 (SPECIAL) TANGENT	TRAFFIC BARRIER TERMINAL, TYPE 1 (SPECIAL) FLARED	TRAFFIC BARRIER TERMINAL, TYPE 6	CONCRETE STRUCTURES	REINFORCEMENT BARS, EPOXY COATED	TERMINAL MARKER - DIRECT APPLIED	GUARDRAIL REFLECTORS, TYPE B	GUARDRAIL REMOVAL
					SQ YD	FOOT	EACH	EACH	EACH	CU YD	POUND	EACH	EACH	FOOT
095-0046	EB	RT	Y	PER STANDARDS 635001 & 782006	151.11	340	1		1	0.31	29	1	4	340
095-0046	EB	LT	Y	PER STANDARDS 635001 & 782006	151.11	340		1	1	0.31	29	1	4	340
095-0047	WB	RT	Y	PER STANDARDS 635001 & 782006	133.33	300		1	1	0.31	29		4	300
095-0047	WB	LT	Y	PER STANDARDS 635001 & 782006	142.22	320	1		1	0.31	29	1	4	320
095-0048	EB	RT	Y	PER STANDARDS 635001 & 782006	151.56	341	1		1	0.31	29	1	4	341
095-0048	EB	LT	Y	PER STANDARDS 635001 & 782006	156.44	352	1		1	0.31	29	1	4	352
095-0049	WB	RT	Y	PER STANDARDS 635001 & 782006	173.78	391	1		1	0.31	29	1	4	391
095-0049	WB	LT	Y	PER STANDARDS 635001 & 782006	140.89	317	1		1	0.31	29	1	4	317
095-0050	EB	RT		PER STANDARDS 635001 & 782006	143.56	323	1		1			1	4	323
095-0050	EB	LT		PER STANDARDS 635001 & 782006	165.78	373	1		1			1	4	373
095-0051	WB	RT		PER STANDARDS 635001 & 782006	159.56	359	1		1			1	4	359
095-0051	WB	LT		PER STANDARDS 635001 & 782006	148.89	335	1		1			1	4	335
095-0053	EB	RT		PER STANDARDS 635001 & 782006	52.00	117	1		1			1	3	117
095-0053	EB	LT		PER STANDARDS 635001 & 782006	79.11	178		1	1				3	178
095-0054	WB	RT		PER STANDARDS 635001 & 782006	79.11	178		1	1				3	178
095-0054	WB	LT		PER STANDARDS 635001 & 782006	48.89	110	1		1			1	3	110
095-0055	EB	RT		PER STANDARDS 635001 & 782006	51.56	116	1		1			1	3	116
095-0055	EB	LT		PER STANDARDS 635001 & 782006	79.11	178		1	1				3	178
095-0056	WB	RT		PER STANDARDS 635001 & 782006	148.89	335	1		1			1	4	335
095-0056	WB	LT		PER STANDARDS 635001 & 782006	51.56	116	1		1			1	3	116
095-0057	EB	RT		PER STANDARDS 635001 & 782006	114.22	257	1		1			1	3	257
095-0057	EB	LT		PER STANDARDS 635001 & 782006	148.00	333	1		1			1	4	333
095-0058	WB	RT		PER STANDARDS 635001 & 782006	162.22	365	1		1			1	4	365
095-0058	WB	LT		PER STANDARDS 635001 & 782006	136.89	308	1		1			1	4	308
SUBTOTAL					**2832.89**	**6374**	**18**	**5**	**23**	**2.48**	**232**	**19**	**84**	**6374**
USE					**2833**	**6374**	**18**	**5**	**23**	**3**	**232**	**19**	**84**	**6374**

MODEL: Guardrail Schedule 1 [SHEET]
FILE NAME: D876M95_sht_schedules.dgn

d'Escoto, Inc.
55 W Van Buren St, Ste 200
Chicago, IL 60605
TEL: 312.787.0707 FAX: 312.787.7322
www.descotoinc.com
IL Professional Engineering Design Firm No. 184001629-0002

Copyright © 2026

USER NAME = mgesior	DESIGNED - MEG	REVISED - (1) 6/01/2026-ADDENDUM 1	
	DRAWN - MEG	REVISED -	
	CHECKED - MTV	REVISED -	
PLOT DATE = 6/2/2026	DATE - 6/1/2026	REVISED -	

STATE OF ILLINOIS
DEPARTMENT OF TRANSPORTATION

PATCHING AND GUARDRAIL SCHEDULE
I-64

SCALE: SHEET 1 OF 1 SHEETS STA. TO STA.

F.A.I RTE.	SECTION	COUNTY	TOTAL SHEETS	SHEET NO.
64	95-(3,4)RS-2	WASHINGTON	775	24

CONTRACT NO. 76M95

ILLINOIS | FED. AID PROJECT

EX ℄ I-64

PR WB ℄ I-64

PR EB ℄ I-64

N

0 50 100

SCALE IN FEET

EX ℄ IL 127

REMOVAL SHEET - RAMP B
FOR ADDITIONAL DETAILS

BEGIN HMA SURFACE
REMOVAL STA 143+07.49

1

EX ℄ RAMP A

MATCHLINE STA 155+00

REMOVAL LEGEND

ROADWAY - HOT-MIX ASPHALT SURFACE REMOVAL, 3 1/4"

SHOULDER - HOT-MIX ASPHALT SURFACE REMOVAL, 3 1/4"

SHOULDER - PAVED SHOULDER REMOVAL

ROADWAY - PAVEMENT REMOVAL

AGGREGATE SHOULDER REMOVAL

NOTE: SEE "REMOVAL SHEETS - MAINLINE"
FOR I-64 REMOVAL DETAILS

MODEL: Ramp A [Sheet]
FILE NAME: c:\pwworkingdir\des-pw-01\sean maxwell\dms02488\D876M95_sht_Rem_QEI.dgn

QUIGG ENGINEERING INC

USER NAME = SMaxwell	DESIGNED - TNS	REVISED - 1 6/01/2026-ADDENDUM 1	
	DRAWN - TNS	REVISED -	
	CHECKED - SDM	REVISED -	
PLOT DATE = 6/3/2026	DATE - 6/1/2026	REVISED -	

STATE OF ILLINOIS
DEPARTMENT OF TRANSPORTATION

REMOVAL PLANS - RAMP A
I-64

SCALE: 1"=50' | SHEET 1 OF 8 SHEETS | STA. 140+00.00 TO STA. 155+00.00

F.A.I. RTE.	SECTION	COUNTY	TOTAL SHEETS	SHEET NO.
64	95-(3,4)RS-2	WASHINGTON	775	81

CONTRACT NO. 76M95

ILLINOIS | FED. AID PROJECT

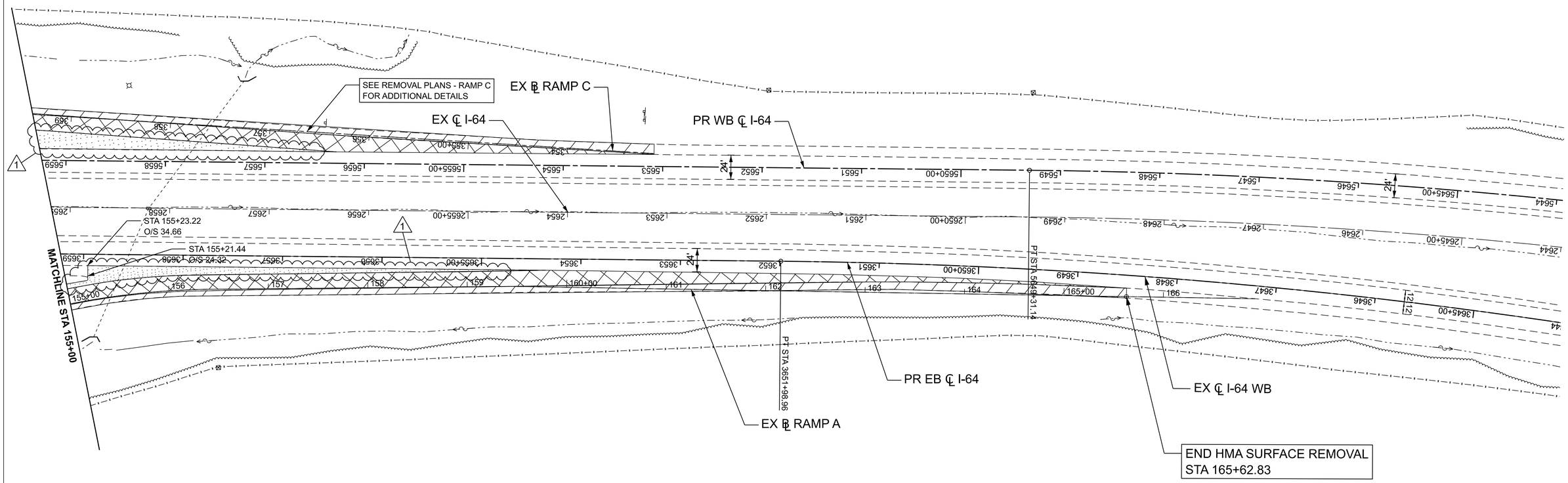

REMOVAL LEGEND

- ROADWAY - HOT-MIX ASPHALT SURFACE REMOVAL, 3 1/4"
- SHOULDER - HOT-MIX ASPHALT SURFACE REMOVAL, 3 1/4"
- SHOULDER - PAVED SHOULDER REMOVAL
- ROADWAY - PAVEMENT REMOVAL
- AGGREGATE SHOULDER REMOVAL

NOTE: SEE "REMOVAL SHEETS - MAINLINE"
FOR I-64 REMOVAL DETAILS

MODEL: Ramp A-1 [Sheet]
FILE NAME: c:\pwworkingdir\des-pw-01\sean maxwell\dms02488\D876M95_sht_Rem_QEI.dgn

QUIGG ENGINEERING INC

USER NAME = SMaxwell	DESIGNED - TNS	REVISED - 1 6/01/2026-ADDENDUM 1	
	DRAWN - TNS	REVISED -	
	CHECKED - SDM	REVISED -	
PLOT DATE = 6/3/2026	DATE - 6/1/2026	REVISED -	

STATE OF ILLINOIS
DEPARTMENT OF TRANSPORTATION

REMOVAL PLANS - RAMP A
I-64

SCALE: 1"=50' | SHEET 2 OF 8 SHEETS | STA. 155+00.00 TO STA. 170+00.00

F.A.I. RTE.	SECTION	COUNTY	TOTAL SHEETS	SHEET NO.
64	95-(3,4)RS-2	WASHINGTON	775	82
		CONTRACT NO. 76M95		
		ILLINOIS	FED. AID PROJECT	

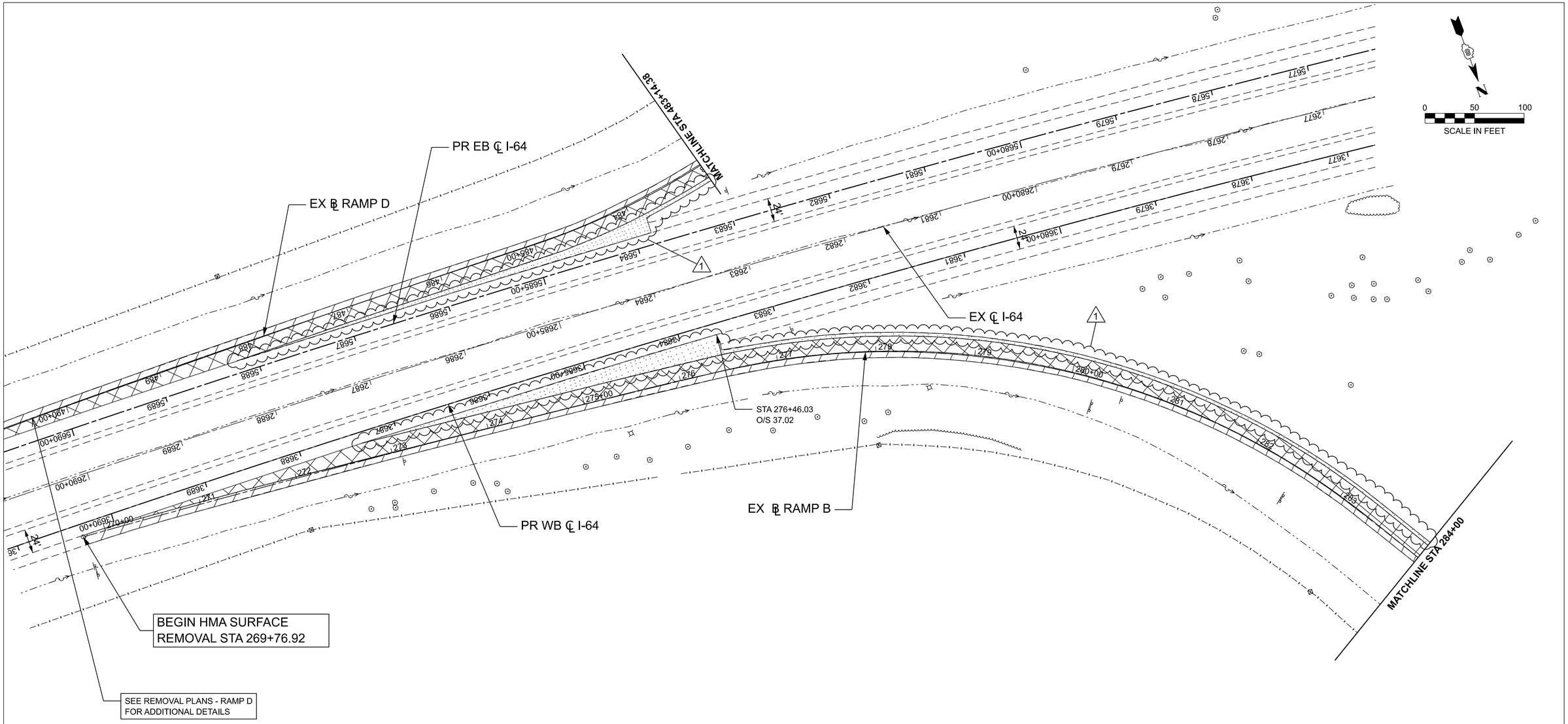

REMOVAL LEGEND

- ROADWAY - HOT-MIX ASPHALT SURFACE REMOVAL, 3 1/4"
- SHOULDER - HOT-MIX ASPHALT SURFACE REMOVAL, 3 1/4"
- SHOULDER - PAVED SHOULDER REMOVAL
- ROADWAY - PAVEMENT REMOVAL
- AGGREGATE SHOULDER REMOVAL

NOTE: SEE "REMOVAL SHEETS - MAINLINE"
FOR I-64 REMOVAL DETAILS

MODEL: RAMPB [Sheet]
FILE NAME: c:\pwworking\dir\des-pw-01\sean maxwell\dms02488\D876M95_sht_Rem_QEI.dgn

QUIGG ENGINEERING INC

USER NAME = SMaxwell	DESIGNED - TNS	REVISED - 1 6/01/2026-ADDENDUM 1	
	DRAWN - TNS	REVISED -	
	CHECKED - SDM	REVISED -	
PLOT DATE = 6/3/2026	DATE - 6/1/2026	REVISED -	

STATE OF ILLINOIS
DEPARTMENT OF TRANSPORTATION

REMOVAL PLANS - RAMP B
I-64

SCALE: 1"=50' | SHEET 3 OF 8 SHEETS | STA. 269+00.00 TO STA. 284+00.00

F.A.I. RTE.	SECTION	COUNTY	TOTAL SHEETS	SHEET NO.
64	95-(3,4)RS-2	WASHINGTON	775	83
		CONTRACT NO. 76M95		
		ILLINOIS	FED. AID PROJECT	

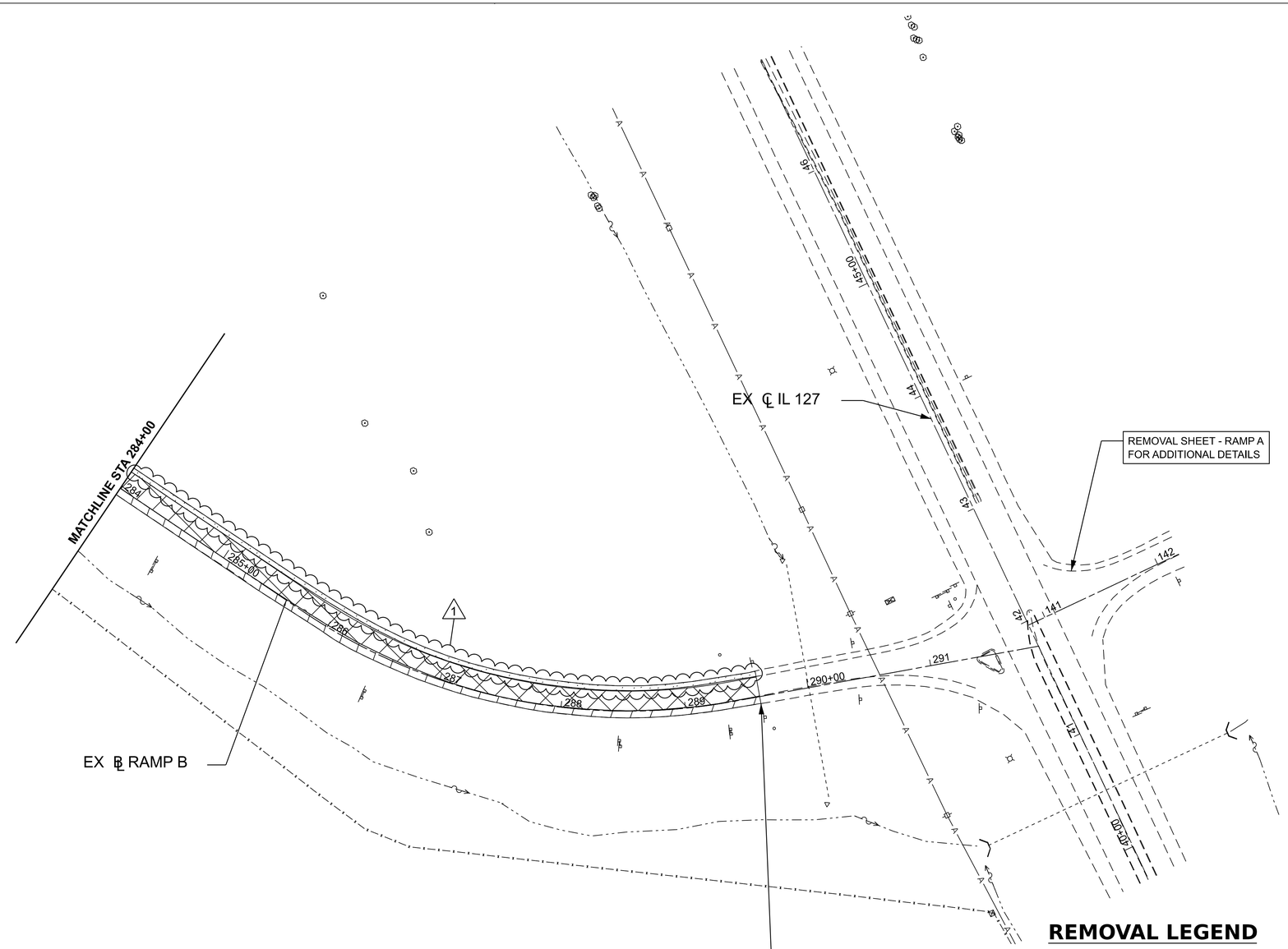

REMOVAL LEGEND

- ROADWAY - HOT-MIX ASPHALT SURFACE REMOVAL, 3 1/4"
- SHOULDER - HOT-MIX ASPHALT SURFACE REMOVAL, 3 1/4"
- SHOULDER - PAVED SHOULDER REMOVAL
- ROADWAY - PAVEMENT REMOVAL
- AGGREGATE SHOULDER REMOVAL

MODEL: RAMPB-1 [Sheet]
FILE NAME: c:\pwworkingdir\des-pw-01\sean.maxwell.dms02488\D876M95_sht_Rem_QEI.dgn

QUIGG ENGINEERING INC

USER NAME = SMaxwell	DESIGNED - TNS	REVISED - 1 6/01/2026-ADDENDUM 1	
	DRAWN - TNS	REVISED -	
	CHECKED - SDM	REVISED -	
PLOT DATE = 6/3/2026	DATE - 6/1/2026	REVISED -	

STATE OF ILLINOIS
DEPARTMENT OF TRANSPORTATION

REMOVAL PLANS - RAMP B
I-64

SCALE: 1"=50' | SHEET 4 OF 8 SHEETS | STA. 284+00.00 TO STA. 299+00.00

F.A.I. RTE.	SECTION	COUNTY	TOTAL SHEETS	SHEET NO.
64	95-(3,4)RS-2	WASHINGTON	775	84
		CONTRACT NO. 76M95		
		ILLINOIS	FED. AID PROJECT	

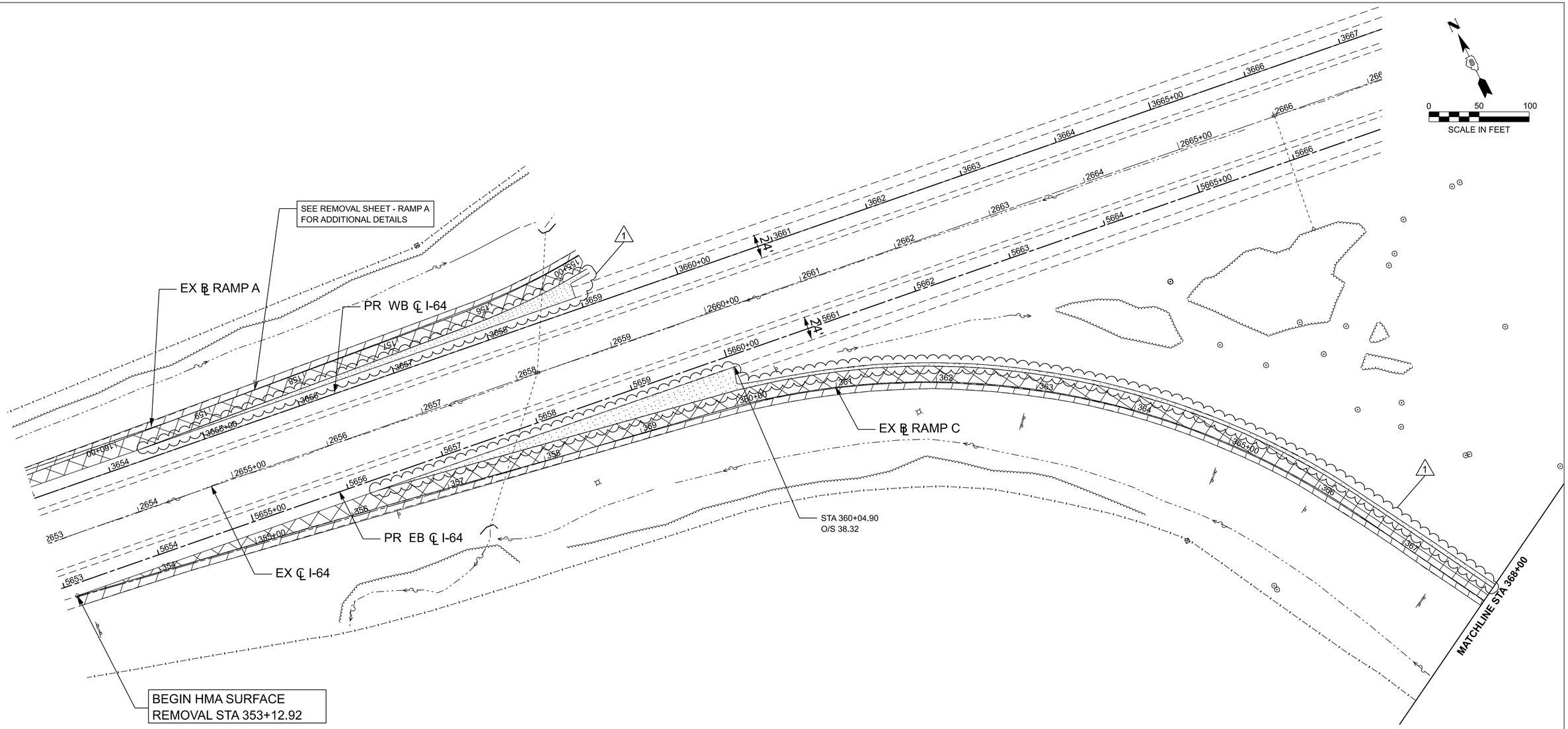

NOTE: SEE "REMOVAL SHEETS - MAINLINE"
FOR I-64 REMOVAL DETAILS

REMOVAL LEGEND

- ROADWAY - HOT-MIX ASPHALT SURFACE REMOVAL, 3 1/4"
- SHOULDER - HOT-MIX ASPHALT SURFACE REMOVAL, 3 1/4"
- SHOULDER - PAVED SHOULDER REMOVAL
- ROADWAY - PAVEMENT REMOVAL
- AGGREGATE SHOULDER REMOVAL

MODEL: RAMPC [Sheet]
FILE NAME: c:\pwworkingdir\des-pw-01\sean maxwell\dms02488\D876M95_sht_Rem_QEI.dgn

QUIGG ENGINEERING INC

USER NAME = SMaxwell	DESIGNED - TNS	REVISED - 1 6/01/2026-ADDENDUM 1	
	DRAWN - TNS	REVISED -	
	CHECKED - SDM	REVISED -	
PLOT DATE = 6/3/2026	DATE - 6/1/2026	REVISED -	

STATE OF ILLINOIS
DEPARTMENT OF TRANSPORTATION

REMOVAL PLANS - RAMP C
I-64

SCALE: 1"=50' | SHEET 5 OF 8 SHEETS | STA. 353+00.00 TO STA. 368+00.00

F.A.I. RTE.	SECTION	COUNTY	TOTAL SHEETS	SHEET NO.
64	95-(3,4)RS-2	WASHINGTON	775	85
		CONTRACT NO. 76M95		
		ILLINOIS	FED. AID PROJECT	

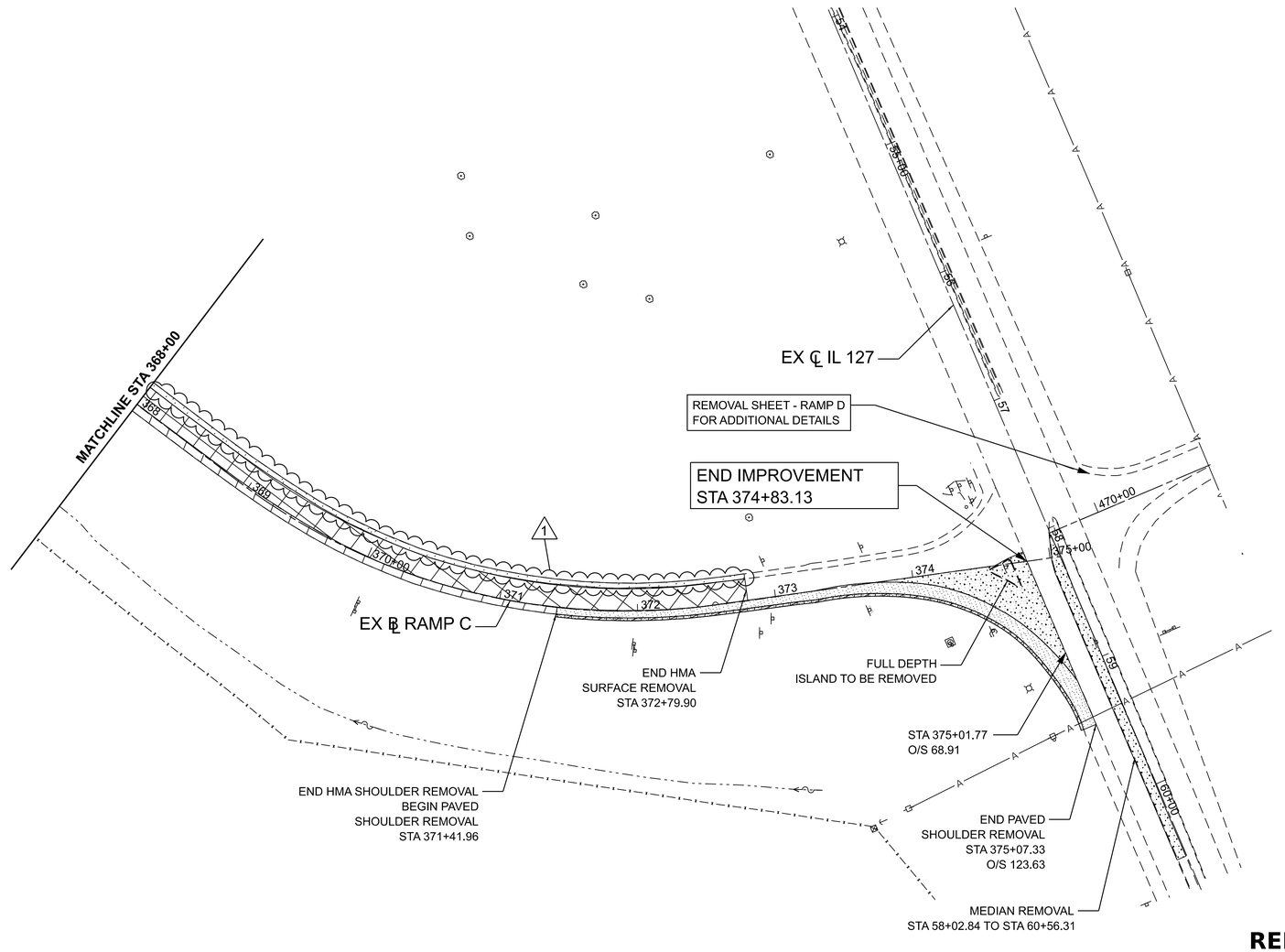

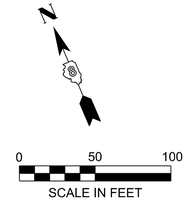

REMOVAL LEGEND

- ROADWAY - HOT-MIX ASPHALT SURFACE REMOVAL, 3 1/4"
- SHOULDER - HOT-MIX ASPHALT SURFACE REMOVAL, 3 1/4"
- SHOULDER - PAVED SHOULDER REMOVAL
- ROADWAY - PAVEMENT REMOVAL
- AGGREGATE SHOULDER REMOVAL

MODEL: RAMPC-1 [Sheet]
FILE NAME: c:\pwworkingdir\des-pw-01\sean maxwell\dms02248\D876M95_sht_Rem_QEI.dgn

QUIGG ENGINEERING INC

USER NAME = SMaxwell	DESIGNED - TNS	REVISED - 1 6/01/2026-ADDENDUM 1	
	DRAWN - TNS	REVISED -	
	CHECKED - SDM	REVISED -	
PLOT DATE = 6/3/2026	DATE - 6/1/2026	REVISED -	

STATE OF ILLINOIS
DEPARTMENT OF TRANSPORTATION

REMOVAL PLANS - RAMP C
I-64

SCALE: 1"=50' | SHEET 6 OF 8 SHEETS | STA. 368+00.00 TO STA. 383+00.00

F.A.I. RTE.	SECTION	COUNTY	TOTAL SHEETS	SHEET NO.
64	95-(3,4)RS-2	WASHINGTON	775	86
		CONTRACT NO. 76M95		
	ILLINOIS	FED. AID PROJECT		

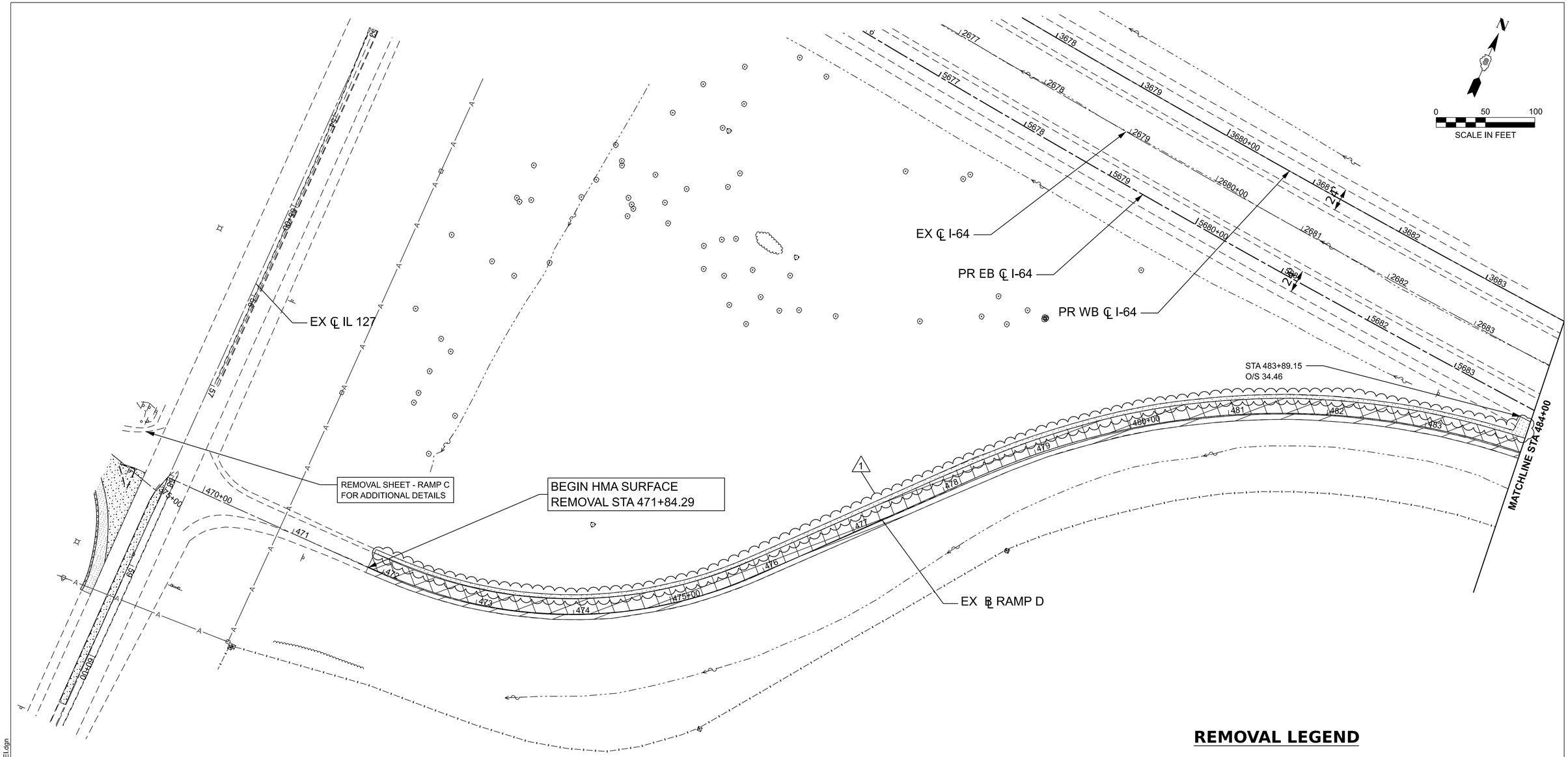

NOTE: SEE "REMOVAL SHEETS - MAINLINE"
FOR I-64 REMOVAL DETAILS

REMOVAL LEGEND

- ROADWAY - HOT-MIX ASPHALT SURFACE REMOVAL, 3 1/4"
- SHOULDER - HOT-MIX ASPHALT SURFACE REMOVAL, 3 1/4"
- SHOULDER - PAVED SHOULDER REMOVAL
- ROADWAY - PAVEMENT REMOVAL
- AGGREGATE SHOULDER REMOVAL

MODEL: RAMPD [Sheet]
FILE NAME: c:\pwworkingdir\des-pw-01\sean maxwell\dms02488\D876M95_sht_Rem_QEI.dgn

QUIGG ENGINEERING INC

USER NAME = SMaxwell	DESIGNED - TNS	REVISED - 1 6/01/2026-ADDENDUM 1	
	DRAWN - TNS	REVISED -	
	CHECKED - SDM	REVISED -	
PLOT DATE = 6/3/2026	DATE - 6/1/2026	REVISED -	

STATE OF ILLINOIS
DEPARTMENT OF TRANSPORTATION

REMOVAL PLANS - RAMP D
I-64

SCALE: 1"=50' | SHEET 7 OF 8 SHEETS | STA. 469+00.00 TO STA. 484+00.00

F.A.I. RTE.	SECTION	COUNTY	TOTAL SHEETS	SHEET NO.
64	95-(3,4)RS-2	WASHINGTON	775	87
		CONTRACT NO. 76M95		
		ILLINOIS	FED. AID PROJECT	

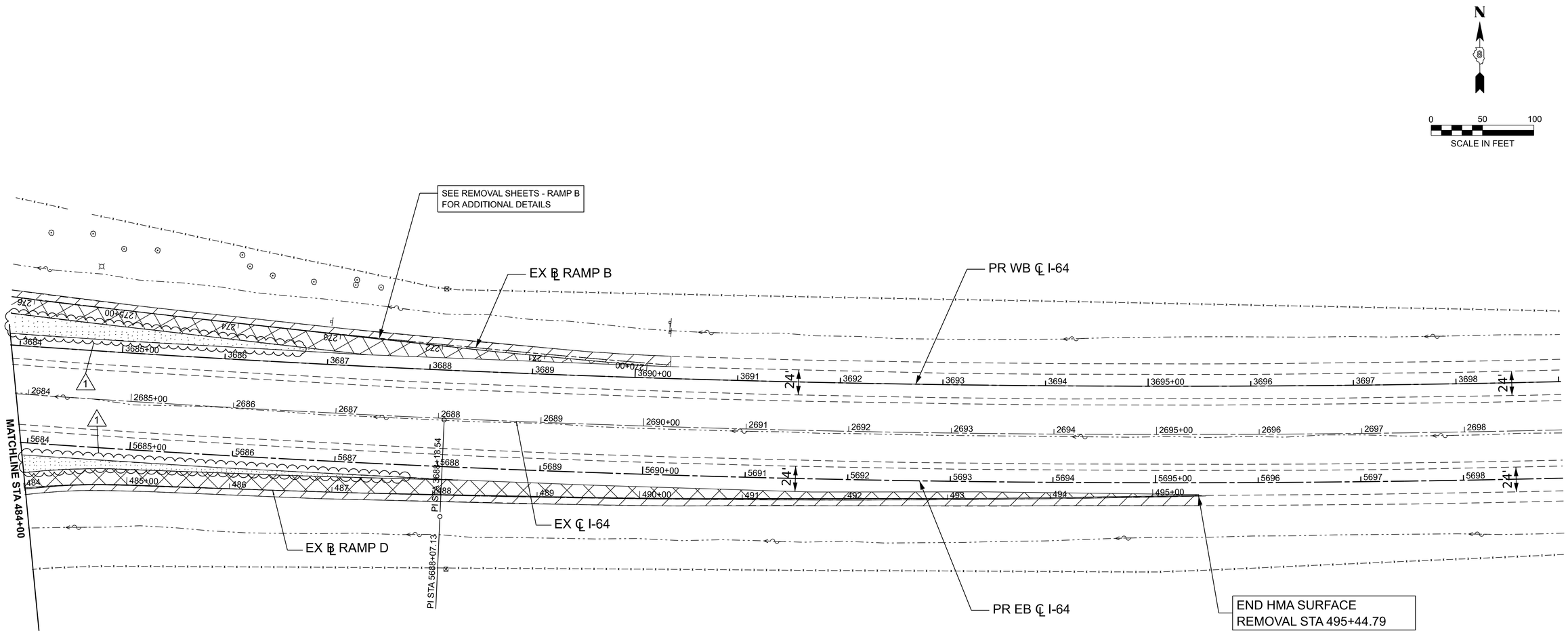

REMOVAL LEGEND

- ROADWAY - HOT-MIX ASPHALT SURFACE REMOVAL, 3 1/4"
- SHOULDER - HOT-MIX ASPHALT SURFACE REMOVAL, 3 1/4"
- SHOULDER - PAVED SHOULDER REMOVAL
- ROADWAY - PAVEMENT REMOVAL
- AGGREGATE SHOULDER REMOVAL

NOTE: SEE "REMOVAL SHEETS - MAINLINE"
FOR I-64 REMOVAL DETAILS

MODEL: RAMPD-1 [Sheet]
FILE NAME: c:\pwworkingdir\des-pw-01\sean maxwell\dms02488\D876M95_sht_Rem_QEI.dgn

QUIGG ENGINEERING INC

USER NAME = SMaxwell	DESIGNED - TNS	REVISED - 1 6/01/2026-ADDENDUM 1	
	DRAWN - TNS	REVISED -	
	CHECKED - SDM	REVISED -	
PLOT DATE = 5/6/2026	DATE - 6/1/2026	REVISED -	

STATE OF ILLINOIS
DEPARTMENT OF TRANSPORTATION

REMOVAL PLANS - RAMP D
I-64

SCALE: 1"=50' | SHEET 8 OF 8 SHEETS | STA. 484+00.00 TO STA. 499+00.00

F.A.I. RTE.	SECTION	COUNTY	TOTAL SHEETS	SHEET NO.
64	95-(3,4)RS-2	WASHINGTON	775	88
		CONTRACT NO. 76M95		
	ILLINOIS	FED. AID PROJECT		

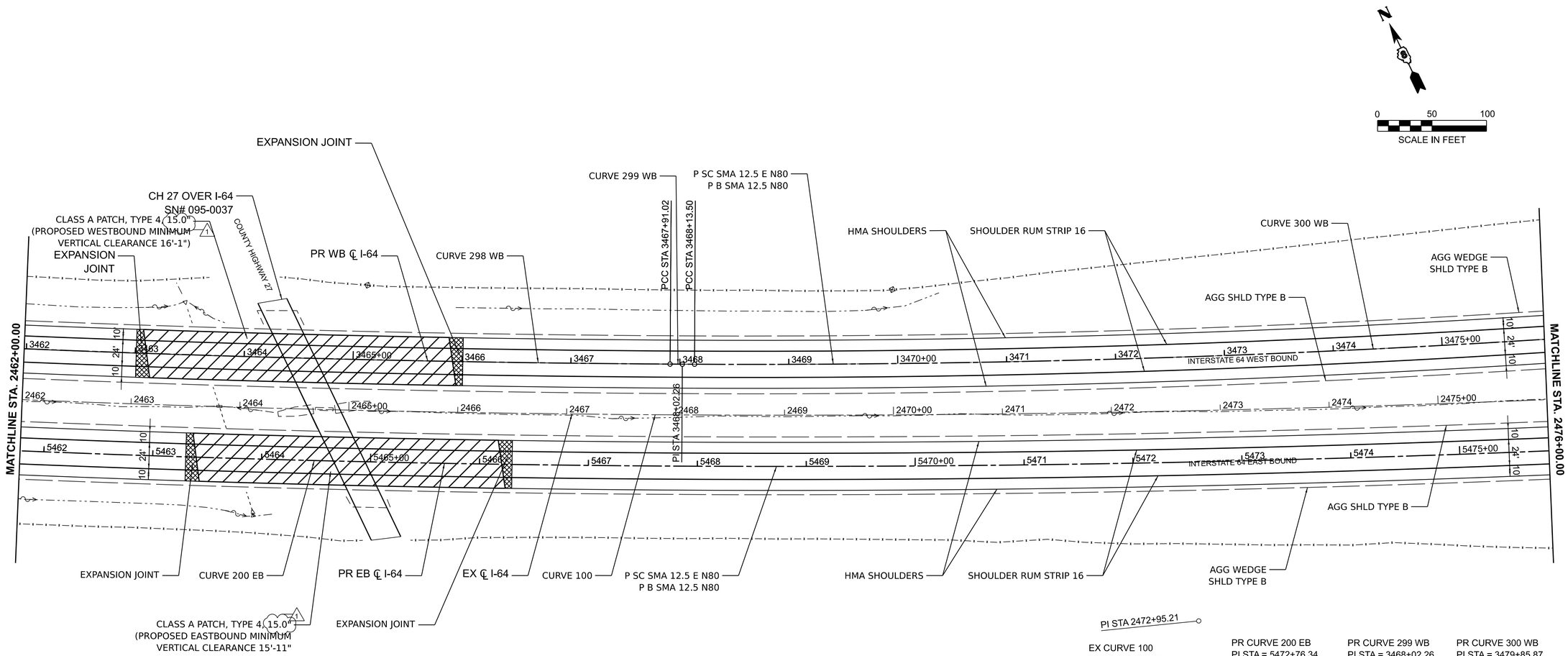

EX CURVE 100
PI STA = 2472+95.21
Δ = 17°05'21" (LT)
D = 00°20'00"
R = 17,186.55'
T = 2,582.22'
L = 5126.09'
E = 192.90'
e = N/A
PC STA = 2447+12.99
PT STA = 2498+39.08

PR CURVE 200 EB
PI STA = 5472+76.34
Δ = 17°05'21" (LT)
D = 00°19'57"
R = 17,233.55'
T = 2,589.28'
L = 5140.11'
E = 193.43'
e = 2.1%
TR = ____
SE RUN = ____
PC STA = 5446+87.06
PT STA = 5498+27.17

PR CURVE 299 WB
PI STA = 3468+02.26
Δ = 00°06'43" (LT)
D = 00°29'51"
R = 11,513.62'
T = 11.24'
L = 22.48'
E = 0.01'
e = VARIES
TR = ____
SE RUN = ____
PC STA = 3467+91.02
PT STA = 3468+13.50

PR CURVE 300 WB
PI STA = 3479+85.87
Δ = 11°37'41" (LT)
D = 00°29'51"
R = 11,513.62'
T = 1,172.37'
L = 2336.69'
E = 59.53'
e = 2.1%
TR = ____
SE RUN = ____
PC STA = 3468+13.50
PT STA = 3491+50.19

MODEL: I64CL - Plan 6 [Sheet]
FILE NAME: D876M95_sht_Pro.dgn

d'Escoto, Inc.
55 W Van Buren St, Ste 200
Chicago, IL 60605
TEL: 312.787.0707 FAX: 312.787.7322
www.descotoinc.com
IL Professional Engineering Design Firm No. 184001629-0002

Copyright © 2026

USER NAME = mgesior	DESIGNED - MEG	REVISED - 1 6/01/2026-ADDENDUM 1	
	DRAWN - MEG	REVISED -	
	CHECKED - MTV	REVISED -	
PLOT DATE = 6/2/2026	DATE - 6/1/2026	REVISED -	

STATE OF ILLINOIS
DEPARTMENT OF TRANSPORTATION

ROADWAY PLANS
I-64

SCALE: 1" = 50' | SHEET 6 OF 39 SHEETS | STA. | TO STA.

F.A.I RTE.	SECTION	COUNTY	TOTAL SHEETS	SHEET NO.
64	95-(3,4)RS-2	WASHINGTON	775	94

CONTRACT NO. 76M95

ILLINOIS | FED. AID PROJECT

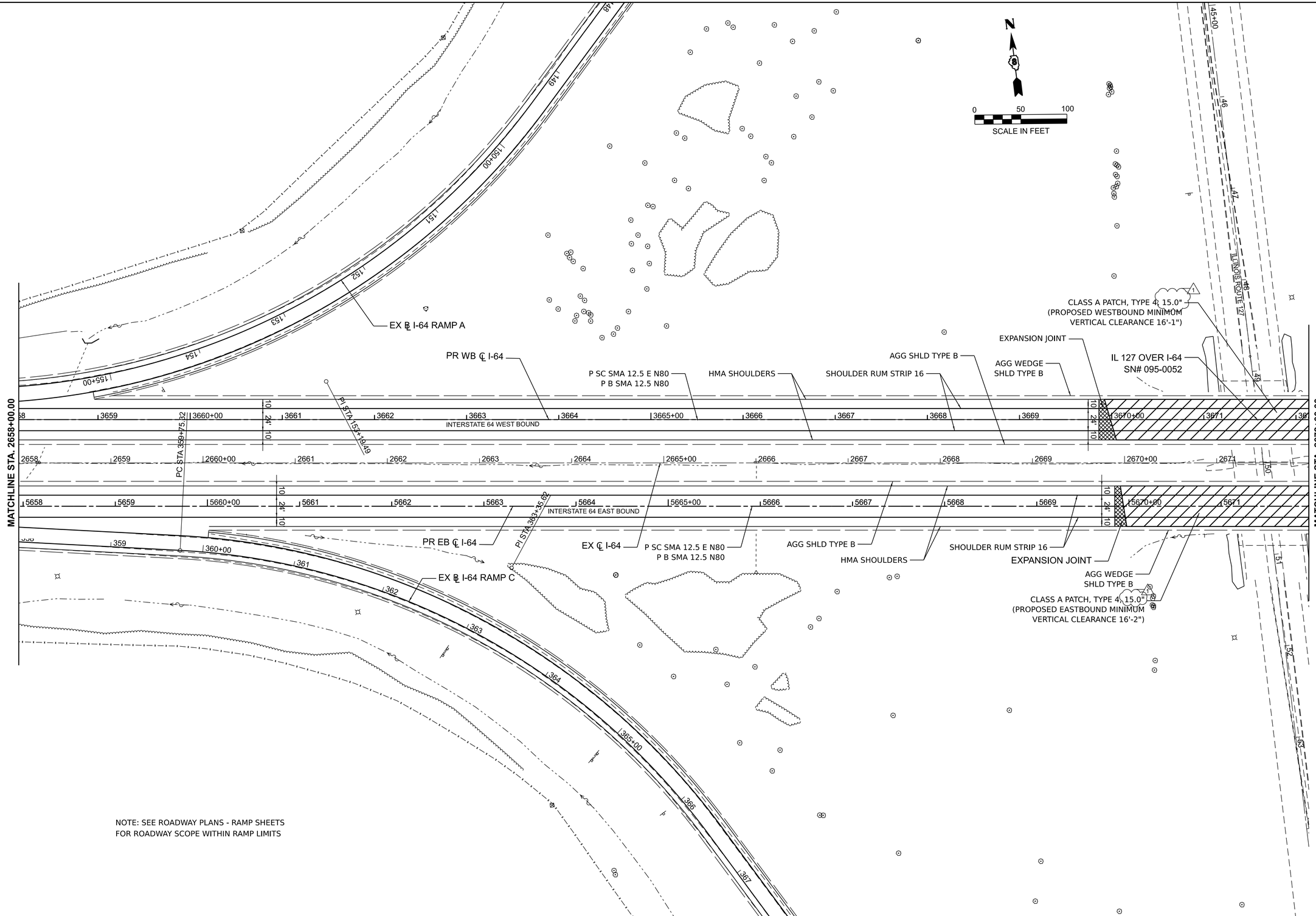

MODEL: I64CL - Plan 20 [Sheet]
FILE NAME: D876M95_sht_Pro.dgn

d'Escoto, Inc.
55 W Van Buren St, Ste 200
Chicago, IL 60605
TEL: 312.787.0707 FAX: 312.787.7322
www.descotoinc.com
IL Professional Engineering Design Firm No. 184001609-0002

Copyright © 2026

USER NAME = mgesior	DESIGNED - MEG	REVISED - 1 6/01/2026-ADDENDUM 1	
	DRAWN - MEG	REVISED -	
	CHECKED - MTV	REVISED -	
PLOT DATE = 6/2/2026	DATE - 6/1/2026	REVISED -	

STATE OF ILLINOIS
DEPARTMENT OF TRANSPORTATION

ROADWAY PLANS
I-64

SCALE: 1" = 50' | SHEET 20 OF 39 SHEETS | STA. | TO STA.

F.A.I RTE.	SECTION	COUNTY	TOTAL SHEETS	SHEET NO.
64	95-(3,4)RS-2	WASHINGTON	775	108
		CONTRACT NO. 76M95		
		ILLINOIS	FED. AID PROJECT	

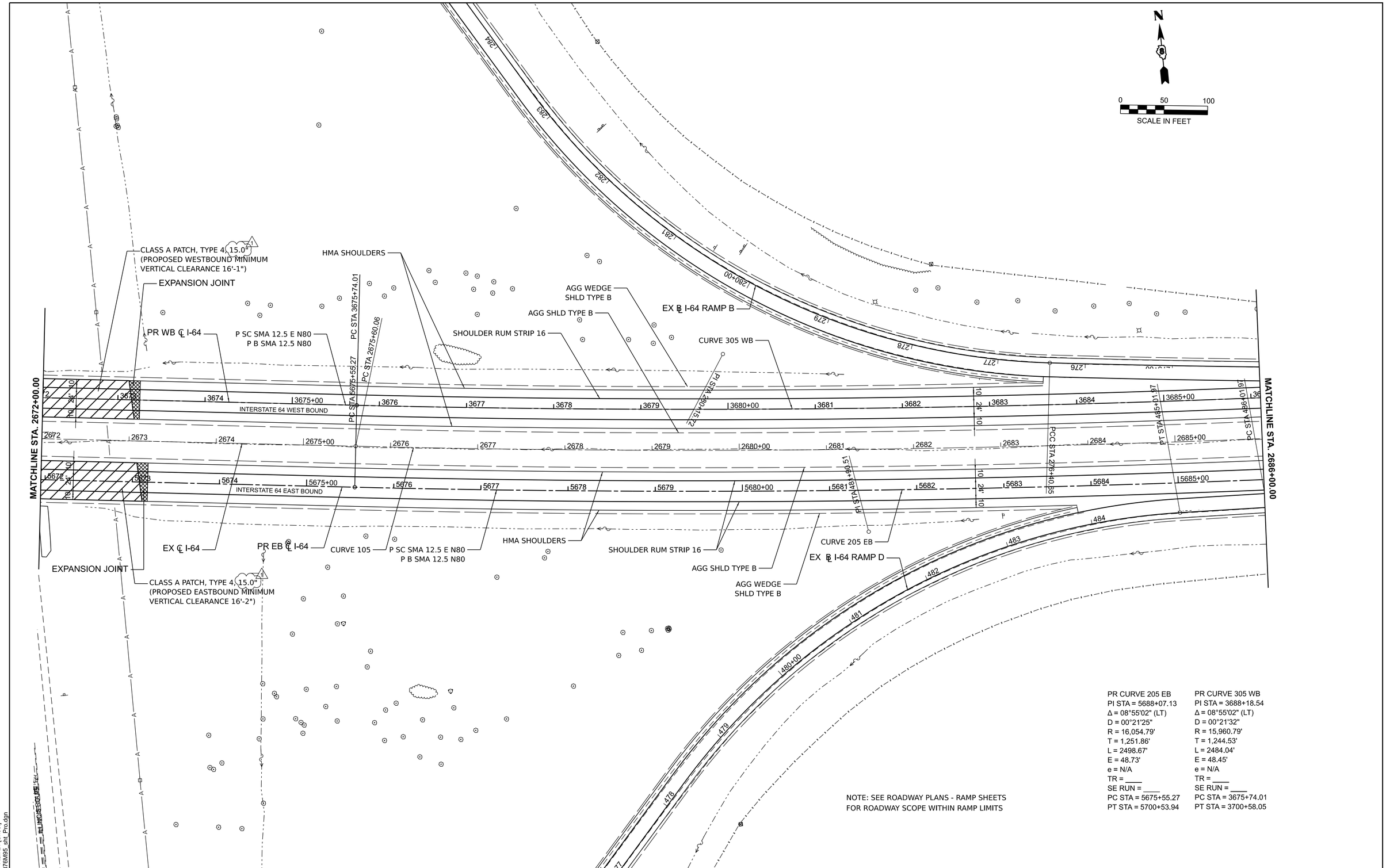

PR CURVE 205 EB	PR CURVE 305 WB
PI STA = 5688+07.13	PI STA = 3688+18.54
Δ = 08°55'02" (LT)	Δ = 08°55'02" (LT)
D = 00°21'25"	D = 00°21'32"
R = 16,054.79'	R = 15,960.79'
T = 1,251.86'	T = 1,244.53'
L = 2498.67'	L = 2484.04'
E = 48.73'	E = 48.45'
e = N/A	e = N/A
TR = ____	TR = ____
SE RUN = ____	SE RUN = ____
PC STA = 5675+55.27	PC STA = 3675+74.01
PT STA = 5700+53.94	PT STA = 3700+58.05

MODEL: I64CL - Plan 21 [Sheet]
FILE NAME: D876M95_sht_Pro.dgn

d'Escoto, Inc.
55 W Van Buren St, Ste 200
Chicago, IL 60605
TEL: 312.787.0707 FAX: 312.787.7322
www.descotoinc.com
IL Professional Engineering Design Firm No. 184001609-0002

Copyright © 2026

USER NAME = mgesior	DESIGNED - MEG	REVISED - 1 6/01/2026-ADDENDUM 1	
	DRAWN - MEG	REVISED -	
	CHECKED - MTV	REVISED -	
PLOT DATE = 6/2/2026	DATE - 6/1/2026	REVISED -	

STATE OF ILLINOIS
DEPARTMENT OF TRANSPORTATION

ROADWAY PLANS
I-64

SCALE: 1" = 50' | SHEET 21 OF 39 SHEETS | STA. | TO STA.

F.A.I RTE.	SECTION	COUNTY	TOTAL SHEETS	SHEET NO.
64	95-(3,4)RS-2	WASHINGTON	775	109
		CONTRACT NO. 76M95		
	ILLINOIS	FED. AID PROJECT		

MOT GENERAL NOTES

1. THE TEMPORARY TRAFFIC CONTROL DEPICTED HEREIN IS THE MINIMUM REQUIREMENT. ADDITIONAL TRAFFIC CONTROL DEVICES AS SPECIFIED IN THE HIGHWAY STANDARDS AS SHOWN IN THE INDEX OF SHEETS AND THE SPECIAL PROVISION SHALL BE PLACED BY THE CONTRACTOR TO THE SATISFACTION OF THE ENGINEER. ALL TRAFFIC CONTROL DEVICES SHALL BE CONSIDERED INCLUDED IN THE COST OF TRAFFIC CONTROL AND PROTECTION UNLESS OTHERWISE INDICATED WITHIN THESE GENERAL NOTES, PLANS OR SPECIAL PROVISIONS.

2. THE CONTRACTOR SHALL FURNISH, INSTALL, MAINTAIN AND REMOVE ALL SIGNS AND SIGN SUPPORTS REQUIRED FOR TRAFFIC CONTROL AND PROTECTION.

3. THE CONTRACTOR SHALL BE RESPONSIBLE FOR PROVIDING LABOR, SIGNS AND TRAFFIC CONTROL DEVICES NECESSARY FOR THE MAINTENANCE OF TRAFFIC UNLESS NOTED OTHERWISE IN THE SPECIAL PROVISIONS.

4. ALL EXISTING SIGNS THAT CONFLICT WITH THE TRAFFIC CONTROL PLAN SHALL BE COVERED OR REMOVED IN ACCORDANCE WITH ARTICLE 107.25 OF THE STANDARD SPECIFICATIONS.

5. THE CONTRACTOR SHALL BE REQUIRED TO MAINTAIN TRAFFIC IN ACCORDANCE WITH THE TRAFFIC CONTROL PLANS, SPECIAL PROVISIONS, APPLICABLE STATE STANDARDS, AND AS DIRECTED BY THE ENGINEER. ANY CHANGES TO THE TRAFFIC CONTROL SHALL BE SUBMITTED TO THE ENGINEER FOR APPROVAL PRIOR TO IMPLEMENTING ANY CHANGES.

6. TRAFFIC CONDITIONS, ACCIDENTS, AND OTHER UNFORESEEN EMERGENCY CONDITIONS MAY REQUIRE THE ENGINEER TO RESTRICT, MODIFY OR REMOVE LANE CLOSURES OR CHANNELIZATION SHOWN IN THE PLANS. THE CONTRACTOR SHALL PROMPTLY RESPOND AT THE TIME OF NOTIFICATION BY THE ENGINEER FOR THE MAINTENANCE OF TRAFFIC CONTROL DEVICES.

7. THE ENGINEER SHALL BE INFORMED A MINIMUM OF 48 HOURS IN ADVANCE OF ANY PROPOSED CHANGE TO THE SUGGESTED STAGES OF CONSTRUCTION AND TRAFFIC CONTROL PLANS.

8. ALL TRAFFIC CONTROL DEVICES SHALL BE REMOVED, COVERED OR TURNED AWAY FROM THE TRAFFIC IMMEDIATELY WHEN THEY ARE NO LONGER NECESSARY.

9. IMMEDIATELY AFTER THE COMPLETION OF CONSTRUCTION, THE CONTRACTOR SHALL RESTORE ALL PERMANENT PAVEMENT MARKINGS, SIGNS, AND OTHER TRAFFIC CONTROL DEVICES THAT WERE COVERED, REMOVED, DAMAGED OR OTHERWISE AFFECTED BY CONSTRUCTION.

10. THE CONTRACTOR SHALL INSTALL ROAD CONSTRUCTION AHEAD SIGNS ON THE ENTRANCE RAMPS FROM 1-64.

11. THE CONTRACTOR SHALL REQUEST AND GAIN APPROVAL FROM THE ILLINOIS DEPARTMENT OF TRANSPORTATION'S EXPRESSWAY TRAFFIC OPERATION ENGINEER AT WWW.IDOTLCS.COM TWENTY-FOUR (24) HOURS IN ADVANCE OF ALL DAILY LANE, RAMP AND SHOULDER CLOSURES AND 7 DAYS IN ADVANCE OF ALL PERMANENT AND WEEKEND CLOSURES ON ALL FREEWAYS AND/OR EXPRESSWAYS. THIS ADVANCE NOTIFICATION IS CALCULATED BASED ON A WORKWEEK OF MONDAY THROUGH FRIDAY AND SHALL NOT INCLUDE WEEKENDS OR HOLIDAYS.

12. ALL TRAFFIC CONTROL DEVICES INCLUDING, BUT NOT LIMITED TO DRUMS, VERTICAL PANELS, AND BARRICADES IMMEDIATELY ADJACENT TO THE EDGE OF THE TRAVELLED WAY SHALL BE EQUIPPED WITH MONO-DIRECTIONAL STEADY BURNING LIGHTS.

13. ALL TRAFFIC CONTROL DEVICES USED ON THIS CONTRACT SHALL BE NEW OR LIKE NEW CONDITION AT THE START OF THE PROJECT.

14. LANE CLOSURES FOR THE RESURFACING PORTION OF THE WORK AT THE EAST SIDE OF THE PROJECT SHOULD FOLLOW HIGHWAY STANDARDS 701402 AND 701401, AND SHALL BE INCLUDED IN THE COST OF TRAFFIC CONTROL AND PROTECTION (SPECIAL).

15. CONTRACTOR WILL NOT BE COMPENSATED FOR WATER BLASTING ANY TEMPORARY PAVEMENT MARKING THAT WAS PLACED PER THE STANDARDS REFERENCED IN THE MOT PLANS. 1

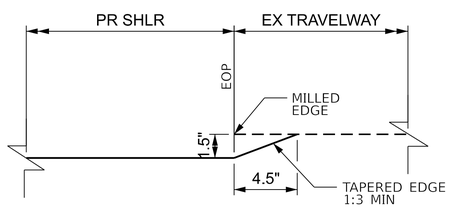

TAPERED EDGE DETAIL

SUGGESTED SEQUENCE OF CONSTRUCTION

- THIS PROJECT WILL BE CONSTRUCTED IN FOUR STAGES: **PRE-STAGE**, **STAGE 1**, **STAGE 2**, AND **STAGE 3**.
- THIS PROJECT INCLUDES THE CONSTRUCTION OF FOUR CROSSOVERS THAT WILL BE CONSTRUCTED IN STAGE 1 AND UTILIZED IN STAGES 2 AND 3.
- THESE STAGING NOTES REFER TO THE CROSSOVERS AS **CROSSOVERS 1**, **2**, **3**, AND **4**, NUMBERED FROM WEST TO EAST. CROSSOVERS 1 AND 4 ARE LOCATED NEAR THE ENDS OF THE PROJECT AND CROSSOVERS 2 AND 3 LOCATED NEAR THE INTERCHANGE. SEE ALIGNMENT CONTROL SHEETS FOR RAMP NAMES.

WORK BEFORE CONSTRUCTION

RESURFACE (MILL AND FILL) PAVEMENT ADJACENT TO CROSSOVER 4 AND 2000' OF EXISTING PAVEMENT EAST OF THE CONSTRUCTION LIMITS THIS IS TO PREVENT PAVEMENT FAILURE DURING CONSTRUCTION DUE TO POOR PAVEMENT CONDITION AND ADDITIONAL STRESS ON THE PAVEMENT SURFACE DUE TO THE CHANNELIZATION OF TRAFFIC FOR CONSTRUCTION STAGING.

- MILL AND RESURFACE EACH LANE SEPARATELY, WITH SINGLE LANE CLOSURE, FOLLOWING HIGHWAY STANDARDS **701402** (MAIN-LINE CONSTRUCTION) AND **701401** (RESURFACING) AND **701400** (APPROACH TO LANE CLOSURE). THERE SHOULD BE NO GRADE CHANGE AT THE LIMITS OF RESURFACING ONCE THE RESURFACING IS COMPLETE.

PRE-STAGE – OUTSIDE SHOULDERS

RECONSTRUCT OUTSIDE SHOULDERS, EASTBOUND AND WESTBOUND.

- WIDENED OUTSIDE SHOULDERS ARE NECESSARY FOR STAGE 1 & 2 CONSTRUCTION.

TRAFFIC

- USE HIGHWAY STANDARDS **701400** AND **701401** TO CLOSE OUTSIDE LANES FOR BOTH EASTBOUND AND WESTBOUND TRAFFIC.
- MAINTAIN ONE LANE OF TRAFFIC IN EXISTING INSIDE LANES THROUGH WORK ZONES.

CONSTRUCTION

- CONSTRUCT OUTSIDE SHOULDERS FOR BOTH EASTBOUND AND WESTBOUND LANES ON I-64 AS DETAILED IN THE PLANS.
- RAMPS: RECONSTRUCT INSIDE SHOULDER WITH FINAL SURFACE.
- USING HIGHWAY STANDARD **701701** REMOVE PORTION OF MEDIAN ON IL 127 AND PLACE TEMPORARY PAVEMENT IN REMOVED MEDIAN FOOTPRINT.

STAGE 1 – CROSSOVERS & INSIDE WESTBOUND SHOULDERS

CONSTRUCT CROSSOVERS, RECONSTRUCT WESTBOUND INSIDE SHOULDERS (WIDENED), AND RESURFACE A PORTION OF THE INSIDE LANE IN EACH DIRECTION.

- LANE CLOSURES AND RESURFACING OF THE INSIDE LANES MAY BE COMPLETED AT THE SAME TIME OR SEPARATELY.
- AS REQUIRED BY IDOT'S DROP OFF POLICY, TEMPORARY CONCRETE BARRIERS (**TCB**) WILL BE INSTALLED TO PROVIDE ADEQUATE ROOM TO CONSTRUCT THE CROSSOVERS AND RESURFACE THE INSIDE LANE AT CROSSOVERS 2 & 3.
- PLACE UNEVEN LANE SIGNS AT CROSSOVERS 2 & 3, AS REQUIRED BY IDOT'S DROP OFF POLICY. SIGNS TO REMAIN TO NOTIFY TRAFFIC OF THE 1.5" DROP BETWEEN LANES.
- THE EXISTING PAVEMENT (BEFORE AND AFTER THE RESURFACED SECTION) WILL BE REMOVED AT A 240:1 TAPER FOR 30 LONGITUDINAL FEET, BEFORE AND AFTER THE RESURFACED PORTION OF THE INSIDE LANE, IN ORDER TO REMOVE THE 1.5" HEIGHT DIFFERENCE BETWEEN THE RESURFACED AND EXISTING PAVEMENT.

TRAFFIC

- USE HIGHWAY STANDARDS **701400** AND **701401** AND **701402** TO CLOSE INSIDE LANES FOR BOTH EASTBOUND AND WESTBOUND TRAFFIC.
- MAINTAIN ONE LANE OF TRAFFIC IN EXISTING OUTSIDE LANES THROUGH WORK ZONES.

CONSTRUCTION

- CONSTRUCT CROSSOVERS AS DETAILED IN PLANS.
- RECONSTRUCT WIDENED WESTBOUND INSIDE SHOULDERS AS DETAILED IN THE PLANS
- RESURFACE INSIDE LANE WITHIN LIMITS OF CROSSOVER 2 AND CROSSOVER 3 WITH TAPERED EDGE AT 1:3 MINIMUM AT RESURFACING LIMITS (WESTBOUND AND EASTBOUND).

STAGE 2 – EASTBOUND LANES & INSIDE EASBOUND SHOULDER & OUTSIDE EASTBOUND SHOULDERS FROM CROSSOVER 2 TO CROSSOVER 3

RESURFACE THE EASTBOUND LANES, RECONSTRUCT EASTBOUND INSIDE SHOULDERS, AND RESURFACE RAMPS C AND D. CONSTRUCT RIGHT TURN LANE ON RAMP C. MILL AND RESURFACE EASTBOUND OUTSIDE SHOULDERS FROM CROSSOVER 2 TO CROSSOVER 3 CONSISTENT WITH OUTSIDE LANE RECONSTRUCTION SUBSTAGE.

STAGE 2A

- CONSTRUCT JOINTED PAVEMENT ON RAMP C FOR RIGHT TURN LANE (SEE DETAILS IN PLANS).

STAGE 2B

- CONSTUCT REMAINDER OF JOINTED PAVEMENT ON RAMP C. REMOVE TEMPORARY PAVEMENT AND RECONSTRUCTION OF MEDIAN ALONG IL-127 TO RESTORE TO NEAR ORIGINAL CONDITION.

WESTBOUND TRAFFIC

- PLACE **TCB** TO SEPARATE WESTBOUND LANES THROUGH THE LENGTH OF THE PROJECT PER TYPICAL SECTION.
- CHANNEL WESTBOUND TRAFFIC TO THE OUTSIDE (WESTBOUND) LANE IN ADVANCE OF CROSSOVER 4.
- WESTBOUND TRAFFIC UTILIZES THE OUTSIDE (WESTBOUND) LANE THROUGH THE LENGTH OF THE PROJECT WITH ACCESS TO RAMPS A AND B.

EASTBOUND TRAFFIC

- CHANNEL EASTBOUND TRAFFIC TO INSIDE (EASTBOUND) LANE IN ADVANCE OF CROSSOVER 1.
- EASTBOUND TRAFFIC CROSSES TO THE INSIDE WESTBOUND LANE AT CROSSOVER 1.
- EASTBOUND LANE RESURFACING BETWEEN CROSSOVER 2 AND 3 FOLLOWS ALTERNATING SUB-STAGING TABLE BELOW TO PRESERVE ACCESS TO RAMPS C AND D AT ALL TIMES WITHOUT THE NEED TO MOVE **TCB** AND FOLLOW IDOT'S DROPOFF POLICY.
- THE EASTBOUND LANES BETWEEN RAMPS C AND D REMAIN CLOSED FOR CONSTRUCTION.
- THROUGH TRAFFIC REMAINS IN THE INSIDE WESTBOUND LANE TO CROSSOVER 4.
- EXITING TRAFFIC CROSSES BACK TO THE OPEN EASTBOUND LANE AT CROSSOVER 2 FOR ACCESS TO RAMP C.
- ENTERING TRAFFIC USING RAMP D WILL CONTINUE ON THE OPEN EASTBOUND LANE UNTIL CROSSOVER 3, CROSSING OVER TO THE INSIDE WESTBOUND LANE.
- EASTBOUND TRAFFIC CROSSES BACK TO THE INSIDE EASTBOUND LANE AT CROSSOVER 4.

STAGE 3 – WESTBOUND LANES

RESURFACE THE WESTBOUND LANES AND RESURFACE RAMPS A AND B. RESURFACE BOTH WESTBOUND SHOULDERS CONSISTENT WITH SHOULDER SUBSTAGING.

EASTBOUND TRAFFIC

- PLACE **TCB** TO SEPARATE EASTBOUND LANES THROUGH THE LENGTH OF THE PROJECT.
- CHANNEL EASTBOUND TRAFFIC TO THE OUTSIDE (EASTBOUND) LANE IN ADVANCE OF CROSSOVER 1.
  - EASTBOUND TRAFFIC UTILIZES THE OUTSIDE (EASTBOUND) LANE THROUGH THE LENGTH OF THE PROJECT WITH ACCESS TO RAMPS C AND D.

WESTBOUND TRAFFIC

- CHANNEL WESTBOUND TRAFFIC TO INSIDE (WESTBOUND) LANE IN ADVANCE OF CROSSOVER 4.
- WESTBOUND TRAFFIC CROSSES TO THE INSIDE EASTBOUND LANE AT CROSSOVER 4.
- WESTBOUND LANE RESURFACING BETWEEN CROSSOVER 3 AND 2 FOLLOWS ALTERNATING SUB-STAGING TABLE BELOW TO PRESERVE ACCESS TO RAMPS A AND B AT ALL TIMES WITHOUT THE NEED TO MOVE **TCB** AND FOLLOW IDOT'S DROPOFF POLICY.
- THE WESTBOUND LANES BETWEEN RAMPS B AND A REMAIN CLOSED FOR CONSTRUCTION.
- THROUGH TRAFFIC REMAINS IN THE INSIDE EASTBOUND LANE TO CROSSOVER 1.
- EXITING TRAFFIC CROSSES BACK TO THE OPEN WESTBOUND LANE AT CROSSOVER 3 FOR ACCESS TO RAMP B.
- ENTERING TRAFFIC USING RAMP A WILL CONTINUE ON THE OPEN WESTBOUND LANE UNTIL CROSSOVER 2, CROSSING OVER TO THE INSIDE EASTBOUND LANE.
- WESTBOUND TRAFFIC CROSSES BACK TO THE INSIDE WESTBOUND LANE AT CROSSOVER 1.

STAGES 2 & 3, SUBSTAGING

FOR STAGE 2 (BETWEEN CROSSOVER 2 AND RAMP C; AND BETWEEN RAMP D AND CROSSOVER 3) AND STAGE 3 (BETWEEN CROSSOVER 3 AND RAMP B; AND BETWEEN RAMP A AND CROSSOVER 2), TRAFFIC WILL ALTERNATE IN BETWEEN THE INSIDE AND OUTSIDE LANES WHILE RESURFACING ALTERNATES IN THESE LOCATIONS. THERE WILL BE A DROP OFF BETWEEN THE LANES AS THE CONTRACTOR ALTERNATES TO COMPLETE THE RESURFACING OF EACH LANE. THIS DROP OFF WILL NOT EXCEED 2.5 INCHES AND WILL NOT REQUIRE **TCB**. FOR ALL SUB-STAGING, UNEVEN LANE SIGNS WILL BE PLACED ACCORDING TO THE DISTRICT'S DROP OFF POLICY.

SUB-STAGE	DESCRIPTION
A1	TRAFFIC WILL UTILIZE THE INSIDE LANE, WHILE THE CONTRACTOR MILLS THE FIRST 2.5 INCHES OF THE OUTSIDE LANE. A 2.5 INCH DROP OFF WILL REMAIN BETWEEN LANES. A TEMPORARY WEDGE OR TAPERED EDGE, 1:3 MINIMUM, WILL BE CONSTRUCTED BETWEEN LANES.
B1	TRAFFIC WILL SWITCH TO THE OUTSIDE LANE, WHILE THE CONTRACTOR MILLS THE FIRST 4 INCHES OFF OF THE INSIDE LANE. A 1.5 INCH DROP OFF WILL REMAIN BETWEEN LANES. NO ADDITIONAL DROP OFF TREATMENT REQUIRED.
A2	TRAFFIC WILL RETURN TO THE INSIDE LANE, WHILE THE CONTRACTOR MILLS THE FINAL 4 INCHES OFF OF THE OUTSIDE LANE. A 2.5 INCH DROP OFF WILL REMAIN BETWEEN LANES. A TEMPORARY WEDGE OR TAPERED EDGE, 1:3 MINIMUM, WILL BE CONSTRUCTED BETWEEN LANES.
B2	TRAFFIC WILL RETURN TO THE OUTSIDE LANE, WHILE THE CONTRACTOR MILLS THE FINAL 2.5 INCHES OFF OF THE INSIDE LANE. CONTRACTOR WILL PLACE THE FIRST 2.5" LIFT OF THE PROPOSED PAVEMENT (BINDER) ON THE INSIDE LANE. A 2.5 INCH DROP OFF WILL REMAIN BETWEEN LANES. A NOTCHED WEDGE LONGITUDINAL JOINT WILL BE CONSTRUCTED BETWEEN LANES.
A3	TRAFFIC WILL RETURN TO THE INSIDE LANE, WHILE THE CONTRACTOR PLACES THE FIRST 2.5 INCH LIFT OF THE PROPOSED PAVEMENT (BINDER) ON THE OUTSIDE LANE. THE CONTRACTOR WILL ALSO PLACE THE FINAL 2.5 INCH LIFT OF THE PROPOSED PAVEMENT (SURFACE). A 2.5 INCH DROP OFF WILL REMAIN BETWEEN LANES. A NOTCHED WEDGE LONGITUDINAL JOINT WILL BE CONSTRUCTED BETWEEN LANES.
B3	TRAFFIC WILL RETURN TO THE OUTSIDE LANE, WHILE THE CONTRACTOR PLACES THE FINAL 2.5" LIFT OF THE PROPOSED PAVEMENT (SURFACE) ON THE INSIDE LANE.

AFTER THE PROPOSED PAVEMENT IS PLACED, THE EXISTING PAVEMENT (BEFORE AND AFTER THE RESURFACED SECTION) WILL BE GRINDED AT A GRADUAL TAPER TO REMOVE THE 1.5" DROP OFF IN THE LONGITUDINAL DIRECTION. THE PAVEMENT WILL BE GRINDED AT A 240:1 TAPER AND WILL REQUIRE 30 LONGITUDINAL FEET, LOCATED BEFORE AND AFTER THE RESURFACED PAVEMENT SECTION.

WORK AFTER CONSTRUCTION

RESURFACE (MILL AND FILL) PAVEMENT ADJACENT TO CROSSOVER 1. THIS RESURFACING IS TO REPAIR SURFACE DAMAGE DURING CONSTRUCTION.

- MILL AND RESURFACE EACH LANE SEPARATELY, WITH SINGLE LANE CLOSURE, FOLLOWING HIGHWAY STANDARDS **701402** (MAIN-LINE CONSTRUCTION) AND **701401** (RESURFACING) AND **701400** (APPROACH TO LANE CLOSURE). THERE SHOULD BE NO GRADE CHANGE AT THE LIMITS OF RESURFACING ONCE THE RESURFACING IS COMPLETE.

SUB-STAGE	INSIDE LANE	OUTSIDE LANE	DROP OFF TYPE	DROP OFF TREATMENT	UNEVEN LANE SIGNAGE?
A1	↑ 6.5" REMAINING	**MILL 2.5"** 4.0" REMAINING	2.5" VERT	TEMPORARY WEDGE OR TAPERED EDGE, 1:3 MINIMUM	YES
B1	**MILL 4.0"** 2.5" REMAINING	↑ 4.0" REMAINING	1.5" VERT	NONE	YES
A2	↑ 2.5" REMAINING	**MILL 4.0"** 0.0" REMAINING	2.5" VERT	TEMPORARY WEDGE OR TAPERED EDGE, 1:3 MINIMUM	YES
B2	**MILL 2.5" PLACE 2.5" (BINDER)** 2.5" COMPLETE	↑ 0.0" COMPLETE	2.5" LIFT	NOTCHED WEDGE LONGITUDINAL JOINT	YES
A3	↑ 2.5" COMPLETE	**PLACE 2.5" (BINDER) PLACE 2.5" (SURFACE)** 5.0" COMPLETE	2.5" LIFT	NOTCHED WEDGE LONGITUDINAL JOINT	YES
B3	**PLACE 2.5" (SURFACE)** 5.0" COMPLETE	↑ 5.0" COMPLETE	0.0" LIFT	NONE	YES

↑ DENOTES TRAFFIC

MODEL: MOT General Notes [SHEET]
FILE NAME: D876M95_sht_MOT_generalNotes.dgn

d'Escoto, Inc.
55 W Van Buren St, Ste 200
Chicago, IL 60605
TEL: 312.787.0707 FAX: 312.787.7322
www.descotoinc.com
IL Professional Engineering Design Firm No. 184001609-0002

Copyright © 2026

USER NAME = mgesior	DESIGNED - MEG	REVISED - 1 6/01/2026-ADDENDUM 1	
	DRAWN - MEG	REVISED -	
	CHECKED - MTV	REVISED -	
PLOT DATE = 6/4/2026	DATE - 6/1/2026	REVISED -	

STATE OF ILLINOIS
DEPARTMENT OF TRANSPORTATION

MAINTENANCE OF TRAFFIC GENERAL NOTES
I-64

SCALE: | SHEET 1 OF 1 SHEETS | STA. | TO STA.

F.A.I RTE.	SECTION	COUNTY	TOTAL SHEETS	SHEET NO.
64	95-(3,4)RS-2	WASHINGTON	775	181
		CONTRACT NO. 76M95		
		ILLINOIS	FED. AID PROJECT	

BRIDGE OMISSIONS

	PR WB STATION LIMITS		PR EB STATION LIMITS	
BEAVER POND CREEK	3432+98.34	3434+18.14	5432+11.15	5434+00.00
LITTLE CROOKED CREEK	3492+48.98	3494+97.24	5492+53.76	5495+01.37
NORTH CREEK	3599+06.29	3600+45.92	5597+83.71	5599+17.65
ALABAMA ROAD AND UP RR	3771+43.03	3773+86.35	5770+86.74	5773+65.14
MIDDLE CREEK	13798+87.24	13800+57.22	5798+50.54	5799+94.14
MIDDLE CREEK	13861+23.19	13862+10.90	5860+40.69	5861+84.13

STAGE 1 - I-64 TRAFFIC

1. USE HIGHWAY STANDARDS 701400 AND 701401 TO CLOSE INSIDE LANES FOR BOTH EASTBOUND AND WESTBOUND TRAFFIC.
2. MAINTAIN ONE LANE OF TRAFFIC IN EXISTING OUTSIDE LANES THROUGH WORK ZONES.

STAGE 1 - I-64 CONSTRUCTION

1. CONSTRUCT CROSSOVERS AS DETAILED IN PLANS.
2. RESURFACE INSIDE LANE WITHIN LIMITS OF CROSSOVER 2 AND CROSSOVER 3 WITH TAPERED EDGE AT 1:3 MINIMUM AT RESURFACING LIMITS. MILL AND OVERLAY INSIDE LANE WITHIN THE CONSTRUCTION LIMITS OF CROSSOVER 2 AND CROSSOVER 3. AS SHOWN IN THE INSIDE LANE RAMP DETAIL, MILL THE EXISTING PAVEMENT AT 1":240" FOR 30' TO CREAT A TRANSITION FROM THE EXISTING PAVEMENT GRADE TO PROPOSED PAVEMENT GRADE.
3. CONSTRUCT INSIDE SHOULDER FOR WESTBOUND LANES ON I-64 AS DETAILED ON PLANS.

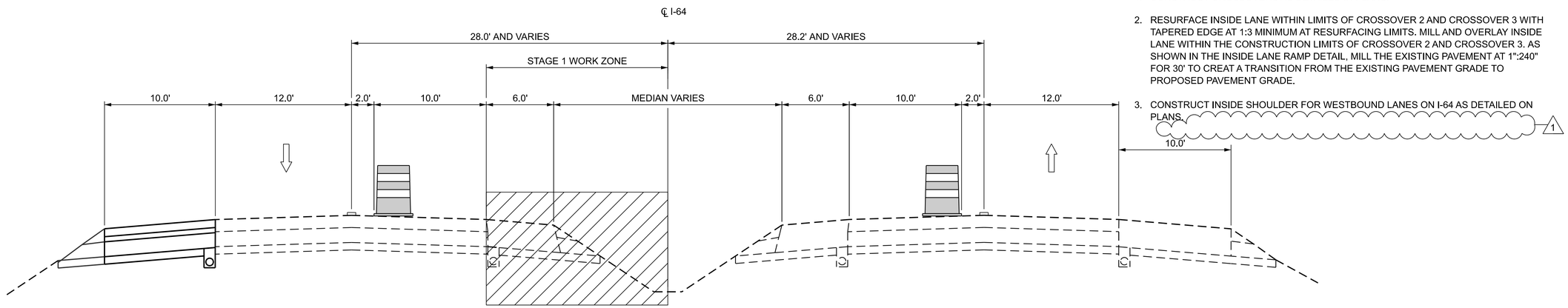

STAGE 1 - I-64

BETWEEN CROSSOVER 1 & 2
WB STA. 2406+24.98 TO STA. 2624+17.48
EB STA. 2406+24.98 TO STA. 2625+13.12
BETWEEN CROSSOVER 3 & 4
WB STA. 2715+97.06 TO STA. 2903+51.84
EB STA. 2715+75.66 TO STA. 2903+51.90
(LOOKING EAST)

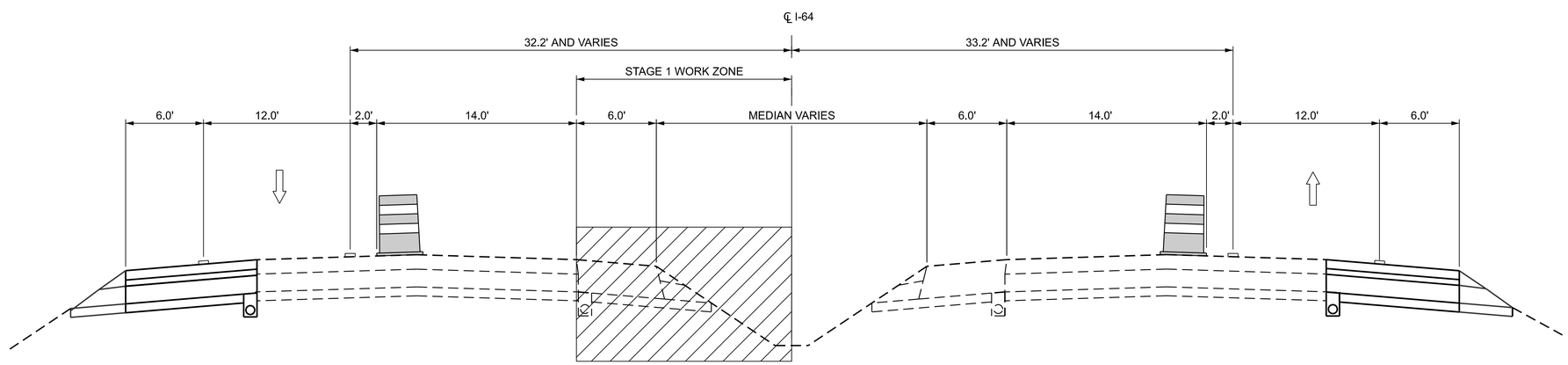

STAGE 1 - I-64

BETWEEN CROSSOVER 2 & 3
WB 2638+80.04 TO STA. 2706+70.50
EB STA. 2638+79.95 TO STA. 2706+67.02
(LOOKING EAST)

LEGEND

- WORK ZONE
- TEMPORARY PAVEMENT MARKING
- DIRECTION OF TRAFFIC
- DRUMS (WITH STREADY BURN MONODIRECTIONAL LIGHT ON TAPER)

MODEL: MOT Typicals - MOT Typicals-1 [Sheet]
FILE NAME: c:\pwworkingdir\des-pw-01\sean.maxwell\dms02488\D876M95_sht_MOT_Typicals_QEI.dgn

QUIGG ENGINEERING INC

USER NAME = SMaxwell	DESIGNED - TNS	REVISED - 1 6/01/2026-ADDENDUM 1	STATE OF ILLINOIS DEPARTMENT OF TRANSPORTATION
	DRAWN - TNS	REVISED -	
	CHECKED - SDM	REVISED -	
PLOT DATE = 5/27/2026	DATE - 5/6/2026	REVISED -	

MAINTENANCE OF TRAFFIC - STAGE 1
I-64

SCALE: 1"=5' | SHEET 1 OF 4 SHEETS | STA. TO STA.

F.A.I. RTE.	SECTION	COUNTY	TOTAL SHEETS	SHEET NO.
64	95-(3,4)RS-2	WASHINGTON	775	183
		CONTRACT NO. 76M95		
		ILLINOIS	FED. AID PROJECT	

BRIDGE OMISSIONS

	PR WB STATION LIMITS		PR EB STATION LIMITS	
BEAVER POND CREEK	3432+98.34	3434+18.14	5432+11.15	5434+00.00
LITTLE CROOKED CREEK	3492+48.98	3494+97.24	5492+53.76	5495+01.37
NORTH CREEK	3599+06.29	3600+45.92	5597+83.71	5599+17.65
ALABAMA ROAD AND UP RR	3771+43.03	3773+86.35	5770+86.74	5773+65.14
MIDDLE CREEK	13798+87.24	13800+57.22	5798+50.54	5799+94.14
MIDDLE CREEK	13861+23.19	13862+10.90	5860+40.69	5861+84.13

STAGE 1 - I-64 TRAFFIC

1. USE HIGHWAY STANDARDS 701400 AND 701402 TO CLOSE INSIDE LANES FOR BOTH EASTBOUND AND WESTBOUND TRAFFIC.
2. MAINTAIN ONE LANE OF TRAFFIC IN EXISTING OUTSIDE LANES THROUGH WORK ZONES.

STAGE 1 - I-64 CONSTRUCTION

1. CONSTRUCT CROSSOVERS AS DETAILED IN PLANS.
2. RESURFACE INSIDE LANE WITHIN LIMITS OF CROSSOVER 2 AND CROSSOVER 3 WITH TAPERED EDGE AT 1:3 MINIMUM AT RESURFACING LIMITS. MILL AND OVERLAY INSIDE LANE WITHIN THE CONSTRUCTION LIMITS OF CROSSOVER 2 AND CROSSOVER 3. AS SHOWN IN THE INSIDE LANE RAMP DETAIL, MILL THE EXISTING PAVEMENT AT 1":240" FOR 30' TO CREAT A TRANSITION FROM THE EXISTING PAVEMENT GRADE TO PROPOSED PAVEMENT GRADE.
3. CONSTRUCT INSIDE SHOULDER FOR WESTBOUND LANES ON I-64 AS DETAILED ON PLANS.

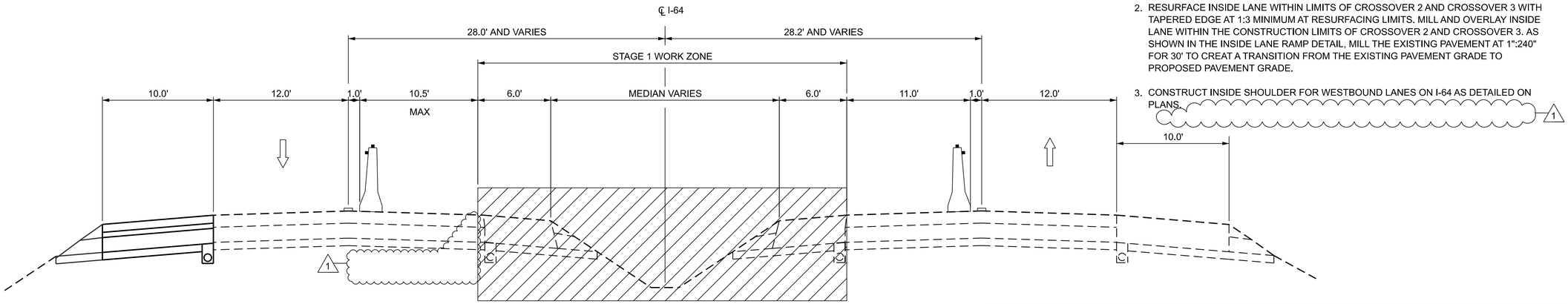

STAGE 1 - I-64

CROSSOVER 1
WB STA. 2397+01.97 TO STA. 2407+40.25
EB STA. 2395+91.86 TO STA. 2406+25.00
CROSSOVER 4
WB STA. 2903+51.84 TO STA. 2913+80.98
EB STA. 2902+52.27 TO STA. 2912+71.45
(LOOKING EAST)

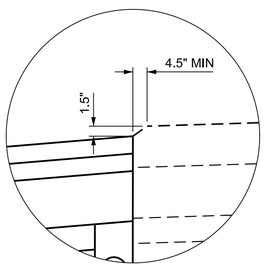

TAPERED EDGE DETAIL

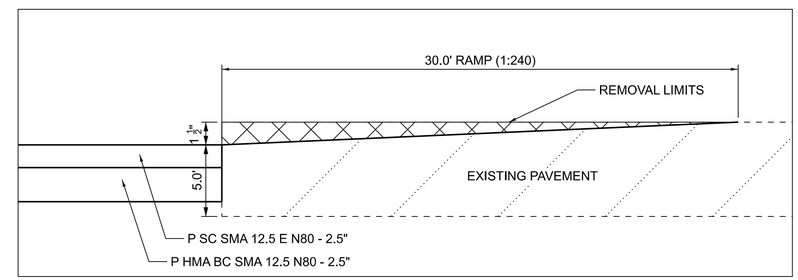

INSIDE LANE RAMP DETAIL

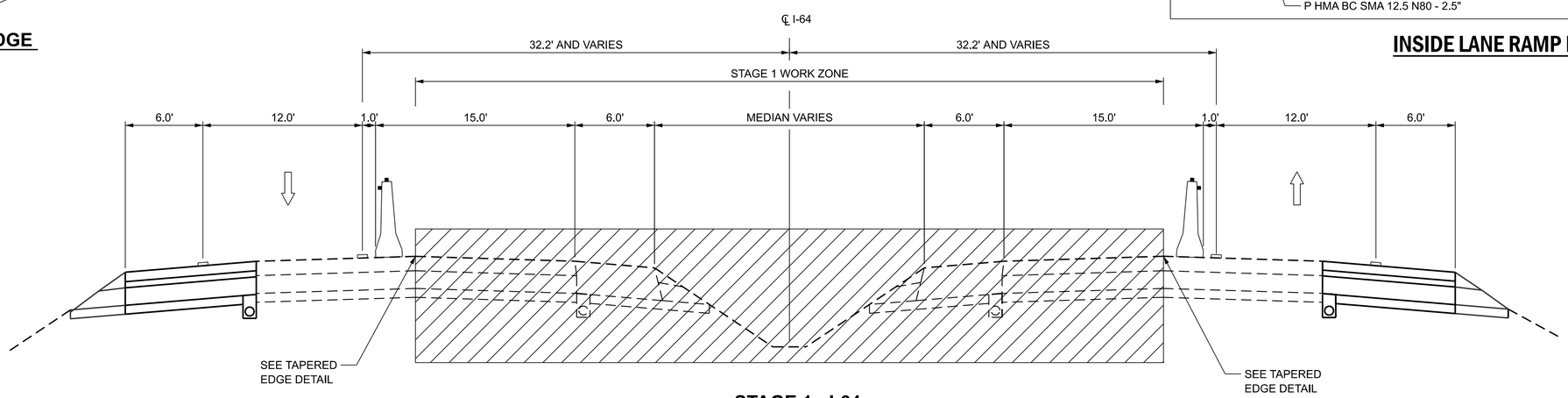

STAGE 1 - I-64

CROSSOVER 2
WB STA. 2624+17.56 TO STA. 2640+12.73
EB STA. 2622+99.40 TO STA. 2638+79.95
CROSSOVER 3
WB STA. 2706+70.50 TO STA. 2717+64.17
EB STA. 2705+04.94 TO STA. 2715+75.66
(LOOKING EAST)

LEGEND

- WORK ZONE
- TEMPORARY PAVEMENT MARKING
- DIRECTION OF TRAFFIC
- TEMPORARY CONCRETE BARRIER WITH BARRIER WALL REFLECTORS

MODEL: MOT Typicals - MOT Typicals-2 [Sheet]
FILE NAME: c:\pwworkingdir\des-pw-01\sean.maxwell.dms\12488\D876M95_sht_MOT_Typicals_QEI.dgn

QUIGG ENGINEERING INC

USER NAME = SMaxwell	DESIGNED - TNS	REVISED - 1 6/01/2026-ADDENDUM 1	
	DRAWN - TNS	REVISED -	
	CHECKED - SDM	REVISED -	
PLOT DATE = 5/27/2026	DATE - 5/6/2026	REVISED -	

STATE OF ILLINOIS
DEPARTMENT OF TRANSPORTATION

MAINTENANCE OF TRAFFIC - STAGE 1
I-64

SCALE: 1"=5' | SHEET 2 OF 4 SHEETS | STA. TO STA.

F.A.I. RTE.	SECTION	COUNTY	TOTAL SHEETS	SHEET NO.
64	95-(3,4)RS-2	WASHINGTON	775	184
		CONTRACT NO. 76M95		
		ILLINOIS	FED. AID PROJECT	

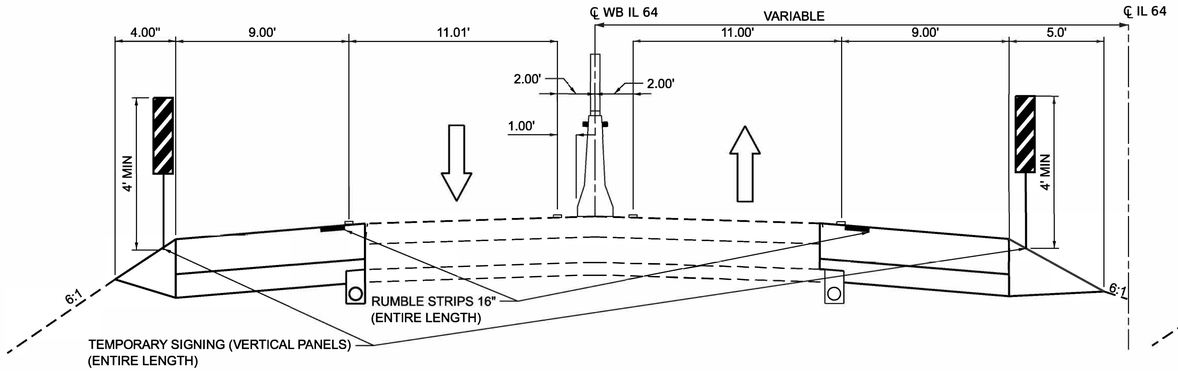

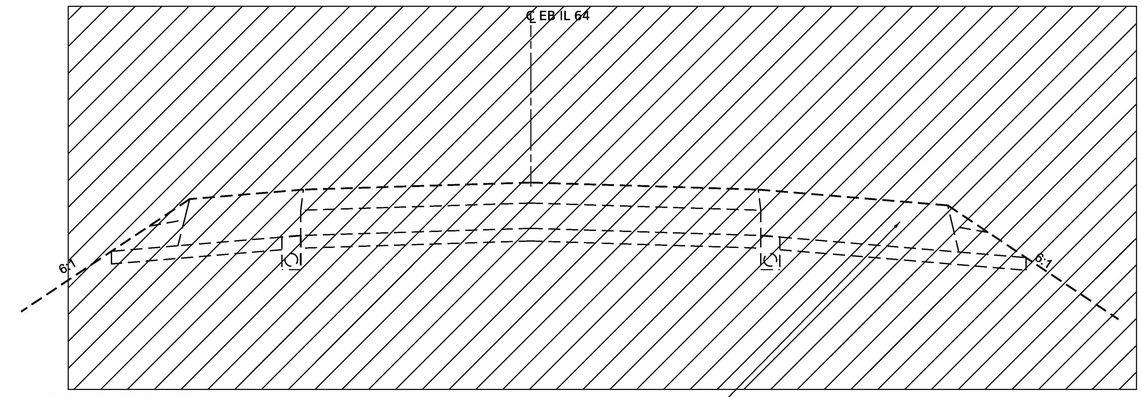

EASTBOUND TANGENT SECTION

STA 5397+06 TO 5529+63
STA 5558+53 TO 5564+27
STA 5580+66 TO 5589+94
STA 5612+03 TO 5616+29
STA 5649+52 TO 5780+72
STA 5808+28 TO 5816+19
STA 5842+71 TO 5848+45
STA 5877+13 TO 5912+46

EASTBOUND HOT-MIX
ASPHALT SURFACE
REMOVAL, VARIABLE DEPTH
STA. 5649+52 TO STA. 5716+44

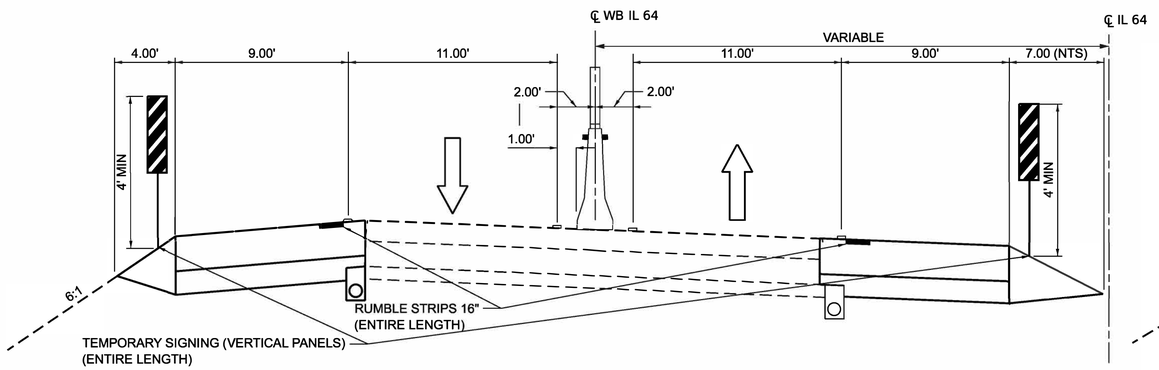

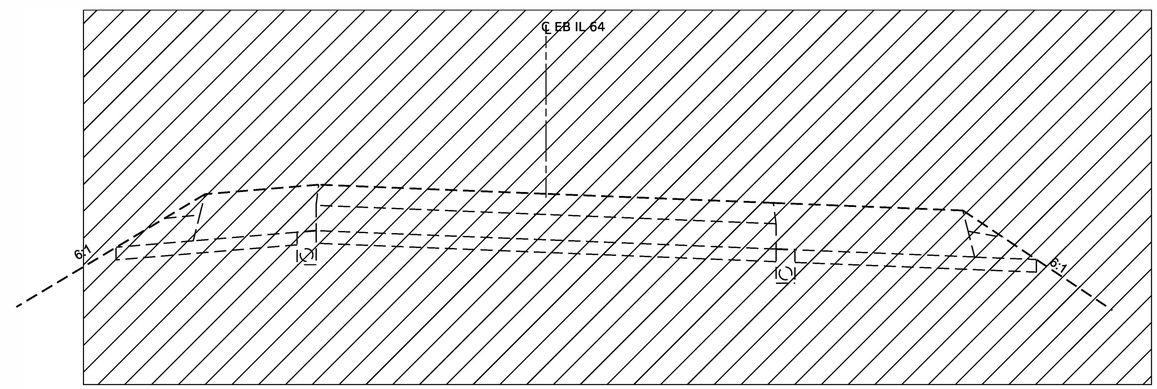

EASTBOUND SUPERELEVATED SECTION

STA 5529+63 TO 5558+53
STA 5591+20 TO 5610+77
STA 5816+19 TO 5842+71

STAGE 2 - I-64 TRAFFIC

1. ALL STAGE 2 LANE CLOSURES ARE COVERED UNDER PAY ITEM TRAFFIC CONTROL AND PROTECTION, (SPECIAL).
2. HIGHWAY STANDARDS 701400 AND 701402 ARE USED AS THE BASIS FOR THE TRAFFIC CONTROL PLAN LANE CLOSURES AT CROSSOVERS 1 AND 4 AS SHOWN IN THE PLAN, WITH ADJUSTMENTS FOR CROSSOVER SIGNAGE PER MUTCD SECTION 2D.52.
3. 701400 AND 701401 ARE USED AS THE BASIS FOR THE TRAFFIC CONTROL PLAN LANE CLOSURES FOR THE EASTBOUND PAVEMENT RESURFACING REQUIRED AT CROSSOVERS 1 AND 4 TO BRING THE PAVEMENT TO PROPOSED GRADE.
4. 701411 IS USED AS THE BASIS FOR THE TRAFFIC CONTROL PLAN AT THE ON-RAMPS AND OFF-RAMPS TO IL-127.

STAGE 2 - I-64 CONSTRUCTION

1. MAINTAIN ONE LANE OF TRAFFIC IN BOTH DIRECTIONS OF TRAVEL IN EXISTING WESTBOUND LANES THROUGH WORK ZONE (WESTBOUND LANE SHOULDERS RECONSTRUCTED ON THE OUTSIDE DURING PRESTAGE AND INSIDE DURING STAGE 1).
2. SUBSTAGES 2A AND 2B ARE INCLUDED IN PLANS TO DISPLAY THE COMPLETION OF THE EASTBOUND MAINLINE ROADYWAY RECONSTRUCTION FROM CROSSOVER 2 TO THE IL-127 ON-RAMP AND THE IL-127 OFF-RAMP TO CROSSOVER 3, WHILE KEEPING THE RAMPS OPEN TO TRAFFIC DURING CONSTRUCTION. THIS WILL REQUIRE +/- 3" MILLING AND RESURFACING AT THE INSIDE SHOULDERS AT CROSSOVERS 2 AND 3, AND IS ACCOUNTED FOR IN TRAFFIC CONTROL SCHEDULE AND IN THE TYPICAL SECTIONS.

1

LEGEND

- WORK ZONE
- TEMPORARY PAVEMENT MARKING
- DIRECTION OF TRAFFIC
- TEMPORARY CONCRETE BARRIER WITH BARRIER WALL WITH REFLECTORS AND GLARE SCREEN

d'Escoto, Inc.
55 W Van Buren St, Ste 200
Chicago, IL 60605
TEL: 312.787.0707 FAX: 312.787.7322
www.descotoinc.com
IL Professional Engineering Design Firm No. 184003509-0002

Copyright © 2026

USER NAME = mgesior	DESIGNED - MEG	REVISED - 1 6/01/2026-ADDENDUM 1	
	DRAWN - MEG	REVISED -	
	CHECKED - MTV	REVISED -	
PLOT DATE = 6/4/2026	DATE - 6/4/2026	REVISED -	

STATE OF ILLINOIS
DEPARTMENT OF TRANSPORTATION

MAINTENANCE OF TRAFFIC TYPICALS STAGE 2
I-64

SCALE: | SHEET 1 OF 3 SHEETS | STA. TO STA.

F.A.I RTE.	SECTION	COUNTY	TOTAL SHEETS	SHEET NO.
64	95-(3,4)RS-2	WASHINGTON	775	185
		CONTRACT NO. 76M95		
	ILLINOIS	FED. AID PROJECT		

MODEL: Stage 2.1 [Sheet]
FILE NAME: pw://des-pw.bentley.com:des-pw-01/Documents/Projects/FTB209 I-64 Resurfacing/06. CADD_Sheets/D876M95_sht_MOT Typicals_DES.dgn

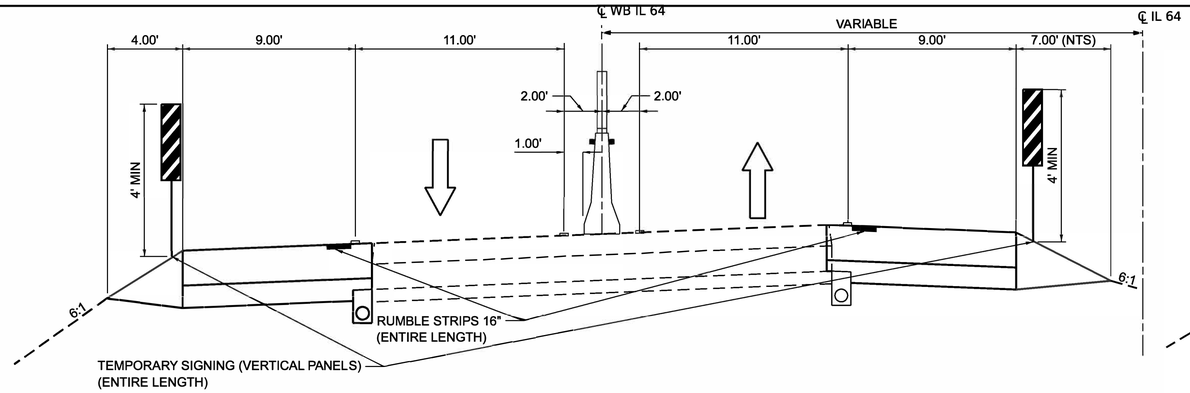

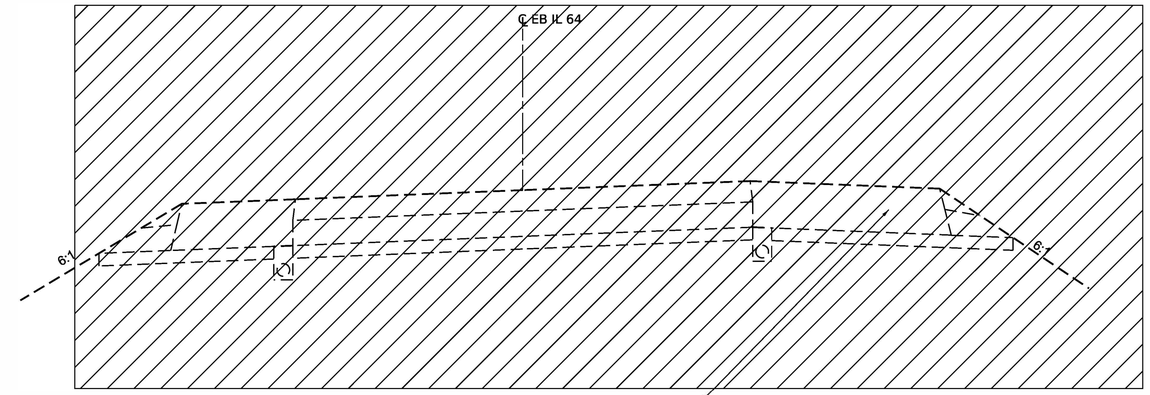

EASTBOUND HOT-MIX
ASPHALT SURFACE
REMOVAL, VARIABLE DEPTH
STA. 5623+83 TO STA. 5649+52

EASTBOUND SUPERELEVATED SECTION

STA 5564+27 TO 5580+66
STA 5616+29 TO 5649+52
STA 5780+00 TO 5808+28
STA 5848+45 TO 5877+13

STAGE 2 - I-64 TRAFFIC

1. ALL STAGE 2 LANE CLOSURES ARE COVERED UNDER PAY ITEM TRAFFIC CONTROL AND PROTECTION, (SPECIAL).
2. HIGHWAY STANDARDS 701400 AND 701402 ARE USED AS THE BASIS FOR THE TRAFFIC CONTROL PLAN LANE CLOSURES AT CROSSOVERS 1 AND 4 AS SHOWN IN THE PLAN, WITH ADJUSTMENTS FOR CROSSOVER SIGNAGE PER MUTCD SECTION 2D.52.
3. 701400 AND 701401 ARE USED AS THE BASIS FOR THE TRAFFIC CONTROL PLAN LANE CLOSURES FOR THE EASTBOUND PAVEMENT RESURFACING REQUIRED AT CROSSOVERS 1 AND 4 TO BRING THE PAVEMENT TO PROPOSED GRADE.
4. 701411 IS USED AS THE BASIS FOR THE TRAFFIC CONTROL PLAN AT THE ON-RAMPS AND OFF-RAMPS TO IL-127.

STAGE 2 - I-64 CONSTRUCTION

1. MAINTAIN ONE LANE OF TRAFFIC IN BOTH DIRECTIONS OF TRAVEL IN EXISTING WESTBOUND LANES THROUGH WORK ZONE (WESTBOUND LANE SHOULDERS RECONSTRUCTED ON THE OUTSIDE DURING PRESTAGE AND INSIDE DURING STAGE 1).
2. SUBSTAGES 2A AND 2B ARE INCLUDED IN PLANS TO DISPLAY THE COMPLETION OF THE EASTBOUND MAINLINE ROADYWAY RECONSTRUCTION FROM CROSSOVER 2 TO THE IL-127 ON-RAMP AND THE IL-127 OFF-RAMP TO CROSSOVER 3, WHILE KEEPING THE RAMPS OPEN TO TRAFFIC DURING CONSTRUCTION. THIS WILL REQUIRE +/- 3" MILLING AND RESURFACING AT THE INSIDE SHOULDERS AT CROSSOVERS 2 AND 3, AND IS ACCOUNTED FOR IN TRAFFIC CONTROL SCHEDULE AND IN THE TYPICAL SECTIONS. 1

LEGEND

- WORK ZONE
- TEMPORARY PAVEMENT MARKING
- DIRECTION OF TRAFFIC
- TEMPORARY CONCRETE BARRIER WITH BARRIER WALL WITH REFLECTORS AND GLARE SCREEN

d'Escoto, Inc.
55 W Van Buren St, Ste 200
Chicago, IL 60605
TEL: 312.787.0707 FAX: 312.787.7322
www.descotoinc.com
IL Professional Engineering Design Firm No. 184001609-0002
Copyright © 2026

USER NAME = mgesior	DESIGNED - MEG	REVISED - 1 6/01/2026-ADDENDUM 1	
	DRAWN - MEG	REVISED -	
	CHECKED - MTV	REVISED -	
PLOT DATE = 6/4/2026	DATE - 6/4/2026	REVISED -	

STATE OF ILLINOIS
DEPARTMENT OF TRANSPORTATION

MAINTENANCE OF TRAFFIC TYPICALS STAGE 2
I-64

SCALE: | SHEET 2 OF 3 SHEETS | STA. | TO STA.

F.A.I RTE.	SECTION	COUNTY	TOTAL SHEETS	SHEET NO.
64	95-(3,4)RS-2	WASHINGTON	775	186
		CONTRACT NO. 76M95		
	ILLINOIS	FED. AID PROJECT		

MODEL: Stage 2.2 [Sheet]
FILE NAME: pw://des-pw.bentley.com:des-pw-01/Documents/Projects/PTB209 I-64 Resurfacing/06. CADD_Sheets/D876M95_sht_MOT Typicals_DES.dgn

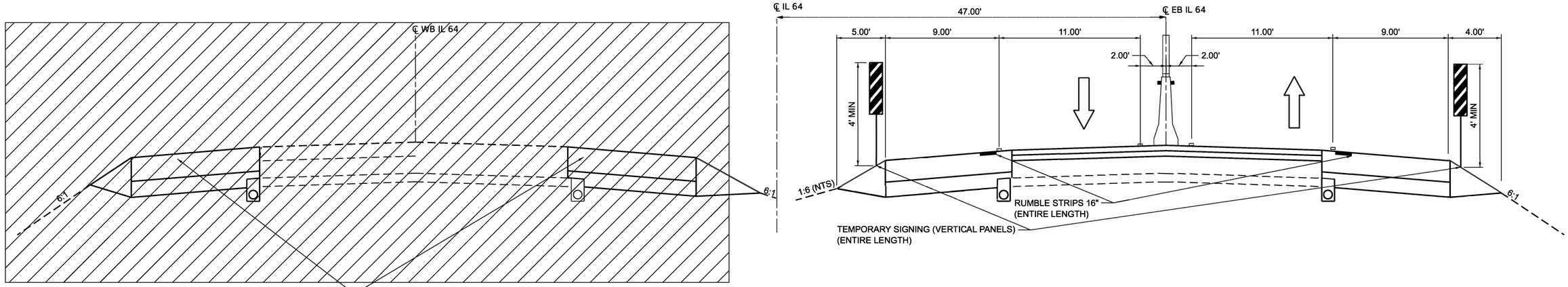

WESTBOUND TANGENT SECTION

STA 3397+29 TO 3467+91
STA 3492+57 TO 3530+49
STA 3558+65 TO 3564+09
STA 3585+66 TO 3590+12
STA 3609+83 TO 3617+96
STA 3653+46 TO 3779+90
STA 13809+90 TO 13817+54
STA 13843+07 TO 13850+98
STA 13879+98 TO 13913+00

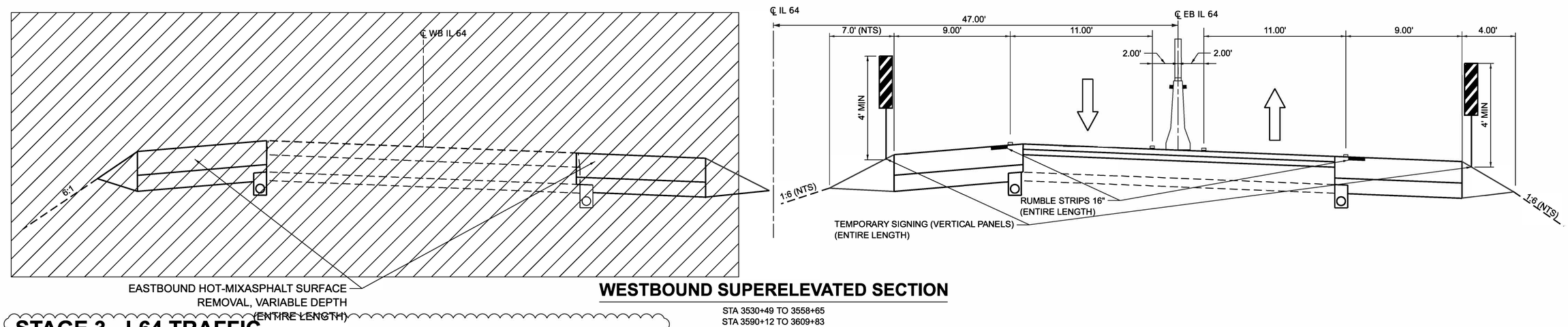

WESTBOUND SUPERELEVATED SECTION

STA 3530+49 TO 3558+65
STA 3590+12 TO 3609+83
STA 13817+53 TO 13843+07

STAGE 3 - I-64 TRAFFIC

1. ALL STAGE 3 LANE CLOSURES ARE COVERED UNDER PAY ITEM TRAFFIC CONTROL AND PROTECTION, (SPECIAL).
2. HIGHWAY STANDARDS 701400 AND 701402 ARE USED AS THE BASIS FOR THE TRAFFIC CONTROL PLAN LANE CLOSURES AT CROSSOVERS 1 AND 4 AS SHOWN IN THE PLAN, WITH ADJUSTMENTS FOR CROSSOVER SIGNAGE PER MUTCD SECTION 2D.52.
3. 701400 AND 701401 ARE USED AS THE BASIS FOR THE TRAFFIC CONTROL PLAN LANE CLOSURES FOR THE WESTBOUND PAVEMENT RESURFACING REQUIRED AT CROSSOVERS 1 AND 4 TO BRING THE PAVEMENT TO PROPOSED GRADE. 1
4. 701411 IS USED AS THE BASIS FOR THE TRAFFIC CONTROL PLAN AT THE ON-RAMPS AND OFF-RAMPS TO IL-127.

STAGE 3 - I-64 CONSTRUCTION

1. MAINTAIN ONE LANE OF TRAFFIC IN BOTH DIRECTIONS OF TRAVEL IN PROPOSED EASTBOUND LANES THROUGH WORK ZONE (ALL EASTBOUND PAVEMENT, ROADWAY AND SHOULDERS, RECONSTRUCTED DURING STAGE 2).
2. SUBSTAGES 3A AND 3B ARE INCLUDED IN PLANS TO DISPLAY THE COMPLETION OF THE WESTBOUND MAINLINE ROADYWAY RECONSTRUCTION FROM CROSSOVER 3 TO THE IL-127 ON-RAMP AND THE IL-127 OFF-RAMP TO CROSSOVER 2, WHILE KEEPING THE RAMPS OPEN TO TRAFFIC DURING CONSTRUCTION.
3. WESTBOUND SHOULDERS RECONSTRUCTED ON THE OUTSIDE DURING PRESTAGE AND INSIDE DURING STAGE 1. +/- 3" MILLING OF BOTH THE INSIDE AND OUTSIDE WESTBOUND SHOULDERS IS REQUIRED TO LOWER SHOULDERS DOWN TO THE MAINLINE GRADE FOR THE LENGTH OF THE PROJECT. THE PURPOSE IS TO HAVE A UNIFORM THICKNESS SURFACE COURSE FOR THE ROADWAY AND SHOULDERS, AND IS ACCOUNTED FOR IN THE TRAFFIC CONTROL SCHEDULE AND IN THE TYPICAL SECTIONS.

LEGEND

- WORK ZONE
- TEMPORARY PAVEMENT MARKING
- DIRECTION OF TRAFFIC
- TEMPORARY CONCRETE BARRIER WITH BARRIER WALL WITH REFLECTORS AND GLARE SCREEN

d'Escoto, Inc.
55 W Van Buren St, Ste 200
Chicago, IL 60605
TEL: 312.787.0707 FAX: 312.787.7322
www.descotoinc.com
IL Professional Engineering Design Firm No. 184001609-0002

Copyright © 2026

USER NAME = mgesior	DESIGNED - MEG	REVISED - 1 6/01/2026-ADDENDUM 1	
	DRAWN - MEG	REVISED -	
	CHECKED - MTV	REVISED -	
PLOT DATE = 6/4/2026	DATE - 6/4/2026	REVISED -	

STATE OF ILLINOIS
DEPARTMENT OF TRANSPORTATION

MAINTENANCE OF TRAFFIC TYPICALS STAGE 3
I-64

SCALE: SHEET 1 OF 3 SHEETS STA. TO STA.

F.A.I RTE.	SECTION	COUNTY	TOTAL SHEETS	SHEET NO.
64	95-(3,4)RS-2	WASHINGTON	775	188
		CONTRACT NO. 76M95		
	ILLINOIS	FED. AID PROJECT		

MODEL: Stage 3.1 [Sheet]
FILE NAME: pw://des-pw.bentley.com:des-pw-01/Documents/Projects/PTB209 I-64 Resurfacing/06. CADD_Sheets/D876M95_sht_MOT Typicals_DES.dgn

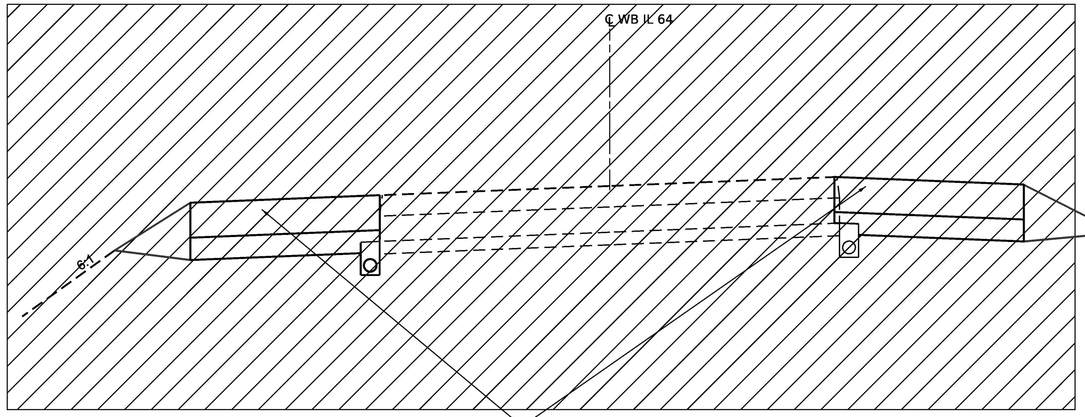

EASTBOUND HOT-MIXASPHALT SURFACE
REMOVAL, VARIABLE DEPTH
(ENTIRE LENGTH)

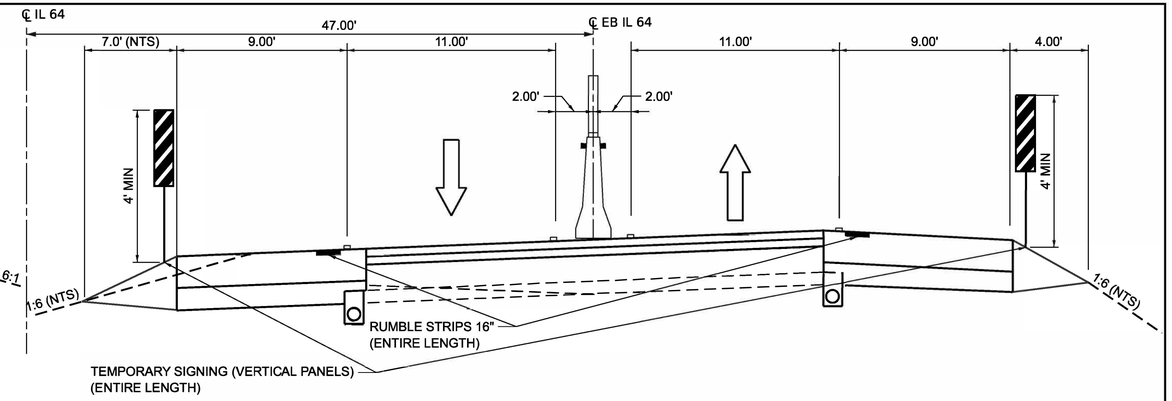

WESTBOUND SUPERELEVATED SECTION

STA 3468+10 TO 3491+31
STA 3565+35 TO 3584+40
STA 3609+82 TO 3652+20
STA 3780+93 TO 13808+63
STA 13816+28 TO 13844+33
STA 13852+24 TO 13878+71

STAGE 3 - I-64 TRAFFIC

1. ALL STAGE 3 LANE CLOSURES ARE COVERED UNDER PAY ITEM TRAFFIC CONTROL AND PROTECTION, (SPECIAL).
2. HIGHWAY STANDARDS 701400 AND 701402 ARE USED AS THE BASIS FOR THE TRAFFIC CONTROL PLAN LANE CLOSURES AT CROSSOVERS 1 AND 4 AS SHOWN IN THE PLAN, WITH ADJUSTMENTS FOR CROSSOVER SIGNAGE PER MUTCD SECTION 2D.52.
3. 701400 AND 701401 ARE USED AS THE BASIS FOR THE TRAFFIC CONTROL PLAN LANE CLOSURES FOR THE WESTBOUND PAVEMENT RESURFACING REQUIRED AT CROSSOVERS 1 AND 4 TO BRING THE PAVEMENT TO PROPOSED GRADE. 1
4. 701411 IS USED AS THE BASIS FOR THE TRAFFIC CONTROL PLAN AT THE ON-RAMPS AND OFF-RAMPS TO IL-127.

STAGE 3 - I-64 CONSTRUCTION

1. MAINTAIN ONE LANE OF TRAFFIC IN BOTH DIRECTIONS OF TRAVEL IN PROPOSED EASTBOUND LANES THROUGH WORK ZONE (ALL EASTBOUND PAVEMENT, ROADWAY AND SHOULDERS, RECONSTRUCTED DURING STAGE 2).
2. SUBSTAGES 3A AND 3B ARE INCLUDED IN PLANS TO DISPLAY THE COMPLETION OF THE WESTBOUND MAINLINE ROADYWAY RECONSTRUCTION FROM CROSSOVER 3 TO THE IL-127 ON-RAMP AND THE IL-127 OFF-RAMP TO CROSSOVER 2, WHILE KEEPING THE RAMPS OPEN TO TRAFFIC DURING CONSTRUCTION.
3. WESTBOUND SHOULDERS RECONSTRUCTED ON THE OUTSIDE DURING PRESTAGE AND INSIDE DURING STAGE 1. +/- 3" MILLING OF BOTH THE INSIDE AND OUTSIDE WESTBOUND SHOULDERS IS REQUIRED TO LOWER SHOULDERS DOWN TO THE MAINLINE GRADE FOR THE LENGTH OF THE PROJECT. THE PURPOSE IS TO HAVE A UNIFORM THICKNESS SURFACE COURSE FOR THE ROADWAY AND SHOULDERS, AND IS ACCOUNTED FOR IN THE TRAFFIC CONTROL SCHEDULE AND IN THE TYPICAL SECTIONS.

LEGEND

- WORK ZONE
- TEMPORARY PAVEMENT MARKING
- DIRECTION OF TRAFFIC
- TEMPORARY CONCRETE BARRIER WITH BARRIER WALL WITH REFLECTORS AND GLARE SCREEN

d'Escoto, Inc.
55 W Van Buren St, Ste 200
Chicago, IL 60605
TEL: 312.787.0707 FAX: 312.787.7322
www.descotoinc.com
IL Professional Engineering Design Firm No. 184001609-0002
Copyright © 2026

USER NAME = mgesior	DESIGNED - MEG	REVISED - 1 6/01/2026-ADDENDUM 1	STATE OF ILLINOIS DEPARTMENT OF TRANSPORTATION
	DRAWN - MEG	REVISED -	
	CHECKED - MTV	REVISED -	
PLOT DATE = 6/4/2026	DATE - 6/4/2026	REVISED -	

MAINTENANCE OF TRAFFIC TYPICALS STAGE 3
I-64

SCALE: | SHEET 2 OF 3 SHEETS | STA. | TO STA.

F.A.I RTE.	SECTION	COUNTY	TOTAL SHEETS	SHEET NO.
64	95-(3,4)RS-2	WASHINGTON	775	189
		CONTRACT NO. 76M95		
		ILLINOIS	FED. AID PROJECT	

MODEL: Stage 3.2 [Sheet]
FILE NAME: pw://des-pw.bentley.com:des-pw-01/Documents/Projects/PTB209 I-64 Resurfacing/06. CADD_Sheets/D876M95_sht_MOT Typicals_DES.dgn