F.A.I. RTE.	SECTION	COUNTY	TOTAL SHEETS	SHEET NO.
57	(27-38B) BR-1	FORD	185	1
	ILLINOIS	CONTRACT NO. 66K39		

06-12-2026 LETTING ITEM 058

INDEX OF SHEETS

1	COVER SHEET
2	GENERAL NOTES, COMMITMENTS
3 - 12	SUMMARY OF QUANTITIES
13 - 20	SCHEDULE OF QUANTITIES
21 - 24	TYPICAL SECTIONS
25	ALIGNMENT, TIES, AND BENCHMARKS
26 - 27	ROADWAY REMOVAL PLAN
28 - 31	ROADWAY PLAN AND PROFILE
32	CROSSOVER DETAILS
33	CROSSOVER PLAN
34 - 35	CROSSOVER JOINT PLAN
36 - 39	CROSSOVER DRAINAGE PLAN AND PROFILE
40	CROSSOVER DRAINAGE SCHEDULE
41 - 42	CROSSOVER REMOVAL PLAN
43 - 44	CROSSOVER TEMPORARY LIGHTING PLAN
45	MAINTENANCE OF TRAFFIC - GENERAL NOTES
46 - 49	MAINTENANCE OF TRAFFIC - TYPICAL SECTIONS
50 - 57	MAINTENANCE OF TRAFFIC PLAN
58	ALTERNATE ROUTE PLAN
59 - 68	SOUTH CROSSOVER CROSS SECTIONS
71 - 80	NORTH CROSSOVER CROSS SECTIONS
81 - 82	EROSION CONTROL PLAN
83 - 86	DRAINAGE PLAN AND PROFILE
87	DRAINAGE SCHEDULE
88 - 90	PAVEMENT MARKING PLAN
91 - 92	LANDSCAPING PLAN
93 - 140	STRUCTURAL PLANS [SN 027-0106 (SB), SN 027-0107 (NB)]
141 -146	DETAILS
147 - 185	CROSS SECTIONS

STATE OF ILLINOIS
DEPARTMENT OF TRANSPORTATION

PROPOSED HIGHWAY PLANS

FAI ROUTE 57 (I-57)
SECTION (27-38B) BR-1
PROJECT: BR-NHPP-2UUK(754)
BRIDGE AND PAVEMENT RECONSTRUCTION
FORD COUNTY

C-93-144-25

T23N

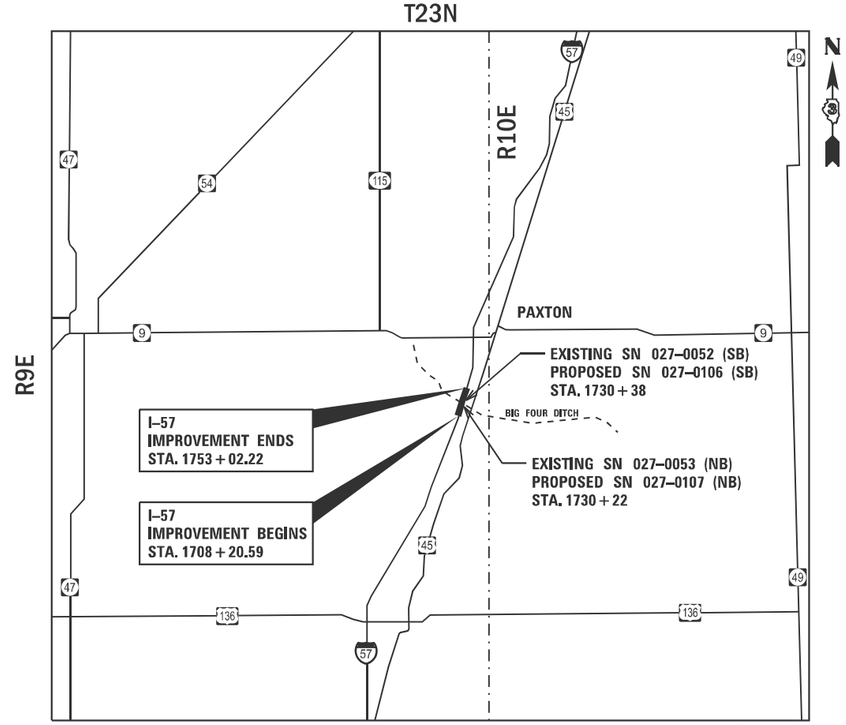

GROSS LENGTH = NET LENGTH = 4,482 FT. = 0.849 MILE

LOCATION MAP
NOT TO SCALE

D-93-106-25

LOCATION OF SECTION INDICATED THUS: -

I-57 (STA. 1708+21 TO STA 1753+02) - INTERSTATE
2023 ADT = 21,100
P.V. = 68.6% S.U. = 3.0% M.U. = 28.4%

V3 Companies
7325 Janes Avenue
Woodridge, IL 60517
630 724 9200 phone
www.v3co.com

EFK•Moen
Civil Engineering Design

LIN ENGINEERING,LTD.
Consulting Engineers
Westmont, Illinois

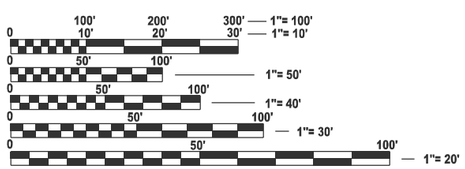

FULL SIZE PLANS HAVE BEEN PREPARED USING STANDARD ENGINEERING SCALES. REDUCED SIZED PLANS WILL NOT CONFORM TO STANDARD SCALES. IN MAKING MEASUREMENTS ON REDUCED PLANS, THE ABOVE SCALES MAY BE USED.

J.U.L.I.E.
JOINT UTILITY LOCATION INFORMATION FOR EXCAVATION
1-800-892-0123
OR 811

PROJECT ENGINEER: DAVID ALEXANDER
SQUAD LEADER: MOHAMED YOUSIF

CONTRACT NO. 66K39

V3 COMPANIES LTD.
JACOB W. BAUER
062-064761
DATE: 02-20-2026
SIGNATURE AND SEAL APPLY TO SHEETS: 1-31, 36-44, 59-87, 91-92, 141-185
JACOB W. BAUER 062-064761 LICENSED PROFESSIONAL ENGINEER OF ILLINOIS
EXPIRATION DATE: 11-30-2027

V3 COMPANIES LTD.
WILLIAM J. VEGRZYN
081-004983
DATE: 02-20-2026
SIGNATURE AND SEAL APPLY TO SHEETS: 93-140
STATE OF ILLINOIS WILLIAM J. VEGRZYN 081-004983 LICENSED STRUCTURAL ENGINEER
EXPIRATION DATE: 11-30-2027

EFK MOEN
ROBERT BRZEZON
062-066618
DATE: 02-20-2026
SIGNATURE AND SEAL APPLY TO SHEETS: 45-58
LICENSED PROFESSIONAL ENGINEER ROBERT BRZEZON 062.066618 STATE OF ILLINOIS
EXPIRATION DATE: 11-30-2027

LIN ENGINEERING, LTD.
SHIRAZ TARIQUE, P.E.
062-064219
DATE: 02-20-2026
SIGNATURE AND SEAL APPLY TO SHEETS: 32-35, 88-90
SHIRAZ TARIQUE 062-064219 LICENSED PROFESSIONAL ENGINEER OF ILLINOIS
EXPIRATION DATE: 11-30-2027

STATE OF ILLINOIS
DEPARTMENT OF TRANSPORTATION

SUBMITTED March 19, 20 26
Trisha Thompson
REGIONAL ENGINEER

May 8, 20 26
ENGINEER OF DESIGN AND ENVIRONMENT

May 8, 20 26
DIRECTOR OF HIGHWAYS, PROJECT IMPLEMENTATION

PRINTED BY THE AUTHORITY OF THE STATE OF ILLINOIS

REV. 3/24/26

GENERAL NOTES

1. EXCEPT AS NOTED ON THE PLANS, PAVEMENT GRADES SHOWN ARE AT THE TOP OF PAVEMENT SURFACES.

2. TOPSOIL TO BE STRIPPED SHALL BE STOCKPILED, STORED, AND REUSED FOR THE PROPOSED LANDSCAPING IMPROVEMENTS. THE STOCKPILE SHALL BE LOCATED WITHIN THE ROW. A 6" TOPSOIL THICKNESS WAS USED IN QUANTITY CALCULATIONS FOR TOPSOIL EXCAVATION AND PLACEMENT ITEM. THE ACTUAL TOPSOIL REMOVAL DEPTH SHALL BE VERIFIED IN THE FIELD.

3. BEFORE ORDERING PIPE CULVERTS OR PIPE DRAINS, THE CONTRACTOR SHALL CONSULT THE ENGINEER FOR EXACT LENGTHS.

4. ALL ELEVATIONS REFERRING TO U.S.G.S. MEAN SEA LEVEL DATUM.

5. THE FOLLOWING RATES OF APPLICATION HAVE BEEN USED IN CALCULATING PLAN QUANTITIES:

GRANULAR MATERIALS	2.05 TONS / CY YD
HMA RESURFACING	112 LBS / SQ YD / IN
SHORT TERM PAVEMENT MARKING	10 FT / 100 FT OF APPLICATION
MIX FOR CRACKS, JTS & FLGWYS	0.0003 TONS / SQ YD
BINDER (HAND METHOD)	0.0005 TONS / SQ YD
SUPPLEMENTRAL WATERING	3 GAL / SQ YD / APPLICATION
CALCIUM CHLORIDE	2 LB / SQ YD / APPLICATION
AGGREGATE DITCH CHECKS	5 TONS AGGREGATE

6. THE CONTRACTOR'S ATTENTION IS DIRECTED TO THE PRESENCE OF DEPARTMENT-OWNED UNDERGROUND ELECTRICAL CABLE WITHIN THE LIMITS OF THE PROPOSED IMPROVEMENT. THE CONTRACTOR SHALL REQUEST THE ILLINOIS DEPARTMENT OF TRANSPORTATION IN OTTAWA (815-434-8506) TO LOCATE THE UNDERGROUND FACILITIES, PROVIDING A MINIMUM OF 72 HOURS NOTICE. THE DEPARTMENT IS NOT A MEMBER OF THE JOINT UTILITY LOCATING INFORMATION FOR EXCAVATORS (JULIE) SYSTEM.

7. ALL DAMAGE TO DEPARTMENT OWNED UNDERGROUND FACILITIES, CAUSED BY THE CONTRACTOR SHALL BE REPAIRED TO THE SATISFACTION OF THE ENGINEER AND AT NO EXPENSE TO THE DEPARTMENT. THIS SHALL INCLUDE ALL TEMPORARY REPAIRS REQUIRED TO KEEP THE FACILITY OPERATIONAL WHILE MATERIAL IS BEING OBTAINED TO MAKE PERMANENT REPAIRS. SPLICING OF ELECTRIC CABLE WILL NOT BE ALLOWED. ELECTRIC CABLE SHALL BE REPLACED FROM POLE TO POLE OR CONTROLLER.

8. THE WORK REQUIRED TO CONNECT ANY SEWER TO AN EXISTING DRAINAGE STRUCTURE OR PIPE WILL NOT BE PAID FOR SEPARATELY, BUT WILL BE CONSIDERED AS INCLUDED IN THE CONTRACT UNIT PRICE BID FOR THE SEWER ITEMS.

9. MEMBERS OF JULIE KNOWN TO BE WITHIN THE LIMITS OF THE IMPROVEMENT ARE:

   AMEREN ILLINOIS
   FRONTIER COMMUNICATIONS
   STATE OF ILLINOIS - CMS
   EASTERN ILLINI ELECTRIC COOP
   MEDIACOM

10. NON-MEMBERS OF JULIE KNOWN TO BE WITHIN THE LIMITS OF THE IMPROVEMENTS ARE:

    ILLINOIS DEPARTMENT OF TRANSPORTATION

COMMITMENTS

RESIDENT ENGINEER TO CONTACT IDOT D5 OPERATION (217-466-7231) WHEN ALTERNATE SIGNS ARE INSTALLED.

DUE TO THE POTENTIAL OF THREATENED AND ENDANGERED SPECIES, ALL TREE REMOVALS SHALL BE COMPLETED BETWEEN OCTOBER 1 AND MARCH 31.

IDOT HIGHWAY STANDARDS

000001-09	STANDARD SYMBOLS, ABBREVIATIONS AND PATTERNS
280001-07	TEMPORARY EROSION CONTROL SYSTEMS
420101-07	24' JOINTED PCC PAVEMENT
420401-13	PAVEMENT CONNECTOR (PCC) FOR BRIDGE APPROACH SLAB
515001-04	NAME PLATE FOR BRIDGES
542001-06	CONCRETE END SECTIONS FOR PIPE CULVERTS 15" (375 MM) THRU 84" (2100 MM) DIAMETER
542411	SLOPED METAL END SECTIONS FOR PIPE CULVERTS 15" (375 MM) THRU 60" (1500 MM) DIAMETER
601001-05	PIPE UNDERDRAINS
630001-13	STEEL PLATE BEAM GUARDRAIL
630201-07	PCC/HMA STABILIZATION AT STEEL PLATE BEAM GUARDRAIL
630301-09	SHOULDER WIDENING FOR TYPE 1 (SPECIAL) GUARDRAIL TERMINALS
631011-10	TRAFFIC BARRIER TERMINAL, TYPE 2
631031-18	TRAFFIC BARRIER TERMINAL, TYPE 6
642001-03	SHOULDER RUMBLE STRIPS, 16 IN.
643001-03	SAND MODULE IMPACT ATTENUATORS
701101-05	OFF-ROAD OPERATIONS, MULTILANE, 15' (4.5 M) TO 24" (600 MM) FROM PAVEMENT EDGE
701106-02	OFF-ROAD OPERATIONS, MULTILANE, MORE THAN 15' (4.5 M) AWAY
701401-13	LANE CLOSURE, FREEWAY/EXPRESSWAY
701406-13	LANE CLOSURE, FREEWAY/EXPRESSWAY, DAY OPERATIONS ONLY
701416-11	LANE CLOSURE, FREEWAY/EXPRESSWAY, WITH CROSSOVER AND BARRIER
701426-09	LANE CLOSURE, MULTILANE, INTERMITTENT OR MOVING OPERATION, FOR SPEEDS > 45 MPH
701428-01	TRAFFIC CONTROL, SETUP AND REMOVAL, FREEWAY/EXPRESSWAY
701901-11	TRAFFIC CONTROL DEVICES
704001-08	TEMPORARY CONCRETE BARRIER
780001-05	TYPICAL PAVEMENT MARKINGS
781001-04	TYPICAL APPLICATIONS RAISED REFLECTIVE PAVEMENT MARKERS
782006-01	GUARDRAIL AND BARRIER WALL REFLECTOR MOUNTING DETAILS

HMA MIXTURE REQUIREMENT TABLE

LOCATIONS	HMA FULL DEPTH			HMA RESURFACING		HMA SHOULDER 11"		
MIXTURE USE	POLY HMA SURFACE COURSE	POLY HMA BINDER TOP LIFT	HMA BINDER BOTTOM LIFT(S)	POLY HMA SURFACE COURSE	POLY HMA BINDER COURSE	POLY HMA SURFACE COURSE	POLY HMA BINDER TOP LIFT	HMA BINDER BOTTOM LIFT(S)
BINDER GRADE (PG)	SBS PG 70-28	SBS PG 70-28	PG 64-22	SBS PG 70-28	SBS PG 70-28	SBS PG 70-28	SBS PG 70-28	PG 64-22
DESIGN AIR VOIDS	4.0% @ N90	4.0% @ N90	4.0% @ N90	4.0% @ N90	4.0% @ N90	4.0% @ N90	4.0% @ N90	4.0% @ N90
MIXTURE COMPOSITION	IL-9.5	IL-19.0	IL-19.0	IL-9.5	IL-19.0	IL-9.5	IL-19.0	IL-19.0
FRICTION AGGREGATE	MIXTURE D			MIXTURE D		MIXTURE D		
MIXTURE WEIGHT	112.0 LB/SY/IN	112.0 LB/SY/IN	112.0 LB/SY/IN	112.0 LB/SY/IN	112.0 LB/SY/IN	112.0 LB/SY/IN	112.0 LB/SY/IN	112.0 LB/SY/IN
QUALITY MANAGEMENT PROGRAM	QC/QA	QC/QA	QC/QA	QC/QA	QC/QA	QC/QA	QC/QA	QC/QA
SUBLOT SIZE	N/A	N/A	N/A	N/A	N/A	N/A	N/A	N/A
DENSITY TEST METHOD	CORES/NUCLEAR	CORES/NUCLEAR	CORES/NUCLEAR	CORES/NUCLEAR	CORES/NUCLEAR	CORES/NUCLEAR	CORES/NUCLEAR	CORES/NUCLEAR
MATERIAL TRANSFER DEVICE (REQUIRED)	YES	YES	YES	YES	YES	YES	YES	YES

STATE OF ILLINOIS
DEPARTMENT OF TRANSPORTATION
DISTRICT THREE
AS BUILT INFORMATION

SUPERVISING CONSTRUCTION FIELD ENGINEER

RESIDENT ENGINEER / TECHNICIAN

START & END DATES OF CONSTRUCTION:

INSPECTORS:

MODEL: 66K39 Sheet Border
FILE NAME: c:\workingdir\$datasource.name\dms16334\D366K39-plan-border.dgn

V3 Companies
7325 Janes Avenue
Woodridge, IL 60517
630 724 9200 phone
www.v3co.com

USER NAME =	DESIGNED - KDC	REVISED -	
	DRAWN - DRP	REVISED -	
	CHECKED - JWB	REVISED -	
PLOT DATE = 02/20/2026	DATE - 02/20/2026	REVISED -	

STATE OF ILLINOIS
DEPARTMENT OF TRANSPORTATION

HIGHWAY STANDARDS, PLAN NOTES AND COMMITMENTS

SCALE: NONE | SHEET 1 OF 1 SHEETS | STA. | TO STA.

F.A.I. RTE.	SECTION	COUNTY	TOTAL SHEETS	SHEET NO.
57	(27-38B) BR-1	FORD	185	2

CONTRACT NO. 66K39

ILLINOIS | FED. AID PROJECT

REV. 5/12/26

SPECIALTY ITEM	CODE NO.	ITEM	UNIT	TOTAL QUANTITY	CONSTRUCTION CODE		
					NHPP 90% FED/10% STATE	BR 90% FED/10% STATE	BR 90% FED/10% STATE
					ROADWAY	BRIDGE	BRIDGE
					0004	0010	0010
					RURAL	PR SN 027-0106	PR SN 027-0107
	20100110	TREE REMOVAL (6 TO 15 UNITS DIAMETER)	UNIT	288	288		
	20100210	TREE REMOVAL (OVER 15 UNITS DIAMETER)	UNIT	22	22		
	20101400	NITROGEN FERTILIZER NUTRIENT	POUND	545	545		
	20101500	PHOSPHORUS FERTILIZER NUTRIENT	POUND	545	545		
	20101600	POTASSIUM FERTILIZER NUTRIENT	POUND	545	545		
	20200100	EARTH EXCAVATION	CU YD	6,685	6,685		
	20400800	FURNISHED EXCAVATION	CU YD	2,827	2,827		
	20800150	TRENCH BACKFILL	CU YD	19	19		
	21101505	TOPSOIL EXCAVATION AND PLACEMENT	CU YD	2,808	2,808		
	21101615	TOPSOIL FURNISH AND PLACE, 4"	SQ YD	50	50		
	25000210	SEEDING, CLASS 2A	ACRE	4.00	4.00		
	25000310	SEEDING, CLASS 4	ACRE	2.00	2.00		
	25000320	SEEDING, CLASS 5	ACRE	2.00	2.00		
	25100630	EROSION CONTROL BLANKET	SQ YD	17,759	17,759		

MODEL: 66K39 Sheet Border
FILE NAME: c:\workingdir\$datasource.name\dms16334\D366K39-plan-border.dgn

V3 Companies
7325 Janes Avenue
Woodridge, IL 60517
630 724 9200 phone
www.v3co.com

USER NAME =	DESIGNED - KDC	REVISED -	
	DRAWN - DRP	REVISED -	
	CHECKED - JWB	REVISED -	
PLOT DATE = 02/20/2026	DATE - 02/20/2026	REVISED -	

STATE OF ILLINOIS
DEPARTMENT OF TRANSPORTATION

SUMMARY OF QUANTITIES

SCALE: NONE | SHEET 1 OF 9 SHEETS | STA. | TO STA.

F.A.I. RTE.	SECTION	COUNTY	TOTAL SHEETS	SHEET NO.
57	(27-38B) BR-1	FORD	185	3

CONTRACT NO. 66K39

ILLINOIS | FED. AID PROJECT

REV. 3/24/26

SPECIALTY ITEM	CODE NO.	ITEM	UNIT	TOTAL QUANTITY	CONSTRUCTION CODE		
					NHPP 90% FED/10% STATE	BR 90% FED/10% STATE	BR 90% FED/10% STATE
					ROADWAY	BRIDGE	BRIDGE
					0004	0010	0010
					RURAL	PR SN 027-0106	PR SN 027-0107
	28000250	TEMPORARY EROSION CONTROL SEEDING	POUND	367	367		
	28000305	TEMPORARY DITCH CHECKS	FOOT	299	299		
	28000400	PERIMETER EROSION BARRIER	FOOT	3,060	3,060		
	28000500	INLET AND PIPE PROTECTION	EACH	43	43		
	28100105	STONE RIPRAP, CLASS A3	SQ YD	462	462		
	28100107	STONE RIPRAP, CLASS A4	SQ YD	2,146	96	1,025	1,025
	28200200	FILTER FABRIC	SQ YD	2,827	981	923	923
	31101810	SUBBASE GRANULAR MATERIAL, TYPE B 12"	SQ YD	9,846	9,846		
	40600290	BITUMINOUS MATERIALS (TACK COAT)	POUND	6,966	6,966		
	40600370	LONGITUDINAL JOINT SEALANT	FOOT	11,173	11,173		
	40600405	MATERIAL TRANSFER DEVICE	TON	8,380	8,380		
	40603090	HOT-MIX ASPHALT BINDER COURSE, IL-19.0, N90	TON	5,405	5,405		
	40603240	POLYMERIZED HOT-MIX ASPHALT BINDER COURSE, IL-19.0, N90	TON	1,785	1,785		
	40604164	POLYMERIZED HOT-MIX ASPHALT SURFACE COURSE, IL-9.5, MIX "D", N90	TON	1,190	1,190		

SPECIALTY ITEM	CODE NO.	ITEM	UNIT	TOTAL QUANTITY	CONSTRUCTION CODE		
					NHPP 90% FED/10% STATE	BR 90% FED/10% STATE	BR 90% FED/10% STATE
					ROADWAY	BRIDGE	BRIDGE
					0004	0010	0010
					RURAL	PR SN 027-0106	PR SN 027-0107
	42000080	PAVEMENT CONNECTOR (PCC) FOR BRIDGE APPROACH SLAB	SQ YD	359	359		
	42000501	PORTLAND CEMENT CONCRETE PAVEMENT 10" (JOINTED)	SQ YD	5,996	5,996		
	42001300	PROTECTIVE COAT	SQ YD	16,721	16,721		
	44000100	PAVEMENT REMOVAL	SQ YD	5,996	5,996		
	44000164	HOT-MIX ASPHALT SURFACE REMOVAL, 3 3/4"	SQ YD	15,899	15,899		
	44004250	PAVED SHOULDER REMOVAL	SQ YD	2,511	2,511		
	44201773	CLASS D PATCHES, TYPE I, 11 INCH	SQ YD	5	5		
	44201777	CLASS D PATCHES, TYPE II, 11 INCH	SQ YD	15	15		
	44201781	CLASS D PATCHES, TYPE III, 11 INCH	SQ YD	128	128		
	44201783	CLASS D PATCHES, TYPE IV, 11 INCH	SQ YD	151	151		
	48101500	AGGREGATE SHOULDERS, TYPE B 6"	SQ YD	4,253	4,253		
	48203041	HOT-MIX ASPHALT SHOULDERS, 11"	SQ YD	2,556	2,556		
	50100100	REMOVAL OF EXISTING STRUCTURES	EACH	6	4	1	1
	50104400	CONCRETE HEADWALL REMOVAL	EACH	4	4		

SPECIALTY ITEM	CODE NO.	ITEM	UNIT	TOTAL QUANTITY	CONSTRUCTION CODE		
					NHPP 90% FED/10% STATE	BR 90% FED/10% STATE	BR 90% FED/10% STATE
					ROADWAY	BRIDGE	BRIDGE
					0004	0010	0010
					RURAL	PR SN 027-0106	PR SN 027-0107
	50105220	PIPE CULVERT REMOVAL	FOOT	889	889		
	50200100	STRUCTURE EXCAVATION	CU YD	341		172	169
	50200300	COFFERDAM EXCAVATION	CU YD	992		496	496
	50201121	COFFERDAM (TYPE 2) (LOCATION - 1)	EACH	1		1	0
	50201122	COFFERDAM (TYPE 2) (LOCATION - 2)	EACH	1		1	0
	50201123	COFFERDAM (TYPE 2) (LOCATION - 3)	EACH	1		0	1
	50201124	COFFERDAM (TYPE 2) (LOCATION - 4)	EACH	1		0	1
	50300225	CONCRETE STRUCTURES	CU YD	594		297	297
	50300255	CONCRETE SUPERSTRUCTURE	CU YD	1,092		546	546
	50300265	SEAL COAT CONCRETE	CU YD	214		107	107
	50300300	PROTECTIVE COAT	SQ YD	3,920		1,960	1,960
	50401310	FURNISHING AND ERECTING PRECAST PRESTRESSED CONCRETE BEAMS, IL36	FOOT	3,468		1,734	1,734
	50800205	REINFORCEMENT BARS, EPOXY COATED	POUND	376,540		188,270	188,270
	50800530	MECHANICAL SPLICERS	EACH	632		316	316

SPECIALTY ITEM	CODE NO.	ITEM	UNIT	TOTAL QUANTITY	CONSTRUCTION CODE		
					NHPP 90% FED/10% STATE	BR 90% FED/10% STATE	BR 90% FED/10% STATE
					ROADWAY	BRIDGE	BRIDGE
					0004	0010	0010
					RURAL	PR SN 027-0106	PR SN 027-0107
	51200961	FURNISHING METAL SHELL PILES 16" X 0.312"	FOOT	3,188		1,448	1,740
	51202305	DRIVING PILES	FOOT	3,188		1,448	1,740
	51203200	TEST PILE METAL SHELLS	EACH	8		4	4
	51204650	PILE SHOES	EACH	96		48	48
	51500100	NAME PLATES	EACH	2		1	1
	52000110	PREFORMED JOINT STRIP SEAL	FOOT	174		87	87
	52100010	ELASTOMERIC BEARING ASSEMBLY, TYPE I	EACH	48		24	24
	52100530	ANCHOR BOLTS, 1 1/4"	EACH	96		48	48
	54213459	END SECTIONS 24"	EACH	1	1		
	54260515	SLOPED METAL END SECTION, STANDARD 542411, 15", 1:6	EACH	4	4		
	58600101	GRANULAR BACKFILL FOR STRUCTURES	CU YD	1,039		520	519
	59100100	GEOCOMPOSITE WALL DRAIN	SQ YD	172		86	86
	60100060	CONCRETE HEADWALLS FOR PIPE DRAINS	EACH	14	14		
	60108100	PIPE UNDERDRAINS 4" (SPECIAL)	FOOT	291	291		

SPECIALTY ITEM	CODE NO.	ITEM	UNIT	TOTAL QUANTITY	CONSTRUCTION CODE		
					NHPP 90% FED/10% STATE	BR 90% FED/10% STATE	BR 90% FED/10% STATE
					ROADWAY	BRIDGE	BRIDGE
					0004	0010	0010
					RURAL	PR SN 027-0106	PR SN 027-0107
	60108501	PIPE UNDERDRAINS, TYPE 3	FOOT	4,047	4,047		
	60146304	PIPE UNDERDRAINS FOR STRUCTURES 4"	FOOT	264		132	132
*	63000001	STEEL PLATE BEAM GUARDRAIL, TYPE A, 6 FOOT POSTS	FOOT	1,200	1,200		
*	63100045	TRAFFIC BARRIER TERMINAL, TYPE 2	EACH	4	4		
*	63100085	TRAFFIC BARRIER TERMINAL, TYPE 6	EACH	8	8		
*	63100167	TRAFFIC BARRIER TERMINAL, TYPE 1 (SPECIAL) TANGENT	EACH	4	4		
	63200310	GUARDRAIL REMOVAL	FOOT	991	991		
	63800920	MODULAR GLARE SCREEN SYSTEM, TEMPORARY	FOOT	5,900	5,900		
	64200116	SHOULDER RUMBLE STRIPS, 16 INCH	FOOT	15,461	15,461		
	66500105	WOVEN WIRE FENCE, 4'	FOOT	156	156		
*	66900200	NON-SPECIAL WASTE DISPOSAL	CU YD	134	134		
*	66900530	SOIL DISPOSAL ANALYSIS	EACH	2	2		
*	66901001	REGULATED SUBSTANCES PRE-CONSTRUCTION PLAN	L SUM	1	1		
*	66901003	REGULATED SUBSTANCES FINAL CONSTRUCTION REPORT	L SUM	1	1		

*= SPECIALTY ITEM

MODEL: 66K39 Sheet Border
FILE NAME: c:\workingdir\$datasource.name\dms16334\D366K39-plan-border.dgn

V3 Companies
7325 Janes Avenue
Woodridge, IL 60517
630 724 9200 phone
www.v3co.com

USER NAME =	DESIGNED - KDC	REVISED -	
	DRAWN - DRP	REVISED -	
	CHECKED - JWB	REVISED -	
PLOT DATE = 02/20/2026	DATE - 02/20/2026	REVISED -	

STATE OF ILLINOIS
DEPARTMENT OF TRANSPORTATION

SUMMARY OF QUANTITIES

SCALE: NONE | SHEET 6 OF 9 SHEETS | STA. | TO STA.

F.A.I. RTE.	SECTION	COUNTY	TOTAL SHEETS	SHEET NO.
57	(27-38B) BR-1	FORD	185	8

CONTRACT NO. 66K39

ILLINOIS | FED. AID PROJECT

REV. 5/12/26 REV. 3/24/26

SPECIALTY ITEM	CODE NO.	ITEM	UNIT	TOTAL QUANTITY	CONSTRUCTION CODE		
					NHPP 90% FED/10% STATE	BR 90% FED/10% STATE	BR 90% FED/10% STATE
					ROADWAY	BRIDGE	BRIDGE
					0004	0010	0010
					RURAL	PR SN 027-0106	PR SN 027-0107
*	66901006	REGULATED SUBSTANCES MONITORING	CAL DA	3	3		
	67000400	ENGINEER'S FIELD OFFICE, TYPE A	CAL MO	24	24		
	67100100	MOBILIZATION	L SUM	1	1		
	70100410	TRAFFIC CONTROL AND PROTECTION, STANDARD 701416	EACH	2	2		
	70100700	TRAFFIC CONTROL AND PROTECTION, STANDARD 701406	L SUM	1	1		
	70100800	TRAFFIC CONTROL AND PROTECTION, STANDARD 701401	L SUM	1	1		
	70103815	TRAFFIC CONTROL SURVEILLANCE	CAL DA	328	328		
	70107025	CHANGEABLE MESSAGE SIGN	CAL DA	856	856		
	70300150	SHORT TERM PAVEMENT MARKING REMOVAL	SQ FT	40,512	40,512		
	70301130	TEMPORARY PAVEMENT MARKING - LINE 6" - EPOXY	FOOT	56,632	56,632		
	70307120	TEMPORARY PAVEMENT MARKING - LINE 4" - TYPE IV TAPE	FOOT	121,536	121,536		
	70400100	TEMPORARY CONCRETE BARRIER	FOOT	5,063	5,063		
	70400125	PINNING TEMPORARY CONCRETE BARRIER	EACH	144	144		
	70400200	RELOCATE TEMPORARY CONCRETE BARRIER	FOOT	8,525	8,525		

*= SPECIALTY ITEM

MODEL: 66K39 Sheet Border
FILE NAME: c:\workingdir$\datasource,name\dms16334\D366K39-plan-border.dgn

V3 Companies
7325 Janes Avenue
Woodridge, IL 60517
630 724 9200 phone
www.v3co.com

USER NAME =	DESIGNED - KDC	REVISED -	
	DRAWN - DRP	REVISED -	
	CHECKED - JWB	REVISED -	
PLOT DATE = 02/20/2026	DATE - 02/20/2026	REVISED -	

STATE OF ILLINOIS
DEPARTMENT OF TRANSPORTATION

SUMMARY OF QUANTITIES

SCALE: NONE | SHEET 7 OF 9 SHEETS | STA. | TO STA.

F.A.I. RTE.	SECTION	COUNTY	TOTAL SHEETS	SHEET NO.
57	(27-38B) BR-1	FORD	185	9

CONTRACT NO. 66K39

ILLINOIS | FED. AID PROJECT

REV. 5/12/26 REV. 3/24/26

SPECIALTY ITEM	CODE NO.	ITEM	UNIT	TOTAL QUANTITY	CONSTRUCTION CODE		
					NHPP 90% FED/10% STATE	BR 90% FED/10% STATE	BR 90% FED/10% STATE
					ROADWAY	BRIDGE	BRIDGE
					0004	0010	0010
					RURAL	PR SN 027-0106	PR SN 027-0107
	70600260	IMPACT ATTENUATORS, TEMPORARY (FULLY REDIRECTIVE, NARROW), TEST LEVEL 3	EACH	4	4		
	70600332	IMPACT ATTENUATORS, RELOCATE (FULLY REDIRECTIVE, NARROW), TEST LEVEL 3	EACH	2	2		
*	78004645	PREFORMED PLASTIC PAVEMENT MARKING, TYPE D - STANDARD - LINE 9"	FOOT	3,145	3,145		
*	78005130	EPOXY PAVEMENT MARKING - LINE 6"	FOOT	25,156	25,156		
*	78011035	GROOVING FOR RECESSED PAVEMENT MARKING 7"	FOOT	23,757	23,757		
*	78011050	GROOVING FOR RECESSED PAVEMENT MARKING 10"	FOOT	2,970	2,970		
*	78100100	RAISED REFLECTIVE PAVEMENT MARKER	EACH	84	84		
	78100200	TEMPORARY RAISED REFLECTIVE PAVEMENT MARKER	EACH	264	264		
*	78100300	REPLACEMENT REFLECTOR	EACH	217	217		
*	78200005	GUARDRAIL REFLECTORS, TYPE A	EACH	24	24		
	78300200	RAISED REFLECTIVE PAVEMENT MARKER REMOVAL	EACH	348	348		
	78300202	PAVEMENT MARKING REMOVAL - WATER BLASTING	SQ FT	24,902	24,902		
*	81028320	UNDERGROUND CONDUIT, PVC, 1" DIA.	FOOT	130	130		
*	81702130	ELECTRIC CABLE IN CONDUIT, 600V (XLP-TYPE USE) 1/C NO. 6	FOOT	390	390		

*= SPECIALTY ITEM

MODEL: 66K39 Sheet Border
FILE NAME: c:\workingdir$\datasource,name\dms16334\D366K39-plan-border.dgn

V3 Companies
7325 Janes Avenue
Woodridge, IL 60517
630 724 9200 phone
www.v3co.com

USER NAME =	DESIGNED - KDC	REVISED -	
	DRAWN - DRP	REVISED -	
	CHECKED - JWB	REVISED -	
PLOT DATE = 02/20/2026	DATE - 02/20/2026	REVISED -	

STATE OF ILLINOIS
DEPARTMENT OF TRANSPORTATION

SUMMARY OF QUANTITIES

SCALE: NONE | SHEET 8 OF 9 SHEETS | STA. | TO STA.

F.A.I. RTE.	SECTION	COUNTY	TOTAL SHEETS	SHEET NO.
57	(27-38B) BR-1	FORD	185	10

CONTRACT NO. 66K39

ILLINOIS | FED. AID PROJECT

REV. 5/12/26 REV. 3/24/26

SPECIALTY ITEM	CODE NO.	ITEM	UNIT	TOTAL QUANTITY	CONSTRUCTION CODE		
					NHPP 90% FED/10% STATE	BR 90% FED/10% STATE	BR 90% FED/10% STATE
					ROADWAY	BRIDGE	BRIDGE
					0004	0010	0010
					RURAL	PR SN 027-0106	PR SN 027-0107
*	81800230	AERIAL CABLE, 2-1/C NO. 6 WITH MESSENGER WIRE	FOOT	4,997	4,997		
	542D0220	PIPE CULVERTS, CLASS D, TYPE 1 15"	FOOT	545	545		
	550A0410	STORM SEWERS, CLASS A, TYPE 2 24"	FOOT	89	89		
	X2011001	HIGH VISIBILITY TEMPORARY FENCING	FOOT	147	147		
	X4062952	HOT-MIX ASPHALT STABILIZATION 6" AT STEEL PLATE BEAM GUARD RAIL	SQ YD	552	552		
	X5030250	BRIDGE DECK GROOVING (LONGITUDINAL)	SQ YD	1,876		938	938
	X5030305	CONCRETE WEARING SURFACE, 5"	SQ YD	586		293	293
	X5040100	PRECAST BRIDGE APPROACH SLAB	SQ FT	5,270		2,635	2,635
	X5080530	BAR TERMINATORS	EACH	992		496	496
	X5230174	DRAINAGE SCUPPERS, DS-11	EACH	4		2	2
	X6350204	LINEAR DELINEATOR PANELS, 4 INCH	EACH	33	33		
	X6350206	LINEAR DELINEATOR PANELS, 6 INCH	EACH	16	16		
	X6420002	FILLING EXISTING RUMBLE STRIP	FOOT	7,600	7,600		
	X6640104	FENCE REMOVAL	FOOT	156	156		

*= SPECIALTY ITEM

MODEL: 66K39 Sheet Border
FILE NAME: c:\workingdir\$datasource.name\dms16334\D366K39-plan-border.dgn

V3 Companies
7325 Janes Avenue
Woodridge, IL 60517
630 724 9200 phone
www.v3co.com

USER NAME =	DESIGNED - KDC	REVISED -	
	DRAWN - DRP	REVISED -	
	CHECKED - JWB	REVISED -	
PLOT DATE = 02/20/2026	DATE - 02/20/2026	REVISED -	

STATE OF ILLINOIS
DEPARTMENT OF TRANSPORTATION

SUMMARY OF QUANTITIES

SCALE: NONE | SHEET 9 OF 9 SHEETS | STA. | TO STA.

F.A.I. RTE.	SECTION	COUNTY	TOTAL SHEETS	SHEET NO.
57	(27-38B) BR-1	FORD	185	11

CONTRACT NO. 66K39

ILLINOIS | FED. AID PROJECT

REV. 5/12/26 REV. 3/24/26

SPECIALTY ITEM	CODE NO.	ITEM	UNIT	TOTAL QUANTITY	CONSTRUCTION CODE		
					NHPP 90% FED/10% STATE	BR 90% FED/10% STATE	BR 90% FED/10% STATE
					ROADWAY	BRIDGE	BRIDGE
					0004	0010	0010
					RURAL	PR SN 027-0106	PR SN 027-0107
	X7010118	TEMPORARY RUMBLE STRIPS (SPECIAL)	EACH	16	16		
	X7010239	CHANGEABLE MESSAGE SIGN (SPECIAL)	CAL WK	868	868		
*	X7011858	REAL-TIME TRAFFIC CONTROL SENSOR UNIT	CAL WK	248	248		
	X7200202	ALTERNATE ROUTE SIGNING	L SUM	1	1		
	X8211009	TEMPORARY LUMINAIRE, LED, ROADWAY, OUTPUT DESIGNATION I	EACH	28	28		
	X8250060	TEMPORARY LIGHTING CONTROLLER	EACH	2	2		
	X7830050	RAISED REFLECTIVE PAVEMENT MARKER, REFLECTOR REMOVAL	EACH	671	671		
*	X7830052	RAISED REFLECTIVE PAVEMENT MARKER, REFLECTOR REPLACEMENT	EACH	454	454		
	X8302163	TEMPORARY WOOD POLE, 60 FT., CLASS 4, 15 FT. MAST ARM	EACH	28	28		
*	X8570002	SMART TRAFFIC MONITORING SYSTEM	CAL WK	124	124		
*	X8570004	SMART TRAFFIC MONITORING DEVICE	CAL WK	620	620		
	Z0013798	CONSTRUCTION LAYOUT	L SUM	1	1		
	Z0029090	DIAMOND GRINDING (BRIDGE SECTION)	SQ YD	2,970		1,485	1,485
Ø	Z0076600	TRAINEES	HOUR	1,000	1,000		
	Z0065760	SLOTTED DRAIN 15" WITH VARIABLE SLOT	FOOT	255	255		
Ø	Z0076604	TRAINEES - TRAINING PROGRAM GRADUATE	HOUR	1,000	1,000		

Ø 0042 *= SPECIALTY ITEM

MODEL: 66K39 Sheet Border
FILE NAME: c:\workingdir$\datasource,name\dms16334\D366K39-plan-border.dgn

V3 Companies
7325 Janes Avenue
Woodridge, IL 60517
630 724 9200 phone
www.v3co.com

USER NAME =	DESIGNED - KDC	REVISED -	
	DRAWN - DRP	REVISED -	
	CHECKED - JWB	REVISED -	
PLOT DATE = 02/20/2026	DATE - 02/20/2026	REVISED -	

STATE OF ILLINOIS
DEPARTMENT OF TRANSPORTATION

SUMMARY OF QUANTITIES

SCALE: NONE | SHEET 10 OF 10 SHEETS | STA. | TO STA.

F.A.I. RTE.	SECTION	COUNTY	TOTAL SHEETS	SHEET NO.
57	(27-38B) BR-1	FORD	185	12
		CONTRACT NO. 66K39		
	ILLINOIS	FED. AID PROJECT		

REV. 5/12/26 REV. 4/21/26 REV. 3/24/26

EARTH EXCAVATION SCHEDULE

STATION	END AREAS				DISTANCE	VOLUME							
	CUT	FILL	TOPSOIL EXCAVATION	PROPOSED TOPSOIL		CUT (EARTH EXCAVATION)	CUT (ADJUSTED FOR 25% SHRINKAGE)	FILL (EMBANKMENT)	BALANCE ADJUSTED CUT-FILL	TOPSOIL EXCAVATION AND PLACEMENT	TOPSOIL EXCAVATION (25% SHRINKAGE)	PROPOSED TOPSOIL	BALANCE ADJUSTED EXCAVATION - PROPOSED
	SQ FT	SQ FT	SQ FT	SQ FT	FT	CU YD	CU YD	CU YD	CU YD	CU YD	CU YD	CU YD	CU YD
STAGE 1													
I-57													
1708+50.00	12.1	7.4	7.5	2.5									
1709+00.00	12.1	7.2	6.8	2.1	50.0	22.4	16.8	13.5	3.3	13.2	9.9	4.3	5.6
1709+50.00	12.1	6.4	6.3	1.8	50.0	22.4	16.8	12.6	4.2	12.1	9.1	3.6	5.5
1710+00.00	11.9	4.4	5.3	1.3	50.0	22.2	16.6	10.0	6.6	10.8	8.1	2.8	5.2
1710+50.00	11.7	4.1	5.1	1.1	50.0	21.8	16.4	7.9	8.5	9.6	7.2	2.2	5.1
1711+00.00	24.0	8.3	10.1	2.4	50.0	33.0	24.8	11.5	13.2	14.1	10.5	3.2	7.3
1711+50.00	27.7	18.3	15.5	4.4	50.0	47.9	35.9	24.7	11.2	23.8	17.8	6.3	11.5
1712+00.00	35.6	62.4	26.3	9.1	50.0	58.6	44.0	74.8	-30.8	38.7	29.0	12.5	16.6
1712+50.00	39.0	58.5	26.3	5.8	50.0	69.1	51.8	112.0	-60.2	48.7	36.5	13.8	22.7
1713+00.00	39.3	38.7	26.3	1.3	50.0	72.4	54.3	90.0	-35.6	48.7	36.5	6.6	29.9
1713+50.00	39.4	29.2	26.3	0.0	50.0	72.8	54.6	62.9	-8.3	48.7	36.5	1.2	35.3
1714+00.00	39.1	29.4	26.3	0.0	50.0	72.6	54.5	54.3	0.2	48.7	36.5	0.0	36.5
1714+50.00	39.4	26.0	26.3	0.0	50.0	72.7	54.5	51.3	3.2	48.7	36.5	0.0	36.5
1715+00.00	38.8	38.1	26.3	1.6	50.0	72.4	54.3	59.4	-5.0	48.7	36.5	1.5	35.0
1715+50.00	38.4	56.8	26.3	5.7	50.0	71.5	53.6	87.8	-34.2	48.7	36.5	6.8	29.8
1716+00.00	35.5	58.7	26.3	8.9	50.0	68.4	51.3	106.9	-55.5	48.8	36.6	13.5	23.1
1716+50.00	33.5	33.7	26.4	10.7	50.0	63.9	47.9	85.5	-37.5	48.8	36.6	18.1	18.5
1717+00.00	25.0	11.3	12.9	3.3	50.0	54.2	40.7	41.6	-0.9	36.3	27.3	13.0	14.2
1717+50.00	12.9	6.6	8.1	1.9	50.0	35.1	26.3	16.5	9.8	19.4	14.6	4.9	9.7
1718+00.00	13.0	5.4	8.1	1.6	50.0	23.9	17.9	11.1	6.8	15.0	11.2	3.3	8.0
1718+50.00	12.5	6.3	7.8	1.8	50.0	23.6	17.7	10.9	6.8	14.7	11.0	3.1	8.0
1719+00.00	12.8	5.1	7.2	1.4	50.0	23.4	17.6	10.6	7.0	13.9	10.5	2.9	7.5
1719+50.00	12.8	5.5	6.6	1.6	50.0	23.8	17.8	9.8	8.0	12.8	9.6	2.8	6.8
1720+00.00	12.6	2.4	3.9	0.9	50.0	23.5	17.6	7.3	10.4	9.7	7.3	2.3	5.0
1741+00.00	12.1	0.2	1.5	0.1									
1741+50.00	12.4	5.9	6.1	1.7	50.0	22.7	17.0	5.7	11.3	7.1	5.3	1.7	3.6
1742+00.00	12.5	2.7	5.4	1.1	50.0	23.0	17.3	8.0	9.3	10.7	8.0	2.6	5.4
1742+50.00	12.5	18.8	14.3	6.7	50.0	23.2	17.4	19.9	-2.5	18.3	13.7	7.3	6.4
1743+00.00	13.1	14.8	14.5	7.0	50.0	23.7	17.8	31.1	-13.4	26.7	20.0	12.7	7.3
1743+50.00	13.6	15.3	14.6	7.0	50.0	24.7	18.5	27.9	-9.4	27.0	20.2	13.0	7.2
1744+00.00	28.0	28.3	26.1	13.2	50.0	38.5	28.9	40.4	-11.5	37.7	28.3	18.7	9.6
1744+50.00	28.5	26.7	26.1	12.0	50.0	52.3	39.2	50.9	-11.7	48.3	36.2	23.3	12.9
1745+00.00	33.8	64.0	26.2	10.5	50.0	57.7	43.3	84.0	-40.8	48.4	36.3	20.9	15.4
1745+50.00	39.8	56.5	26.2	7.7	50.0	68.2	51.2	111.6	-60.4	48.5	36.4	16.8	19.6
1746+00.00	39.0	48.8	26.2	3.7	50.0	73.0	54.7	97.5	-42.7	48.6	36.4	10.5	25.9
1746+50.00	38.7	27.8	26.3	2.2	50.0	71.9	53.9	70.9	-17.0	48.6	36.5	5.5	31.0
1747+00.00	41.1	19.7	26.3	0.0	50.0	73.8	55.4	44.0	11.4	48.7	36.5	2.0	34.5
1747+50.00	42.7	20.6	26.4	0.0	50.0	77.5	58.2	37.3	20.8	48.8	36.6	0.0	36.6
1748+00.00	38.9	28.1	26.4	2.2	50.0	75.5	56.7	45.1	11.5	48.9	36.7	2.1	34.6
1748+50.00	40.3	45.5	26.4	3.7	50.0	73.4	55.0	68.1	-13.1	48.9	36.7	5.5	31.2
1749+00.00	39.9	58.2	26.4	7.7	50.0	74.3	55.7	96.0	-40.2	48.9	36.7	10.5	26.1
1749+50.00	32.4	16.6	16.4	3.6	50.0	67.0	50.2	69.2	-19.0	39.6	29.7	10.4	19.3
1750+00.00	25.1	7.1	10.7	1.8	50.0	53.2	39.9	21.9	18.0	25.1	18.8	5.0	13.8
1750+50.00	25.6	7.2	9.1	2.5	50.0	47.0	35.2	13.3	22.0	18.3	13.7	4.0	9.7
1751+00.00	12.2	4.3	5.3	1.2	50.0	35.0	26.2	10.7	15.6	13.3	9.9	3.5	6.5
1751+50.00	12.0	6.0	6.0	1.6	50.0	22.4	16.8	9.5	7.3	10.4	7.8	2.7	5.2
1752+00.00	11.9	7.2	6.8	2.0	50.0	22.2	16.7	12.2	4.4	11.8	8.9	3.3	5.5
1752+50.00	11.6	6.4	6.7	1.7	50.0	21.8	16.4	12.6	3.8	12.4	9.3	3.4	5.9
1753+00.00	11.3	4.9	6.3	1.4	50.0	21.3	15.9	10.4	5.5	12.1	9.0	2.9	6.1
					STAGE 1 TOTALS	2,215.0	1,661.3	1,971.0	-309.8	1,439.5	1,079.6	317.1	762.5

MODEL: 66K39 Sheet Border
FILE NAME: c:\workingdir\$datasource.name\dms16334\D366K39-plan-border.dgn

V3 Companies
7325 Janes Avenue
Woodridge, IL 60517
630 724 9200 phone
www.v3co.com

USER NAME =	DESIGNED - KDC	REVISED -	
	DRAWN - DRP	REVISED -	
	CHECKED - JWB	REVISED -	
PLOT DATE = 02/20/2026	DATE - 02/20/2026	REVISED -	

STATE OF ILLINOIS
DEPARTMENT OF TRANSPORTATION

SCHEDULE OF QUANTITIES

SCALE: NONE | SHEET 1 OF 8 SHEETS | STA. TO STA.

F.A.I. RTE.	SECTION	COUNTY	TOTAL SHEETS	SHEET NO.
57	(27-38B) BR-1	FORD	185	13
		CONTRACT NO. 66K39		
		ILLINOIS FED. AID PROJECT		

EARTH EXCAVATION SCHEDULE

STATION	END AREAS				DISTANCE	VOLUME							
	CUT	FILL	TOPSOIL STRIPPING	PROPOSED TOPSOIL		CUT (EARTH EXCAVATION)	CUT (ADJUSTED FOR 25% SHRINKAGE)	FILL (EMBANKMENT)	BALANCE ADJUSTED CUT-FILL	TOPSOIL EXCAVATION AND PLACEMENT	TOPSOIL EXCAVATION (25% SHRINKAGE)	PROPOSED TOPSOIL	BALANCE ADJUSTED EXCAVATION - PROPOSED
	SQ FT	SQ FT	SQ FT	SQ FT	FT	CU YD	CU YD	CU YD	CU YD	CU YD	CU YD	CU YD	CU YD
STAGE 2													
I-57 SOUTHBOUND													
1720+50.00	0.7	0.6	1.5	0.0									
1721+00.00	0.7	0.5	1.6	0.0	50.0	1.3	1.0	1.1	-0.1	2.8	2.1	0.0	2.1
1721+50.00	0.7	0.5	1.6	0.0	50.0	1.3	1.0	1.0	0.0	2.9	2.2	0.0	2.2
1722+00.00	0.6	0.8	1.7	0.0	50.0	1.2	0.9	1.2	-0.3	3.1	2.3	0.0	2.3
1722+50.00	0.0	2.0	3.5	0.6	50.0	0.6	0.4	2.6	-2.1	4.8	3.6	0.6	3.1
1723+00.00	0.0	4.3	4.7	1.3	50.0	0.0	0.0	5.8	-5.8	7.6	5.7	1.7	4.0
1723+50.00	0.0	10.6	8.4	3.4	50.0	0.0	0.0	13.8	-13.8	12.1	9.1	4.3	4.8
1724+00.00	0.1	34.9	19.0	9.8	50.0	0.1	0.1	42.2	-42.1	25.4	19.0	12.2	6.8
1724+50.00	0.0	48.1	19.5	9.8	50.0	0.1	0.1	76.9	-76.8	35.7	26.7	18.1	8.6
1725+00.00	44.7	65.3	36.9	21.4	50.0	41.4	31.1	105.0	-73.9	52.3	39.2	28.8	10.4
1725+50.00	50.3	74.5	37.7	21.7	50.0	88.0	66.0	129.5	-63.5	69.1	51.8	39.9	12.0
1726+00.00	30.4	85.1	37.6	21.5	50.0	74.7	56.1	147.8	-91.8	69.7	52.3	40.0	12.3
1726+50.00	21.7	89.8	36.7	20.6	50.0	48.3	36.2	162.0	-125.7	68.8	51.6	38.9	12.7
1727+00.00	15.2	107.4	39.8	22.8	50.0	34.2	25.6	182.6	-157.0	70.8	53.1	40.1	13.0
1727+50.00	25.0	115.4	44.8	25.7	50.0	37.2	27.9	206.3	-178.4	78.3	58.7	44.9	13.9
1728+00.00	2.9	139.1	39.4	21.1	50.0	25.8	19.4	235.7	-216.3	77.9	58.5	43.3	15.2
1732+50.00	1.5	44.0	17.8	7.6									
1733+00.00	1.8	29.3	12.4	5.3	50.0	3.1	2.3	67.9	-65.5	28.0	21.0	11.9	9.1
1733+50.00	1.8	26.2	11.5	4.7	50.0	3.3	2.5	51.4	-48.9	22.2	16.6	9.3	7.4
1734+00.00	1.3	23.9	9.3	4.5	50.0	2.9	2.2	46.4	-44.2	19.3	14.5	8.6	5.9
1734+50.00	1.6	22.9	8.5	3.9	50.0	2.7	2.0	43.3	-41.3	16.5	12.4	7.8	4.6
1735+00.00	0.1	26.5	13.9	6.9	50.0	1.6	1.2	45.7	-44.6	20.8	15.6	10.0	5.6
1735+50.00	0.0	19.0	11.3	5.0	50.0	0.1	0.1	42.1	-42.0	23.4	17.5	11.1	6.5
1736+00.00	0.0	14.6	9.8	4.1	50.0	0.0	0.0	31.1	-31.1	19.6	14.7	8.5	6.2
1736+50.00	0.0	8.8	7.6	2.8	50.0	0.0	0.0	21.7	-21.7	16.1	12.1	6.4	5.7
1737+00.00	0.0	5.7	5.6	1.9	50.0	0.0	0.0	13.5	-13.4	12.2	9.1	4.3	4.9
1737+50.00	0.0	1.0	2.6	0.0	50.0	0.0	0.0	6.2	-6.2	7.6	5.7	1.7	4.0
1738+00.00	0.0	1.1	2.5	0.0	50.0	0.0	0.0	1.9	-1.9	4.7	3.6	0.0	3.6
1738+50.00	0.0	1.1	2.5	0.0	50.0	0.0	0.0	2.0	-2.0	4.7	3.5	0.0	3.5
1739+00.00	0.0	1.0	2.5	0.0	50.0	0.0	0.0	1.9	-1.9	4.6	3.5	0.0	3.5
1739+50.00	0.0	1.0	2.5	0.0	50.0	0.0	0.0	1.8	-1.8	4.6	3.5	0.0	3.5
1740+00.00	0.0	1.0	2.5	0.0	50.0	0.0	0.0	1.8	-1.8	4.6	3.5	0.0	3.5
1740+50.00	0.0	0.0	0.0	0.0	50.0	0.0	0.0	0.9	-0.9	2.3	1.7	0.0	1.7
					STAGE 2 TOTALS	367.9	275.9	1,692.8	1,416.8	792.4	594.3	392.1	202.2

MODEL: 66K39 Sheet Border
FILE NAME: c:\workingdir\$datasource.name\dms16334\D366K39-plan-border.dgn

V3 Companies
7325 Janes Avenue
Woodridge, IL 60517
630 724 9200 phone
www.v3co.com

USER NAME =	DESIGNED - KDC	REVISED -	
	DRAWN - DRP	REVISED -	
	CHECKED - JWB	REVISED -	
PLOT DATE = 02/20/2026	DATE - 02/20/2026	REVISED -	

STATE OF ILLINOIS
DEPARTMENT OF TRANSPORTATION

SCHEDULE OF QUANTITIES

SCALE: NONE | SHEET 2 OF 8 SHEETS | STA. TO STA.

F.A.I. RTE.	SECTION	COUNTY	TOTAL SHEETS	SHEET NO.
57	(27-38B) BR-1	FORD	185	14

CONTRACT NO. 66K39

ILLINOIS | FED. AID PROJECT

EARTH EXCAVATION SCHEDULE

STATION	END AREAS CUT SQ FT	END AREAS FILL SQ FT	END AREAS TOPSOIL STRIPPING SQ FT	END AREAS PROPOSED TOPSOIL SQ FT	DISTANCE FT	VOLUME CUT (EARTH EXCAVATION) CU YD	VOLUME CUT (ADJUSTED FOR 25% SHRINKAGE) CU YD	VOLUME FILL (EMBANKMENT) CU YD	VOLUME BALANCE ADJUSTED CUT-FILL CU YD	VOLUME TOPSOIL EXCAVATION AND PLACEMENT CU YD	VOLUME TOPSOIL EXCAVATION (25% SHRINKAGE) CU YD	VOLUME PROPOSED TOPSOIL CU YD	VOLUME BALANCE ADJUSTED EXCAVATION - PROPOSED CU YD
STAGE 3													
I-57 NORTHBOUND													
1720+50.00	0.1	0.3	1.4	0.0									
1721+00.00	0.1	0.3	1.4	0.0	50.0	0.2	0.1	0.5	-0.4	2.5	1.9	0.0	1.9
1721+50.00	0.1	0.2	1.4	0.0	50.0	0.2	0.1	0.5	-0.3	2.6	1.9	0.0	1.9
1722+00.00	0.1	0.3	1.4	0.0	50.0	0.2	0.1	0.5	-0.3	2.6	1.9	0.0	1.9
1722+50.00	0.0	1.7	3.5	0.6	50.0	0.1	0.1	1.8	-1.7	4.6	3.4	0.6	2.8
1723+00.00	0.0	3.1	3.9	0.9	50.0	0.0	0.0	4.4	-4.4	6.9	5.2	1.4	3.8
1723+50.00	0.0	6.8	6.2	2.2	50.0	0.0	0.0	9.2	-9.2	9.4	7.0	2.9	4.1
1724+00.00	0.0	14.3	10.2	4.5	50.0	0.0	0.0	19.5	-19.5	15.1	11.4	6.2	5.1
1724+50.00	0.0	21.8	13.1	6.2	50.0	0.0	0.0	33.4	-33.4	21.6	16.2	10.0	6.2
1725+00.00	0.0	33.0	18.1	9.1	50.0	0.0	0.0	50.7	-50.7	28.9	21.7	14.2	7.4
1725+50.00	1.7	27.0	13.6	5.1	50.0	1.6	1.2	55.6	-54.4	29.3	22.0	13.2	8.8
1726+00.00	1.6	32.6	9.7	5.1	50.0	3.1	2.3	55.2	-52.9	21.6	16.2	9.4	6.8
1726+50.00	1.0	35.4	12.7	6.6	50.0	2.4	1.8	63.0	-61.2	20.8	15.6	10.8	4.8
1727+00.00	1.9	43.6	15.7	8.0	50.0	2.7	2.0	73.1	-71.1	26.4	19.8	13.5	6.3
1727+50.00	1.6	55.0	19.7	9.5	50.0	3.2	2.4	91.2	-88.8	32.8	24.6	16.2	8.4
1728+00.00	1.9	60.3	21.3	9.5	50.0	3.2	2.4	106.7	-104.3	37.9	28.4	17.6	10.8
1732+50.00	0.6	33.3	15.8	5.9									
1733+00.00	0.1	45.9	20.4	10.3	50.0	0.7	0.5	73.3	-72.8	33.6	25.2	15.0	10.1
1733+50.00	0.0	38.5	18.1	9.0	50.0	0.1	0.1	78.1	-78.0	35.7	26.8	17.8	8.9
1734+00.00	0.0	37.4	18.0	8.7	50.0	0.0	0.0	70.3	-70.3	33.4	25.0	16.4	8.7
1734+50.00	0.0	35.9	17.3	8.6	50.0	0.0	0.0	67.9	-67.9	32.6	24.5	16.0	8.4
1735+00.00	0.0	30.7	16.2	8.0	50.0	0.0	0.0	61.6	-61.6	30.9	23.2	15.4	7.8
1735+50.00	0.0	29.4	16.1	8.0	50.0	0.0	0.0	55.6	-55.6	29.9	22.4	14.8	7.6
1736+00.00	0.0	24.5	14.9	7.1	50.0	0.0	0.0	49.9	-49.9	28.7	21.5	14.0	7.5
1736+50.00	0.0	17.1	11.3	4.9	50.0	0.0	0.0	38.6	-38.6	24.2	18.2	11.1	7.1
1737+00.00	0.0	10.2	7.7	3.1	50.0	0.0	0.0	25.3	-25.2	17.6	13.2	7.4	5.8
1737+50.00	0.0	5.1	5.4	1.6	50.0	0.0	0.0	14.1	-14.1	12.1	9.1	4.3	4.7
1738+00.00	0.0	3.2	4.4	1.1	50.0	0.0	0.0	7.7	-7.7	9.1	6.8	2.5	4.3
1738+50.00	0.0	1.0	2.7	0.0	50.0	0.0	0.0	3.9	-3.9	6.6	4.9	1.0	3.9
1739+00.00	0.0	1.0	2.7	0.0	50.0	0.0	0.0	1.8	-1.8	5.0	3.7	0.0	3.7
1739+50.00	0.0	1.0	2.7	0.0	50.0	0.0	0.0	1.8	-1.8	5.0	3.8	0.0	3.8
1740+00.00	0.0	1.0	2.8	0.0	50.0	0.0	0.0	1.8	-1.8	5.1	3.8	0.0	3.8
1740+50.00	6.5	0.0	1.5	0.0	50.0	6.1	4.5	0.9	3.6	4.0	3.0	0.0	2.9
					STAGE 3 TOTALS	23.7	17.8	1,118.0	-1,100.3	576.2	432.2	251.8	180.4

EARTH EXCAVATION SCHEDULE

STATION	END AREAS CUT SQ FT	END AREAS FILL SQ FT	END AREAS TOPSOIL STRIPPING SQ FT	END AREAS PROPOSED TOPSOIL SQ FT	DISTANCE FT	VOLUME CUT (EARTH EXCAVATION) CU YD	VOLUME CUT (ADJUSTED FOR 25% SHRINKAGE) CU YD	VOLUME FILL (EMBANKMENT) CU YD	VOLUME BALANCE ADJUSTED CUT-FILL CU YD	VOLUME TOPSOIL EXCAVATION AND PLACEMENT CU YD	VOLUME TOPSOIL EXCAVATION (25% SHRINKAGE) CU YD	VOLUME PROPOSED TOPSOIL CU YD	VOLUME BALANCE ADJUSTED EXCAVATION - PROPOSED CU YD
STAGE 4													
I-57													
1708+50.00	12.4	0.0	0.0	0.0									
1709+00.00	12.5	0.0	0.0	0.0	50.0	23.0	17.3	0.0	17.2	0.0	0.0	0.0	0.0
1709+50.00	12.4	0.0	0.0	0.0	50.0	23.1	17.3	0.0	17.3	0.0	0.0	0.1	-0.1
1710+00.00	6.4	0.1	0.0	0.1	50.0	17.4	13.1	0.1	13.0	0.0	0.0	0.1	-0.1
1710+50.00	6.6	0.1	0.0	0.1	50.0	12.0	9.0	0.2	8.8	0.0	0.0	0.2	-0.2
1711+00.00	13.6	0.3	0.0	0.3	50.0	18.6	14.0	0.4	13.6	0.0	0.0	0.4	-0.4
1711+50.00	13.3	0.3	0.0	0.3	50.0	24.8	18.6	0.6	18.0	0.0	0.0	0.6	-0.6
1712+00.00	78.0	0.0	0.0	16.2	50.0	84.5	63.4	0.3	63.1	0.0	0.0	15.2	-15.2
1712+50.00	89.7	0.0	0.0	16.4	50.0	155.3	116.5	0.0	116.5	0.0	0.0	30.2	-30.2
1713+00.00	98.3	0.0	0.0	16.3	50.0	174.1	130.5	0.0	130.5	0.0	0.0	30.3	-30.3
1713+50.00	115.5	0.0	0.0	16.4	50.0	198.0	148.5	0.0	148.5	0.0	0.0	30.3	-30.3
1714+00.00	122.8	0.0	0.0	15.3	50.0	220.6	165.5	0.0	165.5	0.0	0.0	29.3	-29.3
1714+50.00	120.1	0.0	0.0	15.3	50.0	224.9	168.7	0.0	168.7	0.0	0.0	28.3	-28.3
1715+00.00	113.5	0.0	0.0	15.3	50.0	216.3	162.2	0.0	162.2	0.0	0.0	28.3	-28.3
1715+50.00	97.3	0.0	0.0	15.3	50.0	195.2	146.4	0.0	146.4	0.0	0.0	28.4	-28.4
1716+00.00	83.0	0.0	0.0	15.3	50.0	166.9	125.2	0.0	125.2	0.0	0.0	28.3	-28.3
1716+50.00	50.4	0.0	0.0	0.0	50.0	123.5	92.6	0.0	92.6	0.0	0.0	14.2	-14.2
1717+00.00	13.9	0.0	0.0	0.0	50.0	59.5	44.6	0.0	44.6	0.0	0.0	0.1	-0.1
1717+50.00	7.3	0.1	0.0	0.0	50.0	19.6	14.7	0.1	14.6	0.0	0.0	0.1	-0.1
1718+00.00	7.4	0.1	0.0	0.1	50.0	13.6	10.2	0.1	10.1	0.0	0.0	0.1	-0.1
1718+50.00	7.3	0.1	0.0	0.1	50.0	13.6	10.2	0.1	10.0	0.0	0.0	0.1	-0.1
1719+00.00	7.2	0.2	0.0	0.2	50.0	13.5	10.1	0.2	9.9	0.0	0.0	0.2	-0.2
1719+50.00	7.3	0.1	0.0	0.1	50.0	13.4	10.1	0.3	9.8	0.0	0.0	0.3	-0.3
1720+00.00	7.7	0.1	0.0	0.1	50.0	13.8	10.4	0.3	10.1	0.0	0.0	0.3	-0.3
1741+00.00	7.1	0.1	0.0	0.1									
1741+50.00	7.1	0.2	0.0	0.2	50.0	13.2	9.9	0.2	9.6	0.0	0.0	0.2	-0.2
1742+00.00	7.1	0.0	0.0	0.0	50.0	13.2	9.9	0.2	9.7	0.0	0.0	0.2	-0.2
1742+50.00	6.9	0.1	0.0	0.1	50.0	12.9	9.7	0.1	9.6	0.0	0.0	0.1	-0.1
1743+00.00	7.1	0.1	0.0	0.1	50.0	13.0	9.7	0.2	9.5	0.0	0.0	0.2	-0.2
1743+50.00	7.0	0.1	0.0	0.1	50.0	13.1	9.8	0.2	9.6	0.0	0.0	0.2	-0.2
1744+00.00	30.8	0.0	0.0	15.0	50.0	35.0	26.3	0.1	26.1	0.0	0.0	14.0	-14.0
1744+50.00	34.8	0.0	0.0	15.0	50.0	60.7	45.6	0.0	45.6	0.0	0.0	27.7	-27.7
1745+00.00	83.5	0.0	0.0	15.0	50.0	109.6	82.2	0.0	82.2	0.0	0.0	27.7	-27.7
1745+50.00	87.8	0.0	0.0	15.0	50.0	158.6	119.0	0.0	119.0	0.0	0.0	27.7	-27.7
1746+00.00	89.5	0.0	0.0	15.0	50.0	164.2	123.1	0.0	123.1	0.0	0.0	27.8	-27.8
1746+50.00	100.8	0.0	0.0	15.0	50.0	176.2	132.1	0.0	132.1	0.0	0.0	27.8	-27.8
1747+00.00	113.8	0.0	0.0	15.0	50.0	198.7	149.0	0.0	149.0	0.0	0.0	27.8	-27.8
1747+50.00	117.3	0.0	0.0	15.0	50.0	214.0	160.5	0.0	160.5	0.0	0.0	27.8	-27.8
1748+00.00	103.2	0.0	0.0	15.0	50.0	204.2	153.1	0.0	153.1	0.0	0.0	27.8	-27.8
1748+50.00	100.3	0.0	0.0	14.9	50.0	188.4	141.3	0.0	141.3	0.0	0.0	27.7	-27.7
1749+00.00	113.5	0.0	0.0	15.0	50.0	198.0	148.5	0.0	148.5	0.0	0.0	27.7	-27.7
1749+50.00	14.2	0.1	0.0	0.1	50.0	118.3	88.7	0.1	88.6	0.0	0.0	14.0	-14.0
1750+00.00	14.1	0.2	0.0	0.2	50.0	26.3	19.7	0.3	19.4	0.0	0.0	0.3	-0.3
1750+50.00	13.9	0.2	0.0	0.2	50.0	26.0	19.5	0.4	19.1	0.0	0.0	0.4	-0.4
1751+00.00	7.0	0.2	0.0	0.2	50.0	19.4	14.5	0.4	14.2	0.0	0.0	0.4	-0.4
1751+50.00	12.9	0.0	0.0	0.3	50.0	18.4	13.8	0.2	13.6	0.0	0.0	0.4	-0.4
1752+00.00	12.9	0.0	0.0	0.3	50.0	24.0	18.0	0.0	18.0	0.0	0.0	0.5	-0.5
1752+50.00	13.0	0.0	0.0	0.3	50.0	24.0	18.0	0.0	18.0	0.0	0.0	0.5	-0.5
1753+00.00	12.9	0.0	0.0	0.2	50.0	24.0	18.0	0.0	18.0	0.0	0.0	0.4	-0.4
					STAGE 4 TOTALS	4,078.3	3,058.8	5.1	3,053.6	0.0	0.0	574.4	-574.4

EARTH EXCAVATION SCHEDULE TOTALS

DESCRIPTION	VOLUME CUT (EARTH EXCAVATION) CU YD	CUT (ADJUSTED FOR 25% SHRINKAGE) CU YD	FILL (EMBANKMENT) CU YD	BALANCE ADJUSTED CUT-FILL CU YD	FURNISHED EXCAVATION CU YD	TOPSOIL EXCAVATION AND PLACEMENT CU YD	TOPSOIL EXCAVATION (25% SHRINKAGE) CU YD	PROPOSED TOPSOIL CU YD	BALANCE ADJUSTED EXCAVATION - PROPOSED CU YD
STAGE 1									
I-57	2,215.0	1,661.3	1,971.0	-309.8	309.8	1,439.5	1,079.6	317.1	762.5
STAGE 2									
I-57 SOUTHBOUND	367.9	275.9	1,692.8	-1,416.8	1,416.8	792.4	594.3	392.1	202.2
STAGE 3									
I-57 NORTHBOUND	23.7	17.8	1,118.0	-1,100.3	1,100.3	576.2	432.2	251.8	180.4
STAGE 4									
I-57	4,078.3	3,058.8	5.1	3,053.6	0.0	0.0	0.0	574.4	-574.4
PROJECT TOTAL	6,685.0	5,013.0	4,787.0	226.8	2,826.8	2,808.1	2,106.1	1,535.4	570.7

TREE REMOVAL SCHEDULE

LOCATION			TREE REMOVAL (6 TO 15 UNITS DIAMETER)	TREE REMOVAL (OVER 15 UNITS DIAMETER)
STATION	OFFSET	LT/RT	UNIT	UNIT
I-57				
1727+91.70	129.72	LT	7	
1728+26.65	142.67	LT	6	
1728+50.80	147.38	LT	6	
1728+53.49	116.50	RT	7	
1728+55.59	103.87	RT	6	
1728+57.56	107.09	RT	5	
1728+57.99	101.19	RT	5	
1728+59.14	108.76	RT	6	
1728+60.22	105.69	RT	6	
1728+67.46	77.14	RT	6	
1728+68.33	88.99	RT	15	
1728+70.56	120.95	RT		22
1729+22.01	95.72	RT	12	
1729+33.90	86.98	LT	10	
1729+58.27	85.69	LT	8	
1731+27.77	88.79	RT	15	
1731+30.81	94.79	RT	13	
1731+35.82	72.16	RT	4	
1731+44.03	79.26	RT	4	
1731+44.41	77.26	RT	4	
1731+62.93	88.02	RT	9	
1731+63.93	90.39	RT	4	
1731+64.20	86.07	RT	6	
1731+68.11	83.93	RT	5	
1731+69.78	89.00	RT	6	
1731+71.27	86.94	RT	11	
1731+89.87	100.72	LT	8	
1731+91.06	91.10	LT	7	
1731+92.49	100.88	LT	8	
1731+98.76	81.12	LT	12	
1732+08.91	91.32	LT	10	
1732+09.83	84.16	LT	8	
1732+17.70	84.37	LT	7	
1732+20.35	102.55	LT	8	
1732+21.13	102.52	LT	8	
1732+23.05	105.29	LT	9	
1732+25.06	94.87	LT	9	
1732+25.95	94.89	LT	8	
	TOTAL		288	22

LONGITUDINAL JOINT SEALANT SCHEDULE

LOCATION				LONGITUDINAL JOINT SEALANT
STATION	TO	STATION	LANE LOCATION	FOOT
I-57				
1720+50.00		1722+50.00	SB OUTER DL	200
1737+50.00		1740+50.00	SB OUTER DL	300
1720+50.00		1722+50.00	SB PGL	200
1737+50.00		1740+50.00	SB OUTER DL	300
1720+50.00		1722+50.00	SB OUTER DL	200
1737+50.00		1740+50.00	SB OUTER DL	300
1720+50.00		1722+50.00	NB OUTER DL	200
1737+50.00		1740+50.00	NB OUTER DL	300
1720+50.00		1722+50.00	NB OUTER DL	200
1720+50.00		1722+50.00	NB PGL	200
1738+25.00		1740+50.00	NB OUTER DL	300
1720+50.00		1722+50.00	NB INNER DL	200
1738+25.00		1740+50.00	NB INNER DL	300
1722+50.00		1727+93.91	SB OUTER DL	544
1735+00.00		1737+50.00	SB OUTER DL	250
1722+50.00		1727+93.91	SB PGL	544
1735+00.00		1737+50.00	SB PGL	250
1722+50.00		1727+93.91	SB OUTER DL	544
1735+00.00		1737+50.00	SB OUTER DL	250
1722+50.00		1725+42.50	NB OUTER DL	293
1732+64.68		1738+25.00	NB OUTER DL	560
1722+50.00		1725+42.50	NB PGL	293
1732+64.68		1738+25.00	NB PGL	560
1722+50.00		1725+42.50	NB OUTER DL	293
1732+64.68		1738+25.00	NB OUTER DL	560
1722+50.00		1725+42.50	NB INNER DL	293
1732+64.68		1738+25.00	NB INNER DL	560
1727+93.91		1728+43.63	SB OUTER DL	50
1732+32.94		1734+65.71	SB OUTER DL	233
1727+93.91		1728+43.63	SB PGL	50
1732+32.94		1734+65.71	SB PGL	233
172793.91		172843.63	SB OUTER DL	50
1732+32.94		1734+65.71	SB OUTER DL	233
1725+42.50		1728+27.06	NB OUTER DL	285
1732+16.37		1732+64.68	NB OUTER DL	48
1725+42.50		1728+27.06	NB PGL	285
1732+16.37		1732+64.68	NB PGL	48
1725+42.50		1728+27.06	NB OUTER DL	285
1732+16.37		1732+64.68	NB OUTER DL	48
1725+42.50		1728+27.06	NB INNER DL	285
1732+16.37		1732+64.68	NB INNER DL	48
			TOTAL	11,173

SUBBASE GRANULAT MATERIAL, TYPE B 12" SCHEDULE

LOCATION					SUBBASE GRANULAR MATERIAL, TYPE B 12"
STATION	LT/RT	TO	STATION	LT/RT	SQ YD
I-57					
1708+20.59	RT		1717+36.57	RT	712
1710+59.59	LT		1720+50.00	LT	770
1725+42.50	RT		1728+27.06	RT	221
1727+93.91	LT		1728+43.63	LT	55
1732+16.37	RT		1732+64.68	RT	27
1732+32.94	LT		1735+00.00	LT	208
1740+50.00	RT		1750+63.16	RT	788
1743+86.42	LT		1753+02.16	LT	712
				TOTAL	3,494

NOTE: TO BE PLACED AFTER THE CROSSOVER IS REMOVED.

PAVEMENT CONNECTOR (PCC) FOR BRIDGE APPROACH SLAB SCHEDULE

LOCATION					PAVEMENT CONNECTOR (PCC) FOR BRIDGE APPROACH SLAB
STATION	LT/RT	TO	STATION	LT/RT	SQ YD
I-57					
1728+43.63	LT		1728+61.89	LT	90
1732+13.62	LT		1732+32.94	LT	90
1728+27.06	RT		1728+46.38	RT	90
1731+98.11	RT		1732+16.37	RT	90
				TOTAL	359

PAVEMENT REMOVAL SCHEDULE

LOCATION					HOT-MIX ASPHALT SURFACE REMOVAL, 3 3/4"	PAVED SHOULDER REMOVAL
STATION	LT/RT	TO	STATION	LT/RT	SQ YD	SQ YD
I-57						
1708+20.59	RT		1717+36.57	RT		593
1710+59.59	LT		1720+50.00	LT		656
1717+36.57	RT		1720+50.00	RT	204	
1720+50.00	RT		1728+84.04	RT	3,789	
1720+50.00	LT		1729+00.00	LT	3,726	
1731+60.47	RT		1740+50.00	RT	3,898	
1731+75.78	LT		1740+50.00	LT	4,066	
1740+50.00	LT		1743+86.13	LT	215	
1740+50.00	RT		1750+63.16	RT		677
1748+15.29	LT		1753+02.16	LT		584
				TOTAL	15,899	2,511

MAINLINE PAVING SCHEDULE

LOCATION					MATERIAL TRANSFER DEVICE	HOT-MIX ASPHALT BINDER COURSE, IL-19.0, N90	POLYMERIZED HOT-MIX ASPHALT BINDER COURSE, IL-19.0, N90	POLYMERIZED HOT-MIX ASPHALT SURFACE COURSE, IL-9.5, MIX "D", N90	PROTECTIVE COAT
STATION	LT/RT	TO	STATION	LT/RT	TON	TON	TON	TON	SQ YD
I-57									
1708+20.59	RT		1717+36.57	RT					611
1710+59.59	LT		1720+50.00	LT					659
1720+50.00	RT		1722+50.00	RT	187		112	75	889
1720+50.00	LT		1722+50.00	LT	187		112	75	889
1722+50.00	LT		1727+93.91	LT	508		305	203	2,417
1722+50.00	RT		1725+42.50	RT	273		164	109	1,300
1722+50.00	LT		1728+43.63	LT	1,248	1,248			
1722+50.00	RT		1728+27.06	RT	1,204	1,204			
1725+42.50	RT		1728+27.06	RT	266		159	106	1,265
1727+93.91	LT		1728+43.63	LT	46		28	19	221
1732+16.37	RT		1732+64.68	RT	45		27	18	215
1732+16.37	RT		1740+50.00	RT	1,466	1,466			
1732+32.94	LT		1734+65.71	LT	217		130	87	1,035
1732+32.94	LT		1740+50.00	LT	1,487	1,487			
1732+64.68	RT		1738+25.00	RT	523		314	209	2,490
1735+00.00	LT		1737+50.00	LT	233		140	93	1,111
1737+50.00	LT		1740+50.00	LT	280		168	112	1,333
1738+25.00	RT		1740+50.00	RT	210		126	84	1,000
1740+50.00	RT		1750+63.16	RT					676
1743+86.42	LT		1753+02.16	LT					611
				TOTAL	8,380	5,405	1,785	1,190	16,721

SHOULDER SCHEDULE

LOCATION					AGGREGATE SHOULDERS, TYPE B 6"	HOT-MIX ASPHALT SHOULDERS, 11"	HOT-MIX ASPHALT STABILIZATION 6" AT STEEL PLATE BEAM GUARD RAIL
STATION	LT/RT	TO	STATION	LT/RT	SQ YD	SQ YD	SQ YD
I-57							
1708+20.59	RT		1717+36.57	RT	204	611	
1710+59.68	LT		1720+50.00	LT	220	659	
1713+86.28	RT		1732+64.70	RT			25
1717+36.57	RT		1720+50.00	RT	69		
1720+50.00	LT		1728+04.73	LT	167		
1720+50.00	LT		1727+97.31	LT	166		
1720+50.00	RT		1725+60.42	RT	113		
1720+50.00	RT		1726+24.07	RT	127		
1725+56.42	RT		1728+64.42	RT			99
1726+20.07	RT		1728+57.01	RT			75
1727+93.08	LT		1728+73.72	LT			26
1728+00.74	LT		1728+81.13	LT			26
1731+78.87	RT		1732+59.77	RT			26
1731+95.00	LT		1735+02.94	LT			100
1732+02.85	LT		1734+39.34	LT			175
1732+55.51	RT		1740+50.00	RT	176		
1732+60.68	RT		1740+50.00	RT	175		
1734+35.34	LT		1740+50.00	LT	136		
1734+98.94	LT		1740+50.00	LT	122		
1740+50.00	LT		1743+86.42	LT	75		
1740+50.00	RT		1750+63.16	RT	225	676	
1743+86.42	LT		1753+02.16	LT	204	611	
				TOTAL	2,179	2,556	552

GUARDRAIL SCHEDULE

LOCATION					GUARDRAIL REMOVAL	STEEL PLATE BEAM GUARDRAIL, TYPE A, 6 FOOT POSTS	TRAFFIC BARRIER TERMINAL, TYPE 2	TRAFFIC BARRIER TERMINAL, TYPE 6	TRAFFIC BARRIER TERMINAL, TYPE 1 (SPECIAL) TANGENT	GUARDRAIL REFLECTORS, TYPE A	LINEAR DELINEATOR PANELS, 4 INCH	LINEAR DELINEATOR PANELS, 6 INCH
STATION	LT/RT	TO	STATION	LT/RT	FOOT	FOOT	EACH	FOOT	FOOT	EACH	EACH	EACH
I-57												
1725+64.42	25.00' RT		1728+27.66	26.00' RT		263		1	1	4	4	
1726+00.67	22.13' RT		1728+73.18	26.72' RT	273							
1726+32.01	69.00' RT		1728+20.25	68.00' RT		188		1	1	4	4	
1726+44.43	69.70' RT		1728+66.93	60.98' RT	223							
1727+99.49	26.00' LT		1728+73.72	26.00' LT		74	1	1		4	4	
1728+06.74	68.00' LT		1728+81.13	68.00' LT		74	1	1		4	4	
1728+27.06	68.00' LT		1732+16.37	68.00' LT								4
1728+27.06	26.00' LT		1732+16.37	26.00' LT								4
1728+43.63	68.00' RT		1732+32.94	68.00' RT								4
1728+43.63	26.00' RT		1732+32.94	26.00' RT								4
1731+78.87	68.00' RT		1732+53.47	68.00' RT		74	1	1		4	4	
1731+86.28	26.00' RT		1732+58.68	26.00' RT		72	1	1		4	4	
1731+87.04	22.28' LT		1734+59.42	22.63' LT	273							
1731+93.10	61.46' LT		1734+15.65	69.74' LT	223							
1732+32.36	26.00' LT		1734+95.00	26.00' LT		263		1	1		4	
1732+37.75	68.00' LT		1734+27.40	68.00' LT		190		1	1		4	
				TOTAL	991	1,200	4	8	4	24	33	16

PAVEMENT PATCHING SCHEDULE

LOCATION				CLASS D PATCHES, TYPE III, 11 INCH	CLASS D PATCHES, TYPE IV, 11 INCH
STATION	LT/RT	LENGTH (FT)	WIDTH (FT)	SQ YD	SQ YD
I-57					
1725+97.85	LT	6	45		31
1714+00.00	LT	12	12	16	
1717+17.00	LT	12	12	16	
1718+32.00	LT	12	12	16	
1723+50.00	LT	12	12	16	
1725+69.00	LT	12	12	16	
1728+59.00	RT	12	12	16	
1733+00.00	RT	30	12		40
1733+92.00	LT	30	12		40
1734+81.00	RT	12	12	16	
1735+24.00	LT	12	12	16	
1737+00.00	LT	30	12		40
			TOTAL	128	151

FILLING EXISTING RUMBLE STRIP SCHEDULE

LOCATION							FILLING EXISTING RUMBLE STRIP
STATION	OFFSET	LT/RT	TO	STATION	OFFSET	LT/RT	FOOT
I-57							
1709+66.00	57.00	LT		1720+50.00	57.00	LT	1082
1717+38.49	31.00	RT		1728+75.38	31.00	RT	1148
1720+50.00	32.00	LT		1743+84.59	32.00	LT	1124
1709+66.00	57.00	RT		1728+75.38	57.00	RT	1914
1731+69.11	31.00	RT		1740+50.00	31.00	RT	887
1740+50.00	31.00	LT		1743+86.42	31.00	LT	337
1740+50.00	57.00	LT		1751+57.00	57.00	LT	1107
						TOTAL	7,600

LANDSCAPING

LOCATION		OFFSET	SEEDING, CLASS 2A	SEEDING, CLASS 4	SEEDING, CLASS 5	NITROGEN FERTILIZER NUTRIENT	PHOSPHORUS FERTILIZER NUTRIENT	POTASSIUM FERTILIZER NUTRIENT	EROSION CONTROL BLANKET	TEMP. EROSION CONTROL SEEDING	PERIMETER EROSION BARRIER
STATION	STATION	LT / CT / RT	ACRE	ACRE	ACRE	POUND	POUND	POUND	SQ YD	POUND	FOOT
1708+20.59	1728+87.47	CT	1.96	-	-	176	176	176	3921	81	-
1722+47+08	1730+16.75	LT	-	0.76	0.76	68	68	68	3662	76	821
1722+47.03	1729+91.23	RT	-	0.36	0.36	32	32	32	1750	36	760
1728+87.47	1729+91.23	CT	-	0.20	0.20	18	18	18	985	20	-
1730+72.96	1737+48.08	LT	-	0.22	0.22	20	20	20	1072	22	686
1730+41.31	1731+81.20	CT	-	0.21	0.21	19	19	19	1032	21	-
1730+41.31	1738+23.08	RT	-	0.31	0.31	28	28	28	1491	31	793
1731+72.81	1753+02.40	CT	2.03	-	-	183	183	183	3848	79	-
	TOTAL		4.00	2.00	2.00	545	545	545	17759	367	3060

MODEL: 66K39 Sheet Border
FILE NAME: c:\workingdir\$datasource.name\dms16334\D366K39-plan-border.dgn

V3 Companies
7325 Janes Avenue
Woodridge, IL 60517
630 724 9200 phone
www.v3co.com

USER NAME =	DESIGNED - KDC	REVISED -	
	DRAWN - DRP	REVISED -	
	CHECKED - JWB	REVISED -	
PLOT DATE = 02/20/2026	DATE - 02/20/2026	REVISED -	

STATE OF ILLINOIS
DEPARTMENT OF TRANSPORTATION

SCHEDULE OF QUANTITIES

SCALE: NONE | SHEET 6 OF 8 SHEETS | STA. TO STA.

F.A.I. RTE.	SECTION	COUNTY	TOTAL SHEETS	SHEET NO.
57	(27-38B) BR-1	FORD	185	18

CONTRACT NO. 66K39

ILLINOIS | FED. AID PROJECT

TEMPORARY PAVEMENT MARKING SCHEDULE

STAGE	LOCATION	FROM STATION	TO STATION	TEMPORARY PAVEMENT MARKING - LINE 6" - EPOXY			TEMPORARY PAVEMENT MARKING - LINE 4" - TYPE IV TAPE		SHORT TERM PAVEMENT MARKING REMOVAL	PAVEMENT MARKING REMOVAL - WATERBLASTING	TEMPORARY RAISED REFLECTIVE PAVEMENT MARKER		RAISED REFLECTIVE PAVEMENT MARKER REMOVAL	RAISED REFLECTIVE PAVEMENT MARKER, REFLECTOR REMOVAL	RAISED REFLECTIVE PAVEMENT MARKER, REFLECTOR REPLACEMENT
				SOLID YELLOW	SOLID WHITE	10' DASH - 30' SKIP WHITE	SOLID YELLOW	SOLID WHITE			CRYSTAL	AMBER			
				FOOT	FOOT	FOOT	FOOT	FOOT	SQ FT	SQ FT	EACH	EACH	EACH	EACH	EACH
PRE-STAGE	NB I-57	STD 701401						2600							
	SB I-57	STD 701401						2600							
PRE-STAGE SUBTOTAL				0	0	0	0	5200	0.0	0.0	0	0	0	0	0
STAGE 1	REMOVAL OF PREVIOUS STAGE								1733.3						
	NB I-57	STD 701401					2600								
	SB I-57	STD 701401					2600								
STAGE 1 SUBTOTAL				0	0	0	5200	0	1733.3	0.0	0	0	0	0	0
STAGE 2	REMOVAL OF PREVIOUS STAGE								1733.3	*			*		
	NB I-57	1689+66	1752+57				12580	12580						152	
	SB I-57	1708+66	1709+66				12604	12604						14	
		1709+66	1717+66								33	33			
		1717+66	1743+57												
		1743+57	1751+57								33	33		62	
		1751+57	1771+57												
STAGE 2 SUBTOTAL				0	0	0	25184	25184	1733.3	0.0	66	66	0	228	0
WINTER STAGE	REMOVAL OF PREVIOUS STAGE								16789.3				132		
	NB I-57	1689+66	1752+57	12578	12578	3160									152
	SB I-57	1708+66	1771+57	12578	12578	3160									76
WINTER STAGE SUBTOTAL				25156	25156	6320	0	0	16789.3	0.0	0	0	132	0	228
STAGE 3	REMOVAL OF PREVIOUS STAGE									14158.0					
	NB I-57	1689+66	1709+66				12604	12604						62	
		1709+66	1717+71								33	33			
		1717+71	1743+52												
		1743+52	1751+57								33	33			
		1751+57	1752+57											14	
	SB I-57	1708+66	1771+57				12580	12580		0.0				150	
STAGE 3 SUBTOTAL				0	0	0	25184	25184	0.0	14158.0	66	66	0	226	0
STAGE 4	REMOVAL OF PREVIOUS STAGE								16789.3				132		
	NB I-57	STD 701401					2600								76
	SB I-57	STD 701401					2600								150
STAGE 4 SUBTOTAL				0	0	0	5200	0	16789	0	0	0	132	0	226
POST-STAGE	REMOVAL OF PREVIOUS STAGE								1733.3						
	NB I-57	STD 701401						2600							
	SB I-57	STD 701401						2600							
	REMOVAL AT END OF STAGE								1733.3						
POST-STAGE SUBTOTAL				0	0	0	0	5200	3466.7	0.0	0	0	0	0	0
SUBTOTAL				25156	25156	6320	60768	60768	40512.0	14158.0	132	132	264	454	454
TOTAL				56632			121536		40512	14158	264		264	454	454

* SEE PROPOSED PAVEMENT MARKING SCHEDULE FOR REMOVAL OF EXISTING PAVEMENT MARKINGS AND RAISED REFLECTIVE PAVEMENT MARKERS

TEMPORARY CONCRETE BARRIER SCHEDULE

STAGE	LOCATION	FROM STATION	TO STATION	TEMPORARY CONCRETE BARRIER	RELOCATE TEMPORARY CONCRETE BARRIER	MODULAR GLARE SCREEN, TEMPORARY	PINNING TEMPORARY CONCRETE BARRIER	IMPACT ATTENUATORS, TEMPORARY (FULLY REDIRECTIVE, NARROW), TEST LEVEL 3	IMPACT ATTENUATORS, RELOCATE (FULLY REDIRECTIVE, NARROW), TEST LEVEL 3
				FOOT	FOOT	FOOT	EACH	EACH	EACH
STAGE 2	NB I-57	1713+71	1716+18	3387.5		2962.5	144		
		1716+18	1728+69						
		1728+69	1731+69						
		1731+69	1745+82						
		1745+82	1747+57						
	NB I-57/SB I-57	1731+80	1748+46	1675.0				1	
STAGE 2 SUBTOTAL				5062.5	0.0	2962.5	144	1	0
WINTER STAGE	I-57 CROSSOVER	1713+35	1714+61		37.5			1	1
	I-57 CROSSOVER	1746+62	1747+88		37.5			2	
	RELOCATE ALL TEMPORARY BARRIER WALL AND ATTENUATORS OUTSIDE CLEAR ZONE				4987.5				
WINTER SUBTOTAL				0.0	5062.5	0.0	0	3	1
STAGE 3	SB I-57	1714+34	1715+59		3312.5	2937.5			
		1715+59	1744+98						
		1744+98	1747+45						
	SB I-57	1727+05	1728+55		150.0				1
STAGE 3 SUBTOTAL				0.0	3462.5	2937.5	0	0	1
TOTAL				5062.5	8525.0	5900.0	144	4	2

SMART TRAFFIC CONTROL SCHEDULE

DESCRIPTION	UNIT	QTY
REAL-TIME TRAFFIC CONTROL SENSOR UNIT	CAL WK	248
CHANGEABLE MESSAGE SIGN (SPECIAL)	CAL WK	868
SMART TRAFFIC MONITORING SYSTEM	CAL WK	124
SMART TRAFFIC MONITORING DEVICE	CAL WK	620
TEMPORARY RUMBLE STRIPS (SPECIAL)	EACH	16

MAINTENANCE OF TRAFFIC SCHEDULE

DESCRIPTION	UNIT	QTY
TRAFFIC CONTROL AND PROTECTION, STANDARD 701416	EACH	2
TRAFFIC CONTROL AND PROTECTION, STANDARD 701406	L SUM	1
TRAFFIC CONTROL AND PROTECTION, STANDARD 701401	L SUM	1
TRAFFIC CONTROL SURVEILLANCE	CAL DA	328
CHANGEABLE MESSAGE SIGN	CAL DA	856
ALTERNATE ROUTE SIGNING	L SUM	1

PROPOSED TEMPORARY MEDIAN CROSSOVER SCHEDULE

LOCATION	START STATION	END STATION	OFFSET	SUBBASE GRANULAR MATERIAL, TYPE B 12"	PORTLAND CEMENT CONCRETE PAVEMENT 10" (JOINTED)	AGGREGATE SHOULDERS, TYPE B 6"	SHOULDER RUMBLE STRIPS, 16 INCH	PAVEMENT REMOVAL
				SQ YD	SQ YD	SQ YD	FOOT	SQ YD
SOUTH CROSSOVER								
I-57	1708+20.59	1713+11.73	LT/RT			504.52		
I-57	1708+20.59	1720+50.00	LT/RT	3,148.64	2,980.20			2,980.20
NB I-57	1708+20.59	1728+48.58	RT				2027.99	
SB I-57	1709+66.00	1728+64.10	LT				1896.10	
NB I-57	1709+66.00	1728+44.35	RT				1878.35	
SB I-57	1710+59.59	1728+59.87	LT				1800.28	
I-57	1714+84.43	1720+50.00	LT/RT			529.52		
NORTH CROSSOVER								
NB I-57	1731+96.08	1751+57.00	RT				1960.92	
NB I-57	1732+00.31	1750+63.31	RT				1863.00	
SB I-57	1732+11.60	1753+02.41	LT				2090.81	
SB I-57	1732+15.83	1751+57.00	LT				1941.17	
I-57	1740+50.00	1746+38.56	LT/RT			535.08		
I-57	1740+50.00	1753+02.22	LT/RT	3,202.98	3,015.50			3,015.50
I-57	1748+11.26	1753+02.22	LT/RT			504.52		
			TOTAL	6,352	5,996	2,074	15,461	5,996

NOTE: CROSSOVER TO BE REMOVED AT COMPLETION OF CONSTRUCTION.

PROPOSED PAVEMENT MARKING SCHEDULE

LOCATION	START STATION	END STATION	OFFSET	PREFORMED PLASTIC PAVEMENT MARKING, TYPE D - LINE 9"	EPOXY PAVEMENT MARKING - LINE 6"		GROOVING FOR RECESSED PAVEMENT MARKING 7"	GROOVING FOR RECESSED PAVEMENT MARKING 10"	RAISED REFLECTIVE PAVEMENT MARKER	RAISED REFLECTIVE PAVEMENT MARKER REMOVAL	REPLACEMENT REFLECTOR	RAISED REFLECTIVE PAVEMENT MARKER, REFLECTOR REMOVAL	PAVEMENT MARKING REMOVAL - WATER BLASTING		
				CONTRAST, 10' DASH, 30' SKIP, WHITE	SOLID WHITE	SOLID YELLOW							4" SOLID WHITE	4" SOLID YELLOW	9" SKIP DASH
				FOOT	FOOT	FOOT	FOOT	FOOT	EACH	EACH	EACH	EACH	SQ FT	SQ FT	SQ FT
NB I-57			RT								78	78			
NB I-57	1689+66.08	1728+42.06	RT				3,875.98								
NB I-57	1689+66.08	1728+46.38	RT					970.08							
NB I-57	1689+66.08	1728+48.51	RT				3,882.43								
NB I-57	1689+66.08	1752+56.91	RT	1,572.25	6,289.00	6,289.00							2,096.33	2,096.33	1,179.19
SB I-57			LT								30	30			
SB I-57	1708+66.08	1728+59.78	LT				1,993.70								
SB I-57	1708+66.08	1728+61.90	LT					498.96							
SB I-57	1708+66.08	1728+66.22	LT				2,000.14								
SB I-57	1708+66.08	1771+56.91	LT	1,572.25	6,289.00	6,289.00							2,096.33	2,096.33	1,179.19
NB I-57			RT						20	20					
SB I-57			LT						21	21					
NB I-57	1731+95.99	1752+56.91	RT				2,060.92								
NB I-57			RT						22	22					
NB I-57	1731+98.11	1752+56.91	RT					514.70							
NB I-57	1732+00.23	1752+56.91	RT				2,056.68								
SB I-57	1732+11.51	1771+56.91	LT				3,945.40								
SB I-57			LT						21	21					
SB I-57	1732+13.62	1771+56.91	LT					985.82							
SB I-57	1732+15.74	1771+56.91	LT				3,941.17								
NB I-57			RT								31	31			
SB I-57			LT								78	78			
			TOTAL	3,145	25,156		23,757	2,970	84	84	217	217	10,744		

NOTE: SEE TEMPORARY PAVEMENT MARKING SCHEDULE FOR PLACEMENT AND REMOVAL OF TEMPORARY PAVEMENT MARKINGS AND RAISED REFLECTIVE PAVEMENT MARKERS.

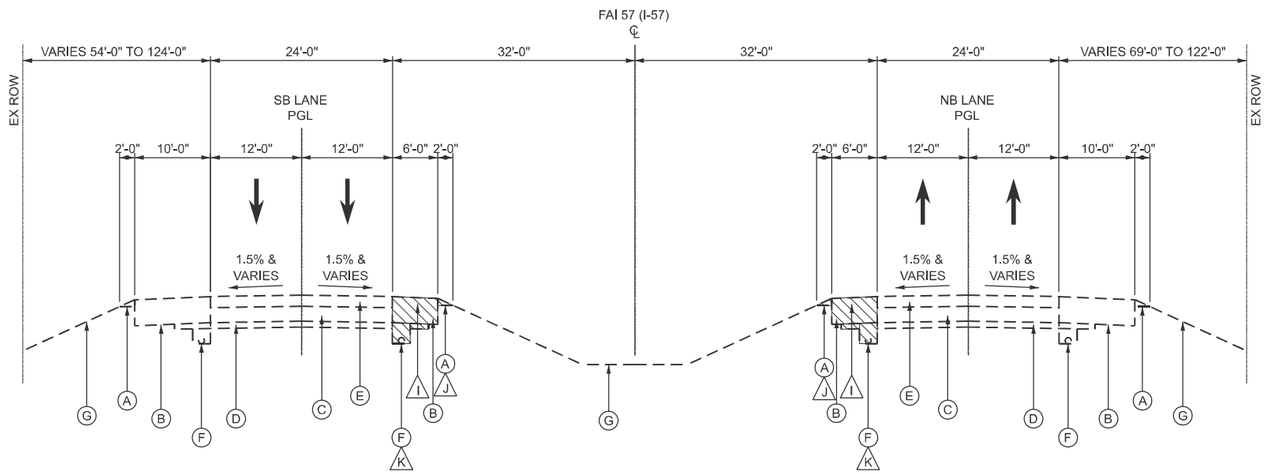

EXISTING TYPICAL SECTION
FAI 57 (I-57)

STA 1710+59.59 TO STA 1720+50.00 SB
STA 1743+86.42 TO STA 1753+02.22 SB

STA 1708+20.59 TO STA 1717+38.49 NB
STA 1740+50.00 TO STA 1750+63.16 NB

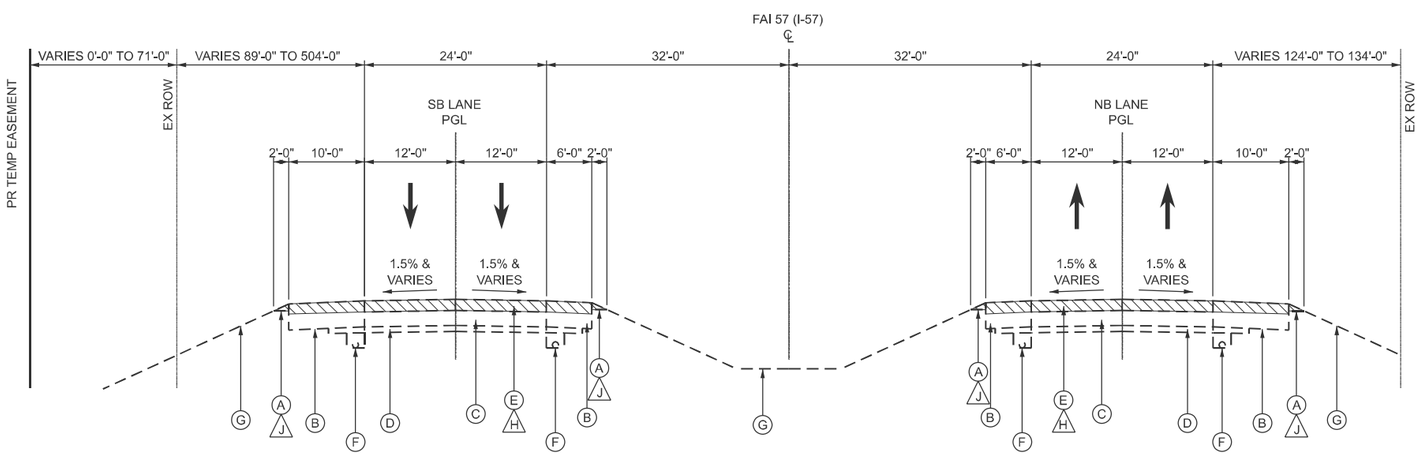

EXISTING TYPICAL SECTION
FAI 57 (I-57)

STA 1720+50.00 TO STA 1728+90.89 SB
STA 1731+84.62 TO STA 1740+50.00 SB

STA 1720+50.00 TO STA 1728+75.38 NB
STA 1731+69.11 TO STA 1740+50.00 NB

BRIDGE OMISSION

STA 1728+43.63 TO STA 1732+32.94 SB

STA 1728+27.06 TO STA 1732+16.37 NB

EXISTING LEGEND

- (A) AGGREGATE SHOULDER
- (B) HMA SHOULDER
- (C) CRC PAVEMENT, 7"
- (D) STABILIZED SUB-BASE, 4"
- (E) HMA OVERLAY, 3¾"
- (F) UNDERDRAIN, 4"
- (G) EXISTING GROUND
- (H) HMA SURFACE REMOVAL, 3¾" (TYP)
- (I) PAVED SHOULDER REMOVAL
- (J) AGGREGATE SHOULDER REMOVAL (SEE NOTE)
- (K) PIPE UNDERDRAIN REMOVAL (SEE NOTE)

PROPOSED LEGEND

1. POLYMERIZED HOT-MIX ASPHALT SURFACE COURSE, IL-9.5, MIX "D", N90, 1.5"
2. POLYMERIZED HOT-MIX ASPHALT BINDER COURSE, IL-19.0, N90, 2.25"
3. HOT-MIX ASPHALT BINDER COURSE, IL-19.0, N90, 2.25" TO 17.00"
4. AGGREGATE SHOULDERS, TYPE B, 6"
5. HOT-MIX ASPHALT STABILIZATION FOR SPBG, 6"
6. STEEL PLATE BEAM GUARDRAIL, TYPE A, 6 FOOT POSTS
7. TOPSOIL EXCAVATION AND PLACEMENT, 4"
8. HOT-MIX ASPHALT SHOULDERS, 11"
9. SUBBASE GRANULAR MATERIAL, TYPE B, 12"
10. PIPE UNDERDRAINS, TYPE 3, 4" *
11. LONGITUDINAL JOINT SEALANT

ITEM TO BE REMOVED

NOTE: VOLUME OF AGGREGATE SHOULDER REMOVAL AND PIPE UNDERDRAIN REMOVAL WILL BE PAID FOR AS EARTH EXCAVATION

* USE PIPE UNDERDRAINS 4" (SPECIAL) TO OUTLET PIPE UNDERDRAINS, TYPE 3

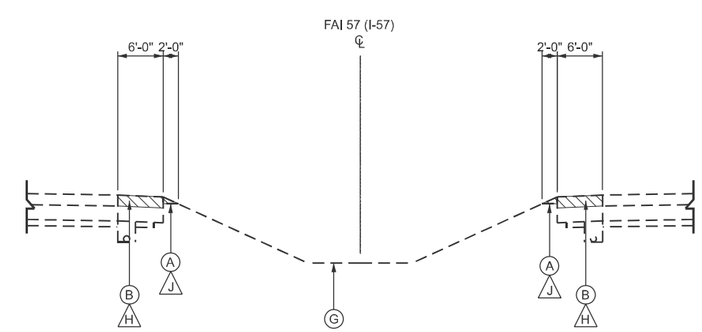

STA 1740+50.00 TO STA 1743+86.42 SB

STA 1717+38.49 TO STA 1720+50.00 NB

MODEL: 66K39 Sheet Border
FILE NAME: c:\workingdir\$datasource.name\dms16334\D366K39-plan-border.dgn

V3 Companies
7325 Janes Avenue
Woodridge, IL 60517
630 724 9200 phone
www.v3co.com

USER NAME =	DESIGNED - KDC	REVISED -	
	DRAWN - DRP	REVISED -	
	CHECKED - JWB	REVISED -	
PLOT DATE = 02/20/2026	DATE - 02/20/2026	REVISED -	

STATE OF ILLINOIS
DEPARTMENT OF TRANSPORTATION

TYPICAL SECTIONS
I-57

SCALE: NONE | SHEET 1 OF 4 SHEETS | STA. | TO STA.

F.A.I. RTE.	SECTION	COUNTY	TOTAL SHEETS	SHEET NO.
57	(27-38B) BR-1	FORD	185	21

CONTRACT NO. 66K39

ILLINOIS | FED. AID PROJECT

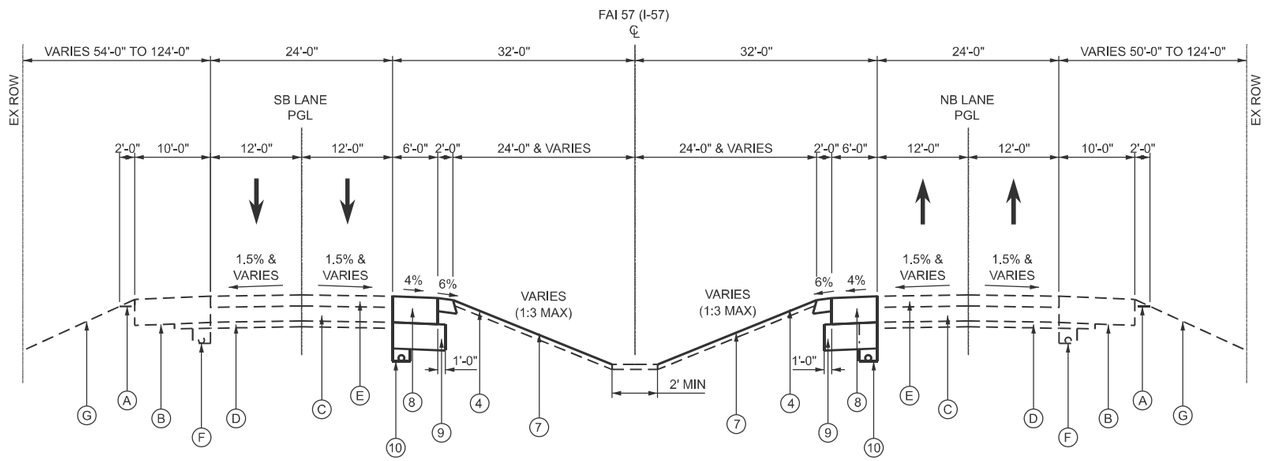

PROPOSED TYPICAL SECTION
FAI 57 (I-57)

STA 1710+59.59 TO STA 1720+50.00 SB
STA 1743+86.42 TO STA 1753+02.22 SB

STA 1708+20.59 TO STA 1717+36.57 NB
STA 1740+50.00 TO STA 1750+63.16 NB

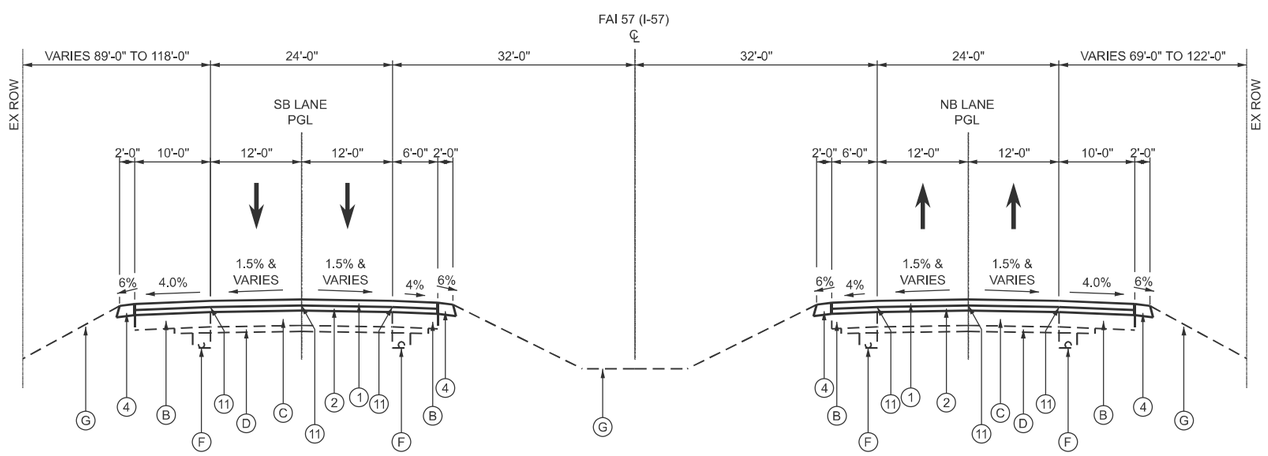

PROPOSED TYPICAL SECTION
FAI 57 (I-57)

STA 1720+50.00 TO STA 1722+50.00 NB & SB
STA 1737+50.00 TO STA 1740+50.00 SB

STA 1738+25.00 TO STA 1740+50.00 NB

EXISTING LEGEND

- (A) AGGREGATE SHOULDER
- (B) HMA SHOULDER
- (C) CRC PAVEMENT, 7"
- (D) STABILIZED SUB-BASE, 4"
- (E) HMA OVERLAY, 3¾"
- (F) UNDERDRAIN, 4"
- (G) EXISTING GROUND
- (H) HMA SURFACE REMOVAL, 3¾" (TYP)
- (I) PAVED SHOULDER REMOVAL
- (J) AGGREGATE SHOULDER REMOVAL (SEE NOTE BELOW)
- (K) PIPE UNDERDRAIN REMOVAL (SEE NOTE)

PROPOSED LEGEND

1. POLYMERIZED HOT-MIX ASPHALT SURFACE COURSE, IL-9.5, MIX "D", N90, 1.5"
2. POLYMERIZED HOT-MIX ASPHALT BINDER COURSE, IL-19.0, N90, 2.25"
3. HOT-MIX ASPHALT BINDER COURSE, IL-19.0, N90, 2.25" TO 17.00"
4. AGGREGATE SHOULDERS, TYPE B, 6"
5. HOT-MIX ASPHALT STABILIZATION FOR SPBG, 6"
6. STEEL PLATE BEAM GUARDRAIL, TYPE A, 6 FOOT POSTS
7. TOPSOIL EXCAVATION AND PLACEMENT, 4"
8. HOT-MIX ASPHALT SHOULDERS, 11"
9. SUBBASE GRANULAR MATERIAL, TYPE B, 12"
10. PIPE UNDERDRAINS, TYPE 3, 4" *
11. LONGITUDINAL JOINT SEALANT

ITEM TO BE REMOVED

NOTE: VOLUME OF AGGREGATE SHOULDER REMOVAL AND PIPE UNDERDRAIN REMOVAL WILL BE PAID FOR AS EARTH EXCAVATION

* USE PIPE UNDERDRAINS 4" (SPECIAL) TO OUTLET PIPE UNDERDRAINS, TYPE 3

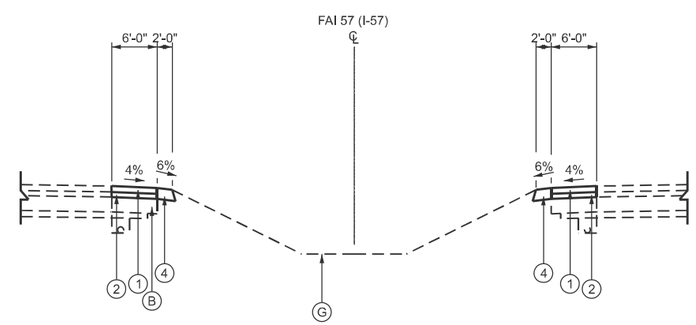

STA 1740+50.00 TO STA 1743+86.42 SB

STA 1717+36.57 TO STA 1720+50.00 NB

MODEL: 66K39 Sheet Border
FILE NAME: c:\workingdir\$datasource.name\dms16334D366K39-plan-border.dgn

V3 Companies
7325 Janes Avenue
Woodridge, IL 60517
630 724 9200 phone
www.v3co.com

USER NAME =	DESIGNED - KDC	REVISED -	
	DRAWN - DRP	REVISED -	
	CHECKED - JWB	REVISED -	
PLOT DATE = 02/20/2026	DATE - 02/20/2026	REVISED -	

STATE OF ILLINOIS
DEPARTMENT OF TRANSPORTATION

TYPICAL SECTIONS
I-57

SCALE: NONE | SHEET 2 OF 4 SHEETS | STA. | TO STA.

F.A.I. RTE.	SECTION	COUNTY	TOTAL SHEETS	SHEET NO.
57	(27-38B) BR-1	FORD	185	22

CONTRACT NO. 66K39

ILLINOIS | FED. AID PROJECT

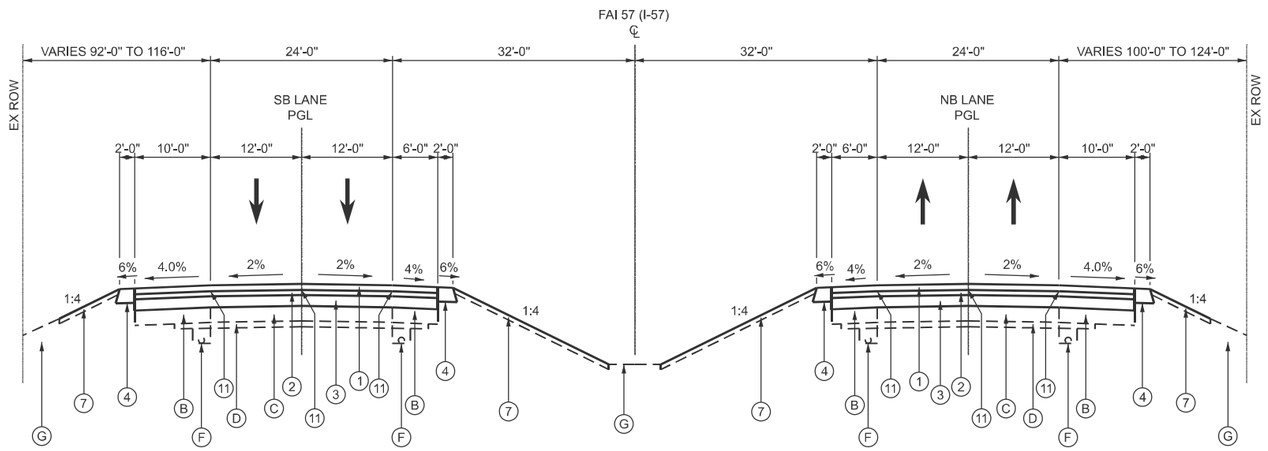

PROPOSED TYPICAL SECTION
FAI 57 (I-57)

STA 1722+50.00 TO STA 1727+93.91 SB
STA 1735+00.00 TO STA 1737+50.00 SB

STA 1722+50.00 TO STA 1725+42.50 NB
STA 1732+64.68 TO STA 1738+25.00 NB

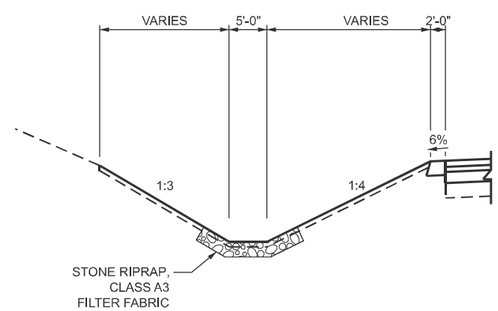

STA 1724+70.20 TO STA 1728+06.74 SB

EXISTING LEGEND

- (A) AGGREGATE SHOULDER
- (B) HMA SHOULDER
- (C) CRC PAVEMENT, 7"
- (D) STABILIZED SUB-BASE, 4"
- (E) HMA OVERLAY, 3¾"
- (F) UNDERDRAIN, 4"
- (G) EXISTING GROUND
- (H) HMA SURFACE REMOVAL, 3¾" (TYP)
- (I) PAVED SHOULDER REMOVAL
- (J) AGGREGATE SHOULDER REMOVAL (SEE NOTE BELOW)
- (K) PIPE UNDERDRAIN REMOVAL (SEE NOTE)

PROPOSED LEGEND

- (1) POLYMERIZED HOT-MIX ASPHALT SURFACE COURSE, IL-9.5, MIX "D", N90, 1.5"
- (2) POLYMERIZED HOT-MIX ASPHALT BINDER COURSE, IL-19.0, N90, 2.25"
- (3) HOT-MIX ASPHALT BINDER COURSE, IL-19.0, N90, 2.25" TO 17.00"
- (4) AGGREGATE SHOULDERS, TYPE B, 6"
- (5) HOT-MIX ASPHALT STABILIZATION FOR SPBG, 6"
- (6) STEEL PLATE BEAM GUARDRAIL, TYPE A, 6 FOOT POSTS
- (7) TOPSOIL EXCAVATION AND PLACEMENT, 4"
- (8) HOT-MIX ASPHALT SHOULDERS, 11"
- (9) SUBBASE GRANULAR MATERIAL, TYPE B, 12"
- (10) PIPE UNDERDRAINS, TYPE 3, 4" *
- (11) LONGITUDINAL JOINT SEALANT

ITEM TO BE REMOVED

NOTE: VOLUME OF AGGREGATE SHOULDER REMOVAL AND PIPE UNDERDRAIN REMOVAL WILL BE PAID FOR AS EARTH EXCAVATION

* USE PIPE UNDERDRAINS 4" (SPECIAL) TO OUTLET PIPE UNDERDRAINS, TYPE 3

MODEL: 66K39 Sheet Border
FILE NAME: c:\workingdir\$datasource.name\dms16334\D366K39-plan-border.dgn

V3 Companies
7325 Janes Avenue
Woodridge, IL 60517
630 724 9200 phone
www.v3co.com

USER NAME =	DESIGNED - KDC	REVISED -	
	DRAWN - DRP	REVISED -	
	CHECKED - JWB	REVISED -	
PLOT DATE = 02/20/2026	DATE - 02/20/2026	REVISED -	

STATE OF ILLINOIS
DEPARTMENT OF TRANSPORTATION

TYPICAL SECTIONS
I-57

SCALE: NONE | SHEET 3 OF 4 SHEETS | STA. TO STA.

F.A.I. RTE.	SECTION	COUNTY	TOTAL SHEETS	SHEET NO.
57	(27-38B) BR-1	FORD	185	23

CONTRACT NO. 66K39

ILLINOIS | FED. AID PROJECT

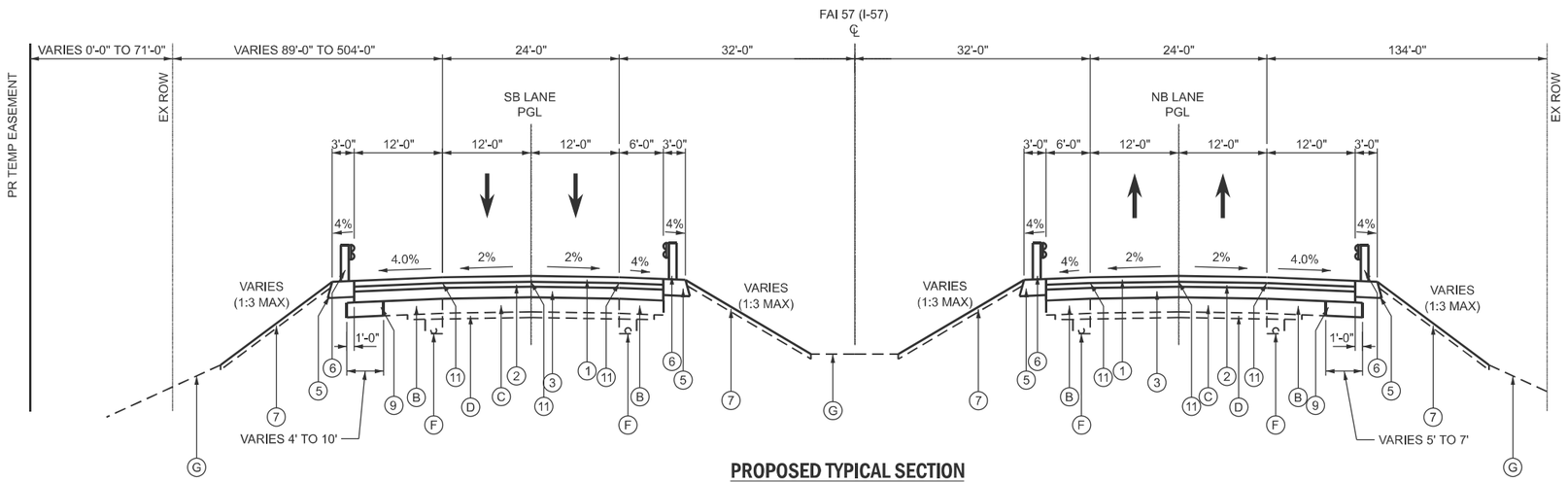

PROPOSED TYPICAL SECTION
FAI 57 (I-57)

STA 1727+93.91 TO STA 1728+43.63 SB
STA 1732+32.94 TO STA 1735+00.00 SB

STA 1725+42.50 TO STA 1728+27.06 NB
STA 1732+16.37 TO STA 1732+64.68 NB

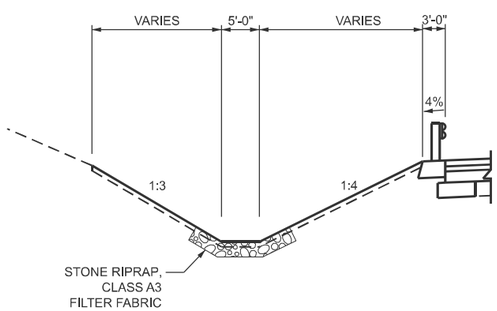

STA 1728+06.74 TO STA 1728+85.00 SB

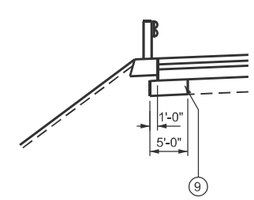

STA 1732+16.37 TO STA 1732+64.68 NB

EXISTING LEGEND

- (A) AGGREGATE SHOULDER
- (B) HMA SHOULDER
- (C) CRC PAVEMENT, 7"
- (D) STABILIZED SUB-BASE, 4"
- (E) HMA OVERLAY, 3¾"
- (F) UNDERDRAIN, 4"
- (G) EXISTING GROUND
- (H) HMA SURFACE REMOVAL, 3¾" (TYP)
- (I) PAVED SHOULDER REMOVAL
- (J) AGGREGATE SHOULDER REMOVAL (SEE NOTE BELOW)
- (K) PIPE UNDERDRAIN REMOVAL (SEE NOTE)

PROPOSED LEGEND

- (1) POLYMERIZED HOT-MIX ASPHALT SURFACE COURSE, IL-9.5, MIX "D", N90, 1.5"
- (2) POLYMERIZED HOT-MIX ASPHALT BINDER COURSE, IL-19.0, N90, 2.25"
- (3) HOT-MIX ASPHALT BINDER COURSE, IL-19.0, N90, 2.25" TO 17.00"
- (4) AGGREGATE SHOULDERS, TYPE B, 6"
- (5) HOT-MIX ASPHALT STABILIZATION FOR SPBG, 6"
- (6) STEEL PLATE BEAM GUARDRAIL, TYPE A, 6 FOOT POSTS
- (7) TOPSOIL EXCAVATION AND PLACEMENT, 4"
- (8) HOT-MIX ASPHALT SHOULDERS, 11"
- (9) SUBBASE GRANULAR MATERIAL, TYPE B, 12"
- (10) PIPE UNDERDRAINS, TYPE 3, 4" *
- (11) LONGITUDINAL JOINT SEALANT

ITEM TO BE REMOVED

NOTE: VOLUME OF AGGREGATE SHOULDER REMOVAL AND PIPE UNDERDRAIN REMOVAL WILL BE PAID FOR AS EARTH EXCAVATION

* USE PIPE UNDERDRAINS 4" (SPECIAL) TO OUTLET PIPE UNDERDRAINS, TYPE 3

MODEL: 66K39 Sheet Border
FILE NAME: c:\workingdir\$datasource.name\dms16334\D366K39-dan-border.dgn

V3 Companies
7325 Janes Avenue
Woodridge, IL 60517
630 724 9200 phone
www.v3co.com

USER NAME =	DESIGNED - KDC	REVISED -	
	DRAWN - DRP	REVISED -	
	CHECKED - JWB	REVISED -	
PLOT DATE = 02/20/2026	DATE - 02/20/2026	REVISED -	

STATE OF ILLINOIS
DEPARTMENT OF TRANSPORTATION

TYPICAL SECTIONS
I-57

SCALE: NONE | SHEET 4 OF 4 SHEETS | STA. | TO STA.

F.A.I. RTE.	SECTION	COUNTY	TOTAL SHEETS	SHEET NO.
57	(27-38B) BR-1	FORD	185	24

CONTRACT NO. 66K39

ILLINOIS | FED. AID PROJECT

BENCHMARKS						
POINT	STATION	OFFSET	NORTHING	EASTING	ELEVATION	DESCRIPTION
BM1	1708+00.73	86.95 RT	1365417.5780	1043178.2350	743.43	CUT "□" TOP 32" RCP HEADWALL NORTH OF E. 100 N RD.
BM2	1716+99.96	96.65 RT	1366268.5290	1043469.0890	736.99	CUT "□" TOP 36" RCP HEADWALL
BM3	1731+71.11	61.79 RT	1367674.8380	1043896.1910	738.77	CUT "□" NE CORNER NE WING WALL
BM4	1749+99.79	2.03 LT	1369431.7320	1044408.4150	738.30	CUT "□" CENTER OF WEST SIDE INLET BOX IN MEDIAN
BM5	1761+18.31	86.74 RT	1370543.4430	1044868.5460	740.03	CUT "□" CENTER OF 6'x4' HEADWALL

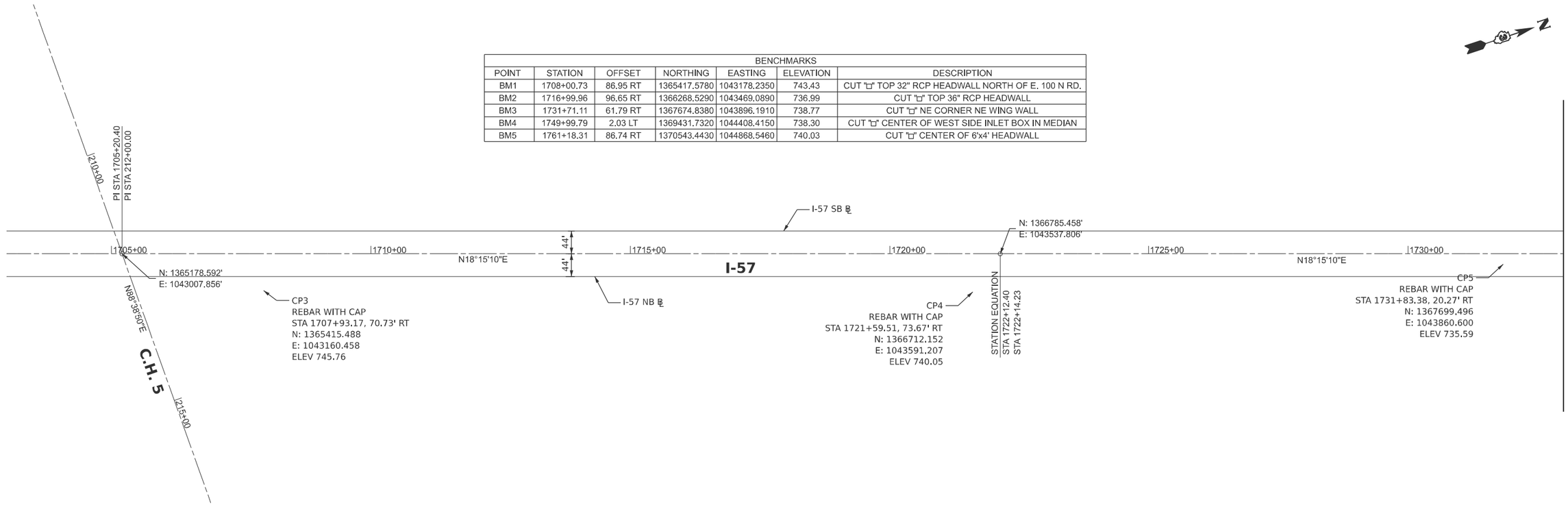

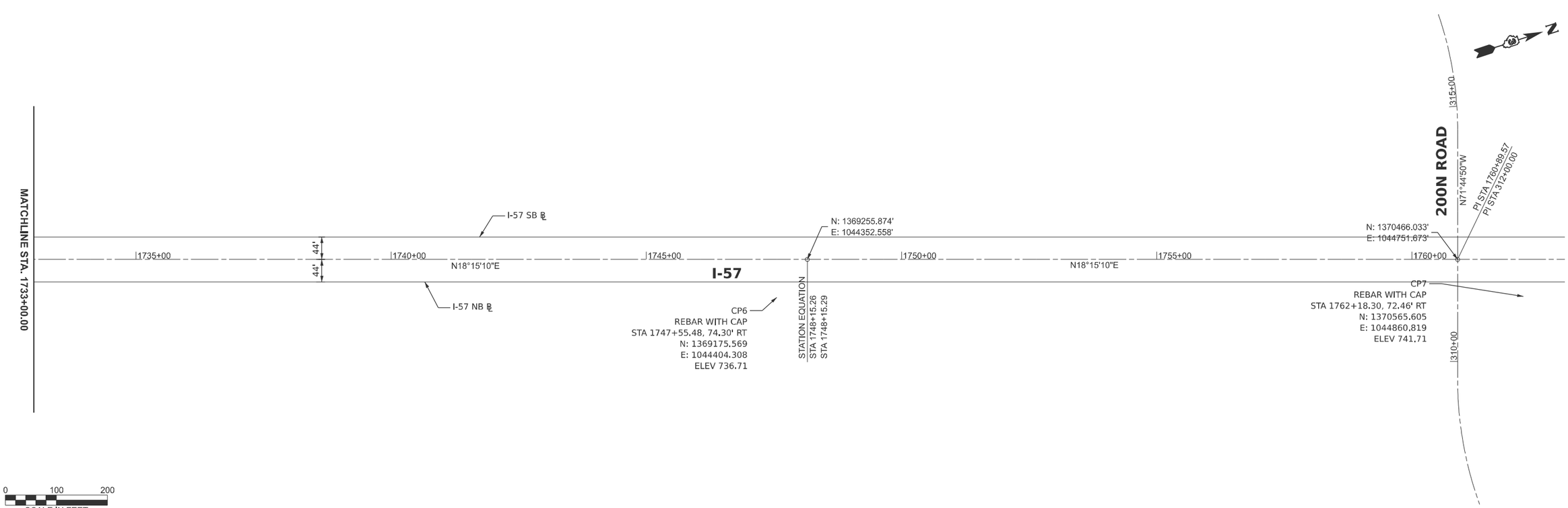

0 100 200
SCALE IN FEET

MODEL: 66K39 Sheet Border
FILE NAME: c:\workingdir$\datasource.name\dms163341D366K39-plan-border.dgn

V3 Companies
7325 Janes Avenue
Woodridge, IL 60517
630 724 9200 phone
www.v3co.com

USER NAME =	DESIGNED - KDC	REVISED -	
	DRAWN - DRP	REVISED -	
	CHECKED - JWB	REVISED -	
PLOT DATE = 02/20/2026	DATE - 02/20/2026	REVISED -	

STATE OF ILLINOIS
DEPARTMENT OF TRANSPORTATION

ALIGNMENT, TIES AND BENCHMARKS

SCALE: 1"=100' | SHEET 1 OF 1 SHEETS | STA. | TO STA.

F.A.I. RTE.	SECTION	COUNTY	TOTAL SHEETS	SHEET NO.
57	(27-38B) BR-1	FORD	185	25
		CONTRACT NO. 66K39		
	ILLINOIS	FED. AID PROJECT		

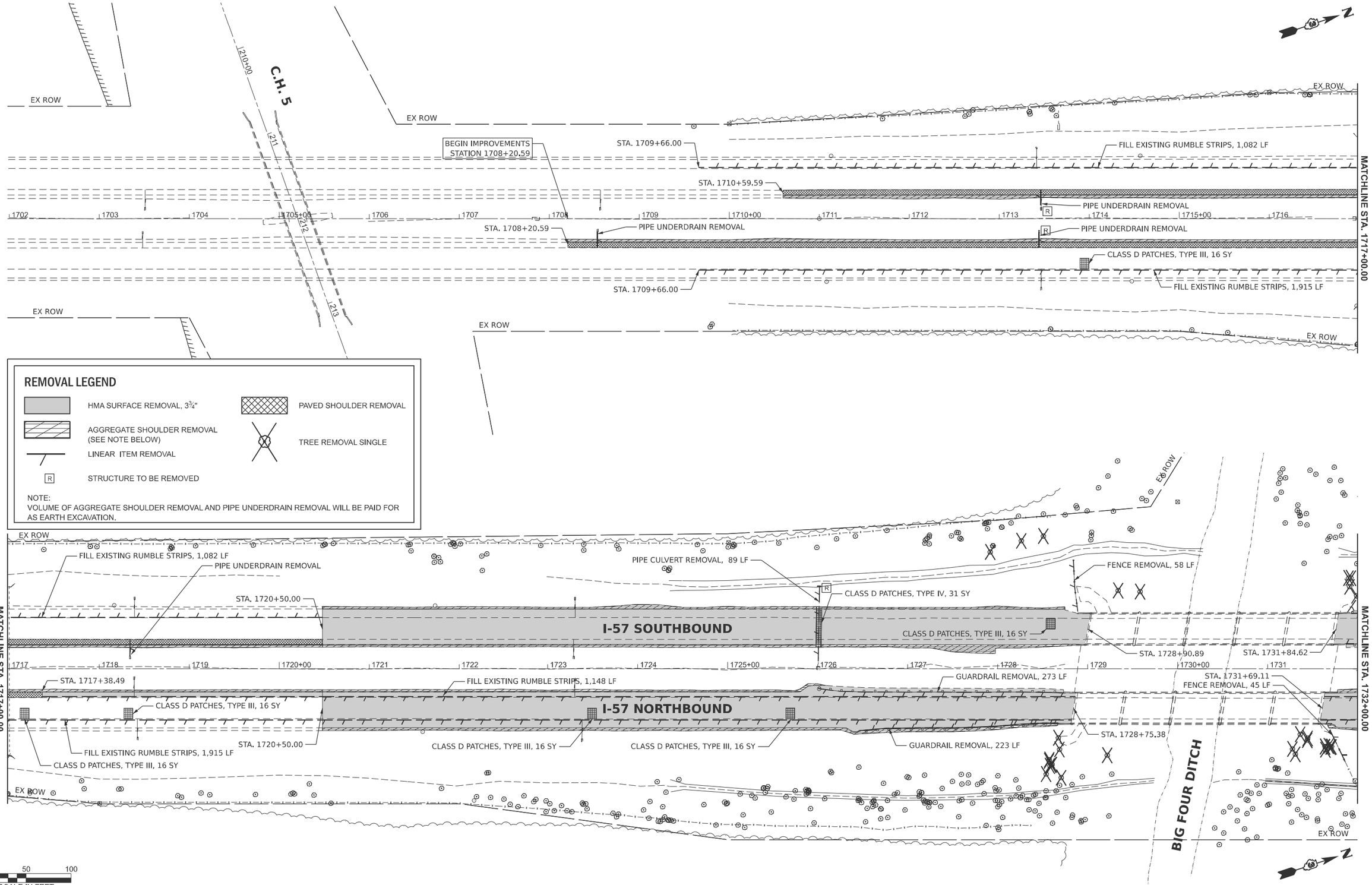

MODEL: 66K39 Sheet Border
FILE NAME: c:\workingdir\$datasource.name\dms16334\D366K39-plan-border.dgn

V3 Companies
7325 Janes Avenue
Woodridge, IL 60517
630 724 9200 phone
www.v3co.com

USER NAME =	DESIGNED - KDC	REVISED -	
	DRAWN - DRP	REVISED -	
	CHECKED - JWB	REVISED -	
PLOT DATE = 02/20/2026	DATE - 02/20/2026	REVISED -	

STATE OF ILLINOIS
DEPARTMENT OF TRANSPORTATION

ROADWAY REMOVAL PLAN
I-57

SCALE: 1"=50' | SHEET 1 OF 2 SHEETS | STA. 1702+00 TO STA. 1732+00

F.A.I. RTE.	SECTION	COUNTY	TOTAL SHEETS	SHEET NO.
57	(27-38B) BR-1	FORD	185	26

CONTRACT NO. 66K39

ILLINOIS | FED. AID PROJECT

EX ROW

FENCE REMOVAL, 53 LF

GUARDRAIL REMOVAL, 223 LF

CLASS D PATCHES, TYPE IV, 40 SY

CLASS D PATCHES, TYPE III, 16 SY

CLASS D PATCHES, TYPE IV, 40 SY

FILL EXISTING RUMBLE STRIPS, 1,108 LF

STA. 1743+86.42

I-57 SOUTHBOUND

STA. 1740+50.00

GUARDRAIL REMOVAL, 273 LF

FILL EXISTING RUMBLE STRIPS, 337 LF

MATCHLINE STA. 1732+00.00

MATCHLINE STA. 1747+00.00

1732 | 1733 | 1734 | 1735+00 | 1736 | 1737 | 1738 | 1739 | 1740+00 | 1741 | 1742 | 1743 | 1744 | 1745+00 | 1746

PIPE UNDERDRAIN REMOVAL

CLASS D PATCHES, TYPE IV, 40 SY

I-57 NORTHBOUND

STA. 1740+50.00

FILL EXISTING RUMBLE STRIPS, 1,999 LF

CLASS D PATCHES, TYPE III, 16 SY

FILL EXISTING RUMBLE STRIPS, 887 LF

EX ROW

REMOVAL LEGEND

- HMA SURFACE REMOVAL, 3¾"
- AGGREGATE SHOULDER REMOVAL (SEE NOTE BELOW)
- LINEAR ITEM REMOVAL
- R — STRUCTURE TO BE REMOVED
- PAVED SHOULDER REMOVAL
- TREE REMOVAL SINGLE

NOTE:
VOLUME OF AGGREGATE SHOULDER REMOVAL AND PIPE UNDERDRAIN REMOVAL WILL BE PAID FOR AS EARTH EXCAVATION.

EX ROW

FILL EXISTING RUMBLE STRIPS, 1,108 LF

PIPE UNDERDRAIN REMOVAL

STA. 1751+57.00

STA. 1753+02.22

MATCHLINE STA. 1747+00.00

1747 | 1748 | 1749 | 1750+00 | 1751 | 1752 | 1753 | 1754 | 1755+00 | 1756 | 1757 | 1758 | 1759 | 1760+00 | 1761

STA. 1750+63.15

STA 1751+57.00

END IMPROVEMENTS
STATION 1753+02.22

FILL EXISTING RUMBLE STRIPS, 1,999 LF

PIPE UNDERDRAIN REMOVAL

EX ROW

EX ROW

200N ROAD

314 | 313 | 312 | 311 | 310+00

EX ROW

0 50 100
SCALE IN FEET

MODEL: 66K39 Sheet Border
FILE NAME: c:\workingdir\$datasource.name\dms16334\D366K39-plan-border.dgn

V3 Companies
7325 Janes Avenue
Woodridge, IL 60517
630 724 9200 phone
www.v3co.com

USER NAME =	DESIGNED - KDC	REVISED -	
	DRAWN - DRP	REVISED -	
	CHECKED - JWB	REVISED -	
PLOT DATE = 02/20/2026	DATE - 02/20/2026	REVISED -	

STATE OF ILLINOIS
DEPARTMENT OF TRANSPORTATION

ROADWAY REMOVAL PLAN
I-57

SCALE: 1"=50' | SHEET 2 OF 2 SHEETS | STA. 1762+00 TO STA. 1732+00

F.A.I. RTE.	SECTION	COUNTY	TOTAL SHEETS	SHEET NO.
57	(27-38B) BR-1	FORD	185	27

CONTRACT NO. 66K39

ILLINOIS | FED. AID PROJECT

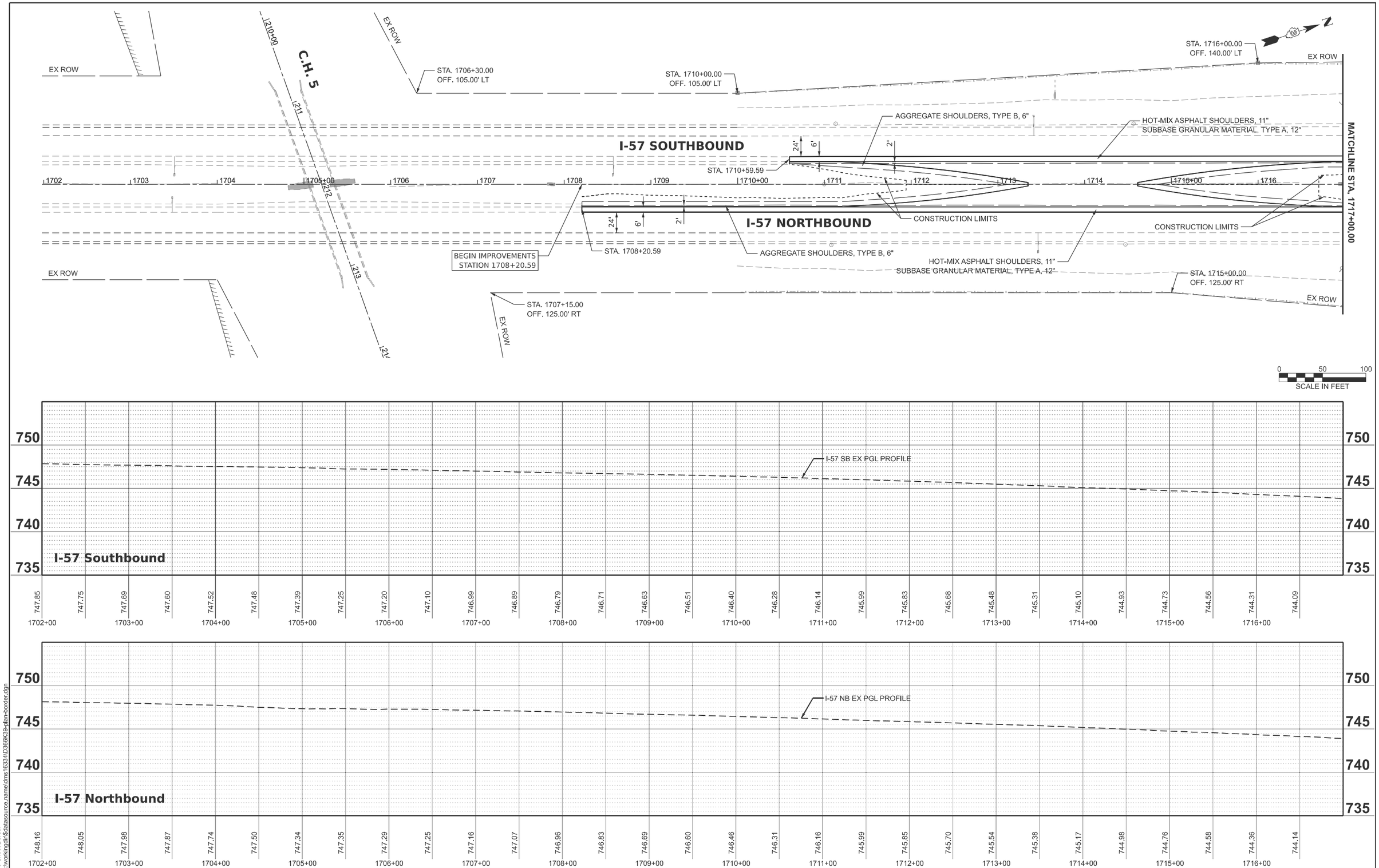

MODEL: 66K39 Sheet Border
FILE NAME: c:\workingdir\$datasource.name\dms16334\D366K39-plan-border.dgn

V3 Companies
7325 Janes Avenue
Woodridge, IL 60517
630 724 9200 phone
www.v3co.com

USER NAME =	DESIGNED - KDC	REVISED -	
	DRAWN - DRP	REVISED -	
	CHECKED - JWB	REVISED -	
PLOT DATE = 02/20/2026	DATE - 02/20/2026	REVISED -	

STATE OF ILLINOIS
DEPARTMENT OF TRANSPORTATION

ROADWAY PLAN AND PROFILE
I-57

SCALE: 1"=50' | SHEET 1 OF 4 SHEETS | STA. 1702+00 TO STA. 1717+00

F.A.I. RTE.	SECTION	COUNTY	TOTAL SHEETS	SHEET NO.
57	(27-38B) BR-1	FORD	185	28
		CONTRACT NO. 66K39		
		ILLINOIS	FED. AID PROJECT	

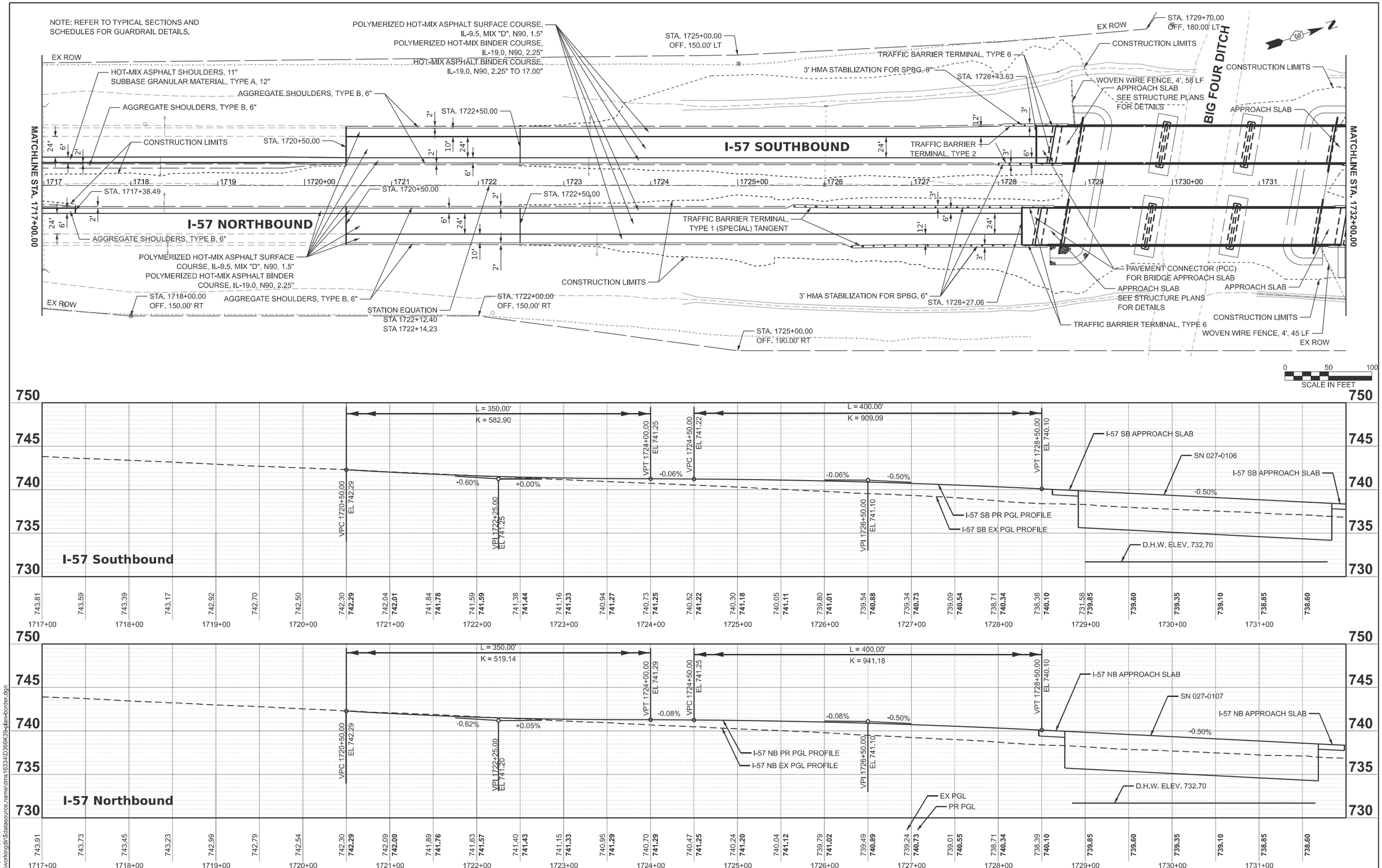

MODEL: 66K39 Sheet Border
FILE NAME: c:\workingdir\$datasource.name\dms16334\D366K39-plan-border.dgn

V3 Companies
7325 Janes Avenue
Woodridge, IL 60517
630 724 9200 phone
www.v3co.com

USER NAME =	DESIGNED - KDC	REVISED -	
	DRAWN - DRP	REVISED -	
	CHECKED - JWB	REVISED -	
PLOT DATE = 02/20/2026	DATE - 02/20/2026	REVISED -	

STATE OF ILLINOIS
DEPARTMENT OF TRANSPORTATION

ROADWAY PLAN AND PROFILE
I-57

SCALE: 1"=50' | SHEET 2 OF 4 SHEETS | STA. 1717+00 TO STA. 1732+00

F.A.I. RTE.	SECTION	COUNTY	TOTAL SHEETS	SHEET NO.
57	(27-38B) BR-1	FORD	185	29
		CONTRACT NO. 66K39		
		ILLINOIS	FED. AID PROJECT	

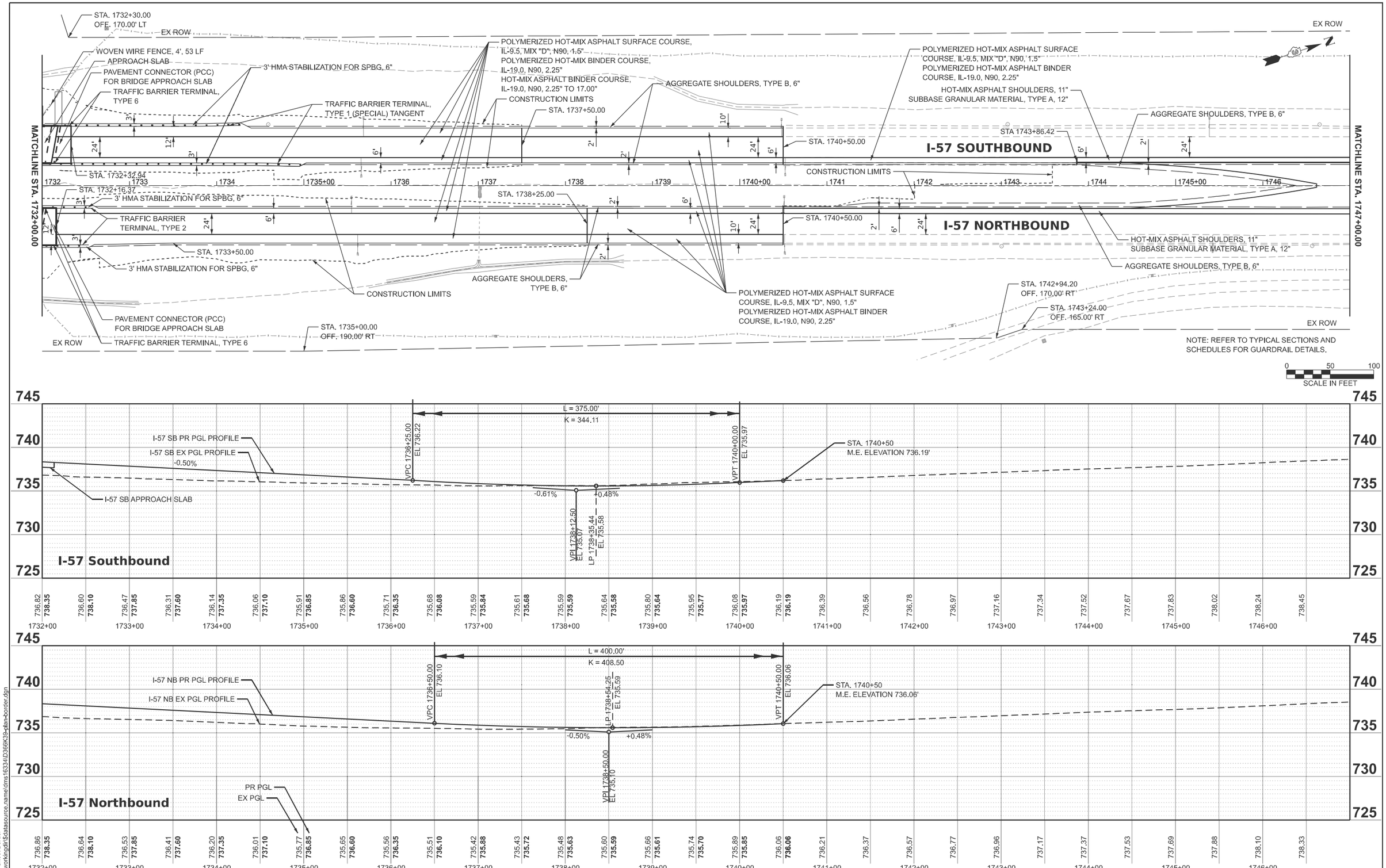

MODEL: 66K39 Sheet Border
FILE NAME: c:\workingdir$\datasource.name\dms16334\D366K39-plan-border.dgn

V3 Companies
7325 Janes Avenue
Woodridge, IL 60517
630 724 9200 phone
www.v3co.com

USER NAME =	DESIGNED - KDC	REVISED -	
	DRAWN - DRP	REVISED -	
	CHECKED - JWB	REVISED -	
PLOT DATE = 02/20/2026	DATE - 02/20/2026	REVISED -	

STATE OF ILLINOIS
DEPARTMENT OF TRANSPORTATION

ROADWAY PLAN AND PROFILE
I-57

SCALE: 1"=50' | SHEET 3 OF 4 SHEETS | STA. 1732+00 TO STA. 1747+00

F.A.I. RTE.	SECTION	COUNTY	TOTAL SHEETS	SHEET NO.
57	(27-38B) BR-1	FORD	185	30

CONTRACT NO. 66K39

ILLINOIS | FED. AID PROJECT

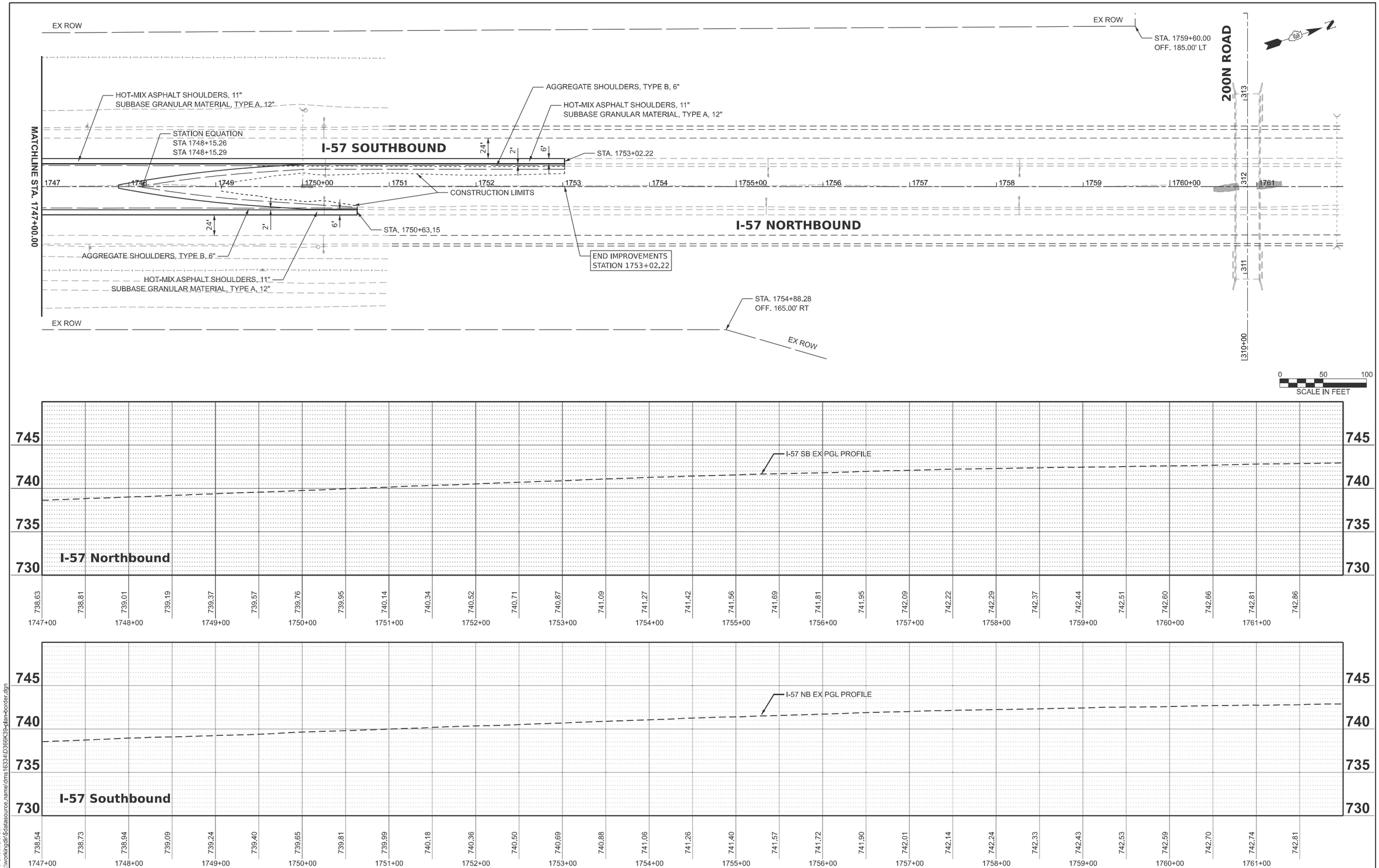

MODEL: 66K39 Sheet Border
FILE NAME: c:\workingdir\$datasource.name\dms16334\D366K39-plan-border.dgn

V3 Companies
7325 Janes Avenue
Woodridge, IL 60517
630 724 9200 phone
www.v3co.com

USER NAME =	DESIGNED - KDC	REVISED -	
	DRAWN - DRP	REVISED -	
	CHECKED - JWB	REVISED -	
PLOT DATE = 02/20/2026	DATE - 02/20/2026	REVISED -	

STATE OF ILLINOIS
DEPARTMENT OF TRANSPORTATION

ROADWAY PLAN AND PROFILE
I-57

SCALE: 1"=50' | SHEET 4 OF 4 SHEETS | STA. 1747+00 TO STA. 1762+00

F.A.I. RTE.	SECTION	COUNTY	TOTAL SHEETS	SHEET NO.
57	(27-38B) BR-1	FORD	185	31

CONTRACT NO. 66K39

ILLINOIS | FED. AID PROJECT

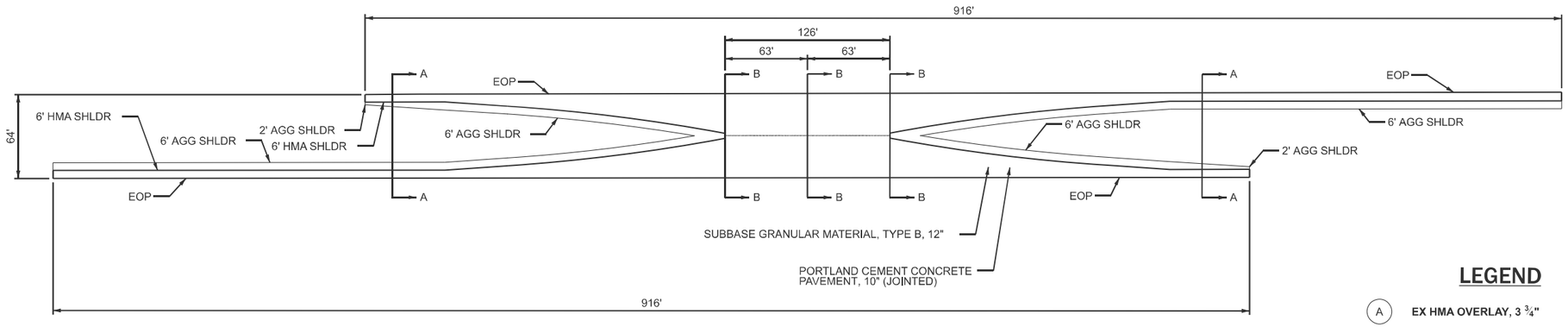

CROSSOVER GEOMETRY

LEGEND

- (A) EX HMA OVERLAY, 3 ¾"
- (B) EX CRC PAVEMENT, 7"
- (C) EX STABILIZED SUB-BASE, 4"
- (D) EX GROUND
- (E) PR PORTLAND CEMENT CONCRETE PAVEMENT, 10" (JOINTED)
- (F) PR SUBBASE GRANULAR MATERIAL, TYPE B, 12"
- (G) PR AGGREGATE SHOULDERS, TYPE B, 6"
- (H) PR SLOTTED DRAIN 15" WITH VARIABLE SLOT
- (I) PR TIE BAR

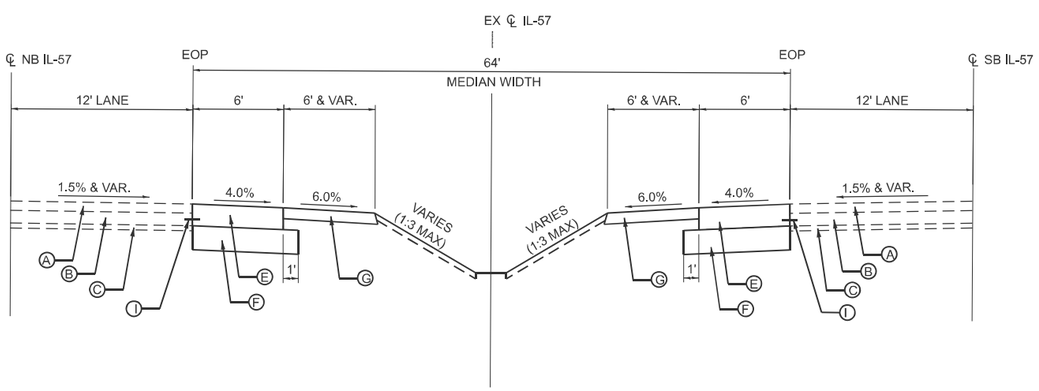

SECTION A-A

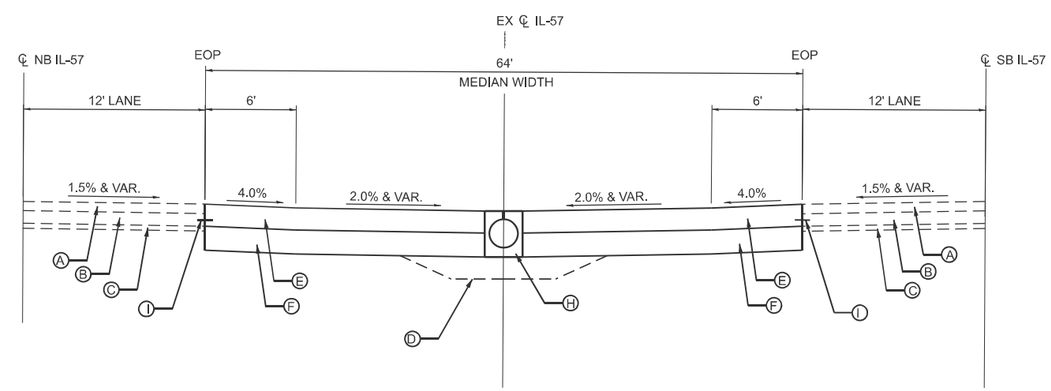

SECTION B-B

NOTE: THE COST OF THE PROPOSED TIE BARS SHALL BE INCLUDED IN THE COST OF THE PACC PAVEMENT 10" (JOINTED). SEE NOTE 2 ON THE PAVEMENT JOINTING DETAILS.

MODEL: Crossover Details
pw://bcoe-pw.bentley.com:2bcoepw01/Documents/Projects/2025/66K39/02 - Drawings/CADD_Sheets/Roadway/D366K39-sht-Crossover01.dgn

LIN ENGINEERING,LTD. Consulting Engineers Westmont, Illinois	USER NAME = kcastillo	DESIGNED - JK	REVISED -	STATE OF ILLINOIS DEPARTMENT OF TRANSPORTATION	I-57 MEDIAN CROSSOVERS CROSSOVER DETAILS	F.A.I. RTE.	SECTION	COUNTY	TOTAL SHEETS / SHEET NO.
		DRAWN - JK	REVISED -			57	(27-38B) ES	FORD	185 / 32
	PLOT SCALE = $SCALE$	CHECKED - RC	REVISED -					CONTRACT NO. 66K39	
	PLOT DATE = 2/19/2026	DATE - 02/20/2026	REVISED -		SCALE: N.T.S. SHEET 1 OF 4 SHEETS STA. TO STA.		ILLINOIS	FED. AID PROJECT	

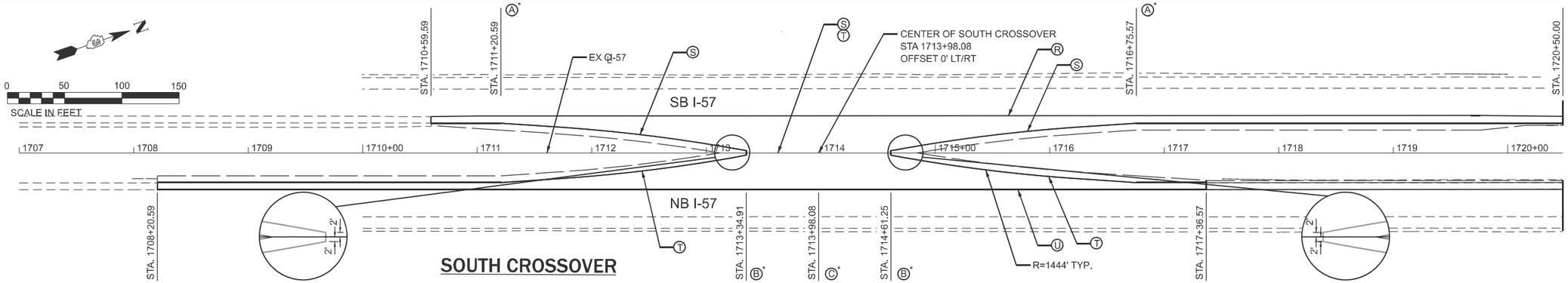

TABLE OF OFFSETS AND SLOPES

		1710+59.59	1711+00.00	1711+20.59	1711+50.00	1712+00.00	1712+50.00	1713+00.00	1713+34.91	1713+50.00	1713+98.08	1714+50.00	1714+61.25	1715+00.00	1715+50.00	1716+00.00	1716+50.00	1716+75.57	1717+00.00	1717+36.57
NORTHBOUND	(R) OFFSET FROM NORTHBOUND INSIDE EOP TO SLOPE BREAK	6.00	6.00	6.00	6.00	6.00	6.00	6.00	6.00	6.00	6.00	6.00	6.00	6.00	6.00	6.00	6.00	6.00	6.00	6.00
	% CROSS SLOPE	4.00	4.00	4.00	4.00	4.00	4.00	4.00	4.00	4.00	4.00	4.00	4.00	4.00	4.00	4.00	4.00	4.00	4.00	4.00
	(S) OFFSET FROM SLOPE BREAK TO THE MEDIAN SIDE EOP	N/A	N/A	N/A	1.83	5.46	10.69	17.69	26.00	26.00	26.00	26.00	26.00	17.69	10.69	5.46	1.83	N/A	N/A	N/A
	% CROSS SLOPE	N/A	N/A	N/A	2.00	2.00	2.00	2.00	1.88	1.81	1.77	1.88	1.88	2.00	2.00	2.00	2.00	N/A	N/A	N/A
SOUTHBOUND	(U) OFFSET FROM SOUTHBOUND INSIDE EOP TO SLOPE BREAK	6.00	6.00	6.00	6.00	6.00	6.00	6.00	6.00	6.00	6.00	6.00	6.00	6.00	6.00	6.00	6.00	6.00	6.00	6.00
	% CROSS SLOPE	4.00	4.00	4.00	4.00	4.00	4.00	4.00	4.00	4.00	4.00	4.00	4.00	4.00	4.00	4.00	4.00	4.00	4.00	4.00
	(T) OFFSET FROM SLOPE BREAK TO THE MEDIAN SIDE EOP	N/A	N/A	N/A	1.83	5.46	10.69	17.69	26.00	26.00	26.00	26.00	26.00	17.69	10.69	5.46	1.83	N/A	N/A	N/A
	% CROSS SLOPE	N/A	N/A	N/A	2.00	2.00	2.00	2.00	2.00	2.00	2.00	2.00	2.00	2.00	2.00	2.00	2.00	N/A	N/A	N/A
				A*					B*		C*		B*					A*		

CROSSOVER TO BE REMOVED AT COMPLETION OF CONSTRUCTION.

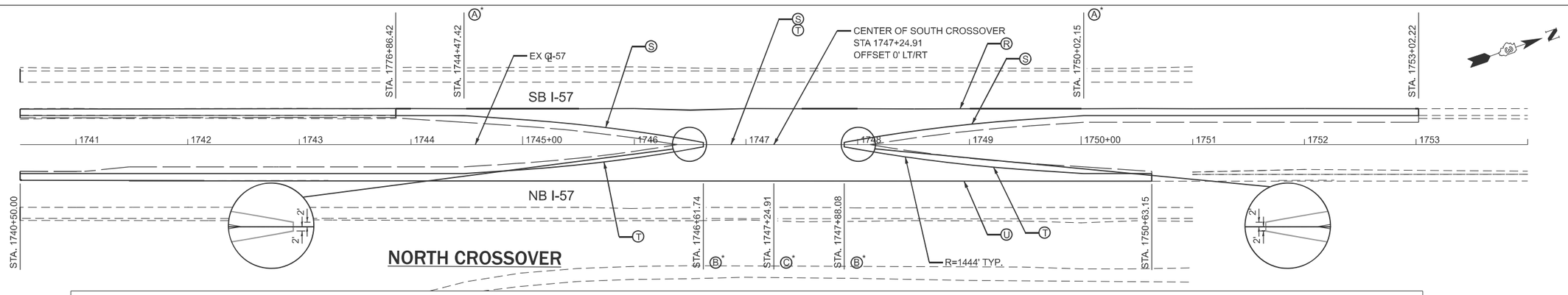

TABLE OF OFFSETS AND SLOPES

		1743+86.42	1744+00.00	1744+47.42	1744+50.00	1745+00.00	1745+50.00	1746+00.00	1746+50.00	1746+61.74	1747+00.00	1747+24.91	1747+50.00	1747+88.08	1748+00.00	1748+50.00	1749+00.00	1749+50.00	1750+00.00	1750+02.15	1750+50.00	1750+63.15
NORTHBOUND	(R) OFFSET FROM NORTHBOUND INSIDE EOP TO SLOPE BREAK	6.00	6.00	6.00	6.00	6.00	6.00	6.00	6.00	6.00	6.00	6.00	6.00	6.00	6.00	6.00	6.00	6.00	6.00	6.00	6.00	6.00
	% CROSS SLOPE	4.00	4.00	4.00	4.00	4.00	4.00	4.00	4.00	4.00	4.00	4.00	4.00	4.00	4.00	4.00	4.00	4.00	4.00	4.00	4.00	4.00
	(S) OFFSET FROM SLOPE BREAK TO THE MEDIAN SIDE EOP	N/A	N/A	N/A	0.17	3.50	7.86	13.98	21.88	26.00	26.00	26.00	26.00	26.00	21.88	13.98	7.86	3.50	0.17	N/A	N/A	N/A
	% CROSS SLOPE	N/A	N/A	N/A	2.00	2.00	2.00	2.00	2.00	2.00	2.00	2.00	2.00	2.00	2.00	2.00	2.00	2.00	2.00	N/A	N/A	N/A
SOUTHBOUND	(U) OFFSET FROM SOUTHBOUND INSIDE EOP TO SLOPE BREAK	6.00	6.00	6.00	6.00	6.00	6.00	6.00	6.00	6.00	6.00	6.00	6.00	6.00	6.00	6.00	6.00	6.00	6.00	6.00	6.00	6.00
	% CROSS SLOPE	4.00	4.00	4.00	4.00	4.00	4.00	4.00	4.00	4.00	4.00	4.00	4.00	4.00	4.00	4.00	4.00	4.00	4.00	4.00	4.00	4.00
	(T) OFFSET FROM SLOPE BREAK TO THE MEDIAN SIDE EOP	N/A	N/A	N/A	0.17	3.50	7.86	13.98	21.88	26.00	26.00	26.00	26.00	26.00	21.88	13.98	7.86	3.50	0.17	N/A	N/A	N/A
	% CROSS SLOPE	N/A	N/A	N/A	2.00	2.00	2.00	2.00	2.00	1.65	1.54	1.54	1.62	1.69	2.00	2.00	2.00	2.00	2.00	N/A	N/A	N/A
				A*						B*		C*		B*						A*		

CROSSOVER TO BE REMOVED AT COMPLETION OF CONSTRUCTION.

MODEL: Crossover Plan
pw:\\bcdw.bentley.com:\bcdw-01\Documents\Projects\2025\66K39\02 - Drawings\CADD_Sheets\Roadway\D36K39-I-Crossovers01.dgn

LIN ENGINEERING,LTD.
Consulting Engineers
Westmont, Illinois

USER NAME = kcastillo	DESIGNED - JK	REVISED -	STATE OF ILLINOIS DEPARTMENT OF TRANSPORTATION	I-57 MEDIAN CROSSOVERS ROADWAY PLAN	
	DRAWN - JK	REVISED -			
PLOT SCALE = $SCALE$	CHECKED - RC	REVISED -			
PLOT DATE = 2/19/2026	DATE - 02/20/2026	REVISED -		SCALE: 1"=50'	SHEET 2 OF 4 SHEETS STA. TO STA.

F.A.I. RTE.	SECTION	COUNTY	TOTAL SHEETS	SHEET NO.
57	(27-38B) ES	FORD	185	33
		CONTRACT NO. 66K39		
	ILLINOIS	FED. AID PROJECT		

NOTES

1. JOINTS SHALL BE SAWED ACCORDING TO STANDARD 420101 AND THE DETAILS SPECIFIED IN THE PLANS. ALL JOINTS SHALL BE SEALED.
2. THE PCC PAVEMENT 10" (JOINTED) SHALL BE TIED TO ADJACENT EXISTING CONTINUOUSLY REINFORCED CONCRETE PAVEMENT AND THE CONCRETE ENCASEMENT FOR THE SLOTTED DRAIN. THE TIE BARS SHALL BE NO. 6 BARS 24" LONG, SPACED 30" C-C, AND INSTALLED ACCORDING TO THE APPLICABLE PORTIONS OF ART 420.05(b) OF THE STANDARD SPECIFICATIONS, AS SHOWN ON THE PLANS, AND AS DIRECTED BY THE ENGINEER. THE COST OF THE BARS TO BE INCLUDED IN THE COST OF THE PCC PAVEMENT 10" (JOINTED).

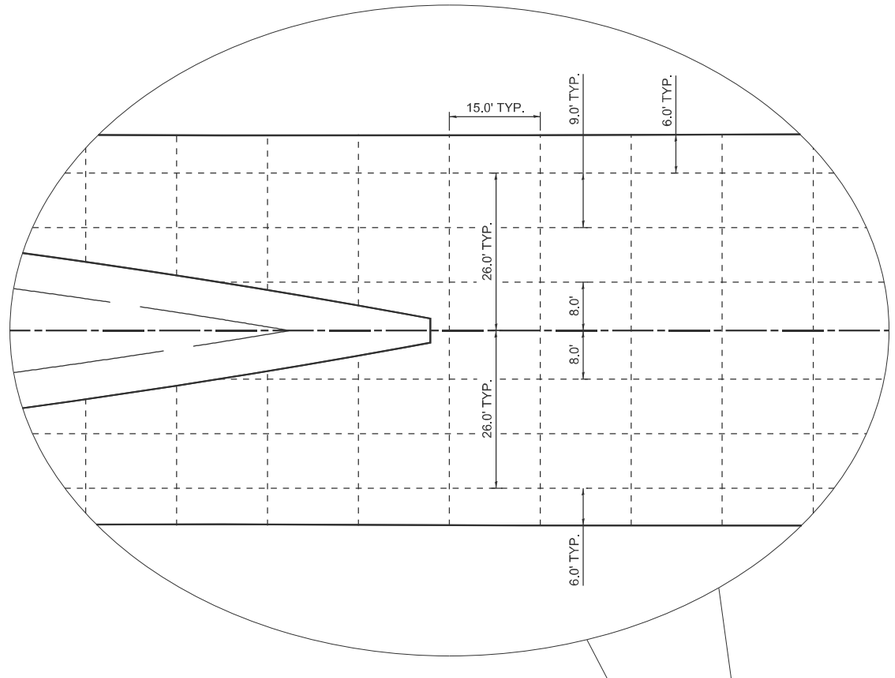

SAW CUT DETAIL

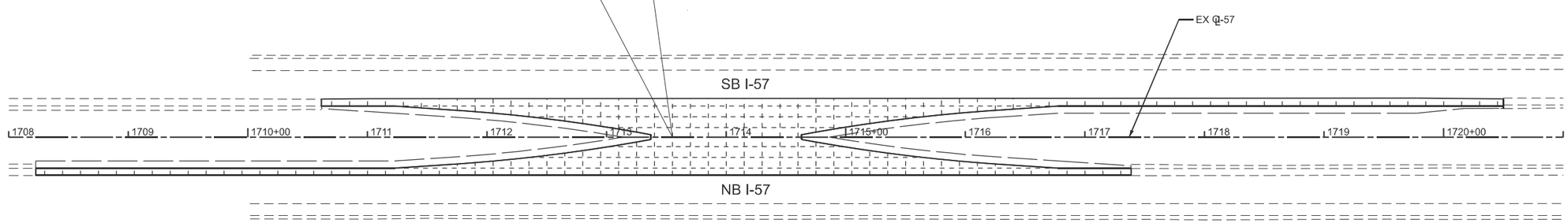

PAVEMENT JOINTING DETAIL

SOUTH CROSSOVER

MODEL: Crossover Jointing Plan 1
pw://x3c-pw.bentley.com:x3c-pw01/Documents/Projects/2025/66K39/02 - Drawings/CADD_Sheets/Roadway/D66K39-I1I-Crossovers02.dgn

LIN ENGINEERING,LTD. Consulting Engineers Westmont, Illinois	USER NAME = kcastillo	DESIGNED - JK	REVISED -	STATE OF ILLINOIS DEPARTMENT OF TRANSPORTATION	I-57 MEDIAN CROSSOVERS PAVEMENT JOINTING DETAILS	F.A.I. RTE.	SECTION	COUNTY	TOTAL SHEETS	SHEET NO.
		DRAWN - JK	REVISED -			57	(27-38B) ES	FORD	185	34
	PLOT SCALE = $SCALE$	CHECKED - RC	REVISED -					CONTRACT NO. 66K39		
	PLOT DATE = 2/19/2026	DATE - 02/20/2026	REVISED -		SCALE: SHEET 3 OF 4 SHEETS STA. TO STA.		ILLINOIS	FED. AID PROJECT		

NOTES

1. JOINTS SHALL BE SAWED ACCORDING TO STANDARD 420101 AND THE DETAILS SPECIFIED IN THE PLANS. ALL JOINTS SHALL BE SEALED.
2. THE PCC PAVEMENT 10' (JOINTED) SHALL BE TIED TO ADJACENT EXISTING CONTINUOUSLY REINFORCED CONCRETE PAVEMENT AND THE CONCRETE ENCASEMENT FOR THE SLOTTED DRAIN. THE TIE BARS SHALL BE NO. 6 BARS 24" LONG, SPACED 30" C-C, AND INSTALLED ACCORDING TO THE APPLICABLE PORTIONS OF ART 420.05(b) OF THE STANDARD SPECIFICATIONS, AS SHOWN ON THE PLANS, AND AS DIRECTED BY THE ENGINEER. THE COST OF THE BARS TO BE INCLUDED IN THE COST OF THE PCC PAVEMENT 10" (JOINTED).

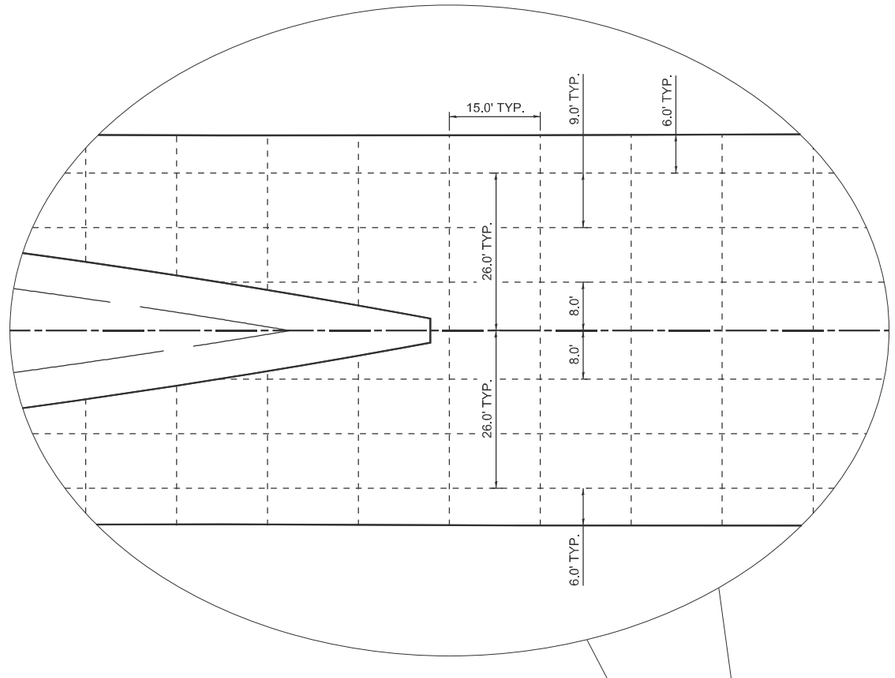

SAW CUT DETAIL

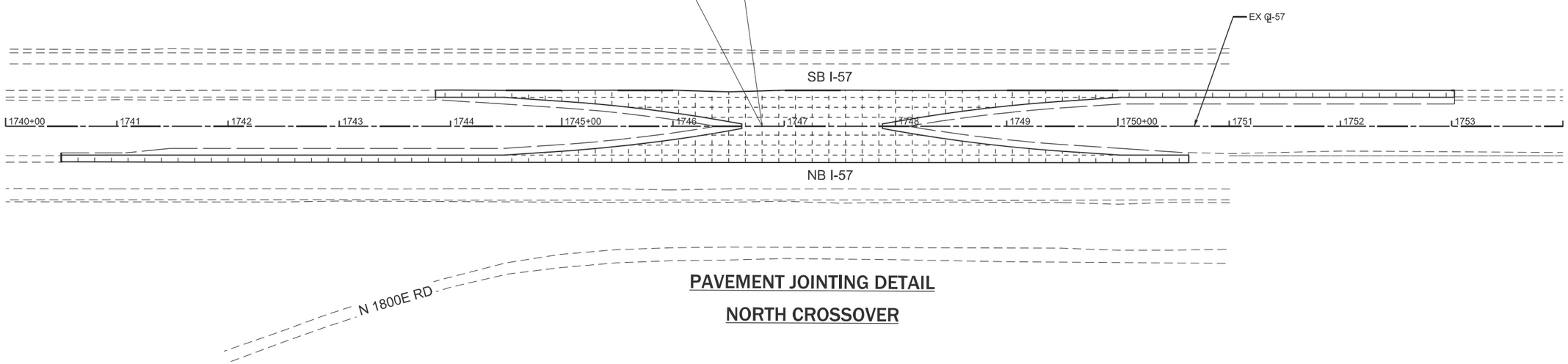

PAVEMENT JOINTING DETAIL

NORTH CROSSOVER

MODEL: Crossover Jointing Plan 2
pw://k3co-pw.bentley.com:k3co-pw01/Documents/Projects/2025/66K39/02 - Drawings/CADD_Sheets/Roadway/D66K39-IlnCrossovers02.dgn

LIN ENGINEERING,LTD. Consulting Engineers Westmont, Illinois	USER NAME = kcastillo	DESIGNED - JK	REVISED -	STATE OF ILLINOIS DEPARTMENT OF TRANSPORTATION	I-57 MEDIAN CROSSOVERS PAVEMENT JOINTING DETAILS	F.A.I. RTE.	SECTION	COUNTY	TOTAL SHEETS	SHEET NO.
		DRAWN - JK	REVISED -			57	(27-38B) ES	FORD	185	35
	PLOT SCALE = $SCALE$	CHECKED - RC	REVISED -					CONTRACT NO. 66K39		
	PLOT DATE = 2/19/2026	DATE - 02/20/2026	REVISED -		SCALE: SHEET 4 OF 4 SHEETS STA. TO STA.		ILLINOIS	FED. AID PROJECT		

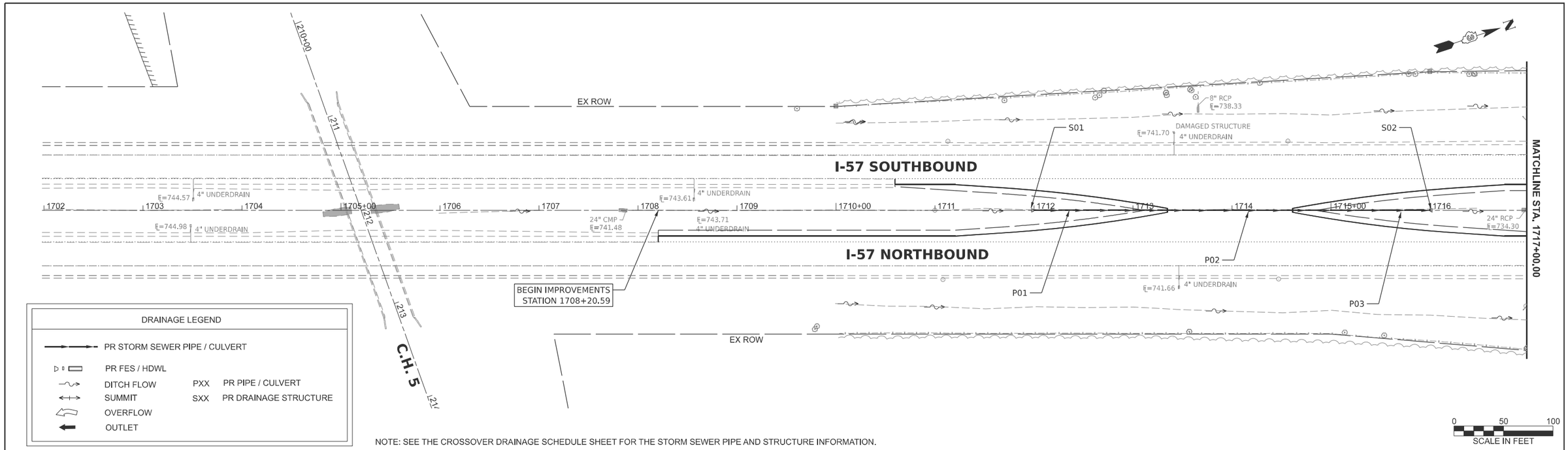

NOTE: SEE THE CROSSOVER DRAINAGE SCHEDULE SHEET FOR THE STORM SEWER PIPE AND STRUCTURE INFORMATION.

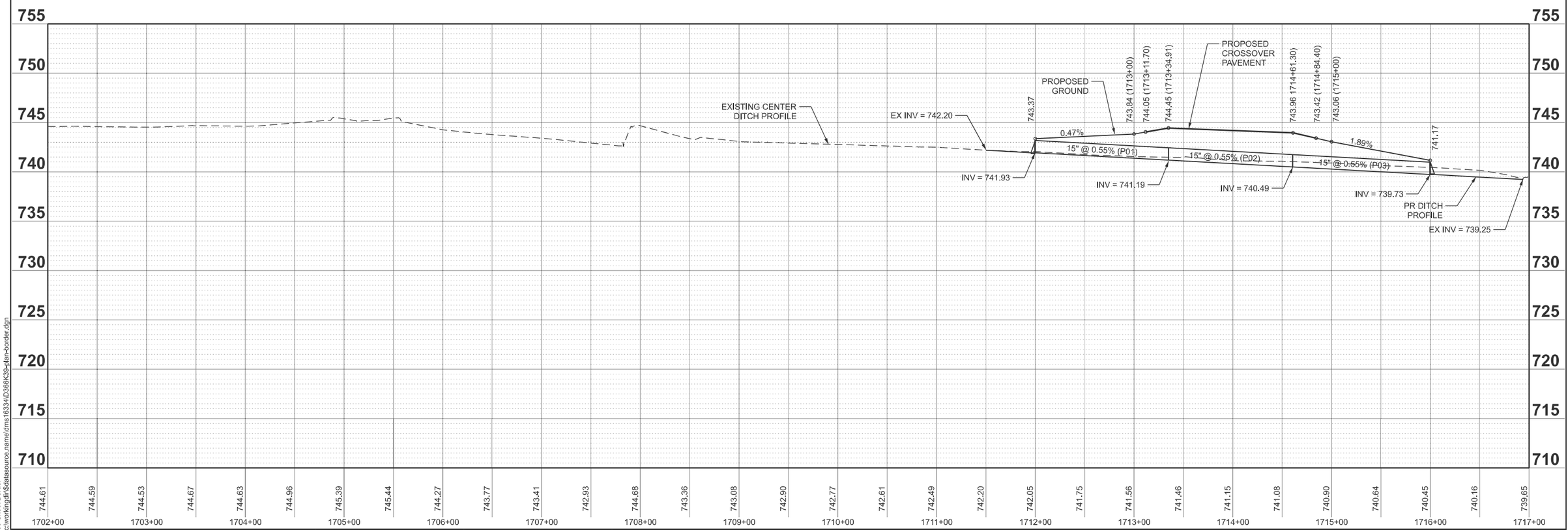

MODEL: 66K39 Sheet Border
FILE NAME: c:\workingdir\$datasource.name\dms16334\D366K39-plan-border.dgn

V3 Companies
7325 Janes Avenue
Woodridge, IL 60517
630 724 9200 phone
www.v3co.com

USER NAME =	DESIGNED - KDC	REVISED -	
	DRAWN - DRP	REVISED -	
	CHECKED - JWB	REVISED -	
PLOT DATE = 02/20/2026	DATE - 02/20/2026	REVISED -	

STATE OF ILLINOIS
DEPARTMENT OF TRANSPORTATION

CROSSOVER DRAINAGE PLAN AND PROFILE
I-57

SCALE: 1"=50' | SHEET 1 OF 4 SHEETS | STA. 1702+00 TO STA. 1717+00

F.A.I. RTE.	SECTION	COUNTY	TOTAL SHEETS	SHEET NO.
57	(27-38B) BR-1	FORD	185	36
		CONTRACT NO. 66K39		
		ILLINOIS	FED. AID PROJECT	

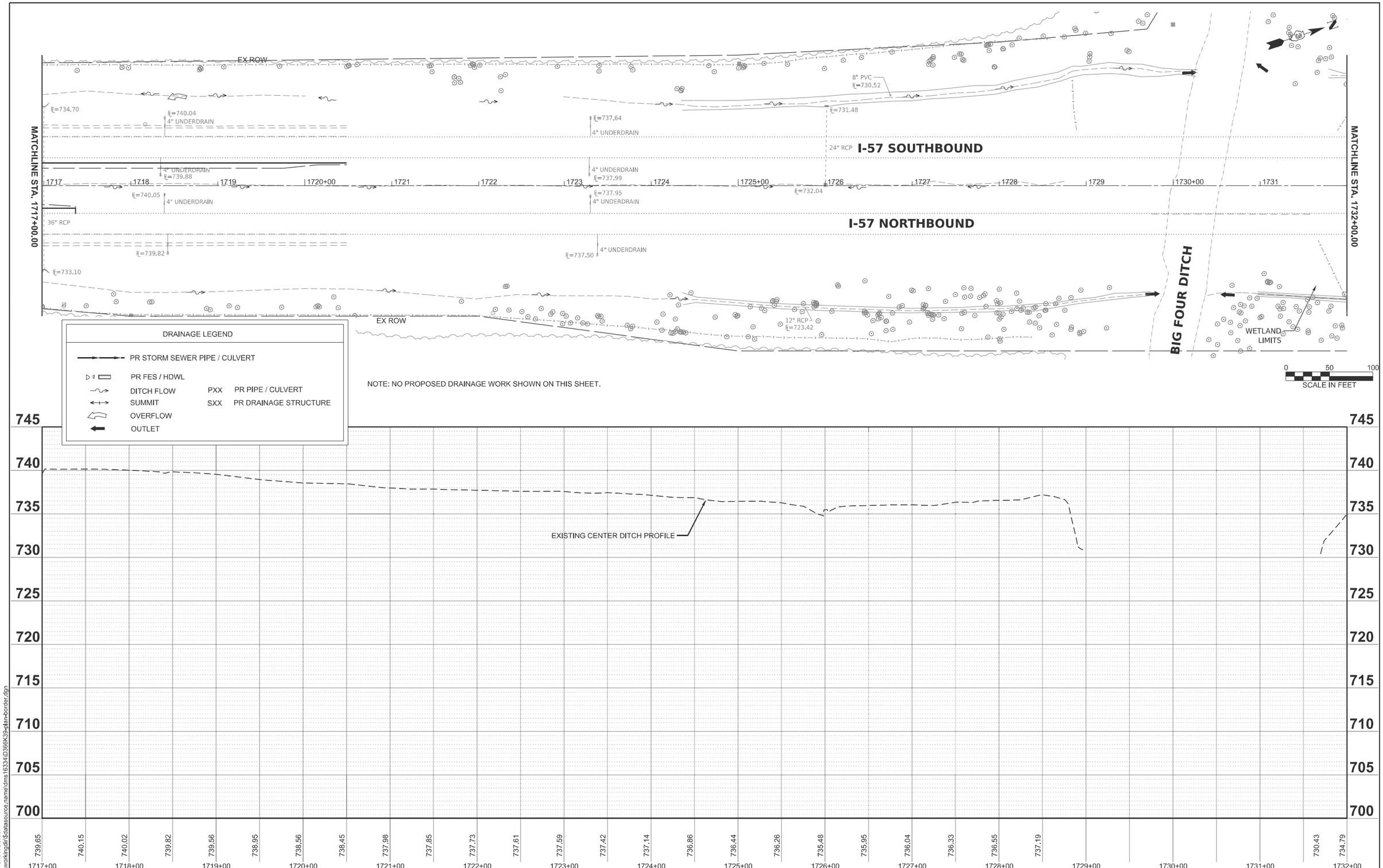

MODEL: 66K39 Sheet Border
FILE NAME: c:\workingdir\$datasource.name\dms16334\D366K39-plan-border.dgn

V3 Companies
7325 Janes Avenue
Woodridge, IL 60517
630 724 9200 phone
www.v3co.com

USER NAME =	DESIGNED - KDC	REVISED -	
	DRAWN - DRP	REVISED -	
	CHECKED - JWB	REVISED -	
PLOT DATE = 02/20/2026	DATE - 02/20/2026	REVISED -	

STATE OF ILLINOIS
DEPARTMENT OF TRANSPORTATION

CROSSOVER DRAINAGE PLAN AND PROFILE
I-57

SCALE: 1"=50' | SHEET 2 OF 4 SHEETS | STA. 1717+00 TO STA. 1732+00

F.A.I. RTE.	SECTION	COUNTY	TOTAL SHEETS	SHEET NO.
57	(27-38B) BR-1	FORD	185	37

CONTRACT NO. 66K39

ILLINOIS | FED. AID PROJECT

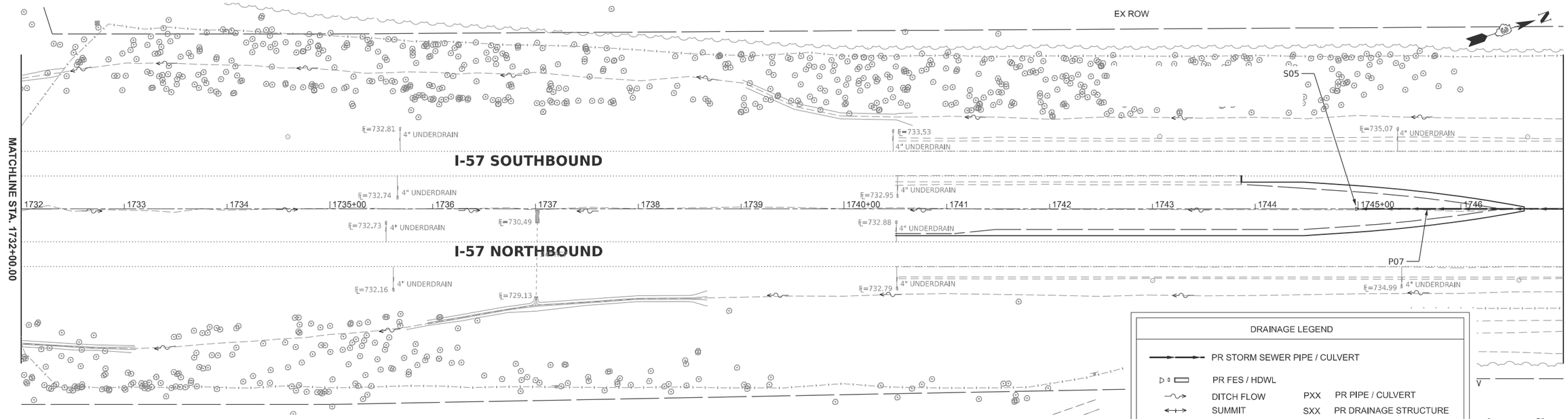

NOTE: SEE THE CROSSOVER DRAINAGE SCHEDULE SHEET FOR THE STORM SEWER PIPE AND STRUCTURE INFORMATION.

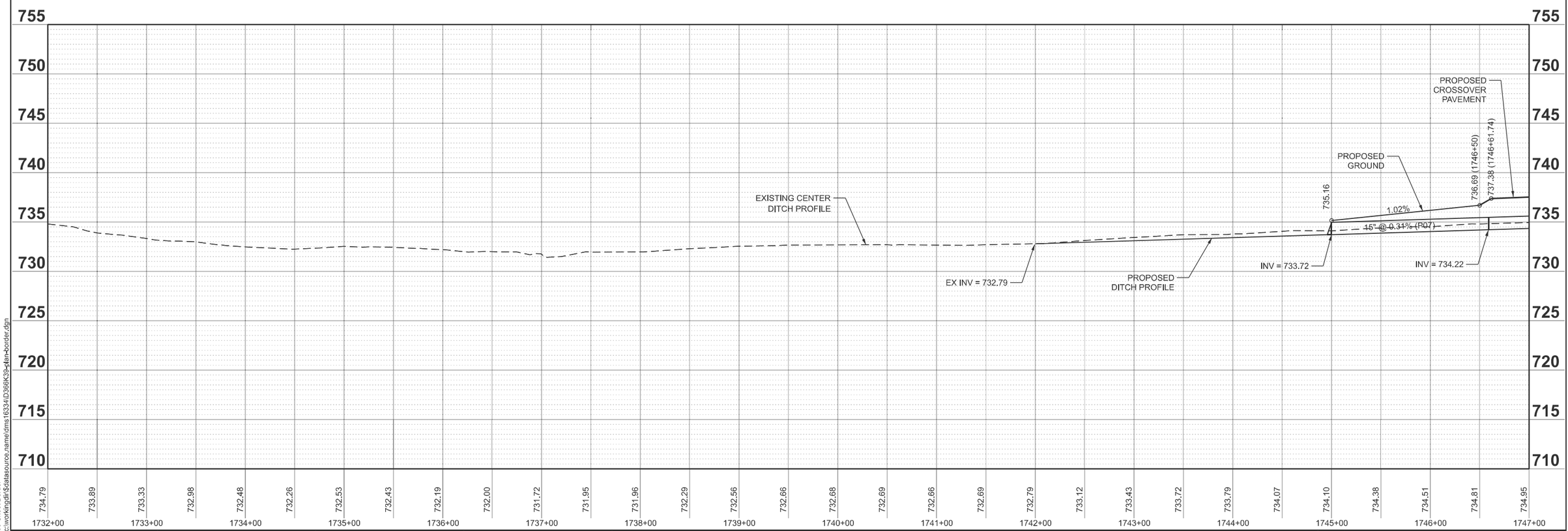

MODEL: 66K39 Sheet Border
FILE NAME: c:\workingdir\$datasource.name\dms16334\D366K39-plan-border.dgn

V3 Companies
7325 Janes Avenue
Woodridge, IL 60517
630 724 9200 phone
www.v3co.com

USER NAME =	DESIGNED - KDC	REVISED -	
	DRAWN - DRP	REVISED -	
	CHECKED - JWB	REVISED -	
PLOT DATE = 02/20/2026	DATE - 02/20/2026	REVISED -	

STATE OF ILLINOIS
DEPARTMENT OF TRANSPORTATION

CROSSOVER DRAINAGE PLAN AND PROFILE
I-57

SCALE: 1"=50' | SHEET 3 OF 4 SHEETS | STA. 1732+00 TO STA. 1747+00

F.A.I. RTE.	SECTION	COUNTY	TOTAL SHEETS	SHEET NO.
57	(27-38B) BR-1	FORD	185	38
		CONTRACT NO. 66K39		
		ILLINOIS FED. AID PROJECT		

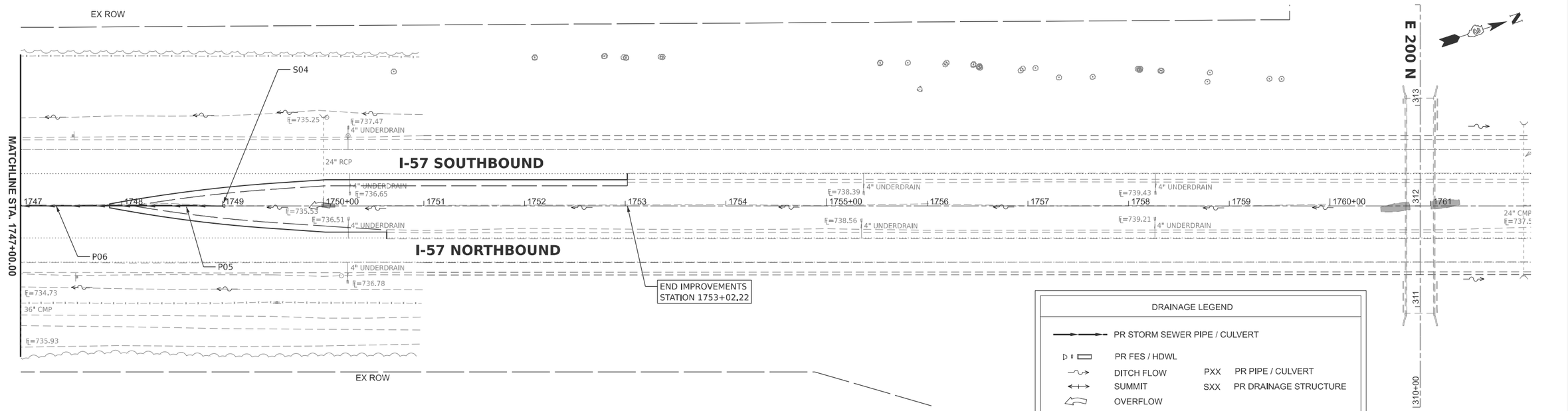

NOTE: SEE THE CROSSOVER DRAINAGE SCHEDULE SHEET FOR THE STORM SEWER PIPE AND STRUCTURE INFORMATION.

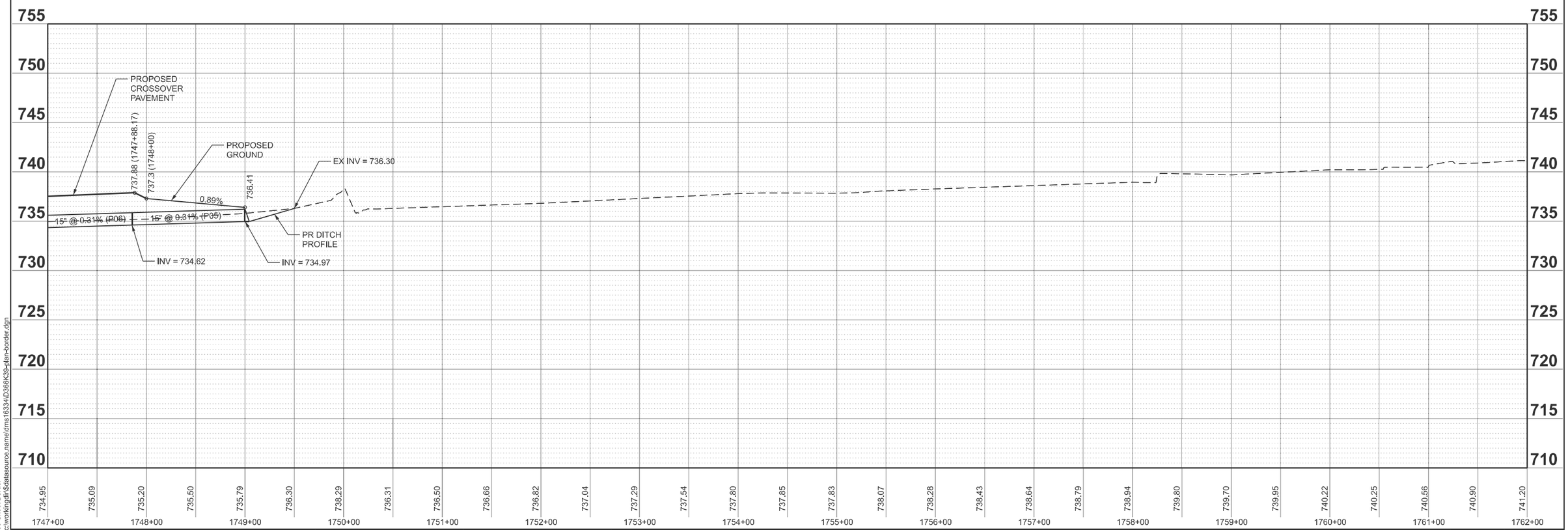

MODEL: 66K39 Sheet Border
FILE NAME: c:\workingdir\$datasource.name\dms16334\D366K39-plan-border.dgn

V3 Companies
7325 Janes Avenue
Woodridge, IL 60517
630 724 9200 phone
www.v3co.com

USER NAME =	DESIGNED - KDC	REVISED -	
	DRAWN - DRP	REVISED -	
	CHECKED - JWB	REVISED -	
PLOT DATE = 02/20/2026	DATE - 02/20/2026	REVISED -	

STATE OF ILLINOIS
DEPARTMENT OF TRANSPORTATION

CROSSOVER DRAINAGE PLAN AND PROFILE
I-57

SCALE: 1"=50' | SHEET 4 OF 4 SHEETS | STA. 1747+00 TO STA. 1762+00

F.A.I. RTE.	SECTION	COUNTY	TOTAL SHEETS	SHEET NO.
57	(27-38B) BR-1	FORD	185	39
		CONTRACT NO. 66K39		
		ILLINOIS	FED. AID PROJECT	

PROPOSED PIPE SCHEDULE											
PIPE ID	US STATION	US OFFSET	DS STATION	DS OFFSET	US STR	US INVERT	DS STR	DS INVERT	PIPE SLOPE	PIPE CULVERTS, CLASS D, TYPE 1 15"	SLOTTED DRAIN 15" WITH VARIABLE SLOT
										FOOT	FOOT
P01	1712+00.00	0' L/R	1713+35.00	0' L/R	S01	741.93	P02	741.19	0.55%	135	
P02	1713+35.00	0' L/R	1714+61.00	0' L/R	P01	741.19	P03	740.49	0.55%		126
P03	1714+61.00	0' L/R	1716+00.00	0' L/R	P02	740.49	S02	739.73	0.55%	139	
P05	1749+00.00	0' L/R	1747+88.00	0' L/R	S04	734.97	P06	734.62	0.31%	112	
P06	1747+88.00	0' L/R	1746+59.00	0' L/R	P05	734.62	P07	734.22	0.31%		129
P07	1746+59.00	0' L/R	1745+00.00	0' L/R	P06	734.22	S05	733.72	0.31%	159	

PROPOSED DRAINAGE STRUCTURE SCHEDULE					
STRUCTURE ID	STATION	OFFSET	RIM	INVERT	SLOPED METAL END SECTION WITH GRATE, STANDARD 542411, 15", 1:6
					EACH
S01	1712+00.00	0' L/R	--	741.93	1
S02	1716+00.00	0' L/R	--	739.73	1
S04	1749+00.00	0' L/R	--	734.97	1
S05	1745+00.00	0' L/R	--	733.72	1

CONCRETE HEADWALL REMOVAL			
STRUCTURE TYPE	STATION	OFFSET	EACH
PIPE UNDERDRAIN HEADWALL	1713+44	14.4' R	1
PIPE UNDERDRAIN HEADWALL	1713+46	10.7' L	1
PIPE UNDERDRAIN HEADWALL	1750+25	12.5' R	1
PIPE UNDERDRAIN HEADWALL	1750+25	12.5' L	1

MODEL: 66K39 Sheet Border
FILE NAME: c:\workingdir\$datasource.name\dms16334\D366K39-plan-border.dgn

V3 Companies
7325 Janes Avenue
Woodridge, IL 60517
630 724 9200 phone
www.v3co.com

USER NAME =	DESIGNED - KDC	REVISED -	
	DRAWN - DRP	REVISED -	
	CHECKED - JWB	REVISED -	
PLOT DATE = 02/20/2026	DATE - 02/20/2026	REVISED -	

STATE OF ILLINOIS
DEPARTMENT OF TRANSPORTATION

CROSSOVER DRAINAGE SCHEDULE

SCALE: NONE | SHEET 1 OF 1 SHEETS | STA. TO STA.

F.A.I. RTE.	SECTION	COUNTY	TOTAL SHEETS	SHEET NO.
57	(27-38B) BR-1	FORD	185	40
		CONTRACT NO. 66K39		
		ILLINOIS	FED. AID PROJECT	

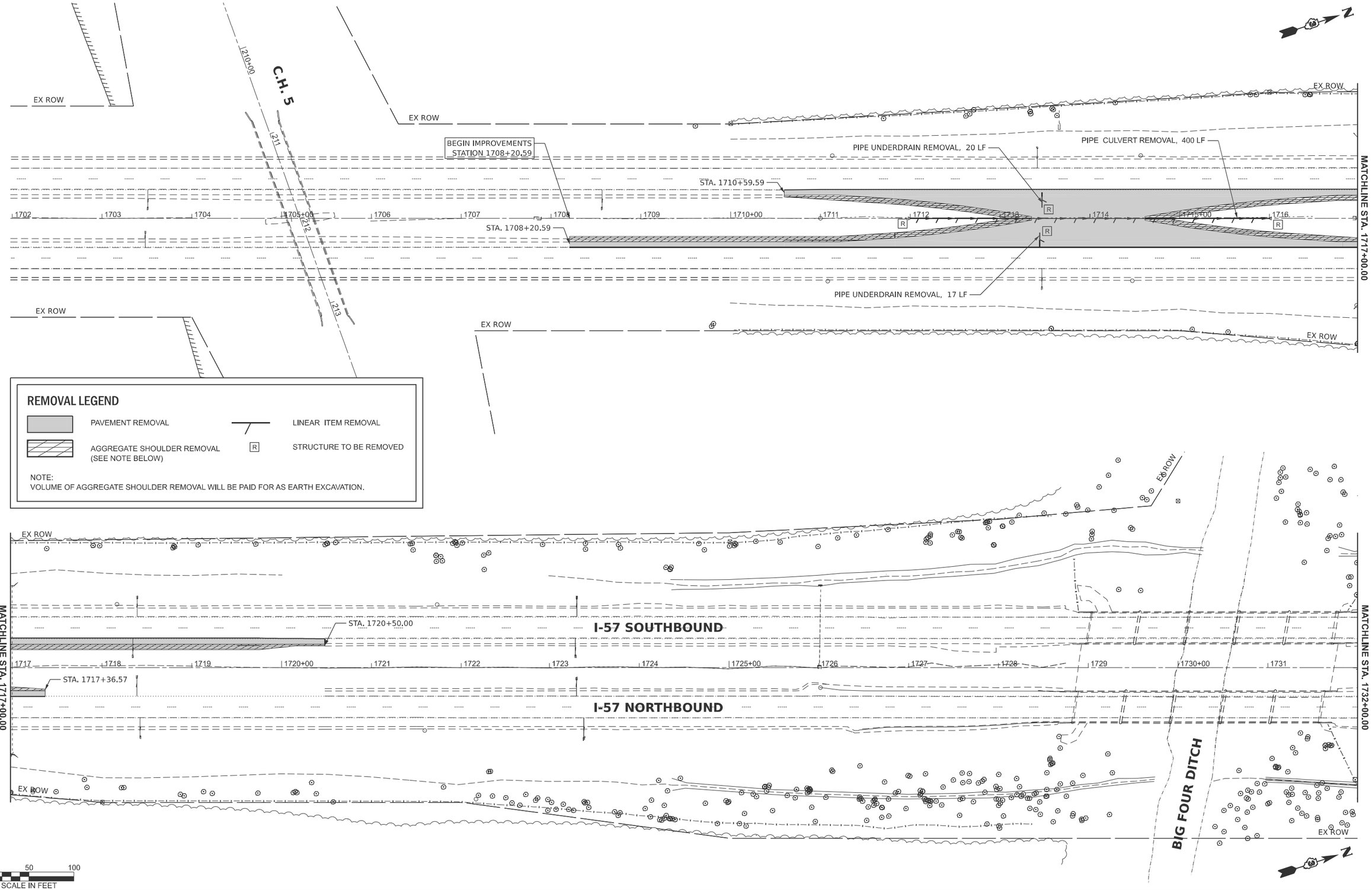

REMOVAL LEGEND

PAVEMENT REMOVAL	LINEAR ITEM REMOVAL
AGGREGATE SHOULDER REMOVAL (SEE NOTE BELOW)	R — STRUCTURE TO BE REMOVED

NOTE:
VOLUME OF AGGREGATE SHOULDER REMOVAL WILL BE PAID FOR AS EARTH EXCAVATION.

MODEL: 66K39 Sheet Border
FILE NAME: c:\workingdir$\datasource.name\dms16334\D366K39-plan-border.dgn

V3 Companies
7325 Janes Avenue
Woodridge, IL 60517
630 724 9200 phone
www.v3co.com

USER NAME =	DESIGNED - KDC	REVISED -	
	DRAWN - DRP	REVISED -	
	CHECKED - JWB	REVISED -	
PLOT DATE = 02/20/2026	DATE - 02/20/2026	REVISED -	

STATE OF ILLINOIS
DEPARTMENT OF TRANSPORTATION

CROSSOVER REMOVAL PLAN
I-57

SCALE: 1"=50' | SHEET 1 OF 2 SHEETS | STA. 1702+00 TO STA. 1732+00

F.A.I. RTE.	SECTION	COUNTY	TOTAL SHEETS	SHEET NO.
57	(27-38B) BR-1	FORD	185	41

CONTRACT NO. 66K39

ILLINOIS | FED. AID PROJECT

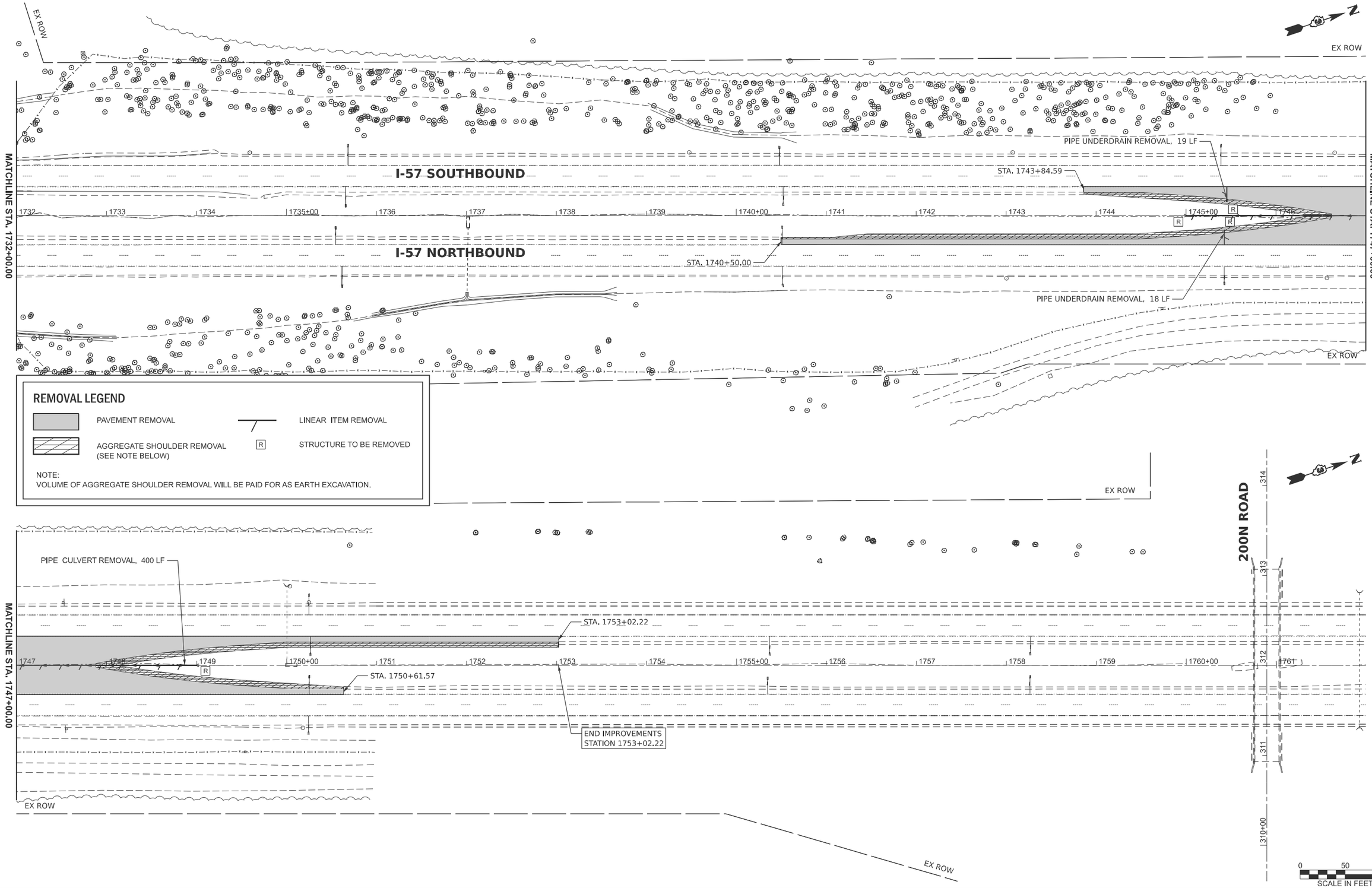

REMOVAL LEGEND

PAVEMENT REMOVAL	LINEAR ITEM REMOVAL
AGGREGATE SHOULDER REMOVAL (SEE NOTE BELOW)	R STRUCTURE TO BE REMOVED

NOTE:
VOLUME OF AGGREGATE SHOULDER REMOVAL WILL BE PAID FOR AS EARTH EXCAVATION.

MODEL: 66K39 Sheet Border
FILE NAME: c:\workingdir$\datasource.name\dms16334\D366K39-plan-border.dgn

V3 Companies
7325 Janes Avenue
Woodridge, IL 60517
630 724 9200 phone
www.v3co.com

USER NAME =	DESIGNED - KDC	REVISED -	
	DRAWN - DRP	REVISED -	
	CHECKED - JWB	REVISED -	
PLOT DATE = 02/20/2026	DATE - 02/20/2026	REVISED -	

STATE OF ILLINOIS
DEPARTMENT OF TRANSPORTATION

CROSSOVER REMOVAL PLAN
I-57

SCALE: 1"=50' | SHEET 2 OF 2 SHEETS | STA. 1762+00 TO STA. 1732+00

F.A.I. RTE.	SECTION	COUNTY	TOTAL SHEETS	SHEET NO.
57	(27-38B) BR-1	FORD	185	42

CONTRACT NO. 66K39

ILLINOIS | FED. AID PROJECT

LEGEND

A — PROPOSED TEMPORARY AERIAL CABLE, SIZE AS INDICATED

T — PROPOSED TEMPORARY LIGHTING CONTROLLER

T — PROPOSED TEMPORARY ELECTRIC SERVICE INSTALLATION

PROPOSED TEMPORARY LIGHTING UNIT,
50FT WOOD POLE, CLASS 3, WITH 15FT M.A.,
LUMINAIRE, LED, ROADWAY OUTPUT DESIGNATION G

PROPOSED GUY WIRE, ANCHOR

CABLE SCHEDULE

1 AERIAL CABLE, 2-1/C NO. 6 WITH MESSENGER WIRE

2 (1) UNDERGROUND CONDUIT, PVC, 1" DIA.
(3) ELECTRIC CABLE IN CONDUIT, 600V (XLP-TYPE USE) 1/C NO. 6

IDOT HIGHWAY STANDARDS

**825001-04 LIGHTING CONTROLLER POLE MOUNTED, 240V
830026-01 TEMPORARY ROADWAY LIGHTING

** TO BE USED FOR TEMPORARY LIGHTING CONTROLLER.

SUMMARY OF QUANTITIES

PAY ITEM		UNIT	TOTALS
X8410102	TEMPORARY LIGHTING SYSTEM	LSUM	1

GENERAL NOTES

1. POLE HEIGHT SHALL BE INCREASED AS NECESSARY TO MAINTAIN REQUIRED CLEARANCE OF AERIAL CABLE OVER THE ROADWAY.
2. TEMPORARY WOOD POLES SHALL BE SET BACK AS SPECIFIED PER PLANS AND OUTSIDE THE CLEAR ZONE.

INDEX OF SHEETS

E1 GENERAL NOTES, HIGHWAY STANDARDS, INDEX OF SHEETS WIRING DIAGRAM, AND SUMMARY OF QUANTITIES

E2 PROPOSED TEMPORARY LIGHTING PLAN - SOUTH CROSSOVER

E3 PROPOSED TEMPORARY LIGHTING PLAN - NORTH CROSSOVER

E4 LUMINAIRE PERFORMANCE TABLE

WIRING LEGEND

T1 TEMPORARY LIGHTING UNIT.

GROUND ROD.

NOTES:

1. ALL NECESSARY REVISIONS TO THE WIRING SHOWN ON THIS SHEET SHALL BE MADE AT NO ADDITIONAL COST TO THE DEPARTMENT AND TO THE SATISFACTION OF THE ENGINEER.

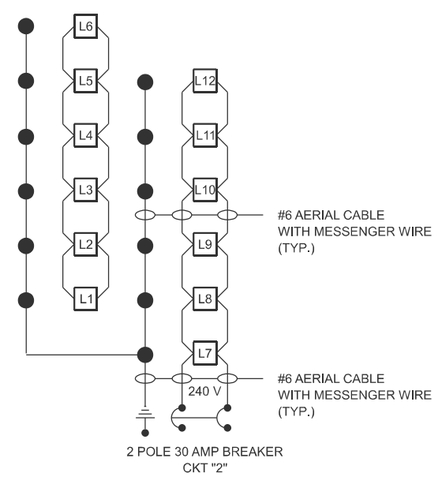

I-57 SOUTH CROSSOVER

TEMPORARY LIGHTING CONTROLLER - 120/240V, 30 AMP
SOUTH OF SN 027-0052 & SN 027-0053

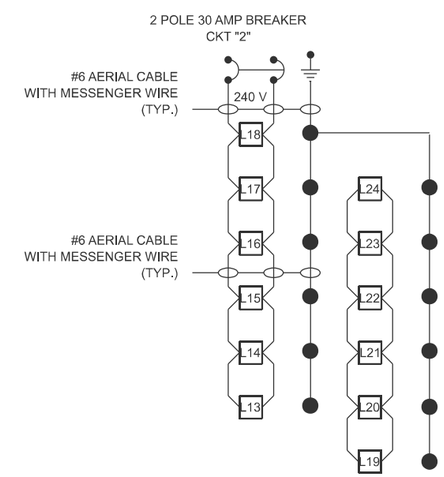

I-57 NORTH CROSSOVER

TEMPORARY LIGHTING CONTROLLER - 120/240V, 30 AMP
NORTH OF SN 027-0052 & SN 027-0053

E1

MODEL: 66K39 Sheet Border
FILE NAME: c:\workingdir\$datasource,name\dms16334\D366K39-plan-border.dgn

V3 Companies
7325 Janes Avenue
Woodridge, IL 60517
630 724 9200 phone
www.v3co.com

USER NAME =	DESIGNED - KDC	REVISED -	
	DRAWN - DRP	REVISED -	
	CHECKED - JWB	REVISED -	
PLOT DATE = 02/20/2026	DATE - 02/20/2026	REVISED -	

STATE OF ILLINOIS
DEPARTMENT OF TRANSPORTATION

CABLE SCHEDULE, GENERAL NOTES, HIGHWAY STANDARDS, INDEX OF SHEETS, LEGEND, AND SUMMARY OF QUANTITIES

SCALE: NONE | SHEET 1 OF 4 SHEETS | STA. TO STA.

F.A.I. RTE.	SECTION	COUNTY	TOTAL SHEETS	SHEET NO.
57	(27-38B) BR-1	FORD	187	43

CONTRACT NO. 66K39

ILLINOIS | FED. AID PROJECT

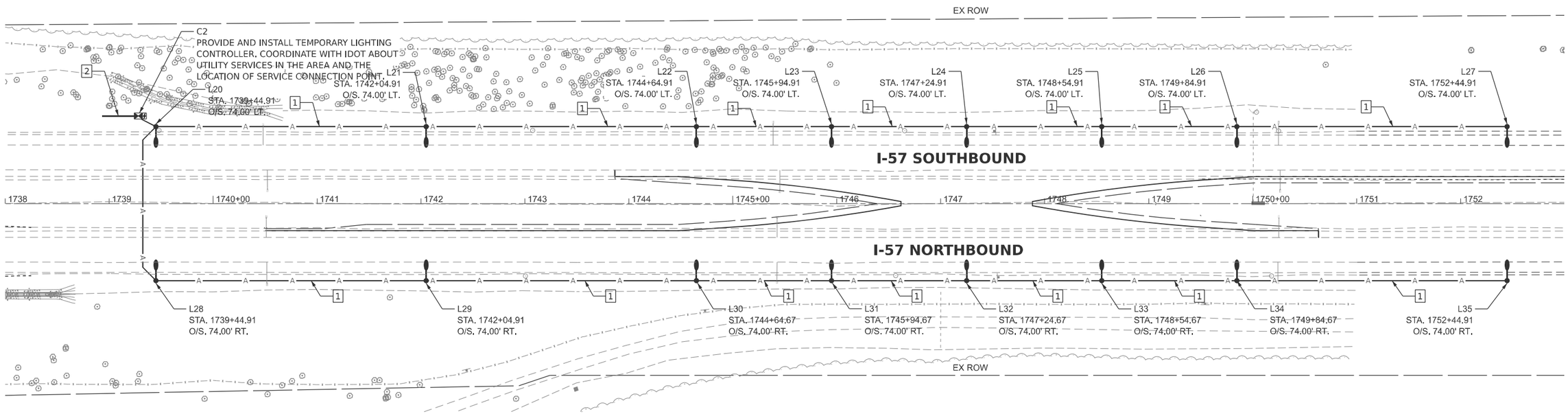

LEGEND

—— A ——	TEMPORARY AERIAL CABLE
	TEMPORARY LIGHTING CONTROLLER
	TEMPORARY WOOD POLE, 60 FT., CLASS 4, 15 FT. MAST ARM, TEMPORARY LUMINAIRE, LED, ROADWAY, OUTPUT DESIGNATION I

KEYED NOTES

1. AERIAL CABLE, 2-1/C NO. 6 WITH MESSENGER WIRE
2. (1) UNDERGROUND CONDUIT, PVC, 1" DIA.
   (3) ELECTRIC CABLE IN CONDUIT, 600V (XLP-TYPE USE) 1/C NO. 6

0 50 100
SCALE IN FEET

MODEL: 66K39 Sheet Border
FILE NAME: c:\workingdir$\datasource.name\dms16334\D366K39-plan-border.dgn

V3 Companies
7325 Janes Avenue
Woodridge, IL 60517
630 724 9200 phone
www.v3co.com

USER NAME =	DESIGNED - KDC	REVISED -	
	DRAWN - DRP	REVISED -	
	CHECKED - JWB	REVISED -	
PLOT DATE = 02/20/2026	DATE - 02/20/2026	REVISED -	

STATE OF ILLINOIS
DEPARTMENT OF TRANSPORTATION

CROSSOVER TEMPORARY LIGHTING PLAN
I-57 - NORTH CROSSOVER

SCALE: 1"=50' | SHEET 2 OF 2 SHEETS | STA. 1702+00 TO STA. 1732+00

F.A.I. RTE.	SECTION	COUNTY	TOTAL SHEETS	SHEET NO.
57	(27-38B) BR-1	FORD	185	44
		CONTRACT NO. 66K39		
	ILLINOIS	FED. AID PROJECT		

MAINTENANCE OF TRAFFIC GENERAL NOTES

1. THE MAINTENANCE OF TRAFFIC PLANS SHALL SERVE AS A GUIDE FOR THE SAFE DIVERSION OF TRAFFIC DURING EXECUTION OF THE CONTRACT. THE CONTRACTOR MAY MODIFY THE MAINTENANCE OF TRAFFIC PLANS TO MEET CONSTRUCTION NEEDS, BUT NOT AT THE EXPENSE OF PUBLIC SAFETY OR CONVENIENCE, AND ANY CHANGES TO THE TRAFFIC CONTROL SHALL BE SUBMITTED TO THE ENGINEER FOR REVIEW AND APPROVAL.
2. ALL EXISTING AND TEMPORARY PAVEMENT MARKINGS FROM PRIOR STAGES THAT ARE IN CONFLICT SHALL BE REMOVED.
3. ANY RAISED REFLECTIVE PAVEMENT MARKERS THAT CONFLICT WITH THE TEMPORARY TRAFFIC LANES MUST HAVE THE REFLECTIVE LENSES REMOVED AS DIRECTED BY THE ENGINEER.
4. SIGNS DESIGNATED AS (O) SHALL HAVE FLUORESCENT ORANGE SHEETING MATERIAL.
5. THE CONTRACTOR SHALL REMOVE OR COVER ALL EXISTING SIGNS THAT CONFLICT WITH OR DO NOT APPLY TO THE REVISED TRAFFIC PATTERNS AND SHALL RESTORE THE SIGNS AT THE END OF CONSTRUCTION AS DIRECTED BY THE ENGINEER. DO NOT PLACE TAPE OR DRILL INTO THE FACE OF THE SIGN WHEN COVERING.
6. THE CONTRACTOR SHALL STORE ANY UNUSED TEMPORARY CONCRETE BARRIER WALLS OUTSIDE THE CLEAR ZONE OR OUTSIDE PROJECT LIMITS. THE STORAGE OF UNUSED TEMPORARY CONCRETE BARRIER WALLS SHALL NOT POSE A HAZARD TO MOTORIST OR ABUTTING PROPERTIES/APPURTENANCES.

MAINTENANCE OF TRAFFIC - STAGING NOTES

PRE-STAGE (NOT SHOWN IN PLANS)

TRAFFIC

1. PLACE ALTERNATE ROUTE SIGNING. SEE ALTERNATE ROUTE SIGNING PLANS FOR DETAILS.
2. CLOSE THE OUTSIDE LANE IN THE NORTHBOUND AND SOUTHBOUND DIRECTIONS UTILIZING HIGHWAY STANDARD 701401 AND THE SMART WORK ZONE DETAIL.

CONSTRUCTION

1. MILL AND FILL THE EXISTING RUMBLE STRIPS FROM STA 1709+66 TO STA 1751+57 ON THE NORTHBOUND OUTSIDE SHOULDER.
2. MILL AND FILL THE EXISTING RUMBLE STRIPS FROM STA 1709+66 TO STA 1720+50 AND FROM STA 1740+50 TO STA 1751+57 ON THE SOUTHBOUND OUTSIDE SHOULDER.

STAGE 1 (NOT SHOWN IN PLANS)

TRAFFIC

1. CLOSE THE INSIDE LANE IN THE NORTHBOUND AND SOUTHBOUND DIRECTIONS UTILIZING HIGHWAY STANDARD 701401 AND THE SMART WORK ZONE DETAIL.
2. MAINTAIN ALTERNATE ROUTE SIGNING PLACED IN PREVIOUS STAGE.

CONSTRUCTION

1. CONSTRUCT THE PROPOSED MEDIAN CROSSOVERS.
2. MILL AND FILL THE EXISTING RUMBLE STRIPS FROM STA 1717+37 TO STA 1740+50 ON THE NORTHBOUND INSIDE SHOULDER.
3. MILL AND FILL THE EXISTING RUMBLE STRIPS FROM STA 1740+50 TO STA 1743+87 ON THE SOUTHBOUND INSIDE SHOULDER.

STAGE 2

TRAFFIC

1. CLOSE THE INSIDE LANE IN THE NORTHBOUND AND SOUTHBOUND DIRECTIONS UTILIZING HIGHWAY STANDARD 701401 AND THE SMART WORK ZONE DETAIL AND AS SHOWN ON THE PLANS.
2. UTILIZING THE CROSSOVERS BUILT IN STAGE 1, SHIFT SOUTHBOUND TRAFFIC ONTO THE NORTHBOUND INSIDE LANE UTILIZING STANDARD 701416 AND AS SHOWN ON THE PLANS.
3. MAINTAIN ALTERNATE ROUTE SIGNING PLACED IN PREVIOUS STAGE. ADD WIDTH RESTRICTION SIGNING. SEE ALTERNATE ROUTE DETOUR FOR DETAILS.

CONSTRUCTION

1. CONSTRUCT PROPOSED STRUCTURE SN 027-0106.
2. CONSTRUCT PROPOSED ROADWAY IMPROVEMENTS WITHIN THE PROJECT LIMITS ALONG SOUTHBOUND PAVEMENT.
   A. PERFORM MAINLINE PAVEMENT RESURFACING.
   B. CONSTRUCT PROPOSED PAVED SHOULDERS. OMIT SHOULDER RUMBLE STRIPS.
   C. PERFORM ALL OUTSIDE ROADWAY WORK AS PERMITTED BY WORK AREA, INCLUDING AGGREGATE SHOULDERS, GUARDRAIL, GRADING, AND LANDSCAPING.

WINTER STAGE (NOT SHOWN IN PLANS)

TRAFFIC

1. RETURN TRAFFIC TO EXISTING LANE CONFIGURATION. REMOVE ALL TRAFFIC CONTROL DEVICES.
2. CLOSE TEMPORARY CROSSOVERS. SEE CROSSOVER CLOSURE (MODIFIED) DETAIL.
2. REMOVE ALTERNATE ROUTE SIGNING.

CONSTRUCTION

1. NONE

MAINTENANCE OF TRAFFIC - STAGING NOTES (CONT.)

STAGE 3

TRAFFIC

1. CLOSE THE INSIDE LANE IN THE NORTHBOUND AND SOUTHBOUND DIRECTIONS UTILIZING HIGHWAY STANDARD 701401 AND THE SMART WORK ZONE DETAIL AND AS SHOWN ON THE PLANS.
2. UTILIZING THE CROSSOVERS BUILT IN STAGE 1, SHIFT NORTHBOUND TRAFFIC ONTO THE SOUTHBOUND INSIDE LANE UTILIZING STANDARD 701416 AND AS SHOWN ON THE PLANS.
3. PLACE ALTERNATE ROUTE SIGNING. SEE ALTERNATE ROUTE DETOUR FOR DETAILS.

CONSTRUCTION

1. CONSTRUCT PROPOSED STRUCTURE SN 027-0107.
2. CONSTRUCT PROPOSED ROADWAY IMPROVEMENTS WITHIN THE PROJECT LIMITS ALONG NORTHBOUND PAVEMENT.
   A. PERFORM MAINLINE PAVEMENT RESURFACING.
   B. CONSTRUCT PROPOSED PAVED SHOULDERS. CONSTRUCT SHOULDER RUMBLE STRIPS AS PERMITTED BY WORK AREA.
   C. PERFORM ALL OUTSIDE ROADWAY WORK AS PERMITTED BY WORK AREA, INCLUDING AGGREGATE SHOULDERS, GUARDRAIL, GRADING, AND LANDSCAPING.

STAGE 4 (NOT SHOWN IN PLANS)

TRAFFIC

1. CLOSE THE INSIDE LANE IN THE NORTHBOUND AND SOUTHBOUND DIRECTIONS UTILIZING HIGHWAY STANDARD 701401 AND THE SMART WORK ZONE DETAIL.
2. MAINTAIN ALTERNATE ROUTE SIGNING PLACED IN PREVIOUS STAGE.

CONSTRUCTION

1. REMOVE THE MEDIAN CROSSOVERS. REGRADE MEDIAN TO FINAL CONDITION.
2. CONSTRUCT THE REMAINING INSIDE SHOULDER RUMBLE STRIPS.

POST-STAGE (NOT SHOWN IN PLANS)

TRAFFIC

1. CLOSE THE OUTSIDE LANE IN THE NORTHBOUND AND SOUTHBOUND DIRECTIONS UTILIZING HIGHWAY STANDARD 701401 AND THE SMART WORK ZONE DETAIL.
2. MAINTAIN ALTERNATE ROUTE SIGNING PLACED IN PREVIOUS STAGE.

CONSTRUCTION

1. CONSTRUCT THE REMAINING OUTSIDE SHOULDER RUMBLE STRIPS.

Illinois Department of Transportation

Luminaire Performance Table

Project

Date	Contract Number	Section Number	County
04/14/26	66K39	(27-38B) BR-1	Ford

Marked Route Number	Municipality
FAI Route 57 (I-57)	Paxton

Roadway

Lane Width (see note 4)	Number and Direction of lanes	Median Width	Surface Classification	Q-Zero Value
12'	2 NB Lanes, 2 SB Lanes	64'	R2	0.07

Structure

Mounting Height	Arm Length	Set-Back (see note 1)	Number of Luminaries
45'	15'	38'	1

Luminaire

Description	Transverse Distribution	Lateral Distribution
ROUDWAY OUTPUT DESIGNATION G	TYPE III	Medium

Total Light Loss Factor (LLF)	B-U-G Rating	Shields	Dimming Protocol
0.70	U=0	N/A	0-10V

Layout

Spacing	Configuration
200'	Single Sided

Performance (see notes 5 and 6)

Average Illuminance, E_{AVE} (fc)	Uniformity Ratio, E_{AVE}/E_{MIN}
N/A	N/A

Average Luminance, L_{AVE} (cd/m^2)	Uniformity Ratio, L_{AVE}/L_{MIN}	Uniformity Ratio, L_{MAX}/L_{MIN}	Veiling Luminance Ratio, L_V/L_{AVE}
0.4	3.5	6.0	0.3

Light Tresspass (see notes 5 and 7)

Distance to ROW (behind pole)	Max. Horizontal Illuminance at ROW, E_H	Max. Vertical Illuminance at ROW, E_V
N/A	N/A	N/A

Notes

1. Set-Back is from Edge of Pavement (white line).
2. Lighting calculations shall be performed with all luminaires oriented toward and perpendicular to the roadway.
3. Performance requirements shall be the minimum acceptable standards of photometric performance for the luminaire, based on the given conditions listed above.
4. Lane width is the width of each **individual** lane, not to be confused with total roadway width.

OPTIMIZER CALCULATIONS WERE PERFORMED ASSUMING A SINGLE-SIDED LIGHTING CONFIGURATION WITH THE CALCULATION GRID LOCATED ON THE SAME SIDE OF THE ROADWAY AS THE LIGHTING UNITS.
COMPLIANCE WITH PERFORMANCE CRITERIA SHALL BE HELD TO ONE SIGNIFICATION DIGIT.

Printed 04/14/26

BDE 5630 (Rev. 06/06/24)

LUMINAIRE PERFORMANCE TABLE

E4

MODEL: 66K39 Sheet Border
FILE NAME: c:\workingdir\$datasource.name\dms16334\D366K39-plan-border.dgn

V3 Companies
7325 Janes Avenue
Woodridge, IL 60517
630 724 9200 phone
www.v3co.com

USER NAME =	DESIGNED - KDC	REVISED -	STATE OF ILLINOIS DEPARTMENT OF TRANSPORTATION
	DRAWN - DRP	REVISED -	
	CHECKED - JWB	REVISED -	
PLOT DATE = 02/20/2026	DATE - 02/20/2026	REVISED -	

LUMINAIRE PERFORMANCE TABLE

SCALE: NONE | SHEET 4 OF 4 SHEETS | STA. | TO STA.

F.A.I. RTE.	SECTION	COUNTY	TOTAL SHEETS	SHEET NO.
57	(27-38B) BR-1	FORD	187	46

CONTRACT NO. 66K39

ILLINOIS | FED. AID PROJECT

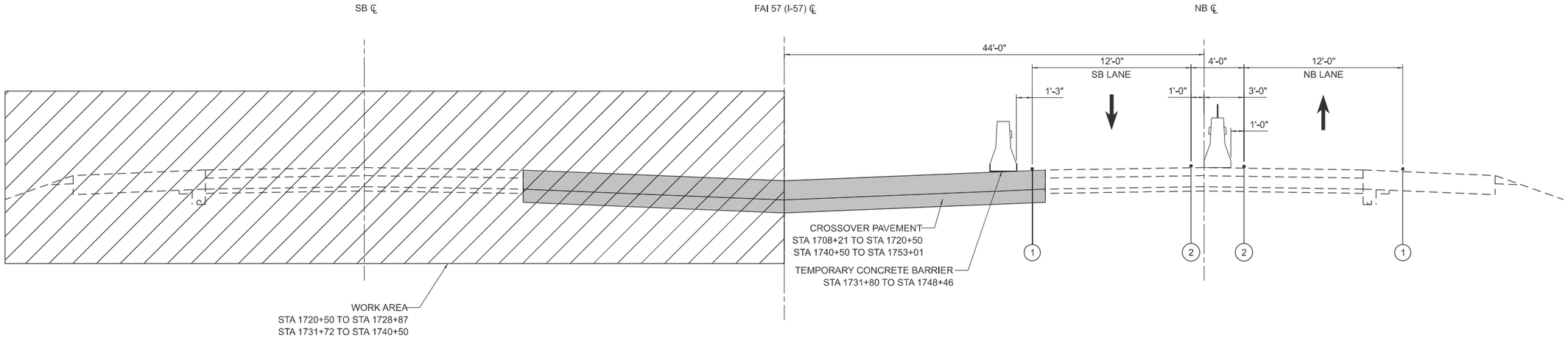

FAI 57 (I-57) TYPICAL SECTION STAGE 2

STA 1708+21 TO STA 1728+87
STA 1731+72 TO STA 1753+01

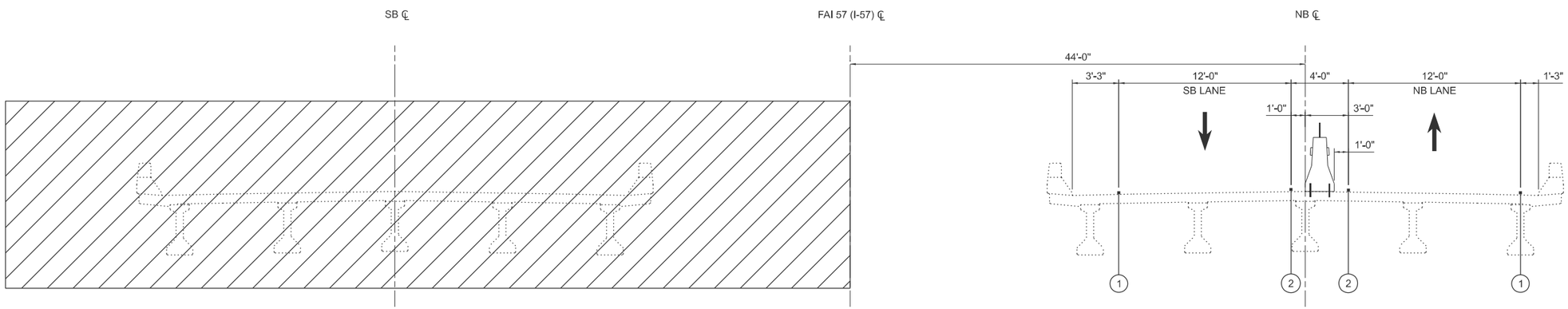

FAI 57 (I-57) BRIDGE TYPICAL SECTION STAGE 2

STA 1728+87 TO STA 1731+72

LEGEND

- DRUMS
- WORK AREA
- MODULAR GLARE SCREEN SYSTEM, TEMPORARY
- TEMPORARY CONCRETE BARRIER
- PINNING TEMPORARY CONCRETE BARRIER
- WORK COMPLETED IN PREVIOUS STAGES
- (1) TEMPORARY PAVEMENT MARKING - TAPE TYPE IV - LINE 4" (SOLID WHITE)
- (2) TEMPORARY PAVEMENT MARKING - TAPE TYPE IV - LINE 4" (SOLID YELLOW)
- (A) EXISTING PAVEMENT MARKING

MODEL: 66K39 Sheet Border
FILE NAME: c:\workingdir\$datasource.name\dms16334\D366K39-plan-border.dgn

EFK•Moen
Civil Engineering Design

USER NAME =	DESIGNED - JDB	REVISED -	
	DRAWN - PJG	REVISED -	
	CHECKED - RBB	REVISED -	
PLOT DATE = 02/20/2026	DATE -	REVISED -	

STATE OF ILLINOIS
DEPARTMENT OF TRANSPORTATION

MAINTENANCE OF TRAFFIC TYPICAL SECTIONS
I-57

SCALE: N/A | SHEET 2 OF 4 SHEETS | STA. TO STA.

F.A.I. RTE.	SECTION	COUNTY	TOTAL SHEETS	SHEET NO.
57	(27-38B) BR-1	FORD	185	47
		CONTRACT NO. 66K39		
	ILLINOIS	FED. AID PROJECT		

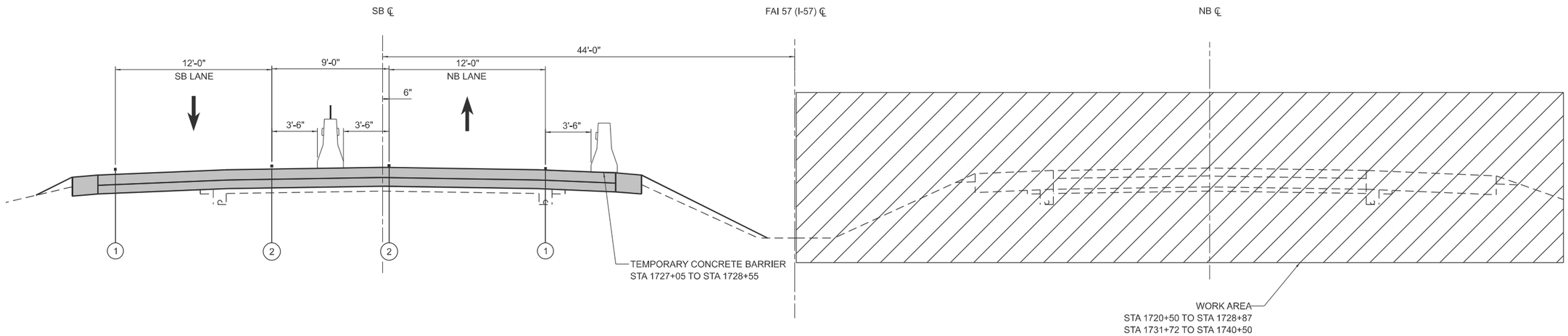

FAI 57 (I-57) TYPICAL SECTION STAGE 3

STA 1708+21 TO STA 1728+87
STA 1731+72 TO STA 1753+01

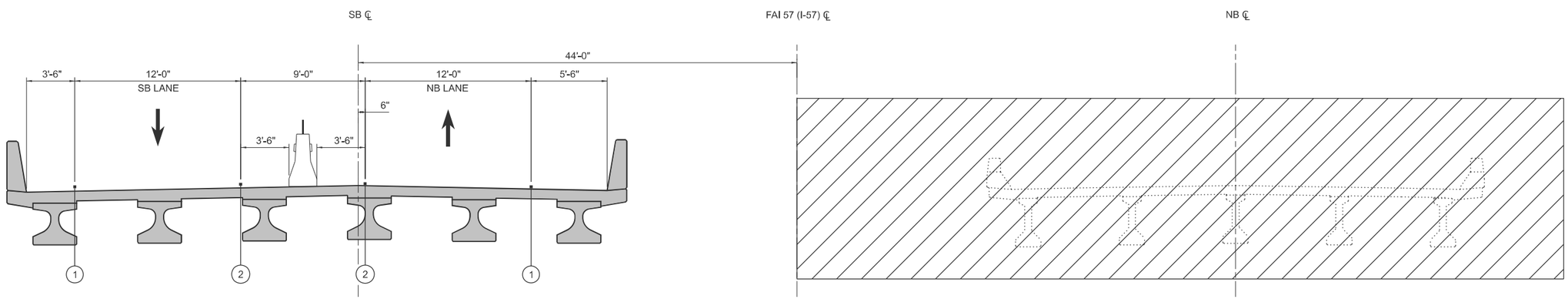

FAI 57 (I-57) BRIDGE TYPICAL SECTION STAGE 3

STA 1728+87 TO STA 1731+72

LEGEND

- DRUMS
- WORK AREA
- MODULAR GLARE SCREEN SYSTEM, TEMPORARY
- TEMPORARY CONCRETE BARRIER
- PINNING TEMPORARY CONCRETE BARRIER
- WORK COMPLETED IN PREVIOUS STAGES
- (1) TEMPORARY PAVEMENT MARKING - TAPE TYPE IV - LINE 4" (SOLID WHITE)
- (2) TEMPORARY PAVEMENT MARKING - TAPE TYPE IV - LINE 4" (SOLID YELLOW)
- (A) EXISTING PAVEMENT MARKING

MODEL: 66K39 Sheet Border
FILE NAME: c:\workingdir\$datasource.name\dms16334\D366K39-plan-border.dgn

EFK♦Moen
Civil Engineering Design

USER NAME =	DESIGNED - JDB	REVISED -	
	DRAWN - PJG	REVISED -	
	CHECKED - RBB	REVISED -	
PLOT DATE = 02/20/2026	DATE -	REVISED -	

STATE OF ILLINOIS
DEPARTMENT OF TRANSPORTATION

MAINTENANCE OF TRAFFIC TYPICAL SECTIONS
I-57

SCALE: N/A | SHEET 3 OF 4 SHEETS | STA. | TO STA.

F.A.I. RTE.	SECTION	COUNTY	TOTAL SHEETS	SHEET NO.
57	(27-38B) BR-1	FORD	185	48
		CONTRACT NO. 66K39		
	ILLINOIS	FED. AID PROJECT		

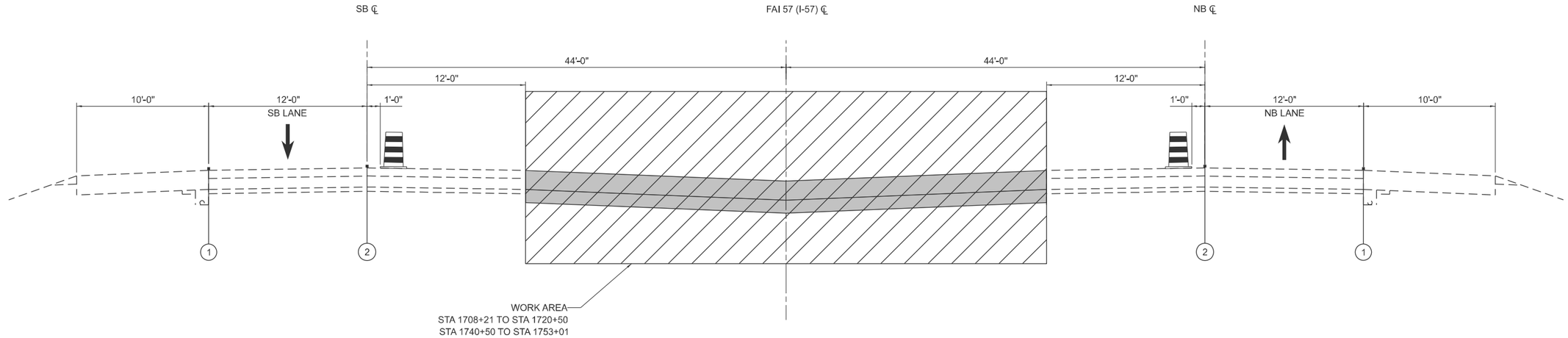

FAI 57 (I-57) TYPICAL SECTION STAGE 4

STA 1708+21 TO STA 1728+87
STA 1731+72 TO STA 1753+01

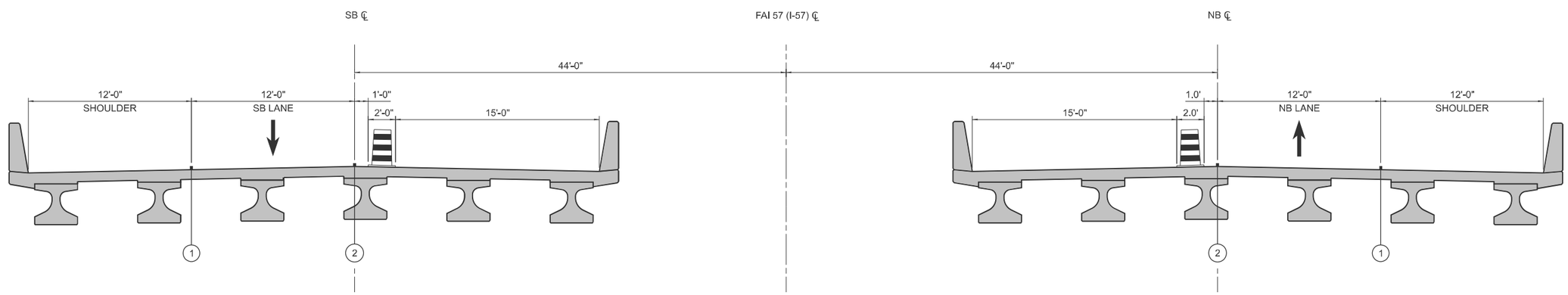

FAI 57 (I-57) BRIDGE TYPICAL SECTION STAGE 4

STA 1728+87 TO STA 1731+72

LEGEND

- DRUMS
- WORK AREA
- MODULAR GLARE SCREEN SYSTEM, TEMPORARY
- TEMPORARY CONCRETE BARRIER
- PINNING TEMPORARY CONCRETE BARRIER
- WORK COMPLETED IN PREVIOUS STAGES
- (1) TEMPORARY PAVEMENT MARKING - TAPE TYPE IV - LINE 4" (SOLID WHITE)
- (2) TEMPORARY PAVEMENT MARKING - TAPE TYPE IV - LINE 4" (SOLID YELLOW)
- (A) EXISTING PAVEMENT MARKING

MODEL: 66K39 Sheet Border
FILE NAME: c:\workingdir\$datasource.name\dms16334\D366K39-plan-border.dgn

EFK•Moen
Civil Engineering Design

USER NAME =	DESIGNED - JDB	REVISED -	
	DRAWN - PJG	REVISED -	
	CHECKED - RBB	REVISED -	
PLOT DATE = 02/20/2026	DATE -	REVISED -	

STATE OF ILLINOIS
DEPARTMENT OF TRANSPORTATION

MAINTENANCE OF TRAFFIC TYPICAL SECTIONS
I-57

SCALE: N/A | SHEET 4 OF 4 SHEETS | STA. | TO STA.

F.A.I. RTE.	SECTION	COUNTY	TOTAL SHEETS	SHEET NO.
57	(27-38B) BR-1	FORD	185	49
		CONTRACT NO. 66K39		
	ILLINOIS	FED. AID PROJECT		

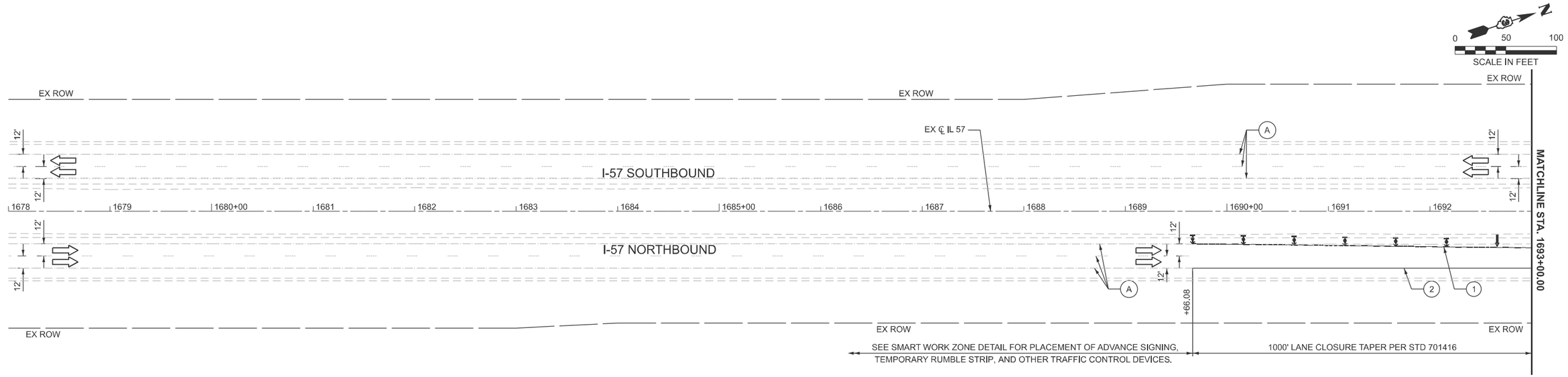

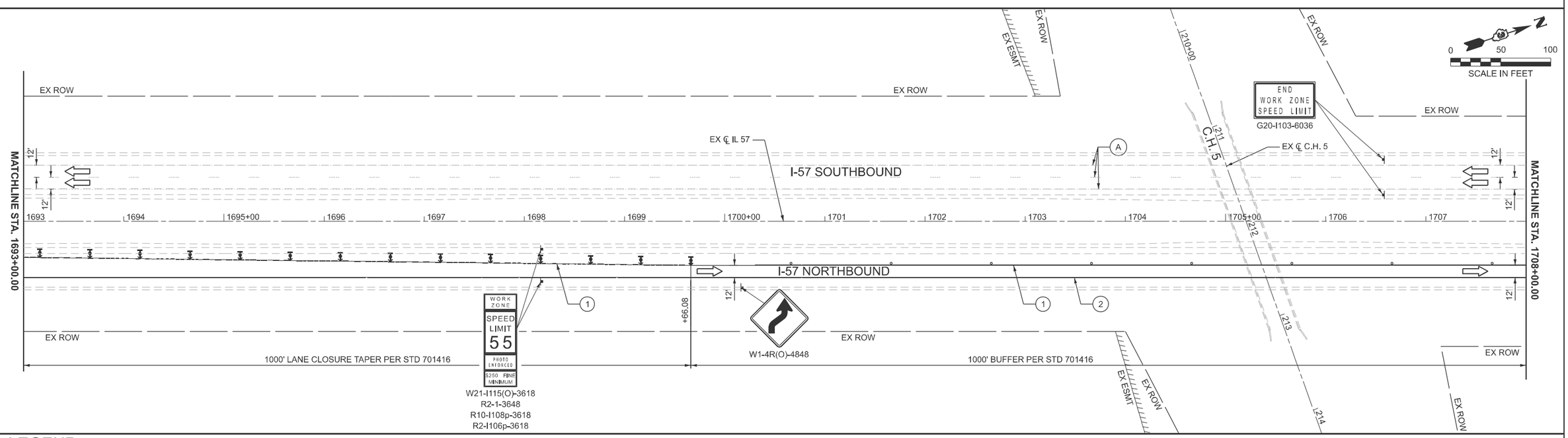

LEGEND

- WORK AREA
- DIRECTION OF TRAFFIC FLOW
- WORK COMPLETED IN PREVIOUS STAGE
- IMPACT ATTENUATORS, TEMPORARY (FULLY REDIRECTIVE, NARROW), TEST LEVEL 3
- TEMPORARY CONCRETE BARRIER
- ARROW BOARD
- DRUMS W/ STEADY BURN MONO-DIRECTIONAL LIGHTS, SPACED AT:
  - 100' CENTERS ON TANGENTS
  - 25' CENTERS IN TAPERS AND SHIFTS
- DIRECTION INDICATOR BARRICADE W/ STEADY BURN MONO-DIRECTIONAL LIGHT AT 50' C-C SPACING IN TAPERS
- TYPE III BARRICADE W/ FLASHING LIGHT
- (1) TEMPORARY PAVEMENT MARKING - LINE 4" - TYPE IV TAPE (SOLID YELLOW)
- (2) TEMPORARY PAVEMENT MARKING - LINE 4" - TYPE IV TAPE (SOLID WHITE)
- (3) TEMPORARY RAISED REFLECTIVE PAVEMENT MARKER, SPACED AT 25' CENTERS (AMBER)
- (4) TEMPORARY RAISED REFLECTIVE PAVEMENT MARKER, SPACED AT 25' CENTERS (CRYSTAL)
- (A) EXISTING PAVEMENT MARKING TO REMAIN

MODEL: 66K39 Sheet Border
FILE NAME: c:\workingdir\$datasource.name\dms16334\D366K39-plan-border.dgn

EFK•Moen
Civil Engineering Design

USER NAME =	DESIGNED - JDB	REVISED -	
	DRAWN - ZJW	REVISED -	
	CHECKED - RBB	REVISED -	
PLOT DATE = 02/20/2026	DATE -	REVISED -	

STATE OF ILLINOIS
DEPARTMENT OF TRANSPORTATION

MAINTENANCE OF TRAFFIC
STAGE 2 PLAN

SCALE: 1"=50' | SHEET 1 OF 8 SHEETS | STA. 1678+00.00 TO STA. 1708+00.00

F.A.I. RTE.	SECTION	COUNTY	TOTAL SHEETS	SHEET NO.
57	(27-38B) BR-1	FORD	185	50
		CONTRACT NO. 66K39		
		ILLINOIS FED. AID PROJECT		

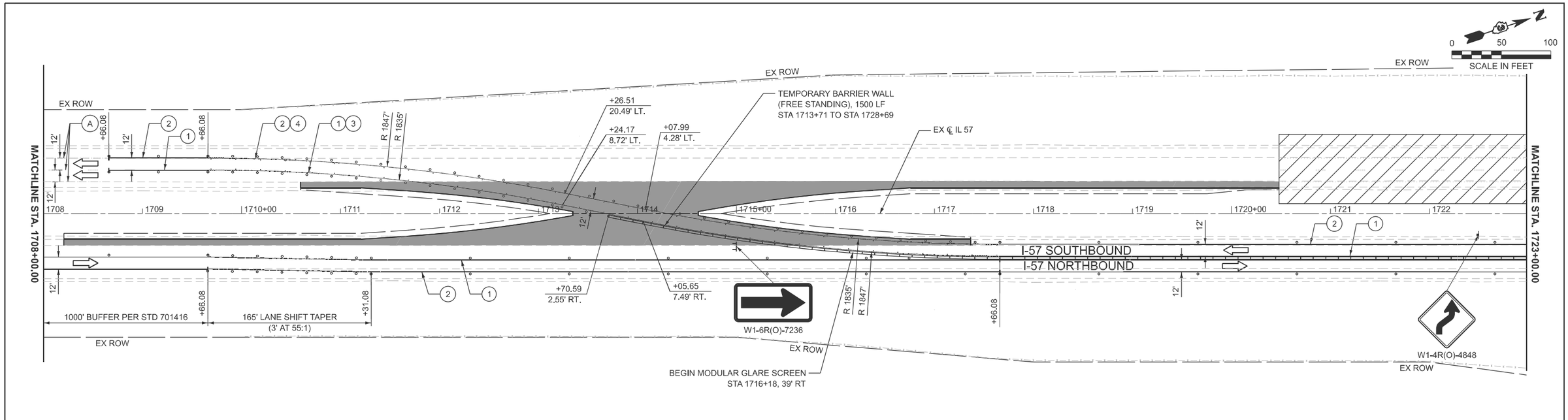

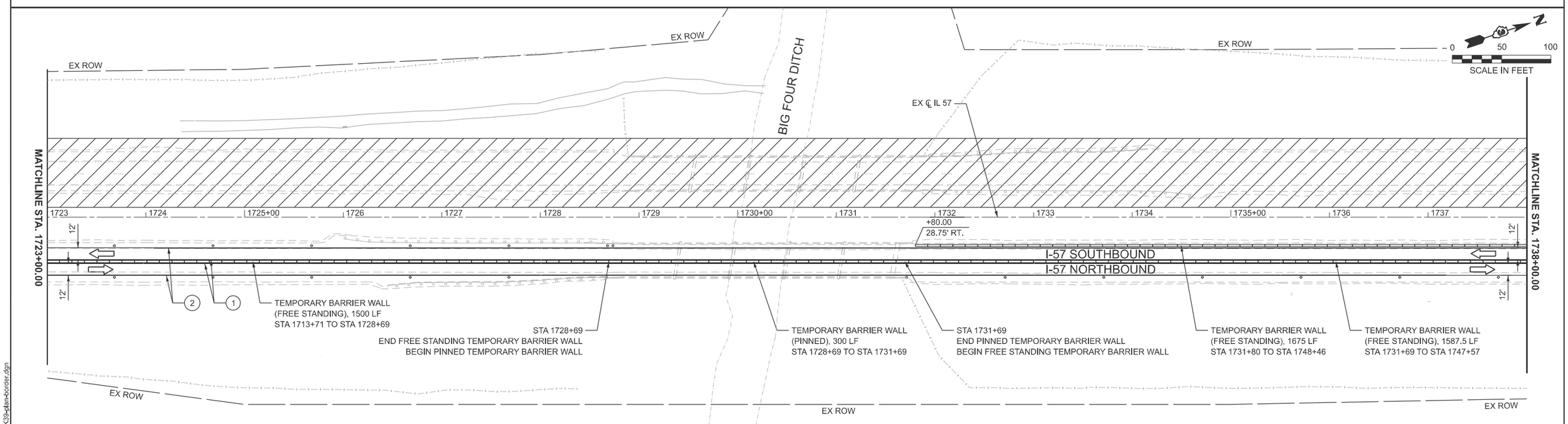

LEGEND

- WORK AREA
- DIRECTION OF TRAFFIC FLOW
- WORK COMPLETED IN PREVIOUS STAGE
- IMPACT ATTENUATORS, TEMPORARY (FULLY REDIRECTIVE, NARROW), TEST LEVEL 3
- TEMPORARY CONCRETE BARRIER
- ARROW BOARD
- DRUMS W/ STEADY BURN MONO-DIRECTIONAL LIGHTS, SPACED AT:
  - 100' CENTERS ON TANGENTS
  - 25' CENTERS IN TAPERS AND SHIFTS
- DIRECTION INDICATOR BARRICADE W/ STEADY BURN MONO-DIRECTIONAL LIGHT AT 50' C-C SPACING IN TAPERS
- TYPE III BARRICADE W/ FLASHING LIGHT
- (1) TEMPORARY PAVEMENT MARKING - LINE 4" - TYPE IV TAPE (SOLID YELLOW)
- (2) TEMPORARY PAVEMENT MARKING - LINE 4" - TYPE IV TAPE (SOLID WHITE)
- (3) TEMPORARY RAISED REFLECTIVE PAVEMENT MARKER, SPACED AT 25' CENTERS (AMBER)
- (4) TEMPORARY RAISED REFLECTIVE PAVEMENT MARKER, SPACED AT 25' CENTERS (CRYSTAL)
- (A) EXISTING PAVEMENT MARKING TO REMAIN

MODEL: 66K39 Sheet Border
FILE NAME: c:\workingdir\5\datasource.name\dms16334\D366K39-plan-border.dgn

EFK•Moen
Civil Engineering Design

USER NAME =	DESIGNED - JDB	REVISED -	
	DRAWN - ZJW	REVISED -	
	CHECKED - RBB	REVISED -	
PLOT DATE = 02/20/2026	DATE -	REVISED -	

STATE OF ILLINOIS
DEPARTMENT OF TRANSPORTATION

MAINTENANCE OF TRAFFIC
STAGE 2 PLAN

SCALE: 1"=50' | SHEET 2 OF 8 SHEETS | STA. 1708+00.00 TO STA. 1738+00.00

F.A.I. RTE.	SECTION	COUNTY	TOTAL SHEETS	SHEET NO.
57	(27-38B) BR-1	FORD	185	51
		CONTRACT NO. 66K39		
		ILLINOIS	FED. AID PROJECT	

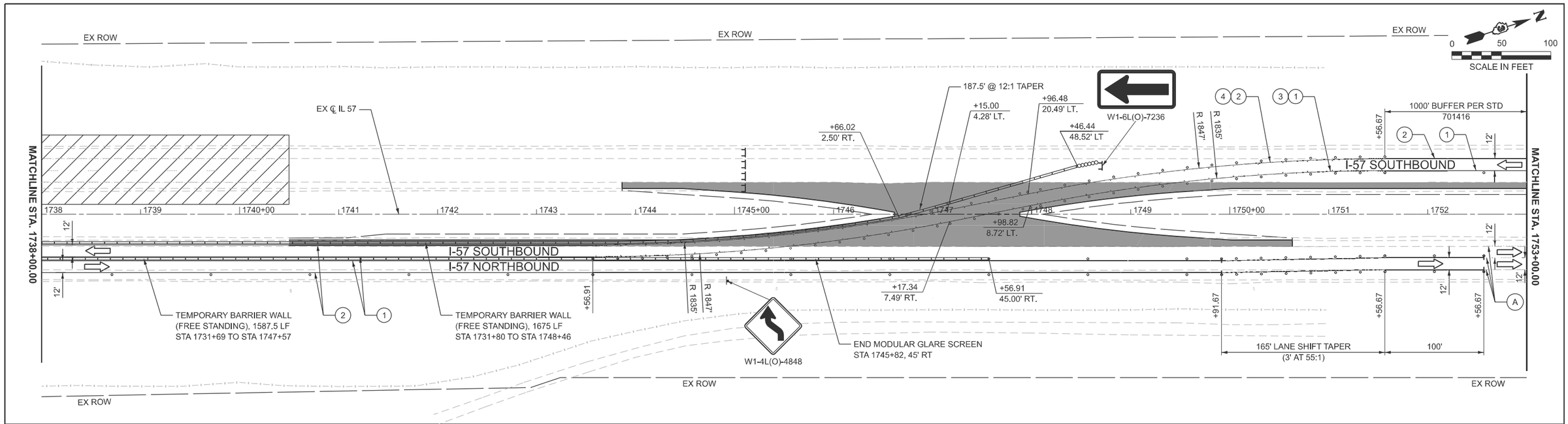

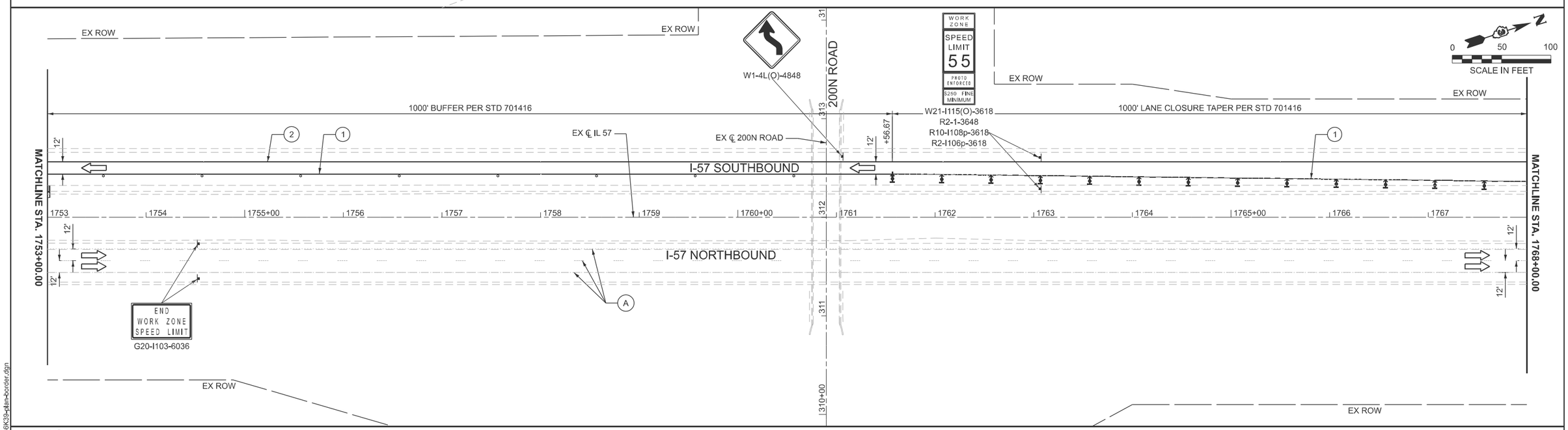

LEGEND

- WORK AREA
- DIRECTION OF TRAFFIC FLOW
- WORK COMPLETED IN PREVIOUS STAGE
- IMPACT ATTENUATORS, TEMPORARY (FULLY REDIRECTIVE, NARROW), TEST LEVEL 3
- TEMPORARY CONCRETE BARRIER
- ARROW BOARD
- DRUMS W/ STEADY BURN MONO-DIRECTIONAL LIGHTS, SPACED AT:
  - 100' CENTERS ON TANGENTS
  - 25' CENTERS IN TAPERS AND SHIFTS
- DIRECTION INDICATOR BARRICADE W/ STEADY BURN MONO-DIRECTIONAL LIGHT AT 50' C-C SPACING IN TAPERS
- TYPE III BARRICADE W/ FLASHING LIGHT
- (1) TEMPORARY PAVEMENT MARKING - LINE 4" - TYPE IV TAPE (SOLID YELLOW)
- (2) TEMPORARY PAVEMENT MARKING - LINE 4" - TYPE IV TAPE (SOLID WHITE)
- (3) TEMPORARY RAISED REFLECTIVE PAVEMENT MARKER, SPACED AT 25' CENTERS (AMBER)
- (4) TEMPORARY RAISED REFLECTIVE PAVEMENT MARKER, SPACED AT 25' CENTERS (CRYSTAL)
- (A) EXISTING PAVEMENT MARKING TO REMAIN

MODEL: 66K39 Sheet Border
FILE NAME: c:\workingdir\$datasource.name\dms16334\D366K39-plan-border.dgn

EFK•Moen
Civil Engineering Design

USER NAME =	DESIGNED - JDB	REVISED -
	DRAWN - ZJW	REVISED -
	CHECKED - RBB	REVISED -
PLOT DATE = 02/20/2026	DATE -	REVISED -

STATE OF ILLINOIS
DEPARTMENT OF TRANSPORTATION

MAINTENANCE OF TRAFFIC
STAGE 2 PLAN

SCALE: 1"=50' | SHEET 3 OF 8 SHEETS | STA. 1738+00.00 TO STA. 1768+00.00

F.A.I. RTE.	SECTION	COUNTY	TOTAL SHEETS	SHEET NO.
57	(27-38B) BR-1	FORD	185	52

CONTRACT NO. 66K39
ILLINOIS | FED. AID PROJECT

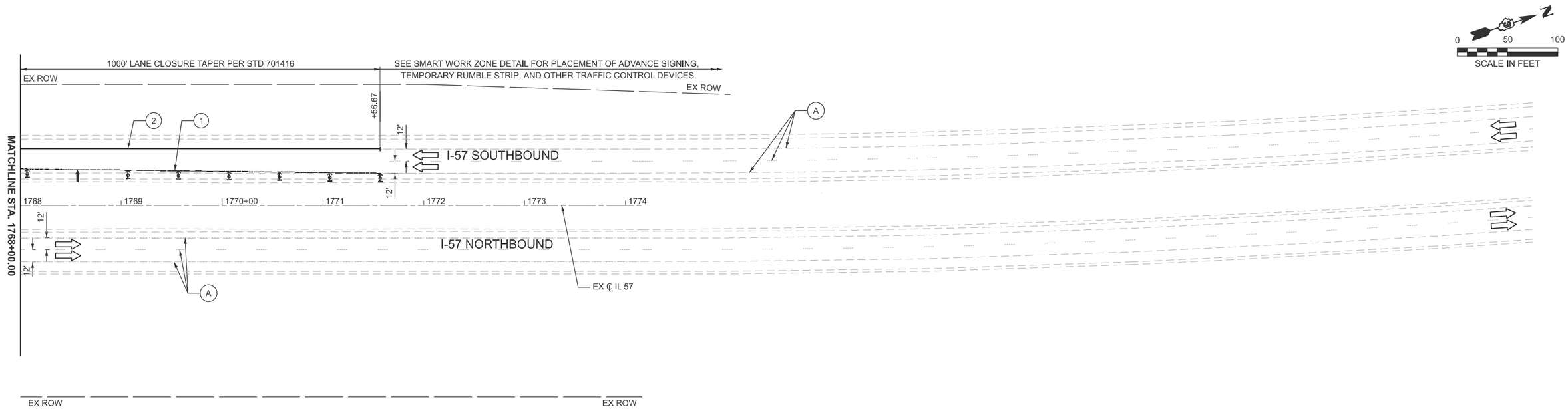

LEGEND

- WORK AREA
- DIRECTION OF TRAFFIC FLOW
- WORK COMPLETED IN PREVIOUS STAGE
- IMPACT ATTENUATORS, TEMPORARY (FULLY REDIRECTIVE, NARROW), TEST LEVEL 3
- TEMPORARY CONCRETE BARRIER
- ARROW BOARD
- DRUMS W/ STEADY BURN MONO-DIRECTIONAL LIGHTS, SPACED AT:
  - 100' CENTERS ON TANGENTS
  - 25' CENTERS IN TAPERS AND SHIFTS
- DIRECTION INDICATOR BARRICADE W/ STEADY BURN MONO-DIRECTIONAL LIGHT AT 50' C-C SPACING IN TAPERS
- TYPE III BARRICADE W/ FLASHING LIGHT
- (1) TEMPORARY PAVEMENT MARKING - LINE 4" - TYPE IV TAPE (SOLID YELLOW)
- (2) TEMPORARY PAVEMENT MARKING - LINE 4" - TYPE IV TAPE (SOLID WHITE)
- (3) TEMPORARY RAISED REFLECTIVE PAVEMENT MARKER, SPACED AT 25' CENTERS (AMBER)
- (4) TEMPORARY RAISED REFLECTIVE PAVEMENT MARKER, SPACED AT 25' CENTERS (CRYSTAL)
- (A) EXISTING PAVEMENT MARKING TO REMAIN

MODEL: 66K39 Sheet Border
FILE NAME: c:\workingdir\$datasource.name\dms16334\D366K39-plan-border.dgn

EFK•Moen
Civil Engineering Design

USER NAME =	DESIGNED - JDB	REVISED -	
	DRAWN - ZJW	REVISED -	
	CHECKED - RBB	REVISED -	
PLOT DATE = 02/20/2026	DATE -	REVISED -	

STATE OF ILLINOIS
DEPARTMENT OF TRANSPORTATION

MAINTENANCE OF TRAFFIC
STAGE 2 PLAN

SCALE: 1"=50' | SHEET 4 OF 8 SHEETS | STA. 1768+00.00 TO STA. 1774+00.00

F.A.I. RTE.	SECTION	COUNTY	TOTAL SHEETS	SHEET NO.
57	(27-38B) BR-1	FORD	185	53

CONTRACT NO. 66K39

ILLINOIS | FED. AID PROJECT

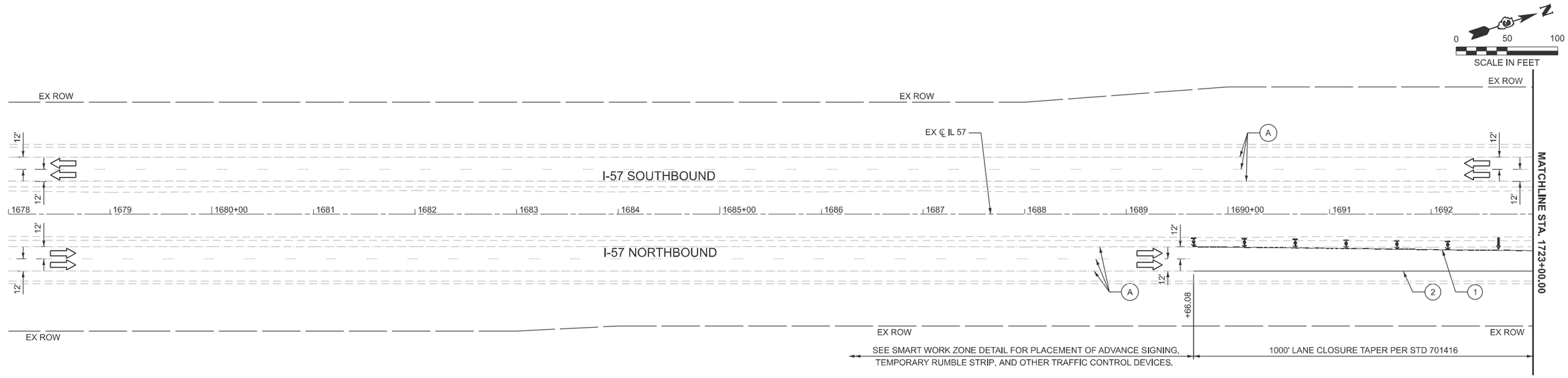

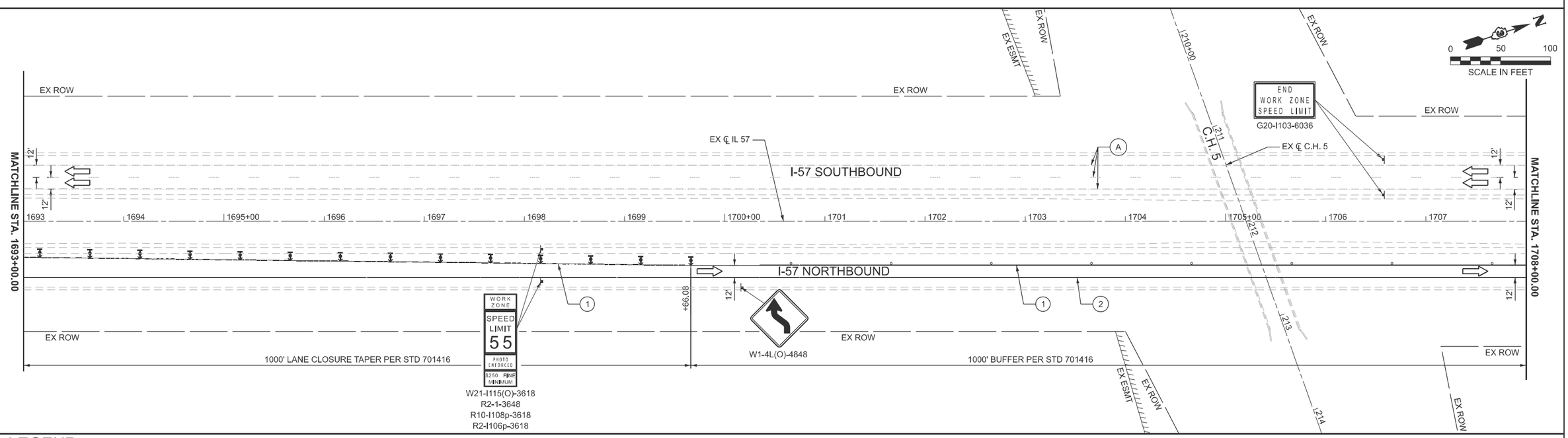

LEGEND

- WORK AREA
- DIRECTION OF TRAFFIC FLOW
- WORK COMPLETED IN PREVIOUS STAGE
- IMPACT ATTENUATORS, TEMPORARY (FULLY REDIRECTIVE, NARROW), TEST LEVEL 3
- TEMPORARY CONCRETE BARRIER
- ARROW BOARD
- DRUMS W/ STEADY BURN MONO-DIRECTIONAL LIGHTS, SPACED AT:
  - 100' CENTERS ON TANGENTS
  - 25' CENTERS IN TAPERS AND SHIFTS
- DIRECTION INDICATOR BARRICADE W/ STEADY BURN MONO-DIRECTIONAL LIGHT AT 50' C-C SPACING IN TAPERS
- TYPE III BARRICADE W/ FLASHING LIGHT
- (1) TEMPORARY PAVEMENT MARKING - LINE 4" - TYPE IV TAPE (SOLID YELLOW)
- (2) TEMPORARY PAVEMENT MARKING - LINE 4" - TYPE IV TAPE (SOLID WHITE)
- (3) TEMPORARY RAISED REFLECTIVE PAVEMENT MARKER, SPACED AT 25' CENTERS (AMBER)
- (4) TEMPORARY RAISED REFLECTIVE PAVEMENT MARKER, SPACED AT 25' CENTERS (CRYSTAL)
- (A) EXISTING PAVEMENT MARKING TO REMAIN

MODEL: 66K39 Sheet Border
FILE NAME: c:\workingdir\$datasource.name\dms16334\D366K39-plan-border.dgn

EFK•Moen
Civil Engineering Design

USER NAME =	DESIGNED - JDB	REVISED -	
	DRAWN - ZJW	REVISED -	
	CHECKED - RBB	REVISED -	
PLOT DATE = 02/20/2026	DATE -	REVISED -	

STATE OF ILLINOIS
DEPARTMENT OF TRANSPORTATION

MAINTENANCE OF TRAFFIC
STAGE 3 PLAN

SCALE: 1"=50' | SHEET 5 OF 8 SHEETS | STA. 1678+00.00 TO STA. 1708+00.00

F.A.I. RTE.	SECTION	COUNTY	TOTAL SHEETS	SHEET NO.
57	(27-38B) BR-1	FORD	185	54
		CONTRACT NO. 66K39		
		ILLINOIS FED. AID PROJECT		

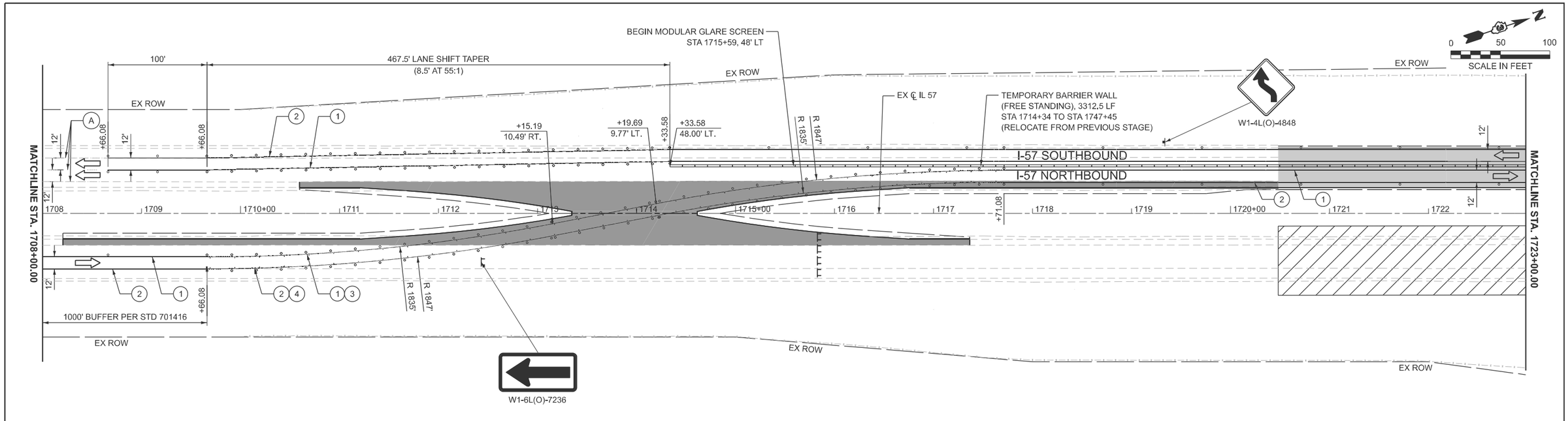

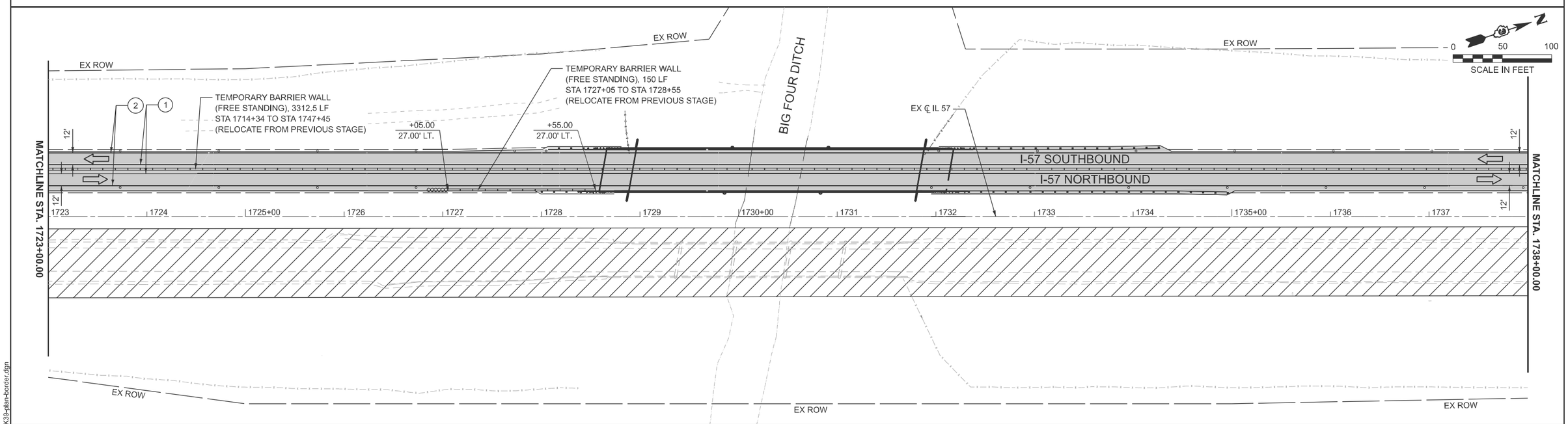

LEGEND

- WORK AREA
- DIRECTION OF TRAFFIC FLOW
- WORK COMPLETED IN PREVIOUS STAGE
- IMPACT ATTENUATORS, TEMPORARY (FULLY REDIRECTIVE, NARROW), TEST LEVEL 3
- TEMPORARY CONCRETE BARRIER
- ARROW BOARD
- DRUMS W/ STEADY BURN MONO-DIRECTIONAL LIGHTS, SPACED AT:
  - 100' CENTERS ON TANGENTS
  - 25' CENTERS IN TAPERS AND SHIFTS
- DIRECTION INDICATOR BARRICADE W/ STEADY BURN MONO-DIRECTIONAL LIGHT AT 50' C-C SPACING IN TAPERS
- TYPE III BARRICADE W/ FLASHING LIGHT
- (1) TEMPORARY PAVEMENT MARKING - LINE 4" - TYPE IV TAPE (SOLID YELLOW)
- (2) TEMPORARY PAVEMENT MARKING - LINE 4" - TYPE IV TAPE (SOLID WHITE)
- (3) TEMPORARY RAISED REFLECTIVE PAVEMENT MARKER, SPACED AT 25' CENTERS (AMBER)
- (4) TEMPORARY RAISED REFLECTIVE PAVEMENT MARKER, SPACED AT 25' CENTERS (CRYSTAL)
- (A) EXISTING PAVEMENT MARKING TO REMAIN

MODEL: 66K39 Sheet Border
FILE NAME: c:\workingdir\$catasource.name\dms16334\D366K39-plan-border.dgn

EFK•Moen
Civil Engineering Design

USER NAME =	DESIGNED - JDB	REVISED -
	DRAWN - ZJW	REVISED -
	CHECKED - RBB	REVISED -
PLOT DATE = 02/20/2026	DATE -	REVISED -

STATE OF ILLINOIS
DEPARTMENT OF TRANSPORTATION

MAINTENANCE OF TRAFFIC
STAGE 3 PLAN

SCALE: 1"=50' | SHEET 6 OF 8 SHEETS | STA. 1708+00.00 TO STA. 1738+00.00

F.A.I. RTE.	SECTION	COUNTY	TOTAL SHEETS	SHEET NO.
57	(27-38B) BR-1	FORD	185	55

CONTRACT NO. 66K39

ILLINOIS | FED. AID PROJECT

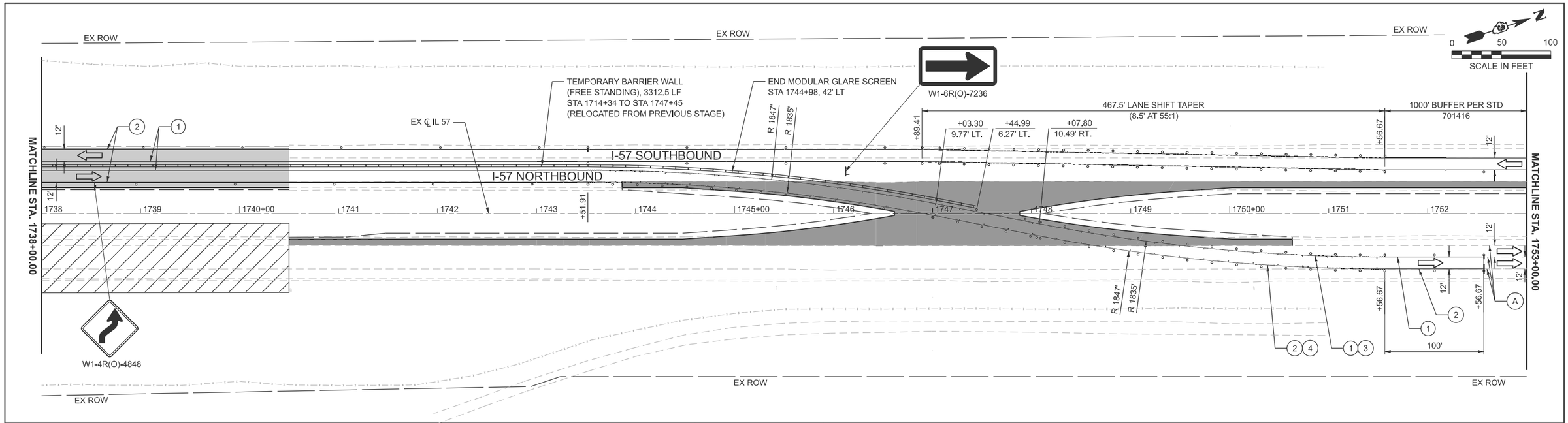

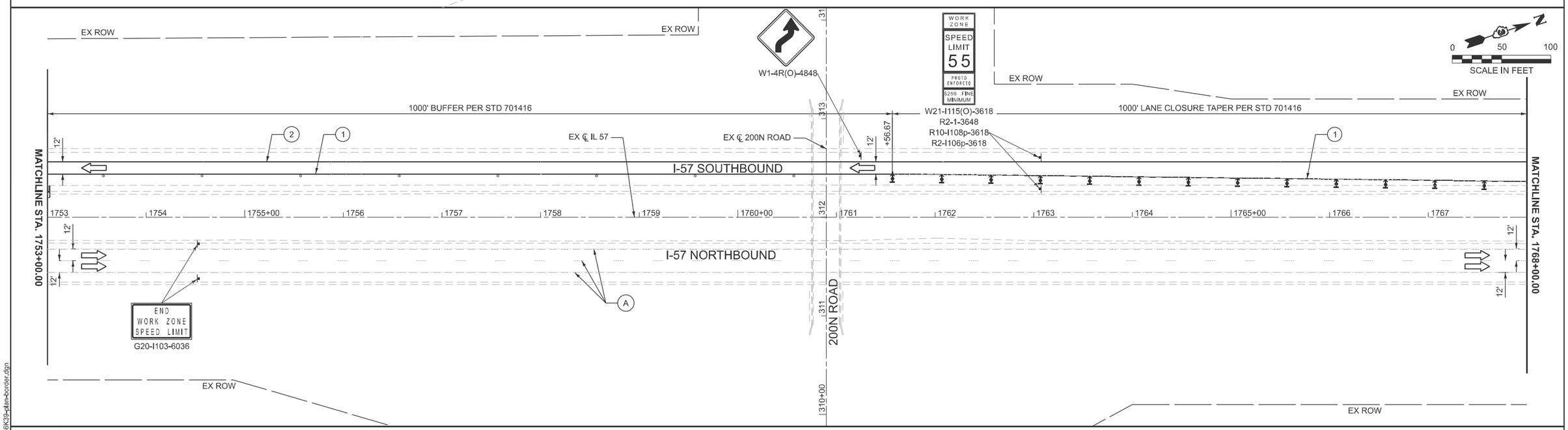

LEGEND

- WORK AREA
- DIRECTION OF TRAFFIC FLOW
- WORK COMPLETED IN PREVIOUS STAGE
- IMPACT ATTENUATORS, TEMPORARY (FULLY REDIRECTIVE, NARROW), TEST LEVEL 3
- TEMPORARY CONCRETE BARRIER
- ARROW BOARD
- DRUMS W/ STEADY BURN MONO-DIRECTIONAL LIGHTS, SPACED AT:
  - 100' CENTERS ON TANGENTS
  - 25' CENTERS IN TAPERS AND SHIFTS
- DIRECTION INDICATOR BARRICADE W/ STEADY BURN MONO-DIRECTIONAL LIGHT AT 50' C-C SPACING IN TAPERS
- TYPE III BARRICADE W/ FLASHING LIGHT
- (1) TEMPORARY PAVEMENT MARKING - LINE 4" - TYPE IV TAPE (SOLID YELLOW)
- (2) TEMPORARY PAVEMENT MARKING - LINE 4" - TYPE IV TAPE (SOLID WHITE)
- (3) TEMPORARY RAISED REFLECTIVE PAVEMENT MARKER, SPACED AT 25' CENTERS (AMBER)
- (4) TEMPORARY RAISED REFLECTIVE PAVEMENT MARKER, SPACED AT 25' CENTERS (CRYSTAL)
- (A) EXISTING PAVEMENT MARKING TO REMAIN

MODEL: 66K39 Sheet Border
FILE NAME: c:\workingdir\$datasource.name\dms16334\D366K39-plan-border.dgn

EFK•Moen
Civil Engineering Design

USER NAME =	DESIGNED - JDB	REVISED -
	DRAWN - ZJW	REVISED -
	CHECKED - RBB	REVISED -
PLOT DATE = 02/20/2026	DATE -	REVISED -

STATE OF ILLINOIS
DEPARTMENT OF TRANSPORTATION

MAINTENANCE OF TRAFFIC
STAGE 3 PLAN

SCALE: 1"=50' | SHEET 7 OF 8 SHEETS | STA. 1738+00.00 TO STA. 1768+00.00

F.A.I. RTE.	SECTION	COUNTY	TOTAL SHEETS	SHEET NO.
57	(27-38B) BR-1	FORD	185	56

CONTRACT NO. 66K39

ILLINOIS | FED. AID PROJECT

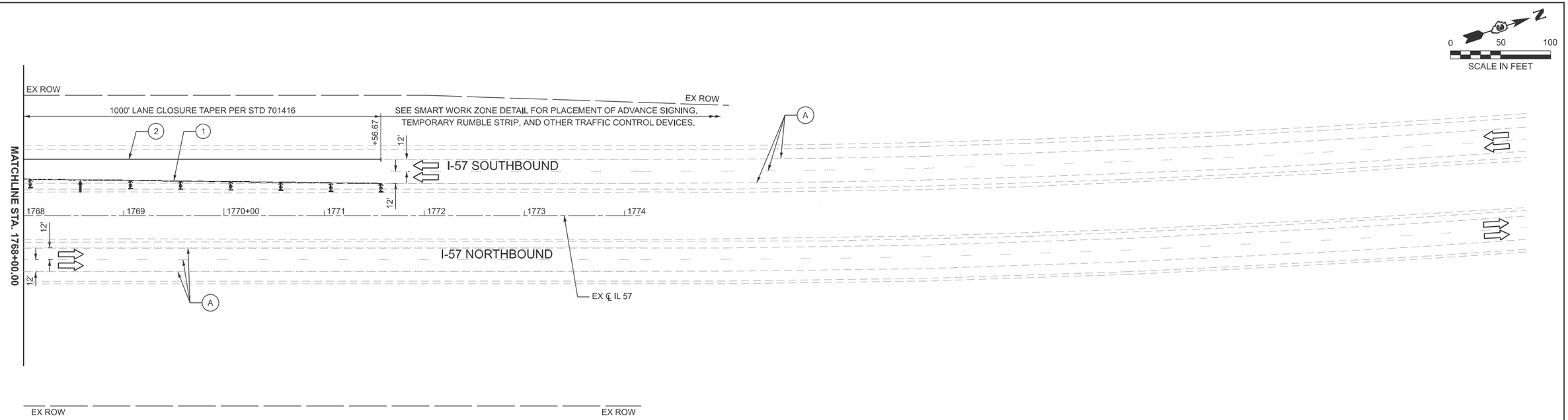

LEGEND

- WORK AREA
- DIRECTION OF TRAFFIC FLOW
- WORK COMPLETED IN PREVIOUS STAGE
- IMPACT ATTENUATORS, TEMPORARY (FULLY REDIRECTIVE, NARROW), TEST LEVEL 3
- TEMPORARY CONCRETE BARRIER
- ARROW BOARD
- DRUMS W/ STEADY BURN MONO-DIRECTIONAL LIGHTS, SPACED AT:
  - 100' CENTERS ON TANGENTS
  - 25' CENTERS IN TAPERS AND SHIFTS
- DIRECTION INDICATOR BARRICADE W/ STEADY BURN MONO-DIRECTIONAL LIGHT AT 50' C-C SPACING IN TAPERS
- TYPE III BARRICADE W/ FLASHING LIGHT
- (1) TEMPORARY PAVEMENT MARKING - LINE 4" - TYPE IV TAPE (SOLID YELLOW)
- (2) TEMPORARY PAVEMENT MARKING - LINE 4" - TYPE IV TAPE (SOLID WHITE)
- (3) TEMPORARY RAISED REFLECTIVE PAVEMENT MARKER, SPACED AT 25' CENTERS (AMBER)
- (4) TEMPORARY RAISED REFLECTIVE PAVEMENT MARKER, SPACED AT 25' CENTERS (CRYSTAL)
- (A) EXISTING PAVEMENT MARKING TO REMAIN

MODEL: 66K39 Sheet Border
FILE NAME: c:\workingdir\$datasource.name\dms16334\D366K39-plan-border.dgn

EFK•Moen
Civil Engineering Design

USER NAME =	DESIGNED - JDB	REVISED -
	DRAWN - ZJW	REVISED -
	CHECKED - RBB	REVISED -
PLOT DATE = 02/20/2026	DATE -	REVISED -

STATE OF ILLINOIS
DEPARTMENT OF TRANSPORTATION

MAINTENANCE OF TRAFFIC
STAGE 3 PLAN

SCALE: 1"=50' | SHEET 8 OF 8 SHEETS | STA. 1768+00.00 TO STA. 1774+00.00

F.A.I. RTE.	SECTION	COUNTY	TOTAL SHEETS	SHEET NO.
57	(27-38B) BR-1	FORD	185	57

CONTRACT NO. 66K39

ILLINOIS | FED. AID PROJECT

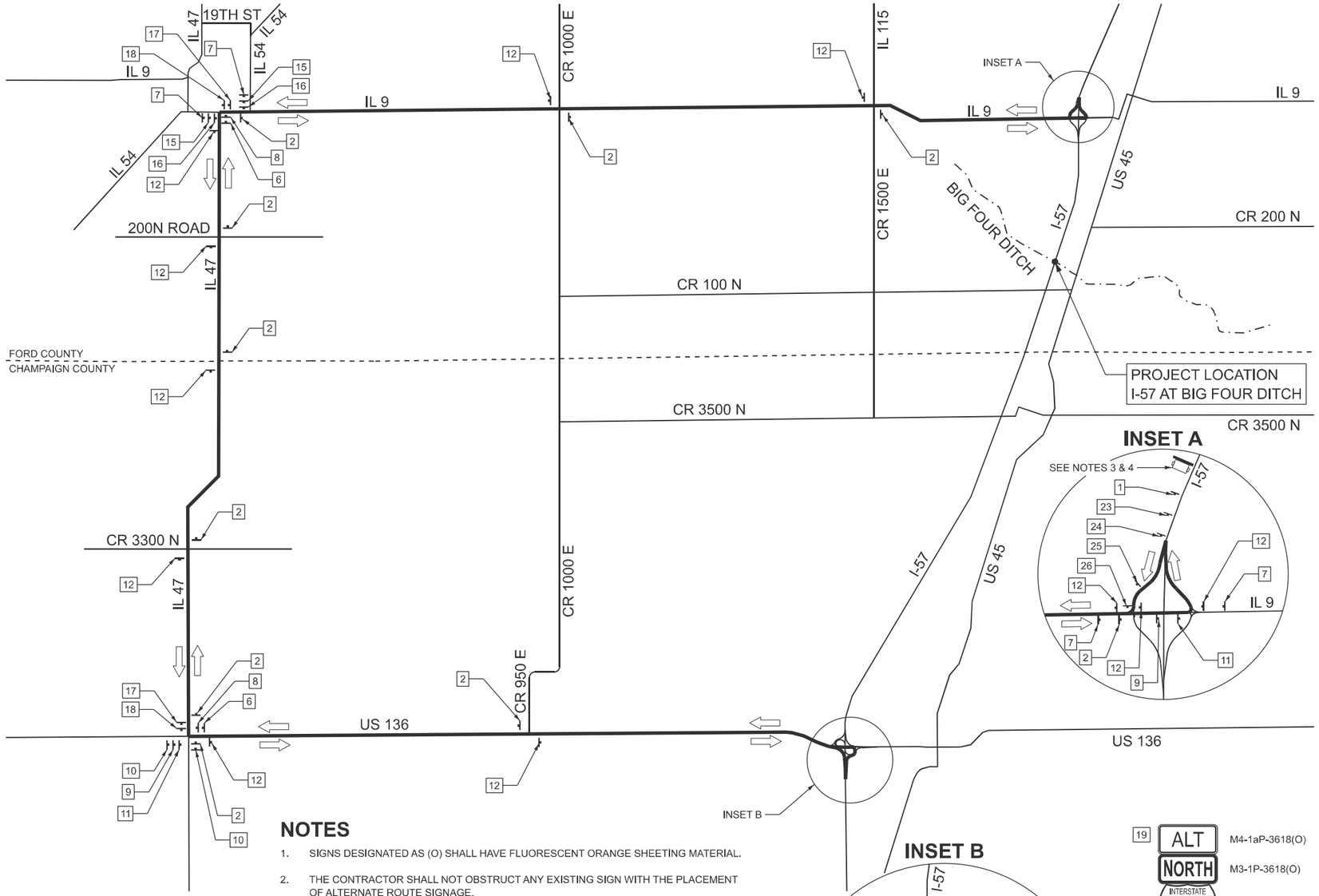

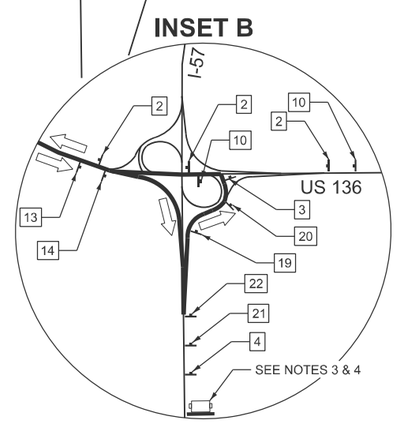

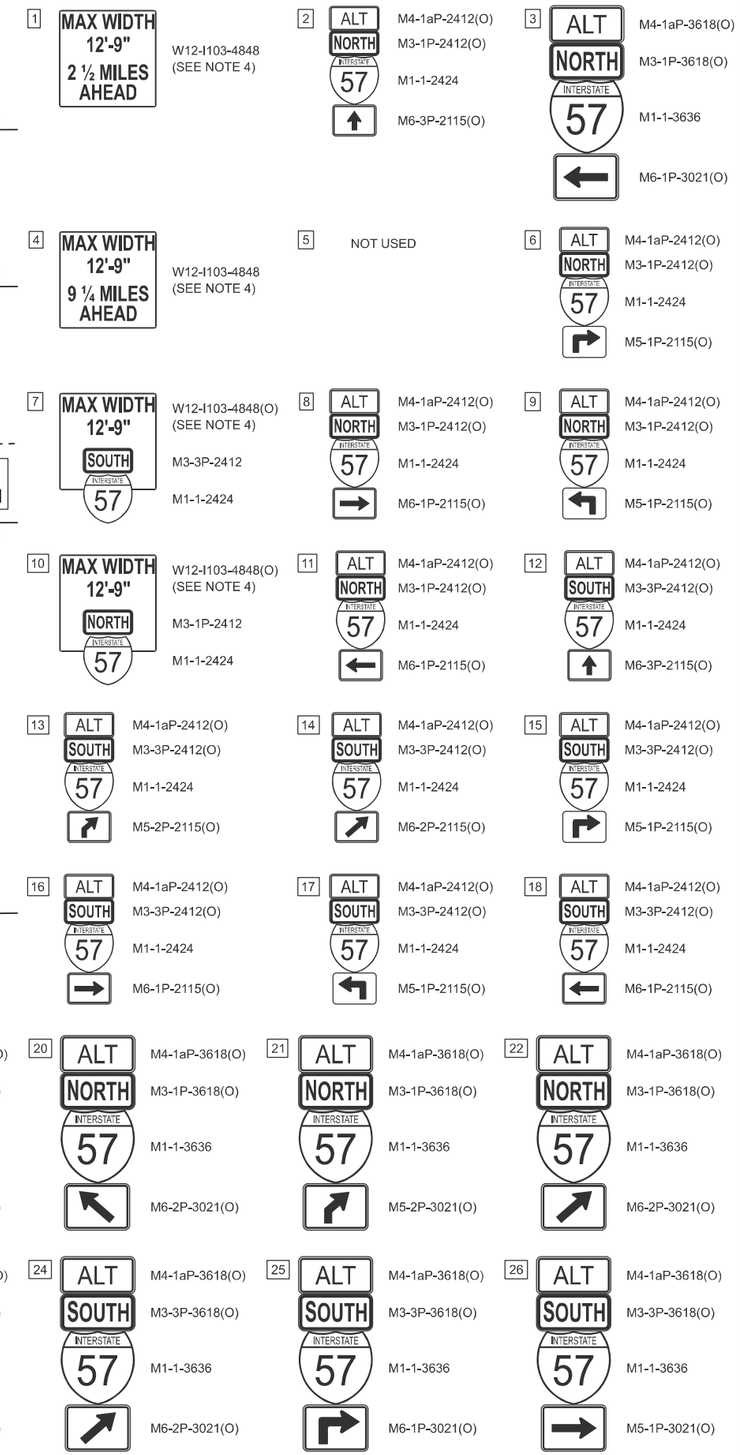

N

NOT TO SCALE

LEGEND

- DIRECTION OF TRAFFIC
- PROPOSED ALTERNATE ROUTE
- PORTABLE CHANGEABLE MESSAGE SIGN

NOTES

1. SIGNS DESIGNATED AS (O) SHALL HAVE FLUORESCENT ORANGE SHEETING MATERIAL.
2. THE CONTRACTOR SHALL NOT OBSTRUCT ANY EXISTING SIGN WITH THE PLACEMENT OF ALTERNATE ROUTE SIGNAGE.
3. TWO EXTRA MESSAGE BOARDS ON I-57 SHALL BE PROVIDED DISPLAYING THE MESSAGES BELOW FOR THE DURATION OF THE PROJECT. THE MESSAGE SHALL BE REVISED AS NEEDED WHEN THE WIDTH RESTRICTION IS IN PLACE.

MSG 1:	MSG 2:	MSG 3:
ROAD	EXPECT	OPTIONAL
CONST	DELAYS	ALT
AHEAD		ROUTE

4. SIGNS ADVISING OF THE WIDTH RESTRICTION SHALL ONLY BE IN PLACE WHILE THE WIDTH RESTRICTION IS IN PLACE IN STAGE 2.
5. ADDITIONAL ALTERNATE ROUTE SIGNS SHALL BE INSTALLED ADJACENT TO EXISTING ROUTE MARKERS.
6. TYPICAL SIGN SPACING SHALL BE 300' ON SURFACE STREETS AND 500' ON EXPRESSWAYS AND RAMPS.
7. ALTERNATE ROUTE SIGN LOCATIONS MAY BE ADJUSED IN CONSTRUCTION AS NECESSARY BY THE RESIDENT ENGINEER.

MODEL: 66K39 Sheet Border
FILE NAME: c:\workingdir\$datasource.name\dms16334\D366K39-plan-border.dgn

EFK•Moen
Civil Engineering Design

USER NAME =	DESIGNED - JDB	REVISED -	
	DRAWN - PJG	REVISED -	
	CHECKED - RBB	REVISED -	
PLOT DATE = 02/20/2026	DATE -	REVISED -	

STATE OF ILLINOIS
DEPARTMENT OF TRANSPORTATION

MAINTENANCE OF TRAFFIC ALTERNATE ROUTE PLAN
I-57

SCALE: N/A | SHEET 1 OF 1 SHEETS | STA. | TO STA.

F.A.I. RTE.	SECTION	COUNTY	TOTAL SHEETS	SHEET NO.
57	(27-38B) BR-1	FORD	185	58

CONTRACT NO. 66K39

ILLINOIS | FED. AID PROJECT

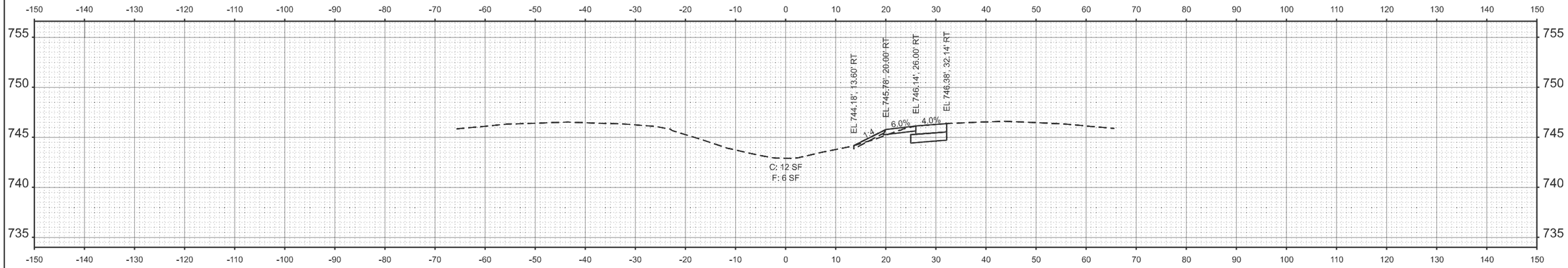

STA 1709+50.00

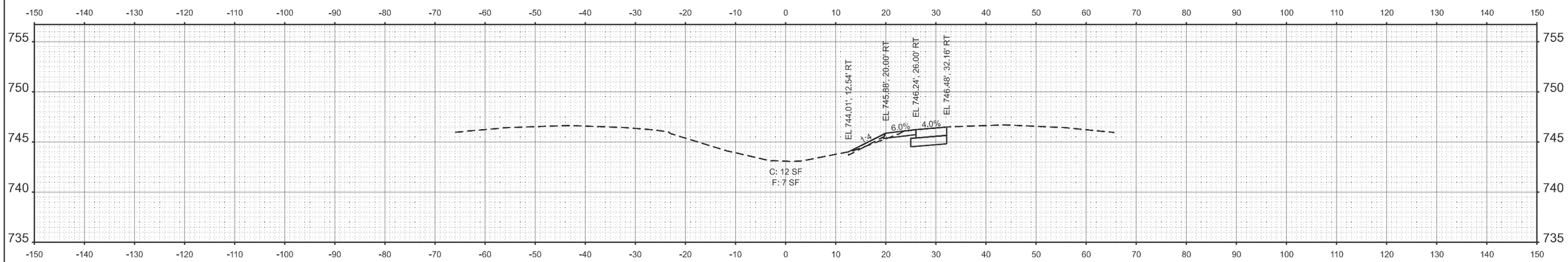

STA 1709+00.00

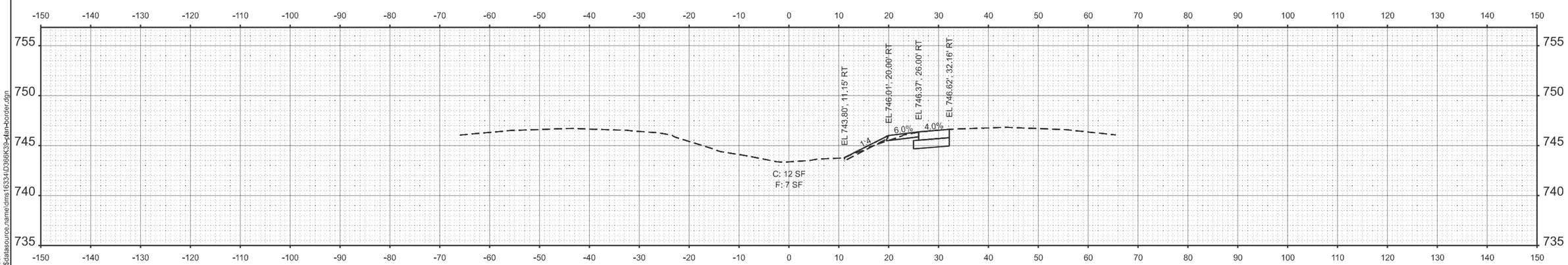

STA 1708+50.00

MODEL: 66K39 Sheet Border
FILE NAME: c:\workingdir$\datasource.name\dms16334\D366K39-plan-border.dgn

V3 Companies
7325 Janes Avenue
Woodridge, IL 60517
630 724 9200 phone
www.v3co.com

USER NAME =	DESIGNED -	REVISED -
	DRAWN -	REVISED -
	CHECKED -	REVISED -
PLOT DATE = 02/20/2026	DATE -	REVISED -

STATE OF ILLINOIS
DEPARTMENT OF TRANSPORTATION

MAINTENANCE OF TRAFFIC CROSS SECTIONS
I-57 SOUTH CROSSOVER

SCALE: 1"=10' | SHEET 1 OF 12 SHEETS | STA. | TO STA.

F.A.I. RTE.	SECTION	COUNTY	TOTAL SHEETS	SHEET NO.
57	(27-38B) BR-1	FORD	185	59
		CONTRACT NO. 66K39		
		ILLINOIS	FED. AID PROJECT	

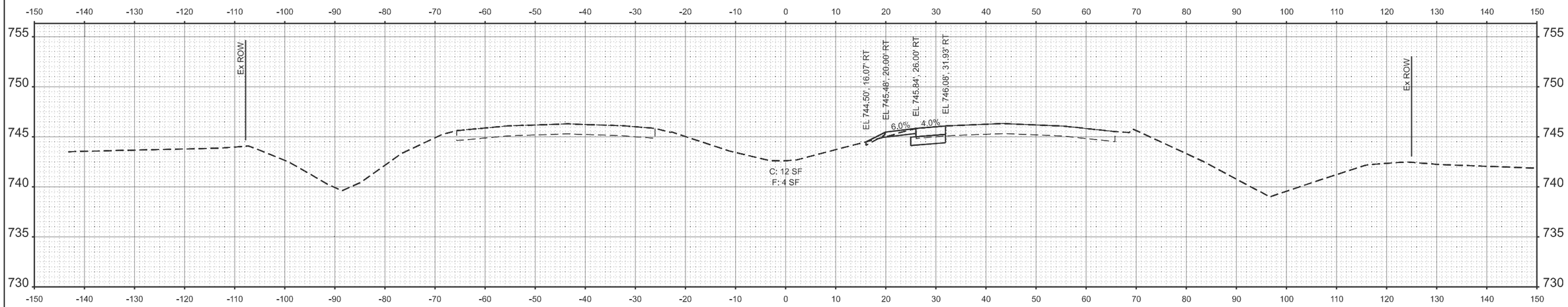

STA 1710+50.00

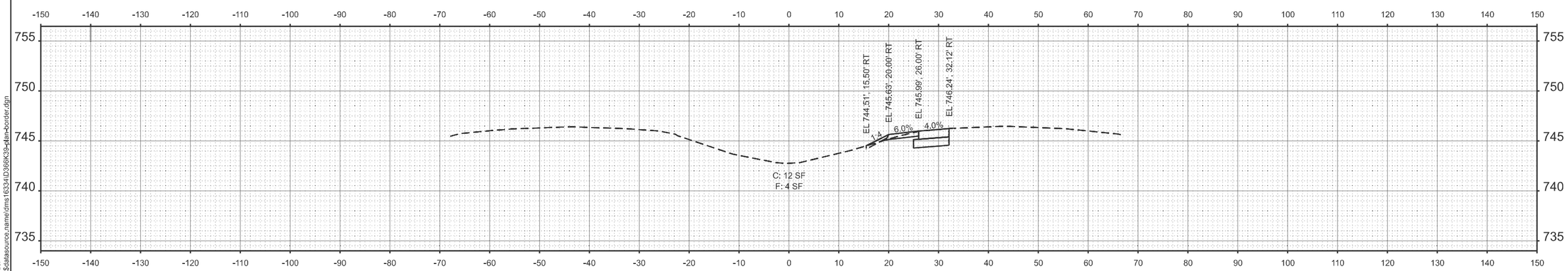

STA 1710+00.00

MODEL: 66K39 Sheet Border
FILE NAME: c:\workingdir\$datasource.name\dms16334\D366K39-plan-border.dgn

V3 Companies
7325 Janes Avenue
Woodridge, IL 60517
630 724 9200 phone
www.v3co.com

USER NAME =	DESIGNED -	REVISED -
	DRAWN -	REVISED -
	CHECKED -	REVISED -
PLOT DATE = 02/20/2026	DATE -	REVISED -

STATE OF ILLINOIS
DEPARTMENT OF TRANSPORTATION

MAINTENANCE OF TRAFFIC CROSS SECTIONS
I-57 SOUTH CROSSOVER

SCALE: 1"=10' | SHEET 2 OF 12 SHEETS | STA. | TO STA.

F.A.I. RTE.	SECTION	COUNTY	TOTAL SHEETS	SHEET NO.
57	(27-38B) BR-1	FORD	185	60
		CONTRACT NO. 66K39		
	ILLINOIS	FED. AID PROJECT		

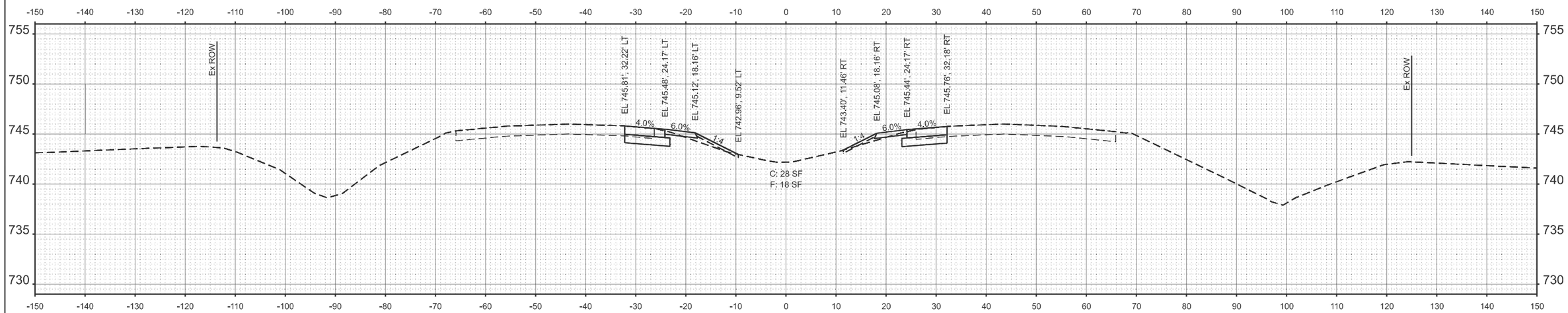

STA 1711+50.00

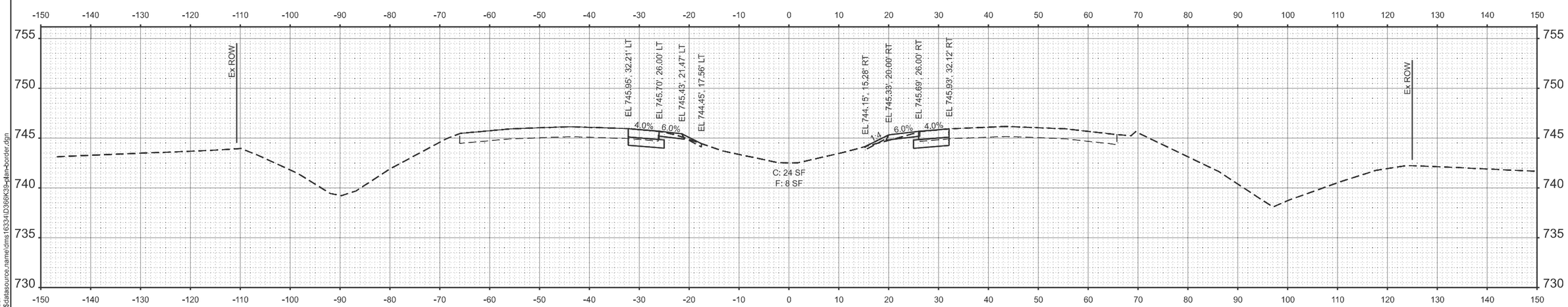

STA 1711+00.00

MODEL: 66K39 Sheet Border
FILE NAME: c:\workingdir$\datasource.name\dms16334\D366K39-plan-border.dgn

V3 Companies
7325 Janes Avenue
Woodridge, IL 60517
630 724 9200 phone
www.v3co.com

USER NAME =	DESIGNED -	REVISED -
	DRAWN -	REVISED -
	CHECKED -	REVISED -
PLOT DATE = 02/20/2026	DATE -	REVISED -

STATE OF ILLINOIS
DEPARTMENT OF TRANSPORTATION

MAINTENANCE OF TRAFFIC CROSS SECTIONS
I-57 SOUTH CROSSOVER

SCALE: 1"=10' | SHEET 3 OF 12 SHEETS | STA. | TO STA.

F.A.I. RTE.	SECTION	COUNTY	TOTAL SHEETS	SHEET NO.
57	(27-38B) BR-1	FORD	185	61
		CONTRACT NO. 66K39		
	ILLINOIS	FED. AID PROJECT		

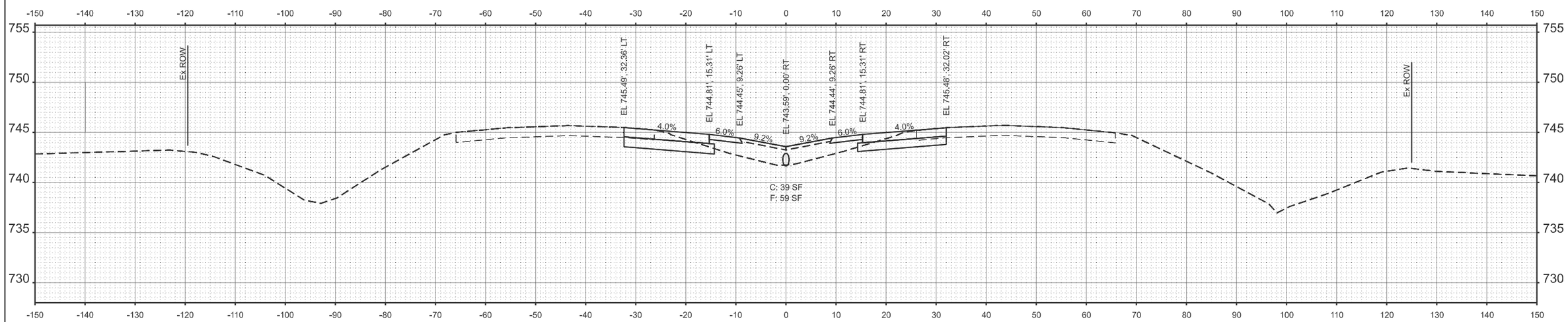

STA 1712+50.00

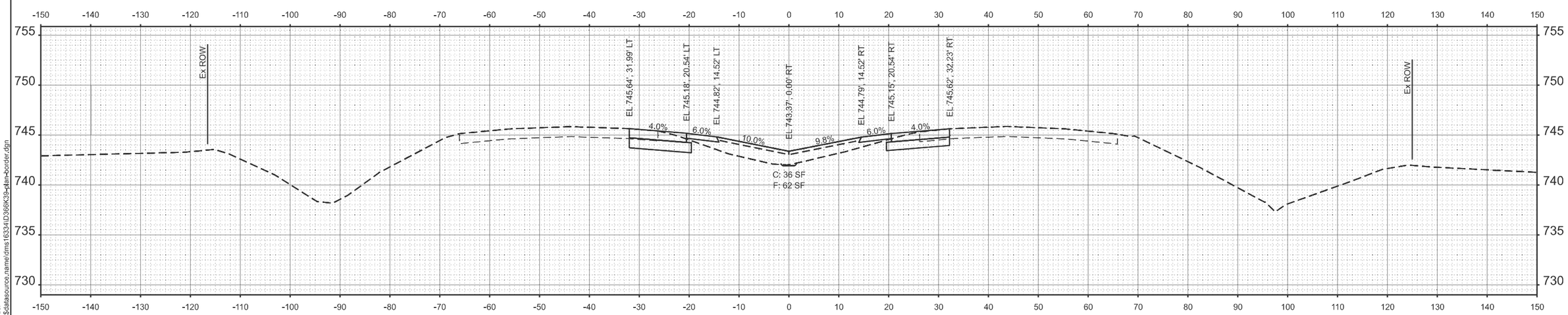

STA 1712+00.00

MODEL: 66K39 Sheet Border
FILE NAME: c:\workingdir\$datasource.name\dms16334\D366K39-plan-border.dgn

V3 Companies
7325 Janes Avenue
Woodridge, IL 60517
630 724 9200 phone
www.v3co.com

USER NAME =	DESIGNED -	REVISED -
	DRAWN -	REVISED -
	CHECKED -	REVISED -
PLOT DATE = 02/20/2026	DATE -	REVISED -

STATE OF ILLINOIS
DEPARTMENT OF TRANSPORTATION

MAINTENANCE OF TRAFFIC CROSS SECTIONS
I-57 SOUTH CROSSOVER

SCALE: 1"=10' | SHEET 4 OF 12 SHEETS | STA. | TO STA.

F.A.I. RTE.	SECTION	COUNTY	TOTAL SHEETS	SHEET NO.
57	(27-38B) BR-1	FORD	185	62
		CONTRACT NO. 66K39		
		ILLINOIS	FED. AID PROJECT	

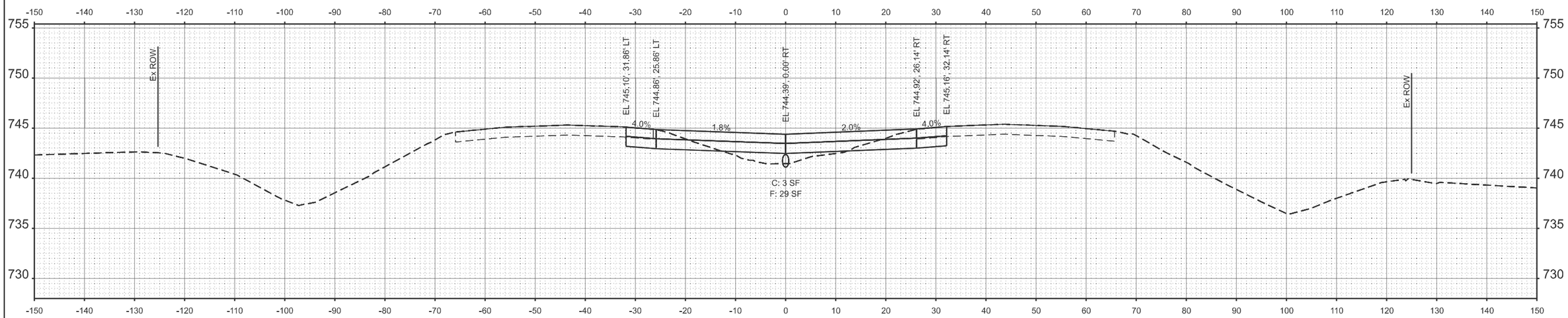

STA 1713+50.00

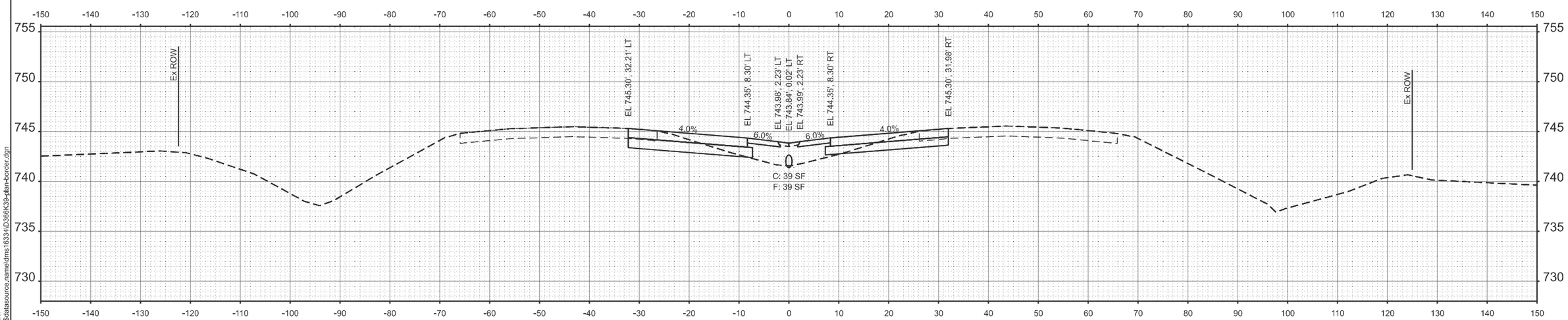

STA 1713+00.00

MODEL: 66K39 Sheet Border
FILE NAME: c:\workingdir\$datasource.name\dms16334\D366K39-plan-border.dgn

V3 Companies
7325 Janes Avenue
Woodridge, IL 60517
630 724 9200 phone
www.v3co.com

USER NAME =	DESIGNED -	REVISED -
	DRAWN -	REVISED -
	CHECKED -	REVISED -
PLOT DATE = 02/20/2026	DATE -	REVISED -

STATE OF ILLINOIS
DEPARTMENT OF TRANSPORTATION

MAINTENANCE OF TRAFFIC CROSS SECTIONS
I-57 SOUTH CROSSOVER

SCALE: 1"=10' | SHEET 5 OF 12 SHEETS | STA. | TO STA.

F.A.I. RTE.	SECTION	COUNTY	TOTAL SHEETS	SHEET NO.
57	(27-38B) BR-1	FORD	185	63
		CONTRACT NO. 66K39		
	ILLINOIS	FED. AID PROJECT		

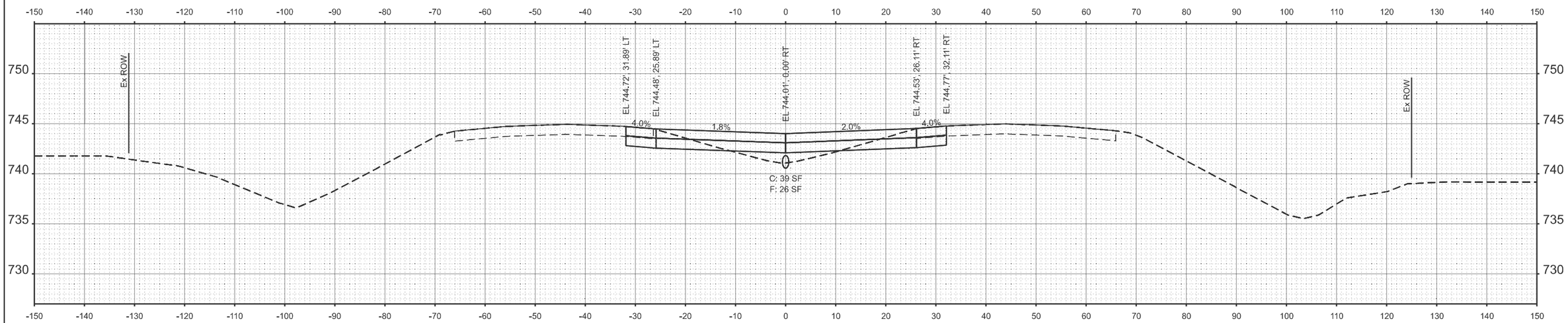

STA 1714+50.00

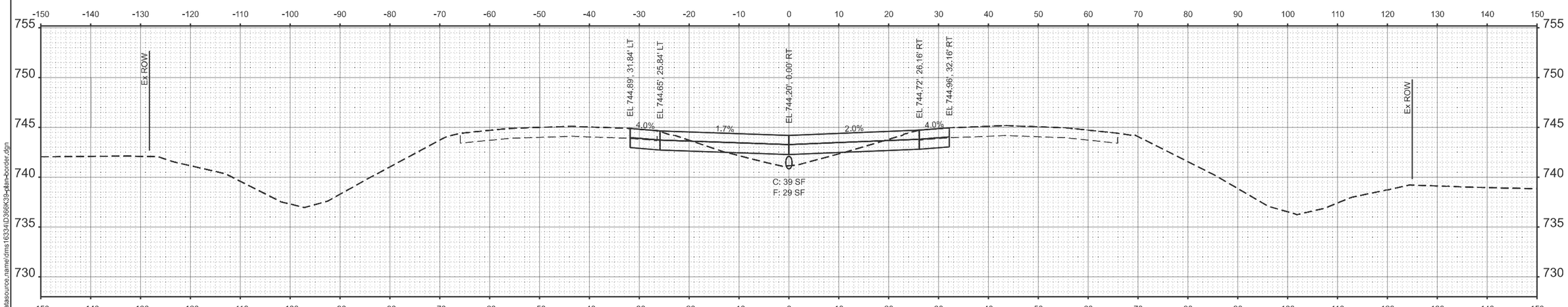

STA 1714+00.00

MODEL: 66K39 Sheet Border
FILE NAME: c:\workingdir$\datasource.name\dms16334\D366K39-plan-border.dgn

V3 Companies
7325 Janes Avenue
Woodridge, IL 60517
630 724 9200 phone
www.v3co.com

USER NAME =	DESIGNED -	REVISED -
	DRAWN -	REVISED -
	CHECKED -	REVISED -
PLOT DATE = 02/20/2026	DATE -	REVISED -

STATE OF ILLINOIS
DEPARTMENT OF TRANSPORTATION

MAINTENANCE OF TRAFFIC CROSS SECTIONS
I-57 SOUTH CROSSOVER

SCALE: 1"=10' | SHEET 6 OF 12 SHEETS | STA. | TO STA.

F.A.I. RTE.	SECTION	COUNTY	TOTAL SHEETS	SHEET NO.
57	(27-38B) BR-1	FORD	185	64
		CONTRACT NO. 66K39		
	ILLINOIS	FED. AID PROJECT		

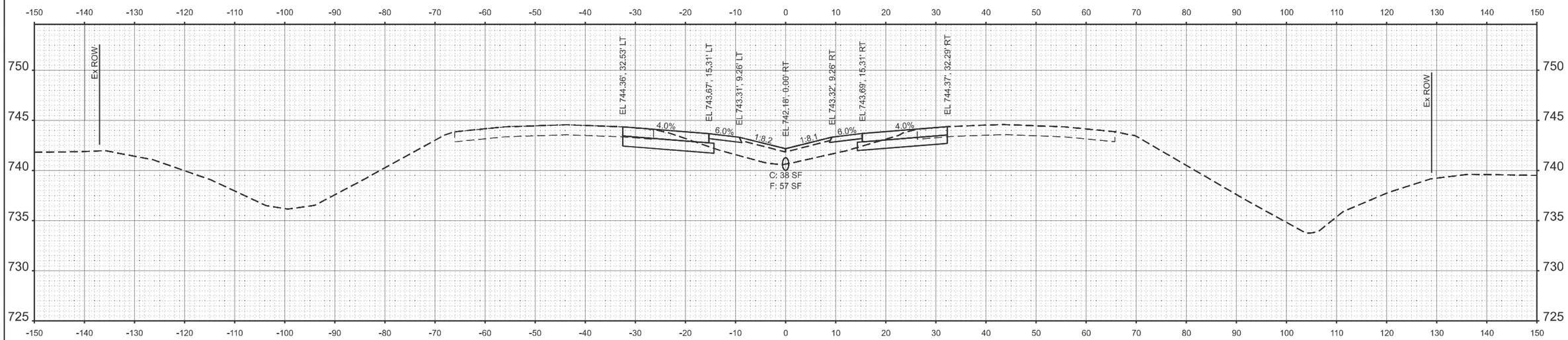

STA 1715+50.00

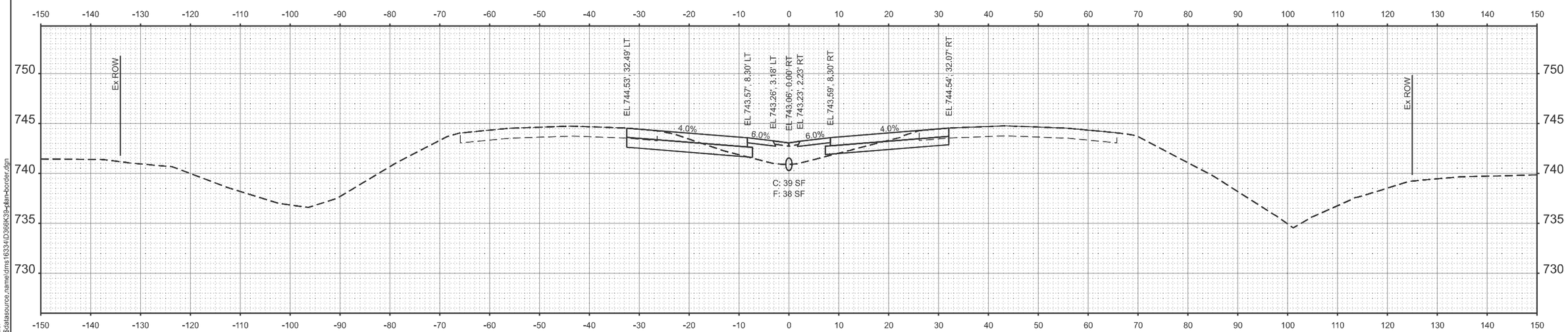

STA 1715+00.00

MODEL: 66K39 Sheet Border
FILE NAME: c:\workingdir$\datasource.name\dms16334\D366K39-plan-border.dgn

V3 Companies
7325 Janes Avenue
Woodridge, IL 60517
630 724 9200 phone
www.v3co.com

USER NAME =	DESIGNED -	REVISED -
	DRAWN -	REVISED -
	CHECKED -	REVISED -
PLOT DATE = 02/20/2026	DATE -	REVISED -

STATE OF ILLINOIS
DEPARTMENT OF TRANSPORTATION

MAINTENANCE OF TRAFFIC CROSS SECTIONS
I-57 SOUTH CROSSOVER

SCALE: 1"=10' | SHEET 7 OF 12 SHEETS | STA. | TO STA.

F.A.I. RTE.	SECTION	COUNTY	TOTAL SHEETS	SHEET NO.
57	(27-38B) BR-1	FORD	185	65
		CONTRACT NO. 66K39		
	ILLINOIS	FED. AID PROJECT		

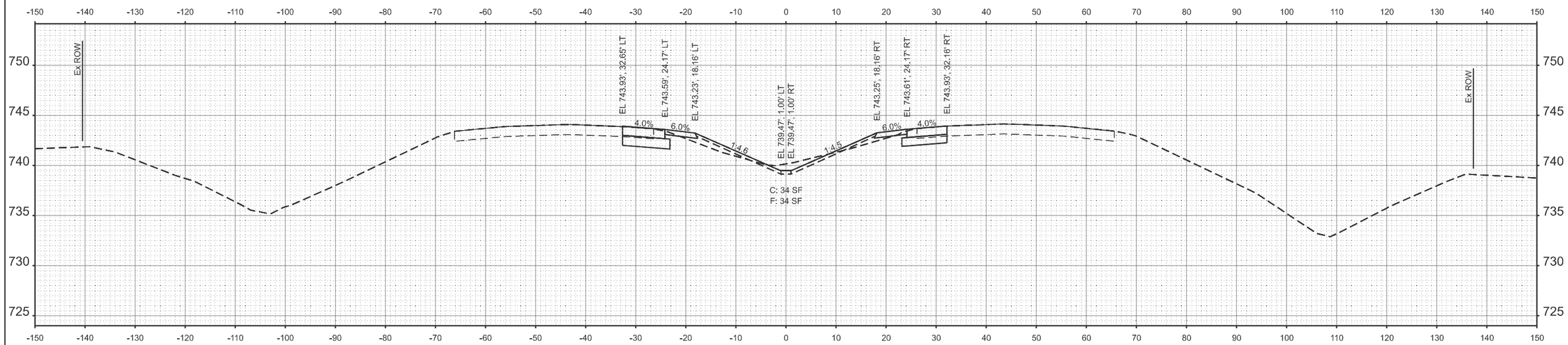

STA 1716+50.00

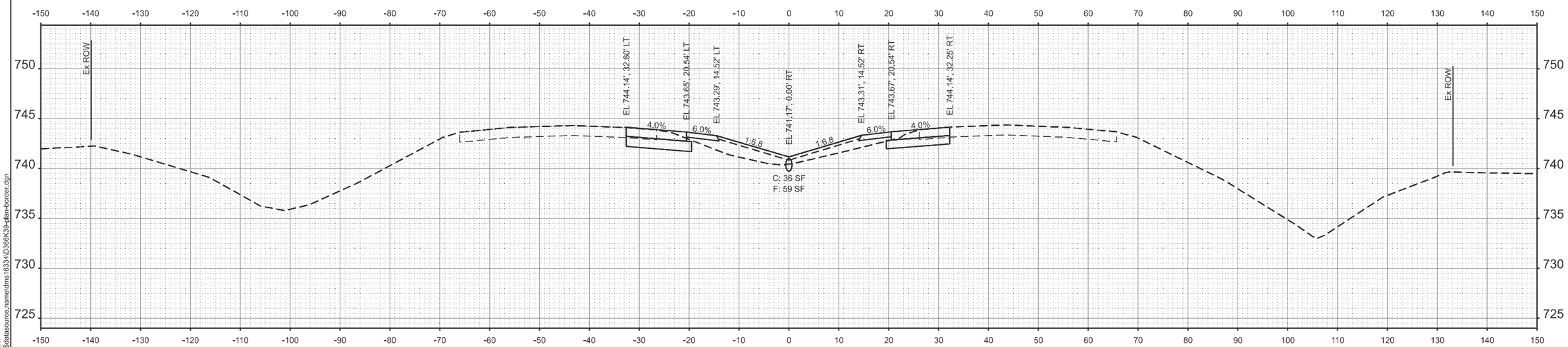

STA 1716+00.00

MODEL: 66K39 Sheet Border
FILE NAME: c:\workingdir\$datasource.name\dms16334\D366K39-plan-border.dgn

V3 Companies
7325 Janes Avenue
Woodridge, IL 60517
630 724 9200 phone
www.v3co.com

USER NAME =	DESIGNED -	REVISED -
	DRAWN -	REVISED -
	CHECKED -	REVISED -
PLOT DATE = 02/20/2026	DATE -	REVISED -

STATE OF ILLINOIS
DEPARTMENT OF TRANSPORTATION

MAINTENANCE OF TRAFFIC CROSS SECTIONS
I-57 SOUTH CROSSOVER

SCALE: 1"=10' | SHEET 8 OF 12 SHEETS | STA. | TO STA.

F.A.I. RTE.	SECTION	COUNTY	TOTAL SHEETS	SHEET NO.
57	(27-38B) BR-1	FORD	185	66
		CONTRACT NO. 66K39		
	ILLINOIS	FED. AID PROJECT		

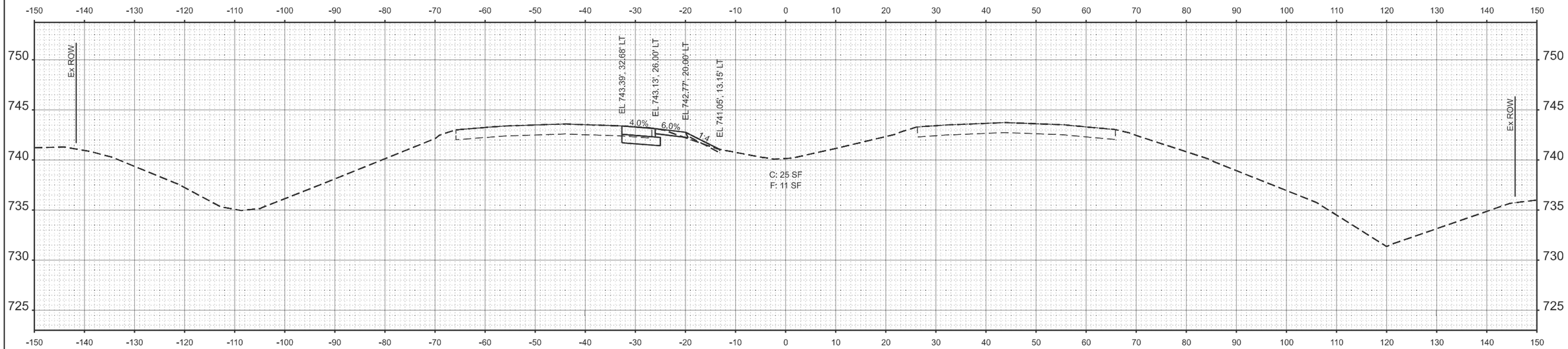

STA 1717+50.00

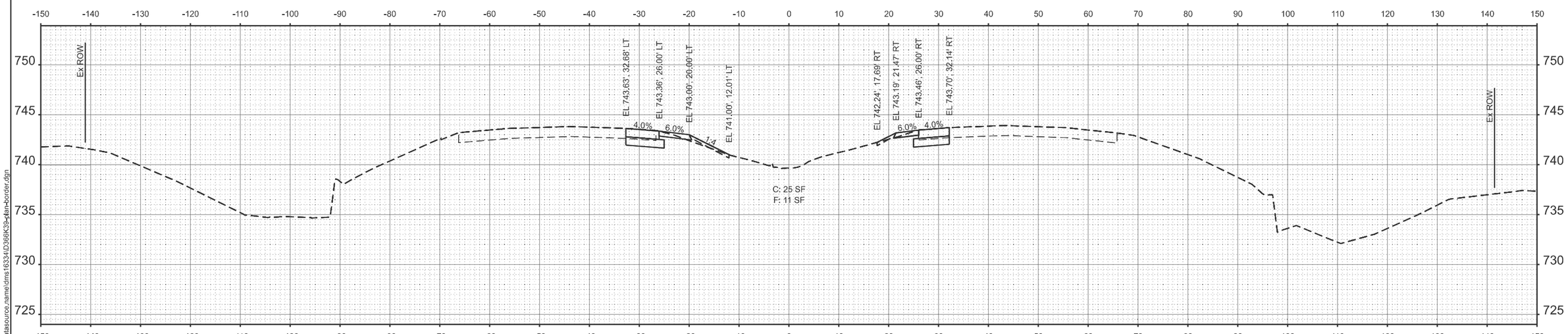

STA 1717+00.00

MODEL: 66K39 Sheet Border
FILE NAME: c:\workingdir\$datasource.name\dms16334\D366K39-plan-border.dgn

V3 Companies
7325 Janes Avenue
Woodridge, IL 60517
630 724 9200 phone
www.v3co.com

USER NAME =	DESIGNED -	REVISED -
	DRAWN -	REVISED -
	CHECKED -	REVISED -
PLOT DATE = 02/20/2026	DATE -	REVISED -

STATE OF ILLINOIS
DEPARTMENT OF TRANSPORTATION

MAINTENANCE OF TRAFFIC CROSS SECTIONS
I-57 SOUTH CROSSOVER

SCALE: 1"=10' | SHEET 9 OF 12 SHEETS | STA. | TO STA.

F.A.I. RTE.	SECTION	COUNTY	TOTAL SHEETS	SHEET NO.
57	(27-38B) BR-1	FORD	185	67
		CONTRACT NO. 66K39		
		ILLINOIS	FED. AID PROJECT	

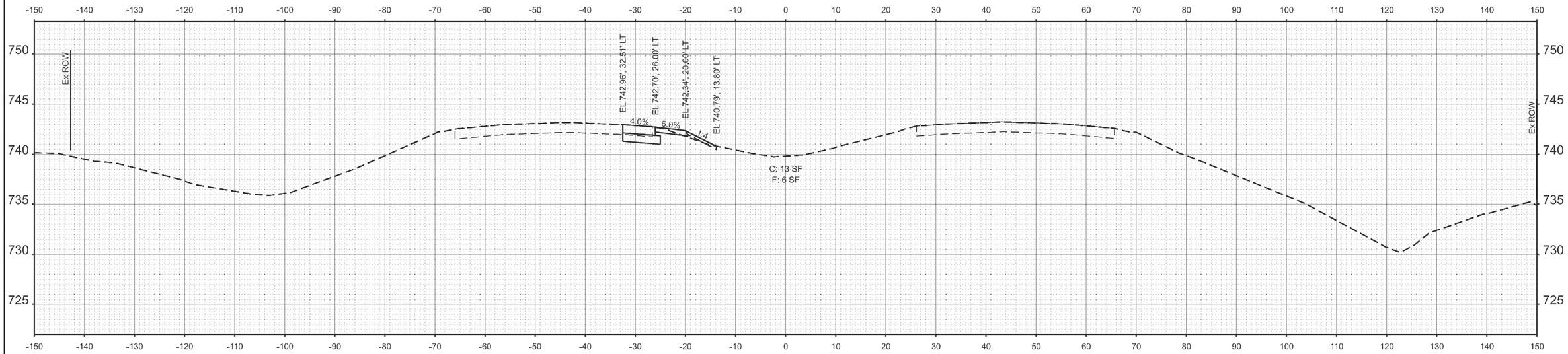

STA 1718+50.00

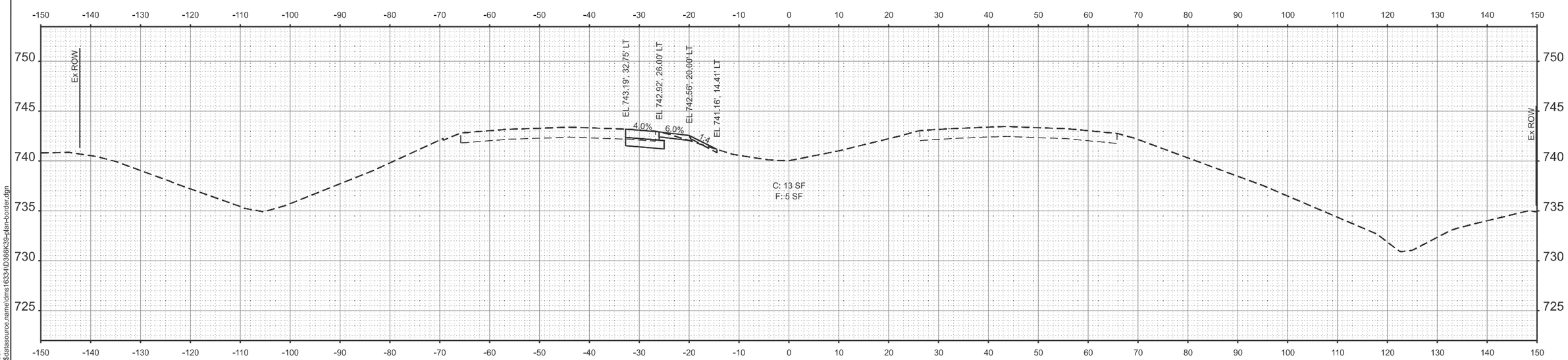

STA 1718+00.00

MODEL: 66K39 Sheet Border
FILE NAME: c:\workingdir\$datasource.name\dms16334\D366K39-plan-border.dgn

V3 Companies
7325 Janes Avenue
Woodridge, IL 60517
630 724 9200 phone
www.v3co.com

USER NAME =	DESIGNED -	REVISED -
	DRAWN -	REVISED -
	CHECKED -	REVISED -
PLOT DATE = 02/20/2026	DATE -	REVISED -

STATE OF ILLINOIS
DEPARTMENT OF TRANSPORTATION

MAINTENANCE OF TRAFFIC CROSS SECTIONS
I-57 SOUTH CROSSOVER

SCALE: 1"=10' | SHEET 10 OF 12 SHEETS | STA. | TO STA.

F.A.I. RTE.	SECTION	COUNTY	TOTAL SHEETS	SHEET NO.
57	(27-38B) BR-1	FORD	185	68
		CONTRACT NO. 66K39		
		ILLINOIS	FED. AID PROJECT	

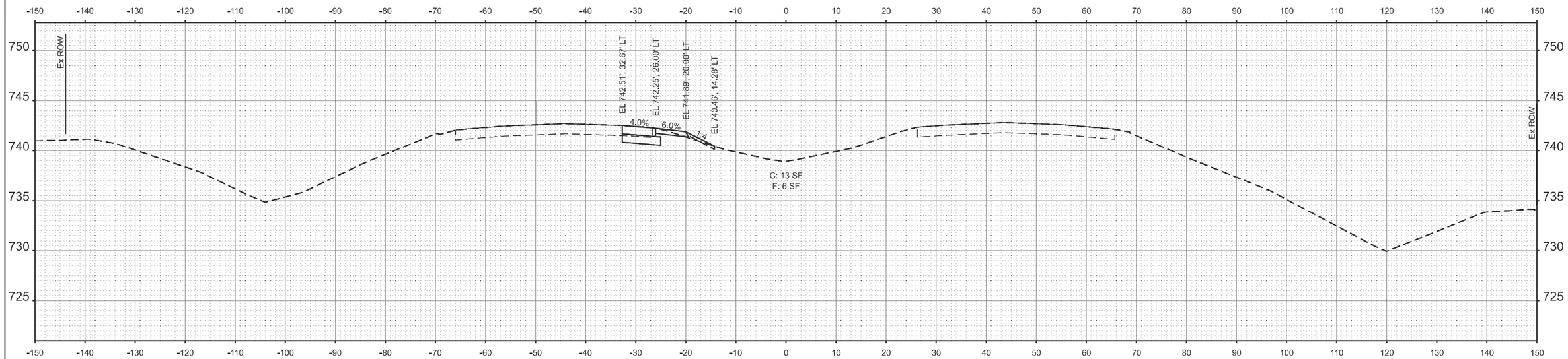

STA 1719+50.00

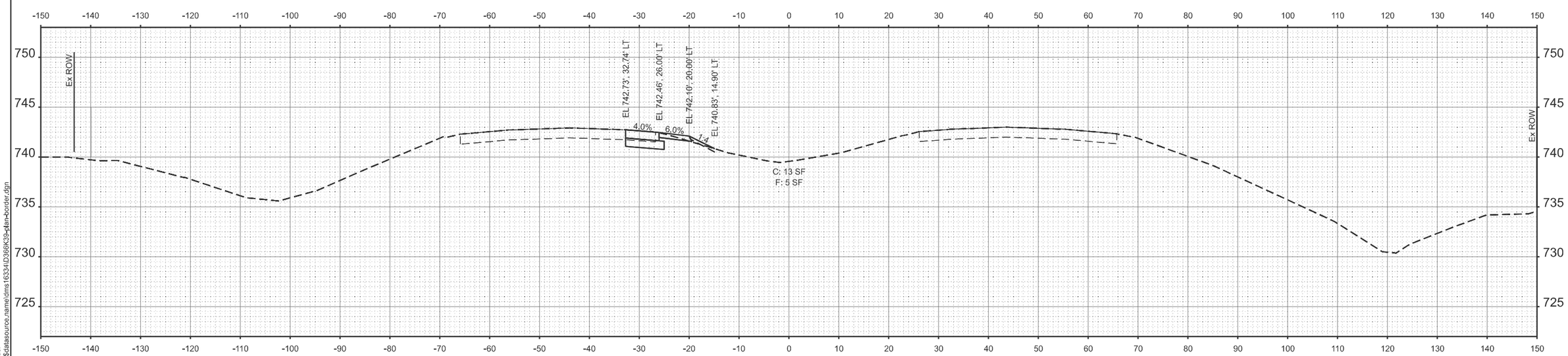

STA 1719+00.00

MODEL: 66K39 Sheet Border
FILE NAME: c:\workingdir$\datasource.name\dms16334\D366K39-plan-border.dgn

V3 Companies
7325 Janes Avenue
Woodridge, IL 60517
630 724 9200 phone
www.v3co.com

USER NAME =	DESIGNED -	REVISED -
	DRAWN -	REVISED -
	CHECKED -	REVISED -
PLOT DATE = 02/20/2026	DATE -	REVISED -

STATE OF ILLINOIS
DEPARTMENT OF TRANSPORTATION

MAINTENANCE OF TRAFFIC CROSS SECTIONS
I-57 SOUTH CROSSOVER

SCALE: 1"=10' | SHEET 11 OF 12 SHEETS | STA. | TO STA.

F.A.I. RTE.	SECTION	COUNTY	TOTAL SHEETS	SHEET NO.
57	(27-38B) BR-1	FORD	185	69
		CONTRACT NO. 66K39		
	ILLINOIS	FED. AID PROJECT		

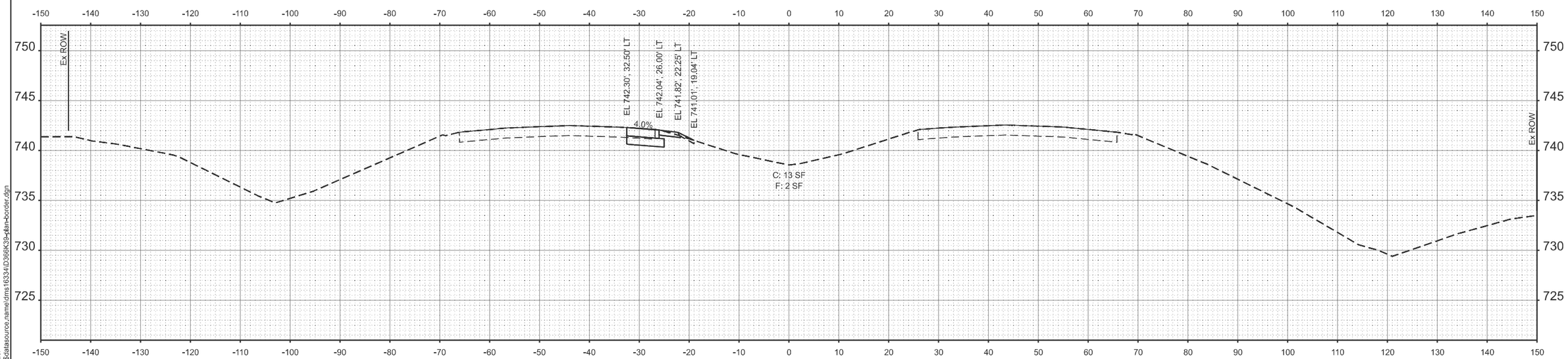

STA 1720+00.00

MODEL: 66K39 Sheet Border
FILE NAME: c:\workingdir\$datasource.name\dms16334\D366K39-plan-border.dgn

V3 Companies
7325 Janes Avenue
Woodridge, IL 60517
630 724 9200 phone
www.v3co.com

USER NAME =	DESIGNED -	REVISED -
	DRAWN -	REVISED -
	CHECKED -	REVISED -
PLOT DATE = 02/20/2026	DATE -	REVISED -

STATE OF ILLINOIS
DEPARTMENT OF TRANSPORTATION

MAINTENANCE OF TRAFFIC CROSS SECTIONS
I-57 SOUTH CROSSOVER

SCALE: 1"=10' | SHEET 12 OF 12 SHEETS | STA. | TO STA.

F.A.I. RTE.	SECTION	COUNTY	TOTAL SHEETS	SHEET NO.
57	(27-38B) BR-1	FORD	185	70
		CONTRACT NO. 66K39		
	ILLINOIS	FED. AID PROJECT		

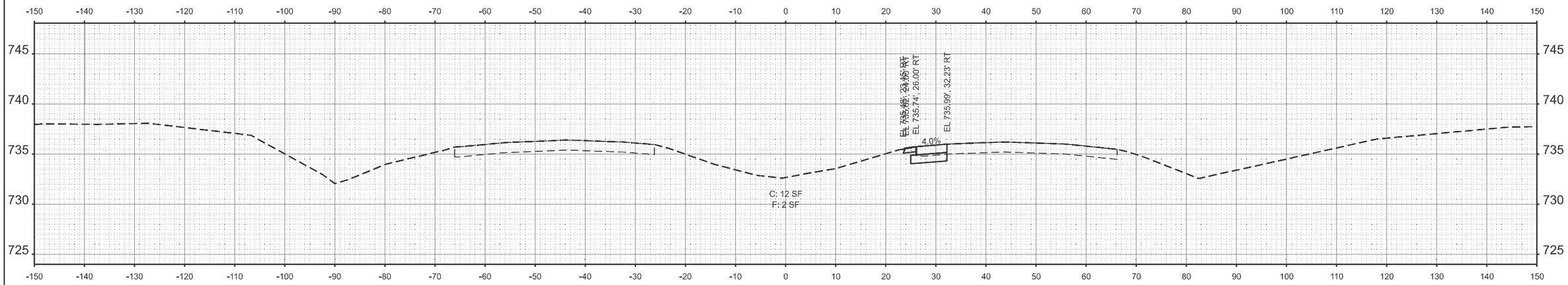

STA 1741+00.00

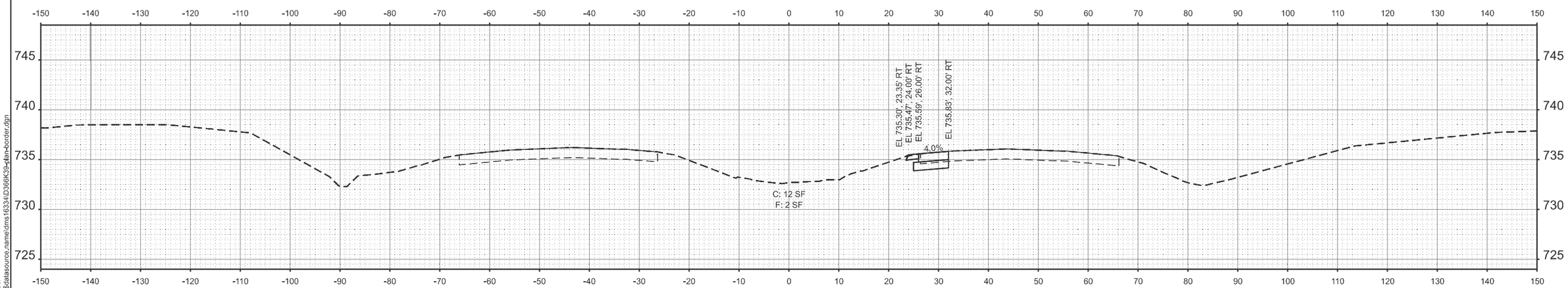

STA 1740+50.00

MODEL: 66K39 Sheet Border
FILE NAME: c:\workingdir\$datasource.name\dms16334\D366K39-plan-border.dgn

V3 Companies
7325 Janes Avenue
Woodridge, IL 60517
630 724 9200 phone
www.v3co.com

USER NAME =	DESIGNED -	REVISED -
	DRAWN -	REVISED -
	CHECKED -	REVISED -
PLOT DATE = 02/20/2026	DATE -	REVISED -

STATE OF ILLINOIS
DEPARTMENT OF TRANSPORTATION

MAINTENANCE OF TRAFFIC CROSS SECTIONS
I-57 NORTH CROSSOVER

SCALE: 1"=10' | SHEET 1 OF 10 SHEETS | STA. | TO STA.

F.A.I. RTE.	SECTION	COUNTY	TOTAL SHEETS	SHEET NO.
57	(27-38B) BR-1	FORD	185	71

CONTRACT NO. 66K39

ILLINOIS | FED. AID PROJECT

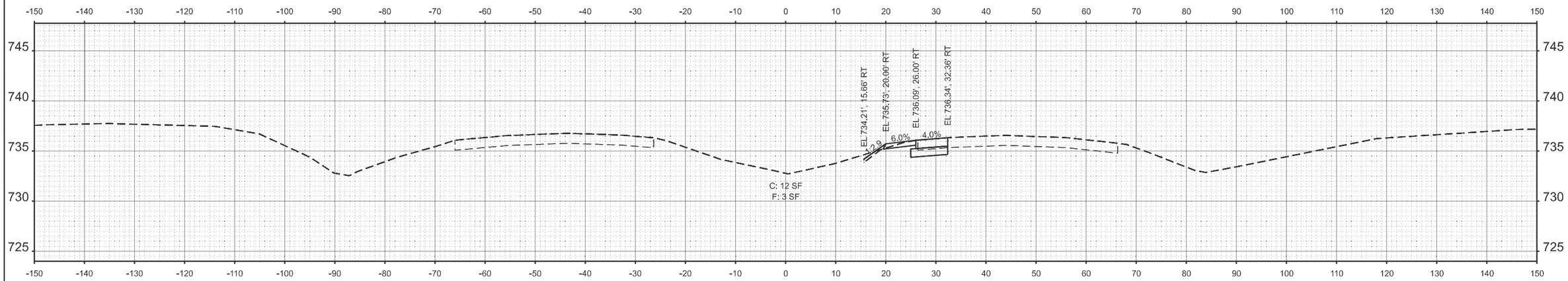

STA 1742+00.00

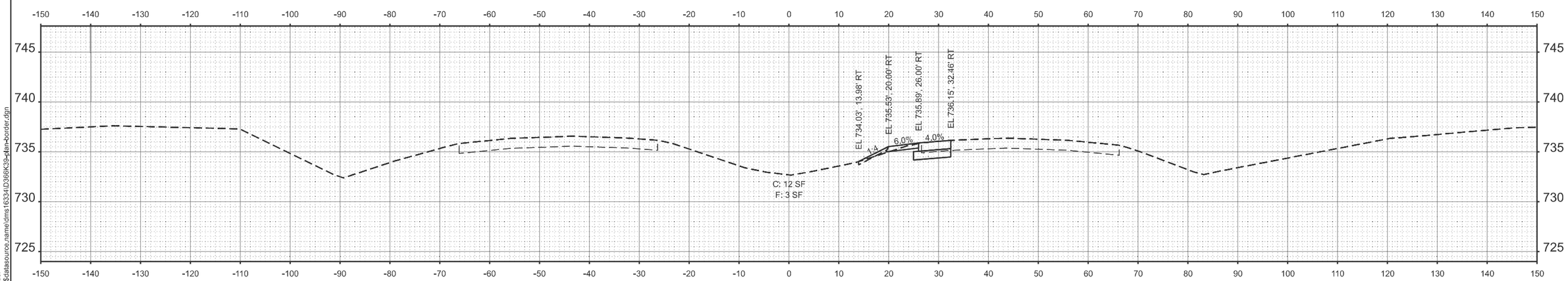

STA 1741+50.00

MODEL: 66K39 Sheet Border
FILE NAME: c:\workingdir\$datasource.name\dms16334\D366K39-plan-border.dgn

V3 Companies
7325 Janes Avenue
Woodridge, IL 60517
630 724 9200 phone
www.v3co.com

USER NAME =	DESIGNED -	REVISED -
	DRAWN -	REVISED -
	CHECKED -	REVISED -
PLOT DATE = 02/20/2026	DATE -	REVISED -

STATE OF ILLINOIS
DEPARTMENT OF TRANSPORTATION

MAINTENANCE OF TRAFFIC CROSS SECTIONS
I-57 NORTH CROSSOVER

SCALE: 1"=10' | SHEET 2 OF 10 SHEETS | STA. | TO STA.

F.A.I. RTE.	SECTION	COUNTY	TOTAL SHEETS	SHEET NO.
57	(27-38B) BR-1	FORD	185	72
		CONTRACT NO. 66K39		
		ILLINOIS FED. AID PROJECT		

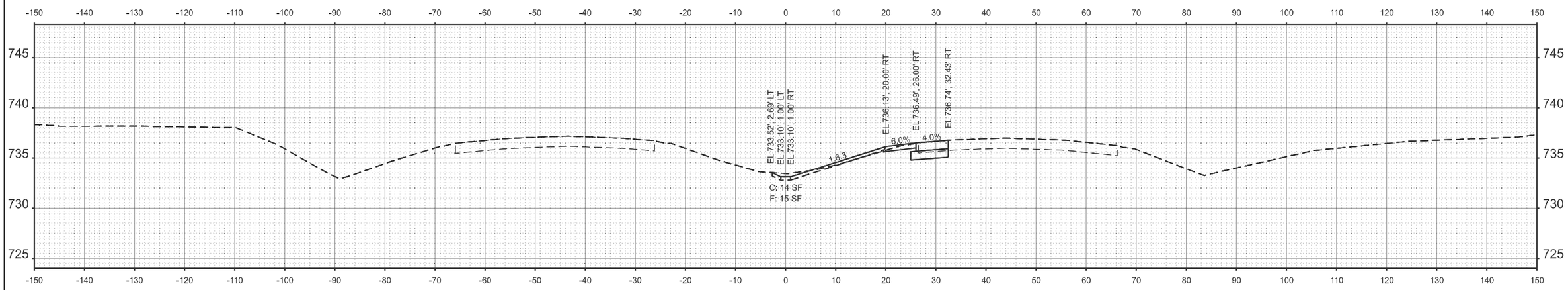

STA 1743+00.00

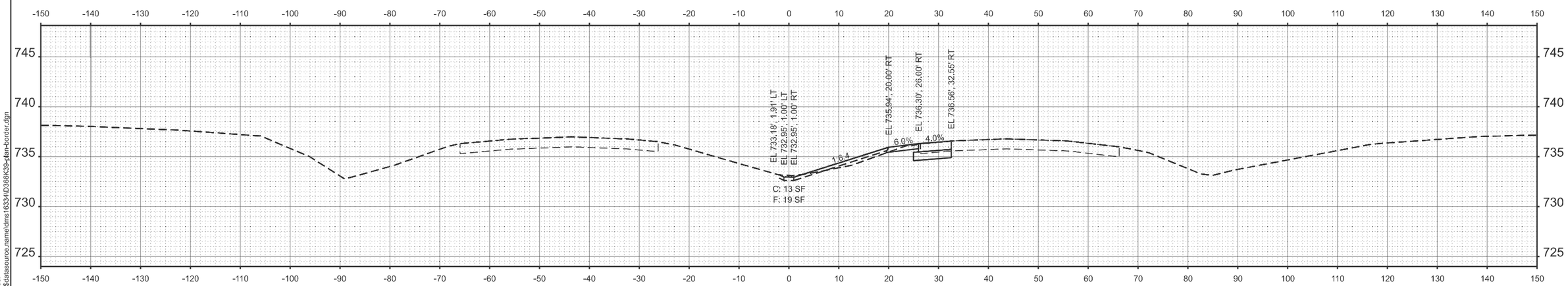

STA 1742+50.00

MODEL: 66K39 Sheet Border
FILE NAME: c:\workingdir\$datasource.name\dms16334\D366K39-plan-border.dgn

V3 Companies
7325 Janes Avenue
Woodridge, IL 60517
630 724 9200 phone
www.v3co.com

USER NAME =	DESIGNED -	REVISED -
	DRAWN -	REVISED -
	CHECKED -	REVISED -
PLOT DATE = 02/20/2026	DATE -	REVISED -

STATE OF ILLINOIS
DEPARTMENT OF TRANSPORTATION

MAINTENANCE OF TRAFFIC CROSS SECTIONS
I-57 NORTH CROSSOVER

SCALE: 1"=10' | SHEET 3 OF 10 SHEETS | STA. | TO STA.

F.A.I. RTE.	SECTION	COUNTY	TOTAL SHEETS	SHEET NO.
57	(27-38B) BR-1	FORD	185	73
		CONTRACT NO. 66K39		
	ILLINOIS	FED. AID PROJECT		

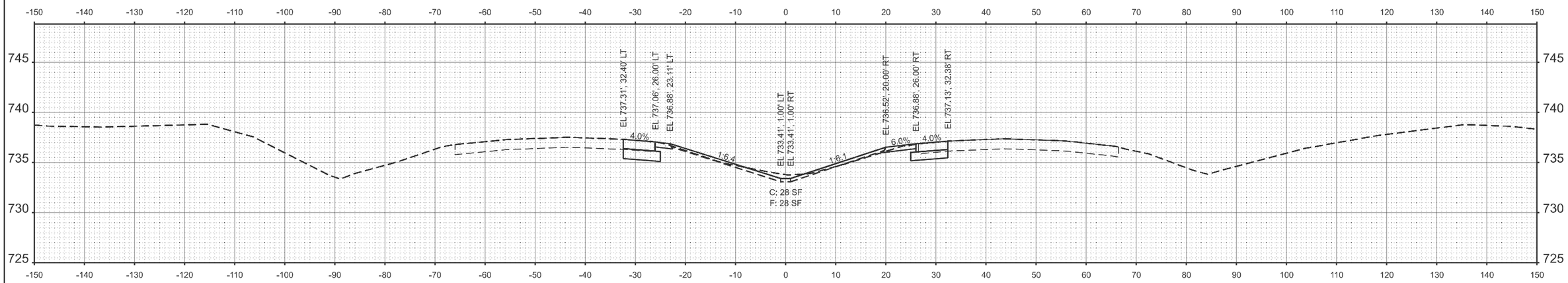

STA 1744+00.00

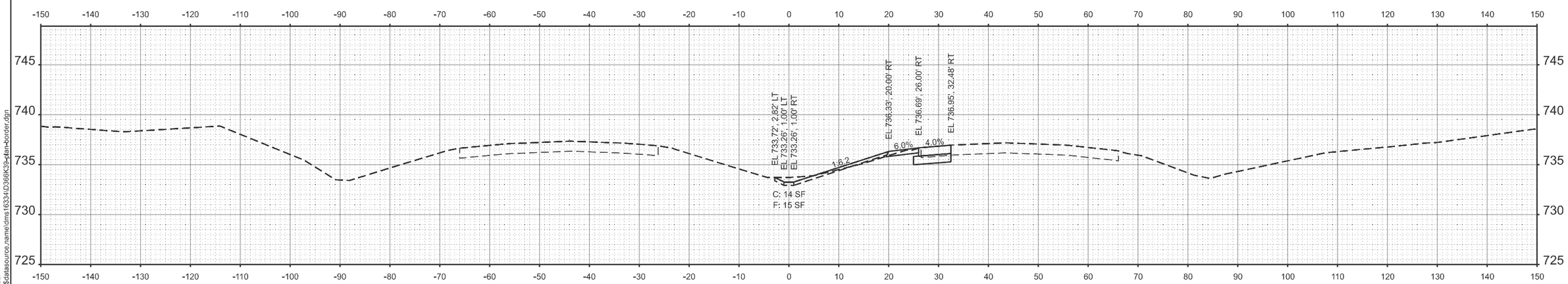

STA 1743+50.00

MODEL: 66K39 Sheet Border
FILE NAME: c:\workingdir$\datasource,name\dms16334\D366K39-plan-border.dgn

V3 Companies
7325 Janes Avenue
Woodridge, IL 60517
630 724 9200 phone
www.v3co.com

USER NAME =	DESIGNED -	REVISED -
	DRAWN -	REVISED -
	CHECKED -	REVISED -
PLOT DATE = 02/20/2026	DATE -	REVISED -

STATE OF ILLINOIS
DEPARTMENT OF TRANSPORTATION

MAINTENANCE OF TRAFFIC CROSS SECTIONS
I-57 NORTH CROSSOVER

SCALE: 1"=10' | SHEET 4 OF 10 SHEETS | STA. TO STA.

F.A.I. RTE.	SECTION	COUNTY	TOTAL SHEETS	SHEET NO.
57	(27-38B) BR-1	FORD	185	74
		CONTRACT NO. 66K39		
		ILLINOIS	FED. AID PROJECT	

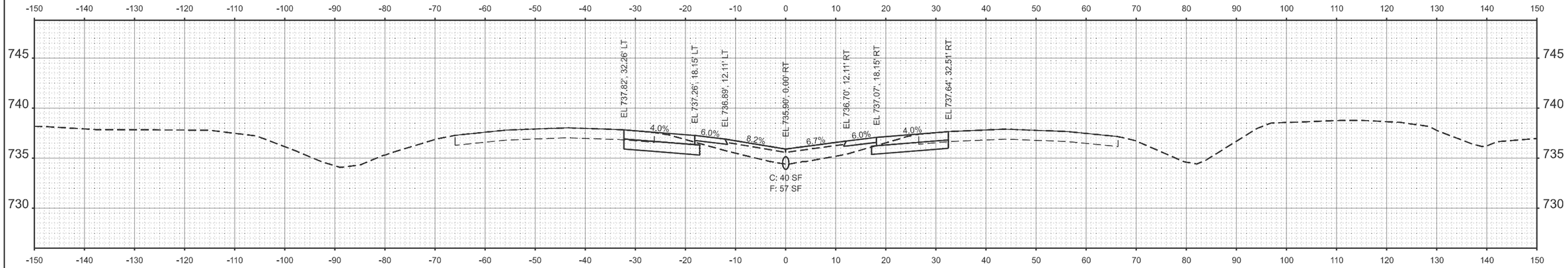

STA 1745+50.00

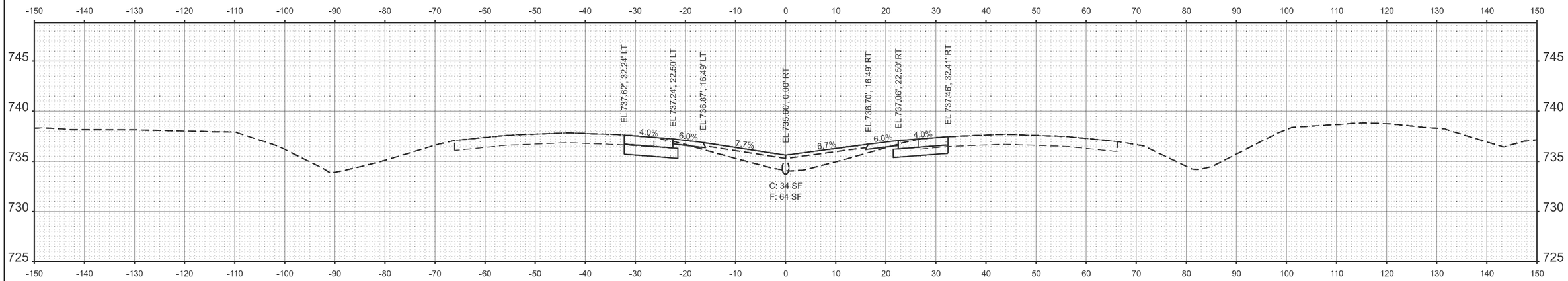

STA 1745+00.00

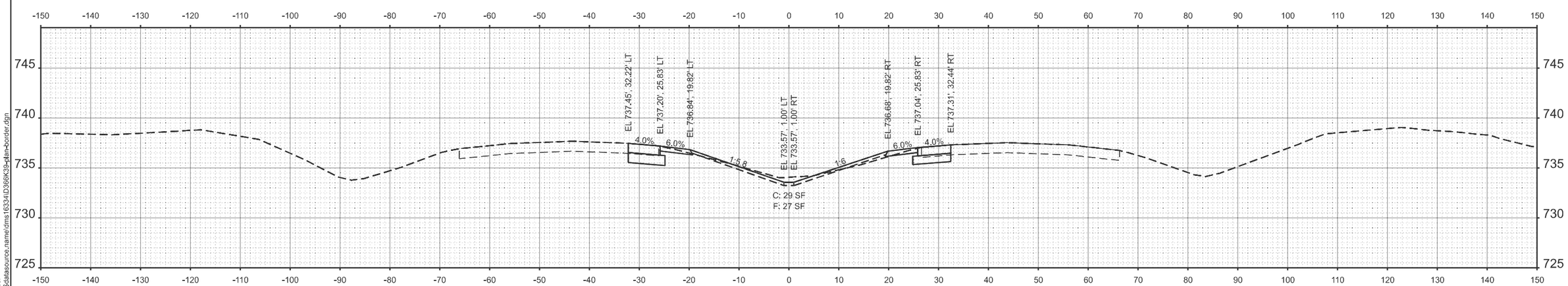

STA 1744+50.00

MODEL: 66K39 Sheet Border
FILE NAME: c:\workingdir\$datasource.name\dms16334\D366K39-plan-border.dgn

V3 Companies
7325 Janes Avenue
Woodridge, IL 60517
630 724 9200 phone
www.v3co.com

USER NAME =	DESIGNED -	REVISED -
	DRAWN -	REVISED -
	CHECKED -	REVISED -
PLOT DATE = 02/20/2026	DATE -	REVISED -

STATE OF ILLINOIS
DEPARTMENT OF TRANSPORTATION

MAINTENANCE OF TRAFFIC CROSS SECTIONS
I-57 NORTH CROSSOVER

SCALE: 1"=10' | SHEET 5 OF 10 SHEETS | STA. | TO STA.

F.A.I. RTE.	SECTION	COUNTY	TOTAL SHEETS	SHEET NO.
57	(27-38B) BR-1	FORD	185	75
		CONTRACT NO. 66K39		
	ILLINOIS	FED. AID PROJECT		

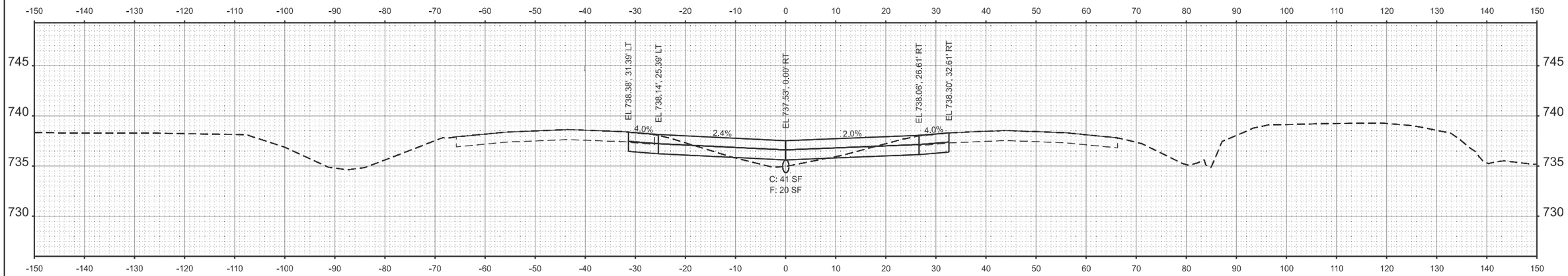

STA 1747+00.00

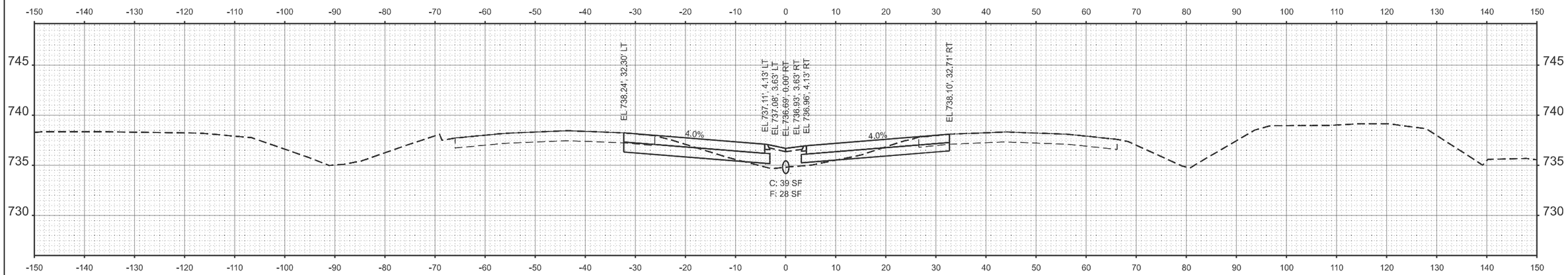

STA 1746+50.00

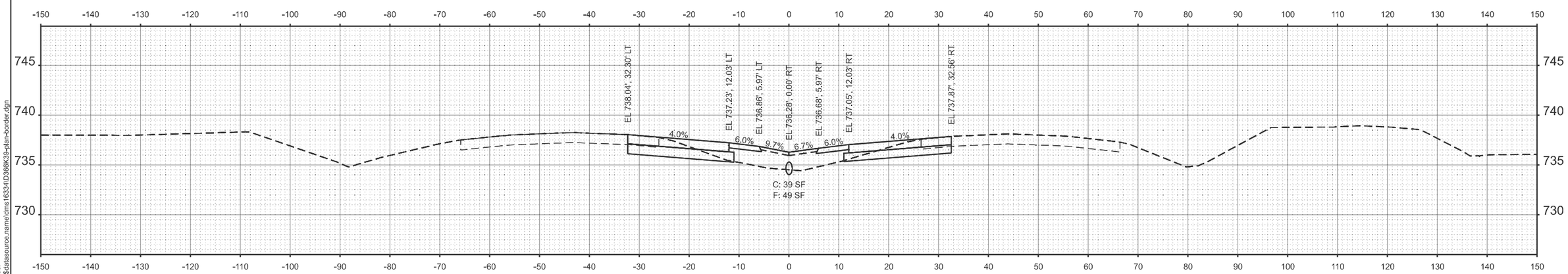

STA 1746+00.00

MODEL: 66K39 Sheet Border
FILE NAME: c:\workingdir\$datasource.name\dms16334\D366K39-plan-border.dgn

V3 Companies
7325 Janes Avenue
Woodridge, IL 60517
630 724 9200 phone
www.v3co.com

USER NAME =	DESIGNED -	REVISED -
	DRAWN -	REVISED -
	CHECKED -	REVISED -
PLOT DATE = 02/20/2026	DATE -	REVISED -

STATE OF ILLINOIS
DEPARTMENT OF TRANSPORTATION

MAINTENANCE OF TRAFFIC CROSS SECTIONS
I-57 NORTH CROSSOVER

SCALE: 1"=10' | SHEET 6 OF 10 SHEETS | STA. | TO STA.

F.A.I. RTE.	SECTION	COUNTY	TOTAL SHEETS	SHEET NO.
57	(27-38B) BR-1	FORD	185	76
		CONTRACT NO. 66K39		
		ILLINOIS	FED. AID PROJECT	

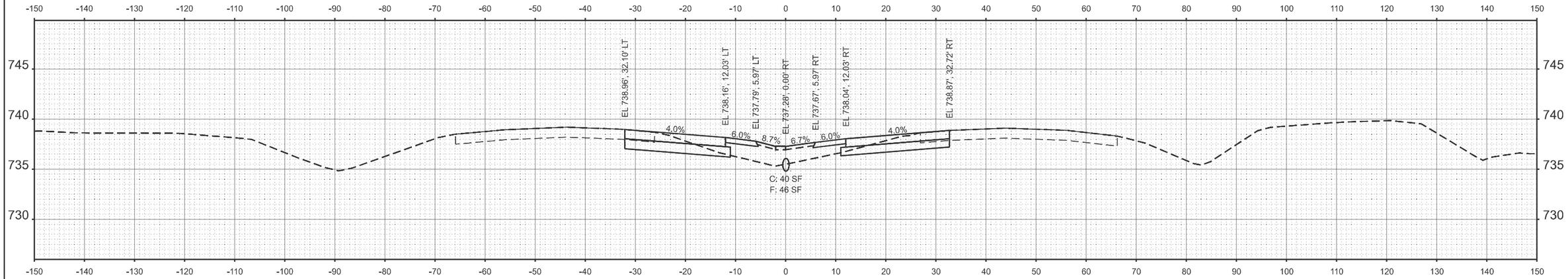

STA 1748+50.00

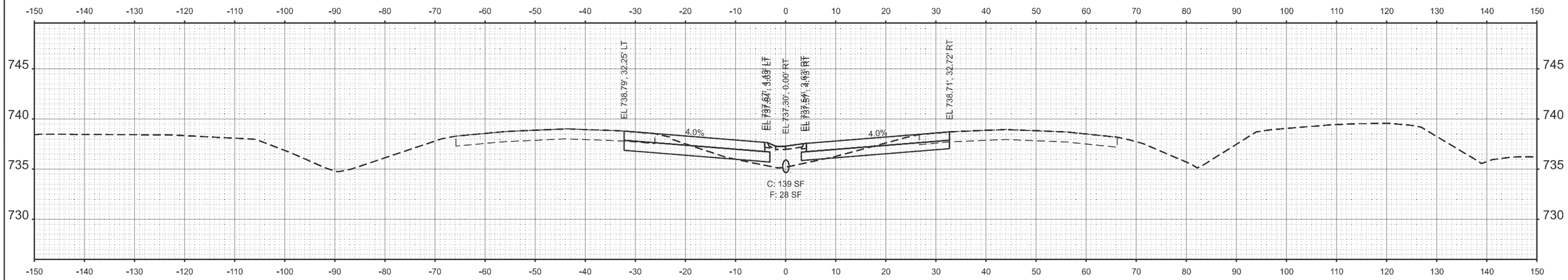

STA 1748+00.00

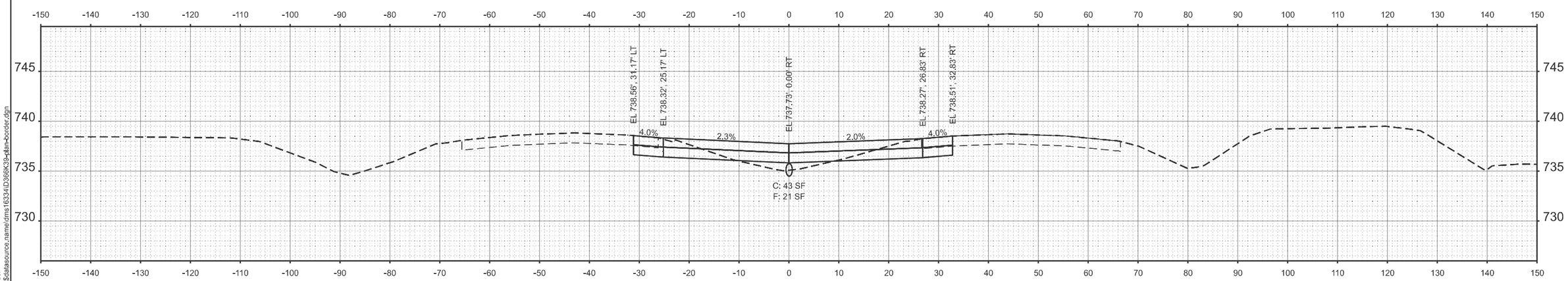

STA 1747+50.00

MODEL: 66K39 Sheet Border
FILE NAME: c:\workingdir\$datasource.name\dms16334\D366K39-plan-border.dgn

V3 Companies
7325 Janes Avenue
Woodridge, IL 60517
630 724 9200 phone
www.v3co.com

USER NAME =	DESIGNED -	REVISED -
	DRAWN -	REVISED -
	CHECKED -	REVISED -
PLOT DATE = 02/20/2026	DATE -	REVISED -

STATE OF ILLINOIS
DEPARTMENT OF TRANSPORTATION

MAINTENANCE OF TRAFFIC CROSS SECTIONS
I-57 NORTH CROSSOVER

SCALE: 1"=10' | SHEET 7 OF 10 SHEETS | STA. | TO STA.

F.A.I. RTE.	SECTION	COUNTY	TOTAL SHEETS	SHEET NO.
57	(27-38B) BR-1	FORD	185	77

CONTRACT NO. 66K39

ILLINOIS | FED. AID PROJECT

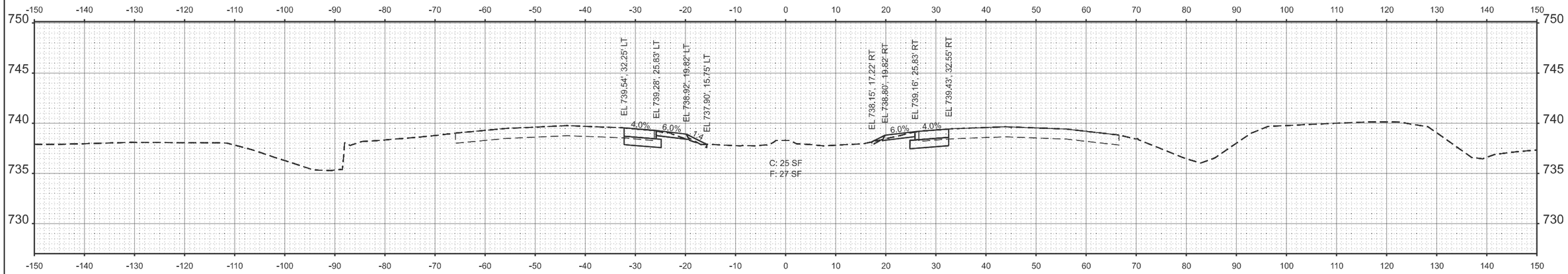

STA 1750+00.00

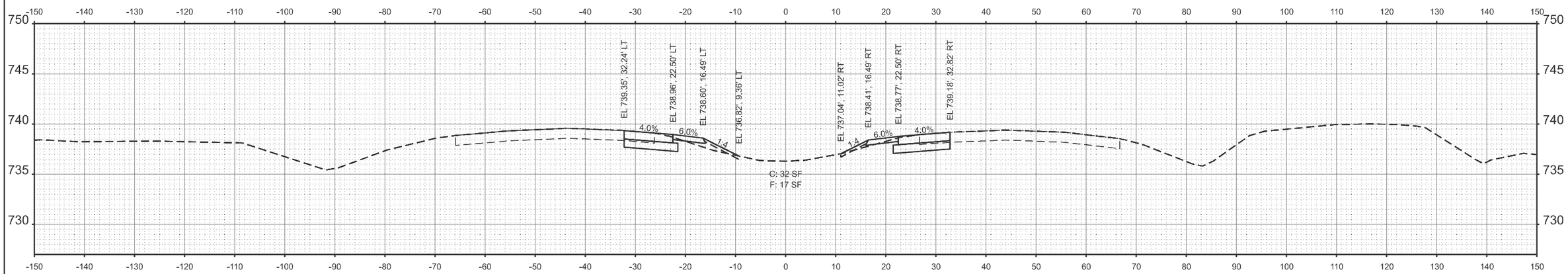

STA 1749+50.00

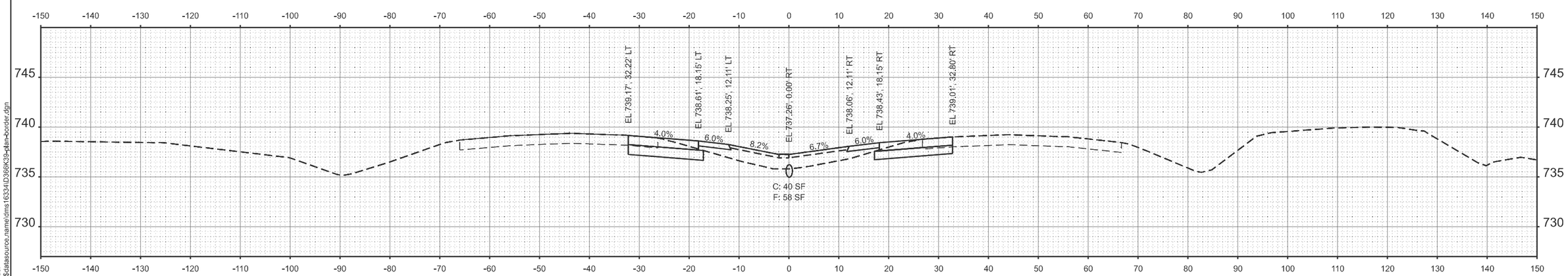

STA 1749+00.00

MODEL: 66K39 Sheet Border
FILE NAME: c:\workingdir\$datasource.name\dms16334\D366K39-plan-border.dgn

V3 Companies
7325 Janes Avenue
Woodridge, IL 60517
630 724 9200 phone
www.v3co.com

USER NAME =	DESIGNED -	REVISED -
	DRAWN -	REVISED -
	CHECKED -	REVISED -
PLOT DATE = 02/20/2026	DATE -	REVISED -

STATE OF ILLINOIS
DEPARTMENT OF TRANSPORTATION

MAINTENANCE OF TRAFFIC CROSS SECTIONS
I-57 NORTH CROSSOVER

SCALE: 1"=10' | SHEET 8 OF 10 SHEETS | STA. TO STA.

F.A.I. RTE.	SECTION	COUNTY	TOTAL SHEETS	SHEET NO.
57	(27-38B) BR-1	FORD	185	78
		CONTRACT NO. 66K39		
		ILLINOIS	FED. AID PROJECT	

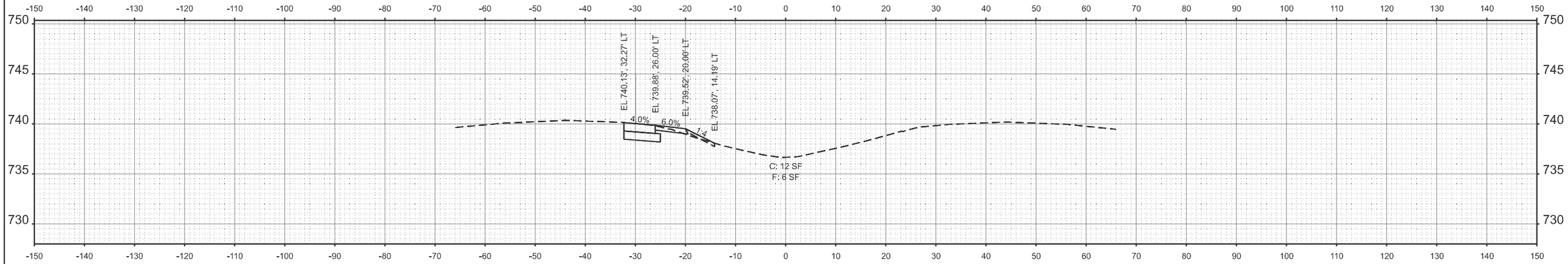

STA 1751+50.00

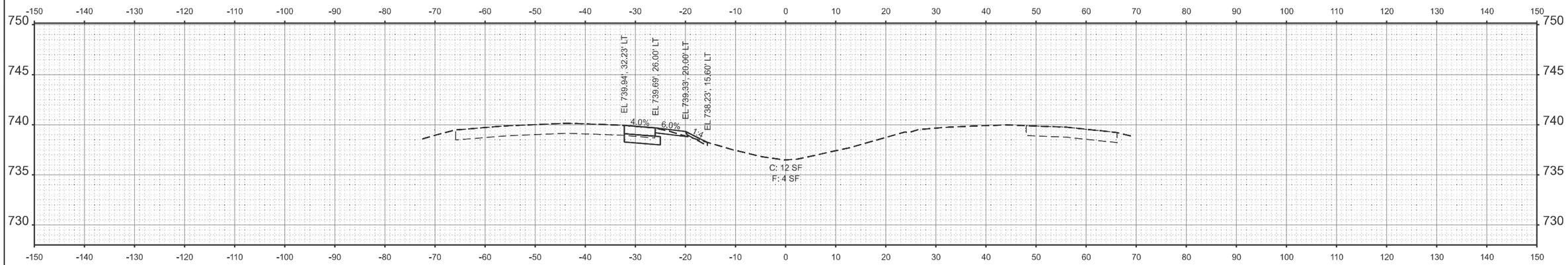

STA 1751+00.00

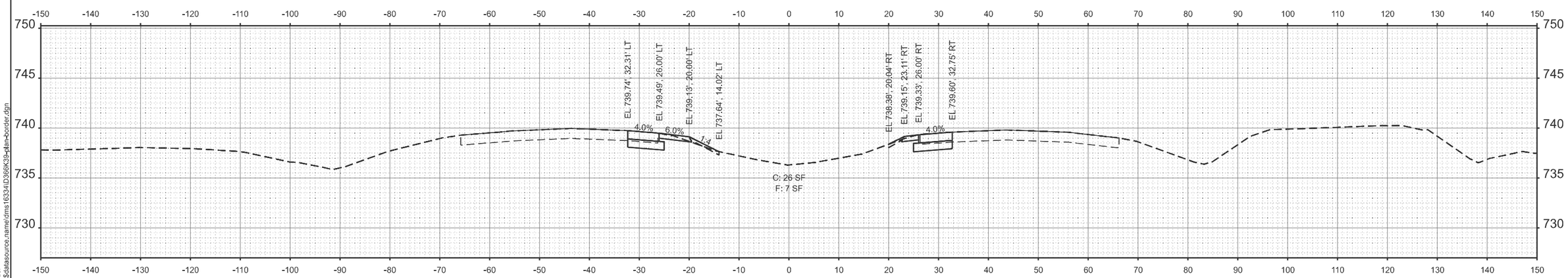

STA 1750+50.00

MODEL: 66K39 Sheet Border
FILE NAME: c:\workingdir$\datasource.name\dms16334\D366K39-plan-border.dgn

V3 Companies
7325 Janes Avenue
Woodridge, IL 60517
630 724 9200 phone
www.v3co.com

USER NAME =	DESIGNED -	REVISED -
	DRAWN -	REVISED -
	CHECKED -	REVISED -
PLOT DATE = 02/20/2026	DATE -	REVISED -

STATE OF ILLINOIS
DEPARTMENT OF TRANSPORTATION

MAINTENANCE OF TRAFFIC CROSS SECTIONS
I-57 NORTH CROSSOVER

SCALE: 1"=10' | SHEET 9 OF 10 SHEETS | STA. | TO STA.

F.A.I. RTE.	SECTION	COUNTY	TOTAL SHEETS	SHEET NO.
57	(27-38B) BR-1	FORD	185	79
		CONTRACT NO. 66K39		
	ILLINOIS	FED. AID PROJECT		

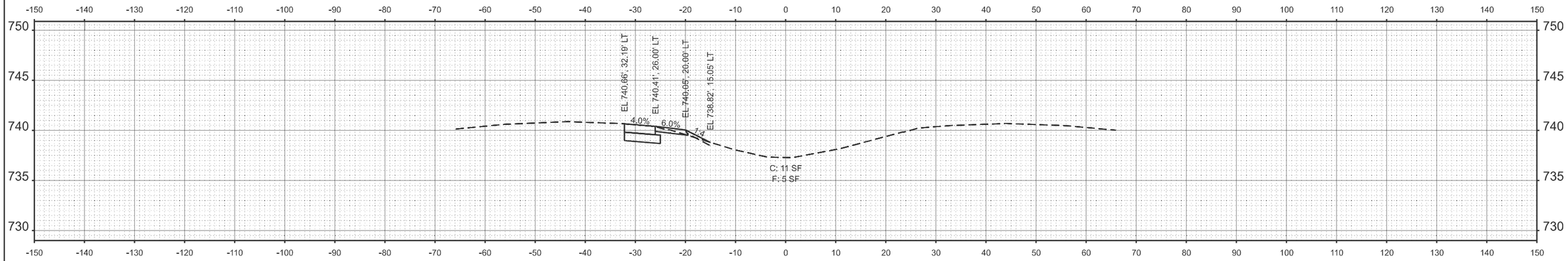

STA 1753+00.00

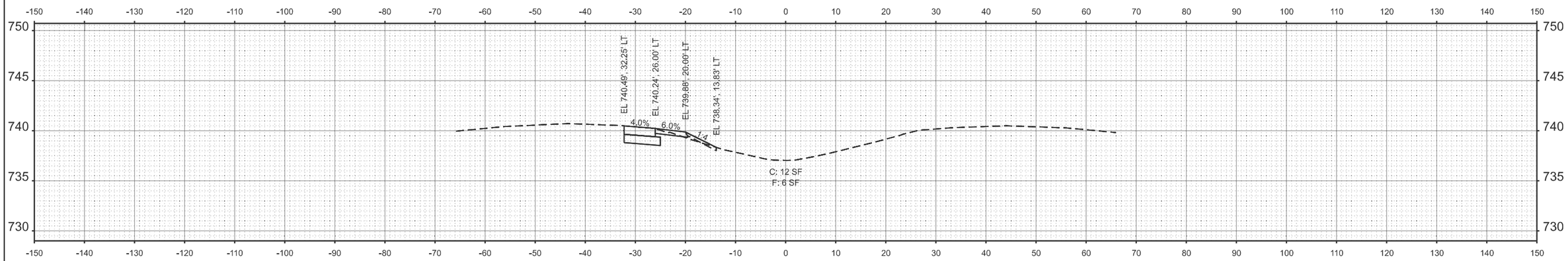

STA 1752+50.00

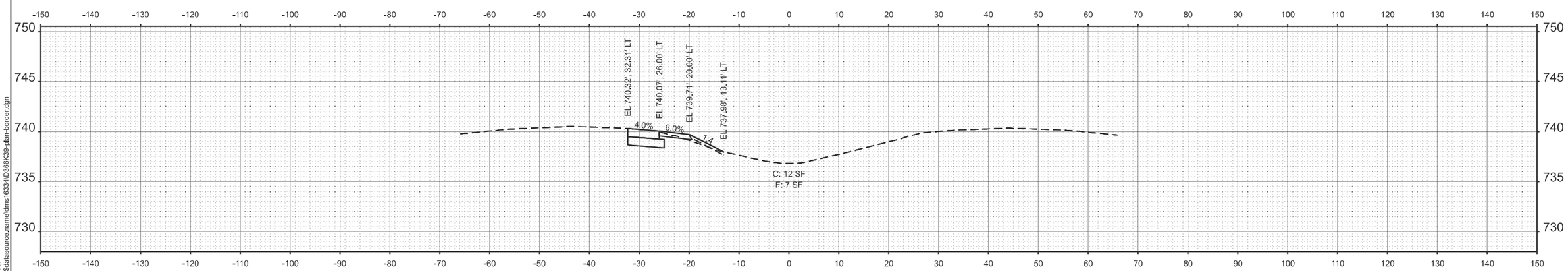

STA 1752+00.00

MODEL: 66K39 Sheet Border
FILE NAME: c:\workingdir\$datasource.name\dms16334\D366K39-plan-border.dgn

V3 Companies
7325 Janes Avenue
Woodridge, IL 60517
630 724 9200 phone
www.v3co.com

USER NAME =	DESIGNED -	REVISED -
	DRAWN -	REVISED -
	CHECKED -	REVISED -
PLOT DATE = 02/20/2026	DATE -	REVISED -

STATE OF ILLINOIS
DEPARTMENT OF TRANSPORTATION

MAINTENANCE OF TRAFFIC CROSS SECTIONS
I-57 NORTH CROSSOVER

SCALE: 1"=10' | SHEET 10 OF 10 SHEETS | STA. | TO STA.

F.A.I. RTE.	SECTION	COUNTY	TOTAL SHEETS	SHEET NO.
57	(27-38B) BR-1	FORD	185	80
		CONTRACT NO. 66K39		
		ILLINOIS	FED. AID PROJECT	

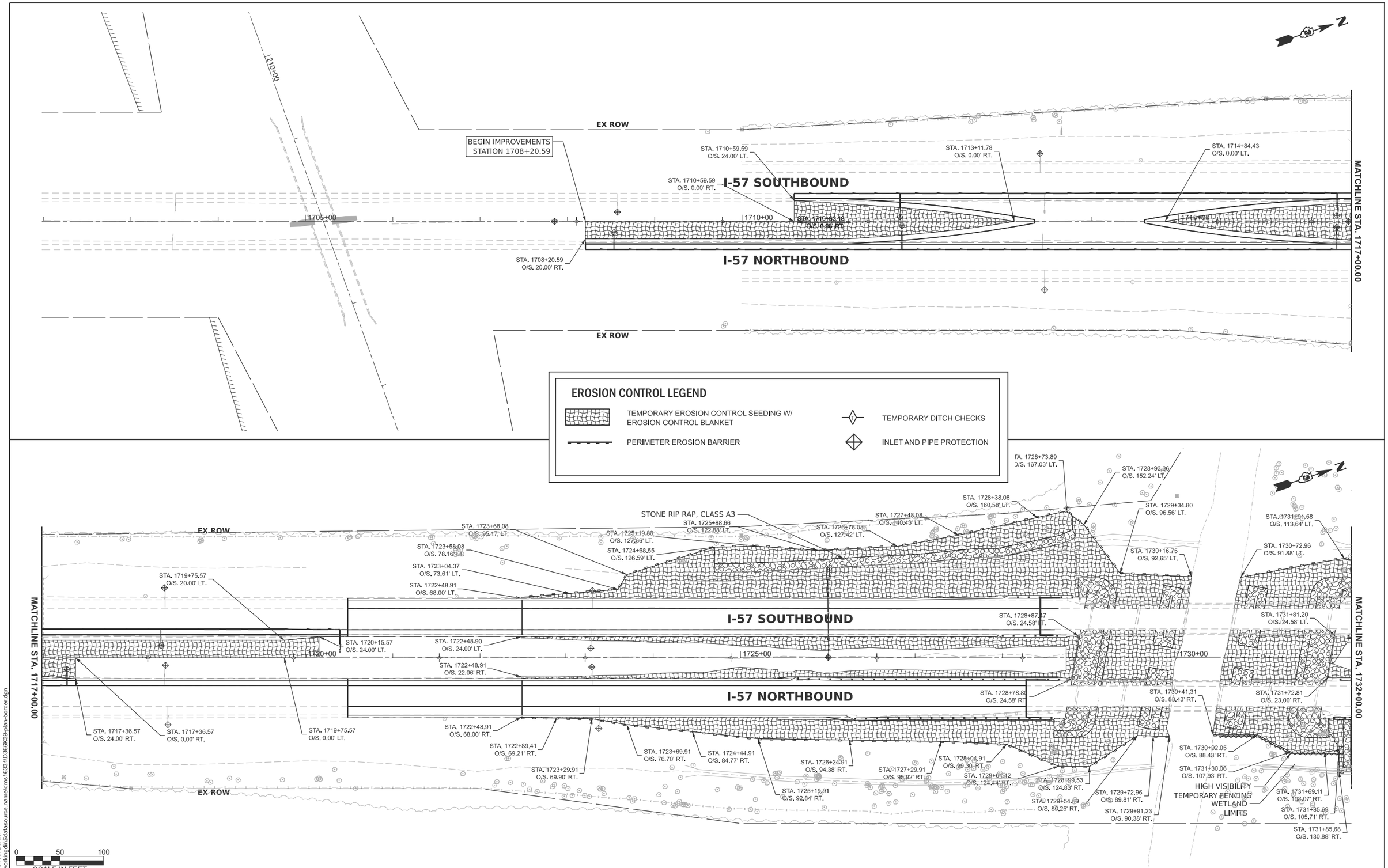

MODEL: 66K39 Sheet Border
FILE NAME: c:\workingdir$\datasource.name\dms16334\D366K39-plan-border.dgn

V3 Companies
7325 Janes Avenue
Woodridge, IL 60517
630 724 9200 phone
www.v3co.com

USER NAME =	DESIGNED - KDC	REVISED -	
	DRAWN - DRP	REVISED -	
	CHECKED - JWB	REVISED -	
PLOT DATE = 02/20/2026	DATE - 02/20/2026	REVISED -	

STATE OF ILLINOIS
DEPARTMENT OF TRANSPORTATION

EROSION CONTROL PLAN
I-57

SCALE: 1"=50' | SHEET 1 OF 2 SHEETS | STA. 1702+00 TO STA. 1732+00

F.A.I. RTE.	SECTION	COUNTY	TOTAL SHEETS	SHEET NO.
57	(27-38B) BR-1	FORD	185	81

CONTRACT NO. 66K39

ILLINOIS | FED. AID PROJECT

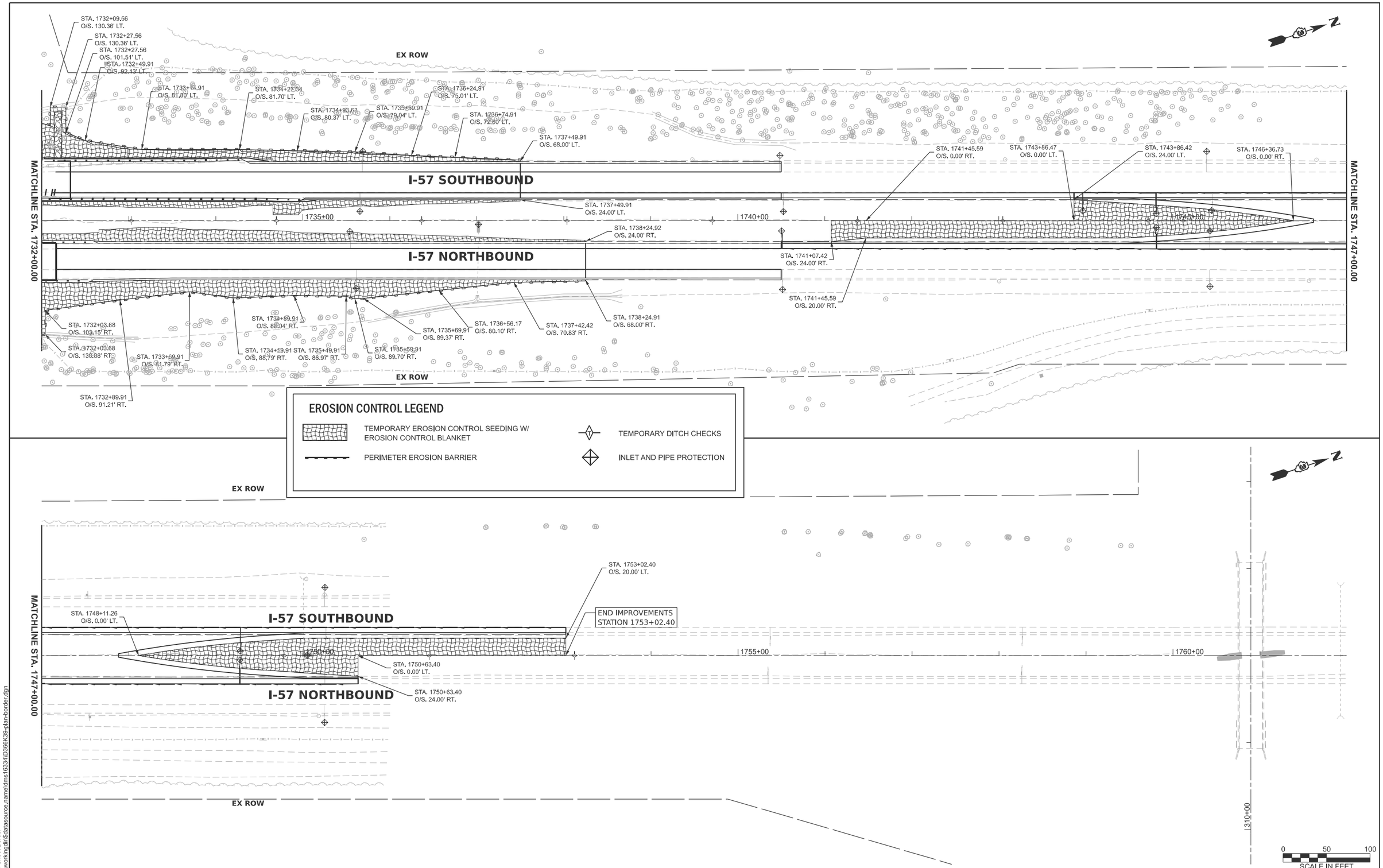

MODEL: 66K39 Sheet Border
FILE NAME: c:\workingdir$\datasource.name\dms16334\D366K39-plan-border.dgn

V3 Companies
7325 Janes Avenue
Woodridge, IL 60517
630 724 9200 phone
www.v3co.com

USER NAME =	DESIGNED - KDC	REVISED -
	DRAWN - DRP	REVISED -
	CHECKED - JWB	REVISED -
PLOT DATE = 02/20/2026	DATE - 02/20/2026	REVISED -

STATE OF ILLINOIS
DEPARTMENT OF TRANSPORTATION

EROSION CONTROL PLAN
I-57

SCALE: 1"=50' | SHEET 2 OF 2 SHEETS | STA. 1762+00 TO STA. 1732+00

F.A.I. RTE.	SECTION	COUNTY	TOTAL SHEETS	SHEET NO.
57	(27-38B) BR-1	FORD	185	82

CONTRACT NO. 66K39

ILLINOIS | FED. AID PROJECT

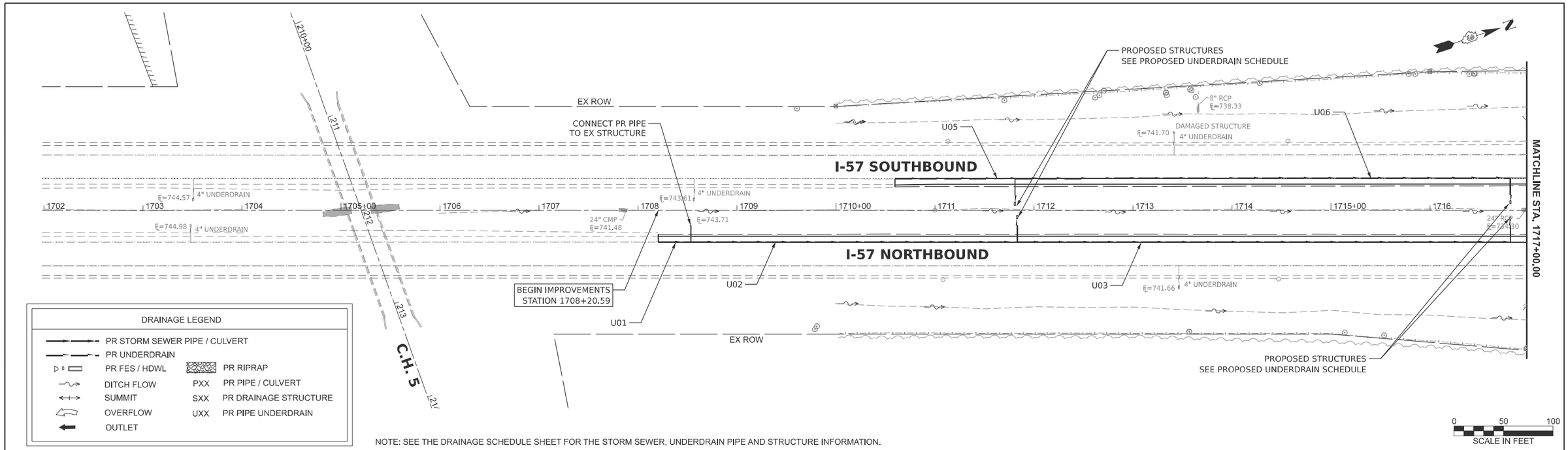

NOTE: SEE THE DRAINAGE SCHEDULE SHEET FOR THE STORM SEWER, UNDERDRAIN PIPE AND STRUCTURE INFORMATION.

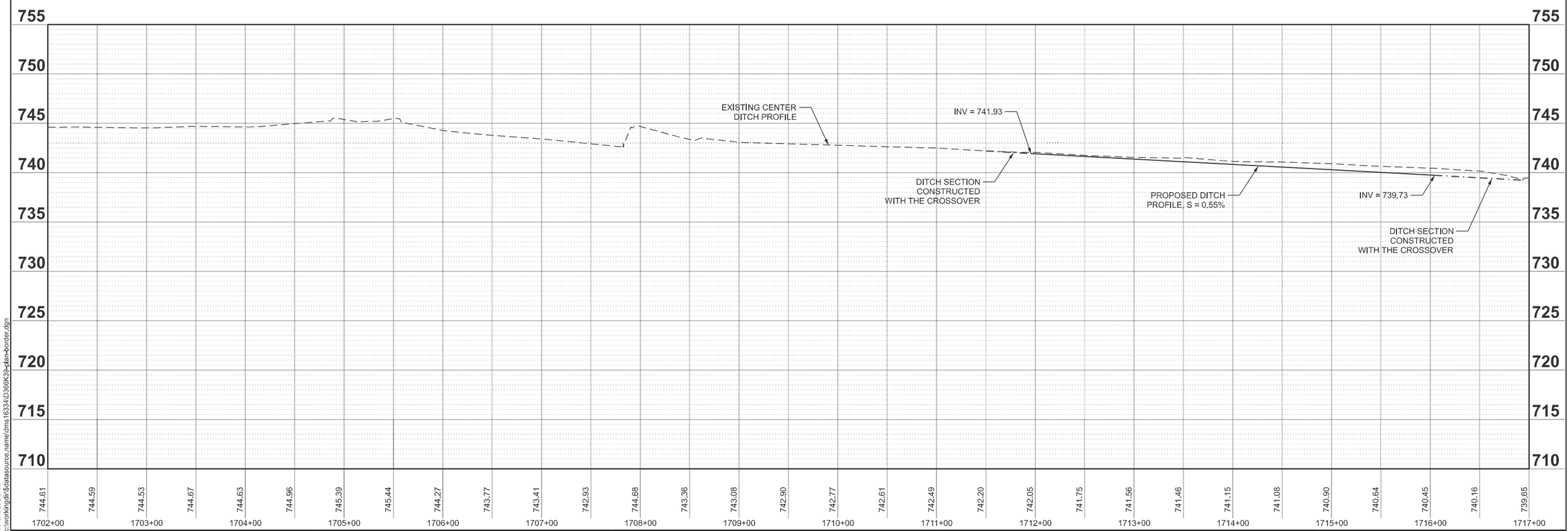

MODEL: 66K39 Sheet Border
FILE NAME: c:\workingdir\$datasource.name\dms16334\D366K39-plan-border.dgn

V3 Companies
7325 Janes Avenue
Woodridge, IL 60517
630 724 9200 phone
www.v3co.com

USER NAME =	DESIGNED - KDC	REVISED -	
	DRAWN - DRP	REVISED -	
	CHECKED - JWB	REVISED -	
PLOT DATE = 02/20/2026	DATE - 02/20/2026	REVISED -	

STATE OF ILLINOIS
DEPARTMENT OF TRANSPORTATION

DRAINAGE PLAN AND PROFILE
I-57

SCALE: 1"=50' | SHEET 1 OF 4 SHEETS | STA. 1702+00 TO STA. 1717+00

F.A.I. RTE.	SECTION	COUNTY	TOTAL SHEETS	SHEET NO.
57	(27-38B) BR-1	FORD	185	83

CONTRACT NO. 66K39

ILLINOIS | FED. AID PROJECT

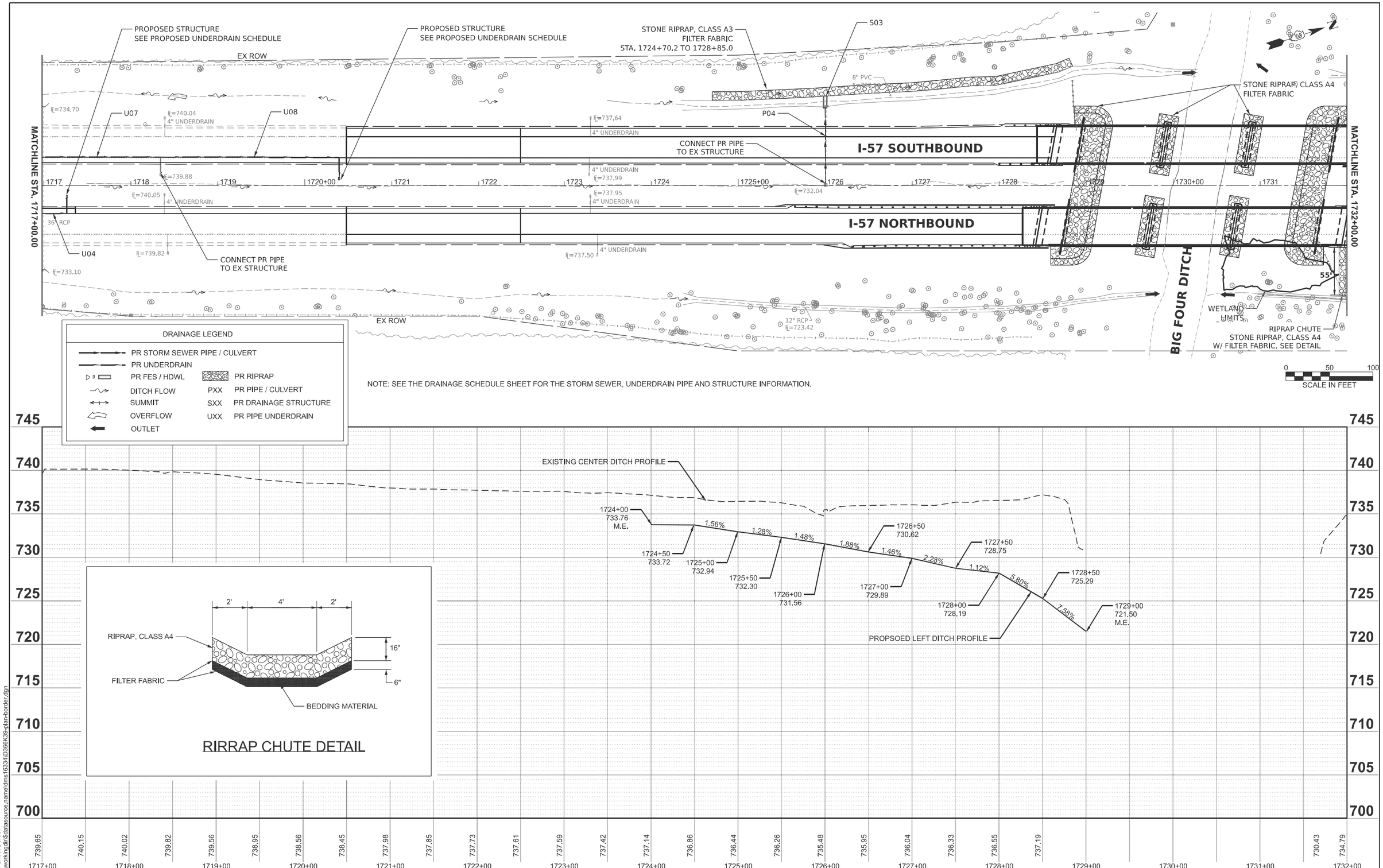

MODEL: 66K39 Sheet Border
FILE NAME: c:\workingdir\$datasource.name\dms16334\D366K39-plan-border.dgn

V3 Companies
7325 Janes Avenue
Woodridge, IL 60517
630 724 9200 phone
www.v3co.com

USER NAME =	DESIGNED - KDC	REVISED -	
	DRAWN - DRP	REVISED -	
	CHECKED - JWB	REVISED -	
PLOT DATE = 02/20/2026	DATE - 02/20/2026	REVISED -	

STATE OF ILLINOIS
DEPARTMENT OF TRANSPORTATION

DRAINAGE PLAN AND PROFILE
I-57

SCALE: 1"=50' | SHEET 2 OF 4 SHEETS | STA. 1717+00 TO STA. 1732+00

F.A.I. RTE.	SECTION	COUNTY	TOTAL SHEETS	SHEET NO.
57	(27-38B) BR-1	FORD	185	84

CONTRACT NO. 66K39

ILLINOIS | FED. AID PROJECT

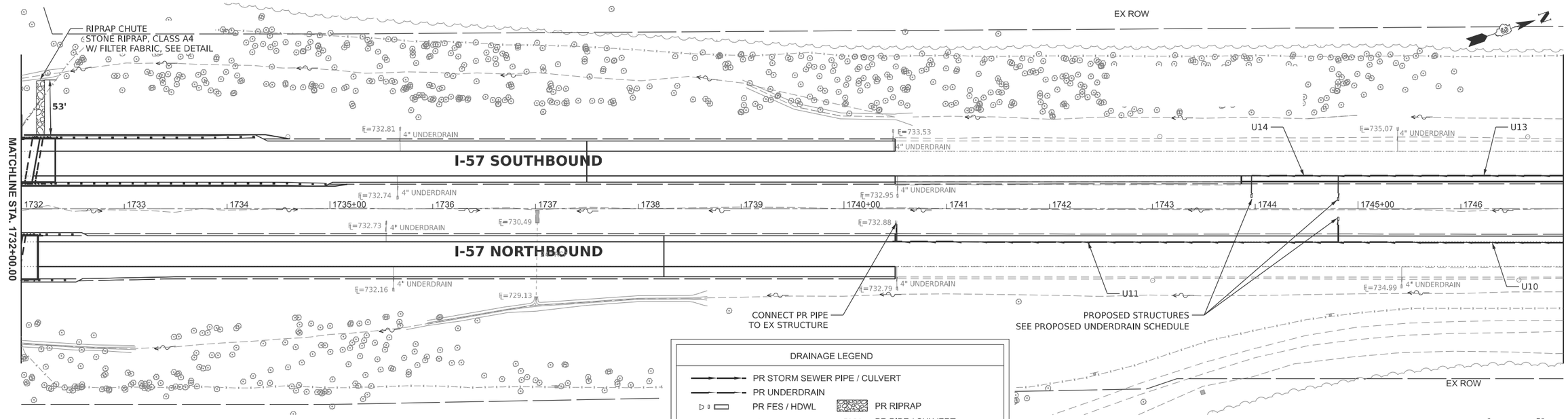

NOTE: SEE THE DRAINAGE SCHEDULE SHEET FOR THE STORM SEWER, UNDERDRAIN PIPE AND STRUCTURE INFORMATION.

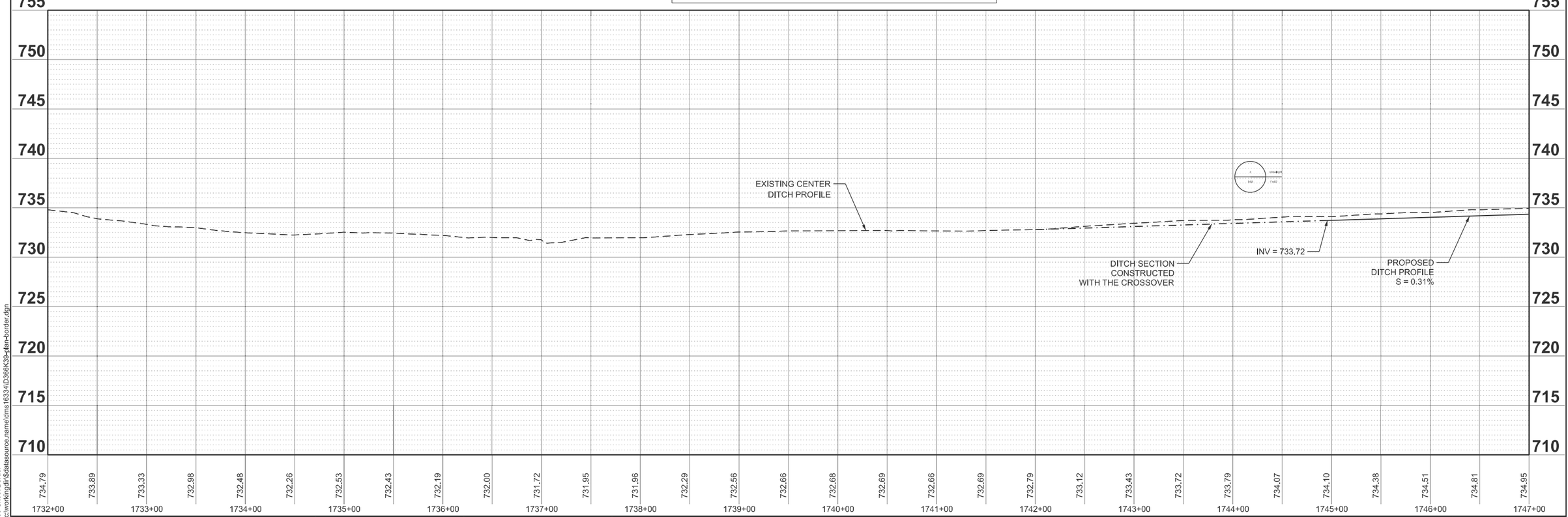

MODEL: 66K39 Sheet Border
FILE NAME: c:\workingdir\$datasource.name\dms16334\D366K39-plan-border.dgn

V3 Companies
7325 Janes Avenue
Woodridge, IL 60517
630 724 9200 phone
www.v3co.com

USER NAME =	DESIGNED - KDC	REVISED -	
	DRAWN - DRP	REVISED -	
	CHECKED - JWB	REVISED -	
PLOT DATE = 02/20/2026	DATE - 02/20/2026	REVISED -	

STATE OF ILLINOIS
DEPARTMENT OF TRANSPORTATION

DRAINAGE PLAN AND PROFILE
I-57

SCALE: 1"=50' | SHEET 3 OF 4 SHEETS | STA. 1732+00 TO STA. 1747+00

F.A.I. RTE.	SECTION	COUNTY	TOTAL SHEETS	SHEET NO.
57	(27-38B) BR-1	FORD	185	85

CONTRACT NO. 66K39

ILLINOIS | FED. AID PROJECT

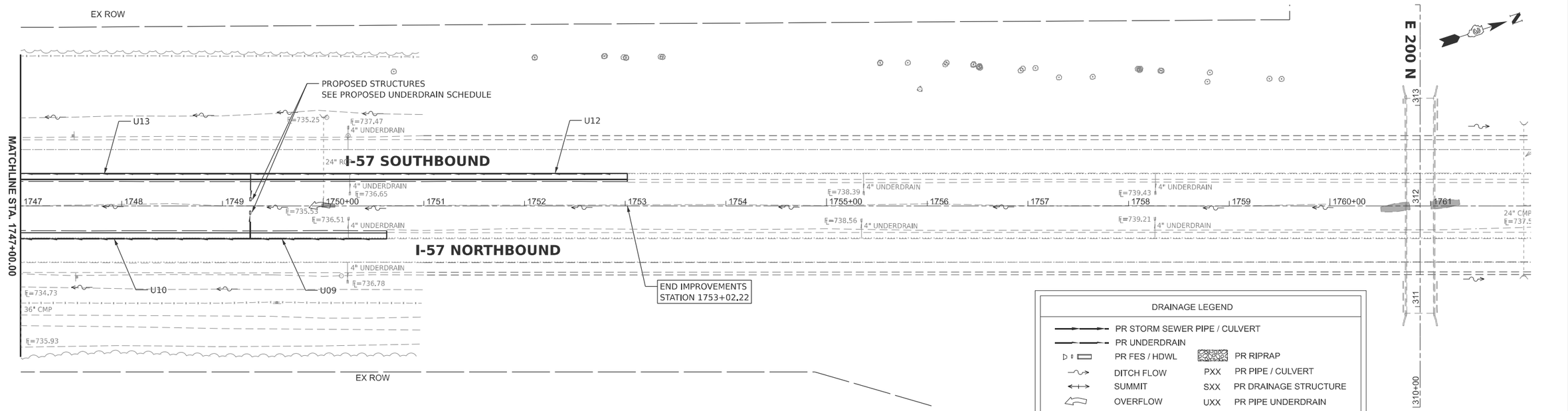

NOTE: SEE THE DRAINAGE SCHEDULE SHEET FOR THE STORM SEWER, UNDERDRAIN PIPE AND STRUCTURE INFORMATION.

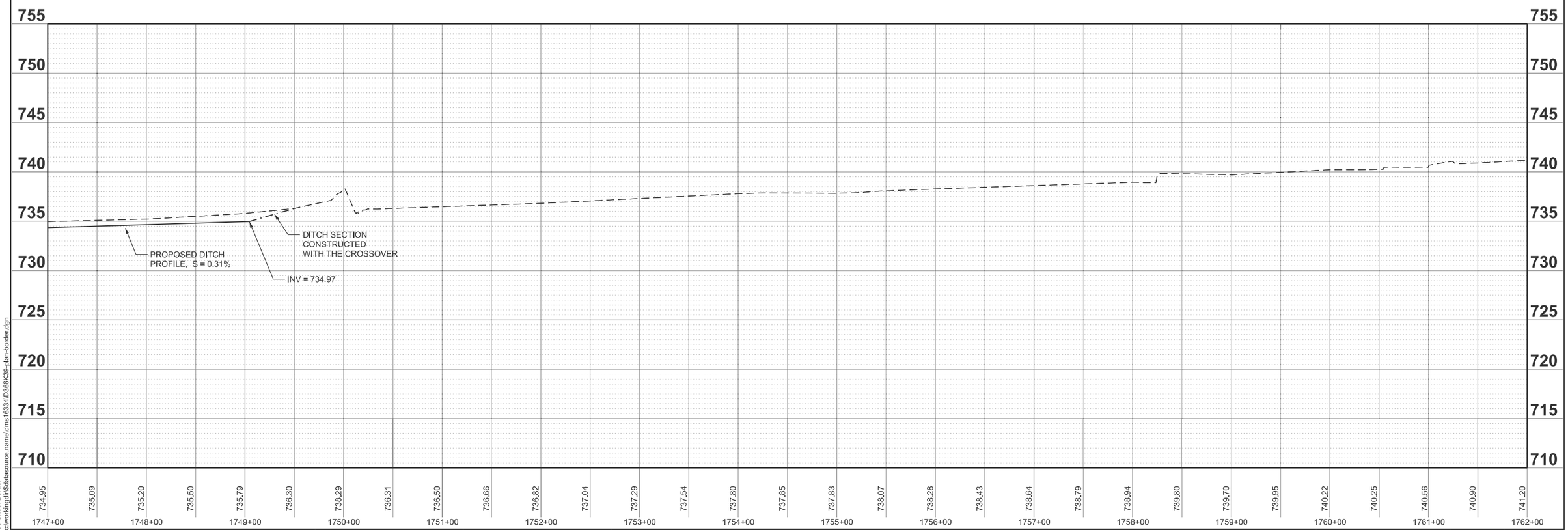

MODEL: 66K39 Sheet Border
FILE NAME: c:\workingdir\$datasource.name\dms16334\D366K39-plan-border.dgn

V3 Companies
7325 Janes Avenue
Woodridge, IL 60517
630 724 9200 phone
www.v3co.com

USER NAME =	DESIGNED - KDC	REVISED -	
	DRAWN - DRP	REVISED -	
	CHECKED - JWB	REVISED -	
PLOT DATE = 02/20/2026	DATE - 02/20/2026	REVISED -	

STATE OF ILLINOIS
DEPARTMENT OF TRANSPORTATION

DRAINAGE PLAN AND PROFILE
I-57

SCALE: 1"=50' | SHEET 4 OF 4 SHEETS | STA. 1747+00 TO STA. 1762+00

F.A.I. RTE.	SECTION	COUNTY	TOTAL SHEETS	SHEET NO.
57	(27-38B) BR-1	FORD	185	86
		CONTRACT NO. 66K39		
		ILLINOIS	FED. AID PROJECT	

PROPOSED PIPE SCHEDULE

PIPE ID	US STATION	US OFFSET	DS STATION	DS OFFSET	US STR	US INVERT	DS STR	DS INVERT	PIPE SLOPE	STORM SEWERS, CLASS A, TYPE 2 24"
										FOOT
P04	1726+00.0	2.57' L	1726+00.0	89.85' L	EX STR	732.04	S03	731.56	0.54%	89

PROPOSED DRAINAGE STRUCTURE SCHEDULE

STRUCTURE ID	STATION	OFFSET	RIM	INVERT	END SECTION 24" (1:4 SLOPE)
					EACH
S03	1726+00.0	89.85' L	--	731.56	1

PROPOSED UNDERDRAIN SCHEDULE

UNDERDRAIN ID	US STATION	US OFFSET	DS STATION	DS OFFSET	CONCRETE HEADWALLS FOR PIPE DRAINS	PIPE UNDERDRAINS 4" (SPECIAL)	PIPE UNDERDRAINS TYPE 3	NOTE
					EACH	FOOT	FOOT	
U01	1708+20.59	32.17' R	1708+53.49	32.17' R		17	33	CONNECT TO EX STRUCTURE
U02	1708+53.49	32.17' R	1711+83.06	32.14' R	1	24	330	
U03	1711+83.06	32.14' R	1716+81.26	32.15' R	1	22	498	
U04	1717+02.39	32.18' R	1717+26.57	32.18' R	1	18	24	
U05	1710+59.59	31.77' L	1711+80.95	32.07' L	1	24	121	
U06	1711+80.95	32.07' L	1716+81.29	32.67' L	1	23	500	
U07	1717+02.39	32.67' L	1718+34.31	32.58' L		18	132	CONNECT TO EX STRUCTURE
U08	1718+34.31	32.58' L	1720+39.41	32.09' L	1	18	205	CONNECT TO EX STRUCTURE
U09	1750+63.16	32.75' R	1749+27.51	32.81' R	1	25	135	
U10	1749+27.51	32.81' R	1744+80.92	32.42' R	1	21	447	
U11	1744+80.92	32.42' R	1740+51.11	32.00' R		18	430	CONNECT TO EX STRUCTURE
U12	1753+02.16	32.20' L	1749+28.04	32.23' L	1	24	374	
U13	1753+02.16	32.20' L	1744+80.85	32.23' L	1	21	447	
U14	1753+02.16	32.20' L	1743+96.54	32.39' L	1	18	84	

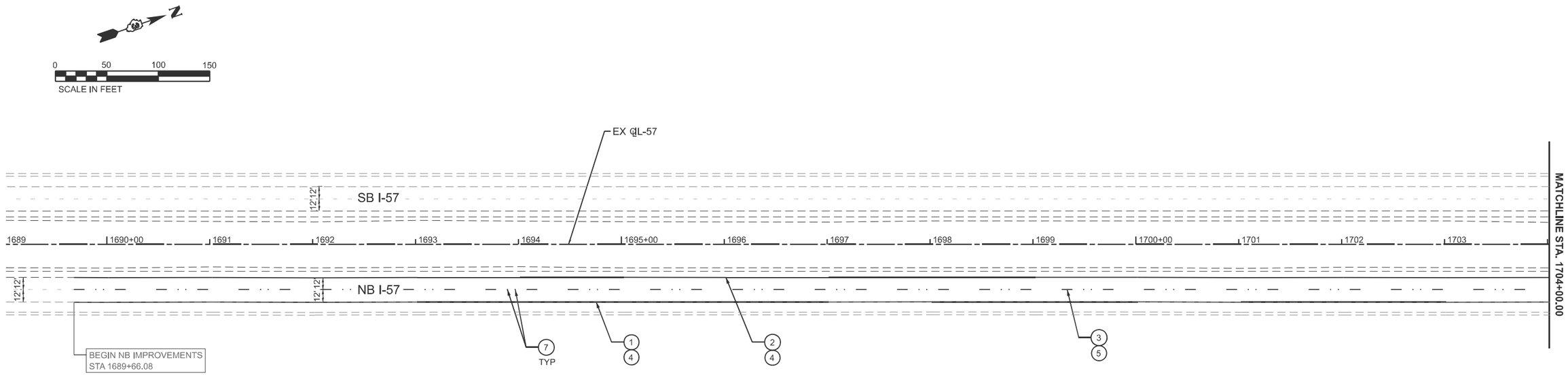

PAVEMENT MARKING LEGEND

1. EPOXY PAVEMENT MARKING - LINE 6" (WHITE)
2. EPOXY PAVEMENT MARKING - LINE 6" (YELLOW)
3. PREFORMED PLASTIC PAVEMENT MARKING, TYPE D - LINE 9" (CONTRAST, 10' - DASH, 30' - SKIP, WHITE)
4. GROOVING FOR RECESSED PAVEMENT MARKING, 7"
5. GROOVING FOR RECESSED PAVEMENT MARKING, 10"
6. RAISED REFLECTIVE PAVEMENT MARKER (2 PER 80' C-C SPACING, TYP. CRYSTAL)
7. REPLACEMENT REFLECTOR
8. SHOULDER RUMBLE STRIPS, 16 INCH

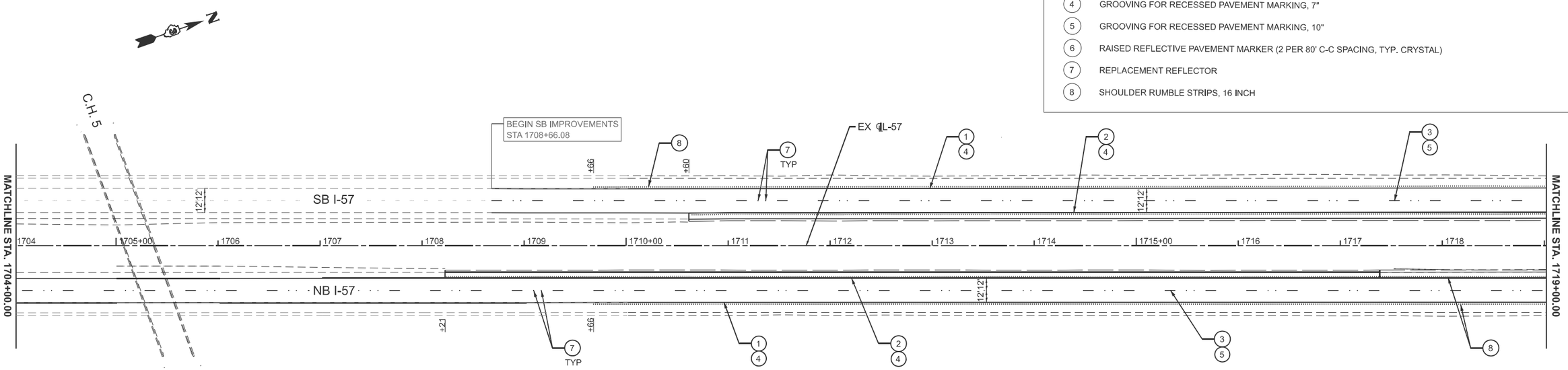

MODEL: PMK-1 Plan
pw:\\v3cwpw.bentley.com:\3cwpw01\Documents\Projects\2025\66K39\2 - Drawings\CADD_Sheets\Roadway\D36K39-\\4PMK.dgn

LIN ENGINEERING,LTD. Consulting Engineers Westmont, Illinois	USER NAME = kcastillo	DESIGNED - JK	REVISED -	STATE OF ILLINOIS DEPARTMENT OF TRANSPORTATION	FAI ROUTE 57 (I-57) PAVEMENT MARKING PLAN
		DRAWN - JK	REVISED -		
	PLOT SCALE = $SCALE$	CHECKED - RC	REVISED -		
	PLOT DATE = 2/19/2026	DATE - 02/20/2026	REVISED -		SCALE: 1"=50' SHEET 1 OF 3 SHEETS STA. 1689+66.08 TO STA. 1719+00.00

F.A.I. RTE.	SECTION	COUNTY	TOTAL SHEETS	SHEET NO.
57	(27-38B) ES	FORD	185	88
		CONTRACT NO. 66K39		
		ILLINOIS	FED. AID PROJECT	

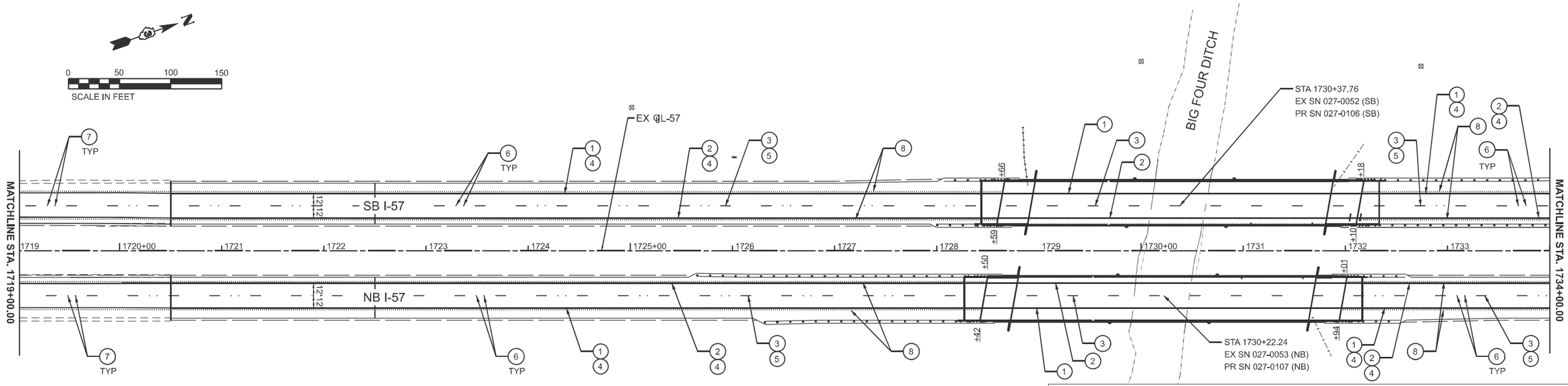

NOTE:
RAISED REFLECTIVE PAVEMENT MARKERS AND GROOVING FOR RECESSED PAVEMENT MARKING SHALL BE OMITTED FROM THE BRIDGE DECKS.

PAVEMENT MARKING LEGEND

1. EPOXY PAVEMENT MARKING - LINE 6" (WHITE)
2. EPOXY PAVEMENT MARKING - LINE 6" (YELLOW)
3. PREFORMED PLASTIC PAVEMENT MARKING, TYPE D - LINE 9" (CONTRAST, 10' - DASH, 30' - SKIP, WHITE)
4. GROOVING FOR RECESSED PAVEMENT MARKING, 7"
5. GROOVING FOR RECESSED PAVEMENT MARKING, 10"
6. RAISED REFLECTIVE PAVEMENT MARKER (2 PER 80' C-C SPACING, TYP. CRYSTAL)
7. REPLACEMENT REFLECTOR
8. SHOULDER RUMBLE STRIPS, 16 INCH

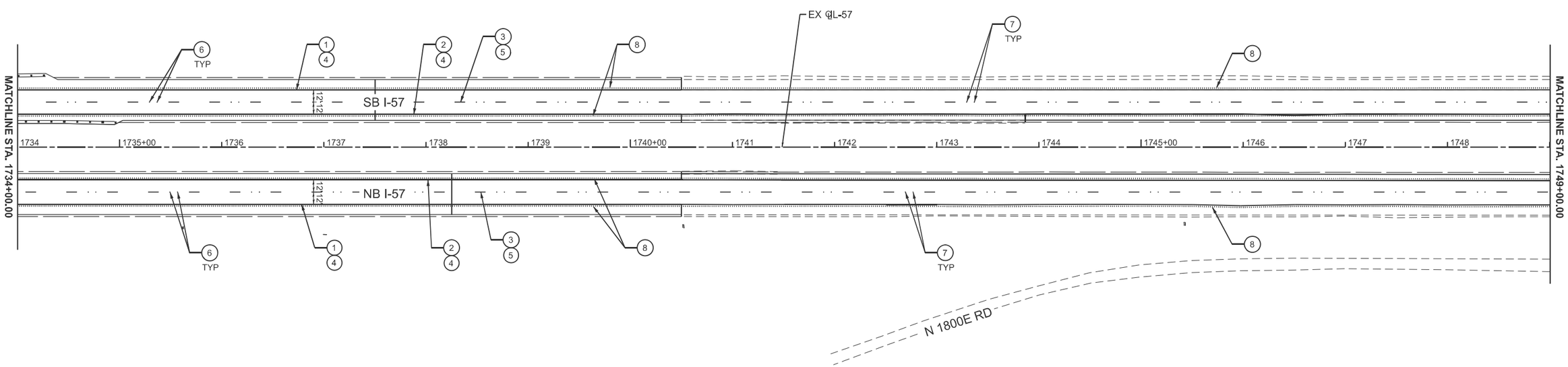

LIN ENGINEERING,LTD. Consulting Engineers Westmont, Illinois	USER NAME = kcastillo	DESIGNED - JK	REVISED -	STATE OF ILLINOIS DEPARTMENT OF TRANSPORTATION	FAI ROUTE 57 (I-57) PAVEMENT MARKING PLAN
		DRAWN - JK	REVISED -		
	PLOT SCALE = $SCALE$	CHECKED - RC	REVISED -		
	PLOT DATE = 2/19/2026	DATE - 02/20/2026	REVISED -		SCALE: 1"=50' SHEET 2 OF 3 SHEETS STA. 1719+00.00 TO STA. 1749+00.00

F.A.I. RTE.	SECTION	COUNTY	TOTAL SHEETS	SHEET NO.
57	(27-38B) ES	FORD	185	89
		CONTRACT NO. 66K39		
		ILLINOIS	FED. AID PROJECT	

MODEL: PMK-2 Plan
pw:\\v3cwpw.bentley.com:\3cwpw01\Documents\Projects\2025\66K39\2 - Drawings\CADD_Sheets\Roadway\036Rk39-ILI4PMK.dgn

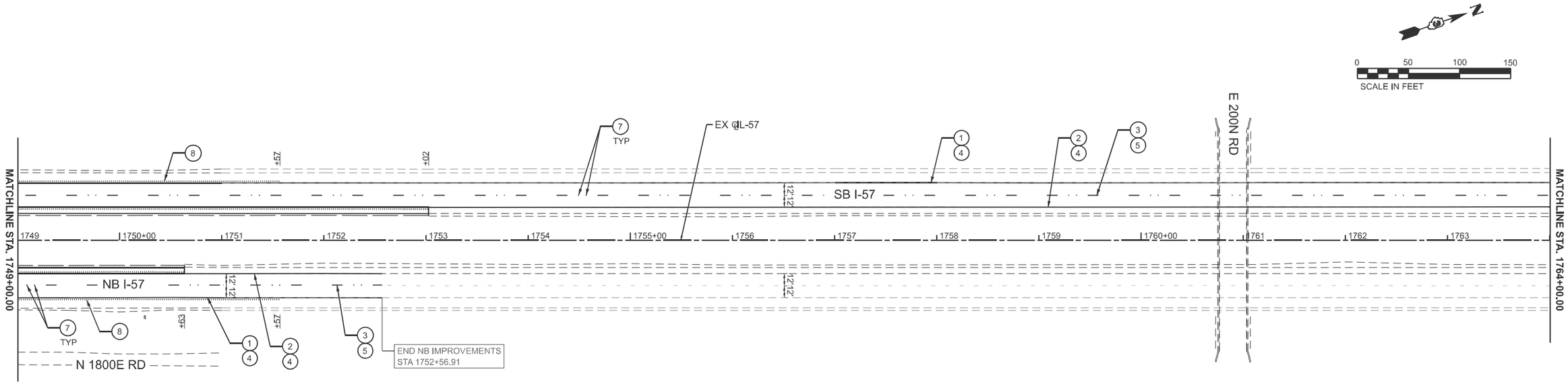

PAVEMENT MARKING LEGEND

1. EPOXY PAVEMENT MARKING - LINE 6" (WHITE)
2. EPOXY PAVEMENT MARKING - LINE 6" (YELLOW)
3. PREFORMED PLASTIC PAVEMENT MARKING, TYPE D - LINE 9" (CONTRAST, 10' - DASH, 30' - SKIP, WHITE)
4. GROOVING FOR RECESSED PAVEMENT MARKING, 7"
5. GROOVING FOR RECESSED PAVEMENT MARKING, 10"
6. RAISED REFLECTIVE PAVEMENT MARKER (2 PER 80' C-C SPACING, TYP. CRYSTAL)
7. REPLACEMENT REFLECTOR
8. SHOULDER RUMBLE STRIPS, 16 INCH

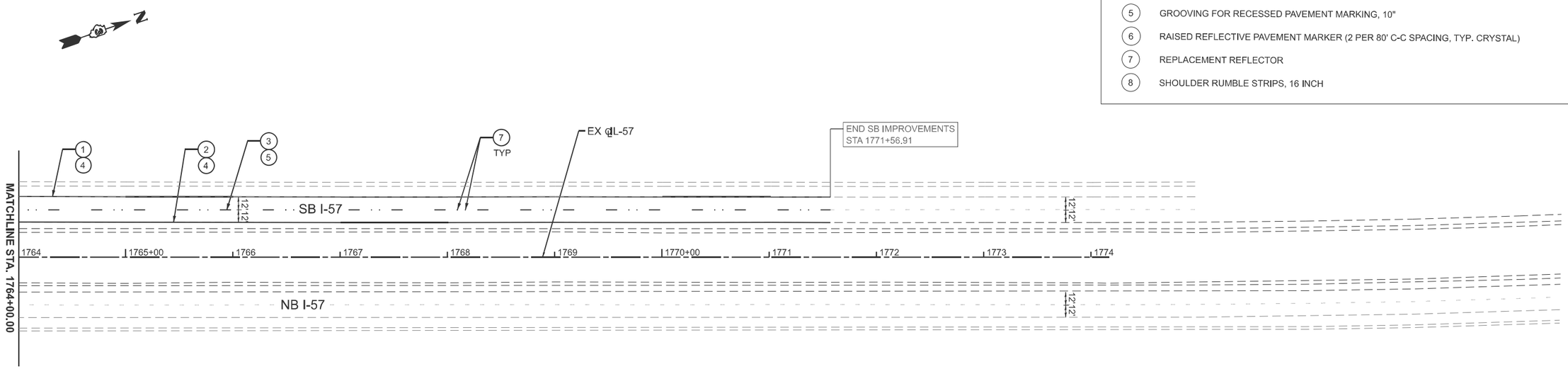

MODEL: PMK-3 Plan
pw://xbcxpw.bentley.com:xbcxpw011\Documents\Projects\2025\66K39\02 - Drawings\CADD_Sheets\Roadway\D366K39sh34PMK.dgn

LIN ENGINEERING, LTD.
Consulting Engineers
Westmont, Illinois

USER NAME = kcastillo	DESIGNED - JK	REVISED -	
	DRAWN - JK	REVISED -	
PLOT SCALE = $SCALE$	CHECKED - RC	REVISED -	
PLOT DATE = 2/19/2026	DATE - 02/20/2026	REVISED -	

STATE OF ILLINOIS
DEPARTMENT OF TRANSPORTATION

FAI ROUTE 57 (I-57)
PAVEMENT MARKING PLAN

SCALE: 1"=50' | SHEET 3 OF 3 SHEETS | STA. 1749+00.00 TO STA. 1771+56.91

F.A.I. RTE.	SECTION	COUNTY	TOTAL SHEETS	SHEET NO.
57	(27-38B) ES	FORD	185	90

CONTRACT NO. 66K39

ILLINOIS | FED. AID PROJECT

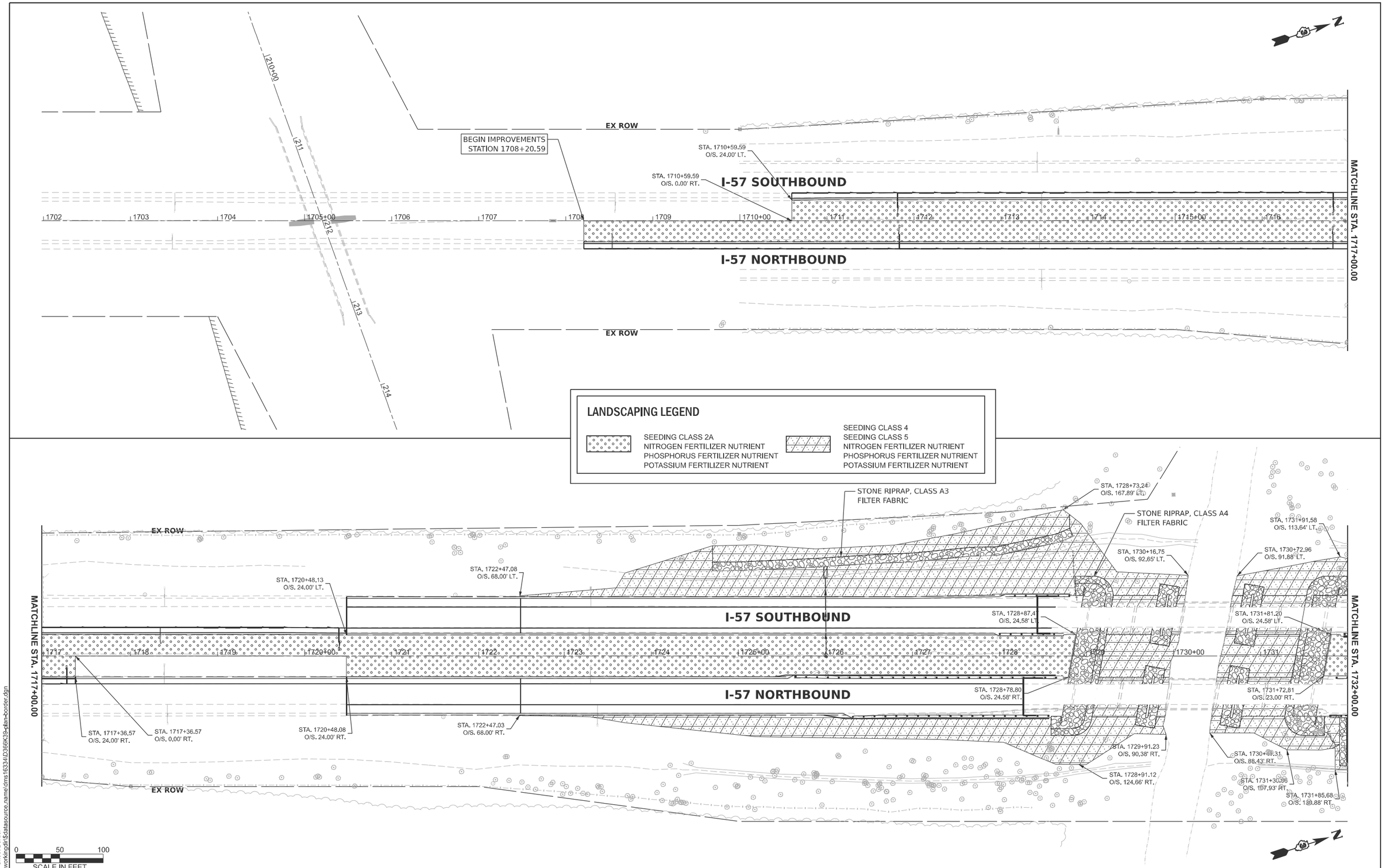

MODEL: 66K39 Sheet Border
FILE NAME: c:\workingdir\$datasource.name\dms16334\D366K39-plan-border.dgn

V3 Companies
7325 Janes Avenue
Woodridge, IL 60517
630 724 9200 phone
www.v3co.com

USER NAME =	DESIGNED - KDC	REVISED -	
	DRAWN - DRP	REVISED -	
	CHECKED - JWB	REVISED -	
PLOT DATE = 02/20/2026	DATE - 02/20/2026	REVISED -	

STATE OF ILLINOIS
DEPARTMENT OF TRANSPORTATION

LANDSCAPING PLAN
I-57

SCALE: 1"=50' | SHEET 1 OF 2 SHEETS | STA. 1702+00 TO STA. 1732+00

F.A.I. RTE.	SECTION	COUNTY	TOTAL SHEETS	SHEET NO.
57	(27-38B) BR-1	FORD	185	91

CONTRACT NO. 66K39

ILLINOIS | FED. AID PROJECT

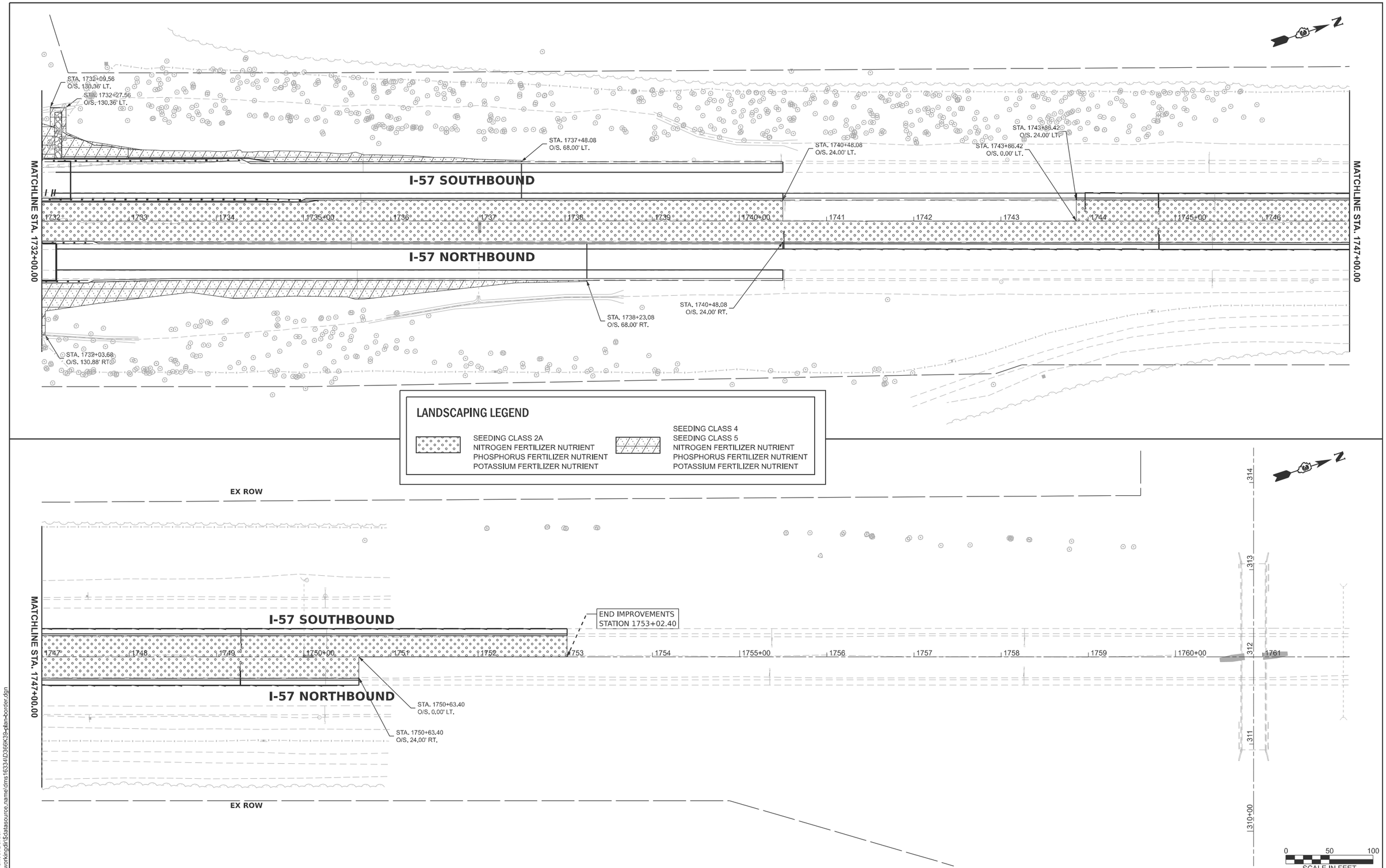

MODEL: 66K39 Sheet Border
FILE NAME: c:\workingdir\$datasource.name\dms16334\D366K39-plan-border.dgn

V3 Companies
7325 Janes Avenue
Woodridge, IL 60517
630 724 9200 phone
www.v3co.com

USER NAME =	DESIGNED - KDC	REVISED -	
	DRAWN - DRP	REVISED -	
	CHECKED - JWB	REVISED -	
PLOT DATE = 02/20/2026	DATE - 02/20/2026	REVISED -	

STATE OF ILLINOIS
DEPARTMENT OF TRANSPORTATION

LANDSCAPING PLAN
I-57

SCALE: 1"=50' | SHEET 2 OF 2 SHEETS | STA. 1762+00 TO STA. 1732+00

F.A.I. RTE.	SECTION	COUNTY	TOTAL SHEETS	SHEET NO.
57	(27-38B) BR-1	FORD	185	92

CONTRACT NO. 66K39

ILLINOIS | FED. AID PROJECT

Benchmark: BM #3 - Cut "□" NE wingwall of SN 027-0053. Sta. 1731+71.11, 61.79' Rt., Elev. 738.773

Existing Structures: Structure 027-0052 (SB) and 027-0053 (NB) were originally constructed in 1968 as Project I-57-5(99)259. The structures are five span bridges (54'-7", 55'-5", 55'-5", 55'-5" and 54'-7") and consist of five 42" deep PPC I-Beams and a 7 1/2" reinforced deck. The bridge is 280'-10" long from back to back of abutments. The out to out of deck width is 36'-0". The existing structure has a 10 degree left forward skew. In 1999, a 2 ½" microsilica concrete overlay was constructed. Aluminum handrails on concrete parapets are present. Each structure will be removed and replaced while traffic is routed to the other side of I-57 via median crossovers.

No Salvage.

DESIGN STRESSES

FIELD UNITS

f'c = 4,000 psi (Superstructure)
f'c = 3,500 psi (Substructure)
fy = 60,000 psi (Reinforcement)

PRECAST PRESTRESSED UNITS

f'c = 8,500 psi
f'ci = 6,500 psi
fpu = 270,000 psi (0.6"∅ low lax. strands)
fpbt = 202,300 psi (0.6"∅ low lax. strands)

DESIGN SPECIFICATIONS

2020 AASHTO LRFD Bridge Design Specifications, 9th Edition

LOADING HL-93

Allow 50#/sq. ft. for future wearing surface.

SEISMIC DATA

Seismic Performance Zone (SPZ) = 1
Design Spectral Acceleration at 1.0 sec. (S_{D1}) = 0.123g
Design Spectral Acceleration at 0.2 sec. (S_{DS}) = 0.204g
Soil Site Class = D

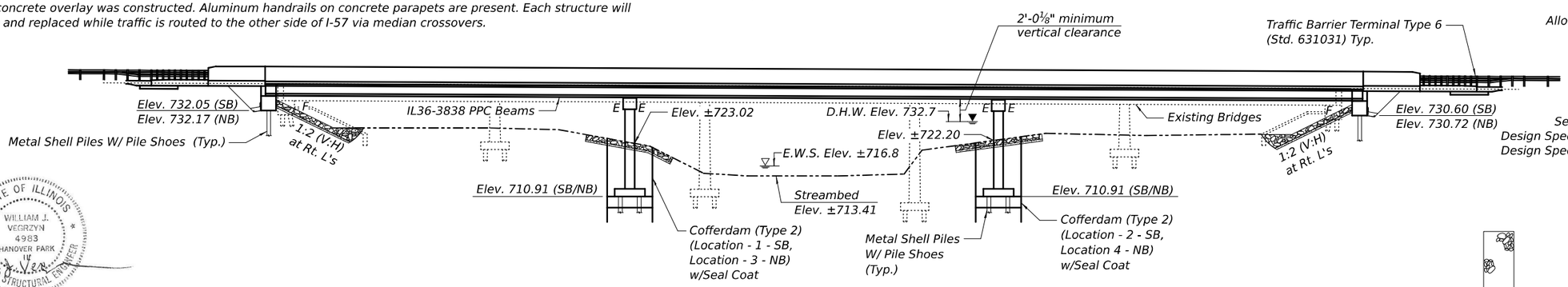

ELEVATION

Notes:
See sheet 2 of 48 for Section A-A and Section B-B.

STATE OF ILLINOIS
WILLIAM J. VEGRZYN
4983
HANOVER PARK
LICENSED STRUCTURAL ENGINEER

10/22/2025
William J. Vegrzyn, Illinois S.E. 4983 Date
Expires 11/30/2026

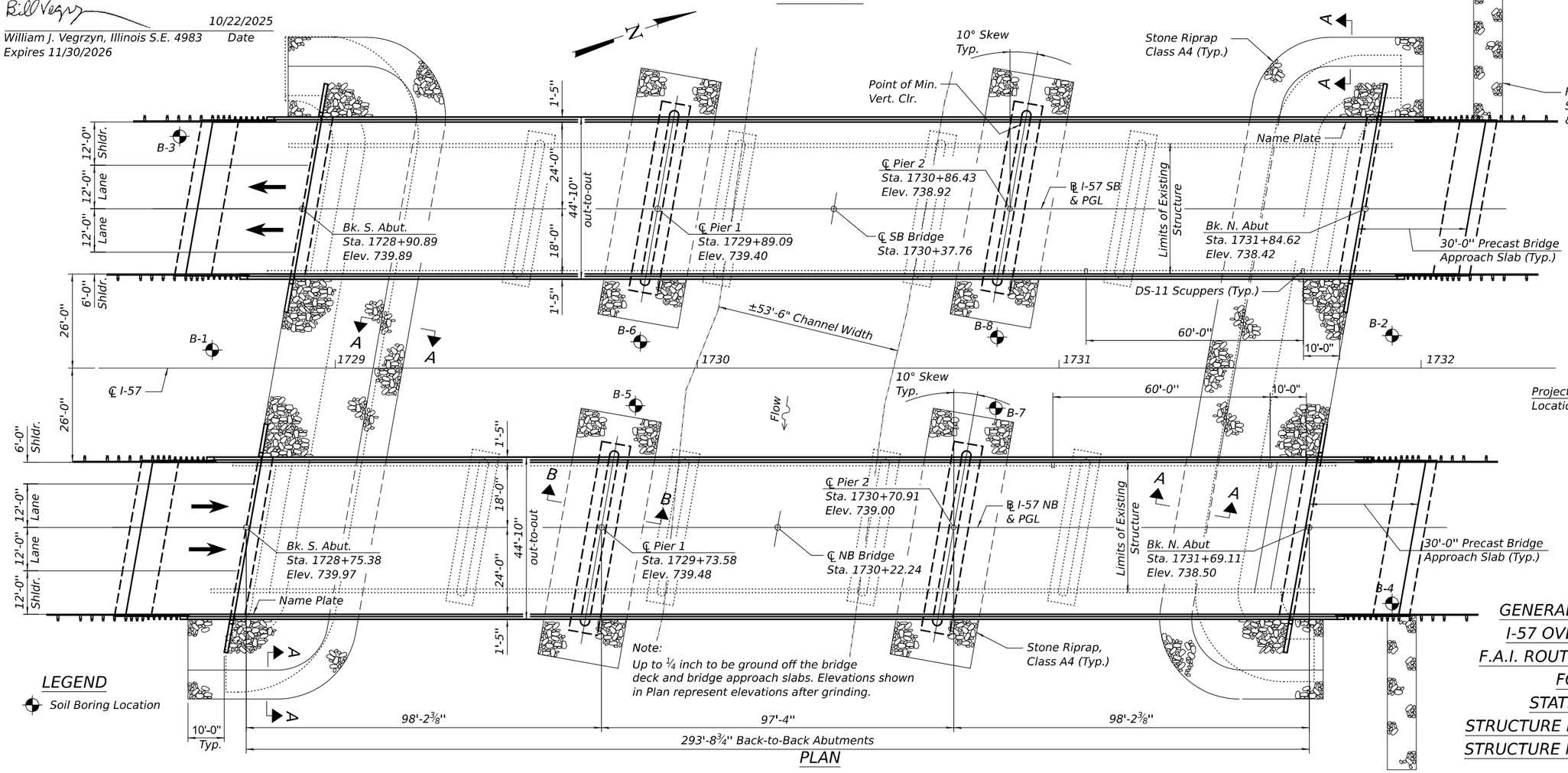

Note:
Up to ¼ inch to be ground off the bridge deck and bridge approach slabs. Elevations shown in Plan represent elevations after grinding.

PLAN

APPROVED
For Structural Adequacy Only
Engineer of Bridges & Structures

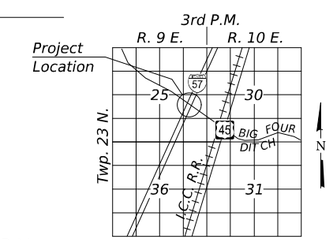

LOCATION SKETCH

LEGEND

Soil Boring Location

GENERAL PLAN & ELEVATION
I-57 OVER BIG FOUR DITCH
F.A.I. ROUTE 57 - SEC. (27-38B)ES
FORD COUNTY
STATION 1730+30.00
STRUCTURE NUMBER 027-0106 (S.B.)
STRUCTURE NUMBER 027-0107 (N.B.)

MODEL: 66K39 Sheet Border
FILE NAME: c:\workingdir\$datasource.name\dms16334\D366K39-plan-border.dgn

V3 Companies
7325 Janes Avenue
Woodridge, IL 60517
630 724 9200 phone
www.v3co.com

USER NAME =	DESIGNED - LKF	REVISED -	
	DRAWN - LJM	REVISED -	
	CHECKED - WJV	REVISED -	
PLOT DATE = 02/20/2026	DATE - 02/20/2026	REVISED -	

STATE OF ILLINOIS
DEPARTMENT OF TRANSPORTATION

SCALE: SHEET 1 OF 48 SHEETS STA. TO STA.

F.A.I. RTE.	SECTION	COUNTY	TOTAL SHEETS	SHEET NO.
57	(27-38B) BR-1	FORD	185	93

CONTRACT NO. 66K39
ILLINOIS FED. AID PROJECT

GENERAL NOTES

Reinforcement bars designated (E) shall be epoxy coated.
Slipforming of the parapets is not allowed.
The Seal coat design thickness is estimated based on the Cofferdam Design Water Elevation (CDWE) shown. Final cofferdam design, details and seal coat thickness shall be submitted to the Engineer for approval.
Layout of the slope protection system may be varied to suit ground conditions in the field as directed by the Engineer.

STA. 1730+37.76
BUILT 20 BY
STATE OF ILLINOIS
F.A.I. RT. 57 - SEC. (27-38B)ES
LOADING HL-93
STR. NO. 027-0106

STA. 1730+22.24
BUILT 20 BY
STATE OF ILLINOIS
F.A.I. RT. 57 - SEC. (27-38B)ES
LOADING HL-93
STR. NO. 027-0107

NAME PLATES

See Std. 515001

INDEX OF SHEETS

1. General Plan and Elevation
2. General Data
3. Substructure Layout
4-5. Stage Construction Details
6-11. Top of Slab Elevations
12-13. Top of Approach Slab Elevations
14. Superstructure - SB
15. Superstructure - NB
16. Superstructure Details - I
17-18. Diaphragm Details
19. Superstructure Details - II
20. Partial Depth Precast Bridge Approach Slab - SB
21. Partial Depth Precast Bridge Approach Slab - NB
22-23. Partial Depth Precast Bridge Approach Slab Details
24. Preformed Joint Strip Details
25. Drainage Scupper, DS-11
26. Framing Plan
27. Framing Details
28. IL36 Beam Span 1 & 3
29. IL36 Beam Span 2
30. IL36 Beam Details
31. Bearing Details
32. South Abutment - SB
33. North Abutment - SB
34. South Abutment - NB
35. North Abutment - NB
36. Pier 1 & 2 - SB
37. Pier 1 & 2 - NB
38. Pier Details
39. Metal Shell Pile Details
40. Bar Splicer and Mechanical Splicer Details
41-48. Soil Boring Logs

TOTAL BILL OF MATERIAL

ITEM	UNIT	SUPER	SUB	TOTAL
Stone Riprap, Class A4	Sq. Yd.	-	2,050	2,050
Filter Fabric	Sq. Yd.	-	1,846	1,846
Removal of Existing Structures	Each	-	-	2
Structure Excavation	Cu. Yd.	-	341.4	341.4
Cofferdam Excavation	Cu. Yd.	-	992	992
Cofferdam (Type 2) (Location - 1)	Each	-	1	1
Cofferdam (Type 2) (Location - 2)	Each	-	1	1
Cofferdam (Type 2) (Location - 3)	Each	-	1	1
Cofferdam (Type 2) (Location - 4)	Each	-	1	1
Concrete Structures	Cu. Yd.	-	593.8	593.8
Concrete Superstructure	Cu. Yd.	1,091.7	-	1,091.7
Seal Coat Concrete	Cu. Yd.	-	214	214
Protective Coat	Sq. Yd.	3,919	-	3,919
Furnishing and Erecting Precast Prestressed Concrete Beams, IL36	Foot	3,468	-	3,468
Reinforcement Bars, Epoxy Coated	Pound	291,270	85,270	376,540
Mechanical Splicers	Each	-	632	632
Furnishing Metal Shell Piles 16" X 0.312"	Foot	-	3,189	3,189
Driving Piles	Foot	-	3,189	3,189
Test Pile Metal Shells	Each	-	8	8
Pile Shoes	Each	-	96	96
Name Plates	Each	2	-	2
Preformed Joint Strip Seal	Foot	174	-	174
Elastomeric Bearing Assembly, Type I	Each	48	-	48
Anchor Bolts, 1 1/4"	Each	96	-	96
Granular Backfill for Structures	Cu. Yd.	-	1,039	1,039
Geocomposite Wall Drain	Sq. Yd.	-	171	171
Pipe Underdrains for Structures, 4"	Foot	-	264	264
Bridge Deck Grooving (Longitudinal)	Sq. Yd.	1,876	-	1,876
Concrete Wearing Surface, 5"	Sq. Yd.	586	-	586
Precast Bridge Approach Slab	Sq. Ft.	5,270	-	5,270
Bar Terminators	Each	160	832	992
Drainage Scuppers, DS-11	Each	4	-	4
Diamond Grinding (Bridge Section)	Sq. Yd.	2,970	-	2,970

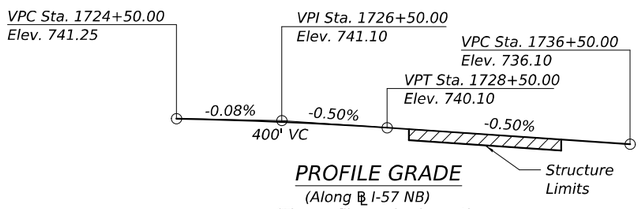

PROFILE GRADE

(Along ℄ I-57 NB)
(The profile grade shows the final grade after grinding)

BYPASS FLOWRATE FROM BRIDGE LIMITS (END OF APPROACH SLAB) TO ROADWAY (SN 027-0106)

	SW Curbline	SE Curbline	NW Curbline	NE Curbline
Q (C.F.S.)	N/A	N/A	1.170	0.460

BYPASS FLOWRATE FROM BRIDGE LIMITS (END OF APPROACH SLAB) TO ROADWAY (SN 027-0107)

	SW Curbline	SE Curbline	NW Curbline	NE Curbline
Q (C.F.S.)	N/A	N/A	0.460	1.170

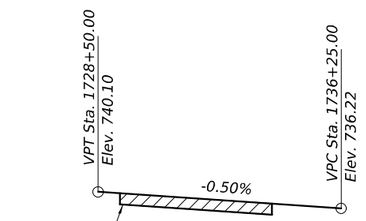

PROFILE GRADE

(Along ℄ I-57 SB)
(The profile grade shows the final grade after grinding)

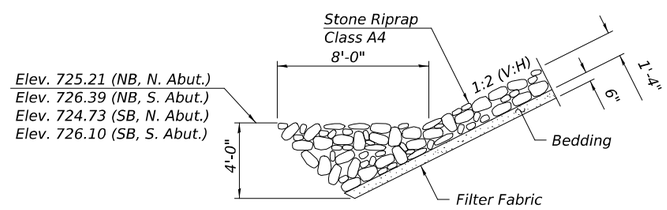

SECTION A-A

DESIGN SCOUR ELEVATION TABLE

Event / Limit State	Design Scour Elevations (ft.) S. Abut.	Pier 1	Pier 2	N. Abut.	Item 113
Q100	-	707.41	707.41	-	5
Q200	-	706.95	706.95	-	
Design	732.05 (SB) 732.17 (NB)	707.41	707.41	730.60 (SB) 730.72 (NB)	
Check	732.05 (SB) 732.17 (NB)	706.95	706.95	730.60 (SB) 730.72 (NB)	

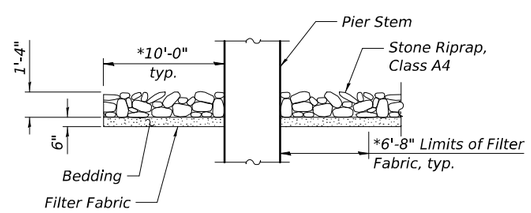

SECTION B-B

* Dimension also applies to pier ends.

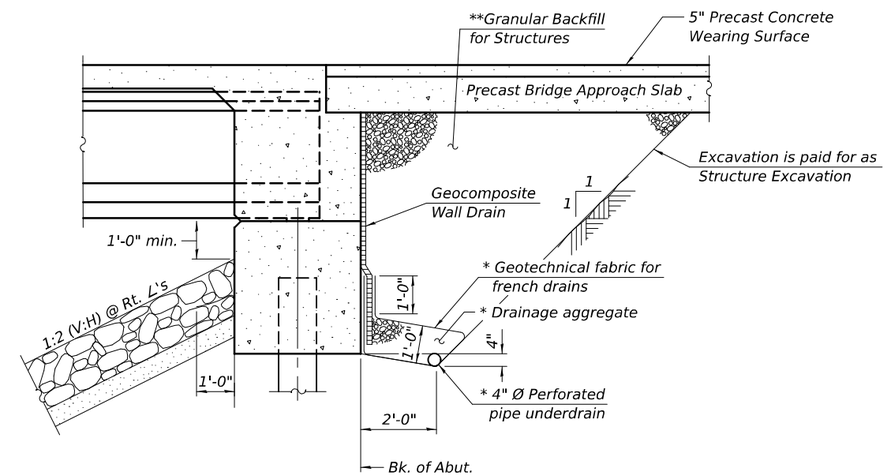

SECTION THRU INTEGRAL ABUTMENT

(Horiz. dim. at Rt. ∠'s)

* Included in the cost of Pipe Underdrains for Structures.
** Granular Backfill for Structures shall follow Standard Specification 586 except the course aggregate shall be grade CA 7, CA 11, or CA 14.

WATERWAY INFORMATION

Drainage Area = 157.2 Sq. Mi. Low Grade Elev. - 735.87 @ Sta. 1738+40

Flood	Freq. Yr.	Q C.F.S.	Opening Ft² Exist.	Opening Ft² Prop.	Nat. H.W.E.	Head - Ft. Exist.	Head - Ft. Prop.	Headwater El. Exist.	Headwater El. Prop.
	10	5,360	2,147	2,212	730.4	0.3	0.3	730.7	730.7
Design	50	8,160	2,727	2,768	732.7	0.4	0.4	733.1	733.0
Base	100	9,340	2,766	2,987	733.5	0.6	0.4	734.1	733.9
Scour Check	200	10,580	2,766	3,208	734.4	0.7	0.4	735.1	734.8

10 Year velocity through existing bridge = 2.6 ft/s
10 Year velocity through proposed bridge = 2.5 ft/s

Note:
All drainage system components shall extend to 2'-0" from the end of each wingwall except an outlet pipe shall extend until intersecting with the side slopes. The pipes shall drain into concrete headwalls. (See Article 601.05 of the Standard Specifications and Highway Standard 601101).

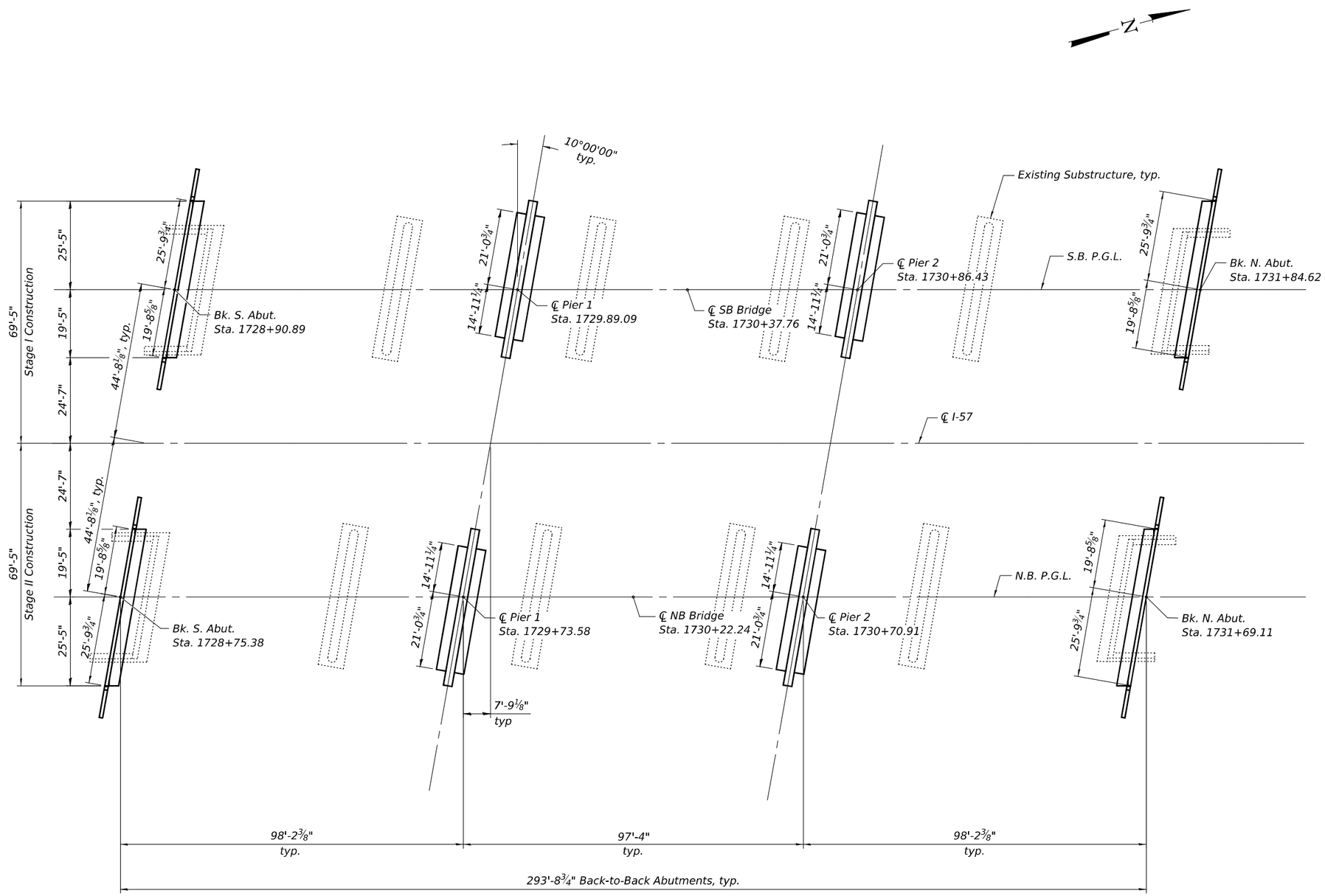

PLAN

MODEL: 66K39 Sheet Border
FILE NAME: c:\workingdir\$datasource.name\dms16334\D366K39-plan-border.dgn

V3 Companies
7325 Janes Avenue
Woodridge, IL 60517
630 724 9200 phone
www.v3co.com

USER NAME =	DESIGNED - LKF	REVISED -	
	DRAWN - CM	REVISED -	
	CHECKED - WJV	REVISED -	
PLOT DATE = 02/20/2026	DATE - 02/20/2026	REVISED -	

STATE OF ILLINOIS
DEPARTMENT OF TRANSPORTATION

SUBSTRUCTURE LAYOUT
STRUCTURE NO. 027-0106 (S.B.) & 027-0107 (N.B.)

SCALE: | SHEET 3 OF 48 SHEETS | STA. | TO STA.

F.A.I. RTE.	SECTION	COUNTY	TOTAL SHEETS	SHEET NO.
57	(27-38B) BR-1	FORD	185	95

CONTRACT NO. 66K39

ILLINOIS | FED. AID PROJECT

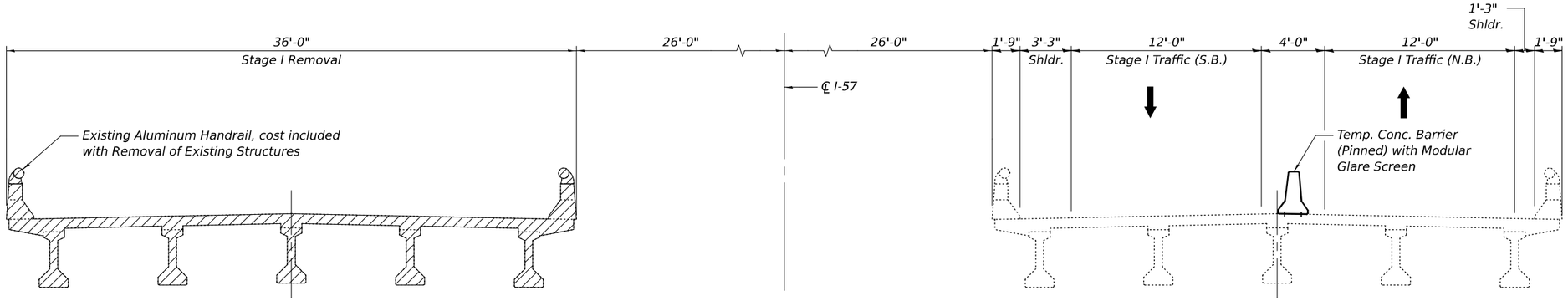

SOUTHBOUND

NORTHBOUND

STAGE 2 REMOVAL

(Looking North)

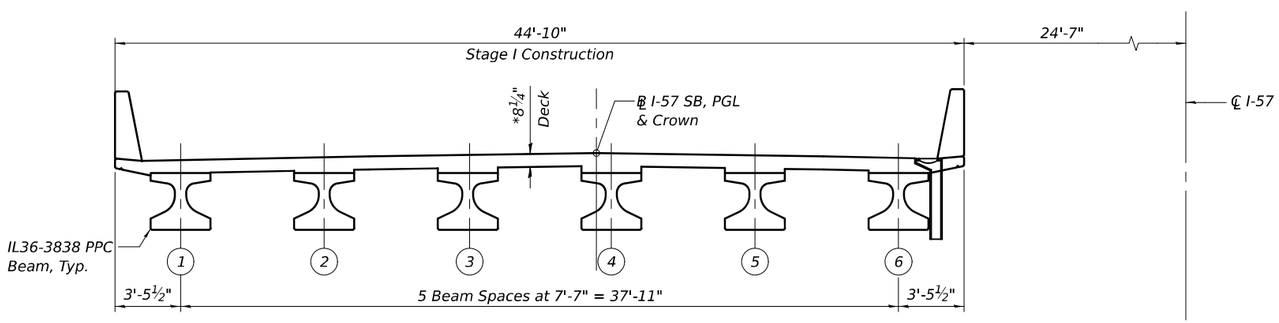

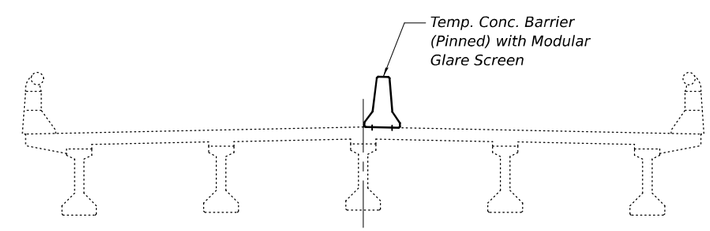

SOUTHBOUND

NORTHBOUND

STAGE 2 CONSTRUCTION

(Looking North)

*Dimension prior to grinding. Up to ¼" will be ground off the bridge deck.

Notes:
Hatching represents limits of Removal of Existing Structures.
See staging plans for quantity of Temporary Concrete Barrier.

MODEL: 66K39 Sheet Border
FILE NAME: c:\workingdir\$datasource.name\dms16334\D366K39-plan-border.dgn

V3 Companies
7325 Janes Avenue
Woodridge, IL 60517
630 724 9200 phone
www.v3co.com

USER NAME =	DESIGNED - LKF	REVISED -	
	DRAWN - CM	REVISED -	
	CHECKED - WJV	REVISED -	
PLOT DATE = 02/20/2026	DATE - 02/20/2026	REVISED -	

STATE OF ILLINOIS
DEPARTMENT OF TRANSPORTATION

STAGE CONSTRUCTION DETAILS - I
STRUCTURE NO. 027-0106 (S.B.) & 027-0107 (N.B.)

SCALE: SHEET 4 OF 48 SHEETS STA. TO STA.

F.A.I. RTE.	SECTION	COUNTY	TOTAL SHEETS	SHEET NO.
57	(27-38B) BR-1	FORD	185	96
		CONTRACT NO. 66K39		
	ILLINOIS	FED. AID PROJECT		

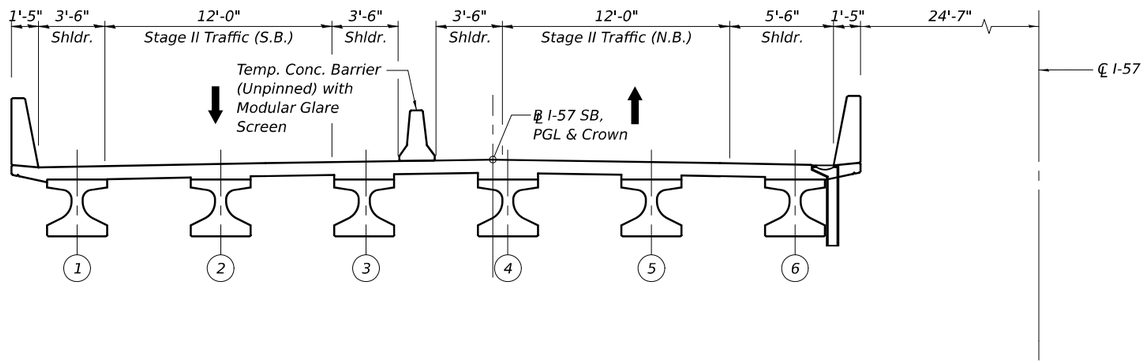

SOUTHBOUND

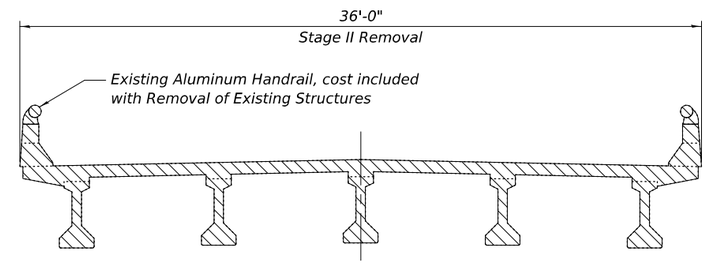

NORTHBOUND

STAGE 3 REMOVAL

(Looking North)

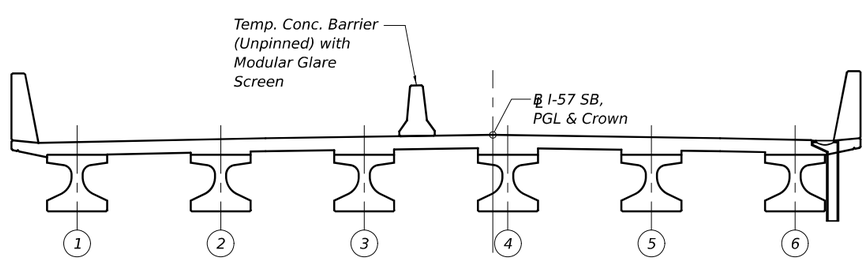

SOUTHBOUND

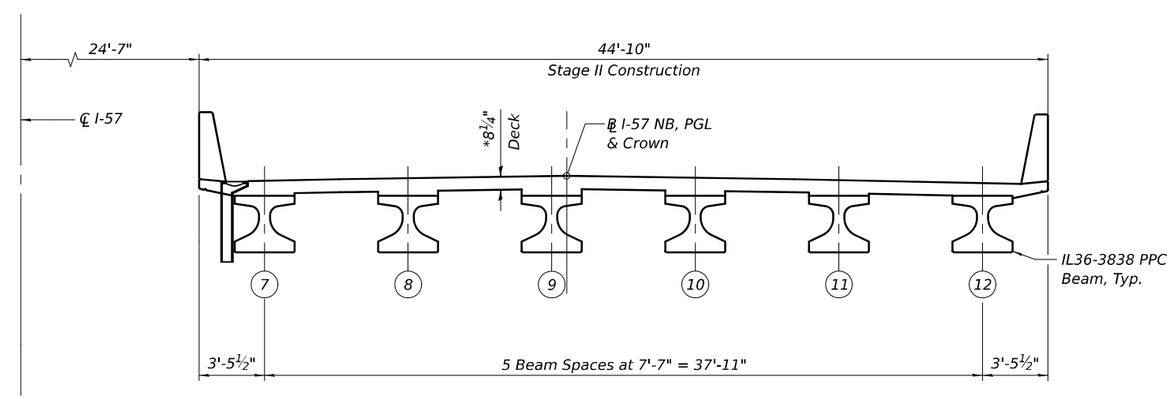

NORTHBOUND

*Dimension prior to grinding. Up to ¼" will be ground off the bridge deck.

STAGE 3 CONSTRUCTION

(Looking North)

Notes:
Hatching represents limits of Removal of Existing Structures.
See staging plans for quantity of Temporary Concrete Barrier.

MODEL: 66K39 Sheet Border
FILE NAME: c:\workingdir\$datasource.name\dms16334\D366K39-plan-border.dgn

V3 Companies
7325 Janes Avenue
Woodridge, IL 60517
630 724 9200 phone
www.v3co.com

USER NAME =	DESIGNED - LKF	REVISED -	
	DRAWN - CM	REVISED -	
	CHECKED - WJV	REVISED -	
PLOT DATE = 02/20/2026	DATE - 02/20/2026	REVISED -	

STATE OF ILLINOIS
DEPARTMENT OF TRANSPORTATION

STAGE CONSTRUCTION DETAILS - II
STRUCTURE NO. 027-0106 (S.B.) & 027-0107 (N.B.)

SCALE: SHEET 5 OF 48 SHEETS STA. TO STA.

F.A.I. RTE.	SECTION	COUNTY	TOTAL SHEETS	SHEET NO.
57	(27-38B) BR-1	FORD	185	97
		CONTRACT NO. 66K39		
	ILLINOIS	FED. AID PROJECT		

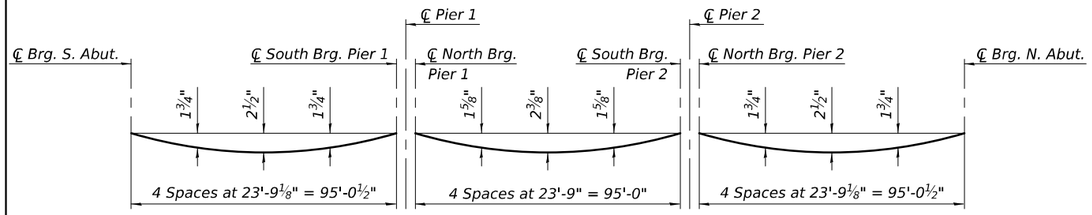

DEAD LOAD DEFLECTION DIAGRAM

(Includes weight of concrete, excluding beams).

Note:

The above deflections are not to be used in the field if the engineer is working from the grade elevations adjusted for dead load deflections and grinding as shown on sheets 7 thru 11 of 48.

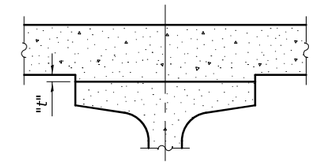

To determine "t": After all precast prestressed beams have been erected, elevations of the top flanges of the beams shall be taken at intervals shown below. These elevations subtracted from the "Theoretical Grade Elevations Adjusted for Dead Load Deflection and Grinding" shown on sheets 7 thru 11 of 48, minus the initial slab thickness prior to grinding, equals the fillet heights "t" above top flange of beams.

The slab is to be ground after curing to achieve smoothness, but the slab is not to be ground to elevations below the "Theoretical Grade Elevations" shown on sheets 7 thru 11 of 48. For grinding the deck, see Special Provisions.

FILLET HEIGHTS

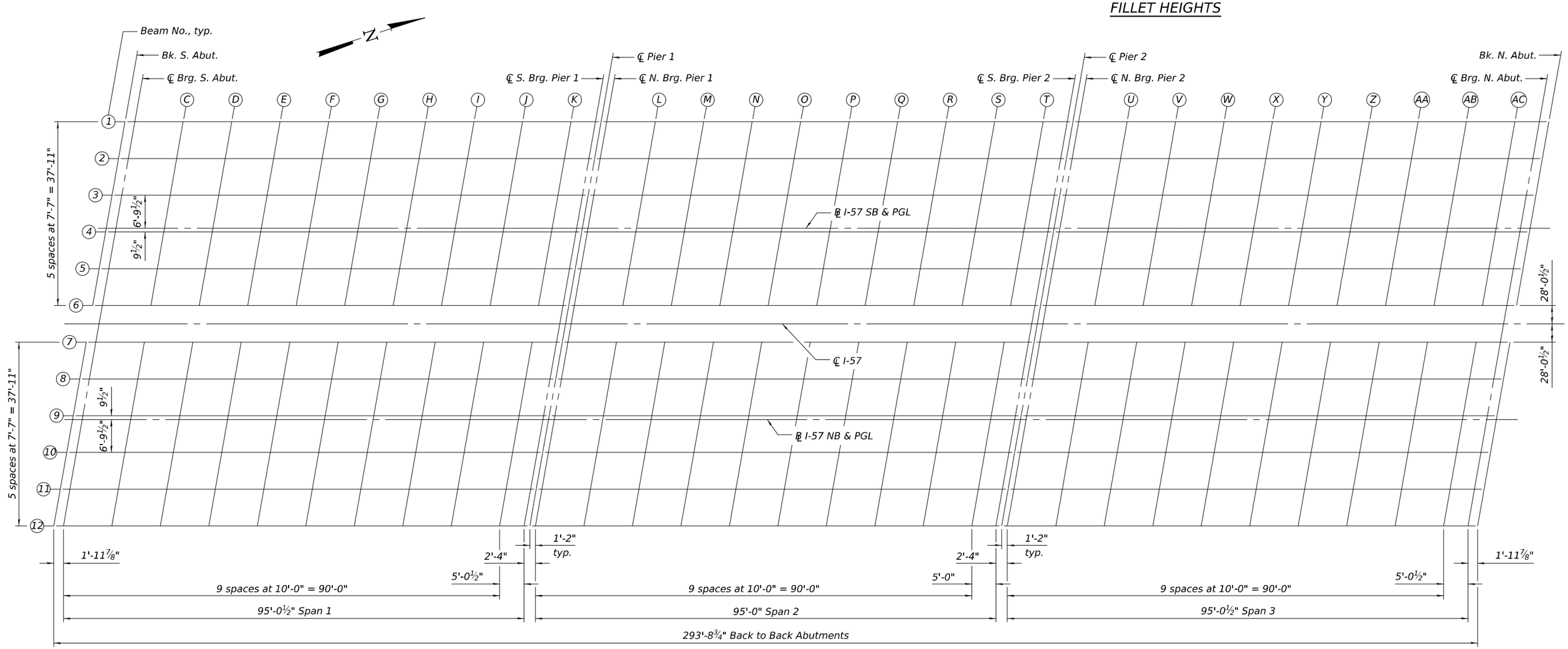

PLAN

MODEL: 66K39 Sheet Border
FILE NAME: c:\workingdir\$datasource.name\dms16334\D366K39-plan-border.dgn

V3 Companies
7325 Janes Avenue
Woodridge, IL 60517
630 724 9200 phone
www.v3co.com

USER NAME =	DESIGNED - LKF	REVISED -	
	DRAWN - LJM	REVISED -	
	CHECKED - WJV	REVISED -	
PLOT DATE = 02/20/2026	DATE - 02/20/2026	REVISED -	

STATE OF ILLINOIS
DEPARTMENT OF TRANSPORTATION

TOP OF SLAB ELEVATIONS - LAYOUT
STRUCTURE NO. 027-0106 (S.B.) & 027-0107 (N.B.)

SCALE: | SHEET 6 OF 48 SHEETS | STA. | TO STA.

F.A.I. RTE.	SECTION	COUNTY	TOTAL SHEETS	SHEET NO.
57	(27-38B) BR-1	FORD	185	98
		CONTRACT NO. 66K39		
	ILLINOIS	FED. AID PROJECT		

BEAM 1

Location	Station	Offset	Theoretical Grade Elevations	Theoretical Grade Elevations Adjusted For Dead Load Deflection and Grinding
Bk. S. Abut.	1728+94.76	-21.96	739.49	739.51
℄ Brg. S. Abut.	1728+96.75	-21.96	739.48	739.50
C	1729+06.75	-21.96	739.43	739.52
D	1729+16.75	-21.96	739.38	739.53
E	1729+26.75	-21.96	739.33	739.52
F	1729+36.75	-21.96	739.28	739.50
G	1729+46.75	-21.96	739.23	739.46
H	1729+56.75	-21.96	739.18	739.38
I	1729+66.75	-21.96	739.13	739.30
J	1729+76.75	-21.96	739.08	739.20
K	1729+86.75	-21.96	739.03	739.09
℄ S. Brg Pier 1	1729+91.80	-21.96	739.01	739.03
℄ Pier 1	1729+92.96	-21.96	739.00	739.02
℄ N. Brg Pier 1	1729+94.13	-21.96	739.00	739.02
L	1730+04.13	-21.96	738.95	739.03
M	1730+14.13	-21.96	738.90	739.04
N	1730+24.13	-21.96	738.85	739.02
O	1730+34.13	-21.96	738.80	739.00
P	1730+44.13	-21.96	738.75	738.96
Q	1730+54.13	-21.96	738.70	738.89
R	1730+64.13	-21.96	738.65	738.81
S	1730+74.13	-21.96	738.60	738.71
T	1730+84.13	-21.96	738.55	738.60
℄ S. Brg Pier 2	1730+89.14	-21.96	738.52	738.54
℄ Pier 2	1730+90.30	-21.96	738.52	738.54
℄ N. Brg Pier 2	1730+91.47	-21.96	738.51	738.53
U	1731+01.47	-21.96	738.46	738.54
V	1731+11.47	-21.96	738.41	738.55
W	1731+21.47	-21.96	738.36	738.54
X	1731+31.47	-21.96	738.31	738.52
Y	1731+41.47	-21.96	738.26	738.49
Z	1731+51.47	-21.96	738.21	738.41
AA	1731+61.47	-21.96	738.16	738.33
AB	1731+71.47	-21.96	738.11	738.23
AC	1731+81.47	-21.96	738.06	738.11
℄ Brg. N. Abut.	1731+86.50	-21.96	738.04	738.06
Bk. N. Abut.	1731+88.49	-21.96	738.03	738.05

BEAM 2

Location	Station	Offset	Theoretical Grade Elevations	Theoretical Grade Elevations Adjusted For Dead Load Deflection and Grinding
Bk. S. Abut.	1728+93.42	-14.38	739.65	739.67
℄ Brg. S. Abut.	1728+95.41	-14.38	739.64	739.66
C	1729+05.41	-14.38	739.59	739.68
D	1729+15.41	-14.38	739.54	739.69
E	1729+25.41	-14.38	739.49	739.68
F	1729+35.41	-14.38	739.44	739.66
G	1729+45.41	-14.38	739.39	739.62
H	1729+55.41	-14.38	739.34	739.54
I	1729+65.41	-14.38	739.29	739.46
J	1729+75.41	-14.38	739.24	739.36
K	1729+85.41	-14.38	739.19	739.24
℄ S. Brg Pier 1	1729+90.46	-14.38	739.17	739.19
℄ Pier 1	1729+91.62	-14.38	739.16	739.18
℄ N. Brg Pier 1	1729+92.79	-14.38	739.16	739.18
L	1730+02.79	-14.38	739.11	739.18
M	1730+12.79	-14.38	739.06	739.19
N	1730+22.79	-14.38	739.01	739.18
O	1730+32.79	-14.38	738.96	739.16
P	1730+42.79	-14.38	738.91	739.12
Q	1730+52.79	-14.38	738.86	739.05
R	1730+62.79	-14.38	738.81	738.97
S	1730+72.79	-14.38	738.76	738.86
T	1730+82.79	-14.38	738.71	738.76
℄ S. Brg Pier 2	1730+87.80	-14.38	738.68	738.70
℄ Pier 2	1730+88.96	-14.38	738.68	738.70
℄ N. Brg Pier 2	1730+90.13	-14.38	738.67	738.69
U	1731+00.13	-14.38	738.62	738.70
V	1731+10.13	-14.38	738.57	738.71
W	1731+20.13	-14.38	738.52	738.70
X	1731+30.13	-14.38	738.47	738.68
Y	1731+40.13	-14.38	738.42	738.65
Z	1731+50.13	-14.38	738.37	738.57
AA	1731+60.13	-14.38	738.32	738.49
AB	1731+70.13	-14.38	738.27	738.38
AC	1731+80.13	-14.38	738.22	738.27
℄ Brg. N. Abut.	1731+85.17	-14.38	738.19	738.21
Bk. N. Abut.	1731+87.15	-14.38	738.18	738.20

BEAM 3

Location	Station	Offset	Theoretical Grade Elevations	Theoretical Grade Elevations Adjusted For Dead Load Deflection and Grinding
Bk. S. Abut.	1728+92.09	-6.79	739.79	739.81
℄ Brg. S. Abut.	1728+94.08	-6.79	739.78	739.80
C	1729+04.08	-6.79	739.73	739.81
D	1729+14.08	-6.79	739.68	739.82
E	1729+24.08	-6.79	739.63	739.81
F	1729+34.08	-6.79	739.58	739.79
G	1729+44.08	-6.79	739.53	739.75
H	1729+54.08	-6.79	739.48	739.67
I	1729+64.08	-6.79	739.43	739.60
J	1729+74.08	-6.79	739.38	739.49
K	1729+84.08	-6.79	739.33	739.38
℄ S. Brg Pier 1	1729+89.12	-6.79	739.30	739.32
℄ Pier 1	1729+90.29	-6.79	739.29	739.31
℄ N. Brg Pier 1	1729+91.45	-6.79	739.29	739.31
L	1730+01.45	-6.79	739.24	739.32
M	1730+11.45	-6.79	739.19	739.33
N	1730+21.45	-6.79	739.14	739.31
O	1730+31.45	-6.79	739.09	739.29
P	1730+41.45	-6.79	739.04	739.25
Q	1730+51.45	-6.79	738.99	739.18
R	1730+61.45	-6.79	738.94	739.10
S	1730+71.45	-6.79	738.89	739.00
T	1730+81.45	-6.79	738.84	738.89
℄ S. Brg Pier 2	1730+86.46	-6.79	738.81	738.83
℄ Pier 2	1730+87.63	-6.79	738.81	738.83
℄ N. Brg Pier 2	1730+88.79	-6.79	738.80	738.82
U	1730+98.79	-6.79	738.75	738.83
V	1731+08.79	-6.79	738.70	738.84
W	1731+18.79	-6.79	738.65	738.84
X	1731+28.79	-6.79	738.60	738.81
Y	1731+38.79	-6.79	738.55	738.78
Z	1731+48.79	-6.79	738.50	738.70
AA	1731+58.79	-6.79	738.45	738.62
AB	1731+68.79	-6.79	738.40	738.52
AC	1731+78.79	-6.79	738.35	738.40
℄ Brg. N. Abut.	1731+83.83	-6.79	738.33	738.35
Bk. N. Abut.	1731+85.82	-6.79	738.32	738.34

℄ I-57 SB & PGL

Location	Station	Offset	Theoretical Grade Elevations	Theoretical Grade Elevations Adjusted For Dead Load Deflection and Grinding
Bk. S. Abut.	1728+90.89	0.00	739.89	739.91
℄ Brg. S. Abut.	1728+92.88	0.00	739.88	739.90
C	1729+02.88	0.00	739.83	739.92
D	1729+12.88	0.00	739.78	739.93
E	1729+22.88	0.00	739.73	739.92
F	1729+32.88	0.00	739.68	739.90
G	1729+42.88	0.00	739.63	739.86
H	1729+52.88	0.00	739.58	739.78
I	1729+62.88	0.00	739.53	739.70
J	1729+72.88	0.00	739.48	739.60
K	1729+82.88	0.00	739.43	739.48
℄ S. Brg Pier 1	1729+87.92	0.00	739.41	739.43
℄ Pier 1	1729+89.09	0.00	739.40	739.42
℄ N. Brg Pier 1	1729+90.26	0.00	739.40	739.42
L	1730+00.26	0.00	739.35	739.43
M	1730+10.26	0.00	739.30	739.43
N	1730+20.26	0.00	739.25	739.42
O	1730+30.26	0.00	739.20	739.40
P	1730+40.26	0.00	739.15	739.36
Q	1730+50.26	0.00	739.10	739.29
R	1730+60.26	0.00	739.05	739.21
S	1730+70.26	0.00	739.00	739.10
T	1730+80.26	0.00	738.95	739.00
℄ S. Brg Pier 2	1730+85.26	0.00	738.92	738.94
℄ Pier 2	1730+86.43	0.00	738.92	738.94
℄ N. Brg Pier 2	1730+87.60	0.00	738.91	738.93
U	1730+97.60	0.00	738.86	738.94
V	1731+07.60	0.00	738.81	738.95
W	1731+17.60	0.00	738.76	738.94
X	1731+27.60	0.00	738.71	738.92
Y	1731+37.60	0.00	738.66	738.89
Z	1731+47.60	0.00	738.61	738.81
AA	1731+57.60	0.00	738.56	738.73
AB	1731+67.60	0.00	738.51	738.62
AC	1731+77.60	0.00	738.46	738.51
℄ Brg. N. Abut.	1731+82.63	0.00	738.43	738.45
Bk. N. Abut.	1731+84.62	0.00	738.42	738.44

BEAM 4

Location	Station	Offset	Theoretical Grade Elevations	Theoretical Grade Elevations Adjusted For Dead Load Deflection and Grinding
Bk. S. Abut.	1728+90.75	0.79	739.88	739.90
℄ Brg. S. Abut.	1728+92.74	0.79	739.87	739.89
C	1729+02.74	0.79	739.82	739.90
D	1729+12.74	0.79	739.77	739.92
E	1729+22.74	0.79	739.72	739.91
F	1729+32.74	0.79	739.67	739.88
G	1729+42.74	0.79	739.62	739.85
H	1729+52.74	0.79	739.57	739.77
I	1729+62.74	0.79	739.52	739.69
J	1729+72.74	0.79	739.47	739.58
K	1729+82.74	0.79	739.42	739.47
℄ S. Brg Pier 1	1729+87.78	0.79	739.40	739.42
℄ Pier 1	1729+88.95	0.79	739.39	739.41
℄ N. Brg Pier 1	1729+90.12	0.79	739.39	739.41
L	1730+00.12	0.79	739.34	739.41
M	1730+10.12	0.79	739.29	739.42
N	1730+20.12	0.79	739.24	739.41
O	1730+30.12	0.79	739.19	739.39
P	1730+40.12	0.79	739.14	739.35
Q	1730+50.12	0.79	739.09	739.27
R	1730+60.12	0.79	739.04	739.20
S	1730+70.12	0.79	738.99	739.09
T	1730+80.12	0.79	738.94	738.98
℄ S. Brg Pier 2	1730+85.12	0.79	738.91	738.93
℄ Pier 2	1730+86.29	0.79	738.90	738.92
℄ N. Brg Pier 2	1730+87.46	0.79	738.90	738.92
U	1730+97.46	0.79	738.85	738.93
V	1731+07.46	0.79	738.80	738.94
W	1731+17.46	0.79	738.75	738.93
X	1731+27.46	0.79	738.70	738.91
Y	1731+37.46	0.79	738.65	738.87
Z	1731+47.46	0.79	738.60	738.80
AA	1731+57.46	0.79	738.55	738.72
AB	1731+67.46	0.79	738.50	738.61
AC	1731+77.46	0.79	738.45	738.50
℄ Brg. N. Abut.	1731+82.49	0.79	738.42	738.44
Bk. N. Abut.	1731+84.48	0.79	738.41	738.43

BEAM 5

Location	Station	Offset	Theoretical Grade Elevations	Theoretical Grade Elevations Adjusted For Dead Load Deflection and Grinding
Bk. S. Abut.	1728+89.41	8.38	739.77	739.79
℄ Brg. S. Abut.	1728+91.40	8.38	739.76	739.78
C	1729+01.40	8.38	739.71	739.80
D	1729+11.40	8.38	739.66	739.81
E	1729+21.40	8.38	739.61	739.80
F	1729+31.40	8.38	739.56	739.78
G	1729+41.40	8.38	739.51	739.74
H	1729+51.40	8.38	739.46	739.66
I	1729+61.40	8.38	739.41	739.58
J	1729+71.40	8.38	739.36	739.48
K	1729+81.40	8.38	739.31	739.37
℄ S. Brg Pier 1	1729+86.45	8.38	739.29	739.31
℄ Pier 1	1729+87.61	8.38	739.28	739.30
℄ N. Brg Pier 1	1729+88.78	8.38	739.28	739.30
L	1729+98.78	8.38	739.23	739.31
M	1730+08.78	8.38	739.18	739.32
N	1730+18.78	8.38	739.13	739.30
O	1730+28.78	8.38	739.08	739.28
P	1730+38.78	8.38	739.03	739.24
Q	1730+48.78	8.38	738.98	739.17
R	1730+58.78	8.38	738.93	739.09
S	1730+68.78	8.38	738.88	738.99
T	1730+78.78	8.38	738.83	738.88
℄ S. Brg Pier 2	1730+83.79	8.38	738.80	738.82
℄ Pier 2	1730+84.95	8.38	738.80	738.82
℄ N. Brg Pier 2	1730+86.12	8.38	738.79	738.81
U	1730+96.12	8.38	738.74	738.82
V	1731+06.12	8.38	738.69	738.83
W	1731+16.12	8.38	738.64	738.83
X	1731+26.12	8.38	738.59	738.80
Y	1731+36.12	8.38	738.54	738.77
Z	1731+46.12	8.38	738.49	738.69
AA	1731+56.12	8.38	738.44	738.61
AB	1731+66.12	8.38	738.39	738.51
AC	1731+76.12	8.38	738.34	738.39
℄ Brg. N. Abut.	1731+81.15	8.38	738.32	738.34
Bk. N. Abut.	1731+83.14	8.38	738.31	738.33

BEAM 6

Location	Station	Offset	Theoretical Grade Elevations	Theoretical Grade Elevations Adjusted For Dead Load Deflection and Grinding
Bk. S. Abut.	1728+88.08	15.96	739.65	739.67
℄ Brg. S. Abut.	1728+90.06	15.96	739.64	739.66
C	1729+00.06	15.96	739.59	739.67
D	1729+10.06	15.96	739.54	739.68
E	1729+20.06	15.96	739.49	739.67
F	1729+30.06	15.96	739.44	739.65
G	1729+40.06	15.96	739.39	739.61
H	1729+50.06	15.96	739.34	739.54
I	1729+60.06	15.96	739.29	739.46
J	1729+70.06	15.96	739.24	739.35
K	1729+80.06	15.96	739.19	739.24
℄ S. Brg Pier 1	1729+85.11	15.96	739.16	739.18
℄ Pier 1	1729+86.28	15.96	739.16	739.18
℄ N. Brg Pier 1	1729+87.44	15.96	739.15	739.17
L	1729+97.44	15.96	739.10	739.18
M	1730+07.44	15.96	739.05	739.19
N	1730+17.44	15.96	739.00	739.18
O	1730+27.44	15.96	738.95	739.15
P	1730+37.44	15.96	738.90	739.12
Q	1730+47.44	15.96	738.85	739.04
R	1730+57.44	15.96	738.80	738.96
S	1730+67.44	15.96	738.75	738.86
T	1730+77.44	15.96	738.70	738.75
℄ S. Brg Pier 2	1730+82.45	15.96	738.68	738.70
℄ Pier 2	1730+83.62	15.96	738.67	738.69
℄ N. Brg Pier 2	1730+84.78	15.96	738.66	738.68
U	1730+94.78	15.96	738.61	738.70
V	1731+04.78	15.96	738.56	738.71
W	1731+14.78	15.96	738.51	738.70
X	1731+24.78	15.96	738.46	738.68
Y	1731+34.78	15.96	738.41	738.64
Z	1731+44.78	15.96	738.36	738.56
AA	1731+54.78	15.96	738.31	738.49
AB	1731+64.78	15.96	738.26	738.38
AC	1731+74.78	15.96	738.21	738.27
℄ Brg. N. Abut.	1731+79.82	15.96	738.19	738.21
Bk. N. Abut.	1731+81.81	15.96	738.18	738.20

BEAM 7

Location	Station	Offset	Theoretical Grade Elevations	Theoretical Grade Elevations Adjusted For Dead Load Deflection and Grinding
Bk. S. Abut.	1728+78.19	-15.96	739.70	739.72
℄ Brg. S. Abut.	1728+80.18	-15.96	739.69	739.71
C	1728+90.18	-15.96	739.64	739.72
D	1729+00.18	-15.96	739.59	739.73
E	1729+10.18	-15.96	739.54	739.73
F	1729+20.18	-15.96	739.49	739.70
G	1729+30.18	-15.96	739.44	739.67
H	1729+40.18	-15.96	739.39	739.59
I	1729+50.18	-15.96	739.34	739.51
J	1729+60.18	-15.96	739.29	739.40
K	1729+70.18	-15.96	739.24	739.29
℄ S. Brg Pier 1	1729+75.23	-15.96	739.21	739.23
℄ Pier 1	1729+76.39	-15.96	739.21	739.23
℄ N. Brg Pier 1	1729+77.56	-15.96	739.20	739.22
L	1729+87.56	-15.96	739.15	739.23
M	1729+97.56	-15.96	739.10	739.24
N	1730+07.56	-15.96	739.05	739.23
O	1730+17.56	-15.96	739.00	739.21
P	1730+27.56	-15.96	738.95	739.17
Q	1730+37.56	-15.96	738.90	739.09
R	1730+47.56	-15.96	738.85	739.02
S	1730+57.56	-15.96	738.80	738.91
T	1730+67.56	-15.96	738.75	738.80
℄ S. Brg Pier 2	1730+72.56	-15.96	738.73	738.75
℄ Pier 2	1730+73.72	-15.96	738.72	738.74
℄ N. Brg Pier 2	1730+74.89	-15.96	738.72	738.74
U	1730+84.89	-15.96	738.67	738.75
V	1730+94.89	-15.96	738.62	738.76
W	1731+04.89	-15.96	738.57	738.75
X	1731+14.89	-15.96	738.52	738.73
Y	1731+24.89	-15.96	738.47	738.69
Z	1731+34.89	-15.96	738.42	738.62
AA	1731+44.89	-15.96	738.37	738.54
AB	1731+54.89	-15.96	738.32	738.43
AC	1731+64.89	-15.96	738.27	738.32
℄ Brg. N. Abut.	1731+69.94	-15.96	738.24	738.26
Bk. N. Abut.	1731+71.92	-15.96	738.23	738.25

BEAM 8

Location	Station	Offset	Theoretical Grade Elevations	Theoretical Grade Elevations Adjusted For Dead Load Deflection and Grinding
Bk. S. Abut.	1728+76.86	-8.38	739.84	739.86
℄ Brg. S. Abut.	1728+78.85	-8.38	739.83	739.85
C	1728+88.85	-8.38	739.78	739.86
D	1728+98.85	-8.38	739.73	739.88
E	1729+08.85	-8.38	739.68	739.87
F	1729+18.85	-8.38	739.63	739.84
G	1729+28.85	-8.38	739.58	739.81
H	1729+38.85	-8.38	739.53	739.73
I	1729+48.85	-8.38	739.48	739.65
J	1729+58.85	-8.38	739.43	739.54
K	1729+68.85	-8.38	739.38	739.43
℄ S. Brg Pier 1	1729+73.89	-8.38	739.35	739.37
℄ Pier 1	1729+75.06	-8.38	739.35	739.37
℄ N. Brg Pier 1	1729+76.22	-8.38	739.34	739.36
L	1729+86.22	-8.38	739.29	739.37
M	1729+96.22	-8.38	739.24	739.38
N	1730+06.22	-8.38	739.19	739.37
O	1730+16.22	-8.38	739.14	739.35
P	1730+26.22	-8.38	739.09	739.31
Q	1730+36.22	-8.38	739.04	739.23
R	1730+46.22	-8.38	738.99	739.16
S	1730+56.22	-8.38	738.94	739.05
T	1730+66.22	-8.38	738.89	738.94
℄ S. Brg Pier 2	1730+71.22	-8.38	738.87	738.89
℄ Pier 2	1730+72.39	-8.38	738.86	738.88
℄ N. Brg Pier 2	1730+73.55	-8.38	738.86	738.88
U	1730+83.55	-8.38	738.81	738.89
V	1730+93.55	-8.38	738.76	738.90
W	1731+03.55	-8.38	738.71	738.89
X	1731+13.55	-8.38	738.66	738.87
Y	1731+23.55	-8.38	738.61	738.83
Z	1731+33.55	-8.38	738.56	738.76
AA	1731+43.55	-8.38	738.51	738.68
AB	1731+53.55	-8.38	738.46	738.57
AC	1731+63.55	-8.38	738.41	738.46
℄ Brg. N. Abut.	1731+68.60	-8.38	738.38	738.40
Bk. N. Abut.	1731+70.59	-8.38	738.37	738.39

BEAM 9

Location	Station	Offset	Theoretical Grade Elevations	Theoretical Grade Elevations Adjusted For Dead Load Deflection and Grinding
Bk. S. Abut.	1728+75.52	-0.79	739.96	739.98
℄ Brg. S. Abut.	1728+77.51	-0.79	739.95	739.97
C	1728+87.51	-0.79	739.90	739.98
D	1728+97.51	-0.79	739.85	740.00
E	1729+07.51	-0.79	739.80	739.99
F	1729+17.51	-0.79	739.75	739.96
G	1729+27.51	-0.79	739.70	739.93
H	1729+37.51	-0.79	739.65	739.85
I	1729+47.51	-0.79	739.60	739.77
J	1729+57.51	-0.79	739.55	739.66
K	1729+67.51	-0.79	739.50	739.55
℄ S. Brg Pier 1	1729+72.55	-0.79	739.48	739.50
℄ Pier 1	1729+73.72	-0.79	739.47	739.49
℄ N. Brg Pier 1	1729+74.89	-0.79	739.46	739.48
L	1729+84.89	-0.79	739.41	739.49
M	1729+94.89	-0.79	739.36	739.50
N	1730+04.89	-0.79	739.31	739.49
O	1730+14.89	-0.79	739.26	739.47
P	1730+24.89	-0.79	739.21	739.43
Q	1730+34.89	-0.79	739.16	739.35
R	1730+44.89	-0.79	739.11	739.28
S	1730+54.89	-0.79	739.06	739.17
T	1730+64.89	-0.79	739.01	739.06
℄ S. Brg Pier 2	1730+69.88	-0.79	738.99	739.01
℄ Pier 2	1730+71.05	-0.79	738.98	739.00
℄ N. Brg Pier 2	1730+72.22	-0.79	738.98	739.00
U	1730+82.22	-0.79	738.93	739.01
V	1730+92.22	-0.79	738.88	739.02
W	1731+02.22	-0.79	738.83	739.01
X	1731+12.22	-0.79	738.78	738.99
Y	1731+22.22	-0.79	738.73	738.95
Z	1731+32.22	-0.79	738.68	738.88
AA	1731+42.22	-0.79	738.63	738.80
AB	1731+52.22	-0.79	738.58	738.69
AC	1731+62.22	-0.79	738.53	738.58
℄ Brg. N. Abut.	1731+67.26	-0.79	738.50	738.52
Bk. N. Abut.	1731+69.25	-0.79	738.49	738.51

℄ I-57 NB & PGL

Location	Station	Offset	Theoretical Grade Elevations	Theoretical Grade Elevations Adjusted For Dead Load Deflection and Grinding
Bk. S. Abut.	1728+75.38	0.00	739.97	739.99
℄ Brg. S. Abut.	1728+77.37	0.00	739.96	739.98
C	1728+87.37	0.00	739.91	740.00
D	1728+97.37	0.00	739.86	740.01
E	1729+07.37	0.00	739.81	740.00
F	1729+17.37	0.00	739.76	739.98
G	1729+27.37	0.00	739.71	739.94
H	1729+37.37	0.00	739.66	739.86
I	1729+47.37	0.00	739.61	739.78
J	1729+57.37	0.00	739.56	739.68
K	1729+67.37	0.00	739.51	739.56
℄ S. Brg Pier 1	1729+72.41	0.00	739.49	739.51
℄ Pier 1	1729+73.58	0.00	739.48	739.50
℄ N. Brg Pier 1	1729+74.75	0.00	739.48	739.50
L	1729+84.75	0.00	739.43	739.51
M	1729+94.75	0.00	739.38	739.51
N	1730+04.75	0.00	739.33	739.50
O	1730+14.75	0.00	739.28	739.48
P	1730+24.75	0.00	739.23	739.44
Q	1730+34.75	0.00	739.18	739.37
R	1730+44.75	0.00	739.13	739.29
S	1730+54.75	0.00	739.08	739.18
T	1730+64.75	0.00	739.03	739.08
℄ S. Brg Pier 2	1730+69.74	0.00	739.00	739.02
℄ Pier 2	1730+70.91	0.00	739.00	739.02
℄ N. Brg Pier 2	1730+72.08	0.00	738.99	739.01
U	1730+82.08	0.00	738.94	739.02
V	1730+92.08	0.00	738.89	739.03
W	1731+02.08	0.00	738.84	739.02
X	1731+12.08	0.00	738.79	739.00
Y	1731+22.08	0.00	738.74	738.97
Z	1731+32.08	0.00	738.69	738.89
AA	1731+42.08	0.00	738.64	738.81
AB	1731+52.08	0.00	738.59	738.70
AC	1731+62.08	0.00	738.54	738.59
℄ Brg. N. Abut.	1731+67.12	0.00	738.51	738.53
Bk. N. Abut.	1731+69.11	0.00	738.50	738.52

BEAM 10

Location	Station	Offset	Theoretical Grade Elevations	Theoretical Grade Elevations Adjusted For Dead Load Deflection and Grinding
Bk. S. Abut.	1728+74.18	6.79	739.88	739.90
℄ Brg. S. Abut.	1728+76.17	6.79	739.87	739.89
C	1728+86.17	6.79	739.82	739.90
D	1728+96.17	6.79	739.77	739.91
E	1729+06.17	6.79	739.72	739.90
F	1729+16.17	6.79	739.67	739.88
G	1729+26.17	6.79	739.62	739.84
H	1729+36.17	6.79	739.57	739.77
I	1729+46.17	6.79	739.52	739.69
J	1729+56.17	6.79	739.47	739.58
K	1729+66.17	6.79	739.42	739.47
℄ S. Brg Pier 1	1729+71.22	6.79	739.39	739.41
℄ Pier 1	1729+72.38	6.79	739.39	739.41
℄ N. Brg Pier 1	1729+73.55	6.79	739.38	739.40
L	1729+83.55	6.79	739.33	739.41
M	1729+93.55	6.79	739.28	739.42
N	1730+03.55	6.79	739.23	739.41
O	1730+13.55	6.79	739.18	739.38
P	1730+23.55	6.79	739.13	739.35
Q	1730+33.55	6.79	739.08	739.27
R	1730+43.55	6.79	739.03	739.19
S	1730+53.55	6.79	738.98	739.09
T	1730+63.55	6.79	738.93	738.98
℄ S. Brg Pier 2	1730+68.55	6.79	738.91	738.93
℄ Pier 2	1730+69.71	6.79	738.90	738.92
℄ N. Brg Pier 2	1730+70.88	6.79	738.89	738.91
U	1730+80.88	6.79	738.84	738.93
V	1730+90.88	6.79	738.79	738.94
W	1731+00.88	6.79	738.74	738.93
X	1731+10.88	6.79	738.69	738.91
Y	1731+20.88	6.79	738.64	738.87
Z	1731+30.88	6.79	738.59	738.79
AA	1731+40.88	6.79	738.54	738.72
AB	1731+50.88	6.79	738.49	738.61
AC	1731+60.88	6.79	738.44	738.50
℄ Brg. N. Abut.	1731+65.92	6.79	738.42	738.44
Bk. N. Abut.	1731+67.91	6.79	738.41	738.43

BEAM 11

Location	Station	Offset	Theoretical Grade Elevations	Theoretical Grade Elevations Adjusted For Dead Load Deflection and Grinding
Bk. S. Abut.	1728+72.85	14.38	739.76	739.78
℄ Brg. S. Abut.	1728+74.83	14.38	739.75	739.77
C	1728+84.83	14.38	739.70	739.78
D	1728+94.83	14.38	739.65	739.79
E	1729+04.83	14.38	739.60	739.78
F	1729+14.83	14.38	739.55	739.76
G	1729+24.83	14.38	739.50	739.72
H	1729+34.83	14.38	739.45	739.65
I	1729+44.83	14.38	739.40	739.57
J	1729+54.83	14.38	739.35	739.46
K	1729+64.83	14.38	739.30	739.35
℄ S. Brg Pier 1	1729+69.88	14.38	739.27	739.29
℄ Pier 1	1729+71.05	14.38	739.27	739.29
℄ N. Brg Pier 1	1729+72.21	14.38	739.26	739.28
L	1729+82.21	14.38	739.21	739.29
M	1729+92.21	14.38	739.16	739.30
N	1730+02.21	14.38	739.11	739.29
O	1730+12.21	14.38	739.06	739.26
P	1730+22.21	14.38	739.01	739.23
Q	1730+32.21	14.38	738.96	739.15
R	1730+42.21	14.38	738.91	739.07
S	1730+52.21	14.38	738.86	738.97
T	1730+62.21	14.38	738.81	738.86
℄ S. Brg Pier 2	1730+67.21	14.38	738.79	738.81
℄ Pier 2	1730+68.38	14.38	738.78	738.80
℄ N. Brg Pier 2	1730+69.54	14.38	738.77	738.79
U	1730+79.54	14.38	738.72	738.81
V	1730+89.54	14.38	738.67	738.82
W	1730+99.54	14.38	738.62	738.81
X	1731+09.54	14.38	738.57	738.79
Y	1731+19.54	14.38	738.52	738.75
Z	1731+29.54	14.38	738.47	738.67
AA	1731+39.54	14.38	738.42	738.60
AB	1731+49.54	14.38	738.37	738.49
AC	1731+59.54	14.38	738.32	738.38
℄ Brg. N. Abut.	1731+64.59	14.38	738.30	738.32
Bk. N. Abut.	1731+66.58	14.38	738.29	738.31

BEAM 12

Location	Station	Offset	Theoretical Grade Elevations	Theoretical Grade Elevations Adjusted For Dead Load Deflection and Grinding
Bk. S. Abut.	1728+71.51	21.96	739.61	739.63
℄ Brg. S. Abut.	1728+73.50	21.96	739.60	739.62
C	1728+83.50	21.96	739.55	739.64
D	1728+93.50	21.96	739.50	739.65
E	1729+03.50	21.96	739.45	739.64
F	1729+13.50	21.96	739.40	739.62
G	1729+23.50	21.96	739.35	739.58
H	1729+33.50	21.96	739.30	739.50
I	1729+43.50	21.96	739.25	739.42
J	1729+53.50	21.96	739.20	739.32
K	1729+63.50	21.96	739.15	739.20
℄ S. Brg Pier 1	1729+68.54	21.96	739.13	739.15
℄ Pier 1	1729+69.71	21.96	739.12	739.14
℄ N. Brg Pier 1	1729+70.87	21.96	739.12	739.14
L	1729+80.87	21.96	739.07	739.15
M	1729+90.87	21.96	739.02	739.15
N	1730+00.87	21.96	738.97	739.14
O	1730+10.87	21.96	738.92	739.12
P	1730+20.87	21.96	738.87	739.08
Q	1730+30.87	21.96	738.82	739.01
R	1730+40.87	21.96	738.77	738.93
S	1730+50.87	21.96	738.72	738.82
T	1730+60.87	21.96	738.67	738.72
℄ S. Brg Pier 2	1730+65.87	21.96	738.64	738.66
℄ Pier 2	1730+67.04	21.96	738.64	738.66
℄ N. Brg Pier 2	1730+68.20	21.96	738.63	738.65
U	1730+78.20	21.96	738.58	738.66
V	1730+88.20	21.96	738.53	738.67
W	1730+98.20	21.96	738.48	738.66
X	1731+08.20	21.96	738.43	738.64
Y	1731+18.20	21.96	738.38	738.61
Z	1731+28.20	21.96	738.33	738.53
AA	1731+38.20	21.96	738.28	738.45
AB	1731+48.20	21.96	738.23	738.34
AC	1731+58.20	21.96	738.18	738.23
℄ Brg. N. Abut.	1731+63.25	21.96	738.15	738.17
Bk. N. Abut.	1731+65.24	21.96	738.14	738.16

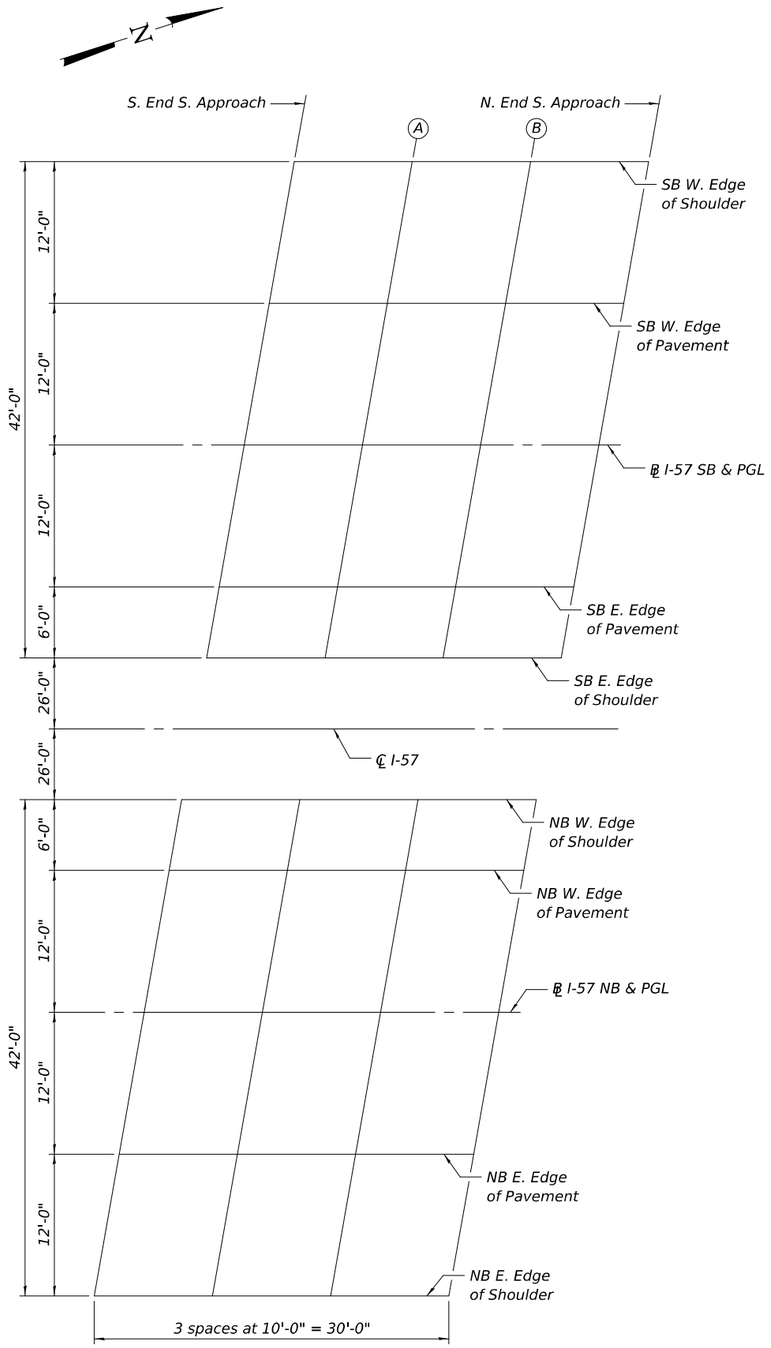

SOUTH APPROACH SLAB PLANS

Notes:
Southbound Offsets measured from ℄ I-57 SB & PGL.
Northbound Offsets measured from ℄ I-57 NB & PGL.

SB W. EDGE OF SHOULDER

Location	Station	Offset	Theoretical Grade Elevations	Theoretical Grade Elevations Adjusted For Grinding
S. End S. Approach	1728+66.14	-24.00	739.60	739.62
A	1728+76.14	-24.00	739.55	739.57
B	1728+86.14	-24.00	739.50	739.52
N. End S. Approach	1728+96.14	-24.00	739.45	739.47

NB W. EDGE OF SHOULDER

Location	Station	Offset	Theoretical Grade Elevations	Theoretical Grade Elevations Adjusted For Grinding
S. End S. Approach	1728+49.57	-18.00	739.80	739.82
A	1728+59.57	-18.00	739.75	739.77
B	1728+69.57	-18.00	739.70	739.72
N. End S. Approach	1728+79.57	-18.00	739.65	739.67

SB W. EDGE OF PAVEMENT

Location	Station	Offset	Theoretical Grade Elevations	Theoretical Grade Elevations Adjusted For Grinding
S. End S. Approach	1728+64.03	-12.00	739.85	739.87
A	1728+74.03	-12.00	739.80	739.82
B	1728+84.03	-12.00	739.75	739.77
N. End S. Approach	1728+94.03	-12.00	739.70	739.72

NB W. EDGE OF PAVEMENT

Location	Station	Offset	Theoretical Grade Elevations	Theoretical Grade Elevations Adjusted For Grinding
S. End S. Approach	1728+48.52	-12.00	739.93	739.95
A	1728+58.52	-12.00	739.88	739.90
B	1728+68.52	-12.00	739.83	739.85
N. End S. Approach	1728+78.52	-12.00	739.78	739.80

℄ I-57 SB & PGL

Location	Station	Offset	Theoretical Grade Elevations	Theoretical Grade Elevations Adjusted For Grinding
S. End S. Approach	1728+61.91	0.00	740.04	740.06
A	1728+71.91	0.00	739.99	740.01
B	1728+81.91	0.00	739.94	739.96
N. End S. Approach	1728+91.91	0.00	739.89	739.91

℄ I-57 NB & PGL

Location	Station	Offset	Theoretical Grade Elevations	Theoretical Grade Elevations Adjusted For Grinding
S. End S. Approach	1728+46.40	0.00	740.12	740.14
A	1728+56.40	0.00	740.07	740.09
B	1728+66.40	0.00	740.02	740.04
N. End S. Approach	1728+76.40	0.00	739.97	739.99

SB E. EDGE OF PAVEMENT

Location	Station	Offset	Theoretical Grade Elevations	Theoretical Grade Elevations Adjusted For Grinding
S. End S. Approach	1728+59.79	12.00	739.87	739.89
A	1728+69.79	12.00	739.82	739.84
B	1728+79.79	12.00	739.77	739.79
N. End S. Approach	1728+89.79	12.00	739.72	739.74

NB E. EDGE OF PAVEMENT

Location	Station	Offset	Theoretical Grade Elevations	Theoretical Grade Elevations Adjusted For Grinding
S. End S. Approach	1728+44.28	12.00	739.95	739.97
A	1728+54.28	12.00	739.90	739.92
B	1728+64.28	12.00	739.85	739.87
N. End S. Approach	1728+74.28	12.00	739.80	739.82

SB E. EDGE OF SHOULDER

Location	Station	Offset	Theoretical Grade Elevations	Theoretical Grade Elevations Adjusted For Grinding
S. End S. Approach	1728+58.74	18.00	739.75	739.77
A	1728+68.74	18.00	739.70	739.72
B	1728+78.74	18.00	739.65	739.67
N. End S. Approach	1728+88.74	18.00	739.60	739.62

NB E. EDGE OF SHOULDER

Location	Station	Offset	Theoretical Grade Elevations	Theoretical Grade Elevations Adjusted For Grinding
S. End S. Approach	1728+42.17	24.00	739.72	739.74
A	1728+52.17	24.00	739.67	739.69
B	1728+62.17	24.00	739.62	739.64
N. End S. Approach	1728+72.17	24.00	739.57	739.59

MODEL: 66K39 Sheet Border
FILE NAME: c:\workingdir\$datasource.name\dms16334\D366K39-plan-border.dgn

V3 Companies
7325 Janes Avenue
Woodridge, IL 60517
630 724 9200 phone
www.v3co.com

USER NAME =	DESIGNED - LKF	REVISED -	
	DRAWN - LJM	REVISED -	
	CHECKED - WJV	REVISED -	
PLOT DATE = 02/20/2026	DATE - 02/20/2026	REVISED -	

STATE OF ILLINOIS
DEPARTMENT OF TRANSPORTATION

TOP OF SOUTH APPROACH SLABS ELEVATIONS
STRUCTURE NO. 027-0106 (S.B.) & 027-0107 (N.B.)

SCALE: | SHEET 12 OF 48 SHEETS | STA. | TO STA.

F.A.I. RTE.	SECTION	COUNTY	TOTAL SHEETS	SHEET NO.
57	(27-38B) BR-1	FORD	185	104

CONTRACT NO. 66K39

ILLINOIS | FED. AID PROJECT

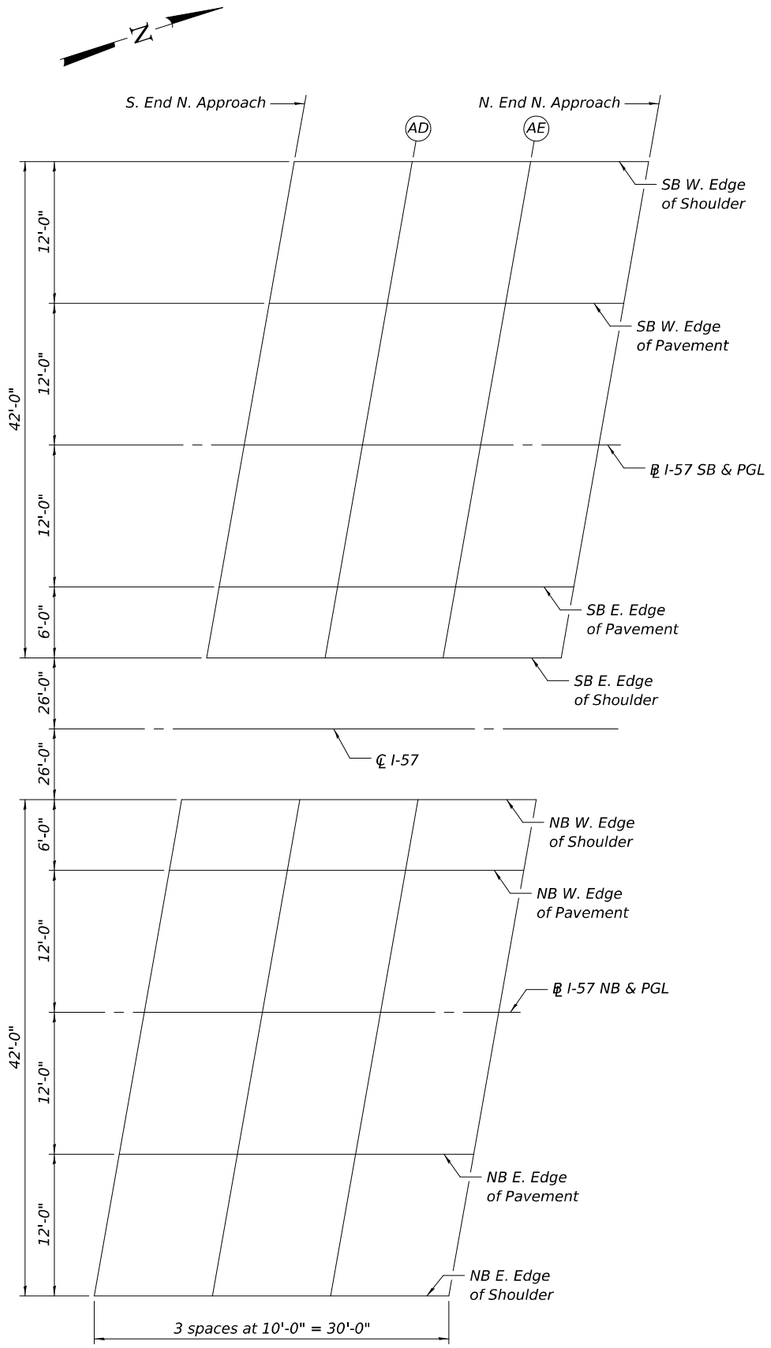

NORTH APPROACH SLAB PLANS

Notes:
Southbound Offsets measured from ℄ I-57 SB & PGL.
Northbound Offsets measured from ℄ I-57 NB & PGL.

SB W. EDGE OF SHOULDER

Location	Station	Offset	Theoretical Grade Elevations	Theoretical Grade Elevations Adjusted For Grinding
S. End N. Approach	1731+87.84	-24.00	737.99	738.01
AD	1731+97.84	-24.00	737.94	737.96
AE	1732+07.84	-24.00	737.89	737.91
N. End N. Approach	1732+17.84	-24.00	737.84	737.86

NB W. EDGE OF SHOULDER

Location	Station	Offset	Theoretical Grade Elevations	Theoretical Grade Elevations Adjusted For Grinding
S. End N. Approach	1731+71.27	-18.00	738.19	738.21
AD	1731+81.27	-18.00	738.14	738.16
AE	1731+91.27	-18.00	738.09	738.11
N. End N. Approach	1732+01.27	-18.00	738.04	738.06

SB W. EDGE OF PAVEMENT

Location	Station	Offset	Theoretical Grade Elevations	Theoretical Grade Elevations Adjusted For Grinding
S. End N. Approach	1731+85.73	-12.00	738.24	738.26
AD	1731+95.73	-12.00	738.19	738.21
AE	1732+05.73	-12.00	738.14	738.16
N. End N. Approach	1732+15.73	-12.00	738.09	738.11

NB W. EDGE OF PAVEMENT

Location	Station	Offset	Theoretical Grade Elevations	Theoretical Grade Elevations Adjusted For Grinding
S. End N. Approach	1731+70.22	-12.00	738.32	738.34
AD	1731+80.22	-12.00	738.27	738.29
AE	1731+90.22	-12.00	738.22	738.24
N. End N. Approach	1732+00.22	-12.00	738.17	738.19

℄ I-57 SB & PGL

Location	Station	Offset	Theoretical Grade Elevations	Theoretical Grade Elevations Adjusted For Grinding
S. End N. Approach	1731+83.61	0.00	738.43	738.45
AD	1731+93.61	0.00	738.38	738.40
AE	1732+03.61	0.00	738.33	738.35
N. End N. Approach	1732+13.61	0.00	738.28	738.30

℄ I-57 NB & PGL

Location	Station	Offset	Theoretical Grade Elevations	Theoretical Grade Elevations Adjusted For Grinding
S. End N. Approach	1731+68.10	0.00	738.51	738.53
AD	1731+78.10	0.00	738.46	738.48
AE	1731+88.10	0.00	738.41	738.43
N. End N. Approach	1731+98.10	0.00	738.36	738.38

SB E. EDGE OF PAVEMENT

Location	Station	Offset	Theoretical Grade Elevations	Theoretical Grade Elevations Adjusted For Grinding
S. End N. Approach	1731+81.49	12.00	738.26	738.28
AD	1731+91.49	12.00	738.21	738.23
AE	1732+01.49	12.00	738.16	738.18
N. End N. Approach	1732+11.49	12.00	738.11	738.13

NB E. EDGE OF PAVEMENT

Location	Station	Offset	Theoretical Grade Elevations	Theoretical Grade Elevations Adjusted For Grinding
S. End N. Approach	1731+65.98	12.00	738.34	738.36
AD	1731+75.98	12.00	738.29	738.31
AE	1731+85.98	12.00	738.24	738.26
N. End N. Approach	1731+95.98	12.00	738.19	738.21

SB E. EDGE OF SHOULDER

Location	Station	Offset	Theoretical Grade Elevations	Theoretical Grade Elevations Adjusted For Grinding
S. End N. Approach	1731+80.44	18.00	738.15	738.17
AD	1731+90.44	18.00	738.10	738.12
AE	1732+00.44	18.00	738.05	738.07
N. End N. Approach	1732+10.44	18.00	738.00	738.02

NB E. EDGE OF SHOULDER

Location	Station	Offset	Theoretical Grade Elevations	Theoretical Grade Elevations Adjusted For Grinding
S. End N. Approach	1731+63.87	24.00	738.11	738.13
AD	1731+73.87	24.00	738.06	738.08
AE	1731+83.87	24.00	738.01	738.03
N. End N. Approach	1731+93.87	24.00	737.96	737.98

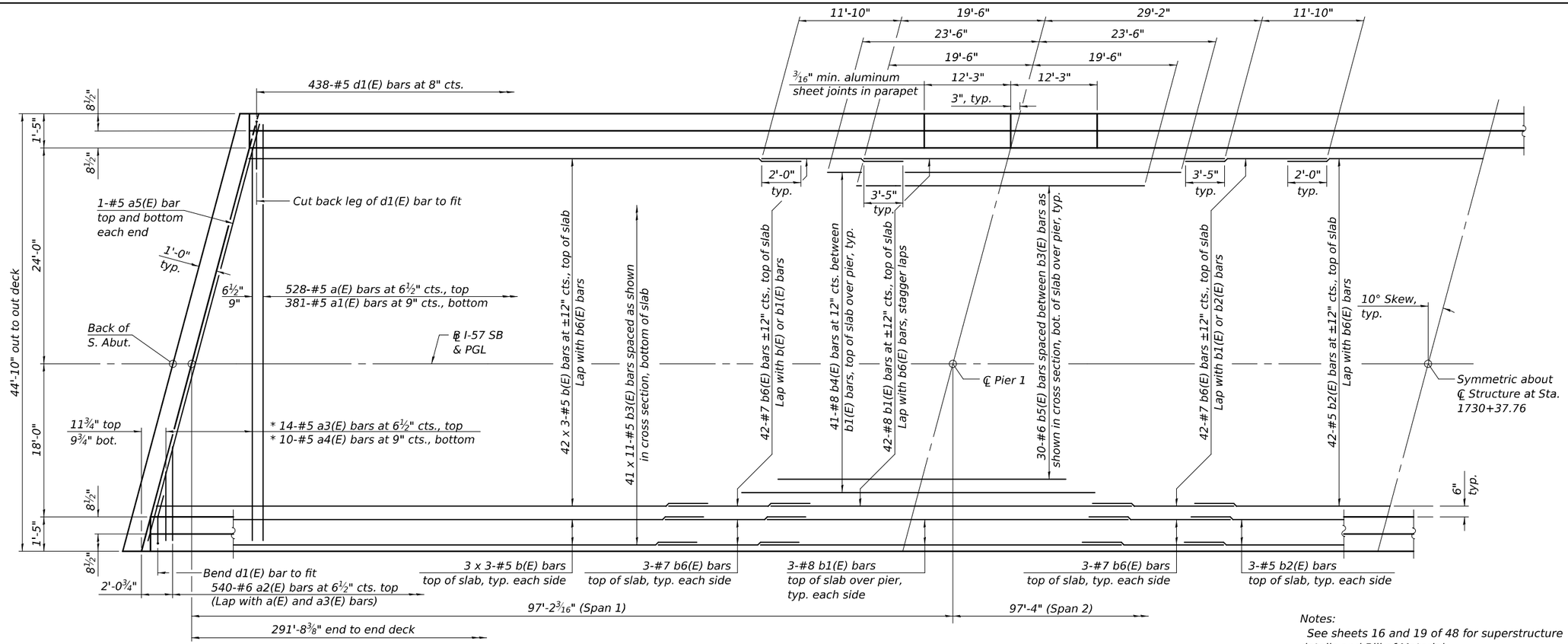

MINIMUM BAR LAP

(unless noted otherwise)

#5 bar = 3'-10"

* See Field Cutting Diagram on sheet 19 of 48.

PARTIAL PLAN - SOUTHBOUND STRUCTURE

Notes:

See sheets 16 and 19 of 48 for superstructure details and Bill of Material.

See sheet 1 of 48 for drainage scupper locations.

Bars indicated thus 20 x 3-#5 etc. indicates 20 lines of bars with 3 lengths per line.

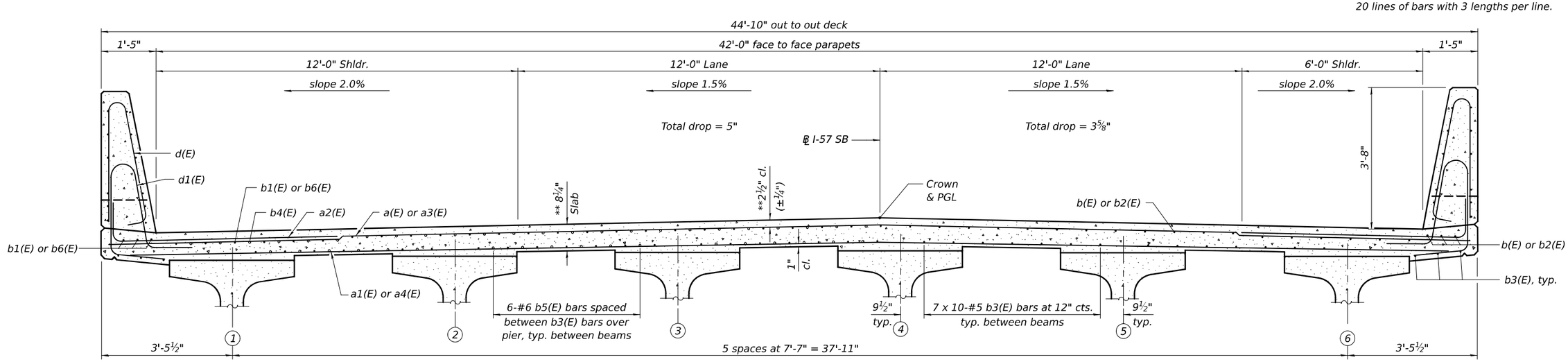

NEAR PIER

** Prior to grinding

*** After grinding

CROSS SECTION

(Looking North)

NEAR MIDSPAN

MODEL: 66K39 Sheet Border
FILE NAME: c:\workingdir\$datasource.name\dms16334\D366K39-plan-border.dgn

V3 Companies
7325 Janes Avenue
Woodridge, IL 60517
630 724 9200 phone
www.v3co.com

USER NAME =	DESIGNED - LKF	REVISED -	
	DRAWN - LJM	REVISED -	
	CHECKED - WJV	REVISED -	
PLOT DATE = 02/20/2026	DATE - 02/20/2026	REVISED -	

STATE OF ILLINOIS
DEPARTMENT OF TRANSPORTATION

SUPERSTRUCTURE - SB
STRUCTURE NO. 027-0106 (S.B.) & 027-0107 (N.B.)

SCALE: SHEET 14 OF 48 SHEETS STA. TO STA.

F.A.I. RTE.	SECTION	COUNTY	TOTAL SHEETS	SHEET NO.
57	(27-38B) BR-1	FORD	185	106
		CONTRACT NO. 66K39		
		ILLINOIS	FED. AID PROJECT	

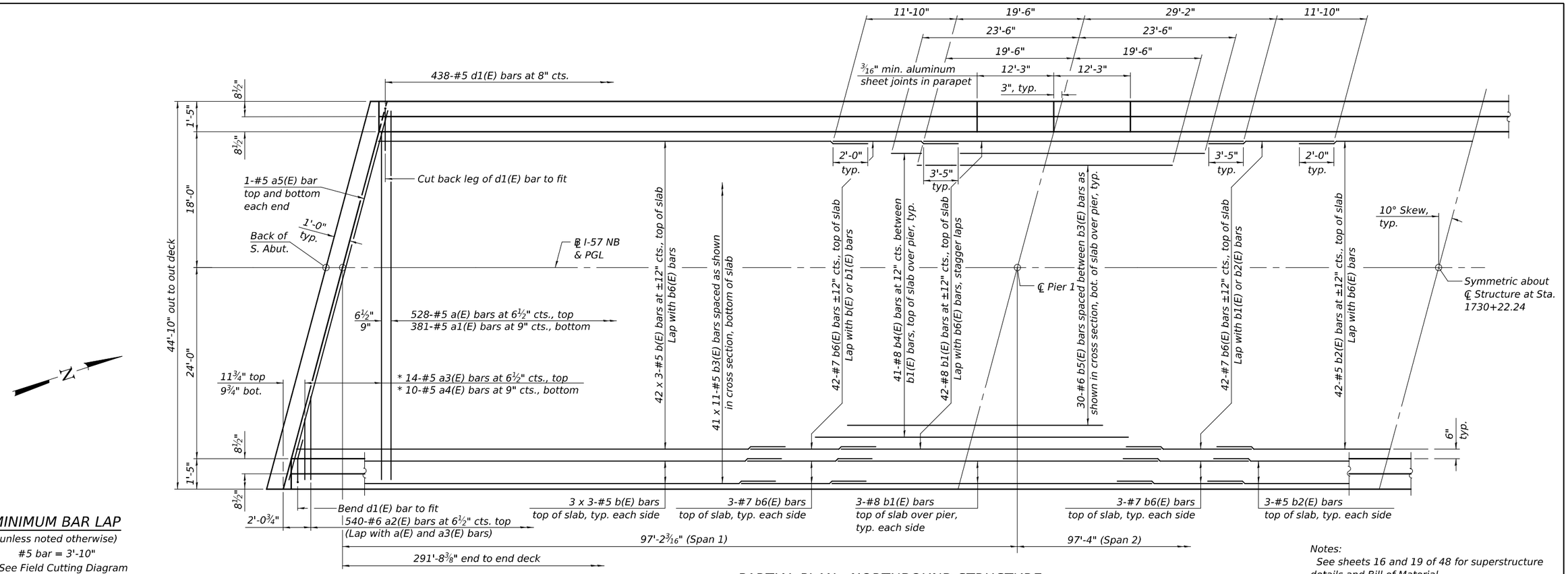

MINIMUM BAR LAP

(unless noted otherwise)

#5 bar = 3'-10"

* See Field Cutting Diagram on sheet 19 of 48.

PARTIAL PLAN - NORTHBOUND STRUCTURE

Notes:

See sheets 16 and 19 of 48 for superstructure details and Bill of Material.

See sheet 1 of 48 for drainage scupper locations.

Bars indicated thus 20 x 3-#5 etc. indicates 20 lines of bars with 3 lengths per line.

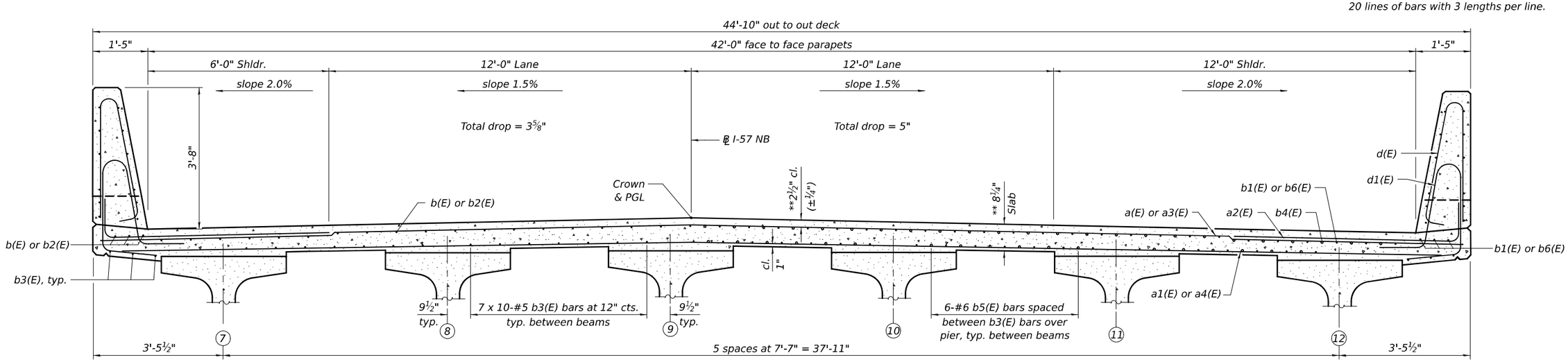

NEAR MIDSPAN

CROSS SECTION

(Looking North)

** Prior to grinding

*** After grinding

NEAR PIER

MODEL: 66K39 Sheet Border
FILE NAME: c:\workingdir\$datasource.name\dms16334\D366K39-plan-border.dgn

V3 Companies
7325 Janes Avenue
Woodridge, IL 60517
630 724 9200 phone
www.v3co.com

USER NAME =	DESIGNED - LKF	REVISED -	
	DRAWN - LJM	REVISED -	
	CHECKED - WJV	REVISED -	
PLOT DATE = 02/20/2026	DATE - 02/20/2026	REVISED -	

STATE OF ILLINOIS
DEPARTMENT OF TRANSPORTATION

SUPERSTRUCTURE - NB
STRUCTURE NO. 027-0106 (S.B.) & 027-0107 (N.B.)

SCALE: SHEET 15 OF 48 SHEETS STA. TO STA.

F.A.I. RTE.	SECTION	COUNTY	TOTAL SHEETS	SHEET NO.
57	(27-38B) BR-1	FORD	185	107

CONTRACT NO. 66K39

ILLINOIS FED. AID PROJECT

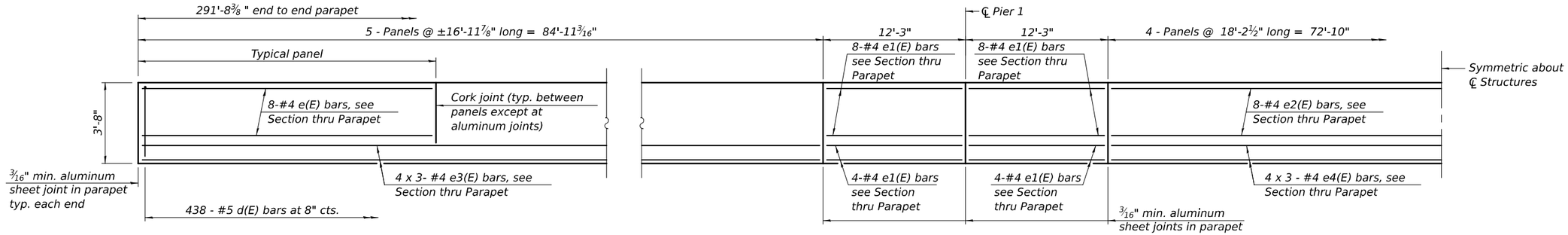

INSIDE ELEVATION OF PARAPET

(Looking West at West Parapets; East Parapets mirror images)

MINIMUM BAR LAP

#4 bar = 2'-2"

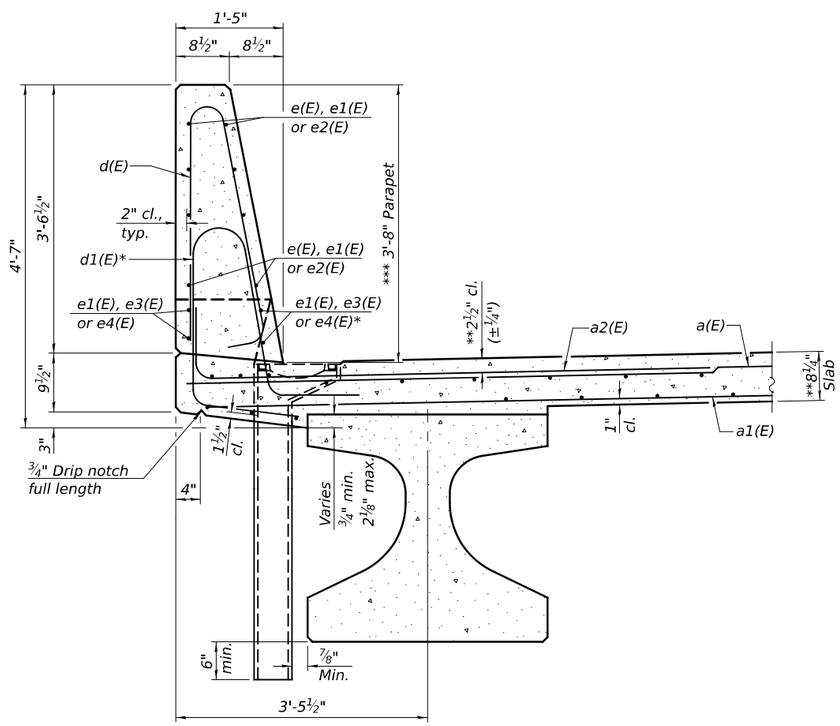

SECTION THRU PARAPET

* Cut to fit at scupper locations
** Prior to grinding
*** After grinding

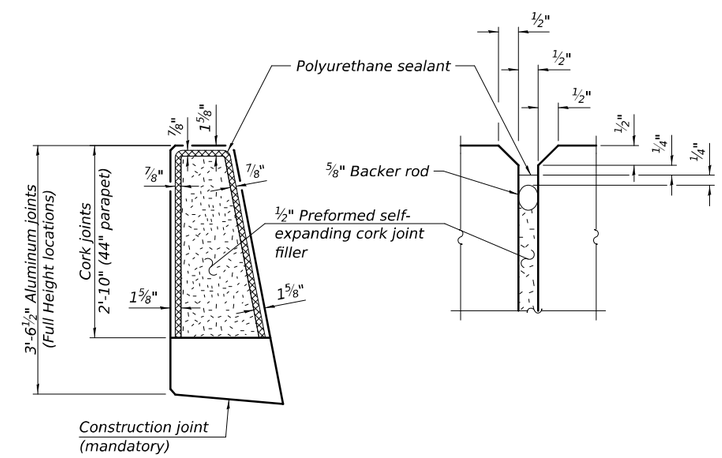

PARAPET JOINT DETAILS

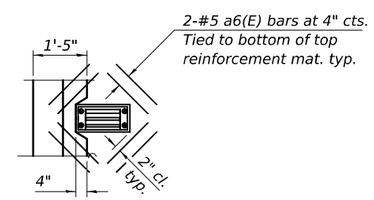

DRAINAGE SCUPPER PLAN

Note:
Cut longitudinal reinforcement to clear drainage scuppers.

Notes:

The 3/16" min. aluminum sheet shall be ASTM B 209 alloy 3003-H14 and coated with 5 mils of either bitumen paint or epoxy paint to minimize reaction with wet concrete. Cost included with Concrete Superstructure.

The polyurethane sealant shall be according to Article 1050.04 of the Std. Spec. and the color shall be gray.

The exterior surfaces of the scuppers shall be coated or pigmented by the manufacturer with a color that matches the concrete.

Bars indicated thus 1 x 2-#4 etc. indicates 1 line of bars with 2 lengths per line.

Bar terminators, paid for separately. See Total Bill of Material.

MODEL: 66K39 Sheet Border
FILE NAME: c:\workingdir\$datasource.name\dms16334\D366K39-plan-border.dgn

V3 Companies
7325 Janes Avenue
Woodridge, IL 60517
630 724 9200 phone
www.v3co.com

USER NAME =	DESIGNED - LKF	REVISED -	
	DRAWN - LJM	REVISED -	
	CHECKED - WJV	REVISED -	
PLOT DATE = 02/20/2026	DATE - 02/20/2026	REVISED -	

STATE OF ILLINOIS
DEPARTMENT OF TRANSPORTATION

SUPERSTRUCTURE DETAILS - I
STRUCTURE NO. 027-0106 (S.B.) & 027-0107 (N.B.)

SCALE: | SHEET 16 OF 48 SHEETS | STA. | TO STA.

F.A.I. RTE.	SECTION	COUNTY	TOTAL SHEETS	SHEET NO.
57	(27-38B) BR-1	FORD	185	108
		CONTRACT NO. 66K39		
	ILLINOIS	FED. AID PROJECT		

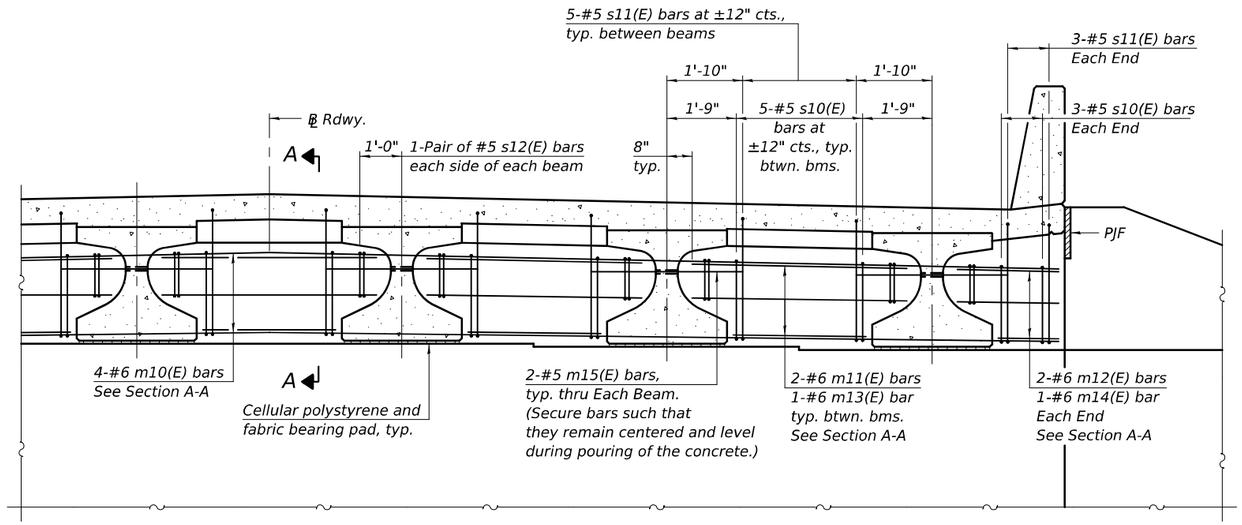

DIAPHRAGM AT ABUTMENT

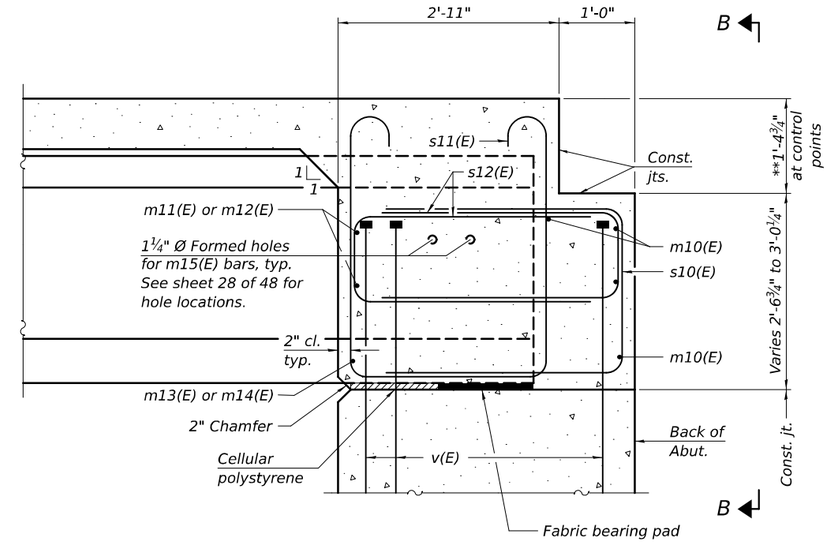

SECTION A-A
(at Rt. ∠'s)
** Prior to grinding

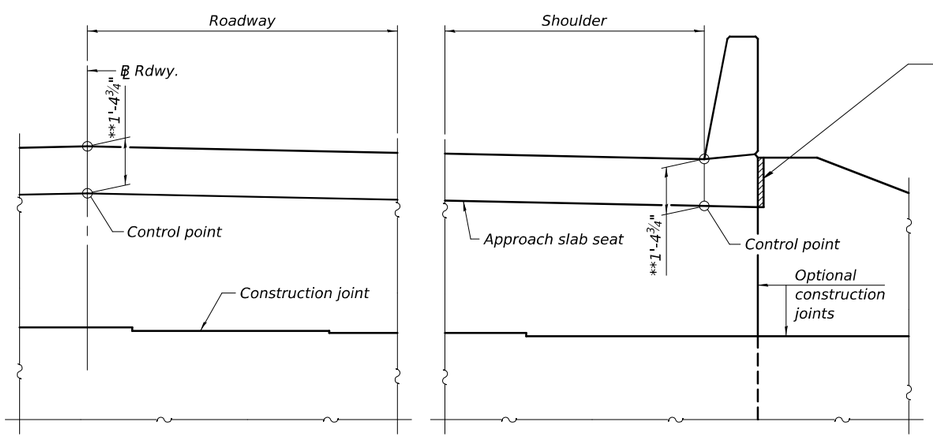

VIEW B-B
** Prior to grinding

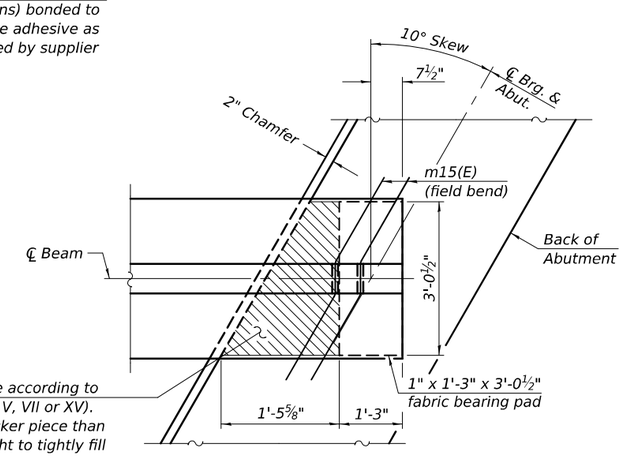

PLAN AT ABUTMENT
(Showing bottom flange of beam)

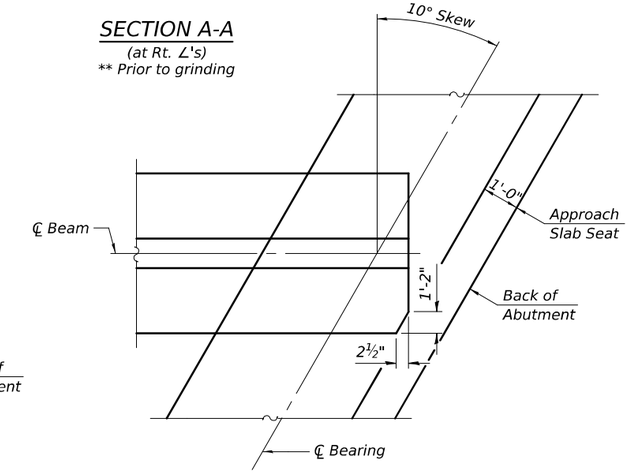

TOP FLANGE CLIPPING DETAIL

Notes:
See sheets 16 and 19 of 48 for superstructure details and Bill of Material.
See sheet 20 of 48 for PJF details.
The s10(E), s11(E) and s12(E) bars shall be placed parallel to the beams. Spacing for these bars shall be at right angles to the beams.
The approach slab seat shall have a constant slope determined from the control points shown.
Cost of cellular polystyrene is included with Concrete Superstructure.
Bar terminators, paid for separately. See Total Bill of Material.

MODEL: 66K39 Sheet Border
FILE NAME: c:\workingdir\$datasource.name\dms16334\D368K39-plan-border.dgn

V3 Companies
7325 Janes Avenue
Woodridge, IL 60517
630 724 9200 phone
www.v3co.com

USER NAME =	DESIGNED - LKF	REVISED -	
	DRAWN - LJM	REVISED -	
	CHECKED - WJV	REVISED -	
PLOT DATE = 02/20/2026	DATE - 02/20/2026	REVISED -	

STATE OF ILLINOIS
DEPARTMENT OF TRANSPORTATION

DIAPHRAGM DETAILS - I
STRUCTURE NO. 027-0106 (S.B.) & 027-0107 (N.B.)

SCALE: SHEET 17 OF 48 SHEETS STA. TO STA.

F.A.I. RTE.	SECTION	COUNTY	TOTAL SHEETS	SHEET NO.
57	(27-38B) BR-1	FORD	185	109
		CONTRACT NO. 66K39		
	ILLINOIS	FED. AID PROJECT		

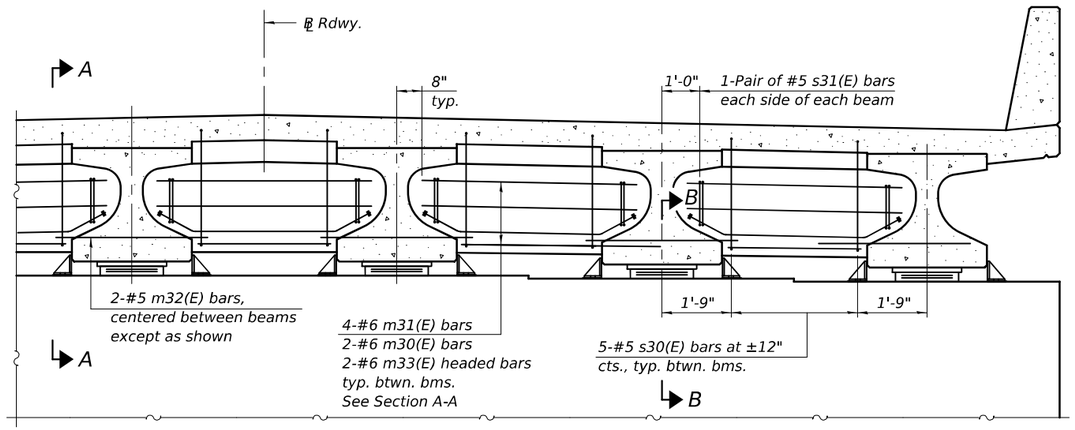

DIAPHRAGM AT PIER

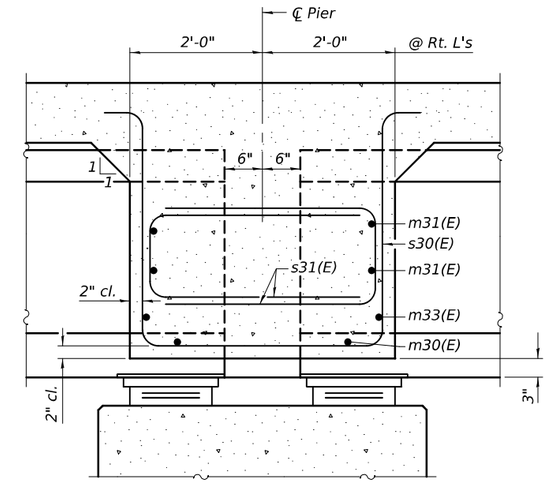

SECTION A-A

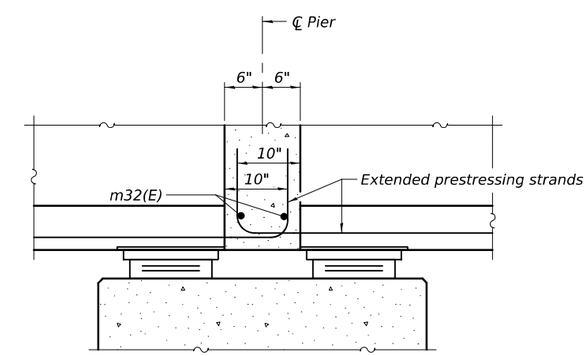

SECTION B-B

Notes:
See sheets 16 and 19 of 48 for superstructure details and Bill of Material.
The s30(E) and s31(E) bars shall be placed parallel to the beams. Spacing for these bars shall be at right angles to the beams.
Horizontal dimensions for Section A-A and Section B-B are along ℄ of beam unless otherwise noted.

MODEL: 66K39 Sheet Border
FILE NAME: c:\workingdir\$datasource.name\dms16334\D366K39-plan-border.dgn

V3 Companies
7325 Janes Avenue
Woodridge, IL 60517
630 724 9200 phone
www.v3co.com

USER NAME =	DESIGNED - LKF	REVISED -	
	DRAWN - LJM	REVISED -	
	CHECKED - WJV	REVISED -	
PLOT DATE = 02/20/2026	DATE - 02/20/2026	REVISED -	

STATE OF ILLINOIS
DEPARTMENT OF TRANSPORTATION

DIAPHRAGM DETAILS - II
STRUCTURE NO. 027-0106 (S.B.) & 027-0107 (N.B.)

SCALE: SHEET 18 OF 48 SHEETS STA. TO STA.

F.A.I. RTE.	SECTION	COUNTY	TOTAL SHEETS	SHEET NO.
57	(27-38B) BR-1	FORD	185	110
		CONTRACT NO. 66K39		
	ILLINOIS	FED. AID PROJECT		

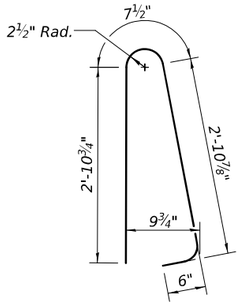

BAR d(E)

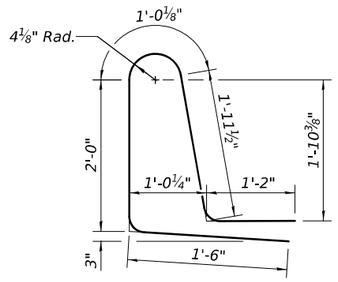

BAR d1(E)

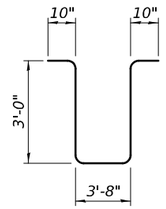

BARS s30(E)

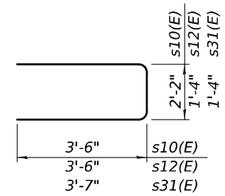

BARS s10(E), s12(E) & s31(E)

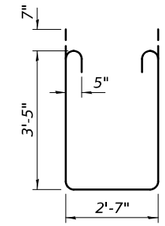

BAR s11(E)

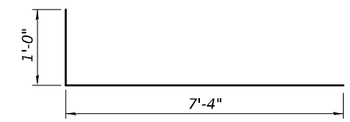

BAR a2(E)

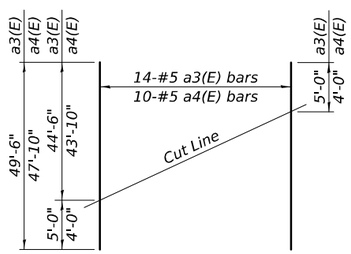

FIELD CUTTING DIAGRAM

Order a3(E) and a4(E) bars full length.
Cut as shown and use remainder of
bars in opposite end of deck.

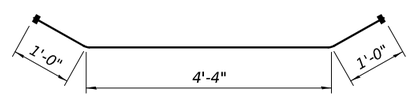

BAR m33(E)

(Headed. 80 - #6 Bar terminators)

TWO SUPERSTRUCTURES
BILL OF MATERIAL

Bar	No.	Size	Length	Shape
a(E)	1056	#5	44'-6"	
a1(E)	762	#5	43'-10"	
a2(E)	2160	#6	8'-4"	
a3(E)	56	#5	49'-6"	
a4(E)	40	#5	47'-10"	
a5(E)	8	#5	45'-2"	
a6(E)	32	#5	1'-6"	
b(E)	576	#5	23'-7"	
b1(E)	192	#8	48'-8"	
b2(E)	96	#5	19'-4"	
b3(E)	902	#5	29'-11"	
b4(E)	164	#8	47'-0"	
b5(E)	120	#6	39'-0"	
b6(E)	384	#7	15'-3"	
d(E)	1752	#5	7'-0"	
d1(E)	1752	#5	7'-8"	
e(E)	320	#4	16'-7"	
e1(E)	192	#4	11'-11"	
e2(E)	128	#4	17'-10"	
e3(E)	96	#4	29'-8"	
e4(E)	48	#4	25'-8"	
m10(E)	16	#6	45'-2"	
m11(E)	40	#6	6'-4"	
m12(E)	16	#6	2'-7"	
m13(E)	20	#6	4'-1"	
m14(E)	8	#6	1'-6"	
m15(E)	48	#5	4'-0"	
m30(E)	40	#6	4'-1"	
m31(E)	80	#6	6'-4"	
m32(E)	48	#5	4'-0"	
m33(E)	40	#6	6'-4"	
s10(E)	124	#5	9'-2"	
s11(E)	124	#5	10'-7"	
s12(E)	96	#5	8'-4"	
s30(E)	100	#5	11'-4"	
s31(E)	80	#5	8'-6"	
Concrete Superstructure			Cu. Yds.	1,074.3
Protective Coat			Sq. Yd.	3,299
Reinforcement Bars, Epoxy Coated			Lbs.	269,700
Bridge Deck Grooving (Longitudinal)			Sq. Yd.	1,556
Diamond Grinding (Bridge Section)			Sq. Yd.	2,463

Notes:
Bar terminators, paid for separately. See Total Bill of Material.

MODEL: 66K39 Sheet Border
FILE NAME: c:\workingdir\$datasource.name\dms16334\D366K39-plan-border.dgn

V3 Companies
7325 Janes Avenue
Woodridge, IL 60517
630 724 9200 phone
www.v3co.com

USER NAME =	DESIGNED - LKF	REVISED -	
	DRAWN - LJM	REVISED -	
	CHECKED - WJV	REVISED -	
PLOT DATE = 02/20/2026	DATE - 02/20/2026	REVISED -	

STATE OF ILLINOIS
DEPARTMENT OF TRANSPORTATION

SUPERSTRUCTURE DETAILS - II
STRUCTURE NO. 027-0106 (S.B.) & 027-0107 (N.B.)

SCALE: | SHEET 19 OF 48 SHEETS | STA. | TO STA.

F.A.I. RTE.	SECTION	COUNTY	TOTAL SHEETS	SHEET NO.
57	(27-38B) BR-1	FORD	185	111
		CONTRACT NO. 66K39		
		ILLINOIS	FED. AID PROJECT	

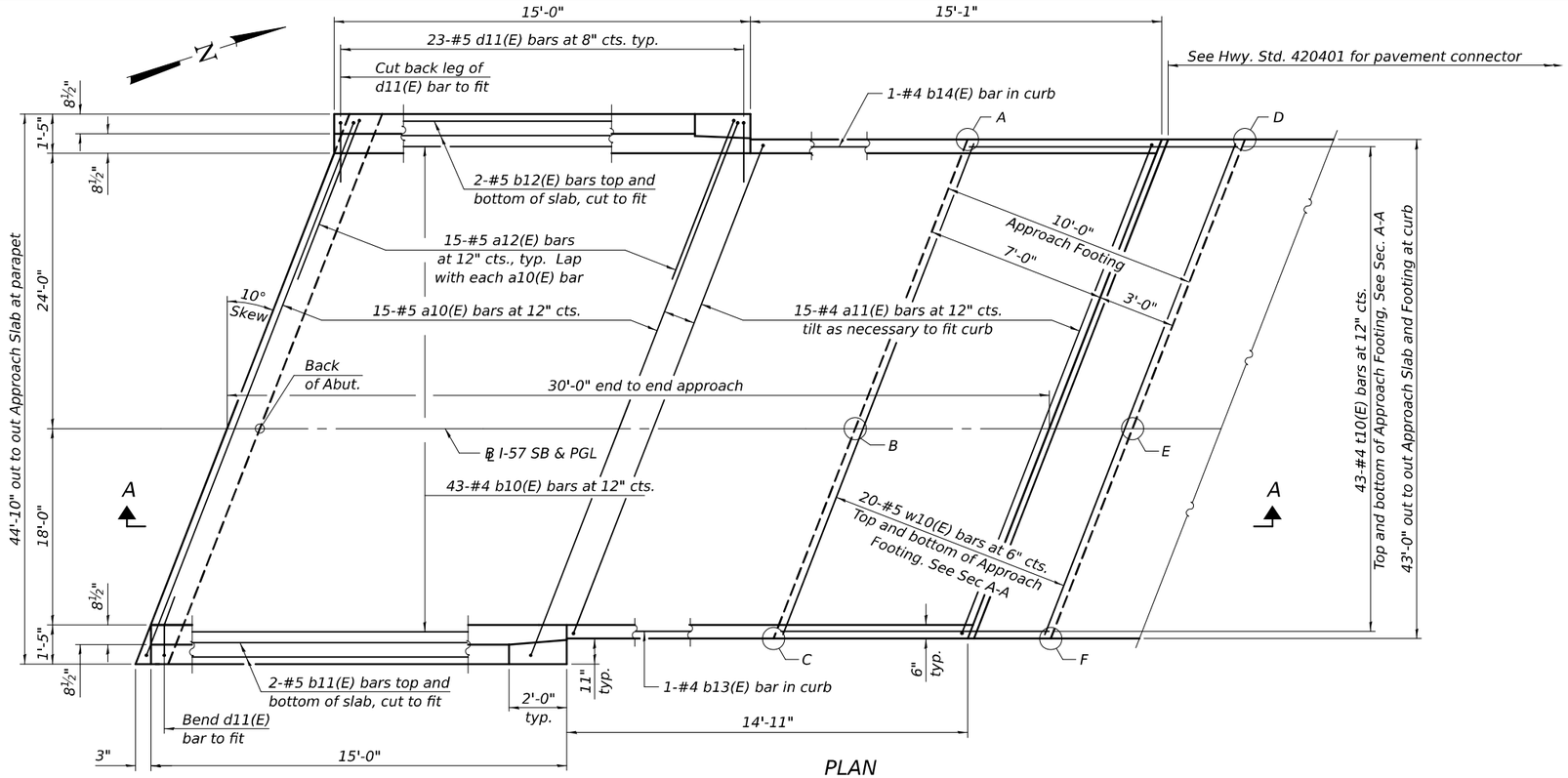

PLAN

(North approach slab shown; South approach slab similar by 180° rotation)

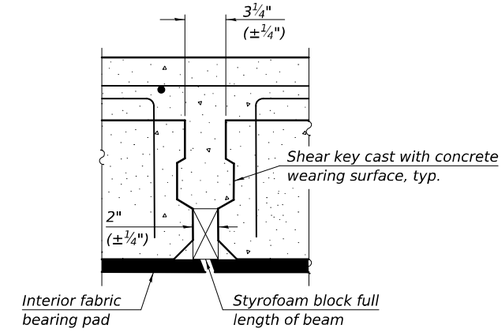

DETAIL 'A'

TOP AND BOTTOM ELEVATIONS FOR APPROACH FOOTING

South Approach			North Approach		
Point/ Location	Top	Bottom	Point/ Location	Top	Bottom
A - NW	738.18	737.34	A - SW	736.49	735.66
B - N ℄	738.63	737.79	B - S ℄	736.94	736.11
C - NE	738.33	737.50	C - SE	736.65	735.81
D - SW	738.23	737.39	D - NW	736.44	735.60
E - S ℄	738.68	737.84	E - N ℄	736.89	736.06
F - SE	738.38	737.55	F - NE	736.60	735.76

Note:
Points A thru C are along edge of footing closest to the bridge while points D thru F are along edge of footing furthest from bridge.

* Fabric bearing pads at the expansion end shall be recessed ¼" into the approach footing and bonded. Adjusting shims, when required, shall be bonded to the top of the fabric bearing pads.

**Prior to Grinding

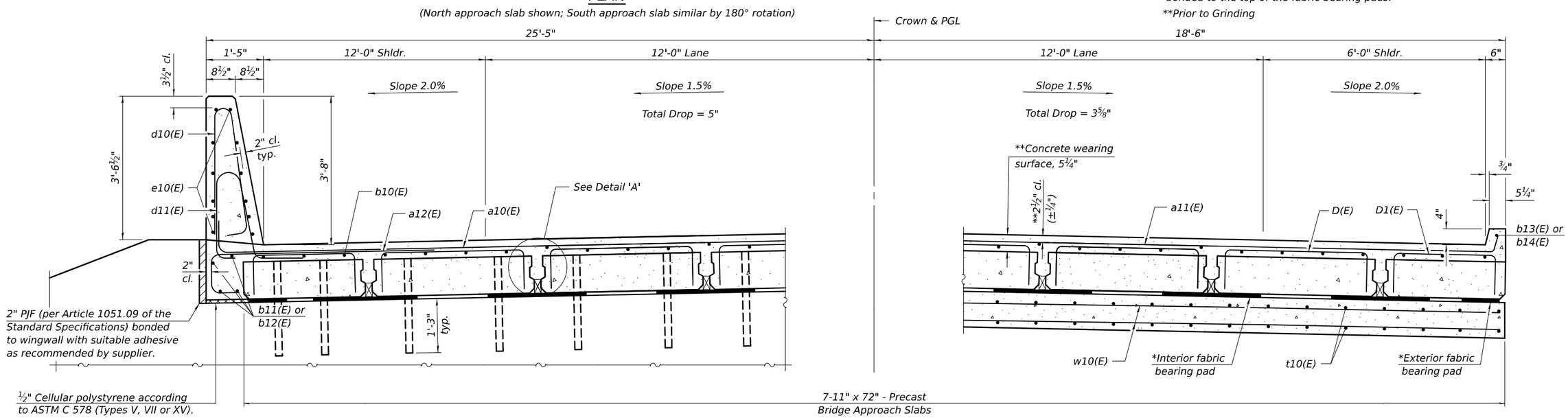

NEAR ABUTMENT

AT APPROACH FOOTING

CROSS SECTION

(Looking North)

MODEL: 66K39 Sheet Border
FILE NAME: c:\workingdir\$datasource.name\dms18334\D366K39-plan-border.dgn

V3 Companies
7325 Janes Avenue
Woodridge, IL 60517
630 724 9200 phone
www.v3co.com

USER NAME =	DESIGNED - LJM	REVISED -	
	DRAWN - LJM	REVISED -	
	CHECKED - WJV	REVISED -	
PLOT DATE = 02/20/2026	DATE - 02/20/2026	REVISED -	

STATE OF ILLINOIS
DEPARTMENT OF TRANSPORTATION

PARTIAL DEPTH PRECAST BRIDGE APPROACH SLAB - SB
STRUCTURE NO. 027-0106 (S.B.) & 027-0107 (N.B.)

SCALE: | SHEET 20 OF 48 SHEETS | STA. | TO STA.

F.A.I. RTE.	SECTION	COUNTY	TOTAL SHEETS	SHEET NO.
57	(27-38B) BR-1	FORD	185	112
		CONTRACT NO. 66K39		
		ILLINOIS	FED. AID PROJECT	

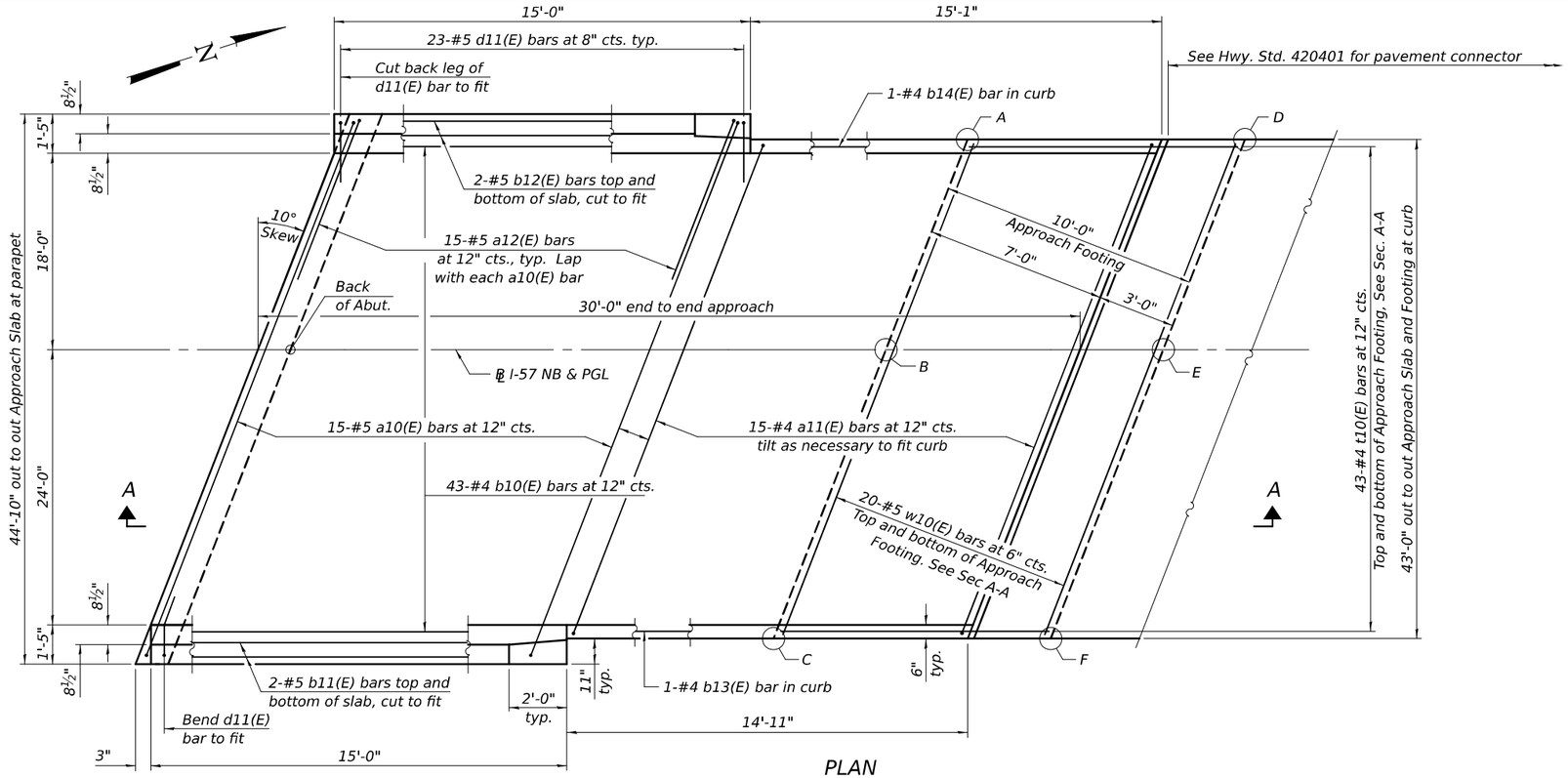

PLAN

(North approach slab shown; South approach slab similar by 180° rotation)

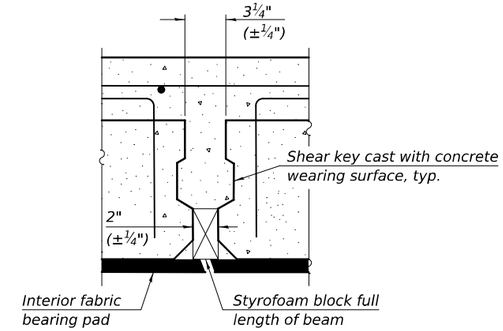

DETAIL 'A'

TOP AND BOTTOM ELEVATIONS FOR APPROACH FOOTING

South Approach			North Approach		
Point/ Location	Top	Bottom	Point/ Location	Top	Bottom
A - NW	738.38	737.55	A - SW	736.69	735.86
B - N ℄	738.71	737.87	B - S ℄	736.02	736.19
C - NE	738.30	737.47	C - SE	736.61	735.78
D - SW	738.43	737.60	D - NW	736.64	735.81
E - S ℄	738.76	737.92	E - N ℄	736.97	736.14
F - SE	738.35	737.52	F - NE	736.56	735.73

Note:
Points A thru C are along edge of footing closest to the bridge while points D thru F are along edge of footing furthest from bridge.

* Fabric bearing pads at the expansion end shall be recessed ¼" into the approach footing and bonded. Adjusting shims, when required, shall be bonded to the top of the fabric bearing pads.

**Prior to Grinding

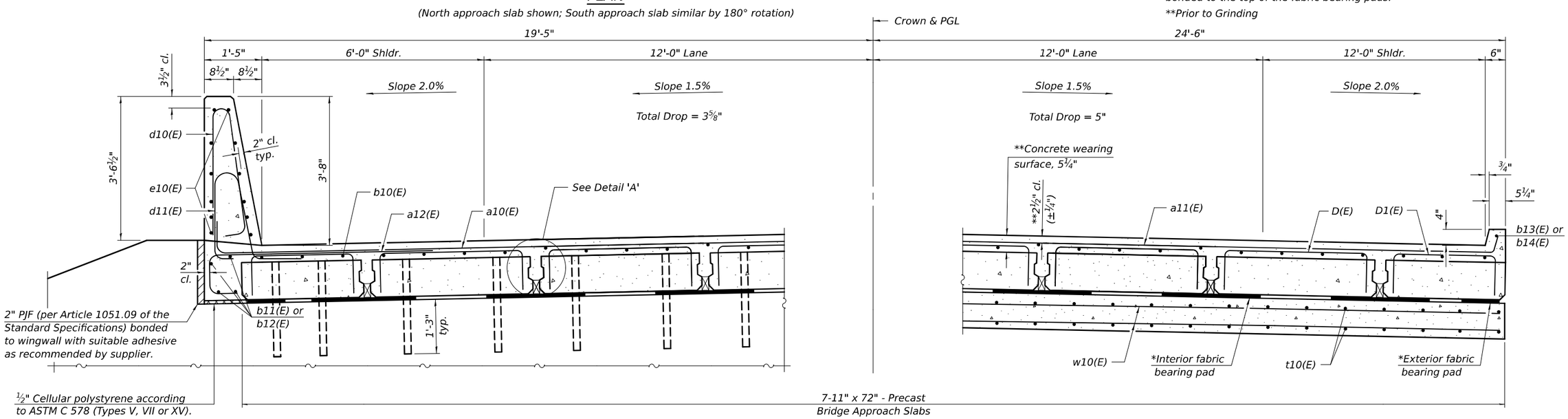

NEAR ABUTMENT

AT APPROACH FOOTING

CROSS SECTION

(Looking North)

MODEL: 66K39 Sheet Border
FILE NAME: c:\workingdir$\$datasource.name\tms16334\D366K39-plan-border.dgn

V3 Companies
7325 Janes Avenue
Woodridge, IL 60517
630 724 9200 phone
www.v3co.com

USER NAME =	DESIGNED - LJM	REVISED -	
	DRAWN - LJM	REVISED -	
	CHECKED - WJV	REVISED -	
PLOT DATE = 02/20/2026	DATE - 02/20/2026	REVISED -	

STATE OF ILLINOIS
DEPARTMENT OF TRANSPORTATION

PARTIAL DEPTH PRECAST BRIDGE APPROACH SLAB - NB
STRUCTURE NO. 027-0106 (S.B.) & 027-0107 (N.B.)

SCALE: | SHEET 21 OF 48 SHEETS | STA. | TO STA.

F.A.I. RTE.	SECTION	COUNTY	TOTAL SHEETS	SHEET NO.
57	(27-38B) BR-1	FORD	185	113
		CONTRACT NO. 66K39		
		ILLINOIS	FED. AID PROJECT	

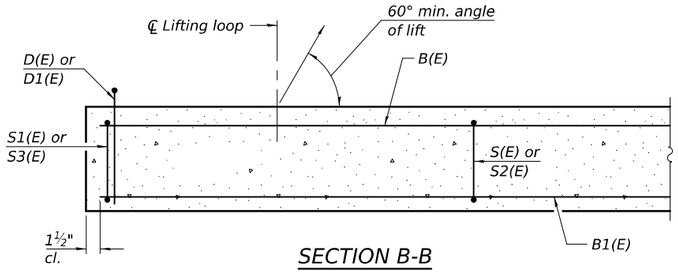

SECTION B-B

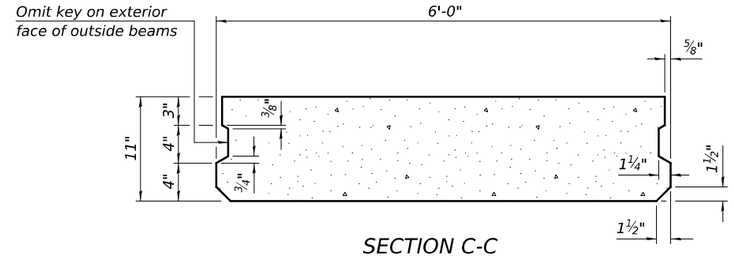

SECTION C-C

(Showing dimensions)

Notes:

The precast bridge approach slab shall be according to Section 504 of the Standard Specifications and shall be paid for at the contract unit price per square foot for Precast Bridge Approach Slab.

Cast-in-place substitution of Precast Bridge Approach Slab is not allowed.

The top surface of precast bridge approach slabs shall be finished similar to precast prestressed deck beams with concrete wearing surface as specified in the IDOT "Manual for Fabrication of Precast Prestressed Concrete Products."

Two ⅛" fabric adjusting shims of the dimensions of the exterior bearing pad shall be provided for each bearing pad location. Cost included with Precast Bridge Approach Slab.

A minimum 2½" Ø lifting pins shall be used to engage the lifting loops during handling.

Compressive strength of precast concrete, f'c shall be 6,000 psi.

Compressive strength of precast concrete during initial lifting, f'ci shall be 5,000 psi.

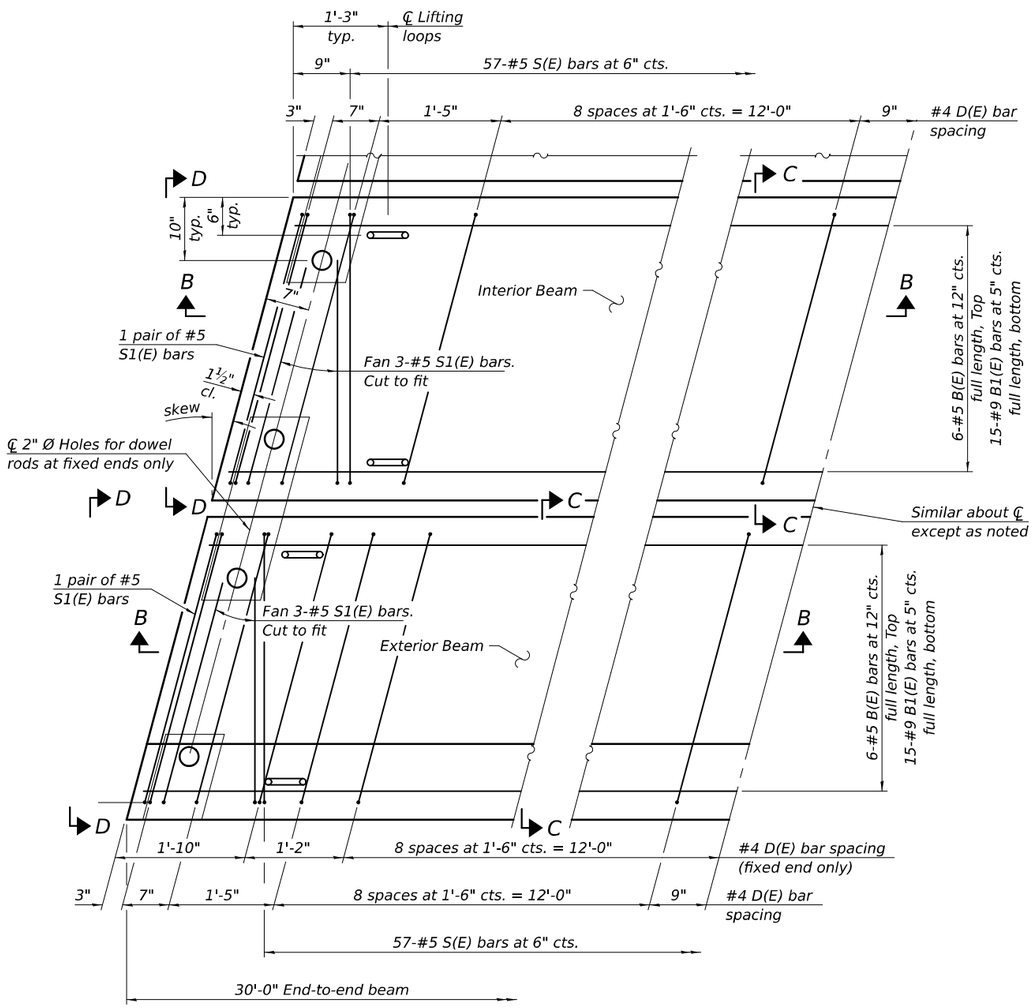

PLAN VIEW

(showing precast bridge approach beams)
(Spacing of D(E) bars may be adjusted up to 3" to miss the dowel rod holes and the lifting loops at the beam ends)

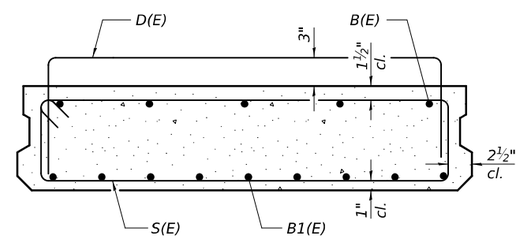

SECTION C-C

(Showing reinforcement)

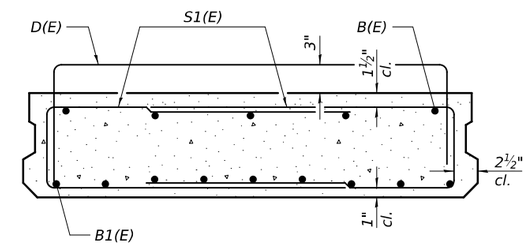

VIEW D-D

(Showing reinforcement)

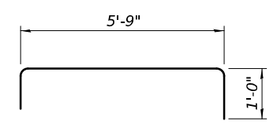

BAR D(E)

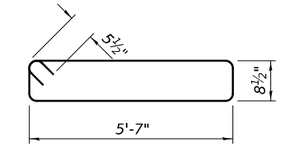

BAR S(E)

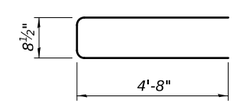

BAR S1(E)

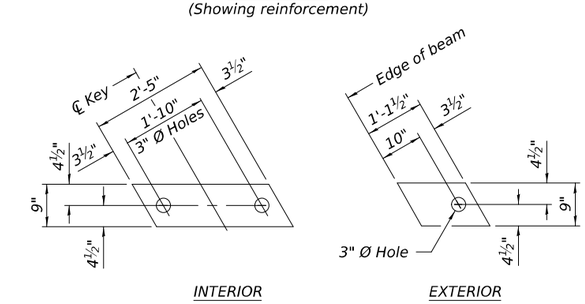

FABRIC BEARING PAD

Notes:

Bearing pads at fixed end shall be ½" thick and bearing pads at expansion end shall be ¾" thick.

Omit holes for fabric bearing pads at approach slab footing end of beams.

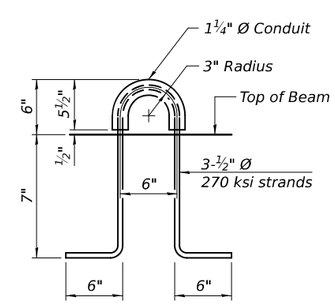

LIFTING LOOP DETAIL

(An alternate lifting loop with a Safe Working Load of 6,250 lbs. (25,000 lbs. Proof Load / Factor of Safety of 4) and utilized according to the manufacturer's recommendations may be used.)

BAR LIST
EACH INTERIOR BEAM

(For information only)

Bar	No.	Size	Length	Shape
B(E)	6	#5	29'-8"	—
B1(E)	15	#9	29'-8"	—
D(E)	22	#4	7'-9"	⊓
S(E)	57	#5	13'-6"	▭
S1(E)	10	#5	10'-1"	▭

BAR LIST
EACH EXTERIOR BEAM

(For information only)

Bar	No.	Size	Length	Shape
B(E)	6	#5	29'-8"	—
B1(E)	15	#9	29'-8"	—
D(E)	32	#4	7'-9"	⊓
S(E)	57	#5	13'-6"	▭
S1(E)	10	#5	10'-1"	▭

MODEL: 66K39 Sheet Border
FILE NAME: c:\workingdir\$datasource.name\dms16334\D366K39-plan-border.dgn

V3 Companies
7325 Janes Avenue
Woodridge, IL 60517
630 724 9200 phone
www.v3co.com

USER NAME =	DESIGNED - LJM	REVISED -	
	DRAWN - LJM	REVISED -	
	CHECKED - WJV	REVISED -	
PLOT DATE = 02/20/2026	DATE - 02/20/2026	REVISED -	

STATE OF ILLINOIS
DEPARTMENT OF TRANSPORTATION

PARTIAL DEPTH PRECAST BRIDGE APPROACH SLAB DETAILS - I
STRUCTURE NO. 027-0106 (S.B.) & 027-0107 (N.B.)

SCALE: SHEET 22 OF 48 SHEETS STA. TO STA.

F.A.I. RTE.	SECTION	COUNTY	TOTAL SHEETS	SHEET NO.
57	(27-38B) BR-1	FORD	185	114

CONTRACT NO. 66K39

ILLINOIS FED. AID PROJECT

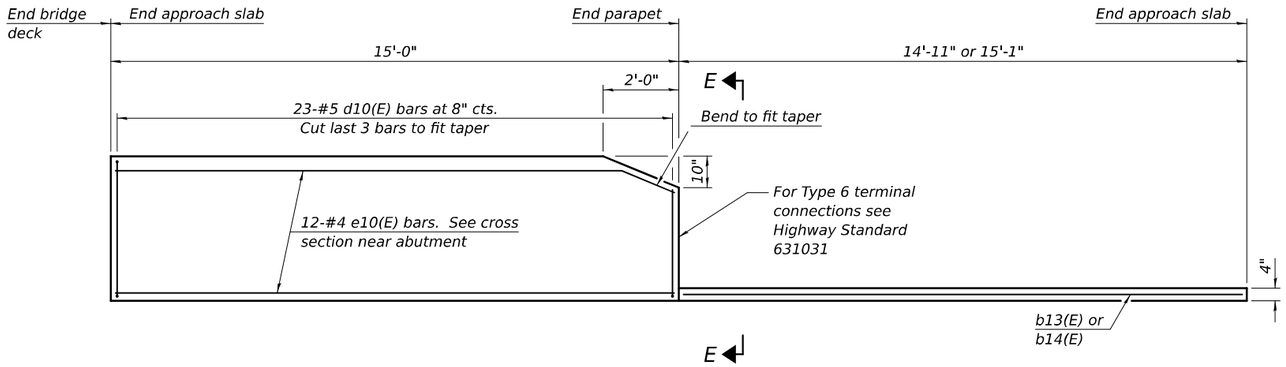

INSIDE ELEVATION OF PARAPET AND CURB

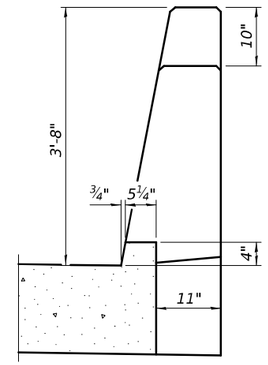

VIEW E-E

Notes:

The joint opening shall be adjusted for temperature per Article 520.04 of the Standard Specifications. However, since this detail is for jointless structures, the length of bridge used to calculate the adjustment shall be equal to half the total bridge length plus the length of the bridge approach slab.

After precast bridge approach slabs have been erected, holes shall be drilled into abutment and anchor dowels placed. Dowel holes shall be filled with non-shrink grout to top of precast slab and cured according to Article 1020.13(a)(3) or 1020.13(a)(5) of the Standard Specifications for a minimum of 24 hours before casting the shear keys and wearing surface.

Any concrete poured monolithically with the wearing surface, such as curbs, shall not be paid for separately, but will be included in the cost of Concrete Wearing Surface, 5".

Parapet concrete shall be paid for as Concrete Superstructure.

Approach footing concrete shall be paid for as Concrete Structures.

The approach footing maximum applied service bearing pressure (Qmax) = 2.0 ksf.

Cost of excavation for approach footing included with Concrete Structures.

For Granular Backfill for Structures and drainage treatment details, see sheet 2 of 48.

Cost of cellular polystyrene is included with Concrete Superstructure.

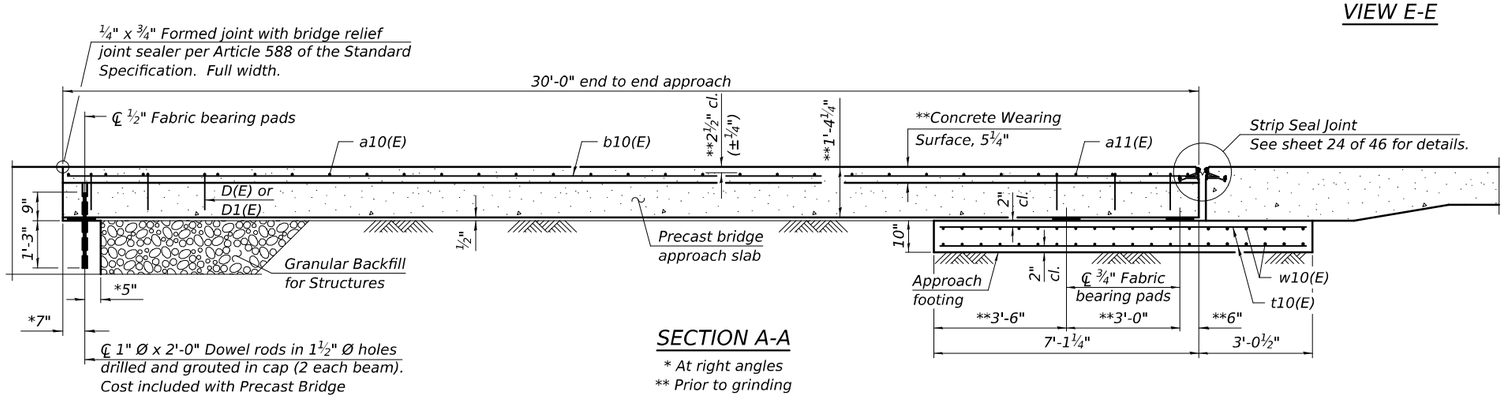

SECTION A-A

* At right angles

** Prior to grinding

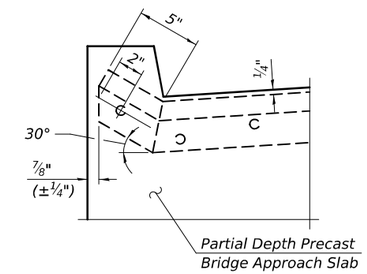

END OF SEAL DETAIL

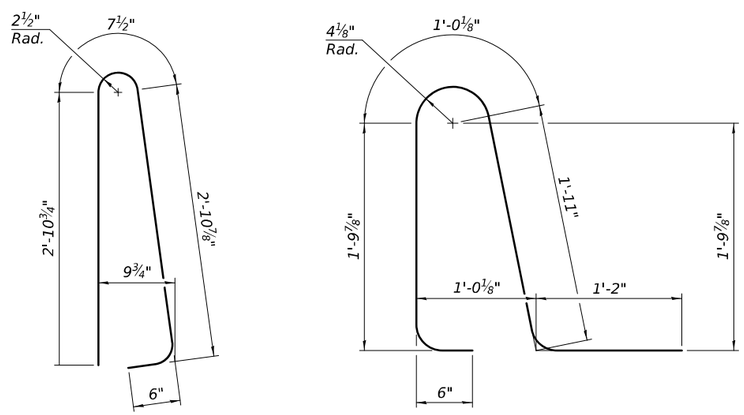

BAR d10(E)

BAR d11(E)

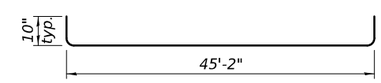

BAR a10(E)

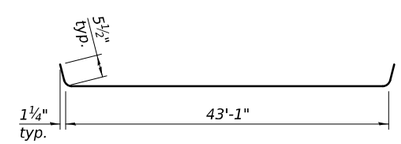

BAR a11(E)

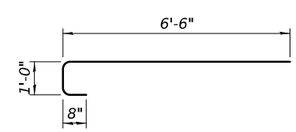

BAR a12(E)

FOUR APPROACHES
BILL OF MATERIAL

Bar	No.	Size	Length	Shape
a10(E)	60	#5	46'-10"	
a11(E)	60	#4	44'-0"	
a12(E)	120	#5	8'-2"	
b10(E)	172	#4	29'-8"	
b11(E)	16	#5	14'-11"	
b12(E)	16	#5	14'-5"	
b13(E)	4	#4	14'-7"	
b14(E)	4	#4	14'-9"	
d10(E)	184	#5	7'-0"	
d11(E)	184	#5	6'-5"	
e10(E)	96	#4	14'-8"	
t10(E)	172	#4	9'-9"	
w10(E)	160	#5	43'-4"	
Concrete Structures			Cu. Yd.	54.0
Concrete Superstructure			Cu. Yd.	17.4
Protective Coat			Sq. Yd.	620
Reinforcement Bars, Epoxy Coated			Pound	21,570
Bridge Deck Grooving (Longitudinal)			Sq. Yd.	320
Concrete Wearing Surface, 5"			Sq. Yd.	586
Precast Bridge Approach Slab			Sq. Ft.	5,270
Diamond Grinding (Bridge Section)			Sq. Yd.	507

MODEL: 66K39 Sheet Border
FILE NAME: c:\workingdir$\datasource.name\dms16334\D366K39-plan-border.dgn

V3 Companies
7325 Janes Avenue
Woodridge, IL 60517
630 724 9200 phone
www.v3co.com

USER NAME =	DESIGNED - LJM	REVISED -	
	DRAWN - LJM	REVISED -	
	CHECKED - WJV	REVISED -	
PLOT DATE = 02/20/2026	DATE - 02/20/2026	REVISED -	

STATE OF ILLINOIS
DEPARTMENT OF TRANSPORTATION

PARTIAL DEPTH PRECAST BRIDGE APPROACH SLAB DETAILS - II
STRUCTURE NO. 027-0106 (S.B.) & 027-0107 (N.B.)

SCALE: | SHEET 23 OF 48 SHEETS | STA. | TO STA.

F.A.I. RTE.	SECTION	COUNTY	TOTAL SHEETS	SHEET NO.
57	(27-38B) BR-1	FORD	185	115
		CONTRACT NO. 66K39		
	ILLINOIS	FED. AID PROJECT		

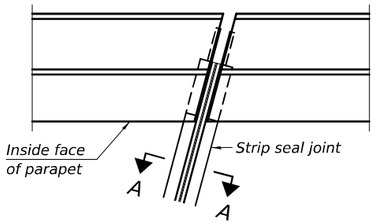

FOR SKEWS ≤ 30°

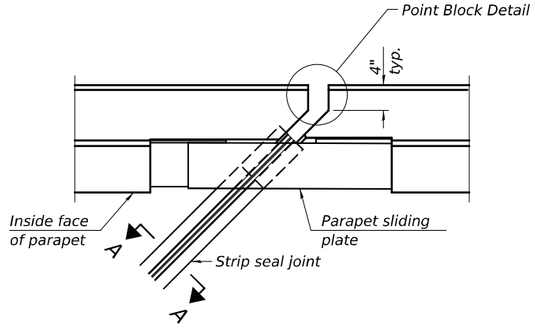

FOR SKEWS > 30°

PLAN AT PARAPET

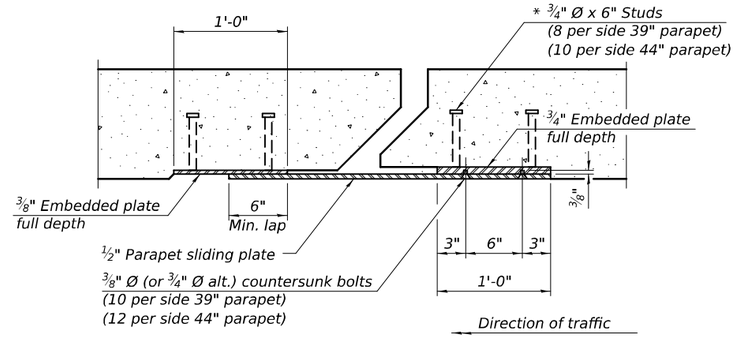

SECTION B-B

(¾" Ø countersunk bolts extending into concrete shall have hex nuts tack welded to the back of the embedded plates with end caps provided.)

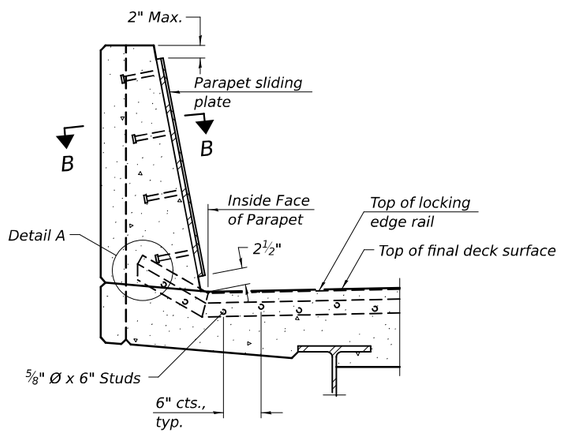

SECTION AT PARAPET

(Skews > 30° shown. Skews ≤ 30° similar except as shown in plan view.)

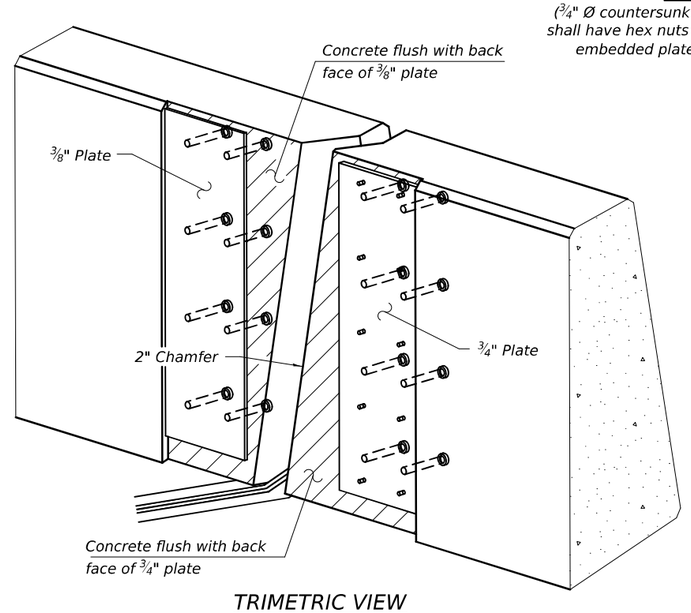

TRIMETRIC VIEW

(Showing embedded plates only)

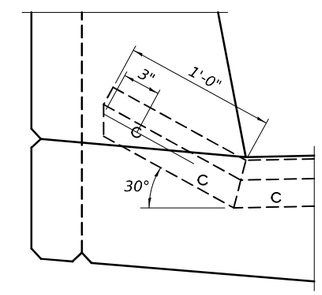

DETAIL A

(Kick-up at parapet locations shown. See sheet of for kick-up at curb locations.)

Notes:

The strip seal shall be made continuous and shall have a minimum thickness of ¼". The configuration of the strip seal shall match the configuration of the locking edge rails. Open or "webbed" strip seal gland configurations are not permitted. The gland shall be sized for a maximum rated movement of 4 inches.

The locking edge rails depicted are configured for typical applications and are conceptual only. The actual configuration of the locking edge rails and matching strip seal may vary from manufacturer to manufacturer provided they fit the application and meet the minimum anchorage shown. Flanged edge rails, however, will not be allowed. Locking edge rails may exceed the 4½" maximum depth provided the anchorage system is revised according to the manufacturer's recommendation.

The manufacturer's recommended installation methods shall be followed.

All steel components shall be galvanized after fabrication according to Article 520.03 of the Standard Specifications.

The Maximum space between locking edge rail segments shall be 3/16" and sealed with a suitable sealant; however, any rail joint within 10' measured perpendicular to the face of the curb or parapet shall be welded as shown in the locking edge rail splice detail.

Cost of parapet sliding plates, embedded plates, and anchorage studs included with Preformed Joint Strip Seal.

39" constant slope barrier shown, 44" constant slope barrier similar as noted.

The concrete opening below the strip seal will vary based on the locking edge rail chosen by the Contractor. Deck and parapet lengths shown elsewhere in the plans are dimensioned to the concrete opening, not the joint opening, and are based on the rolled locking edge rail. If the Contractor elects to use a different locking edge rail, dimensional adjustments may be required. One exception to this would be the strip seal joint at the end of the precast bridge approach slab. For these cases the pavement connector length shall be adjusted, not the length of the bridge approach slab.

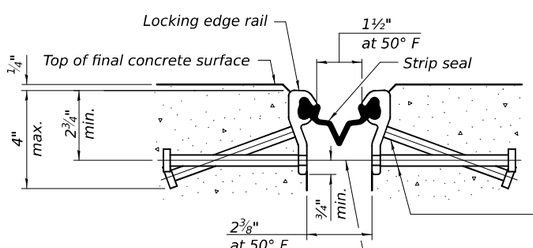

SHOWING ROLLED RAIL JOINT

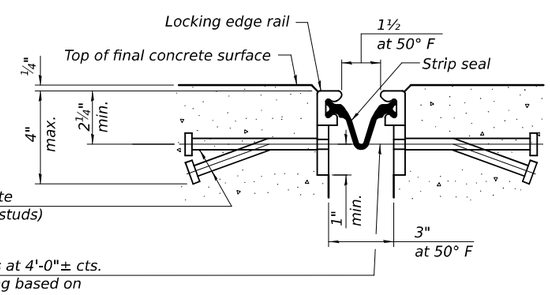

SHOWING WELDED RAIL JOINT

* ⅝" Ø x 6" studs @ 6" cts. (alternate angled/bent studs with horizontal studs)

⅜" Ø threaded rods in 7/16" Ø holes at 4'-0"± cts. for holding the proper joint opening based on the temperature during the deck pour. Place to miss studs. All rods shall be burned, or sawed off flush with the plates after concrete is set.

SECTION A-A

* Granular or solid flux filled headed studs conforming to Article 1006.32 of the Std. Specs., automatically end welded.

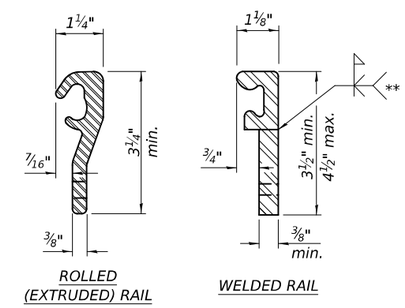

ROLLED (EXTRUDED) RAIL

WELDED RAIL

LOCKING EDGE RAILS

** Back gouge not required if complete joint penetration is verified by mock-up.

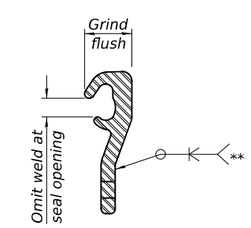

LOCKING EDGE RAIL SPLICE

The inside of the locking edge rail groove shall be free of weld residue. Rolled rail shown, welded rail similar.

BILL OF MATERIAL

Item	Unit	Total
Preformed Joint Strip Seal	Foot	174

EJ-SS 4-4-2025

MODEL: 66K39 Sheet Border
FILE NAME: c:\workingdir\$datasource.name\dms16334\D366K39-plan-border.dgn

V3 Companies
7325 Janes Avenue
Woodridge, IL 60517
630 724 9200 phone
www.v3co.com

USER NAME =	DESIGNED - LKF	REVISED -	
	DRAWN - LJM	REVISED -	
	CHECKED - WJV	REVISED -	
PLOT DATE = 02/20/2026	DATE - 02/20/2026	REVISED -	

STATE OF ILLINOIS
DEPARTMENT OF TRANSPORTATION

PREFORMED JOINT STRIP DETAILS
STRUCTURE NO. 027-0106 (S.B.) & 027-0107 (N.B.)

SCALE: SHEET 24 OF 48 SHEETS STA. TO STA.

F.A.I. RTE.	SECTION	COUNTY	TOTAL SHEETS	SHEET NO.
57	(27-38B) BR-1	FORD	185	116
		CONTRACT NO. 66K39		
	ILLINOIS	FED. AID PROJECT		

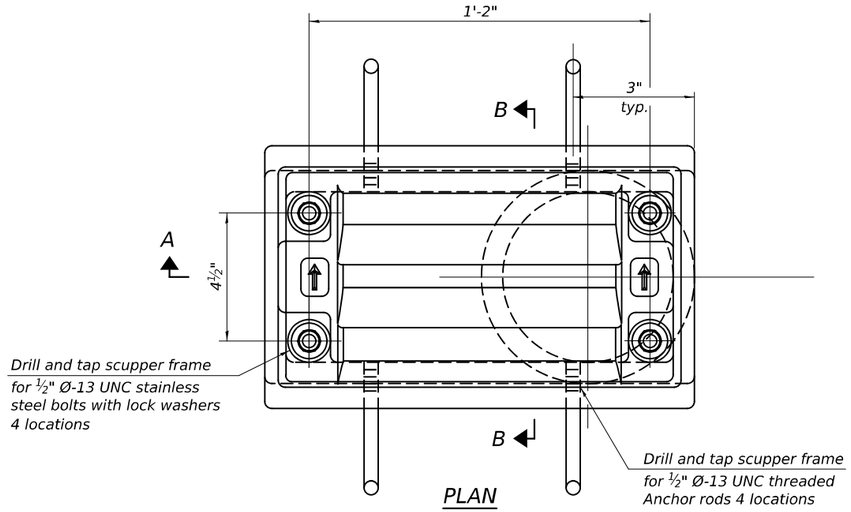

PLAN

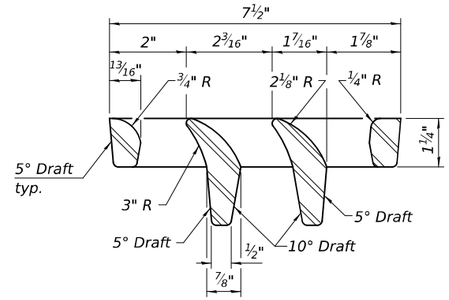

VANE GRATE DETAIL

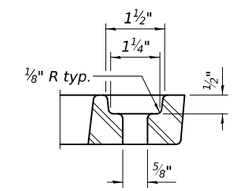

GRATE BOLT HOLE DETAIL

Notes:

All cast iron parts shall be gray iron conforming to the requirements of AASHTO M105, Class 35B and AASHTO M306.

Bolts, anchor rods, nuts and washers shall be according to ASTM A307 and shall be galvanized according to AASHTO M232. As an alternate stainless steel may be used.

Stainless steel hardware shall be according to Article 1006.29(d) of the Standard Specifications.

Structural steel weldments of equal sections and of the same configuration may be substituted for the cast iron scupper frames and downspouts; however, the scupper grates shall remain cast iron. Fillet or full penetration welds shall be used for the weldments. Details shall be submitted to the Engineer for approval.

Structural steel scupper frames and downspouts, when utilized, shall be galvanized according to AASHTO M111.

As an alternate, fiberglass may be used for downspouts according to ASTM D2996 with a short-time rupture strength hoop tensile stress of 30,000 psi min. in lieu of the cast iron or structural steel.

Exterior surfaces of downspouts and exterior exposed surfaces of the scupper frame below deck shall be treated as specified on sheet 16 of 48.

The Contractor shall take appropriate measures to assure that Protective Coat is not applied to the scupper.

Cost of the grate, frame, downspout, anchor rods, nuts and washers including complete installation of the scupper shall be paid for at the contract unit price for Drainage Scuppers, DS-11.

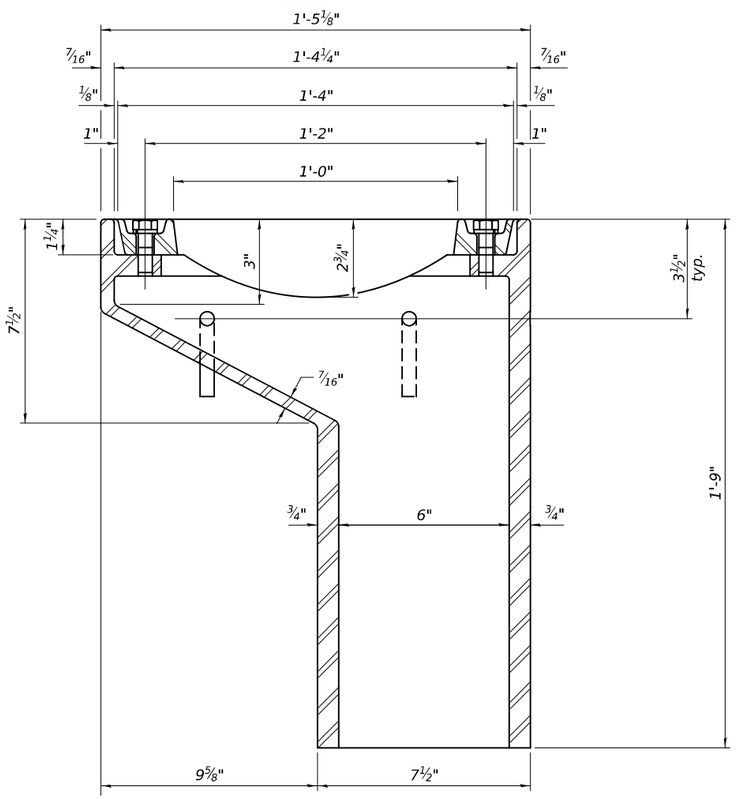

SECTION A-A

See sheet 16 of 48 for scupper location relative to parapet.

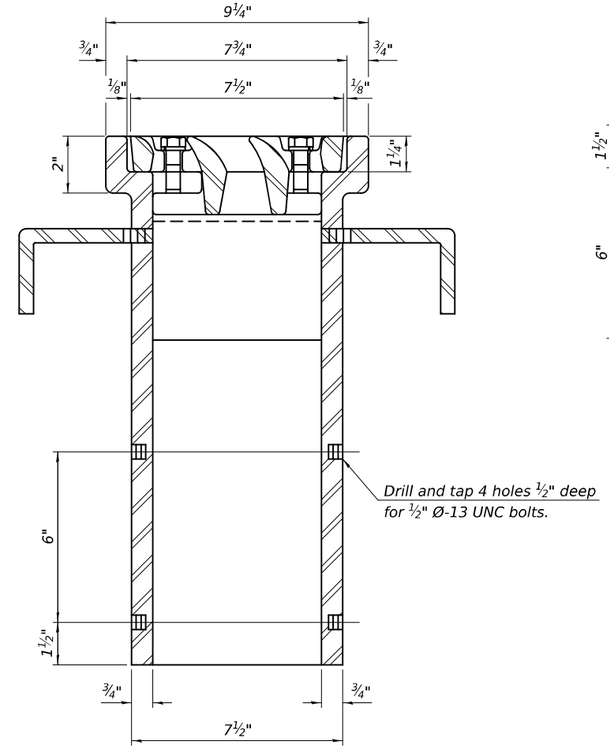

SECTION B-B

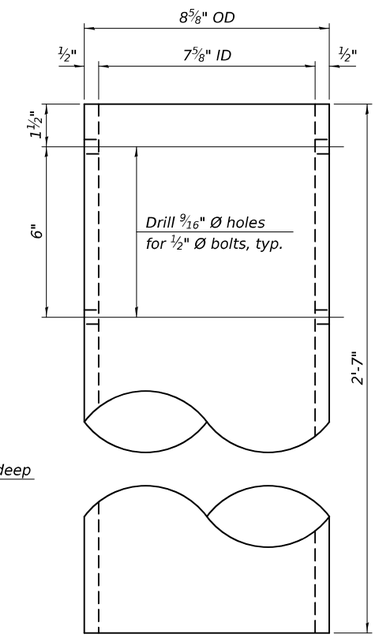

DOWNSPOUT

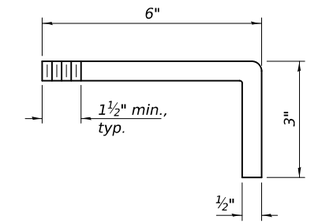

ANCHOR ROD DETAIL

BILL OF MATERIAL

Item	Unit	Quantity
Drainage Scuppers, DS-11	Each	4

DS-11 4-4-2025

MODEL: 66K39 Sheet Border
FILE NAME: c:\workingdir\$datasource.name\dms16334\D366K39-plan-border.dgn

V3 Companies
7325 Janes Avenue
Woodridge, IL 60517
630 724 9200 phone
www.v3co.com

USER NAME =	DESIGNED - LKF	REVISED -	
	DRAWN - LJM	REVISED -	
	CHECKED - WJV	REVISED -	
PLOT DATE = 02/20/2026	DATE - 02/20/2026	REVISED -	

STATE OF ILLINOIS
DEPARTMENT OF TRANSPORTATION

DRAINAGE SCUPPERS, DS - 11
STRUCTURE NO. 027-0106 (S.B.) & 027-0107 (N.B.)

SCALE: SHEET 25 OF 48 SHEETS STA. TO STA.

F.A.I. RTE.	SECTION	COUNTY	TOTAL SHEETS	SHEET NO.
57	(27-38B) BR-1	FORD	185	117
		CONTRACT NO. 66K39		
	ILLINOIS	FED. AID PROJECT		

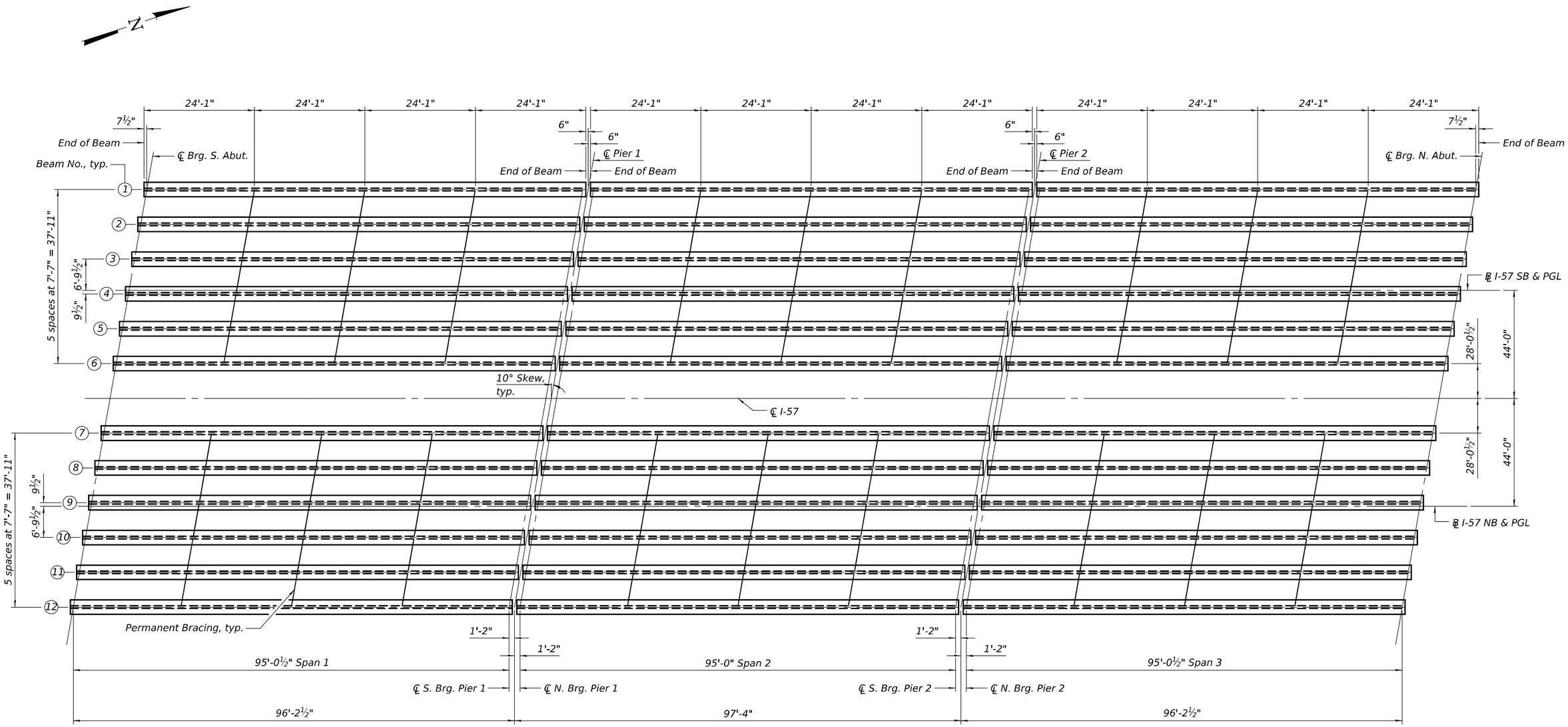

FRAMING PLAN

MODEL: 66K39 Sheet Border
FILE NAME: c:\workingdir\$datasource.name\dms16334\D368K39-plan-border.dgn

V3 Companies
7325 Janes Avenue
Woodridge, IL 60517
630 724 9200 phone
www.v3co.com

USER NAME =	DESIGNED - LKF	REVISED -	
	DRAWN - LJM	REVISED -	
	CHECKED - WJV	REVISED -	
PLOT DATE = 02/20/2026	DATE - 02/20/2026	REVISED -	

STATE OF ILLINOIS
DEPARTMENT OF TRANSPORTATION

FRAMING PLAN
STRUCTURE NO. 027-0106 (S.B.) & 027-0107 (N.B.)

SCALE: SHEET 26 OF 48 SHEETS STA. TO STA.

F.A.I. RTE.	SECTION	COUNTY	TOTAL SHEETS	SHEET NO.
57	(27-38B) BR-1	FORD	185	118
		CONTRACT NO. 66K39		
		ILLINOIS	FED. AID PROJECT	

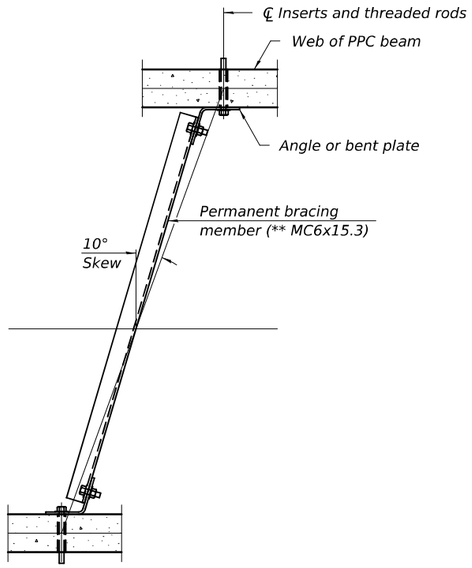

PLAN

INTERIOR BEAM REACTION TABLE				
		Abutments	Pier 1 Span 1 Pier 2 Span 3	Pier 1 Span 2 Pier 2 Span 2
	LLDF	0.821	0.821	0.821
	OCF	1.032	1.032	1.032
	R_{DC1} (k)	82.6	82.6	82.6
*	R_{DC2} (k)	8.2	22.6	22.6
*	R_{DW} (k)	13.4	37.3	37.3
*	R_{LL} (k)	31.9	57.7	57.6
*	R_{IM} (k)	42.4	76.7	76.6
	R_{Total} (Strength I)(Impact) (k)	306.3	500.1	499.6
	R_{Total} (Strength I)(No Impact) (k)	263.4	422.5	422.1

* At continuous piers, reactions from composite loads are assumed to be equally distributed to each bearing line.

INTERIOR BEAM MOMENT TABLE				
		0.4 Sp. 1 0.6 Sp. 3	Pier 1 or 2	0.5 Sp. 2
I	(in⁴)	124639	124639	124639
I'	(in⁴)	306611	306611	306611
S_b	(in³)	7563	7563	7563
S_b'	(in³)	11825	11825	11825
S_t	(in³)	6385	6385	6385
S_t'	(in³)	16968	16968	16968
DC1	(k/ft)	1.697	1.697	1.697
M_{DC1}	('k)	1888	0	1968
DC2	(k/ft)	0.604	0.604	0.604
M_{DC2}	('k)	158	-187	51
DW	(k/ft)	0.375	0.375	0.375
M_{DW}	('k)	258	-308	87
LLDF		0.614	0.614	0.613
M_{LL+IM}	('k)	1299	-1202	1069

I: Non-composite moment of inertia of beam section (in.⁴).
I': Composite moment of inertia of beam section (in.⁴).
S_b: Non-composite section modulus for the bottom fiber of the prestressed beam (in.³).
S_b': Composite section modulus for the bottom fiber of the prestressed beam (in.³).
S_t: Non-composite section modulus for the top fiber of the prestressed beam (in.³).
S_t': Composite section modulus for the top fiber of the prestressed beam (in.³).
DC1: Un-factored non-composite dead load (kips/ft.).
M_{DC1}: Un-factored moment due to non-composite dead load (kip-ft.).
DC2: Un-factored long-term composite (superimposed excluding future wearing surface) dead load (kips/ft.).
M_{DC2}: Un-factored moment due to long-term composite (superimposed excluding future wearing surface) dead load (kip-ft.).
DW: Un-factored long-term composite (superimposed future wearing surface only) dead load (kips/ft.).
M_{DW}: Un-factored moment due to long-term composite (superimposed future wearing surface only) dead load (kip-ft.).
LLDF: Live Load Distribution Factor for moment and shear computed according to Article 4.6.2.2 and further IDOT provisions.
M_{LL+IM}: Un-factored live load moment plus dynamic load allowance (impact) (kip-ft.).
OCF: Obtuse Correction Factor computed according to Article 4.6.2.2.3c or as further simplified by IDOT provisions.
R_{DC1}: Un-factored reaction due to non-composite dead load (kip).
R_{DC2}: Un-factored reaction due to long-term composite (superimposed excluding future wearing surface) dead load (kip).
R_{DW}: Un-factored reaction due to long-term composite (superimposed future wearing surface only) dead load (kip).
R_{LL}: Un-factored live load reaction (kip).
R_{IM}: Un-factored dynamic load allowance (impact) (kip).
R_{Total}(Strength I)(Impact): Total factored reaction including dynamic load allowance (impact) kip).
R_{Total}(Strength I)(No Impact): Total factored reaction not including dynamic load allowance (impact) (kip).

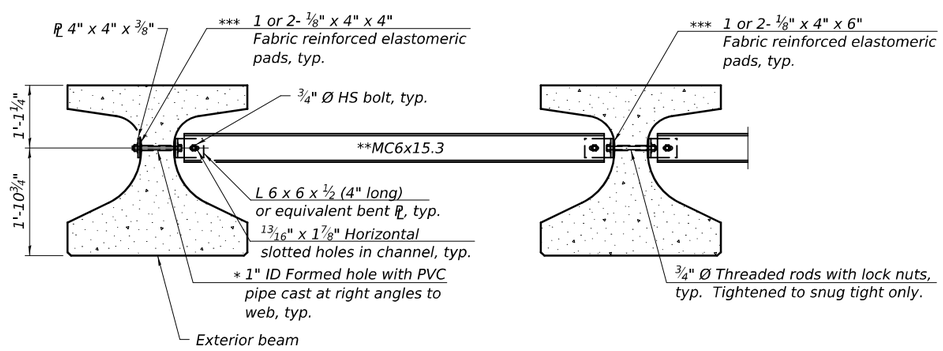

Notes:
All material for bracing shall be hot dip galvanized according to AASHTO M111 unless otherwise noted.
Two hardened washers are required for each set of oversized holes.
All holes shall be 15/16" Ø unless otherwise noted.
5/16" x 3" x 3" plate washers are required over all slotted holes.
All bolts, threaded rods, and hardware shall be galvanized according to AASHTO M232.
Threaded rods shall be ASTM F 1554 Grade 55.
Bracing shall be installed as beams are erected and tightened as soon as possible during erection.
Permanent bracing shall not be paid for separately, but shall be included in the cost of Furnishing and Erecting Precast Prestressed Concrete Beams.

* Fabricator shall locate to miss strands within permissible tolerances.

** Alternate MC6x18 channels are permitted to facilitate material acquisition.

*** Place pads as necessary to provide a flat mounting surface between the steel and concrete.

PERMANENT BRACING DETAILS FOR IL36 BEAMS

MODEL: 66K39 Sheet Border
FILE NAME: c:\workingdir\$datasource.name\dms16334\D366K39-plan-border.dgn

V3 Companies
7325 Janes Avenue
Woodridge, IL 60517
630 724 9200 phone
www.v3co.com

USER NAME =	DESIGNED - LKF	REVISED -
	DRAWN - LJM	REVISED -
	CHECKED - WJV	REVISED -
PLOT DATE = 02/20/2026	DATE - 02/20/2026	REVISED -

STATE OF ILLINOIS
DEPARTMENT OF TRANSPORTATION

FRAMING DETAILS
STRUCTURE NO. 027-0106 (S.B.) & 027-0107 (N.B.)

SCALE: SHEET 27 OF 48 SHEETS STA. TO STA.

F.A.I. RTE.	SECTION	COUNTY	TOTAL SHEETS	SHEET NO.
57	(27-38B) BR-1	FORD	185	119

CONTRACT NO. 66K39
ILLINOIS FED. AID PROJECT

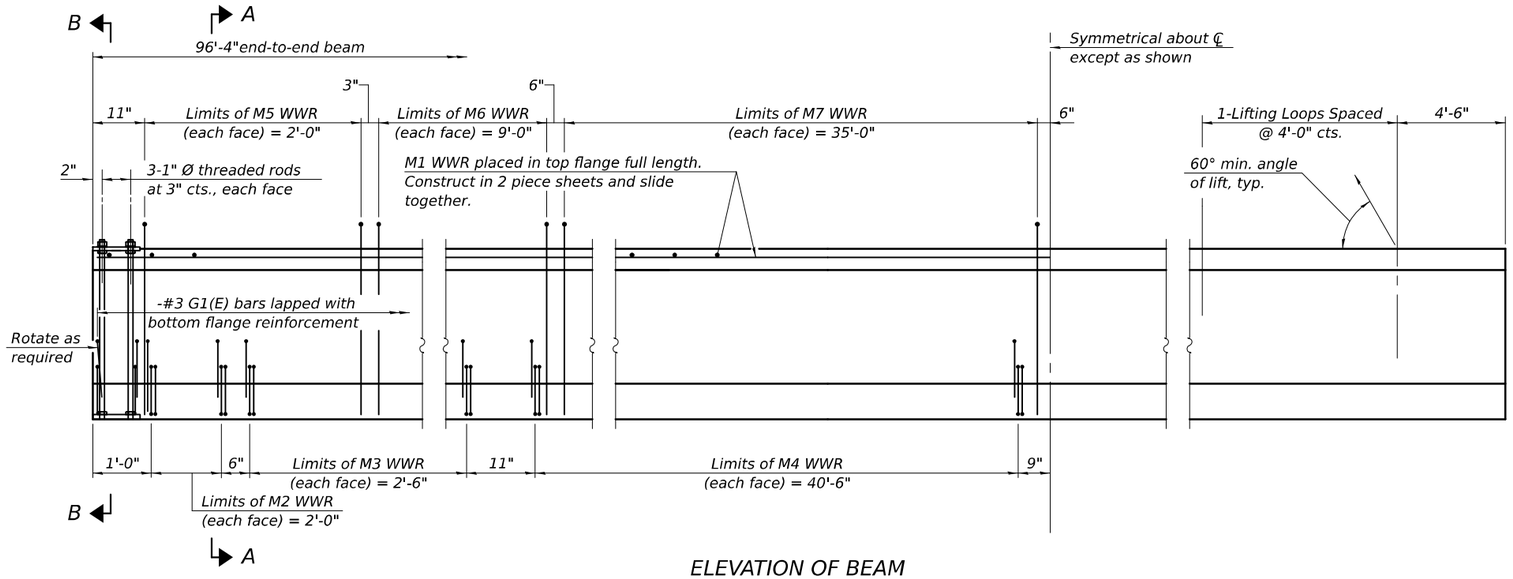

ELEVATION OF BEAM
(Showing reinforcement & dimensions)

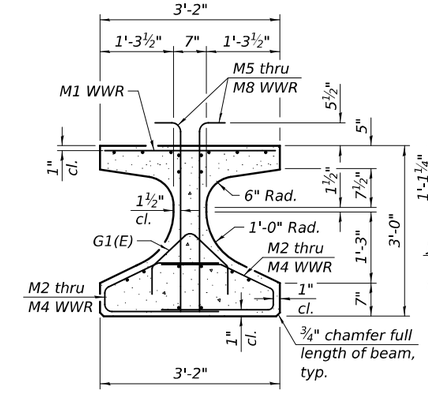

SECTION A-A

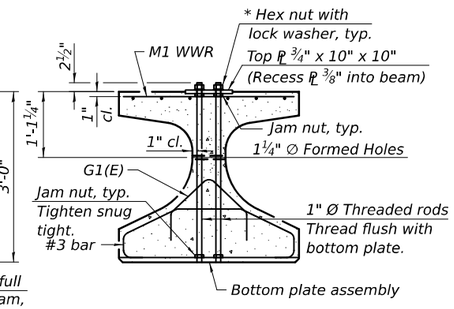

SECTION B-B
* Only tighten sufficiently to compress lock washers

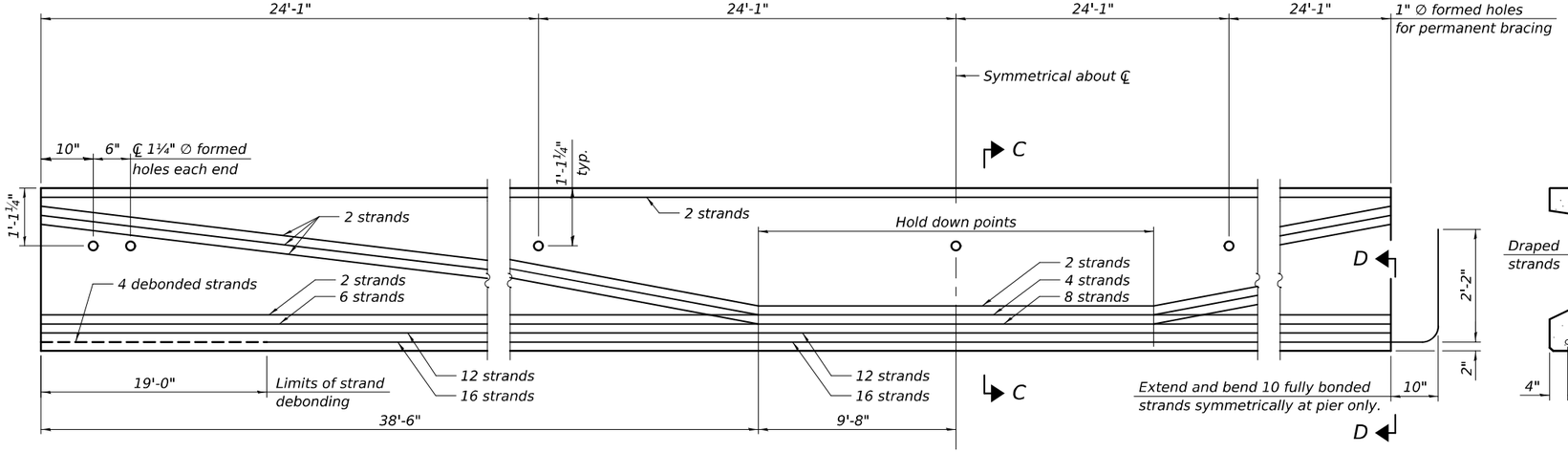

ELEVATION OF BEAM
(Showing prestressing steel)

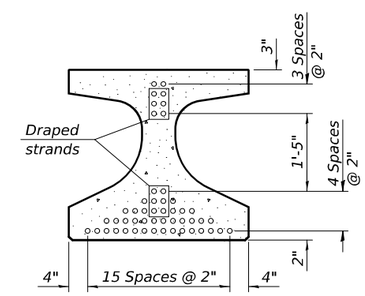

SECTION C-C
(44-0.6" Ø 270 ksi strands)

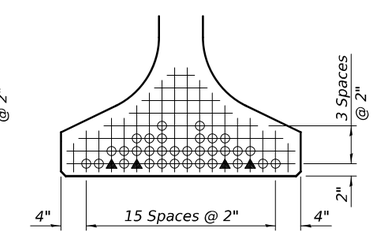

VIEW D-D

○ Fully bonded strand

▲ Partially debonded strand

Note:
See sheet 30 of 48 for additional details and Bill of Material.

MODEL: 66K39 Sheet Border
FILE NAME: c:\workingdir$\datasource.name\dms16334\D366K39-plan-border.dgn

V3 Companies
7325 Janes Avenue
Woodridge, IL 60517
630 724 9200 phone
www.v3co.com

USER NAME =	DESIGNED - LKF	REVISED -	
	DRAWN - LKF	REVISED -	
	CHECKED - WJV	REVISED -	
PLOT DATE = 02/20/2026	DATE - 02/20/2026	REVISED -	

STATE OF ILLINOIS
DEPARTMENT OF TRANSPORTATION

IL36 BEAM - SPANS 1 & 3
STRUCTURE NO. 027-0106 (S.B.) & 027-0107 (N.B.)

SCALE: | SHEET 28 OF 48 SHEETS | STA. | TO STA.

F.A.I. RTE.	SECTION	COUNTY	TOTAL SHEETS	SHEET NO.
57	(27-38B) BR-1	FORD	185	120

CONTRACT NO. 66K39
ILLINOIS | FED. AID PROJECT

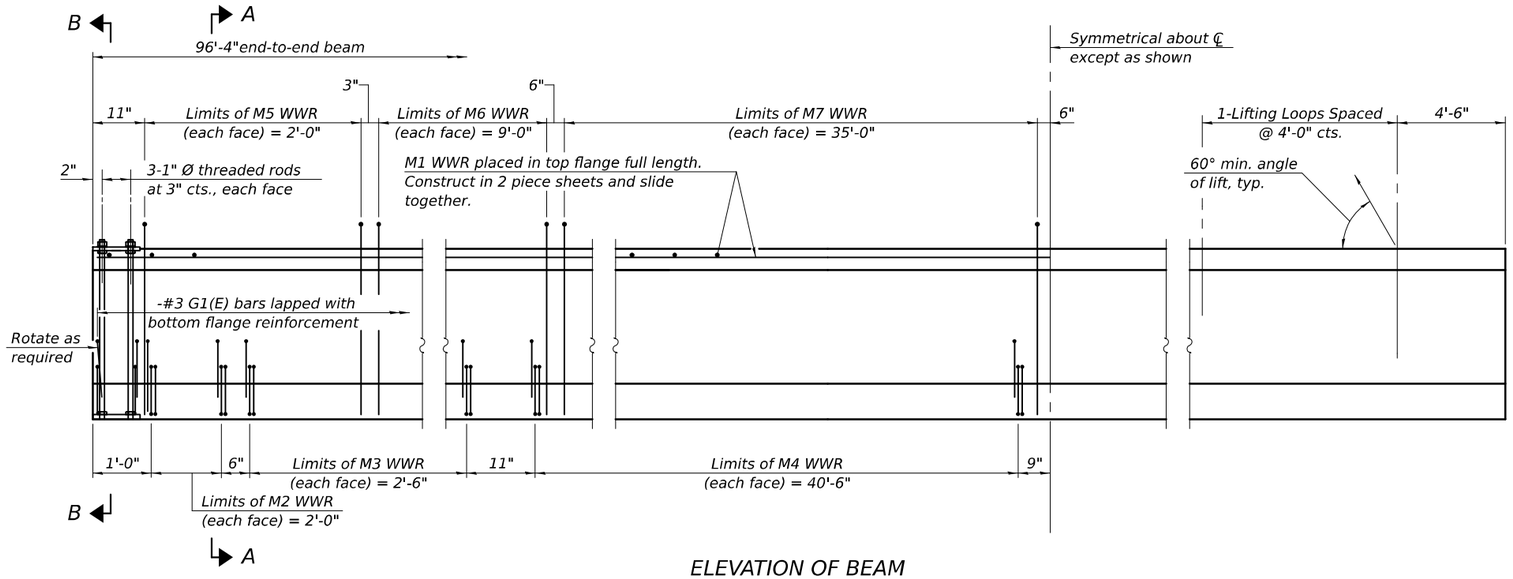

ELEVATION OF BEAM
(Showing reinforcement & dimensions)

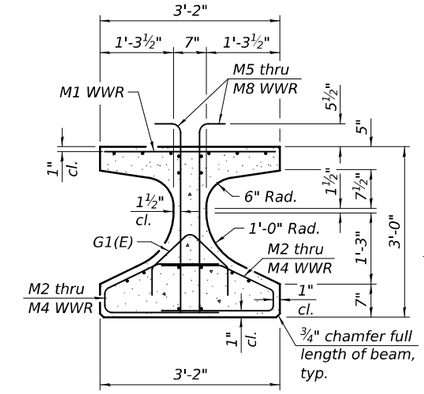

SECTION A-A

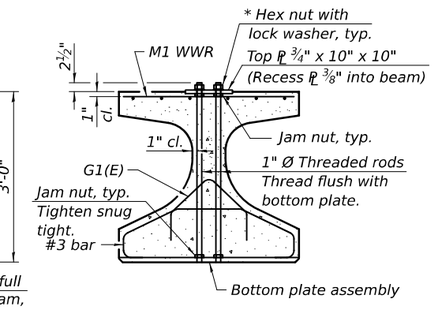

SECTION B-B
* Only tighten sufficiently to
compress lock washers

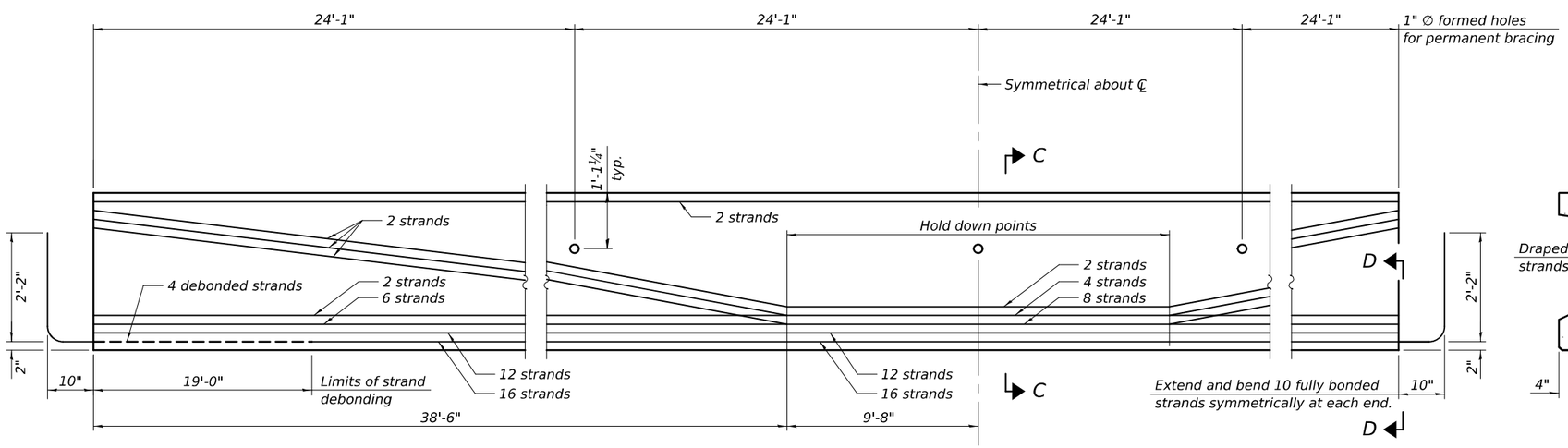

ELEVATION OF BEAM
(Showing prestressing steel)

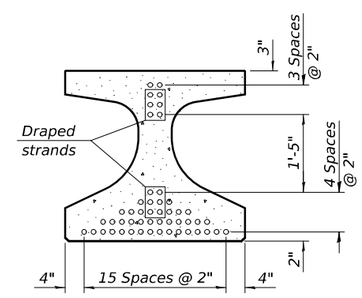

SECTION C-C
(44-0.6" Ø 270 ksi strands)

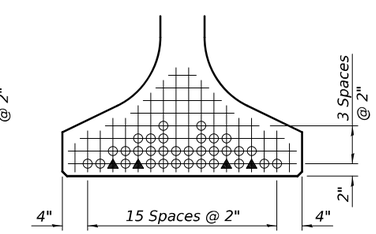

VIEW D-D

○ Fully bonded strand

▲ Partially debonded strand

Note:
See sheet 30 of 48 for additional
details and Bill of Material.

MODEL: 66K39 Sheet Border
FILE NAME: c:\workingdir$\datasource.name\dms16334\D366K39-plan-border.dgn

V3 Companies
7325 Janes Avenue
Woodridge, IL 60517
630 724 9200 phone
www.v3co.com

USER NAME =	DESIGNED - LKF	REVISED -	
	DRAWN - LKF	REVISED -	
	CHECKED - WJV	REVISED -	
PLOT DATE = 02/20/2026	DATE - 02/20/2026	REVISED -	

STATE OF ILLINOIS
DEPARTMENT OF TRANSPORTATION

IL36 BEAM SPAN 2
STRUCTURE NO. 027-0106 (S.B.) & 027-0107 (N.B.)

SCALE: SHEET 29 OF 48 SHEETS STA. TO STA.

F.A.I. RTE.	SECTION	COUNTY	TOTAL SHEETS	SHEET NO.
57	(27-38B) BR-1	FORD	185	121
		CONTRACT NO. 66K39		
	ILLINOIS	FED. AID PROJECT		

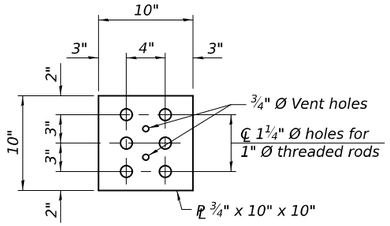

PLAN - TOP PLATE

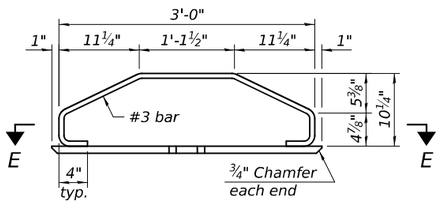

ELEVATION - BOTTOM PLATE ASSEMBLY

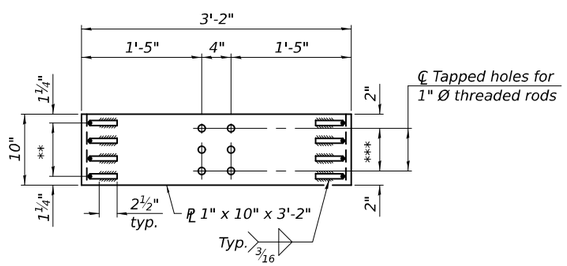

SECTION E-E (Abutments)

** 3 Spaces at 2½" = 7½"
*** 2 Spaces at 3" = 6"

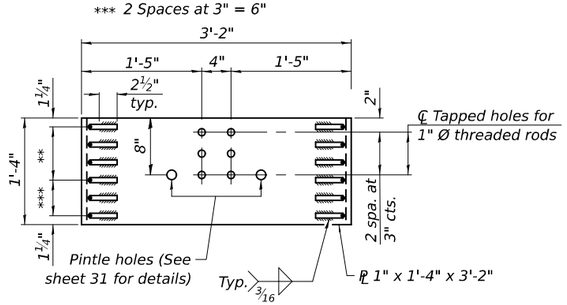

SECTION E-E (Piers 1 & 2)

** 3 Spaces at 2½" = 7½"
*** 2 Spaces at 3" = 6"

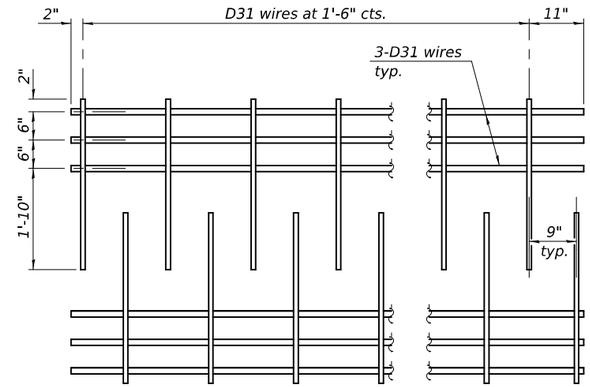

M1 WWR DETAIL

When multiple sheets of M1 WWR are required along the beam length, #5(E) bars (5'-0" long) shall be used to splice the longitudinal D31 wires together (Min. Lap 2'-4").

NOTES

Inserts for ¾" Ø threaded dowel rods, when specified, are to be two strut, ferrule type for interior beams and single ferrule, flared loop type for exterior beams.

Prestressing steel shall be uncoated high strength, low relaxation 7-wire strand, Grade 270. The nominal diameter for beam strands shall be 0.6" and the nominal cross-sectional area shall be 0.217 sq. in. The minimum nominal diameter for lifting loops shall be ½" and the minimum nominal cross sectional area shall be 0.153 sq. in.

The beams shall have a final concrete compressive strength, f'c, of 8500 psi and a release concrete compressive strength, f'ci, of 6500 psi.

A minimum 2½" Ø lifting pin shall be used to engage the lifting loops during handling.

Bend the extended strands inward on the fascia beams to maintain 1½" clearance inside the pier diaphragm.

The top and bottom plates shall be AASHTO M270 Grade 50.

The top plates and bottom plate assemblies shall be galvanized according to AASHTO M111. The threaded rods, nuts and washers shall be galvanized according to AASHTO M232.

Threaded rods shall be ASTM F 1554 Grade 55.

Welded Wire Reinforcement (WWR) shall conform to ASTM A884 with a Class A, Type 1 epoxy coating or ASTM A1060, Table 3 galvanized coating.

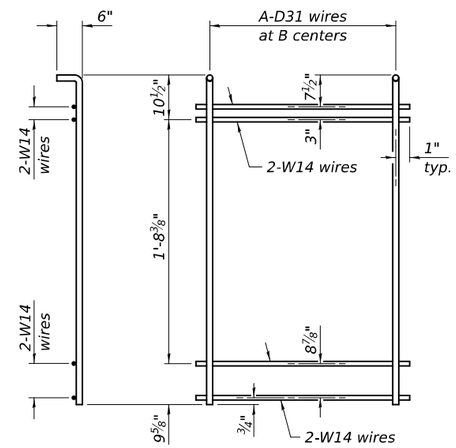

M5 THRU M8 WWR DETAIL

(See Table of Dimensions)

TABLE OF DIMENSIONS

(The WWR designs assume grade 60. If necessary, this permits the fabricator to directly substitute grade 60 rebar as detailed in the Manual for Fabrication of Precast Prestressed Concrete Products.)

SPANS 1-3

WWR	A	B
M2	9	3"
M3	6	6"
M4	28	1'-6"
M5	9	3"
M6	19	6"
M7	36	1'-0"

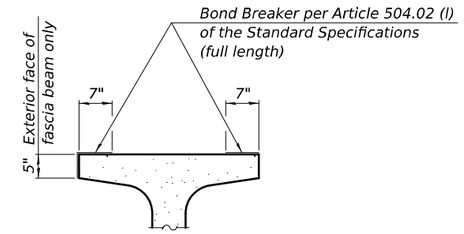

SECTION THRU TOP FLANGE

(Showing limits of bond breaker)

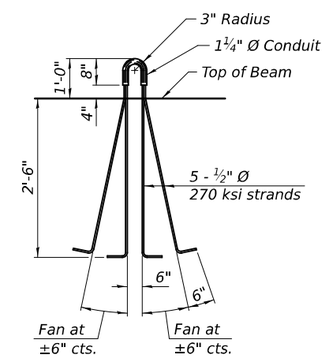

LIFTING LOOP DETAIL

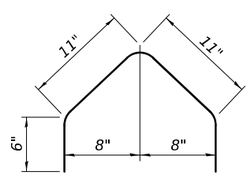

BAR G1(E)

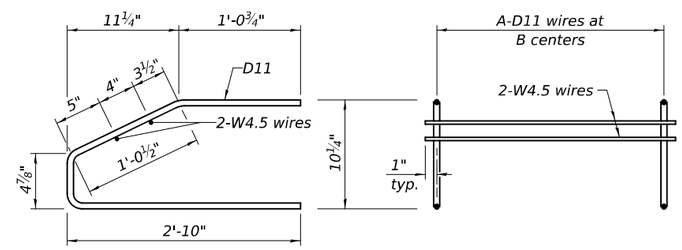

M2 THRU M3 WWR DETAIL

(See Table of Dimensions)

BILL OF MATERIAL

Item	Unit	Total
Furnishing and Erecting Precast Prestressed Concrete Beams, IL36	Ft.	3468

MODEL: 66K39 Sheet Border
FILE NAME: c:\workingdir\$datasource.name\dms16334\D366K39-plan-border.dgn

V3 Companies
7325 Janes Avenue
Woodridge, IL 60517
630 724 9200 phone
www.v3co.com

USER NAME =	DESIGNED - LKF	REVISED -	
	DRAWN - LKF	REVISED -	
	CHECKED - WJV	REVISED -	
PLOT DATE = 02/20/2026	DATE - 02/20/2026	REVISED -	

STATE OF ILLINOIS
DEPARTMENT OF TRANSPORTATION

IL36 BEAM DETAILS
STRUCTURE NO. 027-0106 (S.B.) & 027-0107 (N.B.)

SCALE: SHEET 30 OF 48 SHEETS STA. TO STA.

F.A.I. RTE.	SECTION	COUNTY	TOTAL SHEETS	SHEET NO.
57	(27-38B) BR-1	FORD	185	122

CONTRACT NO. 66K39

ILLINOIS FED. AID PROJECT

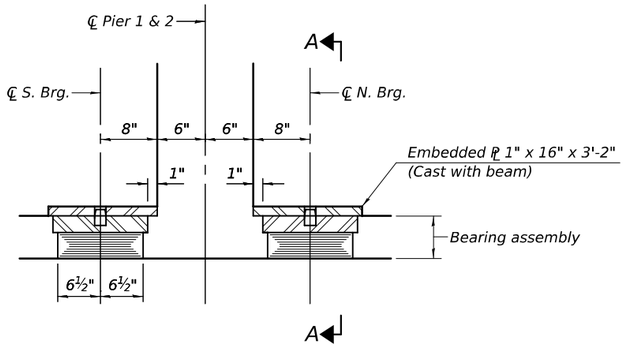

ELEVATION AT PIER

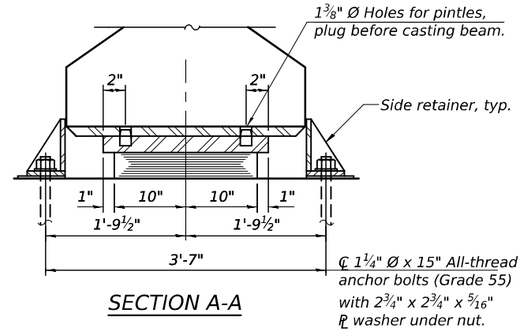

SECTION A-A

TYPE I ELASTOMERIC EXP. BRG.

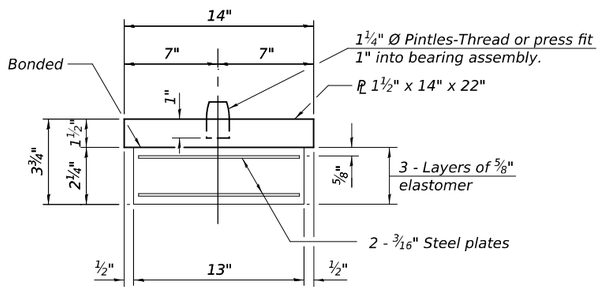

BEARING ASSEMBLY

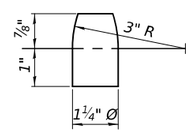

PINTLE

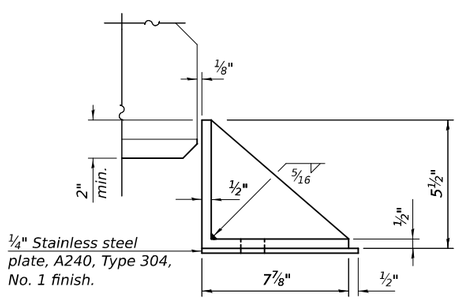

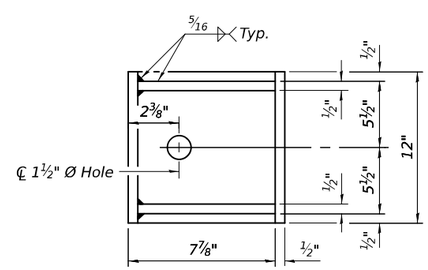

SIDE RETAINER

Equivalent rolled angle with stiffeners
will be allowed in lieu of welded plates.

Notes:

The structural steel plates of the Bearing Assembly shall conform to the requirements of AASHTO M270 Grade 50.

All exposed bearing plates and side retainers shall be hot dip galvanized according to AASHTO M111.

Side retainers and stainless steel plates shall be included in the cost of Elastomeric Bearing Assembly, Type I.

See sheet 30 of 48 for additional details of embedded plate.

Anchor bolts and side retainers at all supports shall be installed as each member is erected unless an equivalent temporary means of lateral restraint is used.

BILL OF MATERIAL

Item	Unit	Total
Elastomeric Bearing Assembly, Type I	Each	48
Anchor Bolts, 1¼"	Each	96

MODEL: 66K39 Sheet Border
FILE NAME: c:\workingdir\$datasource.name\dms16334\D368K39-plan-border.dgn

V3 Companies
7325 Janes Avenue
Woodridge, IL 60517
630 724 9200 phone
www.v3co.com

USER NAME =	DESIGNED - LKF	REVISED -	
	DRAWN - CM	REVISED -	
	CHECKED - WJV	REVISED -	
PLOT DATE = 02/20/2026	DATE - 02/20/2026	REVISED -	

STATE OF ILLINOIS
DEPARTMENT OF TRANSPORTATION

BEARING DETAILS
STRUCTURE NO. 027-0106 (S.B.) & 027-0107 (N.B.)

SCALE: SHEET 31 OF 48 SHEETS STA. TO STA.

F.A.I. RTE.	SECTION	COUNTY	TOTAL SHEETS	SHEET NO.
57	(27-38B) BR-1	FORD	185	123

CONTRACT NO. 66K39

ILLINOIS FED. AID PROJECT

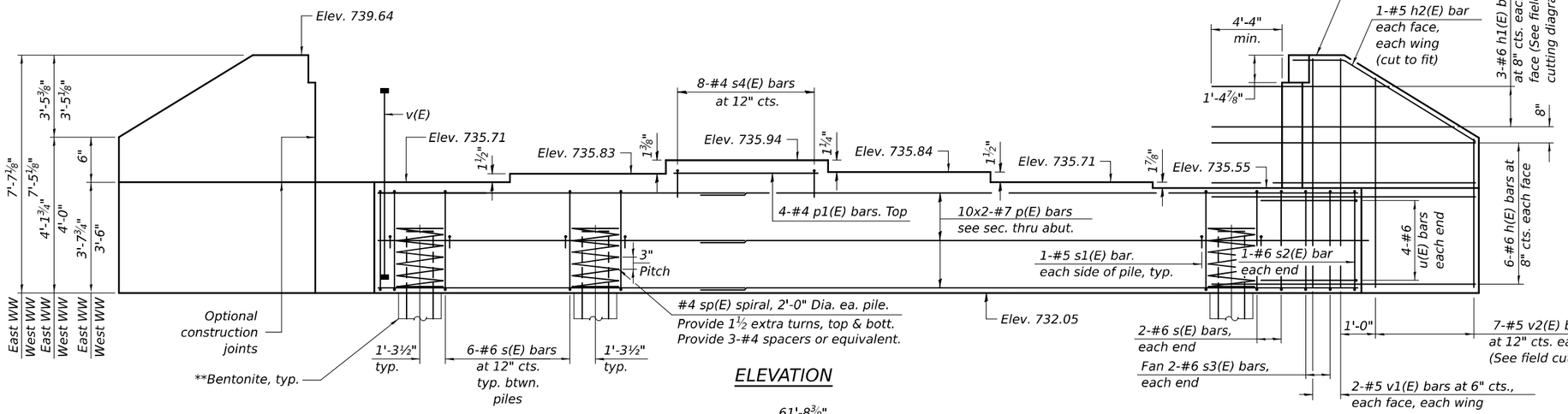

ELEVATION

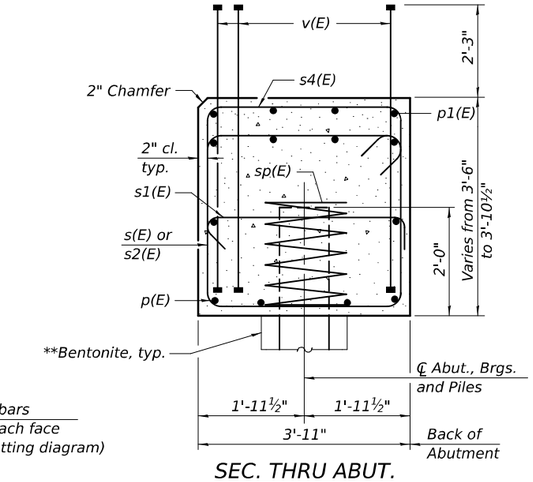

SEC. THRU ABUT.

Dimensions at right angles to abutment.

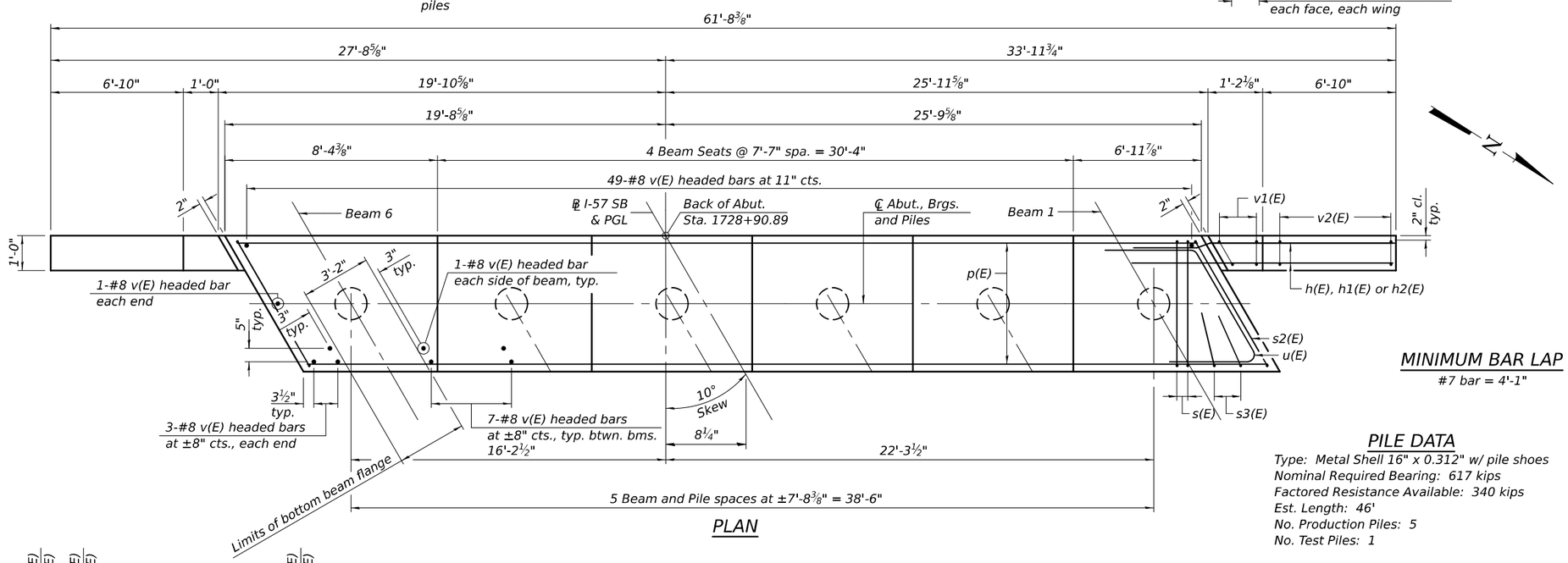

PLAN

MINIMUM BAR LAP

#7 bar = 4'-1"

PILE DATA

Type: Metal Shell 16" x 0.312" w/ pile shoes
Nominal Required Bearing: 617 kips
Factored Resistance Available: 340 kips
Est. Length: 46'
No. Production Piles: 5
No. Test Piles: 1

BILL OF MATERIAL

	Bar	No.	Size	Length	Shape
	h(E)	24	#6	12'-4"	
	h1(E)	12	#6	20'-9"	
	h2(E)	4	#5	8'-3"	
	p(E)	20	#7	24'-9"	
	p1(E)	4	#4	7'-4"	
	s(E)	34	#6	14'-10"	
	s1(E)	12	#5	4'-7"	
	s2(E)	2	#6	15'-0"	
	s3(E)	4	#6	8'-2"	
	s4(E)	8	#4	4'-11"	
*	sp(E)	6	#4	2'-0"	
	u(E)	8	#6	10'-2"	
	v(E)	104	#8	5'-5"	
	v1(E)	8	#5	7'-1"	
	v2(E)	28	#5	10'-6"	
	Structure Excavation			Cu. Yd.	84.8
	Concrete Structures			Cu. Yd.	27.3
	Reinforcement Bars, Epoxy Coated			Pound	4,850
	Furnishing Metal Shell Piles 16"x0.312"			Foot	230
	Driving Piles			Foot	230
	Test Pile Metal Shells			Each	1
	Pile Shoes			Each	6

* Length is height of spiral.

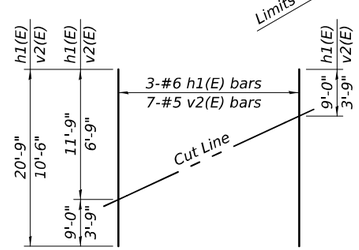

FIELD CUTTING DIAGRAM

Order h1(E) and v2(E) full length. Cut as shown and use remainder of bars in opposite wing.

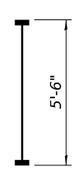

BAR v(E)

(Headed. 208 - #8 Bar terminators)

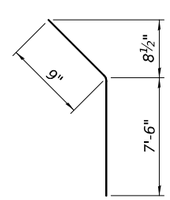

BAR h2(E)

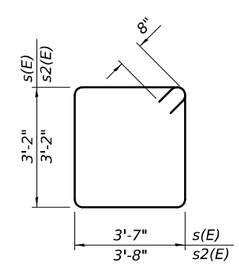

BAR s(E) & s2(E)

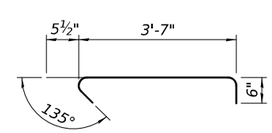

BAR s1(E)

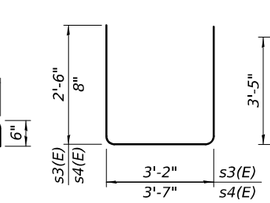

BAR s3(E) & s4(E)

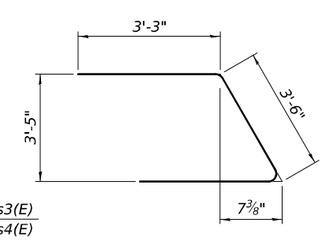

BAR u(E)

Notes:
Pour steps monolithically with cap.
For details of piles see sheet 39 of 48.
Bar terminators, paid for separately.
See Total Bill of Material.

**Piles shall be driven through 2'-0" diameter precored holes extending to elevation 722.00 according to article 512.09(c) of the Standard Specificaitons except that the void space outside the pile shall be filled with bentonite according to the manufacturer's recommendations to achieve a Qu of 1.5 tsf. Cost included in driving piles.

MODEL: 66K39 Sheet Border
FILE NAME: c:\workingdir\$datasource.name\dms16334\D366K39-plan-border.dgn

V3 Companies
7325 Janes Avenue
Woodridge, IL 60517
630 724 9200 phone
www.v3co.com

USER NAME =	DESIGNED - LKF	REVISED -
	DRAWN - LKF	REVISED -
	CHECKED - CSP	REVISED -
PLOT DATE = 02/20/2026	DATE - 02/20/2026	REVISED -

STATE OF ILLINOIS
DEPARTMENT OF TRANSPORTATION

SOUTH ABUTMENT - SB
STRUCTURE NO. 027-0106 (S.B.) & 027-0107 (N.B.)

SCALE: SHEET 32 OF 48 SHEETS STA. TO STA.

F.A.I. RTE.	SECTION	COUNTY	TOTAL SHEETS	SHEET NO.
57	(27-38B) BR-1	FORD	185	124
		CONTRACT NO. 66K39		
		ILLINOIS	FED. AID PROJECT	

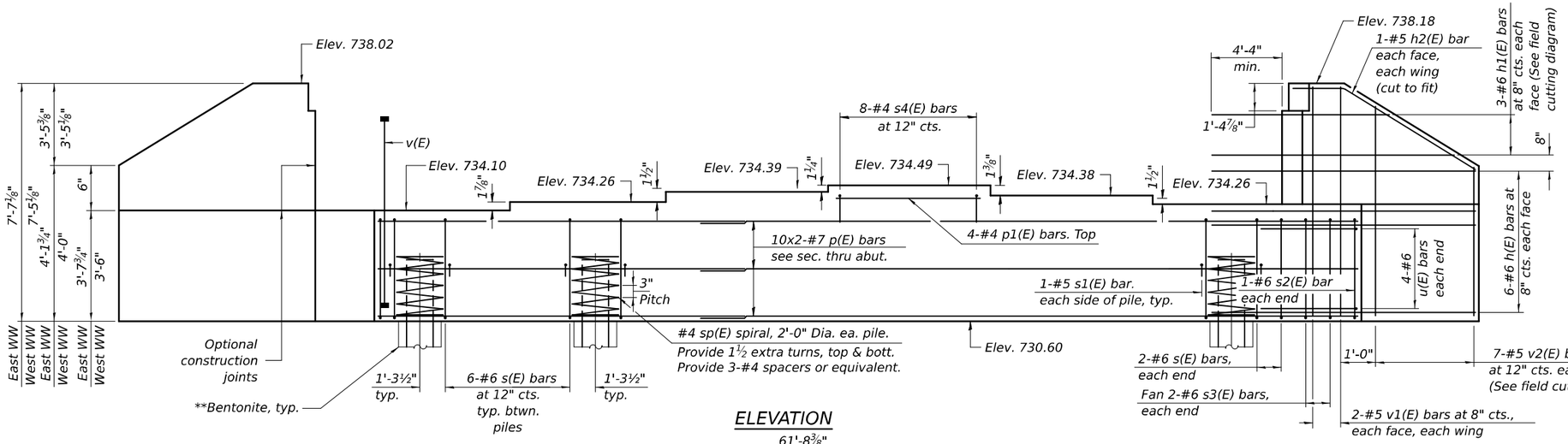

ELEVATION

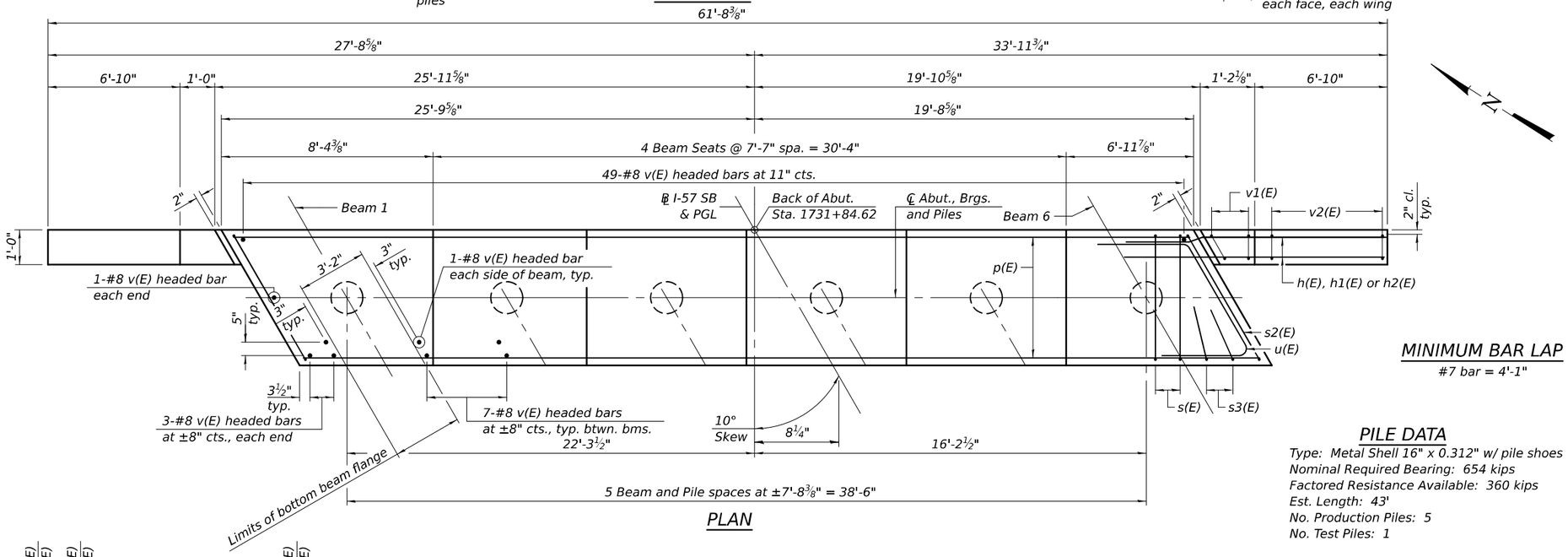

PLAN

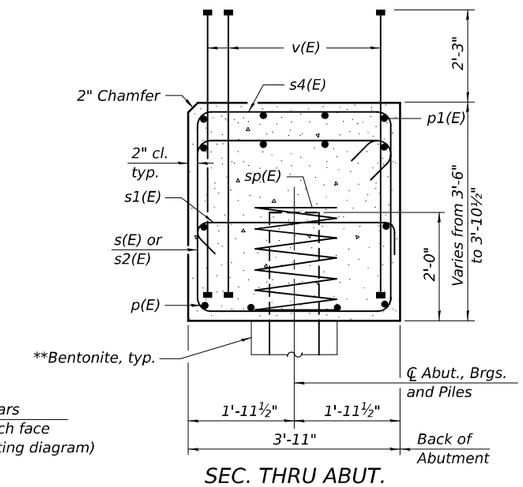

SEC. THRU ABUT.

Dimensions at right angles to abutment.

BILL OF MATERIAL

Bar	No.	Size	Length	Shape
h(E)	24	#6	12'-4"	
h1(E)	6	#6	20'-9"	
h2(E)	4	#5	8'-3"	
p(E)	20	#7	24'-9"	
p1(E)	4	#4	7'-4"	
s(E)	34	#6	14'-10"	
s1(E)	12	#5	4'-7"	
s2(E)	2	#6	15'-0"	
s3(E)	4	#6	8'-2"	
s4(E)	8	#4	4'-11"	
* sp(E)	6	#4	2'-0"	
u(E)	8	#6	10'-2"	
v(E)	104	#8	5'-5"	
v1(E)	8	#5	7'-1"	
v2(E)	12	#5	10'-6"	
Structure Excavation	Cu. Yd.	87.2		
Concrete Structures	Cu. Yd.	27.3		
Reinforcement Bars, Epoxy Coated	Pound	4,850		
Furnishing Metal Shell Piles 16"x0.312"	Foot	215		
Driving Piles	Foot	215		
Test Pile Metal Shells	Each	1		
Pile Shoes	Each	6		

* Length is height of spiral.

MINIMUM BAR LAP

#7 bar = 4'-1"

PILE DATA

Type: Metal Shell 16" x 0.312" w/ pile shoes
Nominal Required Bearing: 654 kips
Factored Resistance Available: 360 kips
Est. Length: 43'
No. Production Piles: 5
No. Test Piles: 1

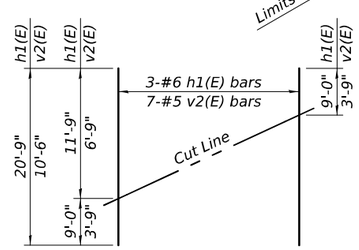

FIELD CUTTING DIAGRAM

Order h1(E) and v2(E) full length. Cut as shown and use remainder of bars in opposite wing.

BAR v(E)

(Headed. 208 - #8 Bar terminators)

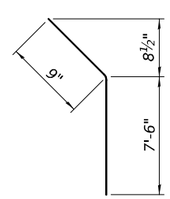

BAR h2(E)

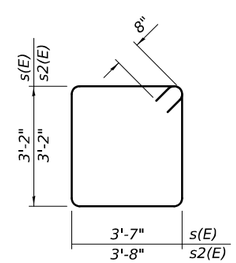

BAR s(E) & s2(E)

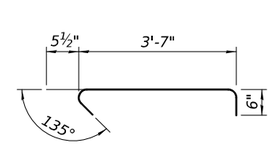

BAR s1(E)

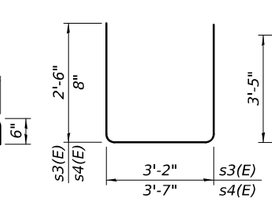

BAR s3(E) & s4(E)

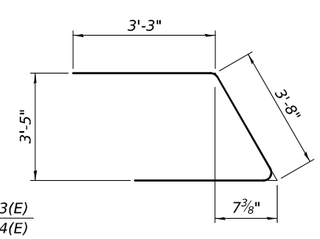

BAR u(E)

Notes:
Pour steps monolithically with cap.
For details of piles see sheet 39 of 48.
Bar terminators, paid for separately.
See Total Bill of Material.

**Piles shall be driven through 2'-0" diameter precored holes extending to elevation 720.00 according to article 512.09(c) of the Standard Specificaitons except that the void space outside the pile shall be filled with bentonite according to the manufacturer's recommendations to achieve a Qu of 1.5 tsf. Cost included in driving piles.

MODEL: 66K39 Sheet Border
FILE NAME: c:\workingdir\$datasource.name\dms16334\D366K39-plan-border.dgn

V3 Companies
7325 Janes Avenue
Woodridge, IL 60517
630 724 9200 phone
www.v3co.com

USER NAME =	DESIGNED - LKF	REVISED -	
	DRAWN - LKF	REVISED -	
	CHECKED - CSP	REVISED -	
PLOT DATE = 02/20/2026	DATE - 02/20/2026	REVISED -	

STATE OF ILLINOIS
DEPARTMENT OF TRANSPORTATION

NORTH ABUTMENT - SB
STRUCTURE NO. 027-0106 (S.B.) & 027-0107 (N.B.)

SCALE: SHEET 33 OF 48 SHEETS STA. TO STA.

F.A.I. RTE.	SECTION	COUNTY	TOTAL SHEETS	SHEET NO.
57	(27-38B) BR-1	FORD	185	125

CONTRACT NO. 66K39
ILLINOIS FED. AID PROJECT

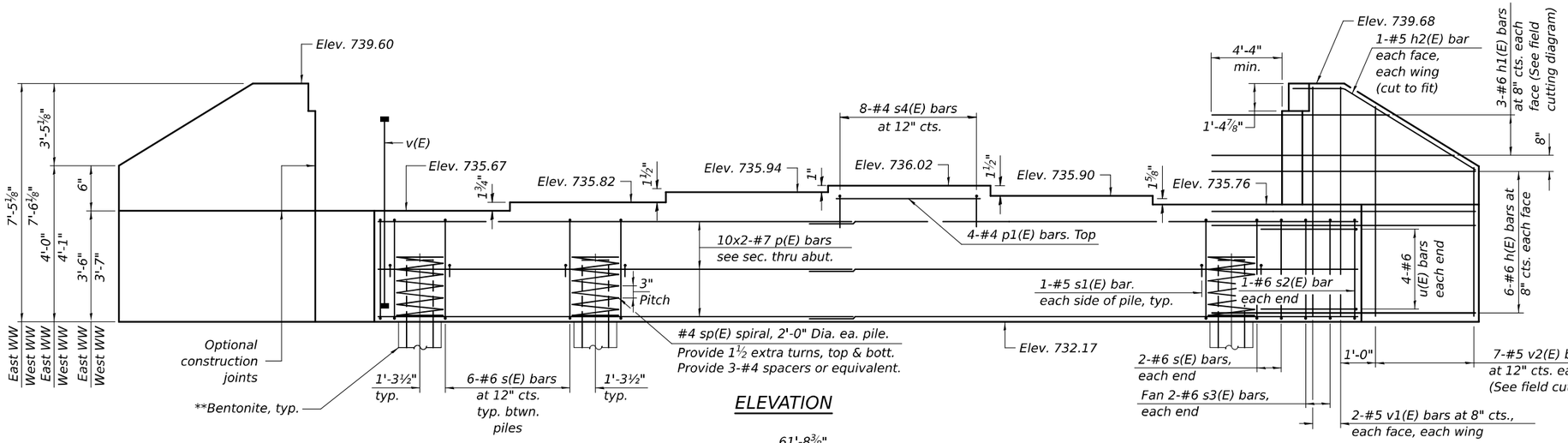

ELEVATION

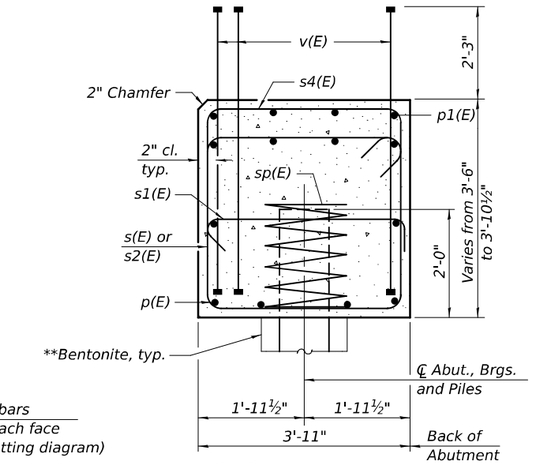

SEC. THRU ABUT.

Dimensions at right angles to abutment.

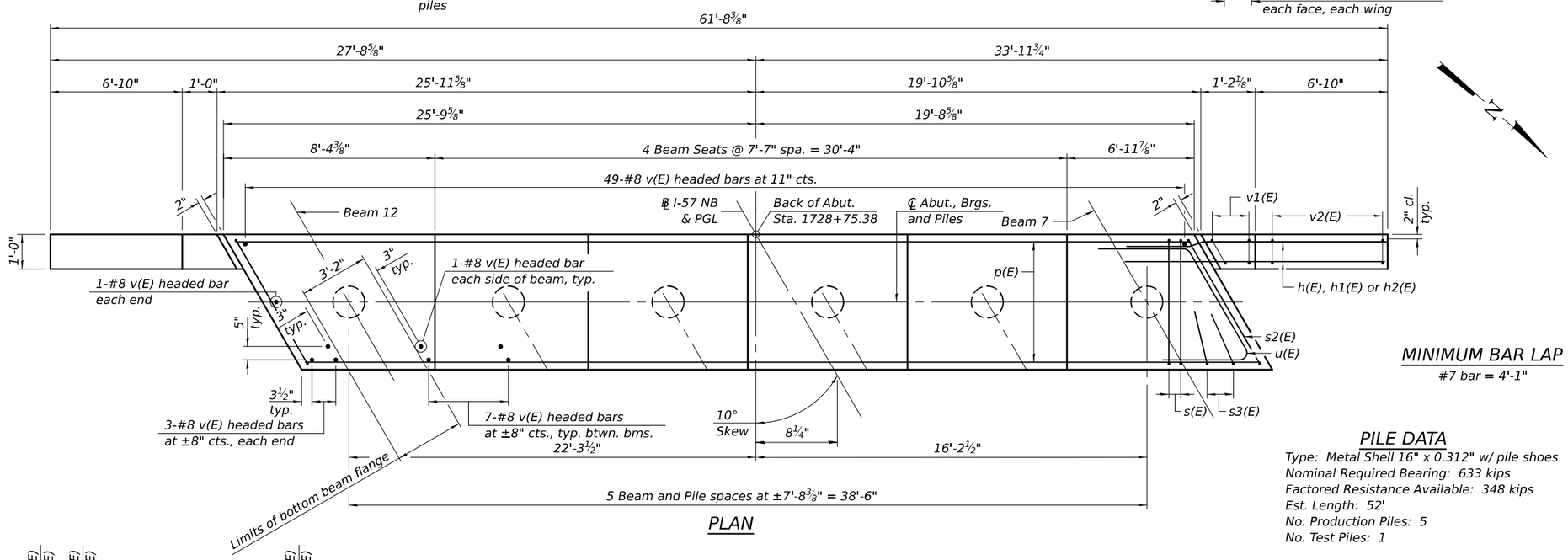

PLAN

MINIMUM BAR LAP

#7 bar = 4'-1"

BILL OF MATERIAL

	Bar	No.	Size	Length	Shape
	h(E)	24	#6	12'-4"	
	h1(E)	12	#6	20'-9"	
	h2(E)	4	#5	8'-3"	
	p(E)	20	#7	24'-9"	
	p1(E)	4	#4	7'-4"	
	s(E)	34	#6	14'-10"	
	s1(E)	12	#5	4'-7"	
	s2(E)	2	#6	15'-0"	
	s3(E)	4	#6	8'-2"	
	s4(E)	8	#4	4'-11"	
*	sp(E)	6	#4	2'-0"	
	u(E)	8	#6	10'-2"	
	v(E)	104	#8	5'-5"	
	v1(E)	8	#5	7'-1"	
	v2(E)	28	#5	10'-6"	
	Structure Excavation	Cu. Yd.	82.9		
	Concrete Structures	Cu. Yd.	27.1		
	Reinforcement Bars, Epoxy Coated	Pound	4,850		
	Furnishing Metal Shell Piles 16"x0.312"	Foot	260		
	Driving Piles	Foot	260		
	Test Pile Metal Shells	Each	1		
	Pile Shoes	Each	6		

* Length is height of spiral.

PILE DATA

Type: Metal Shell 16" x 0.312" w/ pile shoes
Nominal Required Bearing: 633 kips
Factored Resistance Available: 348 kips
Est. Length: 52'
No. Production Piles: 5
No. Test Piles: 1

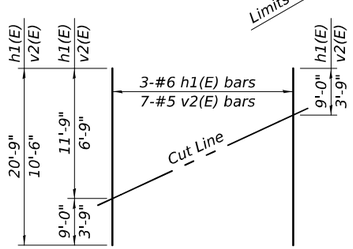

FIELD CUTTING DIAGRAM

Order h1(E) and v2(E) full length. Cut as shown and use remainder of bars in opposite wing.

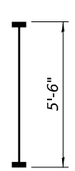

BAR v(E)

(Headed. 208 - #8 Bar terminators)

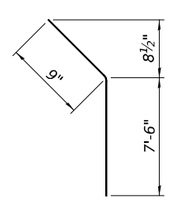

BAR h2(E)

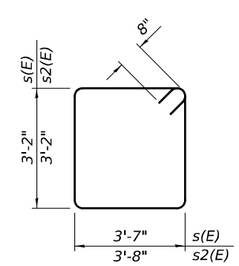

BAR s(E) & s2(E)

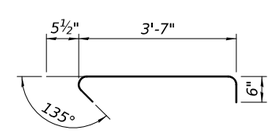

BAR s1(E)

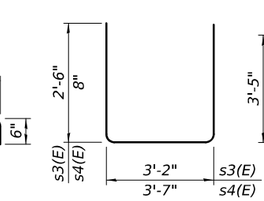

BAR s3(E)

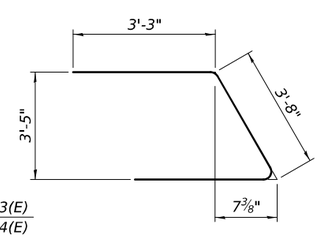

BAR u(E)

Notes:
Pour steps monolithically with cap.
For details of piles see sheet 39 of 48.
Bar terminators, paid for separately.
See Total Bill of Material.

**Piles shall be driven through 2'-0" diameter precored holes extending to elevation 722.00 according to article 512.09(c) of the Standard Specificaitons except that the void space outside the pile shall be filled with bentonite according to the manufacturer's recommendations to achieve a Qu of 1.5 tsf. Cost included in driving piles.

MODEL: 66K39 Sheet Border
FILE NAME: c:\workingdir$\datasource.name\dms16334\D366K39-plan-border.dgn

V3 Companies
7325 Janes Avenue
Woodridge, IL 60517
630 724 9200 phone
www.v3co.com

USER NAME =	DESIGNED - LKF	REVISED -	
	DRAWN - LKF	REVISED -	
	CHECKED - CSP	REVISED -	
PLOT DATE = 02/20/2026	DATE - 02/20/2026	REVISED -	

STATE OF ILLINOIS
DEPARTMENT OF TRANSPORTATION

SOUTH ABUTMENT - NB
STRUCTURE NO. 027-0106 (S.B.) & 027-0107 (N.B.)

SCALE: SHEET 34 OF 48 SHEETS STA. TO STA.

F.A.I. RTE.	SECTION	COUNTY	TOTAL SHEETS	SHEET NO.
57	(27-38B) BR-1	FORD	185	126
		CONTRACT NO. 66K39		
	ILLINOIS	FED. AID PROJECT		

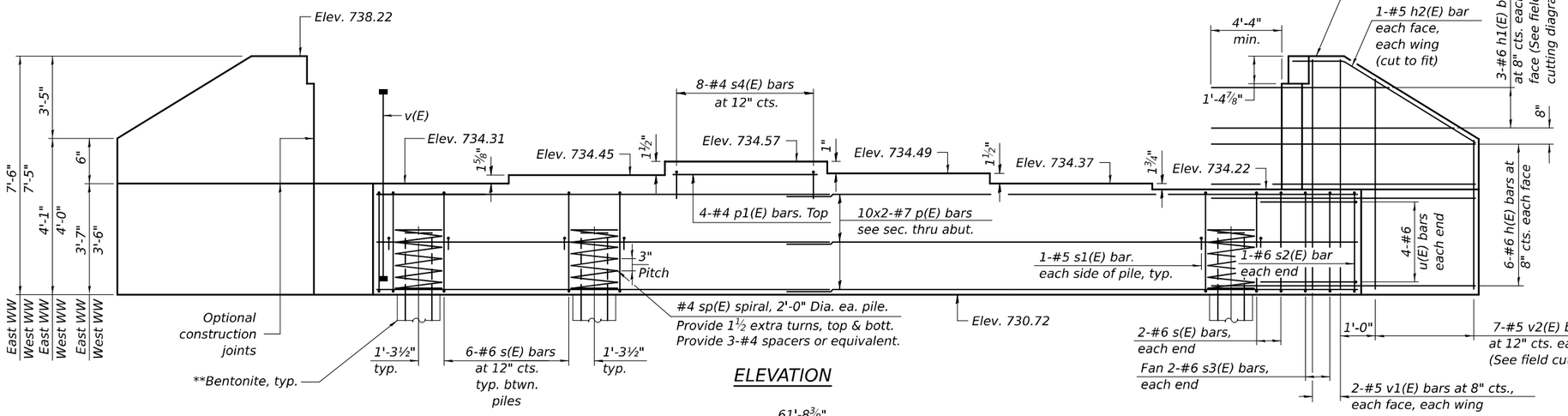

ELEVATION

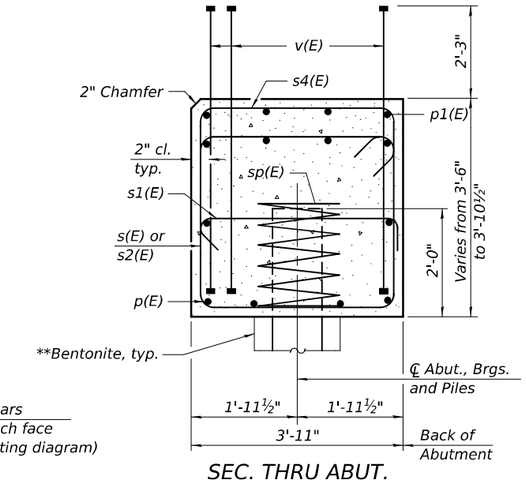

SEC. THRU ABUT.

Dimensions at right angles to abutment.

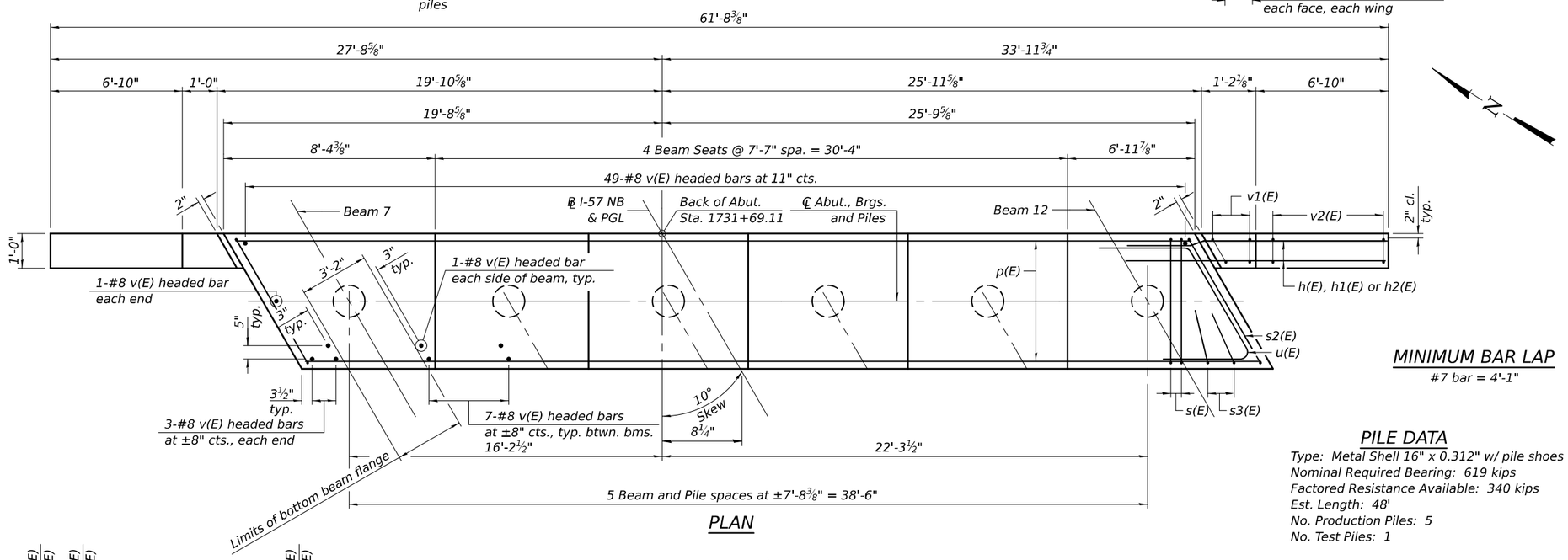

PLAN

MINIMUM BAR LAP

#7 bar = 4'-1"

PILE DATA

Type: Metal Shell 16" x 0.312" w/ pile shoes
Nominal Required Bearing: 619 kips
Factored Resistance Available: 340 kips
Est. Length: 48'
No. Production Piles: 5
No. Test Piles: 1

BILL OF MATERIAL

	Bar	No.	Size	Length	Shape
	h(E)	24	#6	12'-4"	
	h1(E)	6	#6	20'-9"	
	h2(E)	4	#5	8'-3"	
	p(E)	20	#7	24'-9"	
	p1(E)	4	#4	7'-4"	
	s(E)	34	#6	14'-10"	
	s1(E)	12	#5	4'-7"	
	s2(E)	2	#6	15'-0"	
	s3(E)	4	#6	8'-2"	
	s4(E)	8	#4	4'-11"	
*	sp(E)	6	#4	2'-0"	
	u(E)	8	#6	10'-2"	
	v(E)	104	#8	5'-5"	
	v1(E)	8	#5	7'-1"	
	v2(E)	12	#5	10'-6"	
	Structure Excavation			Cu. Yd.	86.5
	Concrete Structures			Cu. Yd.	27.1
	Reinforcement Bars, Epoxy Coated			Pound	4,850
	Furnishing Metal Shell Piles 16"x0.312"			Foot	240
	Driving Piles			Foot	240
	Test Pile Metal Shells			Each	1
	Pile Shoes			Each	6

* Length is height of spiral.

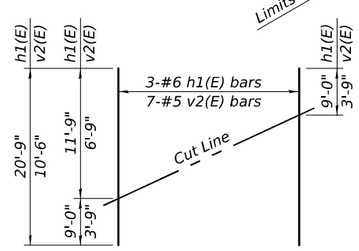

FIELD CUTTING DIAGRAM

Order h1(E) and v2(E) full length. Cut as shown and use remainder of bars in opposite wing.

BAR v(E)

(Headed. 208 - #8 Bar terminators)

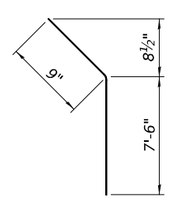

BAR h2(E)

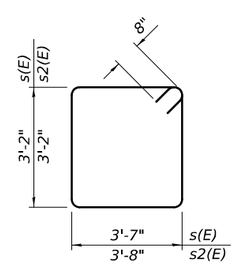

BAR s(E) & s2(E)

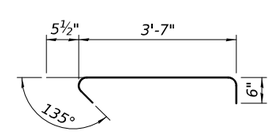

BAR s1(E)

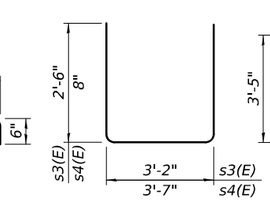

BAR s3(E) & s4(E)

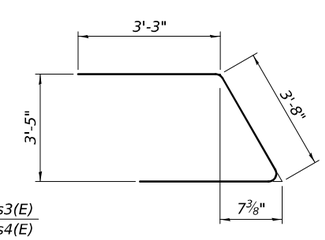

BAR u(E)

Notes:
Pour steps monolithically with cap.
For details of piles see sheet 39 of 48.
Bar terminators, paid for separately.
See Total Bill of Material.

**Piles shall be driven through 2'-0" diameter precored holes extending to elevation 720.00 according to article 512.09(c) of the Standard Specificaitons except that the void space outside the pile shall be filled with bentonite according to the manufacturer's recommendations to achieve a Qu of 1.5 tsf. Cost included in driving piles.

MODEL: 66K39 Sheet Border
FILE NAME: c:\workingdir\$datasource.name\dms16334\D366K39-plan-border.dgn

V3 Companies
7325 Janes Avenue
Woodridge, IL 60517
630 724 9200 phone
www.v3co.com

USER NAME =	DESIGNED - LKF	REVISED -	
	DRAWN - LKF	REVISED -	
	CHECKED - CSP	REVISED -	
PLOT DATE = 02/20/2026	DATE - 02/20/2026	REVISED -	

STATE OF ILLINOIS
DEPARTMENT OF TRANSPORTATION

NORTH ABUTMENT - NB
STRUCTURE NO. 027-0106 (S.B.) & 027-0107 (N.B.)

SCALE: SHEET 35 OF 48 SHEETS STA. TO STA.

F.A.I. RTE.	SECTION	COUNTY	TOTAL SHEETS	SHEET NO.
57	(27-38B) BR-1	FORD	185	127

CONTRACT NO. 66K39
ILLINOIS FED. AID PROJECT

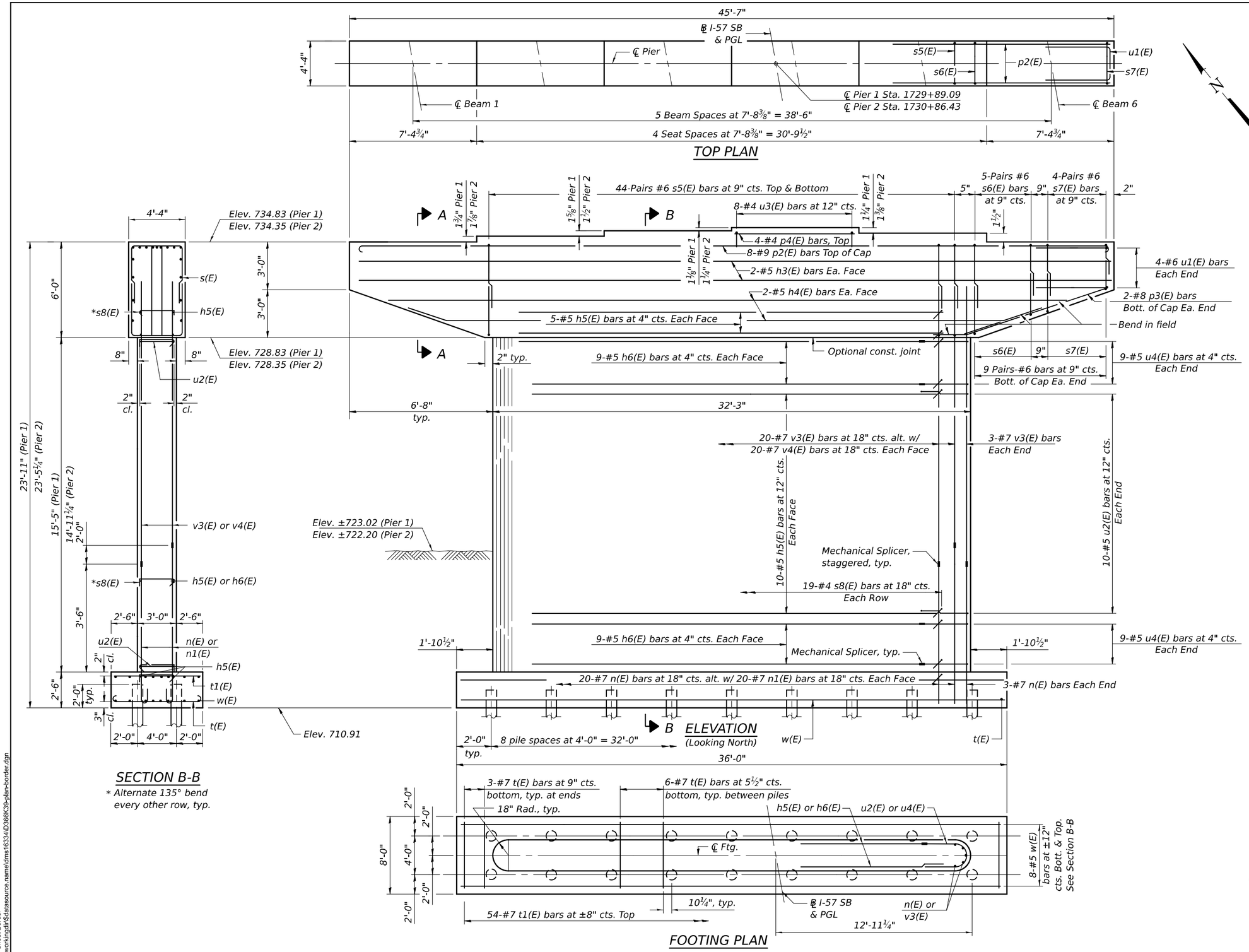

MINIMUM BAR LAP

#6 bar = 2'-6" (s5)

SEAT ELEVATIONS

Beam	Pier 1	Pier 2
1	734.83	734.35
2	734.98	734.51
3	735.12	734.64
4	735.21	734.74
5	735.11	734.63
6	734.98	734.50

PIER 1 PILE DATA

Type: Metal Shell 16" x 0.312" with Pile Shoes
Nominal Required Bearing: 637 kips
Factored Resistance Available: 350 kips
Est. Length: 30'
No. Production Piles: 17
No. Test Piles: 1

PIER 2 PILE DATA

Type: Metal Shell 16" x 0.312" with Pile Shoes
Nominal Required Bearing: 636 kips
Factored Resistance Available: 350 kips
Est. Length: 29'
No. Production Piles: 17
No. Test Piles: 1

Notes:
Space reinforcement in cap to miss anchor bolts.
Pour steps monolithically with cap.
For details of piles, see sheet 39 of 48.
For bearing anchor bolt layout, see sheet 38 of 48.

MODEL: 66K39 Sheet Border
FILE NAME: c:\workingdir\$datasource.name\dms18334\D366K39-plan-border.dgn

V3 Companies
7325 Janes Avenue
Woodridge, IL 60517
630 724 9200 phone
www.v3co.com

USER NAME =	DESIGNED - LKF	REVISED -	
	DRAWN - LKF	REVISED -	
	CHECKED - CSP	REVISED -	
PLOT DATE = 02/20/2026	DATE - 02/20/2026	REVISED -	

STATE OF ILLINOIS
DEPARTMENT OF TRANSPORTATION

SB - PIER 1 & 2
STRUCTURE NO. 027-0106 (S.B.) & 027-0107 (N.B.)

SCALE: SHEET 36 OF 48 SHEETS STA. TO STA.

F.A.I. RTE.	SECTION	COUNTY	TOTAL SHEETS	SHEET NO.
57	(27-38B) BR-1	FORD	185	128

CONTRACT NO. 66K39
ILLINOIS FED. AID PROJECT

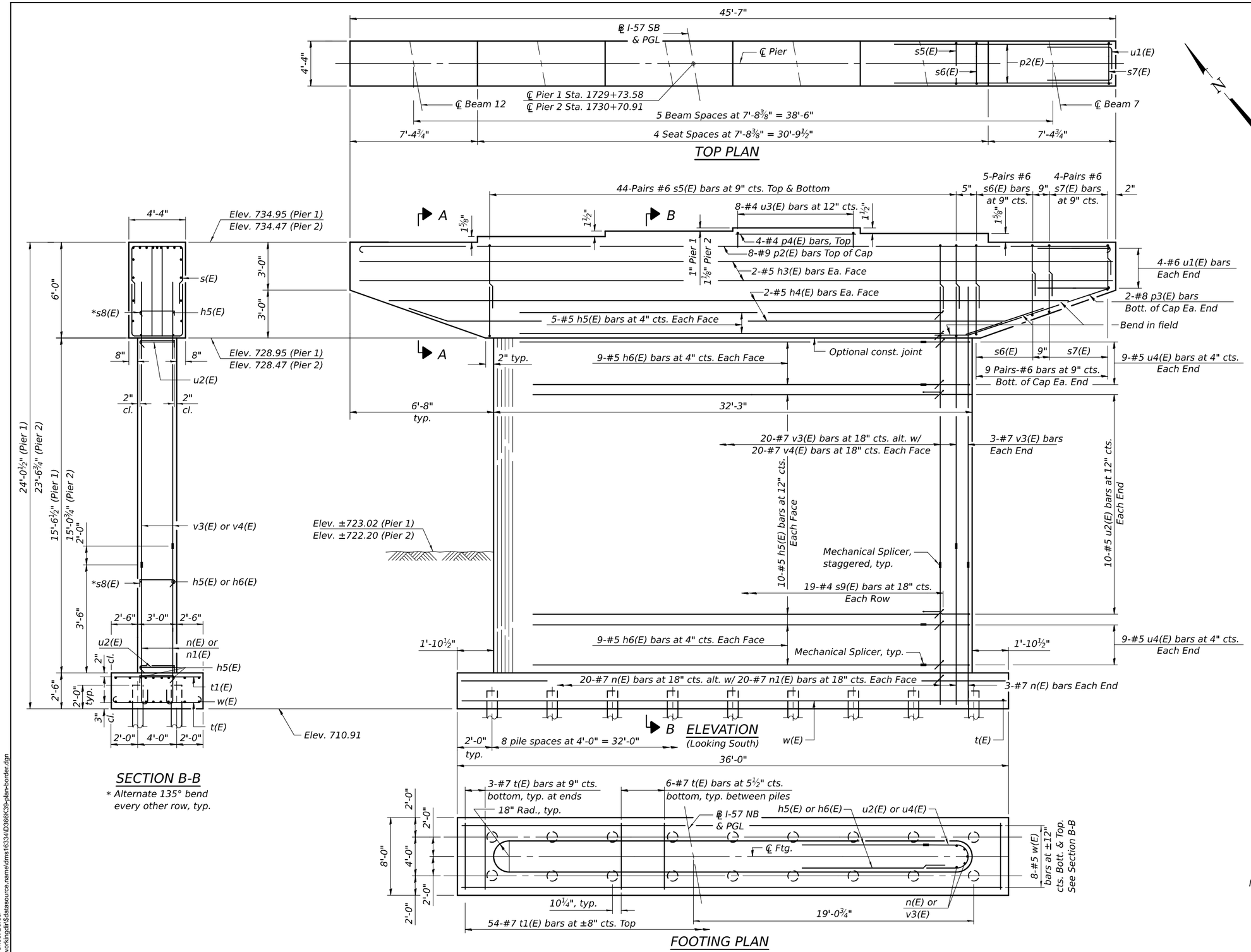

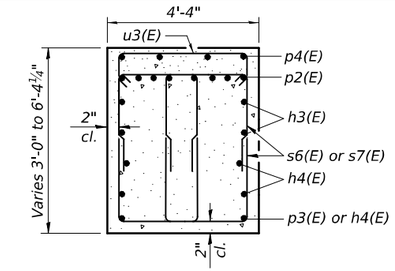

SECTION A-A

MINIMUM BAR LAP

#6 bar = 2'-6" (s5)

SEAT ELEVATIONS

Beam	Pier 1	Pier 2
7	735.03	734.56
8	735.17	734.70
9	735.29	734.82
10	735.21	734.73
11	735.09	734.61
12	734.95	734.47

PIER 1 PILE DATA

Type: Metal Shell 16" x 0.312" with Pile Shoes
Nominal Required Bearing: 641 kips
Factored Resistance Available: 353 kips
Est. Length: 42'
No. Production Piles: 17
No. Test Piles: 1

PIER 2 PILE DATA

Type: Metal Shell 16" x 0.312" with Pile Shoes
Nominal Required Bearing: 639 kips
Factored Resistance Available: 351 kips
Est. Length: 31'
No. Production Piles: 17
No. Test Piles: 1

Notes:
Space reinforcement in cap to miss anchor bolts.
Pour steps monolithically with cap.
For details of piles, see sheet 39 of 48.
For bearing anchor bolt layout, see sheet 38 of 48.

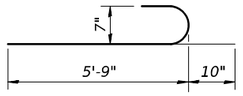

BAR n(E)

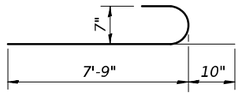

BAR n1(E)

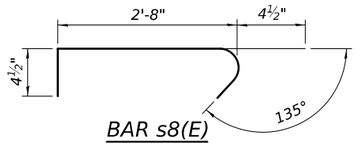

BAR s8(E)

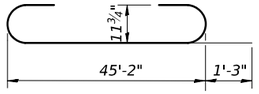

BAR p2(E)

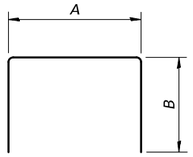

s(E) & u(E) BARS

A & B DIMENSIONS

Bar	A	B
s5(E)	2'-8"	4'-1"
s6(E)	2'-8"	4'-4"
s7(E)	2'-8"	2'-8"
u1(E)	3'-7"	3'-8"
u3(E)	4'-0"	8"

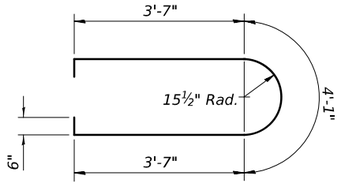

BAR u2(E)

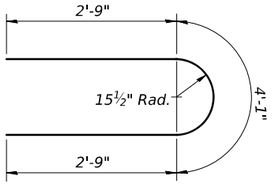

BAR u4(E)

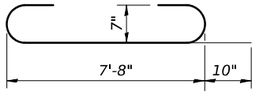

BAR t(E)

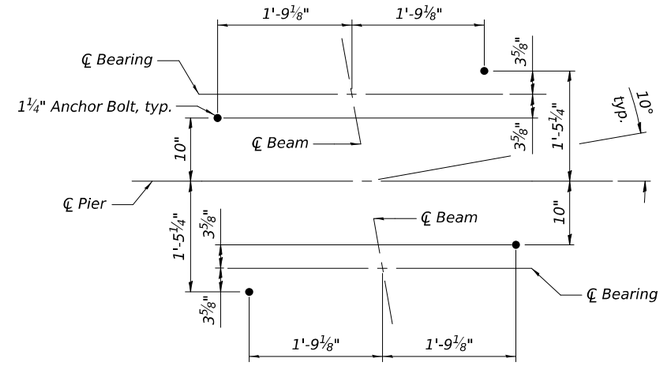

BEARING ANCHOR BOLT LAYOUT DETAILS

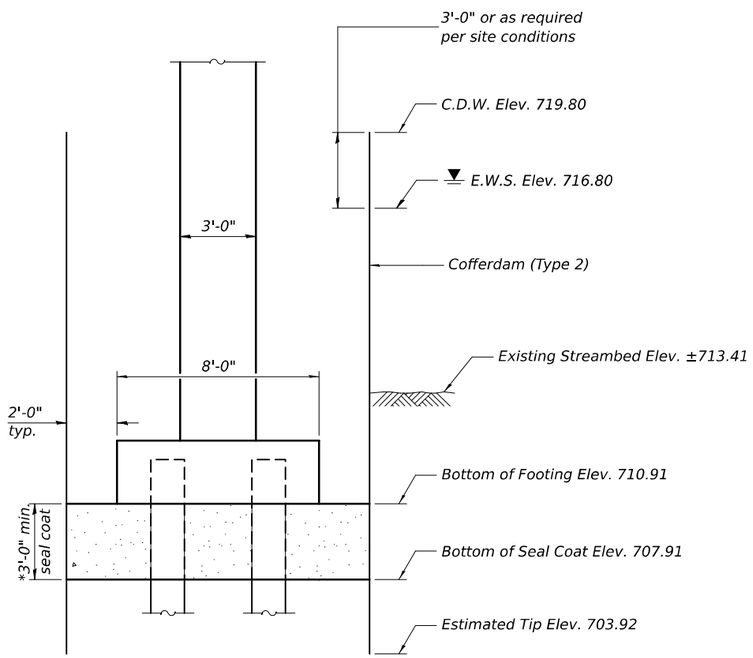

COFFERDAM DETAIL

* Final Design per Contractor. See General Notes on Sheet 2 of 48.

TWO PIERS - SOUTHBOUND BILL OF MATERIAL

Bar	No.	Size	Length	Shape
h3(E)	8	#5	45'-3"	
h4(E)	8	#5	38'-2"	
h5(E)	96	#5	29'-3"	
h6(E)	36	#5	23'-9"	
n(E)	92	#7	6'-7"	
n1(E)	80	#7	8'-7"	
p2(E)	16	#9	47'-8"	
p3(E)	8	#8	8'-4"	
p4(E)	8	#4	7'-4"	
s5(E)	352	#6	10'-10"	
s6(E)	80	#6	11'-4"	
s7(E)	64	#6	8'-0"	
s8(E)	1,292	#4	3'-5"	
t(E)	108	#7	9'-4"	
t1(E)	108	#7	7'-8"	
u1(E)	16	#6	11'-2"	
u2(E)	76	#5	12'-3"	
u3(E)	16	#4	4'-6"	
u4(E)	36	#4	9'-7"	
v3(E)	92	#7	12'-1"	
v4(E)	80	#7	14'-1"	
w(E)	32	#5	35'-8"	
Cofferdam Excavation			Cu. Yd.	496.0
Cofferdam (Type 2) - (Location 1)			Each	1
Cofferdam (Type 2) - (Location 2)			Each	1
Concrete Structures			Cu. Yd.	215.2
Seal Coat Concrete			Cu. Yd.	107
Reinforcement Bars, Epoxy Coated			Pound	32,935
Furnishing Metal Shell Piles 16"x0.312"			Foot	1,003
Driving Piles			Foot	1,003
Test Pile Metal Shells			Each	2
Pile Shoes			Each	36

TWO PIERS - NORTHBOUND BILL OF MATERIAL

Bar	No.	Size	Length	Shape
h3(E)	8	#5	45'-3"	
h4(E)	8	#5	38'-2"	
h5(E)	96	#5	29'-3"	
h6(E)	36	#5	23'-9"	
n(E)	92	#7	6'-7"	
n1(E)	80	#7	8'-7"	
p2(E)	16	#9	47'-8"	
p3(E)	8	#8	8'-4"	
p4(E)	8	#4	7'-4"	
s5(E)	352	#6	10'-10"	
s6(E)	80	#6	11'-4"	
s7(E)	64	#6	8'-0"	
s8(E)	1,292	#4	3'-5"	
t(E)	108	#7	9'-4"	
t1(E)	108	#7	7'-8"	
u1(E)	16	#6	11'-2"	
u2(E)	76	#5	12'-3"	
u3(E)	16	#4	4'-6"	
u4(E)	36	#4	9'-7"	
v3(E)	92	#7	12'-1"	
v4(E)	80	#7	14'-1"	
w(E)	32	#5	35'-8"	
Cofferdam Excavation			Cu. Yd.	496.0
Cofferdam (Type 2) - (Location 3)			Each	1
Cofferdam (Type 2) - (Location 4)			Each	1
Concrete Structures			Cu. Yd.	215.8
Seal Coat Concrete			Cu. Yd.	107
Reinforcement Bars, Epoxy Coated			Pound	32,935
Furnishing Metal Shell Piles 16"x0.312"			Foot	1,241
Driving Piles			Foot	1,241
Test Pile Metal Shells			Each	2
Pile Shoes			Each	36

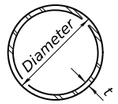

METAL SHELL PILE TABLE

Designation and outside diameter	Wall thickness t	Weight per foot (Lbs./ft.)	Inside volume (yd.³/ft.)
PP12	0.250"	31.40	0.0267
PP14	0.250"	36.75	0.0368
PP14	0.312"	45.65	0.0361
PP16	0.312"	52.32	0.0478
PP16	0.375"	62.64	0.0470

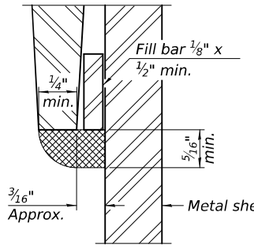

DETAIL A

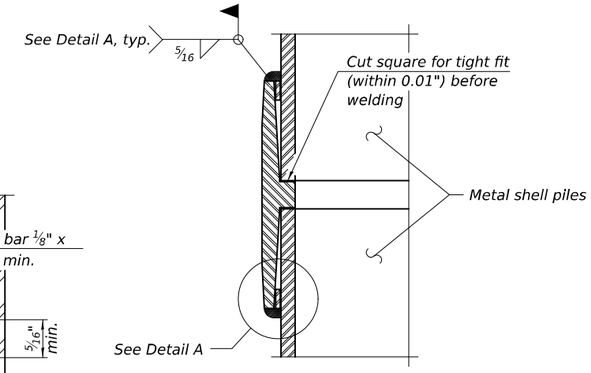

WELDED COMMERCIAL SPLICE

Notes:
The 1/8" x 1/2" min. fill bar may be constructed of 2 bars with a 1/8" max. gap between them.
Pile segments shall be driven to solid contact with splicer before welding.

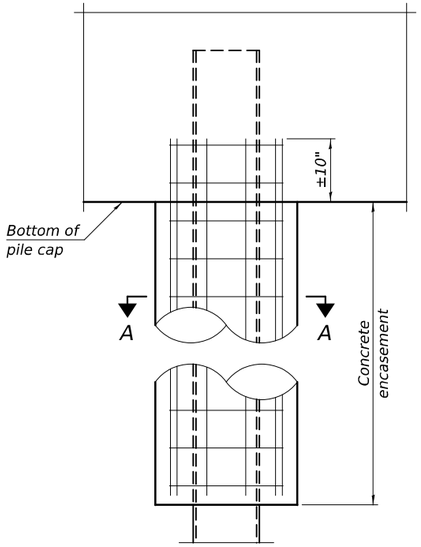

ELEVATION

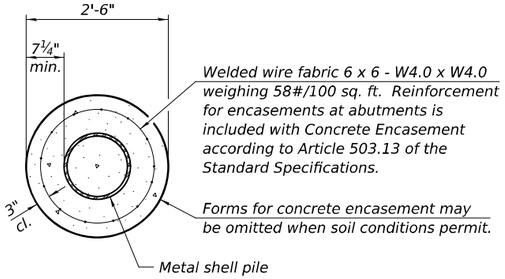

SECTION A-A

INDIVIDUAL PILE CONCRETE ENCASEMENT

(When specified)

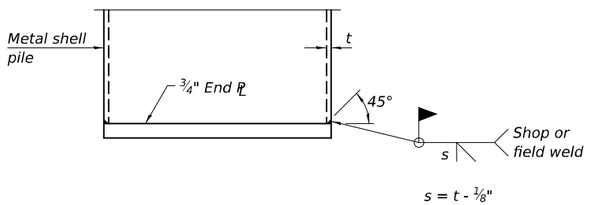

END PLATE ATTACHMENT

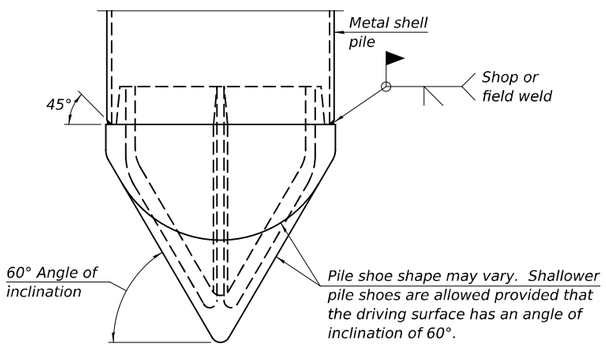

PILE SHOE ATTACHMENT

(When called for on the plans, the Contractor shall furnish metal shell pile shoes consisting of a single piece conical pile point as shown. The pile shoes shall be cast in one piece steel according to either ASTM A 148 Grade 80-50 or AASHTO M 103 Grade 65-35 and shall provide full bearing over the full circumference of the metal shell pile. The pile shoe shall have tapered leads to assure proper alignment and fitting and shall be secured to the pile with a circumferential weld).

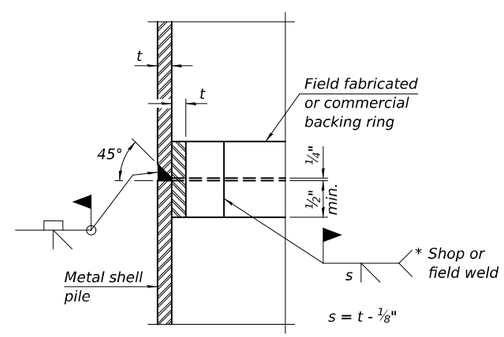

COMPLETE PENETRATION WELD SPLICE

* Field fabricated backing ring may be made from pile shell by removing segment to allow reducing circumference and vertically rejoin with partial joint penetration weld.

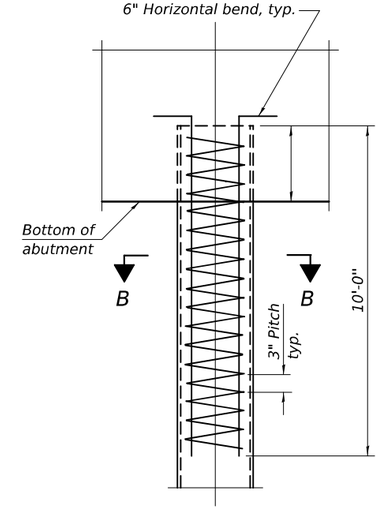

ELEVATION

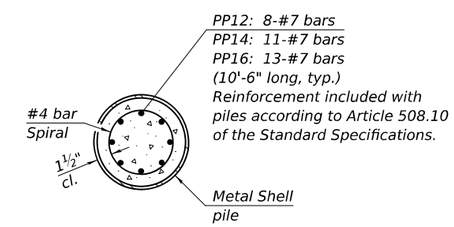

SECTION B-B

REINFORCEMENT AT ABUTMENTS

(Omit when concrete encasement is specified)

Note:
The metal shell piles shall be according to Article 1006.05 of the Standard Specifications.

F-MS 4-4-2025

MODEL: 66K39 Sheet Border
FILE NAME: c:\workingdir\$\datasource.name\dms16334\D366K39-plan-border.dgn

V3 Companies
7325 Janes Avenue
Woodridge, IL 60517
630 724 9200 phone
www.v3co.com

USER NAME =	DESIGNED - LKF	REVISED -	
	DRAWN - CM	REVISED -	
	CHECKED - WJV	REVISED -	
PLOT DATE = 02/20/2026	DATE - 02/20/2026	REVISED -	

STATE OF ILLINOIS
DEPARTMENT OF TRANSPORTATION

METAL SHELL PILE DETAILS
STRUCTURE NO. 027-0106 (S.B.) & 027-0107 (N.B.)

SCALE: SHEET 39 OF 48 SHEETS STA. TO STA.

F.A.I. RTE.	SECTION	COUNTY	TOTAL SHEETS	SHEET NO.
57	(27-38B) BR-1	FORD	185	131
		CONTRACT NO. 66K39		
	ILLINOIS	FED. AID PROJECT		

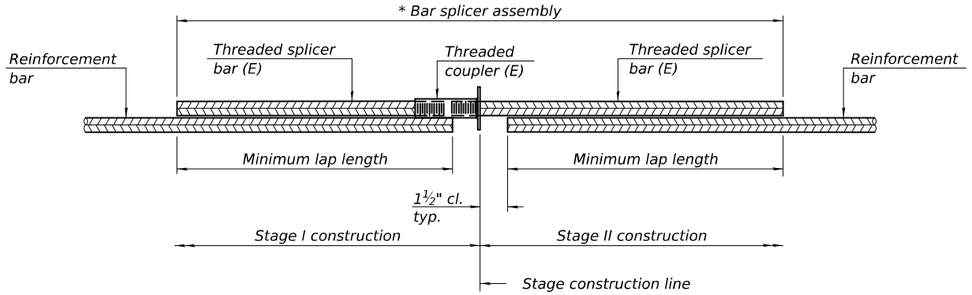

STANDARD BAR SPLICER ASSEMBLY PLAN

Only bar splicer assemblies as presented on the approved QPL list may be used.

Threaded splicer bar length = min. lap length + 1½" + thread length

* Epoxy not required on Bar Splicer Assembly components used in conjunction with black bars.

Location	Bar size	No. assemblies required	Minimum lap length

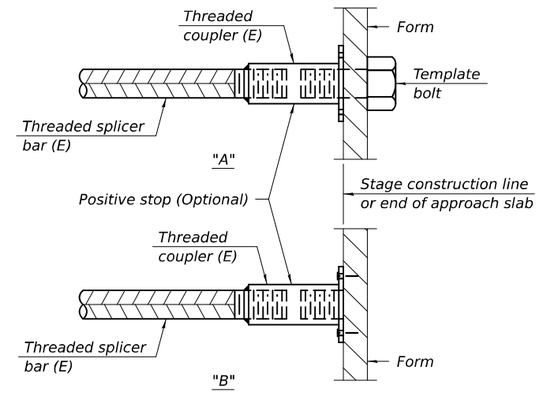

INSTALLATION AND SETTING METHODS

"A" : Set bar splicer assembly by means of a template bolt.
"B" : Set bar splicer assembly by nailing to wood forms or cementing to steel forms.
(E) : Indicates epoxy coating.

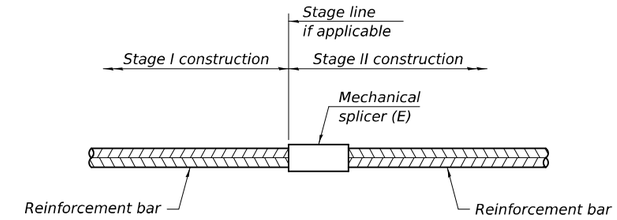

STANDARD MECHANICAL SPLICER

Location	Bar size	No. assemblies required
Pier 1 - SB	#5	72
Pier 1 - SB	#7	86
Pier 2 - SB	#5	72
Pier 2 - SB	#7	86
Pier 1 - NB	#5	72
Pier 1 - NB	#7	86
Pier 2 - NB	#5	72
Pier 2 - NB	#7	86

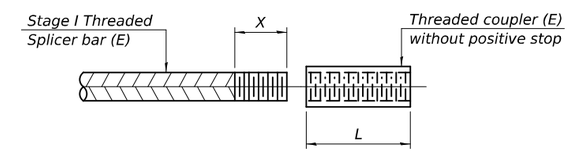

THREADING OF ASSEMBLIES

The threaded length "X" shall be no more than L/2. The bar should be tightened until 0-1 thread(s) is/are exposed.

Notes:
Splicer bars shall be deformed with threaded ends and have a minimum 60 ksi yield strength.
All reinforcement shall be lapped and tied to the splicer bars.
Bar splicer assemblies shall be epoxy coated according to the requirements for reinforcement bars. See Section 508 of the Standard Specifications.
See approved list of bar splicer assemblies and mechanical splicers for alternatives.

BSD-1 4-4-2025

Illinois Department of Transportation
Division of Highways
Illinois Department of Transportation

SOIL BORING LOG

Date 10/22/21

ROUTE FAI 57 (I-57) DESCRIPTION I-57 over Big Four Ditch, 2.37 Miles South of IL 9 LOGGED BY Larry Myers

SECTION (27-38B)ES LOCATION NE 1/4, SEC. 25, TWP. 23, RNG. 9, 3rd PM,
Latitude 40.42202, Longitude -88.11932

COUNTY Ford DRILLING METHOD Hollow Stem Auger HAMMER TYPE CME Automatic

STRUCT. NO. 027-0052
Station 1730+30

BORING NO. 2 (NE Quad)
Station 1731+92
Offset 9.0 ft Lt.
Ground Surface Elev. 734.73 ft

Surface Water Elev. ft
Stream Bed Elev. ft

Groundwater Elev.:
First Encounter 709.7 ft ▼
Upon Completion 711.7 ft ▽
After Hrs. ft

Description	Elev.	DEPTH (ft)	BLOWS (/6")	UCS Qu (tsf)	MOIST (%)
Augered Black Silty Clay Loam Fill. Gray and Brown Silty Clay Loam Till Fill					
	732.23				
Hard to Very Stiff Brown and Gray Silty Clay Loam Till Fill			3		
			4 5	4.0 P	18
		-5			
			2		
			5 5	4.0 P	17
			4		
			5 6	4.0 P	19
	724.73	-10			
Hard Black Silty Clay Loam Topsoil			5		
	723.23		5 7	4.3 P	25
Very Stiff Gray Clay Loam with Some Sand Layers					
			4		
			5 5	3.5 P	16
		-15			
			3		
			3 3	3.0 P	26
	717.23				
Hard Gray Silty Clay Till			4		
			6 6	4.7 S	15
		-20			

Description	Elev.	DEPTH (ft)	BLOWS (/6")	UCS Qu (tsf)	MOIST (%)
Hard Gray Silty Clay Till *(continued)*			5		
			7 9	5.1 S	18
		▽	5		
			7 8	4.7 S	21
		▼-25			
			5		
			7 8	4.8 S	22
			6		
			6 9	5.1 S	18
	705.23				
Hard Gray Silty Clay Loam Till with Sand Layers/Seams		-30			
			12 34 36	4.4 S	18
			Rock in Shoe		
			10 15 23	6.7 S	10
		-35			
			9		
			16 20	6.2 S	9
			7		
			10 11	5.9 S	14
	695.73				
		-40			

The Unconfined Compressive Strength (UCS) Failure Mode is indicated by (B-Bulge, S-Shear, P-Penetrometer)
The SPT (N value) is the sum of the last two blow values in each sampling zone (AASHTO T206)

BBS, form 137 (Rev. 8-99)

SOIL BORING 027-0052.GPJ IL_DOT.GDT 2/1/22

Illinois Department of Transportation
Division of Highways
Illinois Department of Transportation

SOIL BORING LOG

Date 10/22/21

ROUTE FAI 57 (I-57) DESCRIPTION I-57 over Big Four Ditch, 2.37 Miles South of IL 9 LOGGED BY Larry Myers

SECTION (27-38B)ES LOCATION NE 1/4, SEC. 25, TWP. 23, RNG. 9, 3rd PM,
Latitude 40.42202, Longitude -88.11932

COUNTY Ford DRILLING METHOD Hollow Stem Auger HAMMER TYPE CME Automatic

STRUCT. NO. 027-0052
Station 1730+30

BORING NO. 2 (NE Quad)
Station 1731+92
Offset 9.0 ft Lt.
Ground Surface Elev. 734.73 ft

Surface Water Elev. ft
Stream Bed Elev. ft

Groundwater Elev.:
First Encounter 709.7 ft ▼
Upon Completion 711.7 ft ▽
After Hrs. ft

Description	Elev.	DEPTH (ft)	BLOWS (/6")	UCS Qu (tsf)	MOIST (%)
Medium Gray Fine to Coarse Sand, Loamy with Silty and Silty Clay Layers *(continued)*			6		
			10 10		16
			7		
			12 10		15
	690.23				
Hard Gray Silty Clay Loam Till		-45			
			7		
			11 18	8.9 S	8
			6		
			10 12	7.1 S	21
	685.73				
Medium Brown Fine to Coarse Sand with Some Gravel and Silt Layers		-50			
			4 10 10		18
			6		
			6 12		12
	680.73				
Hard Gray Loam Till		-55			
			18		
			23 29	8.1 S	13
			16		
			24 33	9.3 S	12
		-60			

Description	Elev.	DEPTH (ft)	BLOWS (/6")	UCS Qu (tsf)	MOIST (%)
Hard Gray Loam Till *(continued)*			16		
			21 30	9.1 S	16
	673.23				
End of Boring					
		-65			
		-70			
		-75			
		-80			

The Unconfined Compressive Strength (UCS) Failure Mode is indicated by (B-Bulge, S-Shear, P-Penetrometer)
The SPT (N value) is the sum of the last two blow values in each sampling zone (AASHTO T206)

BBS, form 137 (Rev. 8-99)

SOIL BORING 027-0052.GPJ IL_DOT.GDT 2/1/22

MODEL: 66K39 Sheet Border
FILE NAME: c:\workingdir\$datasource.name\dms16334\D366K39-plan-border.dgn

V3 Companies
7325 Janes Avenue
Woodridge, IL 60517
630 724 9200 phone
www.v3co.com

USER NAME =	DESIGNED - LKF	REVISED -	
	DRAWN - LJM	REVISED -	
	CHECKED - WJV	REVISED -	
PLOT DATE = 02/20/2026	DATE - 02/20/2026	REVISED -	

STATE OF ILLINOIS
DEPARTMENT OF TRANSPORTATION

SOIL BORING LOGS - I
STRUCTURE NO. 027-0106 (S.B.) & 027-0107 (N.B.)

SCALE: SHEET 41 OF 48 SHEETS STA. TO STA.

F.A.I. RTE.	SECTION	COUNTY	TOTAL SHEETS	SHEET NO.
57	(27-38B) BR-1	FORD	185	133

CONTRACT NO. 66K39

ILLINOIS FED. AID PROJECT

Illinois Department of Transportation
Division of Highways
Illinois Department of Transportation

SOIL BORING LOG

Date 12/22/21

ROUTE FAI 57 (I-57) **DESCRIPTION** I-57 over Big Four Ditch, 2.37 Miles South of IL 9 **LOGGED BY** Larry Myers

SECTION (27-38B)ES **LOCATION** SE 1/4, **SEC.** 25, **TWP.** 23, **RNG.** 9, 3rd **PM**,
Latitude 40.4212, **Longitude** -88.11989

COUNTY Ford **DRILLING METHOD** Hollow Stem Auger **HAMMER TYPE** CME Automatic

STRUCT. NO. 027-0052
Station 1730+30

BORING NO. 3 (SW Quad)
Station 1728+57
Offset 64.0 ft Lt.
Ground Surface Elev. 737.77 ft

Surface Water Elev. ft
Stream Bed Elev. ft

Groundwater Elev.:
First Encounter 692.8 ft ▼
Upon Completion 707.8 ft ▽
After Hrs. ft

Description	Elev.	DEPTH (ft)	BLOWS (/6")	UCS Qu (tsf)	MOIST (%)
Augered Shoulder Stone, Black & Brown Silty Clay Loam Fill					
	735.27				
Very Stiff to Hard Gray & Brown Silty Clay Loam Till Fill			3		
			3 4	2.0 P	20
		-5			
			3		
			5 6	3.5 P	19
			3		
			5 6	4.0 P	16
		-10			
			4		
			5 6	4.0 P	19
	725.77				
Hard Black Silty Clay Loam Topsoil with Organics			3		
			5 5	4.0 S	23
		-15			
			3		
			4 6	4.1 S	23
	720.77				
Hard Brown & Gray Silty Clay Loam Till Grading to Clay Till with Minor Silt/Sand Pockets			4		
			6 8	4.8 S	16
		-20			
Hard Brown & Gray Silty Clay Loam Till Grading to Clay Till with Minor Silt/Sand Pockets *(continued)*			5		
			7 9	5.3 S	14
			5		
			6 7	4.3 S	20
		-25			
			4		
			5 7	4.4 S	18
			4		
			4 6	4.2 S	22
		▽ -30			
			3 4 6	4.1 S	22
	705.27				
Medium Brown to Gray Fine Sand, Silt, Loam, Gravel Interbedded - Some Thick			5		
			5 5		22
		-35			
			4		
			5 6		22
			3		
			4 6		25
		-40			

The Unconfined Compressive Strength (UCS) Failure Mode is indicated by (B-Bulge, S-Shear, P-Penetrometer)
The SPT (N value) is the sum of the last two blow values in each sampling zone (AASHTO T206)

BBS, form 137 (Rev. 8-99)

Illinois Department of Transportation
Division of Highways
Illinois Department of Transportation

SOIL BORING LOG

Date 12/22/21

ROUTE FAI 57 (I-57) **DESCRIPTION** I-57 over Big Four Ditch, 2.37 Miles South of IL 9 **LOGGED BY** Larry Myers

SECTION (27-38B)ES **LOCATION** SE 1/4, **SEC.** 25, **TWP.** 23, **RNG.** 9, 3rd **PM**,
Latitude 40.4212, **Longitude** -88.11989

COUNTY Ford **DRILLING METHOD** Hollow Stem Auger **HAMMER TYPE** CME Automatic

STRUCT. NO. 027-0052
Station 1730+30

BORING NO. 3 (SW Quad)
Station 1728+57
Offset 64.0 ft Lt.
Ground Surface Elev. 737.77 ft

Surface Water Elev. ft
Stream Bed Elev. ft

Groundwater Elev.:
First Encounter 692.8 ft ▼
Upon Completion 707.8 ft ▽
After Hrs. ft

Description	Elev.	DEPTH (ft)	BLOWS (/6")	UCS Qu (tsf)	MOIST (%)
Medium Brown to Gray Fine Sand, Silt, Loam, Gravel Interbedded - Some Thick *(continued)*			4		
			5 6		23
			4		
			5 7		19
	692.77 ▼	-45			
Medium Gray Fine to Coarse Sand with Some Gravel Layers - Free Water			6		
			10 10		15
			8		
			12 15		24
		-50			
			7 12 18		24
	685.77				
Dense Reddish Brown to Gray Loamy Fine Sand to Coarse Gravel with Loam Layers & Sand Layers			9		
			16 20		15
		-55			
			10		
			15 22		17
			11		
			16 23		16
		-60			
Dense Reddish Brown to Gray Loamy Fine Sand to Coarse Gravel with Loam Layers & Sand Layers *(continued)*			10		
			12 21		14
			16		
			22 30		14
		-65			
			18		
			21 34		18
			15		
			22 31		17
		-70			
			16		
			24 38		18
	666.27				
End of Boring					
		-80			

The Unconfined Compressive Strength (UCS) Failure Mode is indicated by (B-Bulge, S-Shear, P-Penetrometer)
The SPT (N value) is the sum of the last two blow values in each sampling zone (AASHTO T206)

BBS, form 137 (Rev. 8-99)

SOIL BORING 027-0052.GPJ IL_DOT.GDT 2/1/22

MODEL: 66K39 Sheet Border
FILE NAME: c:\workingdir\$datasource.name\dms16334\D366K39-plan-border.dgn

V3 Companies
7325 Janes Avenue
Woodridge, IL 60517
630 724 9200 phone
www.v3co.com

USER NAME =	DESIGNED - LKF	REVISED -	
	DRAWN - LJM	REVISED -	
	CHECKED - WJV	REVISED -	
PLOT DATE = 02/20/2026	DATE - 02/20/2026	REVISED -	

STATE OF ILLINOIS
DEPARTMENT OF TRANSPORTATION

SOIL BORING LOGS - II
STRUCTURE NO. 027-0106 (S.B.) & 027-0107 (N.B.)

SCALE: SHEET 42 OF 48 SHEETS STA. TO STA.

F.A.I. RTE.	SECTION	COUNTY	TOTAL SHEETS	SHEET NO.
57	(27-38B) BR-1	FORD	185	134
		CONTRACT NO. 66K39		
	ILLINOIS	FED. AID PROJECT		

Illinois Department of Transportation
Division of Highways
Illinois Department of Transportation

SOIL BORING LOG

Date 10/20/21

ROUTE FAI 57 (I-57) **DESCRIPTION** I-57 over Big Four Ditch, 2.37 Miles South of IL 9 **LOGGED BY** Larry Myers

SECTION (27-38B)ES **LOCATION** SE 1/4, **SEC.** 25, **TWP.** 23, **RNG.** 9, 3rd **PM**,
Latitude 40.42117, **Longitude** -88.11968

COUNTY Ford **DRILLING METHOD** Hollow Stem Auger **HAMMER TYPE** CME Automatic

STRUCT. NO. 027-0053
Station 1730+30

BORING NO. 1 (SW Quad)
Station 1728+66
Offset 5.0 ft Lt.
Ground Surface Elev. 736.68 ft

Surface Water Elev. ft
Stream Bed Elev. ft

Groundwater Elev.:
First Encounter 718.7 ft ▼
Upon Completion 718.7 ft ▽
After Hrs. ft

Description	Elev.	DEPTH (ft)	BLOWS (/6")	UCS Qu (tsf)	MOIST (%)
Augered Black Silty Clay Loam Fill, Brown Silty Clay Loam Till Fill	734.18				
Very Stiff to Hard Brown and Gray Silty Clay Loam Till Fill		-5	3		
			3 4	3.5 P	18
			3		
			4 5	3.5 P	17
			3		
			3 3	2.5 P	21
		-10	1		
			1 5	4.5 P	19
Hard Black Silty Clay Loam Topsoil	724.68		4		
			4 7	4.0 P	25
		-15	1		
Very Stiff Gray Clay Loam Grading to Loamy Sand, Gravel, Silt - Alluvial Deposits	720.68		2 4	2.5 P	22
			1		
			1 1		21
		-20			

Description	Elev.	DEPTH (ft)	BLOWS (/6")	UCS Qu (tsf)	MOIST (%)
Very Stiff Gray Clay Loam Grading to Loamy Sand, Gravel, Silt - Alluvial Deposits *(continued)*	714.68		1		
			1 2		29
Hard Gray Clay Till			6		
			8 10	5.6 S	14
		-25	5		
			6 8	4.8 S	20
			4		
			5 6	4.4 S	22
		-30	3		
			4 5	4.2 S	25
Medium to Loose Brown Fine Sand to Fine Gravel - Loamy with Gray Silt Layers and Silty Loam Layers	704.18		3		
			7 13		16
		-35	10		
			15 13		15
			7		
			7 8	3.5 P	21
		-40			

The Unconfined Compressive Strength (UCS) Failure Mode is indicated by (B-Bulge, S-Shear, P-Penetrometer)
The SPT (N value) is the sum of the last two blow values in each sampling zone (AASHTO T206)

BBS, form 137 (Rev. 8-99)

SOIL BORING 027-0053.GPJ IL_DOT.GDT 2/1/22

Illinois Department of Transportation
Division of Highways
Illinois Department of Transportation

SOIL BORING LOG

Date 10/20/21

ROUTE FAI 57 (I-57) **DESCRIPTION** I-57 over Big Four Ditch, 2.37 Miles South of IL 9 **LOGGED BY** Larry Myers

SECTION (27-38B)ES **LOCATION** SE 1/4, **SEC.** 25, **TWP.** 23, **RNG.** 9, 3rd **PM**,
Latitude 40.42117, **Longitude** -88.11968

COUNTY Ford **DRILLING METHOD** Hollow Stem Auger **HAMMER TYPE** CME Automatic

STRUCT. NO. 027-0053
Station 1730+30

BORING NO. 1 (SW Quad)
Station 1728+66
Offset 5.0 ft Lt.
Ground Surface Elev. 736.68 ft

Surface Water Elev. ft
Stream Bed Elev. ft

Groundwater Elev.:
First Encounter 718.7 ft ▼
Upon Completion 718.7 ft ▽
After Hrs. ft

Description	Elev.	DEPTH (ft)	BLOWS (/6")	UCS Qu (tsf)	MOIST (%)
Medium to Loose Brown Fine Sand to Fine Gravel - Loamy with Gray Silt Layers and Silty Loam Layers *(continued)*			7		
			8 10	4.0 P	18
			5		
			3 5		17
		-45	2		
			3 4		15
			2		
			4 8		15
		-50	7		
			8 12		12
Hard Gray Loam Till	684.18		18		
			21 27	7.2 S	12
		-55	23		
			28 38	9.3 S	8
			20		
			24 31	9.5 S	10
		-60			

Description	Elev.	DEPTH (ft)	BLOWS (/6")	UCS Qu (tsf)	MOIST (%)
Hard Gray Loam Till *(continued)*			17		
			20 30	8.5 S	10
	675.18				
End of Boring					
		-65			
		-70			
		-75			
		-80			

The Unconfined Compressive Strength (UCS) Failure Mode is indicated by (B-Bulge, S-Shear, P-Penetrometer)
The SPT (N value) is the sum of the last two blow values in each sampling zone (AASHTO T206)

BBS, form 137 (Rev. 8-99)

SOIL BORING 027-0053.GPJ IL_DOT.GDT 2/1/22

MODEL: 66K39 Sheet Border
FILE NAME: c:\workingdir\$datasource.name\dms16334\D366K39-plan-border.dgn

V3 Companies
7325 Janes Avenue
Woodridge, IL 60517
630 724 9200 phone
www.v3co.com

USER NAME =	DESIGNED - LKF	REVISED -	
	DRAWN - LJM	REVISED -	
	CHECKED - WJV	REVISED -	
PLOT DATE = 02/20/2026	DATE - 02/20/2026	REVISED -	

STATE OF ILLINOIS
DEPARTMENT OF TRANSPORTATION

SOIL BORING LOGS - III
STRUCTURE NO. 027-0106 (S.B.) & 027-0107 (N.B.)

SCALE: SHEET 43 OF 48 SHEETS STA. TO STA.

F.A.I. RTE.	SECTION	COUNTY	TOTAL SHEETS	SHEET NO.
57	(27-38B) BR-1	FORD	185	135

CONTRACT NO. 66K39

ILLINOIS FED. AID PROJECT

Illinois Department of Transportation
Division of Highways
Illinois Department of Transportation

SOIL BORING LOG

Date 12/23/21

ROUTE FAI 57 (I-57) DESCRIPTION I-57 over Big Four Ditch, 2.37 Miles South of IL 9 LOGGED BY Larry Myers

SECTION (27-38B)ES LOCATION NE 1/4, SEC. 25, TWP. 23, RNG. 9, 3rd PM,
Latitude 40.42196, Longitude -88.11907

COUNTY Ford DRILLING METHOD Hollow Stem Auger HAMMER TYPE CME Automatic

STRUCT. NO. 027-0053
Station 1730+30

BORING NO. 4 (NE Quad)
Station 1731+92
Offset 65.0 ft Rt.
Ground Surface Elev. 736.19 ft

Surface Water Elev. ft
Stream Bed Elev. ft

Groundwater Elev.:
First Encounter 709.2 ft ▼
Upon Completion 711.2 ft ▽
After Hrs. ft

Description	Elev.	DEPTH (ft)	BLOWS (/6")	UCS Qu (tsf)	MOIST (%)
Augered Shoulder Stone, Brown Silty Clay Loam Fill					
	733.69				
Very Stiff Gray & Brown Silty Clay Loam Till Fill			2		
			3 4	2.0 P	20
		-5			
			2		
			3 5	3.5 P	19
			2		
			3 5	3.5 P	24
		-10			
			2		
			3 5	3.5 P	22
			2		
			3 4	3.0 P	21
	721.69				
Very Stiff Black Silty Clay Loam		-15			
			3		
			3 4	2.0 P	22
	719.19				
Hard to Very Stiff Gray & Brown Silty Clay Till			3		
			5 6	4.2 S	20
		-20			
Hard to Very Stiff Gray & Brown Silty Clay Till *(continued)*			4		
			6 7	4.8 S	17
			4		
			5 6	4.2 B	17
		▽ -25			
			3		
			4 5	3.8 B	19
		▼			
Minor Sand/Gravel Layers at 27'			3		
			5 5	3.4 B	32
		-30			
			4 5 7	3.5 B	25
	704.69				
Hard Gray Silty Clay Loam Till with Some Sand/Gravel Layers & Silt Layers			8		
			12 14	5.1 S	11
		-35			
			11		
			15 17	6.1 S	11
			10		
			12 14	5.3 S	12
		-40			

The Unconfined Compressive Strength (UCS) Failure Mode is indicated by (B-Bulge, S-Shear, P-Penetrometer)
The SPT (N value) is the sum of the last two blow values in each sampling zone (AASHTO T206)

BBS, form 137 (Rev. 8-99)

Illinois Department of Transportation
Division of Highways
Illinois Department of Transportation

SOIL BORING LOG

Date 12/23/21

ROUTE FAI 57 (I-57) DESCRIPTION I-57 over Big Four Ditch, 2.37 Miles South of IL 9 LOGGED BY Larry Myers

SECTION (27-38B)ES LOCATION NE 1/4, SEC. 25, TWP. 23, RNG. 9, 3rd PM,
Latitude 40.42196, Longitude -88.11907

COUNTY Ford DRILLING METHOD Hollow Stem Auger HAMMER TYPE CME Automatic

STRUCT. NO. 027-0053
Station 1730+30

BORING NO. 4 (NE Quad)
Station 1731+92
Offset 65.0 ft Rt.
Ground Surface Elev. 736.19 ft

Surface Water Elev. ft
Stream Bed Elev. ft

Groundwater Elev.:
First Encounter 709.2 ft ▼
Upon Completion 711.2 ft ▽
After Hrs. ft

Description	Elev.	DEPTH (ft)	BLOWS (/6")	UCS Qu (tsf)	MOIST (%)
Hard Gray Silty Clay Loam Till with Some Sand/Gravel Layers & Silt Layers *(continued)*			10		
			10 10	4.8 S	17
			10		
			9 10	4.6 S	17
		-45			
			10		
			11 9	4.7 S	13
			10		
			11 12	4.9 S	11
		-50			
			11 18 24	6.7 S	10
	684.19				
Dense Brown Loamy Fine Sand to Coarse Gravel with Loam and Sand Layers			18		
			25 25		12
		-55			
			20		
			27 29		12
		-60			
Dense Brown Loamy Fine Sand to Coarse Gravel with Loam and Sand Layers *(continued)*			19		
			25 28		12
	674.69				
End of Boring					
		-65			
		-70			
		-75			
		-80			

The Unconfined Compressive Strength (UCS) Failure Mode is indicated by (B-Bulge, S-Shear, P-Penetrometer)
The SPT (N value) is the sum of the last two blow values in each sampling zone (AASHTO T206)

BBS, form 137 (Rev. 8-99)

SOIL BORING 027-0053.GPJ IL_DOT.GDT 2/1/22

MODEL: 66K39 Sheet Border
FILE NAME: c:\workingdir\$datasource.name\dms16334\D366K39-plan-border.dgn

V3 Companies
7325 Janes Avenue
Woodridge, IL 60517
630 724 9200 phone
www.v3co.com

USER NAME =	DESIGNED - LKF	REVISED -
	DRAWN - LJM	REVISED -
	CHECKED - WJV	REVISED -
PLOT DATE = 02/20/2026	DATE - 02/20/2026	REVISED -

STATE OF ILLINOIS
DEPARTMENT OF TRANSPORTATION

SOIL BORING LOGS - IV
STRUCTURE NO. 027-0106 (S.B.) & 027-0107 (N.B.)

SCALE: SHEET 44 OF 48 SHEETS STA. TO STA.

F.A.I. RTE.	SECTION	COUNTY	TOTAL SHEETS	SHEET NO.
57	(27-38B) BR-1	FORD	185	136

CONTRACT NO. 66K39
ILLINOIS FED. AID PROJECT

Illinois Department of Transportation
Division of Highways

SOIL BORING LOG

Date 1/2/24

ROUTE F.A.I Route 57 DESCRIPTION I-57 over Big Four Ditch LOGGED BY KEG

SECTION (27-38B)ES LOCATION Latitude 40.42142°, Longitude -88.11947°

COUNTY Ford DRILLING METHOD HSA + Mudwash @ 11 HAMMER TYPE AUTO

STRUCT. NO. 027-0053(Exist.) 027-0107(Prop.)
Station 1730+30

BORING NO. 5 (S. Pier)
Station 1729+73
Offset 20.2 ft RT
Ground Surface Elev. 721.97 ft

Surface Water Elev. ft
Stream Bed Elev. ft

Groundwater Elev.:
First Encounter ft
Upon Completion ft
After Hrs. ft

Description	Elev.	DEPTH (ft)	BLOWS (/6")	UCS Qu (tsf)	MOIST (%)
SILTY CLAY - Dark Brown, Medium Stiff, w/ some gravel and organics			3		
			3 4	1.5 B	21
w/ some sand, moderately stiff Liquid Limit (%) = 41 Plastic Limit (%) = 15 Plasticity Index (%) = 26 %Gravel = 7.4, %Sand = 70.2, %Silt =16.2, %Clay = 6.2 No Recovery			1		
		-5	2 2	0.6 B	22
			3		
			8 9		
No Recovery			10		
			11 16		
		-10			
CLAY TILL - Gray, Medium Stiff, w/ some gravel Poor Recovery	711.0		13		
			12 15	1.0 P	21
Poor Recovery			5		
			8 12		23
		-15			
			3		
			6 8	1.7 B	23
			4		
		-20	6 8	1.9 B	23
CLAY TILL - Gray, Medium Stiff, w/ some gravel Poor Recovery *(continued)* Becomes gray and brown, stiff			5 6 13	1.9 B	30
SILT - Gray + Brown, Soft Liquid Limit (%) = 20 Plastic Limit (%) = 15 Plasticity Index (%) = 5	698.5		5		
			5 8		23
		-25			
Becomes Medium Stiff w/ some fine sand seams			10		
			11 12	1.3 S	17
			7		
			6 8	1.0 P	21
		-30			
SAND - Brown, Coarse, Moderately Dense, w/ some gravel %Gravel = 0.1, %Sand = 65.5, %Silt = 21.0, %Clay = 13.5	688.5 688.0		6		
			6 14	2.7 S	11
		-35			
SILTY CLAY LOAM TILL- Brown and Medium Stiff					
SANDY CLAY TILL - Gray and Stiff	683.5		10		
		-40	18 22	1.6 S	10

The Unconfined Compressive Strength (UCS) Failure Mode is indicated by (B-Bulge, S-Shear, P-Penetrometer)
The SPT (N value) is the sum of the last two blow values in each sampling zone (AASHTO T206)

BBS, form 137 (Rev. 8-99)

Illinois Department of Transportation
Division of Highways

SOIL BORING LOG

Date 1/2/24

ROUTE F.A.I Route 57 DESCRIPTION I-57 over Big Four Ditch LOGGED BY KEG

SECTION (27-38B)ES LOCATION Latitude 40.42142°, Longitude -88.11947°

COUNTY Ford DRILLING METHOD HSA + Mudwash @ 11 HAMMER TYPE AUTO

STRUCT. NO. 027-0053(Exist.) 027-0107(Prop.)
Station 1730+30

BORING NO. 5 (S. Pier)
Station 1729+73
Offset 20.2 ft RT
Ground Surface Elev. 721.97 ft

Surface Water Elev. ft
Stream Bed Elev. ft

Groundwater Elev.:
First Encounter ft
Upon Completion ft
After Hrs. ft

Description	Elev.	DEPTH (ft)	BLOWS (/6")	UCS Qu (tsf)	MOIST (%)
SANDY CLAY TILL - Gray and Stiff *(continued)*					
			7		
			18 26	1.2 S	8
		-45			
			20		
			20 24		9
		-50			
GRAVELLY SAND - Gray + Brown, Dense, Medium Coarse to Coarse	668.5		23		
			25 36		12
End of Boring	667.0	-55			
		-60			

The Unconfined Compressive Strength (UCS) Failure Mode is indicated by (B-Bulge, S-Shear, P-Penetrometer)
The SPT (N value) is the sum of the last two blow values in each sampling zone (AASHTO T206)

BBS, form 137 (Rev. 8-99)

MODEL: 66K39 Sheet Border
FILE NAME: c:\workingdir\$datasource.name\dms16334\D366K39-plan-border.dgn

V3 Companies
7325 Janes Avenue
Woodridge, IL 60517
630 724 9200 phone
www.v3co.com

USER NAME =	DESIGNED - LKF	REVISED -	
	DRAWN - LJM	REVISED -	
	CHECKED - WJV	REVISED -	
PLOT DATE = 02/20/2026	DATE - 02/20/2026	REVISED -	

STATE OF ILLINOIS
DEPARTMENT OF TRANSPORTATION

SOIL BORING LOGS - V
STRUCTURE NO. 027-0106 (S.B.) & 027-0107 (N.B.)

SCALE: SHEET 45 OF 48 SHEETS STA. TO STA.

F.A.I. RTE.	SECTION	COUNTY	TOTAL SHEETS	SHEET NO.
57	(27-38B) BR-1	FORD	185	137

CONTRACT NO. 66K39
ILLINOIS FED. AID PROJECT

Illinois Department of Transportation
Division of Highways

SOIL BORING LOG

Date 1/2/24

ROUTE F.A.I Route 57 DESCRIPTION I-57 over Big Four Ditch LOGGED BY KEG

SECTION (27-38B)ES LOCATION Latitude 40.42148°, Longitude -88.11959°

COUNTY Ford DRILLING METHOD HSA + Mudwash @ 11' HAMMER TYPE AUTO

STRUCT. NO. 027-0052(Exist.) 027-0106(Prop.)
Station 1730+30

BORING NO. 6 (S. Pier)
Station 1729+81
Offset 17.4 ft LT
Ground Surface Elev. 722.77 ft

Surface Water Elev. ft
Stream Bed Elev. ft

Groundwater Elev.:
First Encounter ft
Upon Completion ft
After Hrs. ft

Description	Elev.	DEPTH (ft)	BLOWS (/6")	UCS Qu (tsf)	MOIST (%)
SILTY CLAY - Dark Brown, Medium Stiff, w/ organics			1		
			3 4	1.2 B	31
w/ some pebbles	718.8		2		
CLAYEY SAND - Brown, Medium Coarse, Loose		-5	2 2	1.5 B	23
	716.8				
CLAY - Gray, Stiff, w/ some pebbles			4		
			4 8	3.7 B	18
w/ some pebbles			4		
		-10	8 10	3.9 B	17
			5		
			8 10	3.3 B	20
			5		
		-15	7 9	2.1 B	23
Liquid Limit (%) = 38 Plastic Limit (%) = 18 Plasticity Index (%) = 20			5		
			8 12	2.1 B	24
	704.3				
SILT - Gray, Soft, Wet, w/ some sand seams			5		
		-20	6 8	0.2 B	19
SILT - Gray, Soft, Wet, w/ some sand seams *(continued)*					
Becomes medium stiff			6 6 8	0.6 B	25
Becomes stiff		-25	6 6 6	0.1 B	22
w/ some fine sand seams			7 6 8	0.1 B	21
		-30	12 10 12	1.0 B	21
	689.3				
SAND - Brown, Coarse, Medium Dense, w/ some gravel	688.8		5		
SILTY CLAY LOAM TILL - Brown + Gray and Very Stiff		-35	7 50/2.5"	4.3 S	11
Becomes stiff			10		
	682.8	-40	14 22	3.7 S	14

The Unconfined Compressive Strength (UCS) Failure Mode is indicated by (B-Bulge, S-Shear, P-Penetrometer)
The SPT (N value) is the sum of the last two blow values in each sampling zone (AASHTO T206)

BBS, form 137 (Rev. 8-99)

Illinois Department of Transportation
Division of Highways

SOIL BORING LOG

Date 1/2/24

ROUTE F.A.I Route 57 DESCRIPTION I-57 over Big Four Ditch LOGGED BY KEG

SECTION (27-38B)ES LOCATION Latitude 40.42148°, Longitude -88.11959°

COUNTY Ford DRILLING METHOD HSA + Mudwash @ 11' HAMMER TYPE AUTO

STRUCT. NO. 027-0052(Exist.) 027-0106(Prop.)
Station 1730+30

BORING NO. 6 (S. Pier)
Station 1729+81
Offset 17.4 ft LT
Ground Surface Elev. 722.77 ft

Surface Water Elev. ft
Stream Bed Elev. ft

Groundwater Elev.:
First Encounter ft
Upon Completion ft
After Hrs. ft

Description	Elev.	DEPTH (ft)	BLOWS (/6")	UCS Qu (tsf)	MOIST (%)
SAND - Orangeish Brown + Gray, Medium Coarse to Coarse, Very Dense, w/ some gravel and clay seams					
%Gravel = 10.1, %Sand = 74.2, %Silt = 12.9, %Clay = 2.8			22		
		-45	29 36		16
Becomes gray			23		
	672.8	-50	22 26		
End of Boring					
		-55			
		-60			

The Unconfined Compressive Strength (UCS) Failure Mode is indicated by (B-Bulge, S-Shear, P-Penetrometer)
The SPT (N value) is the sum of the last two blow values in each sampling zone (AASHTO T206)

BBS, form 137 (Rev. 8-99)

MODEL: 66K39 Sheet Border
FILE NAME: c:\workingdir\$datasource.name\dms16334\D366K39-plan-border.dgn

V3 Companies
7325 Janes Avenue
Woodridge, IL 60517
630 724 9200 phone
www.v3co.com

USER NAME =	DESIGNED - LKF	REVISED -	
	DRAWN - LJM	REVISED -	
	CHECKED - WJV	REVISED -	
PLOT DATE = 02/20/2026	DATE - 02/20/2026	REVISED -	

STATE OF ILLINOIS
DEPARTMENT OF TRANSPORTATION

SOIL BORING LOGS - VI
STRUCTURE NO. 027-0106 (S.B.) & 027-0107 (N.B.)

SCALE: SHEET 46 OF 48 SHEETS STA. TO STA.

F.A.I. RTE.	SECTION	COUNTY	TOTAL SHEETS	SHEET NO.
57	(27-38B) BR-1	FORD	185	138
		CONTRACT NO. 66K39		
		ILLINOIS FED. AID PROJECT		

Illinois Department of Transportation
Division of Highways

SOIL BORING LOG

Date 12/28/23

ROUTE F.A.I Route 57 DESCRIPTION I-57 over Big Four Ditch LOGGED BY KEG

SECTION (27-38B)ES LOCATION Latitude 40.42168°, Longitude -88.11938°

COUNTY Ford DRILLING METHOD HSA + Mudwash @ 11' HAMMER TYPE AUTO

STRUCT. NO. 027-0053(Exist.) 027-0107(Prop.)
Station 1730+30

BORING NO. 7 (N. Pier)
Station 1730+69
Offset 13.8 ft RT
Ground Surface Elev. 722.40 ft

Surface Water Elev. ft
Stream Bed Elev. ft

Groundwater Elev.:
First Encounter ft
Upon Completion ft
After Hrs. ft

Description	Elev.	DEPTH (ft)	BLOWS (/6")	UCS Qu (tsf)	MOIST (%)
SILTY CLAY - Brown, Medium Stiff, w/ organics			2		
			2 4	0.6 B	26
			2		
		-5	2 2	0.7 B	22
			4		
	715.4		5 8	1.4 B	22
CLAY - Brown + Gray, Stiff			9		
		-10	10 13	2.7 B	25
Liquid Limit (%) = 37 Plastic Limit (%) = 18 Plasticity Index (%) = 19			8		
			9 10	1.7 B	21
			3		
		-15	4 7	2.0 B	23
			3		
			3 7		37
	703.9				
SILT - Gray, Medium Stiff, w/ some sand			6		
		-20	8 9		17
SILT - Gray, Medium Stiff, w/ some sand *(continued)*	701.4				
SANDY SILT - Gray, Soft, Wet, w/ some sand seams %Gravel = 0.0, %Sand = 25.4, %Silt = 61.9, %Clay = 12.6			7 7 6		18
	698.9				
SAND - Brown, Medium Coarse, Medium Dense			14		
		-25	13 11		10
			7		
			5 4		13
			7		
		-30	7 6		18
	688.9				
SILTY CLAY LOAM TILL - Brown + Gray, Hard			14		
		-35	31 34	4.8 S	11
		-40	23 45 50/5"	7.6 S	10

The Unconfined Compressive Strength (UCS) Failure Mode is indicated by (B-Bulge, S-Shear, P-Penetrometer)
The SPT (N value) is the sum of the last two blow values in each sampling zone (AASHTO T206)

BBS, form 137 (Rev. 8-99)

Illinois Department of Transportation
Division of Highways

SOIL BORING LOG

Date 12/28/23

ROUTE F.A.I Route 57 DESCRIPTION I-57 over Big Four Ditch LOGGED BY KEG

SECTION (27-38B)ES LOCATION Latitude 40.42168°, Longitude -88.11938°

COUNTY Ford DRILLING METHOD HSA + Mudwash @ 11' HAMMER TYPE AUTO

STRUCT. NO. 027-0053(Exist.) 027-0107(Prop.)
Station 1730+30

BORING NO. 7 (N. Pier)
Station 1730+69
Offset 13.8 ft RT
Ground Surface Elev. 722.40 ft

Surface Water Elev. ft
Stream Bed Elev. ft

Groundwater Elev.:
First Encounter ft
Upon Completion ft
After Hrs. ft

Description	Elev.	DEPTH (ft)	BLOWS (/6")	UCS Qu (tsf)	MOIST (%)
SILTY CLAY LOAM TILL - Brown + Gray, Hard *(continued)*					
	678.9				
CLAY LOAM TILL - Gray and Very Stiff			19		
		-45	32 39	>4.5 P	13
	673.9				
SANDY CLAY TILL Gray and Hard			29		
	672.4	-50	50/5.5"		8
End of Boring					
		-55			
		-60			

The Unconfined Compressive Strength (UCS) Failure Mode is indicated by (B-Bulge, S-Shear, P-Penetrometer)
The SPT (N value) is the sum of the last two blow values in each sampling zone (AASHTO T206)

BBS, form 137 (Rev. 8-99)

MODEL: 66K39 Sheet Border
FILE NAME: c:\workingdir\$datasource.name\dms16334\D366K39-plan-border.dgn

V3 Companies
7325 Janes Avenue
Woodridge, IL 60517
630 724 9200 phone
www.v3co.com

USER NAME =	DESIGNED - LKF	REVISED -	
	DRAWN - LJM	REVISED -	
	CHECKED - WJV	REVISED -	
PLOT DATE = 02/20/2026	DATE - 02/20/2026	REVISED -	

STATE OF ILLINOIS
DEPARTMENT OF TRANSPORTATION

SOIL BORING LOGS - VII
STRUCTURE NO. 027-0106 (S.B.) & 027-0107 (N.B.)

SCALE: SHEET 47 OF 48 SHEETS STA. TO STA.

F.A.I. RTE.	SECTION	COUNTY	TOTAL SHEETS	SHEET NO.
57	(27-38B) BR-1	FORD	185	139

CONTRACT NO. 66K39
ILLINOIS FED. AID PROJECT

Illinois Department of Transportation
Division of Highways

SOIL BORING LOG

Date 12/29/23

ROUTE F.A.I Route 57 DESCRIPTION I-57 over Big Four Ditch LOGGED BY KEG

SECTION (27-38B)ES LOCATION Latitude 40.42173°, Longitude -88.11949°

COUNTY Ford DRILLING METHOD HSA + Mudwash @ 11' HAMMER TYPE AUTO

STRUCT. NO. 027-0052(Exist.) 027-0106(Prop.)
Station 1730+30

BORING NO. 8 (N. Pier)
Station 1730+76
Offset 20.2 ft LT
Ground Surface Elev. 722.36 ft

Surface Water Elev. ft
Stream Bed Elev. ft

Groundwater Elev.:
First Encounter ft
Upon Completion ft
After Hrs. ft

Description	Elev.	DEPTH (ft)	BLOWS (/6")	UCS Qu (tsf)	MOIST (%)
SILTY CLAY - Dark Brown, Soft to Medium Stiff, w/ organics Poor Recovery			2		
			1 2	2.0 P	21
Becomes soft + wet			1		
		-5	1 2	0.1 B	34
Becomes medium stiff			3		
	715.4		5 9	0.2 B	23
CLAY - Brown + Gray, Medium Stiff Poor Recovery					
Liquid Limit (%) = 33 Plastic Limit (%) = 16 Plasticity Index (%) = 17			3		
		-10	8 11	0.7 B	20
Becomes gray, stiff, w/ some pebbles			6		
			7 9	1.8 B	21
Becomes stiff and gray			4		
		-15	5 7	2.1 B	23
w/ some gray, medium coarse, medium dense, sand			2		
			5 4	1.5 B	24
	703.9				
			2		
		-20	3 3		15

Description	Elev.	DEPTH (ft)	BLOWS (/6")	UCS Qu (tsf)	MOIST (%)
CLAYEY SAND - Gray, Medium Coarse, Loose, w/ some gravel %Gravel = 1.0, %Sand = 57.8, %Silt = 28.0, %Clay = 13.3 *(continued)*	701.4		9		
			8 12		19
SAND - Brown, Fine, Medium Dense	698.9				
SILTY CLAY LOAM TILL - Brown and Very Stiff			14		
			16 22	2.8 B	12
		-25			
			15		
			21 25	5.5 B	10
	693.9				
SAND - Gray, Fine, Medium Dense			15		
			15 14		16
		-30			
	688.9				
SILTY CLAY LOAM TILL - Brown and Very Stiff			19		
			29 35	5.9 B	10
		-35			
	683.9				
SANDY CLAY - Brown and Hard			28		
			30 46	6.6 S	15
		-40			

The Unconfined Compressive Strength (UCS) Failure Mode is indicated by (B-Bulge, S-Shear, P-Penetrometer)
The SPT (N value) is the sum of the last two blow values in each sampling zone (AASHTO T206)

BBS, form 137 (Rev. 8-99)

Illinois Department of Transportation
Division of Highways

SOIL BORING LOG

Date 12/29/23

ROUTE F.A.I Route 57 DESCRIPTION I-57 over Big Four Ditch LOGGED BY KEG

SECTION (27-38B)ES LOCATION Latitude 40.42173°, Longitude -88.11949°

COUNTY Ford DRILLING METHOD HSA + Mudwash @ 11' HAMMER TYPE AUTO

STRUCT. NO. 027-0052(Exist.) 027-0106(Prop.)
Station 1730+30

BORING NO. 8 (N. Pier)
Station 1730+76
Offset 20.2 ft LT
Ground Surface Elev. 722.36 ft

Surface Water Elev. ft
Stream Bed Elev. ft

Groundwater Elev.:
First Encounter ft
Upon Completion ft
After Hrs. ft

Description	Elev.	DEPTH (ft)	BLOWS (/6")	UCS Qu (tsf)	MOIST (%)
SANDY CLAY - Brown and Hard *(continued)*					
	678.9				
GRAVELLY SAND - Blueish-Gray, Coarse, Very Dense			32		
			29 31		12
		-45			
	673.9				
SAND Gray, Medium Coarse to Coarse, Dense, w/ some gravel			28		
			26 22		12
	672.4	-50			
End of Boring					
		-55			
		-60			

The Unconfined Compressive Strength (UCS) Failure Mode is indicated by (B-Bulge, S-Shear, P-Penetrometer)
The SPT (N value) is the sum of the last two blow values in each sampling zone (AASHTO T206)

BBS, form 137 (Rev. 8-99)

MODEL: 66K39 Sheet Border
FILE NAME: c:\workingdir\$datasource.name\dms16334\D366K39-plan-border.dgn

V3 Companies
7325 Janes Avenue
Woodridge, IL 60517
630 724 9200 phone
www.v3co.com

USER NAME =	DESIGNED - LKF	REVISED -
	DRAWN - LJM	REVISED -
	CHECKED - WJV	REVISED -
PLOT DATE = 02/20/2026	DATE - 02/20/2026	REVISED -

STATE OF ILLINOIS
DEPARTMENT OF TRANSPORTATION

SOIL BORING LOGS - VIII
STRUCTURE NO. 027-0106 (S.B.) & 027-0107 (N.B.)

SCALE: SHEET 48 OF 48 SHEETS STA. TO STA.

F.A.I. RTE.	SECTION	COUNTY	TOTAL SHEETS	SHEET NO.
57	(27-38B) BR-1	FORD	185	140

CONTRACT NO. 66K39
ILLINOIS FED. AID PROJECT

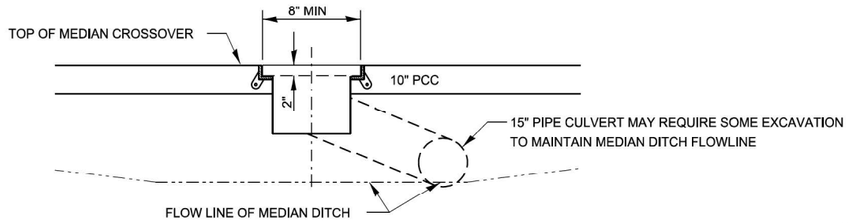

SECTION A-A

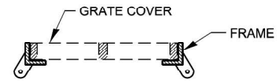

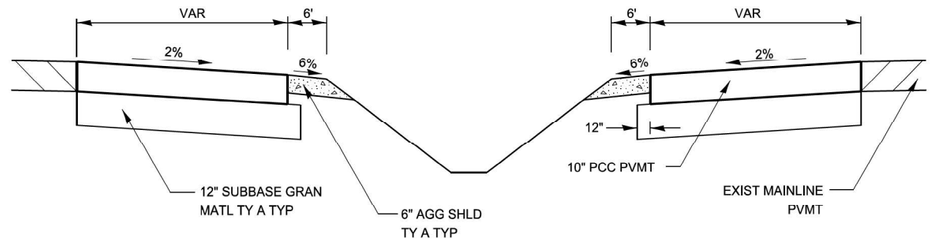

TYPICAL SECTION

GENERAL NOTES:

UNLESS OTHERWISE SPECIFIED, WHEN THE MEDIAN CROSSOVER IS TO BE REMOVED. THE CONTRACTOR SHALL BE REQUIRED TO SAW FULL-DEPTH ALONG THE SHOULDER LINE 6' FROM THE EDGE OF PAVEMENT. THE 6' ADJACENT TO THE EDGE OF PAVEMENT SHALL REMAIN IN PLACE AND BE USED AS SHOULDERS. THE COST OF SAWING SHALL BE INCLUDED IN THE PAVEMENT REMOVAL.

JOINTS SHALL BE SAWED AT A MAXIMUM OF 14' SPACING ACROSS THE MEDIAN WIDTH. ALL JOINTS SHALL BE SEALED.

TRAFFIC CONTROL STANDARD 701416 IS TO BE USED WITH THIS DETAIL.

TABLE OF OFFSETS AND DROPS											
DISTANCE FROM LOCATION STATION	0	63.17'	75'	100'	125'	150'	175'	200'	225'	250'	277.49'
OFFSETS FROM INSIDE EDGE OF PAVEMENT	32'	30'	27.86'	23.67'	19.93'	16.64'	13.80'	11.40'	9.44'	7'	6'
DROP FROM INSIDE EDGE OF PAVEMENT	.64'	.60'	.56'	.47'	.40'	.33'	.28'	.23'	.19'	.16'	.24'
		Ⓑ									Ⓒ

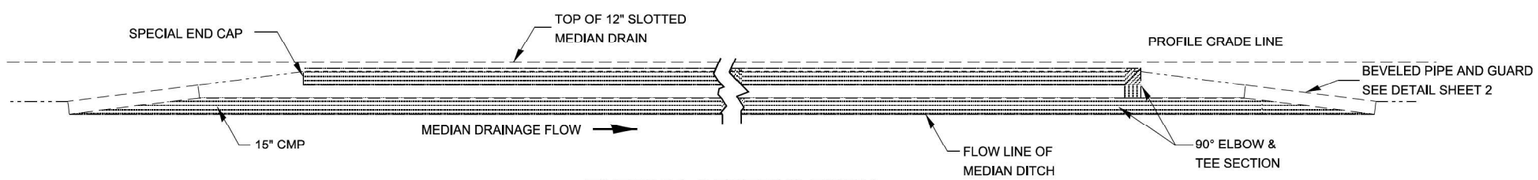

TYPICAL SECTION THRU
CENTERLINE OF MEDIAN CROSSOVER

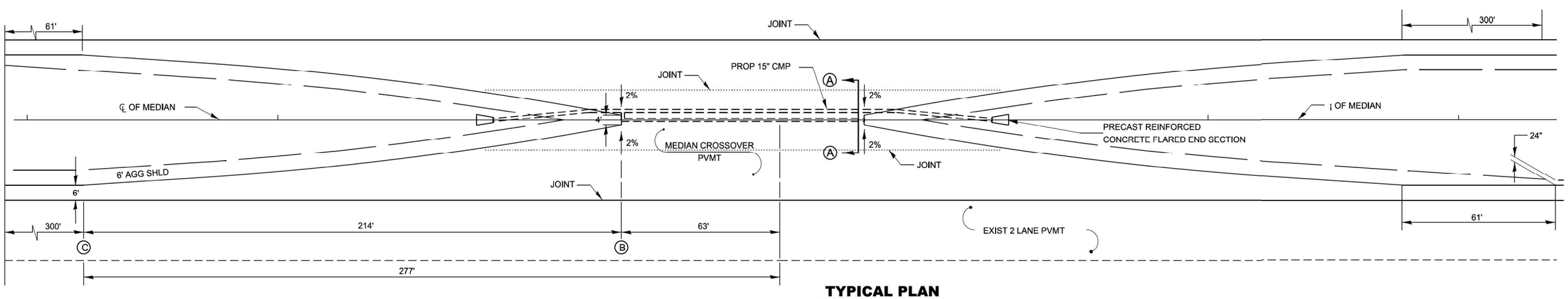

TYPICAL PLAN
1" = 20'

MODEL: 66K39 Sheet Border
FILE NAME: c:\workingdir\$datasource.name\dms16334\D366K39-plan-border.dgn

V3 Companies
7325 Janes Avenue
Woodridge, IL 60517
630 724 9200 phone
www.v3co.com

USER NAME =	DESIGNED - KDC	REVISED -	
	DRAWN - DRP	REVISED -	
	CHECKED - JWB	REVISED -	
PLOT DATE = 02/20/2026	DATE - 02/20/2026	REVISED -	

STATE OF ILLINOIS
DEPARTMENT OF TRANSPORTATION

DETAILS
CROSSOVER

SCALE: NONE | SHEET 1 OF 6 SHEETS | STA. | TO STA.

F.A.I. RTE.	SECTION	COUNTY	TOTAL SHEETS	SHEET NO.
57	(27-38B) BR-1	FORD	185	141
		CONTRACT NO. 66K39		
		ILLINOIS	FED. AID PROJECT	

GENERAL

CLASS SI CONCRETE SHALL BE USED THROUGHOUT.

THIS SPECIFICATION COVERS SLOTTED DRAIN USED FOR THE REMOVAL OF WATER AS SHOWN ON THE PLANS.

THE SLOTTED DRAIN SHALL BE CORRUGATED PIPE CULVERT WITH INTEGRAL SLOTTED DRAINS.

BEFORE PLACING THE CONCRETE ADJACENT TO THE PIPE, THE SLOT SHALL BE COVERED BY EITHER THIN, FLAT METAL SHEETING OR BY A BOARD NOTCHED TO FIT OVER THE GRATE BARS. THIS COVERING MUST FIT CLOSELY IN THE SLOT TO PREVENT ENTRY OF CONCRETE INTO THE PIPE. PAVING OVER THE SLOTTED DRAIN WILL THEN BE ONE CONTINUOUS OPERATION OVER THE PROTECTED DRAIN. THE PROTECTION FOR THE DRAIN SLOT SHALL THEN BE REMOVED. THE PIPE SHALL DRAIN INTO THE SIDE OF THE INLET. THE OPENING WHERE THE SLOT IS REMOVED SHALL BE COVERED TO PREVENT CONCRETE FROM ENTERING THE PIPE.

THE CORRUGATED STEEL PIPE USED IN THE SLOTTED DRAIN SHALL MEET THE REQUIREMENTS OF AASHTO M36/ ASTM A760.

THE CMP SHALL BE ALUMINIZED STEEL TYPE 2.

THE DIAMETER AND GAGE SHALL BE AS SHOWN ON THE PLAN.

STEEL GRATING SHALL MEET THE GALVANIZING REQUIREMENTS OF AASHTO A123.

THIS WORK WILL BE PAID FOR AT THE CONTRACT UNIT PRICE PER FOOT FOR SLOTTED DRAIN 15" WITH 1¾" SLOT, AND SHALL INCLUDE ELBOWS, DRILLING HOLES IN GRATING, SUPPLYING AND PLACING A1 BARS, AND CONCRETE AND GRATING FOR DEPTH SPECIFIED ON PLANS.

USE APPROVED END CAP TO PREVENT CONCRETE ENTRY INTO THE PIPE DURING GUTTER CONSTRUCTION ON THE UPSTREAM END OF THE PIPE.

CONNECTIONS

THE CORRUGATED STEEL PIPE SHALL HAVE A MINIMUM OF TWO REROLLED ANNULAR ENDS.

THE SLOTTED DRAIN BANDS SHALL BE MODIFIED HUGGER BANDS TO SECURE THE PIPE AND PREVENT INFILTRATION OF THE BACKFILL.

WHEN THE SLOTTED DRAIN IS BANDED TOGETHER, THE ADJACENT GRATES SHALL HAVE A MAXIMUM 3" GAP.

GRATES

THE GRATES SHALL BE MANUFACTURED FROM ASTM A670, GRADE 36 STEEL. THE SPACERS AND BEARING BARS (SIDES) SHALL BE 3/16" MATERIAL ±0.008".

THE SPACERS SHALL BE ON 6" CENTERS AND WELDED ON BOTH SIDES TO EACH BEARING BAR (SIDES) WITH FOUR (4) 1¼" LONG 3/16" FILLET WELDS ON EACH SIDE OF THE BEARING BAR.

THE PLATE EXTENDER SHALL BE 7 GAGE STEEL MEETING ASTM A761.

THE ENGINEER MAY CALL FOR TENSILE STRENGTH TESTS ON THE GRATE IF THE GRATE IS NOT IN COMPLIANCE WITH THE ABOVE SPACER SPECIFICATIONS. IF TENSILE STRENGTH TESTS ARE CALLED FOR, MINIMUM RESULTS FOR AN IN-PLACE SPACER PULLED PERPENDICULAR TO THE BEARING BAR SHALL BE:
T = 12,000 POUNDS FOR 2½" GRATE
T = 15,000 POUNDS FOR 6" GRATE

GALVANIZING

THE GRATE AND PLATE EXTENDERS SHALL BE GALVANIZED IN ACCORDANCE WITH ASTM A123 EXCEPT WITH A 2 OZ GALVANIZED COATING.

GRATE ATTACHED TO CSP

THE GRATE SHALL BE FILLET WELDED WITH A MINIMUM WELD 1" LONG TO THE CSP ON EACH SIDE OF THE GRATE AT EVERY OTHER CORRUGATION.

TOLERANCES - FINISHED SLOTTED DRAIN - 20' LENGTH

VERTICAL BOW = ±⅜"
HORIZONTAL BOW = ±⅝"
TWIST = ±½"

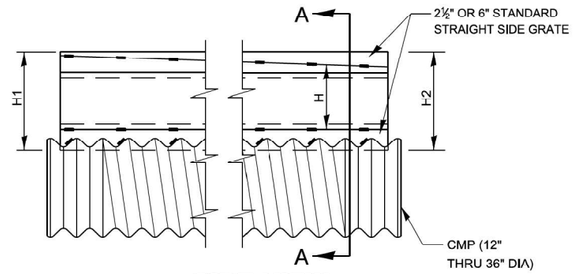

SIDE VIEW

DETAIL WITH VARIABLE HEIGHT GRATE

LOADING CONDITION	MAX. EXTENDER HEIGHT - "H"
H20/H25 * 750 PSI CONCRETE	19"

* 125 PSI TIRE PRESSURE

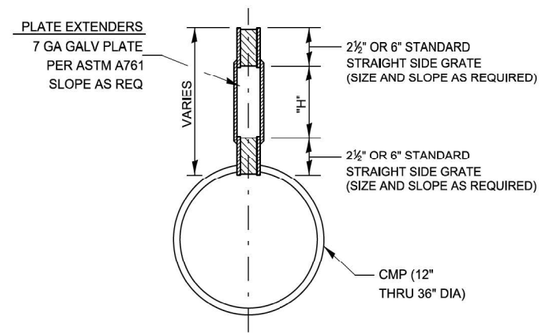

SECTION A-A

STANDARD SIZES						
GAGE OF PIPE	DIAMETER OF PIPE					
	12"	15"	18"	24"	30"	36"
16	X	X	X	X	X	X
14	X	X	X	X	X	X
12	NA	NA	NA	NA	X	X

GRATE TYPE		"A"
VERT	2½"	1¾"
VERT	6"	1¾"
TRAP	2½"	2¼"
TRAP	6"	3"

VERT = VERTICAL
TRAP = TRAPIZOIDAL

SLOTTED DRAIN NOTES

1. GRATING IS AVAILABLE IN DEPTHS OF 2½" AND 6".
2. VERTICAL GRATING (STRAIGHT SIDES) WITH VERTICAL SPACERS IS ALSO AVAILABLE.
3. FOR 6" VERTICAL & TRAPEZOIDAL REQUIREMENTS, THE SLOTTED DRAIN BAND MAY BE FURNISHED WITH THE 4: TECHCO BAND ANGLE.
4. DIMENSIONS ARE SUBJECT TO MANUFACTURING TOLERANCES.
5. REFERENCE CONTECH BAND MANUAL DWG NO 1002697 FOR BAND DETAILS.
6. REFERENCE CONTECH SLOTTED DRAIN DWG NO 1002697.
7. DIMENSIONS FOR H1 AND H2 AS REQUIRED.
8. H1 AND H2 MEASURED FROM TOP OF GRATE TO BOTTOM OF GRATE.

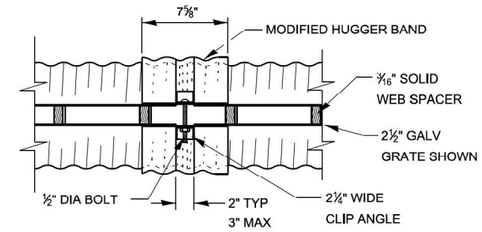

TOP VIEW

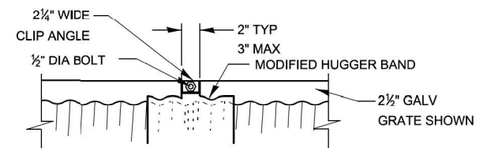

SIDE VIEW

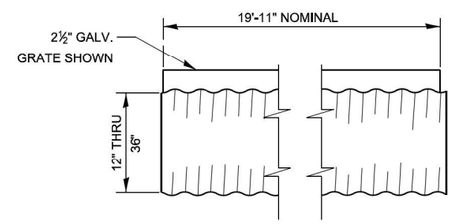

TYPICAL PIPE SECTION

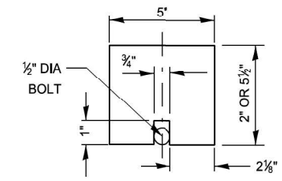

GAP PLATE (OPTIONAL)

MAY BE PLACED DIRECTLY OVER BAND BOLT TO PROVIDE CONTINUOUS FORM FOR GROUTING

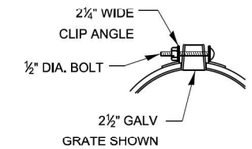

END VIEW

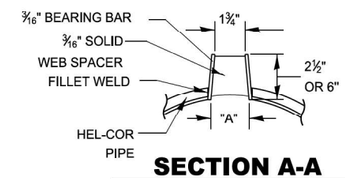

SECTION A-A

STANDARD DETAIL

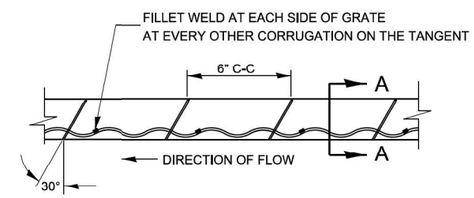

GRATE WELDING DETAIL

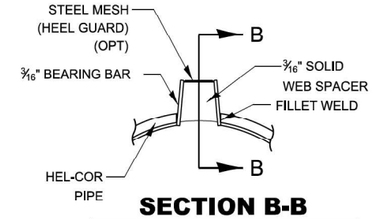

SECTION B-B

DETAIL WITH MESH

(TRAPEZOIDAL GALVANIZED GRATE SHOWN)

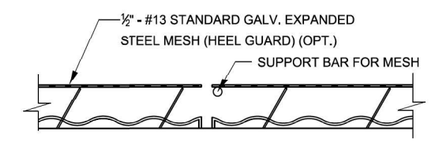

SECTION B-B

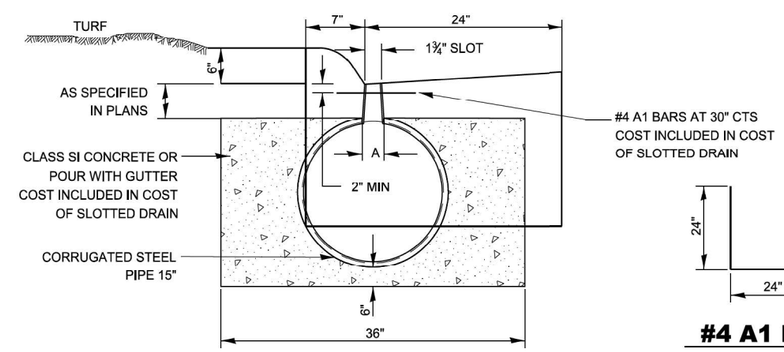

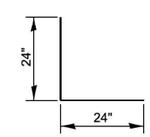

#4 A1 BARS

MODEL: 66K39 Sheet Border
FILE NAME: c:\workingdir\5datasource.name\dms16334\D366K39-plan-border.dgn

V3 Companies
7325 Janes Avenue
Woodridge, IL 60517
630 724 9200 phone
www.v3co.com

USER NAME =	DESIGNED - KDC	REVISED -	
	DRAWN - DRP	REVISED -	
	CHECKED - JWB	REVISED -	
PLOT DATE = 02/20/2026	DATE - 02/20/2026	REVISED -	

STATE OF ILLINOIS
DEPARTMENT OF TRANSPORTATION

DETAILS
SLOTTED DRAIN

SCALE: NONE | SHEET 2 OF 6 SHEETS | STA. | TO STA.

F.A.I. RTE.	SECTION	COUNTY	TOTAL SHEETS	SHEET NO.
57	(27-38B) BR-1	FORD	185	142

CONTRACT NO. 66K39

ILLINOIS | FED. AID PROJECT

NOTES:

COST OF PANELS, POSTS, DRUMS, AND SIGNS SHALL BE INCLUDED IN THE COST OF THE TRAFFIC CONTROL AND PROTECTION PAY ITEMS.

NEAR EDGE OF VERTICAL PANELS SHALL BE PLACED AT LEAST 1' FROM THE EDGE OF SHOULDER AND THE TOP OF THE PANEL SHALL BE AT LEAST 4' ABOVE THE EDGE OF SHOULDER ELEVATION.

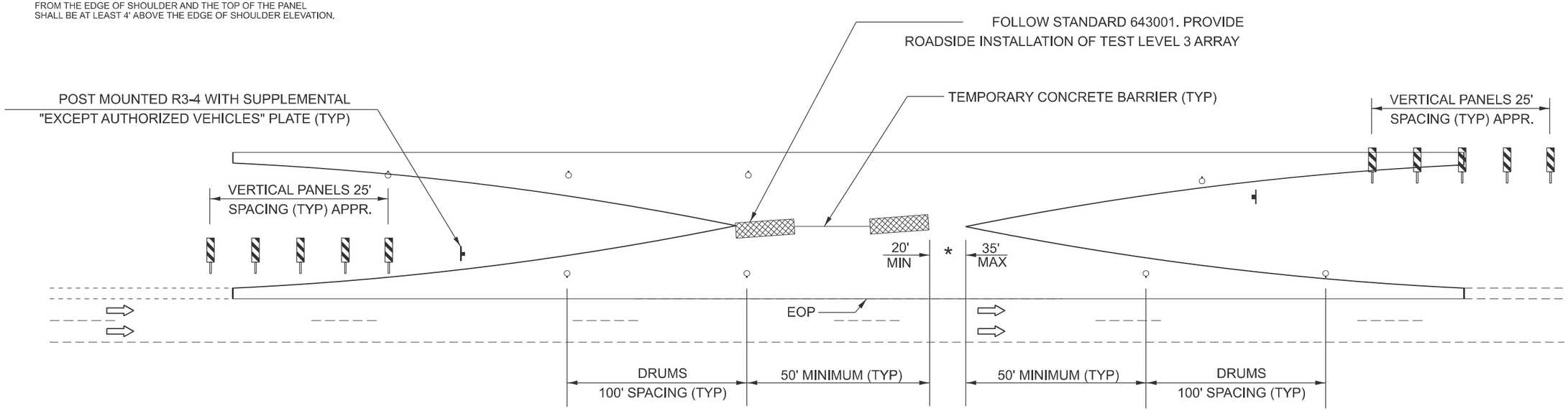

LEGEND

- TRAFFIC FLOW ARROW
- TYPE III BARRICADE
- IMPACT ATTENUATOR
- DRUM W/STEADY BURNING LIGHT
- POST MOUNTED SIGN
- BARRIER WALL MARKER
- TEMPORARY CONCRETE BARRIER
- VERTICAL SIGN PANEL

* REMOVE GAP FOR FULL CLOSURE

CROSSOVER CLOSURE (MODIFIED)

NOT TO SCALE

MODEL: 66K39 Sheet Border
FILE NAME: c:\workingdir\$datasource.name\dms16334\D366K39-plan-border.dgn

V3 Companies
7325 Janes Avenue
Woodridge, IL 60517
630 724 9200 phone
www.v3co.com

USER NAME =	DESIGNED - KDC	REVISED -	
	DRAWN - DRP	REVISED -	
	CHECKED - JWB	REVISED -	
PLOT DATE = 02/20/2026	DATE - 02/20/2026	REVISED -	

STATE OF ILLINOIS
DEPARTMENT OF TRANSPORTATION

DETAILS
CROSSOVER CLOSURE

SCALE: NONE | SHEET 3 OF 6 SHEETS | STA. | TO STA.

F.A.I. RTE.	SECTION	COUNTY	TOTAL SHEETS	SHEET NO.
57	(27-38B) BR-1	FORD	185	143

CONTRACT NO. 66K39

ILLINOIS | FED. AID PROJECT

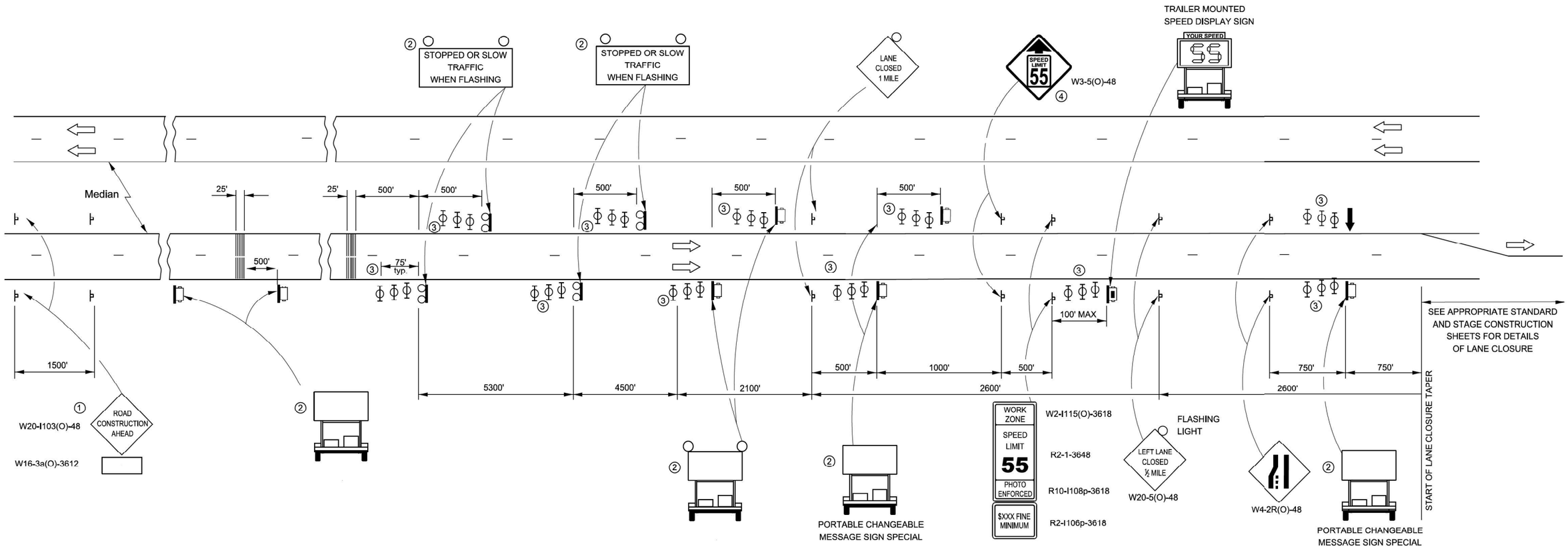

NOTES:

① THE ROAD CONSTRUCTION AHEAD SIGN SHALL BE LOCATED 5 MILES IN ADVANCE OF THE PROJECT LIMITS.

② UNIT TO BE PAID FOR SEPARATELY. TO BE PLACED OUTSIDE OF EXISTING PAVED SHOULDER. ANY REQUIRED EARTHWORK INCLUDED IN THE COST OF THE UNIT.

③ THREE, TYPE II BARRICADES, DRUMS, OR VERTICAL BARRICADES AT 25' CENTERS.

④ THIS SIGN SHALL ONLY BE USED IF THE EXISTING SPEED LIMIT IS GREATHER THAN 65 MPH.

⑤ WHEN SHOWN, PORTABLE CHANGEABLE MESSAGE SIGN SPECIAL SHALL HAVE EQUIVALENT FLASHING BEACONS AS REAL TIME TRAFFIC CONTROL SIGNING. COST INCLUDED IN PORTABLE CHANGEABLE MESSAGE SIGN SPECIAL.

LEGEND:

- ARROW BOARD
- PORTABLE CHANGEABLE MESSAGE SIGN SPECIAL (PCMS)
- SIGN
- REAL-TIME TRAFFIC CONTROL SIGNING
- TYPE II BARRICADE, DRUM, OR VERTICAL BARRICADE WITH MONODIRECTIONAL FLASHING LIGHT.
- SPEED DISPLAY TRAILER
- TEMPORARY RUMBLE STRIPS

DESIGNER NOTE:
USE IN PLACE OF HIGHWAY STANDARD 701400.
REQUIRES SPECIAL PROVISIONS FOR SMART TRAFFIC MONITORING SYTEM AND CONTROL OF WORK - SMART WORK ZONE AND CHANGEABLE MESSAGE SIGN, SPECIAL.

GENERAL NOTE:

THIS STANDARD IS USED WHERE A LANE CLOSURE IS IN PLACE LONGER THAN ONE CONSECUTIVE WEEK OR INCLUDING A WEEKEND OR HOLIDAY AS DESCRIBED IN KEEPING ROADS OPEN TO TRAFFIC.

THE FIRST TWO SIGNS ARE STATIONARY. THE OTHER SIGNS, ARROWBOARDS AND MESSAGE BOARDS SHALL BE MOVED AS NECESSARY TO MAINTAIN THE REQUIRED DISTANCE FROM THE START OF THE LANE CLOSURE TAPER(S).

SEE SPECIAL PROVISIONS FOR SMART TRAFFIC MONITORING SYSTEM, PORTABLE CHANGEABLE MESSAGE SIGN SPECIAL AND CONTROL OF WORK.

THIS DETAIL APPLIES TO APPROACHES TO THE WORK ZONE IN BOTH DIRECTIONS.

WHEN THE RIGHT LANE IS CLOSED, RIGHT LANE CLOSED SIGNS SHALL BE SUBSTITUTED FOR LEFT LANE CLOSED SIGNS.

WHEN EXISTING SIGNS, POLES, AND OTHER ITEMS CONFLICT WITH LOCATING THE EQUIPMENT SHOWN, THE CONTRACTOR SHALL COORDINATE WITH THE ENGINEER TO DECONFLICT EQUIPMENT PLACEMENT.

ALL ORANGE SIGN SHEETING SHALL BE FLOURESCENT ORANGE MATERIAL.

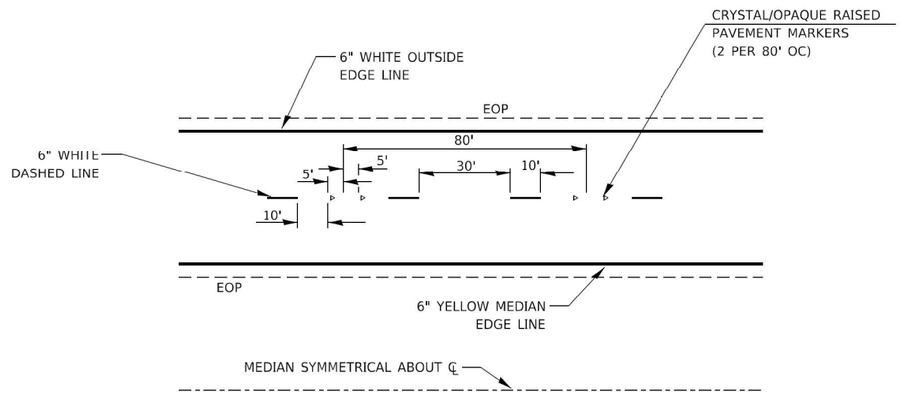

TYPICAL PAVEMENT MARKINGS

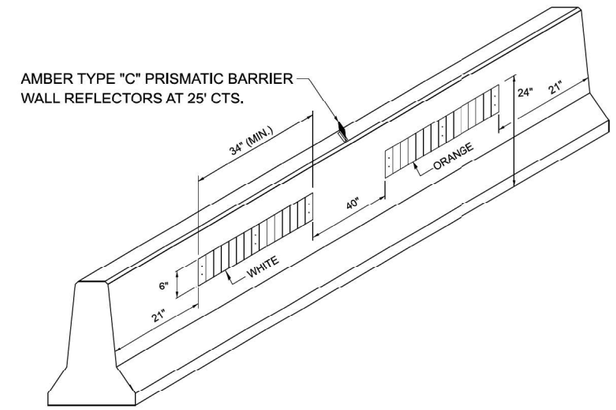

LINEAR DELINEATOR PANELS FOR TEMPORARY CONCRETE BARRIER

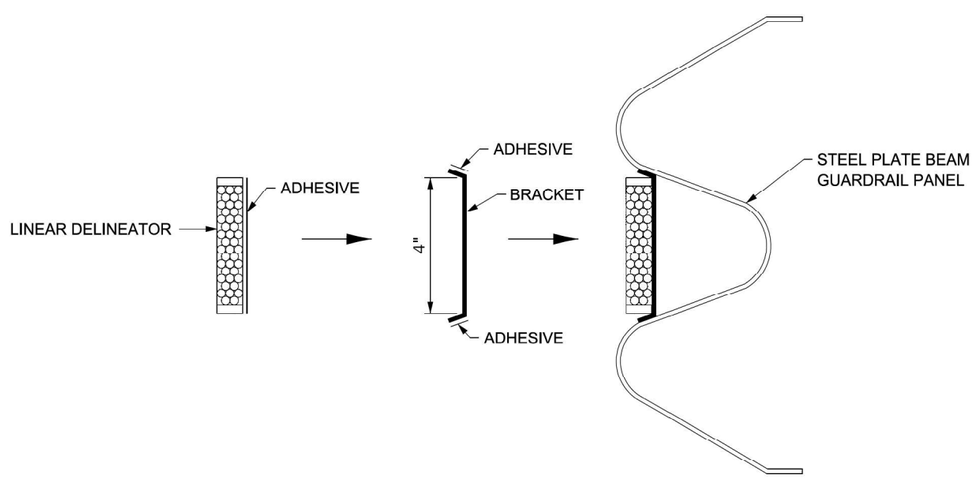

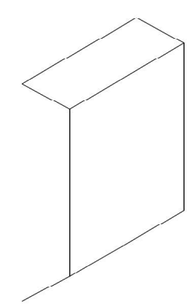

4" BRACKET

LINEAR DELINEATOR APPLICATION TO STANDARD GALVANIZED GUARDRAIL

LINEATOR DELINEATOR SHALL BE APLLIED ACCORDING TO THE MANUFACTURER'S RECOMMENDATIONS

MODEL: 66K39 Sheet Border
FILE NAME: c:\workingdir$\datasource.name\dms16334\D366K39-plan-border.dgn

V3 Companies
7325 Janes Avenue
Woodridge, IL 60517
630 724 9200 phone
www.v3co.com

USER NAME =	DESIGNED - KDC	REVISED -	
	DRAWN - DRP	REVISED -	
	CHECKED - JWB	REVISED -	
PLOT DATE = 02/20/2026	DATE - 02/20/2026	REVISED -	

STATE OF ILLINOIS
DEPARTMENT OF TRANSPORTATION

DETAILS
MARKINGS AND LINEAR DELINEATOR

SCALE: NONE | SHEET 5 OF 6 SHEETS | STA. TO STA.

F.A.I. RTE.	SECTION	COUNTY	TOTAL SHEETS	SHEET NO.
57	(27-38B) BR-1	FORD	185	145

CONTRACT NO. 66K39

ILLINOIS | FED. AID PROJECT

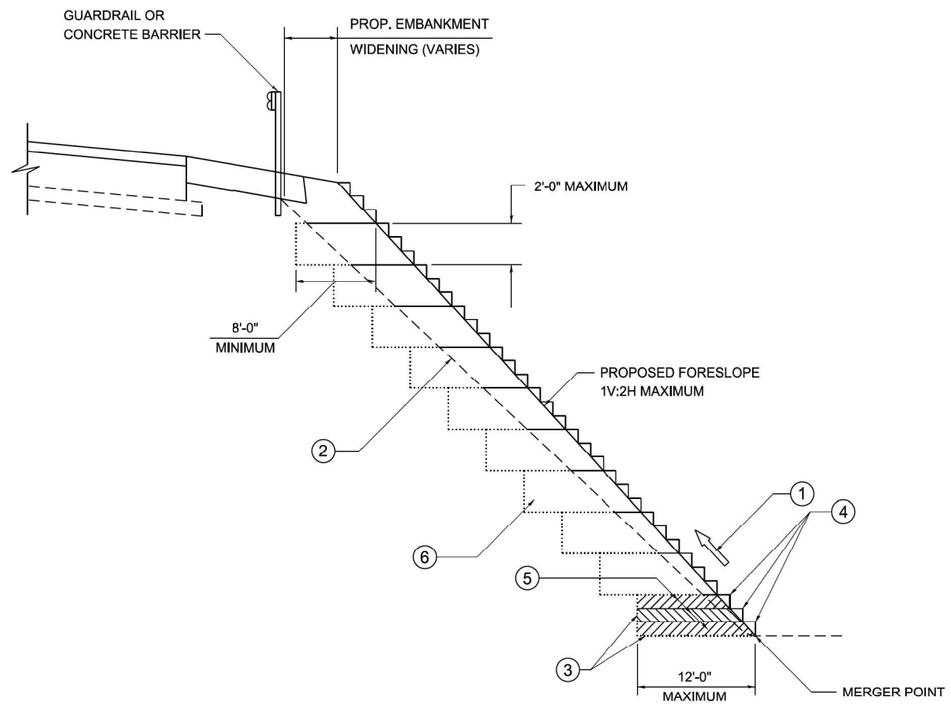

TYPICAL BENCHING DETAIL FOR EMBANKMENT

NOTES:

1. CONSTRUCT SUCCEEDING BENCH CUTS AND EMBANKMENT PLACEMENT AND COMPACTION FROM BOTTOM TO TOP IN STAIRSTEP FASHION.
2. EXISTING FORESLOPE PREPARED IN ACCORDANCE WITH ARTICLE 205.03 OF THE STANDARD SPECIFICATIONS.
3. BENCH CUT EXISTING SLOPE TYPICAL FOR EACH STEP.
4. TRIM TO FINAL SLOPE.
5. EQUAL 8-INCH LIFTS OF EMBANKMENT COMPACTED IN ACCORDANCE WITH ARTICLE 205.05 OF THE STANDARD SPECIFICATIONS.
6. EXCAVATION OF BENCH CUTS WITHIN EXISTING EMBANKMENT WILL BE INCLUDED IN THE COST OF FURNISHED EXCAVATION.
7. SLOPES SHALL BE BENCHED ACCORDING TO THIS DETAIL WHEN THE SLOPE IS STEEPER THAN 1V:4H AND THE HEIGHT IS GREATER THAN 5'.

ALL DIMENSIONS ARE IN INCHES UNLESS OTHERWISE SHOWN.

MODEL: 66K39 Sheet Border
FILE NAME: c:\workingdir$\datasource,name\dms16334\D366K39-plan-border.dgn

V3 Companies
7325 Janes Avenue
Woodridge, IL 60517
630 724 9200 phone
www.v3co.com

USER NAME =	DESIGNED - KDC	REVISED -	
	DRAWN - DRP	REVISED -	
	CHECKED - JWB	REVISED -	
PLOT DATE = 02/20/2026	DATE - 02/20/2026	REVISED -	

STATE OF ILLINOIS
DEPARTMENT OF TRANSPORTATION

DETAILS
BENCHING DETAIL FOR EMBANKMENT

SCALE: NONE | SHEET 6 OF 6 SHEETS | STA. TO STA.

F.A.I. RTE.	SECTION	COUNTY	TOTAL SHEETS	SHEET NO.
57	(27-38B) BR-1	FORD	185	146

CONTRACT NO. 66K39

ILLINOIS | FED. AID PROJECT

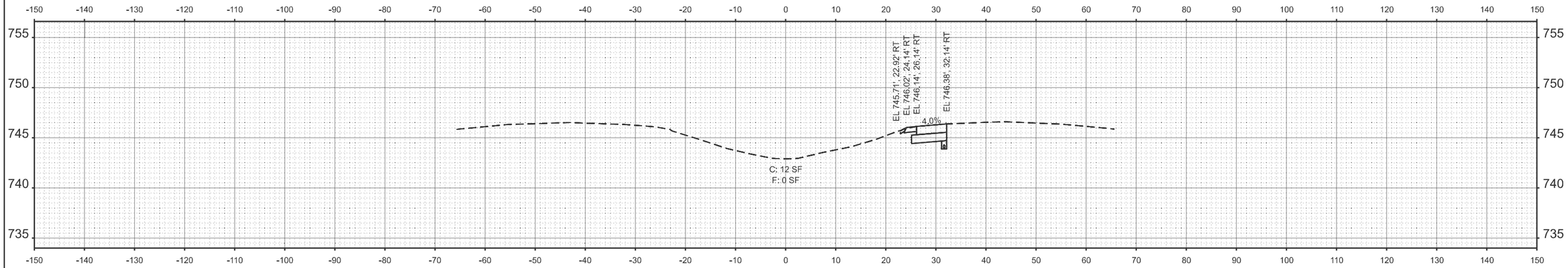

STA 1709+50.00

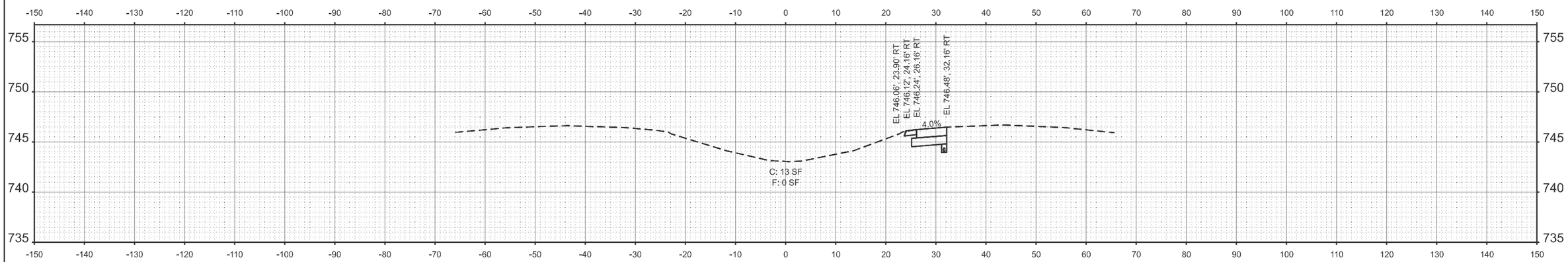

STA 1709+00.00

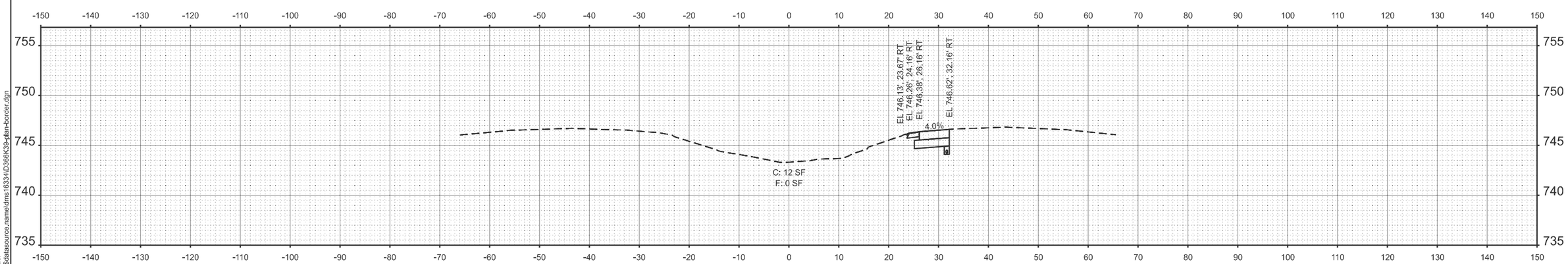

STA 1708+50.00

MODEL: 66K39 Sheet Border
FILE NAME: c:\workingdir$\datasource.name\dms16334\D366K39-plan-border.dgn

V3 Companies
7325 Janes Avenue
Woodridge, IL 60517
630 724 9200 phone
www.v3co.com

USER NAME =	DESIGNED - KDC	REVISED -	
	DRAWN - DRP	REVISED -	
	CHECKED - JWB	REVISED -	
PLOT DATE = 02/20/2026	DATE - 02/20/2026	REVISED -	

STATE OF ILLINOIS
DEPARTMENT OF TRANSPORTATION

CROSS SECTIONS
I-57

SCALE: 1"=10' | SHEET OF 39 SHEETS | STA. TO STA.

F.A.I. RTE.	SECTION	COUNTY	TOTAL SHEETS	SHEET NO.
57	(27-38B) BR-1	FORD	185	147
		CONTRACT NO. 66K39		
		ILLINOIS FED. AID PROJECT		

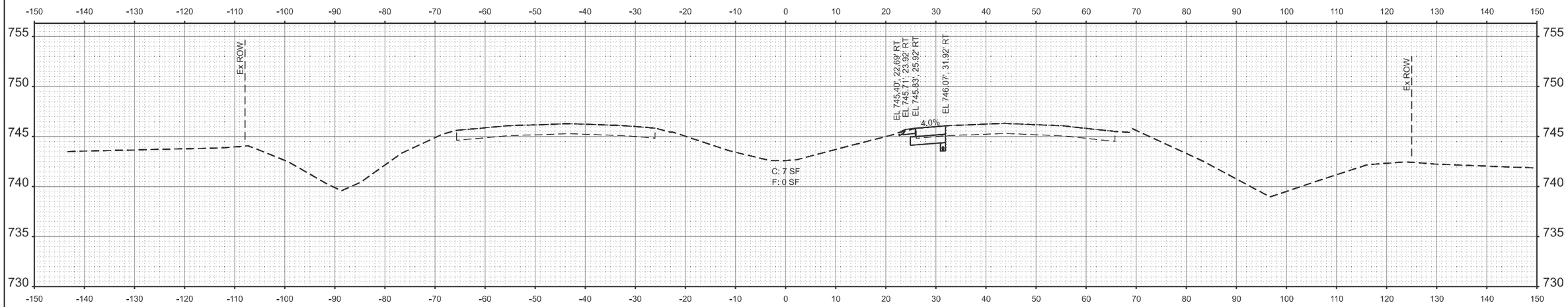

STA 1710+50.00

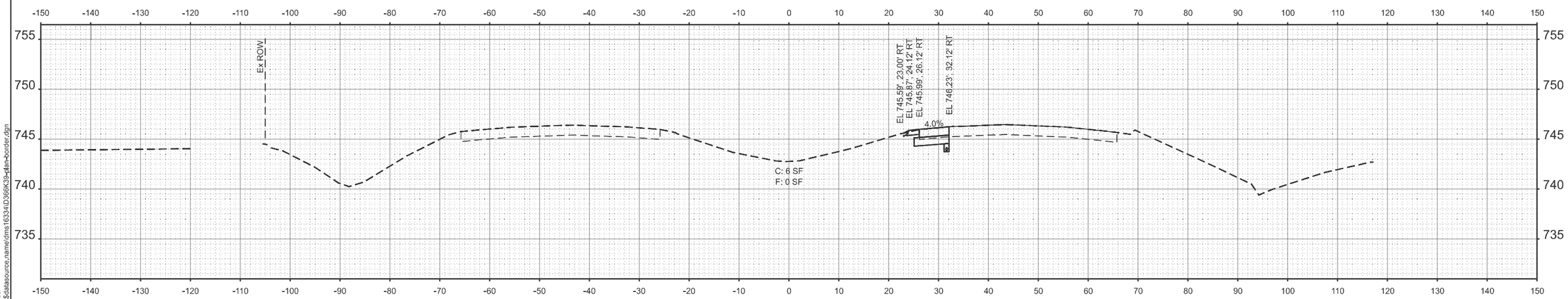

STA 1710+00.00

MODEL: 66K39 Sheet Border
FILE NAME: c:\workingdir\$datasource.name\dms16334\D366K39-plan-border.dgn

V3 Companies
7325 Janes Avenue
Woodridge, IL 60517
630 724 9200 phone
www.v3co.com

USER NAME =	DESIGNED - KDC	REVISED -	
	DRAWN - DRP	REVISED -	
	CHECKED - JWB	REVISED -	
PLOT DATE = 02/20/2026	DATE - 02/20/2026	REVISED -	

STATE OF ILLINOIS
DEPARTMENT OF TRANSPORTATION

CROSS SECTIONS
I-57

SCALE: 1"=10' | SHEET 2 OF 39 SHEETS | STA. | TO STA.

F.A.I. RTE.	SECTION	COUNTY	TOTAL SHEETS	SHEET NO.
57	(27-38B) BR-1	FORD	185	148

CONTRACT NO. 66K39

ILLINOIS | FED. AID PROJECT

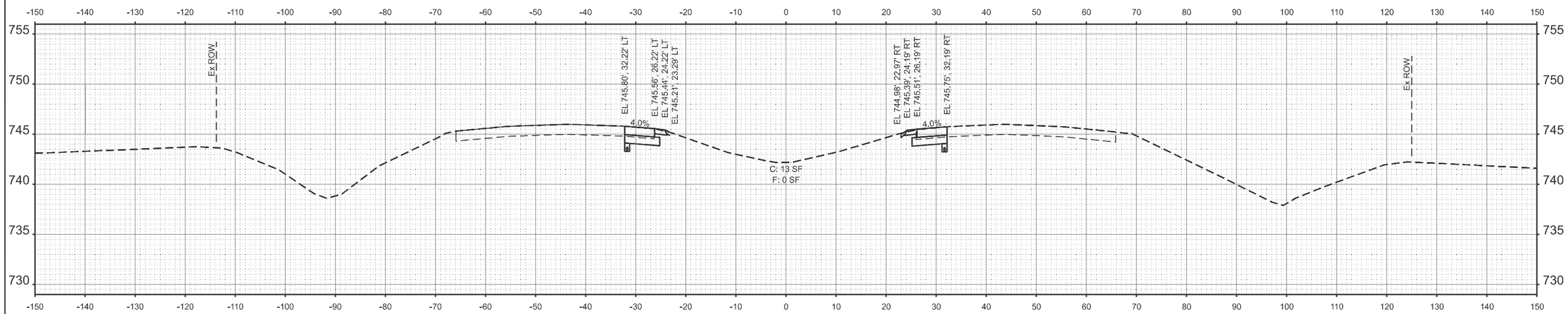

STA 1711+50.00

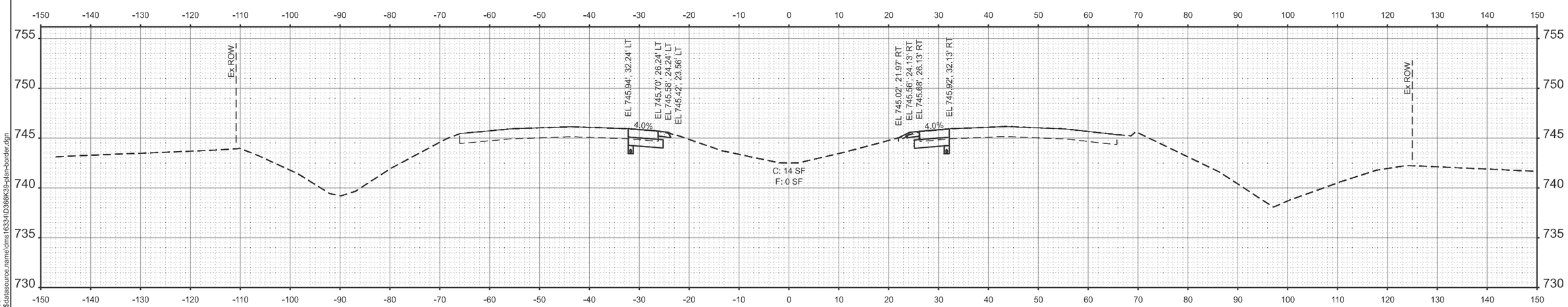

STA 1711+00.00

MODEL: 66K39 Sheet Border
FILE NAME: c:\workingdir$\datasource.name\dms16334\D366K39-plan-border.dgn

V3 Companies
7325 Janes Avenue
Woodridge, IL 60517
630 724 9200 phone
www.v3co.com

USER NAME =	DESIGNED - KDC	REVISED -	
	DRAWN - DRP	REVISED -	
	CHECKED - JWB	REVISED -	
PLOT DATE = 02/20/2026	DATE - 02/20/2026	REVISED -	

STATE OF ILLINOIS
DEPARTMENT OF TRANSPORTATION

CROSS SECTIONS
I-57

SCALE: 1"=10' | SHEET 3 OF 39 SHEETS | STA. | TO STA.

F.A.I. RTE.	SECTION	COUNTY	TOTAL SHEETS	SHEET NO.
57	(27-38B) BR-1	FORD	185	149

CONTRACT NO. 66K39

ILLINOIS | FED. AID PROJECT

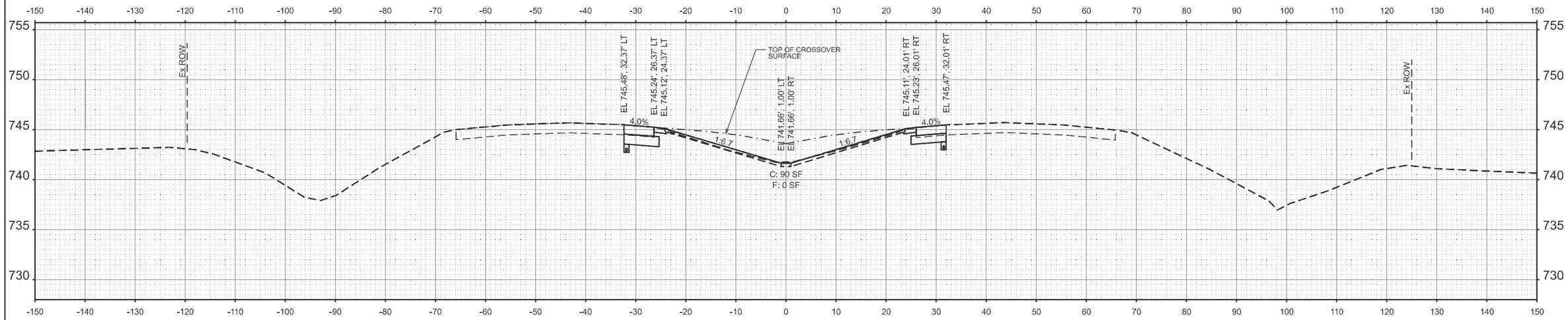

STA 1712+50.00

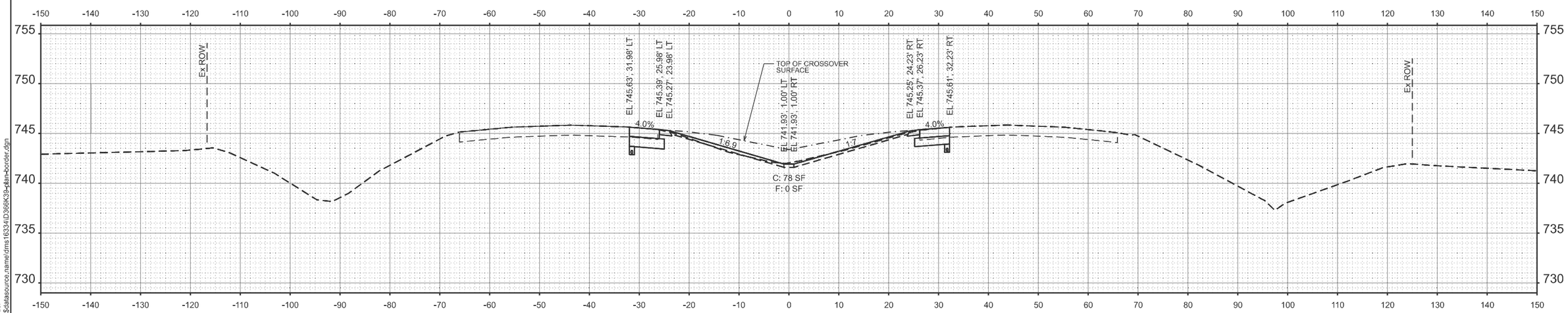

STA 1712+00.00

MODEL: 66K39 Sheet Border
FILE NAME: c:\workingdir\$datasource.name\dms16334\D366K39-plan-border.dgn

V3 Companies
7325 Janes Avenue
Woodridge, IL 60517
630 724 9200 phone
www.v3co.com

USER NAME =	DESIGNED - KDC	REVISED -	
	DRAWN - DRP	REVISED -	
	CHECKED - JWB	REVISED -	
PLOT DATE = 02/20/2026	DATE - 02/20/2026	REVISED -	

STATE OF ILLINOIS
DEPARTMENT OF TRANSPORTATION

CROSS SECTIONS
I-57

SCALE: 1"=10' | SHEET 4 OF 39 SHEETS | STA. | TO STA.

F.A.I. RTE.	SECTION	COUNTY	TOTAL SHEETS	SHEET NO.
57	(27-38B) BR-1	FORD	185	150
		CONTRACT NO. 66K39		
		ILLINOIS FED. AID PROJECT		

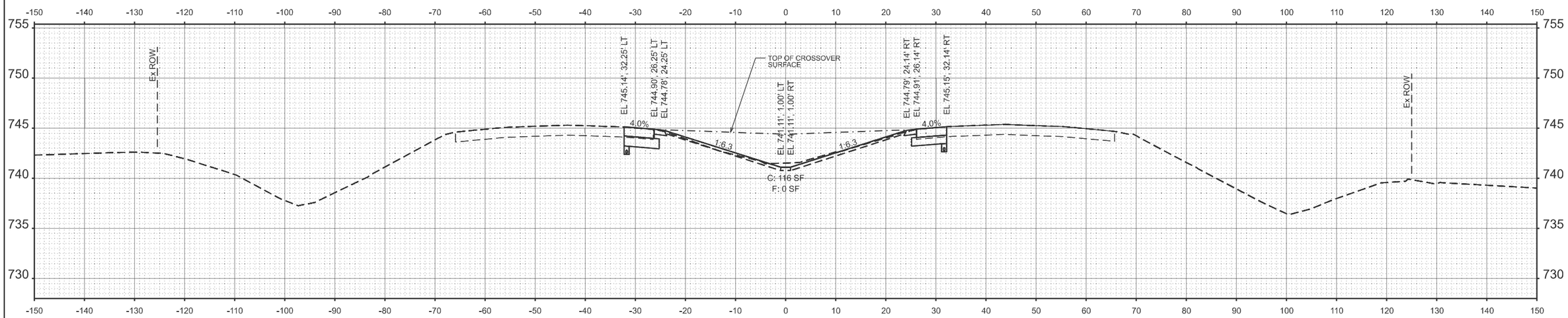

STA 1713+50.00

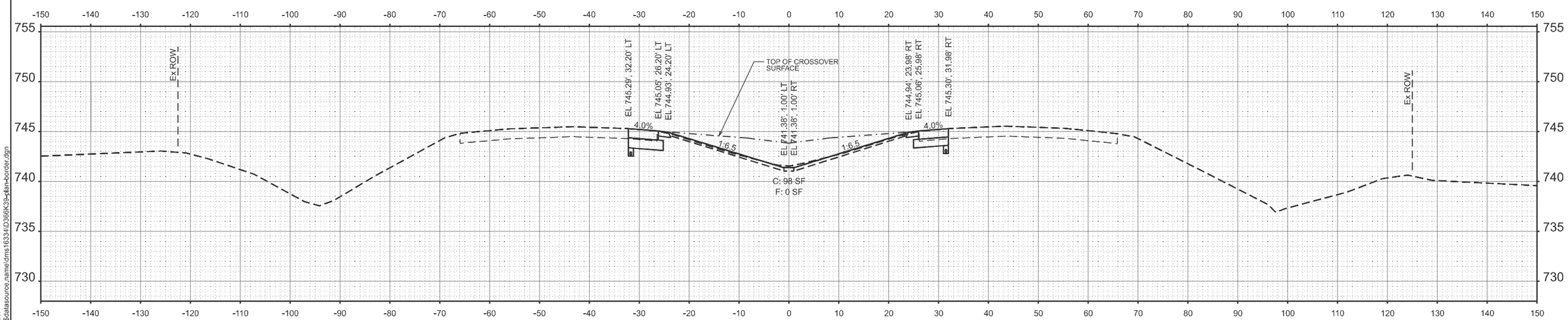

STA 1713+00.00

MODEL: 66K39 Sheet Border
FILE NAME: c:\workingdir\$datasource.name\dms16334\D366K39-plan-border.dgn

V3 Companies
7325 Janes Avenue
Woodridge, IL 60517
630 724 9200 phone
www.v3co.com

USER NAME =	DESIGNED - KDC	REVISED -	
	DRAWN - DRP	REVISED -	
	CHECKED - JWB	REVISED -	
PLOT DATE = 02/20/2026	DATE - 02/20/2026	REVISED -	

STATE OF ILLINOIS
DEPARTMENT OF TRANSPORTATION

CROSS SECTIONS
I-57

SCALE: 1"=10' | SHEET 5 OF 39 SHEETS | STA. | TO STA.

F.A.I. RTE.	SECTION	COUNTY	TOTAL SHEETS	SHEET NO.
57	(27-38B) BR-1	FORD	185	151

CONTRACT NO. 66K39

ILLINOIS | FED. AID PROJECT

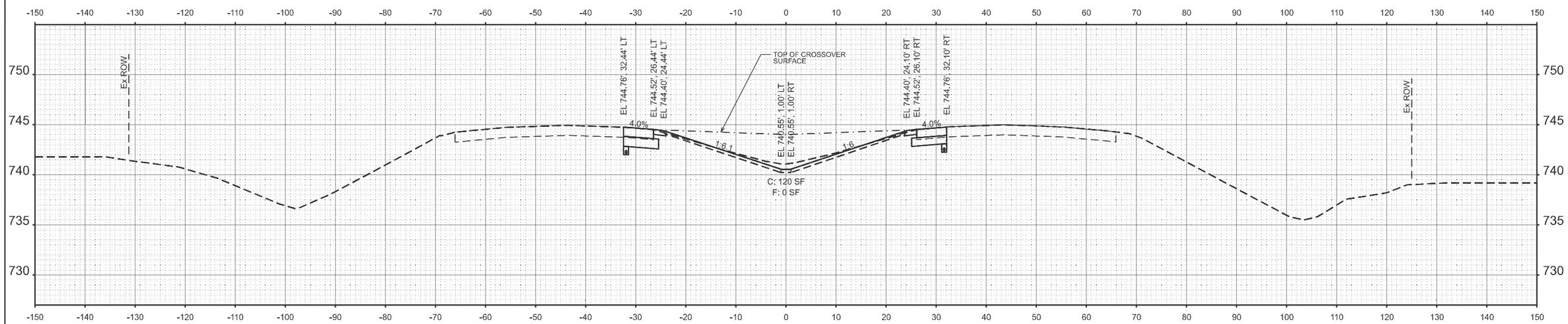

STA 1714+50.00

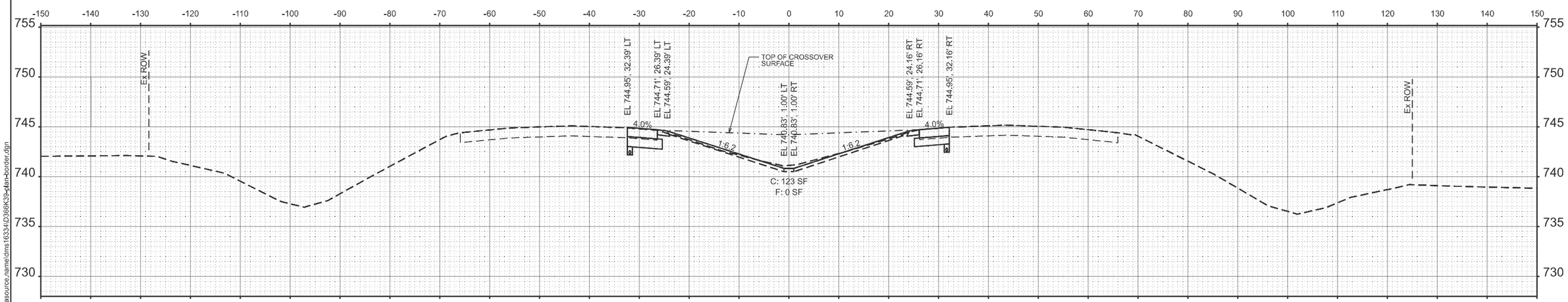

STA 1714+00.00

MODEL: 66K39 Sheet Border
FILE NAME: c:\workingdir$\datasource.name\dms16334\D366K39-plan-border.dgn

V3 Companies
7325 Janes Avenue
Woodridge, IL 60517
630 724 9200 phone
www.v3co.com

USER NAME =	DESIGNED - KDC	REVISED -	
	DRAWN - DRP	REVISED -	
	CHECKED - JWB	REVISED -	
PLOT DATE = 02/20/2026	DATE - 02/20/2026	REVISED -	

STATE OF ILLINOIS
DEPARTMENT OF TRANSPORTATION

CROSS SECTIONS
I-57

SCALE: 1"=10' | SHEET 6 OF 39 SHEETS | STA. | TO STA.

F.A.I. RTE.	SECTION	COUNTY	TOTAL SHEETS	SHEET NO.
57	(27-38B) BR-1	FORD	185	152
		CONTRACT NO. 66K39		
	ILLINOIS	FED. AID PROJECT		

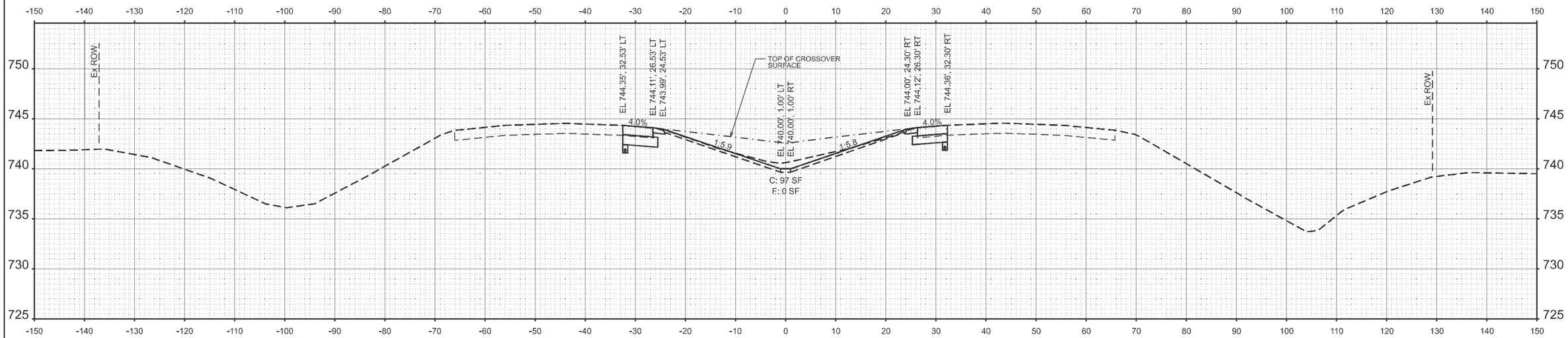

STA 1715+50.00

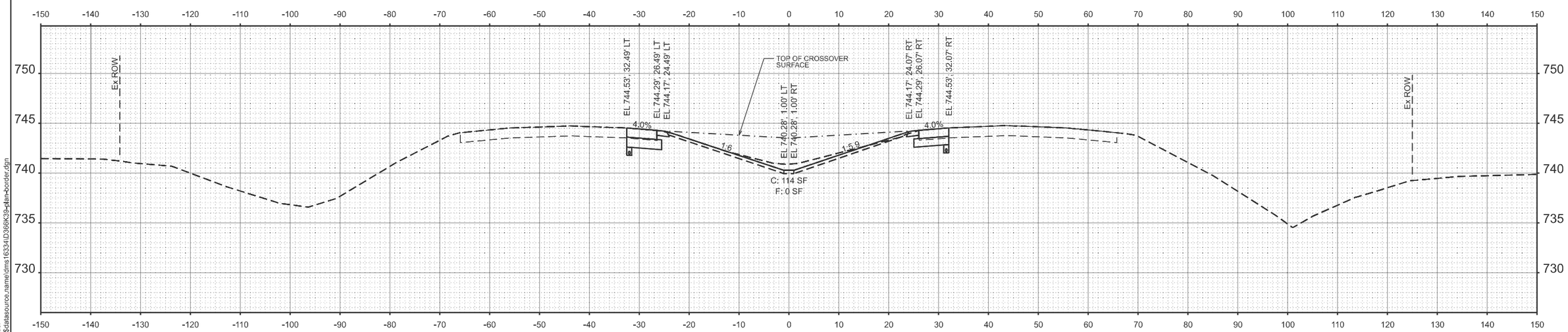

STA 1715+00.00

MODEL: 66K39 Sheet Border
FILE NAME: c:\workingdir$\datasource.name\dms16334\D366K39-plan-border.dgn

V3 Companies
7325 Janes Avenue
Woodridge, IL 60517
630 724 9200 phone
www.v3co.com

USER NAME =	DESIGNED - KDC	REVISED -	
	DRAWN - DRP	REVISED -	
	CHECKED - JWB	REVISED -	
PLOT DATE = 02/20/2026	DATE - 02/20/2026	REVISED -	

STATE OF ILLINOIS
DEPARTMENT OF TRANSPORTATION

CROSS SECTIONS
I-57

SCALE: 1"=10' | SHEET 7 OF 39 SHEETS | STA. | TO STA.

F.A.I. RTE.	SECTION	COUNTY	TOTAL SHEETS	SHEET NO.
57	(27-38B) BR-1	FORD	185	153
		CONTRACT NO. 66K39		
	ILLINOIS	FED. AID PROJECT		

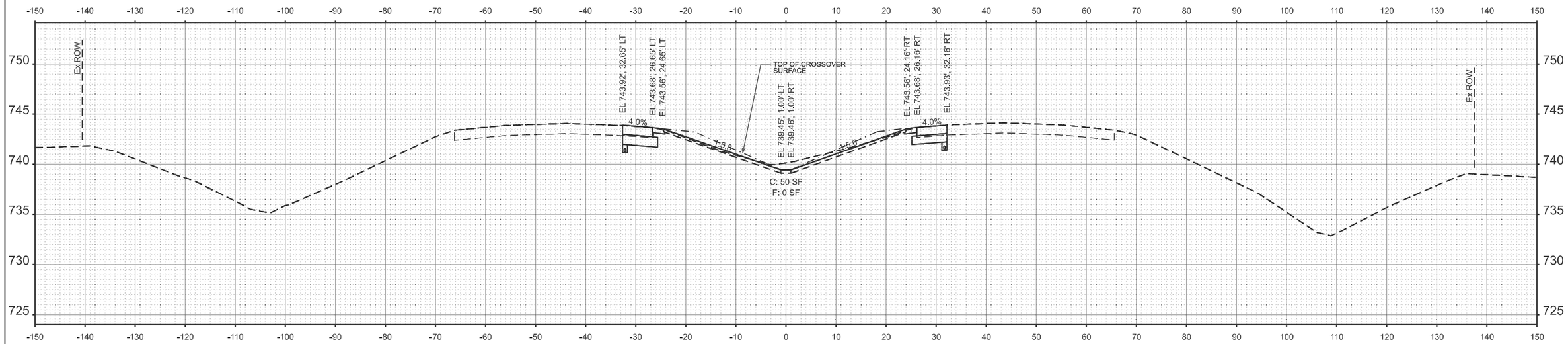

STA 1716+50.00

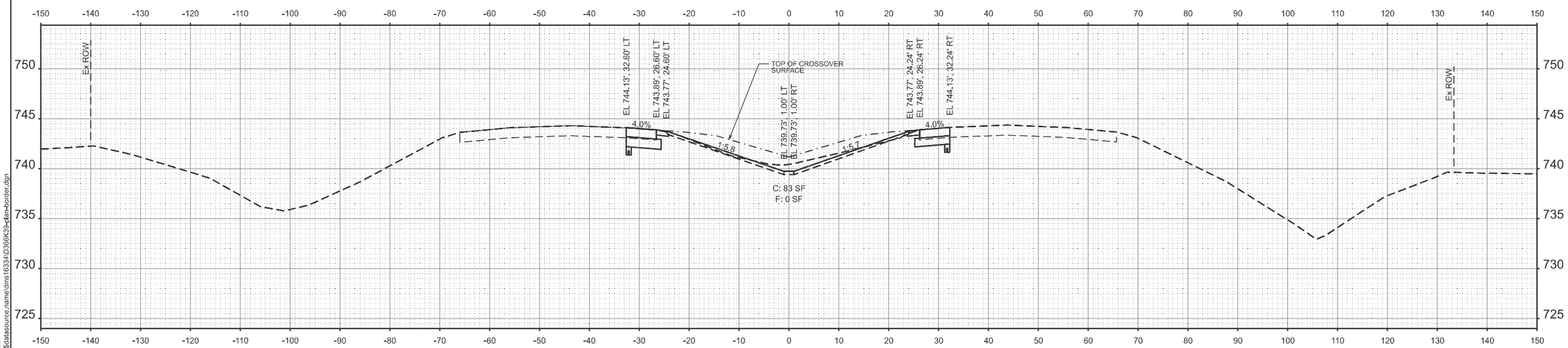

STA 1716+00.00

MODEL: 66K39 Sheet Border
FILE NAME: c:\workingdir\$datasource.name\dms16334\D366K39-plan-border.dgn

V3 Companies
7325 Janes Avenue
Woodridge, IL 60517
630 724 9200 phone
www.v3co.com

USER NAME =	DESIGNED - KDC	REVISED -	
	DRAWN - DRP	REVISED -	
	CHECKED - JWB	REVISED -	
PLOT DATE = 02/20/2026	DATE - 02/20/2026	REVISED -	

STATE OF ILLINOIS
DEPARTMENT OF TRANSPORTATION

CROSS SECTIONS
I-57

SCALE: 1"=10' | SHEET 8 OF 39 SHEETS | STA. | TO STA.

F.A.I. RTE.	SECTION	COUNTY	TOTAL SHEETS	SHEET NO.
57	(27-38B) BR-1	FORD	185	154

CONTRACT NO. 66K39

ILLINOIS | FED. AID PROJECT

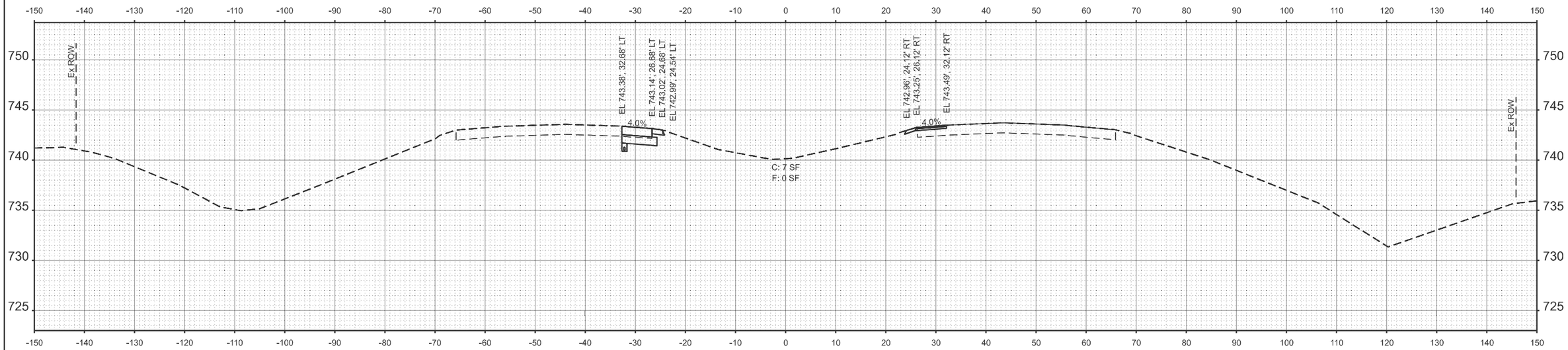

STA 1717+50.00

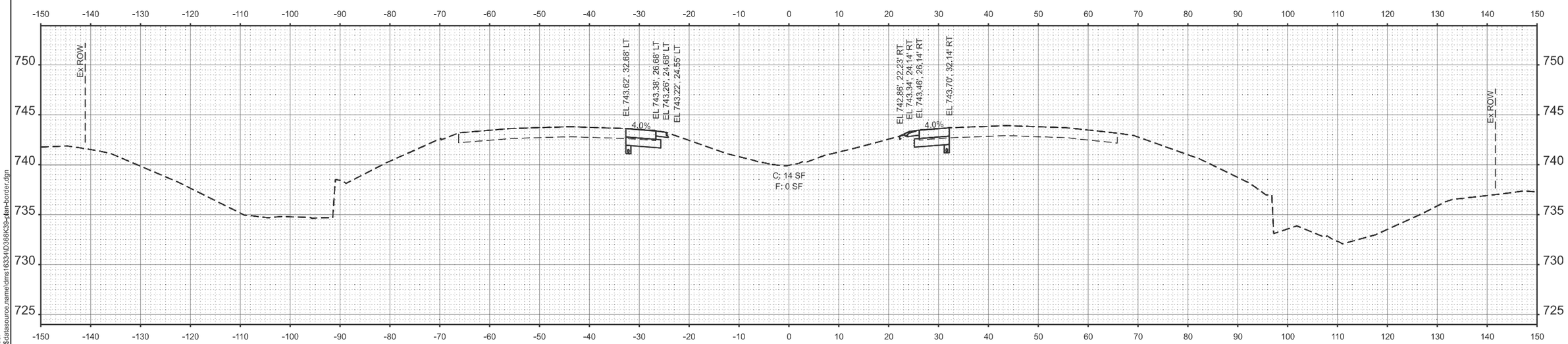

STA 1717+00.00

MODEL: 66K39 Sheet Border
FILE NAME: c:\workingdir\$datasource.name\dms16334\D366K39-plan-border.dgn

V3 Companies
7325 Janes Avenue
Woodridge, IL 60517
630 724 9200 phone
www.v3co.com

USER NAME =	DESIGNED - KDC	REVISED -	
	DRAWN - DRP	REVISED -	
	CHECKED - JWB	REVISED -	
PLOT DATE = 02/20/2026	DATE - 02/20/2026	REVISED -	

STATE OF ILLINOIS
DEPARTMENT OF TRANSPORTATION

CROSS SECTIONS
I-57

SCALE: 1"=10' | SHEET 9 OF 39 SHEETS | STA. | TO STA.

F.A.I. RTE.	SECTION	COUNTY	TOTAL SHEETS	SHEET NO.
57	(27-38B) BR-1	FORD	185	155

CONTRACT NO. 66K39

ILLINOIS | FED. AID PROJECT

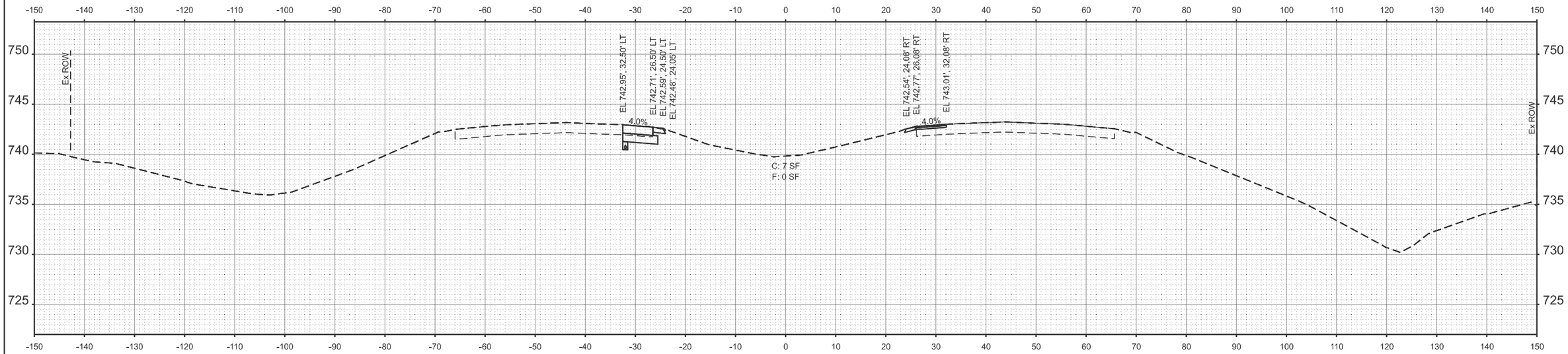

STA 1718+50.00

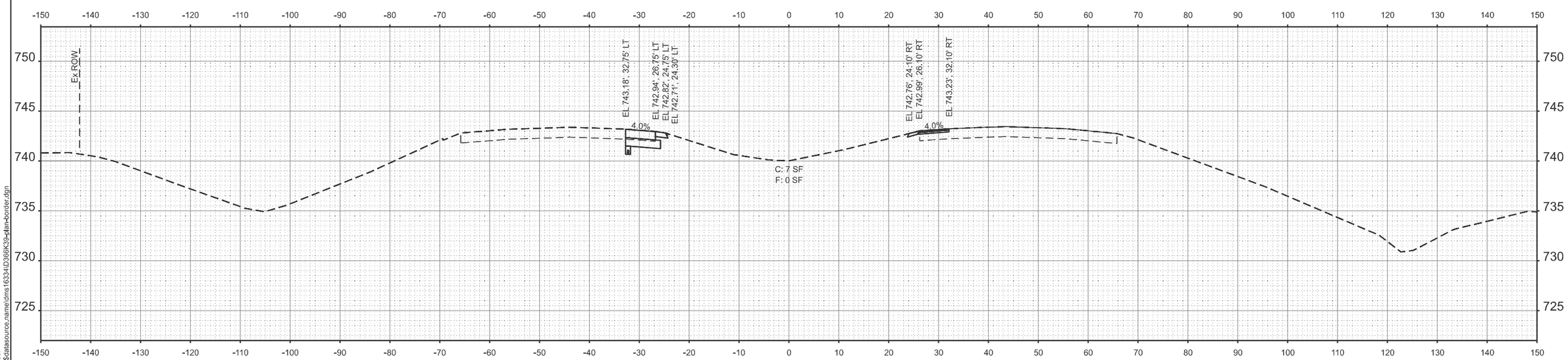

STA 1718+00.00

MODEL: 66K39 Sheet Border
FILE NAME: c:\workingdir\$datasource.name\dms16334\D366K39-plan-border.dgn

V3 Companies
7325 Janes Avenue
Woodridge, IL 60517
630 724 9200 phone
www.v3co.com

USER NAME =	DESIGNED - KDC	REVISED -	
	DRAWN - DRP	REVISED -	
	CHECKED - JWB	REVISED -	
PLOT DATE = 02/20/2026	DATE - 02/20/2026	REVISED -	

STATE OF ILLINOIS
DEPARTMENT OF TRANSPORTATION

CROSS SECTIONS
I-57

SCALE: 1"=10' | SHEET 10 OF 39 SHEETS | STA. | TO STA.

F.A.I. RTE.	SECTION	COUNTY	TOTAL SHEETS	SHEET NO.
57	(27-38B) BR-1	FORD	185	156

CONTRACT NO. 66K39

ILLINOIS | FED. AID PROJECT

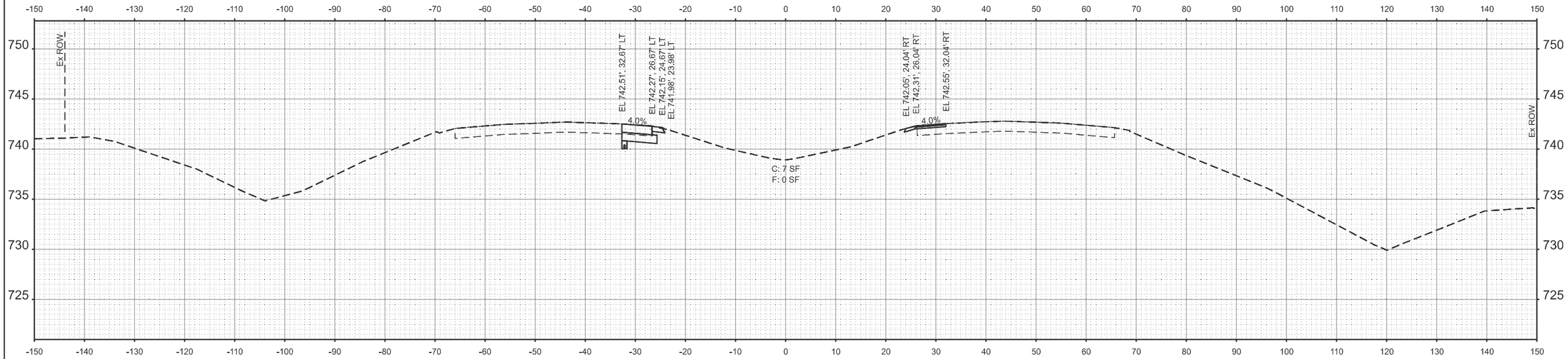

STA 1719+50.00

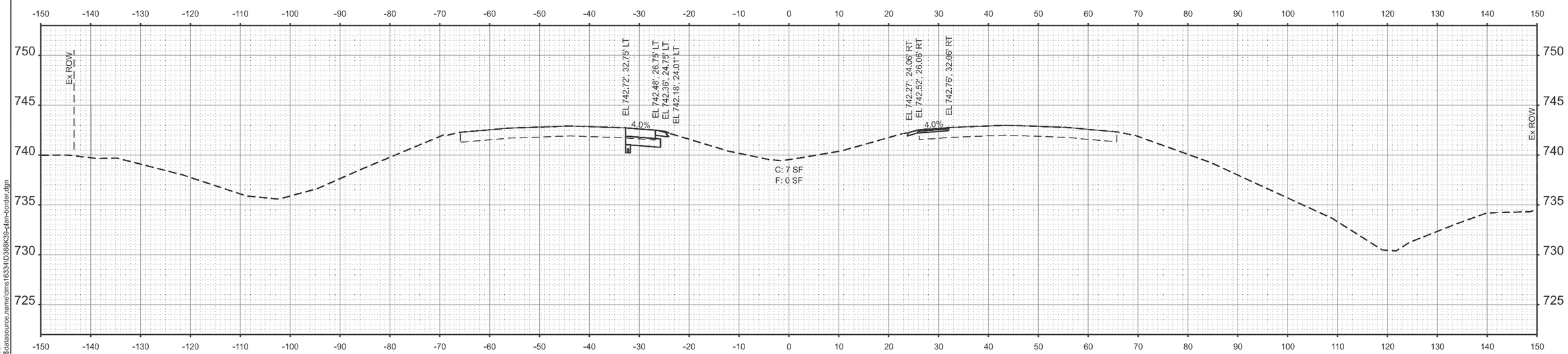

STA 1719+00.00

MODEL: 66K39 Sheet Border
FILE NAME: c:\workingdir$\datasource.name\dms16334\D366K39-plan-border.dgn

V3 Companies
7325 Janes Avenue
Woodridge, IL 60517
630 724 9200 phone
www.v3co.com

USER NAME =	DESIGNED - KDC	REVISED -	
	DRAWN - DRP	REVISED -	
	CHECKED - JWB	REVISED -	
PLOT DATE = 02/20/2026	DATE - 02/20/2026	REVISED -	

STATE OF ILLINOIS
DEPARTMENT OF TRANSPORTATION

CROSS SECTIONS
I-57

SCALE: 1"=10' | SHEET 11 OF 39 SHEETS | STA. | TO STA.

F.A.I. RTE.	SECTION	COUNTY	TOTAL SHEETS	SHEET NO.
57	(27-38B) BR-1	FORD	185	157

CONTRACT NO. 66K39

ILLINOIS | FED. AID PROJECT

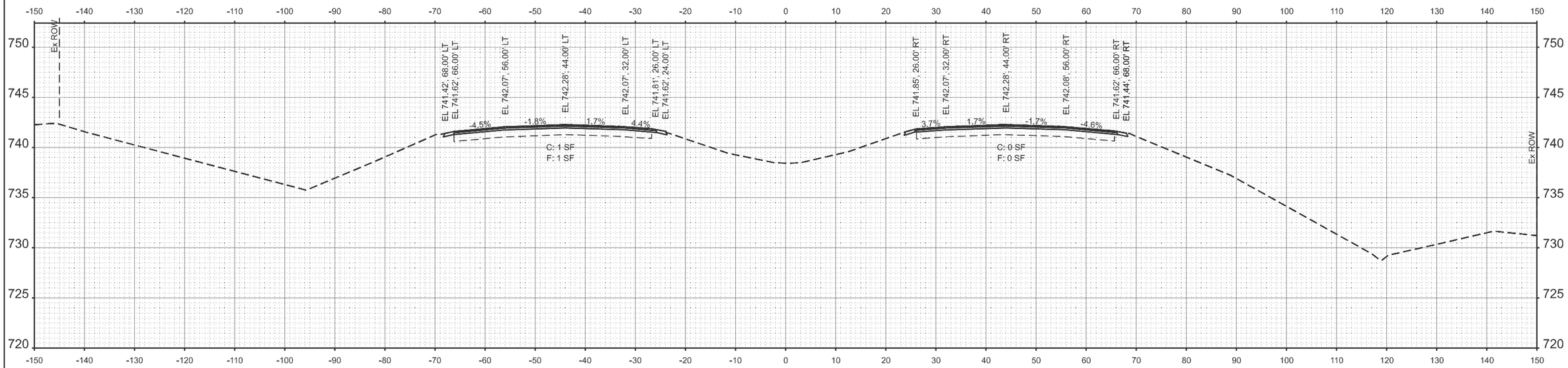

STA 1720+50.00

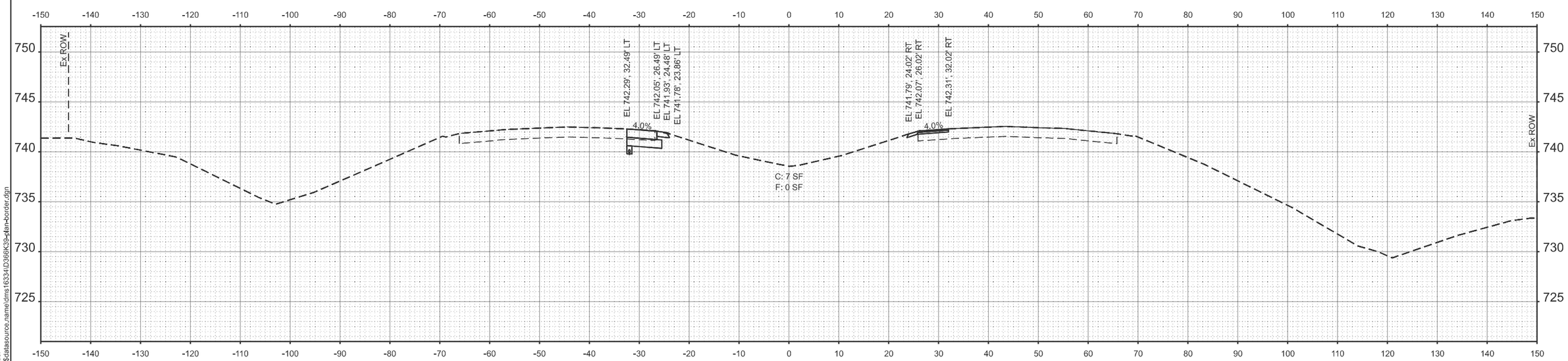

STA 1720+00.00

MODEL: 66K39 Sheet Border
FILE NAME: c:\workingdir$\datasource.name\dms16334\D366K39-plan-border.dgn

V3 Companies
7325 Janes Avenue
Woodridge, IL 60517
630 724 9200 phone
www.v3co.com

USER NAME =	DESIGNED - KDC	REVISED -	
	DRAWN - DRP	REVISED -	
	CHECKED - JWB	REVISED -	
PLOT DATE = 02/20/2026	DATE - 02/20/2026	REVISED -	

STATE OF ILLINOIS
DEPARTMENT OF TRANSPORTATION

CROSS SECTIONS
I-57

SCALE: 1"=10' | SHEET 12 OF 39 SHEETS | STA. | TO STA.

F.A.I. RTE.	SECTION	COUNTY	TOTAL SHEETS	SHEET NO.
57	(27-38B) BR-1	FORD	185	158

CONTRACT NO. 66K39

ILLINOIS | FED. AID PROJECT

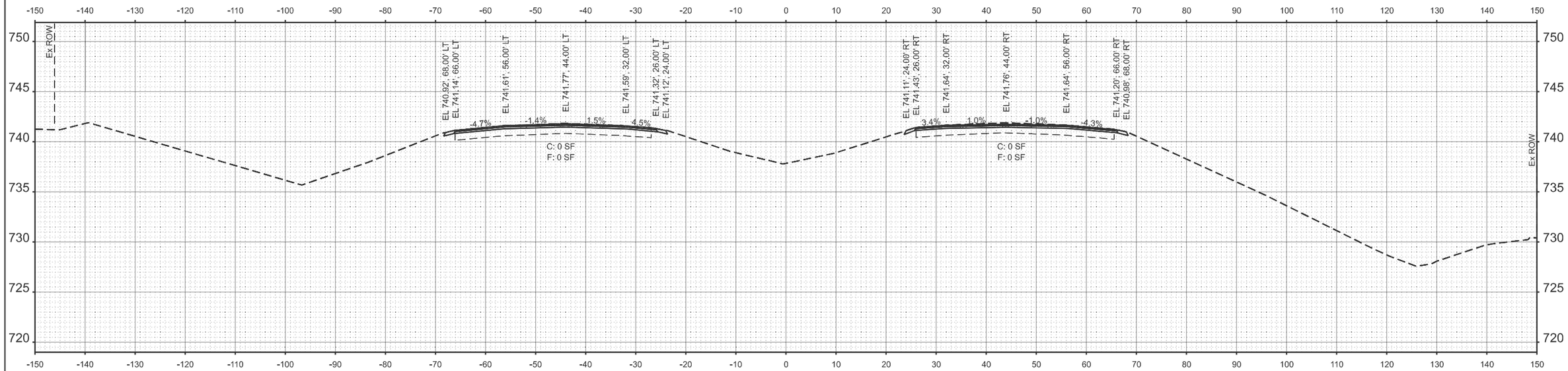

STA 1721+50.00

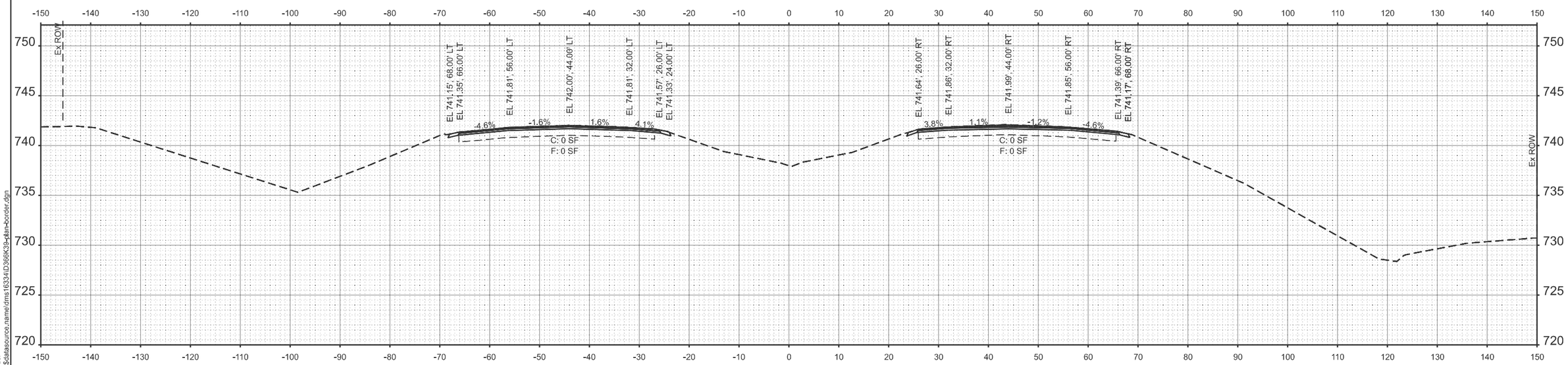

STA 1721+00.00

MODEL: 66K39 Sheet Border
FILE NAME: c:\workingdir$\datasource.name\dms16334\D366K39-plan-border.dgn

V3 Companies
7325 Janes Avenue
Woodridge, IL 60517
630 724 9200 phone
www.v3co.com

USER NAME =	DESIGNED - KDC	REVISED -	
	DRAWN - DRP	REVISED -	
	CHECKED - JWB	REVISED -	
PLOT DATE = 02/20/2026	DATE - 02/20/2026	REVISED -	

STATE OF ILLINOIS
DEPARTMENT OF TRANSPORTATION

CROSS SECTIONS
I-57

SCALE: 1"=10' | SHEET 13 OF 39 SHEETS | STA. | TO STA.

F.A.I. RTE.	SECTION	COUNTY	TOTAL SHEETS	SHEET NO.
57	(27-38B) BR-1	FORD	185	159

CONTRACT NO. 66K39

ILLINOIS | FED. AID PROJECT

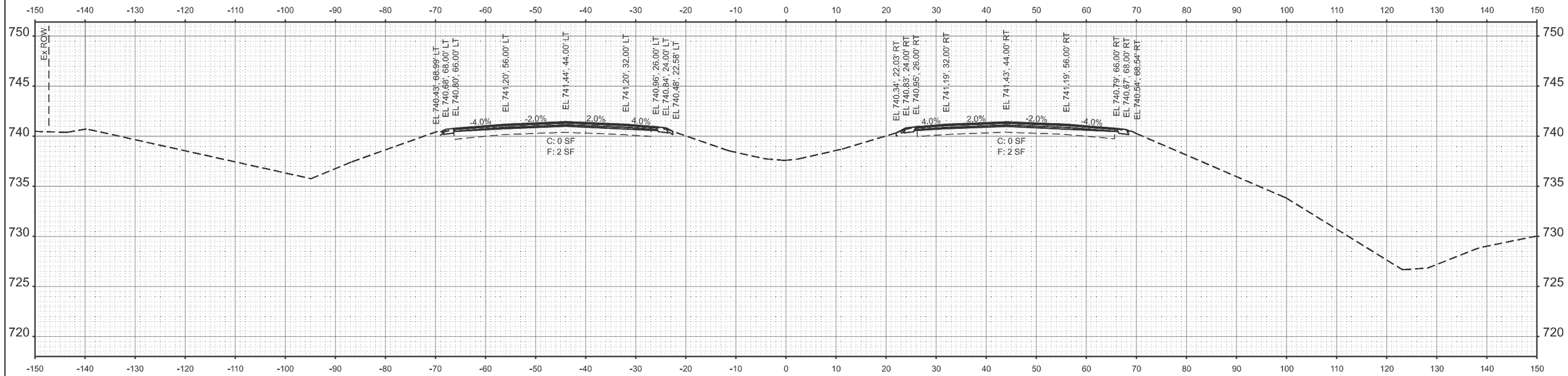

STA 1722+50.00

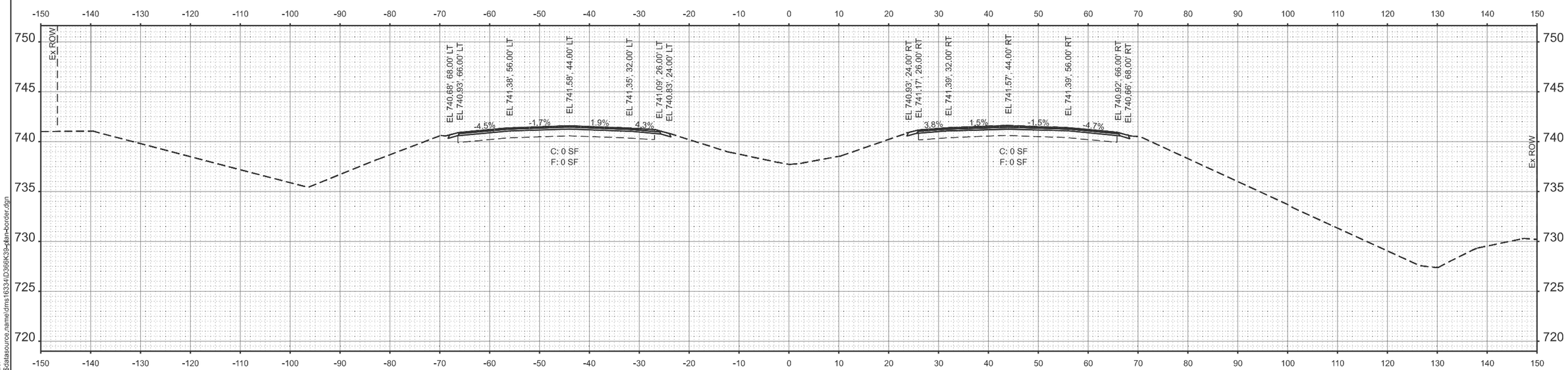

STA 1722+00.00

MODEL: 66K39 Sheet Border
FILE NAME: c:\workingdir\$datasource.name\dms16334\D366K39-plan-border.dgn

V3 Companies
7325 Janes Avenue
Woodridge, IL 60517
630 724 9200 phone
www.v3co.com

USER NAME =	DESIGNED - KDC	REVISED -	
	DRAWN - DRP	REVISED -	
	CHECKED - JWB	REVISED -	
PLOT DATE = 02/20/2026	DATE - 02/20/2026	REVISED -	

STATE OF ILLINOIS
DEPARTMENT OF TRANSPORTATION

CROSS SECTIONS
I-57

SCALE: 1"=10' | SHEET 14 OF 39 SHEETS | STA. | TO STA.

F.A.I. RTE.	SECTION	COUNTY	TOTAL SHEETS	SHEET NO.
57	(27-38B) BR-1	FORD	185	160

CONTRACT NO. 66K39

ILLINOIS | FED. AID PROJECT

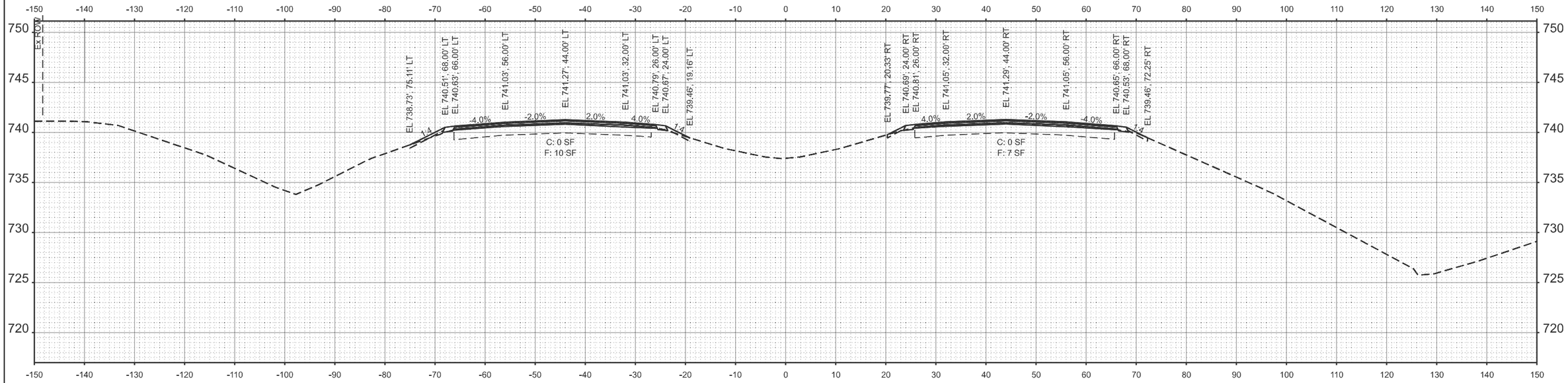

STA 1723+50.00

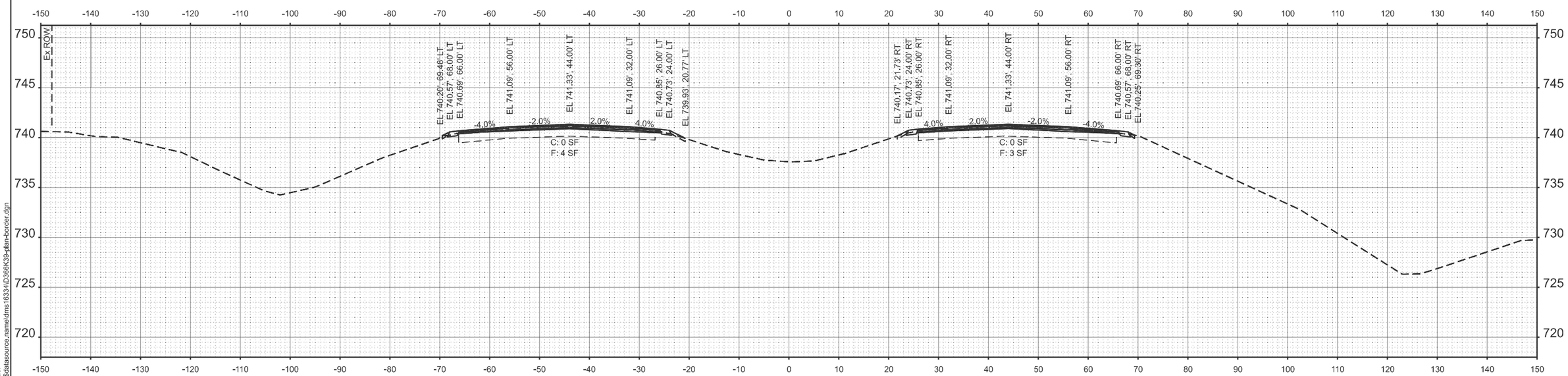

STA 1723+00.00

MODEL: 66K39 Sheet Border
FILE NAME: c:\workingdir\$datasource.name\dms16334\D366K39-plan-border.dgn

V3 Companies
7325 Janes Avenue
Woodridge, IL 60517
630 724 9200 phone
www.v3co.com

USER NAME =	DESIGNED - KDC	REVISED -	
	DRAWN - DRP	REVISED -	
	CHECKED - JWB	REVISED -	
PLOT DATE = 02/20/2026	DATE - 02/20/2026	REVISED -	

STATE OF ILLINOIS
DEPARTMENT OF TRANSPORTATION

CROSS SECTIONS
I-57

SCALE: 1"=10' | SHEET 15 OF 39 SHEETS | STA. | TO STA.

F.A.I. RTE.	SECTION	COUNTY	TOTAL SHEETS	SHEET NO.
57	(27-38B) BR-1	FORD	185	161

CONTRACT NO. 66K39

ILLINOIS | FED. AID PROJECT

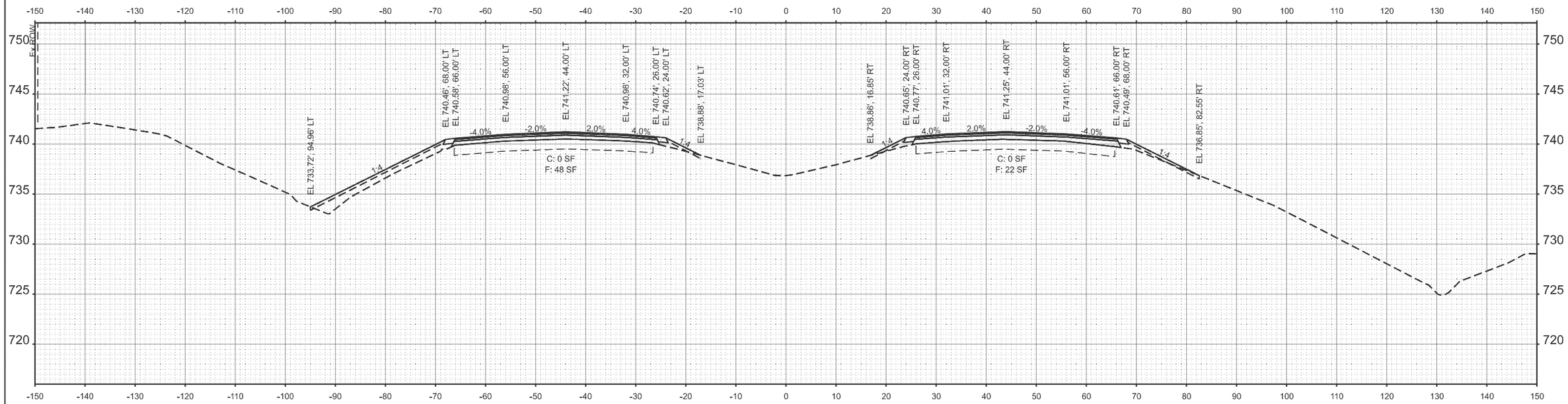

STA 1724+50.00

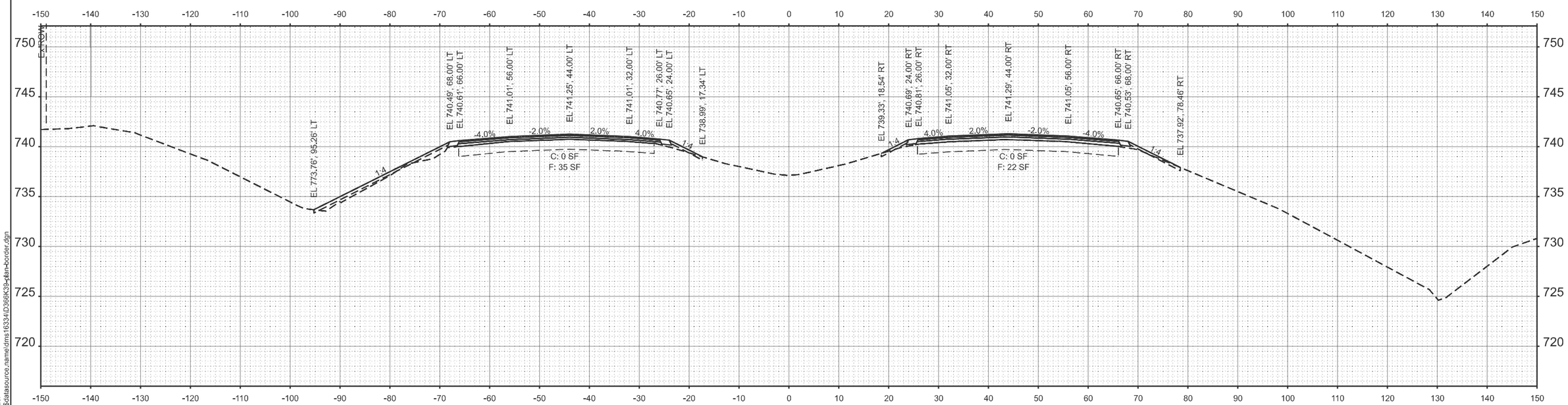

STA 1724+00.00

MODEL: 66K39 Sheet Border
FILE NAME: c:\workingdir\$datasource.name\dms16334\D366K39-plan-border.dgn

V3 Companies
7325 Janes Avenue
Woodridge, IL 60517
630 724 9200 phone
www.v3co.com

USER NAME =	DESIGNED - KDC	REVISED -	
	DRAWN - DRP	REVISED -	
	CHECKED - JWB	REVISED -	
PLOT DATE = 02/20/2026	DATE - 02/20/2026	REVISED -	

STATE OF ILLINOIS
DEPARTMENT OF TRANSPORTATION

CROSS SECTIONS
I-57

SCALE: 1"=10' | SHEET 16 OF 39 SHEETS | STA. | TO STA.

F.A.I. RTE.	SECTION	COUNTY	TOTAL SHEETS	SHEET NO.
57	(27-38B) BR-1	FORD	185	162

CONTRACT NO. 66K39

ILLINOIS | FED. AID PROJECT

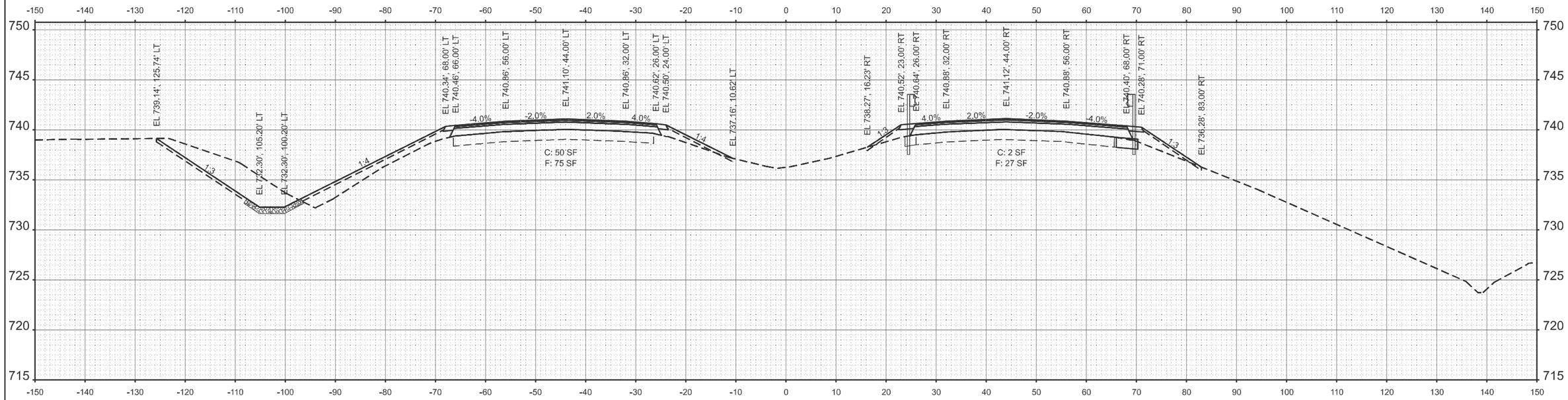

STA 1725+50.00

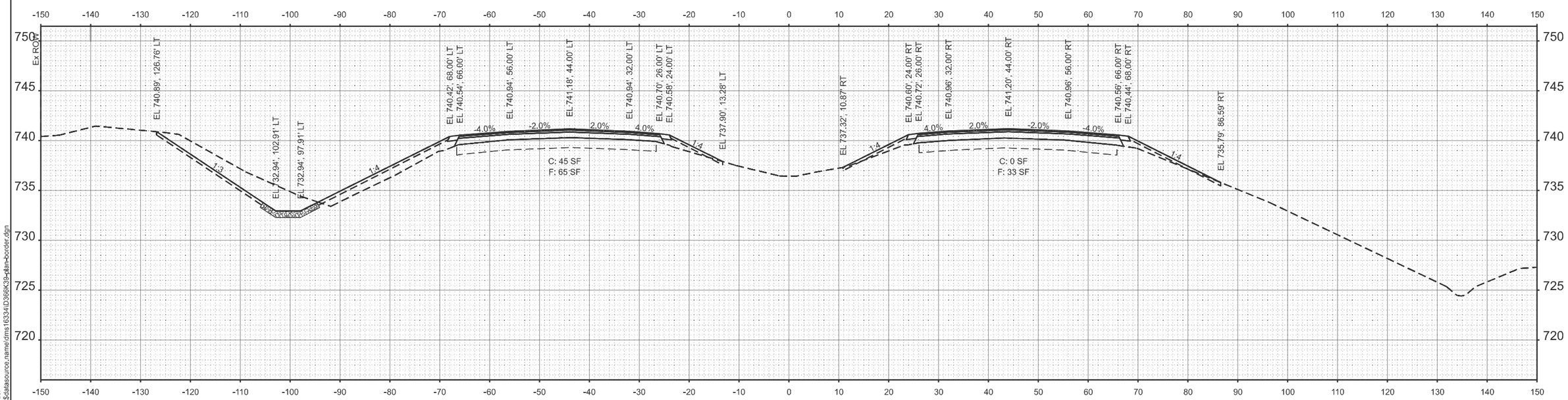

STA 1725+00.00

MODEL: 66K39 Sheet Border
FILE NAME: c:\workingdir$\datasource.name\dms16334\D366K39-plan-border.dgn

V3 Companies
7325 Janes Avenue
Woodridge, IL 60517
630 724 9200 phone
www.v3co.com

USER NAME =	DESIGNED - KDC	REVISED -	
	DRAWN - DRP	REVISED -	
	CHECKED - JWB	REVISED -	
PLOT DATE = 02/20/2026	DATE - 02/20/2026	REVISED -	

STATE OF ILLINOIS
DEPARTMENT OF TRANSPORTATION

CROSS SECTIONS
I-57

SCALE: 1"=10' | SHEET 17 OF 39 SHEETS | STA. | TO STA.

F.A.I. RTE.	SECTION	COUNTY	TOTAL SHEETS	SHEET NO.
57	(27-38B) BR-1	FORD	185	163

CONTRACT NO. 66K39

ILLINOIS | FED. AID PROJECT

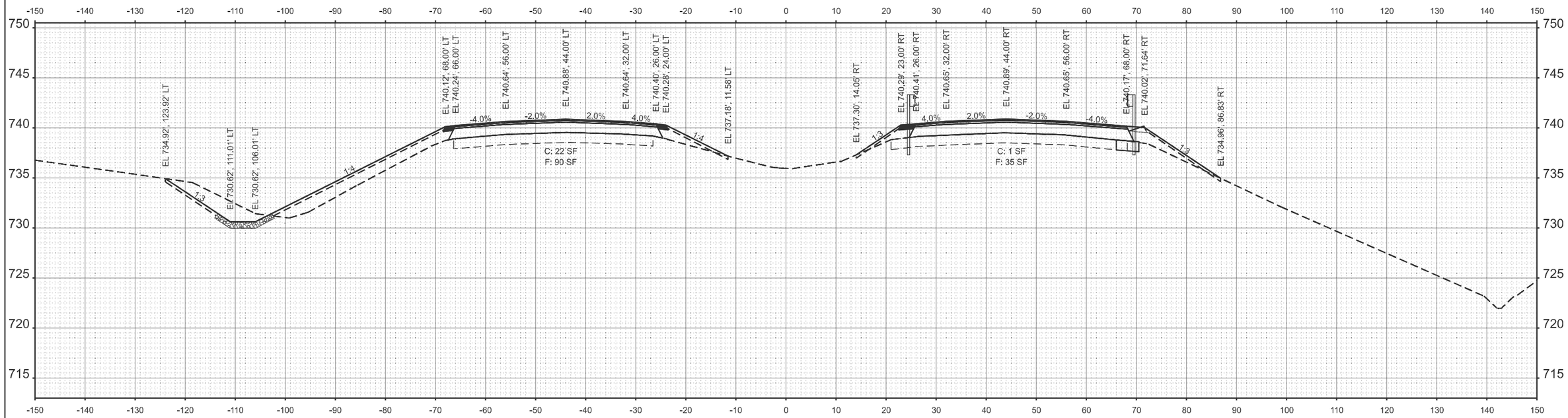

STA 1726+50.00

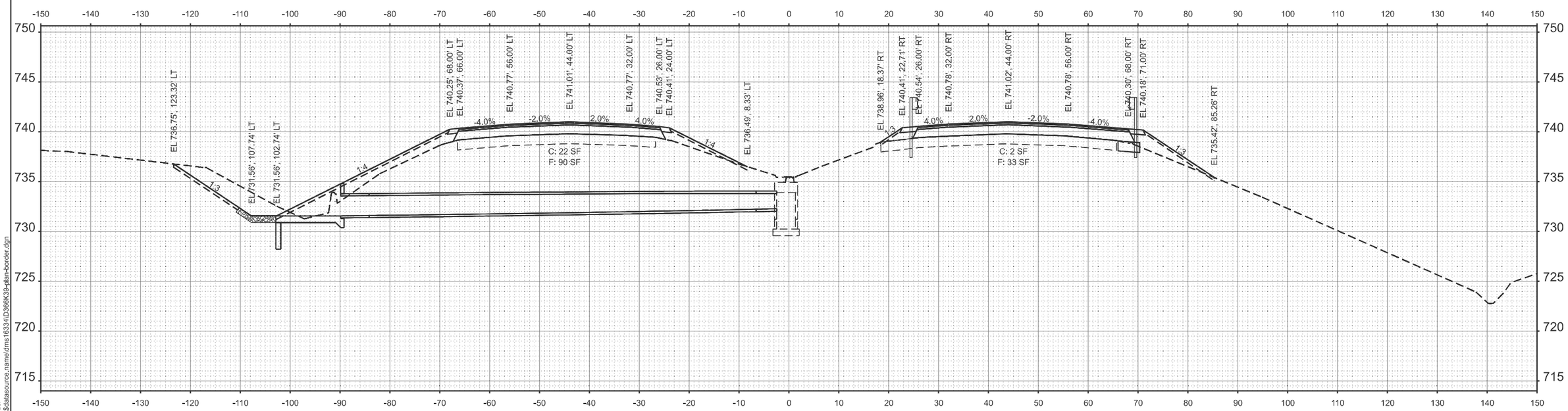

STA 1726+00.00

MODEL: 66K39 Sheet Border
FILE NAME: c:\workingdir$\datasource,name\dms16334\D366K39-plan-border.dgn

V3 Companies
7325 Janes Avenue
Woodridge, IL 60517
630 724 9200 phone
www.v3co.com

USER NAME =	DESIGNED - KDC	REVISED -	
	DRAWN - DRP	REVISED -	
	CHECKED - JWB	REVISED -	
PLOT DATE = 02/20/2026	DATE - 02/20/2026	REVISED -	

STATE OF ILLINOIS
DEPARTMENT OF TRANSPORTATION

CROSS SECTIONS
I-57

SCALE: 1"=10' | SHEET 18 OF 39 SHEETS | STA. | TO STA.

F.A.I. RTE.	SECTION	COUNTY	TOTAL SHEETS	SHEET NO.
57	(27-38B) BR-1	FORD	185	164

CONTRACT NO. 66K39

ILLINOIS | FED. AID PROJECT

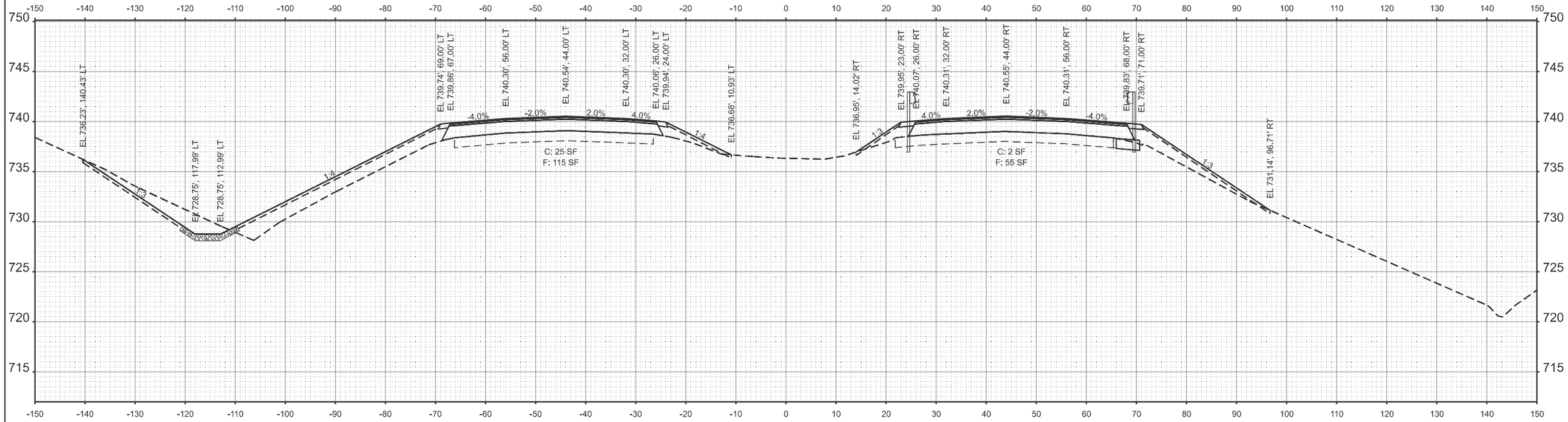

STA 1727+50.00

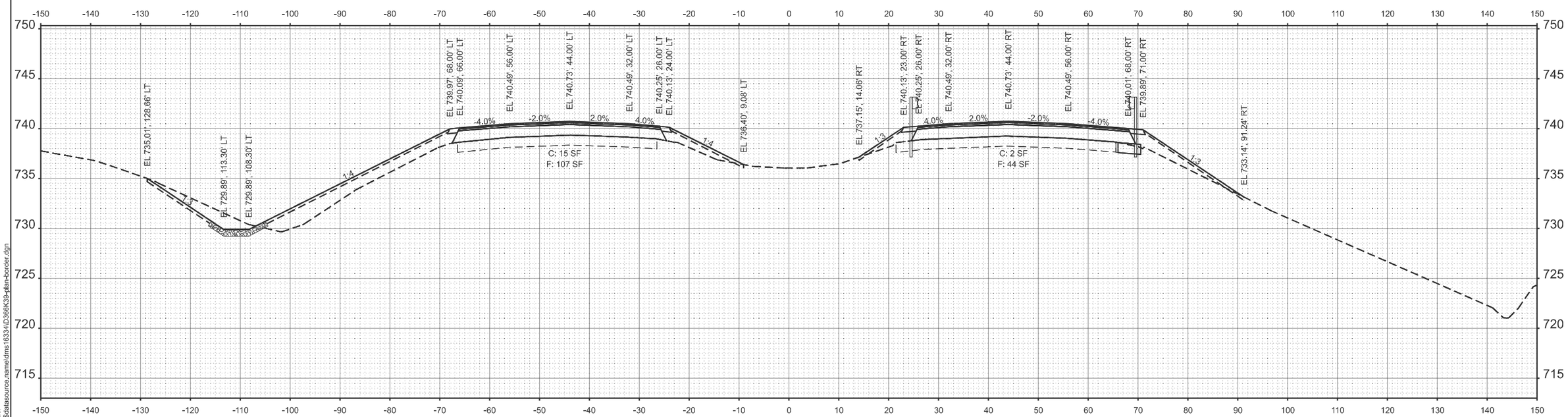

STA 1727+00.00

MODEL: 66K39 Sheet Border
FILE NAME: c:\workingdir\$datasource.name\dms16334\D366K39-plan-border.dgn

V3 Companies
7325 Janes Avenue
Woodridge, IL 60517
630 724 9200 phone
www.v3co.com

USER NAME =	DESIGNED - KDC	REVISED -	
	DRAWN - DRP	REVISED -	
	CHECKED - JWB	REVISED -	
PLOT DATE = 02/20/2026	DATE - 02/20/2026	REVISED -	

STATE OF ILLINOIS
DEPARTMENT OF TRANSPORTATION

CROSS SECTIONS
I-57

SCALE: 1"=10' | SHEET 19 OF 39 SHEETS | STA. | TO STA.

F.A.I. RTE.	SECTION	COUNTY	TOTAL SHEETS	SHEET NO.
57	(27-38B) BR-1	FORD	185	165

CONTRACT NO. 66K39

ILLINOIS | FED. AID PROJECT

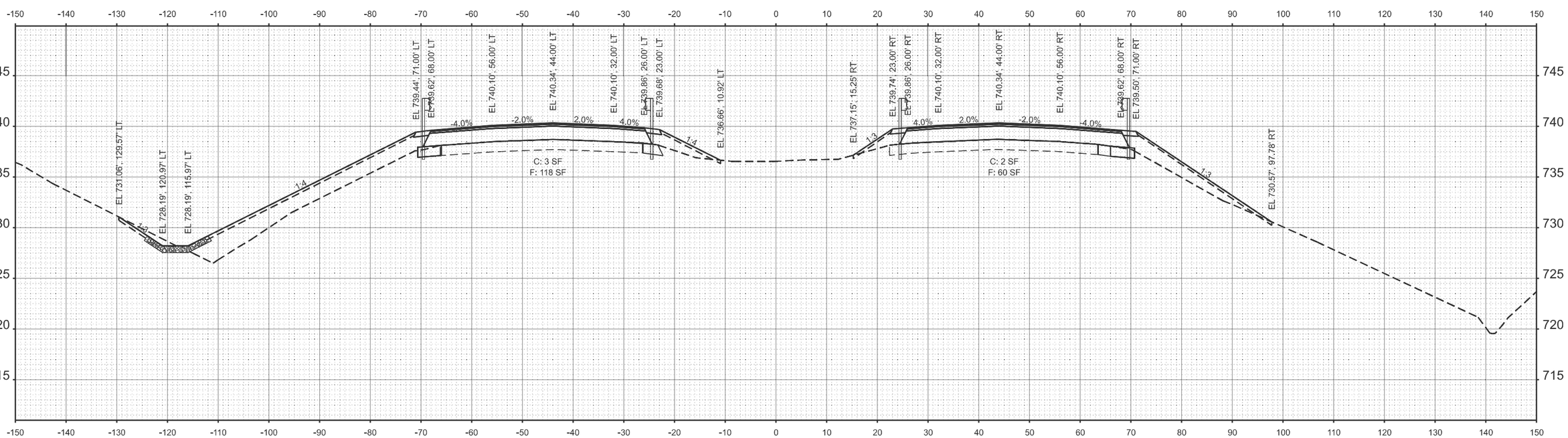

STA 1728+00.00

MODEL: 66K39 Sheet Border
FILE NAME: c:\workingdir\$datasource.name\dms16334\D366K39-plan-border.dgn

V3 Companies
7325 Janes Avenue
Woodridge, IL 60517
630 724 9200 phone
www.v3co.com

USER NAME =	DESIGNED - KDC	REVISED -
	DRAWN - DRP	REVISED -
	CHECKED - JWB	REVISED -
PLOT DATE = 02/20/2026	DATE - 02/20/2026	REVISED -

STATE OF ILLINOIS
DEPARTMENT OF TRANSPORTATION

CROSS SECTIONS
I-57

SCALE: 1"=10' | SHEET 20 OF 39 SHEETS | STA. | TO STA.

F.A.I. RTE.	SECTION	COUNTY	TOTAL SHEETS	SHEET NO.
57	(27-38B) BR-1	FORD	185	166

CONTRACT NO. 66K39

ILLINOIS | FED. AID PROJECT

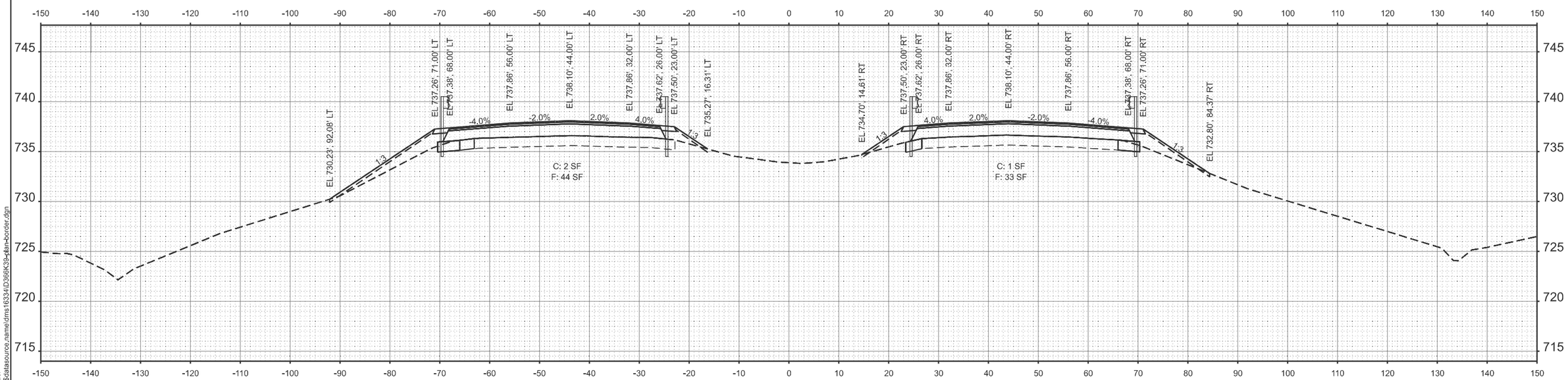

STA 1732+50.00

MODEL: 66K39 Sheet Border
FILE NAME: c:\workingdir\$datasource.name\dms16334\D366K39-plan-border.dgn

V3 Companies
7325 Janes Avenue
Woodridge, IL 60517
630 724 9200 phone
www.v3co.com

USER NAME =	DESIGNED - KDC	REVISED -
	DRAWN - DRP	REVISED -
	CHECKED - JWB	REVISED -
PLOT DATE = 02/20/2026	DATE - 02/20/2026	REVISED -

STATE OF ILLINOIS
DEPARTMENT OF TRANSPORTATION

CROSS SECTIONS
I-57

SCALE: 1"=10' | SHEET 21 OF 39 SHEETS | STA. | TO STA.

F.A.I. RTE.	SECTION	COUNTY	TOTAL SHEETS	SHEET NO.
57	(27-38B) BR-1	FORD	185	167

CONTRACT NO. 66K39

ILLINOIS | FED. AID PROJECT

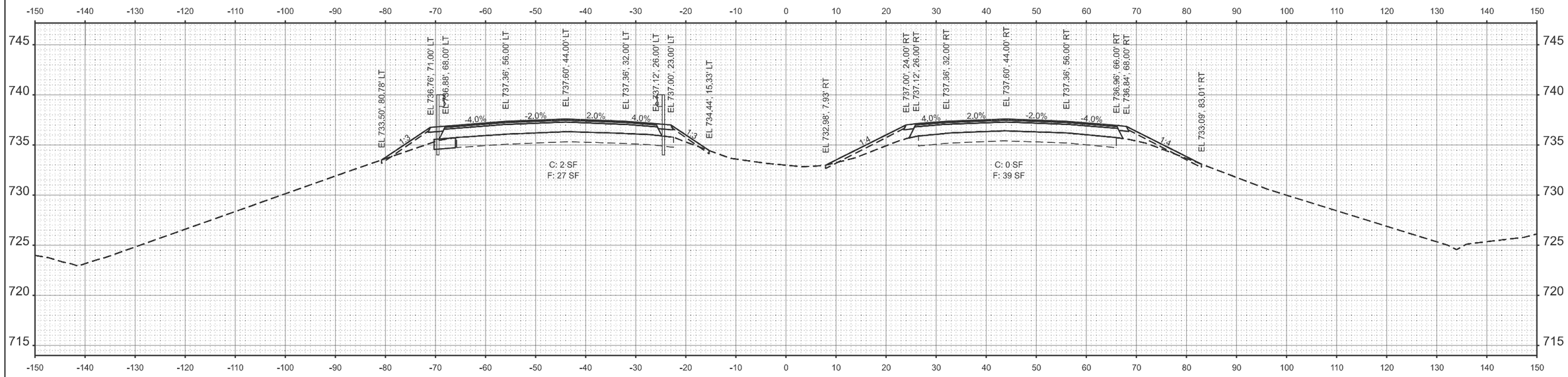

STA 1733+50.00

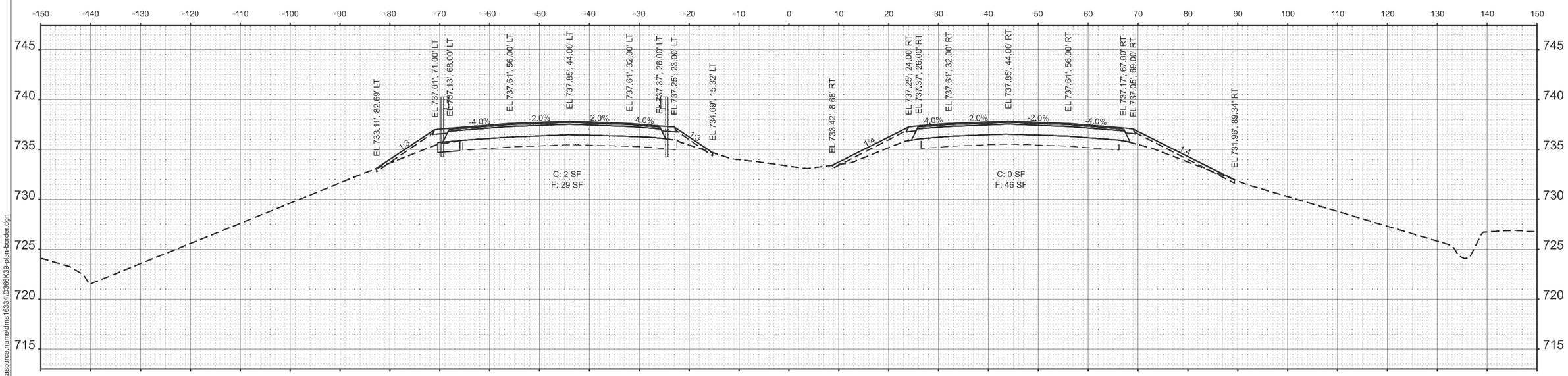

STA 1733+00.00

MODEL: 66K39 Sheet Border
FILE NAME: c:\workingdir$\datasource.name\dms16334\D366K39-plan-border.dgn

V3 Companies
7325 Janes Avenue
Woodridge, IL 60517
630 724 9200 phone
www.v3co.com

USER NAME =	DESIGNED - KDC	REVISED -
	DRAWN - DRP	REVISED -
	CHECKED - JWB	REVISED -
PLOT DATE = 02/20/2026	DATE - 02/20/2026	REVISED -

STATE OF ILLINOIS
DEPARTMENT OF TRANSPORTATION

CROSS SECTIONS
I-57

SCALE: 1"=10' | SHEET 22 OF 39 SHEETS | STA. | TO STA.

F.A.I. RTE.	SECTION	COUNTY	TOTAL SHEETS	SHEET NO.
57	(27-38B) BR-1	FORD	185	168

CONTRACT NO. 66K39

ILLINOIS | FED. AID PROJECT

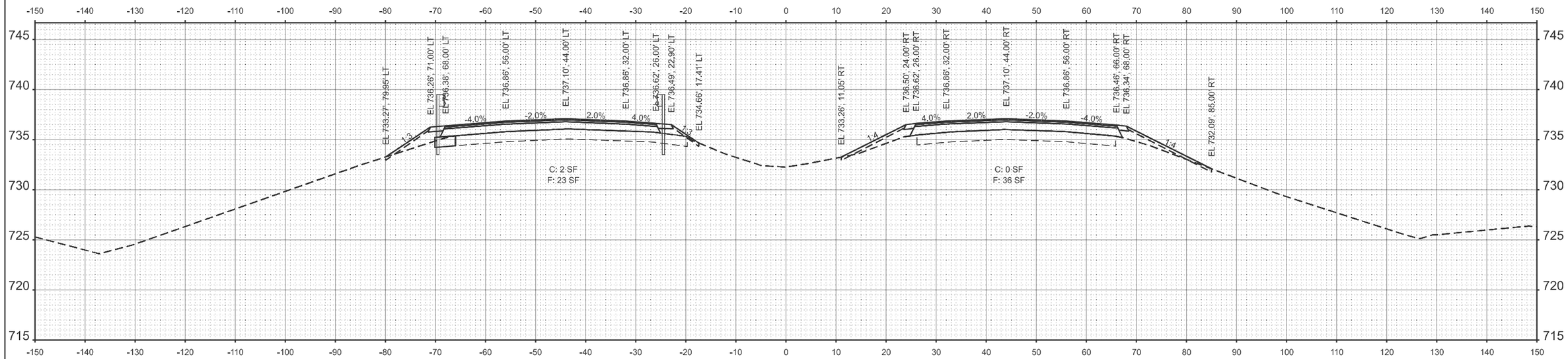

STA 1734+50.00

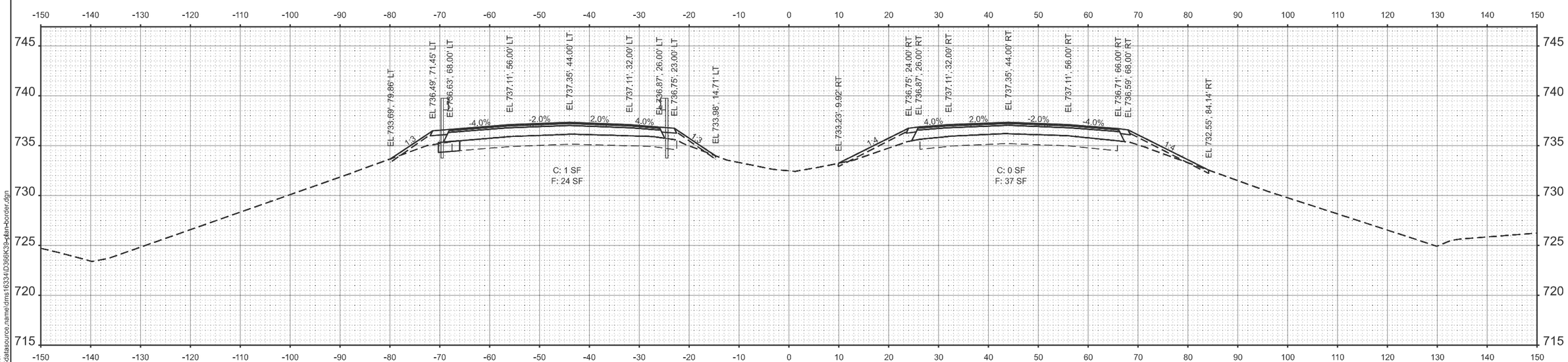

STA 1734+00.00

MODEL: 66K39 Sheet Border
FILE NAME: c:\workingdir$\datasource.name\dms16334\D366K39-plan-border.dgn

V3 Companies
7325 Janes Avenue
Woodridge, IL 60517
630 724 9200 phone
www.v3co.com

USER NAME =	DESIGNED - KDC	REVISED -	
	DRAWN - DRP	REVISED -	
	CHECKED - JWB	REVISED -	
PLOT DATE = 02/20/2026	DATE - 02/20/2026	REVISED -	

STATE OF ILLINOIS
DEPARTMENT OF TRANSPORTATION

CROSS SECTIONS
I-57

SCALE: 1"=10' | SHEET 23 OF 39 SHEETS | STA. | TO STA.

F.A.I. RTE.	SECTION	COUNTY	TOTAL SHEETS	SHEET NO.
57	(27-38B) BR-1	FORD	185	169
		CONTRACT NO. 66K39		
	ILLINOIS	FED. AID PROJECT		

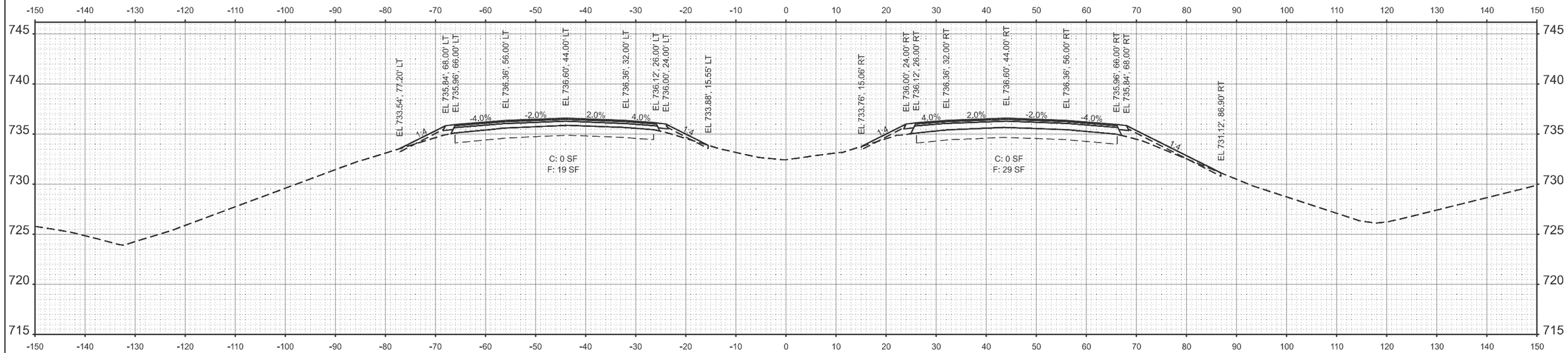

STA 1735+50.00

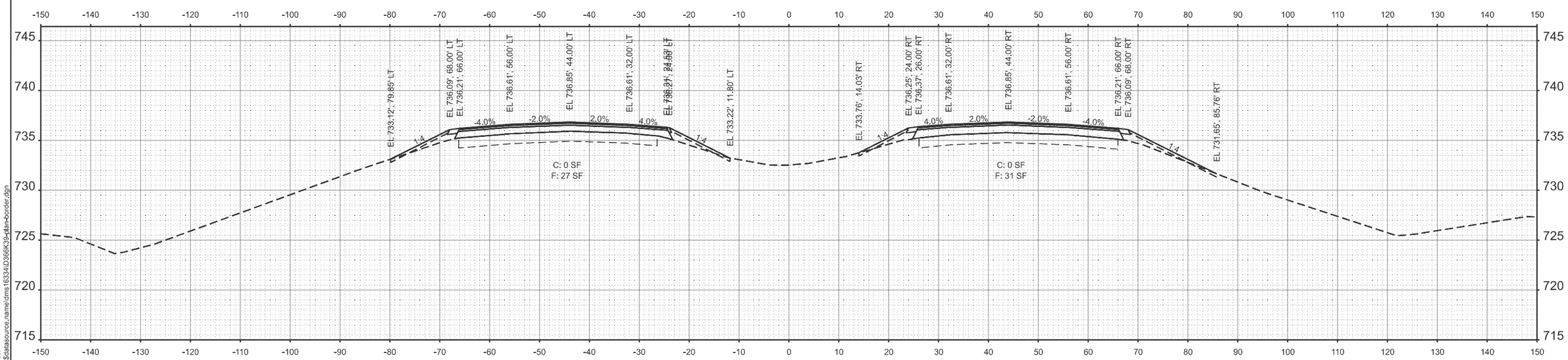

STA 1735+00.00

MODEL: 66K39 Sheet Border
FILE NAME: c:\workingdir\$datasource.name\dms16334.D366K39-plan-border.dgn

V3 Companies
7325 Janes Avenue
Woodridge, IL 60517
630 724 9200 phone
www.v3co.com

USER NAME =	DESIGNED - KDC	REVISED -	
	DRAWN - DRP	REVISED -	
	CHECKED - JWB	REVISED -	
PLOT DATE = 02/20/2026	DATE - 02/20/2026	REVISED -	

STATE OF ILLINOIS
DEPARTMENT OF TRANSPORTATION

CROSS SECTIONS
I-57

SCALE: 1"=10' | SHEET 24 OF 39 SHEETS | STA. | TO STA.

F.A.I. RTE.	SECTION	COUNTY	TOTAL SHEETS	SHEET NO.
57	(27-38B) BR-1	FORD	185	170
		CONTRACT NO. 66K39		
		ILLINOIS FED. AID PROJECT		

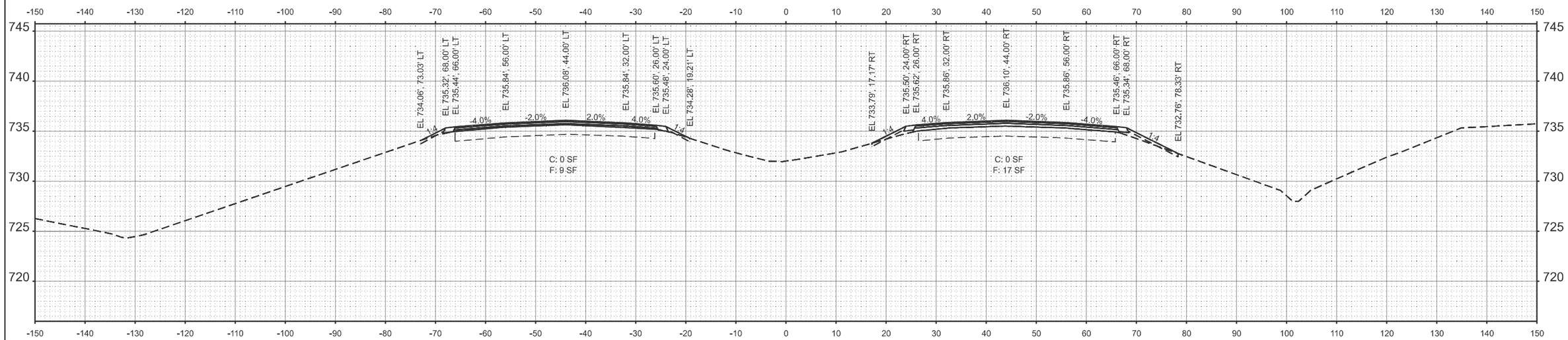

STA 1736+50.00

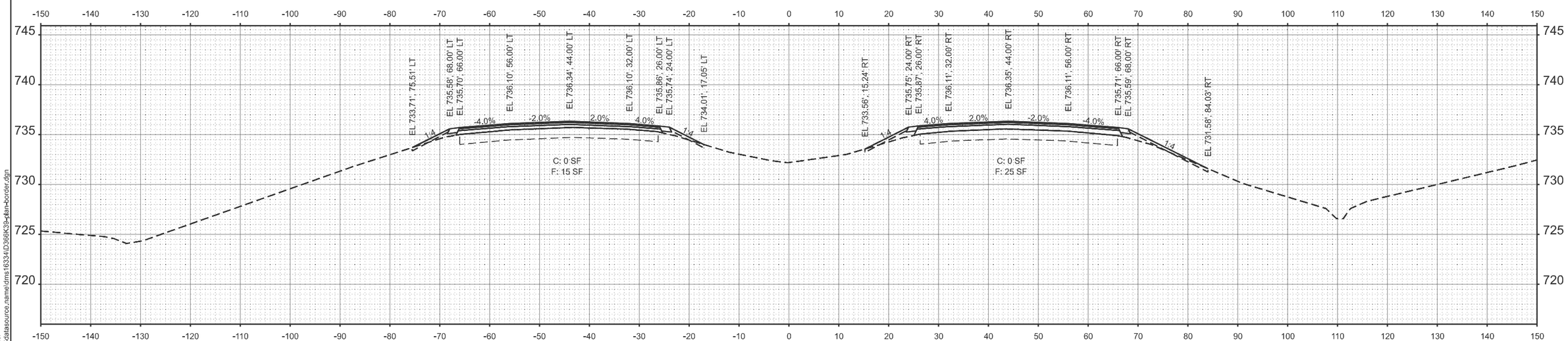

STA 1736+00.00

MODEL: 66K39 Sheet Border
FILE NAME: c:\workingdir\$datasource.name\dms16334\D366K39-plan-border.dgn

V3 Companies
7325 Janes Avenue
Woodridge, IL 60517
630 724 9200 phone
www.v3co.com

USER NAME =	DESIGNED - KDC	REVISED -	
	DRAWN - DRP	REVISED -	
	CHECKED - JWB	REVISED -	
PLOT DATE = 02/20/2026	DATE - 02/20/2026	REVISED -	

STATE OF ILLINOIS
DEPARTMENT OF TRANSPORTATION

CROSS SECTIONS
I-57

SCALE: 1"=10' | SHEET 25 OF 39 SHEETS | STA. | TO STA.

F.A.I. RTE.	SECTION	COUNTY	TOTAL SHEETS	SHEET NO.
57	(27-38B) BR-1	FORD	185	171

CONTRACT NO. 66K39

ILLINOIS | FED. AID PROJECT

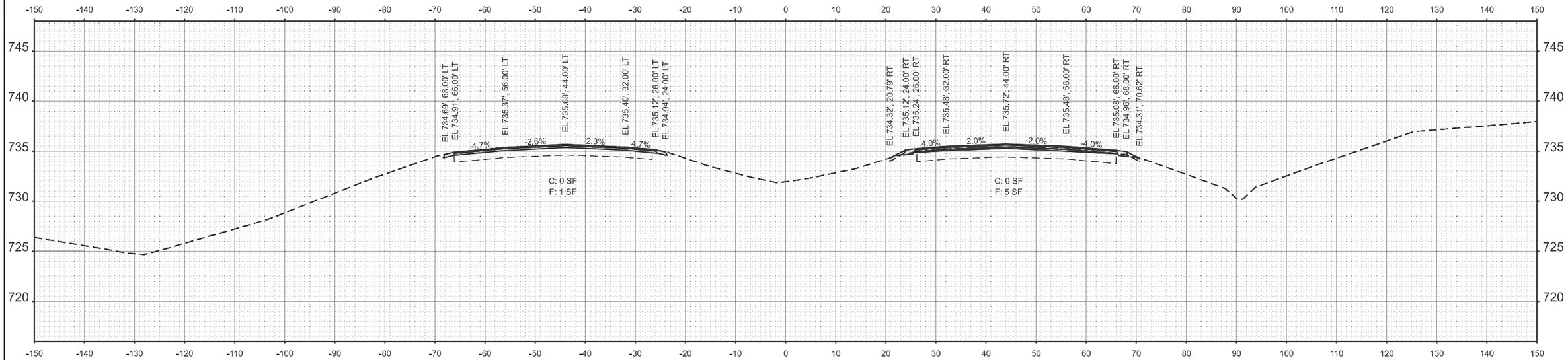

STA 1737+50.00

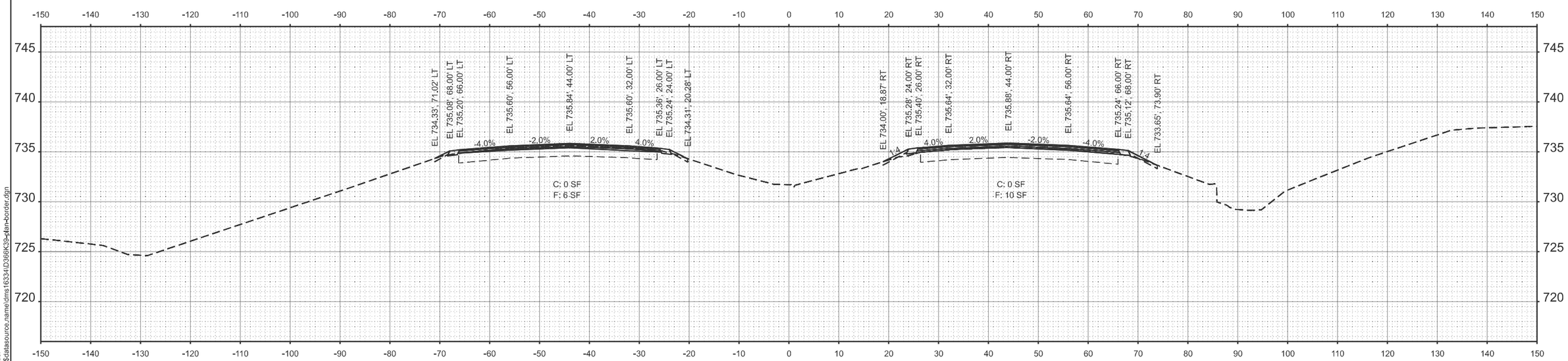

STA 1737+00.00

MODEL: 66K39 Sheet Border
FILE NAME: c:\workingdir$\datasource.name\dms16334\D366K39-plan-border.dgn

V3 Companies
7325 Janes Avenue
Woodridge, IL 60517
630 724 9200 phone
www.v3co.com

USER NAME =	DESIGNED - KDC	REVISED -	
	DRAWN - DRP	REVISED -	
	CHECKED - JWB	REVISED -	
PLOT DATE = 02/20/2026	DATE - 02/20/2026	REVISED -	

STATE OF ILLINOIS
DEPARTMENT OF TRANSPORTATION

CROSS SECTIONS
I-57

SCALE: 1"=10' | SHEET 26 OF 39 SHEETS | STA. | TO STA.

F.A.I. RTE.	SECTION	COUNTY	TOTAL SHEETS	SHEET NO.
57	(27-38B) BR-1	FORD	185	172
		CONTRACT NO. 66K39		
		ILLINOIS	FED. AID PROJECT	

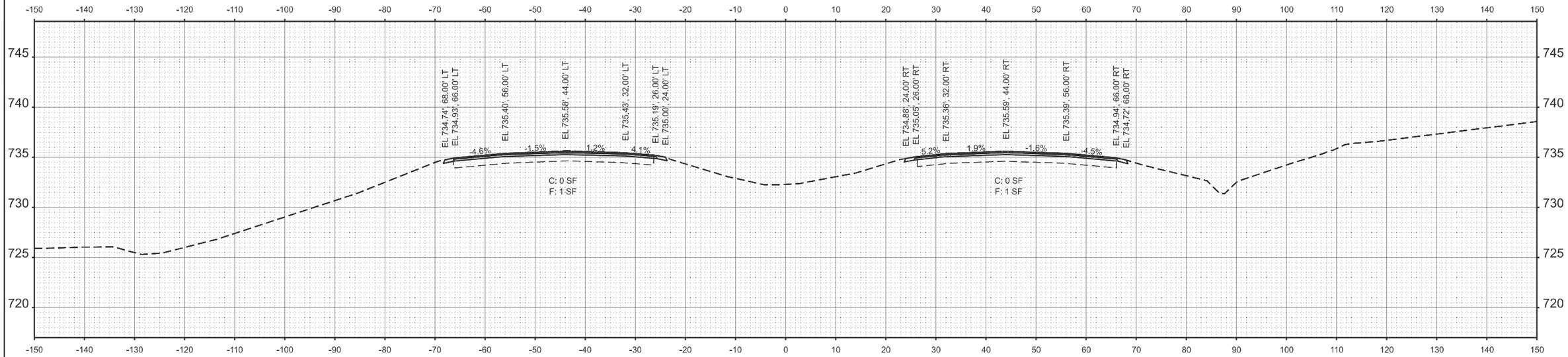

STA 1738+50.00

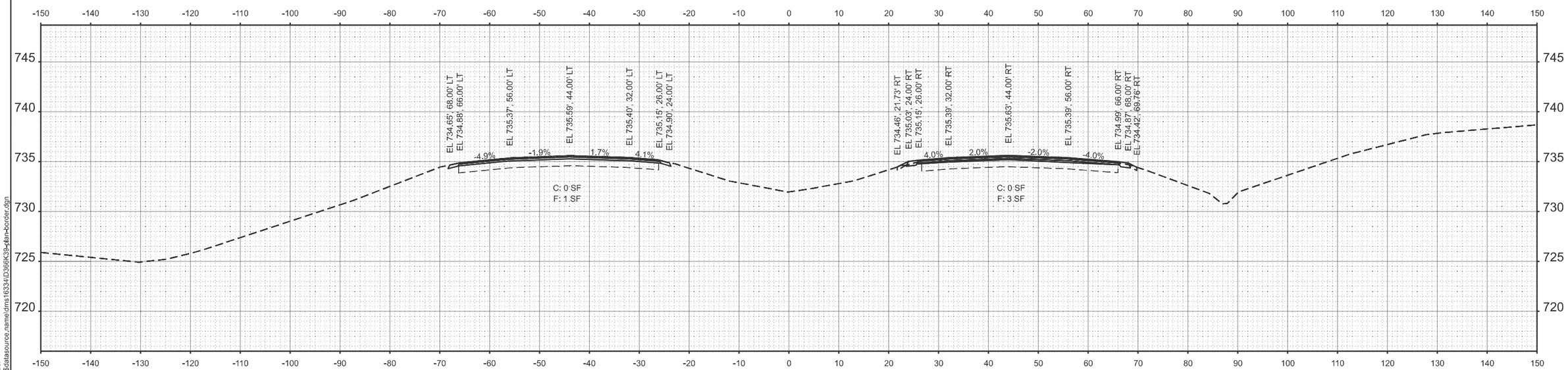

STA 1738+00.00

MODEL: 66K39 Sheet Border
FILE NAME: c:\workingdir\$datasource.name\dms16334\D366K39-plan-border.dgn

V3 Companies
7325 Janes Avenue
Woodridge, IL 60517
630 724 9200 phone
www.v3co.com

USER NAME =	DESIGNED - KDC	REVISED -	
	DRAWN - DRP	REVISED -	
	CHECKED - JWB	REVISED -	
PLOT DATE = 02/20/2026	DATE - 02/20/2026	REVISED -	

STATE OF ILLINOIS
DEPARTMENT OF TRANSPORTATION

CROSS SECTIONS
I-57

SCALE: 1"=10' | SHEET 27 OF 39 SHEETS | STA. | TO STA.

F.A.I. RTE.	SECTION	COUNTY	TOTAL SHEETS	SHEET NO.
57	(27-38B) BR-1	FORD	185	173
		CONTRACT NO. 66K39		
		ILLINOIS FED. AID PROJECT		

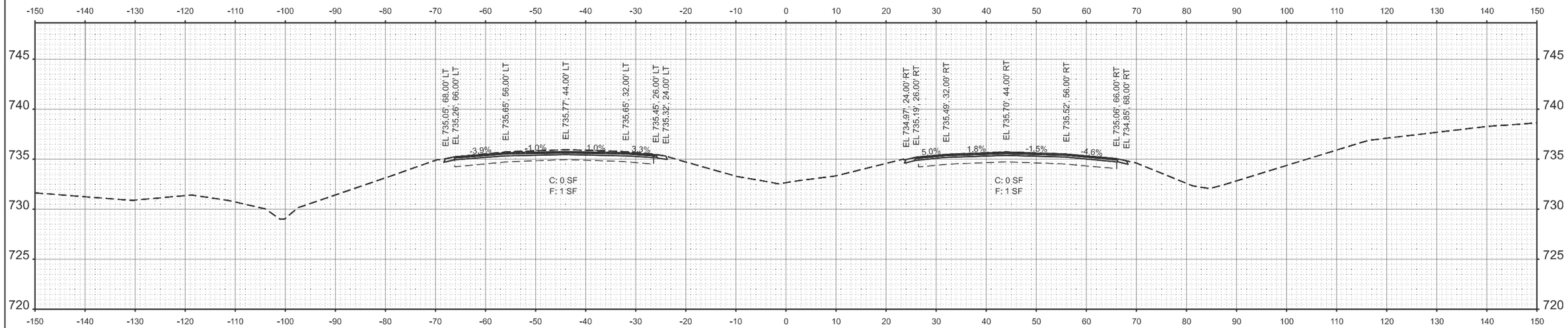

STA 1739+50.00

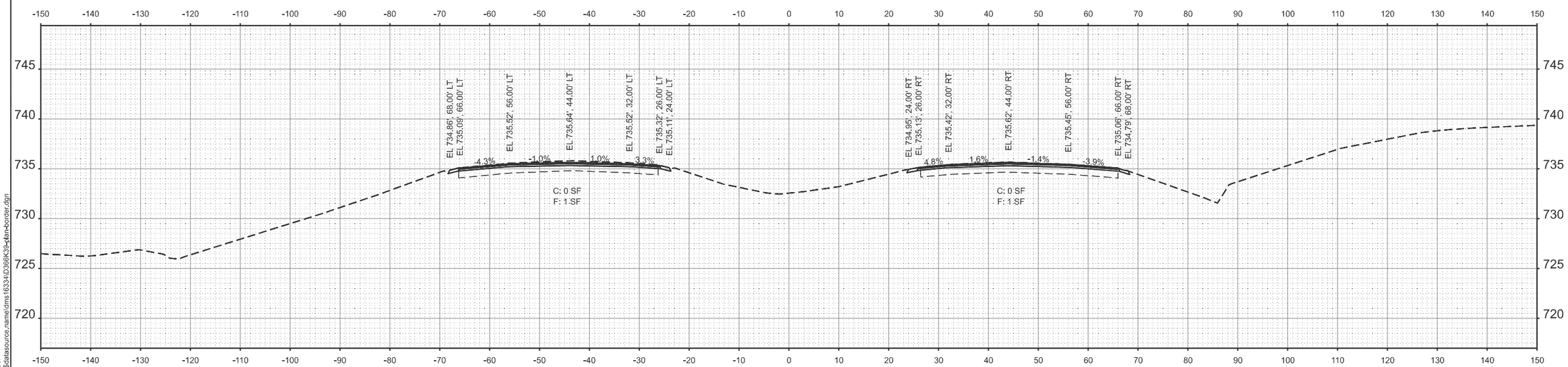

STA 1739+00.00

MODEL: 66K39 Sheet Border
FILE NAME: c:\workingdir\$datasource.name\dms16334\D366K39-plan-border.dgn

V3 Companies
7325 Janes Avenue
Woodridge, IL 60517
630 724 9200 phone
www.v3co.com

USER NAME =	DESIGNED - KDC	REVISED -	
	DRAWN - DRP	REVISED -	
	CHECKED - JWB	REVISED -	
PLOT DATE = 02/20/2026	DATE - 02/20/2026	REVISED -	

STATE OF ILLINOIS
DEPARTMENT OF TRANSPORTATION

CROSS SECTIONS
I-57

SCALE: 1"=10' | SHEET 28 OF 39 SHEETS | STA. | TO STA.

F.A.I. RTE.	SECTION	COUNTY	TOTAL SHEETS	SHEET NO.
57	(27-38B) BR-1	FORD	185	174
		CONTRACT NO. 66K39		
		ILLINOIS	FED. AID PROJECT	

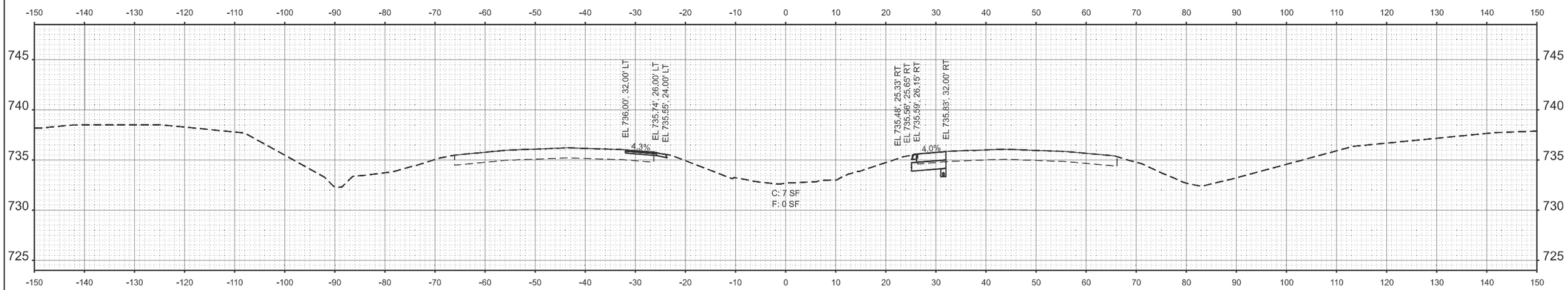

STA 1740+50.00

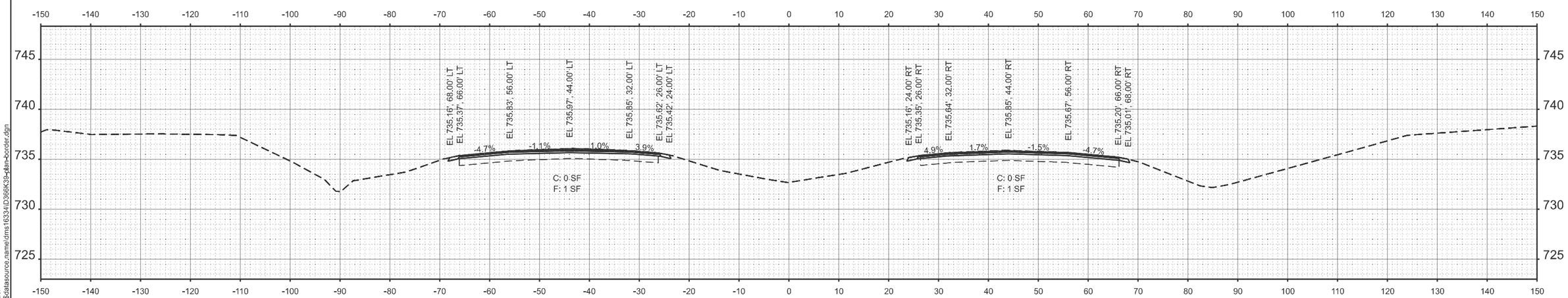

STA 1740+00.00

MODEL: 66K39 Sheet Border
FILE NAME: c:\workingdir$\datasource.name\dms16334\D366K39-plan-border.dgn

V3 Companies
7325 Janes Avenue
Woodridge, IL 60517
630 724 9200 phone
www.v3co.com

USER NAME =	DESIGNED - KDC	REVISED -	
	DRAWN - DRP	REVISED -	
	CHECKED - JWB	REVISED -	
PLOT DATE = 02/20/2026	DATE - 02/20/2026	REVISED -	

STATE OF ILLINOIS
DEPARTMENT OF TRANSPORTATION

CROSS SECTIONS
I-57

SCALE: 1"=10' | SHEET 29 OF 39 SHEETS | STA. | TO STA.

F.A.I. RTE.	SECTION	COUNTY	TOTAL SHEETS	SHEET NO.
57	(27-38B) BR-1	FORD	185	175

CONTRACT NO. 66K39

ILLINOIS | FED. AID PROJECT

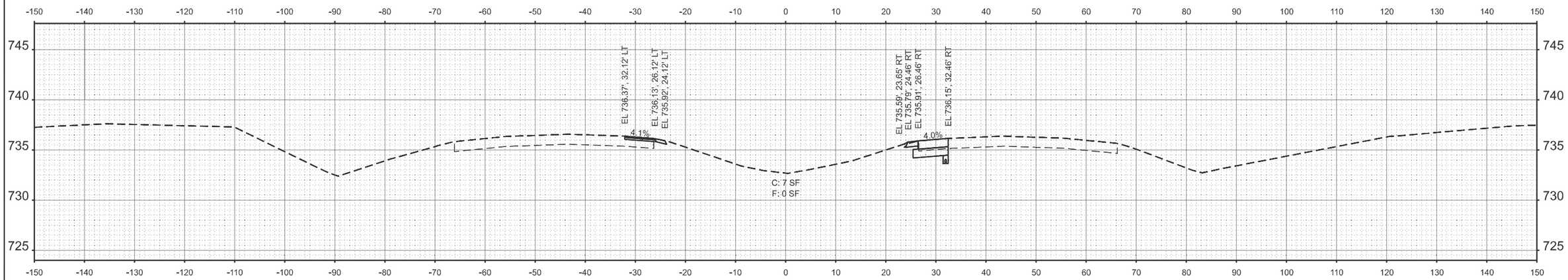

STA 1741+50.00

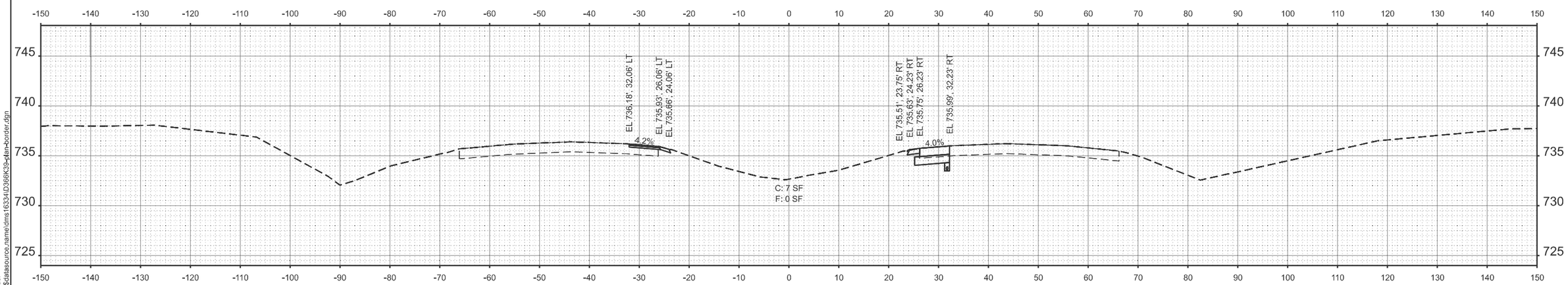

STA 1741+00.00

MODEL: 66K39 Sheet Border
FILE NAME: c:\workingdir$\datasource.name\dms16334\D366K39-plan-border.dgn

V3 Companies
7325 Janes Avenue
Woodridge, IL 60517
630 724 9200 phone
www.v3co.com

USER NAME =	DESIGNED - KDC	REVISED -	
	DRAWN - DRP	REVISED -	
	CHECKED - JWB	REVISED -	
PLOT DATE = 02/20/2026	DATE - 02/20/2026	REVISED -	

STATE OF ILLINOIS
DEPARTMENT OF TRANSPORTATION

CROSS SECTIONS
I-57

SCALE: 1"=10' | SHEET 30 OF 39 SHEETS | STA. | TO STA.

F.A.I. RTE.	SECTION	COUNTY	TOTAL SHEETS	SHEET NO.
57	(27-38B) BR-1	FORD	185	176
		CONTRACT NO. 66K39		
		ILLINOIS	FED. AID PROJECT	

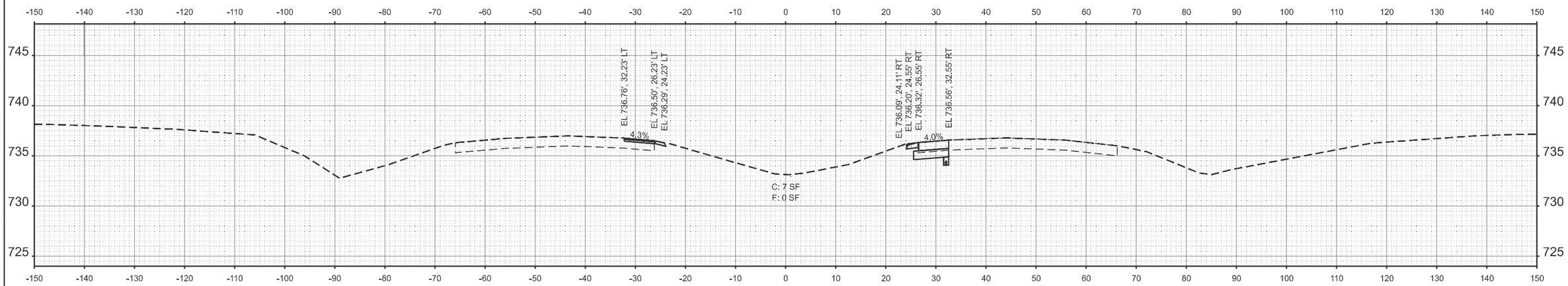

STA 1742+50.00

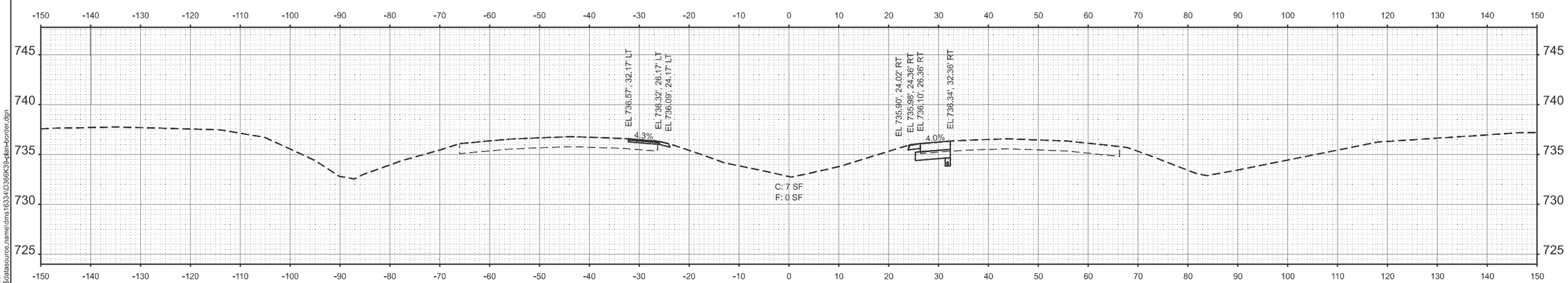

STA 1742+00.00

MODEL: 66K39 Sheet Border
FILE NAME: c:\workingdir\$datasource.name\dms16334\D366K39-plan-border.dgn

V3 Companies
7325 Janes Avenue
Woodridge, IL 60517
630 724 9200 phone
www.v3co.com

USER NAME =	DESIGNED - KDC	REVISED -
	DRAWN - DRP	REVISED -
	CHECKED - JWB	REVISED -
PLOT DATE = 02/20/2026	DATE - 02/20/2026	REVISED -

STATE OF ILLINOIS
DEPARTMENT OF TRANSPORTATION

CROSS SECTIONS
I-57

SCALE: 1"=10' | SHEET 31 OF 39 SHEETS | STA. | TO STA.

F.A.I. RTE.	SECTION	COUNTY	TOTAL SHEETS	SHEET NO.
57	(27-38B) BR-1	FORD	185	177

CONTRACT NO. 66K39

ILLINOIS | FED. AID PROJECT

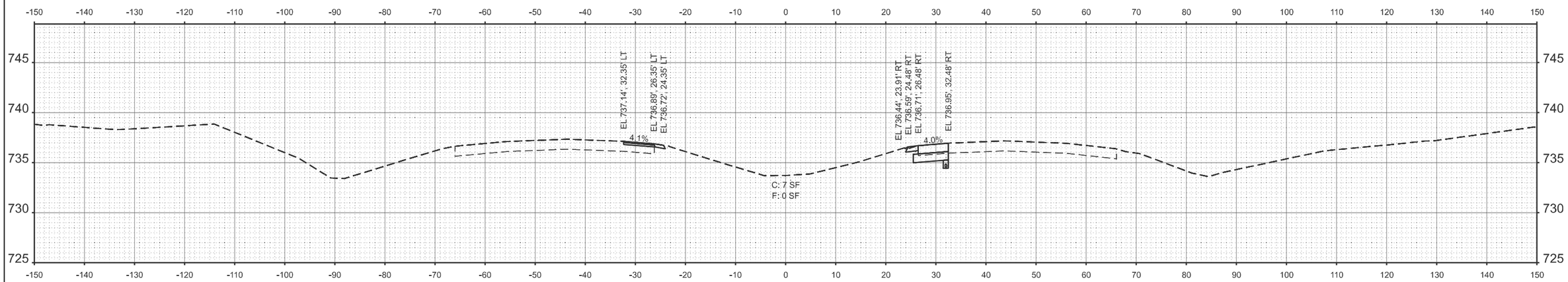

STA 1743+50.00

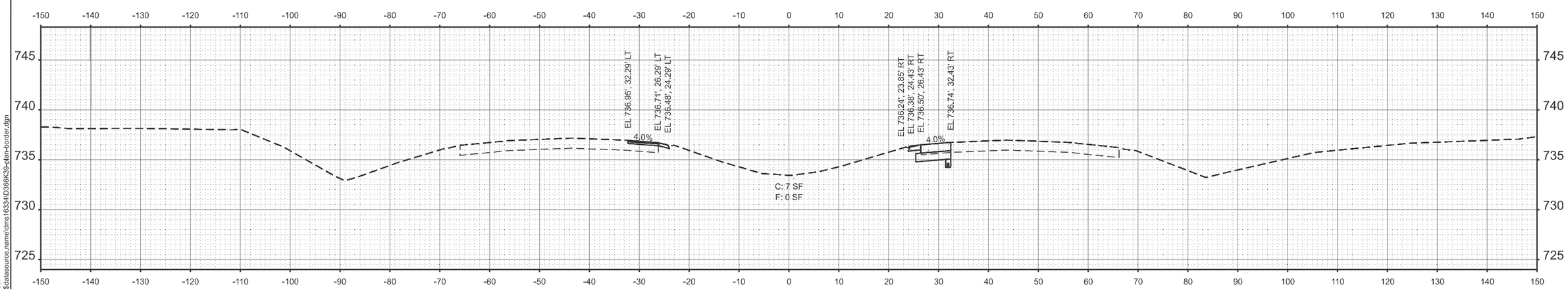

STA 1743+00.00

MODEL: 66K39 Sheet Border
FILE NAME: c:\workingdir$\datasource,name\dms16334\D366K39-plan-border.dgn

V3 Companies
7325 Janes Avenue
Woodridge, IL 60517
630 724 9200 phone
www.v3co.com

USER NAME =	DESIGNED - KDC	REVISED -	
	DRAWN - DRP	REVISED -	
	CHECKED - JWB	REVISED -	
PLOT DATE = 02/20/2026	DATE - 02/20/2026	REVISED -	

STATE OF ILLINOIS
DEPARTMENT OF TRANSPORTATION

CROSS SECTIONS
I-57

SCALE: 1"=10' | SHEET 32 OF 39 SHEETS | STA. TO STA.

F.A.I. RTE.	SECTION	COUNTY	TOTAL SHEETS	SHEET NO.
57	(27-38B) BR-1	FORD	185	178
		CONTRACT NO. 66K39		
		ILLINOIS	FED. AID PROJECT	

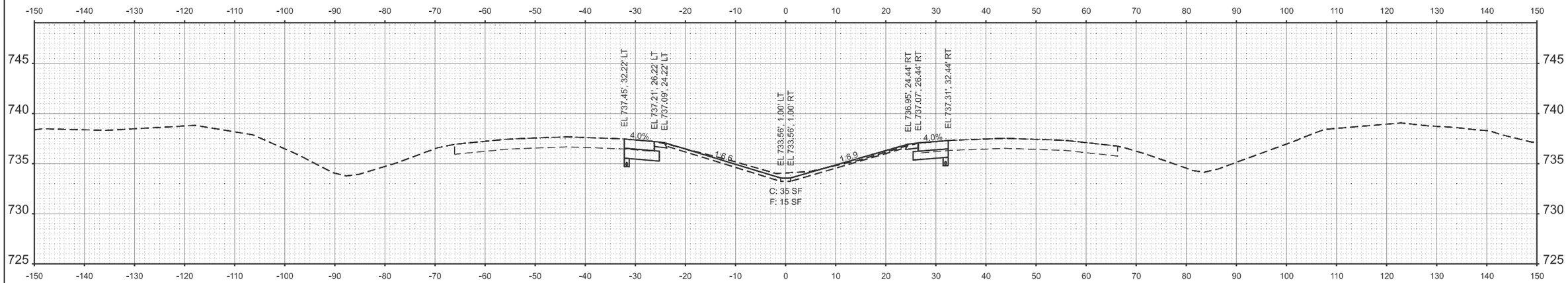

STA 1744+50.00

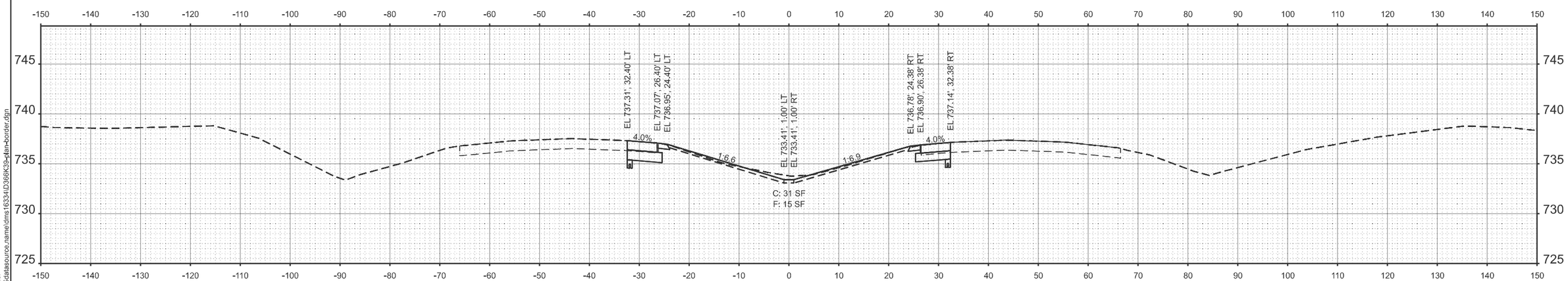

STA 1744+00.00

MODEL: 66K39 Sheet Border
FILE NAME: c:\workingdir$\datasource.name\dms16334\D366K39-plan-border.dgn

V3 Companies
7325 Janes Avenue
Woodridge, IL 60517
630 724 9200 phone
www.v3co.com

USER NAME =	DESIGNED - KDC	REVISED -	
	DRAWN - DRP	REVISED -	
	CHECKED - JWB	REVISED -	
PLOT DATE = 02/20/2026	DATE - 02/20/2026	REVISED -	

STATE OF ILLINOIS
DEPARTMENT OF TRANSPORTATION

CROSS SECTIONS
I-57

SCALE: 1"=10' | SHEET 33 OF 39 SHEETS | STA. | TO STA.

F.A.I. RTE.	SECTION	COUNTY	TOTAL SHEETS	SHEET NO.
57	(27-38B) BR-1	FORD	185	179

CONTRACT NO. 66K39

ILLINOIS | FED. AID PROJECT

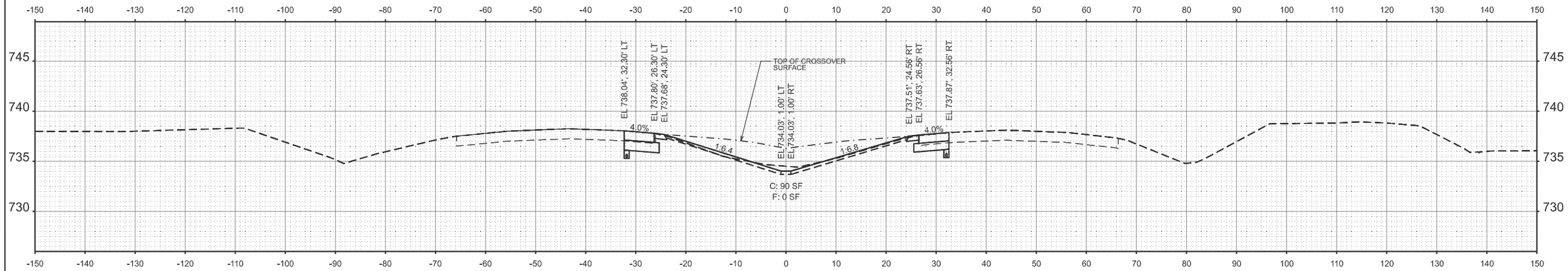

STA 1746+00.00

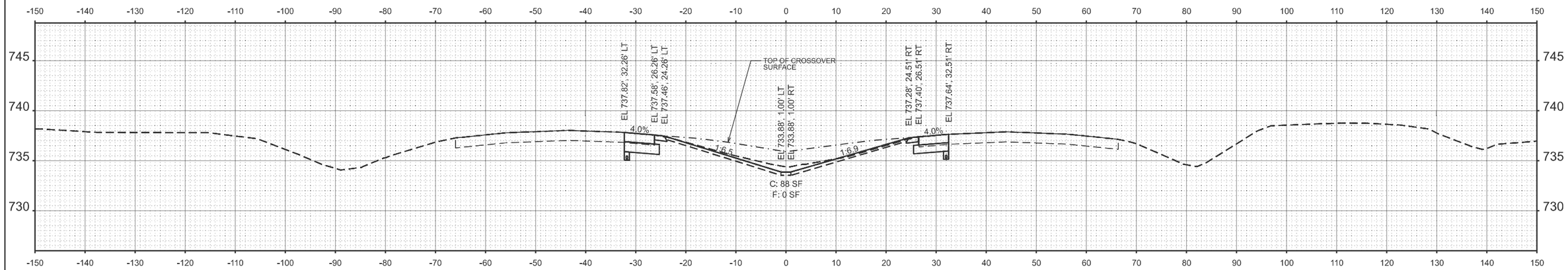

STA 1745+50.00

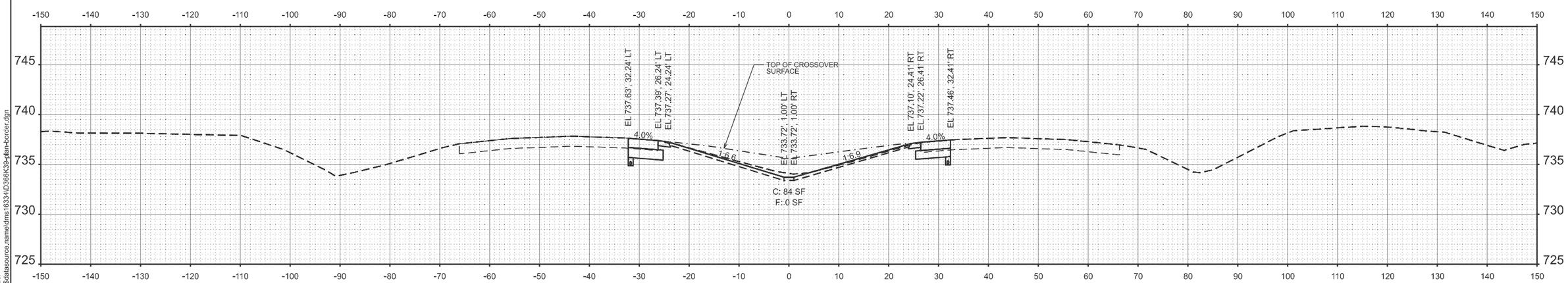

STA 1745+00.00

MODEL: 66K39 Sheet Border
FILE NAME: c:\workingdir$\datasource.name\dms16334\D366K39-plan-border.dgn

V3 Companies
7325 Janes Avenue
Woodridge, IL 60517
630 724 9200 phone
www.v3co.com

USER NAME =	DESIGNED - KDC	REVISED -	
	DRAWN - DRP	REVISED -	
	CHECKED - JWB	REVISED -	
PLOT DATE = 02/20/2026	DATE - 02/20/2026	REVISED -	

STATE OF ILLINOIS
DEPARTMENT OF TRANSPORTATION

CROSS SECTIONS
I-57

SCALE: 1"=10' | SHEET 34 OF 39 SHEETS | STA. | TO STA.

F.A.I. RTE.	SECTION	COUNTY	TOTAL SHEETS	SHEET NO.
57	(27-38B) BR-1	FORD	185	180
		CONTRACT NO. 66K39		
		ILLINOIS FED. AID PROJECT		

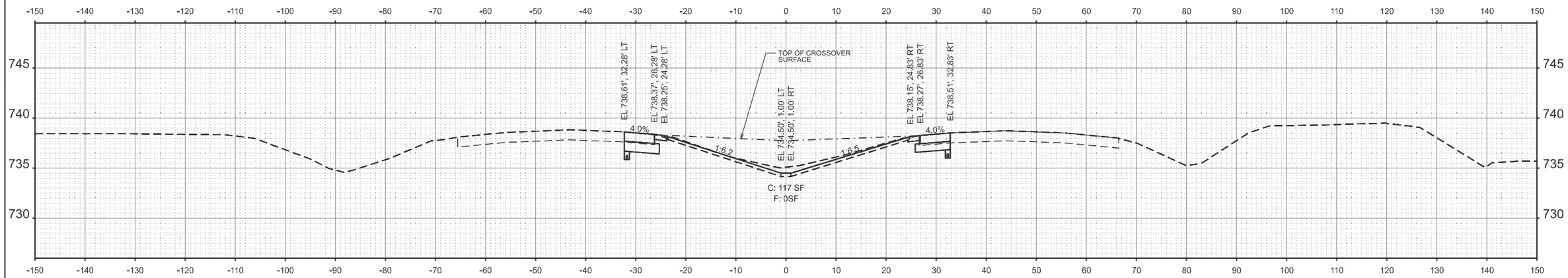

STA 1747+50.00

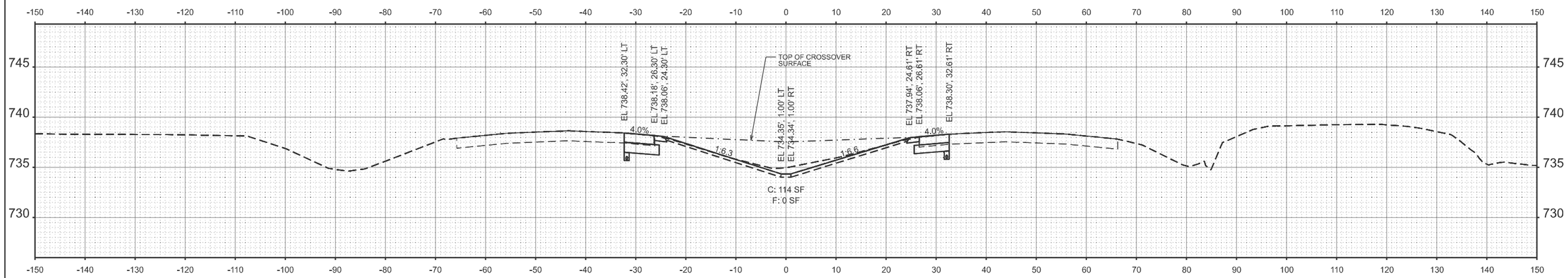

STA 1747+00.00

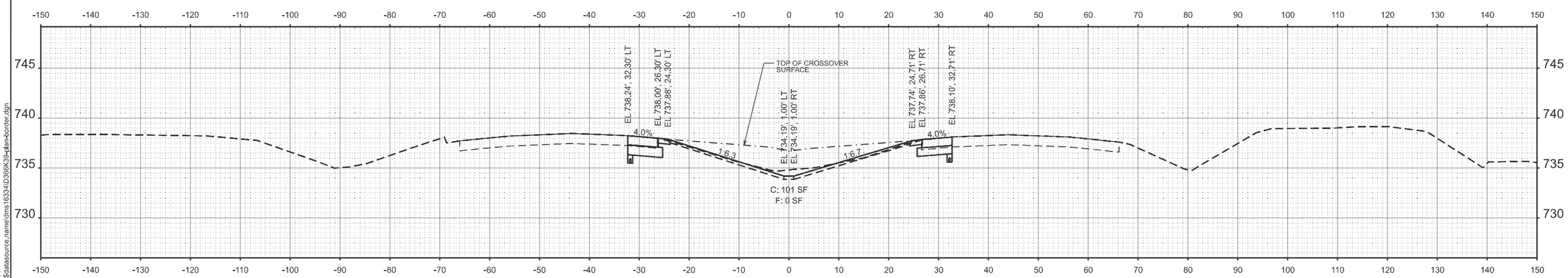

STA 1746+50.00

MODEL: 66K39 Sheet Border
FILE NAME: c:\workingdir\$datasource.name\dms16334\D366K39-plan-border.dgn

V3 Companies
7325 Janes Avenue
Woodridge, IL 60517
630 724 9200 phone
www.v3co.com

USER NAME =	DESIGNED - KDC	REVISED -	
	DRAWN - DRP	REVISED -	
	CHECKED - JWB	REVISED -	
PLOT DATE = 02/20/2026	DATE - 02/20/2026	REVISED -	

STATE OF ILLINOIS
DEPARTMENT OF TRANSPORTATION

CROSS SECTIONS
I-57

SCALE: 1"=10' | SHEET 35 OF 39 SHEETS | STA. | TO STA.

F.A.I. RTE.	SECTION	COUNTY	TOTAL SHEETS	SHEET NO.
57	(27-38B) BR-1	FORD	185	181
		CONTRACT NO. 66K39		
		ILLINOIS FED. AID PROJECT		

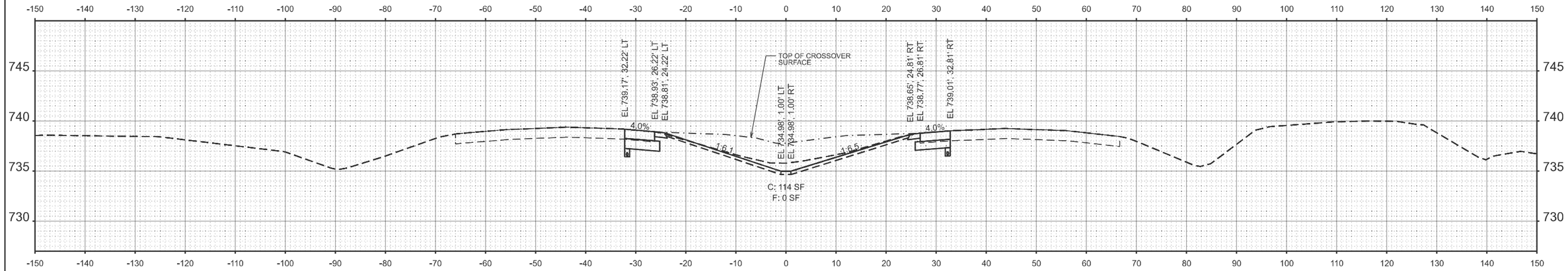

STA 1749+00.00

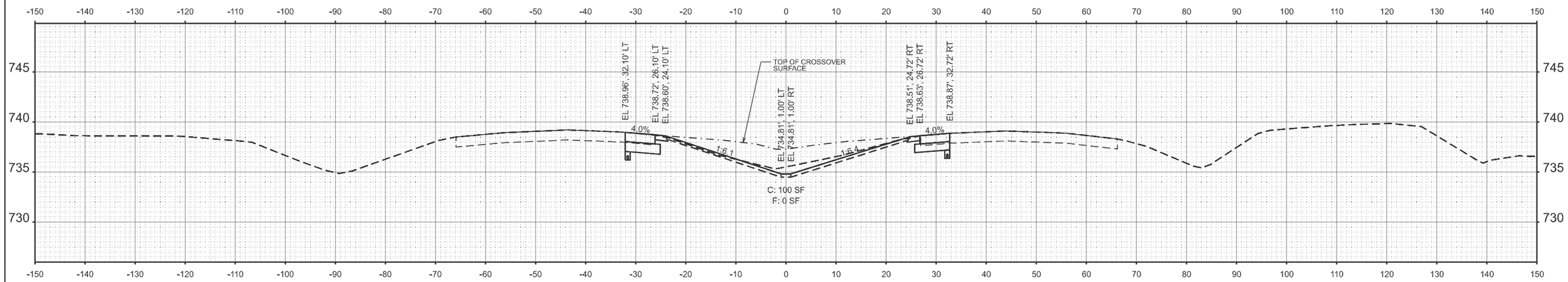

STA 1748+50.00

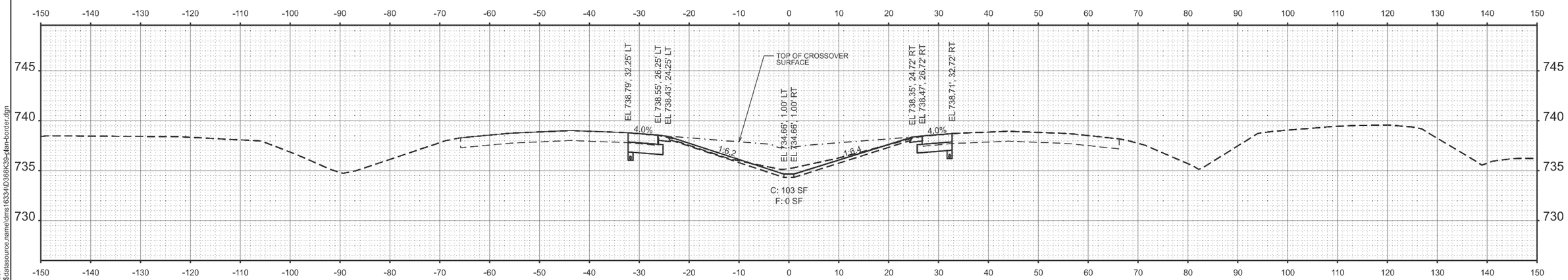

STA 1748+00.00

MODEL: 66K39 Sheet Border
FILE NAME: c:\workingdir\$datasource.name\dms16334\D366K39-plan-border.dgn

V3 Companies
7325 Janes Avenue
Woodridge, IL 60517
630 724 9200 phone
www.v3co.com

USER NAME =	DESIGNED - KDC	REVISED -	
	DRAWN - DRP	REVISED -	
	CHECKED - JWB	REVISED -	
PLOT DATE = 02/20/2026	DATE - 02/20/2026	REVISED -	

STATE OF ILLINOIS
DEPARTMENT OF TRANSPORTATION

CROSS SECTIONS
I-57

SCALE: 1"=10' | SHEET 36 OF 39 SHEETS | STA. | TO STA.

F.A.I. RTE.	SECTION	COUNTY	TOTAL SHEETS	SHEET NO.
57	(27-38B) BR-1	FORD	185	182

CONTRACT NO. 66K39

ILLINOIS | FED. AID PROJECT

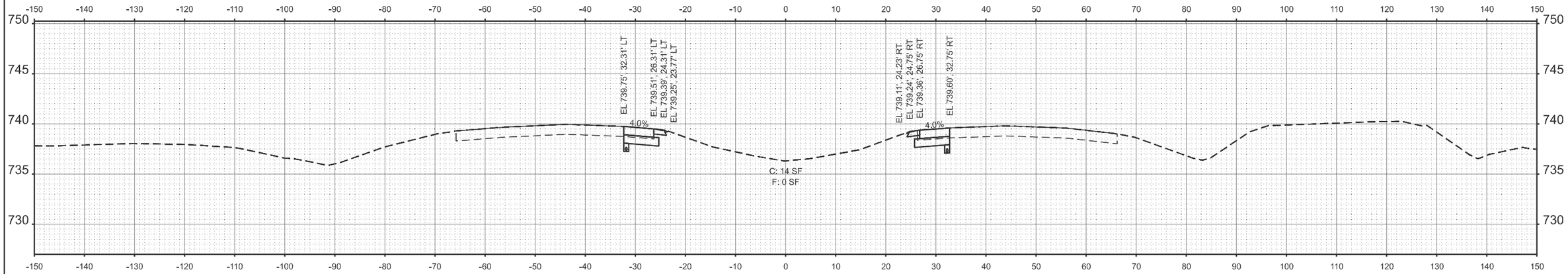

STA 1750+50.00

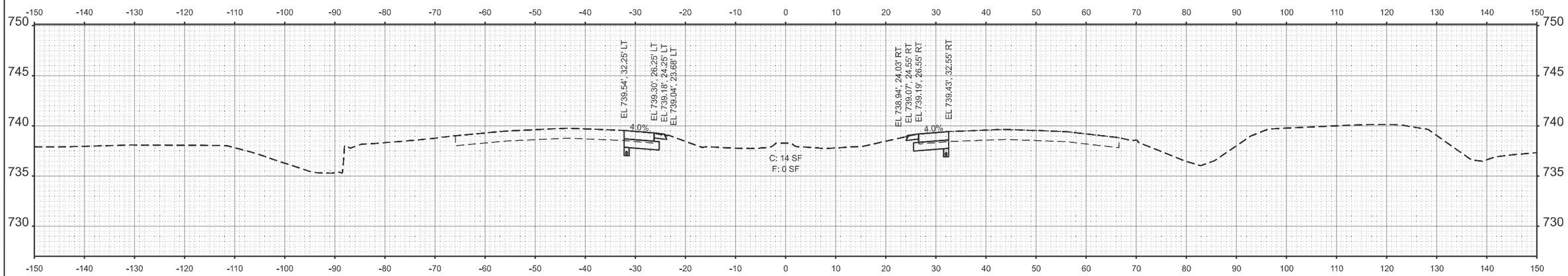

STA 1750+00.00

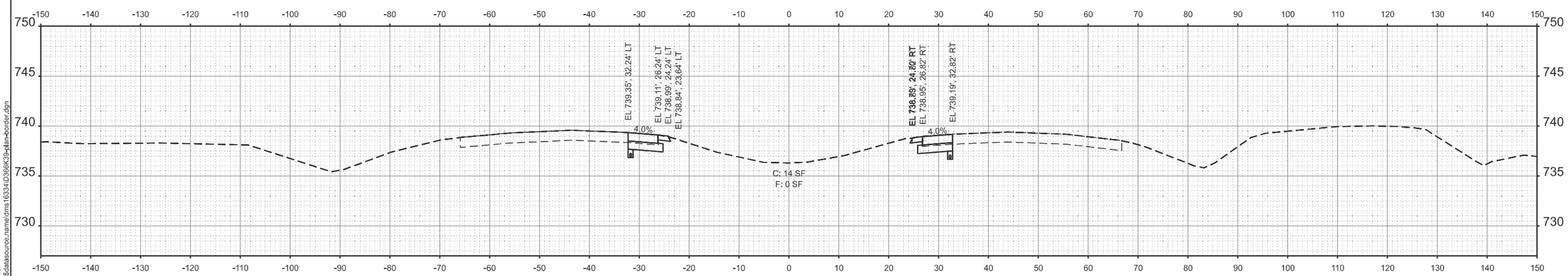

STA 1749+50.00

MODEL: 66K39 Sheet Border
FILE NAME: c:\workingdir\$catasource.name\dms16334\D366K39-plan-border.dgn

V3 Companies
7325 Janes Avenue
Woodridge, IL 60517
630 724 9200 phone
www.v3co.com

USER NAME =	DESIGNED - KDC	REVISED -	
	DRAWN - DRP	REVISED -	
	CHECKED - JWB	REVISED -	
PLOT DATE = 02/20/2026	DATE - 02/20/2026	REVISED -	

STATE OF ILLINOIS
DEPARTMENT OF TRANSPORTATION

CROSS SECTIONS
I-57

SCALE: 1"=10' | SHEET 37 OF 39 SHEETS | STA. | TO STA.

F.A.I. RTE.	SECTION	COUNTY	TOTAL SHEETS	SHEET NO.
57	(27-38B) BR-1	FORD	185	183

CONTRACT NO. 66K39

ILLINOIS | FED. AID PROJECT

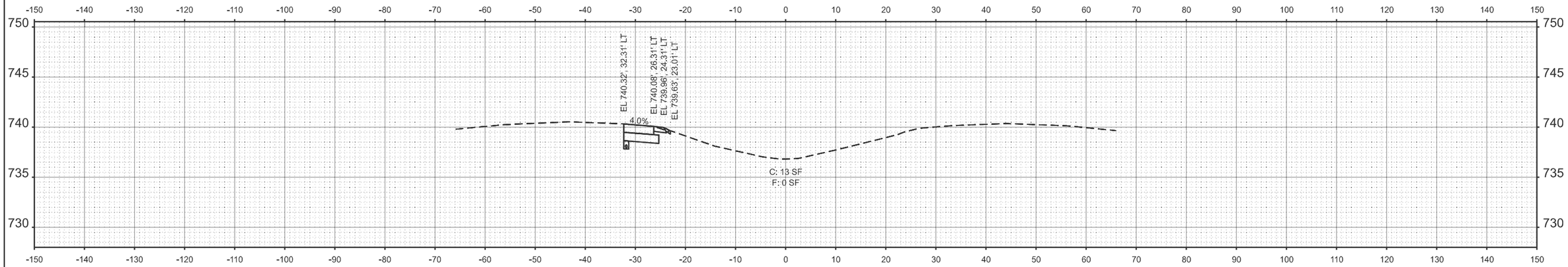

STA 1752+00.00

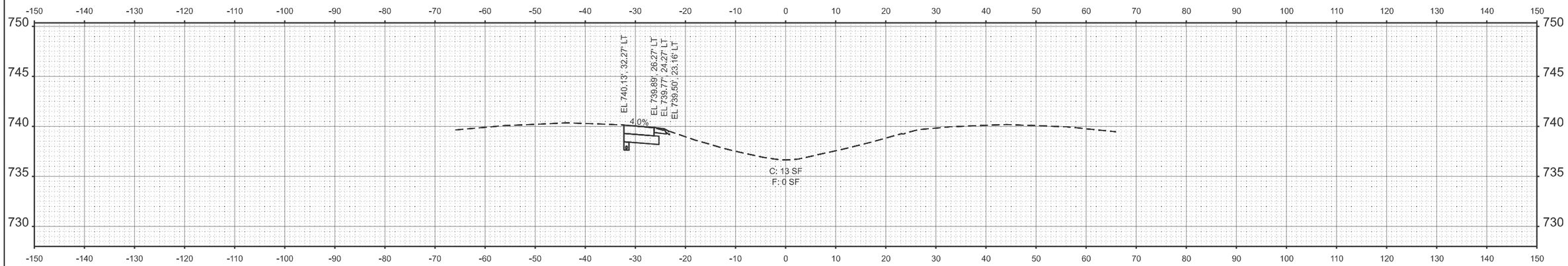

STA 1751+50.00

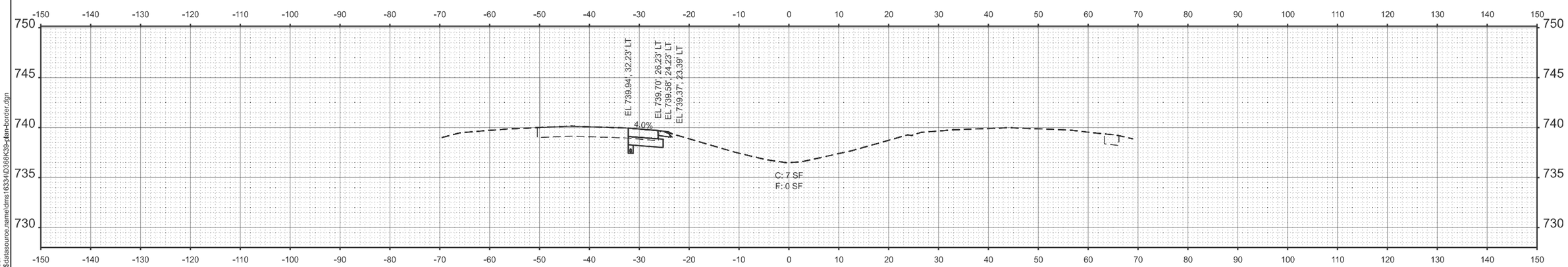

STA 1751+00.00

MODEL: 66K39 Sheet Border
FILE NAME: c:\workingdir\$datasource.name\dms16334\D366K39-plan-border.dgn

V3 Companies
7325 Janes Avenue
Woodridge, IL 60517
630 724 9200 phone
www.v3co.com

USER NAME =	DESIGNED - KDC	REVISED -	
	DRAWN - DRP	REVISED -	
	CHECKED - JWB	REVISED -	
PLOT DATE = 02/20/2026	DATE - 02/20/2026	REVISED -	

STATE OF ILLINOIS
DEPARTMENT OF TRANSPORTATION

CROSS SECTIONS
I-57

SCALE: 1"=10' | SHEET 38 OF 39 SHEETS | STA. | TO STA.

F.A.I. RTE.	SECTION	COUNTY	TOTAL SHEETS	SHEET NO.
57	(27-38B) BR-1	FORD	185	184
		CONTRACT NO. 66K39		
		ILLINOIS FED. AID PROJECT		

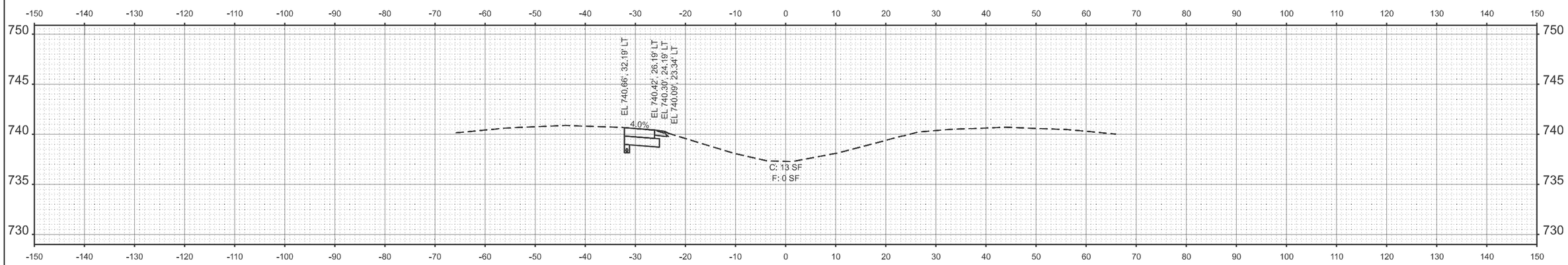

STA 1753+00.00

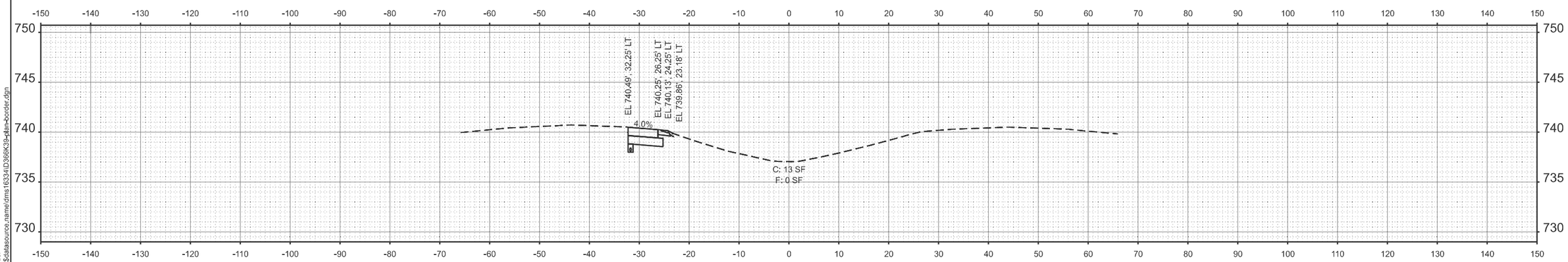

STA 1752+50.00

MODEL: 66K39 Sheet Border
FILE NAME: c:\workingdir$\datasource.name\dms16334\D366K39-plan-border.dgn

V3 Companies
7325 Janes Avenue
Woodridge, IL 60517
630 724 9200 phone
www.v3co.com

USER NAME =	DESIGNED - KDC	REVISED -	
	DRAWN - DRP	REVISED -	
	CHECKED - JWB	REVISED -	
PLOT DATE = 02/20/2026	DATE - 02/20/2026	REVISED -	

STATE OF ILLINOIS
DEPARTMENT OF TRANSPORTATION

CROSS SECTIONS
I-57

SCALE: 1"=10' | SHEET 39 OF 39 SHEETS | STA. | TO STA.

F.A.I. RTE.	SECTION	COUNTY	TOTAL SHEETS	SHEET NO.
57	(27-38B) BR-1	FORD	185	185

CONTRACT NO. 66K39

ILLINOIS | FED. AID PROJECT