06-12-2026 LETTING ITEM 012

F.A.I. RTE	SECTION	COUNTY	TOTAL SHEETS *	SHEET NO.
290	(0404-316-HB) BR 24	COOK	276	1
	ILLINOIS	CONTRACT NO. 62W99		

* 276 + 33 = 309 TOTAL SHEETS

STATE OF ILLINOIS
DEPARTMENT OF TRANSPORTATION
PROPOSED
HIGHWAY PLANS

FAI 290: I290/ IL 53 BETWEEN IL 62 (ALGONQUIN RD) TO IL 72 (HIGGINS RD)
SECTION (0404-316-HB) BR 24
PROJECT NO. NHPP I9WF (826)
BRIDGE REPAIRS AND HMA RESURFACING
LOCATION NO. 1: (016-0982) & (016-0983) IL ROUTE 72
LOCATION NO. 2: (016-0978) & (016-0979) WOODFIELD RD
LOCATION NO. 3: IL 58 (016-0980) GOLF ROAD
LOCATION NO. 4: I-90 (016-0977) I-90
COOK COUNTY

D-91-214-24

LOCATION OF SECTION INDICATED THUS: - ■ -

Ciorba Group, Inc.

DESIGN FIRM
REGISTRATION NUMBER

184-001016

CONSULTING ENGINEERS
8725 W. HIGGINS RD, SUITE 600
CHICAGO, ILLINOIS 60631 :: (773) 775-4009

IMEG
401 E. STATE ST. 4th Floor
ROCKFORD, IL
61104
PH: 815.965.6400
www.imegcorp.com

FOR INDEX OF SHEETS, SEE SHEET NO. 2

THIS PROJECT IS LOCATED WITHIN VILLAGE OF SCHAUMBURG AND CITY OF ROLLING MEADOWS

DESIGN DESIGNATION

INTERSTATE : IL 53

TRAFFIC DATA

IL 53: ADT 82,707 (2017)
P.V. = 89.9% S.U. = 3.4% M.U. =6.7%

POSTED SPEED LIMIT

IL 53 60 MPH

PROJECT LOCATION NO. 4
IL 53 OVER I-90
STRUCTURE NO. 016-0977 (SB & NB)

PROJECT LOCATION NO. 3
IL 53 OVER IL 58
STRUCTURE NO. 016-0980 (SB & NB)

SCHAUMBURG TOWNSHIP

PROJECT LOCATION NO. 2
IL 53 OVER WOODFILED ROAD
STRUCTURE NO. 016-0978 (SB)
STRUCTURE NO. 016-0979 (NB)

PROJECT LOCATION NO. 1
IL 53 OVER IL 72
STRUCTURE NO. 016-0982 (SB)
STRUCTURE NO. 016-0983 (NB)

C-91-272-24

R 9E

T 43N

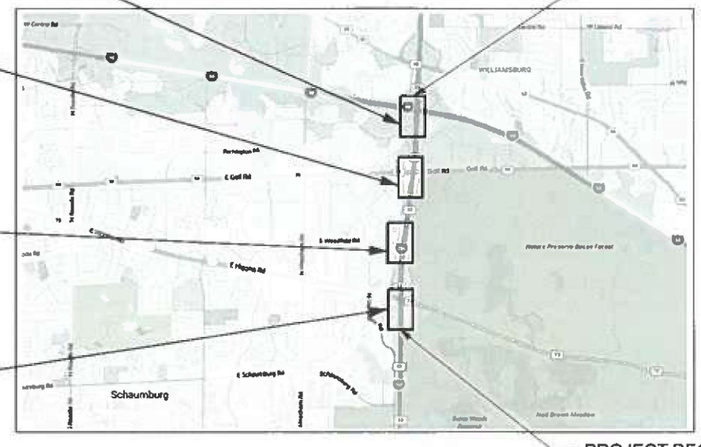

PROJECT ENDS
STA. 152+23

PROJECT BEGINS
STA. 61+26

ELK GROVE TOWNSHIP

N

LOCATION MAP NOT TO SCALE

GROSS LENGTH = 10,349 FT. = 1.96 MILE
NET LENGTH = 10,349 FT. = 1.96 MILE

100' 200' 300' — 1"= 100'
0 10' 20' 30' — 1"= 10'
0 50' 100' — 1"= 50'
0 50' 100' — 1"= 40'
0 50' 100' — 1"= 30'
0 50' 100' — 1"= 20'

FULL SIZE PLANS HAVE BEEN PREPARED USING STANDARD ENGINEERING SCALES. REDUCED SIZED PLANS WILL NOT CONFORM TO STANDARD SCALES. IN MAKING MEASUREMENTS ON REDUCED PLANS, THE ABOVE SCALES MAY BE USED.

J.U.L.I.E.
JOINT UTILITY LOCATION INFORMATION FOR EXCAVATION
1-800-892-0123 OR 811

MEADE ELECTRIC CO., DISTRICT ONE ELECTRICAL MAINTENANCE CONTRACTOR LOCATED IDOT ELECTRICAL EQUIPMENT AND UNDERGROUND CABLE. 773-287-7672

PROJECT MANAGER PRAVEEN KAINI, P.E.

CONTRACT NO. 62W99

LICENSED PROFESSIONAL ENGINEER — BRADLEY S. LANGE — 062-055472 — OF ILLINOIS
DATE: 3/13/2026
SEAL EXPIRES:11/30/2027
SHEETS: 12 - 14 16 - 75 212 -
Bradley S Lange

ALI A. GHARAHTI — 081-005060 — LICENSED STRUCTURAL ENGINEER — EAST MOLINE — STATE OF ILLINOIS
DATE: 3/13/2026
SEAL EXPIRES:11/30/2026
SHEETS: 127 - 167

MATTHEW J. LEHAN — 062-057159 — LICENSED PROFESSIONAL ENGINEER OF ILLINOIS
DATE: 3/13/2026
SEAL EXPIRES:11/30/2027
SHEETS: 1 - 11 15
Matthew J Lehan

STATE OF ILLINOIS — BRETT W. SAUTER — 081-006844 — LICENSED STRUCTURAL ENGINEER
DATE:3/13/2026
SEAL EXPIRES:11/30/2026
SHEETS: 168 - 208

JOSEPH M. VONDRA — 062-055846 — LICENSED PROFESSIONAL ENGINEER OF ILLINOIS
DATE:3/13/2026
SEAL EXPIRES:11/30/2027
SHEETS: 76 - 126

STATE OF ILLINOIS
DEPARTMENT OF TRANSPORTATION

SUBMITTED March 19th 2026
REGIONAL ENGINEER

May 8 2026
ENGINEER OF DESIGN AND ENVIRONMENT

May 8 2026
DIRECTOR OF HIGHWAYS PROJECT IMPLEMENTATION

PRINTED BY THE AUTHORITY OF THE STATE OF ILLINOIS

INDEX OF SHEETS

SHEET NO.	DESCRIPTION
1	COVER SHEET
2	INDEX OF SHEETS. HIGHWAY STANDARDS AND GENERAL NOTES
3 - 11B	SUMMARY OF QUANTITIES
12 - 14	TYPICAL SECTIONS
15	MAINTENANCE OF TRAFFIC - SEQUENCE OF CONSTRUCTION
16	SEQUENCE OF OPERATIONS - RESURFACING
17 - 20	SEQUENCE OF OPERATIONS - RESURFACING TYPICAL SECTIONS
21 - 24	DETOUR PLANS
25 - 42	MAINTENANCE OF TRAFFIC STAGE 1
43 - 59	MAINTENANCE OF TRAFFIC STAGE 2
59A - 59F	MAINTENANCE OF TRAFFIC STAGE 3
60 - 66	ROADWAY AND PAVEMENT MARKING PLANS
67 - 75	PLAN AND PROFILE - DITCH RE-GRADING
75A - 75U	TRAFFIC SIGNAL PLAN
76	LIGHTING GENERAL NOTES AND LEGEND
77 - 85A	PROPOSED LIGHTING PLAN
86 - 89	UNDERPASS LIGHTING REMOVAL PLAN
90 - 95	PROPOSED UNDERPASS LIGHTING PLAN
96 - 98	SINGLE LINE DIAGRAM
99 - 100	LUMINARE INSTALLATION DETAILS
101	ITS GENERAL NOTES AND LEGEND
102 - 108	ITS AND SURVEILLANCE REMOVAL PLAN
109 - 115	PROPOSED ITS AND SURVEILLANCE PLAN
116 - 126	ITS DETAILS
127 - 134	STRUCTURAL PLANS - STRUCTURE NO 016-0982
135 - 147	STRUCTURAL PLANS - STRUCTURE NO 016-0983
148 - 154	STRUCTURAL PLANS - STRUCTURE NO 016-0978
155 - 167A	STRUCTURAL PLANS - STRUCTURE NO 016-0979
168 - 187A	STRUCTURAL PLANS - STRUCTURE NO 016-0980
188 - 211A	STRUCTURAL PLANS - STRUCTURE NO 016-0977
212 - 276	CROSS SECTIONS

TOLLWAY STANDARDS

STANDARD NO.	DESCRIPTION
E2-12	LANE CLOSURE DETAILS
E3-12	SHOULDER CLOSURE DETAILS

DISTRICT ONE STANDARDS

STANDARD NO.	DESCRIPTION
BD-08	DETAILS FOR FRAMES AND LIDS ADJUSTMENTS WITH MILLING
BD-22	PAVEMENT PATCHING FOR HMA SURFACED PAVEMENT
BD-24	CURB AND GUTTER REMOVAL AND REPLACEMENT
BD-32	BUTT JOINT AND HMA TAPER DETAILS

DISTRICT ONE STANDARDS CONT.

STANDARD NO.	DESCRIPTION
BD-51	BENCHING DETAIL FOR EMBANKMENT WIDENING
TC-08	ENTRANCE AND EXIT RAMP CLOSURE DETAILS
TC-09	FREEWAY SINGLE AND MULTI-LANE WEAVE
TC-10	TRAFFIC CONTROL AND PROTECTION FOR SIDE ROADS, INTERSECTIONS, AND DRIVEWAYS
TC-11	RAISED REFLECTIVE PAVEMENT MARKERS (SNOW-PLOW RESISTANT)
TC-12	MULTI -LANE FREEWAY PAVEMENT MARKING
TC-13	DISTRICT ONE TYPICAL PAVEMENT MARKINGS
TC-16	SHORT-TERM PAVEMENT MARKING LETTERS AND SYMBOLS
TC-17	TRAFFIC CONTROL FOR FREEWAY SHOULDER CLOSURES AND PARTIAL RAMP CLOSURES
TC-18	FREEWAY/EXPRESSWAY SIGNING FOR FLAGGING OPERATIONS AT WORK ZONE OPENINGS
TC-21	DETOUR SIGNING FOR CLOSING STATE HIGHWAYS
TC-22	ARTERIAL ROAD INFORMATION SIGN
TC-25	FREEWAY CENTER LANE CLOSURE SHOULDER LANE
TS-01	STANDARD TRAFFIC SIGNAL DESIGN DETAILS

HIGHWAY STANDARDS

STANDARD NO.	DESCRIPTION
000001-09	STANDARD SYMBOLS, ABBREVIATIONS AND PATTERNS
280001-07	TEMPORARY EROSION CONTOL SYSTEMS
420401-13	PAVEMENT CONNECTOR (PCC) FOR BRIDGE APPROACH SLAB
604001-05	FRAME AND LIDS, TYPE 1
606001-09	CONCRETE CURB TYPE B AND COMBINATION CONCRETE CURB AND GUTTER
630001-13	STEEL PLATE BEAM GUARDRAIL
642001-03	SHOULDER RUMBLE STRIPS, 16 IN.
664001-02	CHAIN LINK FENCE
701101-05	OFF-RD OPERATIONS, MULTILANE, 15' (4.5 m) to 24" (600 mm) FROM PAVEMENT EDGE
701400-12	APPROACH TO LANE CLOSURE, FREEWAY/EXPRESSWAY
701401-13	LANE CLOSURE, FREEWAY/EXPRESSWAY
701402-12	LANE CLOSURE, FREEWAY/EXPRESSWAY WITH BARRIER
701411-09	LANE CLOSURE, MULTILANE, AT ENTRANCE OR EXIT RAMP, FOR SPEEDS ≥ 45 MPH
701426-09	LANE CLOSURE, MULTILANE, INTERMITTENT OR MOVING OPER., FOR SPEEDS ≥ 45 MPH
701427-05	LANE CLOSURE, MULTI-LANE, INTERMITTENT OR MOVING OPER., FOR SPEEDS ≤ 40 MPH
701428-01	TRAFFIC CONTROL SETUP AND REMOVAL, FREEWAY/EXPRESSWAY
701446-11	TWO LANE CLOSURE, FREEWAY/EXPRESSWAY
701601-09	URBAN LANE CLOSURE, MULTLANE, 1W OR 2W WITH NONTRAVERSABLE MEDIAN
701701-10	URBAN LANE CLOSURE, MULTILANE INTERSECTION
701801-06	SIDEWALK, CORNER OR CROSSWALK CLOSURE
701901-11	TRAFFIC CONTROL DEVICES
704001-08	TEMPORARY CONCRETE BARRIER
782006-01	GUARDRAIL AND BARRIER WALL REFLECTOR MOUNTING DETAILS
838001-01	BREAKAWAY DEVICES

GENERAL NOTES

1. BEFORE STARTING ANY EXCAVATION, THE CONTRACTOR SHALL CALL "JULIE" AT (800) 892-0123 OR 811 FOR FIELD LOCATIONS OF BURIED ELECTRIC, TELEPHONE, AND GAS FACILITIES. (48 HOURS NOTIFICATION REQUIRED)
2. NO CONSTRUCTION SHALL BEGIN UNTIL ALL PROPER TEMPORARY SIGNS AND BARRICADES HAVE BEEN INSTALLED.
3. THE CONTRACTOR SHALL COORDINATE CONSTRUCTION ACTIVITIES WITH UTILITY COMPANIES AND THE LOCAL MUNICIPALITY.
4. THE CONTRACTOR SHALL BE RESPONSIBLE FOR THE PROTECTION OF ALL UNDERGROUND OR SURFACE UTILITIES EVEN THOUGH THEY MAY NOT BE SHOWN ON PLANS. ANY UTILITY THAT IS DAMAGED DURING CONSTRUCTION SHALL BE REPLACED TO THE SATISFACTION OF THE ENGINEER AT THE CONTRACTOR'S OWN EXPENSE.
5. THE CONTRACTOR WILL NOT BE ALLOWED TO SET UP A YARD OR FIELD OFFICE ON STATE PROPERTY WITHOUT WRITTEN PERMISSION FROM THE DEPARTMENT.
6. IT SHALL BE THE CONTRACTOR'S RESPONSIBILITY TO VERIFY ALL DIMENSIONS AND CONDITIONS EXISTING IN THE FIELD PRIOR TO CONSTRUCTION AND ORDERING OF MATERIALS.
7. DO NOT SCALE PLANS FOR CONSTRUCTION DIMENSIONS.
8. THE CONTRACTOR SHALL CONTACT THE DISTRICT ONE TRAFFIC CONTROL SUPERVISOR AT (847) 705-4470 A MINIMUM OF 72 HOURS IN ADVANCE OF BEGINNING WORK.
9. BEFORE BEGINNING ANY WORK, THE CONTRACTOR SHALL RETAIN AND RECORD FOR FUTURE REFERENCE, ALL EXISTING PAVEMENT MARKING LINES (AND RAISED REFLECTIVE PAVEMENT MARKERS) IN ORDER THAT THESE LOCATIONS CAN BE RE-ESTABLISHED FOR STRIPING. EXACT LOCATIONS OF ALL PAVEMENT MARKINGS SHALL BE AS DIRECTED BY THE ENGINEER.
10. TRAFFIC CONDITIONS, ACCIDENTS AND OTHER UNFORESEEN EMERGENCY CONDITIONS MAY REQUIRE THE ENGINEER TO RESTRICT, MODIFY OR REMOVE LANE CLOSURES OR CANALIZATION SHOWN IN THE PLANS. THE CONTRACTOR SHALL MAKE NECESSARY ADJUSTMENTS AS DIRECTED BY THE ENGINEER WITHOUT DELAY. THE CONTRACTOR SHALL RESPOND TO ANY REQUEST MADE BY THE ENGINEER FOR CORRECTION WITHIN TWO HOURS FROM THE TIME OF NOTIFICATION.
11. ALL SAW CUTTING REQUIRED SHALL BE INCIDENTAL TO CORRESPONDING PAY ITEMS AND SHALL BE PERFORMED PRIOR TO BEGINNING REMOVALS.
12. THE CONTRACTOR SHALL REQUEST AND GAIN APPROVAL FROM THE ILLINOIS DEPARTMENT OF TRANSPORTATION'S EXPRESSWAY TRAFFIC OPERATIONS ENGINEER AT WWW.IDOTICS.COM TWENTY-FOUR HOURS IN ADVANCE OF ALL DAILY LANE, RAMP AND SHOULDER CLOSURES AND 7 DAYS IN ADVANCE OF ALL DAILY LANE, RAMP AND SHOULDER CLOSURES AND 7 DAYS IN ADVANCE OF ALL PERMANENT AND WEEKEND CLOSURES ON ALL FREEWAYS AND/OR EXPRESSWAYS IN DISTRICT ONE. THIS ADVANCE NOTIFICATION IS CALCULATED BASED ON WORKWEEK OF MONDAY THROUGH FRIDAY AND SHALL NOT INCLUDE WEEKENDS OR HOLIDAYS.
13. THE CONTRACTOR SHALL CONTACT KALPANA KANNAN-HOSADURGA THE DISTRICT ONE TRAFFIC CONTROL SUPERVISOR AT KALPANA.KANNAN-HOSADURGA@ILLINOIS.GOV AND EXPRESSWAY TRAFFIC CONTROL SUPERVISOR AT CARLOS.MUNOZ@ILLINOIS.GOV A MINIMUM OF 72 HOURS IN ADVANCE OF BEGINNING WORK.
14. IDOT FACILITIES ARE NOT LOCATED BY JULIE. IDOT ELECTRICAL FACILITIES INCLUDING ROADWAY LIGHTING, FIBER OPTIC, ITS EQUIPMENT, TRAFFIC SIGNAL, AND PUMP STATION FACILITIES ARE LOCATED BY THE DEPARTMENT'S ELECTRICAL MAINTENANCE CONTRACTOR. AS OF THE LETTING DATE, CONTACT MEADE ELECTRIC COMPANY AT 773-287-76-72.
15. THE AGGREGATE GRADATION FOR THE LOWER 9 INCHES OF AGGREGATE SUBGRADE IMPROVEMENT 12" SAHLL BE CS 1 OR RR 1.
16. GEOTECHNICAL FABRIC FOR GROUND STABILIZATION HAS BEEN PROVIDED FOR USE AT THE LOCATIONS INDICATED FOR SOILS THAT TEND TO BE UNSTABLE AND/OR UNSTABLE. THE ACTUAL NEED FOR REMOVAL AND REPLACEMENT WITH ABOVE ITEM WILL BE DETERMINED IN THE FIELD AT THE TIME OF CONSTRUCTION BY THE GEOTECHNICAL ENGINEER. ALL POTENTIALLY UNSTABLE SOILS SHOULD BE TESTED WITH A STATIC OR DYNAMIC CONE PENETROMETER AND TREATED IN ACCORDANCE WITH ARTICLE 301.04 OF THE STANDARD SPECIFICATIONS AND IDOT SUBGRADE STABILITY MANUAL. IF UNSTABLE AND/OR UNSUITABLE SOILS ARE NOT ENCOUNTERED, THEN THE QUANTITY SHALL BE DEDUCTED AND NO ADDITIONAL COMPENSATION WILL BE DUE TO THE CONTRACTOR.
17. GEOTECHNICAL FABRIC FOR GROUND STABILIZATION SHALL BE WOVEN.
18. SHORT TERM PAVEMENT MARKINGS SHALL NOT BE USED ON THE EXPRESSWAY.
19. TEMPORARY PAVEMENT MARKING PAINT SHALL NOT BE USED ON THE EXPRESSWAY.
20. TEMPORARY OR SHORT TERM PAVEMENT MARKINGS ON INTERMEDIATE SURFACES PERTAINING TO THE PAVEMENT RESURFACING PORTION OF THE PROJECT SHALL NOT BE REMOVED UNLESS AUTHORIZED BY THE ENGINEER.
20. TEMPORARY TYPE IV TAPE SHALL BE USED ON ALL FINAL SURFACES AND FOR SHORT TERM PAVEMENT MARKINGS ON FINAL SURFACES ON ARTERIAL ROADWAYS.

DATE PLOTTED = 5/1/2026 12:34:01 AM
PEN TABLE = 20210806.tbl
PLOT CONFIG = CGI-PDF.pltcfg
MODEL: $MODELNAMES
FILE NAME: pw://ciorba-pw.bentley.com:ciorba-pw-01/Documents/Projects/IL_DOT/D1/00211693.06/CADD Data/Sht/Misc Sheets/D162N01-sht-gennote.dgn

CiorbaGroup
8725 W. Higgins Rd, Ste 600, Chicago, IL 60631
P 773.775.4009 | www.ciorba.com

USER NAME = jvondra	DESIGNED -	REVISED -
	DRAWN -	REVISED -
PLOT SCALE = 0.16666667 ' / In.	CHECKED -	REVISED -
PLOT DATE = 5/1/2026	DATE -	REVISED -

STATE OF ILLINOIS
DEPARTMENT OF TRANSPORTATION

I-290/IL 53 HMA RESURFACING AND BRIDGE REPAIRS
INDEX OF SHEETS, HIGHWAY STANDARDS, GENERAL NOTES

SCALE: | SHEET OF SHEETS | STA. | TO STA.

F.A.I. RTE.	SECTION	COUNTY	TOTAL SHEETS	SHEET NO.
290	(0404-316-HB) BR 24	COOK	276	2
		CONTRACT NO. 62W99		
	ILLINOIS	FED. AID PROJECT		

CODE NO.	ITEM	UNIT	TOTAL	0005 ROADWAY FED 90% ST 10%	0047 STRUCTURE FED 90% ST 10% 016-0977	0047 STRUCTURE FED 90% ST 10% 016-0980	0047 STRUCTURE FED 90% ST 10% 016-0978 & 016-0979	0047 STRUCTURE FED 90% ST 10% 016-0982 & 016-0983	0021 ELECTRICAL FED 90% ST 10%	0005 ROADWAY ST 100%
20200100	EARTH EXCAVATION	CU YD	3,841	3,841						
20900110	POROUS GRANULAR BACKFILL	CU YD	113	113						
21001000	GEOTECHNICAL FABRIC FOR GROUND STABALIZATION	SQ YD	39		39					
21101615	TOPSOIL FURNISH AND PLACE, 4"	SQ YD	15,302	15,302						
25000210	SEEDING, CLASS 2A	ACRE	16.0	16.0						
25000400	NITROGEN FERTILIZER NUTRIENT	POUND	1,140	1,140						
25100630	EROSION CONTROL BLANKET	SQ YD	77,440	77,440						
25000600	POTASSIUM FERTILIZER NUTRIENT	POUND	1,140	1,140						
25200100	SODDING	SQ YD	200							200
28100203	STONE RIPRAP, CLASS A2	TON	9		9					
25200100	STONE RIP RAP, CLASS A3	SQ YD	70			70				
30300112	AGGREGATE SUBGRADE IMPROVEMENT 12"	SQ YD	102		102					
40600290	BITUMINOUS MATERIALS (TACK COAT)	POUND	127,623	127,623						
40600370	LONGITUDINAL JOINT SEALANT	FOOT	81,693	81,693						
40600372	LONGITUDINAL JOINT SEALANT, HALF-WIDTH	FOOT	27,231	27,231						
40600405	MATERIAL TRANSFER DEVICE	TON	21,740	21,740						
40600982	HOT-MIX ASPHALT SURFACE REMOVAL - BUTT JOINT	SQ YD	1,140	1,140						
40603085	HOT-MIX ASPHALT BINDER COURSE, IL-19.0, N70	TON	5,550	5,550						

CiorbaGroup
8725 W. Higgins Rd, Ste 600, Chicago, IL 60631
P 773.775.4009 | www.ciorba.com

USER NAME =	DESIGNED - SIK	REVISED -
	CHECKED - BWS	REVISED -
PLOT SCALE =	DRAWN - ETK, SIK	REVISED -
PLOT DATE =	CHECKED - BWS	REVISED -

STATE OF ILLINOIS
DEPARTMENT OF TRANSPORTATION

I-290/IL 53 HMA RESURFACING AND BRIDGE REPAIRS
SUMMARY OF QUANTITIES

F.A.I. RTE.	SECTION	COUNTY	TOTAL SHEETS	SHEET NO.
290	(0404-316-HB) BR24	COOK	276	3
		CONTRACT NO. 62W99		
	ILLINOIS	FED. AID PROJECT		

MODEL: $MODELNAMES
FILE NAME: pw://ciorba-pw.bentley.com:ciorba-pw-01/Documents/Projects/IL_DOT/D1/0021693.06/CADD Data/Sht/MiscSheets/62W99-SOQ.dgn
3/19/2026 8:30:21 PM

REV-SEP

CODE NO.	ITEM	UNIT	TOTAL	0005 ROADWAY FED 90% ST 10%	0047 STRUCTURE FED 90% ST 10% 016-0977	0047 STRUCTURE FED 90% ST 10% 016-0980	0047 STRUCTURE FED 90% ST 10% 016-0978 & 016-0979	0047 STRUCTURE FED 90% ST 10% 016-0982 & 016-0983	0021 ELECTRICAL FED 90% ST 10%	0005 ROADWAY ST 100%
40603200	POLYMERIZED HOT-MIX ASPHALT BINDER COURSE, IL-4.75, N50	TON	2,232	2,232						
40604062	HOT-MIX ASPHALT SURFACE COURSE, IL-9.5, MIX "D", N70	TON	4,051	4,051						
40605015	POLYMERIZED HOT-MIX ASPHALT BINDER COURSE, STONE MATRIX ASPHALT 12.5, N80	TON	10,928	10,928						
40605026	POLYMERIZED HOT-MIX ASPHALT SURFACE COURSE, STONE MATRIX ASPHALT, 9.5, MIX "F", N80	TON	5,087	5,087						
40605036	POLYMERIZED HOT-MIX ASPHALT SURFACE COURSE, STONE MATRIX ASPHALT, 12.5, MIX "F", N80	TON	10,928	10,928						
42000070	PAVEMENT CONNECTOR (HMA) FOR BRIDGE APPROACH SLAB	SQ YD	571	446	105					
44000158	HOT-MIX ASPHALT SURFACE REMOVAL, 2 1/4"	SQ YD	4,414	4,414						
44002210	HOT-MIX ASPHALT OVER PATCHES, 2 1/2"	SQ YD	510							510
44000164	HOT-MIX ASPHALT SURFACE REMOVAL, 3 3/4"	SQ YD	42,731	42,731						
44002216	HOT-MIX ASPHALT OVER PATCHES, 4"	SQ YD								
44000165	HOT-MIX ASPHALT SURFACE REMOVAL, 4"	SQ YD	99,358	99,358						
44200573	CLASS A PATCHES, TYPE I, 12 INCH	SQ YD	4	4						
44201761	CLASS D PATCHES, TYPE I, 10 INCH	SQ YD	10							10
44200577	CLASS A PATCHES, TYPE II, 12 INCH	SQ YD	9	9						
44201765	CLASS D PATCHES, TYPE II, 10 INCH	SQ YD	220							220
44201741	CLASS D PATCHES, TYPE II, 8 INCH	SQ YD	585	585						
44201769	CLASS D PATCHES, TYPE III, 10 INCH	SQ YD	120							120
44201745	CLASS D PATCHES, TYPE III, 8 INCH	SQ YD	520	520						
44201771	CLASS D PATCHES, TYPE IV, 10 INCH	SQ YD	160							160
44201747	CLASS D PATCHES, TYPE IV, 8 INCH	SQ YD	267	267						
44213200	SAW CUTS	FOOT	48	48						

CiorbaGroup
8725 W. Higgins Rd, Ste 600, Chicago, IL 60631
P 773.775.4009 | www.ciorba.com

USER NAME =	DESIGNED - SIK	REVISED -
	CHECKED - BWS	REVISED -
PLOT SCALE =	DRAWN - ETK, SIK	REVISED -
PLOT DATE =	CHECKED - BWS	REVISED -

STATE OF ILLINOIS
DEPARTMENT OF TRANSPORTATION

I-290\L 53 HMA RESURFACING AND BRIDGE REPAIRS
SUMMARY OF QUANTITIES

F.A.I. RTE.	SECTION	COUNTY	TOTAL SHEETS	SHEET NO.
290	(0404-316-HB) BR24	COOK	276	4
		CONTRACT NO. 62W99		
	ILLINOIS	FED. AID PROJECT		

REV-SEP

MODEL: sMODELNAMES
FILE NAME: pw://ciorba-pw.bentley.com:ciorba-pw-01/Documents/Projects/IL_DOT/D1/0021693.06/CADD Data/Sht/Misc Sheets/62W99-SSQ.dgn
3/19/2026 8:30:21 PM

CODE NO.	ITEM	UNIT	TOTAL	0005 ROADWAY FED 90% ST 10%	0047 STRUCTURE FED 90% ST 10% 016-0977	0047 STRUCTURE FED 90% ST 10% 016-0980	0047 STRUCTURE FED 90% ST 10% 016-0978 & 016-0979	0047 STRUCTURE FED 90% ST 10% 016-0982 & 016-0983	0021 ELECTRICAL FED 90% ST 10%	0005 ROADWAY ST 100%
44213202	TIE BARS 1"	EACH	9	9						
48102100	AGGREGATE WEDGE SHOULDER, TYPE B	TON	538	538						
50102400	CONCRETE REMOVAL	CU YD	170.1		73.5	60.6	30.0	6		
50157300	PROTECTIVE SHIELD	SQ YD	951		614	337				
50200100	STRUCTURE EXCAVATION	CU YD	256		256					
50300225	CONCRETE STRUCTURES	CU YD	4.5		4.5					
50300255	CONCRETE SUPERSTRUCTURE	CU YD	160.6		64.5	60.1	30.0	6		
50300300	PROTECTIVE COAT	SQ YD	335		160	175				
50800205	REINFORCEMENT BARS, EPOXY COATED	POUND	33,040		10,740	11,360	9,290	1,650		
50800515	BAR SPLICERS	EACH	204		60	96	32	16		
52000110	PREFORMED JOINT STRIP SEAL	FOOT	869		286	263	168	152		
53016000	DECK SLAB REPAIR (PARTIAL)	SQ YD	141		2	19	60	60		
53016001	DECK SLAB REPAIR (FULL DEPTH, TYPE I)	SQ YD	1		1					
53016002	DECK SLAB REPAIR (FULL DEPTH, TYPE II)	SQ YD	88		43	27	18			
53212754	STRUCTURAL REPAIR OF CONCRETE (DEPTH EQUAL TO OR LESS THAN 5 INCHES)	SQ FT	8,237		5,478	1,614	485	660		

CiorbaGroup
8725 W. Higgins Rd, Ste 600, Chicago, IL 60631
P 773.775.4009 | www.ciorba.com

USER NAME =	DESIGNED - SIK	REVISED -
	CHECKED - BWS	REVISED -
PLOT SCALE =	DRAWN - ETK, SIK	REVISED -
PLOT DATE =	CHECKED - BWS	REVISED -

STATE OF ILLINOIS
DEPARTMENT OF TRANSPORTATION

I-290\L 53 HMA RESURFACING AND BRIDGE REPAIRS
SUMMARY OF QUANTITIES

F.A.I. RTE.	SECTION	COUNTY	TOTAL SHEETS	SHEET NO.
290	(0404-316-HB) BR24	COOK	276	5
		CONTRACT NO. 62W99		
	ILLINOIS	FED. AID PROJECT		

MODEL: sMODELNAMES
FILE NAME: pw://ciorba-pw.bentley.com:ciorba-pw-01/Documents/Projects/IL_DOT/D1/0021693.06/CADD Data/Sht/Misc Sheets/62W99-SSQ.dgn

3/19/2026 8:30:21 PM

REV-SEP

	CODE NO.	ITEM	UNIT	TOTAL	0005 ROADWAY FED 90% ST 10%	0047 STRUCTURE FED 90% ST 10% 016-0977	0047 STRUCTURE FED 90% ST 10% 016-0980	0047 STRUCTURE FED 90% ST 10% 016-0978 & 016-0979	0047 STRUCTURE FED 90% ST 10% 016-0982 & 016-0983	0021 ELECTRICAL FED 90% ST 10%	0005 ROADWAY ST 100%
	53212755	STRUCTURAL REPAIR OF CONCRETE (GREATER THAN 5 INCHES)	SQ FT	1,980		749	1,231				
	60406000	FRAMES AND LIDS, TYPE 1	EACH	5							5
	58700300	CONCRETE SEALER	SQ FT	3,536			3,536				
	60406100	FRAMES AND LIDS, TYPE 1 CLOSED LID	EACH	5							5
	64200116	SHOULDER RUMBLE STRIPS, 16 INCH	FOOT	41,603	41,603						
	63301225	REMOVE AND RERECT STEEL PLATE BEAM GUARDRAIL, TYPE B	FOOT	10,300	10,300						
*	66900200	NON-SPECIAL WASTE DISPOSAL	CU YD	10,000	10,000						
	66400105	CHAIN LINK FENCE 4'	FOOT	5,280							5,280
*	66900530	SOIL DISPOSAL ANALYSIS	EACH	10	10						
*	66901001	REGULATED SUBSTANCES PRE-CONSTRUCTION PLAN	L SUM	1	1						
*	66901003	REGULATED SUBSTANCES FINAL CONSTRUCTION REPORT	L SUM	1	1						
*	66901006	REGULATED SUBSTANCES MONITORING	CAL DA	150	150						
	70300100	SHORT TERM PAVEMENT MARKING	FOOT	73,848	73,848						
	67000400	ENGINEER'S FIELD OFFICE, TYPE A	CAL MO	18	18						
	70300150	SHORT TERM PAVEMENT MARKING REMOVAL	FOOT	73,848	73,848						
	67100100	MOBILIZATION	L SUM	1	1						
	70300211	TEMPORARY PAVEMENT MARKING LETTERS AND SYMBOLS - PAINT	SQ FT	150	150						
	70107025	CHANGEABLE MESSAGE SIGN	CAL DA	276	276						
	70300221	TEMPORARY PAVEMENT MARKING LINE 4" - PAINT	FOOT	105,343	105,343						
	70200100	NIGHTTIME WORK ZONE LIGHTING	L SUM	1	1						
	70300241	TEMPORARY PAVEMENT MARKING LINE 6" - PAINT	FOOT	5,652	5,652						
	70300150	SHORT TERM PAVEMENT MARKING REMOVAL	SQ FT	73,848	73,848						
	70300251	TEMPORARY PAVEMENT MARKING LINE 8" - PAINT	FOOT	42,279	42,279						
	70307100	TEMPORARY PAVEMENT MARKING LETTERS AND SYMBOLS - TYPE IV TAPE	SQ FT	110	110						
	70300281	TEMPORARY PAVEMENT MARKING LINE 24" - PAINT	FOOT	100	100						
	70307120	TEMPORARY PAVEMENT MARKING - LINE 4" - TYPE IV TAPE	FOOT	105,343	105,343						
	70303130	TEMPORARY PAVEMENT MARKING LINE 5" - MODIFIED URETHANE	FOOT	1,988	1,988						

* SPECIALTY ITEM

CiorbaGroup
8725 W. Higgins Rd, Ste 600, Chicago, IL 60631
P 773.775.4009 | www.ciorba.com

USER NAME =	DESIGNED - SIK	REVISED -
	CHECKED - BWS	REVISED -
PLOT SCALE =	DRAWN - ETK, SIK	REVISED -
PLOT DATE =	CHECKED - BWS	REVISED -

STATE OF ILLINOIS
DEPARTMENT OF TRANSPORTATION

I-290/L 53 HMA RESURFACING AND BRIDGE REPAIRS
SUMMARY OF QUANTITIES

F.A.I. RTE.	SECTION	COUNTY	TOTAL SHEETS	SHEET NO.
290	(0404-316-HB) BR24	COOK	276	6
		CONTRACT NO. 62W99		
	ILLINOIS	FED. AID PROJECT		

MODEL: sMODELNAMES
FILE NAME: pw://ciorba-pw.bentley.com:ciorba-pw-01/Documents/Projects/IL_DOT/D1/0021693.06/CADD Data/Sht/Misc Sheets/62W99-SSQ.dgn

3/19/2026 8:30:21 PM

REV-SEP

	CODE NO.	ITEM	UNIT	TOTAL	0005 ROADWAY FED 90% ST 10%	0047 STRUCTURE FED 90% ST 10% 016-0977	0047 STRUCTURE FED 90% ST 10% 016-0980	0047 STRUCTURE FED 90% ST 10% 016-0978 & 016-0979	0047 STRUCTURE FED 90% ST 10% 016-0982 & 016-0983	0021 ELECTRICAL FED 90% ST 10%	0005 ROADWAY ST 100%
	70307125	TEMPORARY PAVEMENT MARKING - LINE 5" - TYPE IV TAPE	FOOT	16,575	16,575						
	70307130	TEMPORARY PAVEMENT MARKING - LINE 6" - TYPE IV TAPE	FOOT	5,652	5,652						
	70307140	TEMPORARY PAVEMENT MARKING - LINE 8" - TYPE IV TAPE	FOOT	42,279	42,279						
	70307160	TEMPORARY PAVEMENT MARKING - LINE 12"- TYPE IV TAPE	FOOT	9,840	9,840						
	70400100	TEMPORARY CONCRETE BARRIER	FOOT	20,450	20,450						
	70400200	RELOCATE TEMPORARY CONCRETE BARRIER	FOOT	2,968	2,968						
	70600260	IMPACT ATTENUATORS, TEMPORARY (FULLY REDIRECTIVE, NARROW), TEST LEVEL 3	EACH	10	10						
	70300211	THERMOPLASTIC PAVEMENT MARKING - LETTERS AND SYMBOLS	SQ FT	117	117						
	70600332	IMPACT ATTENUATORS, RELOCATE (FULLY REDIRECTIVE, NARROW), TEST LEVEL 3	EACH	6	6						
*	78000200	THERMOPLASTIC PAVEMENT MARKING - LINE 4"	FOOT	60,543	60,543						
*	78000400	THERMOPLASTIC PAVEMENT MARKING - LINE 6"	FOOT	1,988	1,988						
	78004635	PREFORMED PLASTIC PAVEMENT MARKING, TYPE D - STANDARD LINE - 4"	FOOT	105,343	105,343						
*	78000500	THERMOPLASTIC PAVEMENT MARKING - LINE 8"	FOOT	26,438	26,438						
	78004635	PREFORMED PLASTIC PAVEMENT MARKING, TYPE D - STANDARD LINE - 7"	FOOT	5,652	5,652						
*	78000600	THERMOPLASTIC PAVEMENT MARKING - LINE 12"	FOOT	9,049	9,049						
	78004645	PREFORMED PLASTIC PAVEMENT MARKING, TYPE D - STANDARD LINE - 9"	FOOT	5,652	5,652						
*	78004220	PREFORMED PLASTIC PAVEMENT MARKING, TYPE B - INLAID - LINE 5"	FOOT	11,289	11,289						
	78004655	PREFORMED PLASTIC PAVEMENT MARKING, TYPE D - STANDARD LINE - 11"	FOOT	5,652	5,652						

* SPECIALTY ITEM

CiorbaGroup
8725 W. Higgins Rd, Ste 600, Chicago, IL 60631
P 773.775.4009 | www.ciorba.com

USER NAME =	DESIGNED - SIK	REVISED -
	CHECKED - BWS	REVISED -
PLOT SCALE =	DRAWN - ETK, SIK	REVISED -
PLOT DATE =	CHECKED - BWS	REVISED -

STATE OF ILLINOIS
DEPARTMENT OF TRANSPORTATION

I-290\L 53 HMA RESURFACING AND BRIDGE REPAIRS
SUMMARY OF QUANTITIES

F.A.I. RTE.	SECTION	COUNTY	TOTAL SHEETS	SHEET NO.
290	(0404-316-HB) BR24	COOK	276	7
		CONTRACT NO. 62W99		
	ILLINOIS	FED. AID PROJECT		

MODEL: sMODELNAMES
FILE NAME: pw://ciorba-pw.bentley.com:ciorba-pw-01/Documents/Projects/IL_DOT/D1/0021693.06/CADD Data/Sht/Misc Sheets/62W99-SSQ.dgn

3/19/2026 8:30:22 PM

REV-SEP

	CODE NO.	ITEM	UNIT	TOTAL	0005 ROADWAY FED 90% ST 10%	0047 STRUCTURE FED 90% ST 10% 016-0977	0047 STRUCTURE FED 90% ST 10% 016-0980	0047 STRUCTURE FED 90% ST 10% 016-0978 & 016-0979	0047 STRUCTURE FED 90% ST 10% 016-0982 & 016-0983	0021 ELECTRICAL FED 90% ST 10%	0005 ROADWAY ST 100%
*	78004620	PREFORMED PLASTIC PAVEMENT MARKING, TYPE D - STANDARD - LINE 4"	FOOT	1,330	1,330						
	78009006	MODIFIED URETHAN PAVEMENT MARKING, LINE 6"	FOOT	4,585	4,585						
*	78009006	MODIFIED URETHAN PAVEMENT MARKING, LINE 8"	FOOT	715	715						
	78011025	GROOVING FOR RECESSED PAVEMENT MARKING 5"	FOOT	4,585	4,585						
*	78011040	GROOVING FOR RECESSED PAVEMENT MARKING 8"	FOOT	715	715						
	78011050	GROOVING FOR RECESSED PAVEMENT MARKING 10"	FOOT	715	715						
*	78011060	GROOVING FOR RECESSED PAVEMENT MARKING 12"	FOOT	715	715						
	78100200	TEMPORARY RAISED REFLECTIVE PAVEMENT MARKER	FOOT	1,429	1,429						
*	78100100	RAISED REFLECTIVE PAVEMENT MARKER	EACH	1,429	1,429						
	78300200	RAISED REFLECTIVE PAVEMENT MARKER REMOVAL	FOOT	1,429	1,429						
	78300202	PAVEMENT MARKING REMOVAL - WATER BLASTING	SQ FT	38,500	38,500						
	78300201	PAVEMENT MARKER REMOVAL - GRINDING	FOOT	38,500	38,500						
*	81028240	UNDERGROUND CONDUIT, GALVANIZED STEEL, 4" DIA.	FOOT	1,128						1,128	
	78300202	PAVEMENT MARKER REMOVAL - WATER BLASTING	FOOT	38,500	38,500						
*	81028750	UNDERGROUND CONDUIT, COILABLE NONMETALLIC CONDUIT, 2" DIA.	FOOT	1,249						1,249	
*	81100320	CONDUIT ATTACHED TO STRUCTURE, 1" DIA., PVC COATED GALVANIZED STEEL	FOOT	2,742						2,742	
*	81300220	JUNCTION BOX, STAINLESS STEEL, ATTACHED TO STRUCTURE, 6" X 6" X 4"	EACH	56						56	
*	81300550	JUNCTION BOX, STAINLESS STEEL, ATTACHED TO STRUCTURE, 12" X 12" X 6"	EACH	36						36	
*	81300915	JUNCTION BOX, STAINLESS STEEL, ATTACHED TO STRUCTURE, 20"X20"X8"	EACH	8							
*	81400200	HEAVY-DUTY HANDHOLE	EACH	6						6	
*	81603032	UNIT DUCT, 600V, 2-1C NO.4, 1/C NO.6 GROUND, (XLP-TYPE USE), 1 1/4" DIA. POLYETHYLENE	FOOT	9,100						9,100	
*	81702110	ELECTRIC CABLE IN CONDUIT, 600V (XLP-TYPE USE) 1/C NO. 10	FOOT	12,724						12,724	

* SPECIALTY ITEM

	CODE NO.	ITEM	UNIT	TOTAL	0005 ROADWAY FED 90% ST 10%	0047 STRUCTURE FED 90% ST 10% 016-0977	0047 STRUCTURE FED 90% ST 10% 016-0980	0047 STRUCTURE FED 90% ST 10% 016-0978 & 016-0979	0047 STRUCTURE FED 90% ST 10% 016-0982 & 016-0983	0021 ELECTRICAL FED 90% ST 10%	0005 ROADWAY ST 100%
*	81702120	ELECTRIC CABLE IN CONDUIT, 600V (XLP-TYPE USE) 1/C NO. 8	FOOT	214						214	
*	81702130	ELECTRIC CABLE IN CONDUIT, 600V (XLP-TYPE USE) 1/C NO. 6	FOOT	1,730						1,730	
*	81702140	ELECTRIC CABLE IN CONDUIT, 600V (XLP-TYPE USE) 1/C NO. 4	FOOT	814						814	
*	X8210007	REPLACED WITH LUMINAIRE, LED, ROADWAY, REPLACEMENT, OUTPUT DESIGNATION G. PI # TO BE ASSIGNED	EACH								
*	X8210007	LUMINAIRE, LED, ROADWAY, REPLACEMENT, OUTPUT DESIGNATION H.	EACH	6						6	
*	82110016	LUMINAIRE, LED, HIGHMAST, OUTPUT DESIGNATION I	EACH	236						236	
*	82110021	LUMINAIRE, LED, UNDERPASS, WALLMOUNT, OUTPUT DESIGNATION D	EACH	16						16	
*	82110026	LUMINAIRE, LED, UNDERPASS, SUSPENDED, OUTPUT DESIGNATION D	EACH	30						30	
	X8210027	ADDED 82110027 LUMINAIRE, LED, UNDERPASS, SUSPENDED, OUTPUT DESIGNATION E	EACH	12						12	
*	83600352	LIGHT POLE FOUNDATION, METAL, 11 1/2" BOLT CIRCLE, 8 5/8" X 6'	EACH	6						6	
*											
*	87300925	ELECTRIC CABLE IN CONDUIT, TRACER, NO. 14 1C	FOOT	18,390						18,390	
*	87900200	DRILL EXISTING HANDHOLE	EACH	14						14	
*	89502300	REMOVE ELECTRIC CABLE FROM CONDUIT	FOOT	46,890						46,890	
	K0029632	WEED CONTROL, NON-RESIDUAL	GALLON	16	16						
	X0327773	ACCESS DOOR	EACH	4		4					

* SPECIALTY ITEM

CiorbaGroup
8725 W. Higgins Rd, Ste 600, Chicago, IL 60631
P 773.775.4009 | www.ciorba.com

USER NAME =	DESIGNED - SIK	REVISED -	
	CHECKED - BWS	REVISED -	
PLOT SCALE =	DRAWN - ETK, SIK	REVISED -	
PLOT DATE =	CHECKED - BWS	REVISED -	

STATE OF ILLINOIS
DEPARTMENT OF TRANSPORTATION

I-290/I-53 HMA RESURFACING AND BRIDGE REPAIRS
SUMMARY OF QUANTITIES

F.A.I. RTE.	SECTION	COUNTY	TOTAL SHEETS	SHEET NO.
290	(0404-316-HB) BR24	COOK	276	9
		CONTRACT NO. 62W99		
	ILLINOIS	FED. AID PROJECT		

MODEL: sMODELNAMES
FILE NAME: pw://ciorba-pw.bentley.com:ciorba-pw-01/Documents/Projects/IL_DOT/D1/0021693.06/CADD Data/Sht/MfrSheets/62W99-SOQ.dgn
3/19/2026 8:30:22 PM

REV-SEP

	CODE NO.	ITEM	UNIT	TOTAL	0005 ROADWAY FED 90% ST 10%	0047 STRUCTURE FED 90% ST 10% 016-0977	0047 STRUCTURE FED 90% ST 10% 016-0980	0047 STRUCTURE FED 90% ST 10% 016-0978 & 016-0979	0047 STRUCTURE FED 90% ST 10% 016-0982 & 016-0983	0021 ELECTRICAL FED 90% ST 10%	0005 ROADWAY ST 100%
	X4400501	COMBINATION CURB AND GUTTER REMOVAL AND REPLACEMENT LESS THAN OR EQUAL TO 10 FEET	FOOT	0							0
	X2020110	GRADING AND SHAPING SHOULDERS	UNIT	98	98						
	X4400503	COMBINATION CURB AND GUTTER REMOVAL AND REPLACEMENT GREATER THAN 10 FEET	FOOT	0							0
	X5017305	PROTECTIVE SHIELD (PERMANENT)	SQ YD	1,183		1,183					
	X5017313	PROTECTIVE SHIELD (PERMANENT) REMOVAL	SQ FT	10,627		10,627					
	X5110310	SLOPE WALL REPAIR	SQ YD	3,047			70	194	2,783		
	X5230154	CLEANING BRIDGE SCUPPERS AND DOWNSPOUTS	EACH	40		4		12	24		
	X5230146	BRIDGE DRAINAGE SYSTEM REPAIR	FOOT	45		45					
	X6050500	REMOVE FRAME AND GRATES (SPECIAL)	EACH	10							10
	X5230152	CLEANING DRAINAGE SYSTEM	L SUM	1		0.6	0.4				
	X6420100	SHOULDER RUMBLE STRIP REMOVAL	SQ YD	6,934	6,934						
	X7010005	MAINTENANCE OF TRAFFIC (ILLINOIS TOLLWAY)	L SUM	1	1						
	X6640300	CHAIN LINK FENCE REMOVAL	FOOT	5,280							5,280
	X7010216	TRAFFIC CONTROL AND PROTECTION, (SPECIAL)	L SUM	1	1						
	X7011015	TRAFFIC CONTROL AND PROTECTION (EXPRESSWAYS)	L SUM	1	1						
	X7013820	TRAFFIC CONTROL SURVEILLANCE, EXPRESSWAYS	CAL DA	276	276						
	X7200061	TEMPORARY INFORMATION SIGNING	SQ FT	2,094	2,094						
*	X0320023	CLOSED CIRCUIT TELEVISION DOME CAMERA, HD	EACH	6						6	
*	X0323917	CABINET, MODEL 334	EACH	6						6	

* SPECIALTY ITEM

CiorbaGroup
8725 W. Higgins Rd, Ste 600, Chicago, IL 60631
P 773.775.4009 | www.ciorba.com

USER NAME =	DESIGNED - SIK	REVISED -
	CHECKED - BWS	REVISED -
PLOT SCALE =	DRAWN - ETK, SIK	REVISED -
PLOT DATE =	CHECKED - BWS	REVISED -

STATE OF ILLINOIS
DEPARTMENT OF TRANSPORTATION

I-290/IL 53 HMA RESURFACING AND BRIDGE REPAIRS
SUMMARY OF QUANTITIES

F.A.I. RTE.	SECTION	COUNTY	TOTAL SHEETS	SHEET NO.
290	(0404-316-HB) BR24	COOK	276	10
		CONTRACT NO. 62W99		
	ILLINOIS	FED. AID PROJECT		

REV-SEP

MODEL: SMODELNAMES
FILE NAME: pw:\\ciorba-pw.bentley.com:ciorba-pw-01\Documents\Projects\IL_DOTD1\002.1693.06\CADD Data\Sht\Misc Sheets\62W99-SOQ.dgn
3/19/2026 8:30:22 PM

	CODE NO.	ITEM	UNIT	TOTAL	0005 ROADWAY FED 90% ST 10%	0047 STRUCTURE FED 90% ST 10% 016-0977	0047 STRUCTURE FED 90% ST 10% 016-0980	0047 STRUCTURE FED 90% ST 10% 016-0978 & 016-0979	0047 STRUCTURE FED 90% ST 10% 016-0982 & 016-0983	0021 ELECTRICAL FED 90% ST 10%	0005 ROADWAY ST 100%
*	X0324599	ROD AND CLEAN EXISTING CONDUIT	FOOT	800						800	
*	X0326461	CLOSED CIRCUIT TELEVISION EQUIPMENT, FIBER OPTIC DISTRIBUTION	EACH	6						6	
*	X0327561	BUDGETARY ALLOWANCE FOR CCTV INTEGRATION	L SUM	1						1	
*	X0327601	CLOSED CIRCUIT TELEVISION CAMERA STRUCTURE, FOUNDATION, 80 FT, MOUNTING HEIGHT	FOOT	123						123	
*	X0327602	CLOSED CIRCUIT TELEVISION CAMERA STRUCTURE, GALVANIZED STEEL, 80 FT. MOUNTING HEIGHT	EACH	6						6	
*	X1400106	WIRELESS VEHICLE DETECTION SYSTEM	EACH	4						4	
*	X1400211	LIGHT POLE, SPECIAL, 30'	EACH	6						6	
*	X1400217	TERMINATE FIBER IN CABINET	EACH	360						360	
*	X1400308	REMOVE CCTV CAMERA	EACH	6						6	
*	X1400341	REMOVAL OF LUMINAIRE, SALVAGE	EACH	306						306	
	X3830074	LIGHT POLE BREAKAWAY DEVICE	EACH	6						6	
	[illegible]										
	X4401198	HOT-MIX ASPHALT SURFACE REMOVAL, VARIABLE DEPTH	SQ YD	4,530	4,530						
*	X7010007	MAINTENANCE OF EXISTING TRAFFIC SURVEILLANCE	L SUM	1						1	
	X7830050	RAISED REFLECTIVE PAVEMENT MARKERS, REFLECTOR REMOVAL	EACH	1,429	1,429						
*	X8000003	MAINTENANCE OF LIGHTING SYSTEM	CAL MO	28						28	
	X7830052	RAISED REFLECTIVE PAVEMENT MARKERS, REFLECTOR REPLACEMENT	EACH	1,429	1,429						
*	X8100863	INTERCEPT EXISTING CONDUIT	EACH	3						3	
	X8210007	LUMINAIRE. LED, ROADWAY, REPLACEMENT, OUTPUT DESIGNATION H	EACH	6						6	
*	X8101095	UNDERGROUND CONDUIT, MULTI-DUCT, 4-18MM MICRODUCTS	FOOT	15,840						15,840	
	X8210405	LUMINAIRE. SHIELD	EACH	6						6	

* SPECIALTY ITEM

CiorbaGroup
8725 W. Higgins Rd, Ste 600, Chicago, IL 60631
P 773.775.4009 | www.ciorba.com

USER NAME =	DESIGNED - SIK	REVISED -
	CHECKED - BWS	REVISED -
PLOT SCALE =	DRAWN - ETK, SIK	REVISED -
PLOT DATE =	CHECKED - BWS	REVISED -

STATE OF ILLINOIS
DEPARTMENT OF TRANSPORTATION

I-290/IL 53 HMA RESURFACING AND BRIDGE REPAIRS
SUMMARY OF QUANTITIES

F.A.I. RTE.	SECTION	COUNTY	TOTAL SHEETS	SHEET NO.
290	(0404-316-HB) BR24	COOK	276	11
		CONTRACT NO. 62W99		
	ILLINOIS	FED. AID PROJECT		

MODEL: SMODELNAMES
FILE NAME: pw://ciorba-pw.bentley.com:ciorba-pw-01/Documents/Projects/IL_DOT/D1/0021693.06/CADD Data/Sht/Misc Sheets/62W99-SOQ.dgn
3/19/2026 8:30:22 PM

REV-SEP

	CODE NO.	ITEM	UNIT	TOTAL	0005 ROADWAY FED 90% ST 10%	0010 STRUCTURE FED 90% ST 10% 016-0977	0010 STRUCTURE FED 90% ST 10% 016-0980	0010 STRUCTURE FED 90% ST 10% 016-0978 & 016-0979	0010 STRUCTURE FED 90% ST 10% 016-0982 & 016-0983	0021 ELECTRICAL FED 90% ST 10%	0005 ROADWAY ST 100%
*	X8710036	FIBER OPTIC CABLE 12 FIBERS, SINGLE MODE	FOOT	1,391						1,391	
*	X8710052	FIBER OPTIC TERMINATION PANEL, 12 FIBER, FO TERM PANEL 12F	EACH	8						8	
*	X8710066	FIBER OPTIC CABLE, MICRO, 144 FIBERS, SINGLE MODE	FOOT	18,390						18,390	
*	X8710304	FIBER OPTIC CABLE SPLICE - LATERAL	EACH	12						12	
*	X8710306	FIBER OPTIC CABLE SPLICE - MAINLINE	EACH	2						2	
*	X8710318	FIBER OPTIC UTILITY MARKER	EACH	30						30	
*	X8710402	FIBER OPTIC INNERDUCT 1 1/4" DIA.	FOOT	15,397						15,397	
*	X8780200	CONCRETE FOUNDATION, SURVEILLANCE CABINET MODEL 334	EACH	6						6	
	X8860105	TRAFFIC SIGNAL DETECTOR LOOP REPLACEMENT	FOOT	387						387	
	X8950425	REMOVE EXISTING TRAFFIC SURVEILLANCE EQUIPMENT	L SUM	1						1	
*	X8710317	SPLICE FIBER IN CABINET	EACH	672						672	
	XXXXXXX	NETWORK SWITCH, ACCESS	EACH	16						16	
	Z0001495	BRIDGE APPROACH SHOULDER REMOVAL	SQ YD	153		153					
	Z0013798	CONSTRUCTION LAYOUT	L SUM	1	1						
	Z0015550	DEBRIS REMOVAL	CU YD	51			51				
	Z0018100	DRAINAGE STRUCTURE ADJUSTMENT (SPECIAL)	EACH	10							10

* SPECIALTY ITEM

CiorbaGroup
8725 W. Higgins Rd, Ste 600, Chicago, IL 60631
P 773.775.4009 | www.ciorba.com

USER NAME =	DESIGNED - SIK	REVISED -
	CHECKED - BWS	REVISED -
PLOT SCALE =	DRAWN - ETK, SIK	REVISED -
PLOT DATE =	CHECKED - BWS	REVISED -

STATE OF ILLINOIS
DEPARTMENT OF TRANSPORTATION

I-290/IL 53 HMA RESURFACING AND BRIDGE REPAIRS
SUMMARY OF QUANTITIES

F.A.I. RTE.	SECTION	COUNTY	TOTAL SHEETS	SHEET NO.
290	(0404-316-HB) BR24	COOK	276	11-A
		CONTRACT NO. 62W99		
	ILLINOIS	FED. AID PROJECT		

MODEL: SMODELNAMES
FILE NAME: pw:\\ciorba-pw.bentley.com:ciorba-pw-01\Documents\Projects\IL_DOT\D1\0021693.06\CADD Data\Sht\MiscSheets\62W99-SOQ.dgn
3/19/2026 8:30:22 PM

REV-SEP

	CODE NO.	ITEM	UNIT	TOTAL	0005 ROADWAY FED 90% ST 10%	0010 STRUCTURE FED 90% ST 10% 016-0977	0010 STRUCTURE FED 90% ST 10% 016-0980	0010 STRUCTURE FED 90% ST 10% 016-0978 & 016-0979	0010 STRUCTURE FED 90% ST 10% 016-0982 & 016-0983	0021 ELECTRICAL FED 90% ST 10%	0005 ROADWAY ST 100%
	Z0018400	DRAINAGE STRUCTURES TO BE ADJUSTED	EACH	30							30
	Z0018500	DRAINAGE STRUCTURES TO BE CLEANED	EACH	50							50
	Z0018600	DRAINAGE STRUCTURES TO BE RECONSTRUCTED	EACH	20							20
	Z0021903	SILICONE JOINT SEALER, 3/4"	FOOT	206			206				
	Z0021904	SILICONE JOINT SEALER, 1"	FOOT	1,170		714	456				
*	Z0033052	COMMUNICATIONS VAULT	EACH	6						6	
	Z0041895	POLYMER CONCRETE	CU FT	7		1	6				
	Z0049790	RELOCATING NAME PLATES	EACH	2				1	1		
	Z0073200	TEMPORARY SHORING AND CRIBBING	EACH	34		15	19				
	Z0073510	TRAFFIC SIGNAL DETECTOR LOOP REPLACEMENT	EACH	5						5	

* SPECIALTY ITEM

CiorbaGroup
8725 W. Higgins Rd, Ste 600, Chicago, IL 60631
P 773.775.4009 | www.ciorba.com

USER NAME =	DESIGNED - SIK	REVISED -
	CHECKED - BWS	REVISED -
PLOT SCALE =	DRAWN - ETK, SIK	REVISED -
PLOT DATE =	CHECKED - BWS	REVISED -

STATE OF ILLINOIS
DEPARTMENT OF TRANSPORTATION

I-290/IL 53 HMA RESURFACING AND BRIDGE REPAIRS
SUMMARY OF QUANTITIES

F.A.I. RTE.	SECTION	COUNTY	TOTAL SHEETS	SHEET NO.
290	(0404-316-HB) BR24	COOK	276	11-B
		CONTRACT NO. 62W99		
	ILLINOIS	FED. AID PROJECT		

MODEL: SMODELNAMES
FILE NAME: pw:\\ciorba-pw.bentley.com:ciorba-pw-01\Documents\Projects\IL_DOT\D1\0021693.06\CADD Data\Sht\MiscSheets\62W99-SOQ.dgn
3/19/2026 8:30:23 PM

REV-SEP

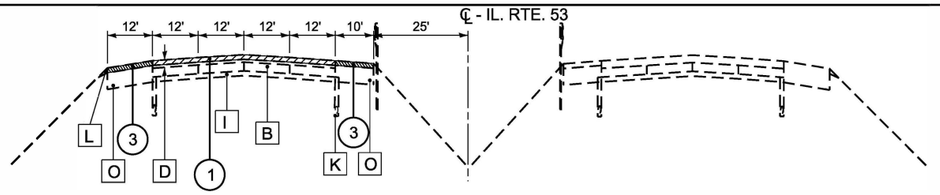

EXISTING TYPICAL SECTION
STA 61+17 TO STA 81+05 (LOOKING NORTH)

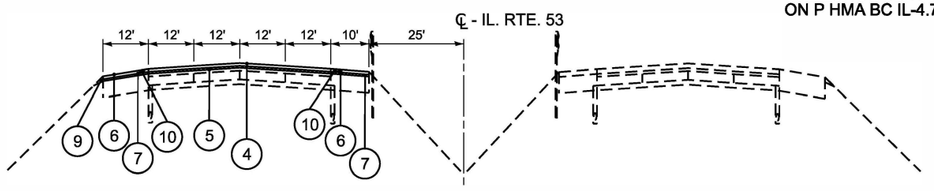

PROPOSED TYPICAL SECTION
STA 61+17 TO STA 81+05 (LOOKING NORTH)

THE LONGITUDINAL JOINT SEALANT SHALL BE PLACED ON MILLED SURFACE AND ON P HMA BC SMA 12.5 N80.

THE LONGITUDINAL JOINT SEALANT SHALL BE PLACED ON P HMA BC IL-4.75 N50.

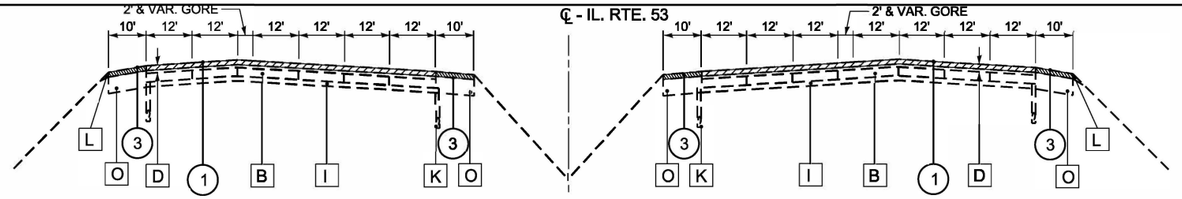

EXISTING TYPICAL SECTION
STA 83+12 TO 99+93 (NB) & STA 82+71 TO 99+93 (SB)
LOOKING NORTH

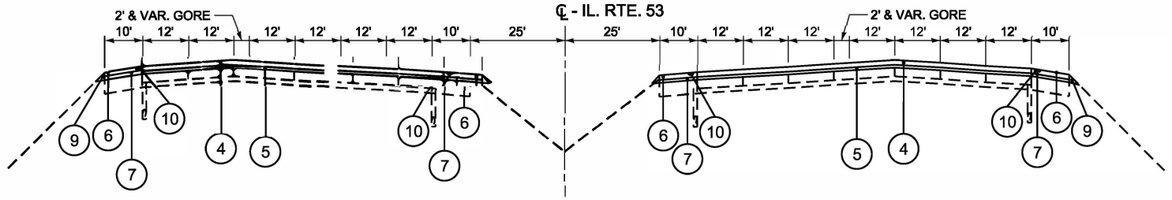

PROPOSED TYPICAL SECTION
STA 83+12 TO 99+93 (NB) & STA 82+71 TO 99+93 (SB)
LOOKING NORTH

EXISTING LEGEND

- A C.R.C PAVEMENT, 8"
- B C.R.C PAVEMENT, 8"
- C P.C.C. PAVEMENT, 10"
- D EXISTING 4" HMA OVERLAY
- E EXISTING 6" HMA OVERLAY
- F EXISTING 2 1/2" HMA OVERLAY
- G EXISTING 2 3/4" HMA OVERLAY
- H EXISTING 3" HMA OVERLAY
- I AGGREGATE SUBGRADE
- J STEEL BEAM GUARDRAIL, DOUBLE RAIL
- K PIPE UNDERDRAIN
- L AGGREGATE SHOULDER
- M HMA SHOULDER, 10"
- N HMA SHOULDER, 14"
- O HMA SHOULDER, 12"
- P P.C.C. SHOULDER, 11"
- Q HMA GORE

PROPOSED PAVING LEGEND

1. HOT-MIX ASPHALT SURFACE REMOVAL, 4" (MAINLINE)
2. HOT-MIX ASPHALT SURFACE REMOVAL, 2-1/4" (RAMPS)
2A. HOT-MIX ASPHALT SURFACE REMOVAL, 2-1/2" (FRONTAGE RD & RAMPS)
3. HOT-MIX ASPHALT SURFACE REMOVAL, 3-3/4" (MAINLINE SHOULDERS)
4. POLYMERIZED HOT-MIX ASPHALT SURFACE COURSE, STONE MATRIX ASPHALT, 12.5, MIX "F", N80, 2" (MAINLINE)
5. POLYMERIZED HOT-MIX ASPHALT BINDER COURSE, STONE MATRIX ASPHALT, 12.5, N80, 2" (MAINLINE)
6. HOT-MIX ASPHALT SURFACE COURSE, IL-9.5, MIX "D", N70, 1-1/2" (MAINLINE SHOULDERS AND RAMPS)
7. HOT-MIX ASPHALT BINDER COURSE, IL-19.0, N70, 2-1/4" (MAINLINE SHOULDERS)
8. POLYMERIZED HOT-MIX ASPHALT BINDER COURSE, IL-4.75, N50, 3/4" (FRONTAGE RD & RAMPS)
9. AGGREGATE WEDGE SHOULDERS, TYPE B
* 10. SHOULDER RUMBLE STRIPS (SIZE AS INDICATED)
11. POLYMERIZED HOT-MIX ASPHALT SURFACE COURSE, STONE MATRIX ASPHALT, 9.5, MIX "F", N80, 1-3/4" (FRONTAGE RD & RAMPS)
12. REMOVE AND REERECT STEEL PLATE BEAM GUARDRAIL, TYPE D
13. GRADING AND SHAPING SHOULDERS

* REFER TO STD. 642001 FOR RUMBLE STRIP LIMITS AT RAMPS.

NOTE: CONTRACTOR SHALL PATCH FIRST

HOT-MIX ASPHALT MIXTURE REQUIREMENTS MIXTURE TYPE	AIR VOIDS @ Ndesign	QMP	MTD Required? (YES/NO)
PAVEMENT RESURFACING (IL ROUTE 53 MAINLINE)			
POLYMERIZED HOT-MIX ASPHALT SURFACE COURSE, STONE MATRIX ASPHALT, 12.5, MIX "F", N80; 2"	3.5% @ 80 GYR	PFP	YES
POLYMERIZED HOT-MIX ASPHALT BINDER COURSE, STONE MATRIX ASPHALT 12.5, N80; 2"	3.5% @ 80 GYR	PFP	YES
PAVEMENT RESURFACING (IL 53 ROUTE MAINLINE SHOULDERS)			
HOT-MIX ASPHALT SURFACE COURSE, IL-9.5, MIX "D", N70; 1-1/2"	4% @ 70 GYR	QCP	NO
HOT-MIX ASPHALT BINDER COURSE, IL-19.0, N70; 2-1/4"	4% @ 70 GYR	QCP	NO
PAVEMENT RESURFACING (IL ROUTE 53 RAMPS)			
POLYMERIZED HOT-MIX ASPHALT SURFACE COURSE, STONE MATRIX ASPHALT, 9.5, MIX "F", N80; 1-3/4"	3.5% @ 80 GYR	QCP	NO
HOT-MIX ASPHALT SURFACE COURSE, IL-9.5, MIX "D", N70; 1-1/2"	4% @ 70 GYR	QCP	NO
POLYMERIZED HOT-MIX ASPHALT BINDER COURSE, IL-4.75, N50; 3/4"	3.5% @ 50 GYR	QC/QA	NO
PAVEMENT RESURFACING (FRONTAGE ROADS)			
POLYMERIZED HOT-MIX ASPHALT SURFACE COURSE, STONE MATRIX ASPHALT, 9.5, MIX "F", N80; 1-3/4"	3.5% @ 80 GYR	QCP	NO
POLYMERIZED HOT-MIX ASPHALT BINDER COURSE, IL-4.75, N50; 3/4"	3.5% @ 50 GYR	QC/QA	NO
PAVEMENT CONNECTOR (HMA) FOR BRIDGE APPROACH SLAB			
POLYMERIZED HOT-MIX ASPHALT SURFACE COURSE, STONE MATRIX ASPHALT, 12.5, MIX "F", N80; 2"	3.5% @ 80 GYR	QC/QA	YES
POLYMERIZED HOT-MIX ASPHALT BINDER COURSE, STONE MATRIX ASPHALT 12.5, N80; 2"	3.5% @ 80 GYR	QC/QA	YES
HMA BINDER COURSE IL-19.0, N90; 11"	4% @ 90 GYR	QC/QA	NO
PATCHING (IL ROUTE 53 MAINLINE)			
CLASS D PATCHES (HMA BINDER IL-19.0)	4% @ 90 GYR	QC/QA	NO
HMA REPLACEMENT OVER PATCHES (HMA BINDER IL-19mm)	4% @ 90 GYR	QC/QA	NO
SHOULDER RUMBLE STRIP REMOVAL			
HOT-MIX ASPHALT SURFACE COURSE, IL-9.5, MIX "D", N70	4% @ 70 GYR	QC/QA	NO

QMP DESIGNATIONS: QUALITY CONTROL/QUALITY ASSURANCE (AC/QC); QUALITY CONTROL FOR PERFORMANCE (QCP); PAY FOR PERFORMANCE (PDP).

THE UNIT WEIGHT USED TO CALCULATE ALL HMA SURFACE MIXTURE QUANTITIES IS 112 LBS/SQ YD/IN.

THE "AC TYPE" FOR POLYMERIZED HMA MIXES SHALL BE "SBS/SBR PG 76-22" AND FOR NON-POLYMERIZED HMA THE "AC TYPE" SHALL BE "PG 64-22" UNLESS MODIFIED BY RECLAIMED MATERIALS SPECIFICATIONS.

WHEN SHOULDER RESURFACING OF SIX (6) FEET OR LESS IS ALLOWED TO BE PLACED SIMULTANEOUSLY WITH THE ADJACENT TRAFFIC LANE, THE MAINLINE QUALITY MANAGEMENT PROGRAM WILL BE ENFORCED FOR THE MAINLINE AND SHOULDER.

IMEG
401 E. STATE ST. 4th Floor
ROCKFORD, IL
61104
PH: 815.965.6400
www.imegcorp.com

USER NAME = Brad.S.Lange	DESIGNED - Brad Lange	REVISED -	
	DRAWN - Tammie Govig	REVISED -	
	CHECKED - Corey Stout	REVISED -	
PLOT DATE = 4/30/2026	DATE - 4/30/2026	REVISED -	

STATE OF ILLINOIS
DEPARTMENT OF TRANSPORTATION

I-290/IL 53 HMA RESURFACING AND BRIDGE REPAIRS
TYPICAL SECTIONS

SCALE: N.T.S. | SHEET 1 OF 3 SHEETS | STA. | TO STA.

F. AI R. B.	SECTION	COUNTY	TOTAL S HEE 'S	SHEET NO.
290	(0404-31 6HB) BR 24	COO K	276	12
		CONTRACT NO. 62W99		
	ILLINOIS FED. AID PROJECT			

MODEL: Typical Sections - Typical Section1 [Sheet]
FILE NAME: W:\24001656.05\IDOT Dist 1 IL 290 Mill and Overlay\CADD Data\Sheets\D1_IL53_sht_Typicals.dgn

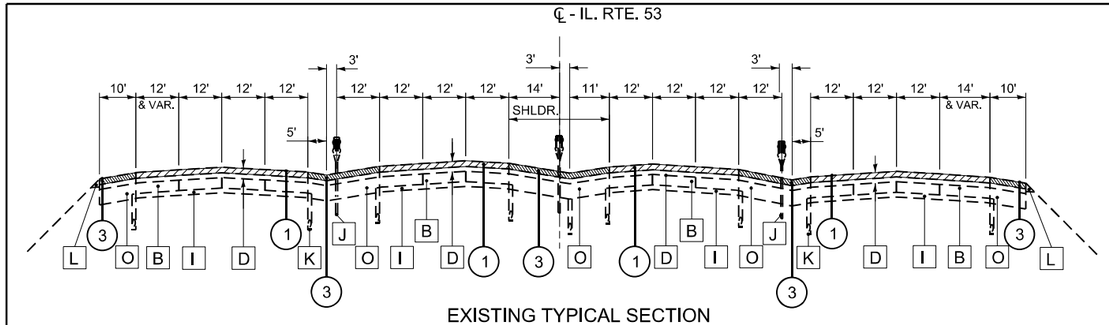

EXISTING TYPICAL SECTION
STA. 99+93 TO 133+91 (LOOKING NORTH)

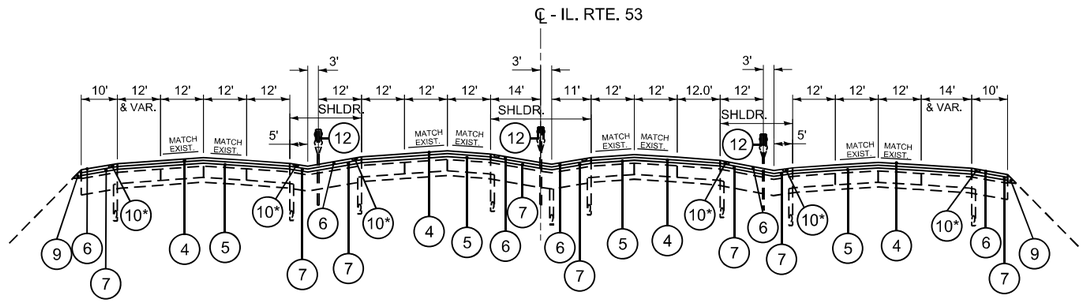

PROPOSED TYPICAL SECTION
STA. 99+93 TO 133+91 (LOOKING NORTH) **

* 16" RUMBLE STRIPS

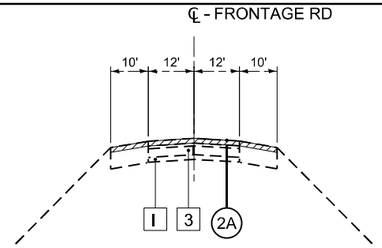

EXISTING TYPICAL SECTION
FRONTAGE ROADS
LOOKING NORTH

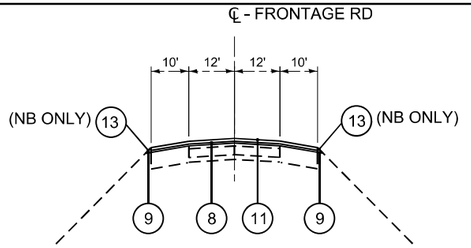

PROPOSED TYPICAL SECTION
FRONTAGE ROADS
LOOKING NORTH

THE LONGITUDINAL JOINT SEALANT SHALL BE PLACED ON MILLED SURFACE AND ON P HMA BC SMA 12.5 N80.

THE LONGITUDINAL JOINT SEALANT SHALL BE PLACED ON P HMA BC IL-4.75 N50.

CLASS D PATCHING ON THE FRONTAGE ROADS WILL BE DETERMINED BY THE ENGINEER.

EXISTING LEGEND

- A C.R.C PAVEMENT, 8"
- B C.R.C PAVEMENT, 8"
- C P.C.C. PAVEMENT, 10"
- D EXISTING 4" HMA OVERLAY
- E EXISTING 6" HMA OVERLAY
- F EXISTING 2 1/2" HMA OVERLAY
- G EXISTING 2 3/4" HMA OVERLAY
- H EXISTING 3" HMA OVERLAY
- I AGGREGATE SUBGRADE
- J STEEL BEAM GUARDRAIL, DOUBLE RAIL
- K PIPE UNDERDRAIN
- L AGGREGATE SHOULDER
- M HMA SHOULDER, 10"
- N HMA SHOULDER, 14"
- O HMA SHOULDER, 12"
- P P.C.C. SHOULDER, 11"
- Q HMA GORE

PROPOSED PAVING LEGEND

- 1 HOT-MIX ASPHALT SURFACE REMOVAL, 4" (MAINLINE)
- 2 HOT-MIX ASPHALT SURFACE REMOVAL, 2-1/4" (RAMPS)
- 2A HOT-MIX ASPHALT SURFACE REMOVAL, 2-1/2" (FRONTAGE RD & RAMPS)
- 3 HOT-MIX ASPHALT SURFACE REMOVAL, 3-3/4" (MAINLINE SHOULDERS)
- 4 POLYMERIZED HOT-MIX ASPHALT SURFACE COURSE, STONE MATRIX ASPHALT, 12.5, MIX "F", N80, 2" (MAINLINE)
- 5 POLYMERIZED HOT-MIX ASPHALT BINDER COURSE, STONE MATRIX ASPHALT, 12.5, N80, 2" (MAINLINE)
- 6 HOT-MIX ASPHALT SURFACE COURSE, IL-9.5, MIX "D", N70, 1-1/2" (MAINLINE SHOULDERS AND RAMPS)
- 7 HOT-MIX ASPHALT BINDER COURSE, IL-19.0, N70, 2-1/4" (MAINLINE SHOULDERS)
- 8 POLYMERIZED HOT-MIX ASPHALT BINDER COURSE, IL-4.75, N50, 3/4" (FRONTAGE RD & RAMPS)
- 9 AGGREGATE WEDGE SHOULDERS, TYPE B
- * 10 SHOULDER RUMBLE STRIPS (SIZE AS INDICATED)
- 11 POLYMERIZED HOT-MIX ASPHALT SURFACE COURSE, STONE MATRIX ASPHALT, 9.5, MIX "F", N80, 1-3/4" (FRONTAGE RD & RAMPS)
- 12 REMOVE AND REERECT STEEL PLATE BEAM GUARDRAIL, TYPE D
- 13 GRADING AND SHAPING SHOULDERS

* REFER TO STD. 642001 FOR RUMBLE STRIP LIMITS AT RAMPS.

NOTE: CONTRACTOR SHALL PATCH FIRST

IMEG
401 E. STATE ST. 4th Floor ROCKFORD, IL 61104
PH: 815.965.6400 www.imegcorp.com

USER NAME = Brad.S.Lange	DESIGNED - Brad Lange	REVISED -
	DRAWN - Tammie Govig	REVISED -
	CHECKED - Corey Stout	REVISED -
PLOT DATE = 4/30/2026	DATE - 4/30/2026	REVISED -

STATE OF ILLINOIS
DEPARTMENT OF TRANSPORTATION

I-290/IL 53 HMA RESURFACING AND BRIDGE REPAIRS
TYPICAL SECTIONS

SCALE: N.T.S. | SHEET 2 OF 3 SHEETS | STA. | TO STA.

F.A.I RTE.	SECTION	COUNTY	TOTAL SHEETS	SHEET NO.
290	(0404-316-HB) BR 24	COOK	276	13
		CONTRACT NO. 62W99		
	ILLINOIS FED. AID PROJECT			

MODEL: Typical Sections - TypicalSection2 [Sheet]
FILE NAME: W:\24001656.05\IDOT Dist 1 IL 290 Mill and Overlay\CADD Data\SheetsID1_IL53_sht_Typicals.dgn

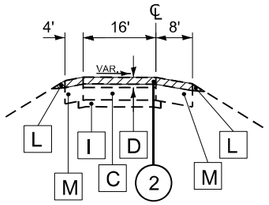

EXISTING TYPICAL SECTION
RAMP ("A")

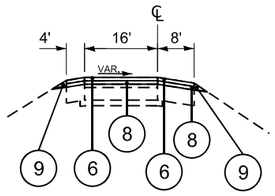

PROPOSED TYPICAL SECTION
RAMP ("A")

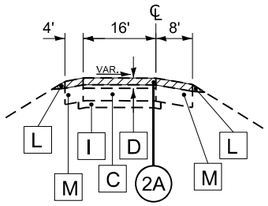

EXISTING TYPICAL SECTION
RAMP ("B")

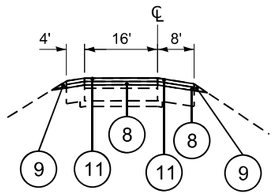

PROPOSED TYPICAL SECTION
RAMP ("B")

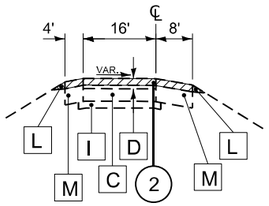

EXISTING TYPICAL SECTION
RAMP ("C")

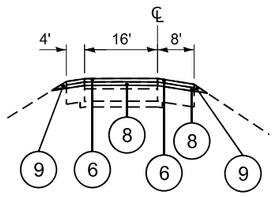

PROPOSED TYPICAL SECTION
RAMP ("C")

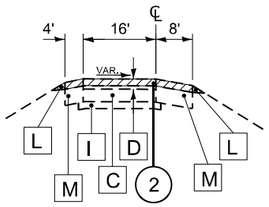

EXISTING TYPICAL SECTION
RAMP ("D")

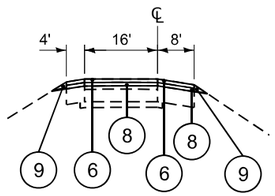

PROPOSED TYPICAL SECTION
RAMP ("D")

THE LONGITUDINAL JOINT SEALANT SHALL BE PLACED ON MILLED SURFACE AND ON P HMA BC SMA 12.5 N80.

THE LONGITUDINAL JOINT SEALANT SHALL BE PLACED ON P HMA BC IL-4.75 N50.

EXISTING LEGEND

- A C.R.C PAVEMENT, 8"
- B C.R.C PAVEMENT, 8"
- C P.C.C. PAVEMENT, 10"
- D EXISTING 4" HMA OVERLAY
- E EXISTING 6" HMA OVERLAY
- F EXISTING 2 1/2" HMA OVERLAY
- G EXISTING 2 3/4" HMA OVERLAY
- H EXISTING 3" HMA OVERLAY
- I AGGREGATE SUBGRADE
- J STEEL BEAM GUARDRAIL, DOUBLE RAIL
- K PIPE UNDERDRAIN
- L AGGREGATE SHOULDER
- M HMA SHOULDER, 10"
- N HMA SHOULDER, 14"
- O HMA SHOULDER, 12"
- P P.C.C. SHOULDER, 11"
- Q HMA GORE

PROPOSED PAVING LEGEND

- (1) HOT-MIX ASPHALT SURFACE REMOVAL, 4" (MAINLINE)
- (2) HOT-MIX ASPHALT SURFACE REMOVAL, 2-1/4" (RAMPS)
- (2A) HOT-MIX ASPHALT SURFACE REMOVAL, 2-1/2" (FRONTAGE RD & RAMPS)
- (3) HOT-MIX ASPHALT SURFACE REMOVAL, 3-3/4" (MAINLINE SHOULDERS)
- (4) POLYMERIZED HOT-MIX ASPHALT SURFACE COURSE, STONE MATRIX ASPHALT, 12.5, MIX "F", N80, 2" (MAINLINE)
- (5) POLYMERIZED HOT-MIX ASPHALT BINDER COURSE, STONE MATRIX ASPHALT, 12.5, N80, 2" (MAINLINE)
- (6) HOT-MIX ASPHALT SURFACE COURSE, IL-9.5, MIX "D", N70, 1-1/2" (MAINLINE SHOULDERS AND RAMPS)
- (7) HOT-MIX ASPHALT BINDER COURSE, IL-19.0, N70, 2-1/4" (MAINLINE SHOULDERS)
- (8) POLYMERIZED HOT-MIX ASPHALT BINDER COURSE, IL-4.75, N50, 3/4" (FRONTAGE RD & RAMPS)
- (9) AGGREGATE WEDGE SHOULDERS, TYPE B
- * (10) SHOULDER RUMBLE STRIPS (SIZE AS INDICATED)
- (11) POLYMERIZED HOT-MIX ASPHALT SURFACE COURSE, STONE MATRIX ASPHALT, 9.5, MIX "F", N80, 1-3/4" (FRONTAGE RD & RAMPS)
- (12) REMOVE AND REERECT STEEL PLATE BEAM GUARDRAIL, TYPE D
- (13) GRADING AND SHAPING SHOULDERS

* REFER TO STD. 642001 FOR RUMBLE STRIP LIMITS AT RAMPS.

NOTE: CONTRACTOR SHALL PATCH FIRST

MODEL: Typical Sections - TypicalSection3 [Sheet]
FILE NAME: W:\24001656.05\IDOT Dist 1 IL 290 Mill and Overlay\CADD Data\Sheets\D1_IL53_sht_TypicalS.dgn

IMEG
401 E. STATE ST. 4th Floor ROCKFORD, IL 61104
PH: 815.965.6400
www.imegcorp.com

USER NAME = Brad.S.Lange	DESIGNED - Brad Lange	REVISED -	
	DRAWN - Tammie Govig	REVISED -	
	CHECKED - Corey Stout	REVISED -	
PLOT DATE = 4/30/2026	DATE - 4/30/2026	REVISED -	

STATE OF ILLINOIS
DEPARTMENT OF TRANSPORTATION

I-290/IL 53 HMA RESURFACING AND BRIDGE REPAIRS
TYPICAL SECTIONS

SCALE: N.T.S. | SHEET 3 OF 3 SHEETS | STA. | TO STA.

F.A.I RTE.	SECTION	COUNTY	TOTAL SHEETS	SHEET NO.
290	(0404-316-HB) BR 24	COOK	276	14
		CONTRACT NO. 62W99		
		ILLINOIS FED. AID PROJECT		

SEQUENCE OF CONSTRUCTION – IL 53 MAINLINE BRIDGES

STAGE 1 SB BRIDGES

1. PROPOSED DECK AND BRIDGE REPAIRS ON THE OUTSIDE LANES OF THE EXPRESS AND LOCAL LANES.
2. WEEKEND CLOSURES WILL BE UTILIZED FOR THE DECK AND BRIDGE REPAIRS. TWO LANES OF TRAFFIC WILL BE SHIFTED TO THE INSIDE SHOULDER AND INSIDE LANE TO ALLOW THE CONCRETE TO CURE.

STAGE 2 SB BRIDGES AND SB STEEL PLATE BEAM GUARDRAIL WORK

1. PROPOSED DECK AND BRIDGE REPAIRS ON THE INSIDE LANES OF THE EXPRESS AND LOCAL LANES.
2. REMOVE THE STEEL PLATE BEAM GUARDRAIL, TYPE D, DEBRIS REMOVAL, CLEANING DRAINAGE STRUCTURES, ADJUSTING OR RECONSTRUCTING DRAINAGE STRUCTUES, RESURFACING, AND REERECTING THE STEEL PLATE BEAM GUARDRAIL, TYPE D.
3. PERMANENT LANE CLOSURES WILL BE UTILIZED SHIFTING THREE LANES OF TRAFFIC TO THE OUTSIDE LANES AND OUTSIDE SHOULDER.

STAGE 2A SB BRIDGES

1. PROPOSED ABUTMENTS, PIERS, AND APPROACH BENT REPAIRS.
2. THE OUTSIDE LANE WILL BE CLOSED USING APPLICABLE IDOT HIGHWAY STANDARDS.
3. USE APPLICABLE TOLLWAY STANDARD DRAWINGS ON I-90. THE INSIDE SHOULDER CLOSURES SHALL BE CLOSED WITH BARRIERS.

STAGE 1 NB BRIDGES

1. PROPOSED DECK AND BRIDGE REPAIRS ON THE OUTSIDE LANES OF THE EXPRESS AND LOCAL LANES.
2. PERMANENT LANE CLOSURES WILL BE UTILIZED SHIFTING TWO LANES OF TRAFFIC TO THE INSIDE SHOULDER AND INSIDE LANES

STAGE 2 NB BRIDGES AND NB STEEL PLATE BEAM GUARDRAIL WORK

1. PROPOSED DECK AND BRIDGE REPAIRS ON THE INSIDE LANES OF THE EXPRESS AND LOCAL LANES.
2. REMOVE THE STEEL PLATE BEAM GUARDRAIL, TYPE D, DEBRIS REMOVAL, CLEANING DRAINAGE STRUCTURES, ADJUSTING OR RECONSTRUCTING DRAINAGE STRUCTUES, RESURFACING, AND REERECTING THE STEEL PLATE BEAM GUARDRAIL, TYPE D.
3. PERMANENT LANE CLOSURES WILL BE UTILIZED SHIFTING TWO LANES OF TRAFFIC TO THE OUTSIDE LANES AND OUTSIDE SHOULDER

STAGE 2A NB BRIDGES

1. PROPOSED ABUTMENTS, PIERS, AND APPROACH BENT REPAIRS.
2. THE OUTSIDE LANE WILL BE CLOSED USING APPLICABLE IDOT HIGHWAY STANDARDS.
3. USE APPLICABLE TOLLWAY STANDARD DRAWINGS ON I-90. THE INSIDE SHOULDER CLOSURES SHALL BE CLOSED WITH BARRIERS.

STAGE 3 MEDIAN STEEL PLATE BEAM GUARDRAIL WORK

1. REMOVE THE STEEL PLATE BEAM GUARDRAIL, TYPE D, DEBRIS REMOVAL, CLEANING DRAINAGE STRUCTURES, ADJUSTING OR RECONSTRUCTING DRAINAGE STRUCTURES, RESURFACING, AND REERECTING THE STEEL PLATE BEAM GUARDRAIL, TYPE D.
2. PERMANENT LANE CLOSURES WILL BE UTILIZED SHIFTING THE NB AND SB EXPRESS LANES TO THE OUTSIDE LANES AND OUTSIDE SHOULDERS.

SEQUENCE OF CONSTRUCTION – IL 53 RAMPS A, B, C, & D

1. PROPOSED PAVEMENT PATCHES, MILL, AND RESURFACE THE RAMPS AND SHOULDERS.
2. A DETOUR WILL BE UTILIZED WITH A MAXIMUM CLOSURE OF 7 CALENDAR DAYS.

SEQUENCE OF CONSTRUCTION – FRONTAGE ROADS

1. PROPOSED PAVEMENT PATCHES, MILL, AND RESURFACE THE FRONTAGE ROADS AND SHOULDERS.
2. LANE CLOSURES USING APPLICABLE IDOT HIGHWAY STANDARDS DURING NIGHTTIME AND WEEKEND HOURS.

SEQUENCE OF CONSTRUCTION – IL 53 MAINLINE

1. PROPOSED PAVEMENT PATCHES, MILL, AND RESURFACE THE NORTHBOUND AND SOUTHBOUND EXPRESS AND LOCAL LANES AND SHOULDERS.
2. LANE CLOSURES USING APPLICABLE IDOT HIGHWAY STANDARDS DURING NIGHTTIME AND WEEKEND HOURS.

CiorbaGroup
8725 W. Higgins Rd, Ste 600, Chicago, IL 60631
P 773.775.4009 | www.ciorba.com

USER NAME = askonicki	DESIGNED -	REVISED -
	DRAWN -	REVISED -
PLOT SCALE = 0.16666667 ' / In.	CHECKED -	REVISED -
PLOT DATE = 3/5/2026	DATE -	REVISED -

STATE OF ILLINOIS
DEPARTMENT OF TRANSPORTATION

I-290/IL 53 HMA RESURFACING AND BRIDGE REPAIRS
MAINTENANCE OF TRAFFIC - SEQUENCE OF CONSTRUCTION

SCALE: | SHEET OF SHEETS | STA. | TO STA.

F.A.I. RTE.	SECTION	COUNTY	TOTAL SHEETS	SHEET NO.
290	(0404-316-HB) BR 24	COOK	276	15
		CONTRACT NO. 62W99		
	ILLINOIS	FED. AID PROJECT		

DATE PLOTTED = 4/30/2026 5:03:08 PM
PW TEMPLATE = D:\2021693.06\Admin\CGI-PDF.dgn
PLOT CONFIG = CGI-PDF.plt
MODEL: SMODELNAMES
FILE NAME: pw://ciorba-pw.bentley.com:ciorba-pw-01/Documents/Projects/IL_DOT/D1/0021693.06/CADD Data/Sht/MOT/D1621N91-sht-MOT SEQ.dgn

SUGGESTED SEQUENCE OF OPERATIONS

RESURFACING SEQUENCE OF OPERATIONS (I-290 EXPRESS LANES) – 3 LANE SECTION

LANE 1: INSIDE LANE
LANE 2: MIDDLE LANE
LANE 3: OUTSIDE LANE

OPERATION 1:
THIS WORK SHALL CONSIST OF MILLING THE OUTSIDE SHOULDER 3-3/4". TEMPORARY CLOSURE OF LANE 3. MAINTAIN TRAFFIC IN LANES 1 & 2.
OPERATION 1A:
THIS WORK SHALL CONSIST OF MILLING OUTSIDE (LANE 3) AND GORE 2" WITH A 20:1 TAPER INTO (LANE 2). TEMPORARY CLOSURE OF LANES 2 & 3. MAINTAIN TRAFFIC IN LANE 1.
OPERATION 1B:
THIS WORK SHALL CONSIST OF MILLING (LANE 3) 2" WITH A 20:1 TAPER INTO (LANE 2), TEMPORARY CLOSURE OF LANES 2 & 3. MAINTAIN TRAFFIC IN LANE 1.
AFTER COMPLETION OF OPERATION 1, 1A & 1B INSTALL TEMPORARY STRIPING BETWEEN (LANE 2) AND (LANE 3).

OPERATION 2:
THIS WORK SHALL CONSIST OF MILLING (LANE 1) 4", MILLING (LANE 2) 2", TEMPORARY CLOSURE OF LANES 1 & 2. MAINTAIN TRAFFIC IN LANE 3.
OPERATION 2A:
THIS WORK SHALL CONSIST OF PLACING (LJS) LONGITUDINAL JOINT SEALANT -HALF-WIDTH AND POLY HMA BINDER SMA, N80-2" (LANE 1)
AFTER COMPLETION OF OPERATION 2 & 2A INSTALL TEMPORARY STRIPING (LANE 1)

OPERATION 3:
THIS WORK SHALL CONSIST OF MILLING OUTSIDE (LANE 3) AND GORE AN ADDITIONAL 2" WITH A 20:1 TAPER INTO (LANE 2), TEMPORARY CLOSURE OF LANES 2 & 3. MAINTAIN TRAFFIC IN LANE 1.
OPERATION 3A:
THIS WORK SHALL CONSIST OF MILLING OUTSIDE (LANE 3) AN ADDITIONAL 2", TEMPORARY CLOSURE OF LANES 2 & 3. MAINTAIN TRAFFIC IN LANE 1.
AFTER COMPLETION OF OPERATION 3 & 3A PLACE TEMPORARY STRIPING BETWEEN (LANE 2) AND (LANE 3) AND (GORE)

OPERATION 4:
THIS WORK SHALL CONSIST OF MILLING (LANE 2) AN ADDITIONAL 2", TEMPORARY CLOSURE OF LANES 1 & 2. MAINTAIN TRAFFIC IN LANE 3.
OPERATION 4A:
THIS WORK SHALL CONSIST OF PLACING (LJS HALF-WIDTH) BETWEEN (LANE 1 & 2), (LJS) BETWEEN (LANE 2 & 3) AND
PLACING POLY HMA BINDER SMA, N80-2" ON (LANE 2). TEMPORARY CLOSURE OF LANES 1 & 2. MAINTAIN TRAFFIC IN LANE 3.
AFTER COMPLETION OF OPERATION 4 & 4A PLACE TEMPORARY STRIPING BETWEEN (LANE 2 & LANE 3)

OPERATION 5:
THIS WORK SHALL CONSIST OF PLACING (LJS) BETWEEN (LANE 3 & GORE), AND (LJS HALF-WIDTH) BETWEEN (GORE & LOCAL LANE 1)
PLACING POLY HMA BINDER SMA, N80-2" ON (LANE 3 & GORE) TRAFFIC IN (LANE 1)
OPERATION 5A:
THIS WORK SHALL CONSIST OF PLACING (LJS) BETWEEN (LANE 3 & THE OUTSIDE SHOULDER), PLACING POLY HMA BINDER SMA, N80-2" ON (LANE 3) AND PLACING HMA BINDER, N70-2-1/4" ON OUTSIDE SHOULDER. TRAFFIC IN (LANE 1)
AFTER COMPLETION OF OPERATION 5 & 5A PLACE TEMPORARY STRIPING AT (GORE)

OPERATION 6:
THIS WORK SHALL CONSIST OF PLACING (LJS) BETWEEN (LANE 1 & 2) & (LANE 2 & 3)
PLACING POLY HMA SURFACE SMA, N80-2" ON (LANE 1) AND (LANE 2). TEMPORARY CLOSURE OF LANES 1 & 2.
MAINTAIN TRAFFIC IN LANE 3.
AFTER COMPLETION OF OPERATION 6 PLACE THE TEMPORARY STRIPING ON (LANE 1) AND (LANE 2).

OPERATION 7:
THIS WORK SHALL CONSIST OF (LJS) BETWEEN LANE 3 & GORE) AND (LJS HALF-WIDTH) BETWEEN (GORE & LOCAL LANE 1)
PLACING POLY HMA SURFACE SMA, N80-2" ON (LANE 3) AND (GORE). TEMPORARY CLOSURE OF LANES 2 & 3. MAINTAIN TRAFFIC IN LANE 1.
OPERATION 7A:
THIS WORK SHALL CONSIST OF PLACING POLY HMA SURFACE SMA, N80-2" ON (LANE 3). TRAFFIC IN (LANE 1)
PLACING HMA SURFACE, N70, 1-1/2" ON OUTSIDE SHOULDER. TEMPORARY CLOSURE OF LANES 2 & 3. MAINTAIN TRAFFIC IN LANE 1.
AFTER COMPLETION OF OPERATION 6 PLACE THE TEMPORARY STRIPING ON (LANE 3) AND (GORE).

RESURFACING SEQUENCE OF OPERATIONS (IL53 LOCAL LANES) – 4 LANE SECTION

LANE 1: INSIDE LANE
LANE 2 & 3: MIDDLE LANES
LANE 4: OUTSIDE LANE

OPERATION 1:
THIS WORK SHALL CONSIST OF MILLING THE OUTSIDE SHOULDER AT 3-3/4", AND MILLING (LANES 2, 3, & 4) 2". TRAFFIC IN (LANE 1)
AFTER COMPLETION OF OPERATION 1 PLACE TEMPORARY STRIPING BETWEEN ALL LANES.

OPERATION 2:
THIS WORK SHALL CONSIST OF MILLING THE INSIDE SHOULDER 3-3/4", AND MILLING (LANE 1) 2", TEMPORARY CLOSURE OF LANES 1 & 2.
MAINTAIN TRAFFIC IN LANE 3 & 4.

OPERATION 3:
THIS WORK SHALL CONSIST OF MILLING (LANE 1) 2", TEMPORARY CLOSURE OF LANES 1 & 2. MAINTAIN TRAFFIC IN LANE 3 & 4.

OPERATION 4:
THIS WORK SHALL CONSIST OF MILLING (LANE 2, 3 &4) 2". TRAFFIC IN (LANE 1)

OPERATION 5:
THIS WORK SHALL CONSIST OF PLACING (LJS) BETWEEN (LANE 3 & 4), BETWEEN (LANE 4 & THE OUTSIDE SHOULDER), AND
PLACING HMA BINDER, N70, 2-1/4" ON OUTSIDE SHOULDER,
PLACING POLY HMA BINDER SMA, N80-2" ON (LANE 4), TEMPORARY CLOSURE OF LANES 3 & 4. MAINTAIN TRAFFIC IN LANE 1 & 2.
AFTER COMPLETION OF OPERATION 5 PLACE TEMPORARY STRIPING BETWEEN (LANE 3 & 4)

OPERATION 6:
THIS WORK SHALL CONSIST OF PLACING (LJS) BETWEEN (LANE 2 & 3) AND
PLACING POLY HMA BINDER SMA, N80-2" ON (LANE 3) TRAFFIC IN (LANE 1)
AFTER COMPLETION OF OPERATION 6 PLACE TEMPORARY STRIPING BETWEEN (LANE 2 & 3)

OPERATION 7:
THIS WORK SHALL CONSIST OF PLACING (LJS) BETWEEN (LANE 1 & 2) AND
PLACING POLY HMA BINDER SMA, N80-2" ON (LANE 2), TEMPORARY CLOSURE OF LANES 1 & 2. MAINTAIN TRAFFIC IN LANE 3 & 4.
AFTER COMPLETION OF OPERATION 7 PLACE TEMPORARY STRIPING BETWEEN (LANE 1 & 2)

OPERATION 8:
PLACING POLY HMA BINDER SMA, N80-2" ON (LANE 1), TEMPORARY CLOSURE OF LANES 1 & 2. MAINTAIN TRAFFIC IN LANE 3 & 4.
PLACING HMA BINDER, N70, 2-1/4" ON INSIDE SHOULDER,

NOTES:

1. **REPEAT OPERATION 5 THRU 8 FOR THE PLACEMENT OF THE SURFACE COURSE. PERMANENT MARKINGS AND REFLECTORS WILL BE PLACED AFTER THE COMPLETION OF THE HMA RESURFACING.**

2. **THE CONTRACTOR SHALL REQUEST AND GAIN APPROVAL FROM THE ILLINOIS DEPARTMENT OF TRANSPORTATIONS'S EXPRESSWAY TRAFFIC OPERATIONS ENGINEER AT WWW.IDOTICS.COM TWENTY-FOUR (24) HOURS IN ADVANCE OF ALL DAILY LANE, RAMP AND SHOULDER CLOSURES AND 7 DAYS IN ADVANCE OF ALL PERMANENT AND WEEKEND CLOSURES ON ALL FREEWAYS AND/OR EXPRESSWAYS IN DISTRICT ONE. THIS ADVANCE NOTIFICATION IS CALCULATED BASED ON WORKWEEK OF MONDAY THROUGH FRIDAY AND SHALL NOT INCLUDE WEEKENDS OR HOLIDAYS.**

3. **THE CONTRACTOR SHALL CONTACT THE IDOT EXPRESSWAY TRAFFIC CONTROL SUPERVISOR DISTRICT ONE CARLOS AT CARLOS.MUNOZ@ILLINOIS.GOV A MINIMUM OF 72 HOURS IN ADVANCE OF THE BEGINNING OF WORK.**

4. **TEMPORARY LANE CLOUSRES ARE UTILIZED FOR RESURFACING OPERATIONS. PERMANENT LANE CLOSURES ARE NECESSARY FOR BRIDGE AND PATCH WORK AND FOR THE WORK TO REMOVE THE STEEL PLATE BEAM GUARDRAIL, TYPE D, DEBRIS REMOVAL, CLEANING DRAINAGE STRUCTURES, ADJUSTING OR RECONSTRUCTING DRAINAGE STRUCTURES, RESURFACING, AND REERECTING THE STEEL PLATE BEAM GUARDRAIL, TYPE D.**

MODEL: MOT Notes
FILE NAME: W:\24001656.05\IDOT Dist 1 IL 290 Mill and Overlay\CADD Data\SheetsID1_IL53_sht_MOT-Notes.dgn

IMEG
401 E. STATE ST. 4th Floor ROCKFORD, IL 61104 PH: 815.965.6400 www.imegcorp.com

USER NAME = Marc.A.Personette	DESIGNED - Brad Lange	REVISED -	
	DRAWN - Marc Personette	REVISED -	
	CHECKED - Corey Stout	REVISED -	
PLOT DATE = 4/30/2026	DATE - 4/30/2026	REVISED -	

STATE OF ILLINOIS
DEPARTMENT OF TRANSPORTATION

I-290/IL 53 HMA RESURFACING AND BRIDGE REPAIRS
SUGGESTED SEQUENCE OF OPERATIONS - RESURFACING

SCALE: N.T.S. | SHEET 1 OF 5 SHEETS | STA. | TO STA.

F.A.I RTE.	SECTION	COUNTY	TOTAL SHEETS	SHEET NO.
290	(0404-316-HB) BR 24	COOK	276	16
		CONTRACT NO. 62W99		
		ILLINOIS FED. AID PROJECT		

℄ - IL. RTE. 53 (I-290 EXPRESS LANES)

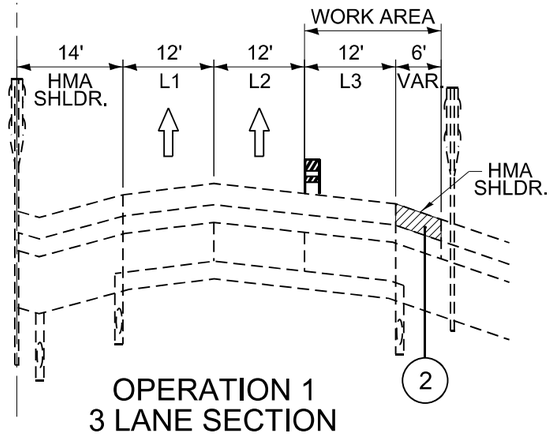

OPERATION 1
3 LANE SECTION

℄ - IL. RTE. 53 (I-290 EXPRESS LANES)

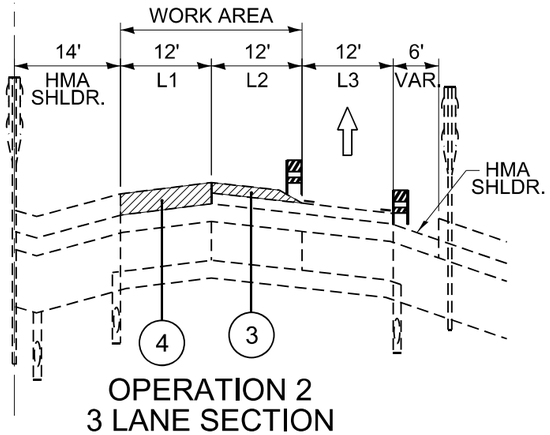

OPERATION 2
3 LANE SECTION

℄ - IL. RTE. 53 (I-290 EXPRESS LANES)

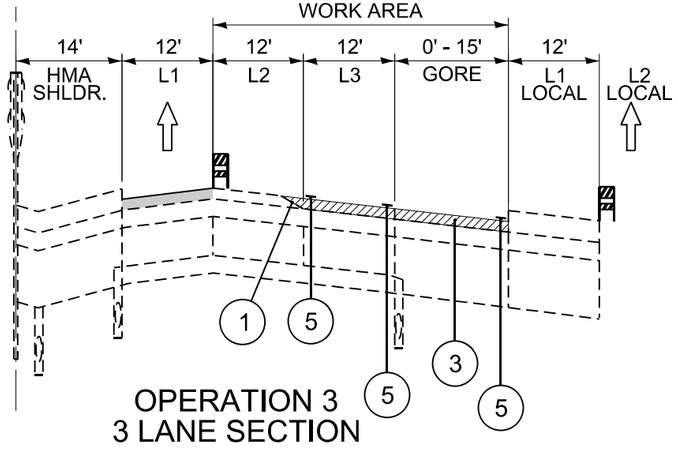

OPERATION 3
3 LANE SECTION

℄ - IL. RTE. 53 (I-290 EXPRESS LANES)

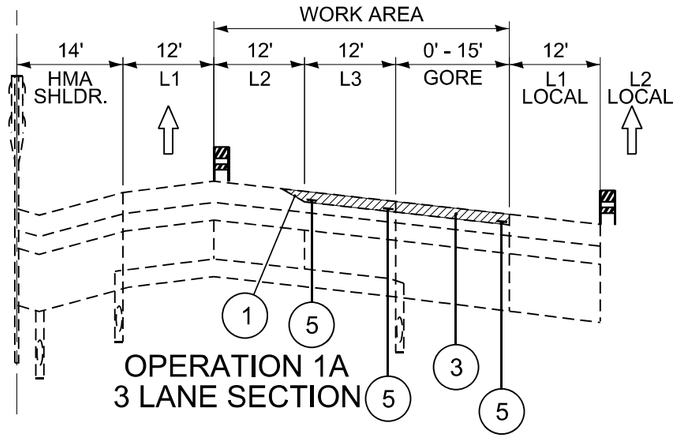

OPERATION 1A
3 LANE SECTION

℄ - IL. RTE. 53 (I-290 EXPRESS LANES)

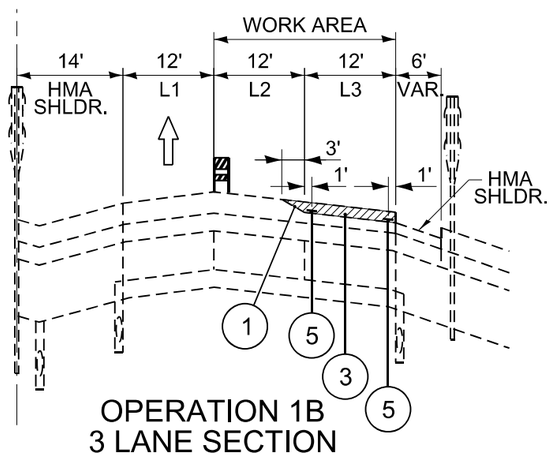

OPERATION 1B
3 LANE SECTION

℄ - IL. RTE. 53 (I-290 EXPRESS LANES)

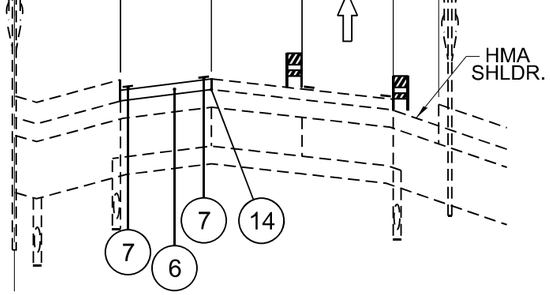

OPERATION 2A
3 LANE SECTION

℄ - IL. RTE. 53 (I-290 EXPRESS LANES)

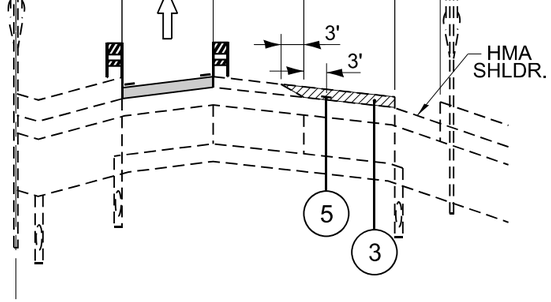

OPERATION 3A
3 LANE SECTION

PROPOSED PAVING LEGEND

1. HOT-MIX ASPHALT SURFACE REMOVAL (VARIABLE DEPTH), TAPER 20:1
2. HOT-MIX ASPHALT SURFACE REMOVAL, 3 3/4" (MAINLINE SHOULDERS)
3. HOT-MIX ASPHALT SURFACE REMOVAL, 2"
4. HOT-MIX ASPHALT SURFACE REMOVAL, 4"
5. MODIFIED URETHANE PAVEMENT MARKING, 6" WHITE LANE LINE (SKIP-DASH)
6. POLYMERIZED HOT-MIX ASPHALT BINDER COURSE, STONE MATRIX ASPHALT, N80, 2"
7. TEMPORARY PAVEMENT MARKING - LINE 6" - TYPE IV TAPE (SKIP-DASH)
8. HOT-MIX ASPHALT BINDER COURSE, IL-19.0, N70, 2 1/4"
9. HOT-MIX ASPHALT SURFACE COURSE, IL-9.5, MIX "D", N70, 1 1/2"
10. POLYMERIZED HOT-MIX ASPHALT SURFACE COURSE, STONE MATRIX ASPHALT, 12.5, MIX "F", N80 2"
11. TEMPORARY PAVEMENT MARKING - LINE 6" TYPE IV TAPE (10' LINE @ 30' SPACE)
12. TEMPORARY PAVEMENT MARKING - LINE 6" TYPE IV TAPE (EDGE LINE)
13. NOT USED
14. LONGITUDINAL JOINT SEALANT HALF - WIDTH
15. LONGITUDINAL JOINT SEALANT
16. TEMPORARY PAVEMENT MARKING - LINE 8" TYPE IV TAPE

VERTICAL BARRICADE/DRUM (NO LIGHT)

IMEG
401 E. STATE ST. 4th Floor
ROCKFORD, IL 61104
PH: 815.965.6400
www.imegcorp.com

USER NAME = Marc.A.Personette	DESIGNED - Brad Lange	REVISED -	
	DRAWN - Marc Personette	REVISED -	
	CHECKED - Corey Stout	REVISED -	
PLOT DATE = 4/29/2026	DATE - 4/29/2026	REVISED -	

STATE OF ILLINOIS
DEPARTMENT OF TRANSPORTATION

I-290/IL 53 HMA RESURFACING AND BRIDGE REPAIRS
SEQUENCE OF OPERATIONS - RESURFACING TYPICAL SECTIONS

SCALE: N.T.S. | SHEET 2 OF 5 SHEETS | STA. | TO STA.

F.A.I RTE.	SECTION	COUNTY	TOTAL SHEETS	SHEET NO.
290	(0404-316-HB) BR 24	COOK	276	17
		CONTRACT NO. 62W99		
	ILLINOIS FED. AID PROJECT			

MODEL: Typical Sections - TypicalSection1 [Sheet]
FILE NAME: W:\2400\1656.05\IDOT Dist 1 IL 290 Mill and Overlay\CADD Data\Sheets\D1_IL53_stH_Sequence of Operations Typicals.dgn

℄ - IL. RTE. 53 (I-290 EXPRESS LANES)

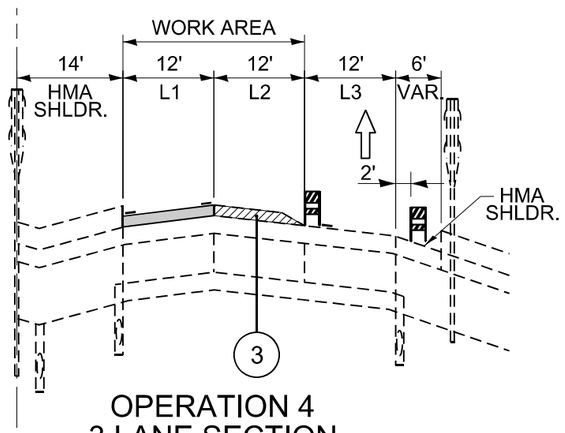

OPERATION 4
3 LANE SECTION

℄ - IL. RTE. 53 (I-290 EXPRESS LANES)

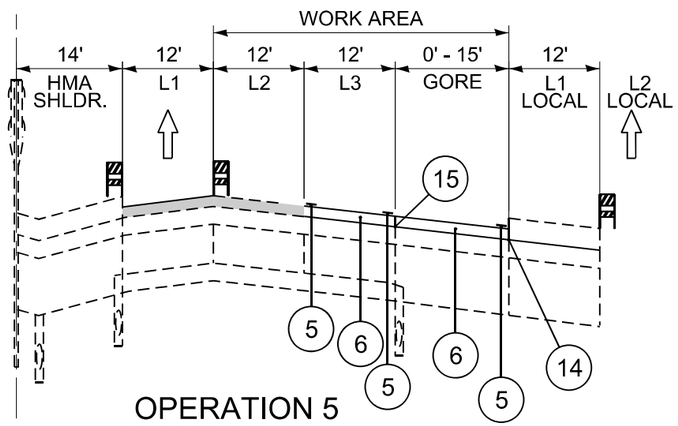

OPERATION 5
3 LANE SECTION

℄ - IL. RTE. 53 (I-290 EXPRESS LANES)

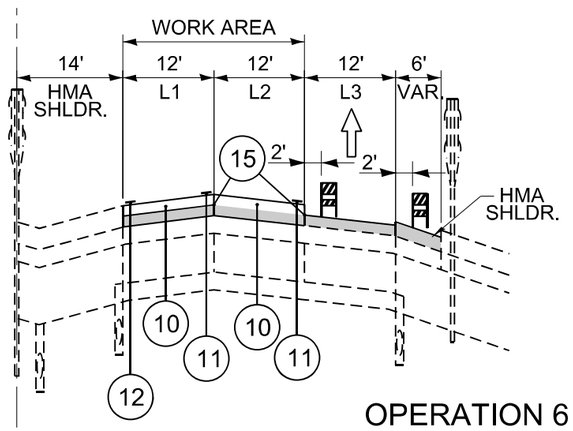

OPERATION 6
3 LANE SECTION

℄ - IL. RTE. 53 (I-290 EXPRESS LANES)

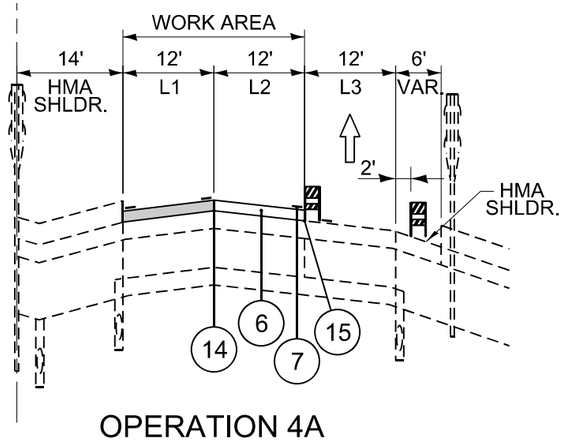

OPERATION 4A
3 LANE SECTION

℄ - IL. RTE. 53 (I-290 EXPRESS LANES)

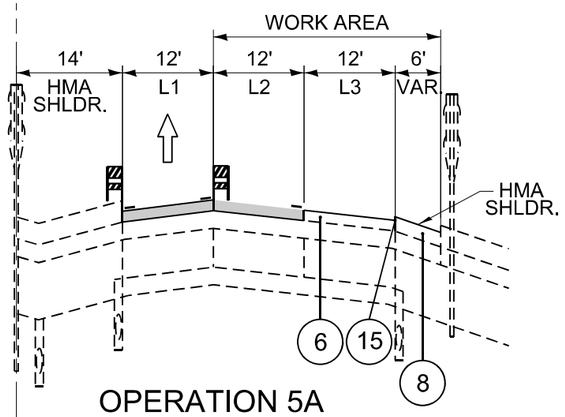

OPERATION 5A
3 LANE SECTION

℄ - IL. RTE. 53 (I-290 EXPRESS LANES)

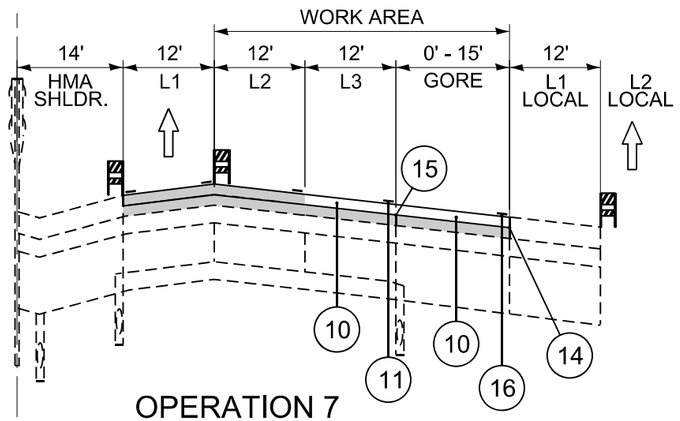

OPERATION 7
3 LANE SECTION

℄ - IL. RTE. 53 (I-290 EXPRESS LANES)

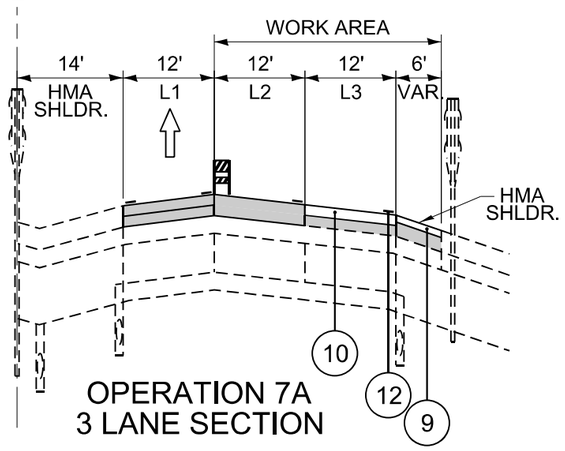

OPERATION 7A
3 LANE SECTION

PROPOSED PAVING LEGEND

1. HOT-MIX ASPHALT SURFACE REMOVAL (VARIABLE DEPTH), TAPER 20:1
2. HOT-MIX ASPHALT SURFACE REMOVAL, 3 3/4" (MAINLINE SHOULDERS)
3. HOT-MIX ASPHALT SURFACE REMOVAL, 2"
4. HOT-MIX ASPHALT SURFACE REMOVAL, 4"
5. MODIFIED URETHANE PAVEMENT MARKING, 6" WHITE LANE LINE (SKIP-DASH)
6. POLYMERIZED HOT-MIX ASPHALT BINDER COURSE, STONE MATRIX ASPHALT, N80, 2"
7. TEMPORARY PAVEMENT MARKING - LINE 6" - TYPE IV TAPE (SKIP-DASH)
8. HOT-MIX ASPHALT BINDER COURSE, IL-19.0, N70, 2 1/4"
9. HOT-MIX ASPHALT SURFACE COURSE, IL-9.5, MIX "D", N70, 1 1/2"
10. POLYMERIZED HOT-MIX ASPHALT SURFACE COURSE, STONE MATRIX ASPHALT, 12.5, MIX "F", N80 2"
11. TEMPORARY PAVEMENT MARKING - LINE 6" TYPE IV TAPE (10' LINE @ 30' SPACE)
12. TEMPORARY PAVEMENT MARKING - LINE 6" TYPE IV TAPE (EDGE LINE)
13. NOT USED
14. LONGITUDINAL JOINT SEALANT HALF - WIDTH
15. LONGITUDINAL JOINT SEALANT
16. TEMPORARY PAVEMENT MARKING - LINE 8" TYPE IV TAPE

VERTICAL BARRICADE/DRUM (NO LIGHT)

IMEG
401 E. STATE ST. 4th Floor
ROCKFORD, IL
61104
PH: 815.965.6400
www.imegcorp.com

USER NAME = Marc.A.Personette	DESIGNED - Brad Lange	REVISED -	
	DRAWN - Marc Personette	REVISED -	
	CHECKED - Corey Stout	REVISED -	
PLOT DATE = 4/29/2026	DATE - 4/29/2026	REVISED -	

STATE OF ILLINOIS
DEPARTMENT OF TRANSPORTATION

I-290/IL 53 HMA RESURFACING AND BRIDGE REPAIRS
SEQUENCE OF OPERATIONS - RESURFACING TYPICAL SECTIONS

SCALE: N.T.S. | SHEET 3 OF 5 SHEETS | STA. | TO STA.

F.A.I RTE.	SECTION	COUNTY	TOTAL SHEETS	SHEET NO.
290	(0404-316-HB) BR 24	COOK	276	18
		CONTRACT NO. 62W99		
	ILLINOIS FED. AID PROJECT			

MODEL: Typical Sections - TypicalSection2 [Sheet]
FILE NAME: W:\2400\1656.05\IDOT Dist 1 IL 290 Mill and Overlay\CADD Data\Sheets\D1_IL53_sht_Sequence of Operations Typicals.dgn

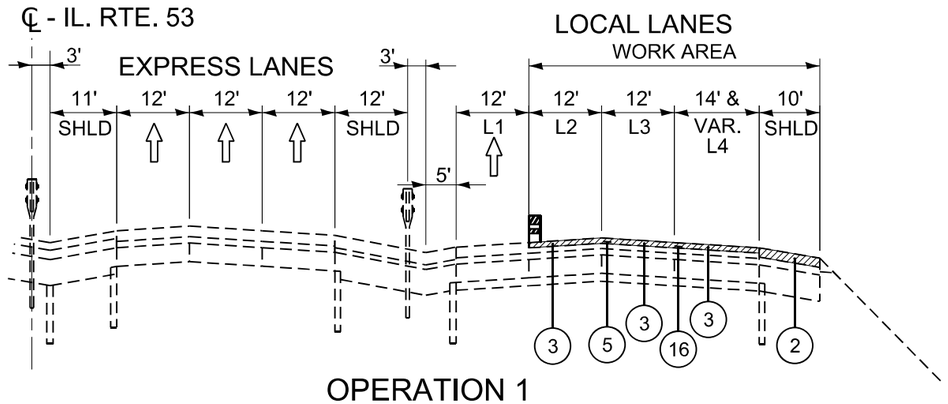

OPERATION 1

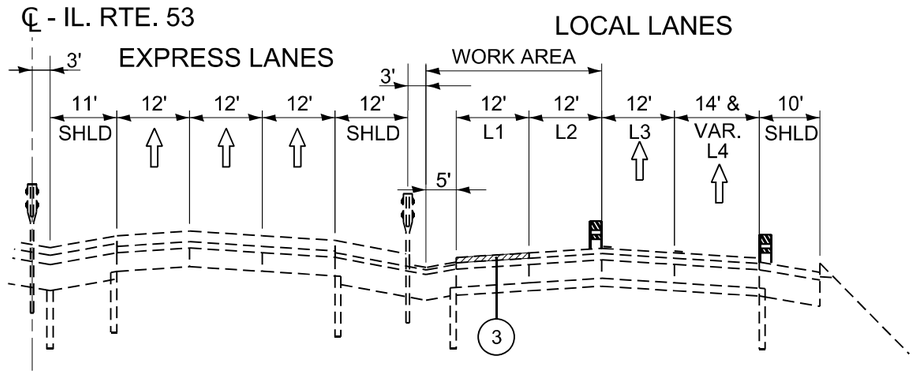

OPERATION 3

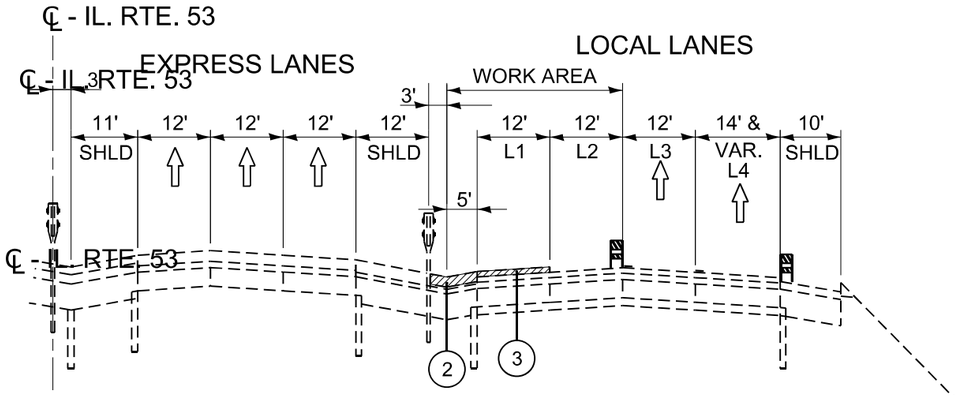

OPERATION 2

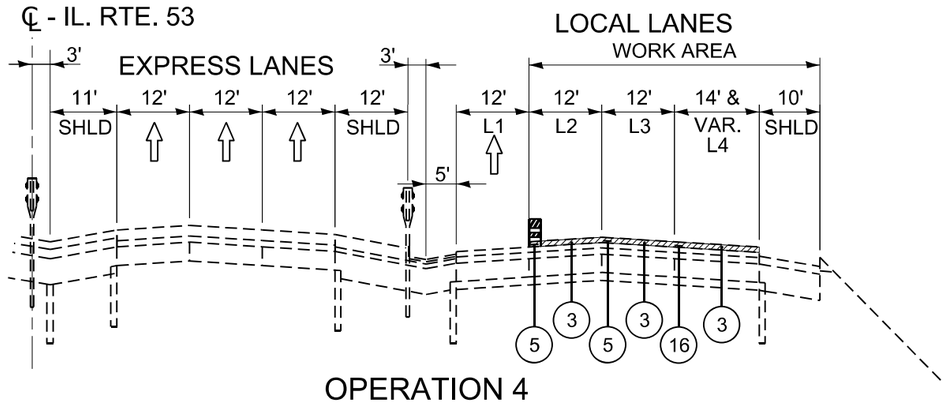

OPERATION 4

PROPOSED PAVING LEGEND

1. HOT-MIX ASPHALT SURFACE REMOVAL (VARIABLE DEPTH), TAPER 20:1
2. HOT-MIX ASPHALT SURFACE REMOVAL, 3 3/4" (MAINLINE SHOULDERS)
3. HOT-MIX ASPHALT SURFACE REMOVAL, 2"
4. HOT-MIX ASPHALT SURFACE REMOVAL, 4"
5. MODIFIED URETHANE PAVEMENT MARKING, 6" WHITE LANE LINE (SKIP-DASH)
6. POLYMERIZED HOT-MIX ASPHALT BINDER COURSE, STONE MATRIX ASPHALT, N80, 2"
7. TEMPORARY PAVEMENT MARKING - LINE 6" - TYPE IV TAPE (SKIP-DASH)
8. HOT-MIX ASPHALT BINDER COURSE, IL-19.0, N70, 2 1/4"
9. HOT-MIX ASPHALT SURFACE COURSE, IL-9.5, MIX "D", N70, 1 1/2"
10. POLYMERIZED HOT-MIX ASPHALT SURFACE COURSE, STONE MATRIX ASPHALT, 12.5, MIX "F", N80 2"
11. TEMPORARY PAVEMENT MARKING - LINE 6" TYPE IV TAPE (10' LINE @ 30' SPACE)
12. TEMPORARY PAVEMENT MARKING - LINE 6" TYPE IV TAPE (EDGE LINE)
13. NOT USED
14. LONGITUDINAL JOINT SEALANT HALF - WIDTH
15. LONGITUDINAL JOINT SEALANT
16. TEMPORARY PAVEMENT MARKING - LINE 8" TYPE IV TAPE

VERTICAL BARRICADE/DRUM (NO LIGHT)

MODEL: Typical Sections - TypicalSection3 [Sheet]
FILE NAME: W:\24001656.05\IDOT Dist 1 IL 290 Mill and Overlay\CADD Data\Sheets\D1_IL53_sht_Sequence of Operations Typicals.dgn

IMEG
401 E. STATE ST. 4th Floor ROCKFORD, IL 61104
PH: 815.965.6400
www.imegcorp.com

USER NAME = Marc.A.Personette	DESIGNED - Brad Lange	REVISED -
	DRAWN - Marc Personette	REVISED -
	CHECKED - Corey Stout	REVISED -
PLOT DATE = 4/29/2026	DATE - 4/29/2026	REVISED -

STATE OF ILLINOIS
DEPARTMENT OF TRANSPORTATION

I-290/IL 53 HMA RESURFACING AND BRIDGE REPAIRS
SEQUENCE OF OPERATIONS - RESURFACING TYPICAL SECTIONS

SCALE: N.T.S. | SHEET 4 OF 5 SHEETS | STA. | TO STA.

F.A.I RTE.	SECTION	COUNTY	TOTAL SHEETS	SHEET NO.
290	(0404-316-HB) BR 24	COOK	276	19
		CONTRACT NO. 62W99		
	ILLINOIS FED. AID PROJECT			

℄ - IL. RTE. 53

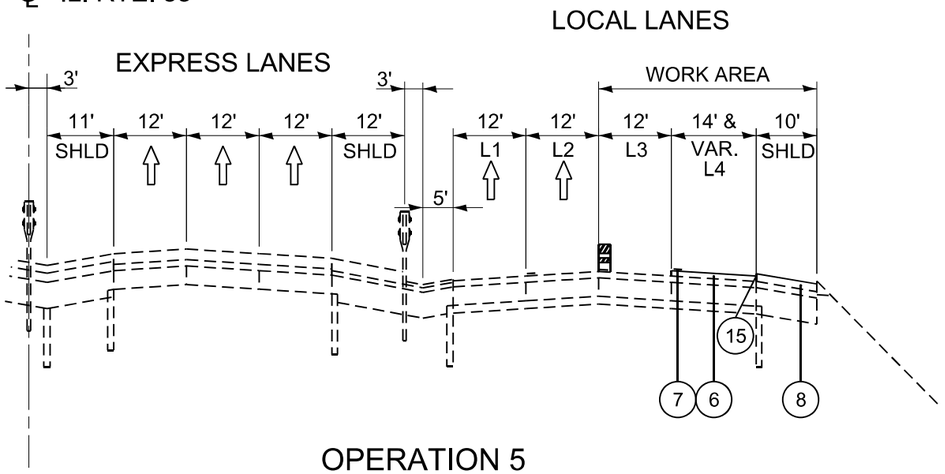

OPERATION 5

℄ - IL. RTE. 53

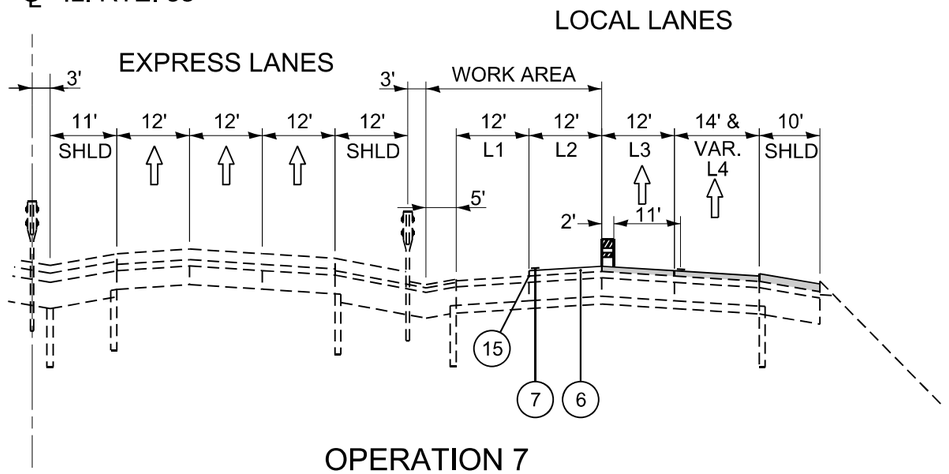

OPERATION 7

℄ - IL. RTE. 53

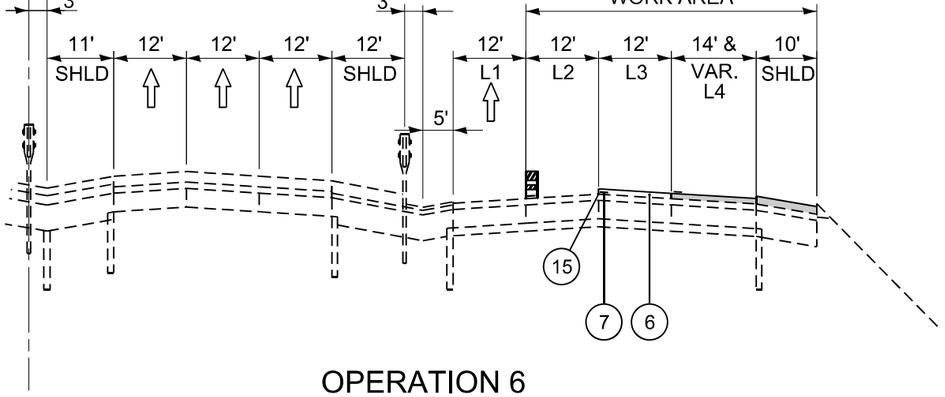

OPERATION 6

℄ - IL. RTE. 53

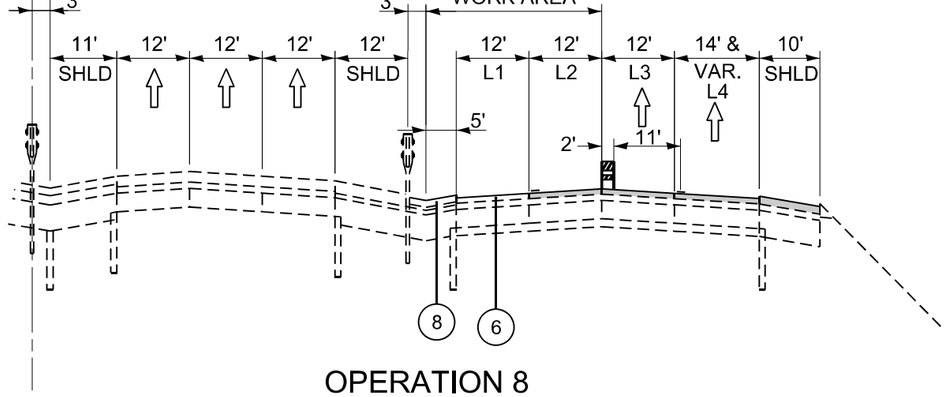

OPERATION 8

PROPOSED PAVING LEGEND

1. HOT-MIX ASPHALT SURFACE REMOVAL (VARIABLE DEPTH), TAPER 20:1
2. HOT-MIX ASPHALT SURFACE REMOVAL, 3 3/4" (MAINLINE SHOULDERS)
3. HOT-MIX ASPHALT SURFACE REMOVAL, 2"
4. HOT-MIX ASPHALT SURFACE REMOVAL, 4"
5. MODIFIED URETHANE PAVEMENT MARKING, 6" WHITE LANE LINE (SKIP-DASH)
6. POLYMERIZED HOT-MIX ASPHALT BINDER COURSE, STONE MATRIX ASPHALT, N80, 2"
7. TEMPORARY PAVEMENT MARKING - LINE 6" - TYPE IV TAPE (SKIP-DASH)
8. HOT-MIX ASPHALT BINDER COURSE, IL-19.0, N70, 2 1/4"
9. HOT-MIX ASPHALT SURFACE COURSE, IL-9.5, MIX "D", N70, 1 1/2"
10. POLYMERIZED HOT-MIX ASPHALT SURFACE COURSE, STONE MATRIX ASPHALT, 12.5, MIX "F", N80 2"
11. TEMPORARY PAVEMENT MARKING - LINE 6" TYPE IV TAPE (10' LINE @ 30' SPACE)
12. TEMPORARY PAVEMENT MARKING - LINE 6" TYPE IV TAPE (EDGE LINE)
13. NOT USED
14. LONGITUDINAL JOINT SEALANT HALF - WIDTH
15. LONGITUDINAL JOINT SEALANT
16. TEMPORARY PAVEMENT MARKING - LINE 8" TYPE IV TAPE

VERTICAL BARRICADE/DRUM (NO LIGHT)

IMEG
401 E. STATE ST. 4th Floor
ROCKFORD, IL
61104
PH: 815.965.6400
www.imegcorp.com

USER NAME = Marc.A.Personette	DESIGNED - Brad Lange	REVISED -
	DRAWN - Marc Personette	REVISED -
	CHECKED - Corey Stout	REVISED -
PLOT DATE = 4/29/2026	DATE - 4/29/2026	REVISED -

STATE OF ILLINOIS
DEPARTMENT OF TRANSPORTATION

I-290/IL 53 HMA RESURFACING AND BRIDGE REPAIRS
SEQUENCE OF OPERATIONS - RESURFACING TYPICAL SECTIONS

SCALE: N.T.S. | SHEET 5 OF 5 SHEETS | STA. | TO STA.

F.A.I RTE.	SECTION	COUNTY	TOTAL SHEETS	SHEET NO.
290	(0404-316-HB) BR 24	COOK	276	20
		CONTRACT NO. 62W99		
	ILLINOIS	FED. AID PROJECT		

MODEL: Typical Sections - TypicalSection4 [Sheet]
FILE NAME: W:\24001656.05\IDOT Dist 1 IL 290 Mill and Overlay\CADD Data\Sheets\D1_IL53_sht_Sequence of Operations Typicals.dgn

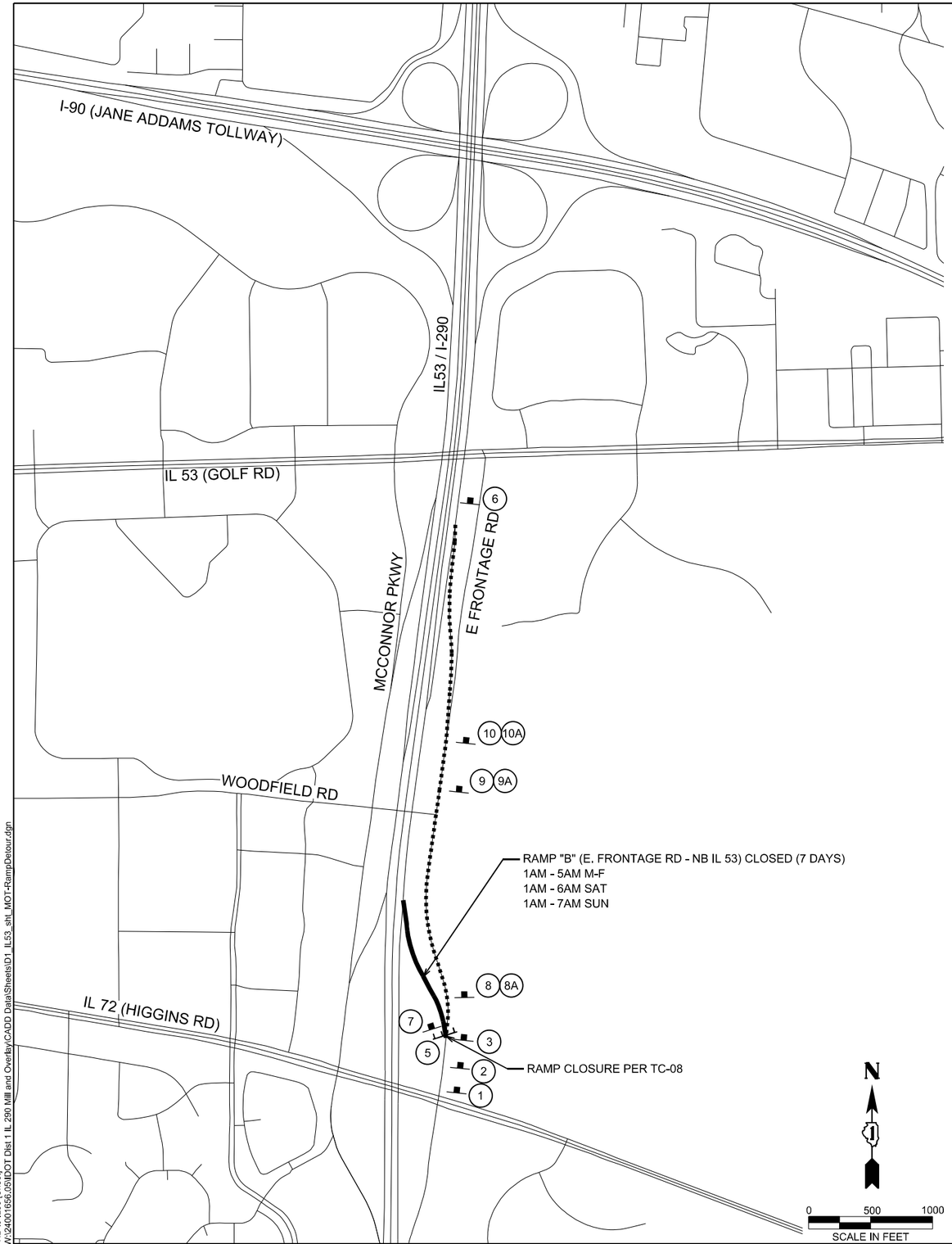

FLASHING WARNING LIGHT - TYPE A (TYP)

1 — RAMP CLOSED AHEAD — W20-3(O) 48"x48"

2 — DETOUR AHEAD — W20-2(O) 48"x48"

3 — ROAD CONTRUCTION AHEAD — W20-3(O) 48"x48"

5 — RAMP CLOSED — R11-2 48"x36"

6 — END DETOUR — M4-8 24"x18"

7 — DO NOT ENTER — R5-1 (TYP) 30"x30"

8

DETOUR	M4-8 24"x12"
TO	M4-5 24"x12"
NORTH	M3-1 24"x12"
ILLINOIS 53	M1-I100.2 24"X24"
↑	M6-3 21"x15"

9

DETOUR	M4-8 24"x12"
TO	M4-5 24"x12"
NORTH	M3-1 24"x12"
ILLINOIS 53	M1-I100.2 24"X24"
↖	M5-2 (L) 21"x15"

10

DETOUR	M4-8 24"x12"
TO	M4-5 24"x12"
NORTH	M3-1 24"x12"
ILLINOIS 53	M1-I100.2 24"X24"
↖	M6-2L 21"x15"

8A

DETOUR	M4-8 24"x12"
TO	M4-5 24"x12"
TOLL	W16-17P 24"x12"
INTERSTATE 90	M1-1 24"x24"
↑	M6-3 21"x15"

9A

DETOUR	M4-8 24"x12"
TO	M4-5 24"x12"
TOLL	W16-17P 24"x12"
INTERSTATE 90	M1-1 24"x24"
↖	M5-2 (L) 21"x15"

10A

DETOUR	M4-8 24"x12"
TO	M4-5 24"x12"
TOLL	W16-17P 24"x12"
INTERSTATE 90	M1-1 24"x24"
↖	M6-2L 21"x15"

LEGEND

- SIGN
- TYPE III BARRICADES WITH TWO FLASHING LIGHTS
- DETOURED TRAFFIC DIRECTION
- PROPOSED DETOUR
- RAMP CLOSED

DETOUR NOTES

1. THE CONTRACTOR SHALL CONTACT THE DISTRICT ONE EXPRESSWAY TRAFFIC CONTROL SUPERVISOR AT (847) 705-4155 A MINIMUM OF 72 HOURS PRIOR TO BEGINNING WORK.
2. THE LOCATIONS OF ALL SIGNS SHOWN ON THE DETOUR PLAN ARE APPROXIMATE. THE CONTRACTOR SHALL ADJUST LOCATIONS TO FIT FIELD CONDITIONS. FINAL LOCATIONS SHALL BE APPROVED BY THE ENGINEER AND SHALL ABIDE BY APPLICABLE DISTRICT ONE TRAFFIC CONTROL DETAILS.
3. EXISTING TRAFFIC SIGNS CONFLICTING WITH THE DETOUR SIGNAGE SHALL BE TEMPORARILY REMOVED OR COVERED AS DIRECTED BY THE ENGINEER.
4. ALL DETOUR SIGNS SHALL BE NEW OR IN LIKE-NEW CONDITION. THE ENGINEER SHALL DETERMINE IF THE CONDITION OF THE SIGNS IS SATISFACTORY.
5. DETOUR SIGNING SHALL HAVE BLACK LETTERS WITH 5" MINIMUM HEIGHT ON ORANGE BACKGROUNDS.
6. ALL DETOUR SIGNS SHALL HAVE THEIR OWN SIGN SUPPORTS.
7. DETOUR SIGN PLACING SHALL FOLLOW TC-21.
8. THE COST FOR ALL DETOUR SIGNING SHALL BE CONSIDERED INCLUDED IN THE COST OF TRAFFIC CONTROL AND PROTECTION (SPECIAL).

IMEG
401 E. STATE ST. 4th Floor
ROCKFORD, IL 61104
PH: 815.965.6400
www.imegcorp.com

USER NAME	= Tammie.S.Govig	DESIGNED	- Brad Lange	REVISED	-
		DRAWN	- Marc Personette	REVISED	-
		CHECKED	- Corey Stout	REVISED	-
PLOT DATE	= 4/29/2026	DATE	- 4/29/2026	REVISED	-

STATE OF ILLINOIS
DEPARTMENT OF TRANSPORTATION

I-290/IL 53 HMA RESURFACING AND BRIDGE REPAIRS
DETOUR PLAN - IL 72 / FRONTAGE RD NB IL 53 ENTRANCE RAMP

SCALE: 1" = 500' | SHEET 1 OF 4 SHEETS | STA. | TO STA.

F.A.I RTE.	SECTION	COUNTY	TOTAL SHEETS	SHEET NO.
290	(0404-316-HB) BR 24	COOK	276	21
		CONTRACT NO. 62W99		
		ILLINOIS FED. AID PROJECT		

MODEL: IL72 NB to IL53 [Sheet]
FILE NAME: W:\24001656.05\IDOT Dist 1 IL 290 Mill and Over\ayCADD Data\Sheets\D1_IL53_sht_MOT-RampDetour.dgn

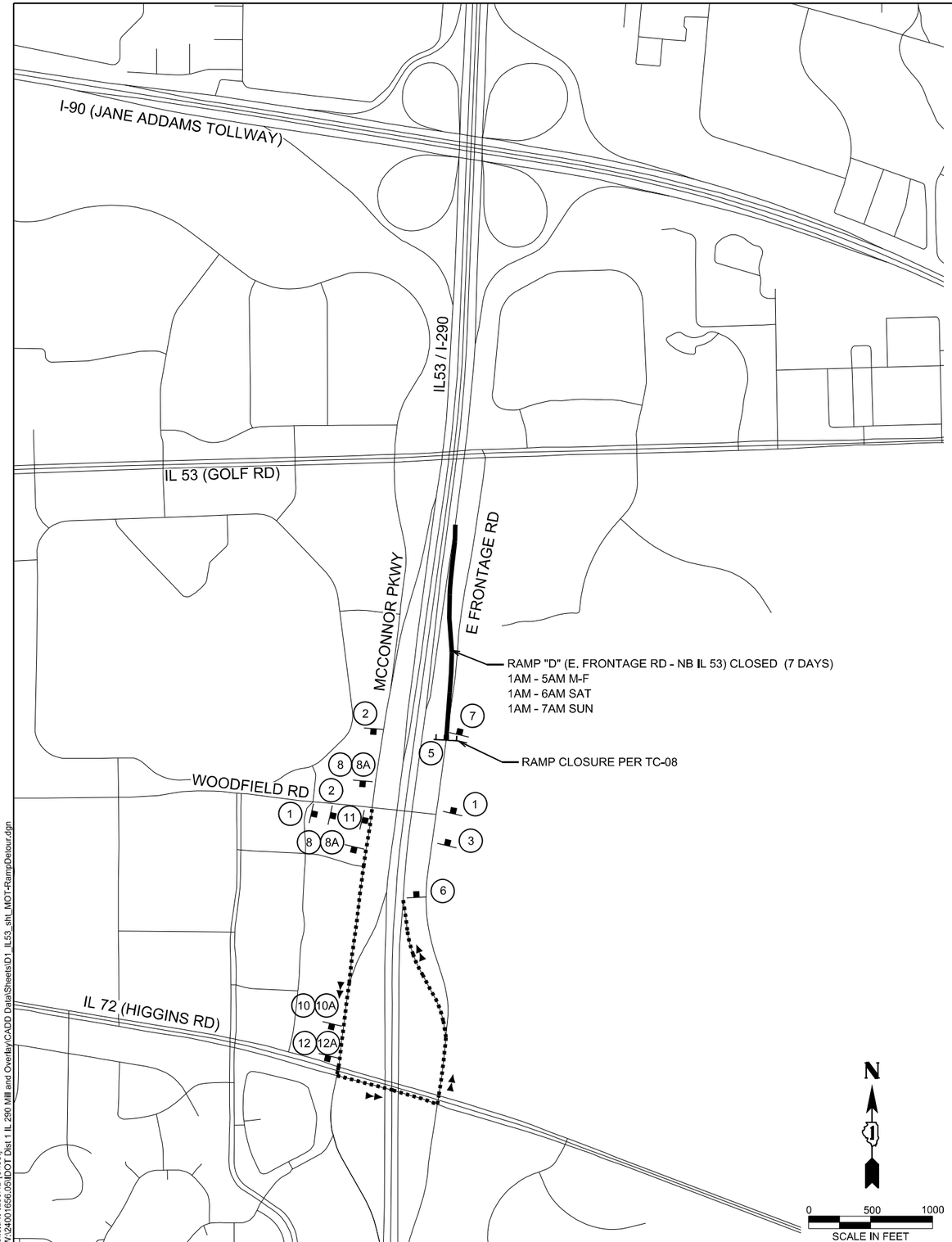

FLASHING WARNING LIGHT - TYPE A (TYP)

1 — RAMP CLOSED AHEAD — W20-3(O) 48"x48"

2 — DETOUR AHEAD — W20-2(O) 48"x48"

3 — ROAD CONTRUCTION AHEAD — W20-3(O) 48"x48"

5 — RAMP CLOSED — R11-2 48"x36"

6 — END DETOUR — M4-8 24"x18"

7 — DO NOT ENTER — R5-1 (TYP) 30"x30"

8

DETOUR	M4-8 24"x12"
TO	M4-5 24"x12"
NORTH	M3-1 24"x12"
ILLINOIS 53	M1-I100.2 24"X24"
↑	M6-3 21"x15"

8A

DETOUR	M4-8 24"x12"
TO	M4-5 24"x12"
TOLL	W16-17P 24"x12"
INTERSTATE 90	M1-1 24"x24"
↑	M6-3 21"x15"

10

DETOUR	M4-8 24"x12"
TO	M4-5 24"x12"
NORTH	M3-1 24"x12"
ILLINOIS 53	M1-I100.2 24"X24"
←	M5-1 (L) 21"x15"

11

DETOUR	M4-8 24"x12"
TO	M4-5 24"x12"
NORTH	M3-1 24"x12"
ILLINOIS 53	M1-I100.2 24"X24"
→	M6-1 (R) 21"x15"

10A

DETOUR	M4-8 24"x12"
TO	M4-5 24"x12"
TOLL	W16-17P 24"x12"
INTERSTATE 90	M1-1 24"x24"
←	M5-1 (L) 21"x15"

12

DETOUR	M4-8 24"x12"
TO	M4-5 24"x12"
NORTH	M3-1 24"x12"
ILLINOIS 53	M1-I100.2 24"X24"
←	M6-1 (R) 21"x15"

12A

DETOUR	M4-8 24"x12"
TO	M4-5 24"x12"
TOLL	W16-17P 24"x12"
INTERSTATE 90	M1-1 24"x24"
←	M6-1 (R) 21"x15"

LEGEND

- SIGN
- TYPE III BARRICADES WITH TWO FLASHING LIGHTS
- DETOURED TRAFFIC DIRECTION
- PROPOSED DETOUR
- RAMP CLOSED

DETOUR NOTES

1. THE CONTRACTOR SHALL CONTACT THE DISTRICT ONE EXPRESSWAY TRAFFIC CONTROL SUPERVISOR AT (847) 705-4155 A MINIMUM OF 72 HOURS PRIOR TO BEGINNING WORK.
2. THE LOCATIONS OF ALL SIGNS SHOWN ON THE DETOUR PLAN ARE APPROXIMATE. THE CONTRACTOR SHALL ADJUST LOCATIONS TO FIT FIELD CONDITIONS. FINAL LOCATIONS SHALL BE APPROVED BY THE ENGINEER AND SHALL ABIDE BY APPLICABLE DISTRICT ONE TRAFFIC CONTROL DETAILS.
3. EXISTING TRAFFIC SIGNS CONFLICTING WITH THE DETOUR SIGNAGE SHALL BE TEMPORARILY REMOVED OR COVERED AS DIRECTED BY THE ENGINEER.
4. ALL DETOUR SIGNS SHALL BE NEW OR IN LIKE-NEW CONDITION. THE ENGINEER SHALL DETERMINE IF THE CONDITION OF THE SIGNS IS SATISFACTORY.
5. DETOUR SIGNING SHALL HAVE BLACK LETTERS WITH 5" MINIMUM HEIGHT ON ORANGE BACKGROUNDS.
6. ALL DETOUR SIGNS SHALL HAVE THEIR OWN SIGN SUPPORTS.
7. DETOUR SIGN PLACING SHALL FOLLOW TC-21.
8. THE COST FOR ALL DETOUR SIGNING SHALL BE CONSIDERED INCLUDED IN THE COST OF TRAFFIC CONTROL AND PROTECTION (SPECIAL).

MODEL: Woodfield to IL53NB [Sheet]
FILE NAME: W:\24001656.05\IDOT Dist 1 IL 290 Mill and Over\Bay\CADD Data\Sheets\D1_IL53_sht_MOT-RampDetour.dgn

IMEG
401 E. STATE ST. 4th Floor ROCKFORD, IL 61104
PH: 815.965.6400 www.imegcorp.com

USER NAME = Tammie.S.Govig	DESIGNED - Brad Lange	REVISED -			
	DRAWN - Marc Personette	REVISED -			
	CHECKED - Corey Stout	REVISED -			
PLOT DATE = 4/29/2026	DATE - 4/29/2026	REVISED -			

STATE OF ILLINOIS
DEPARTMENT OF TRANSPORTATION

I-290/IL 53 HMA RESURFACING AND BRIDGE REPAIRS
DETOUR PLAN - WOODFIELD RD / FRONTAGE RD NB IL 53 ENTRANCE RAMP

SCALE: 1" = 500' | SHEET 2 OF 4 SHEETS | STA. | TO STA.

F.A.I RTE.	SECTION	COUNTY	TOTAL SHEETS	SHEET NO.
290	(0404-316-HB) BR 24	COOK	276	22
		CONTRACT NO. 62W99		
	ILLINOIS FED. AID PROJECT			

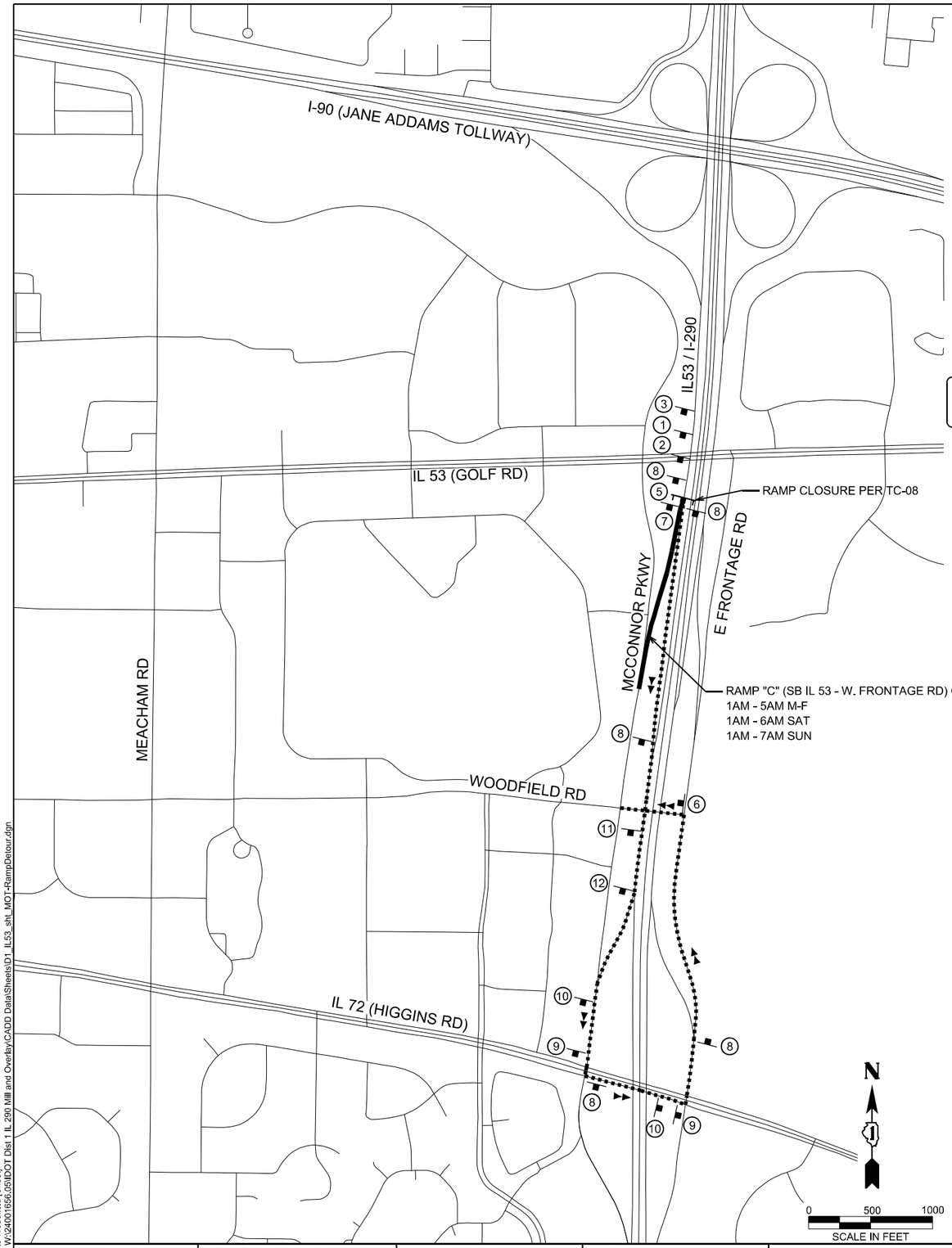

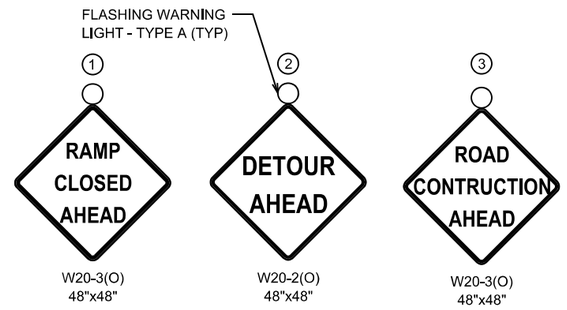

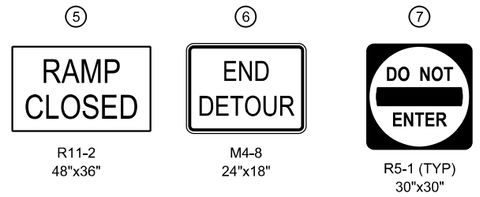

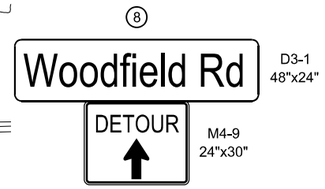

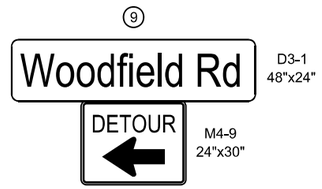

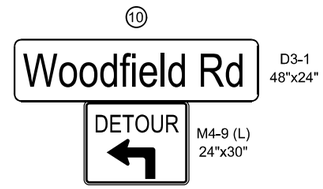

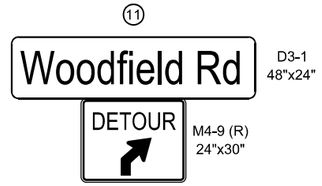

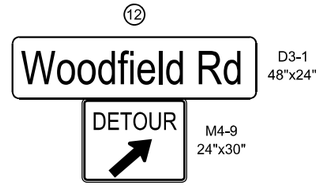

LEGEND

- SIGN
- TYPE III BARRICADES WITH TWO FLASHING LIGHTS
- DETOURED TRAFFIC DIRECTION
- PROPOSED DETOUR
- RAMP CLOSED

DETOUR NOTES

1. THE CONTRACTOR SHALL CONTACT THE DISTRICT ONE EXPRESSWAY TRAFFIC CONTROL SUPERVISOR AT (847) 705-4155 A MINIMUM OF 72 HOURS PRIOR TO BEGINNING WORK.
2. THE LOCATIONS OF ALL SIGNS SHOWN ON THE DETOUR PLAN ARE APPROXIMATE. THE CONTRACTOR SHALL ADJUST LOCATIONS TO FIT FIELD CONDITIONS. FINAL LOCATIONS SHALL BE APPROVED BY THE ENGINEER AND SHALL ABIDE BY APPLICABLE DISTRICT ONE TRAFFIC CONTROL DETAILS.
3. EXISTING TRAFFIC SIGNS CONFLICTING WITH THE DETOUR SIGNAGE SHALL BE TEMPORARILY REMOVED OR COVERED AS DIRECTED BY THE ENGINEER.
4. ALL DETOUR SIGNS SHALL BE NEW OR IN LIKE-NEW CONDITION. THE ENGINEER SHALL DETERMINE IF THE CONDITION OF THE SIGNS IS SATISFACTORY.
5. DETOUR SIGNING SHALL HAVE BLACK LETTERS WITH 5" MINIMUM HEIGHT ON ORANGE BACKGROUNDS.
6. ALL DETOUR SIGNS SHALL HAVE THEIR OWN SIGN SUPPORTS.
7. DETOUR SIGN PLACING SHALL FOLLOW TC-21.
8. THE COST FOR ALL DETOUR SIGNING SHALL BE CONSIDERED INCLUDED IN THE COST OF TRAFFIC CONTROL AND PROTECTION (SPECIAL).

IMEG
401 E. STATE ST. 4th Floor
ROCKFORD, IL 61104
PH: 815.965.6400
www.imegcorp.com

USER NAME = Tammie.S.Govig	DESIGNED - Brad Lange	REVISED -
	DRAWN - Marc Personette	REVISED -
	CHECKED - Corey Stout	REVISED -
PLOT DATE = 4/29/2026	DATE - 4/29/2026	REVISED -

STATE OF ILLINOIS
DEPARTMENT OF TRANSPORTATION

I-290/IL 53 HMA RESURFACING AND BRIDGE REPAIRS
DETOUR PLAN - SB IL 53 WOODFIELD RD EXIT RAMP

SCALE: 1" = 500' | SHEET 3 OF 4 SHEETS | STA. | TO STA.

F.A.I RTE.	SECTION	COUNTY	TOTAL SHEETS	SHEET NO.
290	(0404-316-HB) BR 24	COOK	276	23
		CONTRACT NO. 62W99		
	ILLINOIS FED. AID PROJECT			

MODEL: SB to Woodfield [Sheet]
FILE NAME: W:\24001656.05\IDOT Dist 1 IL 290 Mill and Over\ayCADD Data\Sheets\D1_IL53_sht_MOT-RampDetour.dgn

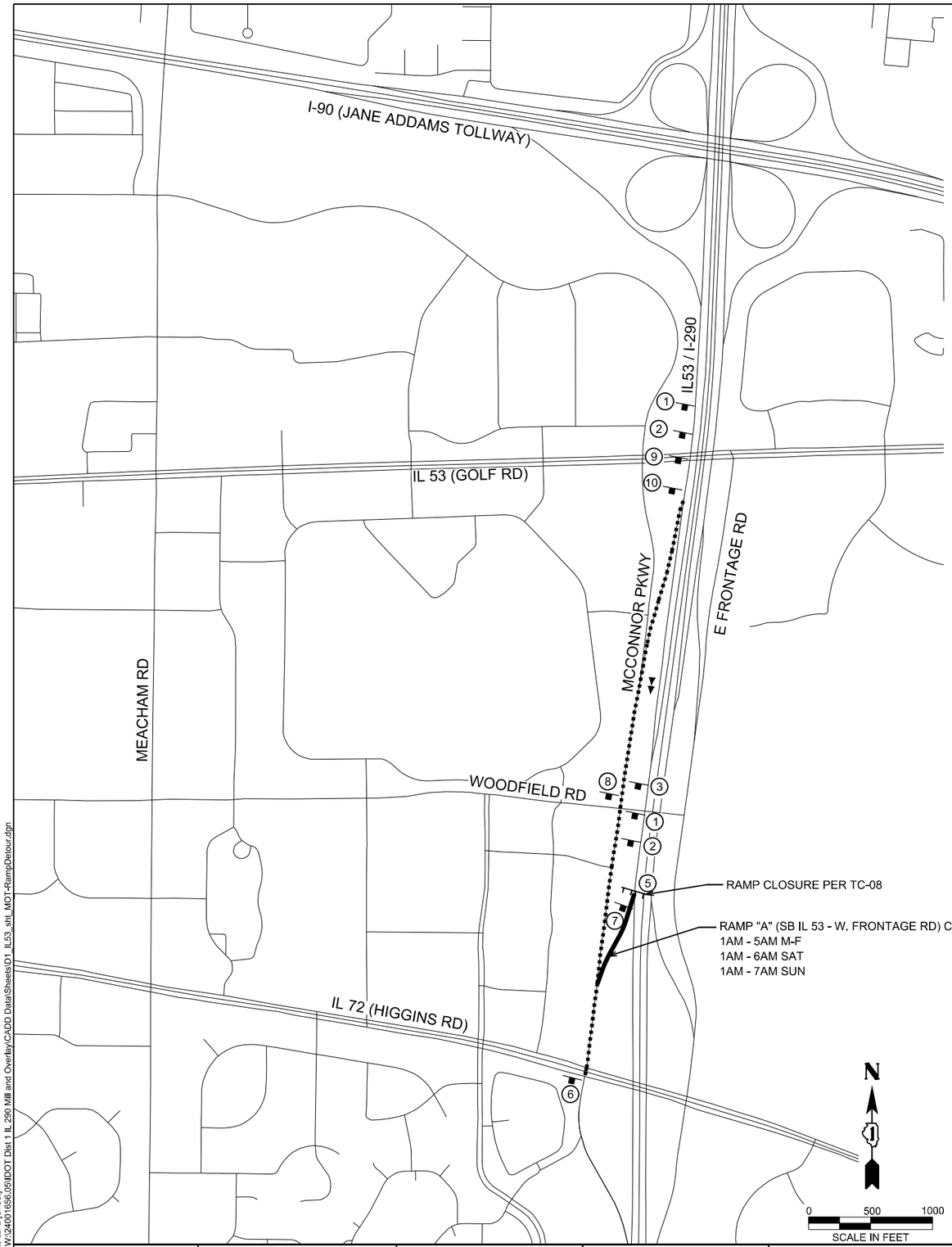

FLASHING WARNING LIGHT - TYPE A (TYP)

① RAMP CLOSED AHEAD — W20-3(O) 48"x48"

② DETOUR AHEAD — W20-2(O) 48"x48"

③ ROAD CONTRUCTION AHEAD — W20-3(O) 48"x48"

⑤ RAMP CLOSED — R11-2 48"x36"

⑥ END DETOUR — M4-8 24"x18"

⑦ DO NOT ENTER — R5-1 (TYP) 48"x48"

⑧

DETOUR	M4-8 24"x12"
TO	M4-5 24"x12"
ILLINOIS 72	M1-I100.2 24"X24"
↑	M6-3 21"x15"

⑨

DETOUR	M4-8 30"x15"
TO	M4-5 36"x18"
ILLINOIS 72	M1-I100.2 36"X36"
↱	M5-2 (R) 30"x21"

⑨

DETOUR	M4-8 30"x15"
TO	M4-5 36"x18"
ILLINOIS 72	M1-I100.2 36"X36"
↗	M6-2 (R) 30"x21"

LEGEND

- SIGN
- TYPE III BARRICADES WITH TWO FLASHING LIGHTS
- DETOURED TRAFFIC DIRECTION
- PROPOSED DETOUR
- RAMP CLOSED

DETOUR NOTES

1. THE CONTRACTOR SHALL CONTACT THE DISTRICT ONE EXPRESSWAY TRAFFIC CONTROL SUPERVISOR AT (847) 705-4155 A MINIMUM OF 72 HOURS PRIOR TO BEGINNING WORK.
2. THE LOCATIONS OF ALL SIGNS SHOWN ON THE DETOUR PLAN ARE APPROXIMATE. THE CONTRACTOR SHALL ADJUST LOCATIONS TO FIT FIELD CONDITIONS. FINAL LOCATIONS SHALL BE APPROVED BY THE ENGINEER AND SHALL ABIDE BY APPLICABLE DISTRICT ONE TRAFFIC CONTROL DETAILS.
3. EXISTING TRAFFIC SIGNS CONFLICTING WITH THE DETOUR SIGNAGE SHALL BE TEMPORARILY REMOVED OR COVERED AS DIRECTED BY THE ENGINEER.
4. ALL DETOUR SIGNS SHALL BE NEW OR IN LIKE-NEW CONDITION. THE ENGINEER SHALL DETERMINE IF THE CONDITION OF THE SIGNS IS SATISFACTORY.
5. DETOUR SIGNING SHALL HAVE BLACK LETTERS WITH 5" MINIMUM HEIGHT ON ORANGE BACKGROUNDS.
6. ALL DETOUR SIGNS SHALL HAVE THEIR OWN SIGN SUPPORTS.
7. DETOUR SIGN PLACING SHALL FOLLOW TC-21.
8. THE COST FOR ALL DETOUR SIGNING SHALL BE CONSIDERED INCLUDED IN THE COST OF TRAFFIC CONTROL AND PROTECTION (SPECIAL).

MODEL: SB to IL72 [Sheet]
FILE NAME: W:\24001656.05\IDOT Dist 1 IL 290 Mill and Over\Bay\CADD Data\Sheets\D1_IL53_sht_MOT-RampDetour.dgn

IMEG
401 E. STATE ST. 4th Floor
ROCKFORD, IL 61104
PH: 815.965.6400
www.imegcorp.com

USER NAME = Tammie.S.Govig	DESIGNED - Brad Lange	REVISED -
	DRAWN - Marc Personette	REVISED -
	CHECKED - Corey Stout	REVISED -
PLOT DATE = 4/29/2026	DATE - 4/29/2026	REVISED -

STATE OF ILLINOIS
DEPARTMENT OF TRANSPORTATION

I-290/IL 53 HMA RESURFACING AND BRIDGE REPAIRS
DETOUR PLAN - SB IL 53 IL 72 EXIT RAMP

SCALE: 1" = 500' | SHEET 4 OF 4 SHEETS | STA. | TO STA.

F.A.I RTE.	SECTION	COUNTY	TOTAL SHEETS	SHEET NO.
290	(0404-316-HB) BR 24	COOK	276	24
		CONTRACT NO. 62W99		
		ILLINOIS	FED. AID PROJECT	

N

0 50 100

SCALE IN FEET

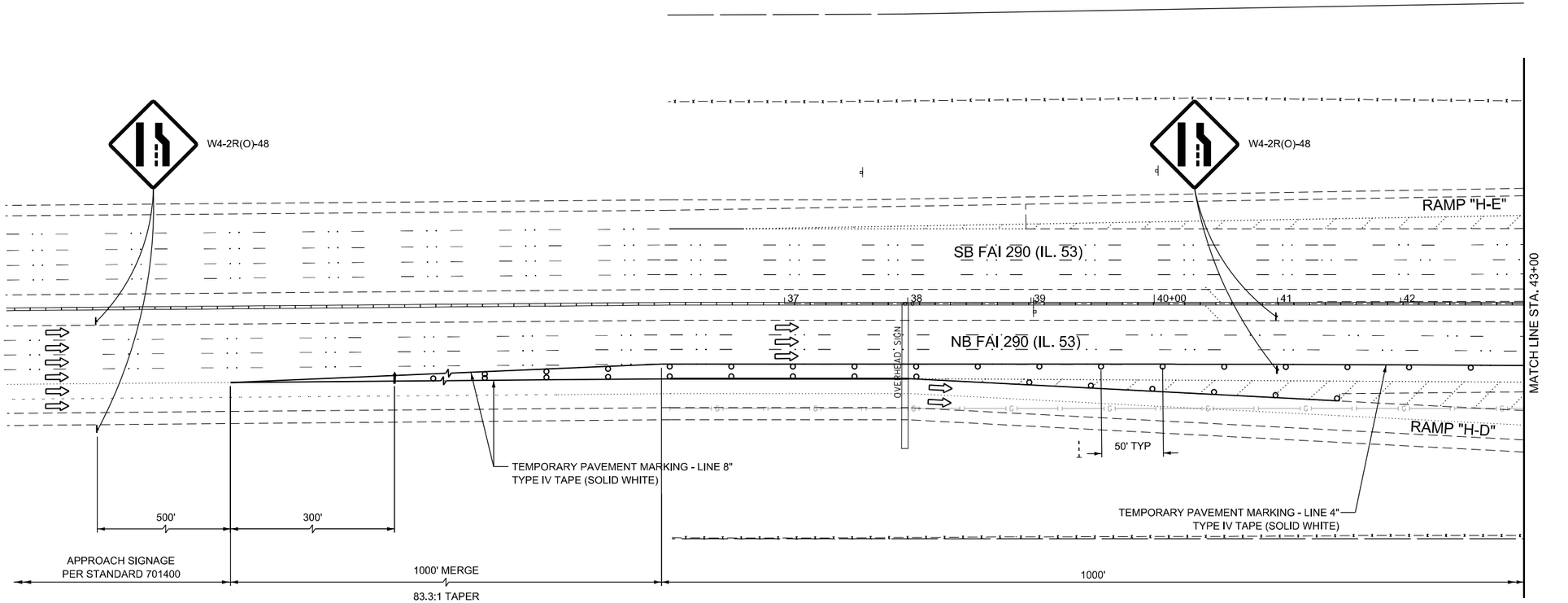

OVERHEAD SIGN - STA 37+98.0

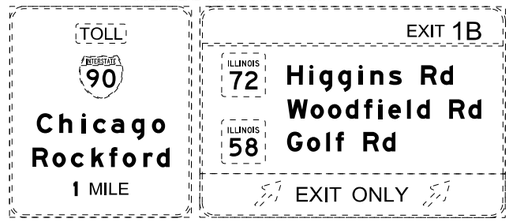

LEGEND

- WORK AREA (BRIDGE)
- PAVEMENT PATCHNG
- IMPACT ATTENUATORS, TEMPORARY (FULLY REDIRECTIVE, NARROW, TEST LEVEL 3
- TYPE III BARRICADE
- TEMPORARY CONCRETE BARRIER
- DRUM WITH STEADY BURN MONODIRECTIONAL LIGHT/ DIRECTION INDICATOR BARRICADE WITH STEADY BURN MONODIRECTIONAL LIGHT (PER HWY. STD. 701401-13)
- SIGN

MODEL: MOT - Plan A [Sheet]
FILE NAME: W:\24001656.05\IDOT Dist 1 IL 290 Mill and Overlay\CADD Data\Sheets\D1_IL53_sht_MOT-Sig1_NB.dgn

IMEG
401 E. STATE ST. 4th Floor
ROCKFORD, IL
61104
PH: 815.965.6400
www.imegcorp.com

USER NAME = Marc.A.Personette	DESIGNED - Brad Lange	REVISED -	
	DRAWN - Marc Personette	REVISED -	
	CHECKED - Corey Stout	REVISED -	
PLOT DATE = 4/29/2026	DATE - 4/29/2026	REVISED -	

STATE OF ILLINOIS
DEPARTMENT OF TRANSPORTATION

I-290/IL 53 HMA RESURFACING AND BRIDGE REPAIRS
MAINTENANCE OF TRAFFIC STAGE 1 - NORTHBOUND BRIDGE REPAIRS

SCALE: 1" = 50' | SHEET 1 OF 9 SHEETS | STA. 28+00.00 TO STA. 43+00.00

F.A.I RTE.	SECTION	COUNTY	TOTAL SHEETS	SHEET NO.
290	(0404-316-HB) BR 24	COOK	276	25
		CONTRACT NO. 62W99		
	ILLINOIS FED. AID PROJECT			

LEGEND

- WORK AREA (BRIDGE)
- PAVEMENT PATCHNG
- IMPACT ATTENUATORS, TEMPORARY (FULLY REDIRECTIVE, NARROW, TEST LEVEL 3
- TYPE III BARRICADE
- TEMPORARY CONCRETE BARRIER
- DRUM WITH STEADY BURN MONODIRECTIONAL LIGHT/ DIRECTION INDICATOR BARRICADE WITH STEADY BURN MONODIRECTIONAL LIGHT (PER HWY. STD. 701401-13)
- SIGN

N

0 50 100

SCALE IN FEET

RAMP "H-E"

SB FAI 290 (IL. 53)

MATCH LINE STA. 43+00

43 44 45+00 46 47 48 49 50+00 51 52 53 54 55+00 56 57

MATCH LINE STA. 58+00

NB FAI 290 (IL. 53)

OVERHEAD SIGN

12'

12:1 TAPER

12'

50' TYP

ARROW BOARD

TEMPORARY PAVEMENT MARKING - LINE 4" TYPE IV TAPE (SOLID WHITE)

IMPACT ATTENUATOR

TEMPORARY CONCRETE BARRIER BEGIN STA 55+21.0

1000'

1000' MERGE 83.3:1 TAPER

W1-4R-48

RAMP "H-D"

OVERHEAD SIGN - STA 53+07.1

ILLINOIS 53 NORTH

NEXT EXIT Kirchoff Rd

ILLINOIS 53 NORTH

TO INTERSTATE 90

TO ILLINOIS 62 Algonquin Rd

ILLINOIS 72 (HIGGINS ROAD)

MODEL: MOT - Plan B [Sheet]
FILE NAME: W:\24001656.05\IDOT Dist 1 IL 290 Mill and Overlay\CADD Data\Sheets\D1_IL53_sht_MOT-Stg1_NB.dgn

IMEG
401 E. STATE ST. 4th Floor ROCKFORD, IL 61104
PH: 815.965.6400
www.imegcorp.com

USER NAME = Marc.A.Personette	DESIGNED - Brad Lange	REVISED -	
	DRAWN - Marc Personette	REVISED -	
	CHECKED - Corey Stout	REVISED -	
PLOT DATE = 4/29/2026	DATE - 4/29/2026	REVISED -	

STATE OF ILLINOIS
DEPARTMENT OF TRANSPORTATION

I-290/IL 53 HMA RESURFACING AND BRIDGE REPAIRS
MAINTENANCE OF TRAFFIC STAGE 1 - NORTHBOUND BRIDGE REPAIRS

SCALE: 1" = 50' | SHEET 2 OF 9 SHEETS | STA. 43+00.00 | TO STA. 58+00.00

F.A.I RTE.	SECTION	COUNTY	TOTAL SHEETS	SHEET NO.
290	(0404-316-HB) BR 24	COOK	276	26
		CONTRACT NO. 62W99		
	ILLINOIS FED. AID PROJECT			

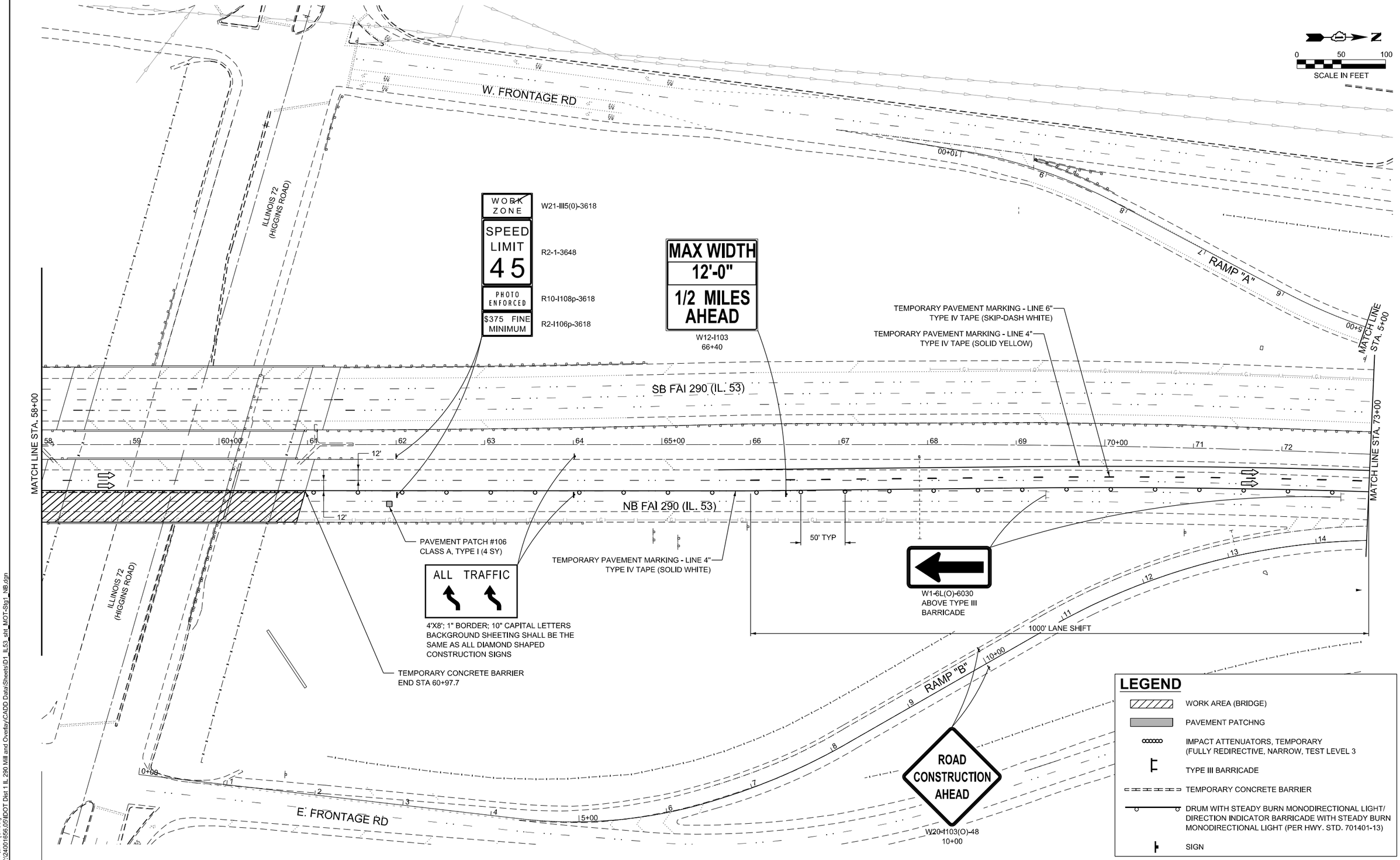

MODEL: MOT - Plan 1 [Sheet]
FILE NAME: W:\2400\1656.05\IDOT Dist 1 IL 290 Mill and Overlay\CADD Data\Sheets\D1_IL53_sht_MOT-Stg1_NB.dgn

IMEG
401 E. STATE ST. 4th Floor
ROCKFORD, IL
61104
PH: 815.965.6400
www.imegcorp.com

USER NAME = Marc.A.Personette	DESIGNED - Brad Lange	REVISED -	
	DRAWN - Marc Personette	REVISED -	
	CHECKED - Corey Stout	REVISED -	
PLOT DATE = 4/29/2026	DATE - 4/29/2026	REVISED -	

STATE OF ILLINOIS
DEPARTMENT OF TRANSPORTATION

I-290/IL 53 HMA RESURFACING AND BRIDGE REPAIRS
MAINTENANCE OF TRAFFIC STAGE 1 - NORTHBOUND BRIDGE REPAIRS

SCALE: 1" = 50' | SHEET 3 OF 9 SHEETS | STA. 58+00.00 | TO STA. 73+00.00

F.A.I RTE.	SECTION	COUNTY	TOTAL SHEETS	SHEET NO.
290	(0404-316-HB) BR 24	COOK	276	27
		CONTRACT NO. 62W99		
		ILLINOIS FED. AID PROJECT		

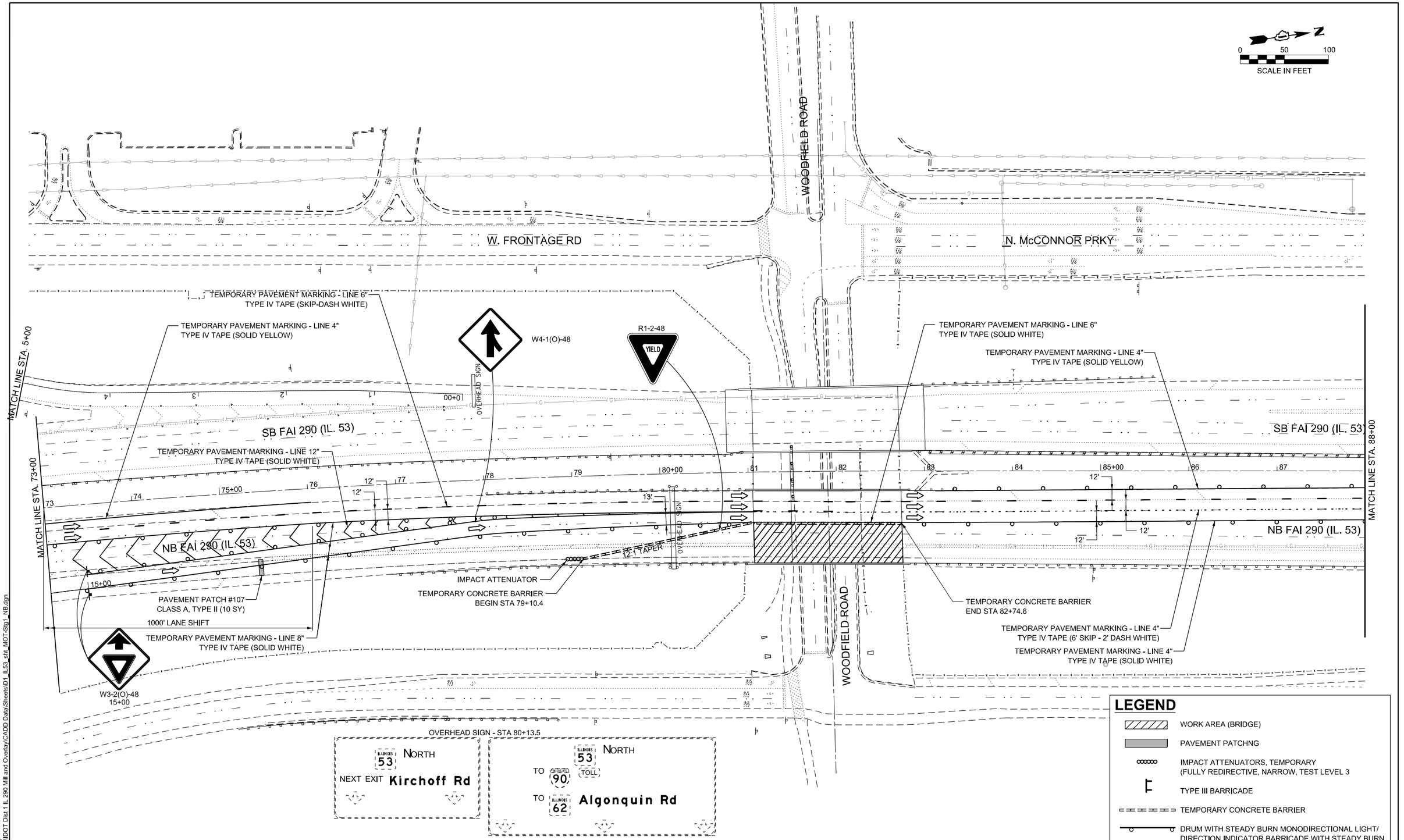

LEGEND

- WORK AREA (BRIDGE)
- PAVEMENT PATCHNG
- IMPACT ATTENUATORS, TEMPORARY (FULLY REDIRECTIVE, NARROW, TEST LEVEL 3
- TYPE III BARRICADE
- TEMPORARY CONCRETE BARRIER
- DRUM WITH STEADY BURN MONODIRECTIONAL LIGHT/ DIRECTION INDICATOR BARRICADE WITH STEADY BURN MONODIRECTIONAL LIGHT (PER HWY. STD. 701401-13)
- SIGN

MODEL: MOT - Plan 2 [Sheet]
FILE NAME: W:\24001656.05\IDOT Dist 1 IL 290 Mill and Overlay\CADD Data\Sheets\D1_IL53_sht_MOT-Stg1_NB.dgn

IMEG
401 E. STATE ST. 4th Floor
ROCKFORD, IL 61104
PH: 815.965.6400
www.imegcorp.com

USER NAME	= Marc.A.Personette	DESIGNED	- Brad Lange	REVISED	-
		DRAWN	- Marc Personette	REVISED	-
		CHECKED	- Corey Stout	REVISED	-
PLOT DATE	= 4/29/2026	DATE	- 4/29/2026	REVISED	-

STATE OF ILLINOIS
DEPARTMENT OF TRANSPORTATION

I-290/IL 53 HMA RESURFACING AND BRIDGE REPAIRS
MAINTENANCE OF TRAFFIC STAGE 1 - NORTHBOUND BRIDGE REPAIRS

SCALE: 1" = 50' | SHEET 4 OF 9 SHEETS | STA. 73+00.00 | TO STA. 88+00.00

F.A.I RTE.	SECTION	COUNTY	TOTAL SHEETS	SHEET NO.
290	(0404-316-HB) BR 24	COOK	276	28
		CONTRACT NO. 62W99		
	ILLINOIS FED. AID PROJECT			

SCALE IN FEET
0 50 100

N. McCONNOR PRKY
MALL DR.
N. McCONNOR PRKY
RAMP "C"
RAMP "D"
SB FAI 290 (IL. 53)
NB FAI 290 (IL. 53)
E. FRONTAGE RD.
MATCH LINE STA. 88+00
MATCH LINE STA. 103+00
OVERHEAD SIGN

W12-1-48
ROAD NARROWS
W5-1(O)
TEMPORARY PAVEMENT MARKING - LINE 6"
TYPE IV TAPE (SKIP-DASH WHITE)
TEMPORARY PAVEMENT MARKING - LINE 4"
TYPE IV TAPE (SOLID YELLOW)
TEMPORARY PAVEMENT MARKING - LINE 8"
TYPE IV TAPE (SOLID WHITE)
TEMPORARY PAVEMENT MARKING - LINE 4"
TYPE IV TAPE (6' SKIP - 2' DASH WHITE)
TEMPORARY PAVEMENT MARKING - LINE 4"
TYPE IV TAPE (SOLID WHITE)
TEMPORARY PAVEMENT MARKING - LINE 12"
TYPE IV TAPE (SOLID WHITE)
12'-0"
W12-I102
93+00
PAVEMENT PATCH #3801
CLASS D, TYPE II (12.4 SY)
W3-2(O)-48
+50
PAVEMENT PATCH #3802
CLASS D, TYPE II (12,4 SY)
OVERHEAD SIGN - STA 91+29.4
500'
W4-1(O)-48
YIELD
R1-2-48
ROAD CONSTRUCTION AHEAD
W20-I103(O)-48

ILLINOIS 53 NORTH
NEXT EXIT Kirchoff Rd

ILLINOIS 53 NORTH
TO CHICAGO 90 TOLL
TO ILLINOIS 62 Algonquin Rd

CONTRACTOR TO COVER EXISTING LEFT ARROW WITH A BLANK SQUARE SIGN.

LEGEND

- WORK AREA (BRIDGE)
- PAVEMENT PATCHNG
- IMPACT ATTENUATORS, TEMPORARY (FULLY REDIRECTIVE, NARROW, TEST LEVEL 3
- TYPE III BARRICADE
- TEMPORARY CONCRETE BARRIER
- DRUM WITH STEADY BURN MONODIRECTIONAL LIGHT/ DIRECTION INDICATOR BARRICADE WITH STEADY BURN MONODIRECTIONAL LIGHT (PER HWY. STD. 701401-13)
- SIGN

MODEL: MOT - Plan 3 [Sheet]
FILE NAME: W:\24001656.05\IDOT Dist 1 IL 290 Mill and Overlay\CADD Data\Sheets\D1_IL53_sht_MOT-Sig1_NB.dgn

IMEG
401 E. STATE ST. 4th Floor ROCKFORD, IL 61104
PH: 815.965.6400 www.imegcorp.com

USER NAME = Marc.A.Personette	DESIGNED - Brad Lange	REVISED -	
	DRAWN - Marc Personette	REVISED -	
	CHECKED - Corey Stout	REVISED -	
PLOT DATE = 4/29/2026	DATE - 4/29/2026	REVISED -	

STATE OF ILLINOIS
DEPARTMENT OF TRANSPORTATION

I-290/IL 53 HMA RESURFACING AND BRIDGE REPAIRS
MAINTENANCE OF TRAFFIC STAGE 1 - NORTHBOUND BRIDGE REPAIRS

SCALE: 1" = 50' | SHEET 5 OF 9 SHEETS | STA. 88+00.00 | TO STA. 103+00.00

F.A.I RTE.	SECTION	COUNTY	TOTAL SHEETS	SHEET NO.
290	(0404-316-HB) BR 24	COOK	276	29
		CONTRACT NO. 62W99		
	ILLINOIS FED. AID PROJECT			

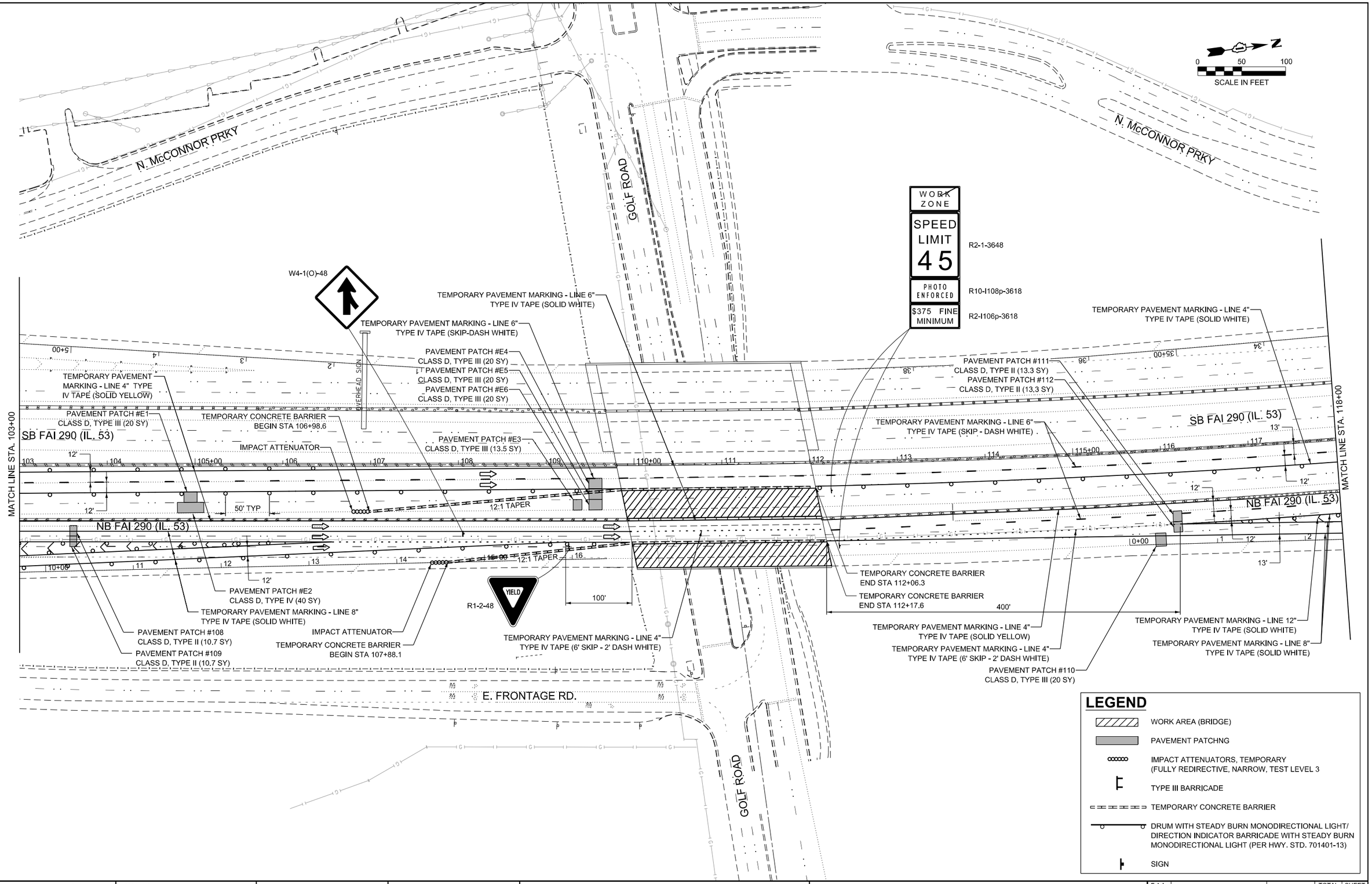

MODEL: MOT - Plan 4 [Sheet]
FILE NAME: W:\24001656.051\IDOT Dist 1 IL 290 Mill and Overlay\CADD Data\Sheets\D1_IL53_sht_MOT-Stg1_NB.dgn

IMEG
401 E. STATE ST. 4th Floor ROCKFORD, IL 61104
PH: 815.965.6400
www.imegcorp.com

USER NAME = Marc.A.Personette	DESIGNED - Brad Lange	REVISED -
	DRAWN - Marc Personette	REVISED -
	CHECKED - Corey Stout	REVISED -
PLOT DATE = 4/29/2026	DATE - 4/29/2026	REVISED -

STATE OF ILLINOIS
DEPARTMENT OF TRANSPORTATION

I-290/IL 53 HMA RESURFACING AND BRIDGE REPAIRS
MAINTENANCE OF TRAFFIC STAGE 1 - NORTHBOUND BRIDGE REPAIRS

SCALE: 1" = 50' | SHEET 6 OF 9 SHEETS | STA. 103+00.00 TO STA. 118+00.00

F.A.I RTE.	SECTION	COUNTY	TOTAL SHEETS	SHEET NO.
290	(0404-316-HB) BR 24	COOK	276	30
		CONTRACT NO. 62W99		
	ILLINOIS FED. AID PROJECT			

LEGEND

- WORK AREA (BRIDGE)
- PAVEMENT PATCHNG
- IMPACT ATTENUATORS, TEMPORARY (FULLY REDIRECTIVE, NARROW, TEST LEVEL 3
- TYPE III BARRICADE
- TEMPORARY CONCRETE BARRIER
- DRUM WITH STEADY BURN MONODIRECTIONAL LIGHT/ DIRECTION INDICATOR BARRICADE WITH STEADY BURN MONODIRECTIONAL LIGHT (PER HWY. STD. 701401-13)
- SIGN

N

0 50 100

SCALE IN FEET

N. McCONNOR PRKY

RAMP "E"

RAMP "G"

RAMP "F"

RAMP "H"

MATCH LINE STA. 118+00

MATCH LINE STA. 133+00

SB FAI 290 (IL. 53)

NB FAI 290 (IL. 53)

TEMPORARY PAVEMENT MARKING - LINE 6" TYPE IV TAPE (SKIP-DASH WHITE)

TEMPORARY PAVEMENT MARKING - LINE 4" TYPE IV TAPE (SOLID YELLOW)

TEMPORARY PAVEMENT MARKING - LINE 4" TYPE IV TAPE (SOLID WHITE)

PAVEMENT PATCH #E8 CLASS D, TYPE III (16 SY)

PAVEMENT PATCH #E8 CLASS D, TYPE III (16 SY)

EXIT OPEN AHEAD D4-I102(G)-3648

TEMPORARY CONCRETE BARRIER BEGIN STA 131+12.9

IMPACT ATTENUATOR

PAVEMENT PATCH #E11 CLASS D, TYPE IV (26.7 SY)

PAVEMENT PATCH #E11 CLASS D, TYPE IV (26.7 SY)

PAVEMENT PATCH #E13 CLASS D, TYPE IV (26.7 SY)

PAVEMENT PATCH #E14 CLASS D, TYPE II (13.3 SY)

PAVEMENT PATCH #116 CLASS D, TYPE II (13.3 SY)

PAVEMENT PATCH #E12 CLASS D, TYPE IV (26.7 SY)

PAVEMENT PATCH #E15 CLASS D, TYPE II (13.3 SY)

12:1 TAPER

50' TYP

ROAD NARROWS W5-1(O)

OVERHEAD SIGN - STA 119+93.8

ILLINOIS 62 Algonquin Rd EXIT 3/4 MILE

TOLL INTERSTATE 90 WEST Rockford EXIT 1/4 MILE

TOLL INTERSTATE 90 EAST Chicago

TEMPORARY PAVEMENT MARKING - LINE 12" TYPE IV TAPE (SOLID WHITE)

TEMPORARY PAVEMENT MARKING - LINE 8" TYPE IV TAPE (SOLID WHITE)

PAVEMENT PATCH #113 CLASS D, TYPE II (7.2 SY)

PAVEMENT PATCH #114 CLASS D, TYPE II (5.7 SY)

PAVEMENT PATCH #115 CLASS D, TYPE III (18.7 SY)

PAVEMENT PATCH #E9 CLASS D, TYPE III (16 SY)

TEMPORARY PAVEMENT MARKING - LINE 12" TYPE IV TAPE (SOLID WHITE)

PAVEMENT PATCH #119 CLASS D, TYPE III (20 SY)

PAVEMENT PATCH #117 CLASS D, TYPE IV (26.7 SY)

PAVEMENT PATCH #118 CLASS D, TYPE IV (26.7 SY)

PAVEMENT PATCH #121 CLASS D, TYPE III (16 SY)

PAVEMENT PATCH #120 CLASS D, TYPE II (13.3 SY)

W3-2(O)-48 +70

W4-1(O)-48

500'

IMPACT ATTENUATOR

TEMPORARY CONCRETE BARRIER BEGIN STA 130+98.6

TEMPORARY PAVEMENT MARKING - LINE 8" TYPE IV TAPE (SOLID WHITE)

ROAD CONSTRUCTION AHEAD W20-I103(O)-48

YIELD R1-2-48

MODEL: MOT - Plan 5 [Sheet]
FILE NAME: W:\24001656.05\IDOT Dist 1 IL 290 Mill and Overlay\CADD Data\Sheets\D1_IL53_sht_MOT-Stg1_NB.dgn

IMEG
401 E. STATE ST. 4th Floor ROCKFORD, IL 61104
PH: 815.965.8400
www.imegcorp.com

USER NAME = Marc.A.Personette	DESIGNED - Brad Lange	REVISED -	
	DRAWN - Marc Personette	REVISED -	
	CHECKED - Corey Stout	REVISED -	
PLOT DATE = 4/29/2026	DATE - 4/29/2026	REVISED -	

STATE OF ILLINOIS
DEPARTMENT OF TRANSPORTATION

I-290/IL 53 HMA RESURFACING AND BRIDGE REPAIRS
MAINTENANCE OF TRAFFIC STAGE 1 - NORTHBOUND BRIDGE REPAIRS

SCALE: 1" = 50' | SHEET 7 OF 9 SHEETS | STA. 118+00.00 TO STA. 133+00.00

F.A.I RTE.	SECTION	COUNTY	TOTAL SHEETS	SHEET NO.
290	(0404-316-HB) BR 24	COOK	276	31
		CONTRACT NO. 62W99		
	ILLINOIS FED. AID PROJECT			

LEGEND

- WORK AREA (BRIDGE)
- PAVEMENT PATCHNG
- IMPACT ATTENUATORS, TEMPORARY (FULLY REDIRECTIVE, NARROW, TEST LEVEL 3
- TYPE III BARRICADE
- TEMPORARY CONCRETE BARRIER
- DRUM WITH STEADY BURN MONODIRECTIONAL LIGHT/ DIRECTION INDICATOR BARRICADE WITH STEADY BURN MONODIRECTIONAL LIGHT (PER HWY. STD. 701401-13)
- SIGN

N

0 50 100

SCALE IN FEET

TOLLWAY I-90

RAMP "I"

RAMP "K" NORTHWEST TOLLWAY ON RAMP

MATCH LINE STA. 133+00

MATCH LINE STA. 148+00

SB COLLECTOR/DISTRIBUTOR

SB EXPRESS

NB EXPRESS

NB COLLECTOR/DISTRIBUTOR

OVERHEAD SIGN

TEMPORARY PAVEMENT MARKING - LINE 6" TYPE IV TAPE (SOLID WHITE)

TEMPORARY PAVEMENT MARKING - LINE 6" TYPE IV TAPE (SKIP-DASH WHITE)

TEMPORARY PAVEMENT MARKING - LINE 4" TYPE IV TAPE (SOLID YELLOW)

TEMPORARY PAVEMENT MARKING - LINE 4" TYPE IV TAPE (SOLID WHITE)

TEMPORARY CONCRETE BARRIER END STA 137+43.7

TEMPORARY CONCRETE BARRIER END STA 137+36.0

PAVEMENT PATCH #E16 CLASS D, TYPE III (20 SY)

PAVEMENT PATCH #E17 CLASS D, TYPE III (20 SY)

PAVEMENT PATCH #E18 CLASS D, TYPE III (20 SY)

PAVEMENT PATCH #E19 CLASS D, TYPE II (13.3 SY)

PAVEMENT PATCH #E22 CLASS D, TYPE III (20 SY)

PAVEMENT PATCH #E23 CLASS D, TYPE II (20 SY)

PAVEMENT PATCH #E24 CLASS D, TYPE II (13.3 SY)

PAVEMENT PATCH #P124 CLASS D, TYPE II (13.3 SY)

PAVEMENT PATCH #P125 CLASS D, TYPE II (13.3 SY)

PAVEMENT PATCH #E21 CLASS D, TYPE II (13.3 SY)

PAVEMENT PATCH #E20 CLASS D, TYPE II (13.3 SY)

PAVEMENT PATCH #126 CLASS D, TYPE II (13.3 SY)

PAVEMENT PATCH #127 CLASS D, TYPE II (13.3 SY)

PAVEMENT PATCH #128 CLASS D, TYPE II (12 SY)

TEMPORARY PAVEMENT MARKING - LINE 12" TYPE IV TAPE (SOLID WHITE)

EXIT OPEN AHEAD D4-I102(G)-3648

TEMPORARY PAVEMENT MARKING - LINE 4" TYPE IV TAPE (6' SKIP - 2' DASH WHITE)

TEMPORARY PAVEMENT MARKING - LINE 8" TYPE IV TAPE (SOLID WHITE)

EXIT SIGN - SPECIAL E5-1

END WORK ZONE SPEED LIMIT G20-I103-6036

RAMP "J"

RAMP "L" NORTHWEST TOLLWAY OFF RAMP

200'

12:1 TAPER

7:1 TAPER

6:1 TAPER

OVERHEAD SIGN - STA 138+20.8

ILLINOIS 62 Algonquin Rd EXIT 1/4 MILE

TOLL INTERSTATE 90 WEST Rockford

MODEL: MOT - Plan 6 [Sheet]
FILE NAME: W:\24001656.05\IDOT Dist 1 IL 290 Mill and Overlay\CADD Data\Sheets\D1_IL53_sht_MOT-Stg1_NB.dgn

IMEG
401 E. STATE ST. 4th Floor ROCKFORD, IL 61104
PH: 815.965.6400
www.imegcorp.com

USER NAME = Marc.A.Personette	DESIGNED - Brad Lange	REVISED -	
	DRAWN - Marc Personette	REVISED -	
	CHECKED - Corey Stout	REVISED -	
PLOT DATE = 4/29/2026	DATE - 4/29/2026	REVISED -	

STATE OF ILLINOIS
DEPARTMENT OF TRANSPORTATION

I-290/IL 53 HMA RESURFACING AND BRIDGE REPAIRS
MAINTENANCE OF TRAFFIC STAGE 1 - NORTHBOUND BRIDGE REPAIRS

SCALE: 1" = 50' | SHEET 8 OF 9 SHEETS | STA. 133+00.00 | TO STA. 148+00.00

F.A.I RTE.	SECTION	COUNTY	TOTAL SHEETS	SHEET NO.
290	(0404-316-HB) BR 24	COOK	276	32
		CONTRACT NO. 62W99		
		ILLINOIS	FED. AID PROJECT	

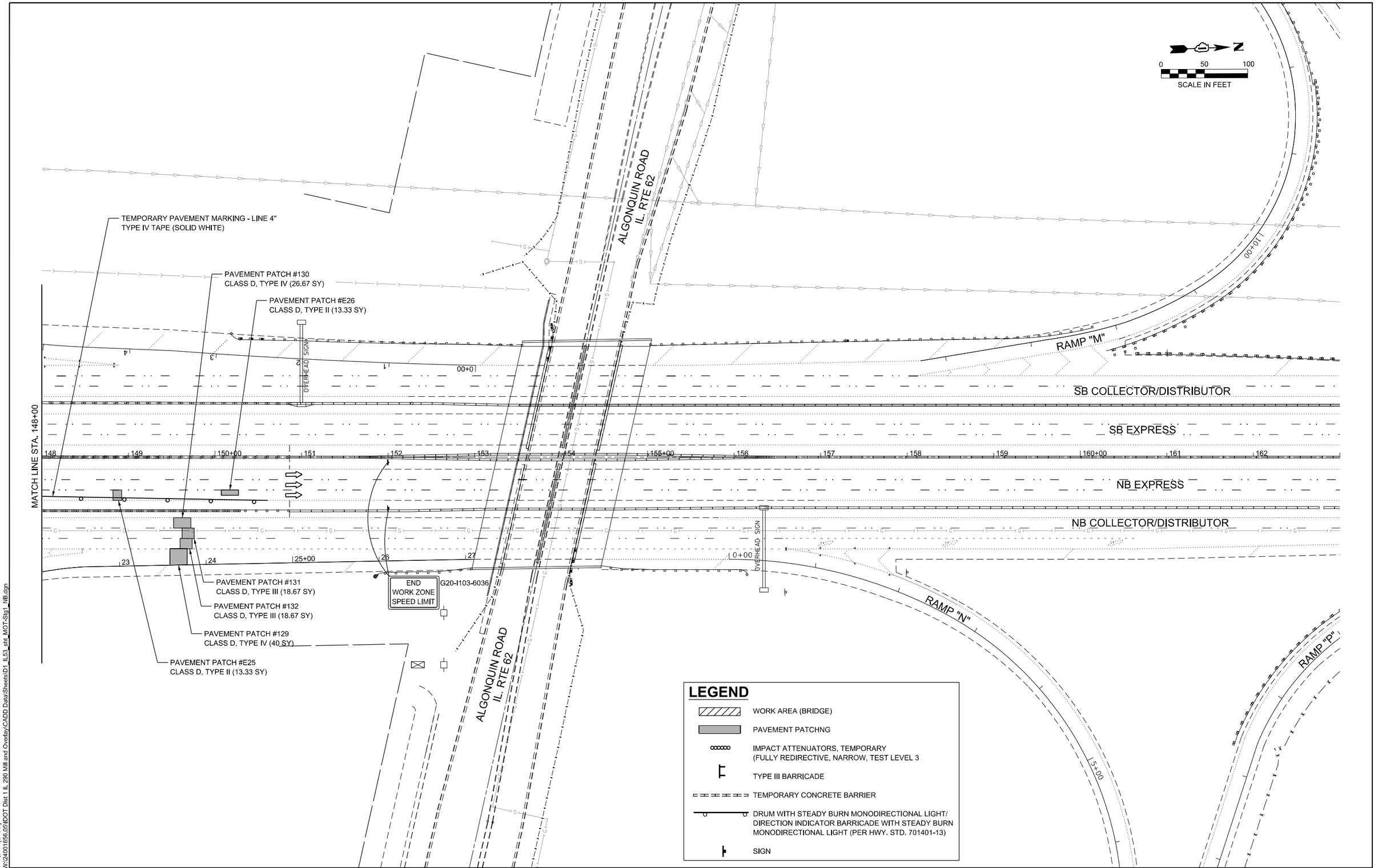

LEGEND

- WORK AREA (BRIDGE)
- PAVEMENT PATCHNG
- IMPACT ATTENUATORS, TEMPORARY (FULLY REDIRECTIVE, NARROW, TEST LEVEL 3
- TYPE III BARRICADE
- TEMPORARY CONCRETE BARRIER
- DRUM WITH STEADY BURN MONODIRECTIONAL LIGHT/ DIRECTION INDICATOR BARRICADE WITH STEADY BURN MONODIRECTIONAL LIGHT (PER HWY. STD. 701401-13)
- SIGN

IMEG
401 E. STATE ST. 4th Floor
ROCKFORD, IL
61104
PH: 815.965.6400
www.imegcorp.com

USER NAME = Marc.A.Personette	DESIGNED - Brad Lange	REVISED -
	DRAWN - Marc Personette	REVISED -
	CHECKED - Corey Stout	REVISED -
PLOT DATE = 4/29/2026	DATE - 4/29/2026	REVISED -

STATE OF ILLINOIS
DEPARTMENT OF TRANSPORTATION

I-290/IL 53 HMA RESURFACING AND BRIDGE REPAIRS
MAINTENANCE OF TRAFFIC STAGE 1 - NORTHBOUND BRIDGE REPAIRS

SCALE: 1" = 50' | SHEET 9 OF 9 SHEETS | STA. 148+00.00 | TO STA. 163+00.00

F.A.I RTE.	SECTION	COUNTY	TOTAL SHEETS	SHEET NO.
290	(0404-316-HB) BR 24	COOK	276	33
		CONTRACT NO. 62W99		
	ILLINOIS FED. AID PROJECT			

MODEL: MOT - Plan 7 [Sheet]
FILE NAME: W:\2400\656.05\IDOT Dist 1 IL 290 Mill and Overlay\CADD Data\Sheets\D1_IL53_sht_MOT-Stg1_NB.dgn

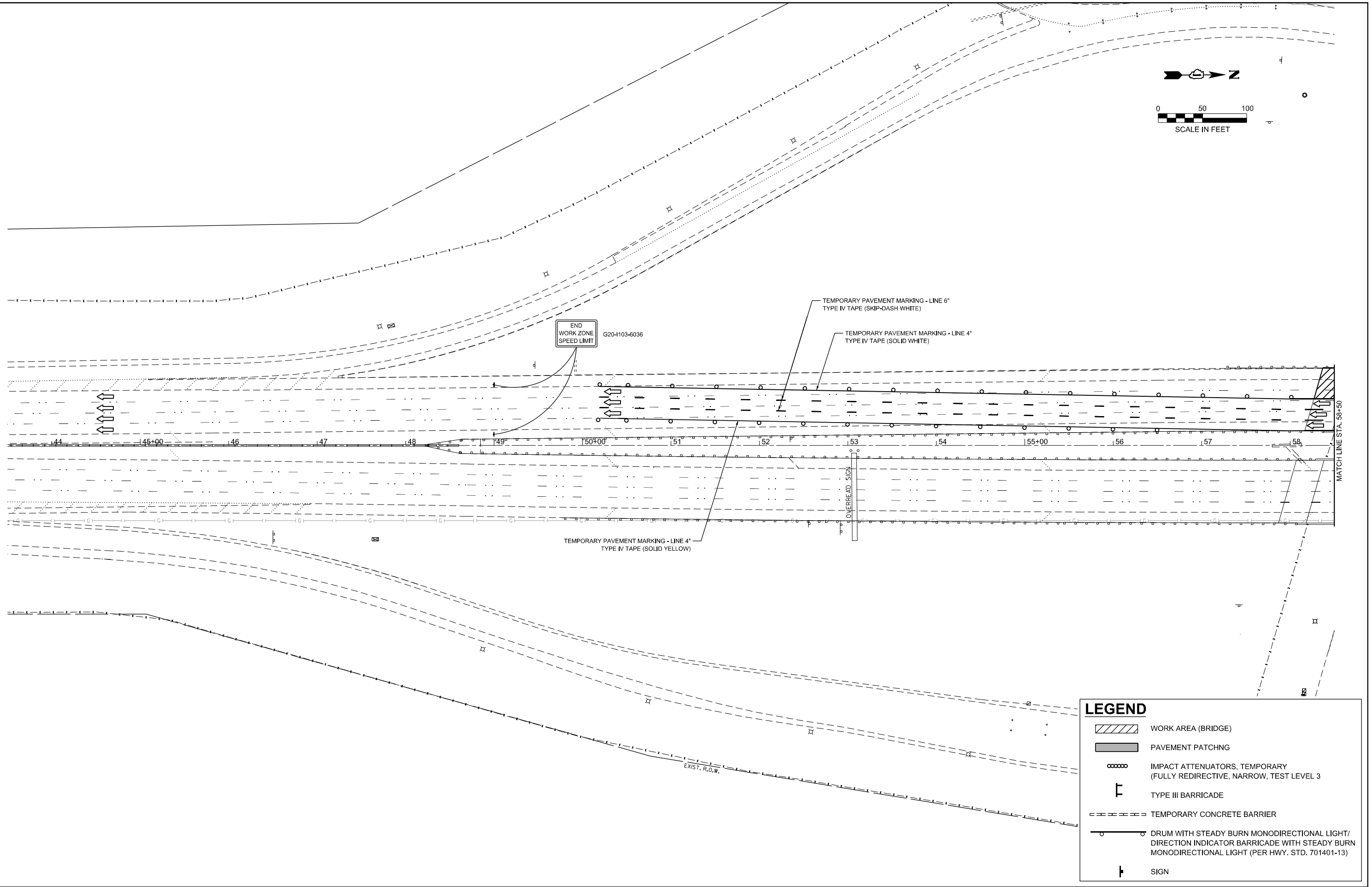

MODEL: MOT - Plan 0 [Sheet]
FILE NAME: W:\24001656.05\IDOT Dist 1 IL 290 Mill and Overlay\CADD Data\Sheets\D1_IL53_sht_MOT-Stg1_SB.dgn

IMEG
401 E. STATE ST. 4th Floor
ROCKFORD, IL
61104
PH: 815.965.6400
www.imegcorp.com

USER NAME = Marc.A.Personette	DESIGNED - Brad Lange	REVISED -	
	DRAWN - Marc Personette	REVISED -	
	CHECKED - Corey Stout	REVISED -	
PLOT DATE = 4/29/2026	DATE - 4/29/2026	REVISED -	

STATE OF ILLINOIS
DEPARTMENT OF TRANSPORTATION

I-290/IL 53 HMA RESURFACING AND BRIDGE REPAIRS
MAINTENANCE OF TRAFFIC STAGE 1 - SOUTHBOUND BRIDGE REPAIRS

SCALE: 1" = 50' | SHEET 1 OF 9 SHEETS | STA. 43+50.00 | TO STA. 58+50.00

F.A.I RTE.	SECTION	COUNTY	TOTAL SHEETS	SHEET NO.
290	(0404-316-HB) BR 24	COOK	276	34
		CONTRACT NO. 62W99		
	ILLINOIS FED. AID PROJECT			

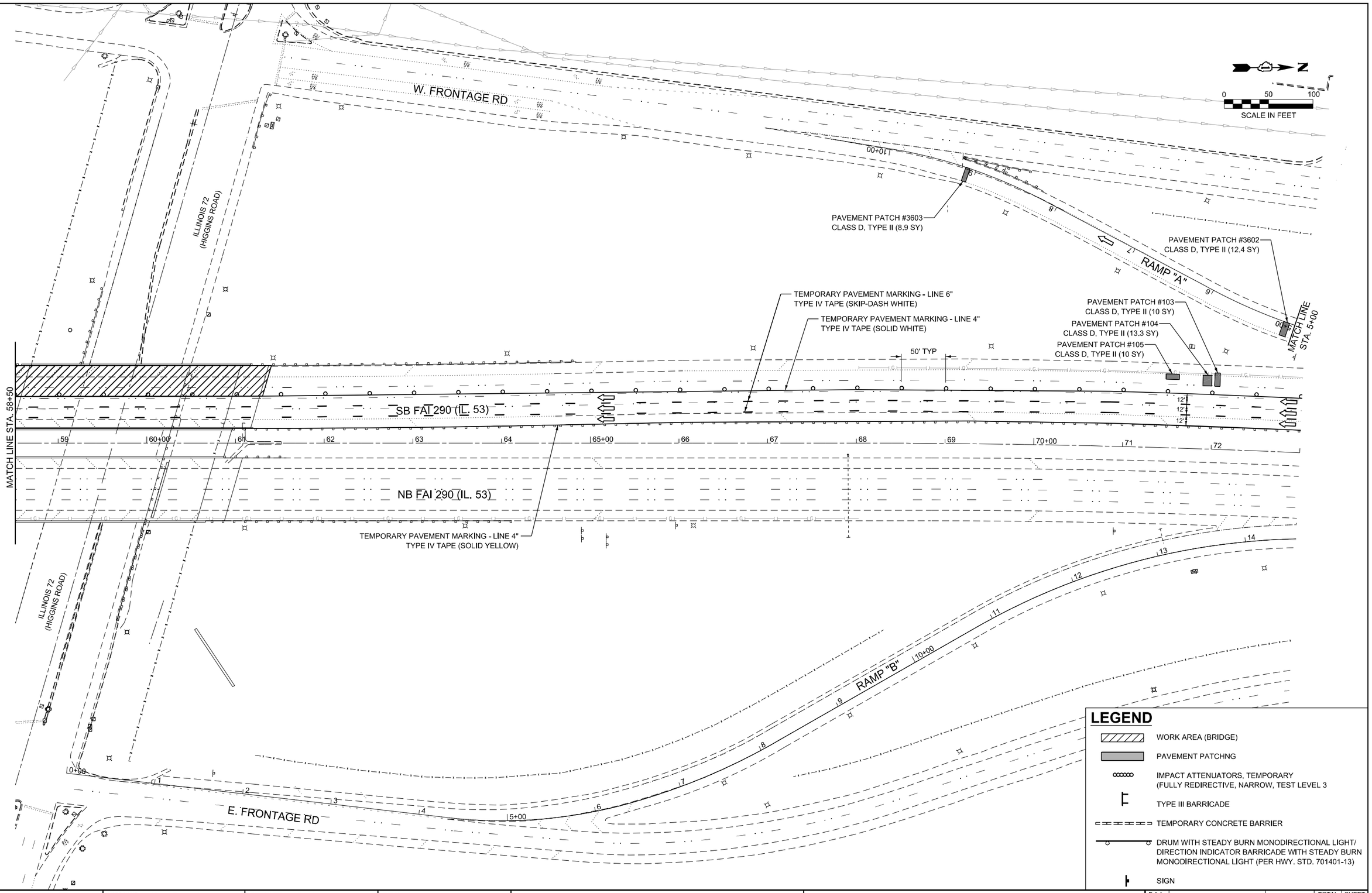

LEGEND

- WORK AREA (BRIDGE)
- PAVEMENT PATCHNG
- IMPACT ATTENUATORS, TEMPORARY (FULLY REDIRECTIVE, NARROW, TEST LEVEL 3
- TYPE III BARRICADE
- TEMPORARY CONCRETE BARRIER
- DRUM WITH STEADY BURN MONODIRECTIONAL LIGHT/ DIRECTION INDICATOR BARRICADE WITH STEADY BURN MONODIRECTIONAL LIGHT (PER HWY. STD. 701401-13)
- SIGN

IMEG
401 E. STATE ST. 4th Floor
ROCKFORD, IL
61104
PH: 815.965.6400
www.imegcorp.com

USER NAME = Marc.A.Personette	DESIGNED - Brad Lange	REVISED -	
	DRAWN - Marc Personette	REVISED -	
	CHECKED - Corey Stout	REVISED -	
PLOT DATE = 4/29/2026	DATE - 4/29/2026	REVISED -	

STATE OF ILLINOIS
DEPARTMENT OF TRANSPORTATION

I-290/IL 53 HMA RESURFACING AND BRIDGE REPAIRS
MAINTENANCE OF TRAFFIC STAGE 1 - SOUTHBOUND BRIDGE REPAIRS

SCALE: 1" = 50' | SHEET 2 OF 9 SHEETS | STA. 58+50.00 | TO STA. 73+00.00

F.A.I RTE.	SECTION	COUNTY	TOTAL SHEETS	SHEET NO.
290	(0404-316-HB) BR 24	COOK	276	35

CONTRACT NO. 62W99

ILLINOIS | FED. AID PROJECT

MODEL: MOT - Plan 1 [Sheet]
FILE NAME: W:\24001656.051\IDOT Dist 1 IL 290 Mill and Overlay\CADD Data\Sheets\D1_IL53_stH_MOT-Stg1_SB.dgn

EXIT 1B

ILLINOIS 72

Higgins Rd

WOODFIELD ROAD

W. FRONTAGE RD

N. McCONNOR PRKY

0 50 100

SCALE IN FEET

TEMPORARY PAVEMENT MARKING - LINE 4"
TYPE IV TAPE (SOLID WHITE)

PAVEMENT PATCH #3601
CLASS D, TYPE II (8.9 SY)

TEMPORARY PAVEMENT MARKING - LINE 4"
TYPE IV TAPE (6' SKIP - 2' DASH WHITE)

TEMPORARY PAVEMENT MARKING - LINE 8"
TYPE IV TAPE (SOLID WHITE)

TEMPORARY PAVEMENT MARKING - LINE 12"
TYPE IV TAPE (SOLID WHITE)

TEMPORARY PAVEMENT MARKING - LINE 6"
TYPE IV TAPE (SOLID WHITE)

TEMPORARY PAVEMENT MARKING - LINE 4"
TYPE IV TAPE (SOLID WHITE)

MATCH LINE STA. 5+00

MATCH LINE STA. 73+00

MATCH LINE STA. 88+00

OVERHEAD SIGN

SB FAI 290 (IL. 53)

NB FAI 290 (IL. 53)

50' TYP

12'

16'

TEMPORARY PAVEMENT MARKING - LINE 4"
TYPE IV TAPE (SOLID YELLOW)

TEMPORARY PAVEMENT MARKING - LINE 6"
TYPE IV TAPE (SKIP-DASH WHITE)

WOODFIELD ROAD

LEGEND

- WORK AREA (BRIDGE)
- PAVEMENT PATCHNG
- IMPACT ATTENUATORS, TEMPORARY (FULLY REDIRECTIVE, NARROW, TEST LEVEL 3
- TYPE III BARRICADE
- TEMPORARY CONCRETE BARRIER
- DRUM WITH STEADY BURN MONODIRECTIONAL LIGHT/ DIRECTION INDICATOR BARRICADE WITH STEADY BURN MONODIRECTIONAL LIGHT (PER HWY. STD. 701401-13)
- SIGN

MODEL: MOT - Plan 2 [Sheet]
FILE NAME: W:\24001656.05\IDOT Dist 1 IL 290 Mill and Overlay\CADD Data\Sheets\D1_IL53_sht_MOT-Sig1_SB.dgn

IMEG
401 E. STATE ST. 4th Floor ROCKFORD, IL 61104
PH: 815.965.6400
www.imegcorp.com

USER NAME = Marc.A.Personette	DESIGNED - Brad Lange	REVISED -	
	DRAWN - Marc Personette	REVISED -	
	CHECKED - Corey Stout	REVISED -	
PLOT DATE = 4/29/2026	DATE - 4/29/2026	REVISED -	

STATE OF ILLINOIS
DEPARTMENT OF TRANSPORTATION

I-290/IL 53 HMA RESURFACING AND BRIDGE REPAIRS
MAINTENANCE OF TRAFFIC STAGE 1 - SOUTHBOUND BRIDGE REPAIRS

SCALE: 1" = 50' | SHEET 3 OF 9 SHEETS | STA. 73+00.00 TO STA. 88+00.00

F.A.I RTE.	SECTION	COUNTY	TOTAL SHEETS	SHEET NO.
290	(0404-316-HB) BR 24	COOK	276	36
		CONTRACT NO. 62W99		
	ILLINOIS FED. AID PROJECT			

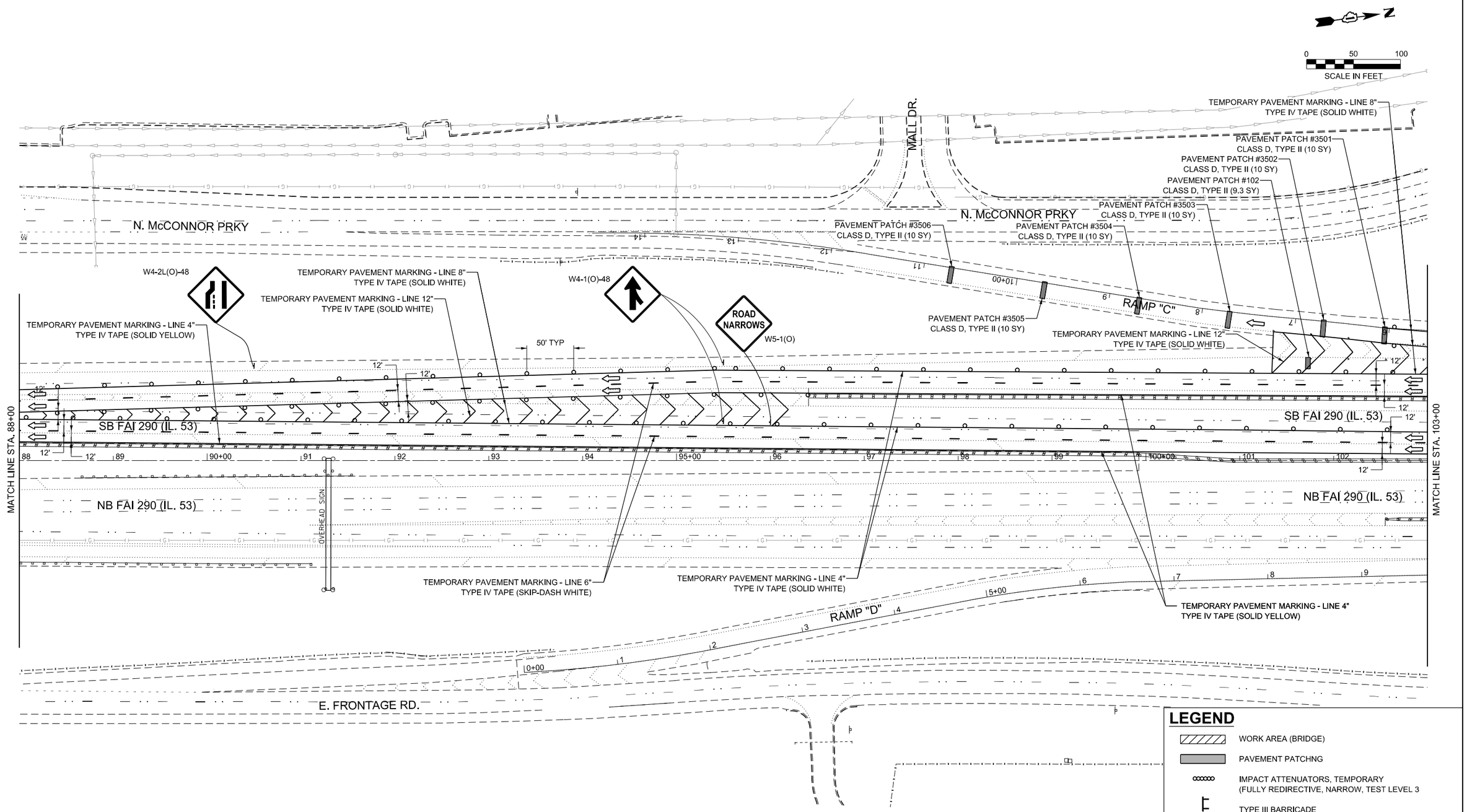

LEGEND

- WORK AREA (BRIDGE)
- PAVEMENT PATCHNG
- IMPACT ATTENUATORS, TEMPORARY (FULLY REDIRECTIVE, NARROW, TEST LEVEL 3
- TYPE III BARRICADE
- TEMPORARY CONCRETE BARRIER
- DRUM WITH STEADY BURN MONODIRECTIONAL LIGHT/ DIRECTION INDICATOR BARRICADE WITH STEADY BURN MONODIRECTIONAL LIGHT (PER HWY. STD. 701401-13)
- SIGN

MODEL: MOT - Plan 3 [Sheet]
FILE NAME: W:\2400\1656.05\IDOT Dist 1 IL 290 Mill and Overlay\CADD Data\Sheets\D1_IL53_sht_MOT-Stg1_SB.dgn

IMEG
401 E. STATE ST. 4th Floor
ROCKFORD, IL
61104
PH: 815.965.6400
www.imegcorp.com

USER NAME = Marc.A.Personette	DESIGNED - Brad Lange	REVISED -	
	DRAWN - Marc Personette	REVISED -	
	CHECKED - Corey Stout	REVISED -	
PLOT DATE = 4/29/2026	DATE - 4/29/2026	REVISED -	

STATE OF ILLINOIS
DEPARTMENT OF TRANSPORTATION

I-290/IL 53 HMA RESURFACING AND BRIDGE REPAIRS
MAINTENANCE OF TRAFFIC STAGE 1 - SOUTHBOUND BRIDGE REPAIRS

SCALE: 1" = 50' | SHEET 4 OF 9 SHEETS | STA. 88+00.00 | TO STA. 103+00.00

F.A.I RTE.	SECTION	COUNTY	TOTAL SHEETS	SHEET NO.
290	(0404-316-HB) BR 24	COOK	276	37
		CONTRACT NO. 62W99		
	ILLINOIS FED. AID PROJECT			

EXIT TO
Higgins Rd
PROHIBITED
(OVER OUTSIDE EXPRESS LANE)

EXIT 1B
ILLINOIS 72
Higgins Rd
1/2 MILE

EXIT 1A
Woodfield Rd
TO ILLINOIS 58 **Golf Rd**

N

0 50 100
SCALE IN FEET

N. McCONNOR PRKY

GOLF ROAD

TEMPORARY PAVEMENT MARKING - LINE 4"
TYPE IV TAPE (6' SKIP - 2' DASH WHITE)

PAVEMENT PATCH #101
CLASS D, TYPE II (6.7 SY)
PAVEMENT PATCH #100
CLASS D, TYPE II (6.7 SY)
PAVEMENT PATCH #99
CLASS D, TYPE II (6.7 SY)

PAVEMENT PATCH #98
CLASS D, TYPE III (20 SY)
PAVEMENT PATCH #97
CLASS D, TYPE III (20 SY)
PAVEMENT PATCH #96
CLASS D, TYPE III (20 SY)

TEMPORARY PAVEMENT MARKING - LINE 8"
TYPE IV TAPE (SOLID WHITE)
900' TAPER

PAVEMENT PATCH #95
CLASS D, TYPE II (10 SY)
TEMPORARY PAVEMENT MARKING - LINE 4"
TYPE IV TAPE (6' SKIP - 2' DASH WHITE)

EXIT SIGN - SPECIAL
E5-1
EXIT

TEMPORARY PAVEMENT MARKING - LINE 8"
TYPE IV TAPE (SOLID WHITE)

TEMPORARY PAVEMENT MARKING -
LINE 12" TYPE IV TAPE (SOLID WHITE)

TEMPORARY PAVEMENT MARKING - LINE 4"
TYPE IV TAPE (SOLID WHITE)

EXIT
OPEN
AHEAD
D4-I102(G)-3648

OVERHEAD SIGN

MATCH LINE STA. 103+00

SB FAI 290 (IL. 53)

197.5'
50' TYP
243'

MATCH LINE STA. 118+00

SB FAI 290 (IL. 53)

PAVEMENT PATCH #E14
CLASS D, TYPE III (20 SY)
PAVEMENT PATCH #E13
CLASS D, TYPE III (20 SY)
PAVEMENT PATCH #E12
CLASS D, TYPE III (20 SY)

PAVEMENT PATCH #E14
CLASS D, TYPE III (20 SY)
PAVEMENT PATCH #E14
CLASS D, TYPE III (20 SY)

NB FAI 290 (IL. 53)

NB FAI 290 (IL. 53)

TEMPORARY PAVEMENT MARKING - LINE 4"
TYPE IV TAPE (SOLID YELLOW)

TEMPORARY PAVEMENT MARKING - LINE 6"
TYPE IV TAPE (SOLID WHITE)

TEMPORARY PAVEMENT MARKING -
LINE 6" TYPE IV TAPE (SKIP-DASH WHITE)

TEMPORARY PAVEMENT MARKING - LINE 4"
TYPE IV TAPE (SOLID YELLOW)

E. FRONTAGE RD.

GOLF ROAD

WORK ZONE
SPEED LIMIT 45 — R2-1-3648
PHOTO ENFORCED — R10-I108p-3618
$375 FINE MINIMUM — R2-I106p-3618

LEGEND

- WORK AREA (BRIDGE)
- PAVEMENT PATCHNG
- IMPACT ATTENUATORS, TEMPORARY (FULLY REDIRECTIVE, NARROW, TEST LEVEL 3
- TYPE III BARRICADE
- TEMPORARY CONCRETE BARRIER
- DRUM WITH STEADY BURN MONODIRECTIONAL LIGHT/ DIRECTION INDICATOR BARRICADE WITH STEADY BURN MONODIRECTIONAL LIGHT (PER HWY. STD. 701401-13)
- SIGN

MODEL: MOT - Plan 4 [Sheet]
FILE NAME: W:\24001656.05\IDOT Dist 1 IL 290 Mill and Overlay\CADD Data\Sheets\D1_IL53_sht_MOT-Stg1_SB.dgn

IMEG
401 E. STATE ST. 4th Floor
ROCKFORD, IL 61104
PH: 815.965.6400
www.imegcorp.com

USER NAME = Marc.A.Personette	DESIGNED - Brad Lange	REVISED -	
	DRAWN - Marc Personette	REVISED -	
	CHECKED - Corey Stout	REVISED -	
PLOT DATE = 4/29/2026	DATE - 4/29/2026	REVISED -	

STATE OF ILLINOIS
DEPARTMENT OF TRANSPORTATION

I-290/IL 53 HMA RESURFACING AND BRIDGE REPAIRS
MAINTENANCE OF TRAFFIC STAGE 1 - SOUTHBOUND BRIDGE REPAIRS

SCALE: 1" = 50' | SHEET 5 OF 9 SHEETS | STA. 103+00.00 TO STA. 118+00.00

F.A.I RTE.	SECTION	COUNTY	TOTAL SHEETS	SHEET NO.
290	(0404-316-HB) BR 24	COOK	276	38
		CONTRACT NO. 62W99		
	ILLINOIS FED. AID PROJECT			

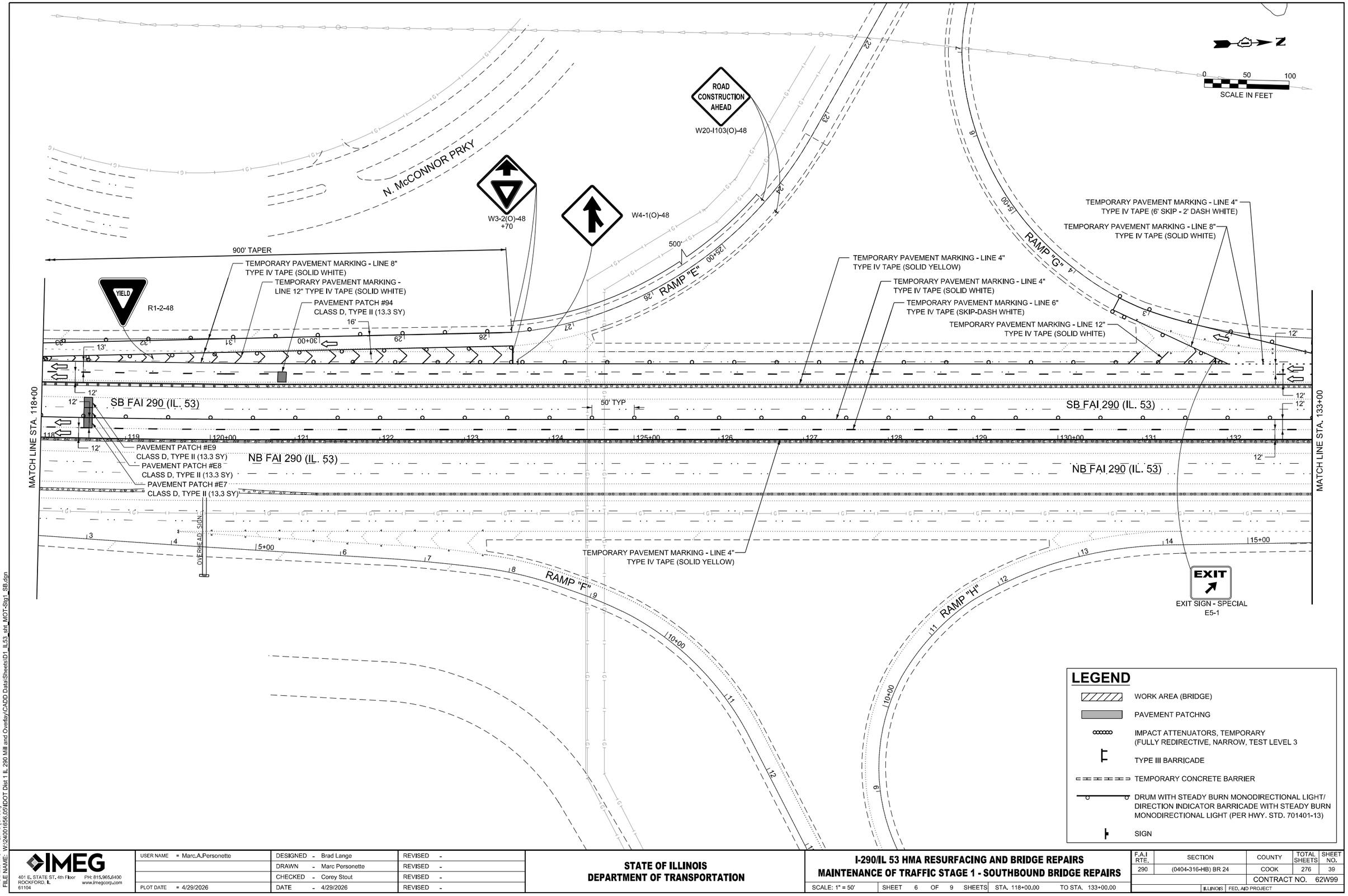

MODEL: MOT - Plan 5 [Sheet]
FILE NAME: W:\24001656.051\IDOT Dist 1 IL 290 Mill and Overlay\CADD Data\Sheets\ID1_IL53_sht_MOT-Stg1_SB.dgn

IMEG
401 E. STATE ST. 4th Floor ROCKFORD, IL 61104
PH: 815.965.6400
www.imegcorp.com

USER NAME = Marc.A.Personette	DESIGNED - Brad Lange	REVISED -	
	DRAWN - Marc Personette	REVISED -	
	CHECKED - Corey Stout	REVISED -	
PLOT DATE = 4/29/2026	DATE - 4/29/2026	REVISED -	

STATE OF ILLINOIS
DEPARTMENT OF TRANSPORTATION

I-290/IL 53 HMA RESURFACING AND BRIDGE REPAIRS
MAINTENANCE OF TRAFFIC STAGE 1 - SOUTHBOUND BRIDGE REPAIRS

SCALE: 1" = 50' | SHEET 6 OF 9 SHEETS | STA. 118+00.00 | TO STA. 133+00.00

F.A.I RTE.	SECTION	COUNTY	TOTAL SHEETS	SHEET NO.
290	(0404-316-HB) BR 24	COOK	276	39
		CONTRACT NO. 62W99		
	ILLINOIS FED. AID PROJECT			

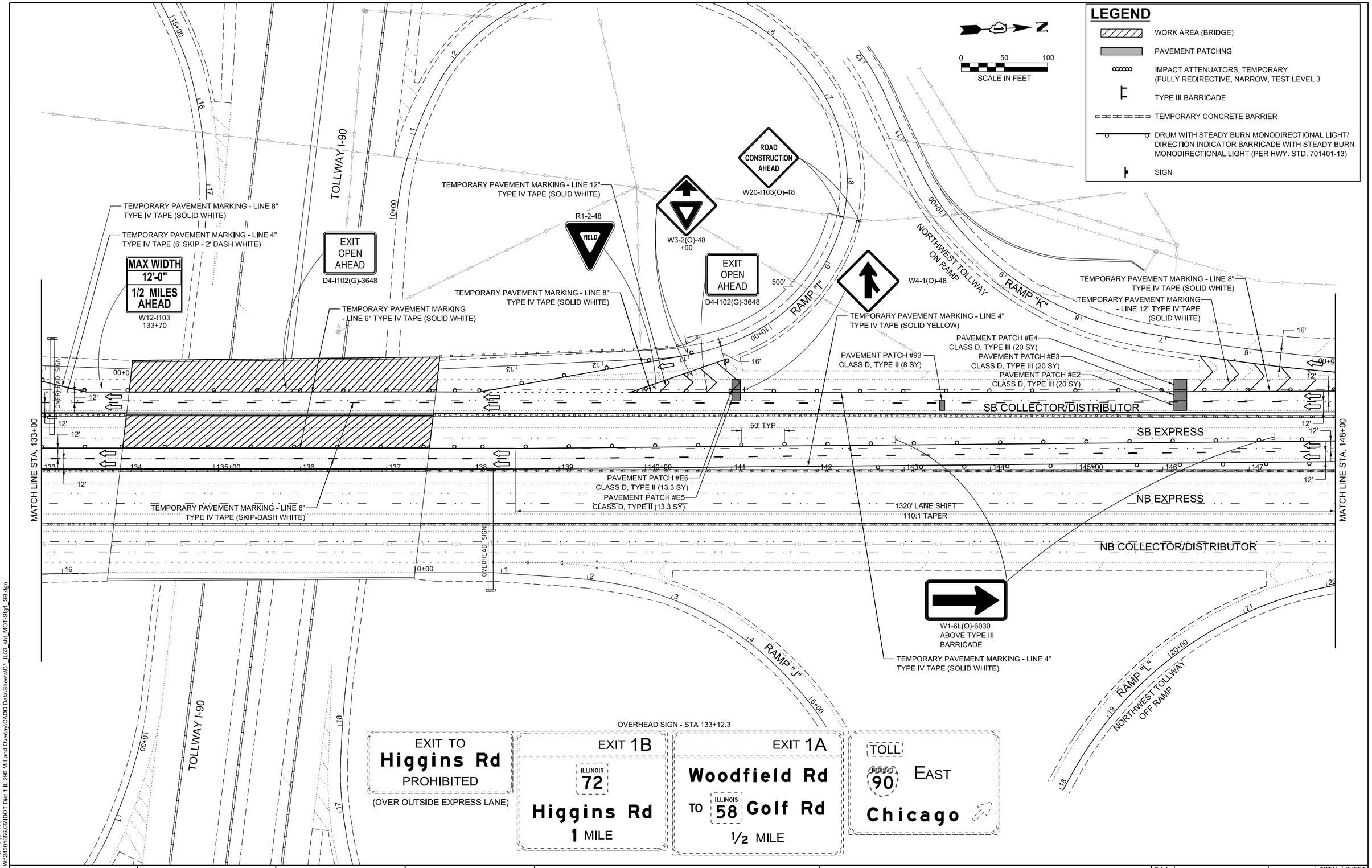

MODEL: MOT - Plan 6 [Sheet]
FILE NAME: W:\24001656.05\IDOT Dist 1 IL 290 Mill and Overlay\CADD Data\Sheets\D1_IL53_sht_MOT-Stg1_SB.dgn

IMEG
401 E. STATE ST. 4th Floor ROCKFORD, IL 61104
PH: 815.965.6400 www.imegcorp.com

USER NAME = Marc.A.Personette	DESIGNED - Brad Lange	REVISED -	
	DRAWN - Marc Personette	REVISED -	
	CHECKED - Corey Stout	REVISED -	
PLOT DATE = 4/29/2026	DATE - 4/29/2026	REVISED -	

STATE OF ILLINOIS
DEPARTMENT OF TRANSPORTATION

I-290/IL 53 HMA RESURFACING AND BRIDGE REPAIRS
MAINTENANCE OF TRAFFIC STAGE 1 - SOUTHBOUND BRIDGE REPAIRS

SCALE: 1" = 50' | SHEET 7 OF 9 SHEETS | STA. 133+00.00 | TO STA. 148+00.0

F.A.I RTE.	SECTION	COUNTY	TOTAL SHEETS	SHEET NO.
290	(0404-316-HB) BR 24	COOK	276	40
		CONTRACT NO. 62W99		
		ILLINOIS FED. AID PROJECT		

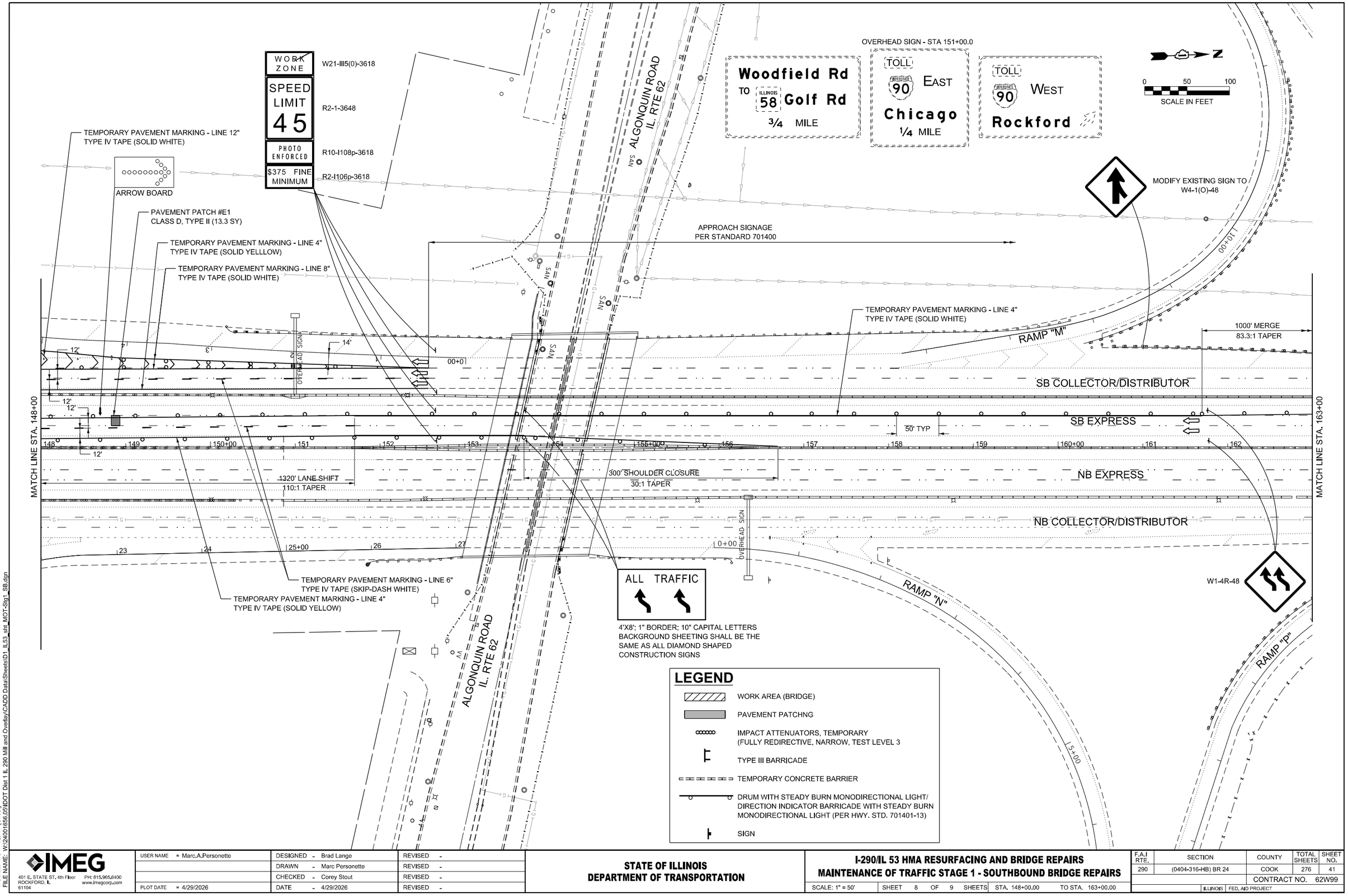

MODEL: MOT - Plan 7 [Sheet]
FILE NAME: W:\2400\656.05\IDOT Dist 1 IL 290 Mill and Overlay\CADD Data\Sheets\D1_IL53_sht_MOT-Stg1_SB.dgn

IMEG
401 E. STATE ST. 4th Floor ROCKFORD, IL 61104
PH: 815.965.6400
www.imegcorp.com

USER NAME = Marc.A.Personette	DESIGNED - Brad Lange	REVISED -
	DRAWN - Marc Personette	REVISED -
	CHECKED - Corey Stout	REVISED -
PLOT DATE = 4/29/2026	DATE - 4/29/2026	REVISED -

STATE OF ILLINOIS
DEPARTMENT OF TRANSPORTATION

I-290/IL 53 HMA RESURFACING AND BRIDGE REPAIRS
MAINTENANCE OF TRAFFIC STAGE 1 - SOUTHBOUND BRIDGE REPAIRS

SCALE: 1" = 50' | SHEET 8 OF 9 SHEETS | STA. 148+00.00 TO STA. 163+00.00

F.A.I RTE.	SECTION	COUNTY	TOTAL SHEETS	SHEET NO.
290	(0404-316-HB) BR 24	COOK	276	41
		CONTRACT NO. 62W99		
	ILLINOIS FED. AID PROJECT			

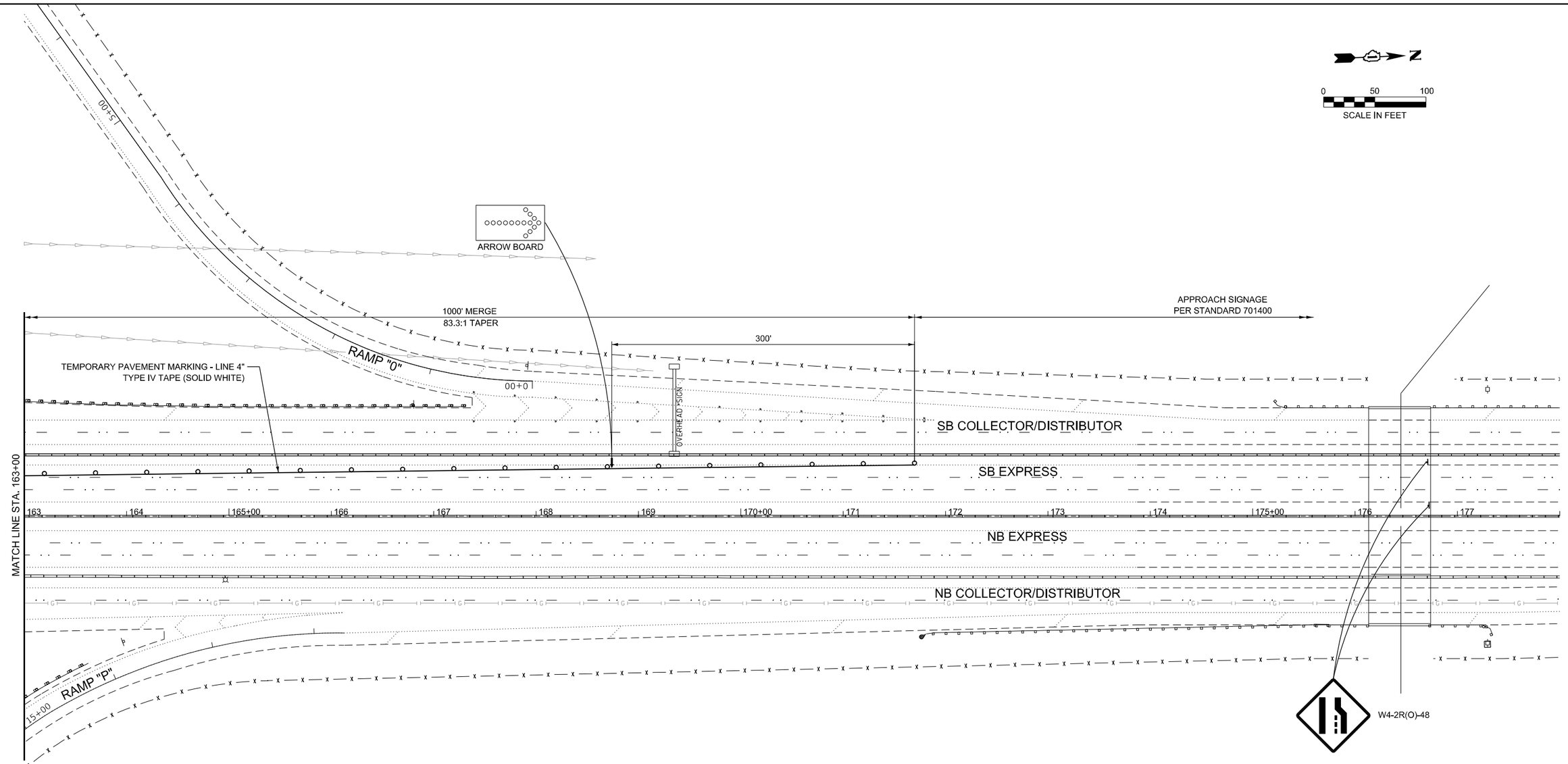

LEGEND

- WORK AREA (BRIDGE)
- PAVEMENT PATCHNG
- IMPACT ATTENUATORS, TEMPORARY (FULLY REDIRECTIVE, NARROW, TEST LEVEL 3
- TYPE III BARRICADE
- TEMPORARY CONCRETE BARRIER
- DRUM WITH STEADY BURN MONODIRECTIONAL LIGHT/ DIRECTION INDICATOR BARRICADE WITH STEADY BURN MONODIRECTIONAL LIGHT (PER HWY. STD. 701401-13)
- SIGN

IMEG
401 E. STATE ST. 4th Floor ROCKFORD, IL 61104
PH: 815.965.6400
www.imegcorp.com

USER NAME = Marc.A.Personette	DESIGNED - Brad Lange	REVISED -
	DRAWN - Marc Personette	REVISED -
	CHECKED - Corey Stout	REVISED -
PLOT DATE = 4/29/2026	DATE - 4/29/2026	REVISED -

STATE OF ILLINOIS
DEPARTMENT OF TRANSPORTATION

I-290/IL 53 HMA RESURFACING AND BRIDGE REPAIRS
MAINTENANCE OF TRAFFIC STAGE 1 - SOUTHBOUND BRIDGE REPAIRS

SCALE: 1" = 50' | SHEET 9 OF 9 SHEETS | STA. 163+00.00 | TO STA. 178+00.00

F.A.I RTE.	SECTION	COUNTY	TOTAL SHEETS	SHEET NO.
290	(0404-316-HB) BR 24	COOK	276	42
		CONTRACT NO. 62W99		
	ILLINOIS FED. AID PROJECT			

MODEL: MOT - Plan 8 [Sheet]
FILE NAME: W:\24001656.051\DOT Dist 1 IL 290 Mill and Overlay\CADD Data\Sheets\D1_IL53_stn_MOT-Stg1_SB.dgn

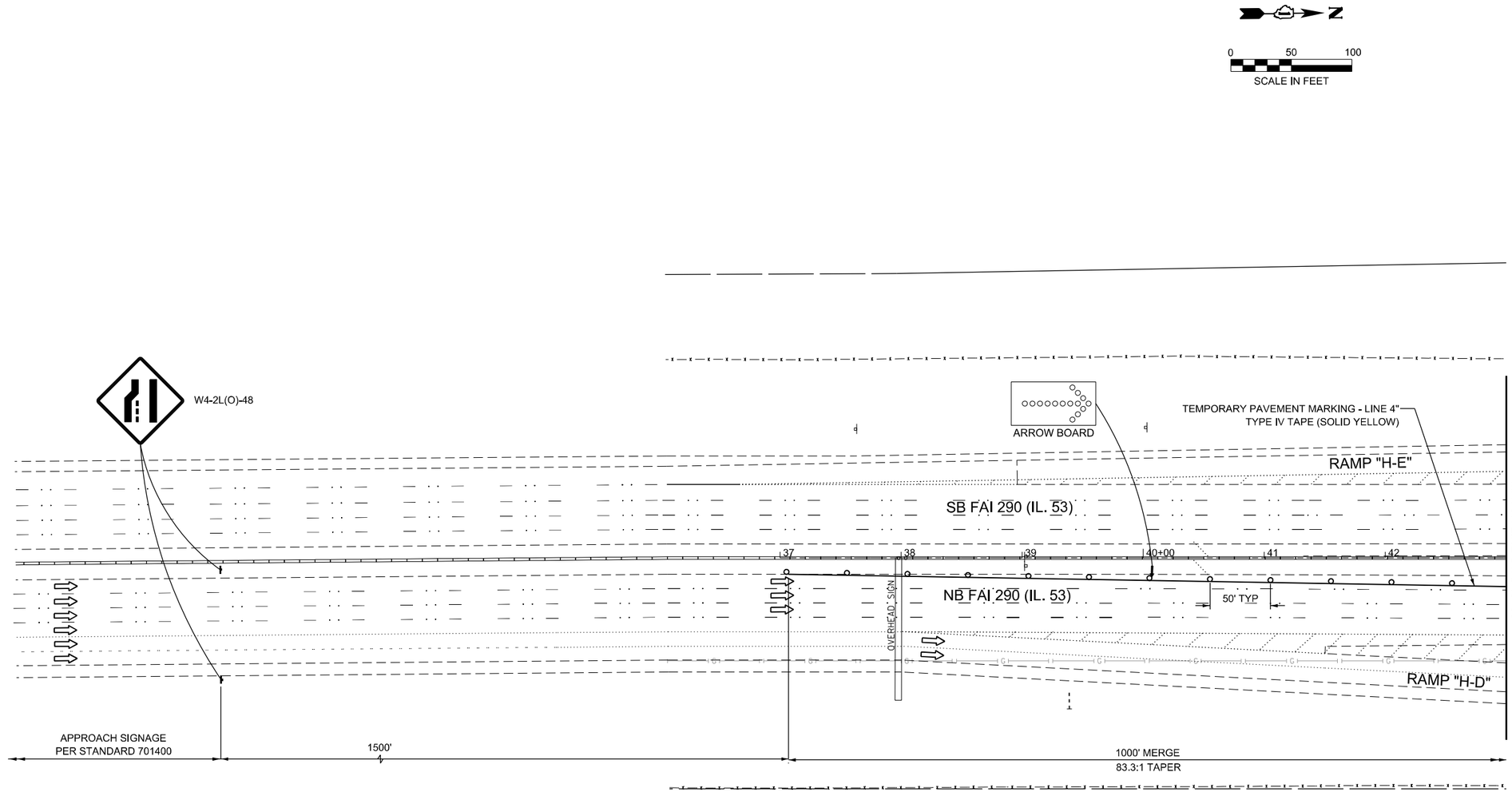

OVERHEAD SIGN - STA 37+98.0

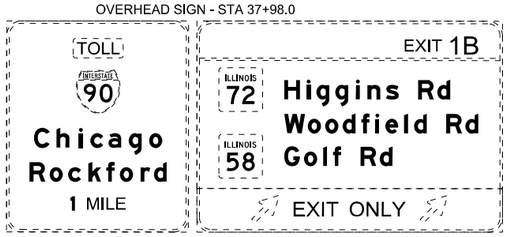

LEGEND

- WORK AREA (BRIDGE)
- PAVEMENT PATCHNG
- IMPACT ATTENUATORS, TEMPORARY (FULLY REDIRECTIVE, NARROW, TEST LEVEL 3
- TYPE III BARRICADE
- TEMPORARY CONCRETE BARRIER
- DRUM WITH STEADY BURN MONODIRECTIONAL LIGHT/ DIRECTION INDICATOR BARRICADE WITH STEADY BURN MONODIRECTIONAL LIGHT (PER HWY. STD. 701401-13)
- SIGN

MODEL: MOT - Plan A [Sheet]
FILE NAME: W:\24001656.05\IDOT Dist 1 IL 290 Mill and Overlay\CADD Data\Sheets\D1_IL53_sht_MOT-Stg2_NB.dgn

IMEG
401 E. STATE ST. 4th Floor
ROCKFORD, IL 61104
PH: 815.965.6400
www.imegcorp.com

USER NAME = Marc.A.Personette	DESIGNED - Brad Lange	REVISED -
	DRAWN - Marc Personette	REVISED -
	CHECKED - Corey Stout	REVISED -
PLOT DATE = 4/29/2026	DATE - 4/29/2026	REVISED -

STATE OF ILLINOIS
DEPARTMENT OF TRANSPORTATION

I-290/IL 53 HMA RESURFACING AND BRIDGE REPAIRS
MAINTENANCE OF TRAFFIC STAGE 2 - NORTHBOUND BRIDGE REPAIRS

SCALE: 1" = 50' | SHEET 1 OF 9 SHEETS | STA. 28+00.00 | TO STA. 43+00.00

F.A.I RTE.	SECTION	COUNTY	TOTAL SHEETS	SHEET NO.
290	(0404-316-HB) BR 24	COOK	276	43
		CONTRACT NO. 62W99		
		ILLINOIS	FED. AID PROJECT	

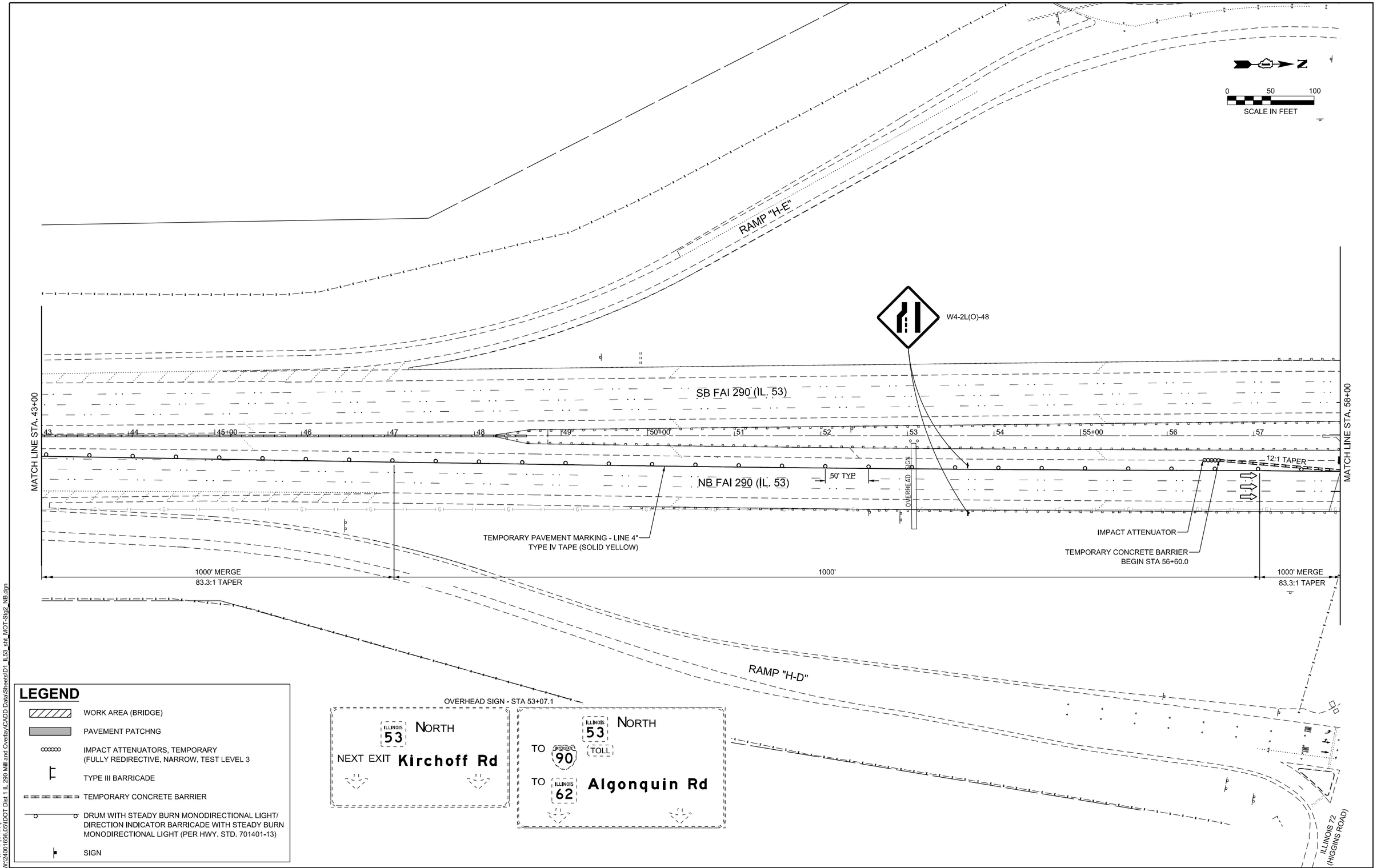

LEGEND

- WORK AREA (BRIDGE)
- PAVEMENT PATCHNG
- IMPACT ATTENUATORS, TEMPORARY (FULLY REDIRECTIVE, NARROW, TEST LEVEL 3
- TYPE III BARRICADE
- TEMPORARY CONCRETE BARRIER
- DRUM WITH STEADY BURN MONODIRECTIONAL LIGHT/ DIRECTION INDICATOR BARRICADE WITH STEADY BURN MONODIRECTIONAL LIGHT (PER HWY. STD. 701401-13)
- SIGN

MODEL: MOT - Plan B [Sheet]
FILE NAME: W:\24001656.05\IDOT Dist 1 IL 290 Mill and Overlay\CADD Data\Sheets\D1_IL53_sht_MOT-Stg2_NB.dgn

IMEG
401 E. STATE ST. 4th Floor ROCKFORD, IL 61104
PH: 815.965.6400
www.imegcorp.com

USER NAME = Marc.A.Personette	DESIGNED - Brad Lange	REVISED -	
	DRAWN - Marc Personette	REVISED -	
	CHECKED - Corey Stout	REVISED -	
PLOT DATE = 4/29/2026	DATE - 4/29/2026	REVISED -	

STATE OF ILLINOIS
DEPARTMENT OF TRANSPORTATION

I-290/IL 53 HMA RESURFACING AND BRIDGE REPAIRS
MAINTENANCE OF TRAFFIC STAGE 2 - NORTHBOUND BRIDGE REPAIRS

SCALE: 1" = 50' | SHEET 2 OF 9 SHEETS | STA. 43+00.00 | TO STA. 58+00.00

F.A.I RTE.	SECTION	COUNTY	TOTAL SHEETS	SHEET NO.
290	(0404-316-HB) BR 24	COOK	276	44
		CONTRACT NO. 62W99		
	ILLINOIS FED. AID PROJECT			

LEGEND

- WORK AREA (BRIDGE)
- PAVEMENT PATCHNG
- IMPACT ATTENUATORS, TEMPORARY (FULLY REDIRECTIVE, NARROW, TEST LEVEL 3
- TYPE III BARRICADE
- TEMPORARY CONCRETE BARRIER
- DRUM WITH STEADY BURN MONODIRECTIONAL LIGHT/ DIRECTION INDICATOR BARRICADE WITH STEADY BURN MONODIRECTIONAL LIGHT (PER HWY. STD. 701401-13)
- SIGN

N

0 50 100
SCALE IN FEET

W. FRONTAGE RD

ILLINOIS 72 (HIGGINS ROAD)

WORK ZONE — W21-III5(0)-3618

SPEED LIMIT 45 — R2-1-3648

PHOTO ENFORCED — R10-I108p-3618

$375 FINE MINIMUM — R2-I106p-3618

MAX WIDTH 12'-0" 1/2 MILES AHEAD
W12-I103
66+40

RAMP "A"

MATCH LINE STA. 5+00

SB FAI 290 (IL. 53)

MATCH LINE STA. 58+00

MATCH LINE STA. 73+00

50' TYP

NB FAI 290 (IL. 53)

12'
12'

PAVEMENT PATCH #106
CLASS A, TYPE I (4 SY)

TEMPORARY PAVEMENT MARKING - LINE 4"
TYPE IV TAPE (SOLID YELLOW)

W1-4R-48

ARROW BOARD

1000' MERGE
83.3:1 TAPER

TEMPORARY CONCRETE BARRIER
END STA 61+00.6

W3-2(O)-48
+77

ILLINOIS 72 (HIGGINS ROAD)

ROAD CONSTRUCTION AHEAD
W20-I103(O)-48

RAMP "B"

500'

W4-1(O)-48

TEMPORARY PAVEMENT MARKING - LINE 12"
TYPE IV TAPE (SOLID WHITE)

TEMPORARY PAVEMENT MARKING - LINE 6"
TYPE IV TAPE (SKIP-DASH WHITE)

TEMPORARY PAVEMENT MARKING - LINE 8"
TYPE IV TAPE (SOLID WHITE)

E. FRONTAGE RD

YIELD
R1-2-48

MODEL: MOT - Plan 1 [Sheet]
FILE NAME: W:\24001656.051\DOT Dist 1 IL 290 Mill and Overlay\CADD Data\Sheets\D1_IL53_sht_MOT-Stg2_NB.dgn

IMEG
401 E. STATE ST. 4th Floor ROCKFORD, IL 61104
PH: 815.965.6400
www.imegcorp.com

USER NAME = Marc.A.Personette	DESIGNED - Brad Lange	REVISED -	
	DRAWN - Marc Personette	REVISED -	
	CHECKED - Corey Stout	REVISED -	
PLOT DATE = 4/29/2026	DATE - 4/29/2026	REVISED -	

STATE OF ILLINOIS
DEPARTMENT OF TRANSPORTATION

I-290/IL 53 HMA RESURFACING AND BRIDGE REPAIRS
MAINTENANCE OF TRAFFIC STAGE 2 - NORTHBOUND BRIDGE REPAIRS

SCALE: 1" = 50' | SHEET 3 OF 9 SHEETS | STA. 58+50.00 | TO STA. 73+00.00

F.A.I RTE.	SECTION	COUNTY	TOTAL SHEETS	SHEET NO.
290	(0404-316-HB) BR 24	COOK	276	45
		CONTRACT NO. 62W99		
	ILLINOIS FED. AID PROJECT			

LEGEND

- WORK AREA (BRIDGE)
- PAVEMENT PATCHNG
- IMPACT ATTENUATORS, TEMPORARY (FULLY REDIRECTIVE, NARROW, TEST LEVEL 3
- TYPE III BARRICADE
- TEMPORARY CONCRETE BARRIER
- DRUM WITH STEADY BURN MONODIRECTIONAL LIGHT/ DIRECTION INDICATOR BARRICADE WITH STEADY BURN MONODIRECTIONAL LIGHT (PER HWY. STD. 701401-13)
- SIGN

N

0 50 100
SCALE IN FEET

WOODFIELD ROAD

W. FRONTAGE RD

N. McCONNOR PRKY

MATCH LINE STA. 5+00

TEMPORARY PAVEMENT MARKING - LINE 4"
TYPE IV TAPE (SOLID YELLOW)

TEMPORARY PAVEMENT MARKING - LINE 6"
TYPE IV TAPE (SKIP-DASH WHITE)

OVERHEAD SIGN

TEMPORARY CONCRETE BARRIER
END STA 82+74.5

W12-1-48

W5-1(O)

ROAD NARROWS

SB FAI 290 (IL. 53)

TEMPORARY CONCRETE BARRIER
BEGIN STA 78+32.2

IMPACT ATTENUATOR

MATCH LINE STA. 73+00

NB FAI 290 (IL. 53)

12:1 TAPER

OVERHEAD SIGN

MATCH LINE STA. 88+00

TEMPORARY PAVEMENT MARKING - LINE 4"
TYPE IV TAPE (6' SKIP - 2' DASH WHITE)

TEMPORARY PAVEMENT MARKING - LINE 4"
TYPE IV TAPE (SOLID WHITE)

TEMPORARY PAVEMENT MARKING - LINE 6"
TYPE IV TAPE (SOLID YELLOW)

TEMPORARY PAVEMENT MARKING - LINE 6"
TYPE IV TAPE (SOLID WHITE)

TEMPORARY PAVEMENT MARKING - LINE 8"
TYPE IV TAPE (SOLID WHITE)

W1-6L(O)-6030
ABOVE TYPE III
BARRICADE

PAVEMENT PATCH # 107
CLASS D, TYPE II (10 SY)

THRU EXIT

4'X8'; 1" BORDER; 10" CAPITAL LETTERS
BACKGROUND SHEETING SHALL BE THE
SAME AS ALL DIAMOND SHAPED
CONSTRUCTION SIGNS

WOODFIELD ROAD

E. FRONTAGE RD

E. FRONTAGE RD

TEMPORARY PAVEMENT MARKING - LINE 12"
TYPE IV TAPE (SOLID WHITE)

OVERHEAD SIGN - STA 80+13.5

ILLINOIS 53 NORTH
NEXT EXIT Kirchoff Rd

ILLINOIS 53 NORTH
TO INTERSTATE 90 TOLL
TO ILLINOIS 62 Algonquin Rd

CONTRACTOR TO COVER EXISTING
LEFT ARROW WITH A BLANK SQUARE
SIGN.

MODEL: MOT - Plan 2 [Sheet]
FILE NAME: W:\24001656.05\IDOT Dist 1 IL 290 Mill and Overlay\CADD Data\Sheets\D1_IL53_sht_MOT-Stg2_NB.dgn

IMEG
401 E. STATE ST. 4th Floor ROCKFORD, IL 61104
PH: 815.965.8400
www.imegcorp.com

USER NAME = Marc.A.Personette	DESIGNED - Brad Lange	REVISED -	
	DRAWN - Marc Personette	REVISED -	
	CHECKED - Corey Stout	REVISED -	
PLOT DATE = 4/29/2026	DATE - 4/29/2026	REVISED -	

STATE OF ILLINOIS
DEPARTMENT OF TRANSPORTATION

I-290/IL 53 HMA RESURFACING AND BRIDGE REPAIRS
MAINTENANCE OF TRAFFIC STAGE 2 - NORTHBOUND BRIDGE REPAIRS

SCALE: 1" = 50' | SHEET 4 OF 9 SHEETS | STA. 73+00.00 | TO STA. 88+00.00

F.A.I RTE.	SECTION	COUNTY	TOTAL SHEETS	SHEET NO.
290	(0404-316-HB) BR 24	COOK	276	46
		CONTRACT NO. 62W99		
	ILLINOIS FED. AID PROJECT			

N

0 50 100
SCALE IN FEET

N. McCONNOR PRKY

MALL DR.

N. McCONNOR PRKY

RAMP "C"

TEMPORARY PAVEMENT MARKING - LINE 4"
TYPE IV TAPE (SOLID YELLOW)

W4-1(O)-48

TEMPORARY PAVEMENT MARKING - LINE 6"
TYPE IV TAPE (SKIP-DASH WHITE)

MATCH LINE STA. 88+00

SB FAI 290 (IL. 53)

NB FAI 290 (IL. 53)

OVERHEAD SIGN

TEMPORARY CONCRETE BARRIER
BEGIN STA 100+88.4

IMPACT ATTENUATOR

12:1 TAPER

MATCH LINE STA. 103+00

TEMPORARY PAVEMENT MARKING - LINE 4"
TYPE IV TAPE (SOLID WHITE)

TEMPORARY PAVEMENT MARKING - LINE 8"
TYPE IV TAPE (SOLID WHITE)

TEMPORARY PAVEMENT MARKING - LINE 12"
TYPE IV TAPE (SOLID WHITE)

RAMP "D"

500'

665'

TEMPORARY PAVEMENT MARKING - LINE 8"
TYPE IV TAPE (SOLID WHITE)

TEMPORARY PAVEMENT MARKING - LINE 4"
TYPE IV TAPE (6' SKIP - 2' DASH WHITE)

PAVEMENT PATCH #3801
CLASS D, TYPE II (12.4 SY)

PAVEMENT PATCH #3802
CLASS D, TYPE II (12.4 SY)

W1-6L(O)-6030
ABOVE TYPE III
BARRICADE

E. FRONTAGE RD.

YIELD

R1-2-48

W3-2(O)-48

ROAD CONSTRUCTION AHEAD

W20-I103(O)-48

OVERHEAD SIGN - STA 91+29.4

ILLINOIS 53 NORTH
NEXT EXIT Kirchoff Rd

ILLINOIS 53 NORTH
TO INTERSTATE 90 TOLL
TO ILLINOIS 62 Algonquin Rd

CONTRACTOR TO COVER EXISTING LEFT ARROW WITH A BLANK SQUARE SIGN.

LEGEND

- WORK AREA (BRIDGE)
- PAVEMENT PATCHNG
- IMPACT ATTENUATORS, TEMPORARY (FULLY REDIRECTIVE, NARROW, TEST LEVEL 3
- TYPE III BARRICADE
- TEMPORARY CONCRETE BARRIER
- DRUM WITH STEADY BURN MONODIRECTIONAL LIGHT/ DIRECTION INDICATOR BARRICADE WITH STEADY BURN MONODIRECTIONAL LIGHT (PER HWY. STD. 701401-13)
- SIGN

MODEL: MOT - Plan 3 [Sheet]
FILE NAME: W:\24001656.05\IDOT Dist 1 IL 290 Mill and Overlay\CADD Data\Sheets\D1_IL53_sht_MOT-Sig2_NB.dgn

IMEG
401 E. STATE ST. 4th Floor
ROCKFORD, IL 61104
PH: 815.965.6400
www.imegcorp.com

USER NAME = Marc.A.Personette	DESIGNED - Brad Lange	REVISED -	
	DRAWN - Marc Personette	REVISED -	
	CHECKED - Corey Stout	REVISED -	
PLOT DATE = 4/29/2026	DATE - 4/29/2026	REVISED -	

STATE OF ILLINOIS
DEPARTMENT OF TRANSPORTATION

I-290/IL 53 HMA RESURFACING AND BRIDGE REPAIRS
MAINTENANCE OF TRAFFIC STAGE 2 - NORTHBOUND BRIDGE REPAIRS

SCALE: 1" = 50' | SHEET 5 OF 9 SHEETS | STA. 88+00.00 | TO STA. 103+00.00

F.A.I RTE.	SECTION	COUNTY	TOTAL SHEETS	SHEET NO.
290	(0404-316-HB) BR 24	COOK	276	47
		CONTRACT NO. 62W99		
	ILLINOIS FED. AID PROJECT			

N

0 50 100
SCALE IN FEET

N. McCONNOR PRKY

GOLF ROAD

N. McCONNOR PRKY

WORK ZONE
SPEED LIMIT 45
R2-1-3648
PHOTO ENFORCED
R10-I108p-3618
$375 FINE MINIMUM
R2-I106p-3618

TEMPORARY PAVEMENT MARKING - LINE 6"
TYPE IV TAPE (SOLID YELLOW)

PAVEMENT PATCH #E4
CLASS D, TYPE III (20 SY)
PAVEMENT PATCH #E5
CLASS D, TYPE III (20 SY)
PAVEMENT PATCH #E6
CLASS D, TYPE III (20 SY)
PAVEMENT PATCH #E3
CLASS D, TYPE III (13.5 SY)

TEMPORARY PAVEMENT MARKING - LINE 6"
TYPE IV TAPE (SKIP-DASH WHITE)

TEMPORARY CONCRETE BARRIER
BEGIN STA 108+30.1

TEMPORARY CONCRETE BARRIER
END STA 112+06.3

MATCH LINE STA. 103+00

PAVEMENT PATCH #109
CLASS D, TYPE II (10.7 SY)

SB FAI 290 (IL. 53)

PAVEMENT PATCH #E1
CLASS D, TYPE III (20 SY)

IMPACT ATTENUATOR

PAVEMENT PATCH #111
CLASS D, TYPE II (13.3 SY)

MATCH LINE STA. 118+00

PAVEMENT PATCH #108
CLASS D, TYPE II (10.7 SY)

12:1 TAPER

NB FAI 290 (IL. 53)

50' TYP

PAVEMENT PATCH #E2
CLASS D, TYPE IV (40 SY)

TEMPORARY PAVEMENT MARKING - LINE 4"
TYPE IV TAPE (6' SKIP - 2' DASH WHITE)

TEMPORARY CONCRETE BARRIER
BEGIN STA 107+58.6

IMPACT ATTENUATOR

TEMPORARY PAVEMENT MARKING - LINE 6"
TYPE IV TAPE (SKIP-DASH WHITE)

TEMPORARY PAVEMENT MARKING - LINE 4"
TYPE IV TAPE (SOLID WHITE)

665'

TEMPORARY PAVEMENT MARKING - LINE 8"
TYPE IV TAPE (SOLID WHITE)

TEMPORARY PAVEMENT MARKING - LINE 4"
TYPE IV TAPE (SOLID YELLOW)

PAVEMENT PATCH #110
CLASS D, TYPE III (20 SY)

PAVEMENT PATCH #112
CLASS D, TYPE II (13.3 SY)

TEMPORARY CONCRETE BARRIER
END STA 112+17.6

E. FRONTAGE RD.

GOLF ROAD

LEGEND

- WORK AREA (BRIDGE)
- PAVEMENT PATCHNG
- IMPACT ATTENUATORS, TEMPORARY (FULLY REDIRECTIVE, NARROW, TEST LEVEL 3
- TYPE III BARRICADE
- TEMPORARY CONCRETE BARRIER
- DRUM WITH STEADY BURN MONODIRECTIONAL LIGHT/ DIRECTION INDICATOR BARRICADE WITH STEADY BURN MONODIRECTIONAL LIGHT (PER HWY. STD. 701401-13)
- SIGN

MODEL: MOT - Plan 4 [Sheet]
FILE NAME: W:\24001656.05\IDOT Dist 1 IL 290 Mill and Overlay\CADD Data\Sheets\D1_IL53_sht_MOT-Stg2_NB.dgn

IMEG
401 E. STATE ST. 4th Floor ROCKFORD, IL 61104
PH: 815.965.6400
www.imegcorp.com

USER NAME = Marc.A.Personette	DESIGNED - Brad Lange	REVISED -	
	DRAWN - Marc Personette	REVISED -	
	CHECKED - Corey Stout	REVISED -	
PLOT DATE = 4/29/2026	DATE - 4/29/2026	REVISED -	

STATE OF ILLINOIS
DEPARTMENT OF TRANSPORTATION

I-290/IL 53 HMA RESURFACING AND BRIDGE REPAIRS
MAINTENANCE OF TRAFFIC STAGE 2 - NORTHBOUND BRIDGE REPAIRS

SCALE: 1" = 50' | SHEET 6 OF 9 SHEETS | STA. 103+00.00 | TO STA. 118+00.00

F.A.I RTE.	SECTION	COUNTY	TOTAL SHEETS	SHEET NO.
290	(0404-316-HB) BR 24	COOK	276	48
		CONTRACT NO. 62W99		
		ILLINOIS	FED. AID PROJECT	

N

0 50 100
SCALE IN FEET

N. McCONNOR PRKY

RAMP "E"

RAMP "G"

RAMP "F"

RAMP "H"

TEMPORARY CONCRETE BARRIER
BEGIN STA 132+44.1

IMPACT ATTENUATOR

TEMPORARY PAVEMENT MARKING - LINE 6"
TYPE IV TAPE (SKIP-DASH WHITE)

TEMPORARY PAVEMENT MARKING - LINE 4"
TYPE IV TAPE (SOLID YELLOW)

PAVEMENT PATCH #E8
CLASS D, TYPE III (16 SY)

PAVEMENT PATCH #E8
CLASS D, TYPE III (16 SY)

PAVEMENT PATCH #E10
CLASS D, TYPE IV (26.7 SY)

PAVEMENT PATCH #E11
CLASS D, TYPE IV (26.7 SY)

PAVEMENT PATCH #E12
CLASS D, TYPE IV (26.7 SY)

PAVEMENT PATCH #E13
CLASS D, TYPE IV (26.7 SY)

PAVEMENT PATCH #E14
CLASS D, TYPE II (13.3 SY)

PAVEMENT PATCH #E15
CLASS D, TYPE II (13.3 SY)

SB FAI 290 (IL. 53)

SB FAI 290 (IL. 53)

MATCH LINE STA. 118+00

MATCH LINE STA. 133+00

PAVEMENT PATCH #116
CLASS D, TYPE II
(13.3 SY)

NB FAI 290 (IL. 53)

NB FAI 290 (IL. 53)

50' TYP

12:1 TAPER

12:1 TAPER

OVERHEAD SIGN - STA 119+93.8

TEMPORARY PAVEMENT MARKING - LINE 4"
TYPE IV TAPE (6' SKIP - 2' DASH WHITE)
307'

TEMPORARY PAVEMENT MARKING - LINE 8"
TYPE IV TAPE (SOLID WHITE)

PAVEMENT PATCH #113
CLASS D, TYPE II (7.2 SY)

PAVEMENT PATCH #114
CLASS D, TYPE II (5.7 SY)

PAVEMENT PATCH #115
CLASS D, TYPE III (18.7 SY)

PAVEMENT PATCH #E9
CLASS D, TYPE III (16 SY)

RIGHT LANE
MUST EXIT

STA 124+85
R3-33

PAVEMENT PATCH #118
CLASS D, TYPE IV (26.7 SY)

PAVEMENT PATCH #117
CLASS D, TYPE IV (26.7 SY)

PAVEMENT PATCH #119
CLASS D, TYPE III (20 SY)

TEMPORARY PAVEMENT MARKING - LINE 4"
TYPE IV TAPE (SOLID WHITE)

W4-1(O)-48

PAVEMENT PATCH #121
CLASS D, TYPE III (16 SY)

PAVEMENT PATCH #120
CLASS D, TYPE II (13.3 SY)

YIELD
R1-2-48

TEMPORARY CONCRETE BARRIER
BEGIN STA 130+92.3

IMPACT ATTENUATOR

TEMPORARY PAVEMENT MARKING - LINE 8"
TYPE IV TAPE (SOLID WHITE)

TEMPORARY PAVEMENT
MARKING LETTERS AND
SYMBOLS - TYPE IV TAPE

500'

W3-2(O)-48
+70

ROAD
CONSTRUCTION
AHEAD
W20-I103(O)-48

ILLINOIS
62
Algonquin Rd
EXIT 3/4 MILE

TOLL
INTERSTATE 90
WEST
Rockford
EXIT 1/4 MILE

TOLL
INTERSTATE 90
EAST
Chicago

LEGEND

- WORK AREA (BRIDGE)
- PAVEMENT PATCHNG
- IMPACT ATTENUATORS, TEMPORARY (FULLY REDIRECTIVE, NARROW, TEST LEVEL 3
- TYPE III BARRICADE
- TEMPORARY CONCRETE BARRIER
- DRUM WITH STEADY BURN MONODIRECTIONAL LIGHT/ DIRECTION INDICATOR BARRICADE WITH STEADY BURN MONODIRECTIONAL LIGHT (PER HWY. STD. 701401-13)
- SIGN

MODEL: MOT - Plan 5 [Sheet]
FILE NAME: W:\24001656.05\IDOT Dist 1 IL 290 Mill and Overlay\CADD Data\Sheets\D1_IL53_sht_MOT-Stg2_NB.dgn

IMEG
401 E. STATE ST. 4th Floor
ROCKFORD, IL
61104
PH: 815.965.6400
www.imegcorp.com

USER NAME = Marc.A.Personette	DESIGNED - Brad Lange	REVISED -	
	DRAWN - Marc Personette	REVISED -	
	CHECKED - Corey Stout	REVISED -	
PLOT DATE = 4/29/2026	DATE - 4/29/2026	REVISED -	

STATE OF ILLINOIS
DEPARTMENT OF TRANSPORTATION

I-290/IL 53 HMA RESURFACING AND BRIDGE REPAIRS
MAINTENANCE OF TRAFFIC STAGE 2 - NORTHBOUND BRIDGE REPAIRS

SCALE: 1" = 50' | SHEET 7 OF 9 SHEETS | STA. 118+00.00 TO STA. 133+00.00

F.A.I RTE.	SECTION	COUNTY	TOTAL SHEETS	SHEET NO.
290	(0404-316-HB) BR 24	COOK	276	49
		CONTRACT NO. 62W99		
		ILLINOIS	FED. AID PROJECT	

LEGEND

- WORK AREA (BRIDGE)
- PAVEMENT PATCHNG
- IMPACT ATTENUATORS, TEMPORARY (FULLY REDIRECTIVE, NARROW, TEST LEVEL 3
- TYPE III BARRICADE
- TEMPORARY CONCRETE BARRIER
- DRUM WITH STEADY BURN MONODIRECTIONAL LIGHT/ DIRECTION INDICATOR BARRICADE WITH STEADY BURN MONODIRECTIONAL LIGHT (PER HWY. STD. 701401-13)
- SIGN

N

0 50 100
SCALE IN FEET

TOLLWAY I-90

RAMP "I"

RAMP "K"
NORTHWEST TOLLWAY
ON RAMP

MATCH LINE STA. 133+00

MATCH LINE STA. 148+00

TEMPORARY CONCRETE BARRIER
END STA 137+43.7

TEMPORARY PAVEMENT MARKING - LINE 6"
TYPE IV TAPE (SOLID YELLOW)

TEMPORARY PAVEMENT MARKING - LINE 6"
TYPE IV TAPE (SKIP-DASH WHITE)

OVERHEAD SIGN

SB COLLECTOR/DISTRIBUTOR

SB EXPRESS

NB EXPRESS

NB COLLECTOR/DISTRIBUTOR

PAVEMENT PATCH #E16
CLASS D, TYPE III (20 SY)

PAVEMENT PATCH #E17
CLASS D, TYPE III (20 SY)

PAVEMENT PATCH #E18
CLASS D, TYPE III (20 SY)

TEMPORARY PAVEMENT MARKING - LINE 4"
TYPE IV TAPE (SOLID YELLOW)

TEMPORARY PAVEMENT MARKING -
LINE 4" TYPE IV TAPE (SOLID WHITE)

PAVEMENT PATCH #E19
CLASS D, TYPE II (13.3 SY)

PAVEMENT PATCH #E22
CLASS D, TYPE III (20 SY)

PAVEMENT PATCH #E23
CLASS D, TYPE II (20 SY)

PAVEMENT PATCH #E24
CLASS D, TYPE II (13.3 SY)

12:1 TAPER

12:1 TAPER

50' TYP

TEMPORARY CONCRETE BARRIER
END STA 137+35.8

TEMPORARY PAVEMENT MARKING
LETTERS AND SYMBOLS - TYPE IV TAPE

TEMPORARY PAVEMENT MARKING - LINE 4"
TYPE IV TAPE (6' SKIP - 2' DASH WHITE)

TEMPORARY PAVEMENT MARKING - LINE 8"
TYPE IV TAPE (SOLID WHITE)

TEMPORARY PAVEMENT MARKING - LINE 8"
TYPE IV TAPE (SOLID WHITE)

PAVEMENT PATCH #E20
CLASS D, TYPE II (13.3 SY)

PAVEMENT PATCH #E21
CLASS D, TYPE II (13.3 SY)

END
WORK ZONE
SPEED LIMIT

G20-I103-6036

PAVEMENT PATCH #P124
CLASS D, TYPE II (13.3 SY)

PAVEMENT PATCH #P125
CLASS D, TYPE II (13.3 SY)

RAMP "J"

RAMP "L"
NORTHWEST TOLLWAY
OFF RAMP

CONTRACTOR TO INSTALL PROPOSED SIGNAGE

OVERHEAD SIGN - STA 138+20.8

RIGHT LANE
EXIT ONLY
AHEAD

W9-7R (O)

ILLINOIS 62
Algonquin Rd
EXIT 1/4 MILE

TOLL
INTERSTATE 90
WEST
Rockford

MODEL: MOT - Plan 6 [Sheet]
FILE NAME: W:\24001656.05\IDOT Dist 1 IL 290 Mill and Overlay\CADD Data\Sheets\D1_IL53_sht_MOT-Stg2_NB.dgn

IMEG
401 E. STATE ST. 4th Floor ROCKFORD, IL 61104
PH: 815.965.6400
www.imegcorp.com

USER NAME = Marc.A.Personette	DESIGNED - Brad Lange	REVISED -	
	DRAWN - Marc Personette	REVISED -	
	CHECKED - Corey Stout	REVISED -	
PLOT DATE = 4/29/2026	DATE - 4/29/2026	REVISED -	

STATE OF ILLINOIS
DEPARTMENT OF TRANSPORTATION

I-290/IL 53 HMA RESURFACING AND BRIDGE REPAIRS
MAINTENANCE OF TRAFFIC STAGE 2 - NORTHBOUND BRIDGE REPAIRS

SCALE: 1" = 50' | SHEET 8 OF 9 SHEETS | STA. 133+00.00 | TO STA. 148+00.00

F.A.I RTE.	SECTION	COUNTY	TOTAL SHEETS	SHEET NO.
290	(0404-316-HB) BR 24	COOK	276	50
		CONTRACT NO. 62W99		
		ILLINOIS FED. AID PROJECT		

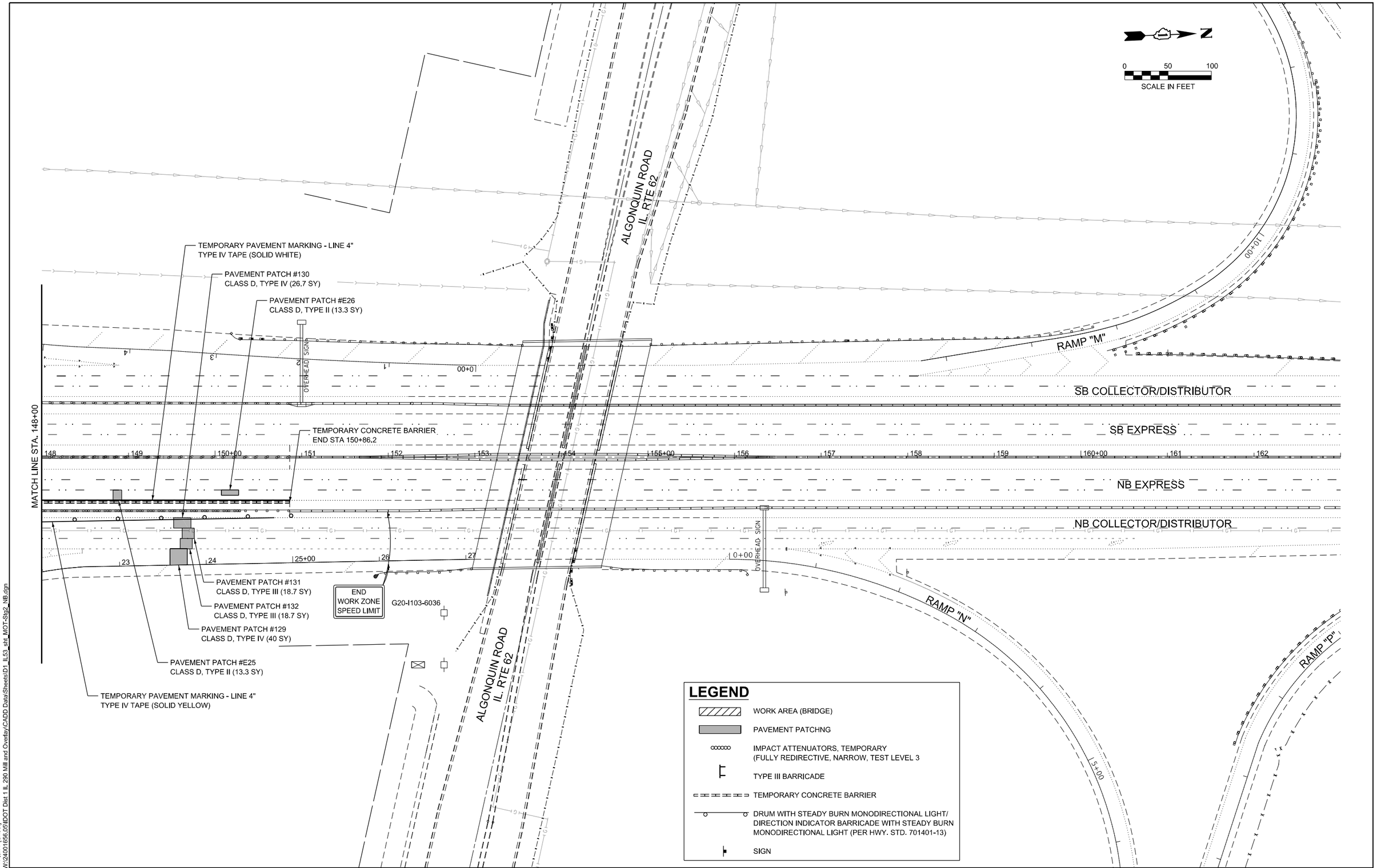

MODEL: MOT - Plan 7 [Sheet]
FILE NAME: W:\2400\656.05\IDOT Dist 1 IL 290 Mill and Overlay\CADD Data\Sheets\D1_IL53_sht_MOT-Stg2_NB.dgn

IMEG
401 E. STATE ST. 4th Floor
ROCKFORD, IL
61104
PH: 815.965.6400
www.imegcorp.com

USER NAME = Marc.A.Personette	DESIGNED - Brad Lange	REVISED -	
	DRAWN - Marc Personette	REVISED -	
	CHECKED - Corey Stout	REVISED -	
PLOT DATE = 4/29/2026	DATE - 4/29/2026	REVISED -	

STATE OF ILLINOIS
DEPARTMENT OF TRANSPORTATION

I-290/IL 53 HMA RESURFACING AND BRIDGE REPAIRS
MAINTENANCE OF TRAFFIC STAGE 2 - NORTHBOUND BRIDGE REPAIRS

SCALE: 1" = 50' | SHEET 9 OF 9 SHEETS | STA. 148+00.00 | TO STA. 163+00.00

F.A.I RTE.	SECTION	COUNTY	TOTAL SHEETS	SHEET NO.
290	(0404-316-HB) BR 24	COOK	276	51
		CONTRACT NO. 62W99		
	ILLINOIS FED. AID PROJECT			

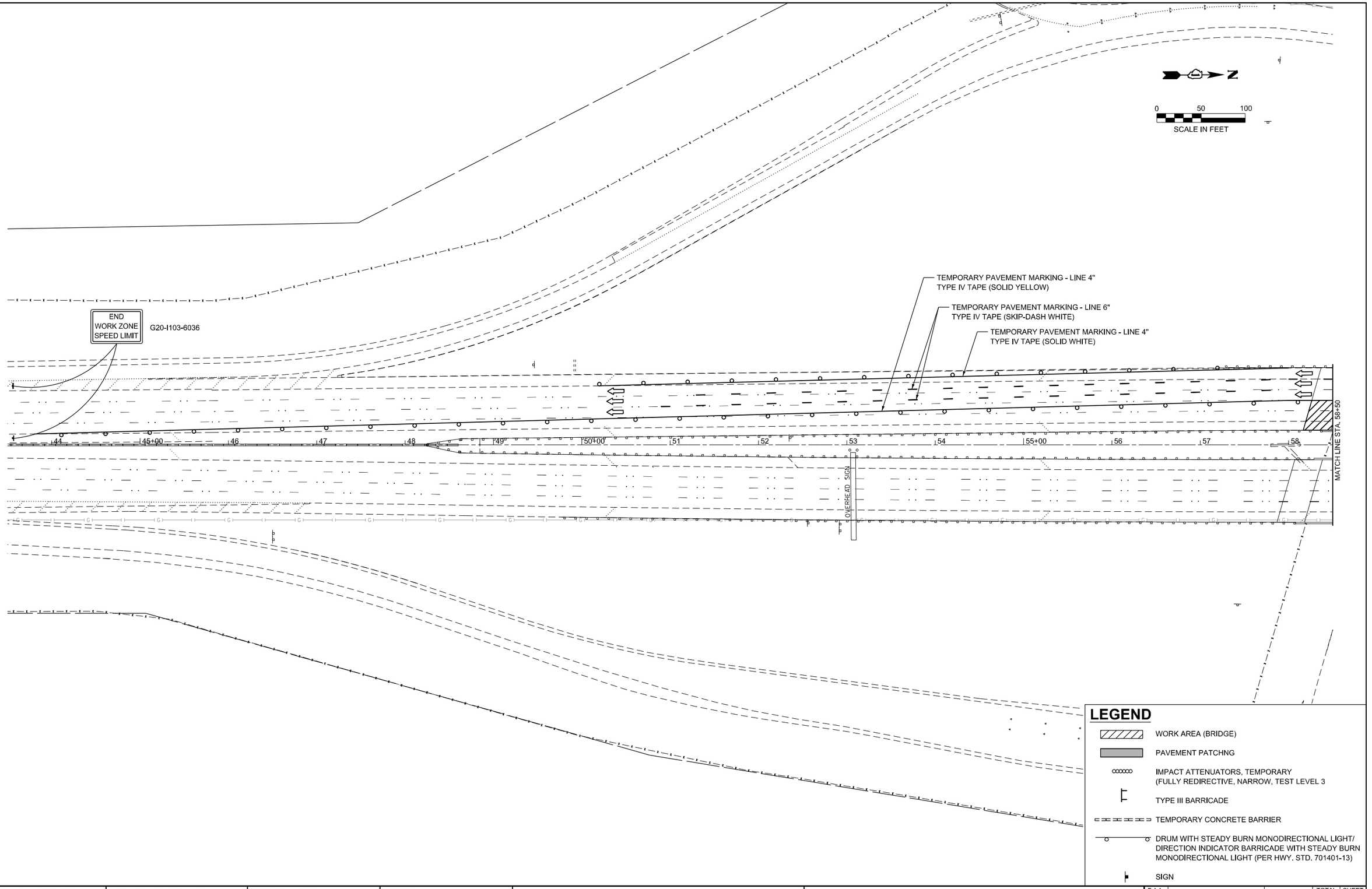

MODEL: MOT - Plan 0 [Sheet]
FILE NAME: W:\24001656.05\IDOT Dist 1 IL 290 Mill and Overlay\CADD Data\Sheets\D1_IL53_sht_MOT-Stg2_SB.dgn

IMEG
401 E. STATE ST. 4th Floor
ROCKFORD, IL
61104
PH: 815.965.6400
www.imegcorp.com

USER NAME = Marc.A.Personette	DESIGNED - Brad Lange	REVISED -	
	DRAWN - Marc Personette	REVISED -	
	CHECKED - Corey Stout	REVISED -	
PLOT DATE = 4/29/2026	DATE - 4/29/2026	REVISED -	

STATE OF ILLINOIS
DEPARTMENT OF TRANSPORTATION

I-290/IL 53 HMA RESURFACING AND BRIDGE REPAIRS
MAINTENANCE OF TRAFFIC STAGE 2 - SOUTHBOUND BRIDGE REPAIRS

SCALE: 1" = 50' | SHEET 1 OF 8 SHEETS | STA. 43+50.00 | TO STA. 58+50.00

F.A.I RTE.	SECTION	COUNTY	TOTAL SHEETS	SHEET NO.
290	(0404-316-HB) BR 24	COOK	276	52
		CONTRACT NO. 62W99		
	ILLINOIS FED. AID PROJECT			

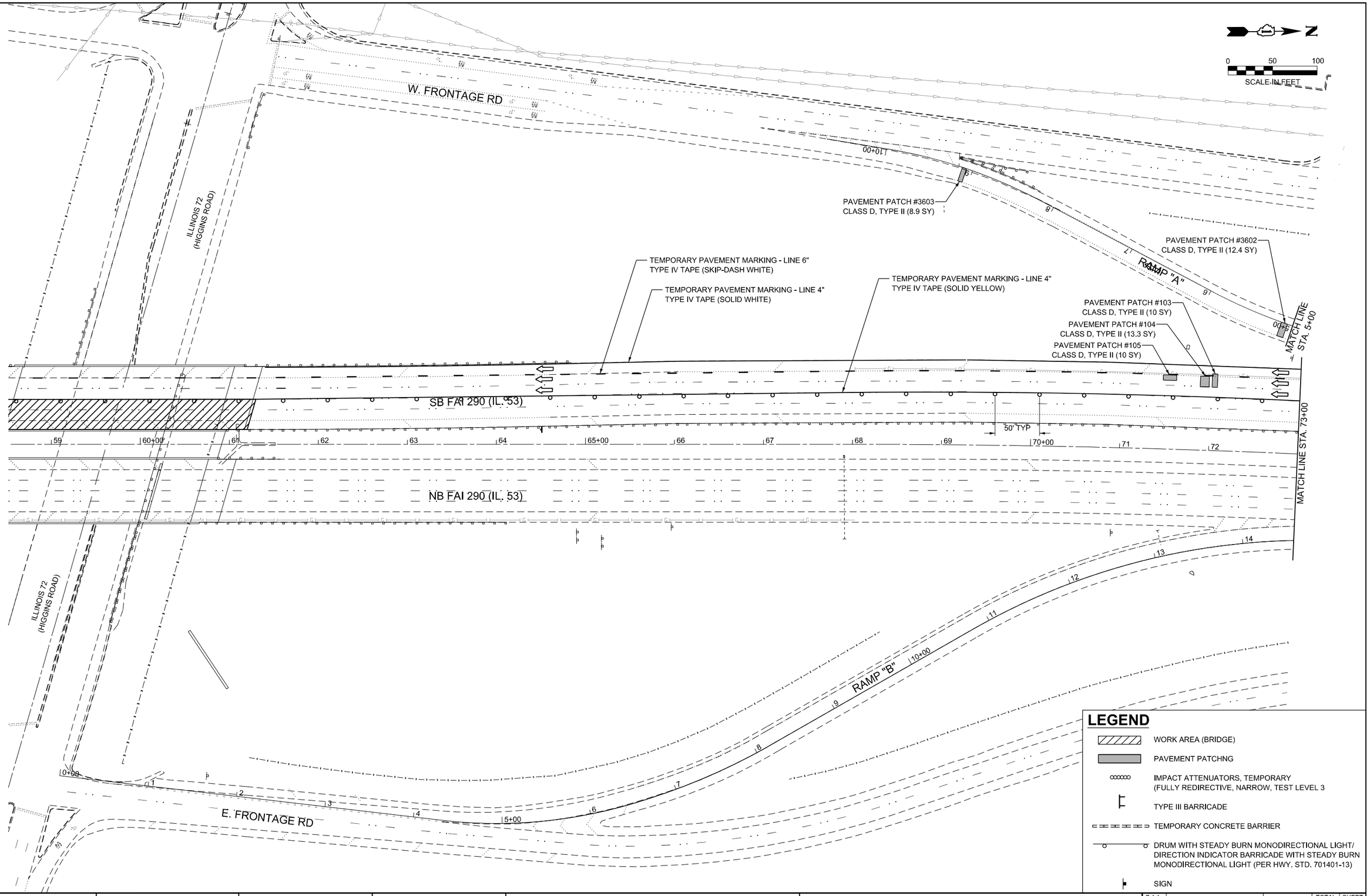

LEGEND

- WORK AREA (BRIDGE)
- PAVEMENT PATCHNG
- IMPACT ATTENUATORS, TEMPORARY (FULLY REDIRECTIVE, NARROW, TEST LEVEL 3
- TYPE III BARRICADE
- TEMPORARY CONCRETE BARRIER
- DRUM WITH STEADY BURN MONODIRECTIONAL LIGHT/ DIRECTION INDICATOR BARRICADE WITH STEADY BURN MONODIRECTIONAL LIGHT (PER HWY. STD. 701401-13)
- SIGN

MODEL: MOT - Plan 1 [Sheet]
FILE NAME: W:\24001656.05\IDOT Dist 1 IL 290 Mill and Overlay\CADD Data\Sheets\D1_IL53_sht_MOT-Stg2_SB.dgn

IMEG
401 E. STATE ST. 4th Floor
ROCKFORD, IL
61104
PH: 815.965.6400
www.imegcorp.com

USER NAME = Marc.A.Personette	DESIGNED - Brad Lange	REVISED -	
	DRAWN - Marc Personette	REVISED -	
	CHECKED - Corey Stout	REVISED -	
PLOT DATE = 4/29/2026	DATE - 4/29/2026	REVISED -	

STATE OF ILLINOIS
DEPARTMENT OF TRANSPORTATION

I-290/IL 53 HMA RESURFACING AND BRIDGE REPAIRS
MAINTENANCE OF TRAFFIC STAGE 2 - SOUTHBOUND BRIDGE REPAIRS

SCALE: 1" = 50' | SHEET 2 OF 8 SHEETS | STA. 58+50.00 | TO STA. 73+00.00

F.A.I RTE.	SECTION	COUNTY	TOTAL SHEETS	SHEET NO.
290	(0404-316-HB) BR 24	COOK	276	53

CONTRACT NO. 62W99

ILLINOIS | FED. AID PROJECT

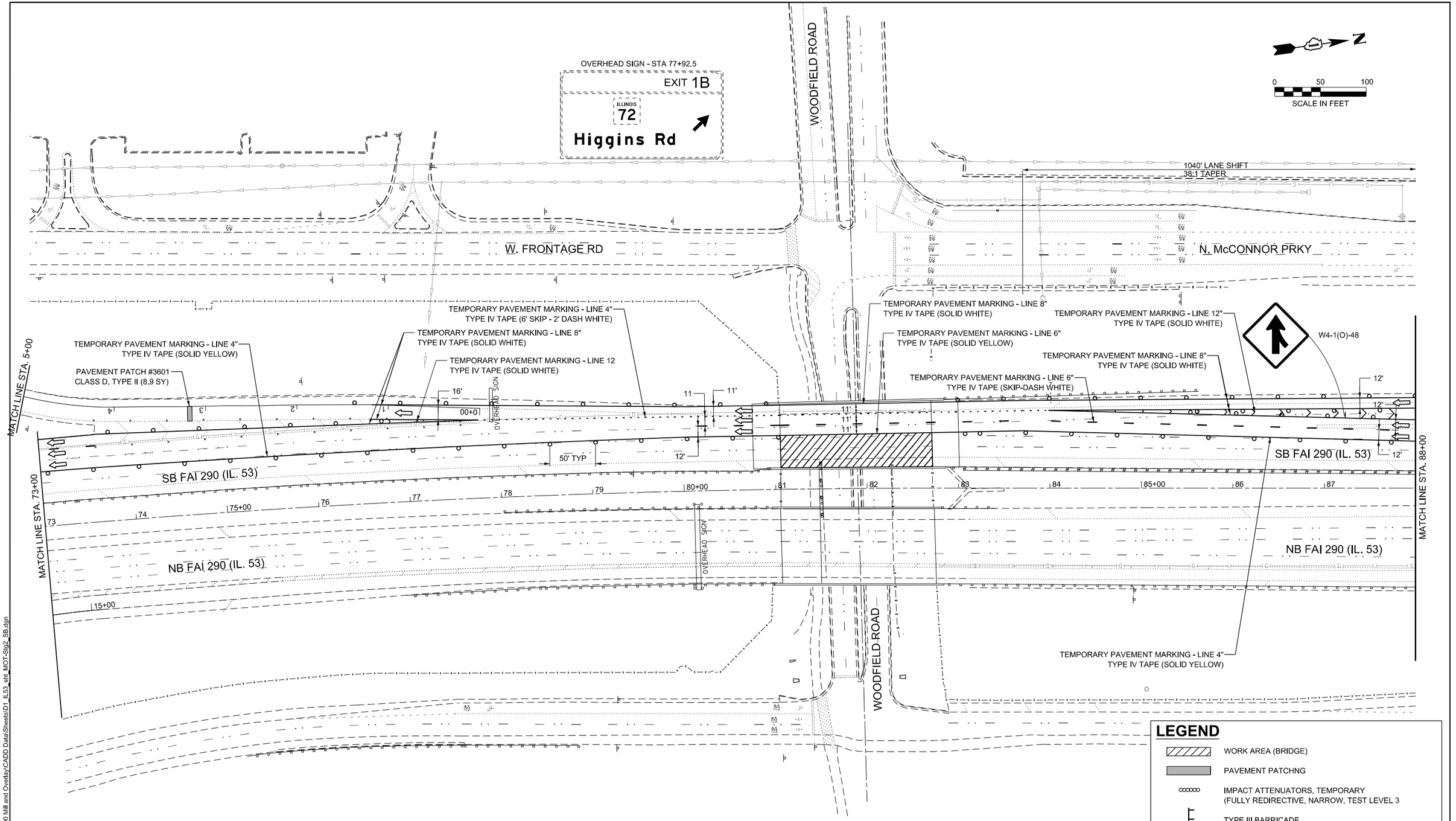

LEGEND

- WORK AREA (BRIDGE)
- PAVEMENT PATCHNG
- IMPACT ATTENUATORS, TEMPORARY (FULLY REDIRECTIVE, NARROW, TEST LEVEL 3
- TYPE III BARRICADE
- TEMPORARY CONCRETE BARRIER
- DRUM WITH STEADY BURN MONODIRECTIONAL LIGHT/ DIRECTION INDICATOR BARRICADE WITH STEADY BURN MONODIRECTIONAL LIGHT (PER HWY. STD. 701401-13)
- SIGN

IMEG
401 E. STATE ST. 4th Floor ROCKFORD, IL 61104
PH: 815.965.6400
www.imegcorp.com

USER NAME = Marc.A.Personette	DESIGNED - Brad Lange	REVISED -	
	DRAWN - Marc Personette	REVISED -	
	CHECKED - Corey Stout	REVISED -	
PLOT DATE = 4/29/2026	DATE - 4/29/2026	REVISED -	

STATE OF ILLINOIS
DEPARTMENT OF TRANSPORTATION

I-290/IL 53 HMA RESURFACING AND BRIDGE REPAIRS
MAINTENANCE OF TRAFFIC STAGE 2 - SOUTHBOUND BRIDGE REPAIRS

SCALE: 1" = 50' | SHEET 3 OF 8 SHEETS | STA. 73+00.00 TO STA. 88+00.00

F.A.I RTE.	SECTION	COUNTY	TOTAL SHEETS	SHEET NO.
290	(0404-316-HB) BR 24	COOK	276	54
		CONTRACT NO. 62W99		
	ILLINOIS FED. AID PROJECT			

MODEL: MOT - Plan 2 [Sheet]
FILE NAME: W:\24001656.05\IDOT Dist 1 IL 290 Mill and Overlay\CADD Data\Sheets\D1_IL53_sht_MOT-Stg2_SB.dgn

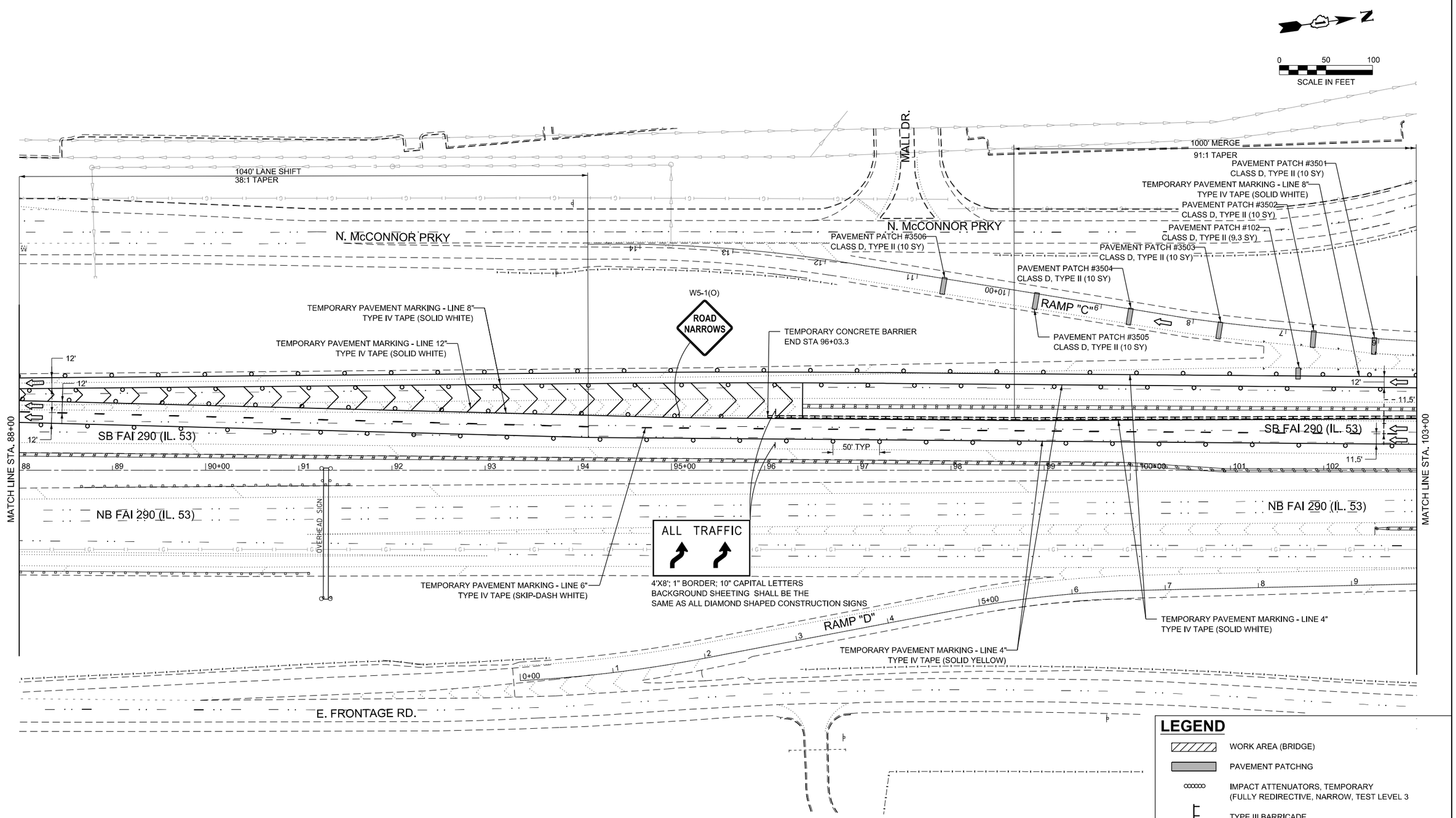

MODEL: MOT - Plan 3 [Sheet]
FILE NAME: W:\2401656.05\IDOT Dist 1 IL 290 Mill and Overlay\CADD Data\Sheets\D1_IL53_stlt_MOT-Stg2_SB.dgn

IMEG
401 E. STATE ST. 4th Floor
ROCKFORD, IL 61104
PH: 815.965.6400
www.imegcorp.com

USER NAME = Marc.A.Personette	DESIGNED - Brad Lange	REVISED -	
	DRAWN - Marc Personette	REVISED -	
	CHECKED - Corey Stout	REVISED -	
PLOT DATE = 4/29/2026	DATE - 4/29/2026	REVISED -	

STATE OF ILLINOIS
DEPARTMENT OF TRANSPORTATION

I-290/IL 53 HMA RESURFACING AND BRIDGE REPAIRS
MAINTENANCE OF TRAFFIC STAGE 2 - SOUTHBOUND BRIDGE REPAIRS

SCALE: 1" = 50' | SHEET 4 OF 8 SHEETS | STA. 88+00.00 | TO STA. 103+00.00

F.A.I RTE.	SECTION	COUNTY	TOTAL SHEETS	SHEET NO.
290	(0404-316-HB) BR 24	COOK	276	55
		CONTRACT NO. 62W99		
	ILLINOIS FED. AID PROJECT			

OVERHEAD SIGN - STA 106+92.2

EXIT TO
Higgins Rd
PROHIBITED
(OVER OUTSIDE EXPRESS LANE)

EXIT 1B
ILLINOIS 72
Higgins Rd
1/2 MILE

EXIT 1A
Woodfield Rd
TO ILLINOIS 58 **Golf Rd**

N

0 50 100
SCALE IN FEET

N. McCONNOR PRKY

GOLF ROAD

1000' MERGE
91:1 TAPER

500'

TEMPORARY PAVEMENT MARKING - LINE 4"
TYPE IV TAPE (6' SKIP - 2' DASH WHITE)

TEMPORARY PAVEMENT MARKING - LINE 8"
TYPE IV TAPE (SOLID WHITE)

TEMPORARY PAVEMENT MARKING - LINE 12"
TYPE IV TAPE (SOLID WHITE)

12'-0"

W12-I102
107+30

OVERHEAD SIGN

PAVEMENT PATCH #101
CLASS D, TYPE II (6.7 SY)

PAVEMENT PATCH #100
CLASS D, TYPE II (6.7 SY)

PAVEMENT PATCH #99
CLASS D, TYPE II (6.7 SY)

TEMPORARY PAVEMENT MARKING - LINE 6"
TYPE IV TAPE (SOLID YELLOW)

W4-2R(O)-48

IMPACT ATTENUATOR

TEMPORARY CONCRETE BARRIER
BEGIN STA 113+41.3

PAVEMENT PATCH #98
CLASS D, TYPE III (20 SY)

PAVEMENT PATCH #97
CLASS D, TYPE III (20 SY)

PAVEMENT PATCH #96
CLASS D, TYPE III (20 SY)

TEMPORARY PAVEMENT MARKING - LINE 4"
TYPE IV TAPE (SOLID WHITE)

PAVEMENT PATCH #95
CLASS D, TYPE II (10 SY)

SB FAI 290 (IL. 53)

MATCH LINE STA. 103+00

MATCH LINE STA. 118+00

50' TYP

12:1 TAPER

PAVEMENT PATCH #E14
CLASS D, TYPE III (20 SY)

PAVEMENT PATCH #E13
CLASS D, TYPE III (20 SY)

PAVEMENT PATCH #E12
CLASS D, TYPE III (20 SY)

PAVEMENT PATCH #E14
CLASS D, TYPE III (20 SY)

PAVEMENT PATCH #E14
CLASS D, TYPE III (20 SY)

NB FAI 290 (IL. 53)

W1-4R-48

TEMPORARY PAVEMENT MARKING - LINE 4"
TYPE IV TAPE (SOLID YELLOW)

TEMPORARY PAVEMENT MARKING - LINE 6"
TYPE IV TAPE (SKIP-DASH WHITE)

TEMPORARY CONCRETE BARRIER
END STA 109+74.9

E. FRONTAGE RD.

GOLF ROAD

WORK ZONE
SPEED LIMIT 45
R2-1-3648

PHOTO ENFORCED
R10-I108p-3618

$375 FINE MINIMUM
R2-I106p-3618

LEGEND

- WORK AREA (BRIDGE)
- PAVEMENT PATCHNG
- IMPACT ATTENUATORS, TEMPORARY (FULLY REDIRECTIVE, NARROW, TEST LEVEL 3
- TYPE III BARRICADE
- TEMPORARY CONCRETE BARRIER
- DRUM WITH STEADY BURN MONODIRECTIONAL LIGHT/ DIRECTION INDICATOR BARRICADE WITH STEADY BURN MONODIRECTIONAL LIGHT (PER HWY. STD. 701401-13)
- SIGN

MODEL: MOT - Plan 4 [Sheet]
FILE NAME: W:\24001656.05\IDOT Dist 1 IL 290 Mill and Overlay\CADD Data\Sheets\D1_IL53_sht_MOT-Stg2_SB.dgn

IMEG
401 E. STATE ST. 4th Floor
ROCKFORD, IL 61104
PH: 815.965.6400
www.imegcorp.com

USER NAME = Marc.A.Personette	DESIGNED - Brad Lange	REVISED -	
	DRAWN - Marc Personette	REVISED -	
	CHECKED - Corey Stout	REVISED -	
PLOT DATE = 4/29/2026	DATE - 4/29/2026	REVISED -	

STATE OF ILLINOIS
DEPARTMENT OF TRANSPORTATION

I-290/IL 53 HMA RESURFACING AND BRIDGE REPAIRS
MAINTENANCE OF TRAFFIC STAGE 2 - SOUTHBOUND BRIDGE REPAIRS

SCALE: 1" = 50' | SHEET 5 OF 8 SHEETS | STA. 103+00.00 | TO STA. 118+00.00

F.A.I RTE.	SECTION	COUNTY	TOTAL SHEETS	SHEET NO.
290	(0404-316-HB) BR 24	COOK	276	56
		CONTRACT NO. 62W99		
		ILLINOIS FED. AID PROJECT		

N

0 50 100
SCALE IN FEET

N. McCONNOR PRKY

ROAD CONSTRUCTION AHEAD
W20-I103(O)-48

W3-2(O)-48
+35

TEMPORARY PAVEMENT MARKING - LINE 4"
TYPE IV TAPE (6' SKIP - 2' DASH WHITE)

TEMPORARY PAVEMENT MARKING - LINE 12"
TYPE IV TAPE (SOLID WHITE)

TEMPORARY PAVEMENT MARKING - LINE 8"
TYPE IV TAPE (SOLID WHITE)

R1-2-48
YIELD

W4-1(O)-48

TEMPORARY PAVEMENT MARKING - LINE 4"
TYPE IV TAPE (SOLID WHITE)

TEMPORARY PAVEMENT MARKING - LINE 6"
TYPE IV TAPE (SKIP-DASH WHITE)

TEMPORARY PAVEMENT MARKING - LINE 4"
TYPE IV TAPE (6' SKIP - 2' DASH WHITE)

TEMPORARY PAVEMENT MARKING - LINE 12"
TYPE IV TAPE (SOLID WHITE)

TEMPORARY PAVEMENT MARKING - LINE 8"
TYPE IV TAPE (SOLID WHITE)

PAVEMENT PATCH #94
CLASS D, TYPE II (13.3 SY)

PAVEMENT PATCH #E9
CLASS D, TYPE II (13.3 SY)

PAVEMENT PATCH #E8
CLASS D, TYPE II (13.3 SY)

PAVEMENT PATCH #E7
CLASS D, TYPE II (13.3 SY)

TEMPORARY PAVEMENT MARKING - LINE 4"
TYPE IV TAPE (SOLID YELLOW)

RAMP "E"
RAMP "F"
RAMP "G"
RAMP "H"

SB FAI 290 (IL. 53)
NB FAI 290 (IL. 53)

OVERHEAD SIGN

50' TYP

MATCH LINE STA. 118+00

MATCH LINE STA. 133+00

LEGEND

- WORK AREA (BRIDGE)
- PAVEMENT PATCHNG
- IMPACT ATTENUATORS, TEMPORARY (FULLY REDIRECTIVE, NARROW, TEST LEVEL 3
- TYPE III BARRICADE
- TEMPORARY CONCRETE BARRIER
- DRUM WITH STEADY BURN MONODIRECTIONAL LIGHT/ DIRECTION INDICATOR BARRICADE WITH STEADY BURN MONODIRECTIONAL LIGHT (PER HWY. STD. 701401-13)
- SIGN

MODEL: MOT - Plan 5 [Sheet]
FILE NAME: W:\24001656.05\IDOT Dist 1 IL 290 Mill and Overlay\CADD Data\Sheets\D1_IL53_stst_MOT-Stg2_SB.dgn

IMEG
401 E. STATE ST. 4th Floor ROCKFORD, IL 61104
PH: 815.965.6400
www.imegcorp.com

USER NAME = Marc.A.Personette	DESIGNED - Brad Lange	REVISED -
	DRAWN - Marc Personette	REVISED -
	CHECKED - Corey Stout	REVISED -
PLOT DATE = 4/29/2026	DATE - 4/29/2026	REVISED -

STATE OF ILLINOIS
DEPARTMENT OF TRANSPORTATION

I-290/IL 53 HMA RESURFACING AND BRIDGE REPAIRS
MAINTENANCE OF TRAFFIC STAGE 2 - SOUTHBOUND BRIDGE REPAIRS

SCALE: 1" = 50' | SHEET 6 OF 8 SHEETS | STA. 118+00.00 | TO STA. 133+00.00

F.A.I RTE.	SECTION	COUNTY	TOTAL SHEETS	SHEET NO.
290	(0404-316-HB) BR 24	COOK	276	57
		CONTRACT NO. 62W99		
		ILLINOIS	FED. AID PROJECT	

LEGEND

- WORK AREA (BRIDGE)
- PAVEMENT PATCHNG
- IMPACT ATTENUATORS, TEMPORARY (FULLY REDIRECTIVE, NARROW, TEST LEVEL 3
- TYPE III BARRICADE
- TEMPORARY CONCRETE BARRIER
- DRUM WITH STEADY BURN MONODIRECTIONAL LIGHT/ DIRECTION INDICATOR BARRICADE WITH STEADY BURN MONODIRECTIONAL LIGHT (PER HWY. STD. 701401-13)
- SIGN

N

0 50 100
SCALE IN FEET

MAX WIDTH 12'-0" 1/2 MILES AHEAD
W12-I103
133+70

ROAD CONSTRUCTION AHEAD
W20-I103(O)-48

W3-2(O)-48
+70

YIELD
R1-2-48

W4-1(O)-48

MATCH LINE STA. 12+00

TOLLWAY I-90

TEMPORARY PAVEMENT MARKING - LINE 12" TYPE IV TAPE (SOLID WHITE)

TEMPORARY PAVEMENT MARKING - LINE 8" TYPE IV TAPE (SOLID WHITE)

500'

1320' LANE SHIFT
55:1 TAPER

RAMP "I"

RAMP "K"
NORTHWEST TOLLWAY ON RAMP

TEMPORARY PAVEMENT MARKING - LINE 8" TYPE IV TAPE (SOLID WHITE)

TEMPORARY PAVEMENT MARKING - LINE 12" TYPE IV TAPE (SOLID WHITE)

PAVEMENT PATCH #E4
CLASS D, TYPE III (20 SY)

PAVEMENT PATCH #E3
CLASS D, TYPE III (20 SY)

PAVEMENT PATCH #E2
CLASS D, TYPE III (20 SY)

TEMPORARY PAVEMENT MARKING - LINE 6" TYPE IV TAPE (SOLID YELLOW)

TEMPORARY PAVEMENT MARKING - LINE 4" TYPE IV TAPE (SOLID YELLOW)

TEMPORARY PAVEMENT MARKING - LINE 4" TYPE IV TAPE (SOLID WHITE)

OVERHEAD SIGN

SB COLLECTOR/DISTRIBUTOR

SB EXPRESS

12:1 TAPER

50' TYP

PAVEMENT PATCH #E6
CLASS D, TYPE II (13.3 SY)

PAVEMENT PATCH #E5
CLASS D, TYPE II (13.3 SY)

PAVEMENT PATCH #93
CLASS D, TYPE II (8 SY)

NB EXPRESS

660' LANE SHIFT
55:1 TAPER

NB COLLECTOR/DISTRIBUTOR

MATCH LINE STA. 133+00

MATCH LINE STA. 148+00

TEMPORARY PAVEMENT MARKING - LINE 6" TYPE IV TAPE (SKIP-DASH WHITE)

TEMPORARY CONCRETE BARRIER END STA 133+95.1

IMPACT ATTENUATOR

TEMPORARY CONCRETE BARRIER BEGIN STA 138+80.3

RAMP "J"

TOLLWAY I-90

ALL TRAFFIC

4'X8'; 1" BORDER; 10" CAPITAL LETTERS BACKGROUND SHEETING SHALL BE THE SAME AS ALL DIAMOND SHAPED CONSTRUCTION SIGNS

RAMP "L"
NORTHWEST TOLLWAY OFF RAMP

MATCH LINE STA. 18+00

OVERHEAD SIGN - STA 133+12.2

EXIT TO
Higgins Rd
PROHIBITED
(OVER OUTSIDE EXPRESS LANE)

EXIT 1B
ILLINOIS 72
Higgins Rd
1 MILE

EXIT 1A
Woodfield Rd
TO ILLINOIS 58 Golf Rd
1/2 MILE

TOLL
INTERSTATE 90
EAST
Chicago

MODEL: MOT - Plan 6 [Sheet]
FILE NAME: W:\2400\1656.05\IDOT Dist 1 IL 290 Mill and Overlay\CADD Data\Sheets\D1_IL53_sht_MOT-Stg2_SB.dgn

IMEG
401 E. STATE ST. 4th Floor
ROCKFORD, IL 61104
PH: 815.965.6400
www.imegcorp.com

USER NAME = Marc.A.Personette	DESIGNED - Brad Lange	REVISED -	
	DRAWN - Marc Personette	REVISED -	
	CHECKED - Corey Stout	REVISED -	
PLOT DATE = 4/29/2026	DATE - 4/29/2026	REVISED -	

STATE OF ILLINOIS
DEPARTMENT OF TRANSPORTATION

I-290/IL 53 HMA RESURFACING AND BRIDGE REPAIRS
MAINTENANCE OF TRAFFIC STAGE 2 - SOUTHBOUND BRIDGE REPAIRS

SCALE: 1" = 50' | SHEET 7 OF 8 SHEETS | STA. 133+00.00 | TO STA. 148+00.00

F.A.I RTE.	SECTION	COUNTY	TOTAL SHEETS	SHEET NO.
290	(0404-316-HB) BR 24	COOK	276	58
		CONTRACT NO. 62W99		
		ILLINOIS FED. AID PROJECT		

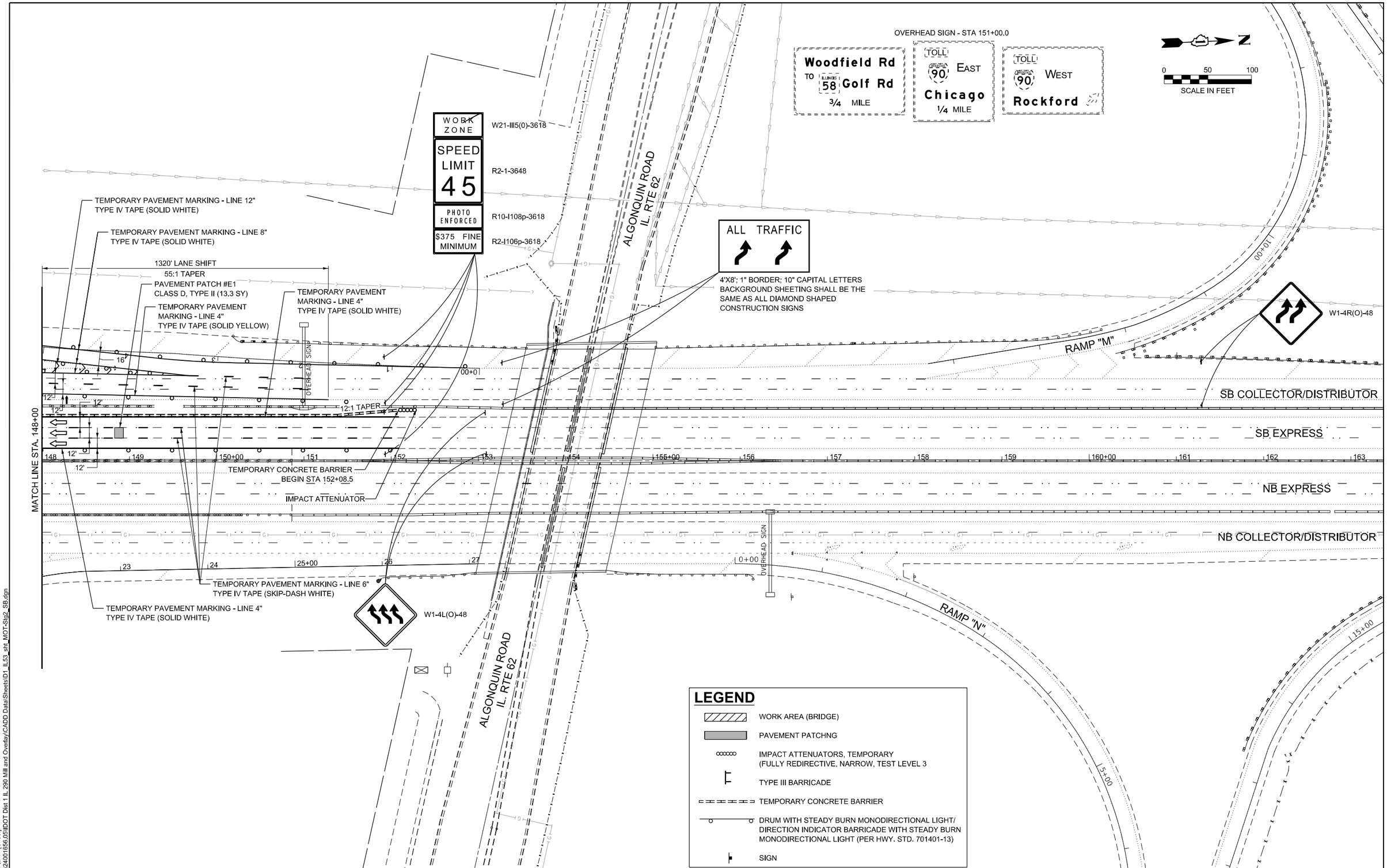

MODEL: MOT - Plan 7 [Sheet]
FILE NAME: W:\24001656.05\IDOT Dist 1 IL 290 Mill and Overlay\CADD Data\Sheets\D1_IL53_sht_MOT-Stg2_SB.dgn

IMEG
401 E. STATE ST. 4th Floor
ROCKFORD, IL
61104
PH: 815.965.6400
www.imegcorp.com

USER NAME = Marc.A.Personette	DESIGNED - Brad Lange	REVISED -	
	DRAWN - Marc Personette	REVISED -	
	CHECKED - Corey Stout	REVISED -	
PLOT DATE = 4/29/2026	DATE - 4/29/2026	REVISED -	

STATE OF ILLINOIS
DEPARTMENT OF TRANSPORTATION

I-290/IL 53 HMA RESURFACING AND BRIDGE REPAIRS
MAINTENANCE OF TRAFFIC STAGE 2 - SOUTHBOUND BRIDGE REPAIRS

SCALE: 1" = 50' | SHEET 8 OF 8 SHEETS | STA. 148+00.00 TO STA. 163+00.00

F.A.I RTE.	SECTION	COUNTY	TOTAL SHEETS	SHEET NO.
290	(0404-316-HB) BR 24	COOK	276	59
		CONTRACT NO. 62W99		
		ILLINOIS FED. AID PROJECT		

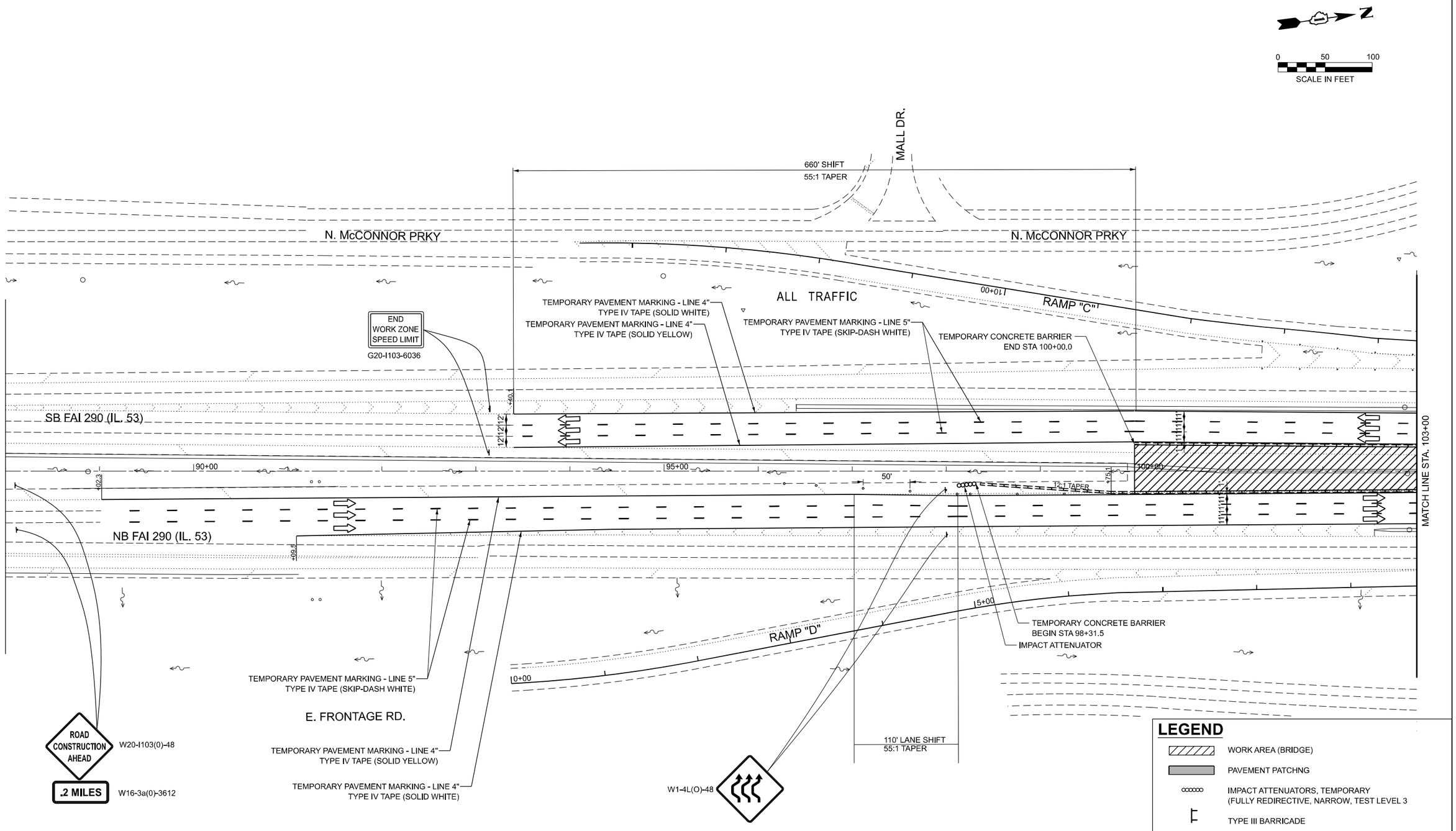

MODEL: sMODELNAMES
FILE NAME: pw://ciorba-pw.bentley.com:ciorba-pw-01/Documents/Projects/IL_DOT/D1/0021693.06/CADD Data/SNI/MOT/D1_IL53_sht_MOT-Sig3_NB.dgn

4/30/2026 2:28:34 PM

CiorbaGroup
8725 W. Higgins Rd, Ste 600, Chicago, IL 60631
P 773.775.4009 | www.ciorba.com

USER NAME =		DESIGNED -	SIK	REVISED -	
		CHECKED -	BWS	REVISED -	
PLOT SCALE =		DRAWN -	ETK, SIK	REVISED -	
PLOT DATE =		CHECKED -	BWS	REVISED -	

STATE OF ILLINOIS
DEPARTMENT OF TRANSPORTATION

I-290/IL 53 HMA RESURFACING AND BRIDGE REPAIRS
MAINTENANCE OF TRAFFIC STAGE 3 - GUARDRAIL

SCALE: 1" = 50' SHEET 1 OF 6 SHEETS STA. 88+00.00 TO STA. 103+00.00

F.A.I. RTE.	SECTION	COUNTY	TOTAL SHEETS	SHEET NO.
290	(0404-316-HB) BR24	COOK	276	59A
		CONTRACT NO. 62W99		
	ILLINOIS FED. AID PROJECT			

OVERHEAD SIGN - STA 106+92.2

EXIT TO
Higgins Rd
PROHIBITED
(OVER OUTSIDE EXPRESS LANE)

EXIT 1B
ILLINOIS 72
Higgins Rd
1/2 MILE

EXIT 1A
Woodfield Rd
TO ILLINOIS 58 **Golf Rd**

N

0 50 100
SCALE IN FEET

N. McCONNOR PRKY

GOLF ROAD

N. McCONNOR PRKY

TEMPORARY PAVEMENT MARKING - LINE 4"
TYPE IV TAPE (SOLID YELLOW)

TEMPORARY PAVEMENT MARKING - LINE 4"
TYPE IV TAPE (SOLID WHITE)

TEMPORARY PAVEMENT MARKING - LINE 5"
TYPE IV TAPE (SKIP-DASH WHITE)

5+00
0+00
SB FAI 290 (IL. 53)
35+00
MATCH LINE STA. 103+00
105+00
110+00
115+00
MATCH LINE STA. 118+00
NB FAI 290 (IL. 53)
10+00
440' SHIFT
55:1 TAPER
E. FRONTAGE RD.
GOLF ROAD
ALL TRAFFIC
W1-4L(O)-48
4'X8'; 1" BORDER; 10" CAPITAL LETTERS
BACKGROUND SHEETING SHALL BE THE
SAME AS ALL DIAMOND SHAPED
CONSTRUCTION SIGNS

TEMPORARY PAVEMENT MARKING - LINE 4"
TYPE IV TAPE (SOLID YELLOW)

TEMPORARY PAVEMENT MARKING - LINE 4"
TYPE IV TAPE (SOLID WHITE)

TEMPORARY PAVEMENT MARKING - LINE 5"
TYPE IV TAPE (SKIP-DASH WHITE)

0+00
84.5
ALL TRAFFIC
220' SHIFT
55:1 TAPER
4'X8'; 1" BORDER; 10" CAPITAL LETTERS
BACKGROUND SHEETING SHALL BE THE
SAME AS ALL DIAMOND SHAPED
CONSTRUCTION SIGNS

LEGEND

- WORK AREA (BRIDGE)
- PAVEMENT PATCHNG
- IMPACT ATTENUATORS, TEMPORARY (FULLY REDIRECTIVE, NARROW, TEST LEVEL 3
- TYPE III BARRICADE
- TEMPORARY CONCRETE BARRIER
- DRUM WITH STEADY BURN MONODIRECTIONAL LIGHT/ DIRECTION INDICATOR BARRICADE WITH STEADY BURN MONODIRECTIONAL LIGHT (PER HWY. STD. 701401-13)
- SIGN

CiorbaGroup
8725 W. Higgins Rd, Ste 600, Chicago, IL 60631
P 773.775.4009 | www.ciorba.com

USER NAME =	DESIGNED - SIK	REVISED -
	CHECKED - BWS	REVISED -
PLOT SCALE = 50	DRAWN - ETK, SIK	REVISED -
PLOT DATE =	CHECKED - BWS	REVISED -

STATE OF ILLINOIS
DEPARTMENT OF TRANSPORTATION

I-290/IL 53 HMA RESURFACING AND BRIDGE REPAIRS
MAINTENANCE OF TRAFFIC STAGE 3 - GUARDRAIL

SCALE: 1" = 50' SHEET 2 OF 6 SHEETS STA. 103+00.00 TO STA. 118+00.00

F.A.I. RTE:	SECTION	COUNTY	TOTAL SHEETS	SHEET NO.
290	(0404-316-HB) BR24	COOK	276	59B
		CONTRACT NO. 62W99		
		ILLINOIS	FED. AID PROJECT	

MODEL: sMODELNAMES
FILE NAME: pw://ciorba-pw.bentley.com:ciorba-pw-01/Documents/Projects/IL_DOT/D1/0021693.06/CADD Data/Sht/MOT/D1_IL53_sht_MOT-Stg3_NB.dgn
4/30/2026 2:30:35 PM

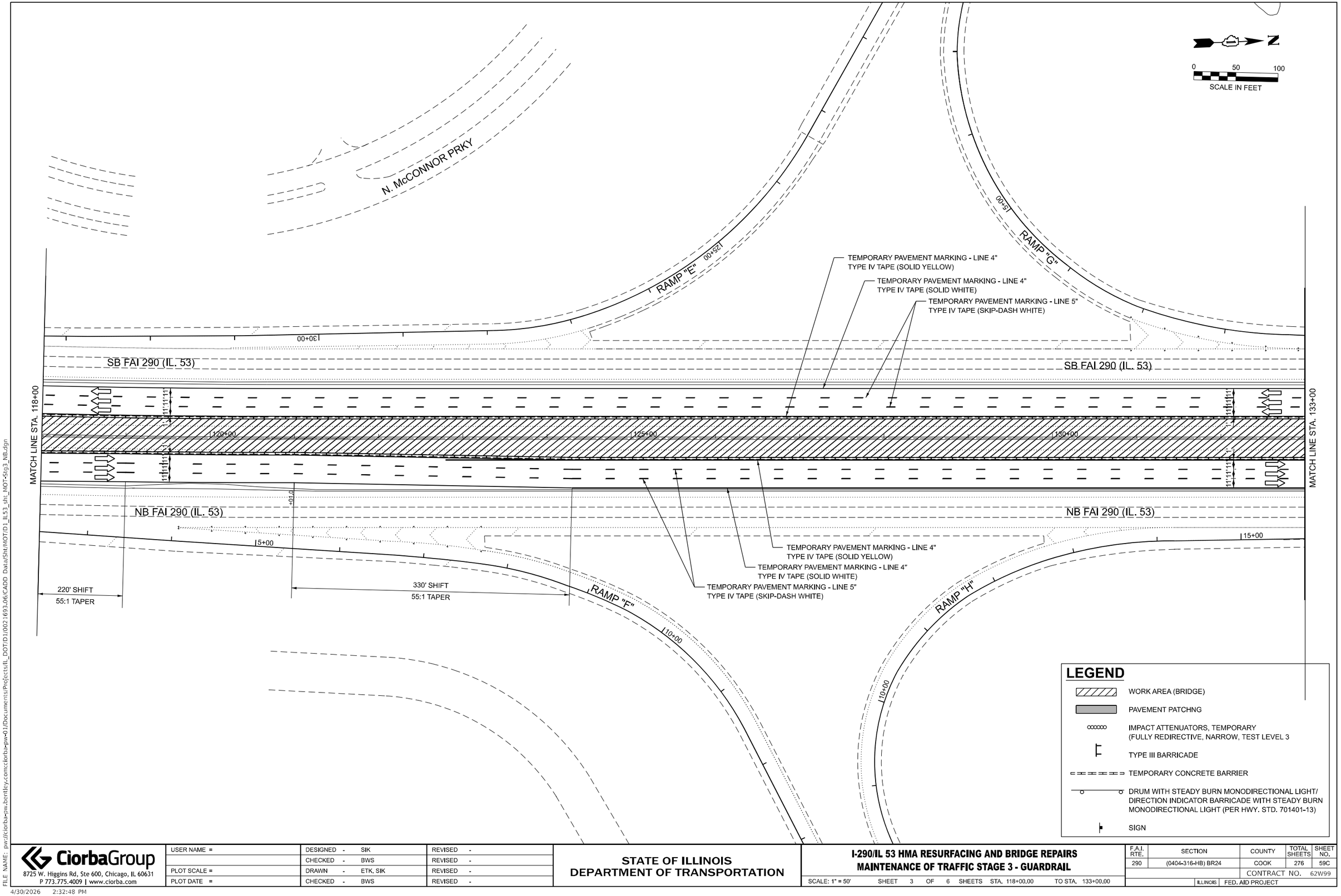

MODEL: sMODELNAMES
FILE NAME: pw://ciorba-pw.bentley.com:ciorba-pw-01/Documents/Projects/IL_DOT/D1/0021693.06/CADD Data/Sht/MOT/D1_IL53_sht_MOT-Stg3_NB.dgn

4/30/2026 2:32:48 PM

CiorbaGroup
8725 W. Higgins Rd, Ste 600, Chicago, IL 60631
P 773.775.4009 | www.ciorba.com

USER NAME =		DESIGNED -	SIK	REVISED -
		CHECKED -	BWS	REVISED -
PLOT SCALE =		DRAWN -	ETK, SIK	REVISED -
PLOT DATE =		CHECKED -	BWS	REVISED -

STATE OF ILLINOIS
DEPARTMENT OF TRANSPORTATION

I-290/IL 53 HMA RESURFACING AND BRIDGE REPAIRS
MAINTENANCE OF TRAFFIC STAGE 3 - GUARDRAIL

SCALE: 1" = 50' SHEET 3 OF 6 SHEETS STA. 118+00.00 TO STA. 133+00.00

F.A.I. RTE.	SECTION	COUNTY	TOTAL SHEETS	SHEET NO.
290	(0404-316-HB) BR24	COOK	276	59C
		CONTRACT NO. 62W99		
		ILLINOIS	FED. AID PROJECT	

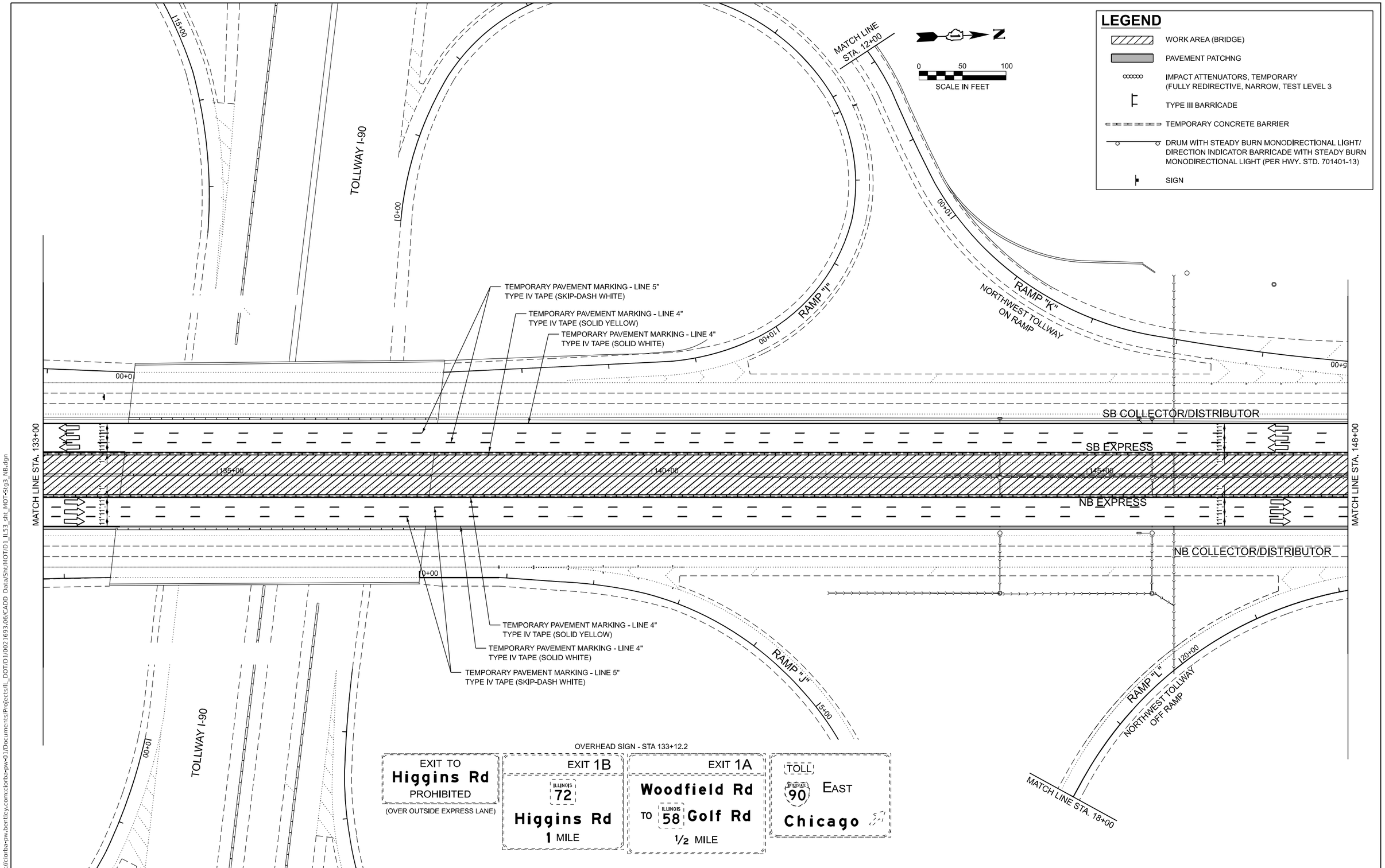

MODEL: SMODELNAMES
FILE NAME: pw://ciorba-pw.bentley.com:ciorba-pw-01/Documents/Projects/IL_DOT/D1/0021693.06/CADD Data/Sht/MOT/D1_IL53_sht_MOT-Stg3_NB.dgn

4/30/2026 2:34:25 PM

CiorbaGroup
8725 W. Higgins Rd, Ste 600, Chicago, IL 60631
P 773.775.4009 | www.ciorba.com

USER NAME =	DESIGNED - SIK	REVISED -
	CHECKED - BWS	REVISED -
PLOT SCALE =	DRAWN - ETK, SIK	REVISED -
PLOT DATE =	CHECKED - BWS	REVISED -

STATE OF ILLINOIS
DEPARTMENT OF TRANSPORTATION

I-290/IL 53 HMA RESURFACING AND BRIDGE REPAIRS
MAINTENANCE OF TRAFFIC STAGE 3 - GUARDRAIL

SCALE: 1" = 50' SHEET 4 OF 6 SHEETS STA. 133+00.00 TO STA. 148+00.00

F.A.I. RTE.	SECTION	COUNTY	TOTAL SHEETS	SHEET NO.
290	(0404-316-HB) BR24	COOK	276	59D
		CONTRACT NO. 62W99		
	ILLINOIS	FED. AID PROJECT		

OVERHEAD SIGN - STA 151+00.0

Woodfield Rd
TO ILLINOIS 58 Golf Rd
3/4 MILE

TOLL 90 EAST
Chicago
1/4 MILE

TOLL 90 WEST
Rockford

N

0 50 100
SCALE IN FEET

4'X8'; 1" BORDER; 10" CAPITAL LETTERS
BACKGROUND SHEETING SHALL BE THE
SAME AS ALL DIAMOND SHAPED
CONSTRUCTION SIGNS

ALL TRAFFIC

55' LANE SHIFT
55:1 TAPER

TEMPORARY PAVEMENT MARKING - LINE 5"
TYPE IV TAPE (SKIP-DASH WHITE)

ALGONQUIN ROAD
IL. RTE 62

TEMPORARY CONCRETE BARRIER
BEGIN STA 153+68.8

IMPACT ATTENUATOR

TEMPORARY PAVEMENT
MARKING - LINE 4"
TYPE IV TAPE (SOLID YELLOW)

TEMPORARY PAVEMENT
MARKING - LINE 4"
TYPE IV TAPE (SOLID WHITE)

W1-4L(O)-48

1000' LANE SHIFT

RAMP "M"

SB COLLECTOR/DISTRIBUTOR

SB EXPRESS

NB EXPRESS

NB COLLECTOR/
DISTRIBUTOR

MATCH LINE STA. 148+00

MATCH LINE STA. 163+00

150+00

155+00

160+00

00+01

25+00

10+00

15+00

12:1 TAPER

25'

100'

OVERHEAD SIGN

END
WORK ZONE
SPEED LIMIT
G20-I103-6036

RAMP "N"

TEMPORARY CONCRETE BARRIER
END STA 152+00.0

660' LANE SHIFT
55:1 TAPER

LEGEND

- WORK AREA (BRIDGE)
- PAVEMENT PATCHNG
- IMPACT ATTENUATORS, TEMPORARY (FULLY REDIRECTIVE, NARROW, TEST LEVEL 3
- TYPE III BARRICADE
- TEMPORARY CONCRETE BARRIER
- DRUM WITH STEADY BURN MONODIRECTIONAL LIGHT/ DIRECTION INDICATOR BARRICADE WITH STEADY BURN MONODIRECTIONAL LIGHT (PER HWY. STD. 701401-13)
- SIGN

CiorbaGroup
8725 W. Higgins Rd, Ste 600, Chicago, IL 60631
P 773.775.4009 | www.ciorba.com

USER NAME =	DESIGNED - SIK	REVISED -
	CHECKED - BWS	REVISED -
PLOT SCALE =	DRAWN - ETK, SIK	REVISED -
PLOT DATE =	CHECKED - BWS	REVISED -

STATE OF ILLINOIS
DEPARTMENT OF TRANSPORTATION

I-290/IL 53 HMA RESURFACING AND BRIDGE REPAIRS
MAINTENANCE OF TRAFFIC STAGE 3 - GUARDRAIL

SCALE: 1" = 50' SHEET 5 OF 6 SHEETS STA. 148+00.00 TO STA. 163+00.00

F.A.I. RTE.	SECTION	COUNTY	TOTAL SHEETS	SHEET NO.
290	(0404-316-HB) BR24	COOK	276	59E
		CONTRACT NO. 62W99		
	ILLINOIS	FED. AID PROJECT		

MODEL: SMODELNAMES
FILE NAME: pw:\\Ciorba-pw.bentley.com:ciorba-pw-01\Documents\Projects\IL_DOT\D1\0021693.06\CADD Data\Sht\MOT\D1_IL53_sht_MOT-Stg3_NB.dgn

4/30/2026 2:36:04 PM

0 50 100
SCALE IN FEET

TEMPORARY PAVEMENT MARKING - LINE 5"
TYPE IV TAPE (SKIP-DASH WHITE)

TEMPORARY PAVEMENT
MARKING - LINE 4"
TYPE IV TAPE (SOLID YELLOW)

TEMPORARY PAVEMENT
MARKING - LINE 4"
TYPE IV TAPE (SOLID WHITE)

1000' LANE SHIFT

I-290 / IL. RTE. 53

SALT CREEK

RAMP 'O'

00+81

OVERHEAD SIGN

SOUTHBOUND COLLECTOR/DISTRIBUTOR

SOUTHBOUND EXPRESS

MATCH LINE STA. 163+00

11' 11' 11'

12' 12' 12'

35.8

50'

165+00

170+00

175+00

IL. 53

IL. 53

NORTHBOUND EXPRESS

NORTHBOUND COLLECTOR/DISTRIBUTOR

ARROW BOARD

ILL. ROUTE 62 ENTRANCE RAMP

RAMP 'P'

ROAD CONSTRUCTION AHEAD — W20-I103(0)-48

.4 MILES — W16-3a(0)-3612

LEGEND

- WORK AREA (BRIDGE)
- PAVEMENT PATCHNG
- IMPACT ATTENUATORS, TEMPORARY (FULLY REDIRECTIVE, NARROW, TEST LEVEL 3
- TYPE III BARRICADE
- TEMPORARY CONCRETE BARRIER
- DRUM WITH STEADY BURN MONODIRECTIONAL LIGHT/ DIRECTION INDICATOR BARRICADE WITH STEADY BURN MONODIRECTIONAL LIGHT (PER HWY. STD. 701401-13)
- SIGN

CiorbaGroup
8725 W. Higgins Rd, Ste 600, Chicago, IL 60631
P 773.775.4009 | www.ciorba.com

USER NAME =	DESIGNED - SIK	REVISED -
	CHECKED - BWS	REVISED -
PLOT SCALE =	DRAWN - ETK, SIK	REVISED -
PLOT DATE =	CHECKED - BWS	REVISED -

STATE OF ILLINOIS
DEPARTMENT OF TRANSPORTATION

I-290/IL 53 HMA RESURFACING AND BRIDGE REPAIRS
MAINTENANCE OF TRAFFIC STAGE 3 - GUARDRAIL

SCALE: 1"=66' SHEET 6 OF 6 SHEETS STA. 163+00.00 TO STA.

F.A.I. RTE.	SECTION	COUNTY	TOTAL SHEETS	SHEET NO.
290	(0404-316-HB) BR24	COOK	276	59F
		CONTRACT NO. 62W99		
	ILLINOIS	FED. AID PROJECT		

MODEL: SMODELNAMES
FILE NAME: pw://ciorba-pw.bentley.com:ciorba-pw-01/Documents/Projects/IL_DOT/D1/0021693.06/CADD Data/Sht/MOT/D1_IL53_sht_MOT-Stg3_NB.dgn

4/30/2026 2:36:57 PM

LIMIT OF RESURFACING (AT JOINT)

REFER TO DETAIL TC-12b FOR RRPM PLACEMENT WITHIN THE 3'-9' SKIP LINE (ONE SIDED/CRYSTAL LENSE/36' C-C

0 50 100
SCALE IN FEET

PROPOSED W. FRONTAGE RD RESURFACING
PROPOSED HOT-MIX ASPHALT SURFACE REMOVAL, 2-1/2"
PROPOSED POLYMERIZED HOT-MIX ASPHALT SURFACE COURSE, STONE MATRIX ASPHALT, 9.5, MIX "F", N80, 1-3/4"
PROPOSED POLYMERIZED HOT-MIX ASPHALT BINDER COURSE, IL-4.75, N50, 3/4"

W. FRONTAGE RD

ILLINOIS 72 (HIGGINS ROAD)

MAINLINE RESURFACING

RAMP "A" RESURFACING

PROPOSED RAMP "A" RESURFACING
PROPOSED HOT-MIX ASPHALT SURFACE REMOVAL 2-1/4"
PROPOSED HOT-MIX ASPHALT SURFACE COURSE, IL-9.5, MIX "D", N70, 1-1/2"
PROPOSED POLYMERIZED HOT-MIX ASPHALT BINDER COURSE, IL-4.75, N50, 3/4"

RAMP "A"

MATCH LINE STA. 693+35

PROPOSED SHOULDER RESURFACING (MAINLINE)
PROPOSED HOT-MIX ASPHALT SURFACE REMOVAL, 3-3/4"
PROPOSED HOT-MIX ASPHALT SURFACE COURSE, IL-9.5, MIX "D", N70, 1-1/2"
PROPOSED HOT-MIX ASPHALT BINDER COURSE, IL-19.0, N70, 2-1/4"

PROPOSED MAINLINE RESURFACING
PROPOSED HOT-MIX ASPHALT SURFACE REMOVAL, 4"
PROPOSED POLYMERIZED HOT-MIX ASPHALT SURFACE COURSE, STONE MATRIX ASPHALT, 12.5, MIX "F", N80, 2"
PROPOSED POLYMERIZED HOT-MIX ASPHALT BINDER COURSE, STONE MATRIX ASPHALT 12.5, N80, 2"

+26.7 LIMIT OF RESURFACING

HMA SHOULDER

SB FAI 290 (IL. 53)

HMA SHOULDER

CONC. HMA HMA

MATCH LINE STA. 5+00

MATCH LINE STA. 73+00

NB FAI 290 (IL. 53)

CONC. CONC. CONC.

PAVEMENT MARKING LEGEND

1. THERMOPLASTIC PAVEMENT MARKING - LINE 4" YELLOW EDGE LINE
2. THERMOPLASTIC PAVEMENT MARKING - LINE 4" WHITE EDGE LINE
3. THERMOPLASTIC PAVEMENT MARKING - LINE 8" WHITE LINE (LANE \ GORE)
4. THERMOPLASTIC PAVEMENT MARKING - LINE 12" WHITE DIAGONALS
5. NOT USED
6. THERMOPLASTIC PAVEMENT MARKING - LINE 12" WHITE CHEVRON (TYP.)
7. THERMOPLASTIC PAVEMENT MARKING - LINE 8" WHITE DOTTED (3' DASH @ 9' SKIP)
8. THERMOPLASTIC PAVEMENT MARKING - LINE 4" WHITE SKIP (2' DASH @ 6' SKIP)
9. THERMOPLASTIC PAVEMENT MARKING - LINE 12" YELLOW DIAGONALS
10. THERMOPLASTIC PAVEMENT MARKING - LINE 24" WHITE STOP BAR
11. THERMOPLASTIC PAVEMENT MARKING - LETTERS & SYMBOLS
12. MODIFIED URETHANE PAVEMENT MARKING - LINE 6" EDGE LINE (ON PCC PAVEMENT ONLY)
13. CONTRAST PREFORMED PLASTIC PAVEMENT MARKING, TYPE D, STANDARD - LINE 9" (1.5" BLACK, 6" WHITE, 1.5" BLACK) (10' DASH @ 30' SKIP) (GROOVED)

ILLINOIS 72 (HIGGINS ROAD)

+00 LIMIT OF RESURFACING

PROPOSED E. FRONTAGE RD & RAMP "B" RESURFACING
PROPOSED HOT-MIX ASPHALT SURFACE REMOVAL, 2-1/2"
PROPOSED POLYMERIZED HOT-MIX ASPHALT SURFACE COURSE, STONE MATRIX ASPHALT, 9.5, MIX "F", N80, 1-3/4"
PROPOSED POLYMERIZED HOT-MIX ASPHALT BINDER COURSE, IL-4.75, N50, 3/4"

E. FRONTAGE RD

RAMP "B"

+25 LIMIT OF RAMP RESURFACING

HMA HMA HMA

GRADING AND SHAPING SHOULDERS AGGREGATE WEDGE, TYPE B

GRADING AND SHAPING SHOULDERS AGGREGATE WEDGE, TYPE B

MATCH LINE STA. 799+25

THE REMOVAL AND REPLACEMENT OF CHAIN LINK FENCE ALONG THE FRONTAGE ROADS WILL BE DETERMINED BY THE ENGINEER.

PAVEMENT MARKING LEGEND

14. CONTRAST PREFORMED PLASTIC PAVEMENT MARKING, TYPE D, STANDARD - LINE 7" (1.5" BLACK, 4" WHITE, 1.5" BLACK) (2' DASH @ 6' SKIP) (GROOVED)
15. MODIFIED URETHANE PAVEMENT MARKING - LINE 8" (ON PCC PAVEMENT ONLY)
16. CONTRAST PREFORMED PLASTIC PAVEMENT MARKING, TYPE D, STANDARD - LINE 11" (1.5" BLACK, 8" WHITE, 1.5" BLACK) (3' DASH @ 9' SKIP) (GROOVED)
17. PREFORMED PLASTIC PAVEMENT MARKING, TYPE D, STANDARD - LINE 4" WHITE (10' DASH @ 30' SKIP) (GROOVED)
18. THERMOPLASTIC PAVEMENT MARKING - LINE 6" WHITE SKIP (2' DASH @ 6' SKIP)
19. THERMOPLASTIC PAVEMENT MARKING - LINE 6" WHITE LANE LINE
20. THERMOPLASTIC PAVEMENT MARKING - LINE 6" WHITE EDGE LINE
21. THERMOPLASTIC PAVEMENT MARKING - LINE 6" YELLOW EDGE LINE

IMEG
401 E. STATE ST. 4th Floor ROCKFORD, IL 61104
PH: 815.965.6400 www.imegcorp.com

USER NAME = Marc.A.Personette	DESIGNED - Patrick Pauser	REVISED -
	DRAWN - Patrick Pauser	REVISED -
	CHECKED - Brad Lange	REVISED -
PLOT DATE = 4/29/2026	DATE - 4/29/2026	REVISED -

STATE OF ILLINOIS
DEPARTMENT OF TRANSPORTATION

I-290/IL 53 HMA RESURFACING AND BRIDGE REPAIRS
ROADWAY AND PAVEMENT MARKING PLAN

SCALE: 1" = 50' | SHEET 1 OF 7 SHEETS | STA. 59+00.00 | TO STA. 73+00.00

F.A.I RTE.	SECTION	COUNTY	TOTAL SHEETS	SHEET NO.
290	(0404-316-HB) BR 24	COOK	276	60
		CONTRACT NO. 62W99		
	ILLINOIS FED. AID PROJECT			

MODEL: Plan 1 [Sheet]
FILE NAME: W:\2400\656.05\IDOT Dist 1 IL 290 Mill and Overlay\CADD Data\Sheets\D1_IL53_sht_Plan_RdwyPMK.dgn

PAVEMENT MARKING LEGEND

(14) CONTRAST PREFORMED PLASTIC PAVEMENT MARKING, TYPE D, STANDARD - LINE 7" (1.5" BLACK, 4" WHITE, 1.5" BLACK) (2' DASH @ 6' SKIP) (GROOVED)

(15) MODIFIED URETHANE PAVEMENT MARKING - LINE 8" (ON PCC PAVEMENT ONLY)

(16) CONTRAST PREFORMED PLASTIC PAVEMENT MARKING, TYPE D, STANDARD - LINE 11" (1.5" BLACK, 8" WHITE, 1.5" BLACK) (3' DASH @ 9' SKIP) (GROOVED)

(17) PREFORMED PLASTIC PAVEMENT MARKING, TYPE D, STANDARD - LINE 4" WHITE (10' DASH @ 30' SKIP) (GROOVED)

PAVEMENT MARKING LEGEND

(1) THERMOPLASTIC PAVEMENT MARKING - LINE 4" YELLOW EDGE LINE

(2) THERMOPLASTIC PAVEMENT MARKING - LINE 4" WHITE EDGE LINE

(3) THERMOPLASTIC PAVEMENT MARKING - LINE 8" WHITE LINE (LANE \ GORE)

(4) THERMOPLASTIC PAVEMENT MARKING - LINE 12" WHITE DIAGONALS

(5) NOT USED

(6) THERMOPLASTIC PAVEMENT MARKING - LINE 12" WHITE CHEVRON (TYP.)

(7) THERMOPLASTIC PAVEMENT MARKING - LINE 8" WHITE DOTTED (3' DASH @ 9' SKIP)

(8) THERMOPLASTIC PAVEMENT MARKING - LINE 4" WHITE SKIP (2' DASH @ 6' SKIP)

(9) THERMOPLASTIC PAVEMENT MARKING - LINE 12" YELLOW DIAGONALS

(10) THERMOPLASTIC PAVEMENT MARKING - LINE 24" WHITE STOP BAR

(11) THERMOPLASTIC PAVEMENT MARKING - LETTERS & SYMBOLS

(12) MODIFIED URETHANE PAVEMENT MARKING - LINE 6" EDGE LINE (ON PCC PAVEMENT ONLY)

(13) CONTRAST PREFORMED PLASTIC PAVEMENT MARKING, TYPE D, STANDARD - LINE 9" (1.5" BLACK, 6" WHITE, 1.5" BLACK) (10' DASH @ 30' SKIP) (GROOVED)

LIMIT OF RESURFACING (AT JOINT)

PROPOSED W. FRONTAGE RD RESURFACING
PROPOSED HOT-MIX ASPHALT SURFACE REMOVAL, 2-1/2"
PROPOSED POLYMERIZED HOT-MIX ASPHALT SURFACE COURSE, STONE MATRIX ASPHALT, 9.5, MIX "F", N80, 1-3/4"
PROPOSED POLYMERIZED HOT-MIX ASPHALT BINDER COURSE, IL-4.75, N50, 3/4"

CARSON'S CRES

MATCH LINE STA. 693+35

LIMIT OF RESURFACING (AT JOINT +02)

WOODFIELD ROAD

W. FRONTAGE RD

N. McCONNOR PRKY

PROPOSED RAMP "A" RESURFACING
PROPOSED HOT-MIX ASPHALT SURFACE REMOVAL, 2-1/4"
PROPOSED HOT-MIX ASPHALT SURFACE COURSE, IL-9.5, MIX "D", N70, 1-1/2"
PROPOSED POLYMERIZED HOT-MIX ASPHALT BINDER COURSE, IL-4.75, N50, 3/4"

PROPOSED MAINLINE RESURFACING
PROPOSED HOT-MIX ASPHALT SURFACE REMOVAL, 4"
PROPOSED POLYMERIZED HOT-MIX ASPHALT SURFACE COURSE, STONE MATRIX ASPHALT, 12.5, MIX "F",N80, 2"
PROPOSED POLYMERIZED HOT-MIX ASPHALT BINDER COURSE, STONE MATRIX ASPHALT, 12.5, N80, 2"

PROPOSED MAINLINE RESURFACING
PROPOSED HOT-MIX ASPHALT SURFACE REMOVAL, 4"
PROPOSED POLYMERIZED HOT-MIX ASPHALT SURFACE COURSE, STONE MATRIX ASPHALT, 12.5, MIX "F", N80, 2"
PROPOSED POLYMERIZED HOT-MIX ASPHALT BINDER COURSE, STONE MATRIX ASPHALT, 12.5, N80, 2"

MATCH LINE STA. 5+00

RAMP "A" RESURFACING

MAINLINE RESURFACING

RESURFACING OMMISION
STA 81+06 - STA 82+71

HMA SHOULDER

SB FAI 290 (IL. 53)

HMA

CONC.

OVERHEAD SIGN

MATCH LINE STA. 73+00

NB FAI 290 (IL. 53)

MATCH LINE STA. 88+00

PROPOSED SHOULDER RESURFACING (MAINLINE)
PROPOSED HOT-MIX ASPHALT SURFACE REMOVAL 3-3/4"
PROPOSED HOT-MIX ASPHALT SURFACE COURSE, IL-9.5, MIX "D", N70, 1-1/2"
PROPOSED HOT-MIX ASPHALT BINDER COURSE, IL-19.0, N70, 2-1/4"

+12 LIMIT OF RESURFACING

GRADING AND SHAPING SHOULDERS
AGGREGATE WEDGE, TYPE B

MATCH LINE STA. 799+25

PROPOSED E. FRONTAGE RD RESURFACING
PROPOSED HOT-MIX ASPHALT SURFACE REMOVAL, 2-1/2"
PROPOSED POLYMERIZED HOT-MIX ASPHALT SURFACE COURSE, STONE MATRIX ASPHALT, 9.5, MIX "F", N80, 1-3/4"
PROPOSED POLYMERIZED HOT-MIX ASPHALT BINDER COURSE, IL-4.75, N50, 3/4"

LIMIT OF RESURFACING (AT JOINT +12)

LIMIT OF RESURFACING (AT JOINT +73)

THE REMOVAL AND REPLACEMENT OF CHAIN LINK FENCE ALONG THE FRONTAGE ROADS WILL BE DETERMINED BY THE ENGINEER.

(17) PREFORMED PLASTIC PAVEMENT MARKING, TYPE D, STANDARD - LINE 4" WHITE (10' DASH @ 30' SKIP) (GROOVED)

(18) THERMOPLASTIC PAVEMENT MARKING - LINE 6" WHITE SKIP (2' DASH @ 6' SKIP)

(19) THERMOPLASTIC PAVEMENT MARKING - LINE 6" WHITE LANE LINE

(20) THERMOPLASTIC PAVEMENT MARKING - LINE 6" WHITE EDGE LINE

(21) THERMOPLASTIC PAVEMENT MARKING - LINE 6" YELLOW EDGE LINE

0 50 100
SCALE IN FEET

MODEL: Plan 2 [Sheet]
FILE NAME: W:\2400\1656.05\IDOT Dist 1 IL 290 Mill and Overlay\CADD Data\Sheets\D1_IL53_sht_Plan_RdwyPMK.dgn

IMEG
401 E. STATE ST. 4th Floor
ROCKFORD, IL 61104
PH: 815.965.6400
www.imegcorp.com

USER NAME = Marc.A.Personette	DESIGNED - Patrick Pauser	REVISED -	
	DRAWN - Patrick Pauser	REVISED -	
	CHECKED - Brad Lange	REVISED -	
PLOT DATE = 4/29/2026	DATE - 4/29/2026	REVISED -	

STATE OF ILLINOIS
DEPARTMENT OF TRANSPORTATION

I-290/IL 53 HMA RESURFACING AND BRIDGE REPAIRS
ROADWAY AND PAVEMENT MARKING PLAN

SCALE: 1" = 50' | SHEET 2 OF 7 SHEETS | STA. 73+00.00 TO STA. 88+00.00

F.A.I RTE.	SECTION	COUNTY	TOTAL SHEETS	SHEET NO.
290	(0404-316-HB) BR 24	COOK	276	61
		CONTRACT NO. 62W99		
	ILLINOIS FED. AID PROJECT			

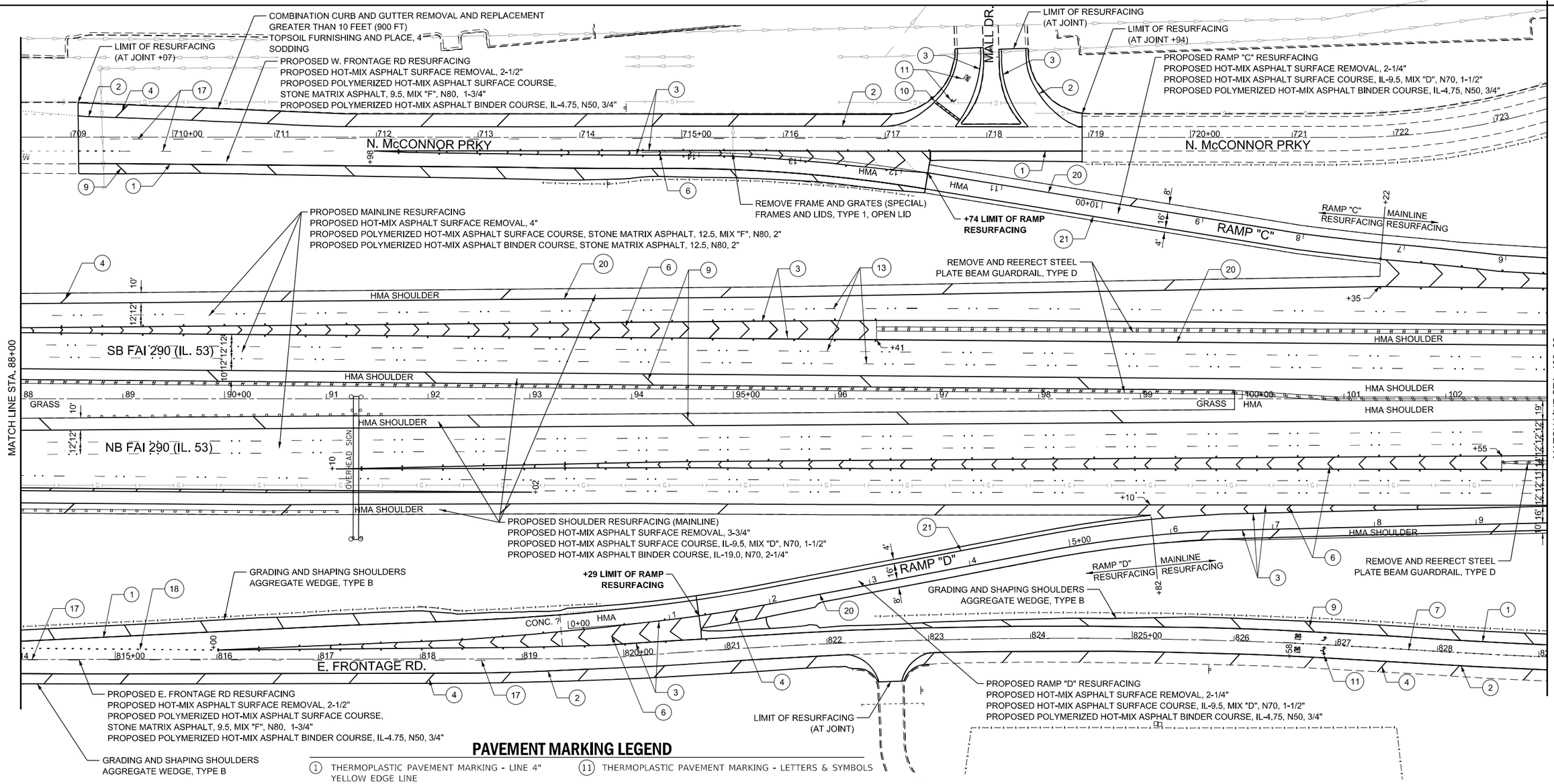

THE REMOVAL AND REPLACEMENT OF CHAIN LINK FENCE ALONG THE FRONTAGE ROADS WILL BE DETERMINED BY THE ENGINEER.

PAVEMENT MARKING LEGEND

1. THERMOPLASTIC PAVEMENT MARKING - LINE 4" YELLOW EDGE LINE
2. THERMOPLASTIC PAVEMENT MARKING - LINE 4" WHITE EDGE LINE
3. THERMOPLASTIC PAVEMENT MARKING - LINE 8" WHITE LINE (LANE \ GORE)
4. THERMOPLASTIC PAVEMENT MARKING - LINE 12" WHITE DIAGONALS
5. NOT USED
6. THERMOPLASTIC PAVEMENT MARKING - LINE 12" WHITE CHEVRON (TYP.)
7. THERMOPLASTIC PAVEMENT MARKING - LINE 8" WHITE DOTTED (3' DASH @ 9' SKIP)
8. THERMOPLASTIC PAVEMENT MARKING - LINE 4" WHITE SKIP (2' DASH @ 6' SKIP)
9. THERMOPLASTIC PAVEMENT MARKING - LINE 12" YELLOW DIAGONALS
10. THERMOPLASTIC PAVEMENT MARKING - LINE 24" WHITE STOP BAR
11. THERMOPLASTIC PAVEMENT MARKING - LETTERS & SYMBOLS
12. MODIFIED URETHANE PAVEMENT MARKING - LINE 6" EDGE LINE (ON PCC PAVEMENT ONLY)
13. CONTRAST PREFORMED PLASTIC PAVEMENT MARKING, TYPE D, STANDARD - LINE 9" (1.5" BLACK, 6" WHITE, 1.5" BLACK) (10' DASH @ 30' SKIP) (GROOVED)
14. CONTRAST PREFORMED PLASTIC PAVEMENT MARKING, TYPE D, STANDARD - LINE 7" (1.5" BLACK, 4" WHITE, 1.5" BLACK) (2' DASH @ 6' SKIP) (GROOVED)
15. MODIFIED URETHANE PAVEMENT MARKING - LINE 8" (ON PCC PAVEMENT ONLY)
16. CONTRAST PREFORMED PLASTIC PAVEMENT MARKING, TYPE D, STANDARD - LINE 11" (1.5" BLACK, 8" WHITE, 1.5" BLACK) (3' DASH @ 9' SKIP) (GROOVED)
17. PREFORMED PLASTIC PAVEMENT MARKING, TYPE D, STANDARD - LINE 4" WHITE (10' DASH @ 30' SKIP) (GROOVED)
18. THERMOPLASTIC PAVEMENT MARKING - LINE 6" WHITE SKIP (2' DASH @ 6' SKIP)
19. THERMOPLASTIC PAVEMENT MARKING - LINE 6" WHITE LANE LINE
20. THERMOPLASTIC PAVEMENT MARKING - LINE 6" WHITE EDGE LINE
21. THERMOPLASTIC PAVEMENT MARKING - LINE 6" YELLOW EDGE LINE

IMEG
401 E. STATE ST. 4th Floor ROCKFORD, IL 61104
PH: 815.965.6400 www.imegcorp.com

USER NAME = Marc.A.Personette	DESIGNED - Patrick Pauser	REVISED -
	DRAWN - Patrick Pauser	REVISED -
	CHECKED - Brad Lange	REVISED -
PLOT DATE = 4/29/2026	DATE - 4/29/2026	REVISED -

STATE OF ILLINOIS
DEPARTMENT OF TRANSPORTATION

I-290/IL 53 HMA RESURFACING AND BRIDGE REPAIRS
ROADWAY AND PAVEMENT MARKING PLAN

SCALE: 1" = 50' | SHEET 3 OF 7 SHEETS | STA. 88+00.00 | TO STA. 103+00.00

F.A.I RTE.	SECTION	COUNTY	TOTAL SHEETS	SHEET NO.
290	(0404-316-HB) BR 24	COOK	276	62
		CONTRACT NO. 62W99		
		ILLINOIS	FED. AID PROJECT	

MODEL: Plan 3 [Sheet]
FILE NAME: W:\24001656.051\IDOT Dist 1 IL 290 Mill and Overlay\CADD Data\Sheets\D1_IL53_sht_Plan_RdwyPMK.dgn

PAVEMENT MARKING LEGEND

1. THERMOPLASTIC PAVEMENT MARKING - LINE 4" YELLOW EDGE LINE
2. THERMOPLASTIC PAVEMENT MARKING - LINE 4" WHITE EDGE LINE
3. THERMOPLASTIC PAVEMENT MARKING - LINE 8" WHITE LINE (LANE \ GORE)
4. THERMOPLASTIC PAVEMENT MARKING - LINE 12" WHITE DIAGONALS
5. NOT USED
6. THERMOPLASTIC PAVEMENT MARKING - LINE 12" WHITE CHEVRON (TYP.)
7. THERMOPLASTIC PAVEMENT MARKING - LINE 8" WHITE DOTTED (3' DASH @ 9' SKIP)
8. THERMOPLASTIC PAVEMENT MARKING - LINE 4" WHITE SKIP (2' DASH @ 6' SKIP)
9. THERMOPLASTIC PAVEMENT MARKING - LINE 12" YELLOW DIAGONALS
10. THERMOPLASTIC PAVEMENT MARKING - LINE 24" WHITE STOP BAR
11. THERMOPLASTIC PAVEMENT MARKING - LETTERS & SYMBOLS
12. MODIFIED URETHANE PAVEMENT MARKING - LINE 6" EDGE LINE (ON PCC PAVEMENT ONLY)
13. CONTRAST PREFORMED PLASTIC PAVEMENT MARKING, TYPE D, STANDARD - LINE 9" (1.5" BLACK, 6" WHITE, 1.5" BLACK) (10' DASH @ 30' SKIP) (GROOVED)
14. CONTRAST PREFORMED PLASTIC PAVEMENT MARKING, TYPE D, STANDARD - LINE 7" (1.5" BLACK, 4" WHITE, 1.5" BLACK) (2' DASH @ 6' SKIP) (GROOVED)
15. MODIFIED URETHANE PAVEMENT MARKING - LINE 8" (ON PCC PAVEMENT ONLY)
16. CONTRAST PREFORMED PLASTIC PAVEMENT MARKING, TYPE D, STANDARD - LINE 11" (1.5" BLACK, 8" WHITE, 1.5" BLACK) (3' DASH @ 9' SKIP) (GROOVED)

PAVEMENT MARKING LEGEND

17. PREFORMED PLASTIC PAVEMENT MARKING, TYPE D, STANDARD - LINE 4" WHITE (10' DASH @ 30' SKIP) (GROOVED)
18. THERMOPLASTIC PAVEMENT MARKING - LINE 6" WHITE SKIP (2' DASH @ 6' SKIP)
19. THERMOPLASTIC PAVEMENT MARKING - LINE 6" WHITE LANE LINE
20. THERMOPLASTIC PAVEMENT MARKING - LINE 6" WHITE EDGE LINE
21. THERMOPLASTIC PAVEMENT MARKING - LINE 6" YELLOW EDGE LINE

N

0 50 100
SCALE IN FEET

N. McCONNOR PRKY

GOLF ROAD

RESURFACING OMMISION
STA 109+80 - STA 112+01

MATCH LINE STA. 103+00

MATCH LINE STA. 118+00

SB FAI 290 (IL. 53)

NB FAI 290 (IL. 53)

HMA SHOULDER

OVERHEAD SIGN

VAR.

HMA

CONC.

REMOVE AND REERECT STEEL PLATE BEAM GUARDRAIL, TYPE D

PROPOSED MAINLINE RESURFACING
PROPOSED HOT-MIX ASPHALT SURFACE REMOVAL, 4"
PROPOSED POLYMERIZED HOT-MIX ASPHALT SURFACE COURSE, STONE MATRIX ASPHALT, 12.5, MIX "F", N80, 2"
PROPOSED POLYMERIZED HOT-MIX ASPHALT BINDER COURSE, STONE MATRIX ASPHALT, 12.5, N80, 2"

PROPOSED SHOULDER RESURFACING (MAINLINE)
PROPOSED HOT-MIX ASPHALT SURFACE REMOVAL, 3-3/4"
PROPOSED HOT-MIX ASPHALT SURFACE COURSE, IL-9.5, MIX "D", N70, 1-1/2"
PROPOSED HOT-MIX ASPHALT BINDER COURSE, IL-19.0, N70, 2-1/4"

GRADING AND SHAPING SHOULDERS
AGGREGATE WEDGE, TYPE B

PROPOSED E. FRONTAGE RD RESURFACING
PROPOSED HOT-MIX ASPHALT SURFACE REMOVAL, 2-1/2"
PROPOSED POLYMERIZED HOT-MIX ASPHALT SURFACE COURSE, STONE MATRIX ASPHALT, 9.5, MIX "F", N80, 1-3/4"
PROPOSED POLYMERIZED HOT-MIX ASPHALT BINDER COURSE, IL-4.75, N50, 3/4"

E. FRONTAGE RD.

REFER TO DETAIL TC-12b FOR RRPM PLACEMENT WITHIN THE 3'-9' SKIP LINE (ONE SIDED/CRYSTAL LENSE /36' C-C

LIMIT OF RESURFACING (AT JOINT)

THE REMOVAL AND REPLACEMENT OF CHAIN LINK FENCE ALONG THE FRONTAGE ROADS WILL BE DETERMINED BY THE ENGINEER.

IMEG
401 E. STATE ST. 4th Floor ROCKFORD, IL 61104
PH: 815.965.6400 www.imegcorp.com

USER NAME = Marc.A.Personette	DESIGNED - Patrick Pauser	REVISED -
	DRAWN - Patrick Pauser	REVISED -
	CHECKED - Brad Lange	REVISED -
PLOT DATE = 4/29/2026	DATE - 4/29/2026	REVISED -

STATE OF ILLINOIS
DEPARTMENT OF TRANSPORTATION

I-290/IL 53 HMA RESURFACING AND BRIDGE REPAIRS
ROADWAY AND PAVEMENT MARKING PLAN

SCALE: 1" = 50' | SHEET 4 OF 7 SHEETS | STA. 103+00.00 | TO STA. 118+00.00

F.A.I RTE.	SECTION	COUNTY	TOTAL SHEETS	SHEET NO.
290	(0404-316-HB) BR 24	COOK	276	63
		CONTRACT NO. 62W99		
		ILLINOIS	FED. AID PROJECT	

MODEL: Plan 4 [Sheet]
FILE NAME: W:\2400\1656.05\IDOT Dist 1 IL 290 Mill and Overlay\CADD Data\Sheets\D1_IL53_sht_Plan_RdwyPMK.dgn

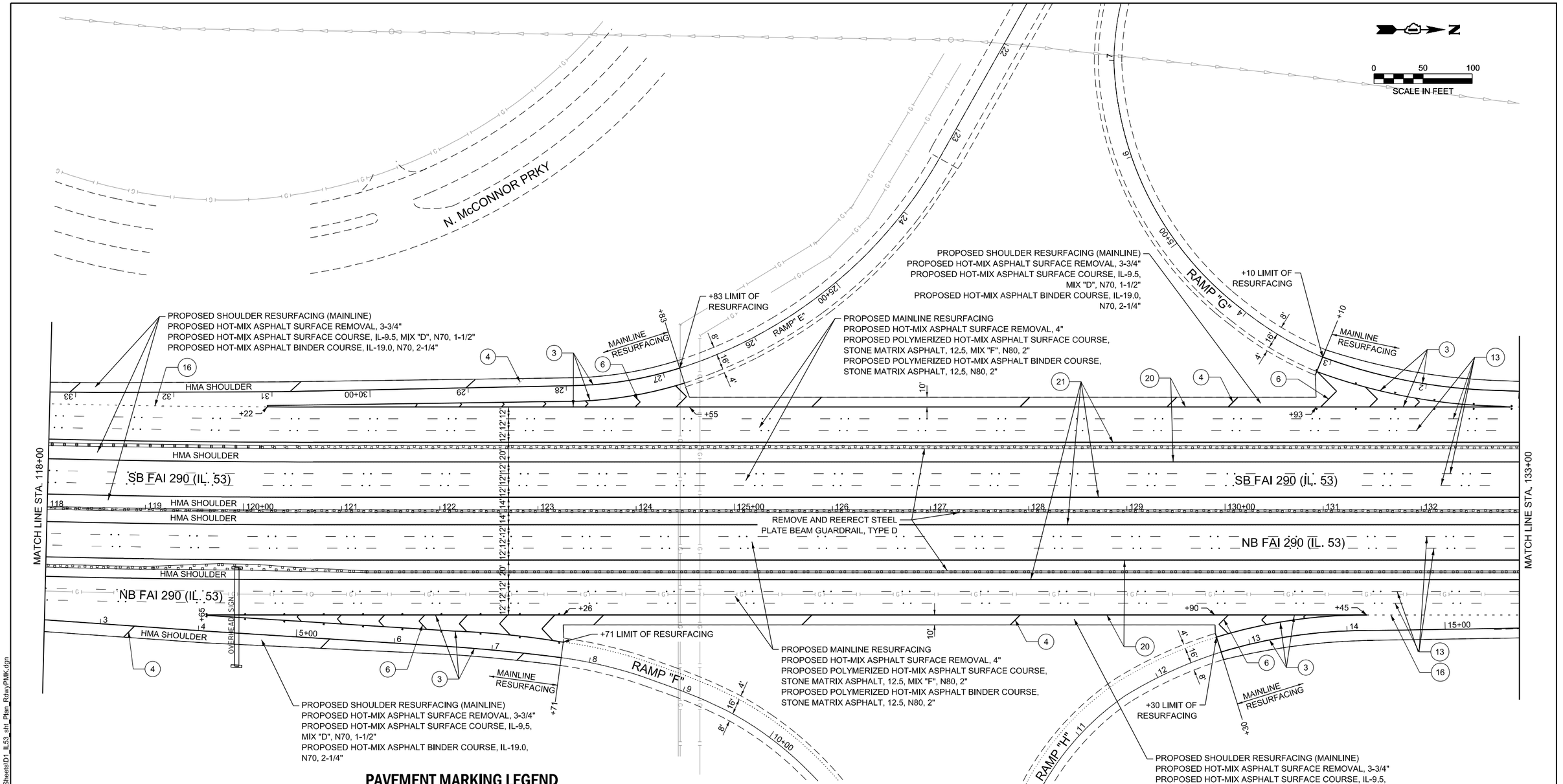

PAVEMENT MARKING LEGEND

1. THERMOPLASTIC PAVEMENT MARKING - LINE 4" YELLOW EDGE LINE
2. THERMOPLASTIC PAVEMENT MARKING - LINE 4" WHITE EDGE LINE
3. THERMOPLASTIC PAVEMENT MARKING - LINE 8" WHITE LINE (LANE \ GORE)
4. THERMOPLASTIC PAVEMENT MARKING - LINE 12" WHITE DIAGONALS
5. NOT USED
6. THERMOPLASTIC PAVEMENT MARKING - LINE 12" WHITE CHEVRON (TYP.)
7. THERMOPLASTIC PAVEMENT MARKING - LINE 8" WHITE DOTTED (3' DASH @ 9' SKIP)
8. THERMOPLASTIC PAVEMENT MARKING - LINE 4" WHITE SKIP (2' DASH @ 6' SKIP)
9. THERMOPLASTIC PAVEMENT MARKING - LINE 12" YELLOW DIAGONALS
10. THERMOPLASTIC PAVEMENT MARKING - LINE 24" WHITE STOP BAR
11. THERMOPLASTIC PAVEMENT MARKING - LETTERS & SYMBOLS
12. MODIFIED URETHANE PAVEMENT MARKING - LINE 6" EDGE LINE (ON PCC PAVEMENT ONLY)
13. CONTRAST PREFORMED PLASTIC PAVEMENT MARKING, TYPE D, STANDARD - LINE 9" (1.5" BLACK, 6" WHITE, 1.5" BLACK) (10' DASH @ 30' SKIP) (GROOVED)
14. CONTRAST PREFORMED PLASTIC PAVEMENT MARKING, TYPE D, STANDARD - LINE 7" (1.5" BLACK, 4" WHITE, 1.5" BLACK) (2' DASH @ 6' SKIP) (GROOVED)
15. MODIFIED URETHANE PAVEMENT MARKING - LINE 8" (ON PCC PAVEMENT ONLY)
16. CONTRAST PREFORMED PLASTIC PAVEMENT MARKING, TYPE D, STANDARD - LINE 11" (1.5" BLACK, 8" WHITE, 1.5" BLACK) (3' DASH @ 9' SKIP) (GROOVED)
17. PREFORMED PLASTIC PAVEMENT MARKING, TYPE D, STANDARD - LINE 4" WHITE (10' DASH @ 30' SKIP) (GROOVED)
18. THERMOPLASTIC PAVEMENT MARKING - LINE 6" WHITE SKIP (2' DASH @ 6' SKIP)
19. THERMOPLASTIC PAVEMENT MARKING - LINE 6" WHITE LANE LINE
20. THERMOPLASTIC PAVEMENT MARKING - LINE 6" WHITE EDGE LINE
21. THERMOPLASTIC PAVEMENT MARKING - LINE 6" YELLOW EDGE LINE

IMEG
401 E. STATE ST. 4th Floor ROCKFORD, IL 61104
PH: 815.965.6400 www.imegcorp.com

USER NAME = Marc.A.Personette	DESIGNED - Patrick Pauser	REVISED -
	DRAWN - Patrick Pauser	REVISED -
	CHECKED - Brad Lange	REVISED -
PLOT DATE = 4/29/2026	DATE - 4/29/2026	REVISED -

STATE OF ILLINOIS
DEPARTMENT OF TRANSPORTATION

I-290/IL 53 HMA RESURFACING AND BRIDGE REPAIRS
ROADWAY AND PAVEMENT MARKING PLAN

SCALE: 1" = 50' | SHEET 5 OF 7 SHEETS | STA. 118+00.00 | TO STA. 133+00.00

F.A.I RTE.	SECTION	COUNTY	TOTAL SHEETS	SHEET NO.
290	(0404-316-HB) BR 24	COOK	276	64
		CONTRACT NO. 62W99		
	ILLINOIS FED. AID PROJECT			

MODEL: Plan 5 [Sheet]
FILE NAME: W:\24001656.05\IDOT Dist 1 IL 290 Mill and Overlay\CADD Data\Sheets\D1_IL53_sht_Plan_RdwyPMK.dgn

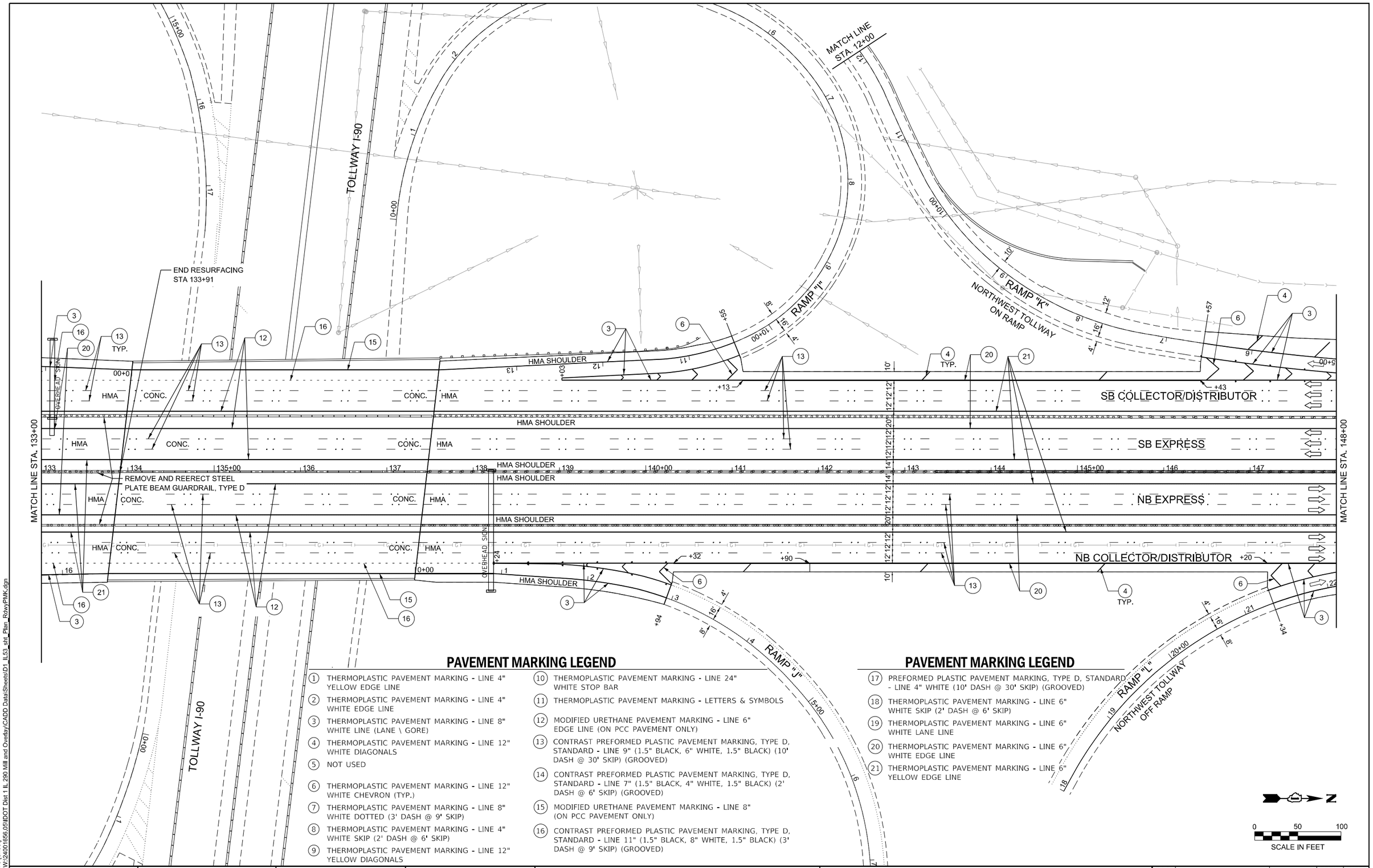

PAVEMENT MARKING LEGEND

1. THERMOPLASTIC PAVEMENT MARKING - LINE 4" YELLOW EDGE LINE
2. THERMOPLASTIC PAVEMENT MARKING - LINE 4" WHITE EDGE LINE
3. THERMOPLASTIC PAVEMENT MARKING - LINE 8" WHITE LINE (LANE \ GORE)
4. THERMOPLASTIC PAVEMENT MARKING - LINE 12" WHITE DIAGONALS
5. NOT USED
6. THERMOPLASTIC PAVEMENT MARKING - LINE 12" WHITE CHEVRON (TYP.)
7. THERMOPLASTIC PAVEMENT MARKING - LINE 8" WHITE DOTTED (3' DASH @ 9' SKIP)
8. THERMOPLASTIC PAVEMENT MARKING - LINE 4" WHITE SKIP (2' DASH @ 6' SKIP)
9. THERMOPLASTIC PAVEMENT MARKING - LINE 12" YELLOW DIAGONALS
10. THERMOPLASTIC PAVEMENT MARKING - LINE 24" WHITE STOP BAR
11. THERMOPLASTIC PAVEMENT MARKING - LETTERS & SYMBOLS
12. MODIFIED URETHANE PAVEMENT MARKING - LINE 6" EDGE LINE (ON PCC PAVEMENT ONLY)
13. CONTRAST PREFORMED PLASTIC PAVEMENT MARKING, TYPE D, STANDARD - LINE 9" (1.5" BLACK, 6" WHITE, 1.5" BLACK) (10' DASH @ 30' SKIP) (GROOVED)
14. CONTRAST PREFORMED PLASTIC PAVEMENT MARKING, TYPE D, STANDARD - LINE 7" (1.5" BLACK, 4" WHITE, 1.5" BLACK) (2' DASH @ 6' SKIP) (GROOVED)
15. MODIFIED URETHANE PAVEMENT MARKING - LINE 8" (ON PCC PAVEMENT ONLY)
16. CONTRAST PREFORMED PLASTIC PAVEMENT MARKING, TYPE D, STANDARD - LINE 11" (1.5" BLACK, 8" WHITE, 1.5" BLACK) (3' DASH @ 9' SKIP) (GROOVED)

PAVEMENT MARKING LEGEND

17. PREFORMED PLASTIC PAVEMENT MARKING, TYPE D, STANDARD - LINE 4" WHITE (10' DASH @ 30' SKIP) (GROOVED)
18. THERMOPLASTIC PAVEMENT MARKING - LINE 6" WHITE SKIP (2' DASH @ 6' SKIP)
19. THERMOPLASTIC PAVEMENT MARKING - LINE 6" WHITE LANE LINE
20. THERMOPLASTIC PAVEMENT MARKING - LINE 6" WHITE EDGE LINE
21. THERMOPLASTIC PAVEMENT MARKING - LINE 6" YELLOW EDGE LINE

IMEG
401 E. STATE ST. 4th Floor
ROCKFORD, IL 61104
PH: 815.965.6400
www.imegcorp.com

USER NAME = Marc.A.Personette	DESIGNED - Patrick Pauser	REVISED -	
	DRAWN - Patrick Pauser	REVISED -	
	CHECKED - Brad Lange	REVISED -	
PLOT DATE = 4/29/2026	DATE - 4/29/2026	REVISED -	

STATE OF ILLINOIS
DEPARTMENT OF TRANSPORTATION

I-290/IL 53 HMA RESURFACING AND BRIDGE REPAIRS
ROADWAY AND PAVEMENT MARKING PLAN

SCALE: 1" = 50' | SHEET 6 OF 7 SHEETS | STA. 133+00.00 | TO STA. 148+00.00

F.A.I RTE.	SECTION	COUNTY	TOTAL SHEETS	SHEET NO.
290	(0404-316-HB) BR 24	COOK	276	65
		CONTRACT NO. 62W99		
	ILLINOIS FED. AID PROJECT			

MODEL: Plan 6 [Sheet]
FILE NAME: W:\2400\1656.05\IDOT Dist 1 IL 290 Mill and Overlay\CADD Data\Sheets\D1_IL53_sht_Plan_RdwyPMrk.dgn

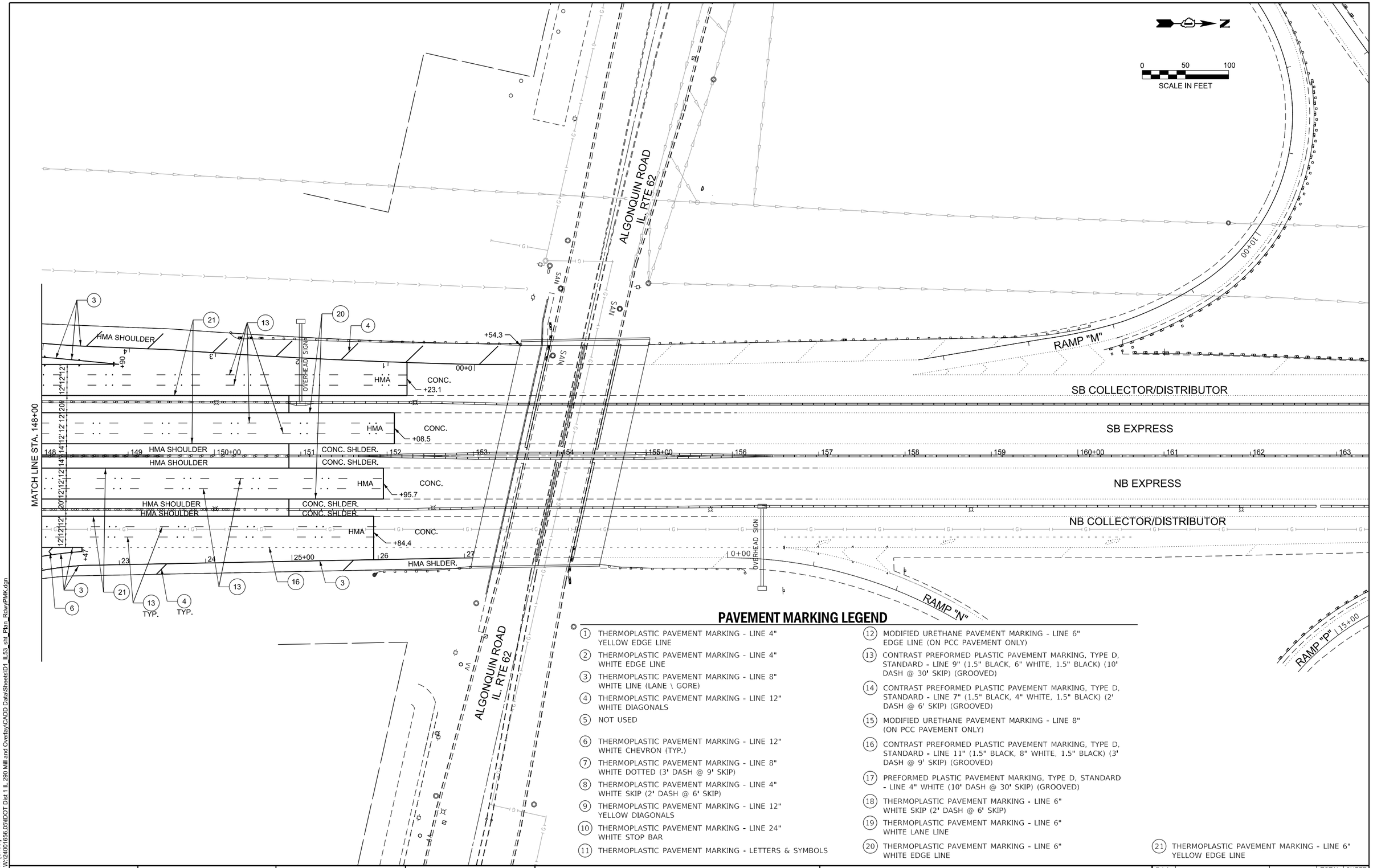

PAVEMENT MARKING LEGEND

1. THERMOPLASTIC PAVEMENT MARKING - LINE 4" YELLOW EDGE LINE
2. THERMOPLASTIC PAVEMENT MARKING - LINE 4" WHITE EDGE LINE
3. THERMOPLASTIC PAVEMENT MARKING - LINE 8" WHITE LINE (LANE \ GORE)
4. THERMOPLASTIC PAVEMENT MARKING - LINE 12" WHITE DIAGONALS
5. NOT USED
6. THERMOPLASTIC PAVEMENT MARKING - LINE 12" WHITE CHEVRON (TYP.)
7. THERMOPLASTIC PAVEMENT MARKING - LINE 8" WHITE DOTTED (3' DASH @ 9' SKIP)
8. THERMOPLASTIC PAVEMENT MARKING - LINE 4" WHITE SKIP (2' DASH @ 6' SKIP)
9. THERMOPLASTIC PAVEMENT MARKING - LINE 12" YELLOW DIAGONALS
10. THERMOPLASTIC PAVEMENT MARKING - LINE 24" WHITE STOP BAR
11. THERMOPLASTIC PAVEMENT MARKING - LETTERS & SYMBOLS
12. MODIFIED URETHANE PAVEMENT MARKING - LINE 6" EDGE LINE (ON PCC PAVEMENT ONLY)
13. CONTRAST PREFORMED PLASTIC PAVEMENT MARKING, TYPE D, STANDARD - LINE 9" (1.5" BLACK, 6" WHITE, 1.5" BLACK) (10' DASH @ 30' SKIP) (GROOVED)
14. CONTRAST PREFORMED PLASTIC PAVEMENT MARKING, TYPE D, STANDARD - LINE 7" (1.5" BLACK, 4" WHITE, 1.5" BLACK) (2' DASH @ 6' SKIP) (GROOVED)
15. MODIFIED URETHANE PAVEMENT MARKING - LINE 8" (ON PCC PAVEMENT ONLY)
16. CONTRAST PREFORMED PLASTIC PAVEMENT MARKING, TYPE D, STANDARD - LINE 11" (1.5" BLACK, 8" WHITE, 1.5" BLACK) (3' DASH @ 9' SKIP) (GROOVED)
17. PREFORMED PLASTIC PAVEMENT MARKING, TYPE D, STANDARD - LINE 4" WHITE (10' DASH @ 30' SKIP) (GROOVED)
18. THERMOPLASTIC PAVEMENT MARKING - LINE 6" WHITE SKIP (2' DASH @ 6' SKIP)
19. THERMOPLASTIC PAVEMENT MARKING - LINE 6" WHITE LANE LINE
20. THERMOPLASTIC PAVEMENT MARKING - LINE 6" WHITE EDGE LINE
21. THERMOPLASTIC PAVEMENT MARKING - LINE 6" YELLOW EDGE LINE

IMEG
401 E. STATE ST. 4th Floor
ROCKFORD, IL 61104
PH: 815.965.6400
www.imegcorp.com

USER NAME = Marc.A.Personette	DESIGNED - Patrick Pauser	REVISED -
	DRAWN - Patrick Pauser	REVISED -
	CHECKED - Brad Lange	REVISED -
PLOT DATE = 4/29/2026	DATE - 4/29/2026	REVISED -

STATE OF ILLINOIS
DEPARTMENT OF TRANSPORTATION

I-290/IL 53 HMA RESURFACING AND BRIDGE REPAIRS
ROADWAY AND PAVEMENT MARKING PLAN

SCALE: 1" = 50' | SHEET 7 OF 7 SHEETS | STA. 148+00.00 | TO STA. 163+00.00

F.A.I RTE.	SECTION	COUNTY	TOTAL SHEETS	SHEET NO.
290	(0404-316-HB) BR 24	COOK	276	66
		CONTRACT NO. 62W99		
	ILLINOIS FED. AID PROJECT			

MODEL: Plan 7 [Sheet]
FILE NAME: W:\24001656.05\IDOT Dist 1 IL 290 Mill and Overlay\CADD Data\Sheets\D1_IL53_stnt_Plan_RdwyPMK.dgn

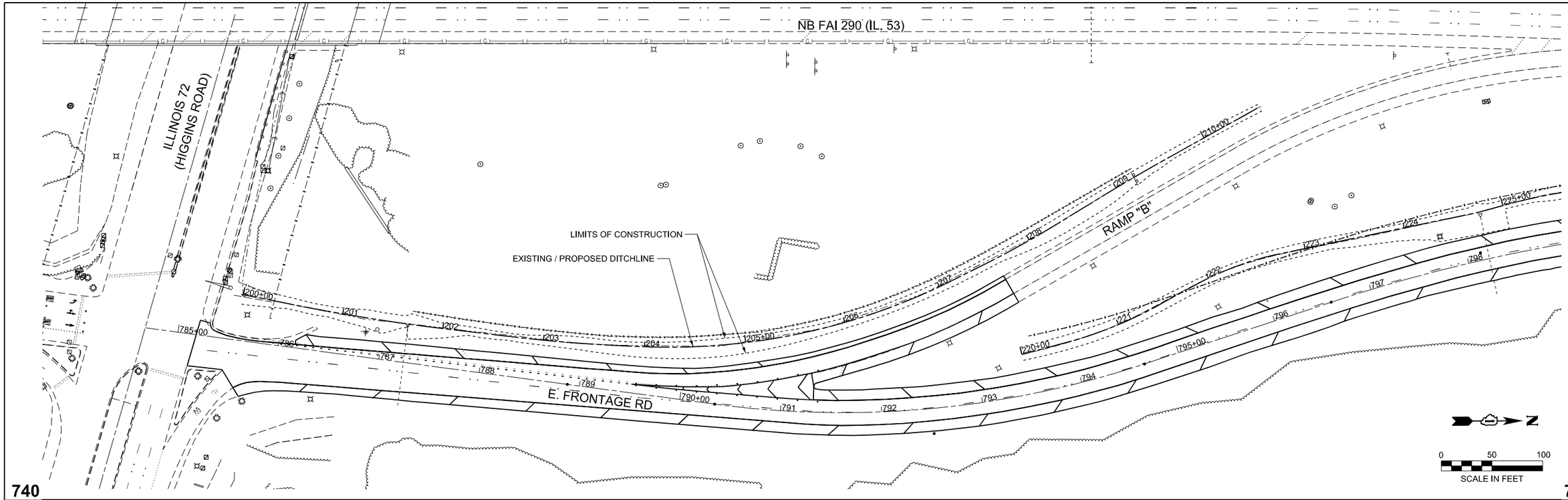

MODEL: NB Frontage Ditching - NB-Plan 1 [Sheet]
FILE NAME: W:\24001656.05\IDOT Dist 1 IL 290 Mill and Overlay\CADD Data\SheetsID1_IL53_sht_PlanProf_DitchGrading.dgn

IMEG
401 E. STATE ST. 4th Floor
ROCKFORD, IL 61104
PH: 815.965.6400
www.imegcorp.com

USER NAME = Marc.A.Personette	DESIGNED - Marc Personette	REVISED -	
	DRAWN - Marc Personette	REVISED -	
	CHECKED - Brad Lange	REVISED -	
PLOT DATE = 3/17/2026	DATE - 3/17/2026	REVISED -	

STATE OF ILLINOIS
DEPARTMENT OF TRANSPORTATION

I-290/IL 53 HMA RESURFACING AND BRIDGE REPAIRS
PLAN & PROFILE - DITCH RE-GRADING

SCALE: 1"=50' | SHEET 1 OF 9 SHEETS | STA. 198+97.66 | TO STA. 211+74.18

F.A.I. RTE.	SECTION	COUNTY	TOTAL SHEETS	SHEET NO.
290	(0404-316-HB) BR 24	COOK	276	67
		CONTRACT NO. 62W99		
		ILLINOIS	FED. AID PROJECT	

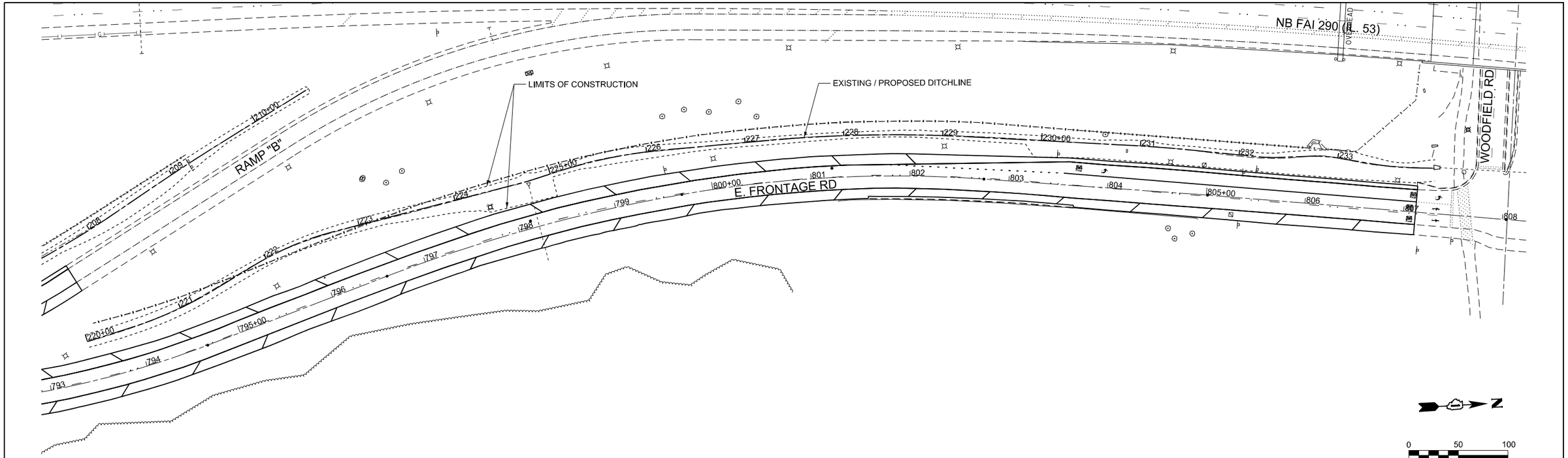

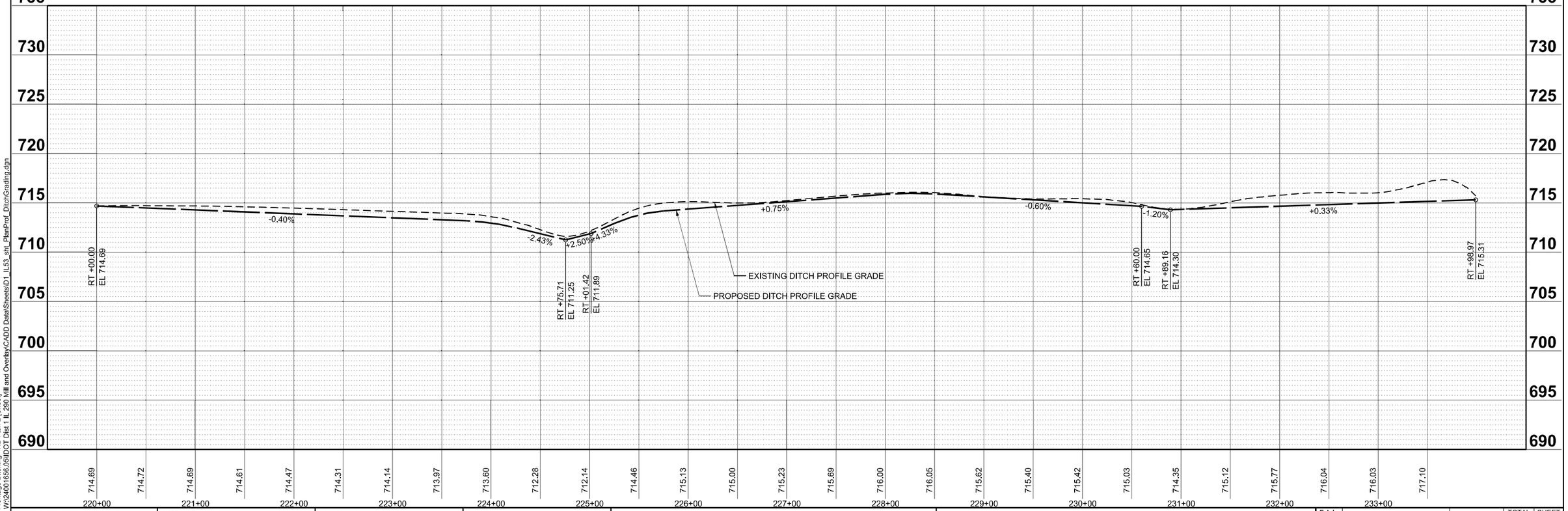

MODEL: NB Frontage Ditching - NB-Plan 2 [Sheet]
FILE NAME: W:\24001656.05\IDOT Dist 1 IL 290 Mill and Overlay\CADD Data\Sheets\D1_IL53_sht_PlanProf_DitchGrading.dgn

IMEG
401 E. STATE ST. 4th Floor
ROCKFORD, IL 61104
PH: 815.965.6400
www.imegcorp.com

USER NAME = Marc.A.Personette	DESIGNED - Marc Personette	REVISED -
	DRAWN - Marc Personette	REVISED -
	CHECKED - Brad Lange	REVISED -
PLOT DATE = 3/17/2026	DATE - 3/17/2026	REVISED -

STATE OF ILLINOIS
DEPARTMENT OF TRANSPORTATION

I-290/IL 53 HMA RESURFACING AND BRIDGE REPAIRS
PLAN & PROFILE - DITCH RE-GRADING

SCALE: 1"=50' | SHEET 2 OF 9 SHEETS | STA. 220+51.19 | TO STA. 233+91.15

F.A.I. RTE.	SECTION	COUNTY	TOTAL SHEETS	SHEET NO.
290	(0404-316-HB) BR 24	COOK	276	68
		CONTRACT NO. 62W99		
		ILLINOIS	FED. AID PROJECT	

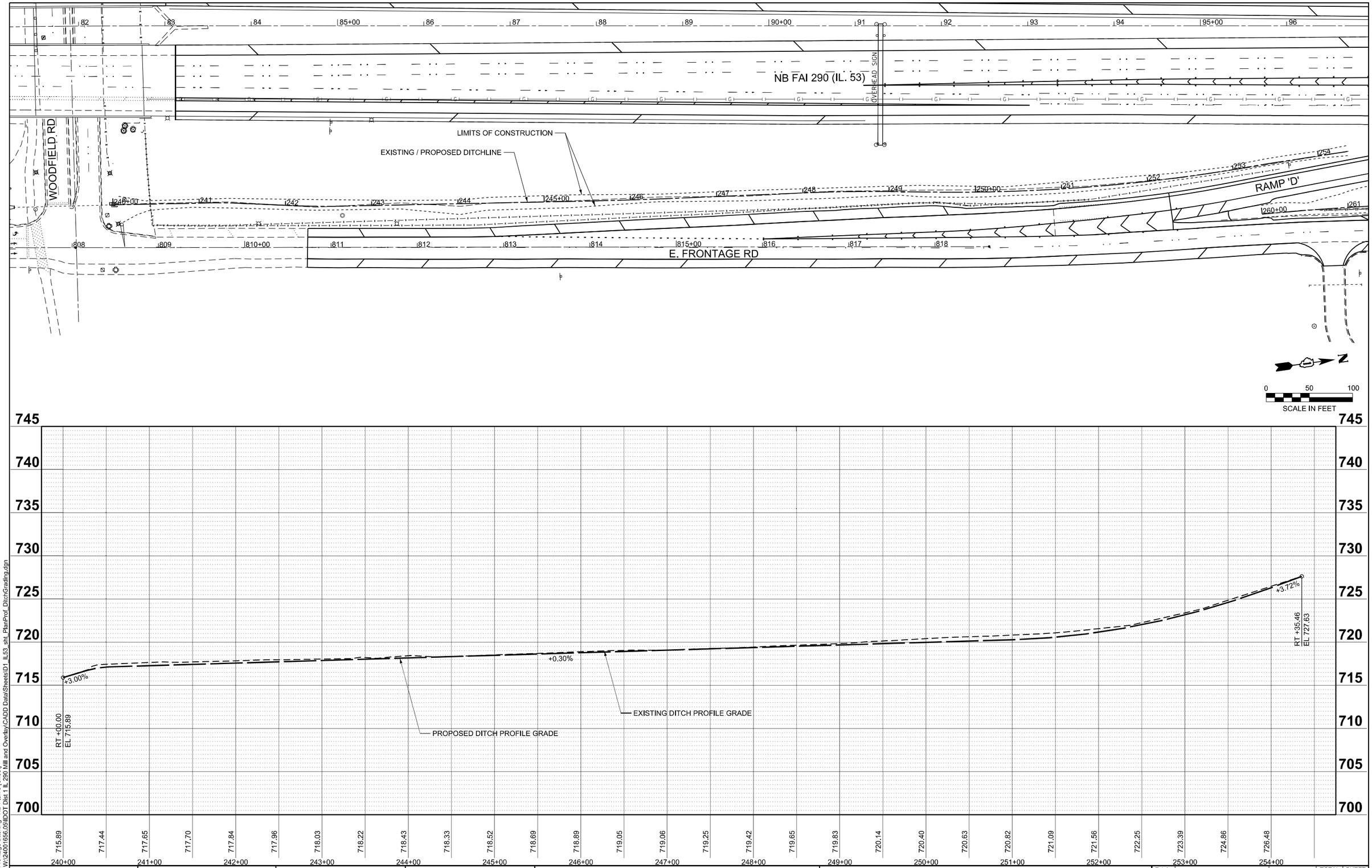

MODEL: NB Frontage Ditching - NB-Plan 3 [Sheet]
FILE NAME: W:\24001656.05\IDOT Dist 1 IL 290 Mill and Overlay\CADD Data\Sheets\D1_IL53_sht_PlanProf_DitchGrading.dgn

IMEG
401 E. STATE ST. 4th Floor
ROCKFORD, IL 61104
PH: 815.965.6400
www.imegcorp.com

USER NAME = Marc.A.Personette	DESIGNED - Marc Personette	REVISED -	
	DRAWN - Marc Personette	REVISED -	
	CHECKED - Brad Lange	REVISED -	
PLOT DATE = 3/17/2026	DATE - 3/17/2026	REVISED -	

STATE OF ILLINOIS
DEPARTMENT OF TRANSPORTATION

I-290/IL 53 HMA RESURFACING AND BRIDGE REPAIRS
PLAN & PROFILE - DITCH RE-GRADING

SCALE: 1"=50' | SHEET 3 OF 9 SHEETS | STA. 239+80.10 | TO STA. 253+58.87

F.A.I. RTE.	SECTION	COUNTY	TOTAL SHEETS	SHEET NO.
290	(0404-316-HB) BR 24	COOK	276	69
		CONTRACT NO. 62W99		
		ILLINOIS	FED. AID PROJECT	

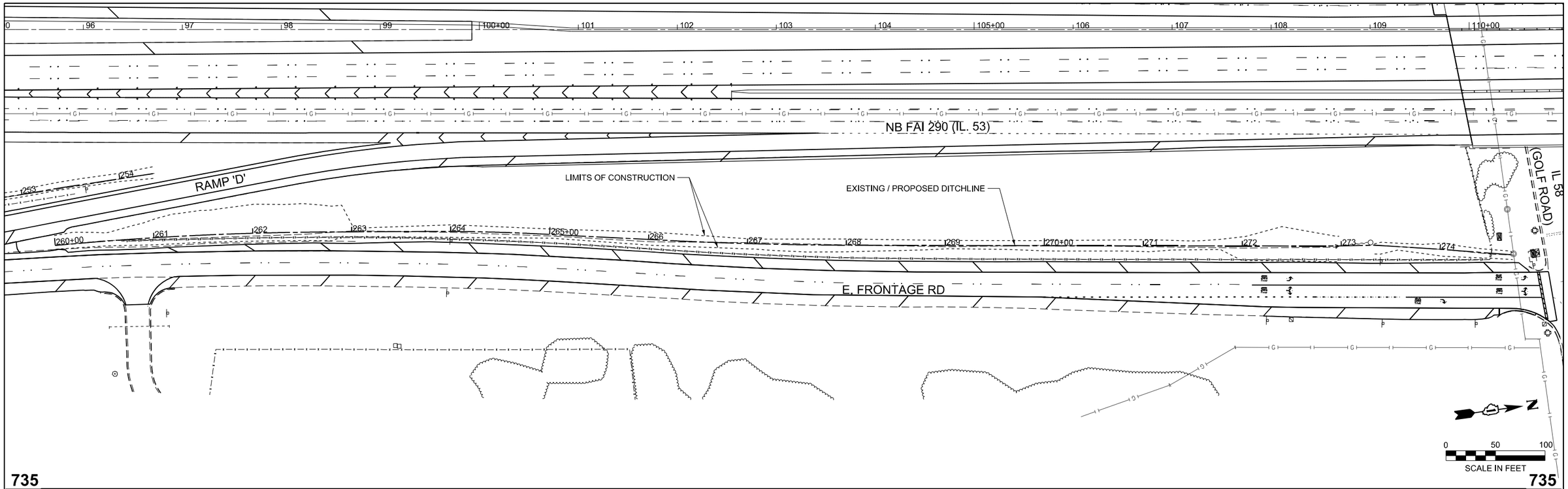

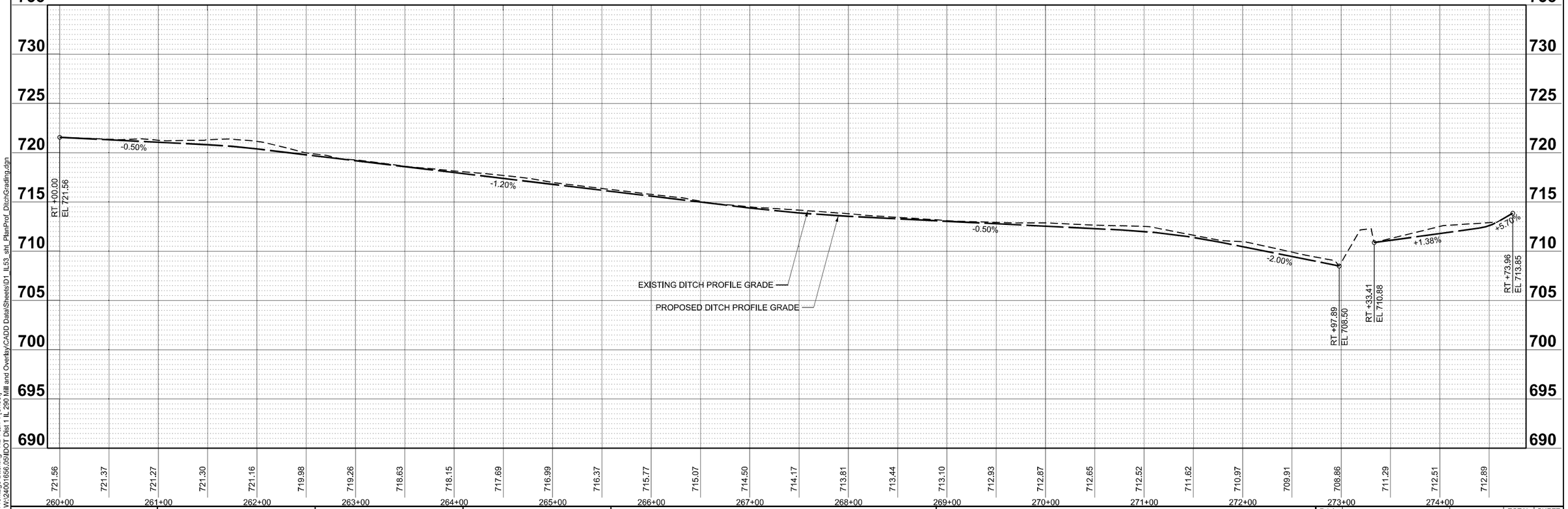

MODEL: NB Frontage Ditching - NB-Plan 4 [Sheet]
FILE NAME: W:\24001656.05\IDOT Dist 1 IL 290 Mill and Over\by\CADD Data\Sheets\D1_IL53_sht_PlanProf_DitchGrading.dgn

IMEG
401 E. STATE ST. 4th Floor
ROCKFORD, IL 61104
PH: 815.965.6400
www.imegcorp.com

USER NAME = Marc.A.Personette	DESIGNED - Marc Personette	REVISED -
	DRAWN - Marc Personette	REVISED -
	CHECKED - Brad Lange	REVISED -
PLOT DATE = 3/17/2026	DATE - 3/17/2026	REVISED -

STATE OF ILLINOIS
DEPARTMENT OF TRANSPORTATION

I-290/IL 53 HMA RESURFACING AND BRIDGE REPAIRS
PLAN & PROFILE - DITCH RE-GRADING

SCALE: 1"=50' | SHEET 4 OF 9 SHEETS | STA. 260+48.45 | TO STA. 274+24.89

F.A.I. RTE.	SECTION	COUNTY	TOTAL SHEETS	SHEET NO.
290	(0404-316-HB) BR 24	COOK	276	70
		CONTRACT NO. 62W99		
		ILLINOIS	FED. AID PROJECT	

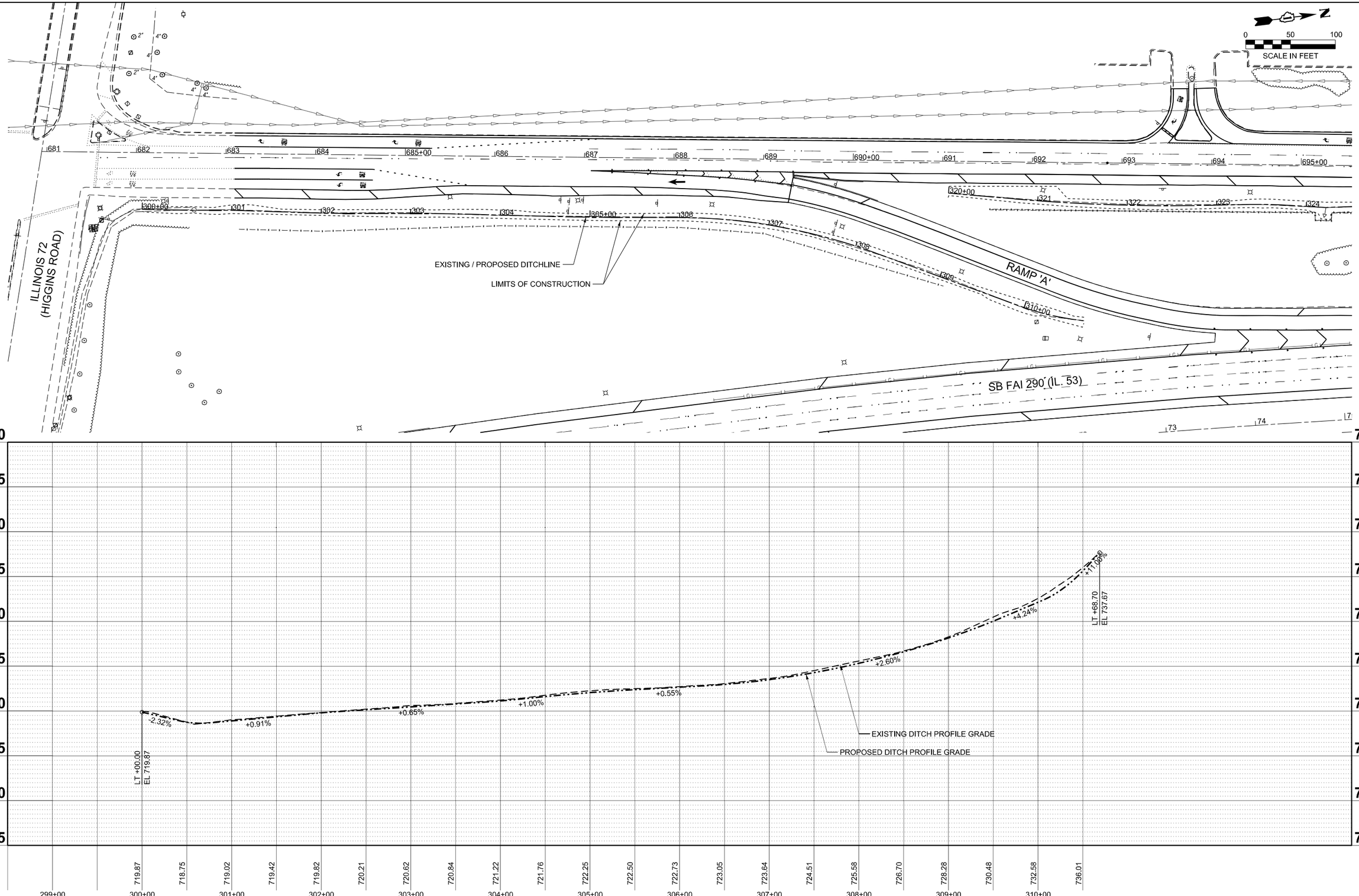

MODEL: SB Frontage Ditching - Plan 1 [Sheet]
FILE NAME: W:\24001656.05\IDOT Dist 1 IL 290 Mill and Overlay\CADD Data\Sheets\D1_IL53_sht_PlanProf_DitchGrading.dgn

IMEG
401 E. STATE ST. 4th Floor
ROCKFORD, IL 61104
PH: 815.965.6400
www.imegcorp.com

USER NAME = Marc.A.Personette	DESIGNED - Marc Personette	REVISED -
	DRAWN - Marc Personette	REVISED -
	CHECKED - Brad Lange	REVISED -
PLOT DATE = 3/17/2026	DATE - 3/17/2026	REVISED -

STATE OF ILLINOIS
DEPARTMENT OF TRANSPORTATION

I-290/IL 53 HMA RESURFACING AND BRIDGE REPAIRS
PLAN & PROFILE - DITCH RE-GRADING

SCALE: 1"=50' | SHEET 5 OF 9 SHEETS | STA. 298+50.27 | TO STA. 313+70.42

F.A.I. RTE.	SECTION	COUNTY	TOTAL SHEETS	SHEET NO.
290	(0404-316-HB) BR 24	COOK	276	71
		CONTRACT NO. 62W99		
		ILLINOIS	FED. AID PROJECT	

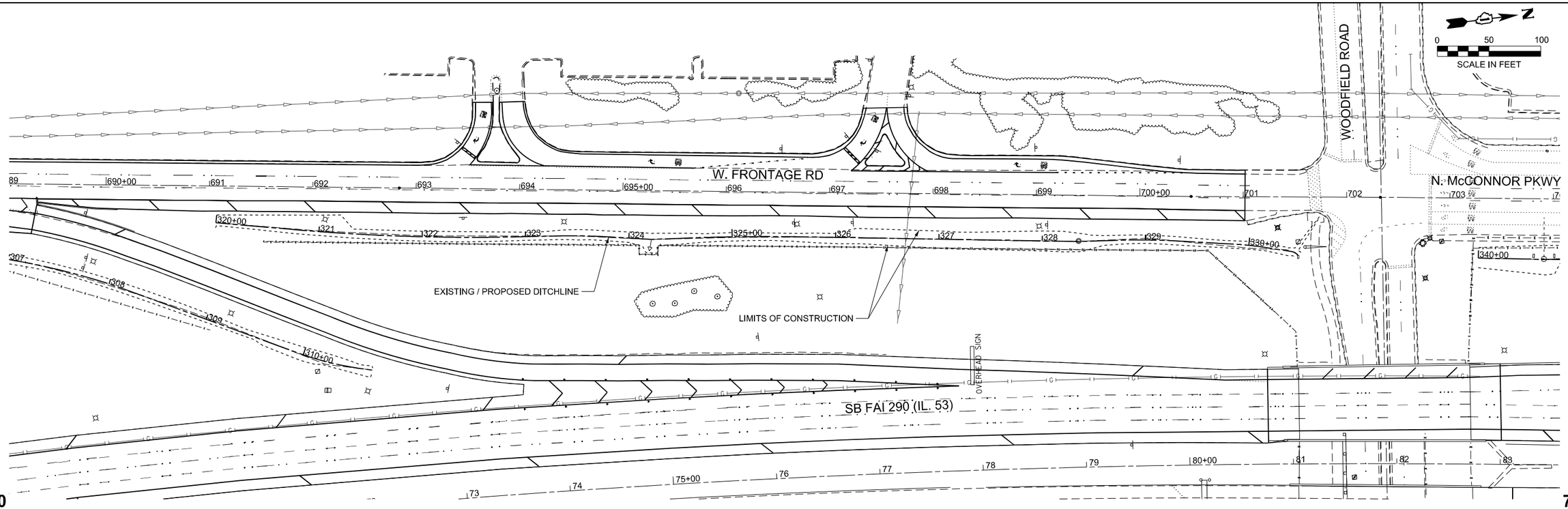

MODEL: SB Frontage Ditching - Plan 2 [Sheet]
FILE NAME: W:\24001656.05\IDOT Dist 1 IL 290 Mill and Overlay\CADD Data\Sheets\D1_IL53_sht_PlanProf_DitchGrading.dgn

IMEG
401 E. STATE ST. 4th Floor
ROCKFORD, IL 61104
PH: 815.965.6400
www.imegcorp.com

USER NAME = Marc.A.Personette	DESIGNED - Marc Personette	REVISED -	
	DRAWN - Marc Personette	REVISED -	
	CHECKED - Brad Lange	REVISED -	
PLOT DATE = 3/17/2026	DATE - 3/17/2026	REVISED -	

STATE OF ILLINOIS
DEPARTMENT OF TRANSPORTATION

I-290/IL 53 HMA RESURFACING AND BRIDGE REPAIRS
PLAN & PROFILE - DITCH RE-GRADING

SCALE: 1"=50' | SHEET 6 OF 9 SHEETS | STA. 317+99.22 | TO STA. 333+73.14

F.A.I. RTE.	SECTION	COUNTY	TOTAL SHEETS	SHEET NO.
290	(0404-316-HB) BR 24	COOK	276	72
		CONTRACT NO. 62W99		
		ILLINOIS	FED. AID PROJECT	

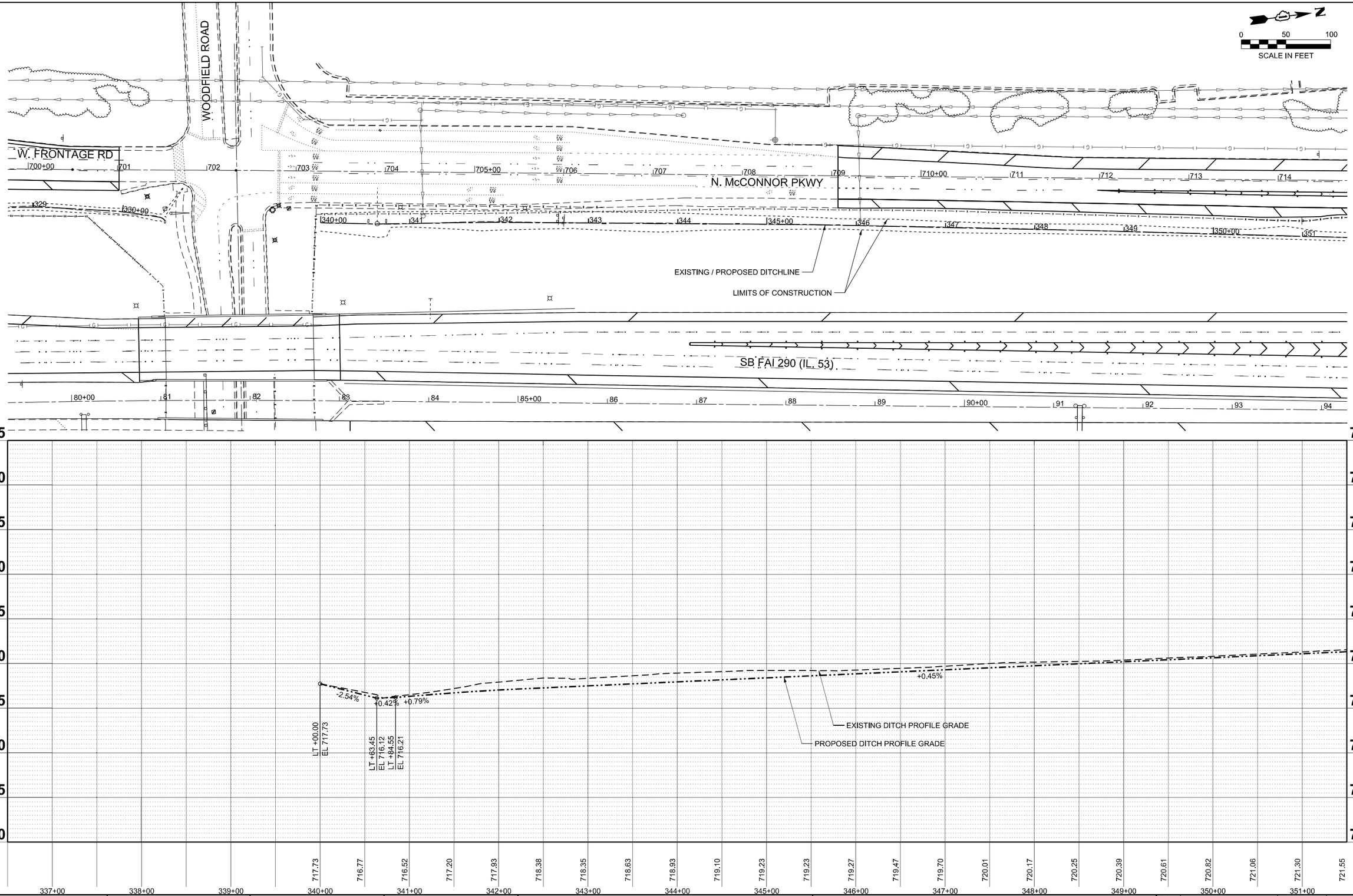

MODEL: SB Frontage Ditching - Plan 3-1 [Sheet]
FILE NAME: W:\24001656.05\IDOT Dist 1 IL 290 Mill and Over\by\CADD Data\Sheets\D1_IL53_sht_PlanProf_DitchGrading.dgn

IMEG
401 E. STATE ST. 4th Floor
ROCKFORD, IL 61104
PH: 815.965.6400
www.imegcorp.com

USER NAME = Marc.A.Personette	DESIGNED - Marc Personette	REVISED -
	DRAWN - Marc Personette	REVISED -
	CHECKED - Brad Lange	REVISED -
PLOT DATE = 3/17/2026	DATE - 3/17/2026	REVISED -

STATE OF ILLINOIS
DEPARTMENT OF TRANSPORTATION

I-290/IL 53 HMA RESURFACING AND BRIDGE REPAIRS
PLAN & PROFILE - DITCH RE-GRADING

SCALE: 1"=50' | SHEET 7 OF 9 SHEETS | STA. 336+49.70 | TO STA. 351+50.00

F.A.I. RTE.	SECTION	COUNTY	TOTAL SHEETS	SHEET NO.
290	(0404-316-HB) BR 24	COOK	276	73
		CONTRACT NO. 62W99		
		ILLINOIS	FED. AID PROJECT	

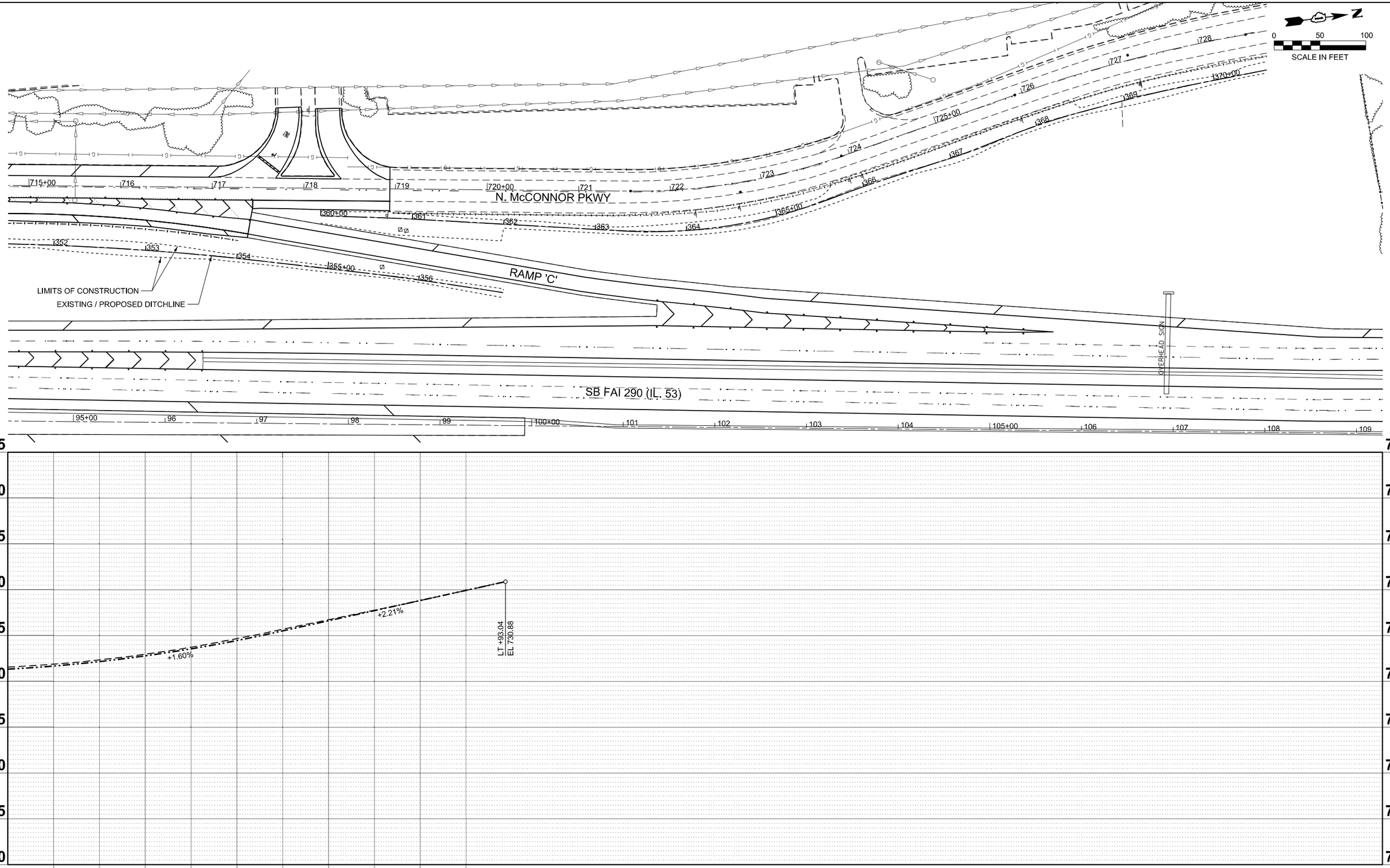

MODEL: SB Frontage Ditching - Plan 3-2 [Sheet]
FILE NAME: W:\24001656.05\IDOT Dist 1 IL 290 Mill and Overlay\CADD Data\SheetsID1_IL53_sht_PlanProf_DitchGrading.dgn

IMEG
401 E. STATE ST. 4th Floor
ROCKFORD, IL 61104
PH: 815.965.6400
www.imegcorp.com

USER NAME = Marc.A.Personette	DESIGNED - Marc Personette	REVISED -
	DRAWN - Marc Personette	REVISED -
	CHECKED - Brad Lange	REVISED -
PLOT DATE = 3/17/2026	DATE - 3/17/2026	REVISED -

STATE OF ILLINOIS
DEPARTMENT OF TRANSPORTATION

I-290/IL 53 HMA RESURFACING AND BRIDGE REPAIRS
PLAN & PROFILE - DITCH RE-GRADING

SCALE: 1"=50' | SHEET 8 OF 9 SHEETS | STA. 351+50.00 | TO STA. 366+64.65

F.A.I. RTE.	SECTION	COUNTY	TOTAL SHEETS	SHEET NO.
290	(0404-316-HB) BR 24	COOK	276	74
		CONTRACT NO. 62W99		
		ILLINOIS	FED. AID PROJECT	

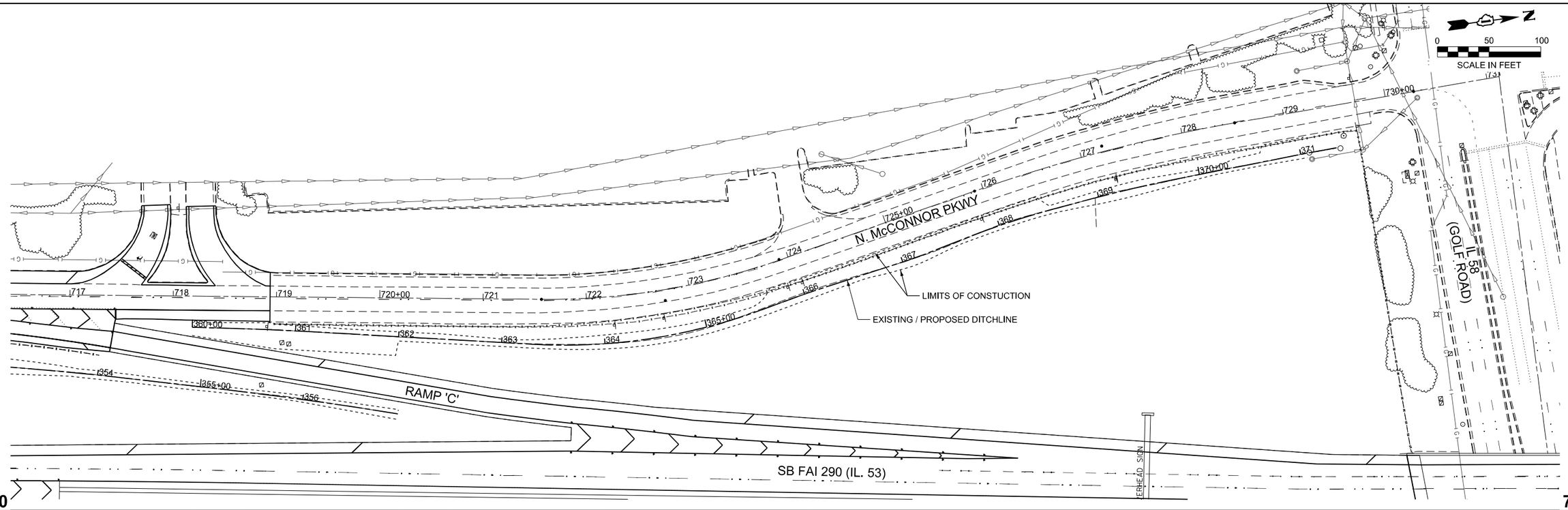

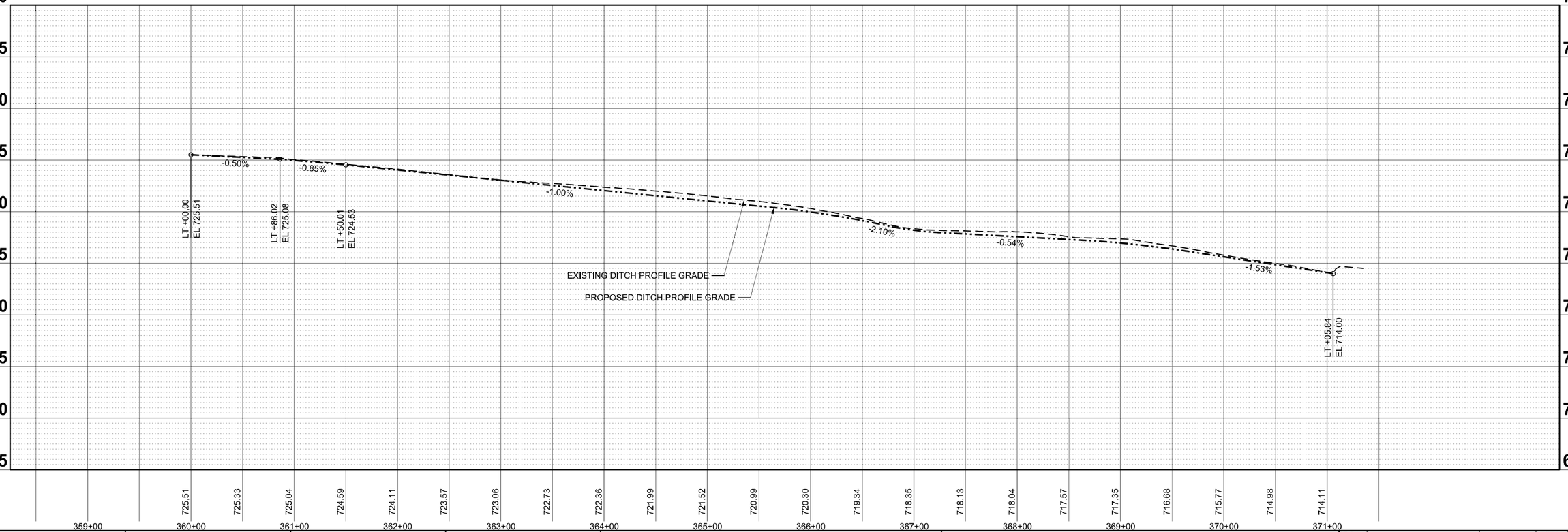

MODEL: SB Frontage Ditching - Plan 4 [Sheet]
FILE NAME: W:\24001656.05\IDOT Dist 1 IL 290 Mill and Overlay\CADD Data\Sheets\D1_IL53_sht_PlanProf_DitchGrading.dgn

IMEG
401 E. STATE ST. 4th Floor
ROCKFORD, IL 61104
PH: 815.965.6400
www.imegcorp.com

USER NAME = Marc.A.Personette	DESIGNED - Marc Personette	REVISED -	
	DRAWN - Marc Personette	REVISED -	
	CHECKED - Brad Lange	REVISED -	
PLOT DATE = 3/17/2026	DATE - 3/17/2026	REVISED -	

STATE OF ILLINOIS
DEPARTMENT OF TRANSPORTATION

I-290/IL 53 HMA RESURFACING AND BRIDGE REPAIRS
PLAN & PROFILE - DITCH RE-GRADING

SCALE: 1"=50' | SHEET 9 OF 9 SHEETS | STA. 358+24.00 | TO STA. 373+55.04

F.A.I. RTE.	SECTION	COUNTY	TOTAL SHEETS	SHEET NO.
290	(0404-316-HB) BR 24	COOK	276	75
		CONTRACT NO. 62W99		
		ILLINOIS	FED. AID PROJECT	

TRAFFIC SIGNAL GENERAL NOTES

1. THE CONTRACTOR SHALL VERIFY THE LOCATIONS OF EXISTING TRAFFIC SIGNAL LOOPS PRIOR TO BEGINNING CONSTRUCTION.

2. THE CONTRACTOR SHALL REPLACE ALL DETECTOR LOOPS IMPACTED BY THE ROADWAY RESURFACING AT:
   A) IL 72 AT W. FRONTAGE ROAD
   B) WOODFIELD ROAD AT E. FRONTAGE ROAD
   c) GOLF ROAD (IL 58) AT E. FRONTAGE ROAD

SUMMARY OF QUANTITIES

DESCRIPTION	UNIT	TOTAL
DETECTOR LOOP REPLACEMENT	FOOT	777
TEMPORARY TRAFFIC SIGNAL TIMING	EACH	5

DATE PLOTTED = 4/30/2026 9:50:02 PM
PEN TABLE = 0021693.05.tbl
PLOT CONFIG = CGI-PDF.pltcfg
MODEL: $MODELNAMES
FILE NAME: pw://ciorba-pw.bentley.com:ciorba-pw-01/Documents/Projects/IL_DOT/D1/0021693.05/CADD Data/Sht/Signals/D162W99-sht-TS101.dgn

CiorbaGroup
8725 W. Higgins Rd, Ste 600, Chicago, IL 60631
P 773.775.4009 | www.ciorba.com

USER NAME = jvondra	DESIGNED - DTJ	REVISED -	
	DRAWN - AM	REVISED -	
PLOT SCALE = 0.16666667 ' / in.	CHECKED - JMV	REVISED -	
PLOT DATE = 3/17/2026	DATE - 3/17/2026	REVISED -	

STATE OF ILLINOIS
DEPARTMENT OF TRANSPORTATION

I-290/IL 53 HMA RESURFACING AND BRIDGE REPAIRS
TRAFFIC SIGNAL GENERAL NOTES AND SUMMARY OF QUANTITIES

SCALE: SHEET OF SHEETS STA. TO STA.

F.A.I. RTE.	SECTION	COUNTY	TOTAL SHEETS	SHEET NO.
290	(0404-316-HB) BR 24	COOK	276	75A

CONTRACT NO. 62W99

ILLINOIS FED. AID PROJECT

TRAFFIC SIGNAL LEGEND

ITEM	EXISTING	PROPOSED
TRAFFIC SIGNAL CABINET		
UNINTERRUPTABLE POWER SUPPLY		
COMMUNICATION CABINET	CC	CC
MASTER CONTROLLER	MC	MC
MASTER MASTER CONTROLLER	MMC	MMC
SERVICE INSTALLATION -(P) POLE MOUNTED	P	P
SERVICE INSTALLATION -(G) GROUND MOUNTED -(GM) GROUND MOUNTED METERED	G GM	G GM
CELLULAR MODEM	CM	CM
TELEPHONE CONNECTION	ET	T
STEEL MAST ARM ASSEMBLY AND POLE		
ALUMINUM MAST ARM ASSEMBLY AND POLE		
STEEL COMBINATION MAST ARM ASSEMBLY AND POLE WITH LUMINAIRE		
SIGNAL POST -(BM) BARREL MOUNTED - TEMPORARY		BM
WOOD POLE		
GUY WIRE		
SIGNAL HEAD		
SIGNAL HEAD WITH BACKPLATE		
SIGNAL HEAD - PROGRAMMABLE	P P	P P
FLASHER INSTALLATION -(FS) SOLAR POWERED	F FS	F FS
PEDESTRIAN SIGNAL HEAD		
PEDESTRIAN PUSH BUTTON -(APS) ACCESSIBLE PEDESTRIAN PUSH BUTTON	APS	APS
RADAR DETECTION SENSOR	R	R
VIDEO DETECTION CAMERA	V	V
RADAR/VIDEO DETECTION ZONE		
PAN, TILT, ZOOM (PTZ) CAMERA	PTZ	PTZ
EMERGENCY VEHICLE LIGHT DETECTOR		
CONFIRMATION BEACON		
WIRELESS INTERCONNECT		
WIRELESS INTERCONNECT RADIO REPEATER	ERR	RR
WIRELESS ACCESS POINT		

ITEM	EXISTING	PROPOSED
HANDHOLE -SQUARE -ROUND		
DOUBLE HANDHOLE		
HEAVY DUTY HANDHOLE -SQUARE -ROUND	H	H
JUNCTION BOX		
RAILROAD CANTILEVER MAST ARM		
RAILROAD FLASHING SIGNAL		
RAILROAD CROSSING GATE		
RAILROAD CROSSBUCK		
RAILROAD CONTROLLER BUNGALOW		
UNDERGROUND CONDUIT (UC), GALVANIZED STEEL		
TEMPORARY SPAN WIRE, TETHER WIRE, AND CABLE		
SYSTEM ITEM	S	SP
INTERSECTION ITEM	I	IP
REMOVAL ITEM		R
RELOCATE ITEM		RL
ABANDON ITEM		A
CONTROLLER CABINET AND FOUNDATION TO BE REMOVED		RCF
MAST ARM POLE AND FOUNDATION TO BE REMOVED		RMF
SIGNAL POST AND FOUNDATION TO BE REMOVED		RPF
DETECTOR LOOP, TYPE I		
PREFORMED DETECTOR LOOP	P	P
WIRELESS DETECTOR SENSOR	W	W

ITEM	EXISTING	PROPOSED
SIGNAL HEAD -(P) PROGRAMMABLE SIGNAL HEAD -(EV) ELONGATED VISORS	R Y G — P EV	R Y G — P EV
SIGNAL HEAD WITH BACKPLATE -(RB) RETROREFLECTIVE BACKPLATE -(P) PROGRAMMABLE SIGNAL HEAD -(EV) ELONGATED VISORS	R Y G — RB P EV	R Y G — RB P EV
PEDESTRIAN SIGNAL HEAD WITH COUNTDOWN TIMER	C D	C D
ILLUMINATED LED SIGN "NO LEFT TURN"/"NO RIGHT TURN"		
ELECTRIC CABLE, SIGNAL, NO. 14 - 2/C, 3/C, 5/C, 7/C	5	5
ELECTRIC CABLE, LEAD-IN, NO. 14, 1 PAIR	1P	1P
SERVICE CABLE, 2/C - NO. 2, NO. 4, NO. 6	2#2 / 2#4 / 2#6	2#2 / 2#4 / 2#6
GROUND CABLE NO. 6 SOLID COPPER (GREEN), 1/C	1#6	1#6
ELECTRIC CABLE, TRACER, NO. 14, 1/C	1	1
ELECTRIC CABLE, RAILROAD, NO. 14, 3/C	RAILROAD NO. 14 3/C — 3	RAILROAD NO. 14 3/C — 3
ELECTRIC CABLE, STREET NAME SIGN NO. 14, 3/C, TYPE SOOW	SOOW — 3	SOOW — 3
VENDOR CABLE	V	V
EMERGENCY VEHICLE PRIORITY LINE SENSOR CABLE, NO. 20, 3/C	3#20	3#20
OUTDOOR RATED NETWORK CABLE	ONC	ONC
FIBER OPTIC CABLE -12F: 12 MULTIMODE -24F: 12 MULTIMODE / 12 SINGLE MODE -36F: 12 MULTIMODE / 24 SINGLE MODE -24SM: 24 SINGLE MODE -48SM: 48 SINGLE MODE	12F / 24F / 36F / 24SM / 48SM	24F / 36F / 24SM / 48SM
GROUND ROD -(C) CONTROLLER -(M) MAST ARM -(P) POST -(S) SERVICE	C M P S	C M P S

103

MODEL: TS-01a [Sheet]
FILE NAME: c:\pw_workjpwidot\lawrence.demanche@illinois.gov\d0951416\TS-01.dgn

USER NAME = lawrence.demanche	DESIGNED - IP	REVISED -
	DRAWN - IP	REVISED -
PLOT SCALE = $SCALE$	CHECKED - NB/KK	REVISED -
PLOT DATE = 12/15/2025	DATE - 10/15/2025	REVISED -

STATE OF ILLINOIS
DEPARTMENT OF TRANSPORTATION

DISTRICT ONE
STANDARD TRAFFIC SIGNAL DESIGN DETAILS

SCALE: NONE | SHEET 1 OF 7 SHEETS | STA. | TO STA.

F.A. RTE.	SECTION	COUNTY	TOTAL SHEETS	SHEET NO.
	TS-01	CONTRACT NO.		
	ILLINOIS FED. AID PROJECT			

DATE PLOTTED = 4/20/2026 9:40:13 PM
PRINTED BY = DOT20185.05.tbl
PLOT CONFIG = CQI-PDF.pltcfg
MODEL: $MODELNAME$
FILE NAME: pw://ciorba-pw.bentley.com:ciorba-pw-01/Documents/Projects/IL_DOTDJ\0021693.05/CADD Data/Shs\Signals\D162W99-sht-TS102.dgn

CiorbaGroup
8725 W. Higgins Rd, Ste 600, Chicago, IL 60631
P 773.775.4009 | www.ciorba.com

USER NAME = ayu	DESIGNED - DTJ	REVISED -
	DRAWN - AM	REVISED -
PLOT SCALE = 0.16666667 ' / In.	CHECKED - JMV	REVISED -
PLOT DATE = 3/17/2026	DATE - 3/17/2026	REVISED -

STATE OF ILLINOIS
DEPARTMENT OF TRANSPORTATION

I-290/IL 53 HMA RESURFACING AND BRIDGE REPAIRS
EXISTING TRAFFIC SIGNAL PLAN (RECORD DRAWING)

SCALE: N.T.S. | SHEET OF SHEETS | STA. | TO STA.

F.A.I. RTE.	SECTION	COUNTY	TOTAL SHEETS	SHEET NO.
290	(0404-316-HB) BR 24	COOK	276	75B
		CONTRACT NO. 62W99		
	ILLINOIS FED. AID PROJECT			

DETECTOR LOOP NOTES:

1. LOOPS SHALL BE SPLICED IN SERIES.
2. SAW-CUTS SHALL BE A MINIMUM WIDTH OF 5/16" AT A DEPTH OF 3". IF IN CONCRETE, THE SAW-CUT DEPTH SHALL BE TO THE TOP OF THE REINFORCEMENT.
3. LOOP CORNERS SHALL BE DRILLED WITH A 2" DIAMETER CORE.
4. EACH PAIR OF LOOP WIRES SHALL BE PLACED IN A SEPARATE EMPTY COILABLE NON-METALLIC CONDUIT FROM THE EDGE OF PAVEMENT TO THE HANDHOLE. SPACING BETWEEN THE HOLES DRILLED IN THE PAVEMENT SHALL NOT BE LESS THAN 6". EMPTY COILABLE NON-METALLIC CONDUIT SHALL BE INCLUDED IN THE COST OF THE DETECTOR LOOP PAY ITEM.
5. THE NUMBER OF LOOP TURNS SHALL BE AS RECOMMENDED BY THE AMPLIFIER MANUFACTURER. ALL ADJACENT SIDES OF THE LOOPS SHALL BE INSTALLED IN SUCH A WAY THAT THE CURRENT FLOW IS IN THE SAME DIRECTION TO REINFORCE ITS MAGNETIC FIELDS FOR SMALL VEHICLE DETECTION.
6. EACH LEAD-IN CABLE SHALL BE IDENTIFIED AND PERMANENTLY TAGGED IN THE HANDHOLE. EACH LEAD-IN CABLE TAG SHALL INDICATE THE LOCATION OF THE LOOP, LOOP NUMBER, LOOP DIRECTION (IN OR OUT), AND LOOP ROTATION (CLOCKWISE/COUNTERCLOCKWISE) IN WATER PROOF INK. SEE DETECTOR LOOP LEAD-IN CABLE TAG DETAIL. THE CONTRACTOR SHALL MARK THE LOOP LOCATIONS ON THE RECORD DRAWINGS AND PRESENT THEM TO THE ENGINEER AFTER THE FINAL INSPECTION.
7. ALL LOOP CABLE SHALL BE FASTENED WITH PLASTIC TIE WRAP TO THE HANDHOLE HOOKS.
8. IN ASPHALT PAVEMENT, LOOPS SHOULD BE PLACED IN THE BINDER AND THE DIVE HOLES MARKED AT THE CURB WITH A SAW-CUT. THE SAW-CUT SHALL BE CUT IN ACCORDANCE WITH LOCAL AND E.P.A. DUST CONTROL REQUIREMENTS. DETECTOR LOOP(S) SHALL NOT BE INSTALLED IN WET CONDITIONS AND THE SAW-CUTS MUST BE FREE OF DEBRIS AND RESIDUE SUCH AS DUST AND WATER WHICH IS TO BE ACHIEVED BY THE USE OF COMPRESSED AIR, WIRE BRUSHING AND HEAT DRYING ACCORDING TO SEALANT MANUFACTURER REQUIREMENTS. THE DETECTOR WIRE SHALL BE HELD IN PLACE BY THE USE OF FORM WEDGES. WEDGES SHALL BE SPACED NO MORE THAN 18" APART.
9. LOOP SPLICES SHALL BE SOLDERED USING A SOLDERING IRON. BLOW TORCHES OR OTHER DEVICES WHICH OXIDIZE COPPER CABLE SHALL NOT BE ALLOWED FOR SOLDERING OPERATIONS.
10. PREFORMED DETECTOR LOOPS SHALL BE USED WHERE NEW CONCRETE PAVEMENT IS PROPOSED. THE INSTALLATION OF PREFORMED LOOPS SHALL BE IN ACCORDANCE WITH THE DISTRICT 1 SPECIFICATIONS OR AS DIRECTED BY THE ENGINEER.

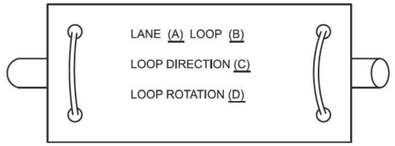

A. LANE 1 IS THE LANE CLOSEST TO THE CENTERLINE OF THE ROADWAY.

B. LOOP #1 IS THE LOOP CLOSEST TO THE INTERSECTION.

C. LABEL LOOP CABLE "IN" OR LOOP CABLE "OUT".

D. LABEL LOOP CABLE CLOCKWISE OR LOOP CABLE COUNTERCLOCKWISE.

DETECTOR LOOP LEAD-IN CABLE TAG

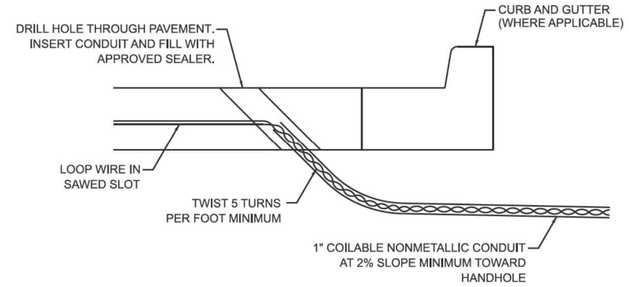

DETECTOR LOOP DIVE DETAIL

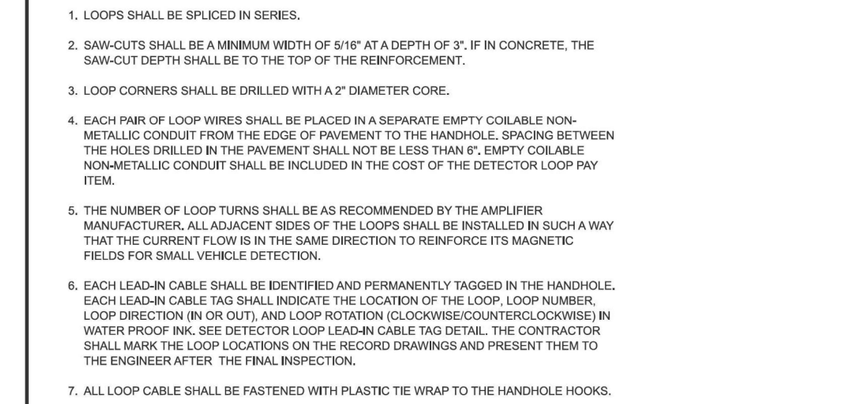

DETECTOR LOOP WIRING SCHEMATIC

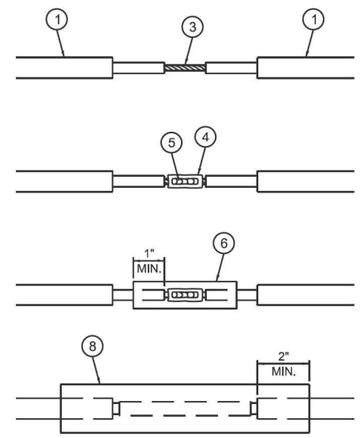

LOOP-TO-LOOP Ssplice DETAIL

1. DETECTOR LOOP CABLE.
2. DETECTOR LOOP LEAD-IN CABLE
3. BARE CONDUCTORS TWISTED TOGETHER.
4. BUTT SPLICE CRIMP CONNECTOR.
5. SPLICE SOLDERED WITH ROSIN CORE FLUX. ALL EXPOSED SURFACES OF THE SOLDER SHALL BE SMOOTH. THE SPLICES SHALL BE STAGGERED.
6. WCSMW 30/100 HEAT SHRINK TUBE, 3" MINIMUM LENGTH, UNDERWATER GRADE.
7. SELF-INFUSED, SILICONE ELECTRICAL TAPE TIGHTLY WRAPPED AROUND CABLES.
8. WCS 200/750 HEAT SHRINK TUBE, 8" MINIMUM LENGTH, UNDERWATER GRADE.

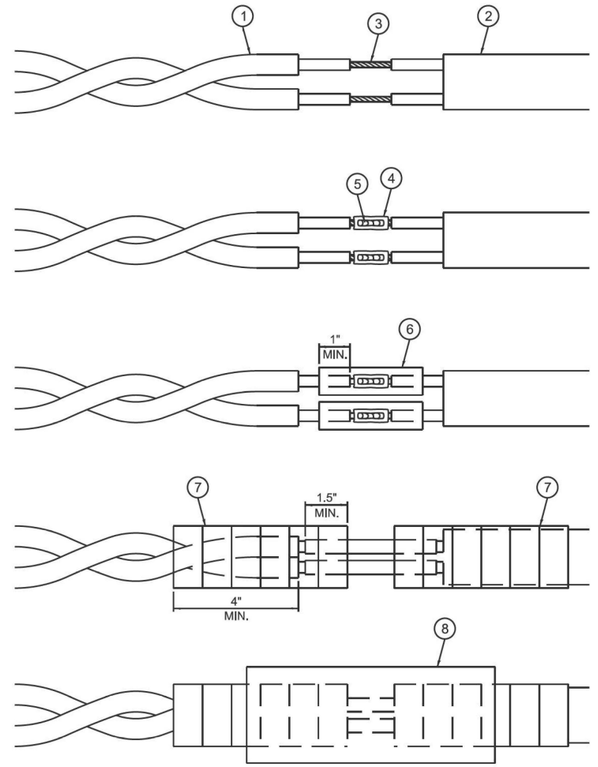

LOOP-TO-CONTROLLER SPLICE DETAIL

103

MODEL: TS-01b [Sheet]
FILE NAME: c:\pw_work\pwidot\lawrence.demanche@illinois.gov\d0951416\TS-01.dgn

USER NAME = lawrence.demanche	DESIGNED - IP	REVISED -	
	DRAWN - IP	REVISED -	
PLOT SCALE = $SCALE$	CHECKED - NB/KK	REVISED -	
PLOT DATE = 12/16/2025	DATE - 10/15/2025	REVISED -	

STATE OF ILLINOIS
DEPARTMENT OF TRANSPORTATION

DISTRICT ONE
STANDARD TRAFFIC SIGNAL DESIGN DETAILS

SCALE: NONE | SHEET 2 OF 7 SHEETS | STA. | TO STA.

F.A. RTE.	SECTION	COUNTY	TOTAL SHEETS	SHEET NO.
	TS-01	CONTRACT NO.		
	ILLINOIS FED. AID PROJECT			

DATE PLOTTED = 4/20/2026 9:40:27 PM
PLOT SCALE = 0.03937008 'tbl
PLOT CONFIG = CGI-PDF.pltcfg
MODEL: $MODELNAME$
FILE NAME: pw://ciorba-pw.bentley.com:ciorba-pw-01/Documents/Projects/IL_DOTD\10021693.05/CADD Data/StruSignals/D162W99-sht-TS103.dgn

CiorbaGroup
8725 W. Higgins Rd, Ste 600, Chicago, IL 60631
P 773.775.4009 | www.ciorba.com

USER NAME = ayu	DESIGNED - DTJ	REVISED -
	DRAWN - AM	REVISED -
PLOT SCALE = 0.16666667 ' / In.	CHECKED - JMV	REVISED -
PLOT DATE = 3/17/2026	DATE - 3/17/2026	REVISED -

STATE OF ILLINOIS
DEPARTMENT OF TRANSPORTATION

I-290/IL 53 HMA RESURFACING AND BRIDGE REPAIRS
EXISTING TRAFFIC SIGNAL PLAN (RECORD DRAWING)

SCALE: N.T.S. | SHEET OF SHEETS | STA. | TO STA.

F.A.I. RTE.	SECTION	COUNTY	TOTAL SHEETS	SHEET NO.
290	(0404-316-HB) BR 24	COOK	276	75C
		CONTRACT NO. 62W99		
	ILLINOIS FED. AID PROJECT			

NOTES:

1. THE MAST ARM MOUNTED SIGNAL HEADS SHALL BE CENTERED ON THE LANES OR AS SHOWN ON THE TRAFFIC SIGNAL PLANS.
2. REFER TO THE TRAFFIC SIGNAL EQUIPMENT OFFSET MINIMUMS TABLE.
3. A 4' MINIMUM UNOBSTRUCTED PEDESTRIAN ACCESS ROUTE SHALL BE MAINTAINED.
4. THE PUSH-BUTTON SHALL BE LOCATED 5' OR LESS FROM THE OUTSIDE EDGE OF THE MARKED CROSSWALK FARTHEST FROM THE INTERSECTION FOR THE CROSSWALK THAT THE PUSH-BUTTON CONTROLS.
5. IF THE MAST ARM POLE OR SIGNAL POST WHERE THE PUSH-BUTTON IS TO BE INSTALLED IS NOT IMMEDIATELY ADJACENT TO THE SIDEWALK, PROVIDE A FIRM, STABLE, AND SLIP RESISTANT SURFACE UP TO THE MAST ARM POLE OR SIGNAL POST. THE MINIMUM PAVED AREA IN FRONT OF THE PUSH-BUTTON SHALL BE 2.5' X 4'. IF THIS DOES NOT MEET THE REQUIREMENT STATED IN NOTE 3, A SEPARATE PEDESTRIAN SIGNAL POST SHALL BE INSTALLED TO PLACE THE PUSH-BUTTON ADJACENT TO THE SIDEWALK SURFACE.
6. THE HEIGHT OF THE PEDESTRIAN PUSH-BUTTON SHALL BE 36". IF APPROVED BY THE AREA TRAFFIC SIGNAL ENGINEER, THE PUSH-BUTTON MAY BE LOCATED AT A HEIGHT BETWEEN 30" AND 42". THE HEIGHT OF THE EQUESTRIAN PUSH-BUTTON SHAL BE 72" OR AS DIRECTED BY THE ENGINEER.
7. THE FACE OF THE PUSH-BUTTON SHALL BE PARALLEL TO THE CROSSWALK IT CONTROLS.
8. THE PUSH-BUTTON SHALL BE LOCATED BEHIND THE DETECTABLE WARNING.
9. WHERE A PUSH-BUTTON IS BEING INSTALLED ON A MAST ARM POLE OR SIGNAL POST ADJACENT TO THE PEDESTRIAN ACCESS ROUTE, THE PROPOSED FOUNDATION SHALL BE INSTALLED WITHIN THE SIDE CURB IN ORDER TO MEET THE 10" REACH REQUIREMENT.
10. THE SIDEWALK PANEL IN FRONT OF THE PUSH-BUTTON SHALL HAVE A SLOPE LESS THAN 5%.
11. WHERE TWO PEDESTRIAN PUSH-BUTTONS ARE PROVIDED ON THE SAME CORNER, THEY SHALL BE 10' OR MORE APART. EXCEPTION: IN ALTERATIONS WHERE TECHNICALLY INFEASIBLE TO PROVIDE 10' SEPARATION BETWEEN PUSH-BUTTONS ON THE SAME CORNER.
12. CORRESPONDING PEDESTRIAN EQUIPMENT (SIGNAL HEAD AND PUSH-BUTTON) SHALL BE INSTALLED ON THE SAME POST CLOSEST TO THE CROSSWALK IT CONTROLS.
13. PEDESTRIAN SIGNAL HEADS INSTALLED ON MAST ARM POLES OR SIGNAL POSTS SHALL BE MOUNTED WITH THE BOTTOM OF THE SIGNAL HOUSING (INCLUDING BRACKETS) NOT LESS THAN 8' OR MORE THAN 10' ABOVE SIDEWALK LEVEL. PEDESTRIAN SIGNAL HEADS INSTALLED ON PEDESTRIAN SIGNAL POSTS SHALL BE MOUNTED WITH THE BOTTOM OF THE SIGNAL HOUSING (INCLUDING BRACKETS) NOT LESS THAN 8' ABOVE SIDEWALK LEVEL. THE PEDESTRIAN SIGNAL HEADS SHALL BE POSITIONED AND ADJUSTED TO PROVIDE MAXIMUM VISIBILITY AT THE BEGINNING OF THE CONTROLLED CROSSWALK.
14. THE LOCATIONS OF THE PEDESTRIAN PUSH-BUTTONS AND PEDESTRIAN SIGNAL HEADS SHALL MEET THE REQUIREMENTS OF THE MUTCD, PROWAG, AND THE REQUIREMENTS ON THIS DETAIL SHEET.

TRAFFIC SIGNAL MAST ARM AND SIGNAL POST

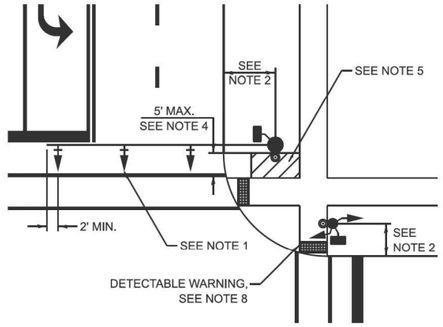

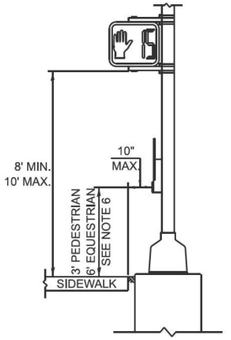

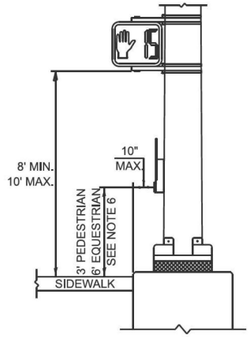

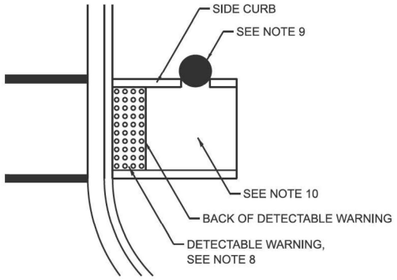

PEDESTRIAN SIGNAL POST

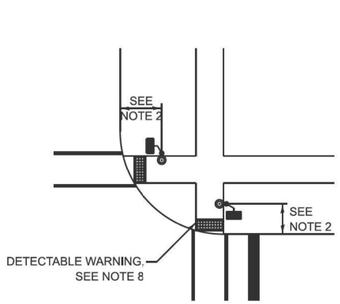

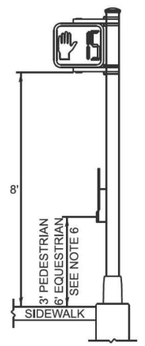

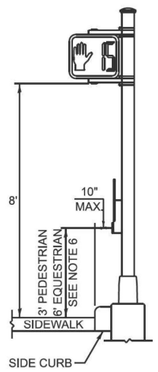

PUSH-BUTTON LOCATIONS

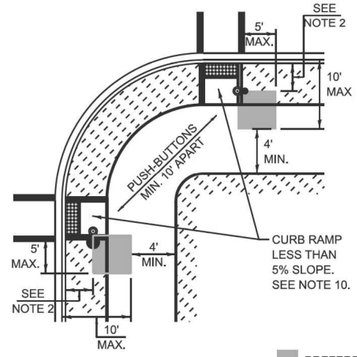

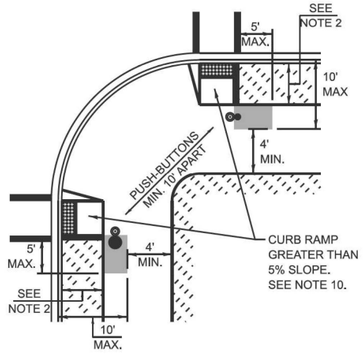

PREFERRED PUSH-BUTTON LOCATION

TRAFFIC SIGNAL EQUIPMENT	BARRIER CURB (MINIMUM DISTANCE FROM THE BACK OF CURB TO THE CENTER OF THE FOUNDATION)	SHOULDER / NON-BARRIER CURB (MINIMUM DISTANCE FROM THE EDGE LINE OF THE RIGHT-MOST LANE TO THE CENTER OF THE FOUNDATION)
MAST ARM ASSEMBLY AND POLE	6'	SHOULDER WIDTH + 2', MINIMUM 10'
SIGNAL POST	4'	SHOULDER WIDTH + 2', MINIMUM 10'
PEDESTRIAN SIGNAL POST	4'	4' - SEE NOTE 2
TEMPORARY WOOD POLE	6'	SHOULDER WIDTH + 2', MINIMUM 10'
TRAFFIC SIGNAL CABINET	6' - SEE NOTE 3	SHOULDER WIDTH + 6', MINIMUM 16' - SEE NOTE 3
SERVICE CABINET	6' - SEE NOTE 3	SHOULDER WIDTH + 6', MINIMUM 16' - SEE NOTE 3

TRAFFIC SIGNAL EQUIPMENT OFFSET MINIMUMS

NOTES:

1. CONTACT THE AREA TRAFFIC SIGNAL ENGINEER FOR ASSISTANCE LOCATING THE TRAFFIC SIGNAL EQUIPMENT WHEN THERE ARE CONFLICTS AND THE MINIMUM OFFSET DISTANCES CANNOT BE MET.
2. MINIMUM DISTANCE FROM THE BACK OF THE DETECTABLE WARNING.
3. MINIMUM DISTANCE TO THE ROADWAY SIDE OF THE FOUNDATION.
4. ANY CHANGES TO THE OFFSETS OF THE FOUNDATIONS FROM THE MINIMUM DISTANCES LISTED IN THE "TRAFFIC SIGNAL EQUIPMENT OFFSET" TABLE AND THE TRAFFIC SIGNAL PLAN COULD AFFECT THE PLACEMENT OF THE TRAFFIC SIGNAL HEADS, PEDESTRIAN SIGNAL HEADS, AND THE PEDESTRIAN PUSH-BUTTONS. THE SIGNAL HEAD PLACEMENT ON THE MAST ARMS SHALL REMAIN AS PER THE TRAFFIC SIGNAL PLAN AND THE "TRAFFIC SIGNAL MAST ARM AND SIGNAL POST" DETAIL ABOVE. THE PROPOSED MAST ARM LENGTHS MAY NEED TO BE REVISED TO MEET THESE REQUIREMENTS. THE LOCATIONS OF THE PEDESTRIAN PUSH-BUTTONS AND PEDESTRIAN SIGNAL HEADS SHALL MEET THE REQUIREMENTS OF THE MUTCD, PROWAG, AND THE REQUIREMENTS ON THIS DETAIL SHEET.

MODEL: TS-01c [Sheet]
FILE NAME: c:\pw_work\kjwidot\lawrence.demanche@illinois.gov\d09514116\TS-01.dgn

USER NAME = lawrence.demanche	DESIGNED - IP		REVISED -
	DRAWN - IP		REVISED -
PLOT SCALE = $SCALE$	CHECKED - NB/KK		REVISED -
PLOT DATE = 12/16/2025	DATE - 10/15/2025		REVISED -

STATE OF ILLINOIS
DEPARTMENT OF TRANSPORTATION

DISTRICT ONE
STANDARD TRAFFIC SIGNAL DESIGN DETAILS

SCALE: NONE | SHEET 3 OF 7 SHEETS | STA. | TO STA.

F.A. RTE.	SECTION	COUNTY	TOTAL SHEETS	SHEET NO.
	TS-01	CONTRACT NO.		
	ILLINOIS FED. AID PROJECT			

DATE PLOTTED = 4/30/2026 9:40:55 PM
PRINTED BY = 20251205.tbl
PLOT CONFIG = CQI-PDF.pltcfg
MODEL: $MODELNAME$
FILE NAME: pw://ciorba-pw.bentley.com:ciorba-pw-01/Documents/Projects/IL_DOTFD1.00021693.05/CADD Data/Shi/Signals/D162W99-sht-TS104.dgn

CiorbaGroup
8725 W. Higgins Rd, Ste 600, Chicago, IL 60631
P 773.775.4009 | www.ciorba.com

USER NAME = ayu	DESIGNED - DTJ		REVISED -
	DRAWN - AM		REVISED -
PLOT SCALE = 0.16666667 ' / In.	CHECKED - JMV		REVISED -
PLOT DATE = 3/17/2026	DATE - 3/17/2026		REVISED -

STATE OF ILLINOIS
DEPARTMENT OF TRANSPORTATION

I-290/IL 53 HMA RESURFACING AND BRIDGE REPAIRS
EXISTING TRAFFIC SIGNAL PLAN (RECORD DRAWING)

SCALE: N.T.S. | SHEET OF SHEETS | STA. | TO STA.

F.A.I. RTE.	SECTION	COUNTY	TOTAL SHEETS	SHEET NO.
290	(0404-316-HB) BR 24	COOK	276	75D
		CONTRACT NO. 62W99		
	ILLINOIS FED. AID PROJECT			

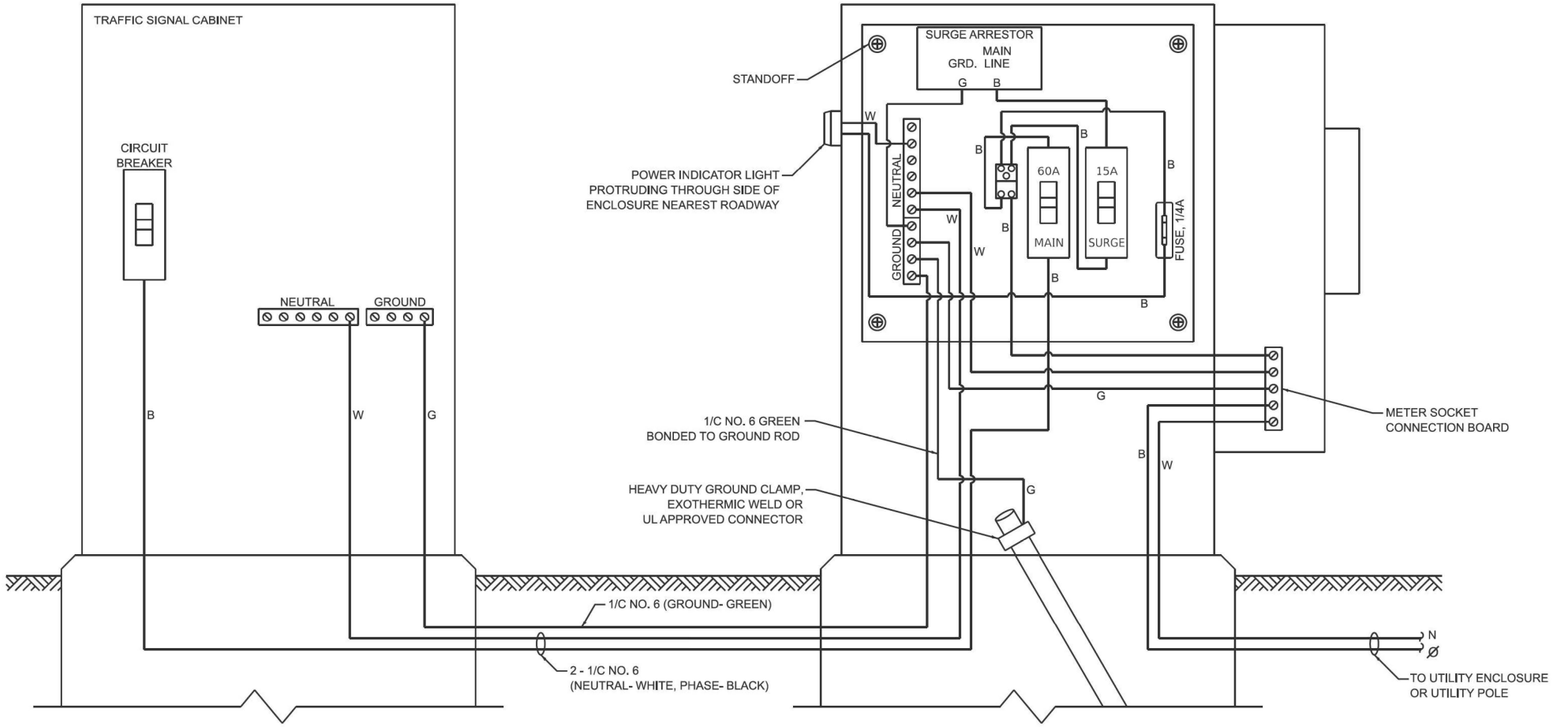

ELECTRIC SERVICE WIRING DIAGRAM IN GROUND MOUNTED SERVICE CABINET

NOTES:

1. THE GROUND MOUNTED SERVICE CABINET IS TO BE LOCATED BETWEEN THE TRAFFIC SIGNAL CABINET AND THE UTILITY CONNECTION, PREFERABLY 20' TO 50' FROM THE TRAFFIC SIGNAL CONTROLLER CABINET.
2. ELECTRIC SERVICE PANELS SHALL BE CONSTRUCTED TO UL STD. 508, INDUSTRIAL CONTROL PANEL, AND CARRY THE UL LABEL.
3. ALL WIRING SHALL BE NEATLY DRESSED AND SUPPORTED.
4. THE METER SOCKET IS TO BE PROVIDED BY THE CONTRACTOR. THE METER IS TO BE PROVIDED BY THE UTILITY COMPANY.

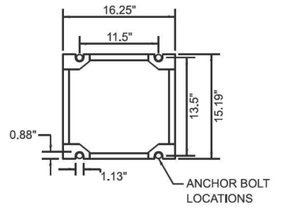

CABINET BASE BOLT PATTERN

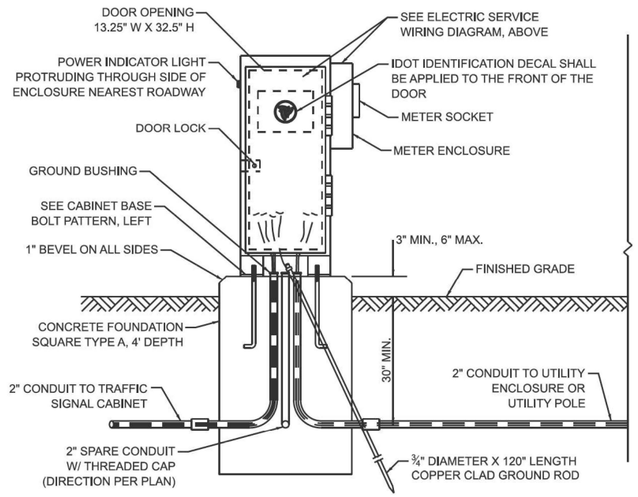

SERVICE INSTALLATION - GROUND MOUNTED WITH METER

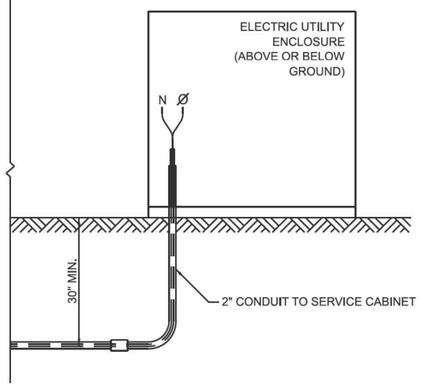

CONNECTION TO UTILITY ENCLOSURE

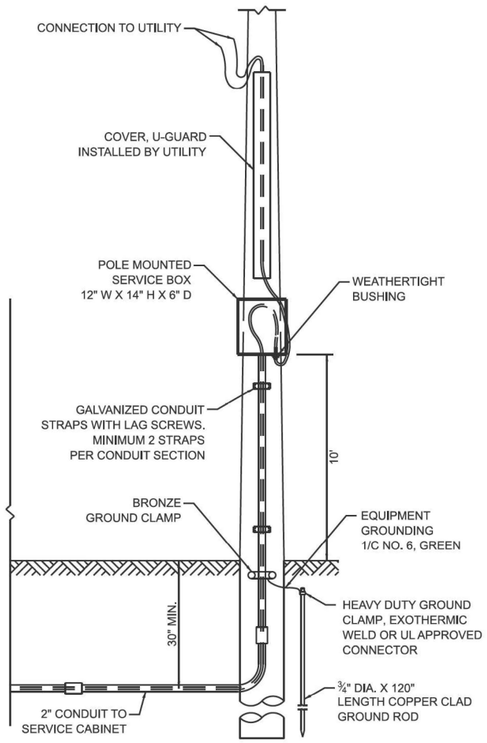

CONNECTION TO UTILITY POLE

USER NAME = lawrence.demanche	DESIGNED - IP		REVISED -
	DRAWN - IP		REVISED -
PLOT SCALE = $SCALE$	CHECKED - NB/KK		REVISED -
PLOT DATE = 12/16/2025	DATE - 10/15/2025		REVISED -

STATE OF ILLINOIS
DEPARTMENT OF TRANSPORTATION

DISTRICT ONE
STANDARD TRAFFIC SIGNAL DESIGN DETAILS

SCALE: NONE | SHEET 4 OF 7 SHEETS | STA. | TO STA.

F.A. RTE.	SECTION	COUNTY	TOTAL SHEETS	SHEET NO.
	TS-01	CONTRACT NO.		
	ILLINOIS FED. AID PROJECT			

MODEL: TS-01d [Sheet]
FILE NAME: c:\pw_work\dot\lawrence.demanche@illinois.gov\d0951416\TS-01.dgn

DATE PLOTTED = 4/20/2026 9:41:24 PM
PEN TABLE = 100%_05.tbl
PLOT CONFIG = CQI-PDF.pltcfg
MODEL: $MODELNAME$
FILE NAME: pw://ciorba-pw.bentley.com:ciorba-pw-01/Documents/Projects/IL_DOT/D1/0021693.05/CADD Data/Shr/Signals/D162W99-sht-TS105.dgn

CiorbaGroup
8725 W. Higgins Rd, Ste 600, Chicago, IL 60631
P 773.775.4009 | www.ciorba.com

USER NAME = ayu	DESIGNED - DTJ		REVISED -
	DRAWN - AM		REVISED -
PLOT SCALE = 0.16666667 ' / In.	CHECKED - JMV		REVISED -
PLOT DATE = 3/17/2026	DATE - 3/17/2026		REVISED -

STATE OF ILLINOIS
DEPARTMENT OF TRANSPORTATION

I-290/IL 53 HMA RESURFACING AND BRIDGE REPAIRS
EXISTING TRAFFIC SIGNAL PLAN (RECORD DRAWING)

SCALE: N.T.S. | SHEET OF SHEETS | STA. | TO STA.

F.A.I. RTE.	SECTION	COUNTY	TOTAL SHEETS	SHEET NO.
290	(0404-316-HB) BR 24	COOK	276	75E
		CONTRACT NO. 62W99		
	ILLINOIS FED. AID PROJECT			

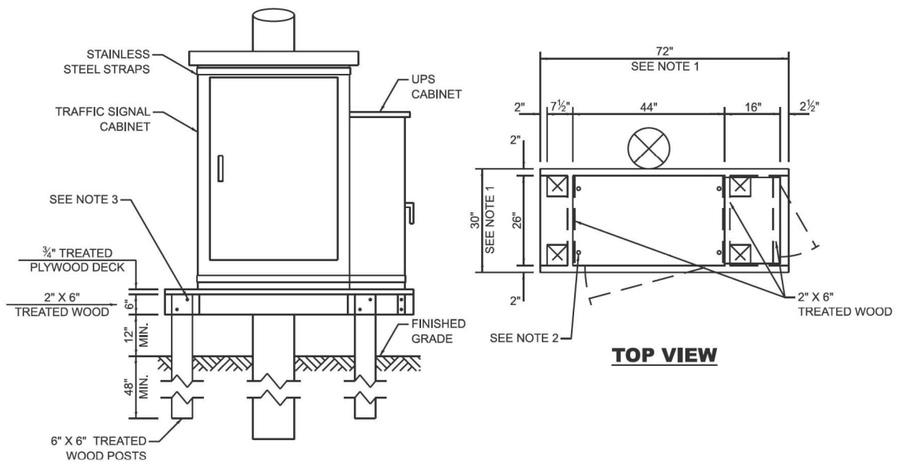

TOP VIEW

NOTES:

1. THE PLATFORM SIZE IS BASED ON A TRAFFIC SIGNAL CABINET TYPE IV WITH BASE DIMENSIONS OF 26" X 44" AND UNINTERRUPTABLE POWER SUPPLY CABINET WITH BASE DIMENSIONS OF 16" X 25". ADJUST THE PLATFORM SIZE TO FIT THE BASE DIMENSIONS OF THE CABINET SUPPLIED.
2. DRILLED HOLES THROUGH THE PLATFORM ARE TO MATCH THE TRAFFIC SIGNAL CABINET BOLT TEMPLATE. THE CABINET SHALL BE FASTENED TO THE PLATFORM WITH CARRIAGE BOLTS, WASHERS, AND NUTS.
3. ALL WOOD SUPPORT FRAMING SHALL BE FASTENED TO THE WOOD POSTS WITH 2 LAG SCREWS FOR EACH CONNECTION.

TEMPORARY TRAFFIC SIGNAL CABINET WOOD SUPPORT PLATFORM

MAST ARM LENGTH	FOUNDATION DEPTH	FOUNDATION DIAMETER	SPIRAL DIAMETER	QUANTITY OF REBARS	SIZE OF REBARS
LESS THAN 30'	10'	30"	24"	8	#6
GREATER THAN OR EQUAL TO 30' AND LESS THAN 40'	13.5'	30"	24"	8	#6
	11'	36"	30"	12	#7
GREATER THAN OR EQUAL TO 40' AND LESS THAN 50'	13'	36"	30"	12	#7
GREATER THAN OR EQUAL TO 50' AND UP TO 55'	15'	36"	30"	12	#7
GREATER THAN OR EQUAL TO 56' AND LESS THAN 65'	21'	42"	36"	16	#8
GREATER THAN OR EQUAL TO 65' AND UP TO 75'	25'	42"	36"	16	#8

DEPTH OF MAST ARM FOUNDATIONS, TYPE E

TYPE E FOUNDATION NOTES:

1. FOR STANDARD AND COMBINATION MAST ARM ASSEMBLIES. FOUNDATION DEPTHS FOR STANDARD DUAL MAST ARMS WITH THE LONGEST ARM LENGTH UP TO AND INCLUDING 55' SHALL BE INCREASE BY 1' OF THAT SHOWN IN THE TABLE, BASED ON THE LONGER OF THE TWO ARMS.
2. SEE STATE STANDARD 878001 CONCRETE FOUNDATION DETAILS FOR MORE INFORMATION.

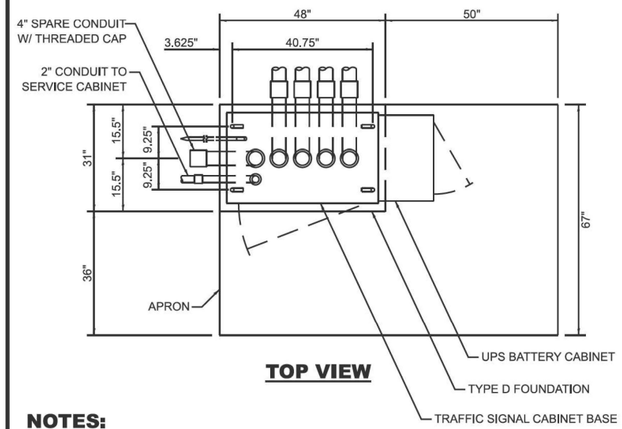

TOP VIEW

NOTES:

1. THE TOP OF THE FOUNDATION SHALL BE HIGHER THAN THE TOP OF THE DOUBLE HANDHOLE.

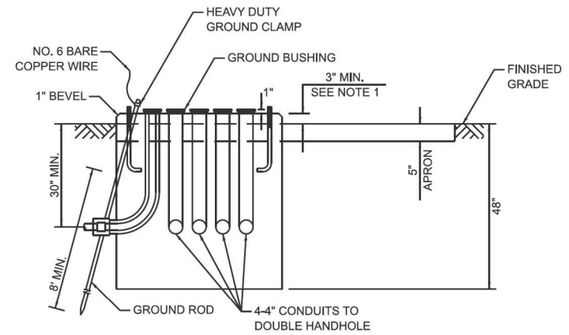

TYPE D FOUNDATION
TYPE IV AND TYPE V TRAFFIC SIGNAL CABINET AND UPS BATTERY CABINET

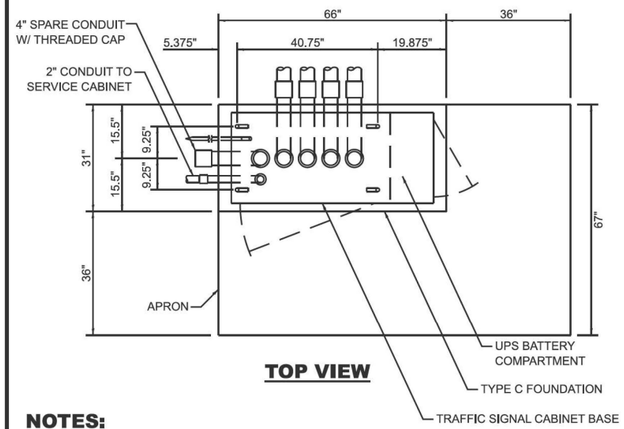

TOP VIEW

NOTES:

1. THE TOP OF THE FOUNDATION SHALL BE HIGHER THAN THE TOP OF THE DOUBLE HANDHOLE.

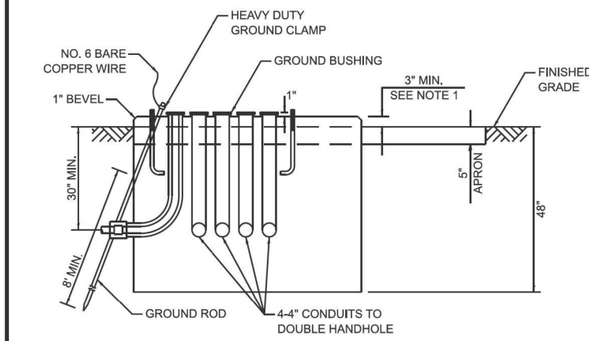

TYPE C FOUNDATION
SUPER P AND SUPER R TRAFFIC SIGNAL CABINETS

FOUNDATION	DEPTH
TYPE A - SIGNAL POST, SERVICE CABINET	4'
TYPE C - TRAFFIC SIGNAL CABINET WITH UPS	4'
TYPE D - TRAFFIC SIGNAL CABINET	4'

DEPTH OF FOUNDATIONS TYPES A, C & D

VERTICAL CABLE	LENGTH
MAST ARM MOUNTED SIGNAL HEAD (L = MAST ARM LENGTH - DISTANCE TO SIGNAL HEAD FROM END OF ARM)	20'+L
BRACKET MOUNTED SIGNAL HEAD (MAST ARM POLE OR SIGNAL POLE)	13'
PEDESTRIAN SIGNAL HEAD	10'
PEDESTRIAN PUSH BUTTON	6'
SERVICE INSTALLATION POLE MOUNT TO SERVICE DROP	13.5'
SERVICE INSTALLATION POLE MOUNT TO GROUND	13.5'
SERVICE INSTALLATION GROUND MOUNT	6'
FOUNDATION (SIGNAL POST, MAST ARM, TRAFFIC SIGNAL CABINET, SERVICE CABINET)	3'

VERTICAL CABLE LENGTH

CABLE SLACK	LENGTH
HANDHOLE	6.5'
DOUBLE HANDHOLE	13'
SIGNAL POST	2'
MAST ARM	2'
TRAFFIC SIGNAL CABINET OR SERVICE CABINET	1.5'
FIBER OPTIC CABLE AT TRAFFIC SIGNAL CABINET	13'
GROUND CABLE AT SIGNAL POST, MAST ARM, OR CABINET	1.5'
GROUND CABLE AT HANDHOLE OR DOUBLE HANDHOLE	6.5'
GROUND CABLE BETWEEN HANDHOLE FRAME AND COVER	5'

CABLE SLACK LENGTH

USER NAME = lawrence.demanche	DESIGNED - IP	REVISED -
	DRAWN - IP	REVISED -
PLOT SCALE = $SCALE$	CHECKED - NB/KK	REVISED -
PLOT DATE = 12/16/2025	DATE - 10/15/2025	REVISED -

STATE OF ILLINOIS
DEPARTMENT OF TRANSPORTATION

DISTRICT ONE
STANDARD TRAFFIC SIGNAL DESIGN DETAILS

SCALE: NONE | SHEET 5 OF 7 SHEETS | STA. | TO STA.

F.A. RTE.	SECTION	COUNTY	TOTAL SHEETS	SHEET NO.
	TS-01	CONTRACT NO.		
	ILLINOIS FED. AID PROJECT			

MODEL: TS-01e [Sheet]
FILE NAME: c:\pw_work\pwidot\lawrence.demanche@illinois.gov\d09514116\TS-01.dgn

DATE PLOTTED = 4/30/2026 9:41:49 PM
PEN TABLE = 2020-01-06.tbl
PLOT CONFIG = CGI-PDF.pltcfg
MODEL: $MODELNAME$
FILE NAME: pw://ciorba-pw.bentley.com:ciorba-pw-01/Documents/Projects/IL_DOT/D1/00216935.05/CADD Data/Sht/Signals/D162W99-sht-TS106.dgn

CiorbaGroup
8725 W. Higgins Rd, Ste 600, Chicago, IL 60631
P 773.775.4009 | www.ciorba.com

USER NAME = ayu	DESIGNED - DTJ	REVISED -
	DRAWN - AM	REVISED -
PLOT SCALE = 0.16666667 ' / In.	CHECKED - JMV	REVISED -
PLOT DATE = 3/17/2026	DATE - 3/17/2026	REVISED -

STATE OF ILLINOIS
DEPARTMENT OF TRANSPORTATION

I-290/IL 53 HMA RESURFACING AND BRIDGE REPAIRS
EXISTING TRAFFIC SIGNAL PLAN (RECORD DRAWING)

SCALE: N.T.S. | SHEET OF SHEETS | STA. | TO STA.

F.A.I. RTE.	SECTION	COUNTY	TOTAL SHEETS	SHEET NO.
290	(0404-316-HB) BR 24	COOK	276	75F
		CONTRACT NO. 62W99		
	ILLINOIS FED. AID PROJECT			

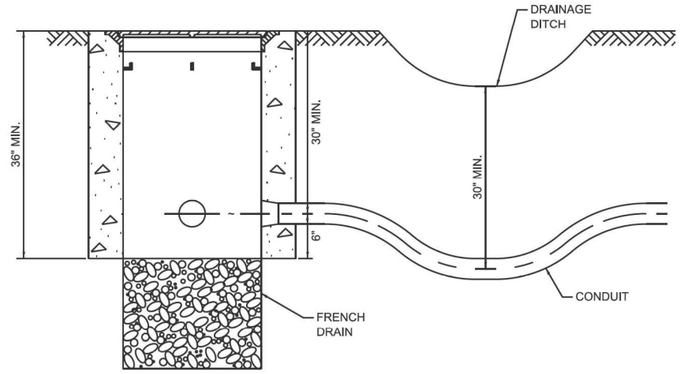

NOTES:

1. THE CONDUIT DEPTH SHALL BE A MINIMUM OF 30" BELOW THE BOTTOM OF THE DRAINAGE DITCH OR ANY SLOPING GROUND.
2. THE MINIMUM CONDUIT DEPTH APPLIES TO ALL CONDUIT PLACED UNDER ROADWAY PAVEMENT, MULTI-USE PATHS, SIDEWALKS AND SOIL SURFACES.
3. THE MINIMUM CONDUIT DEPTH APPLIES TO ALL HANDHOLES, HEAVY DUTY HANDHOLES AND DOUBLE HANDHOLES.

HANDHOLE WITH MINIMUM CONDUIT DEPTH

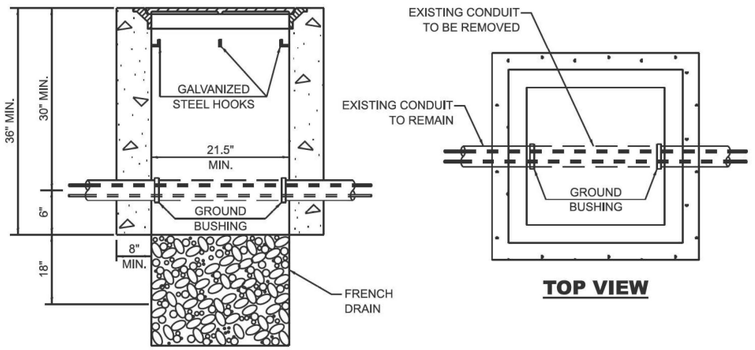

TOP VIEW

NOTES:

1. HANDHOLE CONSTRUCTED PER STATE STANDARD 814001.
2. REMOVAL OF THE EXISTING CONDUIT FROM THE HANDHOLE AND THE INSTALLATION OF THE CONDUIT BUSHINGS SHALL BE INCLUDED WITH THE COST OF THE HANDHOLE.

HANDHOLE TO INTERCEPT EXISTING CONDUIT

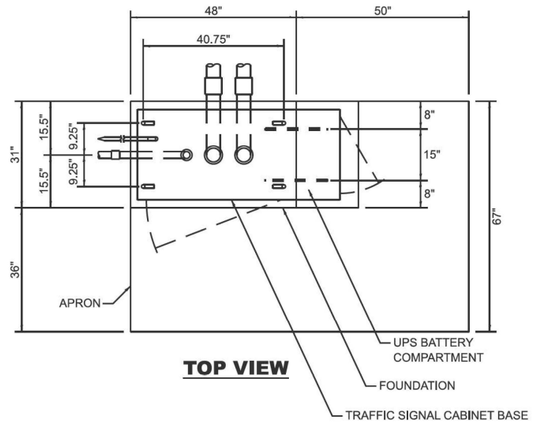

TOP VIEW

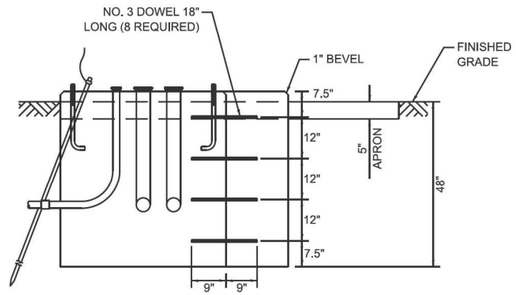

MODIFY EXISTING TYPE "D" FOUNDATION TO TYPE "C" FOUNDATION

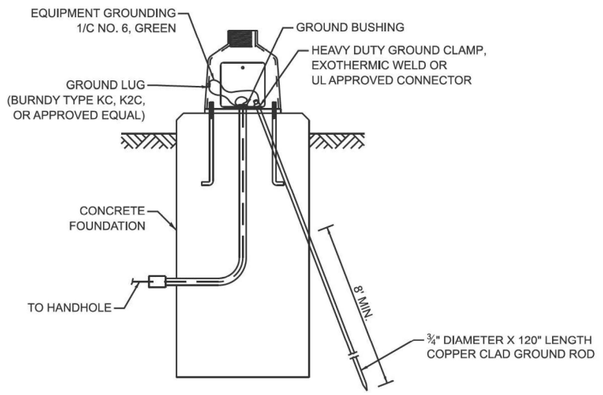

MAST ARM / POST GROUNDING DETAIL

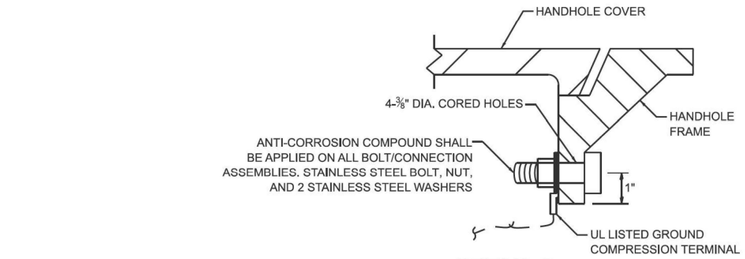

DETAIL A

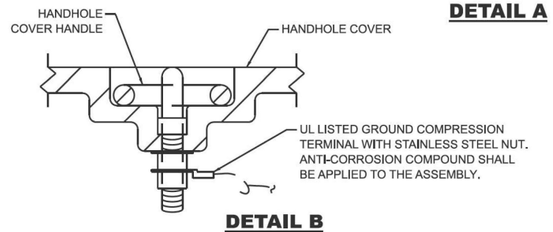

DETAIL B

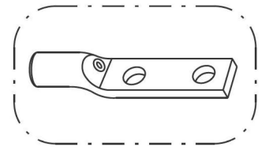

HEAVY-DUTY COMPRESSION TERMINAL (BURNDY TYPE YGHA OR APPROVED EQUAL)

¾" HEAVY-DUTY GROUND ROD CLAMP BRONZE OR COPPER, UL APPROVED (BURNDY TYPE GRC OR APPROVED EQUAL)

NOTES:

1. CONDUIT THAT HAS BEEN DRILLED INTO AN EXISTING HANDHOLE WILL REQUIRE A GROUND BUSHING FOR THE CONDUIT TO BE PROPERLY GROUNDED.
2. GROUND CABLE SHALL BE LOOPED OVER HOOKS IN THE HANDHOLES. 6.5' OF SLACK SHALL BE PROVIDED IN SINGLE AND DOUBLE HANDHOLES. 5' OF SLACK SHALL BE PROVIDED BETWEEN THE FRAME AND COVER.

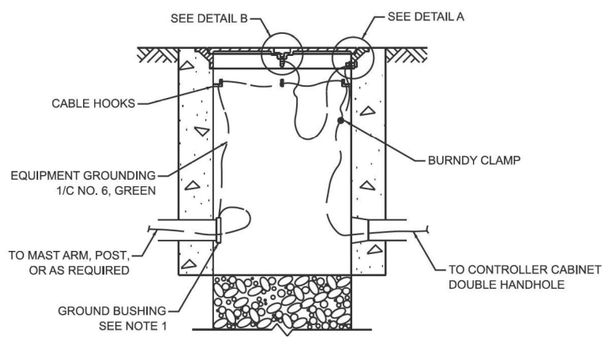

HANDHOLE GROUNDING DETAIL

MODEL: TS-01f [Sheet]
FILE NAME: c:\pw_workjowidot\lawrence.demanche@illinois.gov\d0951416\TS-01.dgn

USER NAME = lawrence.demanche	DESIGNED - IP		REVISED -
	DRAWN - IP		REVISED -
PLOT SCALE = $SCALE$	CHECKED - NB/KK		REVISED -
PLOT DATE = 12/16/2025	DATE - 10/15/2025		REVISED -

STATE OF ILLINOIS
DEPARTMENT OF TRANSPORTATION

DISTRICT ONE
STANDARD TRAFFIC SIGNAL DESIGN DETAILS

SCALE: NONE | SHEET 6 OF 7 SHEETS | STA. | TO STA.

F.A. RTE.	SECTION	COUNTY	TOTAL SHEETS	SHEET NO.
	TS-01	CONTRACT NO.		
	ILLINOIS FED. AID PROJECT			

103

DATE PLOTTED = 4/20/2026 9:42:17 PM
PRINTED BY = DOT20.05.tbl
PLOT CONFIG = CQI-PDF.pltcfg
MODEL: $MODELNAME$
FILE NAME: pw://ciorba-pw.bentley.com:ciorba-pw-01/Documents/Projects/IL_DOTD\10021693.05/CADD Data/ShiSignals/D162W99-sht-TS107.dgn

CiorbaGroup
8725 W. Higgins Rd, Ste 600, Chicago, IL 60631
P 773.775.4009 | www.ciorba.com

USER NAME = ayu	DESIGNED - DTJ	REVISED -
	DRAWN - AM	REVISED -
PLOT SCALE = 0.16666667 ' / In.	CHECKED - JMV	REVISED -
PLOT DATE = 3/17/2026	DATE - 3/17/2026	REVISED -

STATE OF ILLINOIS
DEPARTMENT OF TRANSPORTATION

I-290/IL 53 HMA RESURFACING AND BRIDGE REPAIRS
EXISTING TRAFFIC SIGNAL PLAN (RECORD DRAWING)

SCALE: N.T.S. | SHEET OF SHEETS | STA. | TO STA.

F.A.I. RTE.	SECTION	COUNTY	TOTAL SHEETS	SHEET NO.
290	(0404-316-HB) BR 24	COOK	276	75G
		CONTRACT NO. 62W99		
	ILLINOIS FED. AID PROJECT			

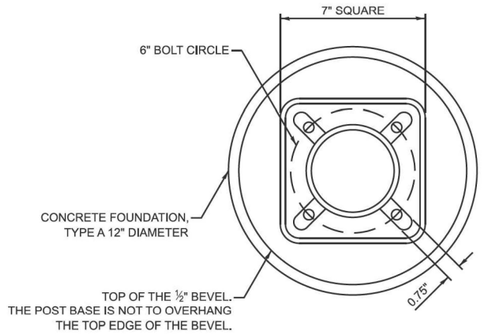

BOLT PATTERN

NOTES:

1. IF THE PEDESTRIAN SIGNAL POST FOUNDATION IS INSTALLED WITHIN A SIDEWALK CURB, THE TOP OF THE FOUNDATION SHALL BE INSTALLED FLUSH WITH THE TOP OF THE SIDEWALK CURB.

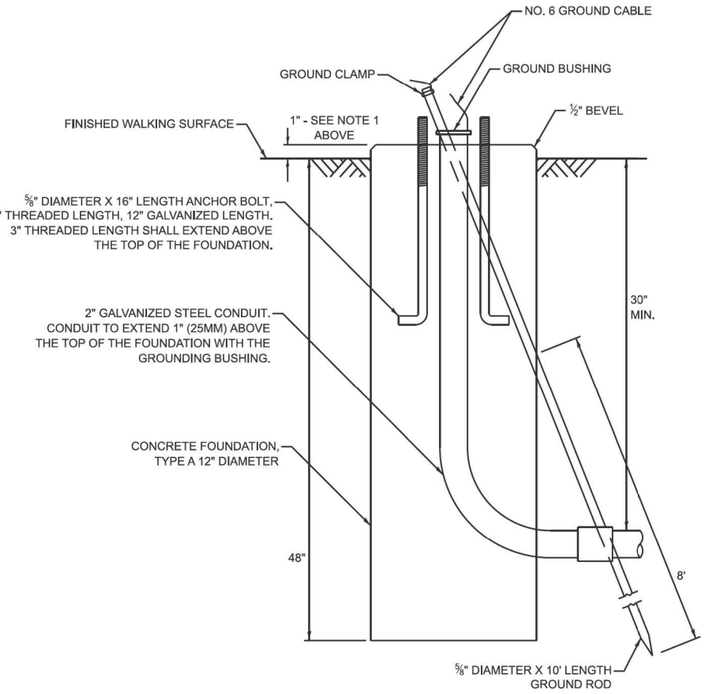

CONCRETE FOUNDATION, TYPE A 12-INCH DIAMETER

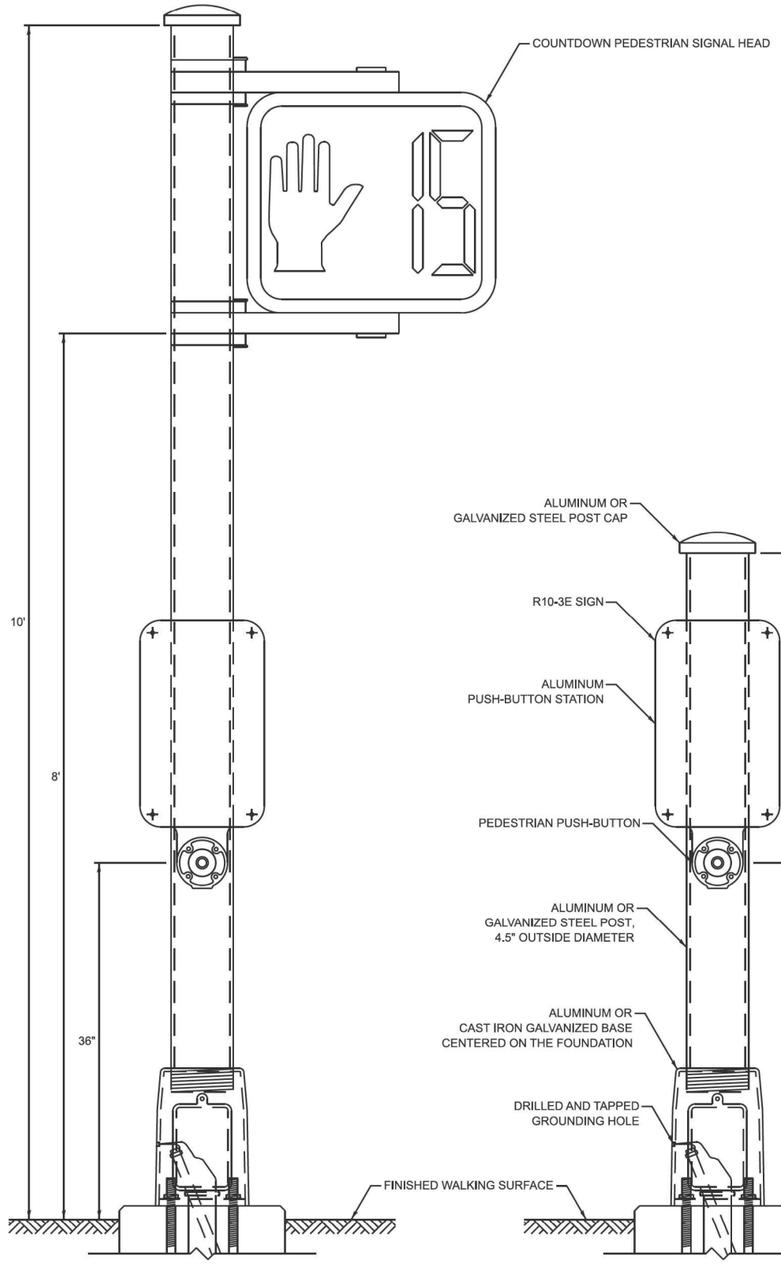

PEDESTRIAN SIGNAL POST, 10 FT.

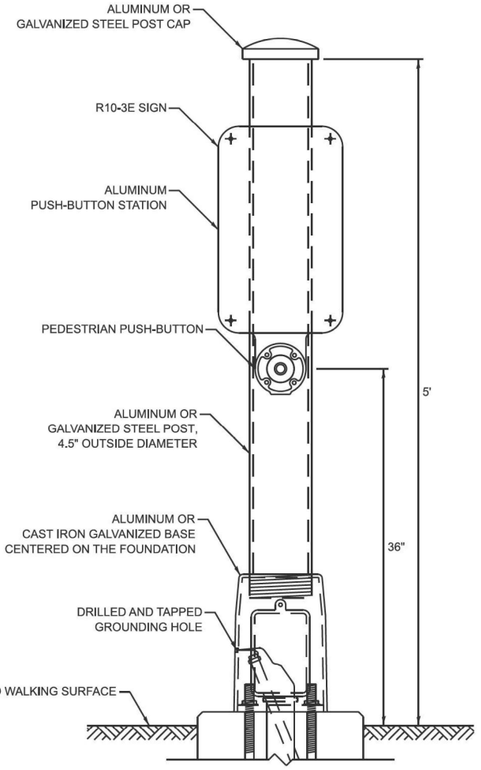

PEDESTRIAN SIGNAL POST, 5 FT.

R10-3E
9" X 15"

W10-I101
18" X 24"

SIGN NOTES:

1. THE SIGN PANELS SHALL BE TYPE AP SHEETING.
2. WHEN SIGN R10-3E IS INSTALLED AT MEDIANS WHERE ONLY ONE PUSH-BUTTON IS BEING USED FOR BOTH DIRECTIONS, THE ARROW SHALL BE BI-DIRECTIONAL.
3. SIGN W10-I101 IS REQUIRED FOR EACH PEDESTRIAN SIGNAL HEAD AT RAILROAD INTERSECTIONS.

MODEL: TS-01p [Sheet]
FILE NAME: c:\pw_work\dot\lawrence.demanche@illinois.gov\d0951416\TS-01.dgn

USER NAME = lawrence.demanche	DESIGNED - IP	REVISED -	
	DRAWN - IP	REVISED -	
PLOT SCALE = $SCALE$	CHECKED - NB/KK	REVISED -	
PLOT DATE = 12/16/2025	DATE - 10/15/2025	REVISED -	

STATE OF ILLINOIS
DEPARTMENT OF TRANSPORTATION

DISTRICT ONE
STANDARD TRAFFIC SIGNAL DESIGN DETAILS

SCALE: NONE | SHEET 7 OF 7 SHEETS | STA. | TO STA.

F.A. RTE.	SECTION	COUNTY	TOTAL SHEETS	SHEET NO.
	TS-01	CONTRACT NO.		
	ILLINOIS FED. AID PROJECT			

DATE PLOTTED = 4/20/2026 9:42:44 PM
PRINTED BY = 0021693.05.tbl
PLOT CONFIG = CQI-PDF.pltcfg
MODEL: $MODELNAME$
FILE NAME: pw://ciorba-pw.bentley.com:ciorba-pw-01/Documents/Projects/IL_DOT/D1/0021693.05/CADD Data/Shr/Signals/D162W99-sht-TS108.dgn

CiorbaGroup
8725 W. Higgins Rd, Ste 600, Chicago, IL 60631
P 773.775.4009 | www.ciorba.com

USER NAME = ayu	DESIGNED - DTJ	REVISED -	
	DRAWN - AM	REVISED -	
PLOT SCALE = 0.16666667 ' / In.	CHECKED - JMV	REVISED -	
PLOT DATE = 3/17/2026	DATE - 3/17/2026	REVISED -	

STATE OF ILLINOIS
DEPARTMENT OF TRANSPORTATION

I-290/IL 53 HMA RESURFACING AND BRIDGE REPAIRS
EXISTING TRAFFIC SIGNAL PLAN (RECORD DRAWING)

SCALE: N.T.S. | SHEET OF SHEETS | STA. | TO STA.

F.A.I. RTE.	SECTION	COUNTY	TOTAL SHEETS	SHEET NO.
290	(0404-316-HB) BR 24	COOK	276	75H
		CONTRACT NO. 62W99		
	ILLINOIS FED. AID PROJECT			

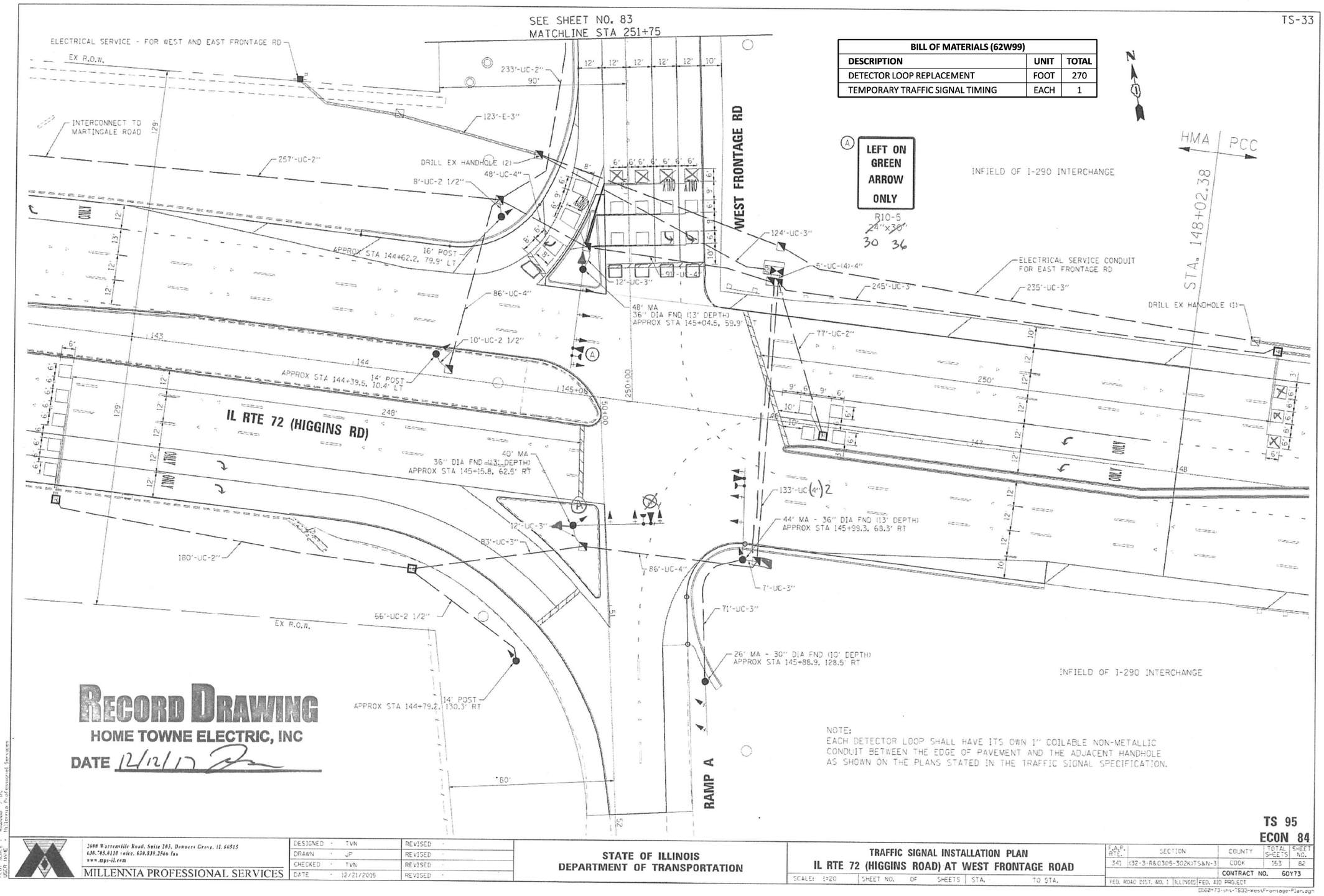

BILL OF MATERIALS (62W99)		
DESCRIPTION	UNIT	TOTAL
DETECTOR LOOP REPLACEMENT	FOOT	270
TEMPORARY TRAFFIC SIGNAL TIMING	EACH	1

NOTE:
EACH DETECTOR LOOP SHALL HAVE ITS OWN 1" COILABLE NON-METALLIC CONDUIT BETWEEN THE EDGE OF PAVEMENT AND THE ADJACENT HANDHOLE AS SHOWN ON THE PLANS STATED IN THE TRAFFIC SIGNAL SPECIFICATION.

RECORD DRAWING
HOME TOWNE ELECTRIC, INC
DATE 12/12/17

TS 95
ECON 84

MILLENNIA PROFESSIONAL SERVICES
2600 Warrenville Road, Suite 203, Downers Grove, IL 60515
630.705.0110 voice, 630.839.2566 fax
www.mps-il.com

DESIGNED - TVN	REVISED -		
DRAWN - JP	REVISED -		
CHECKED - TVN	REVISED -		
DATE - 12/21/2015	REVISED -		

STATE OF ILLINOIS
DEPARTMENT OF TRANSPORTATION

TRAFFIC SIGNAL INSTALLATION PLAN
IL RTE 72 (HIGGINS ROAD) AT WEST FRONTAGE ROAD
SCALE: 1:20 | SHEET NO. OF SHEETS | STA. TO STA.

F.A.P. RTE.	SECTION	COUNTY	TOTAL SHEETS	SHEET NO.
341	(32-3-R&0305-302K)TS&N-3	COOK	153	82
		CONTRACT NO. 60Y73		
FED. ROAD DIST. NO. 1	ILLINOIS	FED. AID PROJECT		

D162Y73-sht-TS33-WestFrontage-Plan.dgn

FILE NAME : D162Y73-sht-TS33-WestFrontage-Plan.dgn
PLOT SCALE : 40.0000 ' / in.
USER NAME : Millennia Professional Services

DATE PLOTTED = 4/30/2026 9:43:10 PM
PEN TABLE = 0021693.05.tbl
PLOT CONFIG = CGI-PDF.pltcfg
MODEL: $MODELNAME$
FILE NAME: pw://ciorba-pw.bentley.com:ciorba-pw-01/Documents/Projects/IL_DOT/D1/0021693.05/CADD Data/Sht/Signals/D162W99-sht-TS201.dgn

CiorbaGroup
8725 W. Higgins Rd, Ste 600, Chicago, IL 60631
P 773.775.4009 | www.ciorba.com

USER NAME = ayu	DESIGNED - DTJ	REVISED -	
	DRAWN - AM	REVISED -	
PLOT SCALE = 0.16666667 ' / in.	CHECKED - JMV	REVISED -	
PLOT DATE = 3/17/2026	DATE - 3/17/2026	REVISED -	

STATE OF ILLINOIS
DEPARTMENT OF TRANSPORTATION

I-290/IL 53 HMA RESURFACING AND BRIDGE REPAIRS
EXISTING TRAFFIC SIGNAL PLAN (RECORD DRAWING)
SCALE: N.T.S. | SHEET OF SHEETS | STA. TO STA.

F.A.I. RTE.	SECTION	COUNTY	TOTAL SHEETS	SHEET NO.
290	(0404-316-HB) BR 24	COOK	276	75I
		CONTRACT NO. 62W99		
		ILLINOIS	FED. AID PROJECT	

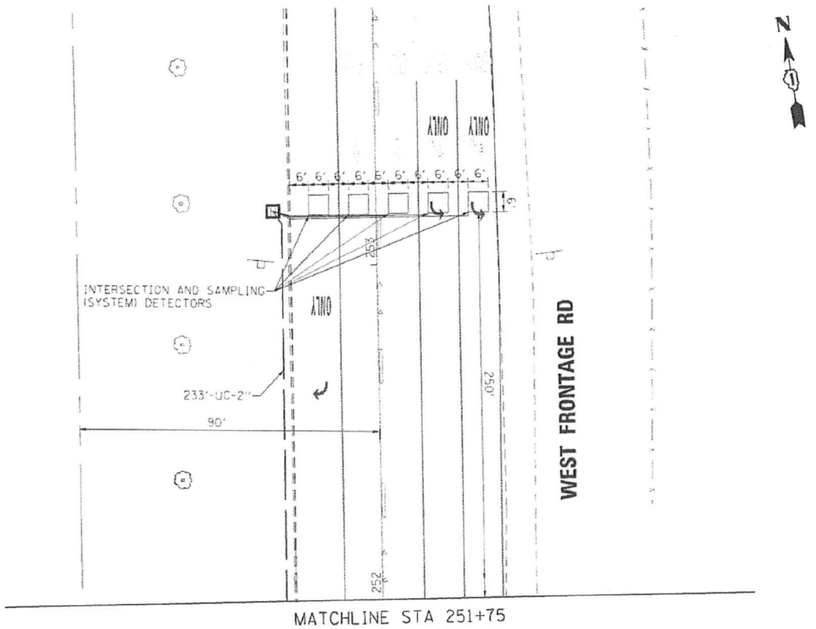

NOTE:
EACH DETECTOR LOOP SHALL HAVE ITS OWN 1" COILABLE NON-METALLIC CONDUIT BETWEEN THE EDGE OF PAVEMENT AND THE ADJACENT HANDHOLE AS SHOWN ON THE PLANS STATED IN THE TRAFFIC SIGNAL SPECIFICATION.

RECORD DRAWING
HOME TOWNE ELECTRIC, INC
DATE 12/12/17

FILE NAME = D162Y73-sht-TS34-WestFrontage-Plan.dgn
PLOT SCALE = 40.0000 '/ In.
USER NAME = Millennia Professional Services

2600 Warrenville Road, Suite 203, Downers Grove, IL 60515
630.705.8110 voice, 630.539.2566 fax
www.mps-il.com
MILLENNIA PROFESSIONAL SERVICES

DESIGNED - TVN		REVISED -
DRAWN - JP		REVISED -
CHECKED - TVN		REVISED -
DATE - 12/21/2015		REVISED -

STATE OF ILLINOIS
DEPARTMENT OF TRANSPORTATION

TRAFFIC SIGNAL INSTALLATION PLAN
IL RTE 72 (HIGGINS ROAD) AT WEST FRONTAGE ROAD

SCALE: 1:20 | SHEET NO. OF SHEETS | STA. TO STA.

F.A.P. RTE.	SECTION	COUNTY	TOTAL SHEETS	SHEET NO.
341	(32-3-R&0305-302KJTS&N-3	COOK	153	83
		CONTRACT NO. 60Y73		
FED. ROAD DIST. NO. 1	ILLINOIS	FED. AID PROJECT		

TS 95
ECON 84

D162Y73-sht-TS34-WestFrontage-Plan.dgn

DATE PLOTTED = 4/20/2026 9:43:38 PM
PLOT SCALE = 20.0000 '/ In.
PLOT CONFIG = CQI-PDF.pltcfg
MODEL: $MODELNAME$
FILE NAME: pw://ciorba-pw.bentley.com:ciorba-pw-01/Documents/Projects/IL_DOT/D1.0021693.05/CADD Data/Shs/Signals/D162W99-sht-TS202.dgn

CiorbaGroup
8725 W. Higgins Rd, Ste 600, Chicago, IL 60631
P 773.775.4009 | www.ciorba.com

USER NAME = ayu		DESIGNED - DTJ		REVISED -	
		DRAWN - AM		REVISED -	
PLOT SCALE = 0.16666667 '/ In.		CHECKED - JMV		REVISED -	
PLOT DATE = 3/17/2026		DATE - 3/17/2026		REVISED -	

STATE OF ILLINOIS
DEPARTMENT OF TRANSPORTATION

I-290/IL 53 HMA RESURFACING AND BRIDGE REPAIRS
EXISTING TRAFFIC SIGNAL PLAN (RECORD DRAWING)

SCALE: N.T.S. | SHEET OF SHEETS | STA. TO STA.

F.A.I. RTE.	SECTION	COUNTY	TOTAL SHEETS	SHEET NO.
290	(0404-316-HB) BR 24	COOK	276	75J
		CONTRACT NO. 62W99		
	ILLINOIS	FED. AID PROJECT		

PROPOSED CONTROLLER SEQUENCE

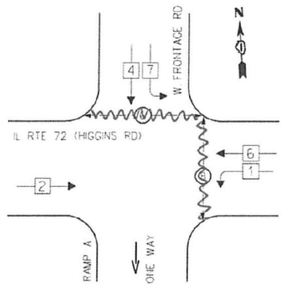

LEGEND

- SINGLE ENTRY PHASE
- DUAL ENTRY PHASE
- OL OVERLAP
- PEDESTRIAN PHASE
- NUMBER REFERS TO ASSOCIATED PHASE

PHASE DESIGNATION DIAGRAM

RECORD DRAWING
HOME TOWNE ELECTRIC, INC
DATE 12/12/17

EMERGENCY VEHICLE PREEMPTION SEQUENCE

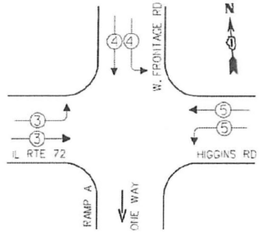

I.D.O.T
TRAFFIC SIGNAL INSTALLATION
ELECTRICAL SERVICE REQUIREMENTS

TYPE	NO. OF LAMPS x	WATTAGE L.E.D.	OPERATION	TOTAL WATTAGE
SIGNAL (RED)	17	17	0.50	144.5
(YELLOW)	17	25	0.25	106.25
(GREEN)	17	15	0.25	63.75
ARROW		12	0.10	
PED. SIGNAL		25	1.00	
CONTROLLER	1	100	1.00	100.00
ILLUM. SIGN		120	0.06	
VIDEO SYSTEM		150	1.00	
FLASHER		150	0.50	
			TOTAL	414.5

ILLINOIS DEPARTMENT OF TRANSPORTATION
DIVISION OF HIGHWAYS/DISTRICT 1
201 W. CENTER CT/SCHAUMBURG, IL 60196-1096

ENERGY SUPPLY - CONTACT: DAVE SCHACHT
PHONE: 630-437-2129
COMPANY: COMMONWEALTH EDISON

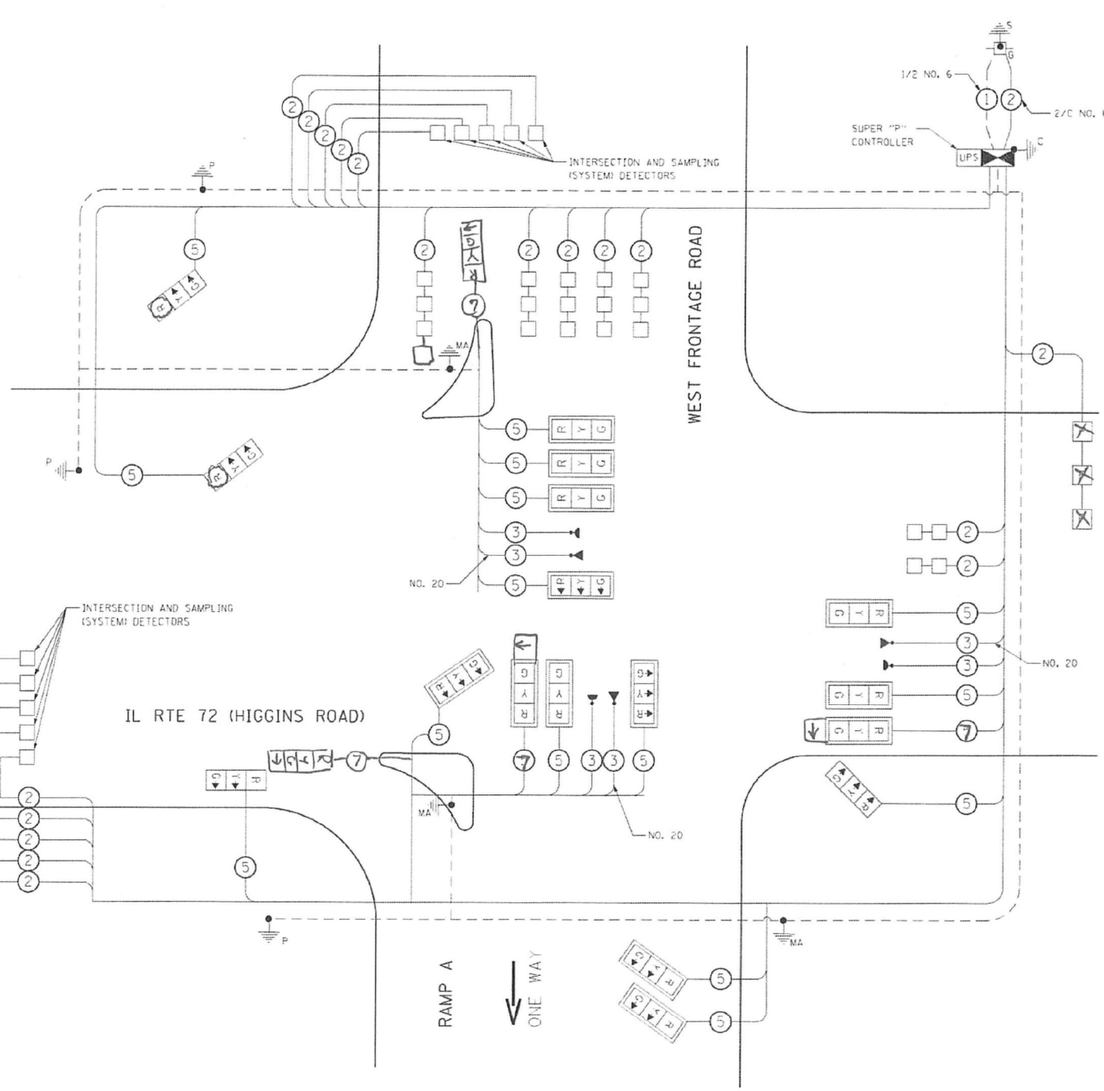

CABLE PLAN

TS 95
ECON 84

2600 Warrenville Road, Suite 203, Downers Grove, IL 60515
630.705.0110 voice, 630.839.2566 fax
www.mps-il.com
MILLENNIA PROFESSIONAL SERVICES

DESIGNED	TVN	REVISED -
DRAWN	JP	REVISED -
CHECKED	TVN	REVISED -
DATE	12/21/2015	REVISED -

STATE OF ILLINOIS
DEPARTMENT OF TRANSPORTATION

CABLE PLAN, PHASE DESIGNATION DIAGRAM, AND EMERGENCY VEHICLE PREEMPTION SEQUENCE
IL RTE 72 (HIGGINS ROAD) AT WEST FRONTAGE ROAD

SCALE: N/A | SHEET NO. OF SHEETS | STA. TO STA.

F.A.P. RTE.	SECTION	COUNTY	TOTAL SHEETS	SHEET NO.
341	(32-3-R&0305-302KITS&N-3	COOK	153	84
		CONTRACT NO. 60Y73		
FED. ROAD DIST. NO. 1	ILLINOIS	FED. AID PROJECT		

D:\60Y73-sht-1535-WestFrontage-Cable.dgn

FILE NAME = D:\60Y73-sht-1535-WestFrontage-Cable.dgn
PLOT SCALE = 40.0000 ' / in.
USER NAME = Millennia Professional Services

DATE PLOTTED = 4/20/2026 9:44:08 PM
PEN TABLE = 03072022.tbl
PLOT CONFIG = CGI-PDF.pltCfg
MODEL: $MODELNAMES
FILE NAME: pw://ciorba-pw.bentley.com:ciorba-pw-01/Documents/Projects/IL_DOT/D1/0021693.05/CADD Data/Shr/Signals/D162W99-sht-TS203.dgn

CiorbaGroup
8725 W. Higgins Rd, Ste 600, Chicago, IL 60631
P 773.775.4009 | www.ciorba.com

USER NAME = ayu	DESIGNED - DTJ	REVISED -	
	DRAWN - AM	REVISED -	
PLOT SCALE = 0.16666667 ' / In.	CHECKED - JMV	REVISED -	
PLOT DATE = 3/17/2026	DATE - 3/17/2026	REVISED -	

STATE OF ILLINOIS
DEPARTMENT OF TRANSPORTATION

I-290/IL 53 HMA RESURFACING AND BRIDGE REPAIRS
EXISTING TRAFFIC SIGNAL PLAN (RECORD DRAWING)

SCALE: | SHEET OF SHEETS | STA. TO STA.

F.A.I. RTE.	SECTION	COUNTY	TOTAL SHEETS	SHEET NO.
290	(0404-316-HB) BR 24	MULTIPLE*	276	75K
		CONTRACT NO. 62W99		
	ILLINOIS	FED. AID PROJECT		

BILL OF MATERIALS (62W99)		
DESCRIPTION	UNIT	TOTAL
TEMPORARY TRAFFIC SIGNAL TIMING	EACH	1

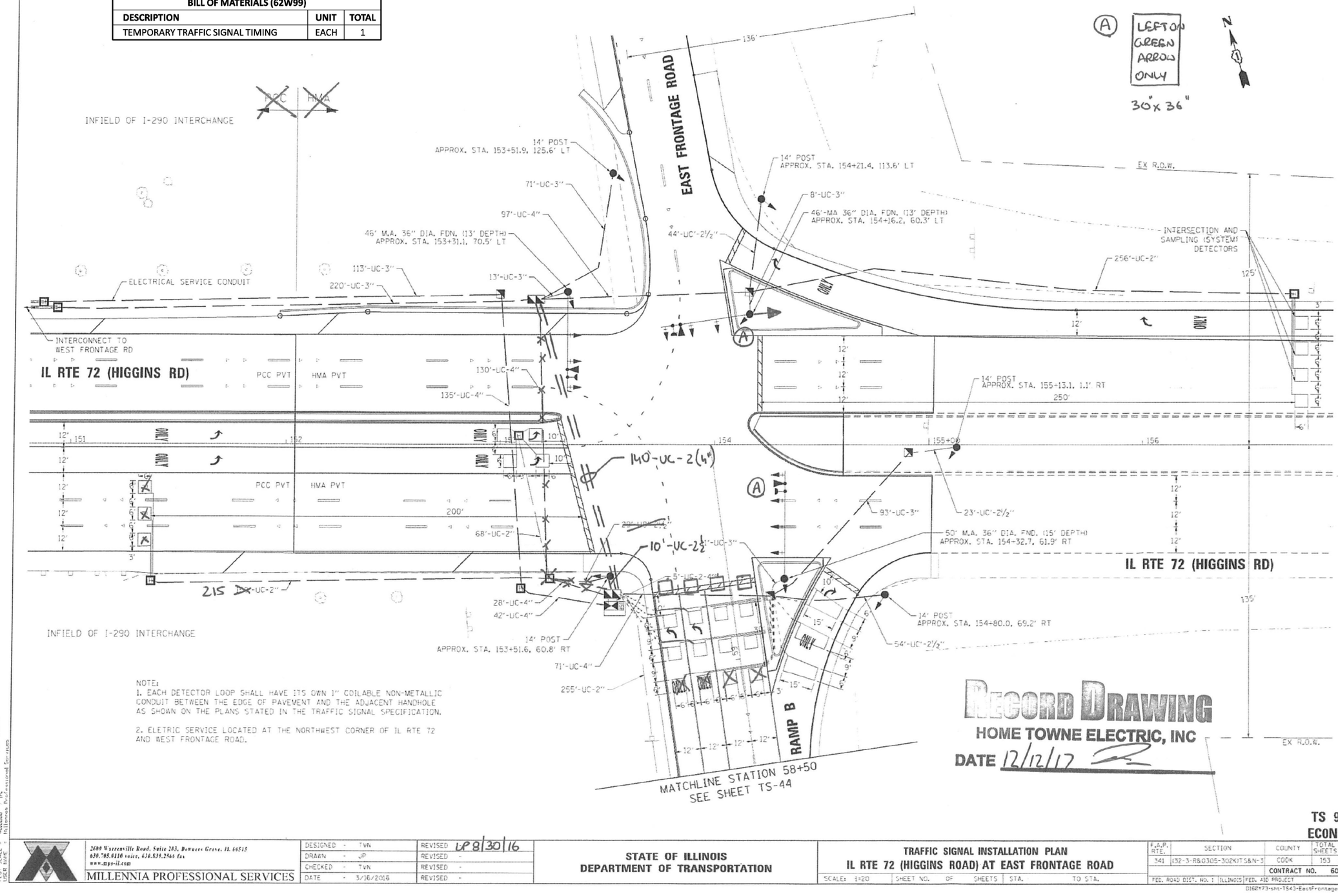

NOTE:
1. EACH DETECTOR LOOP SHALL HAVE ITS OWN 1" COILABLE NON-METALLIC CONDUIT BETWEEN THE EDGE OF PAVEMENT AND THE ADJACENT HANDHOLE AS SHOWN ON THE PLANS STATED IN THE TRAFFIC SIGNAL SPECIFICATION.

2. ELETRIC SERVICE LOCATED AT THE NORTHWEST CORNER OF IL RTE 72 AND WEST FRONTAGE ROAD.

RECORD DRAWING
HOME TOWNE ELECTRIC, INC
DATE 12/12/17

TS 96
ECON 84

FILE NAME = D162W73-sht-TS43-EastFrontage-Plan.dgn
PLOT SCALE = 40.0000 '/ In.
PLOT DATE = 3/17/2016
USER NAME = Millennia Professional Services

2600 Warrenville Road, Suite 203, Downers Grove, IL 60515
630.705.6110 voice, 630.839.2566 fax
www.mps-il.com
MILLENNIA PROFESSIONAL SERVICES

DESIGNED - TVN	REVISED UP 8/30/16	
DRAWN - JP	REVISED -	
CHECKED - TVN	REVISED -	
DATE - 3/16/2016	REVISED -	

STATE OF ILLINOIS
DEPARTMENT OF TRANSPORTATION

TRAFFIC SIGNAL INSTALLATION PLAN
IL RTE 72 (HIGGINS ROAD) AT EAST FRONTAGE ROAD

SCALE: 1:20 | SHEET NO. OF SHEETS | STA. | TO STA.

F.A.P. RTE.	SECTION	COUNTY	TOTAL SHEETS	SHEET NO.
341	(32-3-R&0305-302)ITS&N-3	COOK	153	BB
		CONTRACT NO. 60Y73		
FED. ROAD DIST. NO. 1	ILLINOIS	FED. AID PROJECT		

D162Y73-sht-TS43-EastFrontage-Plan.dgn

DATE PLOTTED = 4/20/2026 9:44:34 PM
PEN TABLE = 0202-0615.tbl
PLOT CONFIG = CGI-PDF.pltcfg
MODEL: $MODELNAME$
FILE NAME: pw:\\ciorba-pw.bentley.com:ciorba-pw-01\Documents\Projects\IL_DOT\01\0023.693.05\CADD Data\Sht2Signals\D162W99-sht-TS204.dgn

CiorbaGroup
8725 W. Higgins Rd, Ste 600, Chicago, IL 60631
P 773.775.4009 | www.ciorba.com

USER NAME = ayu	DESIGNED - DTJ	REVISED -
	DRAWN - AM	REVISED -
PLOT SCALE = 0.1666667 '/ In.	CHECKED - JMV	REVISED -
PLOT DATE = 3/17/2026	DATE - 3/17/2026	REVISED -

STATE OF ILLINOIS
DEPARTMENT OF TRANSPORTATION

I-290/IL 53 HMA RESURFACING AND BRIDGE REPAIRS
EXISTING TRAFFIC SIGNAL PLAN (RECORD DRAWING)

SCALE: N.T.S. | SHEET OF SHEETS | STA. | TO STA.

F.A.I. RTE.	SECTION	COUNTY	TOTAL SHEETS	SHEET NO.
290	(0404-316-HB) BR 24	COOK	276	75L
		CONTRACT NO. 62W99		
	ILLINOIS	FED. AID PROJECT		

PROPOSED CONTROLLER SEQUENCE

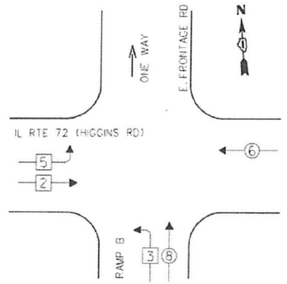

PHASE DESIGNATION DIAGRAM

LEGEND
- SINGLE ENTRY PHASE
- DUAL ENTRY PHASE
- OVERLAP (OL)
- PEDESTRIAN PHASE
- NUMBER REFERS TO ASSOCIATED PHASE

EMERGENCY VEHICLE PREEMPTION SEQUENCE

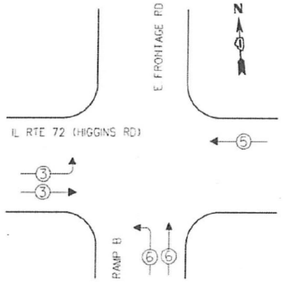

RECORD DRAWING
HOME TOWNE ELECTRIC, INC
DATE 12/12/17

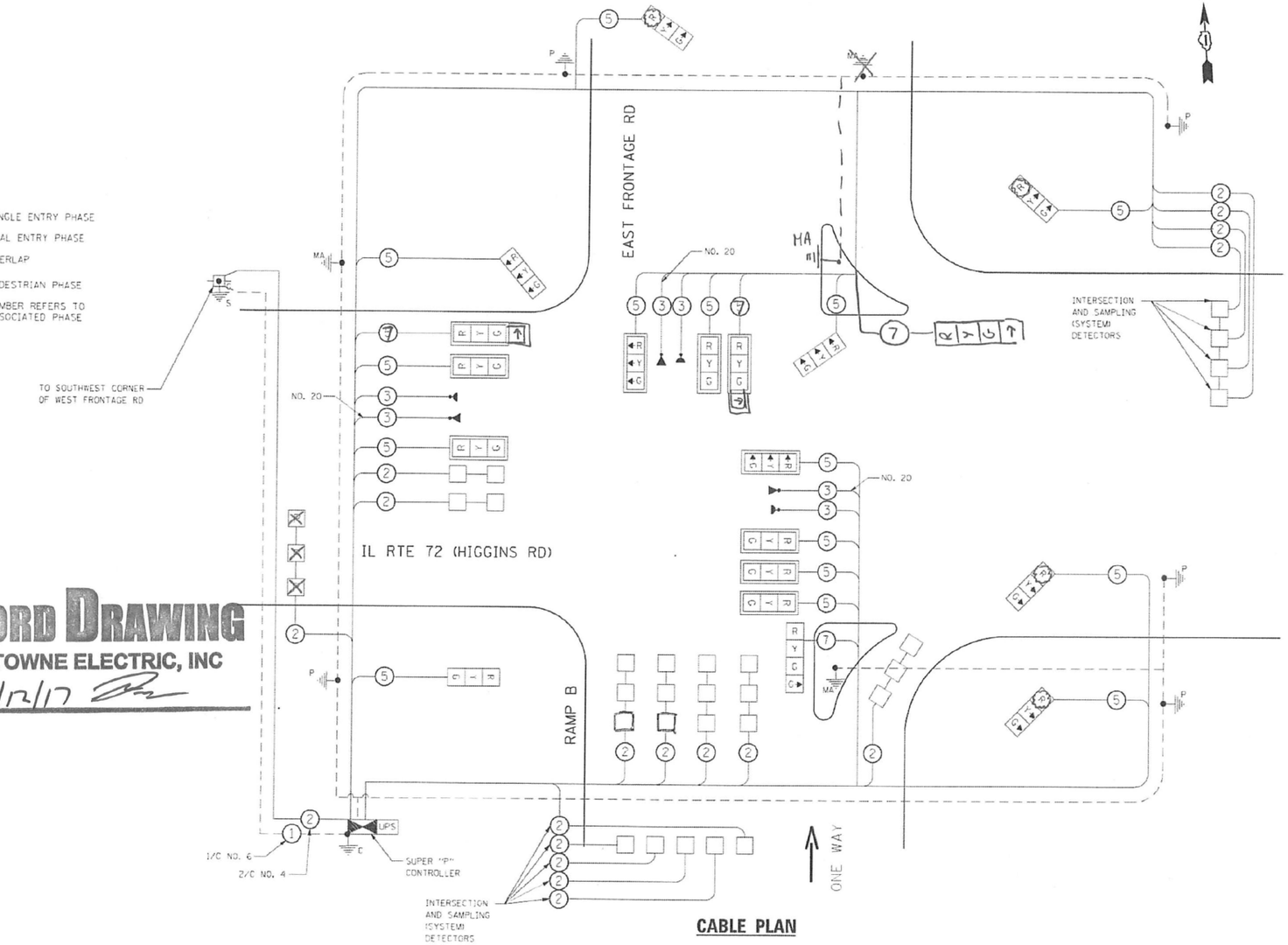

CABLE PLAN

I.D.O.T TRAFFIC SIGNAL INSTALLATION ELECTRICAL SERVICE REQUIREMENTS				TOTAL WATTAGE
TYPE	NO. OF LAMPS x	WATTAGE I.E.E.D.	OPERATION	
SIGNAL (RED)	18	17	0.50	153.0
(YELLOW)	18	25	0.25	112.5
(GREEN)	18	15	0.25	67.5
ARROW	1	12	0.10	1.2
PED. SIGNAL		25	1.00	
CONTROLLER	1	100	1.00	100.00
ILLUM. SIGN		120	0.05	
VIDEO SYSTEM		150	1.00	
FLASHER		150	0.50	
			TOTAL	434.2

ILLINOIS DEPARTMENT OF TRANSPORTATION
DIVISION OF HIGHWAYS/DISTRICT 1
201 N. CENTER CT/SCHAUMBURG, IL 60196-1096

ENERGY SUPPLY - CONTACT: DAVE SCHACHT
PHONE: 630-437-2129
COMPANY: COMMONWEALTH EDISON

NOTES:

1. EXISTING PHASING INCLUDES LAGGING NORTHBOUND LEFT TURNING PHASE. CONSULT WITH SCAT CONSULTANT ABOUT PROPOSED PHASING.

TS 96
ECON 84

FILE NAME = D1621731-sht-TS45-EastFrontage-Cable.dgn
PLOTTED = 4/20/2026 - 9:45:01 PM
USER NAME = Millennia Professional Services

2600 Warrenville Road, Suite 203, Downers Grove, IL 60515
630.705.6110 voice, 630.839.2566 fax
www.mps-il.com
MILLENNIA PROFESSIONAL SERVICES

DESIGNED	TVN	REVISED	LP 8/30/16
DRAWN	JP	REVISED	-
CHECKED	TVN	REVISED	-
DATE	12/21/2015	REVISED	-

STATE OF ILLINOIS
DEPARTMENT OF TRANSPORTATION

IL RTE 72 (HIGGINS ROAD) AT EAST FRONTAGE ROAD
CABLE PLAN, CONTROLLER SEQUENCE AND
PHASE DESIGNATION DIAGRAM

SCALE: N/A | SHEET NO. OF SHEETS | STA. - TO STA.

F.A.I. RTE.	SECTION	COUNTY	TOTAL SHEETS	SHEET NO.
341	(32-3-R&0305-302KITS&N-3	COOK	153	90
		CONTRACT NO. 60Y73		
FED. ROAD DIST. NO. 1	ILLINOIS	FED. AID PROJECT		

D1621731-sht-TS45-EastFrontage-Cable.dgn

DATE PLOTTED = 4/20/2026 - 9:45:01 PM
PLOT SCALE = 1.0000 '/ In.
PLOT CONFIG = CGI-PDF.pltcfg
MODEL: $MODELNAME$
FILE NAME: pw://ciorba-pw.bentley.com:ciorba-pw-01/Documents/Projects/IL_DOT/D1/0021693.05/CADD Data/Shts/Signals/D162W99-sht-TS205.dgn

CiorbaGroup
8725 W. Higgins Rd, Ste 600, Chicago, IL 60631
P 773.775.4009 | www.ciorba.com

USER NAME = ayu	DESIGNED - DTJ	REVISED -	
	DRAWN - AM	REVISED -	
PLOT SCALE = 0.16666867 '/ In.	CHECKED - JMV	REVISED -	
PLOT DATE = 3/17/2026	DATE - 3/17/2026	REVISED -	

STATE OF ILLINOIS
DEPARTMENT OF TRANSPORTATION

I-290/IL 53 HMA RESURFACING AND BRIDGE REPAIRS
EXISTING TRAFFIC SIGNAL PLAN (RECORD DRAWING)

SCALE: N.T.S. | SHEET OF SHEETS | STA. TO STA.

F.A.I. RTE.	SECTION	COUNTY	TOTAL SHEETS	SHEET NO.
290	(0404-316-HB) BR 24	MULTIPLE*	276	75M
		CONTRACT NO. 62W99		
	ILLINOIS	FED. AID PROJECT		

NOTES:

1. ALL MAST ARM ASSEMBLIES AND POLES AND TRAFFIC SIGNAL POSTS SHALL BE POWDER COATED BLACK.
2. MOUNTING LOCATION OF RADAR DETECTOR WILL BE DETERMINED PER MANUFACTURER'S RECOMMENDATIONS.
3. EACH DETECTOR LOOP SHALL HAVE ITS OWN 1" COILABLE NON-METALLIC CONDUIT BETWEEN THE EDGE OF PAVEMENT AND THE ADJACENT HAND HOLE AS SHOWN ON THE PLANS AND AS STATED IN THE TRAFFIC SIGNAL SPECIFICATIONS.

BILL OF MATERIALS (62W99)		
DESCRIPTION	UNIT	TOTAL
TEMPORARY TRAFFIC SIGNAL TIMING	EACH	1

(A) R10-11C 30" X 42" SIGN PANEL - TYPE 1 2 REQUIRED

(B) R3-3 36" X 36" SIGN PANEL - TYPE 1 1 REQUIRED

(C) R3-2 36" X 36" SIGN PANEL - TYPE 1 2 REQUIRED

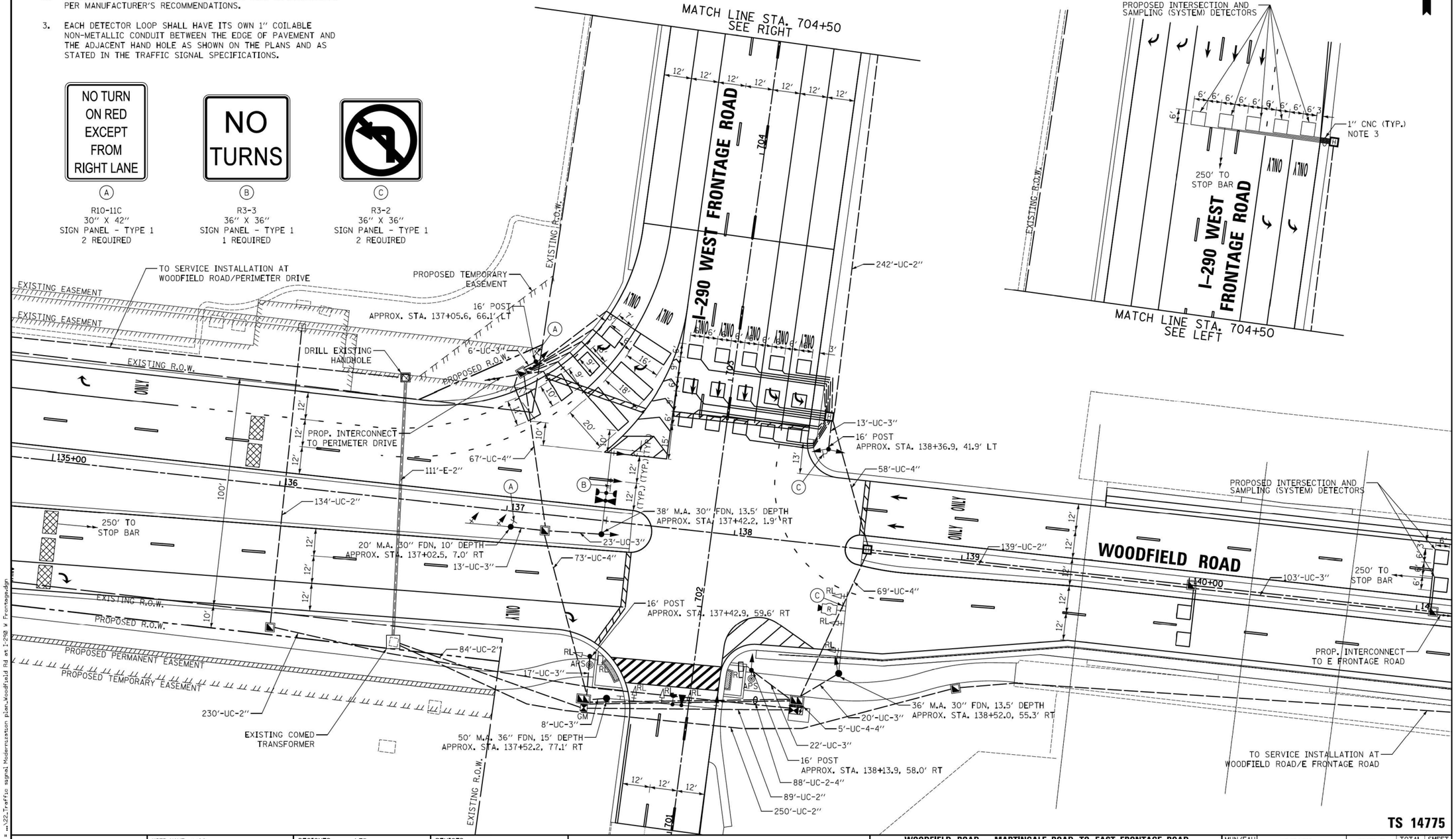

TS 14775

CIVILTECH	USER NAME = djk	DESIGNED - LEP	REVISED -
		DRAWN - OJT	REVISED -
	PLOT SCALE = 20.0000 ' / in.	CHECKED - JJE	REVISED -
	PLOT DATE = 2/12/2019	DATE - 01/28/2019	REVISED -

STATE OF ILLINOIS
DEPARTMENT OF TRANSPORTATION

WOODFIELD ROAD – MARTINGALE ROAD TO EAST FRONTAGE ROAD
TRAFFIC SIGNAL MODERNIZATION PLAN
WOODFIELD ROAD AND I-290 WEST FRONTAGE ROAD
SCALE: 1" = 20' | SHEET 1 OF 1 SHEETS | STA. | TO STA.

MUN/FAU RTE.	SECTION	COUNTY	TOTAL SHEETS	SHEET NO.
3073/		COOK	282	170
1689	14-00114-01-PV	CONTRACT NO. 61F09		
		ILLINOIS	FED. AID PROJECT	

FILE NAME = ...\22_Traffic signal Modernization plan_Woodfield Rd at I-290 W Frontage.dgn

DATE PLOTTED = 4/30/2026 9:45:29 PM
PEN TABLE = 2021-04-15.tbl
PLOT CONFIG = CGI-PDF.pltcfg
MODEL: $MODELNAMES
FILE NAME: pw://ciorba-pw.bentley.com:ciorba-pw-01/Documents/Projects/IL_DOT/D1/00231693.05/CADD Data/Sht/Signals/D162W99-sht-TS206.dgn

CiorbaGroup
8725 W. Higgins Rd, Ste 600, Chicago, IL 60631
P 773.775.4009 | www.ciorba.com

USER NAME = ayu	DESIGNED - DTJ	REVISED -	
	DRAWN - AM	REVISED -	
PLOT SCALE = 0.16666667 ' / In.	CHECKED - JMV	REVISED -	
PLOT DATE = 3/17/2026	DATE - 3/17/2026	REVISED -	

STATE OF ILLINOIS
DEPARTMENT OF TRANSPORTATION

I-290/IL 53 HMA RESURFACING AND BRIDGE REPAIRS
EXISTING TRAFFIC SIGNAL PLAN (RECORD DRAWING)
SCALE: N.T.S. | SHEET OF SHEETS | STA. | TO STA.

F.A.I. RTE.	SECTION	COUNTY	TOTAL SHEETS	SHEET NO.
290	(0404-316-HB) BR 24	COOK	276	75N
		CONTRACT NO. 62W99		
		ILLINOIS	FED. AID PROJECT	

PROPOSED CONTROLLER SEQUENCE

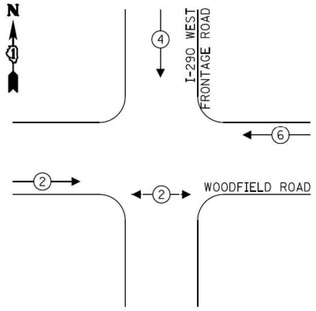

LEGEND:

- PROTECTED PHASE
- PROTECTED/PERMITTED PHASE
- PEDESTRIAN PHASE
- OL OVERLAP

PROPOSED EMERGENCY VEHICLE PREEMPTION SEQUENCE

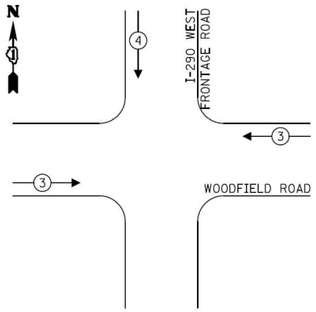

LEGEND:

(S) NO. 14 3/C (BLACK, WHITE, GREEN), TYPE SOOW

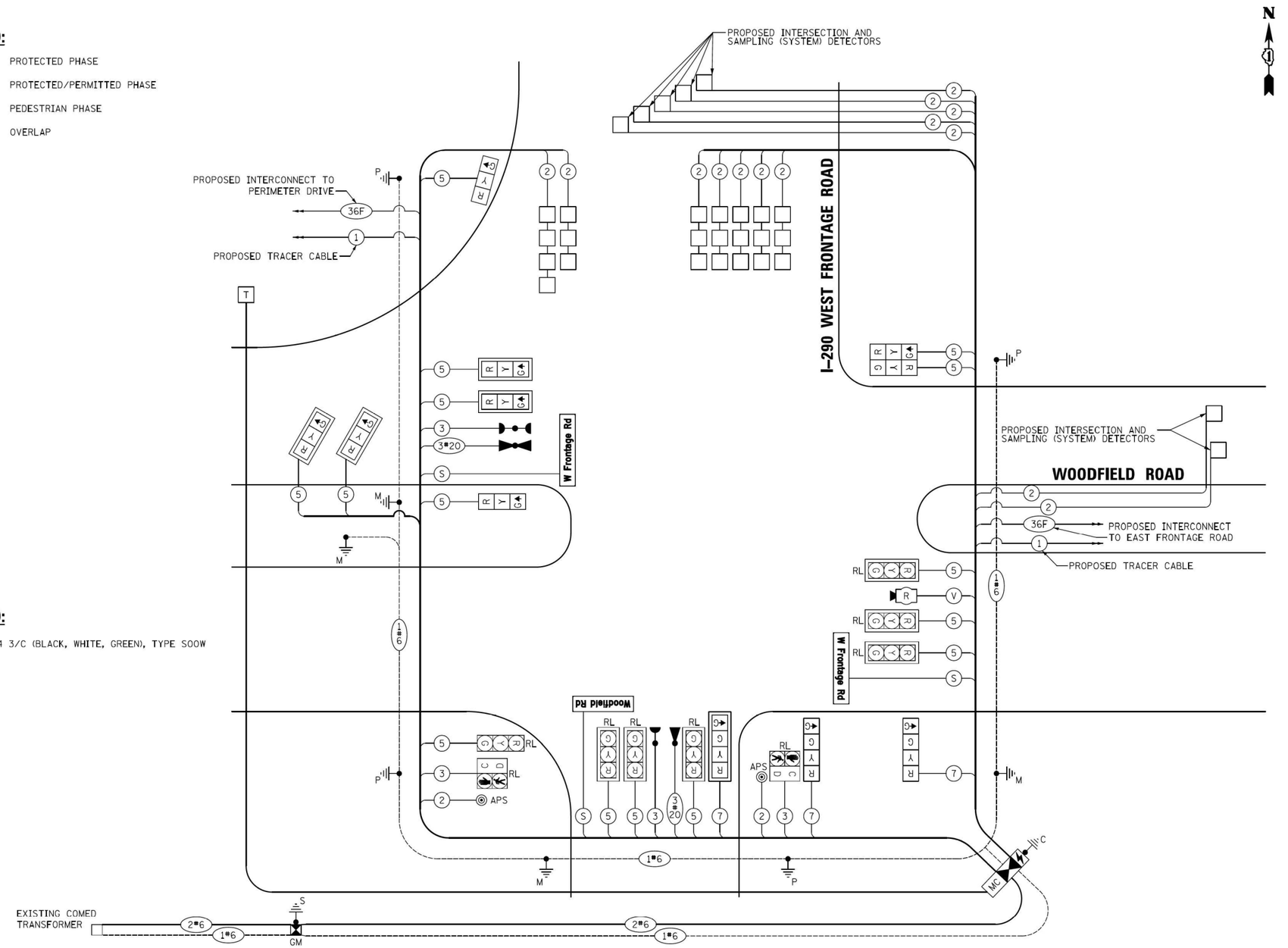

TRAFFIC SIGNAL ELECTRICAL SERVICE REQUIREMENTS

TYPE	NO. OF LAMPS	LED WATTAGE	% OPERATION	TOTAL WATTAGE
SIGNAL (RED)	18	11	50	99.0
(YELLOW)	18	20	5	18.0
(GREEN)	21	12	45	113.4
PERMISSIVE ARROW	-	10	10	-
PED. SIGNAL	2	20	100	40.0
CONTROLLER	1	100	100	100.0
UPS	1	25	100	25.0
VIDEO SYSTEM	1	150	100	150.0
BLANK-OUT SIGN	-	25	5	-
FLASHER	-	-	50	-
STREET NAME SIGN	3	120	50	180.0
LUMINAIRE	-	-	-	-
			TOTAL =	725.4

ENERGY COSTS TO:

VILLAGE OF SCHAUMBURG
101 SCHAUMBURG COURT
SCHAUMBURG, IL 60193

ENERGY SUPPLY: CONTACT: TRACY WASH
PHONE: (630) 691-4691
COMPANY: COMED
ACCOUNT NUMBER: 0245068017

TS 14775

FILE NAME = ...\23_Cable Plan and Sequences_Woodfield Rd at I-290 W Frontage Rd.dgn

CIVILTECH	USER NAME = djk	DESIGNED - LEP	REVISED -
		DRAWN - OJT	REVISED -
	PLOT SCALE = 20.0000 ' / in.	CHECKED - JJE	REVISED -
	PLOT DATE = 2/12/2019	DATE - 01/28/2019	REVISED -

STATE OF ILLINOIS
DEPARTMENT OF TRANSPORTATION

WOODFIELD ROAD – MARTINGALE ROAD TO EAST FRONTAGE ROAD
CABLE PLAN AND SEQUENCES
WOODFIELD ROAD AND I-290 WEST FRONTAGE ROAD
SCALE: NO SCALE | SHEET 1 OF 1 SHEETS | STA. TO STA.

MUN/FAU RTE.	SECTION	COUNTY	TOTAL SHEETS	SHEET NO.
3073/ 1689	14-00114-01-PV	COOK	282	171
		CONTRACT NO. 61F09		
		ILLINOIS FED. AID PROJECT		

103

DATE PLOTTED = 4/30/2026 9:45:56 PM
PEN TABLE = 0021693.05.tbl
PLOT CONFIG = CGI-PDF.pltcfg
MODEL: $MODELNAME$
FILE NAME: pw://ciorba-pw.bentley.com:ciorba-pw-01/Documents/Projects/IL_DOT/D1/0021693.05/CADD Data/Sht/Signals/D162W99-sht-TS207.dgn

CiorbaGroup
8725 W. Higgins Rd, Ste 600, Chicago, IL 60631
P 773.775.4009 | www.ciorba.com

USER NAME = ayu	DESIGNED - DTJ	REVISED -	
	DRAWN - AM	REVISED -	
PLOT SCALE = 0.16666667 ' / in.	CHECKED - JMV	REVISED -	
PLOT DATE = 3/17/2026	DATE - 3/17/2026	REVISED -	

STATE OF ILLINOIS
DEPARTMENT OF TRANSPORTATION

I-290/IL 53 HMA RESURFACING AND BRIDGE REPAIRS
EXISTING TRAFFIC SIGNAL PLAN (RECORD DRAWING)
SCALE: N.T.S. | SHEET OF SHEETS | STA. TO STA.

F.A.I. RTE.	SECTION	COUNTY	TOTAL SHEETS	SHEET NO.
290	(0404-316-HB) BR 24	MULTIPLE*	276	750
		CONTRACT NO. 62W99		
		ILLINOIS FED. AID PROJECT		

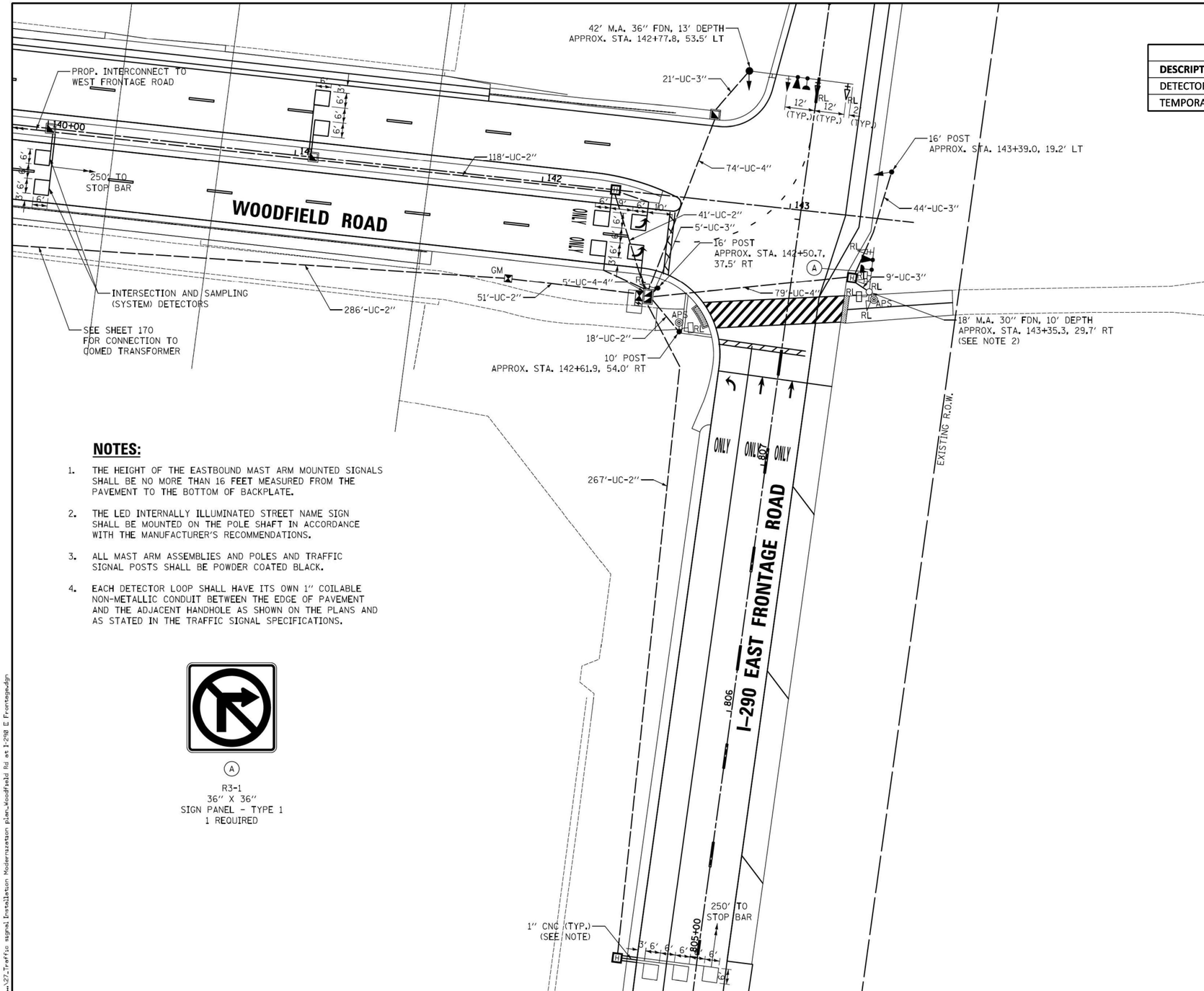

BILL OF MATERIALS (62W99)		
DESCRIPTION	UNIT	TOTAL
DETECTOR LOOP REPLACEMENT	FOOT	117
TEMPORARY TRAFFIC SIGNAL TIMING	EACH	1

NOTES:

1. THE HEIGHT OF THE EASTBOUND MAST ARM MOUNTED SIGNALS SHALL BE NO MORE THAN 16 FEET MEASURED FROM THE PAVEMENT TO THE BOTTOM OF BACKPLATE.
2. THE LED INTERNALLY ILLUMINATED STREET NAME SIGN SHALL BE MOUNTED ON THE POLE SHAFT IN ACCORDANCE WITH THE MANUFACTURER'S RECOMMENDATIONS.
3. ALL MAST ARM ASSEMBLIES AND POLES AND TRAFFIC SIGNAL POSTS SHALL BE POWDER COATED BLACK.
4. EACH DETECTOR LOOP SHALL HAVE ITS OWN 1" COILABLE NON-METALLIC CONDUIT BETWEEN THE EDGE OF PAVEMENT AND THE ADJACENT HANDHOLE AS SHOWN ON THE PLANS AND AS STATED IN THE TRAFFIC SIGNAL SPECIFICATIONS.

A

R3-1
36" X 36"
SIGN PANEL - TYPE 1
1 REQUIRED

TS 14770

CIVILTECH	USER NAME = djk	DESIGNED - LEP	REVISED -	STATE OF ILLINOIS DEPARTMENT OF TRANSPORTATION	WOODFIELD ROAD – MARTINGALE ROAD TO EAST FRONTAGE ROAD TRAFFIC SIGNAL MODERNIZATION PLAN WOODFIELD ROAD AND I-290 EAST FRONTAGE ROAD	MUN/FAU RTE.	SECTION	COUNTY	TOTAL SHEETS	SHEET NO.
		DRAWN - OJT	REVISED -			3073/	14-00114-01-PV	COOK	282	180
	PLOT SCALE = 20.0000 ' / in.	CHECKED - JJE	REVISED -			1689		CONTRACT NO. 61F09		
	PLOT DATE = 2/12/2019	DATE - 01/28/2019	REVISED -		SCALE: 1" = 20' SHEET 1 OF 1 SHEETS STA. TO STA.		ILLINOIS	FED. AID PROJECT		

FILE NAME = ...\27_Traffic signal Installation Modernization plan_Woodfield Rd at I-290 E Frontage.dgn

DATE PLOTTED = 4/30/2026 9:46:21 PM
PEN TABLE = 0021693.05.tbl
PLOT CONFIG = CGI-PDF.pltcfg
MODEL: $MODELNAMES
FILE NAME: pw://ciorba-pw.bentley.com:ciorba-pw-01/Documents/Projects/IL_DOT/D1/0021693.05/CADD Data/Sht/Signals/D162W99-sht-TS208.dgn

CiorbaGroup 8725 W. Higgins Rd, Ste 600, Chicago, IL 60631 P 773.775.4009 | www.ciorba.com	USER NAME = ayu	DESIGNED - DTJ	REVISED -	STATE OF ILLINOIS DEPARTMENT OF TRANSPORTATION	I-290/IL 53 HMA RESURFACING AND BRIDGE REPAIRS EXISTING TRAFFIC SIGNAL PLAN (RECORD DRAWING)	F.A.I. RTE.	SECTION	COUNTY	TOTAL SHEETS	SHEET NO.
		DRAWN - AM	REVISED -			290	(0404-316-HB) BR 24	COOK	276	75P
	PLOT SCALE = 0.16666667 ' / in.	CHECKED - JMV	REVISED -					CONTRACT NO. 62W99		
	PLOT DATE = 3/17/2026	DATE - 3/17/2026	REVISED -		SCALE: N.T.S. SHEET OF SHEETS STA. TO STA.		ILLINOIS	FED. AID PROJECT		

PROPOSED CONTROLLER SEQUENCE

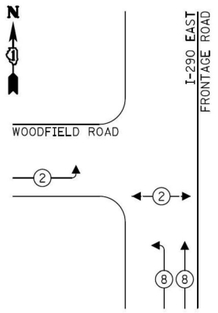

PROPOSED EMERGENCY VEHICLE PREEMPTION SEQUENCE

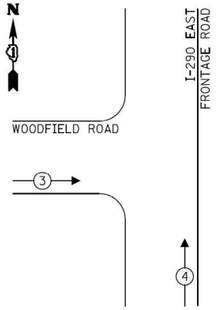

LEGEND:

- PROTECTED PHASE
- PROTECTED/PERMITTED PHASE
- PEDESTRIAN PHASE
- OL OVERLAP

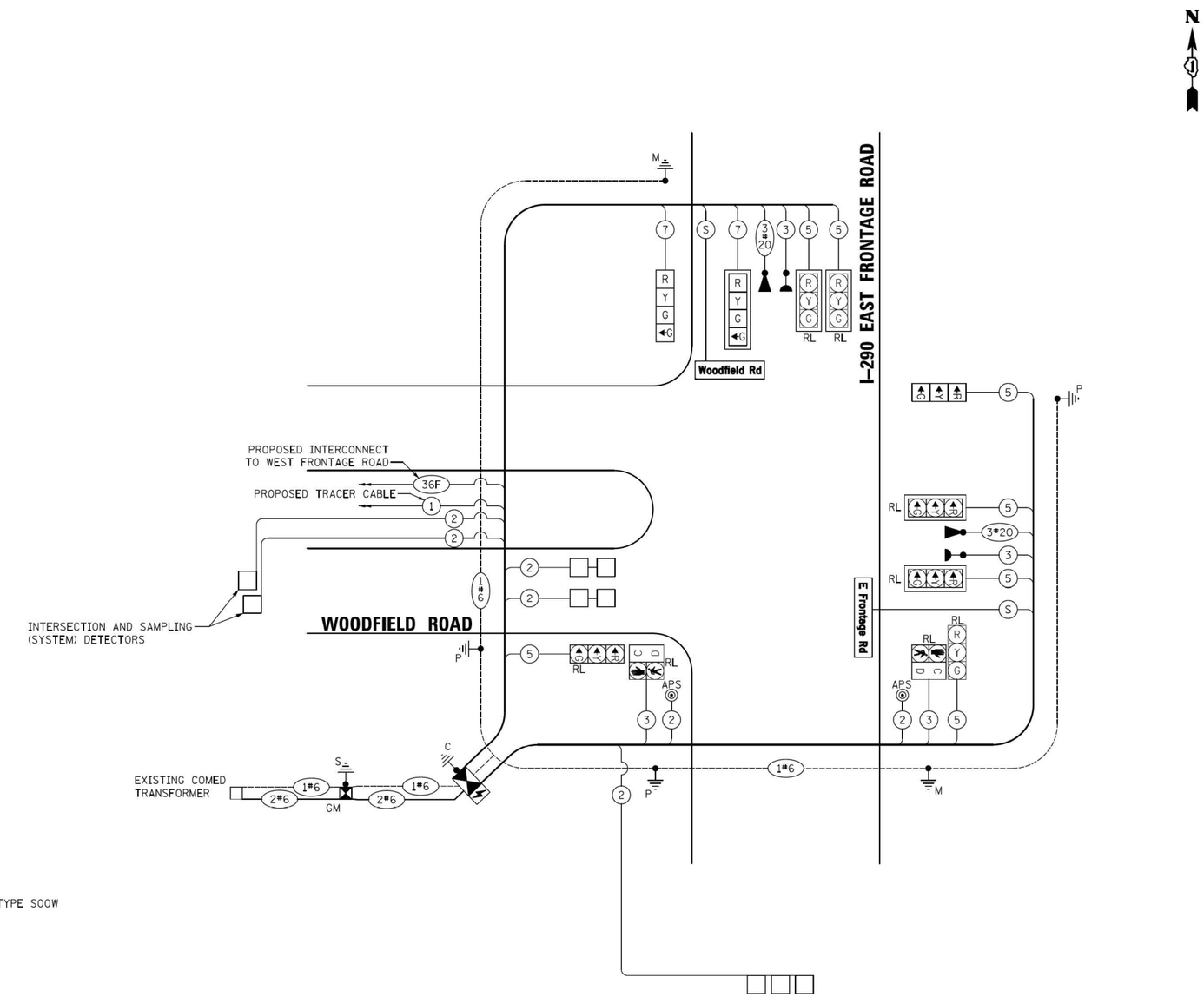

TRAFFIC SIGNAL ELECTRICAL SERVICE REQUIREMENTS

TYPE	NO. OF LAMPS	LED WATTAGE	% OPERATION	TOTAL WATTAGE
SIGNAL (RED)	9	11	50	49.5
(YELLOW)	9	20	5	9.0
(GREEN)	11	12	45	59.4
PERMISSIVE ARROW	-	10	10	-
PED. SIGNAL	2	20	100	40.0
CONTROLLER	1	100	100	100.0
UPS	1	25	100	25.0
VIDEO SYSTEM	-	150	100	-
BLANK-OUT SIGN	-	25	5	-
FLASHER	-	-	50	-
STREET NAME SIGN	2	120	50	120.0
LUMINAIRE	-	-	-	-
			TOTAL =	402.9

ENERGY COSTS TO:

VILLAGE OF SCHAUMBURG
101 SCHAUMBURG COURT
SCHAUMBURG, IL 60193

ENERGY SUPPLY: CONTACT: TRACY WASH
PHONE: (630) 691-4691
COMPANY: COMED
ACCOUNT NUMBER: 0245068017

LEGEND:

(S) NO. 14 3/C (BLACK, WHITE, GREEN), TYPE SOOW

TS 14770

FILE NAME = ...\28_Cable Plan and Sequences_Woodfield Rd at I-290 E Frontage Rd.dgn

CIVILTECH	USER NAME = djk	DESIGNED - LEP	REVISED -
		DRAWN - OJT	REVISED -
	PLOT SCALE = 20.0000 ' / in.	CHECKED - JJE	REVISED -
	PLOT DATE = 2/12/2019	DATE - 01/28/2019	REVISED -

STATE OF ILLINOIS
DEPARTMENT OF TRANSPORTATION

WOODFIELD ROAD – MARTINGALE ROAD TO EAST FRONTAGE ROAD
CABLE PLAN AND SEQUENCES
WOODFIELD ROAD AND I-290 EAST FRONTAGE ROAD

SCALE: NO SCALE | SHEET 1 OF 1 SHEETS | STA. TO STA.

MUN/FAU RTE.	SECTION	COUNTY	TOTAL SHEETS	SHEET NO.
3073/ 1689	14-00114-01-PV	COOK	282	181
		CONTRACT NO. 61F09		
		ILLINOIS FED. AID PROJECT		

DATE PLOTTED = 4/30/2026 9:46:50 PM
PEN TABLE = 0021693.05.tbl
PLOT CONFIG = CGI-PDF.pltcfg
MODEL: $MODELNAMES
FILE NAME: pw://ciorba-pw.bentley.com:ciorba-pw-01/Documents/Projects/IL_DOT/D1/0021693.05/CADD Data/Sht/Signals/D162W99-sht-TS209.dgn

CiorbaGroup
8725 W. Higgins Rd, Ste 600, Chicago, IL 60631
P 773.775.4009 | www.ciorba.com

USER NAME = ayu	DESIGNED - DTJ	REVISED -	
	DRAWN - AM	REVISED -	
PLOT SCALE = 0.16666667 ' / in.	CHECKED - JMV	REVISED -	
PLOT DATE = 3/17/2026	DATE - 3/17/2026	REVISED -	

STATE OF ILLINOIS
DEPARTMENT OF TRANSPORTATION

I-290/IL 53 HMA RESURFACING AND BRIDGE REPAIRS
EXISTING TRAFFIC SIGNAL PLAN (RECORD DRAWING)

SCALE: N.T.S. | SHEET OF SHEETS | STA. TO STA.

F.A.I. RTE.	SECTION	COUNTY	TOTAL SHEETS	SHEET NO.
290	(0404-316-HB) BR 24	COOK	276	75Q
		CONTRACT NO. 62W99		
		ILLINOIS FED. AID PROJECT		

TRAFFIC SIGNAL LEGEND

	PROPOSED	EXISTING
CONTROLLER	■	▣
SERVICE INSTALLATION	▮	▯
SIGNAL HEAD	→	▷
SIGNAL HEAD WITH BACKPLATE	+→	+▷
SIGNAL HEAD, PEDESTRIAN	▮→	▯▷
SIGNAL POST	●	○
MAST ARM ASSEMBLY AND POLE, STEEL	●—	○—
MAST ARM ASSEMBLY AND POLE, ALUMINUM	●—	○—
COMBINATION MAST ARM ASSEMBLY AND POLE, STEEL WITH LUMINAIRE	●—✳	○—✳
UNIT DUCT	UD	
COMMON TRENCH	CT	
HANDHOLE	◥	◹
HEAVY DUTY HANDHOLE	H	H
DOUBLE HANDHOLE	◥◤	◹◺
G.S. CONDUIT IN TRENCH (T) OR PUSHED (P)	——	═══

	PROPOSED	EXISTING
PEDESTRIAN PUSHBUTTON DETECTOR	⊙	⊙
DETECTOR LOOP	□	⬚
CAST IRON JUNCTION BOX	ⓘ	ⓘ "E"
EMERGENCY VEHICLE LIGHT DETECTOR	◀■	◀⋈
CONFIRMATION BEACON	■■	⋈
SIGNAL HEAD OPTICALLY PROGRAMMED	→"P"	▷ "P"
CONDUIT SPLICE	——	
WOOD POLE	⊗	⊗"E"
RACEWAY FOR MAGNETIC DETECTOR, TYPE I OR TYPE II	▭	▭ "E"
VEHICLE DETECTOR, NON COMPENSATED MAGNETIC TYPE	▬	▭
RAILROAD CONTROL CABINET	⋈	⋈"E"
TELEPHONE CONNECTION	T	T
ILLUMINATED SIGN "NO LEFT TURN"		"E"
ILLUMINATED SIGN "NO RIGHT TURN"		"E"
UNINTERRUPTIBLE POWER SUPPLY	UPS	UPS
RELOCATED	"R"	

CONSTRUCTION NOTES:

1. RELOCATE EXISTING LIGHT DETECTORS AND CONFIRMATION BEACONS TO THE NEW MAST ARMS AND POST.
2. RELOCATE EXISTING LIGHT DETECTOR AMPLIFIER TO NEW CONTROLLER CABINET.
3. ALL EXISTING CONFIRMATION BEACONS SHALL BE RETROFITTED WITH LED INDICATIONS. THIS WORK SHALL BE INCIDENTAL TO THE PAY ITEM: UNINTERRUPTIBLE POWER SUPPLY.

BILL OF MATERIALS (62W99)		
DESCRIPTION	UNIT	TOTAL
DETECTOR LOOP REPLACEMENT	FOOT	390
TEMPORARY TRAFFIC SIGNAL TIMING	EACH	1

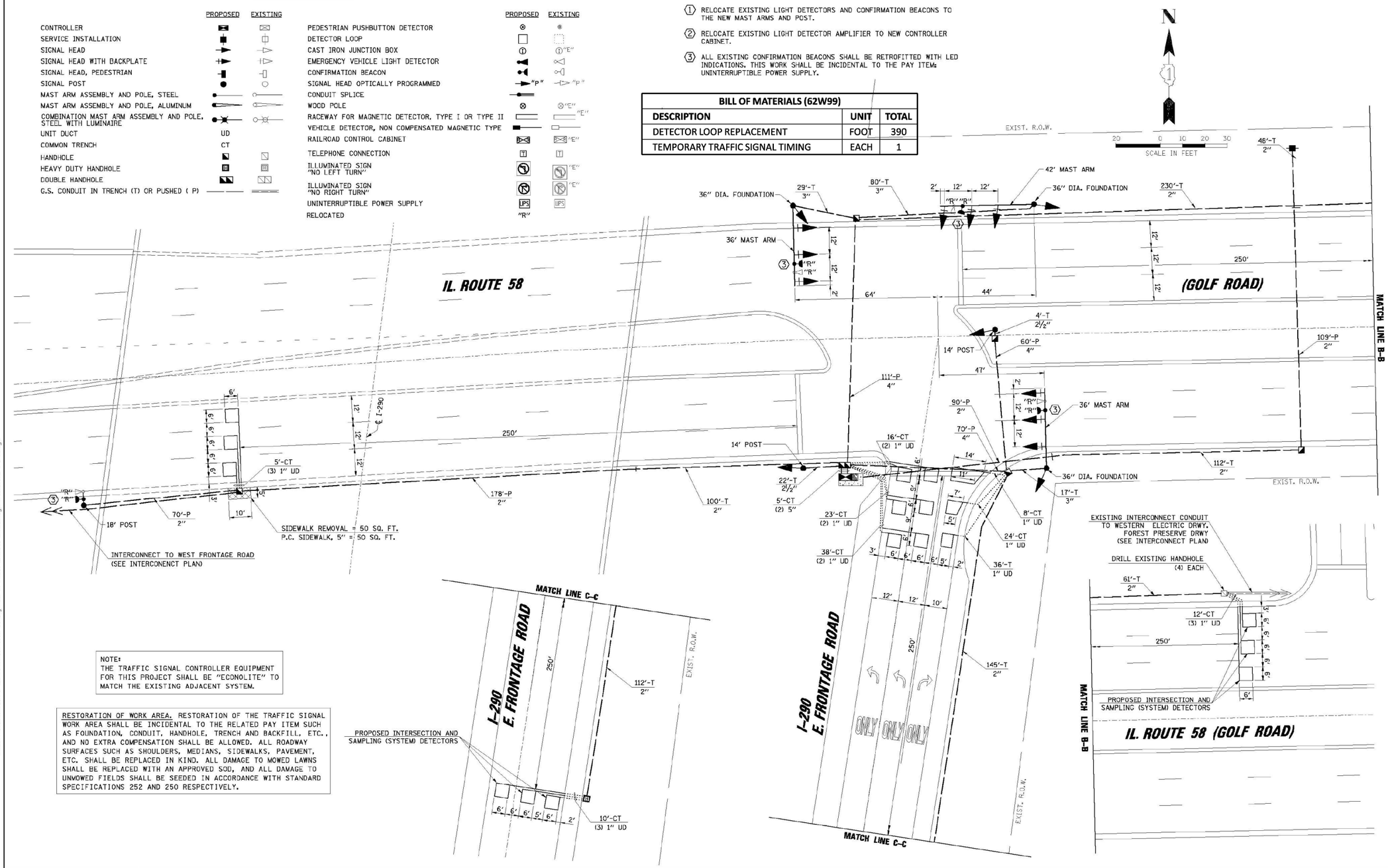

NOTE:
THE TRAFFIC SIGNAL CONTROLLER EQUIPMENT FOR THIS PROJECT SHALL BE "ECONOLITE" TO MATCH THE EXISTING ADJACENT SYSTEM.

RESTORATION OF WORK AREA. RESTORATION OF THE TRAFFIC SIGNAL WORK AREA SHALL BE INCIDENTAL TO THE RELATED PAY ITEM SUCH AS FOUNDATION, CONDUIT, HANDHOLE, TRENCH AND BACKFILL, ETC., AND NO EXTRA COMPENSATION SHALL BE ALLOWED. ALL ROADWAY SURFACES SUCH AS SHOULDERS, MEDIANS, SIDEWALKS, PAVEMENT, ETC. SHALL BE REPLACED IN KIND. ALL DAMAGE TO MOWED LAWNS SHALL BE REPLACED WITH AN APPROVED SOD, AND ALL DAMAGE TO UNMOWED FIELDS SHALL BE SEEDED IN ACCORDANCE WITH STANDARD SPECIFICATIONS 252 AND 250 RESPECTIVELY.

FILE NAME = ...\TSD_IL58 @ I-290E.dgn	USER NAME = FPACIONE	DESIGNED - ABR	REVISED -
		DRAWN - FPB / FCP	REVISED -
	PLOT SCALE = 20'	CHECKED - MJT	REVISED -
	PLOT DATE = 1/26/2009	DATE -	REVISED -

STATE OF ILLINOIS
DEPARTMENT OF TRANSPORTATION

TRAFFIC SIGNAL MODERNIZATION PLAN
IL ROUTE 58 (GOLF ROAD) AND I-290 E. FRONTAGE ROAD

SCALE: 1"= 20' | SHEET NO. OF SHEETS | STA. TO STA.

F.A.P. RTE.	SECTION	COUNTY	TOTAL SHEETS	SHEET NO.
VAR	2009-008-TS	COOK	41	29
		CONTRACT NO. 60G04		
FED. ROAD DIST. NO.	ILLINOIS	FED. AID PROJECT		

PROFILE PLAN

SURVEYED — BY — DATE
ELEVATIONS — BY —
ALIGNMENT CHECKED — BY —
GRADES CHECKED — BY —
STRUCTURE NOTATIONS CHKD — BY —
NOTE BOOK — PLOTTED — DATE
NO. — FOR FIELD WORK —

CHRISTOPHER B. BURKE ENGINEERING LTD.
9575 West Higgins Road, Suite 600
Rosemont, Illinois 60018
(847) 823-0500

N:\data\60B0401\acad\S-EE Northwest Cook Safety\Task W - IL58 @ I-290 E Frontage\TSD_IL58 @ I-290E.dgn

DATE PLOTTED = 4/20/2026 9:47:16 PM
PEN TABLE = CGH-PDF.tbl
PLOT CONFIG = CGH-PDF.pltcfg
MODEL: $MODELNAME$
FILE NAME: pw://ciorba-pw.bentley.com:ciorba-pw-01/Documents/Projects/IL_DOT/01002169.05/CADD Data/Shr2Signals/D162W99-sht-TS210.dgn

CiorbaGroup
8725 W. Higgins Rd, Ste 600, Chicago, IL 60631
P 773.775.4009 | www.ciorba.com

USER NAME = ayu	DESIGNED - DTJ	REVISED -	
	DRAWN - AM	REVISED -	
PLOT SCALE = 0.16666667 '/ In.	CHECKED - JMV	REVISED -	
PLOT DATE = 3/17/2026	DATE - 3/17/2026	REVISED -	

STATE OF ILLINOIS
DEPARTMENT OF TRANSPORTATION

I-290/IL 53 HMA RESURFACING AND BRIDGE REPAIRS
EXISTING TRAFFIC SIGNAL PLAN (RECORD DRAWING)

SCALE: N.T.S. | SHEET OF SHEETS | STA. TO STA.

F.A.I. RTE.	SECTION	COUNTY	TOTAL SHEETS	SHEET NO.
290	(0404-316-HB) BR 24	COOK	276	75R
		CONTRACT NO. 62W99		
	ILLINOIS	FED. AID PROJECT		

CHRISTOPHER B. BURKE ENGINEERING LTD.
9575 West Higgins Road, Suite 600
Rosemont, Illinois 60018
(847) 823-0500

PLAN | SURVEYED | DRAWN | ALIGNMENT CHECKED | GRADES CHECKED | STA. & ELE. MATCHED | PLAN FILE NAME
PROFILE | SURVEYED | DRAWN | GRADES CHECKED | STA. & ELE. MATCHED | NOTE BOOK | NO.

N:\Data\VRBRAID Task S - EE Northwest Cook Safety\Task N - IL53 & I-290 E Frontage\GAB IL53 & I-290E.dgn

CONTROLLER SEQUENCE

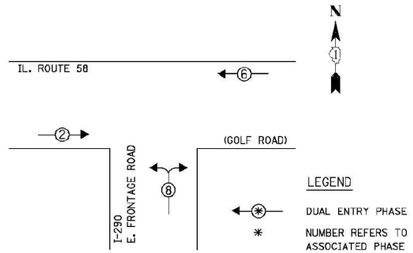

PHASE DESIGNATION DIAGRAM

EMERGENCY VEHICLE PREEMPTION SEQUENCE

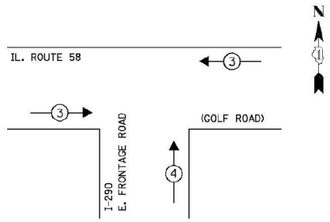

PROPOSED EMERGENCY VEHICLE PREEMPTORS		
EMERGENCY VEHICLE PREEMPTOR	3	4
MOVEMENT	← →	↑

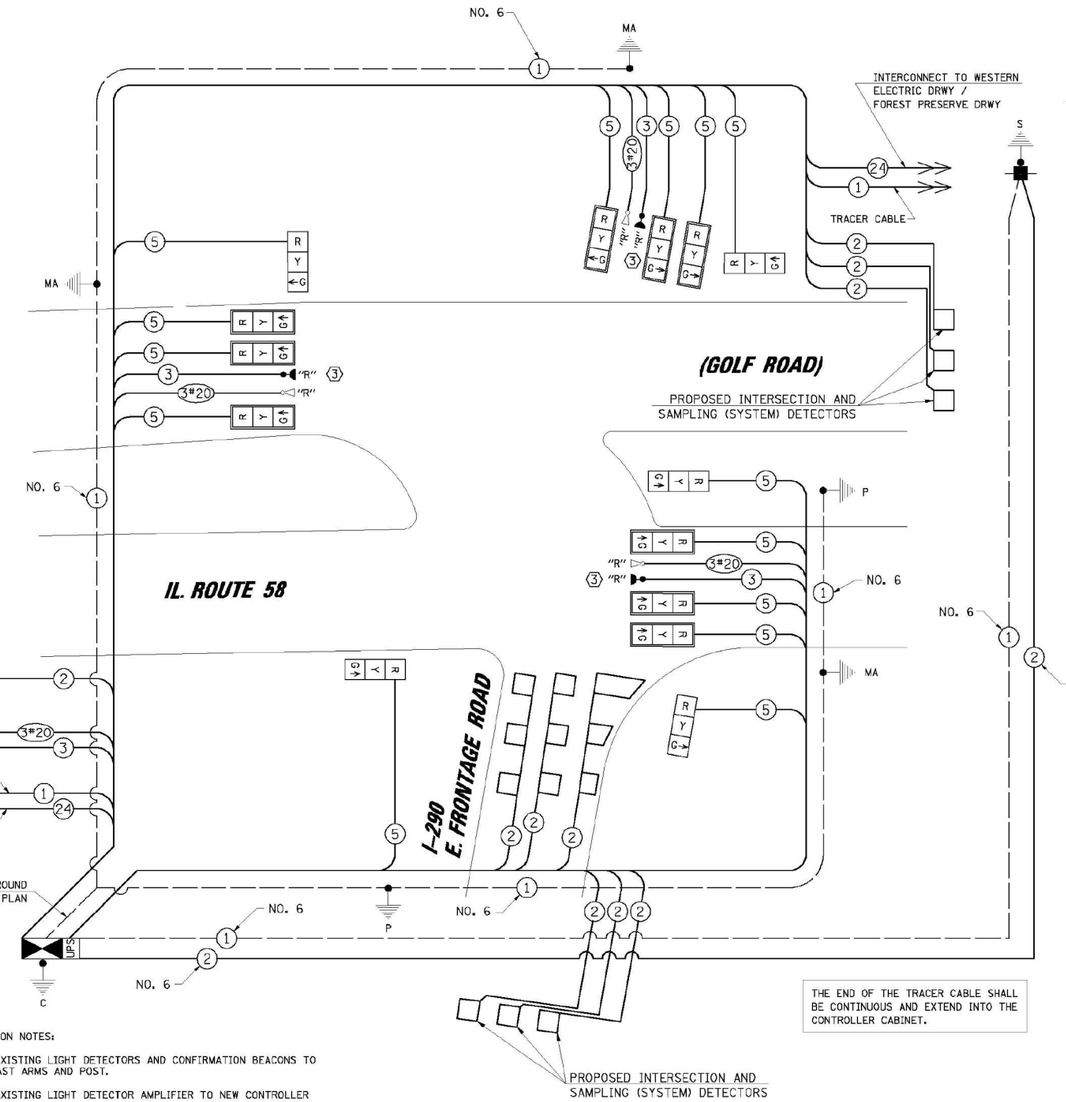

CABLE PLAN

THE END OF THE TRACER CABLE SHALL BE CONTINUOUS AND EXTEND INTO THE CONTROLLER CABINET.

CABLE PLAN LEGEND

EXISTING	PROPOSED	
	G	8" (200mm) TRAFFIC SIGNAL SECTION
	R	12" (300mm) TRAFFIC SIGNAL SECTION
	W	12" (300mm) PEDESTRIAN SIGNAL SECTION
	C D	12" (300mm) PEDESTRIAN SIGNAL SECTION WITH COUNTDOWN TIMER
		CONTROLLER CABINET
		SERVICE INSTALLATION
	T	TELEPHONE INSTALLATION
		VEHICLE DETECTOR, INDUCTION LOOP
		MAGNETIC DETECTOR
		EMERGENCY VEHICLE LIGHT DETECTOR
		CONFIRMATION BEACON
		PUSHBUTTON DETECTOR
(2)	(2)	DENOTES NUMBER OF CONDUCTORS. ALL CABLE NO. 14 EXCEPT AS INDICATED. ALL LOOP DETECTOR CABLE TO BE SHIELDED.
(1)	(1)	GROUND CABLE IN CONDUIT NO. 6 SOLID COPPER (GREEN)
(24)	(24)	FIBER OPTIC CABLE IN CONDUIT NO. 62.5/125 2-WM12F SM12F
	R Y G ←Y ←G	SIGNAL FACE WITH BACKPLATE "P" INDICATES PROGRAMMED HEAD.
"P"	"P"	
		RAILROAD CONTROL CABINET
"E"		ILLUMINATED SIGN "NO LEFT TURN"
"E"		ILLUMINATED SIGN "NO RIGHT TURN"
H/C	C	GROUND ROD AT HANDHOLE (H), DOUBLE HANDHOLE (H), OR CONTROLLER (C)
P	P	GROUND ROD AT POST (P) OR MAST ARM POLE (MA)
S	S	GROUND ROD AT ELECTRIC SERVICE INSTALLATION
	UPS	UNINTERRUPTIBLE POWER SUPPLY
	"R"	RELOCATED

I.D.O.T. TRAFFIC SIGNAL INSTALLATION ELECTRICAL SERVICE REQUIREMENTS					TOTAL WATTAGE
TYPE	NO. OF LAMPS	WATTAGE INCAND.	WATTAGE LED	X % OPERATION	
SIGNAL (RED)	13		17	0.50	110.50
(YELLOW)	13		25	0.25	81.25
(GREEN)	13		15	0.25	48.25
ARROW	-		12	0.10	-
PED. SIGNAL	-		25	1.00	-
CONTROLLER	1		100	1.00	100.00
ILLUM. SIGN	-		25	0.05	-
FLASHER				0.50	-
ENERGY COSTS TO:				TOTAL =	340.00

ILLINOIS DEPARTMENT OF TRANSPORTATION
DIVISION OF HIGHWAY/DISTRICT 1
201 WEST CENTER COURT/SCHAUMBURG, ILLINOIS 60196-1096
ENERGY SUPPLY: CONTACT: MARK GLOECKLE
PHONE: (630) 691-4529
COMPANY: COMED

CONSTRUCTION NOTES:

(1) RELOCATE EXISTING LIGHT DETECTORS AND CONFIRMATION BEACONS TO THE NEW MAST ARMS AND POST.

(2) RELOCATE EXISTING LIGHT DETECTOR AMPLIFIER TO NEW CONTROLLER CABINET.

(3) ALL EXISTING CONFIRMATION BEACONS SHALL BE RETROFITTED WITH LED INDICATIONS. THIS WORK SHALL BE INCIDENTAL TO THE PAY ITEM: UNINTERRUPTIBLE POWER SUPPLY.

NOTE:
THE TRAFFIC SIGNAL CONTROLLER EQUIPMENT FOR THIS PROJECT SHALL BE "ECONOLITE" TO MATCH THE EXISTING ADJACENT SYSTEM.

FOUNDATION (DEPTH)	FT.	(m)	CABLE SLACK	FT.	(m)	VERTICAL	FT.	(m)
TYPE A - POST	4	(1.2)	HANDHOLE	6.5	(2.0)	ALL FOUNDATIONS	3.5	(1.0)
C - CONTROLLER W/ UPS	4	(1.2)	DOUBLE HANDHOLE	13	(4.0)	MAST ARM (L) POLE	20'+L-2=	
D - CONTROLLER	4	(1.2)	SIGNAL POST	2	(1.0)		(6m+L-0.6m)=	
E - M. ARM POLE			CONTROLLER CAB.	1	(0.5)	BRACKET MOUNTED	13	(4.0)
30" (750mm)	15	(4.6)	FIBER OPTIC	13	(4.0)	PED. PUSHBUTTON	6	(1.8)
36" (900mm)	15	(4.6)	ELECTRIC SERVICE	1	(0.5)	ELECTRIC SERVICE	13.5	(4.1)
42" (1050mm)	25	(7.6)	GROUND CABLE	1	(0.5)	SERVICE TO GROUND	13.5	(4.1)
						POST MOUNTED	6	(1.8)

RESTORATION OF WORK AREA. RESTORATION OF THE TRAFFIC SIGNAL WORK AREA SHALL BE INCIDENTAL TO THE RELATED PAY ITEM SUCH AS FOUNDATION, CONDUIT, HANDHOLE, TRENCH AND BACKFILL, ETC., AND NO EXTRA COMPENSATION SHALL BE ALLOWED. ALL ROADWAY SURFACES SUCH AS SHOULDERS, MEDIANS, SIDEWALKS, PAVEMENT, ETC. SHALL BE REPLACED IN KIND. ALL DAMAGE TO MOWED LAWNS SHALL BE REPLACED WITH AN APPROVED SOD, AND ALL DAMAGE TO UNMOWED FIELDS SHALL BE SEEDED IN ACCORDANCE WITH STANDARD SPECIFICATIONS 252 AND 250 RESPECTIVELY.

SCHEDULE OF QUANTITIES

ITEM	UNIT	TOTAL
SIGN PANEL - TYPE 2	SQ FT	12.5
CONDUIT IN TRENCH, 2" DIA., GALVANIZED STEEL	FOOT	808
CONDUIT IN TRENCH, 2 1/2" DIA., GALVANIZED STEEL	FOOT	43
CONDUIT IN TRENCH, 3" DIA., GALVANIZED STEEL	FOOT	137
CONDUIT IN TRENCH, 4" DIA., GALVANIZED STEEL	FOOT	10
CONDUIT PUSHED, 2" DIA., GALVANIZED STEEL	FOOT	444
CONDUIT PUSHED, 4" DIA., GALVANIZED STEEL	FOOT	238
HANDHOLE	EACH	4
HEAVY-DUTY HANDHOLE	EACH	1
DOUBLE HANDHOLE	EACH	1
TRENCH AND BACKFILL FOR ELECTRICAL WORK	FOOT	1096
FULL-ACTUATED CONTROLLER AND TYPE IV CABINET, SPECIAL	EACH	1
TRANSCEIVER - FIBER OPTIC	EACH	1
ELECTRIC CABLE IN CONDUIT, SIGNAL NO. 14 3C	FOOT	1087
ELECTRIC CABLE IN CONDUIT, SIGNAL NO. 14 5C	FOOT	2776
ELECTRIC CABLE IN CONDUIT, LEADIN, NO. 14 1 PAIR	FOOT	2658
ELECTRIC CABLE IN CONDUIT, SERVICE, NO. 8 2 C	FOOT	372
TRAFFIC SIGNAL POST, GALVANIZED STEEL 14 FT.	EACH	2
TRAFFIC SIGNAL POST, GALVANIZED STEEL 18 FT.	EACH	1
STEEL MAST ARM ASSEMBLY AND POLE, 38 FT.	EACH	2
STEEL MAST ARM ASSEMBLY AND POLE, 42 FT.	EACH	1
CONCRETE FOUNDATION, TYPE A	FOOT	12
CONCRETE FOUNDATION, TYPE C	FOOT	4
CONCRETE FOUNDATION, TYPE E 36-INCH DIAMETER	FOOT	45
DRILL EXISTING HANDHOLE	EACH	4
SIGNAL HEAD, LED, 1-FACE, 3-SECTION, MAST-ARM MOUNTED	EACH	9
SIGNAL HEAD, LED, 1-FACE, 3-SECTION, BRACKET MOUNTED	EACH	5
TRAFFIC SIGNAL BACKPLATE, LOUVERED, ALUMINUM	EACH	9
INDUCTIVE LOOP DETECTOR	EACH	9
DETECTOR LOOP, TYPE I	FOOT	522
TEMPORARY TRAFFIC SIGNAL INSTALLATION	EACH	1
RELOCATE EXISTING EMERGENCY VEHICLE PRIORITY SYSTEM, DETECTOR UNIT	EACH	4
RELOCATE EXISTING EMERGENCY VEHICLE PRIORITY SYSTEM, PHASING UNIT	EACH	1
REMOVE EXISTING TRAFFIC SIGNAL EQUIPMENT	EACH	1
REMOVE EXISTING HANDHOLE	EACH	8
REMOVE EXISTING CONCRETE FOUNDATION	EACH	7
TEMPORARY TRAFFIC SIGNAL TIMINGS	EACH	1
SERVICE INSTALLATION - GROUND MOUNTED	EACH	1
UNINTERRUPTIBLE POWER SUPPLY	EACH	1
ELECTRIC CABLE IN CONDUIT, GROUNDING, NO. 6 1C	FOOT	873
ELECTRIC CABLE IN CONDUIT NO. 20 3/C, TWISTED, SHIELDED	FOOT	1087

FILE NAME = ...\GAB_IL58 & I-290E.dgn	USER NAME = FPACIONE	DESIGNED - ABR	REVISED -
		DRAWN - FPB / FCP	REVISED -
	PLOT SCALE = N.T.S.	CHECKED - MJT	REVISED -
	PLOT DATE = 1/26/2009	DATE -	REVISED -

STATE OF ILLINOIS
DEPARTMENT OF TRANSPORTATION

SCHEDULE OF QUANTITIES, CABLE PLAN, PHASE DESIGNATION DIAGRAM AND EMERGENCY VEHICLE PREEMPTION SEQUENCE
IL ROUTE 58 (GOLF ROAD) AND I-290 E. FRONTAGE ROAD

SCALE: N.T.S. | SHEET NO. OF SHEETS | STA. TO STA.

F.A.P. RTE.	SECTION	COUNTY	TOTAL SHEETS	SHEET NO.
VAR	2009-008-TS	COOK	41	30
		CONTRACT NO. 60G04		
FED. ROAD DIST. NO.	ILLINOIS	FED. AID PROJECT		

DATE PLOTTED = 4/20/2026 9:47:40 PM
PEN TABLE = 0026_IDOT_45.tbl
PLOT CONFIG = CGI-PDF.pltcfg
MODEL: $MODELNAME$
FILE NAME: pw://ciorba-pw.bentley.com:ciorba-pw-01/Documents/Projects/IL_DOT/D1002I693.09/CADD Data/ShtSignals/D162W99-sht-TS211.dgn

CiorbaGroup
8725 W. Higgins Rd, Ste 600, Chicago, IL 60631
P 773.775.4009 | www.ciorba.com

USER NAME = ayu	DESIGNED - DTJ	REVISED -
	DRAWN - AM	REVISED -
PLOT SCALE = 0.16666667 '/ In.	CHECKED - JMV	REVISED -
PLOT DATE = 3/17/2026	DATE - 3/17/2026	REVISED -

STATE OF ILLINOIS
DEPARTMENT OF TRANSPORTATION

I-290/IL 53 HMA RESURFACING AND BRIDGE REPAIRS
EXISTING TRAFFIC SIGNAL PLAN (RECORD DRAWING)

SCALE: N.T.S. | SHEET OF SHEETS | STA. TO STA.

F.A.I. RTE.	SECTION	COUNTY	TOTAL SHEETS	SHEET NO.
290	(0404-316-HB) BR 24	COOK	276	75S
		CONTRACT NO. 62W99		
	ILLINOIS	FED. AID PROJECT		

TRAFFIC SIGNAL LEGEND

	PROPOSED	EXISTING
CONTROLLER	■	⊠
SERVICE INSTALLATION	■	⊣
SIGNAL HEAD	→	→
SIGNAL HEAD WITH BACKPLATE	→	→
SIGNAL HEAD, PEDESTRIAN		
SIGNAL POST	●	○
MAST ARM ASSEMBLY AND POLE, STEEL		
MAST ARM ASSEMBLY AND POLE, ALUMINUM		
COMBINATION MAST ARM ASSEMBLY AND POLE, STEEL WITH LUMINAIRE		
UNIT DUCT	UD	
COMMON TRENCH	CT	
HANDHOLE	◪	◪
HEAVY DUTY HANDHOLE	■	■
DOUBLE HANDHOLE	◪◪	◪◪
G.S. CONDUIT IN TRENCH (T) OR PUSHED (P)		
PEDESTRIAN PUSHBUTTON DETECTOR	⊙	⊙
DETECTOR LOOP	□	□
CAST IRON JUNCTION BOX	ⓘ	ⓘ "E"
EMERGENCY VEHICLE LIGHT DETECTOR		
CONFIRMATION BEACON		
SIGNAL HEAD OPTICALLY PROGRAMMED	→ "P"	→ "P"
CONDUIT SPLICE		
WOOD POLE	⊗	⊗ "E"
RACEWAY FOR MAGNETIC DETECTOR, TYPE I OR TYPE II		"E"
VEHICLE DETECTOR, NON COMPENSATED MAGNETIC TYPE		
RAILROAD CONTROL CABINET	⊠	⊠ "E"
TELEPHONE CONNECTION	T	T "E"
ILLUMINATED SIGN "NO LEFT TURN"		"E"
ILLUMINATED SIGN "NO RIGHT TURN"		"E"
UNINTERRUPTIBLE POWER SUPPLY	UPS	
RELOCATED	"R"	

RESTORATION OF WORK AREA. RESTORATION OF THE TRAFFIC SIGNAL WORK AREA SHALL BE INCIDENTAL TO THE RELATED PAY ITEM SUCH AS FOUNDATION, CONDUIT, HANDHOLE, TRENCH AND BACKFILL, ETC., AND NO EXTRA COMPENSATION SHALL BE ALLOWED. ALL ROADWAY SURFACES SUCH AS SHOULDERS, MEDIANS, SIDEWALKS, PAVEMENT, ETC. SHALL BE REPLACED IN KIND. ALL DAMAGE TO MOWED LAWNS SHALL BE REPLACED WITH AN APPROVED SOD, AND ALL DAMAGE TO UNMOWED FIELDS SHALL BE SEEDED IN ACCORDANCE WITH STANDARD SPECIFICATIONS 252 AND 250 RESPECTIVELY.

NOTE:
THE TRAFFIC SIGNAL CONTROLLER EQUIPMENT FOR THIS PROJECT SHALL BE "ECONOLITE" TO MATCH THE EXISTING ADJACENT SYSTEM.

SIGN (B)

R3-2
24" x 24"
2-REQUIRED

SIGN (A)

R10-5
24" x 30"
2-REQUIRED

CONSTRUCTION NOTES:

1. RELOCATE EXISTING LIGHT DETECTORS AND CONFIRMATION BEACONS TO THE NEW MAST ARMS.
2. RELOCATE EXISTING LIGHT DETECTOR AMPLIFIER TO NEW CONTROLLER CABINET.
3. ALL EXISTING CONFIRMATION BEACONS SHALL BE RETROFITTED WITH LED INDICATIONS. THIS WORK SHALL BE INCIDENTAL TO THE PAY ITEM: UNINTERRUPTIBLE POWER SUPPLY.

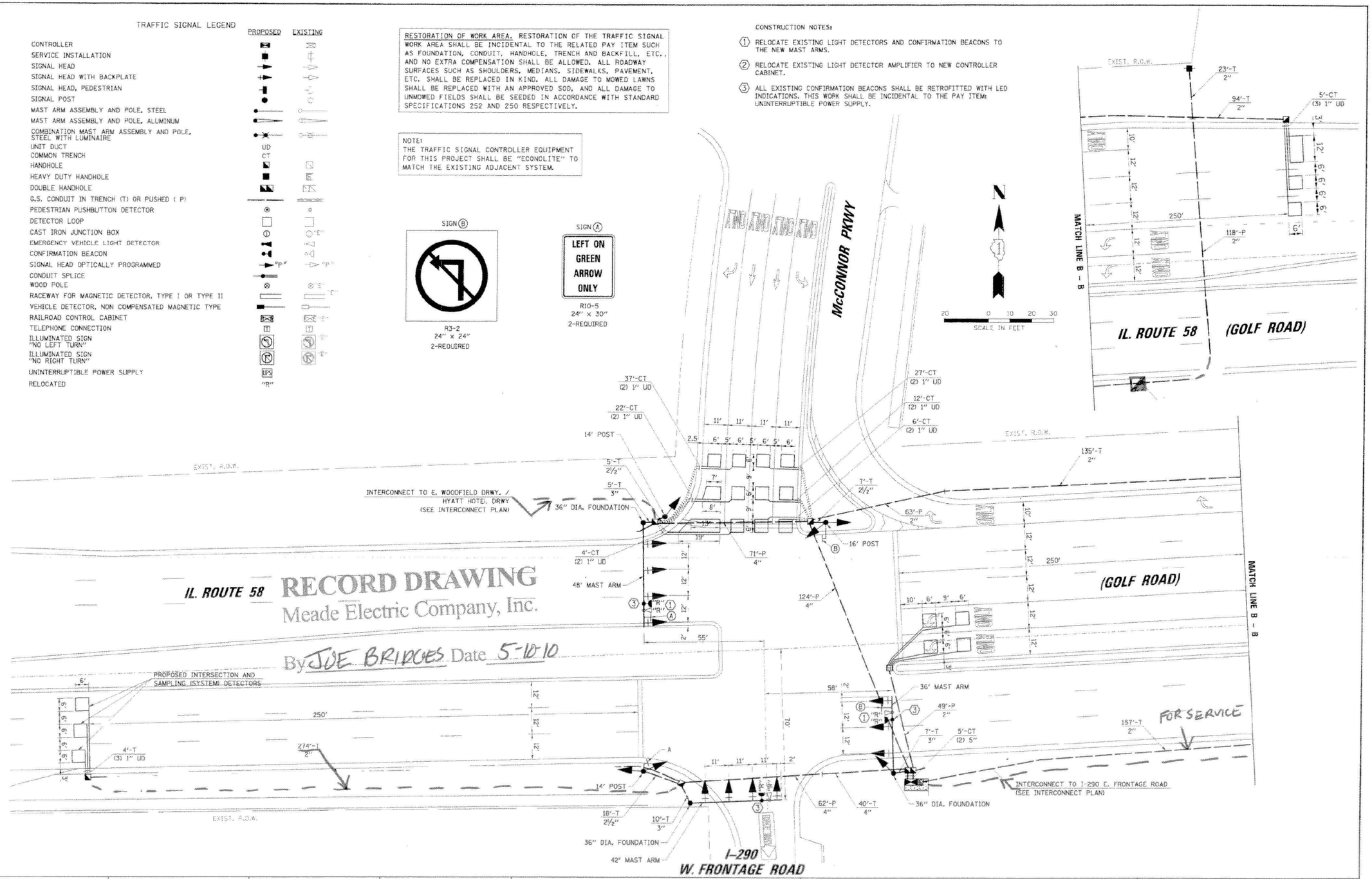

RECORD DRAWING
Meade Electric Company, Inc.
By JOE BRIDGES Date 5-10-10

FILE NAME =	USER NAME = FRACCONE	DESIGNED - ABR	REVISED -
		DRAWN - FPB / FCP	REVISED -
	P.C. SCALE = 20	CHECKED - MJT	REVISED -
	P.C. DATE = 1/20/2009	DATE -	REVISED -

STATE OF ILLINOIS
DEPARTMENT OF TRANSPORTATION

TRAFFIC SIGNAL MODERNIZATION PLAN
IL ROUTE 58 (GOLF ROAD) AND I-290 W. FRONTAGE ROAD / McCONNOR PKWY

SCALE: 1"= 20' | SHEET NO. OF SHEETS | STA. TO STA.

F.A.P. RTE.	SECTION	COUNTY	TOTAL SHEETS	SHEET NO.
VAR	2009-008-TS	COOK	41	24
		CONTRACT NO. 60G04		
FED. ROAD DIST. NO.	ILLINOIS	FED. AID PROJECT		

CHRISTOPHER B. BURKE ENGINEERING LTD.
9575 West Higgins Road, Suite 600
Rosemont, Illinois 60018
(847) 823-0500

DATE	BY	DESCRIPTION
		SURVEYED (N.) OTHER CHECKED
		DRAWN CHECKED
		DES. OF ALT. CHECKED
		QUANTITIES CHECKED
		STRUCTURE APPROVED

PLAN NOTE BOOK NO. | SHEET NO.

DATE PLOTTED = 5/1/2026
PEN TABLE = 2011_05.tbl
PLOT CONFIG = CGI-PDF.pltcfg
MODEL: $MODELNAMES
FILE NAME: pw://ciorba-pw.bentley.com:ciorba-pw-01/Documents/Projects/IL_DOT/D1/0021693.05/CADD Data/Shr/Signals/D162W99-sht-TS212.dgn

CiorbaGroup
8725 W. Higgins Rd, Ste 600, Chicago, IL 60631
P 773.775.4009 | www.ciorba.com

USER NAME = djohnson	DESIGNED - DTJ	REVISED -	
	DRAWN - AM	REVISED -	
PLOT SCALE = 0.16666667 ' / In.	CHECKED - JMV	REVISED -	
PLOT DATE = 3/17/2026	DATE - 3/17/2026	REVISED -	

STATE OF ILLINOIS
DEPARTMENT OF TRANSPORTATION

I-290/IL 53 HMA RESURFACING AND BRIDGE REPAIRS
EXISTING TRAFFIC SIGNAL PLAN (RECORD DRAWING)

SCALE: N.T.S. | SHEET OF SHEETS | STA. TO STA.

F.A.I. RTE.	SECTION	COUNTY	TOTAL SHEETS	SHEET NO.
290	(0404-316-HB) BR 24	COOK	276	75T
		CONTRACT NO. 62W99		
	ILLINOIS	FED. AID PROJECT		

CONTROLLER SEQUENCE

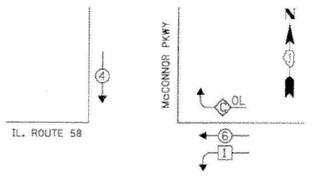

LEGEND

- DUAL ENTRY PHASE
- PROTECTED LEFT TURN PHASE
- OL — OVERLAP
- NUMBER REFERS TO ASSOCIATED PHASE

PHASE DESIGNATION DIAGRAM

RIGHT TURN OVERLAP PHASE DESIGNATION

C = CONTINUOUS OVERLAP (FREE FLOW RIGHT)

EMERGENCY VEHICLE PREEMPTION SEQUENCE

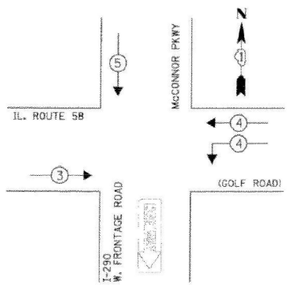

PROPOSED EMERGENCY VEHICLE PREEMPTORS			
EMERGENCY VEHICLE PREEMPTOR	3	4	5
MOVEMENT	→	←	↓

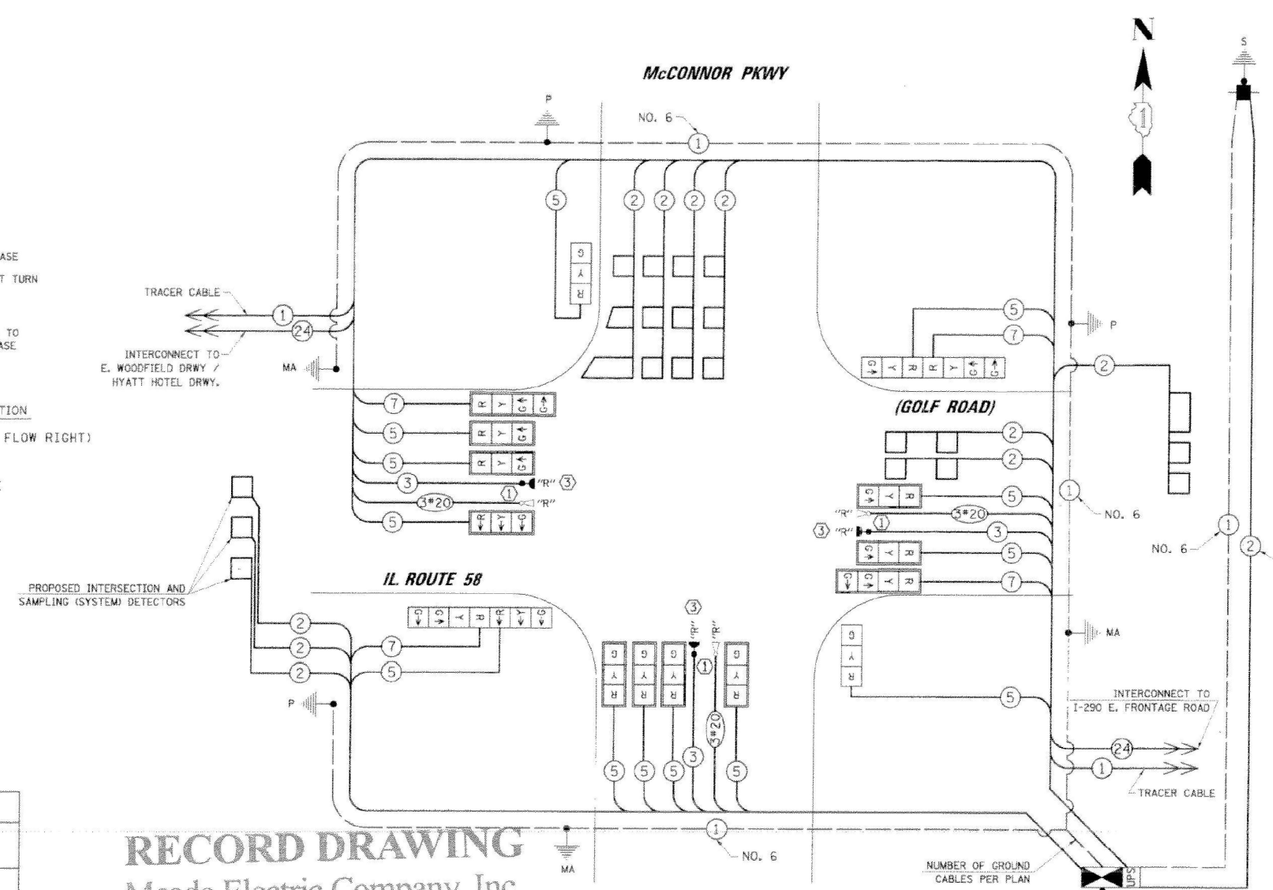

RECORD DRAWING
Meade Electric Company, Inc.
By JOE BRIDGES Date 5-10-10

CABLE PLAN

CONSTRUCTION NOTES:

1. RELOCATE EXISTING LIGHT DETECTORS AND CONFIRMATION BEACON TO THE NEW MAST ARMS.
2. RELOCATE EXISTING LIGHT DETECTOR AMPLIFIER TO NEW CONTROLLER CABINET.
3. ALL EXISTING CONFIRMATION BEACONS SHALL BE RETROFITTED WITH LED INDICATIONS. THIS WORK SHALL BE INCIDENTAL TO THE PAY ITEMS UNINTERRUPTIBLE POWER SUPPLY.

THE END OF THE TRACER CABLE SHALL BE CONTINUOUS AND EXTEND INTO THE CONTROLLER CABINET.

NOTE:
THE TRAFFIC SIGNAL CONTROLLER EQUIPMENT FOR THIS PROJECT SHALL BE "ECONOLITE" TO MATCH THE EXISTING ADJACENT SYSTEM.

RESTORATION OF WORK AREA. RESTORATION OF THE TRAFFIC SIGNAL WORK AREA SHALL BE INCIDENTAL TO THE RELATED PAY ITEM SUCH AS FOUNDATION, CONDUIT, HANDHOLE, TRENCH AND BACKFILL, ETC., AND NO EXTRA COMPENSATION SHALL BE ALLOWED. ALL ROADWAY SURFACES SUCH AS SHOULDERS, MEDIANS, SIDEWALKS, PAVEMENT, ETC. SHALL BE REPLACED IN KIND. ALL DAMAGE TO MOWED LAWNS SHALL BE REPLACED WITH AN APPROVED SOD, AND ALL DAMAGE TO UNMOWED FIELDS SHALL BE SEEDED IN ACCORDANCE WITH STANDARD SPECIFICATIONS 252 AND 250 RESPECTIVELY.

CABLE PLAN LEGEND

EXISTING	PROPOSED	
	C	8" (200mm) TRAFFIC SIGNAL SECTION
	R	12" (300mm) TRAFFIC SIGNAL SECTION
	W	12" (300mm) PEDESTRIAN SIGNAL SECTION
	C D	12" (300mm) PEDESTRIAN SIGNAL SECTION WITH COUNTDOWN TIMER
		CONTROLLER CABINET
		SERVICE INSTALLATION
	T	TELEPHONE INSTALLATION
		VEHICLE DETECTOR, INDUCTION LOOP
		MAGNETIC DETECTOR
		EMERGENCY VEHICLE LIGHT DETECTOR
		CONFIRMATION BEACON
		PUSHBUTTON DETECTOR
	(2)	DENOTES NUMBER OF CONDUCTORS. ALL CABLE NO. 14 EXCEPT AS INDICATED. ALL LOOP DETECTOR CABLE TO BE SHIELDED.
	(1)	GROUND CABLE IN CONDUIT NO. 6 SOLID COPPER (GREEN)
	(24)	FIBER OPTIC CABLE IN CONDUIT NO. 62.5/125 2-MM12F SM12F
	R Y G Y G "P"	SIGNAL FACE WITH BACKPLATE "P" INDICATES PROGRAMMED HEAD.
		RAILROAD CONTROL CABINET
		ILLUMINATED SIGN "NO LEFT TURN"
		ILLUMINATED SIGN "NO RIGHT TURN"
H/C	C	GROUND ROD AT HANDHOLE (H), DOUBLE HANDHOLE (H), OR CONTROLLER (C)
P	P	GROUND ROD AT POST (P) OR MAST ARM POLE (MA)
S	S	GROUND ROD AT ELECTRIC SERVICE INSTALLATION
	UPS	UNINTERRUPTIBLE POWER SUPPLY
	"R"	RELOCATED

SCHEDULE OF QUANTITIES

ITEM	UNIT	TOTAL
SIDEWALK REMOVAL	SQ FT	250
COMBINATION CONCRETE CURB AND GUTTER REMOVAL AND REPLACEMENT	FOOT	30
SIGN PANEL - TYPE 1	SQ FT	18
SIGN PANEL - TYPE 2	SQ FT	50
CONDUIT IN TRENCH, 2" DIA., GALVANIZED STEEL	FOOT	756
CONDUIT IN TRENCH, 2 1/2" DIA., GALVANIZED STEEL	FOOT	12
CONDUIT IN TRENCH, 3" DIA., GALVANIZED STEEL	FOOT	22
CONDUIT IN TRENCH, 4" DIA., GALVANIZED STEEL	FOOT	40
CONDUIT IN TRENCH, 5" DIA., GALVANIZED STEEL	FOOT	10
CONDUIT PUSHED, 2" DIA., GALVANIZED STEEL	FOOT	230
CONDUIT PUSHED, 4" DIA., GALVANIZED STEEL	FOOT	257
HANDHOLE	EACH	6
HEAVY-DUTY HANDHOLE	EACH	1
DOUBLE HANDHOLE	EACH	1
TRENCH AND BACKFILL FOR ELECTRICAL WORK	FOOT	934
FULL-ACTUATED CONTROLLER AND TYPE IV CABINET, SPECIAL	EACH	1
TRANSCEIVER - FIBER OPTIC	EACH	1
ELECTRIC CABLE IN CONDUIT, SIGNAL NO. 14 3C	FOOT	803
ELECTRIC CABLE IN CONDUIT, SIGNAL NO. 14 5C	FOOT	2459
ELECTRIC CABLE IN CONDUIT, SIGNAL NO. 14 7C	FOOT	682
ELECTRIC CABLE IN CONDUIT, LEAD-IN, NO. 14 1 PAIR	FOOT	2609
ELECTRIC CABLE IN CONDUIT, SERVICE, NO. 6 2 C	FOOT	373
TRAFFIC SIGNAL POST, GALVANIZED STEEL 14 FT.	EACH	2
TRAFFIC SIGNAL POST, GALVANIZED STEEL 16 FT.	EACH	1
STEEL MAST ARM ASSEMBLY AND POLE, 36 FT.	EACH	1
STEEL MAST ARM ASSEMBLY AND POLE, 42 FT.	EACH	1
STEEL MAST ARM ASSEMBLY AND POLE, 48 FT.	EACH	1
CONCRETE FOUNDATION, TYPE A	FOOT	16
CONCRETE FOUNDATION, TYPE C	FOOT	4
CONCRETE FOUNDATION, TYPE E 36-INCH DIAMETER	FOOT	45
SIGNAL HEAD, LED, 1-FACE, 3-SECTION, MAST-ARM MOUNTED	EACH	9
SIGNAL HEAD, LED, 1-FACE, 3-SECTION, BRACKET MOUNTED	EACH	2
SIGNAL HEAD, LED, 1-FACE, 4-SECTION, MAST ARM MOUNTED	EACH	2
SIGNAL HEAD, LED, 2-FACE, 1-3 SECTION, 1-4 SECTION, BRACKET MOUNTED	EACH	2
TRAFFIC SIGNAL BACKPLATE, LOUVERED, ALUMINUM	EACH	11
INDUCTIVE LOOP DETECTOR	EACH	10
DETECTOR LOOP, TYPE I	FOOT	919
TEMPORARY TRAFFIC SIGNAL INSTALLATION	EACH	1
RELOCATE EXISTING EMERGENCY VEHICLE PRIORITY SYSTEM, DETECTOR UNIT	EACH	3
RELOCATE EXISTING EMERGENCY VEHICLE PRIORITY SYSTEM, PHASING UNIT	EACH	1
REMOVE EXISTING TRAFFIC SIGNAL EQUIPMENT	EACH	1
REMOVE EXISTING HANDHOLE	EACH	9
REMOVE EXISTING CONCRETE FOUNDATION	EACH	10
TEMPORARY TRAFFIC SIGNAL TIMINGS	EACH	1
SERVICE INSTALLATION - GROUND MOUNTED	EACH	1
UNINTERRUPTIBLE POWER SUPPLY	EACH	1
ELECTRIC CABLE IN CONDUIT, GROUNDING, NO. 6 1C	FOOT	804
ELECTRIC CABLE IN CONDUIT NO. 20 3/C, TWISTED, SHIELDED	FOOT	803

I.D.O.T.
TRAFFIC SIGNAL INSTALLATION
ELECTRICAL SERVICE REQUIREMENTS

TYPE	NO. OF LAMPS	WATTAGE x INCAND.	WATTAGE x LED	x % OPERATION	TOTAL WATTAGE
SIGNAL (RED)	17		17	0.50	144.50
(YELLOW)	17		25	0.25	106.25
(GREEN)	19		15	0.25	71.25
ARROW	2		12	1.00	24.00
PED. SIGNAL	-		25	1.00	-
CONTROLLER	1		100	1.00	100.00
ILLUM. SIGN	-		25	0.05	-
FLASHER				0.50	-
ENERGY COSTS TO:				TOTAL =	446.00

ILLINOIS DEPARTMENT OF TRANSPORTATION
DIVISION OF HIGHWAY/DISTRICT 1
201 WEST CENTER COURT/SCHAUMBURG, ILLINOIS 60196-1096
ENERGY SUPPLY: CONTACT: MARK GLOECKLE
PHONE: (630) 691-4529
COMPANY: COMED

FOUNDATION (DEPTH)	FT.	(m)
TYPE A - POST	4	(1.2)
C - CONTROLLER W/ UPS	4	(1.2)
D - CONTROLLER	4	(1.2)
E - M. ARM POLE		
30" (750mm)	15	(4.6)
36" (900mm)	15	(4.6)
42" (1050mm)	25	(7.6)

CABLE SLACK	FT.	(m)
HANDHOLE	6.5	(2.0)
DOUBLE HANDHOLE	13	(4.0)
SIGNAL POST	2	(1.0)
CONTROLLER CAB.	1	(0.5)
FIBER OPTIC	13	(4.0)
ELECTRIC SERVICE	1	(0.5)
GROUND CABLE	1	(0.5)

VERTICAL	FT.	(m)
ALL FOUNDATIONS	3.5	(1.0)
MAST ARM (L) POLE	20'+L-2=	(6m+L-0.6m)=
BRACKET MOUNTED	13	(4.0)
PED. PUSHBUTTON	6	(1.8)
ELECTRIC SERVICE	13.5	(4.1)
SERVICE TO GROUND	13.5	(4.1)
POST MOUNTED	6	(1.8)

FILE NAME =	USER NAME = EPACICNE	DESIGNED - ABR	REVISED -
...\CAD_ILSS # I-290\dgn		DRAWN - FPB / FCP	REVISED -
	PLOT SCALE = N.T.S.	CHECKED - MJT	REVISED -
	PLOT DATE = 1/29/2009	DATE -	REVISED -

STATE OF ILLINOIS
DEPARTMENT OF TRANSPORTATION

SCHEDULE OF QUANTITIES, CABLE PLAN, PHASE DESIGNATION DIAGRAM AND EMERGENCY VEHICLE PREEMPTION SEQUENCE
IL ROUTE 58 (GOLF ROAD) AND I-290 W. FRONTAGE ROAD / McCONNOR PKWY

SCALE: N.T.S. | SHEET NO. OF SHEETS | STA. | TO STA.

F.A.P. RTE.	SECTION	COUNTY	TOTAL SHEETS	SHEET NO.
VAR	2009-008-TS	COOK	41	25
		CONTRACT NO. 60G04		
FED. ROAD DIST. NO.	ILLINOIS	FED. AID PROJECT		

DATE PLOTTED = 5/1/2026
PEN TABLE = 2022_05.tbl
PLOT CONFIG = CGI-PDF.pltcfg
MODEL: $MODELNAMES
FILE NAME: pw://ciorba-pw.bentley.com:ciorba-pw-01/Documents/Projects/IL_DOT/01/0021693.05/CADD Data/Shr/Signals/D162W99-sht-ts213.dgn

CiorbaGroup
8725 W. Higgins Rd, Ste 600, Chicago, IL 60631
P 773.775.4009 | www.ciorba.com

USER NAME = djohnson	DESIGNED - DTJ	REVISED -
	DRAWN - AM	REVISED -
PLOT SCALE = 0.16666667 ' / In.	CHECKED - JMV	REVISED -
PLOT DATE = 3/17/2026	DATE - 3/17/2026	REVISED -

STATE OF ILLINOIS
DEPARTMENT OF TRANSPORTATION

I-290/IL 53 HMA RESURFACING AND BRIDGE REPAIRS
EXISTING TRAFFIC SIGNAL PLAN (RECORD DRAWING)

SCALE: N.T.S. | SHEET OF SHEETS | STA. | TO STA.

F.A.I. RTE.	SECTION	COUNTY	TOTAL SHEETS	SHEET NO.
290	(0404-316-HB) BR 24	COOK	276	75U
		CONTRACT NO. 62W99		
	ILLINOIS	FED. AID PROJECT		

ROADWAY LIGHTING NOTES

1. THE CONTRACTOR SHALL KEEP DEVIATIONS FROM THE UNIT DUCT ROUTING SHOWN ON THE PLANS TO A MINIMUM. MAJOR DEVIATIONS SHALL BE REPORTED TO AND APPROVED BY THE ENGINEER BEFORE INSTALLATION.
2. REMOVAL OF THE EXISTING LIGHTING SYSTEM SHALL NOT BEGIN BEFORE THE TEMPORARY OR PROPOSED LIGHTING SYSTEM IS OPERATIONAL.
3. THE ENGINEER SHALL APPROVE THE LOCATION OF ALL PUSH PITS.
4. UNDERGROUND SPLICES ARE NOT ALLOWED.
5. NO POLES SHALL BE ERECTED UNTIL THE RESPECTIVE CONCRETE FOUNDATIONS HAVE CURED.
6. IDOT MAINTAINED EQUIPMENT IS NOT PART OF J.U.L.I.E. THE CONTRACTOR SHOULD CALL IDOT ELECTRICAL/TRAFFIC MAINTENANCE CONTRACTOR MEADE ELECTRIC AT 773-287-7672 FOR CABLE LOCATION SERVICE FOR IDOT MAINTAINED EQUIPMENT BEFORE START OF ANY WORK. THE FIRST LOCATE IS FREE; HOEVER, REPEAT LOCATES AT THE SAME LOCATION ARE SUBJECT TO CHARGE.
7. PLEASE SEE KEEPING THE EXPRESSWAY OPEN TO TRAFFIC CONRACT SPECIAL PROVISION FOR REQUIREMENTS ON LANE CLOSURES. AERIAL CABLE INSTALLATIONS OVER THE INTERSTATE WILL REQUIRE FULL STOPS. IDOT EXPRESSWAY SECTION APPROVAL AND COORDINATION IS REQUIRED.
8. ALL EXISTING LIGHT TOWER AND UNDERPASS LUMINAIRES ARE TO BE SALVAGED.

LIGHTING LEGEND

EXISTING	PROPOSED	DESCRIPTION
(E)		EXISTING LIGHT POLE AND LUMINAIRE TO REMAIN
		LIGHT POLE ON LIGHT POLE FOUNDATION, METAL, 15" BOLT CIRCLE, 10" X 8' AND UMINAIRE, LED, ROADWAY, REPLACEMENT, OUTPUT DESIGNATION AS NOTED, MOUNTED 47.5' ABOVE THE EDGE OF PAVEMENT
		EXISTING ILLINOIS TOLLWAY LIGHT POLE TO REMAIN
	(H)	EXISTING HIGH MAST TOWER TO REMAIN AND LUMINAIRES TO BE REPLACED
	(E)	EXISTING HIGH MAST TOWER AND LUMINAIRES TO REMAIN
		HIGH MAST LUMINAIRE ARM
		HIGH MAST LED LUMINAIRE
		LUMINAIRE, LED, UNDERPASS, INSTALLATION TYPE AND OUTPUT DESIGNATION AS CALLED ON THE PLAN SHEETS
OR		EXISTING UNDERPASS LUMINAIRE TO BE REMOVED
		LIGHTING CONTROLLER
J E	J	JUNCTION BOX, STAINLESS STEEL, ATTACHED TO STRUCTURE. SIZE AND TYPE AS FOLLOWS: JB1 - 6" X 6" X 4" JB2 - 12" X 12" X 6" JB3 - 20" X 20" X 8"
		UNIT DUCT, TYPE, NUMBER AND SIZE OF CONDUCTORS AS NOTED ON PLANS
		EXISTING UNDERGROUND CONDUIT, WIRING WITHIN

BILL OF MATERIALS

DESCRIPTION	UNIT	TOTAL
CONDUIT ATTACHED TO STRUCTURE, 1" DIA., PVC COATED GALVANIZED STEEL	FOOT	2,742
JUNCTION BOX, STAINLESS STEEL, ATTACHED TO STRUCTURE, 6" X 6" X 4"	EACH	56
JUNCTION BOX, STAINLESS STEEL, ATTACHED TO STRUCTURE, 12" X 12" X 6"	EACH	36
JUNCTION BOX, STAINLESS STEEL, ATTACHED TO STRUCTURE, 20" X 20" X 8"	EACH	8
ELECTRIC CABLE IN CONDUIT, 600V (XLP-TYPE USE) 1/C NO. 10	FOOT	12,724
LUMINAIRE, LED, HIGHMAST, OUTPUT DESIGNATION I	EACH	236
LUMINAIRE, LED, UNDERPASS, WALLMOUNT, OUTPUT DESIGNATION D	EACH	16
LUMINAIRE, LED, UNDERPASS, SUSPENDED, OUTPUT DESIGNATION D	EACH	30
LUMINAIRE, LED, UNDERPASS, SUSPENDED, OUTPUT DESIGNATION E	EACH	12
REMOVAL OF LUMINAIRE, SALVAGE	EACH	306
MAINTENANCE OF LIGHTING SYSTEM	CAL MO	28
LUMINAIRE, LED, ROADWAY, REPLACEMENT, OUTPUT DESIGNATION H	EACH	6
LUMINAIRE SHIELD	EACH	8
LUMINAIRE, LED, ROADWAY, REPLACEMENT, OUTPUT DESIGNATION G	EACH	50

DATE PLOTTED = 4/30/2026 10:41:15 PM
PEN TABLE = 007-0603-06.tbl
PLOT CONFIG = CGI-PDF.pltcfg
MODEL: $MODELNAMES
FILE NAME: pw://ciorba-pw.bentley.com:ciorba-pw-01/Documents/Projects/IL_DOT/D1/0021693.05/CADD Data/Shr/Lighting/D162W99-shr-LTG001.dgn

CiorbaGroup
8725 W. Higgins Rd, Ste 600, Chicago, IL 60631
P 773.775.4009 | www.ciorba.com

USER NAME = mbalog	DESIGNED - DTJ	REVISED -	
	DRAWN - MB	REVISED -	
PLOT SCALE = 0.16666667 ' / in.	CHECKED - JMV	REVISED -	
PLOT DATE = 4/30/2026	DATE - 03/18/2026	REVISED -	

STATE OF ILLINOIS
DEPARTMENT OF TRANSPORTATION

I-290/IL 53 HMA RESURFACING AND BRIDGE REPAIRS
LIGHTING GENERAL NOTES AND LEGEND

SCALE: | SHEET OF SHEETS | STA. | TO STA.

F.A.I RTE.	SECTION	COUNTY	TOTAL SHEETS	SHEET NO.
290	(0404-316-HB) BR 24	MULTIPLE*	276	76
		CONTRACT NO. 62W99		
	ILLINOIS FED. AID PROJECT			

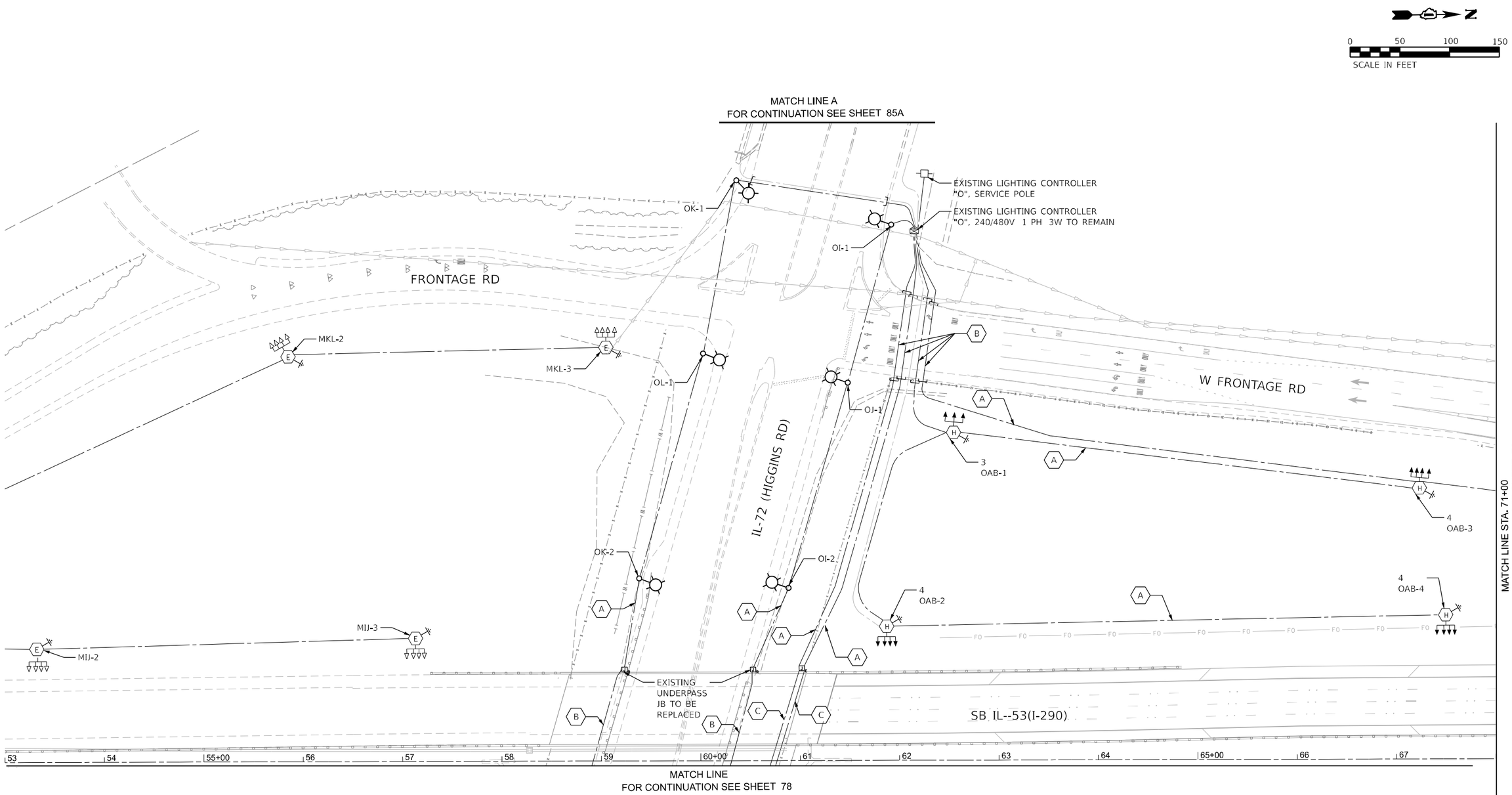

WIRING/CONDUIT LEGEND

- (A) EXISTING 3-1/C #2 & 1-1/C #4 GND IN 1 1/2" UNIT DUCT
- (B) EXISTING 3-1/C #2 & 1-1/C #4 GND IN 1 1/2" UNIT DUCT WITHIN CONDUIT PUSHED, 4" DIA., GALVANIZED STEEL
- (C) EXISTING 3-1/C #2 & 1-1/C #4 GND IN 1 1/2" PVC COATED RGS CONDUIT ATTACHED TO STRUCTURE

DATE PLOTTED = 4/30/2026 10:41:32 PM
PEN TABLE = 0021693.05.tbl
PLOT CONFIG = CGI-PDF.pltcfg
MODEL: $MODELNAMES
FILE NAME: pw://ciorba-pw.bentley.com:ciorba-pw-01/Documents/Projects/IL_DOT/D1/0021693.05/CADD Data/Sht/Lighting/D162W99-sht-LTG201.dgn

CiorbaGroup 8725 W. Higgins Rd, Ste 600, Chicago, IL 60631 P 773.775.4009 | www.ciorba.com	USER NAME = mbalog	DESIGNED - DTJ	REVISED -	STATE OF ILLINOIS DEPARTMENT OF TRANSPORTATION	I-290/IL 53 HMA RESURFACING AND BRIDGE REPAIRS PROPOSED LIGHTING PLAN
		DRAWN - MB	REVISED -		
	PLOT SCALE = 0.16666667 ' / in.	CHECKED - JMV	REVISED -		
	PLOT DATE = 3/19/2026	DATE - 03/18/2026	REVISED -		SCALE: 1"=50' SHEET OF SHEETS STA. 53+00 TO STA. 68+00

F.A.I. RTE.	SECTION	COUNTY	TOTAL SHEETS	SHEET NO.
290	(0404-316-HB) BR 24	MULTIPLE*	276	77
		CONTRACT NO. 62W99		
		ILLINOIS FED. AID PROJECT		

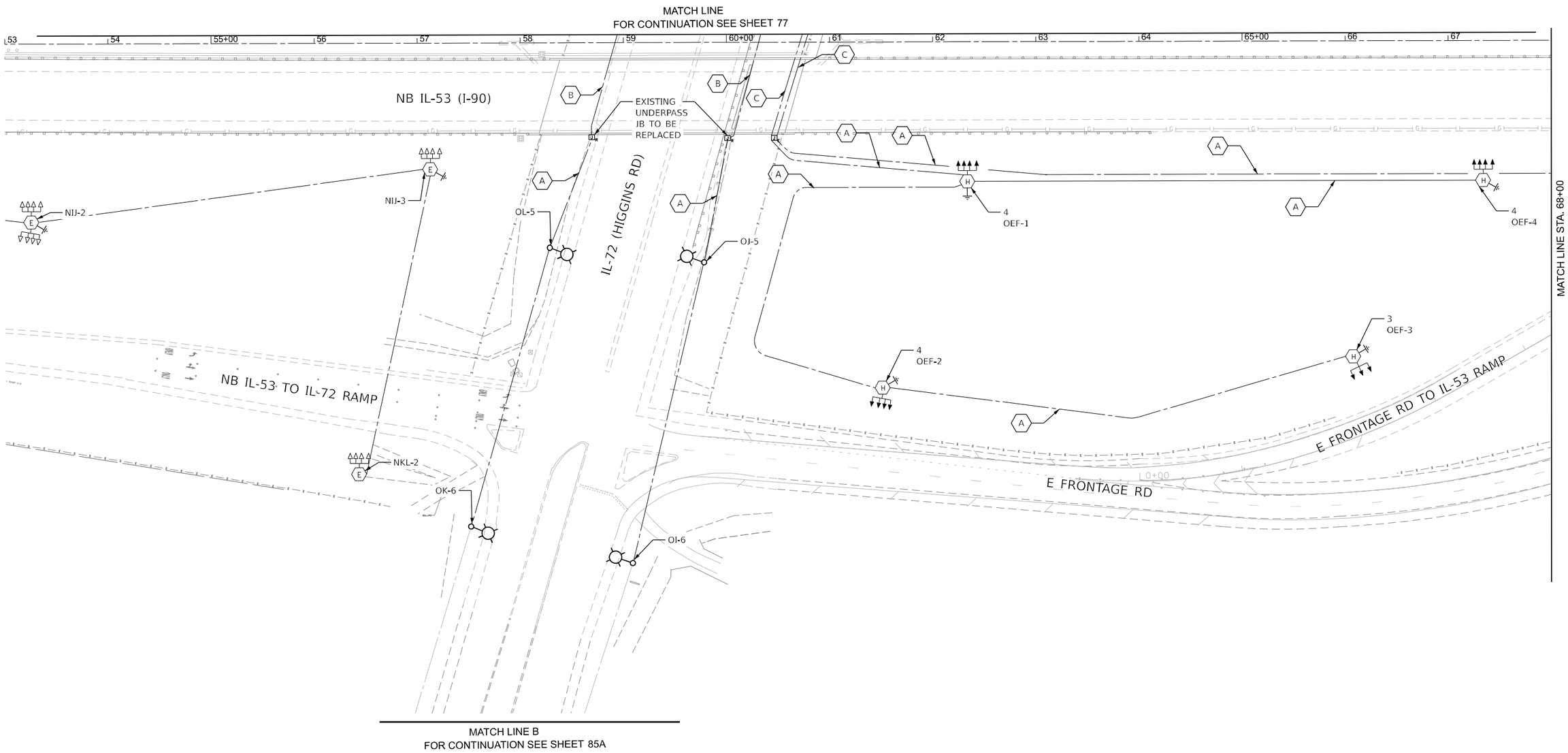

WIRING/CONDUIT LEGEND

- (A) EXISTING 3-1/C #2 & 1-1/C #4 GND IN 1 1/2" UNIT DUCT
- (B) EXISTING 3-1/C #2 & 1-1/C #4 GND IN 1 1/2" UNIT DUCT WITHIN CONDUIT PUSHED, 4" DIA., GALVANIZED STEEL
- (C) EXISTING 3-1/C #2 & 1-1/C #4 GND IN 1 1/2" PVC COATED RGS CONDUIT ATTACHED TO STRUCTURE

DATE PLOTTED = 4/20/2026 10:41:42 PM
PEN TABLE = 0021693.05.tbl
PLOT CONFIG = CGI-PDF.pltcfg
MODEL: SMODELNAMES
FILE NAME: pw://ciorba-pw.bentley.com:ciorba-pw-01/Documents/Projects/IL_DOT/D1.0021693.05/CADD Data/Shr/Lighting/D162W99-shr-LTG202.dgn

CiorbaGroup
8725 W. Higgins Rd, Ste 600, Chicago, IL 60631
P 773.775.4009 | www.ciorba.com

USER NAME = ddubinskiy	DESIGNED - DTJ	REVISED -	
	DRAWN - MB	REVISED -	
PLOT SCALE = 0.16666667 ' / In.	CHECKED - JMV	REVISED -	
PLOT DATE = 3/19/2026	DATE - 03/18/2026	REVISED -	

STATE OF ILLINOIS
DEPARTMENT OF TRANSPORTATION

I-290/IL 53 HMA RESURFACING AND BRIDGE REPAIRS
PROPOSED LIGHTING PLAN

SCALE: 1"=50' | SHEET OF SHEETS | STA. 53+00 | TO STA. 68+00

F.A.I RTE.	SECTION	COUNTY	TOTAL SHEETS	SHEET NO.
290	(0404-316-HB) BR 24	MULTIPLE*	276	78
		CONTRACT NO. 62W99		
	ILLINOIS FED. AID PROJECT			

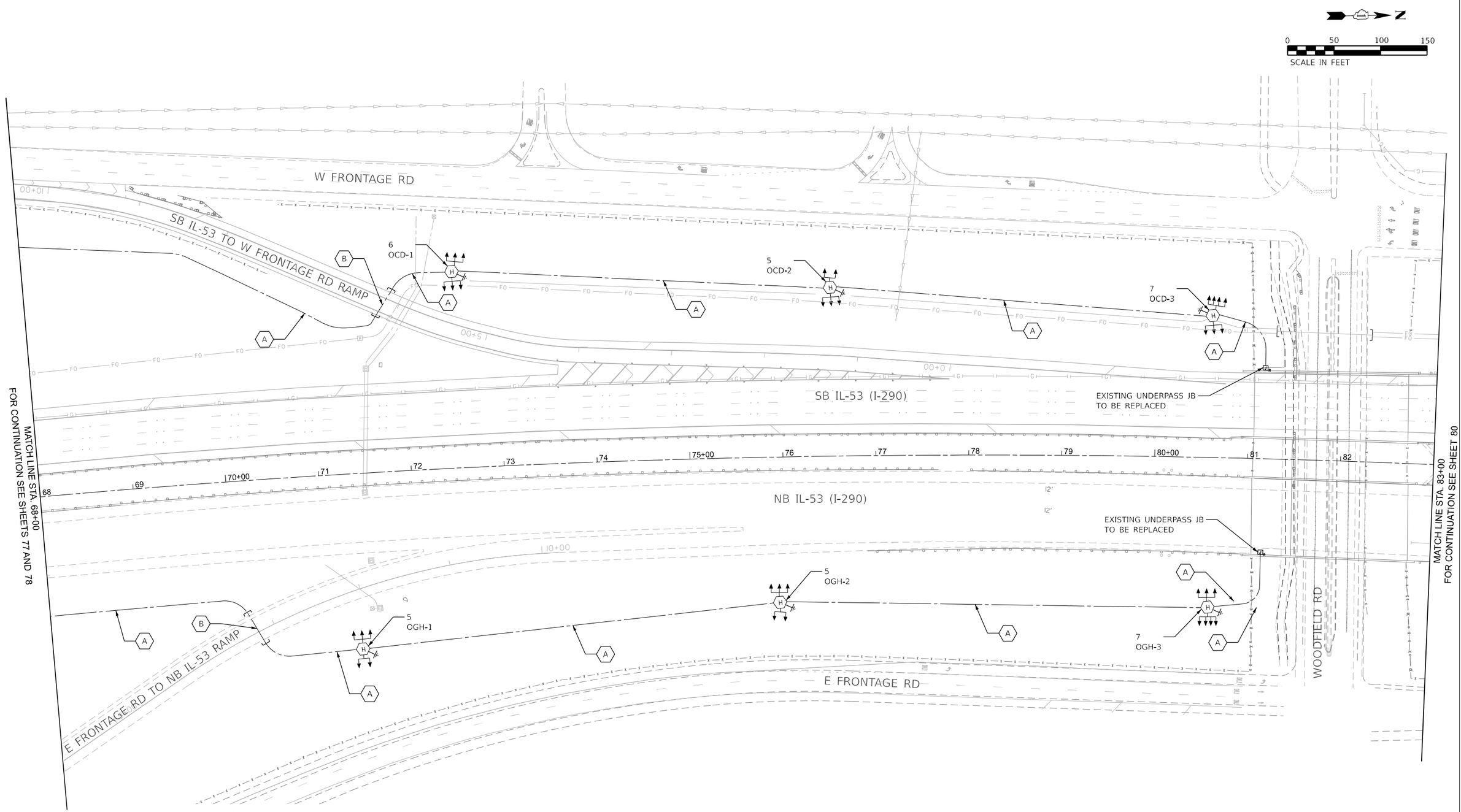

WIRING/CONDUIT LEGEND

- (A) EXISTING 3-1/C #2 & 1-1/C #4 GND IN 1 1/2" UNIT DUCT
- (B) EXISTING 3-1/C #2 & 1-1/C #4 GND IN 1 1/2" UNIT DUCT WITHIN CONDUIT PUSHED, 4" DIA., GALVANIZED STEEL
- (C) EXISTING 3-1/C #2 & 1-1/C #4 GND IN 1 1/2" PVC COATED RGS CONDUIT ATTACHED TO STRUCTURE

DATE PLOTTED = 3/19/2026 11:44:46 AM
PENTABLE = 0030_PLOTS.tbl
PLOT CONFIG = CGI-PDF.pltcfg
MODEL: sMODELNAMES
FILE NAME: pw://ciorba-pw.bentley.com:ciorba-pw-01/Documents/Projects/IL_DOT/01/0021693.05/CADD Data/ShtLighting/0021693.05-sht-LTG203.dgn

CiorbaGroup
8725 W. Higgins Rd, Ste 600, Chicago, IL 60631
P 773.775.4009 | www.ciorba.com

USER NAME = mbalog	DESIGNED - DTJ	REVISED -	
	DRAWN - MB	REVISED -	
PLOT SCALE = 0.1666667 ' / In.	CHECKED - JMV	REVISED -	
PLOT DATE = 3/19/2026	DATE - 03/18/2026	REVISED -	

STATE OF ILLINOIS
DEPARTMENT OF TRANSPORTATION

I-290/IL 53 HMA RESURFACING AND BRIDGE REPAIRS
PROPOSED LIGHTING PLAN

SCALE: 1"=50' | SHEET OF SHEETS | STA. 68+00 | TO STA. 83+00

F.A.I RTE.	SECTION	COUNTY	TOTAL SHEETS	SHEET NO.
290	(0404-316-HB) BR 24	MULTIPLE*	276	79
		CONTRACT NO. 62W99		
		ILLINOIS	FED. AID PROJECT	

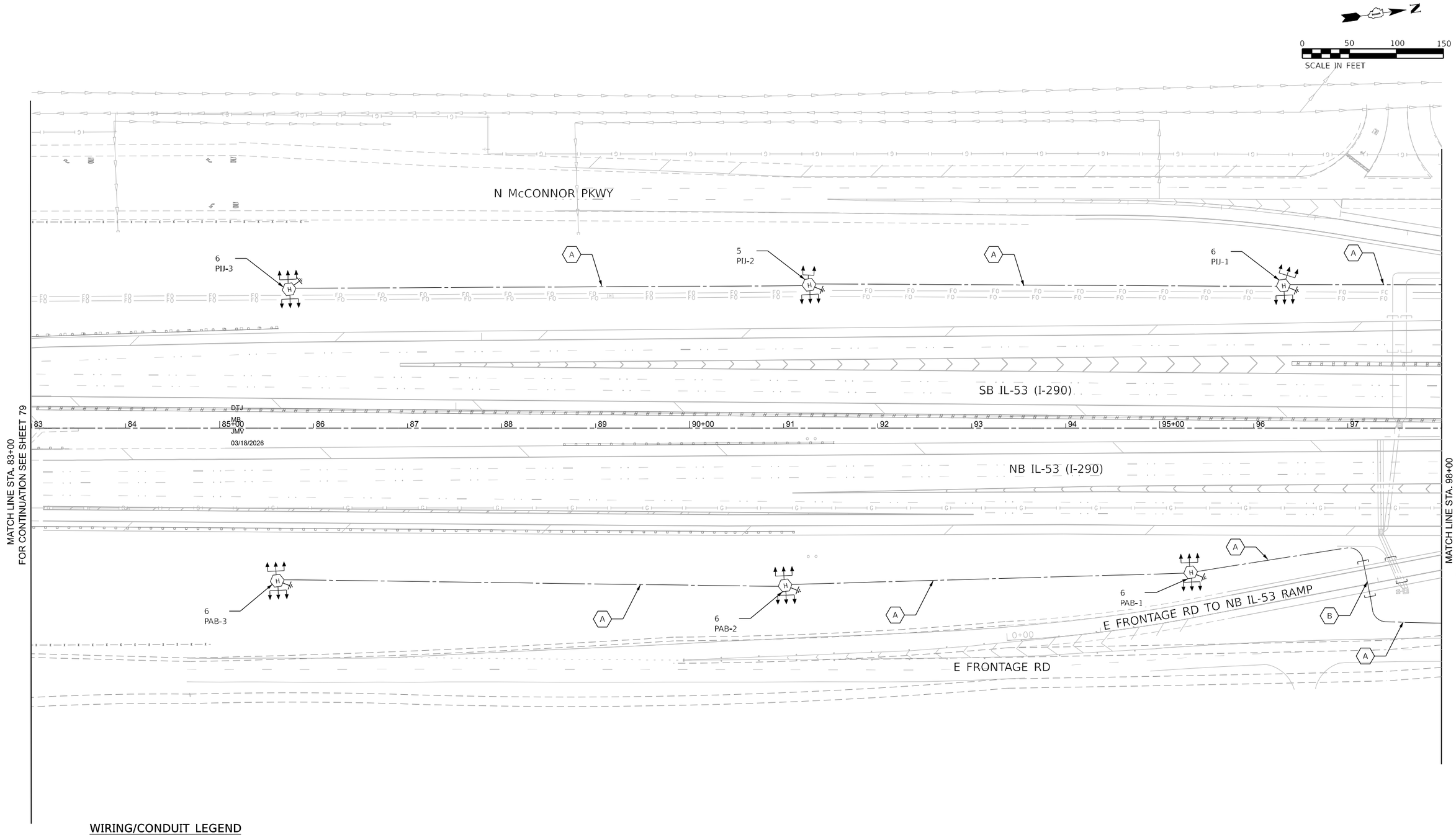

WIRING/CONDUIT LEGEND

- (A) EXISTING 3-1/C #2 & 1-1/C #4 GND IN 1 1/2" UNIT DUCT
- (B) EXISTING 3-1/C #2 & 1-1/C #4 GND IN 1 1/2" UNIT DUCT WITHIN CONDUIT PUSHED, 4" DIA., GALVANIZED STEEL
- (C) EXISTING 3-1/C #2 & 1-1/C #4 GND IN 1 1/2" PVC COATED RGS CONDUIT ATTACHED TO STRUCTURE

DATE PLOTTED = 3/19/2026 11:45:04 AM
PEN TABLE = 0021693.05.tbl
PLOT CONFIG = CGI-PDF.pltcfg
MODEL: $MODELNAMES
FILE NAME: pw://ciorba-pw.bentley.com:ciorba-pw-01/Documents/Projects/IL_DOT/D1/0021693.05/CADD Data/Sht/Lighting/0021693.05-sht-LTG204.dgn

CiorbaGroup
8725 W. Higgins Rd, Ste 600, Chicago, IL 60631
P 773.775.4009 | www.ciorba.com

USER NAME = djohnson	DESIGNED - DTJ	REVISED -	
	DRAWN - MB	REVISED -	
PLOT SCALE = 0.16666667 ' / in.	CHECKED - JMV	REVISED -	
PLOT DATE = 3/19/2026	DATE - 03/18/2026	REVISED -	

STATE OF ILLINOIS
DEPARTMENT OF TRANSPORTATION

I-290/IL 53 HMA RESURFACING AND BRIDGE REPAIRS
PROPOSED LIGHTING PLAN

SCALE: 1"=50' | SHEET OF SHEETS | STA. 83+00 TO STA. 98+00

F.A.I. RTE.	SECTION	COUNTY	TOTAL SHEETS	SHEET NO.
290	(0404-316-HB) BR 24	MULTIPLE*	276	80
		CONTRACT NO. 62W99		
		ILLINOIS	FED. AID PROJECT	

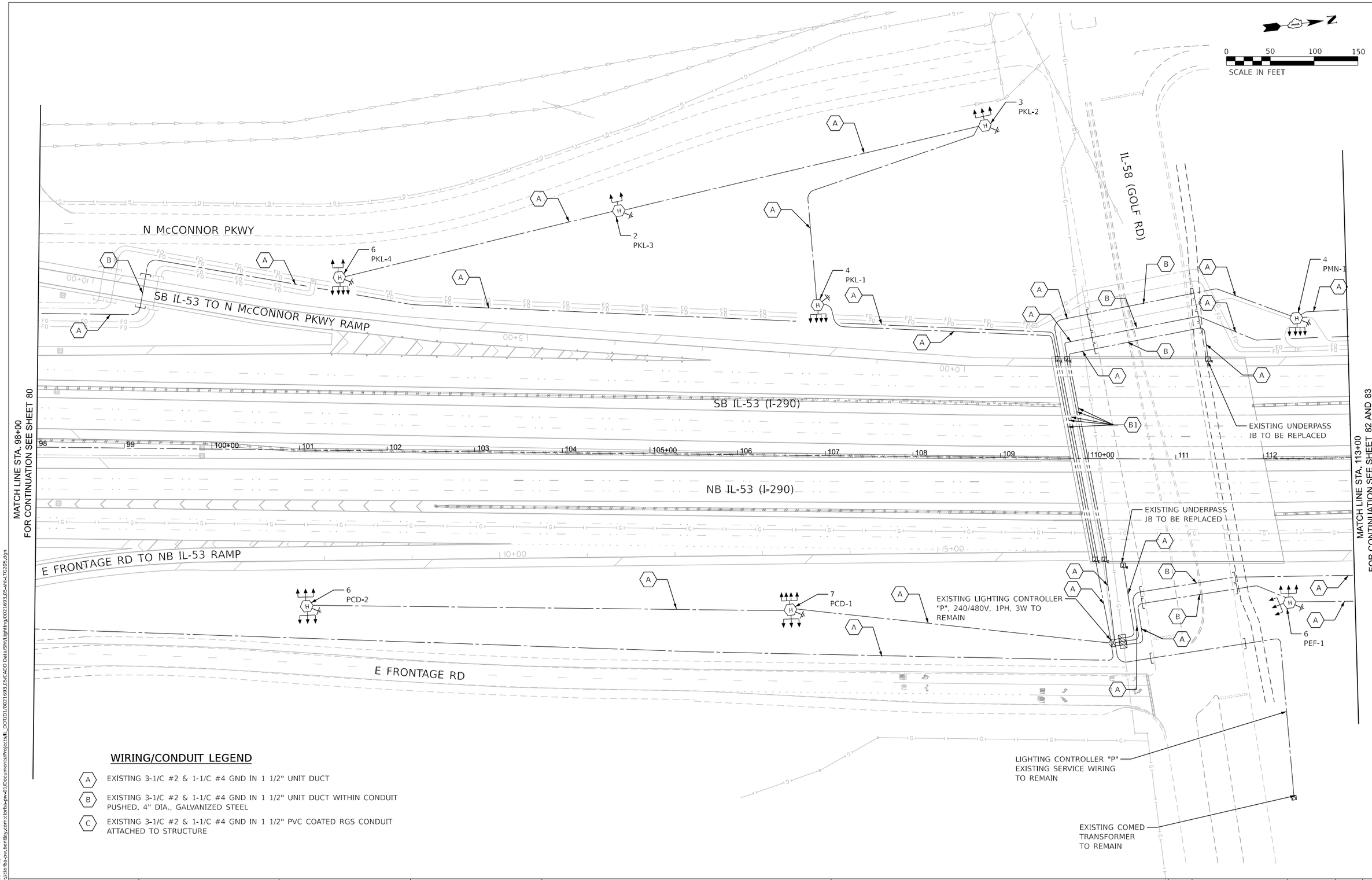

WIRING/CONDUIT LEGEND

- (A) EXISTING 3-1/C #2 & 1-1/C #4 GND IN 1 1/2" UNIT DUCT
- (B) EXISTING 3-1/C #2 & 1-1/C #4 GND IN 1 1/2" UNIT DUCT WITHIN CONDUIT PUSHED, 4" DIA., GALVANIZED STEEL
- (C) EXISTING 3-1/C #2 & 1-1/C #4 GND IN 1 1/2" PVC COATED RGS CONDUIT ATTACHED TO STRUCTURE

CiorbaGroup
8725 W. Higgins Rd, Ste 600, Chicago, IL 60631
P 773.775.4009 | www.ciorba.com

USER NAME = mbalog	DESIGNED - DTJ	REVISED -
	DRAWN - MB	REVISED -
PLOT SCALE = 0.16666667 ' / In.	CHECKED - JS	REVISED -
PLOT DATE = 3/19/2026	DATE - 03/18/2026	REVISED -

STATE OF ILLINOIS
DEPARTMENT OF TRANSPORTATION

I-290/IL 53 HMA RESURFACING AND BRIDGE REPAIRS
PROPOSED LIGHTING PLAN

SCALE: 1"=50' | SHEET OF SHEETS | STA. 98+00 | TO STA. 113+00

F.A.I. RTE.	SECTION	COUNTY	TOTAL SHEETS	SHEET NO.
290	(0404-316-HB) BR 24	MULTIPLE*	276	81
		CONTRACT NO. 62W99		
	ILLINOIS FED. AID PROJECT			

DATE PLOTTED = 3/19/2026 11:45:26 AM
PLOT FILE = 0021693_05.tbl
PLOT CONFIG = CGI-PDF.pltcfg
MODEL: $MODELNAMES
FILE NAME: pw://ciorba-pw.bentley.com:ciorba-pw-01/Documents/Projects/IL_DOT/D1/0021693.05/CADD Data/Sht/Lighting/0021693_05-sht-LTG206.dgn

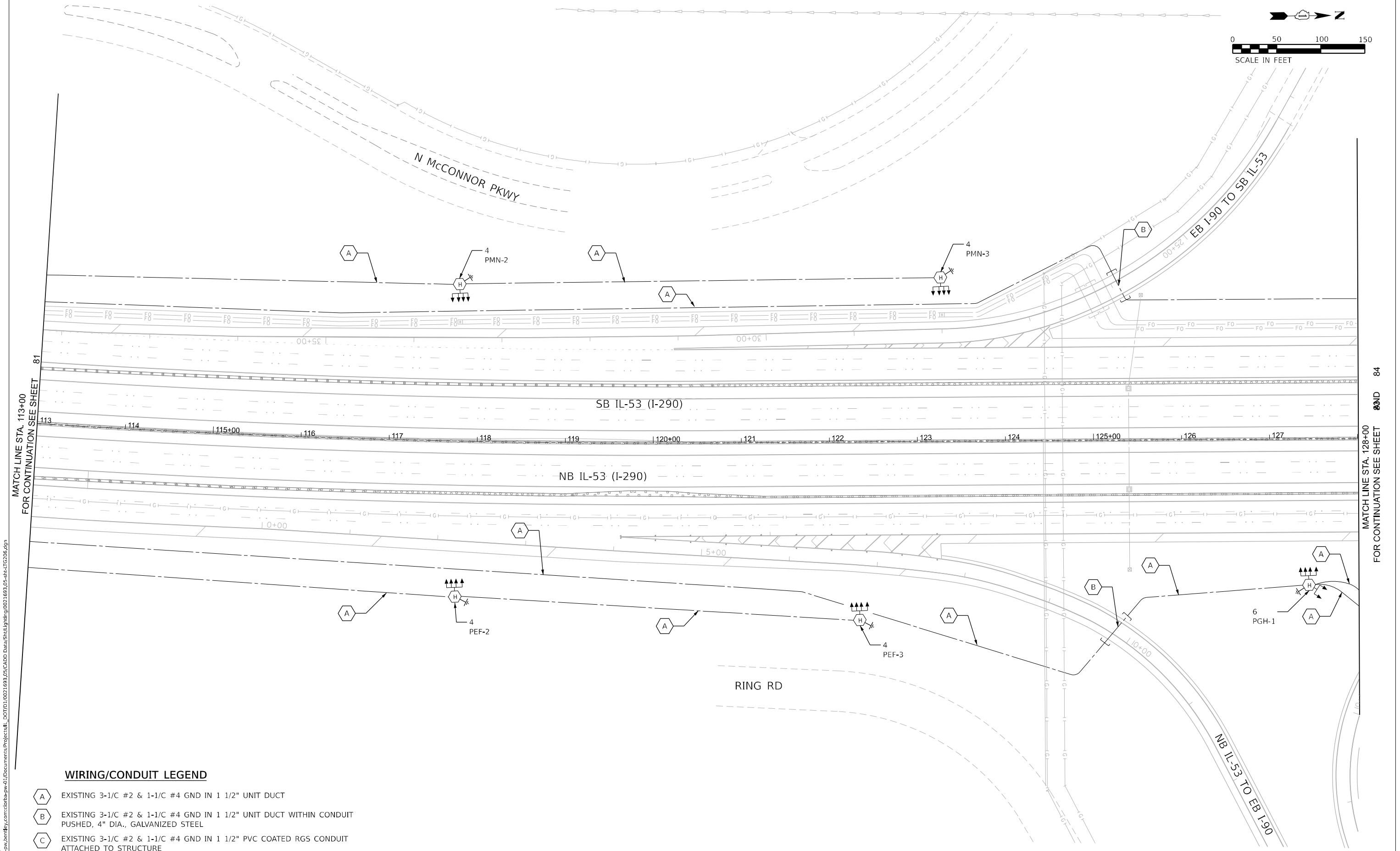

WIRING/CONDUIT LEGEND

- (A) EXISTING 3-1/C #2 & 1-1/C #4 GND IN 1 1/2" UNIT DUCT
- (B) EXISTING 3-1/C #2 & 1-1/C #4 GND IN 1 1/2" UNIT DUCT WITHIN CONDUIT PUSHED, 4" DIA., GALVANIZED STEEL
- (C) EXISTING 3-1/C #2 & 1-1/C #4 GND IN 1 1/2" PVC COATED RGS CONDUIT ATTACHED TO STRUCTURE

DATE PLOTTED = 3/19/2026 11:45:43 AM
PRINTED BY = mbalog PLOT FILE = 05.tbl
PLOT CONFIG = CGI-PDF.pltcfg
MODEL: \$MODEL.NAMES
FILE NAME: pw://ciorba-pw.bentley.com:ciorba-pw-01/Documents/Projects/IL_DOTFD1.0021693.05/CADD Data/Shr/Lighting/0021693.05-sht-LTG206.dgn

CiorbaGroup
8725 W. Higgins Rd, Ste 600, Chicago, IL 60631
P 773.775.4009 | www.ciorba.com

USER NAME = mbalog	DESIGNED - DTJ	REVISED -	
	DRAWN - MB	REVISED -	
PLOT SCALE = 0.16666667 ' / In.	CHECKED - JMV	REVISED -	
PLOT DATE = 3/19/2026	DATE - 03/18/2026	REVISED -	

STATE OF ILLINOIS
DEPARTMENT OF TRANSPORTATION

I-290/IL 53 HMA RESURFACING AND BRIDGE REPAIRS
PROPOSED LIGHTING PLAN

SCALE: 1"=50' | SHEET OF SHEETS | STA. 113+00 | TO STA. 128+00

F.A.I. RTE.	SECTION	COUNTY	TOTAL SHEETS	SHEET NO.
290	(0404-316-HB) BR 24	MULTIPLE*	276	82
		CONTRACT NO. 62W99		
	ILLINOIS FED. AID PROJECT			

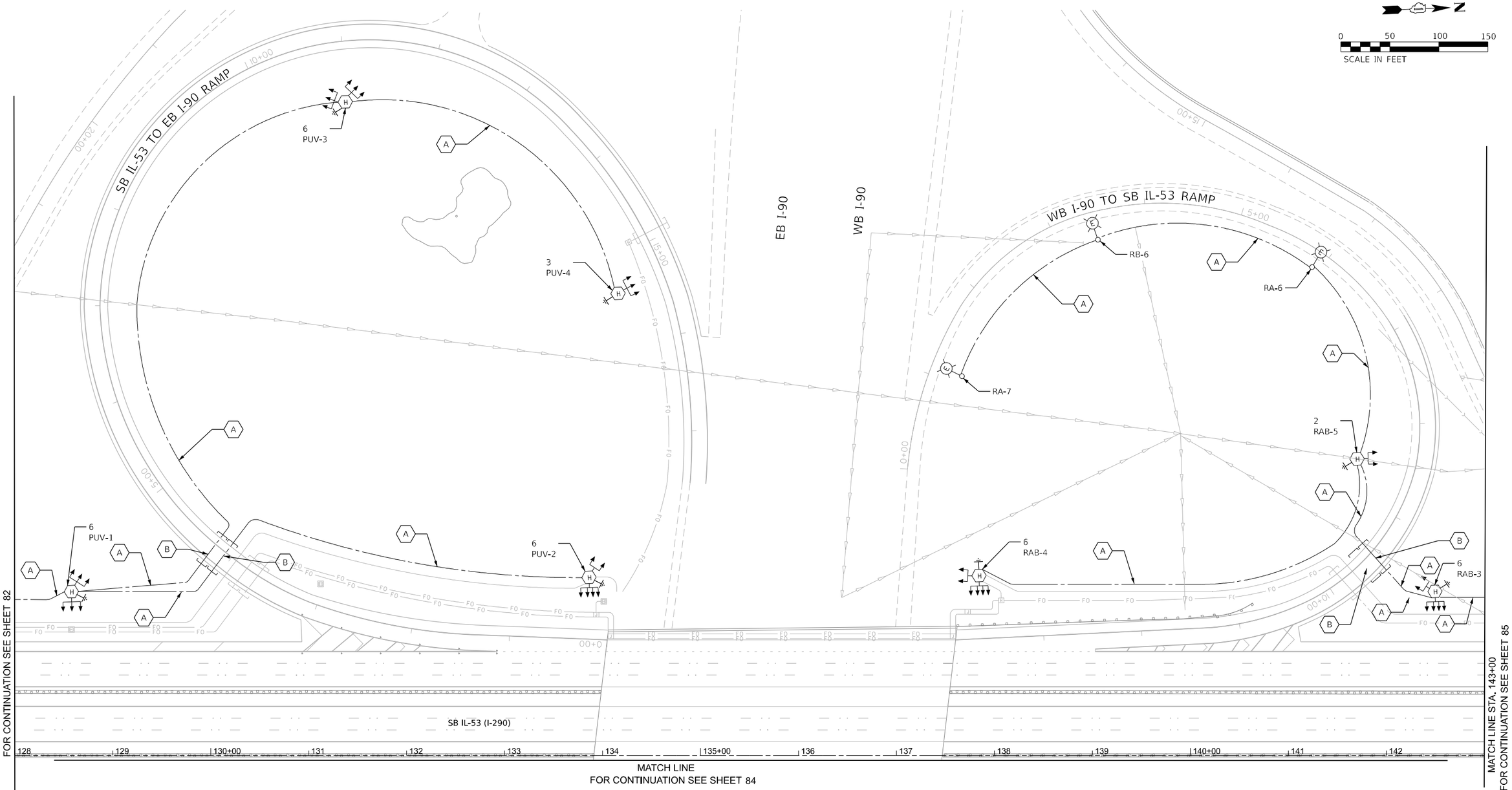

WIRING/CONDUIT LEGEND

- (A) EXISTING 3-1/C #2 & 1-1/C #4 GND IN 1 1/2" UNIT DUCT
- (B) EXISTING 3-1/C #2 & 1-1/C #4 GND IN 1 1/2" UNIT DUCT WITHIN CONDUIT PUSHED, 4" DIA., GALVANIZED STEEL
- (C) EXISTING 3-1/C #2 & 1-1/C #4 GND IN 1 1/2" PVC COATED RGS CONDUIT ATTACHED TO STRUCTURE

DATE PLOTTED = 3/19/2026 11:46:02 AM
PEN TABLE = 0021693.05.tbl
PLOT CONFIG = CGI-PDF.pltcfg
MODEL: $MODELNAMES
FILE NAME: pw://ciorba-pw.bentley.com:ciorba-pw-01/Documents/Projects/IL_DOT/D1/0021693.05/CADD Data/Sht/Lighting/0021693.05-sht-LTG207.dgn

CiorbaGroup
8725 W. Higgins Rd, Ste 600, Chicago, IL 60631
P 773.775.4009 | www.ciorba.com

USER NAME = mbalog	DESIGNED - DTJ	REVISED -	
	DRAWN - MB	REVISED -	
PLOT SCALE = 0.16666667 ' / in.	CHECKED - JMV	REVISED -	
PLOT DATE = 3/19/2026	DATE - 03/18/2026	REVISED -	

STATE OF ILLINOIS
DEPARTMENT OF TRANSPORTATION

I-290/IL 53 HMA RESURFACING AND BRIDGE REPAIRS
PROPOSED LIGHTING PLAN

SCALE: 1"=50' | SHEET OF SHEETS | STA. 128+00 TO STA. 143+00

F.A.I. RTE.	SECTION	COUNTY	TOTAL SHEETS	SHEET NO.
290	(0404-316-HB) BR 24	MULTIPLE*	276	83
		CONTRACT NO. 62W99		
		ILLINOIS	FED. AID PROJECT	

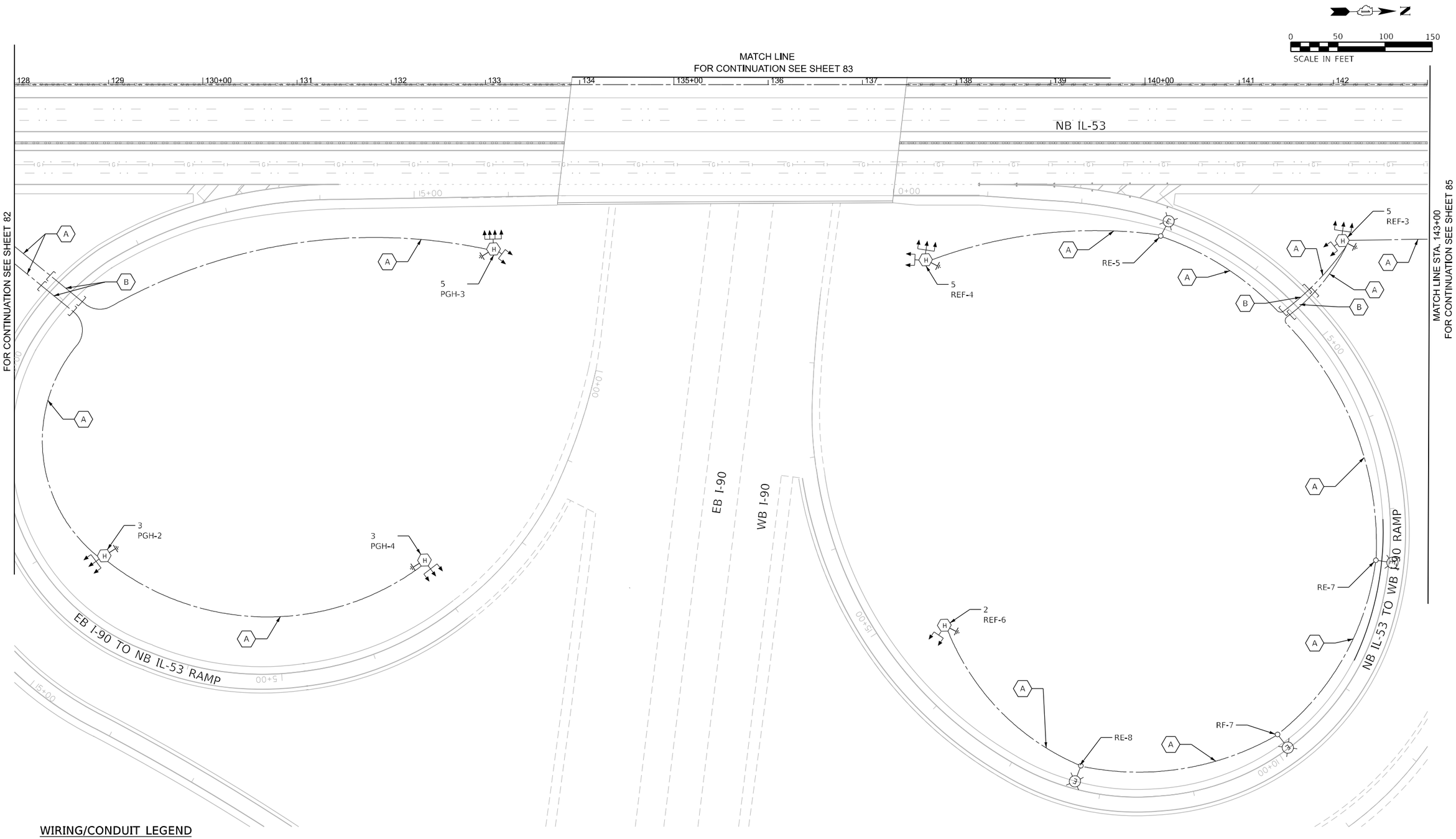

0 50 100 150
SCALE IN FEET

WIRING/CONDUIT LEGEND

(A) EXISTING 3-1/C #2 & 1-1/C #4 GND IN 1 1/2" UNIT DUCT

(B) EXISTING 3-1/C #2 & 1-1/C #4 GND IN 1 1/2" UNIT DUCT WITHIN CONDUIT PUSHED, 4" DIA., GALVANIZED STEEL

(C) EXISTING 3-1/C #2 & 1-1/C #4 GND IN 1 1/2" PVC COATED RGS CONDUIT ATTACHED TO STRUCTURE

DATE PLOTTED = 3/19/2026 11:46:23 AM
PART TO PLOT = 0021693_05.tbl
PLOT CONFIG = CGI-PDF.pltcfg
MODEL: SMODELNAMES
FILE NAME: pw:\\ciorba-pw.bentley.com:ciorba-pw-01\Documents\Projects\IL_DOTFD1\0021693\05\CADD Data\Shts\Lighting\0021693_05-sht-LTG208.dgn

CiorbaGroup
8725 W. Higgins Rd, Ste 600, Chicago, IL 60631
P 773.775.4009 | www.ciorba.com

USER NAME = mbalog	DESIGNED - DTJ	REVISED -
	DRAWN - MB	REVISED -
PLOT SCALE = 0.16666667 ' / In.	CHECKED - JMV	REVISED -
PLOT DATE = 3/19/2026	DATE - 03/18/2026	REVISED -

STATE OF ILLINOIS
DEPARTMENT OF TRANSPORTATION

I-290/IL 53 HMA RESURFACING AND BRIDGE REPAIRS
PROPOSED LIGHTING PLAN

SCALE: 1"=50' | SHEET OF SHEETS | STA. 128+00 | TO STA. 143+00

F.A.I. RTE.	SECTION	COUNTY	TOTAL SHEETS	SHEET NO.
290	(0404-316-HB) BR 24	MULTIPLE*	276	84
		CONTRACT NO. 62W99		
	ILLINOIS	FED. AID PROJECT		

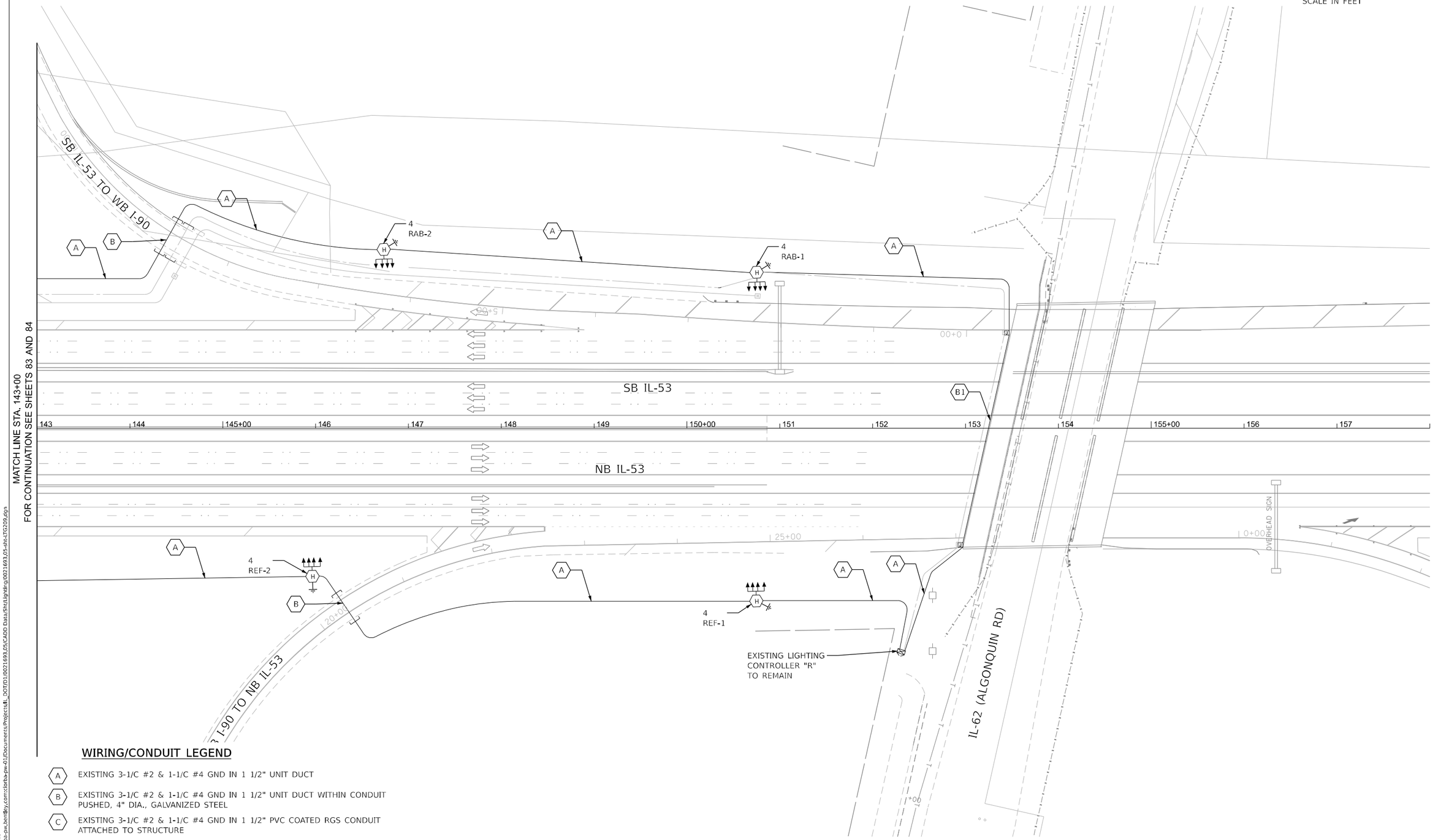

WIRING/CONDUIT LEGEND

- (A) EXISTING 3-1/C #2 & 1-1/C #4 GND IN 1 1/2" UNIT DUCT
- (B) EXISTING 3-1/C #2 & 1-1/C #4 GND IN 1 1/2" UNIT DUCT WITHIN CONDUIT PUSHED, 4" DIA., GALVANIZED STEEL
- (C) EXISTING 3-1/C #2 & 1-1/C #4 GND IN 1 1/2" PVC COATED RGS CONDUIT ATTACHED TO STRUCTURE

DATE PLOTTED = 3/19/2026 11:46:46 AM
PLOT SCALE = 0.16666667 ' / In.
PLOT CONFIG = CQI-PDF.pltcfg
MODEL: SMODELNAMES
FILE NAME: pw://ciorba-pw.bentley.com:ciorba-pw-01/Documents/Projects/IL_DOT/D1.00021693.05/CADD Data/Sht/Lighting\0021693.05-sht-LTG209.dgn

CiorbaGroup
8725 W. Higgins Rd, Ste 600, Chicago, IL 60631
P 773.775.4009 | www.ciorba.com

USER NAME = mbalog	DESIGNED - DTJ	REVISED -
	DRAWN - MB	REVISED -
PLOT SCALE = 0.16666667 ' / In.	CHECKED - JMV	REVISED -
PLOT DATE = 3/19/2026	DATE - 03/18/2026	REVISED -

STATE OF ILLINOIS
DEPARTMENT OF TRANSPORTATION

I-290/IL 53 HMA RESURFACING AND BRIDGE REPAIRS
PROPOSED LIGHTING PLAN

SCALE: 1"=50' | SHEET OF SHEETS | STA. 143+00 | TO STA. 158+00

F.A.I. RTE.	SECTION	COUNTY	TOTAL SHEETS	SHEET NO.
290	(0404-316-HB) BR 24	MULTIPLE*	276	85
		CONTRACT NO. 62W99		
	ILLINOIS FED. AID PROJECT			

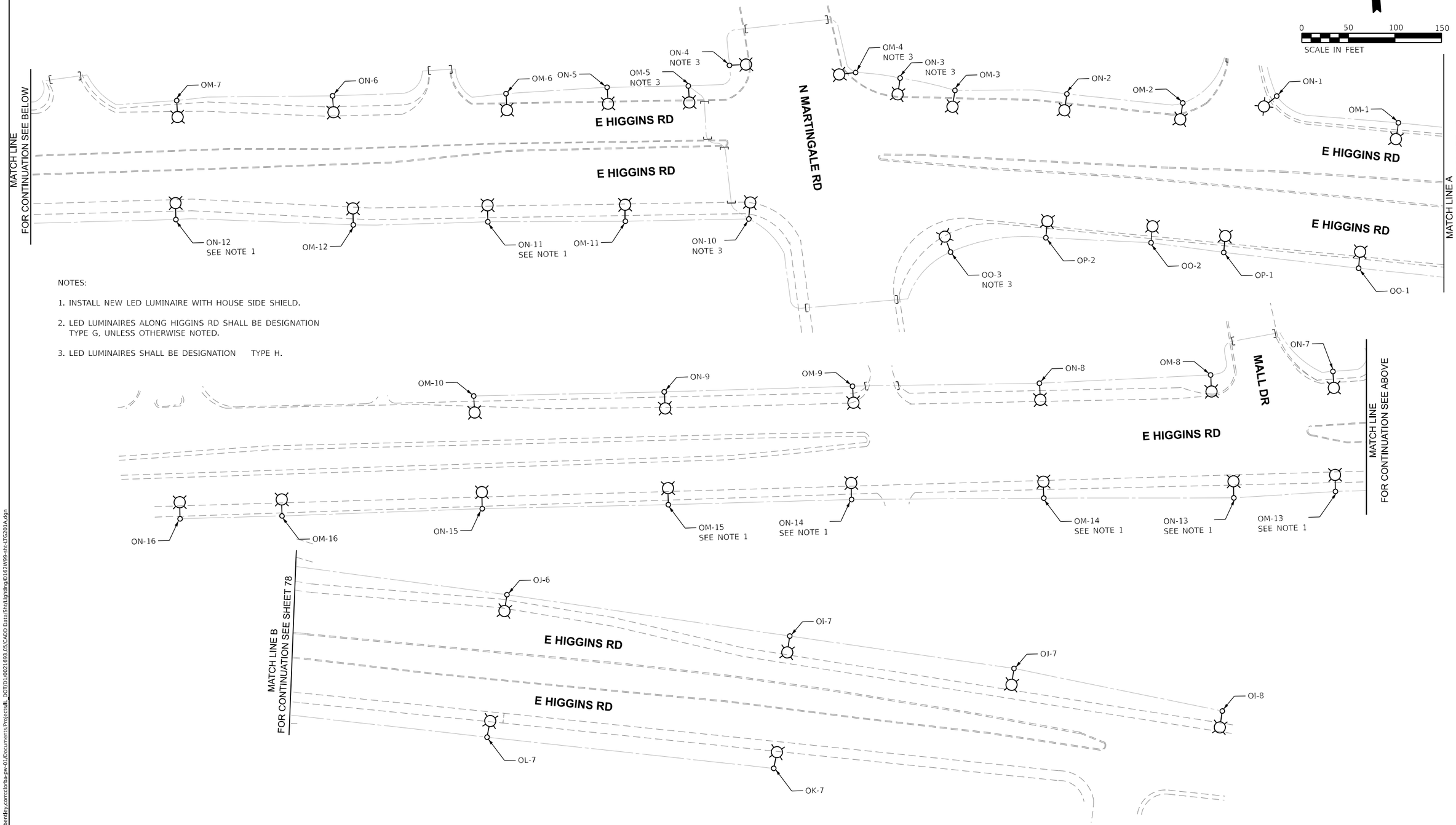

NOTES:

1. INSTALL NEW LED LUMINAIRE WITH HOUSE SIDE SHIELD.
2. LED LUMINAIRES ALONG HIGGINS RD SHALL BE DESIGNATION TYPE G, UNLESS OTHERWISE NOTED.
3. LED LUMINAIRES SHALL BE DESIGNATION TYPE H.

DATE PLOTTED = 4/30/2026 10:43:22 PM
PEN TABLE = 0021693.05.tbl
PLOT CONFIG = CGI-PDF.pltcfg
MODEL: $MODELNAMES
FILE NAME: pw://ciorba-pw.bentley.com:ciorba-pw-01/Documents/Projects/IL_DOT/D1/0021693.05/CADD Data/Sht/Lighting/D162W99-sht-LTG201A.dgn

CiorbaGroup
8725 W. Higgins Rd, Ste 600, Chicago, IL 60631
P 773.775.4009 | www.ciorba.com

USER NAME = mbalog	DESIGNED -	REVISED -	
	DRAWN -	REVISED -	
PLOT SCALE = 0.16666667 ' / in.	CHECKED -	REVISED -	
PLOT DATE = 3/19/2026	DATE -	REVISED -	

STATE OF ILLINOIS
DEPARTMENT OF TRANSPORTATION

I-290/IL 53 HMA RESURFACING AND BRIDGE REPAIRS
PROPOSED LIGHTING PLAN HIGGINS RD

SCALE: 1"=50' | SHEET OF SHEETS | STA. TO STA.

F.A.I. RTE.	SECTION	COUNTY	TOTAL SHEETS	SHEET NO.
290	(0404-316-HB) BR 24	COOK	276	85A
		CONTRACT NO. 62W99		
		ILLINOIS	FED. AID PROJECT	

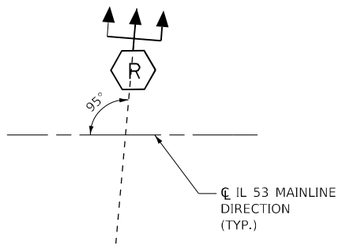

OAB-1

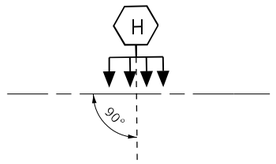

OAB-2

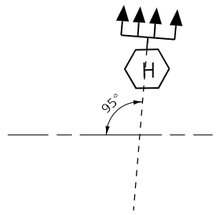

OAB-3

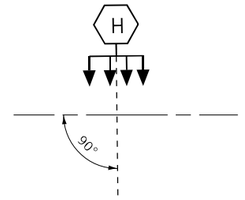

OAB-4

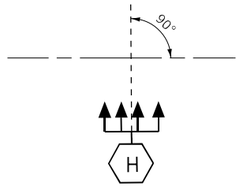

OEF-1

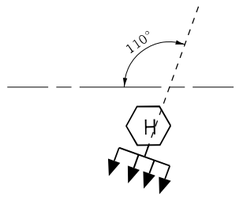

OEF-2

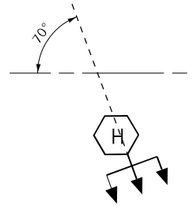

OEF-3

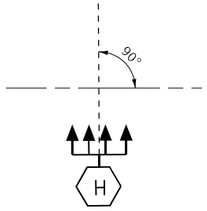

OEF-4

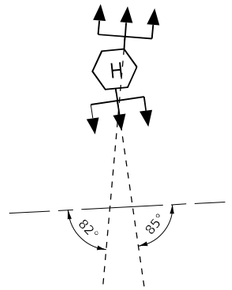

OCD-1

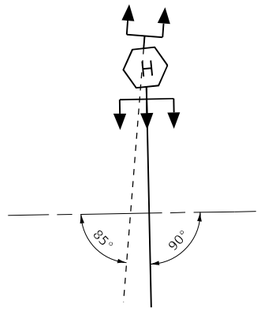

OCD-2

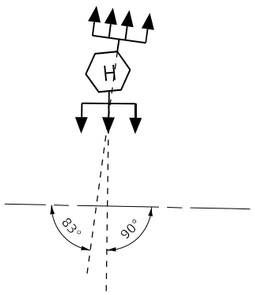

OCD-3

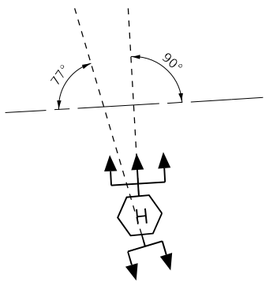

OGH-1

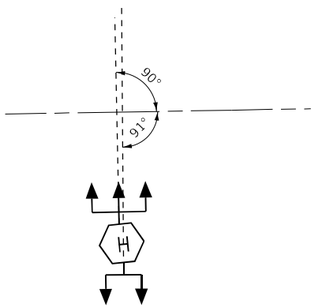

OGH-2

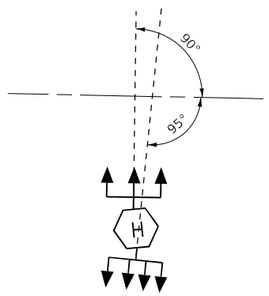

OGH-3

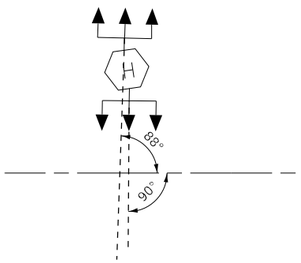

PIJ-3

DATE PLOTTED = 3/19/2026 11:47:03 AM
PRINTED BY = mbalog
PLOT CONFIG = CGI-PDF.pltcfg
MODEL: SMODELNAMES
FILE NAME: pw:\\ciorba-pw.bentley.com:ciorba-pw-01\Documents\Projects\IL_DOT\D1\0021693.05\CADD Data\Stru\Lighting\0021693.05-sht-LTG301.dgn

CiorbaGroup
8725 W. Higgins Rd, Ste 600, Chicago, IL 60631
P 773.775.4009 | www.ciorba.com

USER NAME = mbalog		DESIGNED - DTJ	REVISED -	
		DRAWN - MB	REVISED -	
PLOT SCALE = 0.16666667 ' / In.		CHECKED - JMV	REVISED -	
PLOT DATE = 3/19/2026		DATE - 03/18/2026	REVISED -	

STATE OF ILLINOIS
DEPARTMENT OF TRANSPORTATION

I-290/IL 53 HMA RESURFACING AND BRIDGE REPAIRS
PROPOSED LIGHTING PLAN
LIGHT TOWER LUMINAIRE ORIENTATION

SCALE: | SHEET OF SHEETS | STA. | TO STA.

F.A.I RTE.	SECTION	COUNTY	TOTAL SHEETS	SHEET NO.
290	(0404-316-HB) BR 24	MULTIPLE*	276	86
		CONTRACT NO. 62W99		
	ILLINOIS	FED. AID PROJECT		

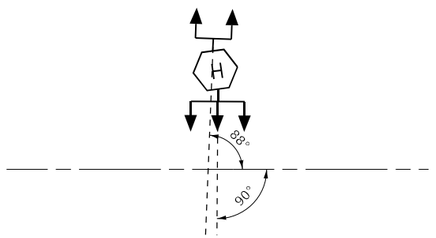

PIJ-2

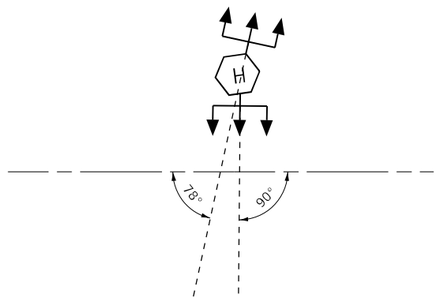

PIJ-1

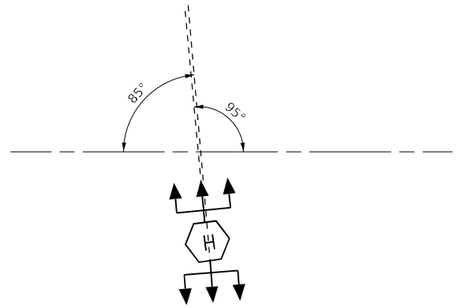

PAB-3

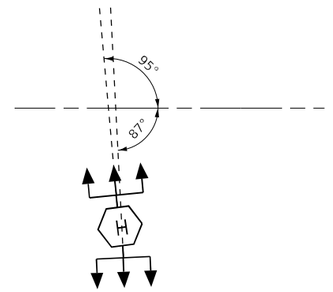

PAB-1

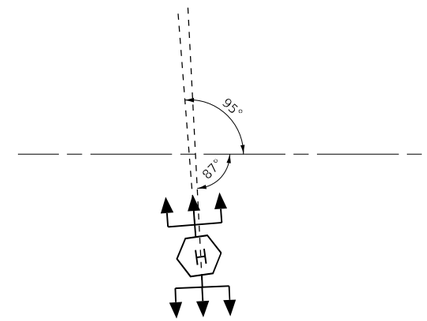

PAB-2

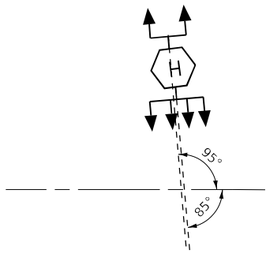

PKL-4

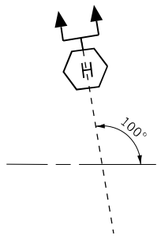

PKL-3

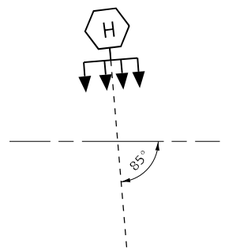

PKL-1

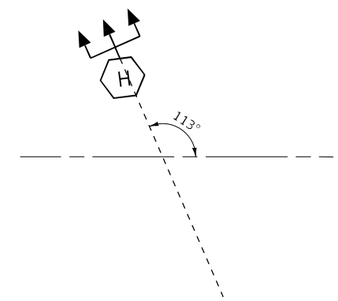

PKL-2

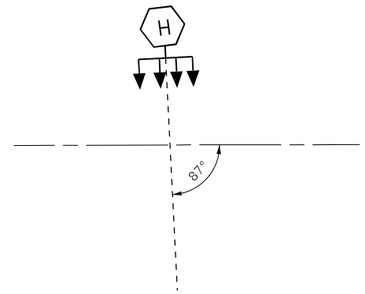

PMN-1

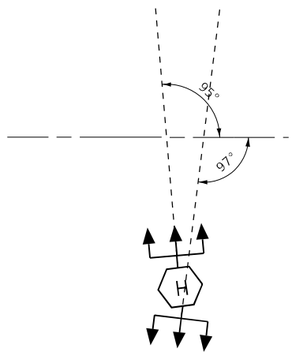

PCD-2

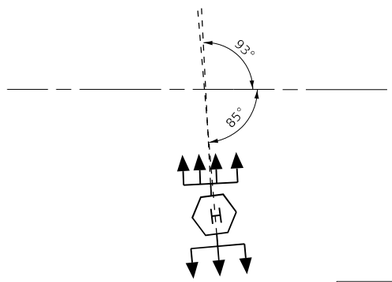

PCD-1

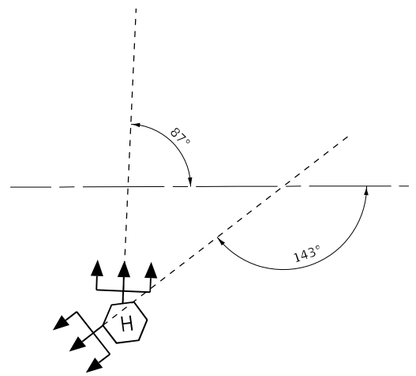

PEF-1

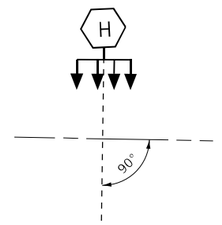

PMN-2

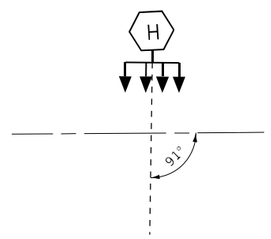

PMN-3

DATE PLOTTED = 3/19/2026 11:47:21 AM
PEN TABLE = 0021693.05.tbl
PLOT CONFIG = CGI-PDF.pltcfg
MODEL: $MODELNAMES
FILE NAME: pw://ciorba-pw.bentley.com:ciorba-pw-01/Documents/Projects/IL_DOT/D1/0021693.05/CADD Data/Sht/Lighting/0021693.05-sht-LTG302.dgn

CiorbaGroup
8725 W. Higgins Rd, Ste 600, Chicago, IL 60631
P 773.775.4009 | www.ciorba.com

USER NAME = djohnson	DESIGNED - DTJ	REVISED -	
	DRAWN - MB	REVISED -	
PLOT SCALE = 0.16666667 ' / in.	CHECKED - JMV	REVISED -	
PLOT DATE = 3/19/2026	DATE - 03/18/2026	REVISED -	

STATE OF ILLINOIS
DEPARTMENT OF TRANSPORTATION

I-290/IL 53 HMA RESURFACING AND BRIDGE REPAIRS
PROPOSED LIGHTING PLAN
LIGHT TOWER LUMINAIRE ORIENTATION

SCALE: SHEET OF SHEETS STA. TO STA.

F.A.I RTE.	SECTION	COUNTY	TOTAL SHEETS	SHEET NO.
290	(0404-316-HB) BR 24	MULTIPLE*	276	87
		CONTRACT NO. 62W99		
		ILLINOIS FED. AID PROJECT		

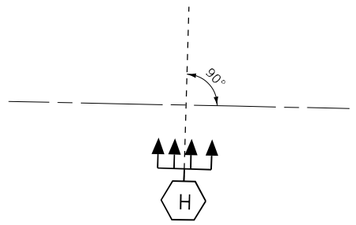

PEF-2

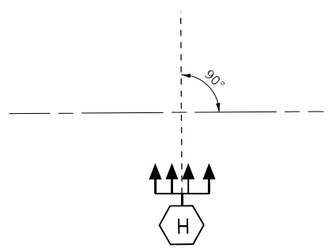

PEF-3

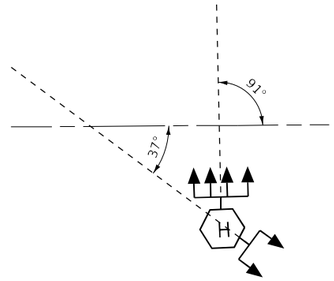

PGH-1

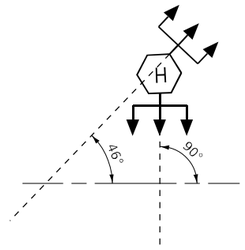

PUV-1

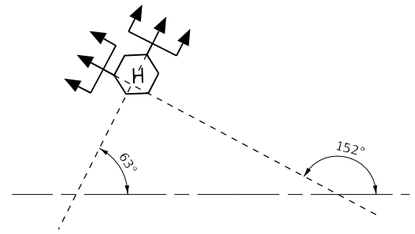

PUV-3

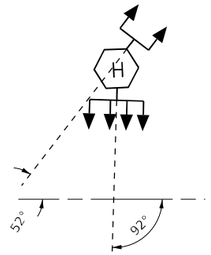

PUV-2

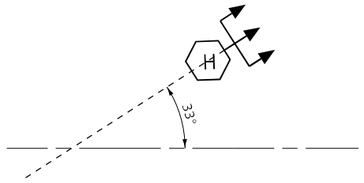

PUV-4

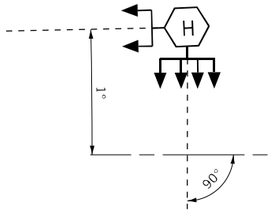

RAB-4

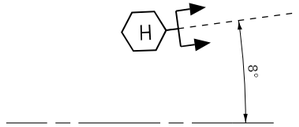

RAB-5

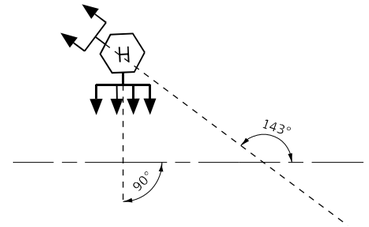

RAB-3

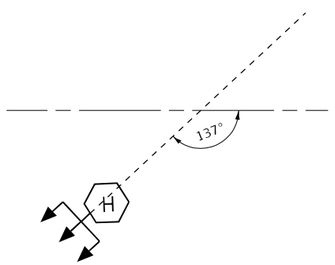

PGH-2

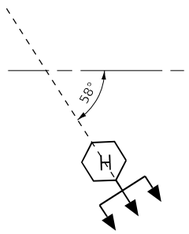

PGH-4

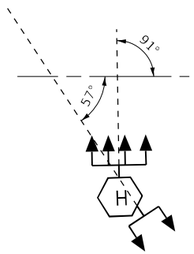

PGH-5

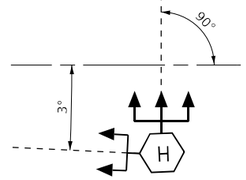

REF-4

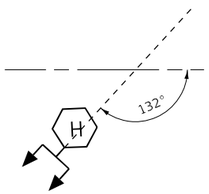

REF-6

DATE PLOTTED = 3/19/2026 11:47:40 AM
PLOT FILE = 0021693.05.tbl
PLOT CONFIG = CGI-PDF.pltcfg
MODEL: SMODELNAMES
FILE NAME: pw://ciorba-pw.bentley.com:ciorba-pw-01/Documents/Projects/IL_DOT/D1/0021693/05/CADD Data/Shts/Lighting/0021693_05-sht-LTG303.dgn

CiorbaGroup
8725 W. Higgins Rd. Ste 600, Chicago, IL 60631
P 773.975.4009 | www.ciorba.com

USER NAME = mbalog		DESIGNED - DTJ		REVISED -	
		DRAWN - MB		REVISED -	
PLOT SCALE = 0.16666667 ' / In.		CHECKED - JMV		REVISED -	
PLOT DATE = 3/19/2026		DATE - 03/18/2026		REVISED -	

STATE OF ILLINOIS
DEPARTMENT OF TRANSPORTATION

I-290/IL 53 HMA RESURFACING AND BRIDGE REPAIRS
PROPOSED LIGHTING PLAN
LIGHT TOWER LUMINAIRE ORIENTATION

SCALE: | SHEET OF SHEETS | STA. | TO STA.

F.A.I RTE.	SECTION	COUNTY	TOTAL SHEETS	SHEET NO.
290	(0404-316-HB) BR 24	MULTIPLE*	276	88
		CONTRACT NO. 62W99		
	ILLINOIS FED. AID PROJECT			

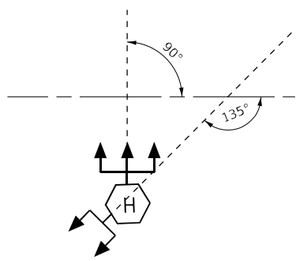

REF-3

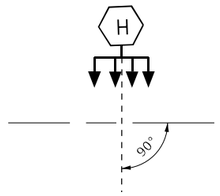

RAB-2

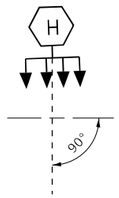

RAB-1

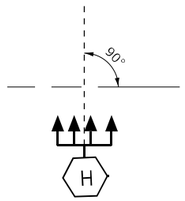

REF-2

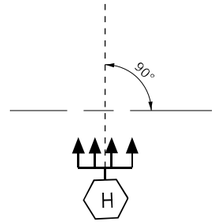

REF-1

DATE PLOTTED = 3/19/2026 11:48:01 AM
PEN TABLE = 0021693.05.tbl
PLOT CONFIG = CGI-PDF.pltcfg
MODEL: $MODELNAMES
FILE NAME: pw://ciorba-pw.bentley.com:ciorba-pw-01/Documents/Projects/IL_DOT/D1/0021693.05/CADD Data/Sht/Lighting/0021693.05-sht-LTG304.dgn

CiorbaGroup
8725 W. Higgins Rd, Ste 600, Chicago, IL 60631
P 773.775.4009 | www.ciorba.com

USER NAME = mbalog	DESIGNED - DTJ	REVISED -	
	DRAWN - MB	REVISED -	
PLOT SCALE = 0.16666667 ' / in.	CHECKED - JMV	REVISED -	
PLOT DATE = 3/19/2026	DATE - 03/18/2026	REVISED -	

STATE OF ILLINOIS
DEPARTMENT OF TRANSPORTATION

I-290/IL 53 HMA RESURFACING AND BRIDGE REPAIRS
PROPOSED LIGHTING PLAN
LIGHT TOWER LUMINAIRE ORIENTATION

SCALE: | SHEET OF SHEETS | STA. TO STA.

F.A.I RTE.	SECTION	COUNTY	TOTAL SHEETS	SHEET NO.
290	(0404-316-HB) BR 24	MULTIPLE*	276	89
		CONTRACT NO. 62W99		
		ILLINOIS	FED. AID PROJECT	

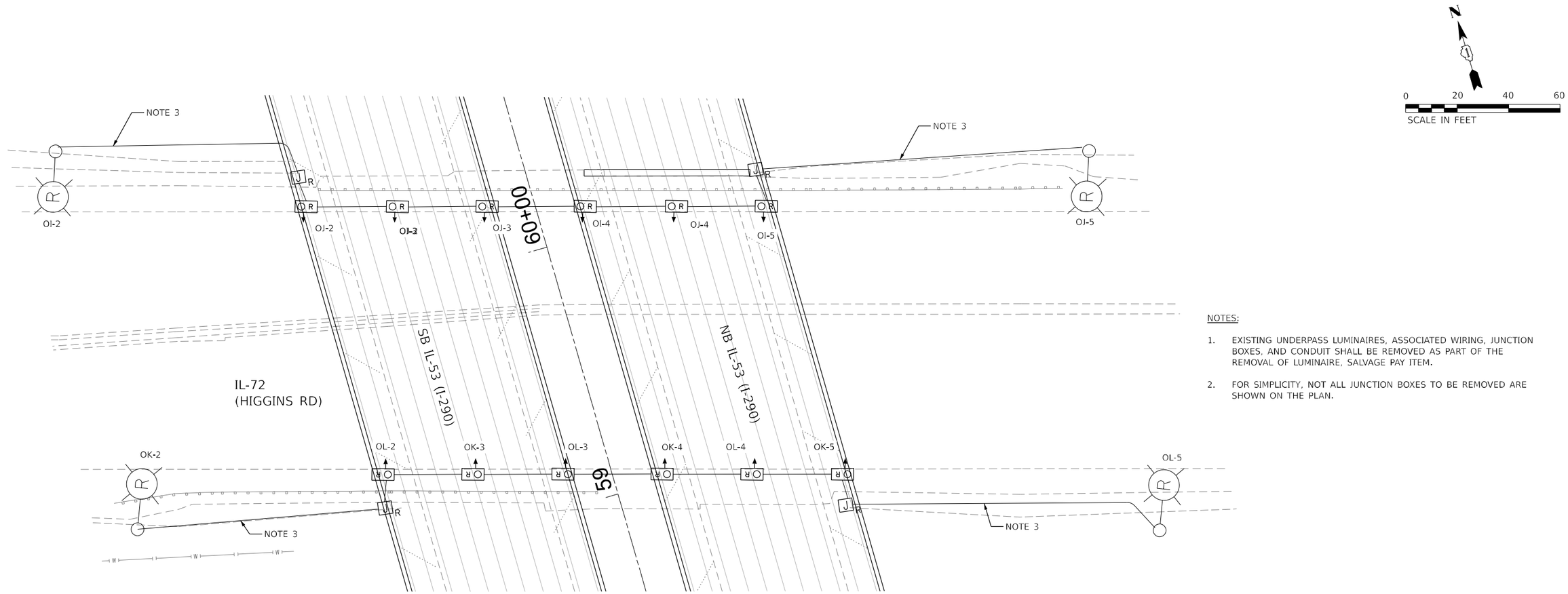

NOTES:

1. EXISTING UNDERPASS LUMINAIRES, ASSOCIATED WIRING, JUNCTION BOXES, AND CONDUIT SHALL BE REMOVED AS PART OF THE REMOVAL OF LUMINAIRE, SALVAGE PAY ITEM.
2. FOR SIMPLICITY, NOT ALL JUNCTION BOXES TO BE REMOVED ARE SHOWN ON THE PLAN.

DATE PLOTTED = 4/30/2026 10:44:20 PM
PEN TABLE = 0021693.05.tbl
PLOT CONFIG = CGI-PDF.pltcfg
MODEL: $MODELNAMES
FILE NAME: pw://ciorba-pw.bentley.com:ciorba-pw-01/Documents/Projects/IL_DOT/D1/0021693.05/CADD Data/Sht/Lighting/D162W99-sht-LTG401.dgn

CiorbaGroup
8725 W. Higgins Rd, Ste 600, Chicago, IL 60631
P 773.775.4009 | www.ciorba.com

USER NAME = jvondra	DESIGNED - DTJ	REVISED -	
	DRAWN - MB	REVISED -	
PLOT SCALE = 0.16666667 ' / in.	CHECKED - JMV	REVISED -	
PLOT DATE = 3/19/2026	DATE - 03/18/2026	REVISED -	

STATE OF ILLINOIS
DEPARTMENT OF TRANSPORTATION

I-290/IL 53 HMA RESURFACING AND BRIDGE REPAIRS
UNDERPASS LIGHTING REMOVAL PLAN
HIGGINS ROAD AT IL-53 OVERPASS

SCALE: 1"=20' | SHEET OF SHEETS | STA. TO STA.

F.A.I. RTE.	SECTION	COUNTY	TOTAL SHEETS	SHEET NO.
290	(0404-316-HB) BR 24	MULTIPLE*	276	90
		CONTRACT NO. 62W99		
		ILLINOIS	FED. AID PROJECT	

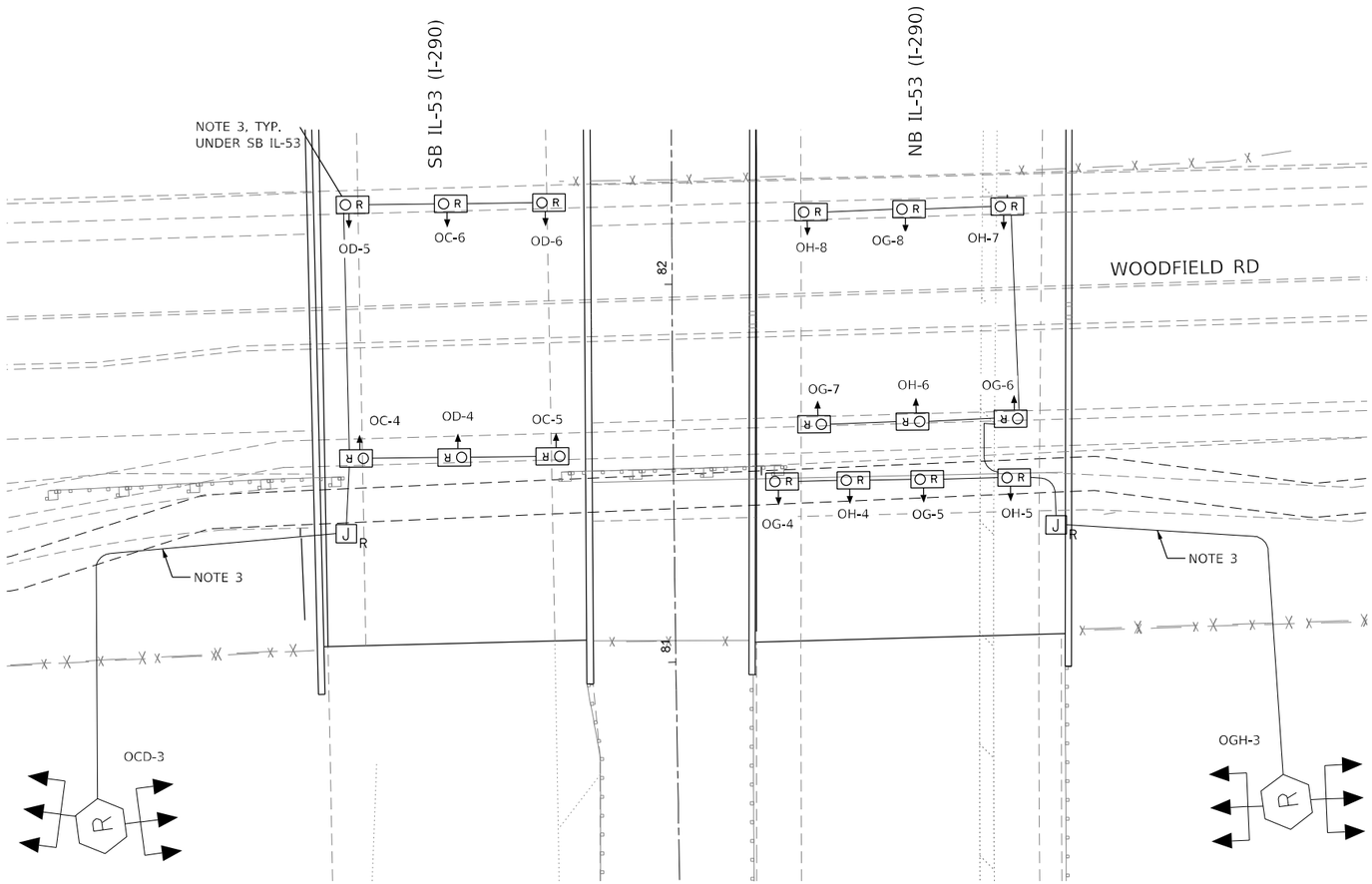

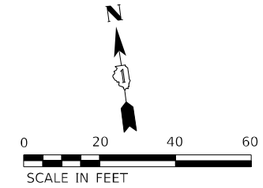

NOTES:

1. EXISTING UNDERPASS LUMINAIRES, ASSOCIATED WIRING, JUNCTION BOXES, AND CONDUIT SHALL BE REMOVED AS PART OF THE REMOVAL OF LUMINAIRE, SALVAGE PAY ITEM.
2. FOR SIMPLICITY, NOT ALL JUNCTION BOXES TO BE REMOVED ARE SHOWN ON THE PLAN.

DATE PLOTTED = 4/30/2026 10:44:32 PM
PEN TABLE = 0021693.05.tbl
PLOT CONFIG = CGI-PDF.pltcfg
MODEL: $MODELNAMES
FILE NAME: pw://ciorba-pw.bentley.com:ciorba-pw-01/Documents/Projects/IL_DOT/D1/0021693.05/CADD Data/Sht/Lighting/D162W99-sht-LTG402.dgn

CiorbaGroup
8725 W. Higgins Rd, Ste 600, Chicago, IL 60631
P 773.775.4009 | www.ciorba.com

USER NAME = jvondra	DESIGNED - DTJ	REVISED -	
	DRAWN - MB	REVISED -	
PLOT SCALE = 0.16666667 ' / in.	CHECKED - JMV	REVISED -	
PLOT DATE = 3/19/2026	DATE - 03/18/2026	REVISED -	

STATE OF ILLINOIS
DEPARTMENT OF TRANSPORTATION

I-290/IL 53 HMA RESURFACING AND BRIDGE REPAIRS
UNDERPASS LIGHTING REMOVAL PLAN
WOODFIELD ROAD AT IL-53 OVERPASS

SCALE: 1"=20' | SHEET OF SHEETS | STA. TO STA.

F.A.I. RTE.	SECTION	COUNTY	TOTAL SHEETS	SHEET NO.
290	(0404-316-HB) BR 24	MULTIPLE*	276	91
		CONTRACT NO. 62W99		
		ILLINOIS	FED. AID PROJECT	

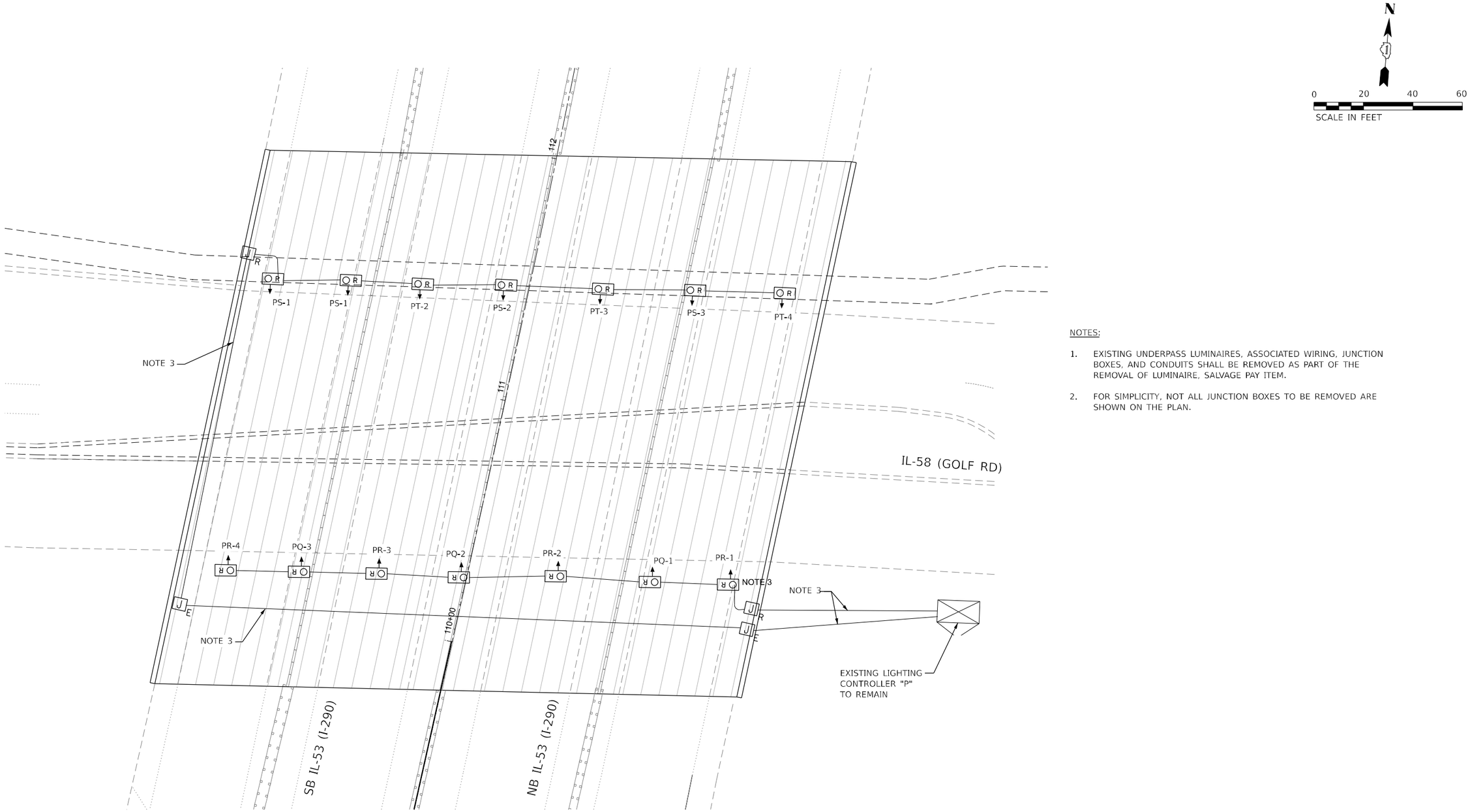

NOTES:

1. EXISTING UNDERPASS LUMINAIRES, ASSOCIATED WIRING, JUNCTION BOXES, AND CONDUITS SHALL BE REMOVED AS PART OF THE REMOVAL OF LUMINAIRE, SALVAGE PAY ITEM.
2. FOR SIMPLICITY, NOT ALL JUNCTION BOXES TO BE REMOVED ARE SHOWN ON THE PLAN.

DATE PLOTTED = 4/30/2026 10:44:43 PM
PEN TABLE = 0021693.05.tbl
PLOT CONFIG = CGI-PDF.pltcfg
MODEL: $MODELNAMES
FILE NAME: pw://ciorba-pw.bentley.com:ciorba-pw-01/Documents/Projects/IL_DOT/D1/0021693.05/CADD Data/Sht/Lighting/D162W99-sht-LTG403.dgn

CiorbaGroup
8725 W. Higgins Rd, Ste 600, Chicago, IL 60631
P 773.775.4009 | www.ciorba.com

USER NAME = jvondra	DESIGNED - DTJ	REVISED -	
	DRAWN - MB	REVISED -	
PLOT SCALE = 0.16666667 ' / in.	CHECKED - JMV	REVISED -	
PLOT DATE = 3/19/2026	DATE - 03/18/2026	REVISED -	

STATE OF ILLINOIS
DEPARTMENT OF TRANSPORTATION

I-290/IL 53 HMA RESURFACING AND BRIDGE REPAIRS
UNDERPASS LIGHTING REMOVAL PLAN
GOLF ROAD AT I-53 OVERPASS

SCALE: 1"=20' | SHEET OF SHEETS | STA. TO STA.

F.A.I. RTE.	SECTION	COUNTY	TOTAL SHEETS	SHEET NO.
290	(0404-316-HB) BR 24	MULTIPLE*	276	92
		CONTRACT NO. 62W99		
		ILLINOIS	FED. AID PROJECT	

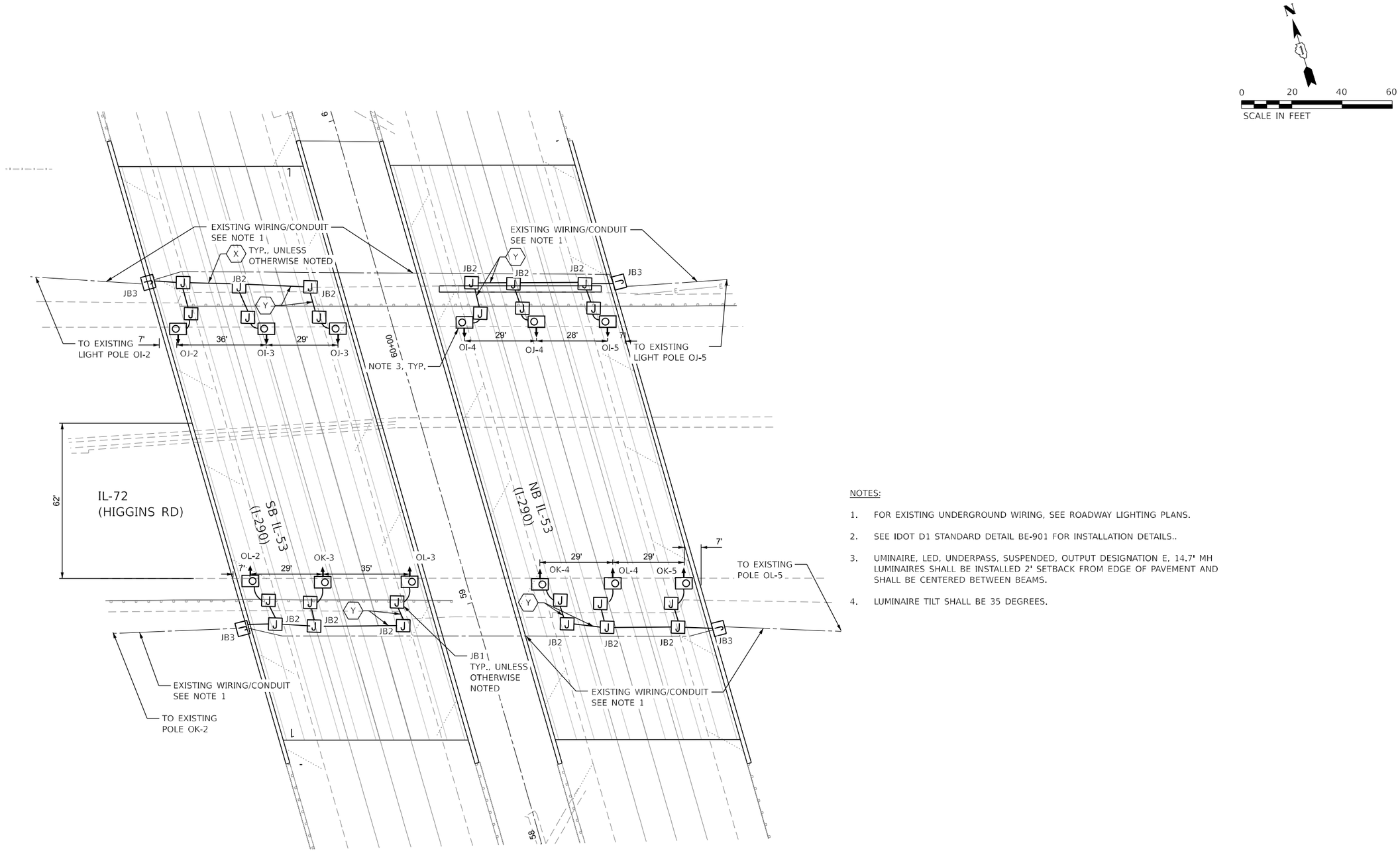

NOTES:

1. FOR EXISTING UNDERGROUND WIRING, SEE ROADWAY LIGHTING PLANS.
2. SEE IDOT D1 STANDARD DETAIL BE-901 FOR INSTALLATION DETAILS..
3. UMINAIRE, LED, UNDERPASS, SUSPENDED, OUTPUT DESIGNATION E, 14.7' MH LUMINAIRES SHALL BE INSTALLED 2' SETBACK FROM EDGE OF PAVEMENT AND SHALL BE CENTERED BETWEEN BEAMS.
4. LUMINAIRE TILT SHALL BE 35 DEGREES.

WIRING/CONDUIT LEGEND

X 3-1/C #10 & 1-1/C #10 GND IN 1" PVC COATED RGS CONDUIT ATTACHED TO STRUCTURE

DATE PLOTTED = 4/30/2026 10:44:57 PM
PEN TABLE = 0021693.05.tbl
PLOT CONFIG = CGI-PDF.pltcfg
MODEL: $MODELNAMES
FILE NAME: pw://ciorba-pw.bentley.com:ciorba-pw-01/Documents/Projects/IL_DOT/D1/0021693.05/CADD Data/Sht/Lighting/D162W99-sht-LTG404.dgn

CiorbaGroup
8725 W. Higgins Rd, Ste 600, Chicago, IL 60631
P 773.775.4009 | www.ciorba.com

USER NAME = jvondra	DESIGNED - DTJ	REVISED -	
	DRAWN - MB	REVISED -	
PLOT SCALE = 0.16666667 ' / in.	CHECKED - JMV	REVISED -	
PLOT DATE = 3/19/2026	DATE - 03/18/2026	REVISED -	

STATE OF ILLINOIS
DEPARTMENT OF TRANSPORTATION

I-290/IL 53 HMA RESURFACING AND BRIDGE REPAIRS
PROPOSED UNDERPASS LIGHTING PLAN
HIGGINS ROAD AT IL-53 OVERPASS

SCALE: 1"=20' | SHEET OF SHEETS | STA. TO STA.

F.A.I. RTE.	SECTION	COUNTY	TOTAL SHEETS	SHEET NO.
290	(0404-316-HB) BR 24	MULTIPLE*	276	93
		CONTRACT NO. 62W99		
		ILLINOIS	FED. AID PROJECT	

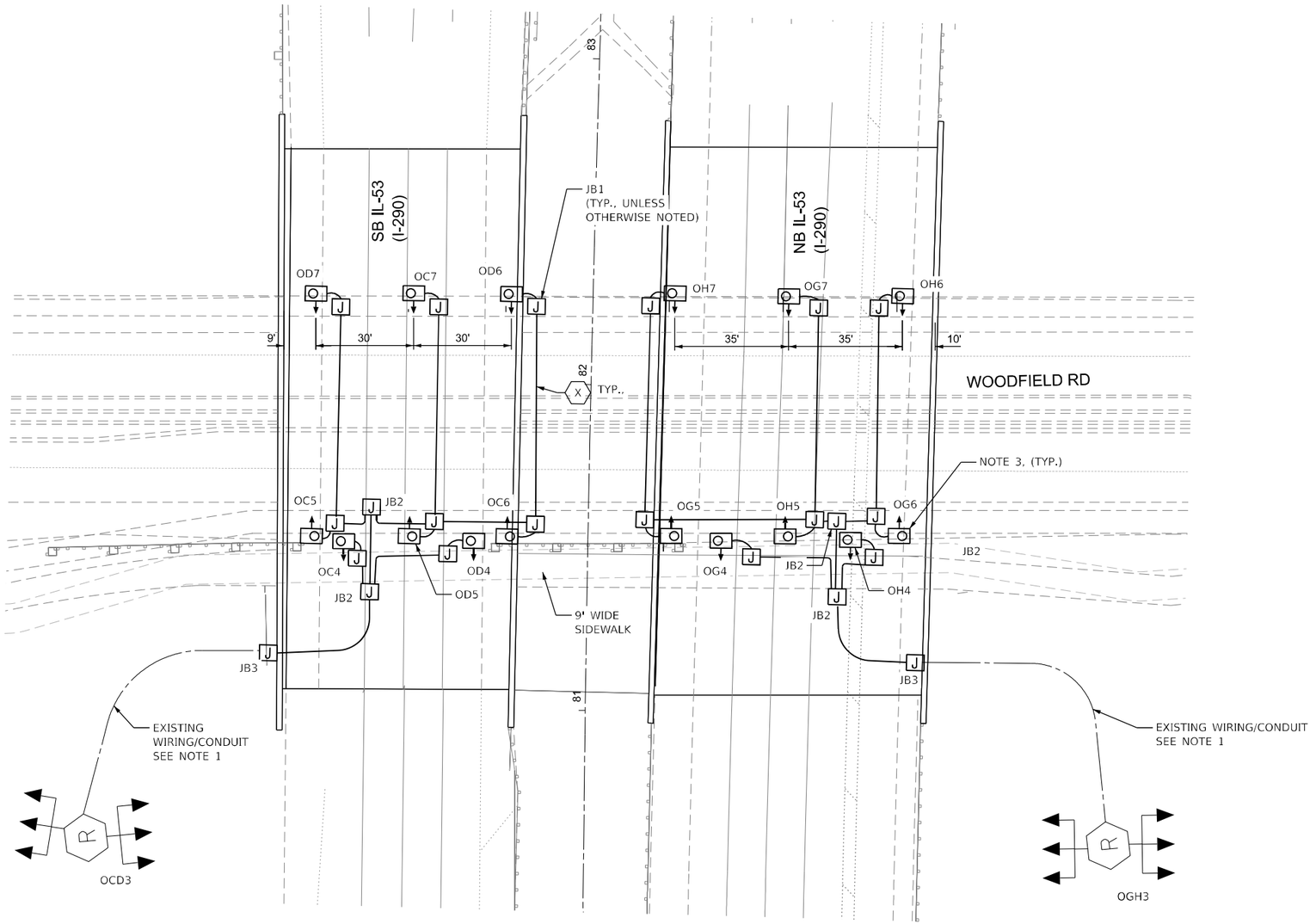

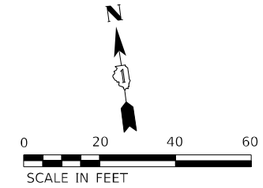

NOTES:

1. FOR EXISTING UNDERGROUND WIRING, SEE ROADWAY LIGHTING PLANS.
2. SEE IDOT D1 STANDARD DETAIL BE-903 FOR INSTALLATION DETAILS.
3. LUMINAIRE, LED, UNDERPASS, WALLMOUNT, OUTPUT DESIGNATION D.
4. LUMINAIRE SPACING IS THE SAME AT BOTH SOUTH AND NORTH PIERS.
5. LUMINAIRE TILT IS 0 DEGREES.

WIRING/CONDUIT LEGEND

(X) 3-1/C #10 & 1-1/C #10 GND IN 1" PVC COATED RGS CONDUIT ATTACHED TO STRUCTURE

DATE PLOTTED = 4/20/2026 10:45:08 PM
PRINT TABLE = 000_PDF_55.tbl
PLOT CONFIG = CGI-PDF.pltcfg
MODEL: SMODELNAMES
FILE NAME: pw://ciorba-pw.bentley.com:ciorba-pw-01/Documents/Projects/IL_DOTFD1\0021693.05\CADD Data\Shts\Lighting\D162W99-sht-LTG405.dgn

CiorbaGroup
8725 W. Higgins Rd, Ste 600, Chicago, IL 60631
P 773.775.4009 | www.ciorba.com

USER NAME = mbalog	DESIGNED - DTJ	REVISED -
	DRAWN - MB	REVISED -
PLOT SCALE = 0.16666667 ' / In.	CHECKED - JMV	REVISED -
PLOT DATE = 3/19/2026	DATE - 03/18/2026	REVISED -

STATE OF ILLINOIS
DEPARTMENT OF TRANSPORTATION

I-290/IL 53 HMA RESURFACING AND BRIDGE REPAIRS
PROPOSED UNDERPASS LIGHTING PLAN
WOODFIELD ROAD AT IL-53 OVERPASS

SCALE: 1"=20' | SHEET OF SHEETS | STA. TO STA.

F.A.I. RTE.	SECTION	COUNTY	TOTAL SHEETS	SHEET NO.
290	(0404-316-HB) BR 24	MULTIPLE*	276	94
		CONTRACT NO. 62W99		
	ILLINOIS FED. AID PROJECT			

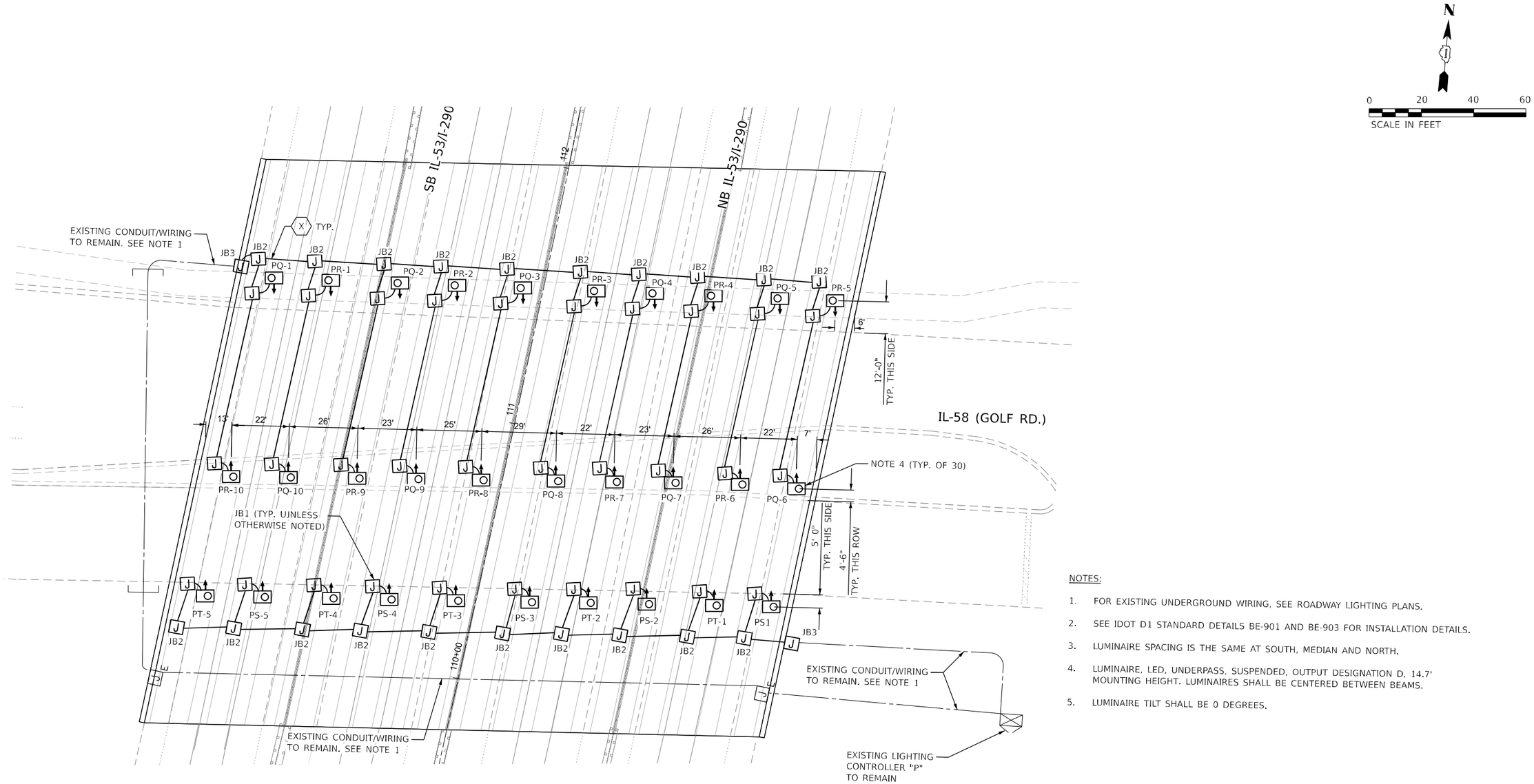

NOTES:

1. FOR EXISTING UNDERGROUND WIRING, SEE ROADWAY LIGHTING PLANS.
2. SEE IDOT D1 STANDARD DETAILS BE-901 AND BE-903 FOR INSTALLATION DETAILS.
3. LUMINAIRE SPACING IS THE SAME AT SOUTH, MEDIAN AND NORTH.
4. LUMINAIRE, LED, UNDERPASS, SUSPENDED, OUTPUT DESIGNATION D, 14.7' MOUNTING HEIGHT. LUMINAIRES SHALL BE CENTERED BETWEEN BEAMS.
5. LUMINAIRE TILT SHALL BE 0 DEGREES.

WIRING/CONDUIT LEGEND

X 3-1/C #10 & 1-1/C #10 GND IN 1" PVC COATED RGS CONDUIT ATTACHED TO STRUCTURE

DATE PLOTTED = 4/30/2026 10:45:19 PM
PEN TABLE = 0021693.05.tbl
PLOT CONFIG = CGI-PDF.pltcfg
MODEL: $MODELNAMES
FILE NAME: pw://ciorba-pw.bentley.com:ciorba-pw-01/Documents/Projects/IL_DOT/D1/0021693.05/CADD Data/Sht/Lighting/D162W99-sht-LTG406.dgn

CiorbaGroup
8725 W. Higgins Rd, Ste 600, Chicago, IL 60631
P 773.775.4009 | www.ciorba.com

USER NAME = mbalog	DESIGNED - DTJ	REVISED -	
	DRAWN - MB	REVISED -	
PLOT SCALE = 0.16666667 ' / in.	CHECKED - JMV	REVISED -	
PLOT DATE = 3/19/2026	DATE - 03/18/2026	REVISED -	

STATE OF ILLINOIS
DEPARTMENT OF TRANSPORTATION

I-290/IL 53 HMA RESURFACING AND BRIDGE REPAIRS
PROPOSED UNDERPASS LIGHTING PLAN
GOLF ROAD AT IL-53 OVERPASS

SCALE: 1"=20' | SHEET OF SHEETS | STA. TO STA.

F.A.I. RTE.	SECTION	COUNTY	TOTAL SHEETS	SHEET NO.
290	(0404-316-HB) BR 24	MULTIPLE*	276	95
		CONTRACT NO. 62W99		
		ILLINOIS	FED. AID PROJECT	

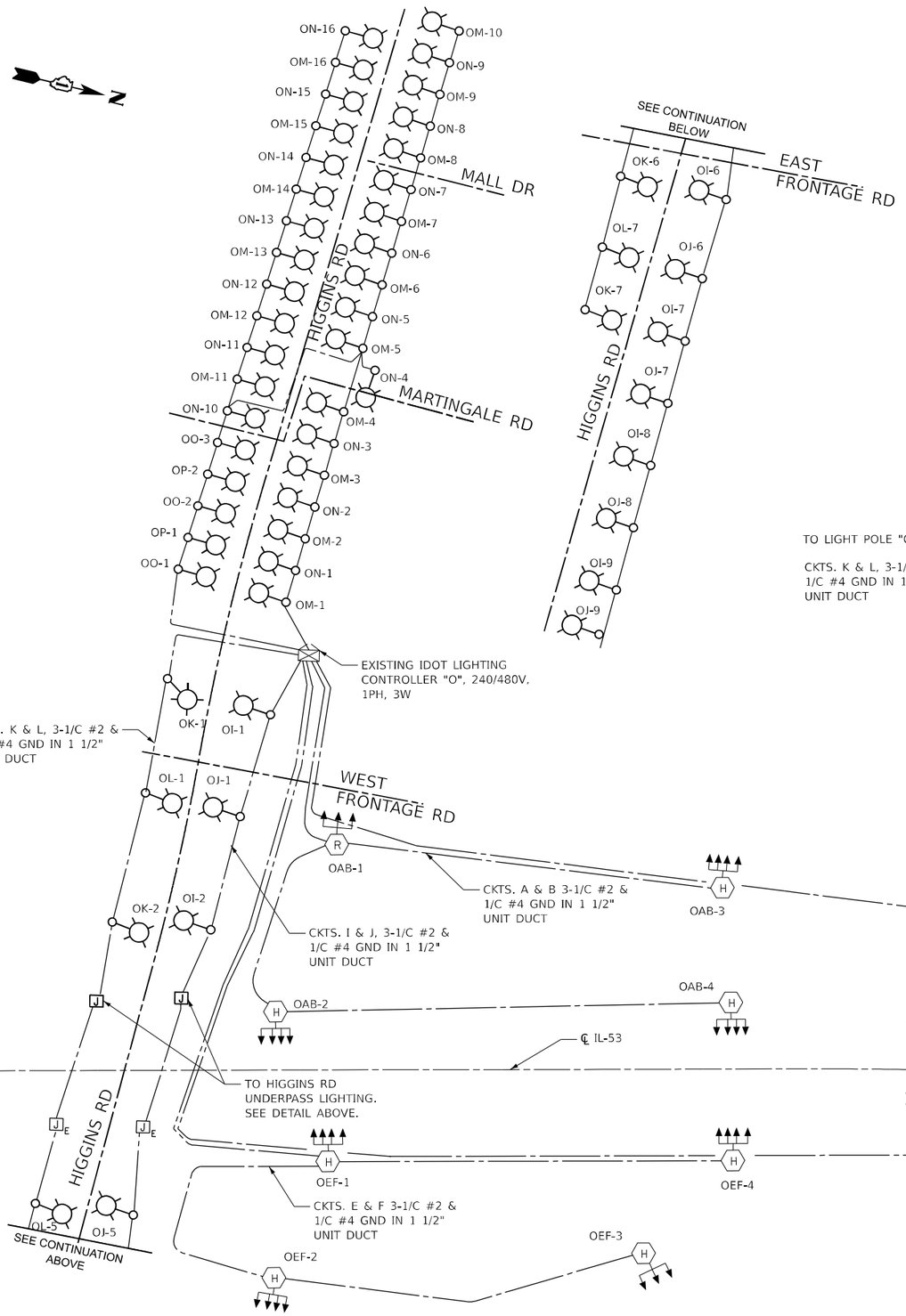

HIGGINS RD. UNDERPASS WIRING DIAGRAM

WOODFIELD RD. UNDERPASS WIRING DIAGRAM

NOTE:

THE 6 LUMINAIRES AT THE INTERSECTION OF HIGINS RD. AND MARTINGALE RD. SHALL BE DESIGNATION TYPE H. ALL OTHER ROADWAY LUMINAIRES ALONG HIGGINS RD. SHAL BE DESIGNATION TYPE G.

LEGEND

- EXISTING IDOT LIGHT POLE WITH NEW LED LUMINAIRE
- EXISTING JUNCTION BOX TO REMAIN
- PROPOSED JUNCTION BOX
- EXISTING IDOT LIGHT TOWER WITH NEW LED LUMINAIRES
- NEW LED UNDERPASS LUMINAIRE
- EXISTING WIRING

LOAD TABLE			
LIGHTING CONTROLLER "O", 240/480V, 1-PH, 3-WIRE			
CKT.	NO. LUM.	RED PHASE	BLACK PHASE
A	7-430W	3010	
B	7-430W		3010
C	8-430W 4-79W	3756	
D	7-430W 4-79W		3326
E	7-430W	3010	
F	8-430W		3440
G	8-430W 4-64W	3696	
H	8-430W 4-64W		3696
I	6-130W 4-57W	1008	
J	6-130W 3-76W		1008
K	4-130W 6-57W	862	
L	3-130W 6-57W		732
M	13-130W 3-211W	2323	
N	13-130W 3-211W		2323
O	3-230W	690	
P	2-230W		460
TOTAL	60-430W 56-230W 16-79W 12-76W	18355	17995
TOTAL CONNECTED LOAD CAPACITY (KVA): 36.35			
LED HIGHMAST=430W; LED POLE=130W; LED POLE HIGGINS @ MARTINGALE=211W; LED UNDERPASS=57W (HIGGINS) OR 64W (GOLF)			

CiorbaGroup
8725 W. Higgins Rd, Ste 600, Chicago, IL 60631
P 773.775.4009 | www.ciorba.com

USER NAME = mbalog		DESIGNED - DTJ		REVISED -	
		DRAWN - MB		REVISED -	
PLOT SCALE = 0.16666667 ' / In.		CHECKED - JMV		REVISED -	
PLOT DATE = 3/19/2026		DATE - 03/18/2026		REVISED -	

STATE OF ILLINOIS
DEPARTMENT OF TRANSPORTATION

I-290/IL 53 HMA RESURFACING AND BRIDGE REPAIRS
SINGLE LINE DIAGRAM
LIGHTING CONTROLLER "O"

SCALE: | SHEET OF SHEETS | STA. | TO STA.

F.A.I RTE.	SECTION	COUNTY	TOTAL SHEETS	SHEET NO.
290	(0404-316-HB) BR 24	MULTIPLE*	276	96
		CONTRACT NO. 62W99		
	ILLINOIS	FED. AID PROJECT		

DATE PLOTTED = 4/20/2026 10:45:30 PM
PLOT SCALE = 0.0166667 IN
PLOT CONFIG = CGI-PDF.pltcfg
MODEL: sMODELNAME$
FILE NAME: pw:\\ciorba-pw.bentley.com:ciorba-pw-01\Documents\Projects\IL_DOT\D1\0021693.05\CADD Data\Shts\Lighting\D162W99-sht-LTG501.dgn

LOAD TABLE			
LIGHTING CONTROLLER "P", 240/480V, 1-PH, 3-WIRE			
CKT.	NO. LUM.	RED PHASE	BLACK PHASE
A	9-430W	3870	
B	9-430W		3870
C	6-430W	2580	
D	6-430W		258o
E	7-430W	3010	
F	7-430W		3010
G	9-430W	3870	
H	9-430W		3870
I	10-430W	4300	
J	9-430W		3870
K	7-430W	3010	
L	8-430W		3440
M	6-430W	2580	
N	6-430W		2580
Q	10-57W	570	
R	10-57W		570
S	5-57W	285	
T	5-57W		285
U	10-430W	4300	
V	10-430W		4300
TOTAL	128-430W 24-53W	28375	25795
TOTAL CONNECTED LOAD (KVA): 54.17			
LED HIGHMAST=430W; LED UNDERPASS=57W			

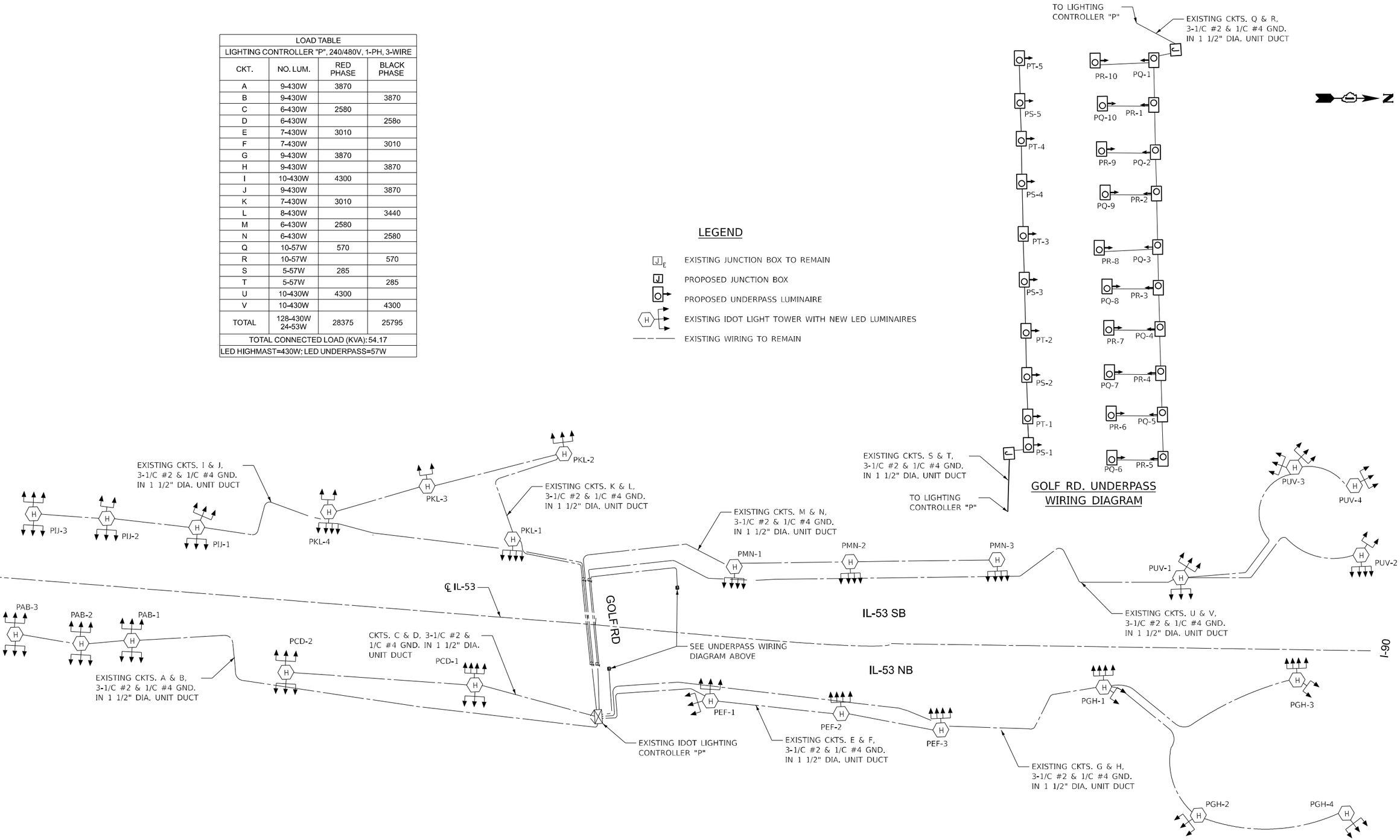

DATE PLOTTED = 4/30/2026 10:45:41 PM
PEN TABLE = 0021693.05.tbl
PLOT CONFIG = CGI-PDF.pltcfg
MODEL: $MODELNAMES
FILE NAME: pw://ciorba-pw.bentley.com:ciorba-pw-01/Documents/Projects/IL_DOT/D1/0021693.05/CADD Data/Sht/Lighting/D162W99-sht-LTG502.dgn

CiorbaGroup
8725 W. Higgins Rd, Ste 600, Chicago, IL 60631
P 773.775.4009 | www.ciorba.com

USER NAME = amarotta	DESIGNED - DTJ	REVISED -	
	DRAWN - MB	REVISED -	
PLOT SCALE = 0.16666667 ' / in.	CHECKED - JMV	REVISED -	
PLOT DATE = 3/19/2026	DATE - 03/18/2026	REVISED -	

STATE OF ILLINOIS
DEPARTMENT OF TRANSPORTATION

I-290/IL 53 HMA RESURFACING AND BRIDGE REPAIRS
SINGLE LINE DIAGRAM
LIGHTING CONTROLLER "P"

SCALE: SHEET OF SHEETS STA. TO STA.

F.A.I RTE.	SECTION	COUNTY	TOTAL SHEETS	SHEET NO.
290	(0404-316-HB) BR 24	MULTIPLE*	276	97
		CONTRACT NO. 62W99		
		ILLINOIS FED. AID PROJECT		

LOAD TABLE			
LIGHTING CONTROLLER "R", 277/480V, 3-PH, 4-WIRE			
CKT.	NO. LUM.	RED PHASE	BLACK PHASE
A	2-230W 10-430W	4760	
B	1-230W 10-430W		4530
C			
D			
E	3-230W 10-430W	4990	
F	2-230W 10-430W		4760
G	2-50W 8-100W	900	
H	2-50W 8-100W		900
I			
J	8-230W	1840	
K	8-230W 8-100W 2-50W		2740
M	13-230W		2990
N	14-230W	3220	
O	13-230W		2990
P	17-230W	3910	
Q	17-230W		3910
R	17-230W	3910	
S	3-230W		690
T	3-230W	690	
U	5-230W		1150
V	8-230W		1840
X	8-230W	1840	
TOTAL	40-430W 141-230W 24-100W 6-50W	26060	26500
TOTAL CONNECTED LOAD CAPACITY (KVA): 52.56			
LED HIGHMAST=430W; LED POLE=230W; LED UNDERPASS=50W OR 100W			

LEGEND

- EXISTING IDOT LIGHT POLE TO REMAIN
- EXISTING UNDERPASS LUMINAIRE TO REMAIN
- EXISTING JUNCTION BOX TO REMAIN
- PROPOSED LUNCTION BOX
- EXISTING IDOT LIGHT TOWER WITH NEW LED LUMINAIRES
- EXISTING WIRING

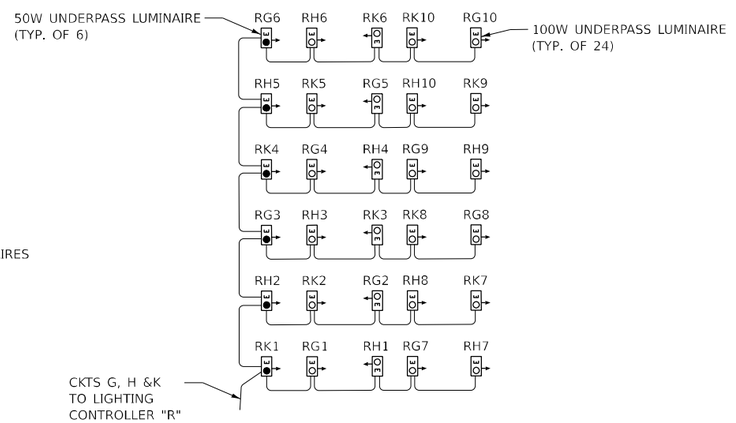

ALGONQUIN UNDERPASS WIRING DIAGRAM

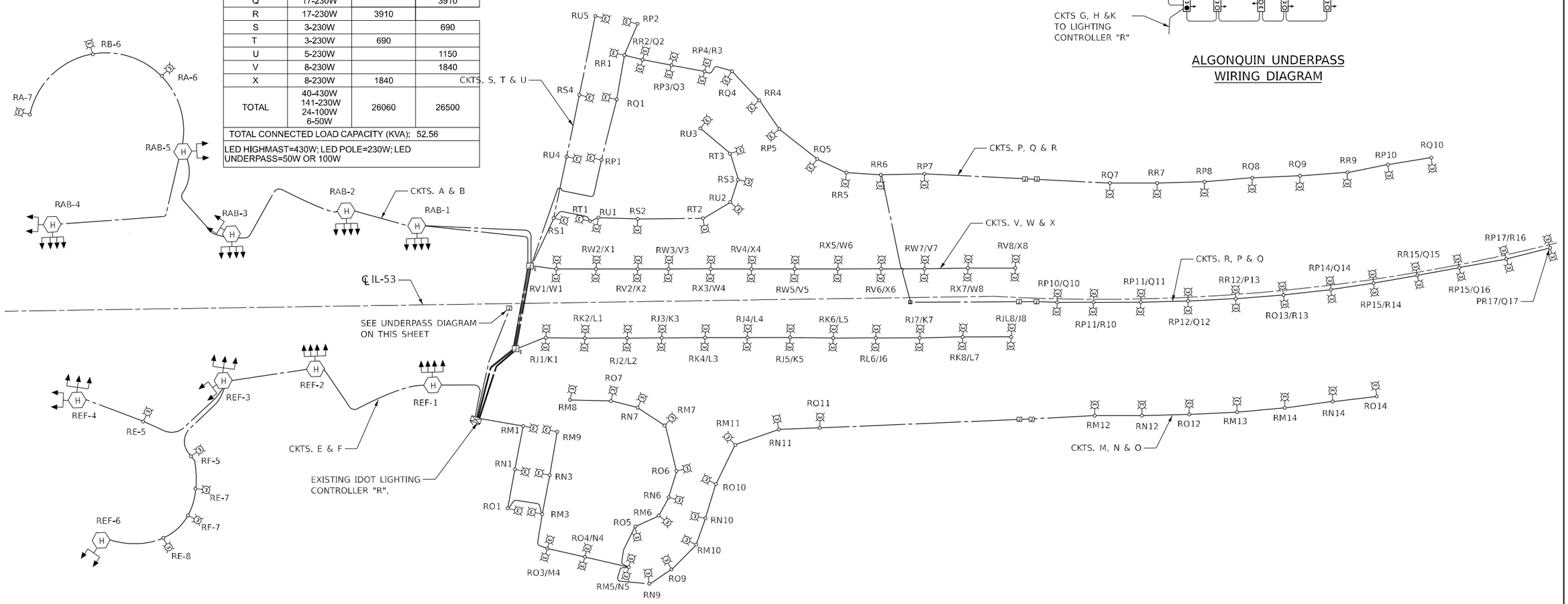

DATE PLOTTED = 4/20/2026 10:45:51 PM
PRINT PLOT ID = 20260420_104551.tif
PLOT CONFIG = CGI-PDF_plt.cfg
MODEL: SMODELNAMES
FILE NAME: pw://ciorba-pw.bentley.com:ciorba-pw-01/Documents/Projects/IL_DOT/D10021693.05/CADD Data/Sht/Lighting/D162W99-sht-LTG503.dgn

CiorbaGroup 8725 W. Higgins Rd, Ste 600, Chicago, IL 60631 P 773.775.4009 | www.ciorba.com	USER NAME = amarotta	DESIGNED - DTJ	REVISED -	STATE OF ILLINOIS DEPARTMENT OF TRANSPORTATION	I-290/IL 53 HMA RESURFACING AND BRIDGE REPAIRS SINGLE LINE DIAGRAM LIGHTING CONTROLLER "R"
		DRAWN - MB	REVISED -		
	PLOT SCALE = 0.16666667 ' / In.	CHECKED - JMV	REVISED -		
	PLOT DATE = 3/19/2026	DATE - 03/18/2026	REVISED -		SCALE: SHEET OF SHEETS STA. TO STA.

F.A.I RTE.	SECTION	COUNTY	TOTAL SHEETS	SHEET NO.
290	(0404-316-HB) BR 24	MULTIPLE*	276	98
		CONTRACT NO. 62W99		
	ILLINOIS FED. AID PROJECT			

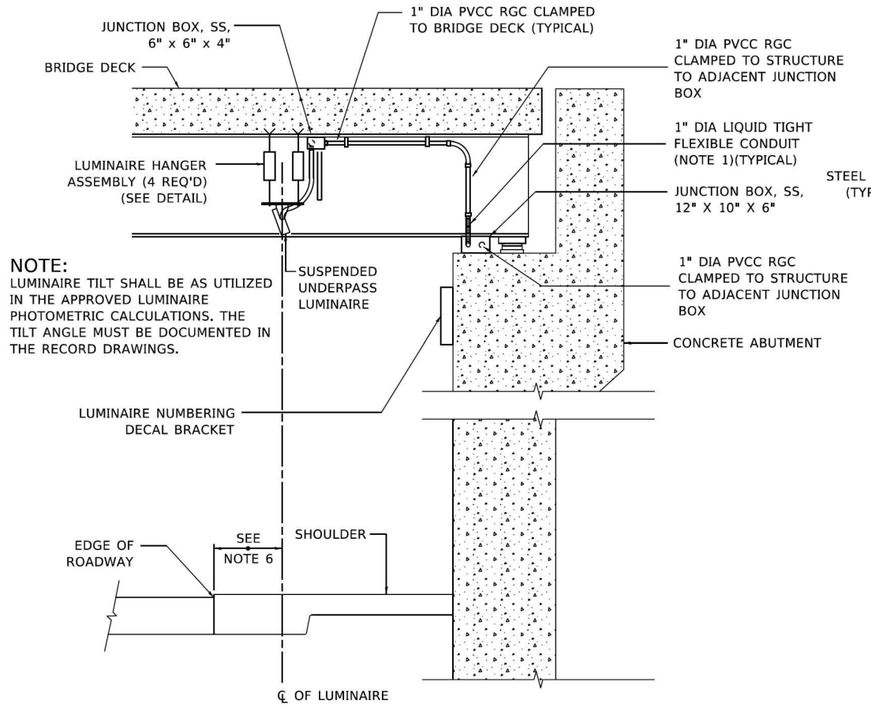

NOTE:
LUMINAIRE TILT SHALL BE AS UTILIZED IN THE APPROVED LUMINAIRE PHOTOMETRIC CALCULATIONS. THE TILT ANGLE MUST BE DOCUMENTED IN THE RECORD DRAWINGS.

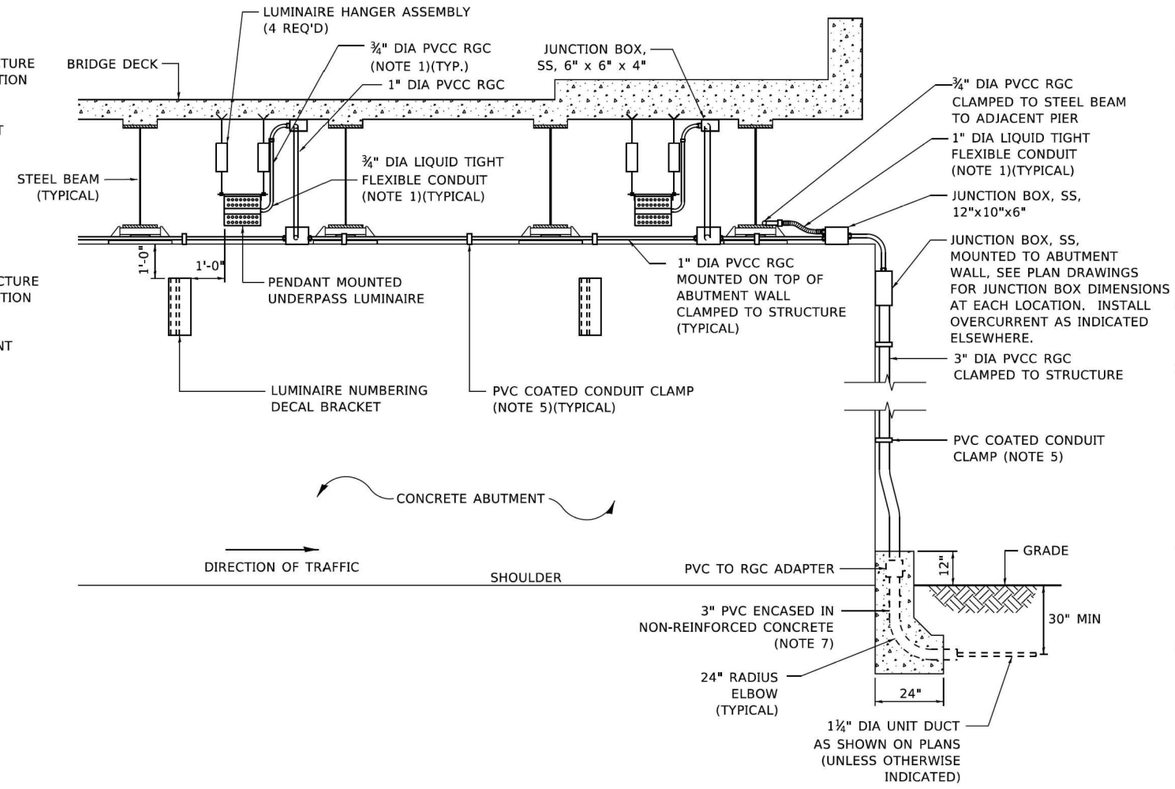

NOTES:

1. LIQUID TIGHT FLEXIBLE METAL CONDUIT, MAXIMUM LENGTH 6'-0", TYPICAL FOR EACH INSTANCE AS SHOWN. PROVIDE PVC COATED RIGID GALVANIZED STEEL CONDUIT AS REQUIRED NOT TO EXCEED 6'-0" OF FLEXIBLE LIQUID TIGHT METAL CONDUIT. LIQUID TIGHT FLEXIBLE METAL CONDUIT WILL BE INCLUDED IN THE COST OF THE CONDUIT ATTACHED TO STRUCTURE, OF THE CORRESPONDING DIA., GALVANIZED STEEL, PVC COATED PAY ITEM EXCEPT THAT " DIA. CONDUIT AND " DIA. FLEXIBLE CONDUIT SHALL BE INCLUDED IN THE COST OF UNDERPASS LUMINAIRE INSTALLATION.
2. SEE UNDERPASS LIGHTING PLANS FOR INSTALLATION LOCATION OF UNDERPASS LIGHTING LUMINAIRES.
3. THE CONTRACTOR SHALL USE APPROVED SINGLE COIL FLARED LOOP INSERTS WHEN SUSPENDED MOUNTING AN UNDERPASS LUMINAIRE TO A NEW BRIDGE DECK. THE FLARED LOOP INSERTS MUST BE CAST INTO THE CONCRETE DECK. THE CONTRACTOR IS RESPONSIBLE FOR LOCATING AND COORDINATING THE INSERT LOCATIONS FOR MOUNTING THE UNDERPASS LIGHTING SYSTEM AS SHOWN ON THE PLANS WITH THE BRIDGE DECK CONTRACTOR. SEE DETAIL.
4. THE UNDERPASS LUMINAIRE HANGER ASSEMBLY COMPLETE WITH HEAVY DUTY ANCHORS/INSERTS AND ALL APPLICABLE HARDWARE SHALL BE INCLUDED IN THE COST OF THE UNDERPASS LUMINAIRE PAY ITEM.
5. SECURE THE CONDUIT WITH PVC COATED CONDUIT CLAMPS OR CONDUIT BEAM CLAMPS AS SHOWN AT 5'-0" INTERVALS FOR LATERALS AND WITHIN 2'-0" MAXIMUM FROM ANY JUNCTION BOX, FLEXIBLE CONDUIT, OR CHANGE IN DIRECTION. ALL PVC COATED CONDUIT CLAMPS OR BEAM CLAMPS SHALL BE INCLUDED WITH THE COST OF THE "CONDUIT ATTACHED TO STRUCTURE, OF THE CORRESPONDING DIA., GALVANIZED STEEL, PVC COATED" PAY ITEM.
6. ALL UNDERPASS LUMINAIRES MUST BE CENTERED IN THE BEAM SPACE AS INDICATED ON THE PLANS UNLESS OTHERWISE DIRECTED BY THE ENGR. LUMINAIRE SETBACK SHALL BE AS INDICATED IN PLANS FOR EACH SPECIFIC UNDERPASS
7. THE CONCRETE ENCASED CONDUIT TRANSITION SHALL BE INCLUDED IN THE COST OF THE GALVANIZED RIGID STEEL CONDUIT PAY ITEMS.
8. ALL CONDUIT ATTACHED TO STRUCTURE SHALL BE PVC COATED RIGID STEEL CONDUIT (PVCC RGC) TYPICAL.
9. IN NO INSTANCE SHALL ANY UNDERPASS LUMINAIRE OR ANY OTHER ELECTRICAL EQUIPMENT BE INSTALLED BELOW THE ELEVATION OF THE BOTTOM OF THE BRIDGE BEAM WHEN OVER ANY PAVEMENT (ROADWAY OR SHOULDER).

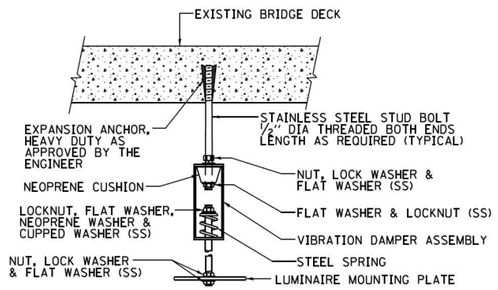

EXISTING BRIDGE DECK INSTALLATION

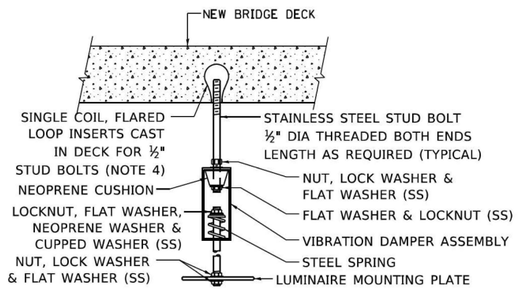

NEW BRIDGE DECK INSTALLATION

TYPICAL LUMINAIRE HANGER ASSEMBLY DETAILS

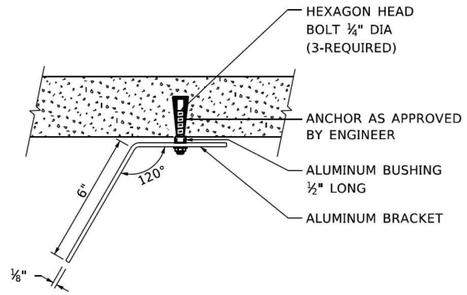

TOP VIEW

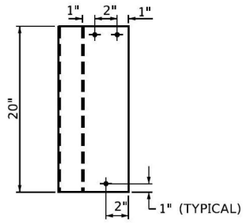

ELEVATION

LUMINAIRE NUMBERING DECAL BRACKET

NOT TO SCALE

PVC COATED CONDUIT BEAM CLAMP
NOT TO SCALE

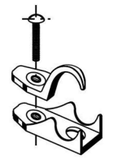

PVC COATED CONDUIT CLAMP
NOT TO SCALE

MODEL: Default
FILE NAME: pw:\\dalanroom.dot.illinois.gov:PWIDOT\Documents\IDOT Offices\District 1\Projects\Std22x34\CADData\CADsheets\be901.dgn

USER NAME = gaglianobt	DESIGNED -	REVISED - 12-12-05	
	DRAWN -	REVISED -	
PLOT SCALE = 100.0000 ' / In.	CHECKED -	REVISED -	
PLOT DATE = 1/15/2020	DATE -	REVISED -	

STATE OF ILLINOIS
DEPARTMENT OF TRANSPORTATION

SUSPENDED MOUNT LED UNDERPASS LUMINAIRE INSTALLATION DETAILS

SCALE: NONE | SHEET 1 OF 1 SHEETS | STA. | TO STA.

F.A.I RTE.	SECTION	COUNTY	TOTAL SHEETS	SHEET NO.
290	(0404-316-HB) BR 24	MULTIPLE*	276	99
	BE-901	CONTRACT NO. 62W99		
	ILLINOIS FED. AID PROJECT			

NOTE:

LUMINAIRE TILT SHALL BE AS UTILIZED IN THE APPROVED LUMINAIRE PHOTOMETRIC CALCULATIONS. THE TILT ANGLE MUST BE DOCUMENTED IN THE RECORD DRAWINGS.

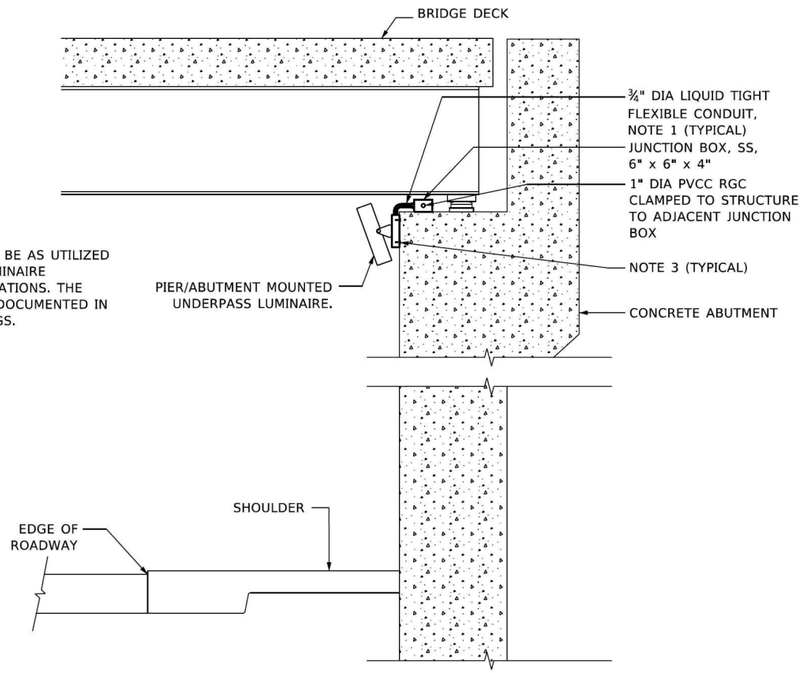

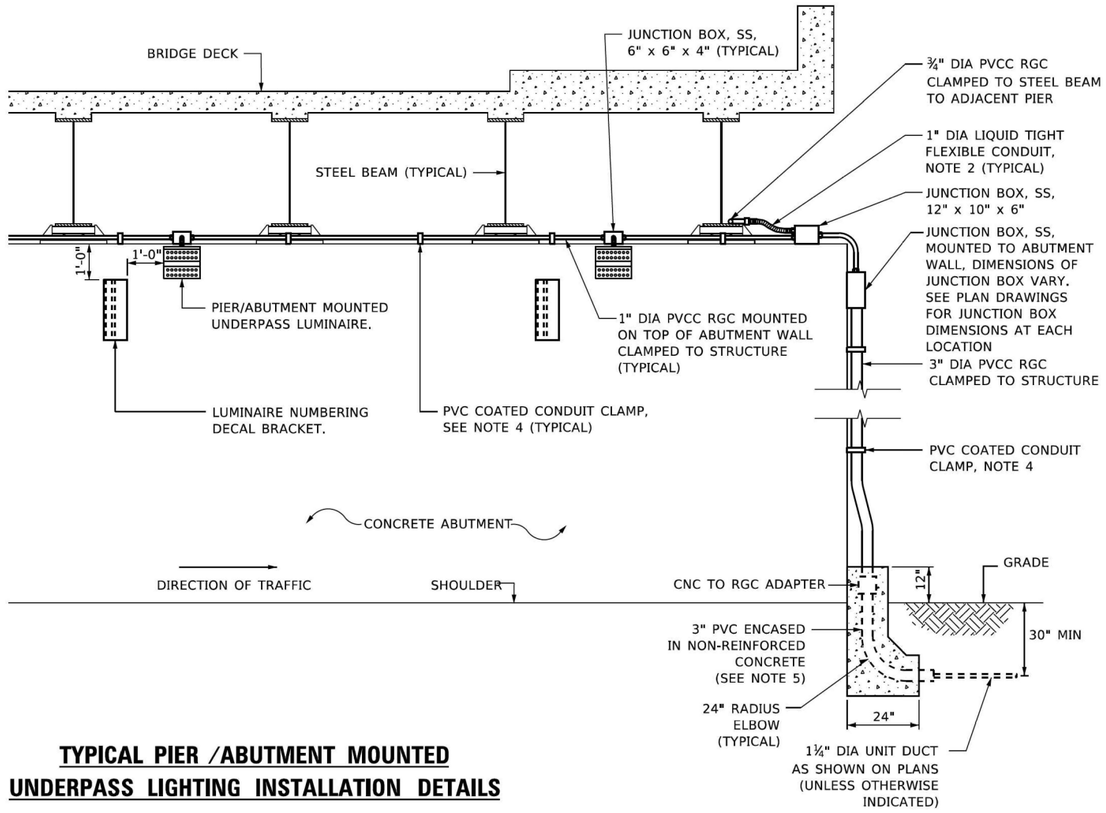

TYPICAL PIER /ABUTMENT MOUNTED UNDERPASS LIGHTING INSTALLATION DETAILS

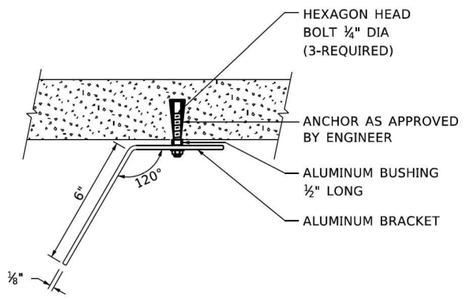

TOP VIEW

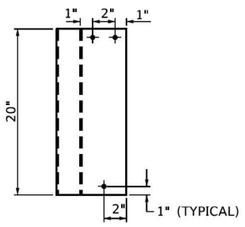

ELEVATION

LUMINAIRE NUMBERING DECAL BRACKET

NOT TO SCALE

PVC COATED CONDUIT BEAM CLAMP

NOT TO SCALE

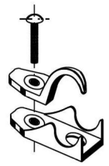

PVC COATED CONDUIT CLAMP

NOT TO SCALE

NOTES:

1. LIQUID TIGHT FLEXIBLE METAL CONDUIT, MAXIMUM LENGTH 6'-0", TYPICAL FOR EACH INSTANCE AS SHOWN. PROVIDE PVC COATED RIGID GALVANIZED STEEL CONDUIT AS REQUIRED NOT TO EXCEED 6'-0" OF FLEXIBLE LIQUID TIGHT METAL CONDUIT. LIQUID TIGHT FLEXIBLE METAL CONDUIT WILL BE INCLUDED IN THE COST OF THE CONDUIT ATTACHED TO STRUCTURE, OF THE CORRESPONDING DIA., GALVANIZED STEEL, PVC COATED PAY ITEM EXCEPT THAT THE COST OF THE " DIA. RIGID STEEL CONDUIT AND " DIA. FLEXIBLE CONDUIT SHALL BE INCLUDED IN THE LUMINAIRE INSTALLATION.
2. SEE UNDERPASS LIGHTING PLANS FOR INSTALLATION LOCATION OF UNDERPASS LIGHTING LUMINAIRES.
3. UNDERPASS LUMINAIRE MOUNTED TO FACE OF PIER OR ABUTMENT WALL WITH ½" ALUMINUM SPACERS. MOUNTING HEIGHT OF 1" BELOW THE TOP OF PIER OR ABUTMENT WALL TYPICAL FOR ALL PIER/ABUTMENT MOUNTED UNDERPASS LUMINAIRES UNLESS OTHERWISE NOTED.
4. EXPANSION ANCHOR, POWDER ACTUATED FASTENERS WILL NOT BE ALLOWED. EXPANSION ANCHOR MUST BE SIZED IN ACCORDANCE WITH MANUFACTURERS REQUIREMENTS.
5. SECURE THE CONDUIT WITH PVC COATED CONDUIT CLAMPS OR CONDUIT BEAM CLAMPS AS SHOWN AT 5'-0" INTERVALS FOR LATERALS AND WITHIN 2'-0" MAXIMUM FROM ANY JUNCTION BOX, FLEXIBLE CONDUIT, OR CHANGE IN DIRECTION. ALL PVC COATED CONDUIT CLAMPS OR BEAM CLAMPS SHALL BE INCLUDED WITH THE COST OF THE "CONDUIT ATTACHED TO STRUCTURE, OF THE CORRESPONDING DIA., GALVANIZED STEEL, PVC COATED" PAY ITEM.
6. THE CONCRETE ENCASED CONDUIT TRANSITION SHALL BE INCLUDED IN THE COST OF THE GALVANIZED RIGID STEEL CONDUIT PAY ITEMS.
7. ALL CONDUIT ATTACHED TO STRUCTURE SHALL BE PVC COATED RIGID STEEL CONDUIT (PVCC RGC) TYPICAL.

MODEL: Default
FILE NAME: pw:\\planroom.dot.illinois.gov:PWIDOT\Documents\IDOT Offices\District 1\Projects\Dist\d22x34\CADData\CADsheets\be903.dgn

USER NAME = gaglianobt	DESIGNED -	REVISED -	01-25-05
	DRAWN -	REVISED -	
PLOT SCALE = 100.0000 ' / in.	CHECKED -	REVISED -	
PLOT DATE = 1/15/2020	DATE -	REVISED -	

STATE OF ILLINOIS
DEPARTMENT OF TRANSPORTATION

PIER /ABUTMENT MOUNTED LED UNDERPASS LUMINARE INSTALLATION DETAILS

SCALE: NONE | SHEET 1 OF 1 SHEETS | STA. | TO STA.

F.A.I RTE.	SECTION	COUNTY	TOTAL SHEETS	SHEET NO.
290	(0404-316-HB) BR 24	MULTIPLE*	276	100
	BE-903	CONTRACT NO. 62W99		
	ILLINOIS FED. AID PROJECT			

ITS AND SURVEILLANCE GENERAL NOTES

1. THE CONTRACTOR SHALL VERIFY THE LOCATIONS OF EXISTING SURVEILLANCE CABINETS AND FIBER OPTIC CABLE PRIOR TO BEGINNING CONSTRUCTION.

2. A MAINILNE SPLICE SHALL NOT BE IN THE SAME COMMUNICATION VAULT AS A LATERAL SPLICE.

3. THE CONTRACTOR SHALL EXERCISE CARE WITH THE INSTALLATION OF UNDERGROUND EQUIPMENT AND FACILITIES. IT SHALL BE THE CONTRACTOR'S RESPONSIBILITY TO CONTACT ANY UTILITIES IN THE WORK ZONE AND REQUEST UTILITY LOCATES.

4. ALL UNDERGROUND ELECTRICAL RACEWAYS SHALL BE INSTALLED AT A MINIMUM DEPTH OF 30-INCHES, UNLESS OTHERWISE NOTED. FIBER OPTIC RACEWAYS SHALL BE INSTALLED AT A MINIMUM DEPTH OF 42-INCHES.

5. THE CONTRACTOR SHALL VERIFY ADEQUATE CLEARANCE OVER EXISTING FACILITIES BEFORE INSTALLING DUCTS, CONDUIT AND CABLE.

6. ALL DISTRUBED AREAS WHERE RESTORATION IS NOT COVERED BY APPLICABLE SECTIONS OF THE SPECIAL PROVISIONS SHALL BE RESTORED WITH TOPSOIL AND GRASS SEEDING. DAMAGED SHOULDER AREAS SHALL BE RESTORED TO THE SATIFACTION OF THE ENGINEER. THE WORK SHALL BE CONSIDERED INCIDENTAL TO THE CONTRACT.

7. THE CONTRACTOR SHALL KEEP DEVIATIONS FROM THE UNIT DUCT ROUTING SHOWN ON THE PLANS TO A MINIMUM. MAJOR DEVIATIONS SHALL BE REPORTED TO AND APPROVED BY THE ENGINEER BEFORE INSTALLATION.

8. THE CONTRACTOR SHALL CONTACT THE IDOT TRAFFIC SYSTEMS CENTER (708-524-2145) 21 DAYS IN ADVANCE OF ALL SURVEILLANCE AND ITS WORK FOR THIS PROJECT.

9. THE CONTRACTOR SHALL CONTACT THE IDOT TRAFFIC SYSTEMS CENTER (708-524-2145) 72 HOURS IN ADVANCE OF WORK THAT REQUIRES TEMPORARY DE-ENERGIZING OF ITS EQUIPMENT.

10. ALL EQUIPMENT TO BE WIRED USING AERIAL CABLES SHALL BE DISCONNECTED AND RECONNECTED WITHIN THE SAME CALENDAR DAY.

11. FIBER OPTIC CABLE SPLICES SHALL BE COMPLETED DURING OFF-PEAK HOURS AT NO ADDITIONAL COST TO THE DEPARTMENT. COORDINATE WITH ELECTRICAL MAINTENANCE SECTION.

12. PLEASE SEE KEEPING THE EXPRESSWAY OPEN TO TRAFFIC CONTRACT SPECIAL PROVISION FOR REQUIREMENTS ON LANE CLOSURES. AERIAL CABLE INSTALLATION OVER THE INTERSTATE WILL REQUIRE FULL STOPS, IDOT EXPRESSWAY SECTION APPROVAL AND COORDINATION IS REQUIRED.

13. STEEL CONDUIT INSTALLED UNDERGROUND SHALL BE RIGID GALVANIZED STEEL.

14. FIBER OPTIC LINK FROM D1 HEADQUARTERS TO THE REST OF THE SYSTEM MUST NOT BE INTERRUPTED.

15. FIBER OPTIC DISTRIBUTION AND LATERAL CABLES SHALL BE INSTALLED BETWEEN COMMUNICATIONS VAULTS AND CABINETS AS SHOWN ON THE PLANS, FIBER OPTIC SLACK SHALL BE AS FOLLOWS:
    - 100 FEET FOR EACH CABLE (144 AND 12 FIBER) IN COMMUNICATION VAULTS.
    - 100 FEET FOR EACH CABLE (144 AND 12 FIBER) IN HEAVY-DUTY HANDHOLES.
    - 100 FEET FOR EACH CABLE (144 AND 12 FIBER) IN JUNCTION BOXES.
    - 100 FEET FOR EACH CABLE AT CABINETS.

LEGEND

EXISTING	PROPOSED	DESCRIPTION
⊠		TRAFFIC SURVEILLANCE CONTROLLER, EXISTING
⊞		TELEPHONE SERVICE
H		HEAVY DUTY HANDHOLE
H	H	HEAVY DUTY HANDHOLE
J	J	JUNCTION BOX, STAINLESS STEEL, SIZED AND TYPE AS NOTED
C	C	COMMUNICATION VAULT, 36"x60"
E R	PTZ	CCTV DOME CAMERA AND STRUCTURE
⊟		SERVICE POLE
		TEMPORARY WOOD POLE, 60 FT., CLASS 4
		INDUCTION LOOP
		ROUND INDUCTION LOOP
		WIRELESS IN-PAVEMENT DETECTOR
	R	WIRELESS REPEATER
	AP	WIRELESS DETECTOR ACCESS POINT

FO	FO	FIBER OPTIC CABLE
	A/C	AERIAL CABLE
		UNIT DUCT, CONDUIT OR CABLE AS NOTED
		UNDERGROUND CONDUIT, RIGID GALANIZED STEEL (SIZED AS NOTED ON PLANS)
		CONDUIT ATTACHED TO STRUCTURE, PVC COATED GALVAINZED STEEL (SIZED AS NOTED ON PLANS)
	R	REMOVE

DATE PLOTTED = 4/20/2026 10:18:59 PM
PEN TABLE = 0704161.tbl
PLOT CONFIG = CGI-PDF.pltcfg
MODEL: $MODELNAMES
FILE NAME: pw://ciorba-pw.bentley.com:ciorba-pw-01/Documents/Projects\IL_DOT/D1\0021693.05/CADD Data/Sht/ITS\D162W99-ite-ITS001.dgn

CiorbaGroup
8725 W. Higgins Rd, Ste 600, Chicago, IL 60631
P 773.775.4009 | www.ciorba.com

USER NAME = djohnson	DESIGNED - DTJ	REVISED -	
	DRAWN - MB	REVISED -	
PLOT SCALE = 0.16666667 ' / In.	CHECKED - JMV	REVISED -	
PLOT DATE = 3/19/2026	DATE - 03/18/2026	REVISED -	

STATE OF ILLINOIS
DEPARTMENT OF TRANSPORTATION

ITS GENERAL NOTES AND LEGEND

SCALE: | SHEET OF SHEETS | STA. | TO STA.

F.A.I. RTE.	SECTION	COUNTY	TOTAL SHEETS	SHEET NO.
290	(0404-316-HB) BR 24	MULTIPLE*	276	101
		CONTRACT NO. 62W99		
	ILLINOIS	FED. AID PROJECT		

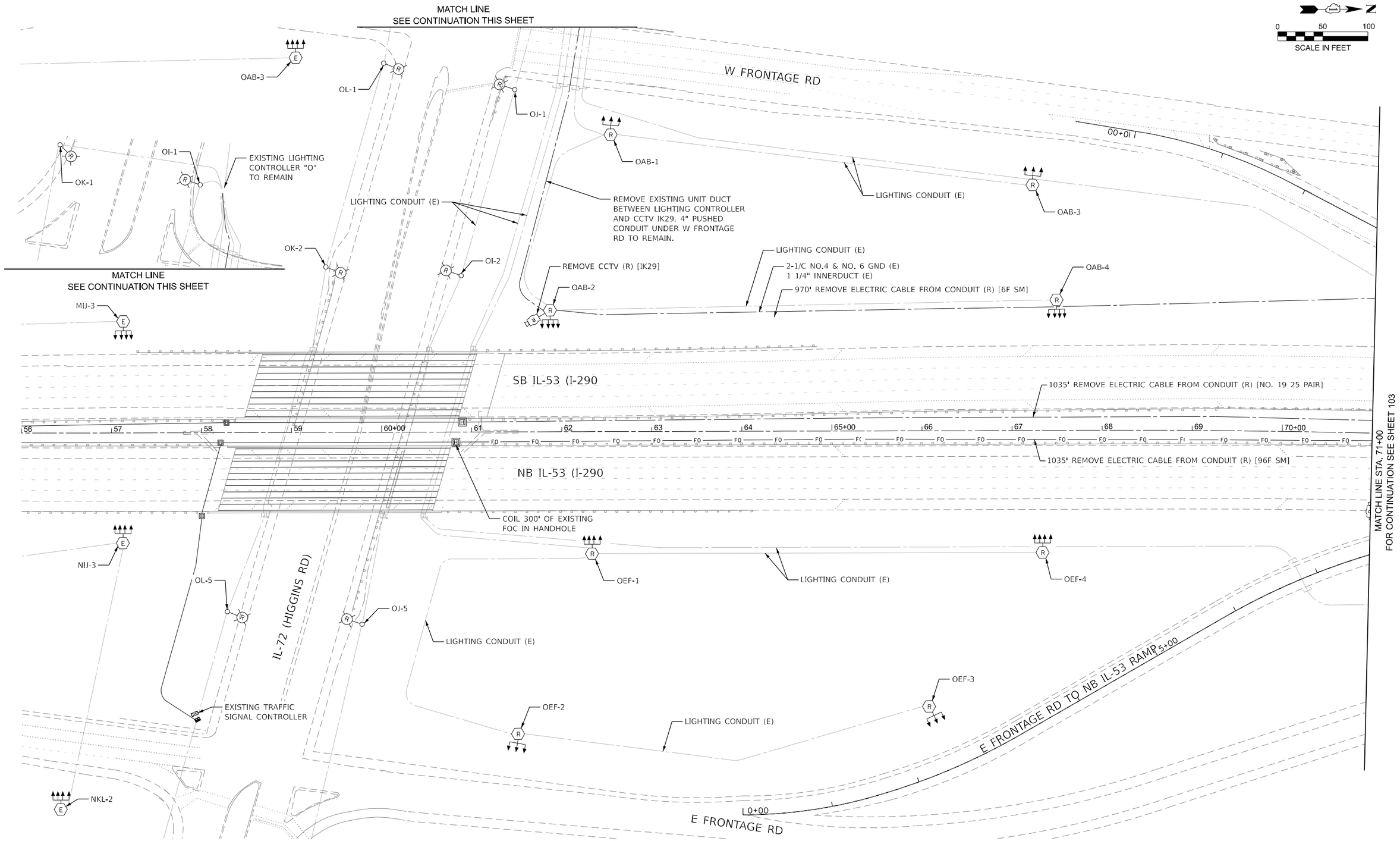

DATE PLOTTED = 4/30/2026 10:19:13 PM
PEN TABLE = 0021693.05.tbl
PLOT CONFIG = CGI-PDF.pltcfg
MODEL: $MODELNAMES
FILE NAME: pw://ciorba-pw.bentley.com:ciorba-pw-01/Documents/Projects/IL_DOT/D1/0021693.05/CADD Data/Sht/ITS/D162W99-sht-ITS201.dgn

CiorbaGroup
8725 W. Higgins Rd, Ste 600, Chicago, IL 60631
P 773.775.4009 | www.ciorba.com

USER NAME = djohnson	DESIGNED - DTJ	REVISED -	
	DRAWN - MB	REVISED -	
PLOT SCALE = 0.16666667 ' / in.	CHECKED - JMV	REVISED -	
PLOT DATE = 3/19/2026	DATE - 03/18/2026	REVISED -	

STATE OF ILLINOIS
DEPARTMENT OF TRANSPORTATION

I-290/IL 53 HMA RESURFACING AND BRIDGE REPAIRS
ITS AND SURVEILLANCE REMOVAL PLAN

SCALE: 1"=50' | SHEET OF SHEETS | STA. 56+00 TO STA. 71+00

F.A.I. RTE.	SECTION	COUNTY	TOTAL SHEETS	SHEET NO.
290	(0404-316-HB) BR 24	MULTIPLE*	276	102
		CONTRACT NO. 62W99		
		ILLINOIS	FED. AID PROJECT	

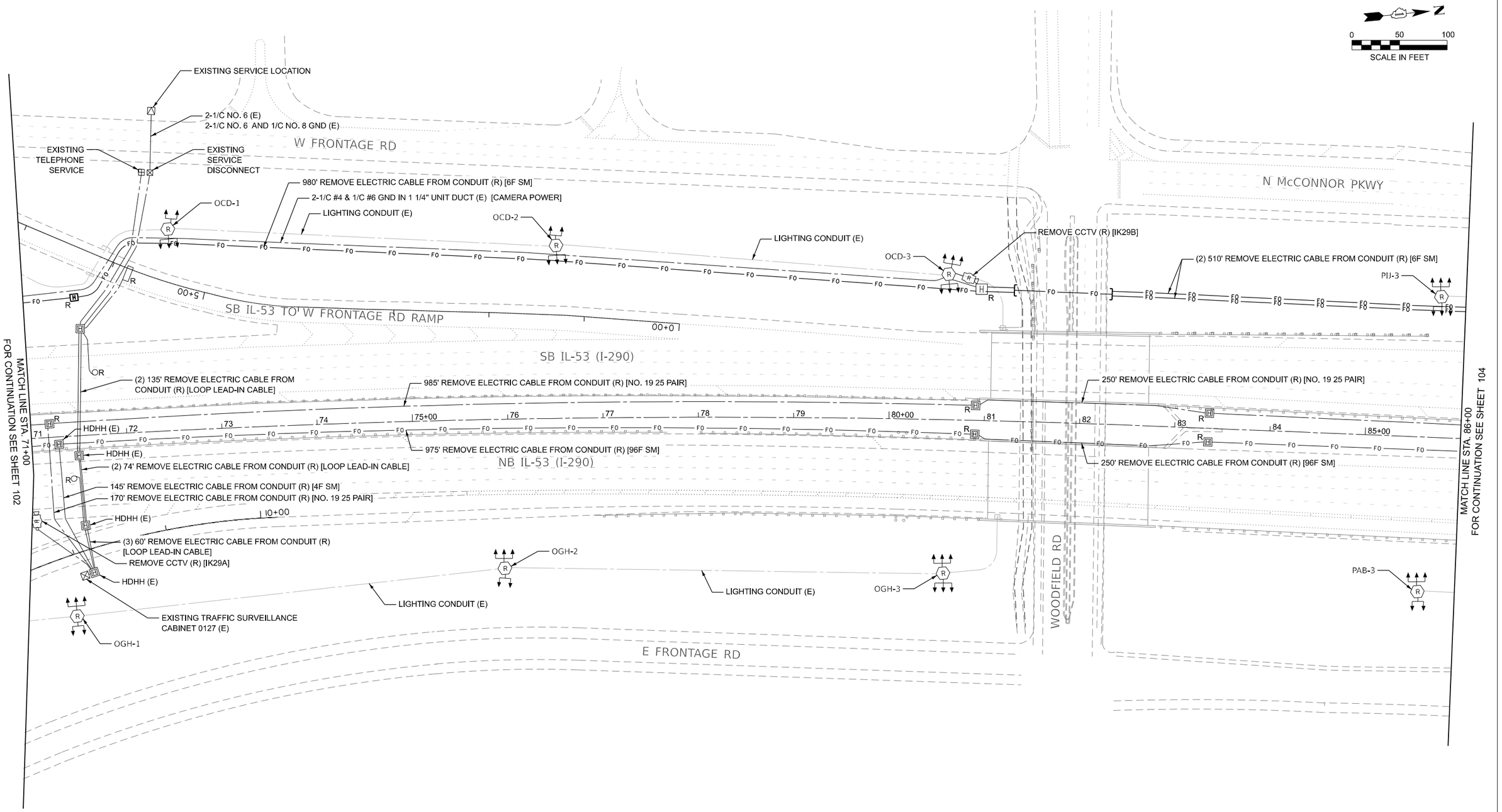

DATE PLOTTED = 4/30/2026 10:19:24 PM
PEN TABLE = 0021693.05.tbl
PLOT CONFIG = CGI-PDF.pltcfg
MODEL: $MODELNAMES
FILE NAME: pw://ciorba-pw.bentley.com:ciorba-pw-01/Documents/Projects/IL_DOT/D1/0021693.05/CADD Data/Sht/ITS/D162W99-sht-ITS202.dgn

CiorbaGroup
8725 W. Higgins Rd, Ste 600, Chicago, IL 60631
P 773.775.4009 | www.ciorba.com

USER NAME = djohnson	DESIGNED - DTJ	REVISED -	
	DRAWN - MB	REVISED -	
PLOT SCALE = 0.16666667 ' / in.	CHECKED - JMV	REVISED -	
PLOT DATE = 3/19/2026	DATE - 03/18/2026	REVISED -	

STATE OF ILLINOIS
DEPARTMENT OF TRANSPORTATION

I-290/IL 53 HMA RESURFACING AND BRIDGE REPAIRS
ITS AND SURVEILLANCE REMOVALPLAN

SCALE: 1"=50' | SHEET OF SHEETS | STA. 71+00 TO STA. 86+00

F.A.I. RTE.	SECTION	COUNTY	TOTAL SHEETS	SHEET NO.
290	(0404-316-HB) BR 24	MULTIPLE*	276	103
		CONTRACT NO. 62W99		
		ILLINOIS	FED. AID PROJECT	

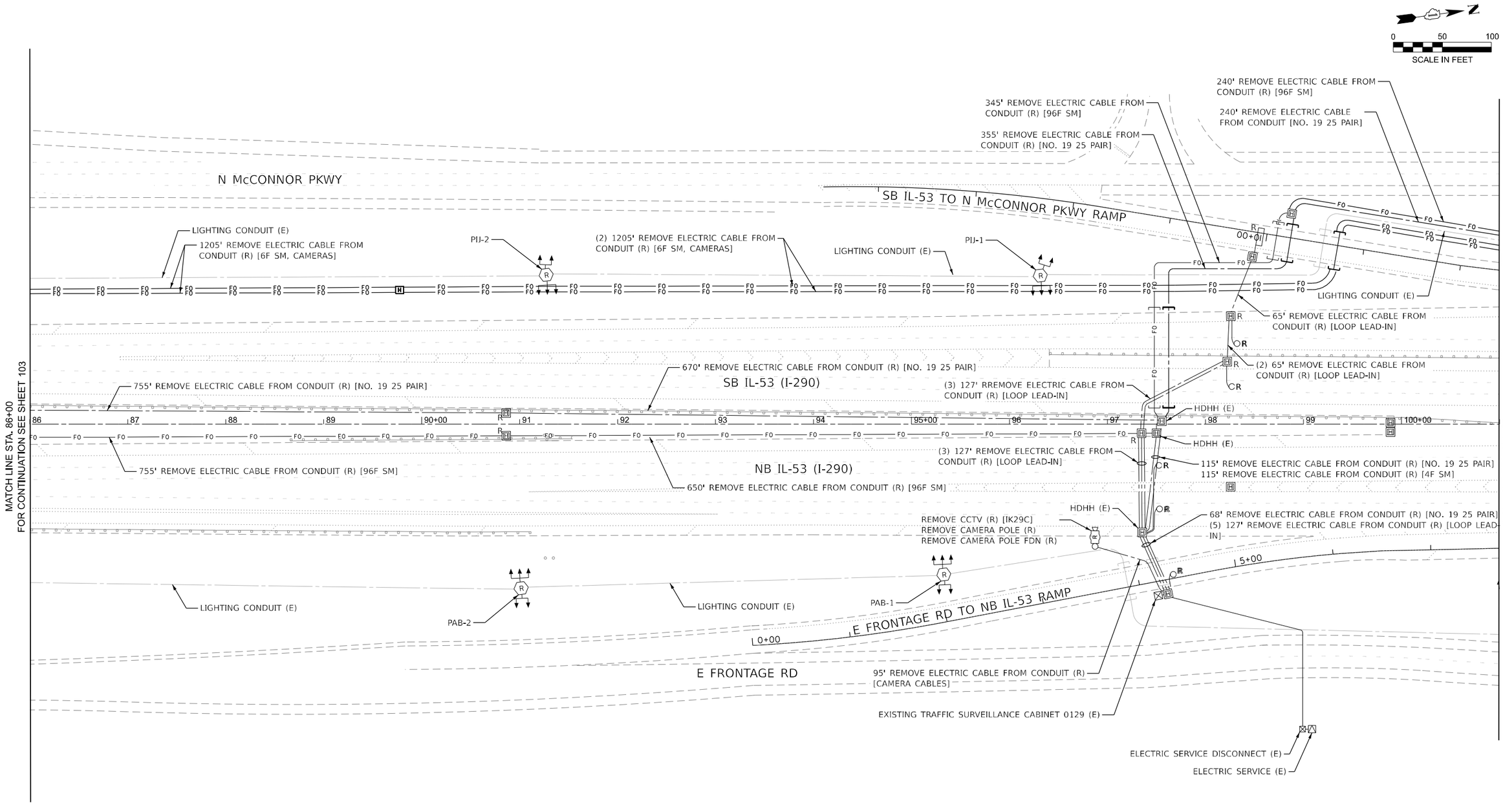

DATE PLOTTED = 4/30/2026 10:19:38 PM
PEN TABLE = 0021693.05.tbl
PLOT CONFIG = CGI-PDF.pltcfg
MODEL: $MODELNAMES
FILE NAME: pw://ciorba-pw.bentley.com:ciorba-pw-01/Documents/Projects/IL_DOT/D1/0021693.05/CADD Data/Sht/ITS/D162W99-sht-ITS203.dgn

CiorbaGroup
8725 W. Higgins Rd, Ste 600, Chicago, IL 60631
P 773.775.4009 | www.ciorba.com

USER NAME = amarotta	DESIGNED - DTJ	REVISED -	
	DRAWN - MB	REVISED -	
PLOT SCALE = 0.16666667 ' / in.	CHECKED - JMV	REVISED -	
PLOT DATE = 3/19/2026	DATE - 03/18/2026	REVISED -	

STATE OF ILLINOIS
DEPARTMENT OF TRANSPORTATION

I-290/IL 53 HMA RESURFACING AND BRIDGE REPAIRS
ITS AND SURVEILLANCE REMOVAL PLAN

SCALE: 1"=50' | SHEET OF SHEETS | STA. 86+00 TO STA. 101+00

F.A.I. RTE.	SECTION	COUNTY	TOTAL SHEETS	SHEET NO.
290	(0404-316-HB) BR 24	MULTIPLE*	276	104
		CONTRACT NO. 62W99		
		ILLINOIS	FED. AID PROJECT	

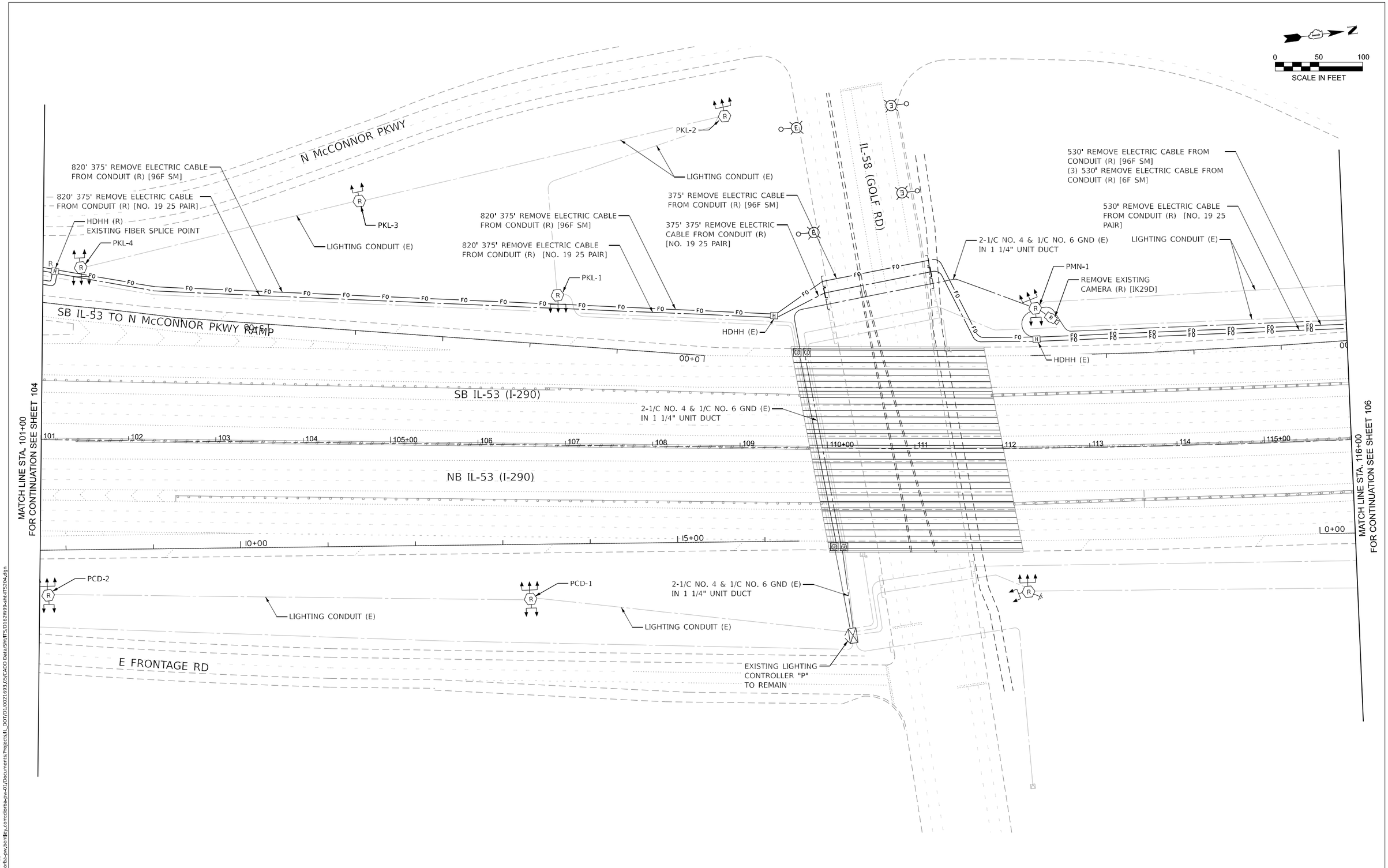

DATE PLOTTED = 4/30/2026 10:19:52 PM
PEN TABLE = 0021693.05.tbl
PLOT CONFIG = CGI-PDF.pltcfg
MODEL: sMODELNAMES
FILE NAME: pw://ciorba-pw.bentley.com:ciorba-pw-01/Documents/Projects/IL_DOT/D1/0021693.05/CADD Data/Sht/ITS/D162W99-sht-ITS204.dgn

CiorbaGroup
8725 W. Higgins Rd, Ste 600, Chicago, IL 60631
P 773.775.4009 | www.ciorba.com

USER NAME = amarotta	DESIGNED - DTJ	REVISED -	
	DRAWN - MB	REVISED -	
PLOT SCALE = 0.16666667 ' / in.	CHECKED - JMV	REVISED -	
PLOT DATE = 3/17/2026	DATE - 03/18/2026	REVISED -	

STATE OF ILLINOIS
DEPARTMENT OF TRANSPORTATION

I-290/IL 53 HMA RESURFACING AND BRIDGE REPAIRS
ITS AND SURVEILLANCE REMOVAL PLAN

SCALE: 1"=50' | SHEET OF SHEETS | STA. 101+00 TO STA. 116+00

F.A.I. RTE.	SECTION	COUNTY	TOTAL SHEETS	SHEET NO.
290	(0404-316-HB) BR 24	MULTIPLE*	276	105
		CONTRACT NO. 62W99		
		ILLINOIS	FED. AID PROJECT	

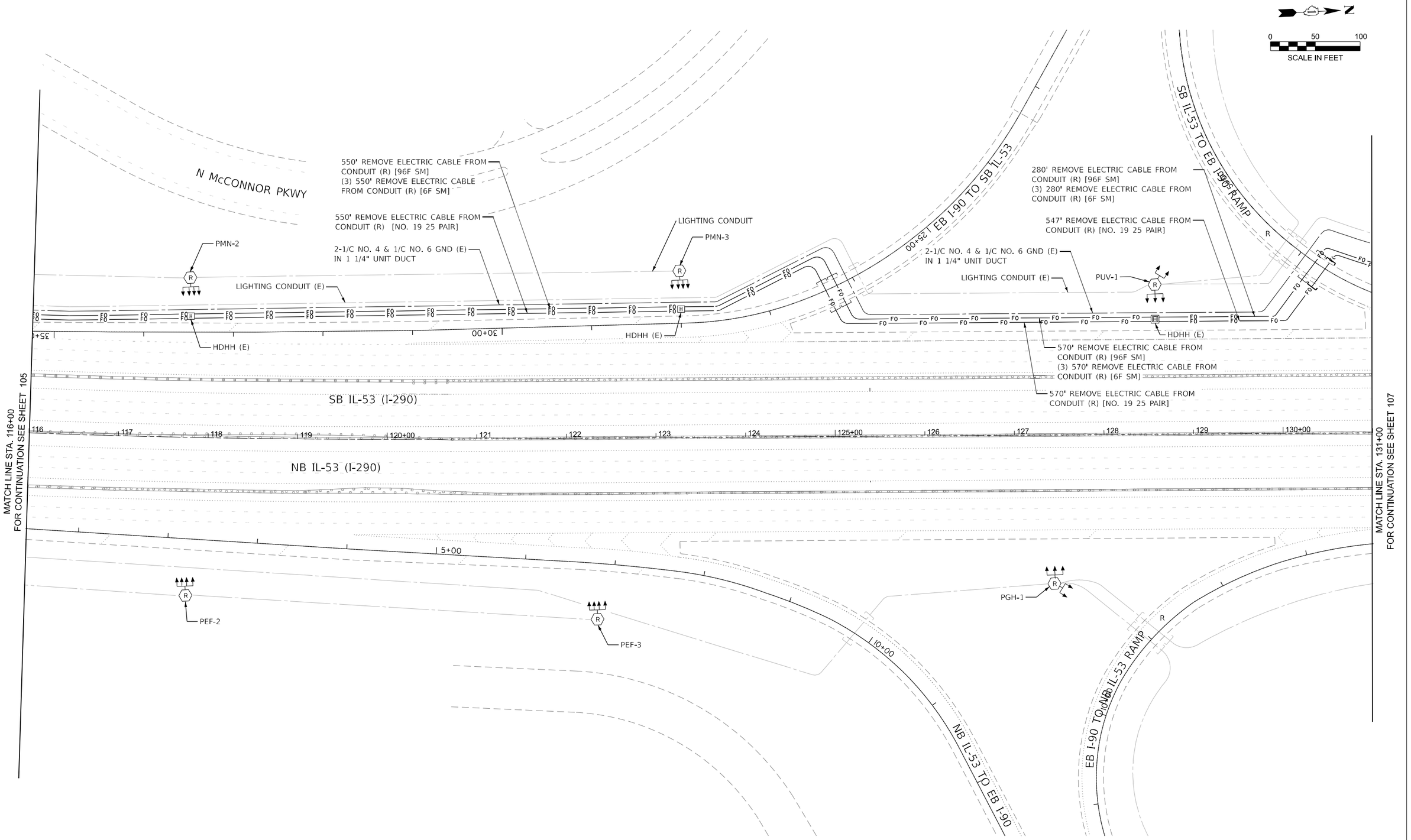

DATE PLOTTED = 4/30/2026 10:20:04 PM
PRT. TABLE = 60FT_HMA_05.tbl
PLOT CONFIG = CGI-PDF.pltcfg
MODEL: SMODELNAMES
FILE NAME: pw:\\ciorba-pw.bentley.com:ciorba-pw-01\Documents\Projects\IL_DOT\D1\0021693,05\CADD Data\Shts\ITS\D162W99-sht-ITS205.dgn

CiorbaGroup
8725 W. Higgins Rd, Ste 600, Chicago, IL 60631
P 773.775.4009 | www.ciorba.com

USER NAME = amarotta	DESIGNED - DTJ	REVISED -	
	DRAWN - MB	REVISED -	
PLOT SCALE = 0.16666667 ' / In.	CHECKED - JMV	REVISED -	
PLOT DATE = 3/17/2026	DATE - 03/18/2026	REVISED -	

STATE OF ILLINOIS
DEPARTMENT OF TRANSPORTATION

I-290/IL 53 HMA RESURFACING AND BRIDGE REPAIRS
ITS AND SURVEILLANCE REMOVAL PLAN

SCALE: 1"=50' | SHEET OF SHEETS | STA. 116+00 | TO STA. 131+00

F.A.I. RTE.	SECTION	COUNTY	TOTAL SHEETS	SHEET NO.
290	(0404-316-HB) BR 24	MULTIPLE*	276	106
		CONTRACT NO. 62W99		
	ILLINOIS	FED. AID PROJECT		

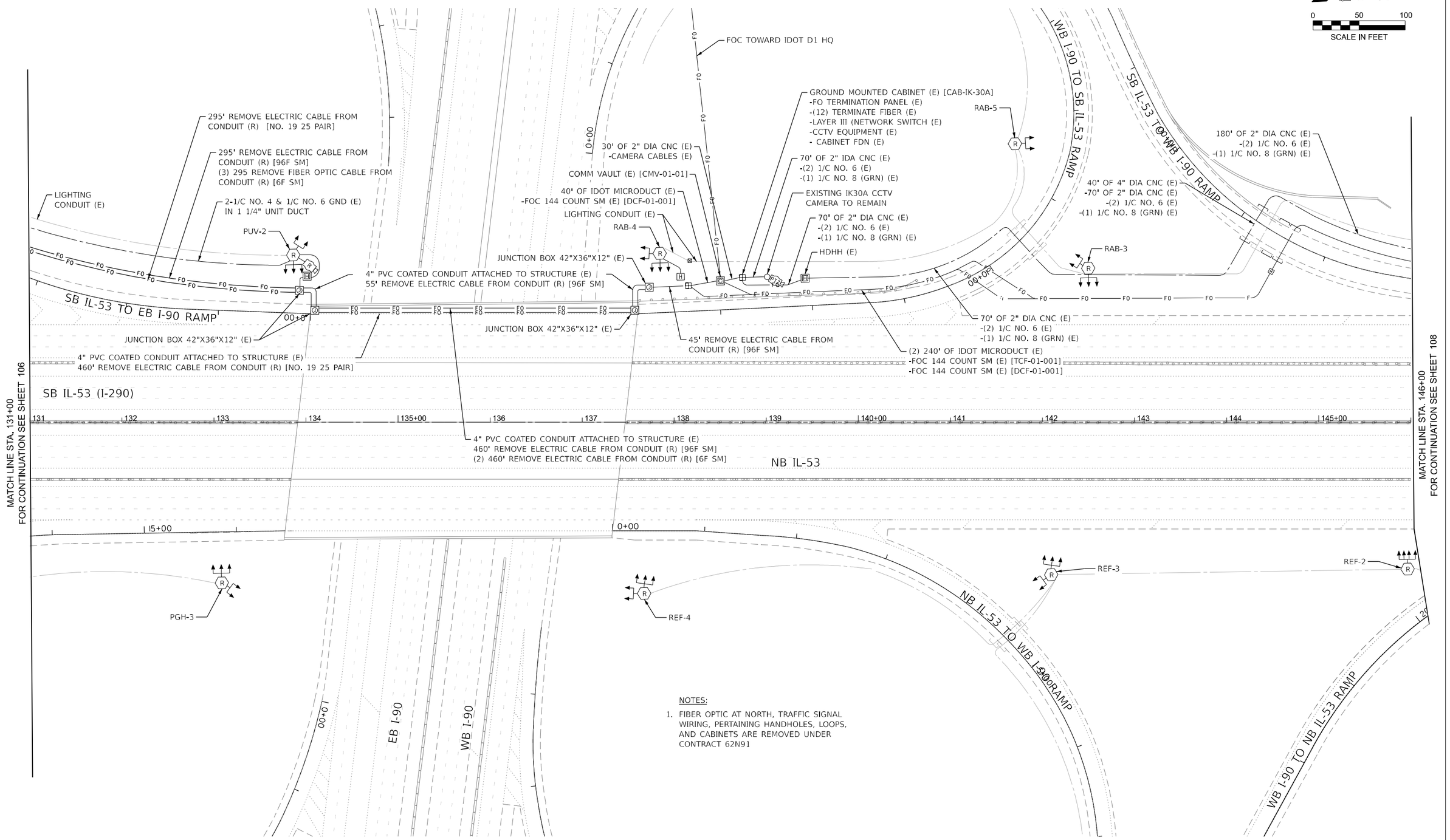

NOTES:

1. FIBER OPTIC AT NORTH, TRAFFIC SIGNAL WIRING, PERTAINING HANDHOLES, LOOPS, AND CABINETS ARE REMOVED UNDER CONTRACT 62N91

DATE PLOTTED = 4/30/2026 10:20:16 PM
PEN TABLE = 0021693.05.tbl
PLOT CONFIG = CGI-PDF.pltcfg
MODEL: $MODELNAMES
FILE NAME: pw://ciorba-pw.bentley.com:ciorba-pw-01/Documents/Projects/IL_DOT/D1/0021693.05/CADD Data/Sht/ITS/D162W99-sht-ITS206.dgn

CiorbaGroup
8725 W. Higgins Rd, Ste 600, Chicago, IL 60631
P 773.775.4009 | www.ciorba.com

USER NAME = amarotta	DESIGNED - DTJ	REVISED -	
	DRAWN - MB	REVISED -	
PLOT SCALE = 0.16666667 ' / in.	CHECKED - JMV	REVISED -	
PLOT DATE = 3/19/2026	DATE - 03/18/2026	REVISED -	

STATE OF ILLINOIS
DEPARTMENT OF TRANSPORTATION

I-290/IL 53 HMA RESURFACING AND BRIDGE REPAIRS
ITS AND SURVEILLANCE REMOVAL PLAN

SCALE: 1"=50' | SHEET OF SHEETS | STA. 131+00 TO STA. 146+00

F.A.I. RTE.	SECTION	COUNTY	TOTAL SHEETS	SHEET NO.
290	(0404-316-HB) BR 24	MULTIPLE*	276	107
		CONTRACT NO. 62W99		
		ILLINOIS	FED. AID PROJECT	

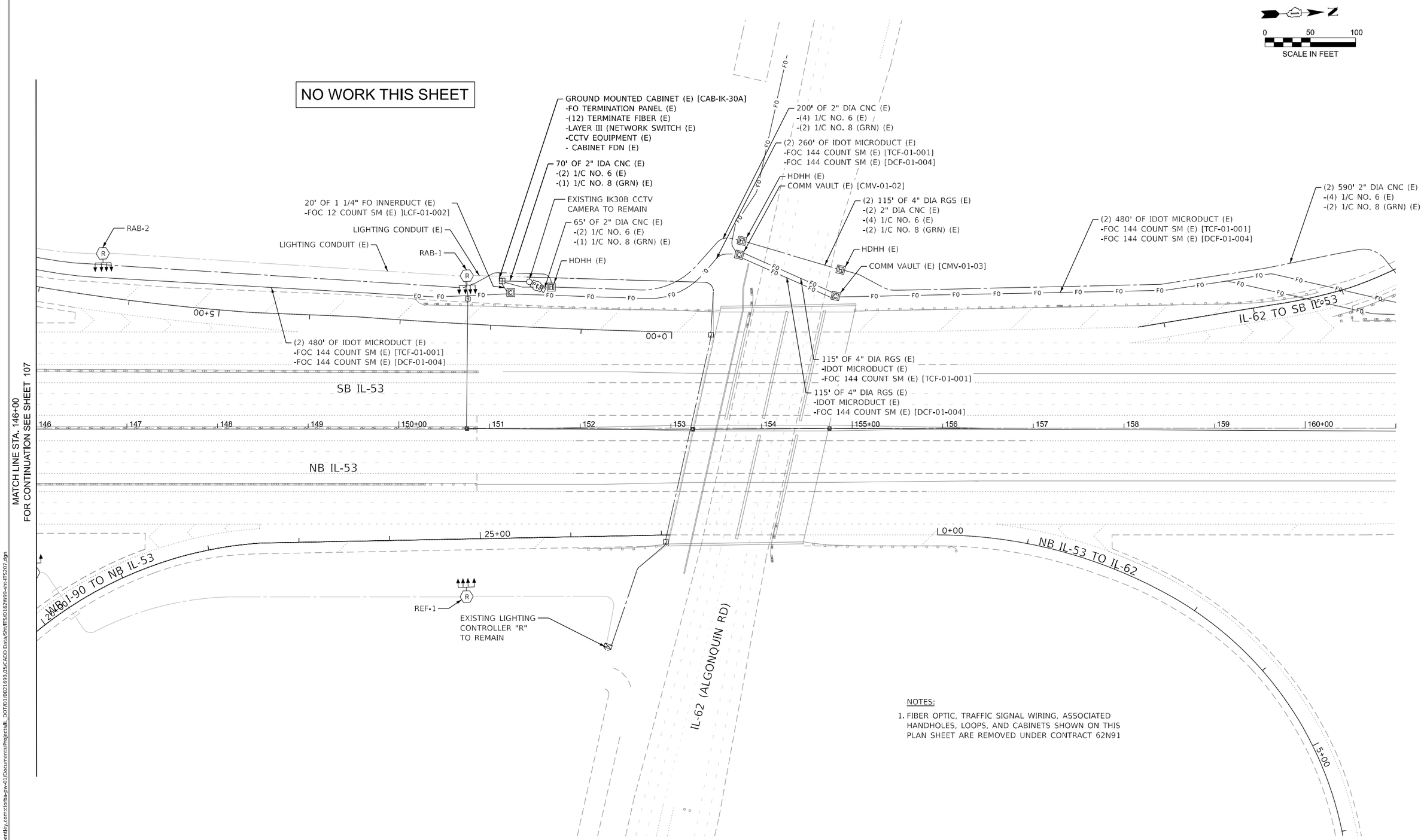

NOTES:

1. FIBER OPTIC, TRAFFIC SIGNAL WIRING, ASSOCIATED HANDHOLES, LOOPS, AND CABINETS SHOWN ON THIS PLAN SHEET ARE REMOVED UNDER CONTRACT 62N91

DATE PLOTTED = 4/30/2026 10:20:29 PM
PEN TABLE = 0021693.05.tbl
PLOT CONFIG = CGI-PDF.pltcfg
MODEL: $MODELNAMES
FILE NAME: pw://ciorba-pw.bentley.com:ciorba-pw-01/Documents/Projects/IL_DOT/D1/0021693.05/CADD Data/Sht/ITS/D162W99-sht-ITS207.dgn

CiorbaGroup
8725 W. Higgins Rd, Ste 600, Chicago, IL 60631
P 773.775.4009 | www.ciorba.com

USER NAME = djohnson	DESIGNED - DTJ	REVISED -	
	DRAWN - MB	REVISED -	
PLOT SCALE = 0.16666667 ' / in.	CHECKED - JMV	REVISED -	
PLOT DATE = 3/19/2026	DATE - 03/18/2026	REVISED -	

STATE OF ILLINOIS
DEPARTMENT OF TRANSPORTATION

I-290/IL 53 HMA RESURFACING AND BRIDGE REPAIRS
ITS AND SURVEILLANCE REMOVAL PLAN

SCALE: 1"=50' | SHEET OF SHEETS | STA. 146+00 TO STA. 161+00

F.A.I. RTE.	SECTION	COUNTY	TOTAL SHEETS	SHEET NO.
290	(0404-316-HB) BR 24	MULTIPLE*	276	108
		CONTRACT NO. 62W99		
		ILLINOIS	FED. AID PROJECT	

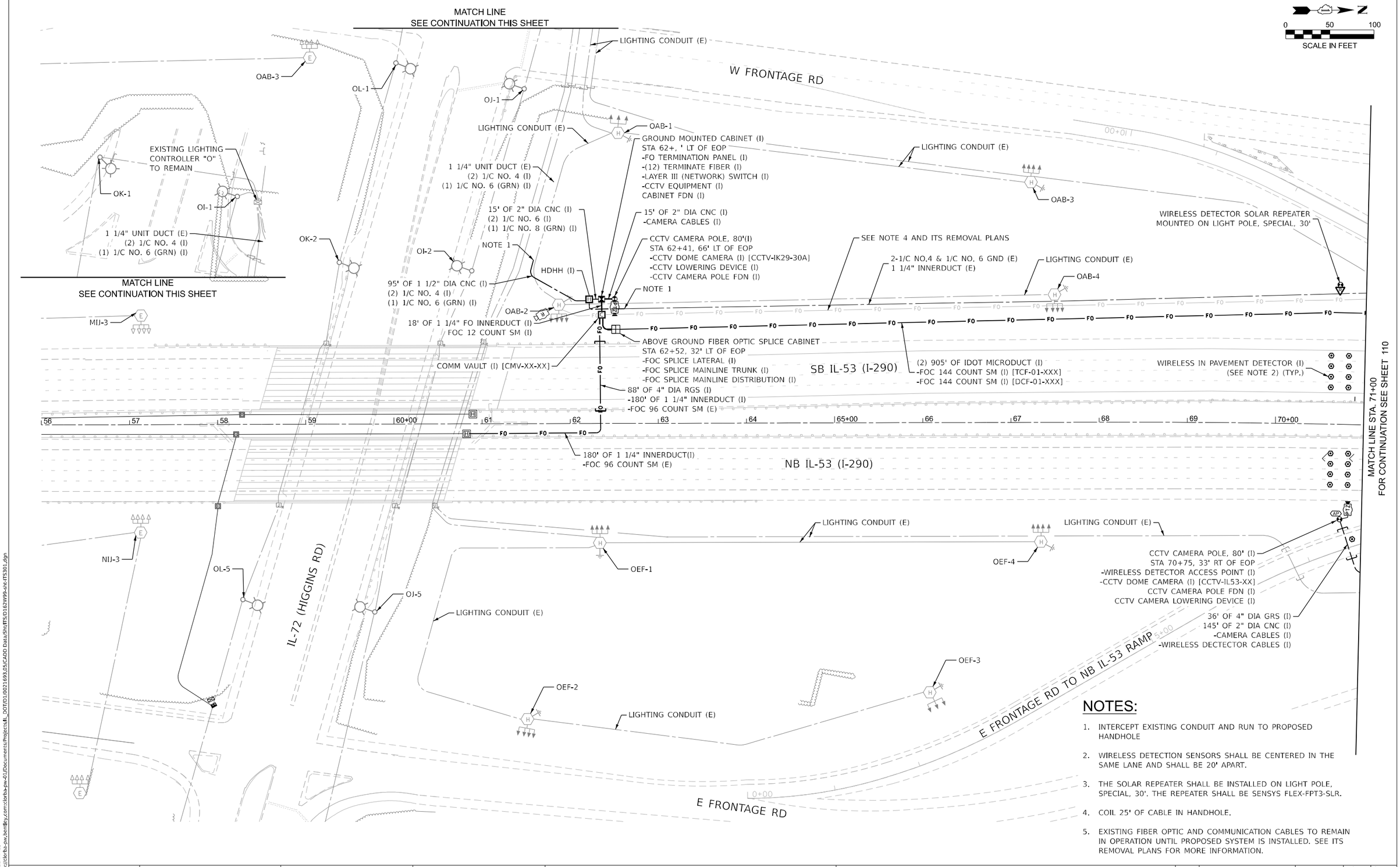

NOTES:

1. INTERCEPT EXISTING CONDUIT AND RUN TO PROPOSED HANDHOLE
2. WIRELESS DETECTION SENSORS SHALL BE CENTERED IN THE SAME LANE AND SHALL BE 20' APART.
3. THE SOLAR REPEATER SHALL BE INSTALLED ON LIGHT POLE, SPECIAL, 30'. THE REPEATER SHALL BE SENSYS FLEX-FPT3-SLR.
4. COIL 25' OF CABLE IN HANDHOLE.
5. EXISTING FIBER OPTIC AND COMMUNICATION CABLES TO REMAIN IN OPERATION UNTIL PROPOSED SYSTEM IS INSTALLED. SEE ITS REMOVAL PLANS FOR MORE INFORMATION.

DATE PLOTTED = 4/30/2026 10:20:45 PM
PEN TABLE = 2017.08.05.tbl
PLOT CONFIG = CGI-PDF.pltcfg
MODEL: SMODELNAMES
FILE NAME: pw://ciorba-pw.bentley.com:ciorba-pw-01/Documents/Projects/IL_DOTFD1.0021693.05/CADD Data/Shts/ITS/D162W99-sht-ITS301.dgn

CiorbaGroup
8725 W. Higgins Rd, Ste 600, Chicago, IL 60631
P 773.775.4009 | www.ciorba.com

USER NAME = djohnson	DESIGNED - DTJ	REVISED -	
	DRAWN - MB	REVISED -	
PLOT SCALE = 0.16666667 ' / In.	CHECKED - JMV	REVISED -	
PLOT DATE = 3/19/2026	DATE - 03/18/2026	REVISED -	

STATE OF ILLINOIS
DEPARTMENT OF TRANSPORTATION

I-290/IL 53 HMA RESURFACING AND BRIDGE REPAIRS
PROPOSED ITS AND SURVEILLANCE PLAN

SCALE: 1"=50' | SHEET OF SHEETS | STA. 56+00 | TO STA. 71+00

F.A.I. RTE.	SECTION	COUNTY	TOTAL SHEETS	SHEET NO.
290	(0404-316-HB) BR 24	MULTIPLE*	276	109
		CONTRACT NO. 62W99		
	ILLINOIS	FED. AID PROJECT		

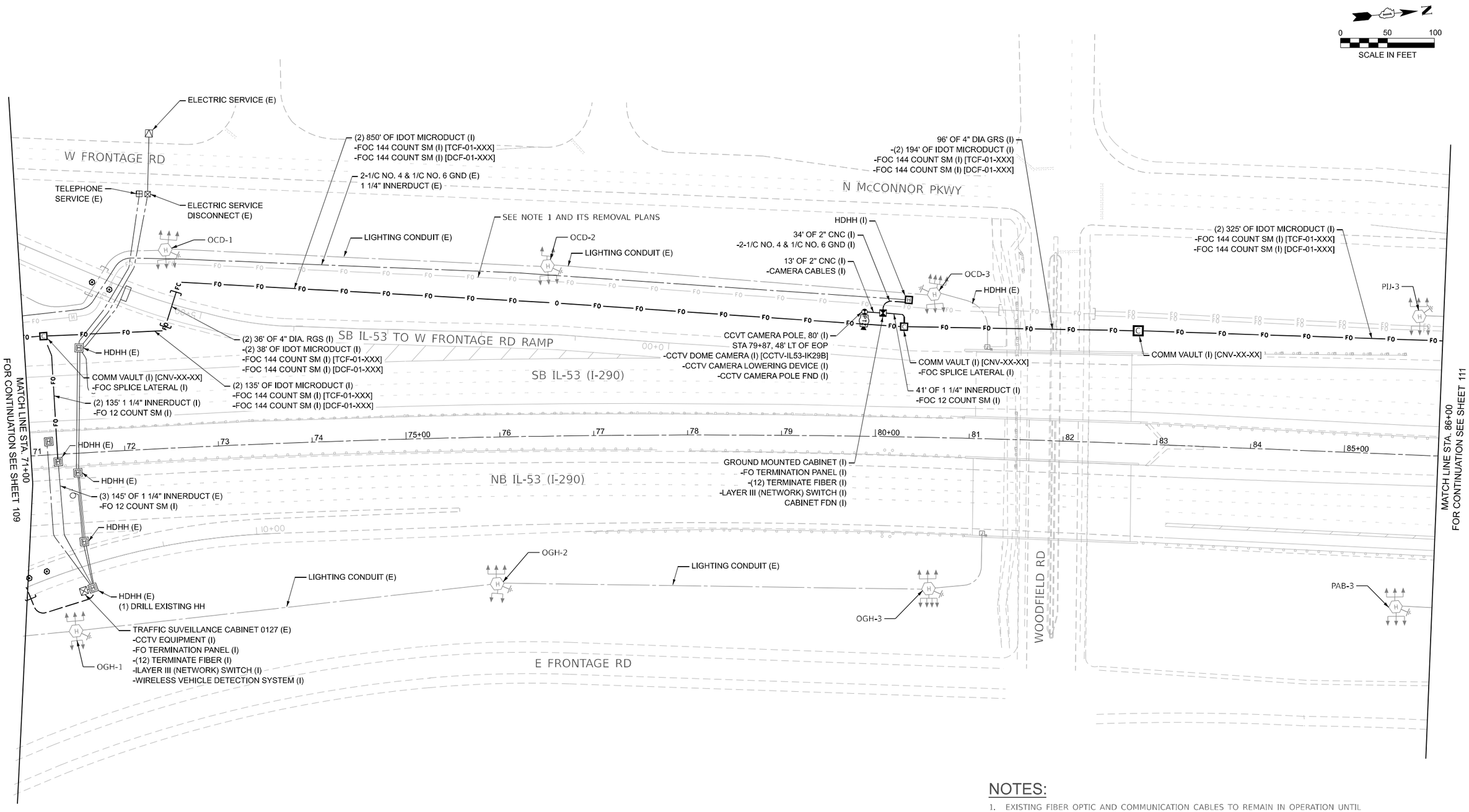

NOTES:

1. EXISTING FIBER OPTIC AND COMMUNICATION CABLES TO REMAIN IN OPERATION UNTIL PROPOSED SYSTEM IS INSTALLED. SEE ITS REMOVAL PLANS FOR MORE INFORMATION.

DATE PLOTTED = 4/30/2026 10:20:56 PM
PEN TABLE = 0021693.05.tbl
PLOT CONFIG = CGI-PDF.pltcfg
MODEL: $MODELNAMES
FILE NAME: pw://ciorba-pw.bentley.com:ciorba-pw-01/Documents/Projects/IL_DOT/D1/0021693.05/CADD Data/Sht/ITS/D162W99-sht-ITS302.dgn

CiorbaGroup
8725 W. Higgins Rd, Ste 600, Chicago, IL 60631
P 773.775.4009 | www.ciorba.com

USER NAME = djohnson	DESIGNED - DTJ	REVISED -	
	DRAWN - MB	REVISED -	
PLOT SCALE = 0.16666667 ' / in.	CHECKED - JMV	REVISED -	
PLOT DATE = 3/19/2026	DATE - 03/18/2026	REVISED -	

STATE OF ILLINOIS
DEPARTMENT OF TRANSPORTATION

I-290/IL 53 HMA RESURFACING AND BRIDGE REPAIRS
PROPOSED ITS AND SURVEILLANCE PLAN

SCALE: 1"=50' | SHEET OF SHEETS | STA. 71+00 TO STA. 86+00

F.A.I. RTE.	SECTION	COUNTY	TOTAL SHEETS	SHEET NO.
290	(0404-316-HB) BR 24	MULTIPLE*	276	110
		CONTRACT NO. 62W99		
		ILLINOIS	FED. AID PROJECT	

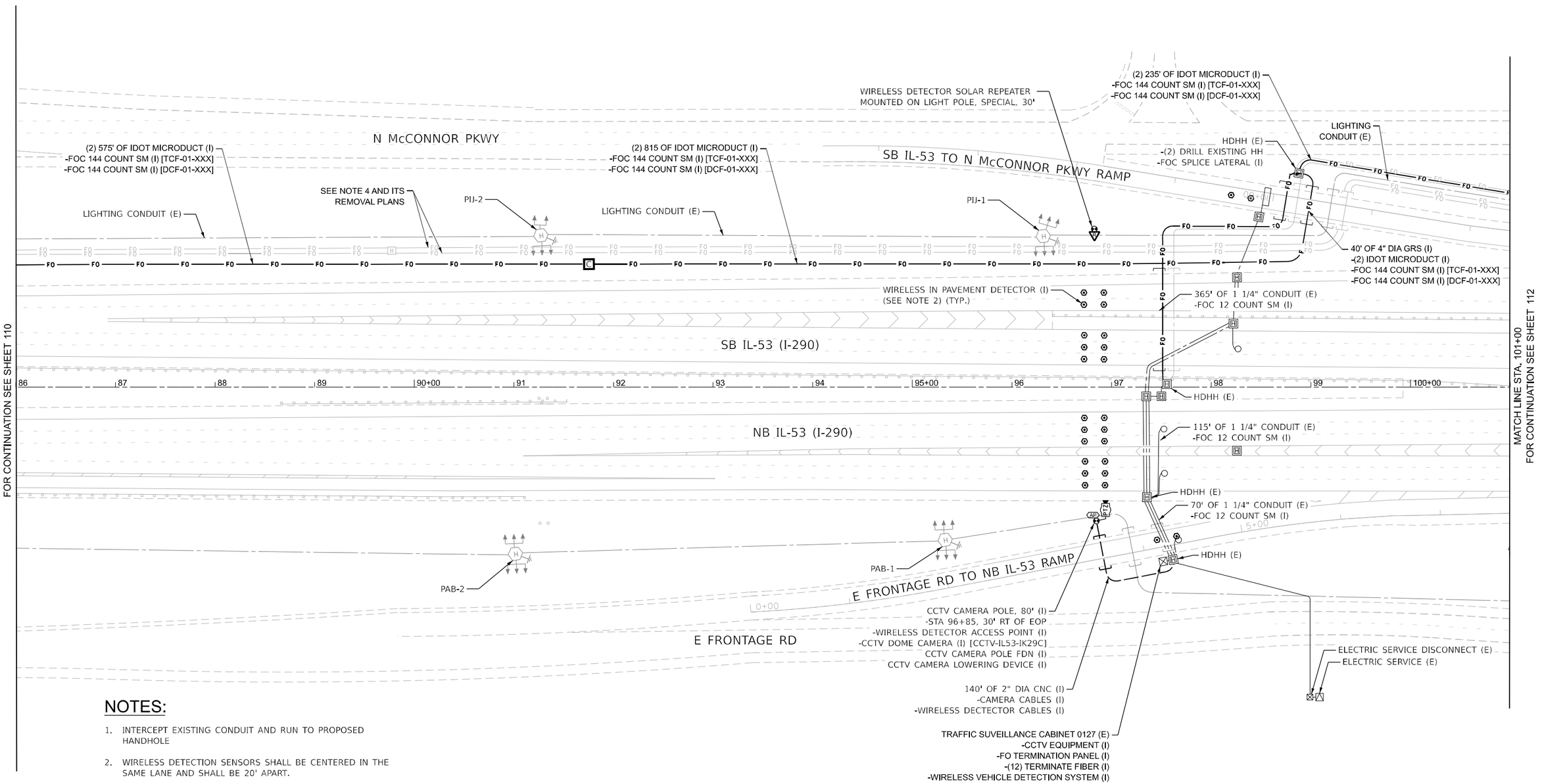

NOTES:

1. INTERCEPT EXISTING CONDUIT AND RUN TO PROPOSED HANDHOLE
2. WIRELESS DETECTION SENSORS SHALL BE CENTERED IN THE SAME LANE AND SHALL BE 20' APART.
3. THE SOLAR REPEATER SHALL BE INSTALLED ON LIGHT POLE, SPECIAL, 30'. THE REPEATER SHALL BE SENSYS FLEX-FPT3-SLR.
4. EXISTING FIBER OPTIC AND COMMUNICATION CABLES TO REMAIN IN OPERATION UNTIL PROPOSED SYSTEM IS INSTALLED. SEE ITS REMOVAL PLANS FOR MORE INFORMATION.

DATE PLOTTED = 4/20/2026 10:21:11 PM
PRINT TABLE = 0001702_PRINT.tbl
PLOT CONFIG = CGI-PDF.pltcfg
MODEL: SMODELNAMES
FILE NAME: pw://ciorba-pw.bentley.com:ciorba-pw-01/Documents/Projects/IL_DOT/D1/0021693/05/CADD Data/Sht/ITS/D162W99-sht-ITS303.dgn

CiorbaGroup
8725 W. Higgins Rd, Ste 600, Chicago, IL 60631
P 773.775.4009 | www.ciorba.com

USER NAME = djohnson	DESIGNED - DTJ	REVISED -	
	DRAWN - MB	REVISED -	
PLOT SCALE = 0.16666667 ' / In.	CHECKED - JMV	REVISED -	
PLOT DATE = 3/19/2026	DATE - 03/18/2026	REVISED -	

STATE OF ILLINOIS
DEPARTMENT OF TRANSPORTATION

I-290/IL 53 HMA RESURFACING AND BRIDGE REPAIRS
PROPOSED ITS AND SURVEILLANCE PLAN

SCALE: 1"=50' | SHEET OF SHEETS | STA. 86+00 | TO STA. 101+00

F.A.I. RTE.	SECTION	COUNTY	TOTAL SHEETS	SHEET NO.
290	(0404-316-HB) BR 24	MULTIPLE*	276	111
		CONTRACT NO. 62W99		
	ILLINOIS FED. AID PROJECT			

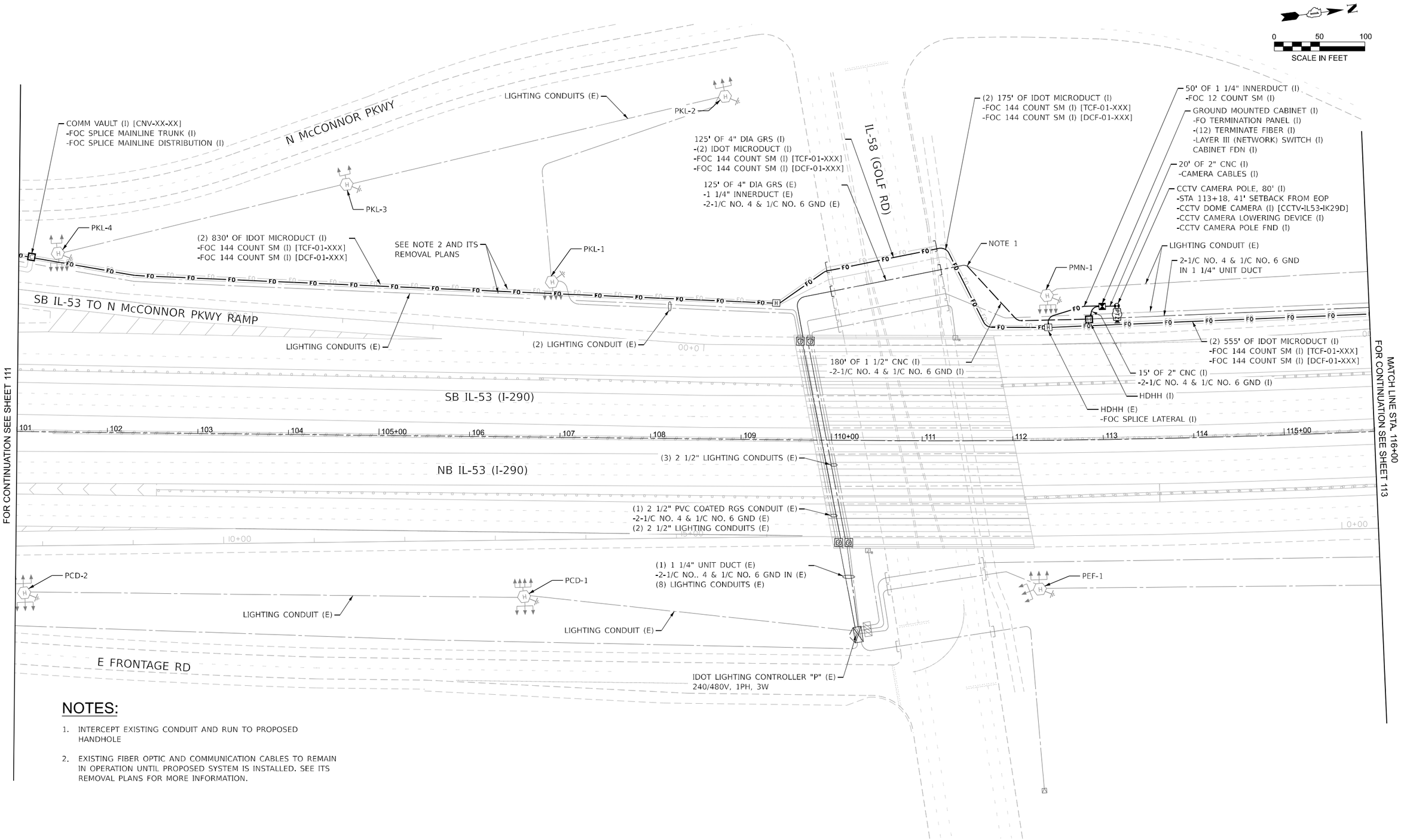

NOTES:

1. INTERCEPT EXISTING CONDUIT AND RUN TO PROPOSED HANDHOLE
2. EXISTING FIBER OPTIC AND COMMUNICATION CABLES TO REMAIN IN OPERATION UNTIL PROPOSED SYSTEM IS INSTALLED. SEE ITS REMOVAL PLANS FOR MORE INFORMATION.

DATE PLOTTED = 4/30/2026 10:21:22 PM
PEN TABLE = 0021693.05.tbl
PLOT CONFIG = CGI-PDF.pltcfg
MODEL: $MODELNAMES
FILE NAME: pw://ciorba-pw.bentley.com:ciorba-pw-01/Documents/Projects/IL_DOT/D1/0021693.05/CADD Data/Sht/ITS/D162W99-sht-ITS304.dgn

CiorbaGroup
8725 W. Higgins Rd, Ste 600, Chicago, IL 60631
P 773.775.4009 | www.ciorba.com

USER NAME = djohnson	DESIGNED - DTJ	REVISED -	
	DRAWN - MB	REVISED -	
PLOT SCALE = 0.16666667 ' / in.	CHECKED - JMV	REVISED -	
PLOT DATE = 3/19/2026	DATE - 03/18/2026	REVISED -	

STATE OF ILLINOIS
DEPARTMENT OF TRANSPORTATION

I-290/IL 53 HMA RESURFACING AND BRIDGE REPAIRS
PROPOSED ITS AND SURVEILLANCE PLAN

SCALE: 1"=50' | SHEET OF SHEETS | STA. 101+00 TO STA. 116+00

F.A.I. RTE.	SECTION	COUNTY	TOTAL SHEETS	SHEET NO.
290	(0404-316-HB) BR 24	MULTIPLE*	276	112
		CONTRACT NO. 62W99		
		ILLINOIS	FED. AID PROJECT	

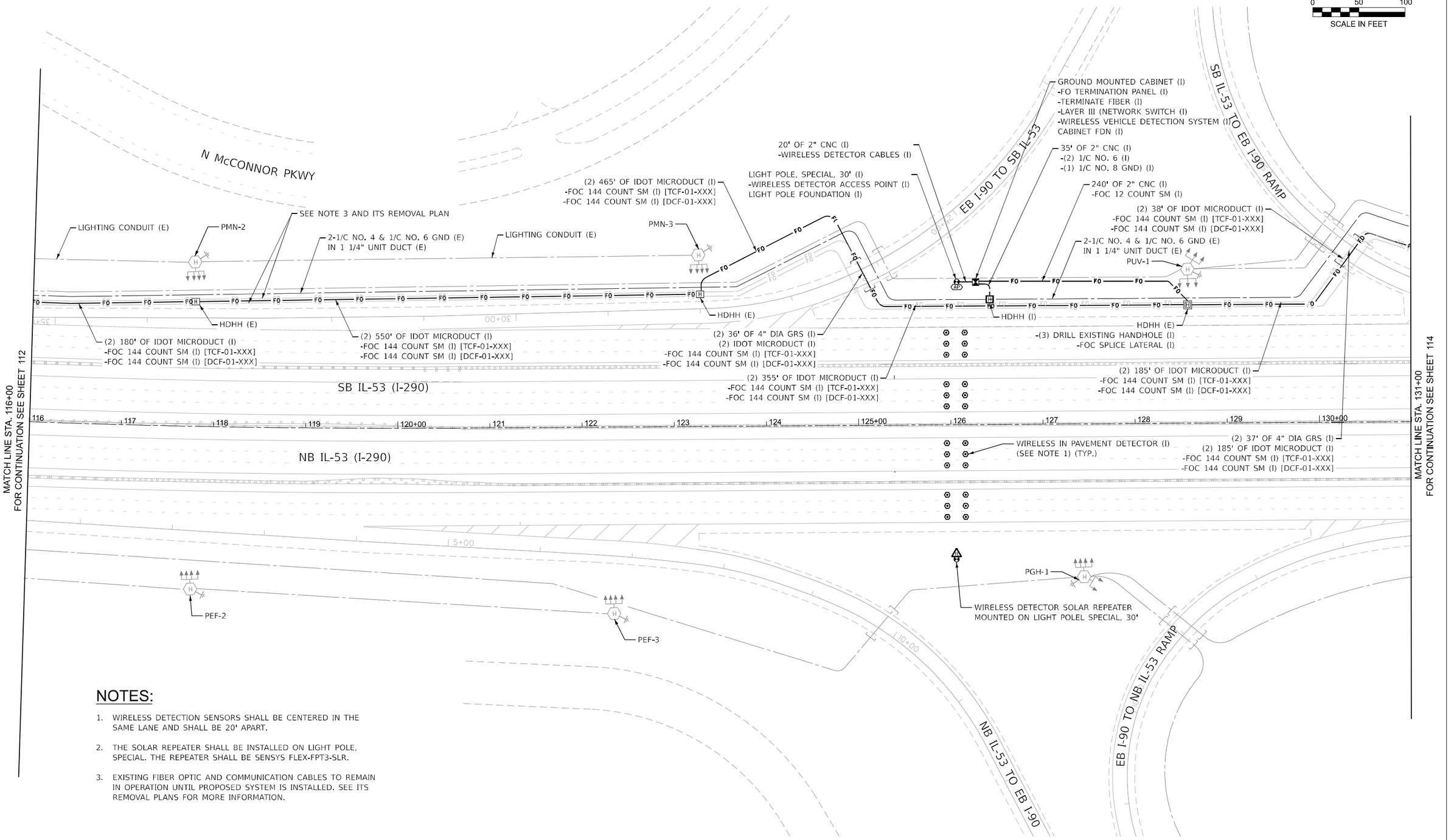

NOTES:

1. WIRELESS DETECTION SENSORS SHALL BE CENTERED IN THE SAME LANE AND SHALL BE 20' APART.
2. THE SOLAR REPEATER SHALL BE INSTALLED ON LIGHT POLE, SPECIAL. THE REPEATER SHALL BE SENSYS FLEX-FPT3-SLR.
3. EXISTING FIBER OPTIC AND COMMUNICATION CABLES TO REMAIN IN OPERATION UNTIL PROPOSED SYSTEM IS INSTALLED. SEE ITS REMOVAL PLANS FOR MORE INFORMATION.

DATE PLOTTED = 4/30/2026 10:21:33 PM
PEN TABLE = 0021693.05.tbl
PLOT CONFIG = CGI-PDF.pltcfg
MODEL: $MODELNAMES
FILE NAME: pw://ciorba-pw.bentley.com:ciorba-pw-01/Documents/Projects/IL_DOT/D1/0021693.05/CADD Data/Sht/ITS/D162W99-sht-ITS305.dgn

CiorbaGroup
8725 W. Higgins Rd, Ste 600, Chicago, IL 60631
P 773.775.4009 | www.ciorba.com

USER NAME = djohnson	DESIGNED - DTJ	REVISED -	
	DRAWN - MB	REVISED -	
PLOT SCALE = 0.16666667 ' / in.	CHECKED - JMV	REVISED -	
PLOT DATE = 3/19/2026	DATE - 03/18/2026	REVISED -	

STATE OF ILLINOIS
DEPARTMENT OF TRANSPORTATION

I-290/IL 53 HMA RESURFACING AND BRIDGE REPAIRS
PROPOSED ITS AND SURVEILLANCE PLAN

SCALE: 1"=50' | SHEET OF SHEETS | STA. 116+00 TO STA. 131+00

F.A.I. RTE.	SECTION	COUNTY	TOTAL SHEETS	SHEET NO.
290	(0404-316-HB) BR 24	MULTIPLE*	276	113
		CONTRACT NO. 62W99		
		ILLINOIS	FED. AID PROJECT	

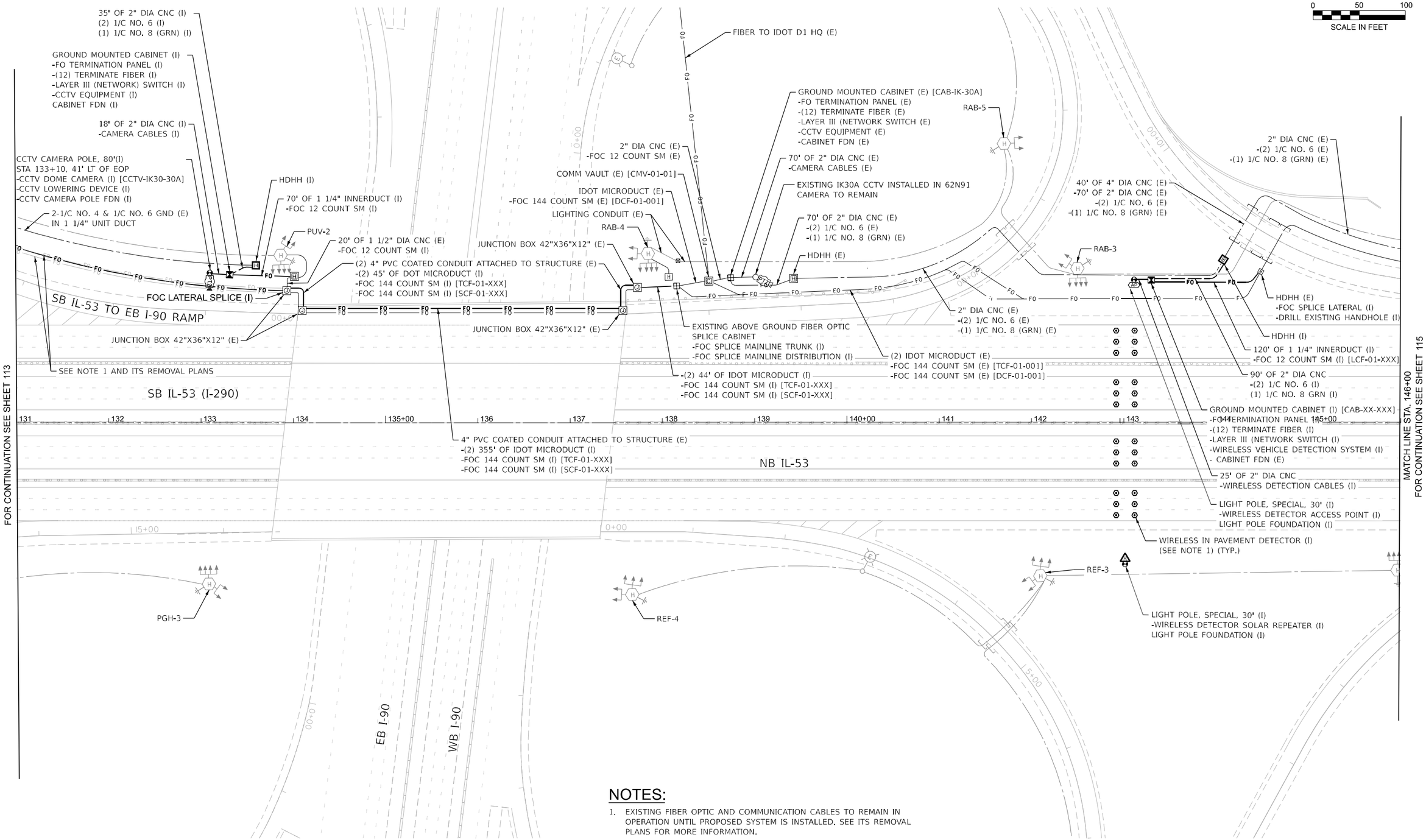

NOTES:

1. EXISTING FIBER OPTIC AND COMMUNICATION CABLES TO REMAIN IN OPERATION UNTIL PROPOSED SYSTEM IS INSTALLED. SEE ITS REMOVAL PLANS FOR MORE INFORMATION.

DATE PLOTTED = 4/20/2026 10:21:50 PM
PRINTER NAME = 0021693_05.tbl
PLOT CONFIG = CQI-PDF.pltcfg
MODEL: SMODELNAMES
FILE NAME: pw://ciorba-pw.bentley.com:ciorba-pw-01/Documents/Projects/IL_DOT/D1/0021693.05/CADD Data/Shuffle/ITS/D162W99-cht-ITS306.dgn

CiorbaGroup
8725 W. Higgins Rd, Ste 600, Chicago, IL 60631
P 773.775.4009 | www.ciorba.com

USER NAME = djohnson	DESIGNED - DTJ	REVISED -	STATE OF ILLINOIS DEPARTMENT OF TRANSPORTATION	I-290/IL 53 HMA RESURFACING AND BRIDGE REPAIRS PROPOSED ITS AND SURVEILLANCE PLAN
	DRAWN - MB	REVISED -		
PLOT SCALE = 0.16666667 ' / In.	CHECKED - JMV	REVISED -		SCALE: 1"=50' SHEET OF SHEETS STA. 131+00.00 TO STA. 146+00.00
PLOT DATE = 3/19/2026	DATE - 03/18/2026	REVISED -		

F.A.I. RTE.	SECTION	COUNTY	TOTAL SHEETS	SHEET NO.
290	(0404-316-HB) BR 24	MULTIPLE*	276	114
		CONTRACT NO. 62W99		
	ILLINOIS FED. AID PROJECT			

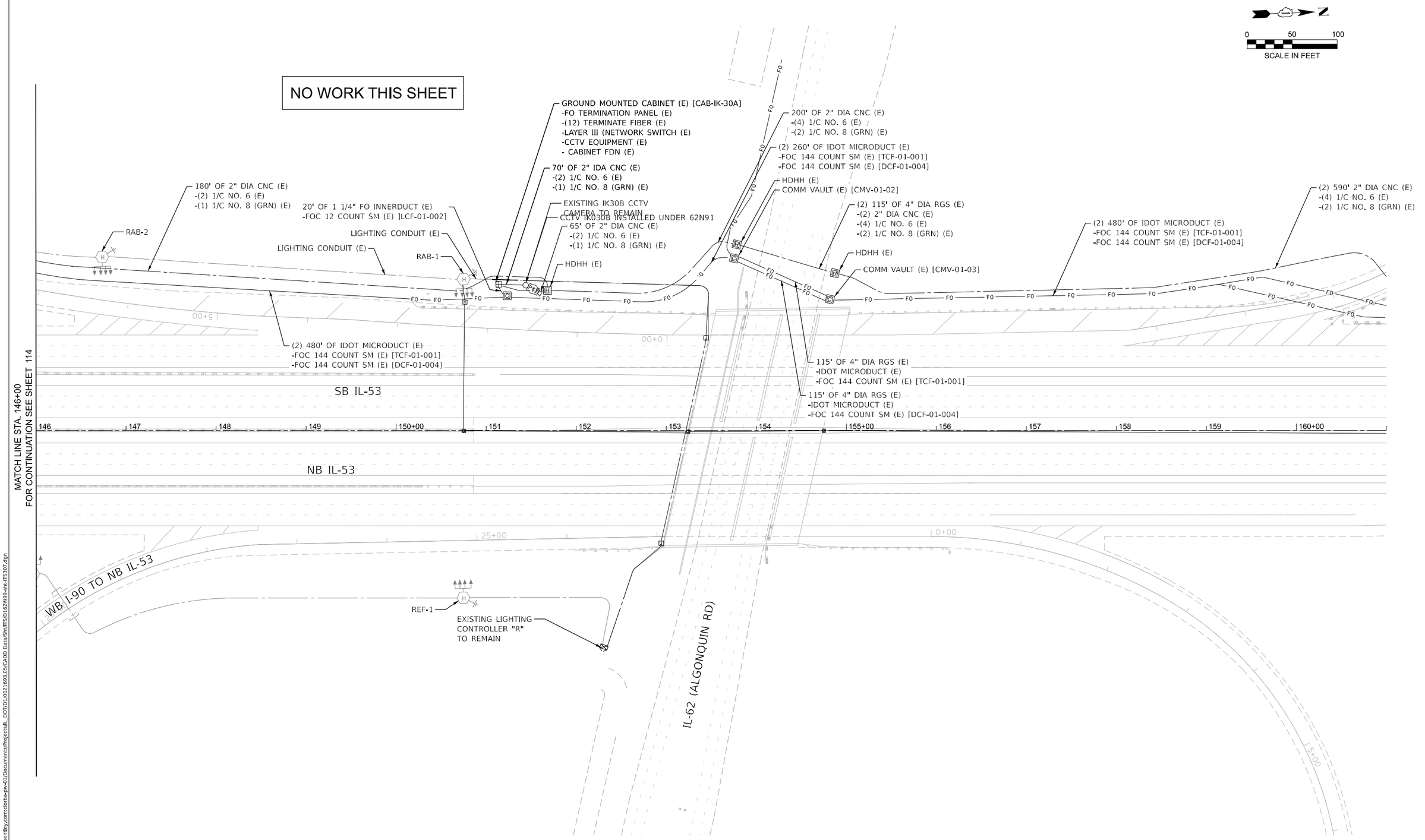

DATE PLOTTED = 4/30/2026 10:22:02 PM
PEN TABLE = 0021693.05.tbl
PLOT CONFIG = CGI-PDF.pltcfg
MODEL: $MODELNAMES
FILE NAME: pw://ciorba-pw.bentley.com:ciorba-pw-01/Documents/Projects/IL_DOT/D1/0021693.05/CADD Data/Sht/ITS/D162W99-sht-ITS307.dgn

CiorbaGroup
8725 W. Higgins Rd, Ste 600, Chicago, IL 60631
P 773.775.4009 | www.ciorba.com

USER NAME = djohnson	DESIGNED - DTJ	REVISED -	
	DRAWN - MB	REVISED -	
PLOT SCALE = 0.16666667 ' / in.	CHECKED - JMV	REVISED -	
PLOT DATE = 3/19/2026	DATE - 03/18/2026	REVISED -	

STATE OF ILLINOIS
DEPARTMENT OF TRANSPORTATION

I-290/IL 53 HMA RESURFACING AND BRIDGE REPAIRS
PROPOSED ITS AND SURVEILLANCE PLAN

SCALE: 1"=50' | SHEET OF SHEETS | STA. 146+00 TO STA. 161+00

F.A.I. RTE.	SECTION	COUNTY	TOTAL SHEETS	SHEET NO.
290	(0404-316-HB) BR 24	MULTIPLE*	276	115
		CONTRACT NO. 62W99		
		ILLINOIS	FED. AID PROJECT	

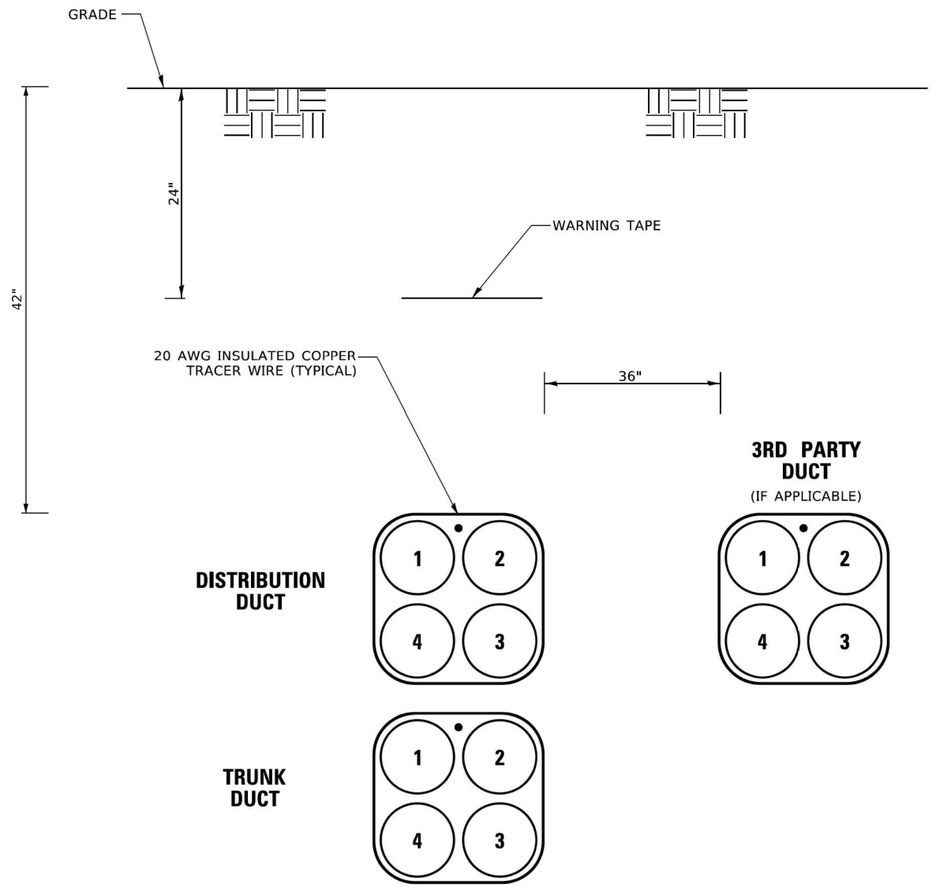

DISTRIBUTION DUCT
MICRODUCT CELL ASSIGNMENTS
1. (BLUE) 144 IDOT (DCF)
2. (ORANGE) SPARE
3. (GREEN) SPARE
4. (BROWN) SPARE

TRUNK DUCT
MICRODUCT CELL ASSIGNMENTS
1. (BLUE) SPARE
2. (ORANGE) 144 IDOT (TCF)
3. (GREEN) SPARE
4. (BROWN) SPARE

NOTES:

MUILTI-CELL DUCT COLOR CONFIGURATION:

IDOT MICRO DUCT WILL HAVE AN ORANGE OVERSHEATH FOR TRUNK.

IDOT MICRO DUCT USED AS DISTRIBUTION WILL HAVE A BLUE OVERSHEATH FOR DISTRIBUTION.

3RD PARTY MICRO DUCT OVERSHEATH WILL BE SLATE.

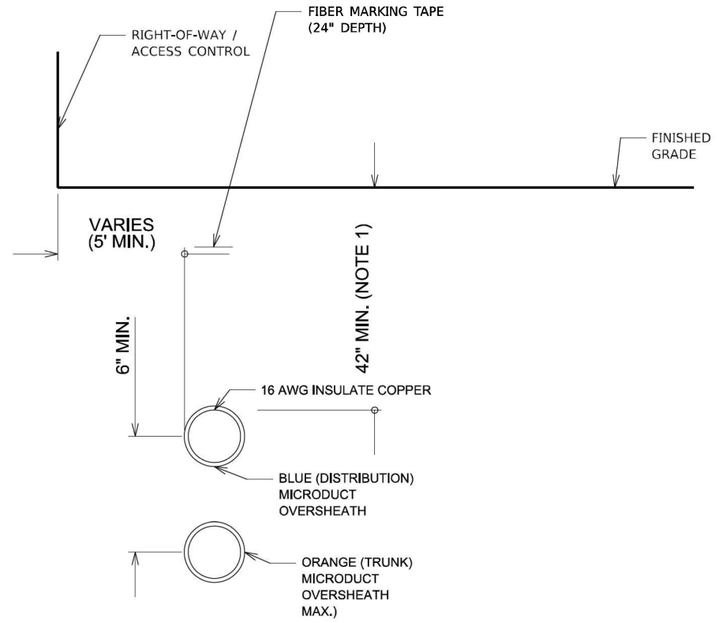

IL RTE 53 SOUTHBOUND TYPICAL CONDUIT SECTION

NOTES

1. GREATER DEPTH MAY BE REQUIRED IN CERTAIN SITUATIONS, INCLUDING, BUT NOT LIMITED TO: ENTERING HANDHOLES/VAULTS, UTILITY AVOIDANCE, CROSSING BENEATH BOX CULVERTS.

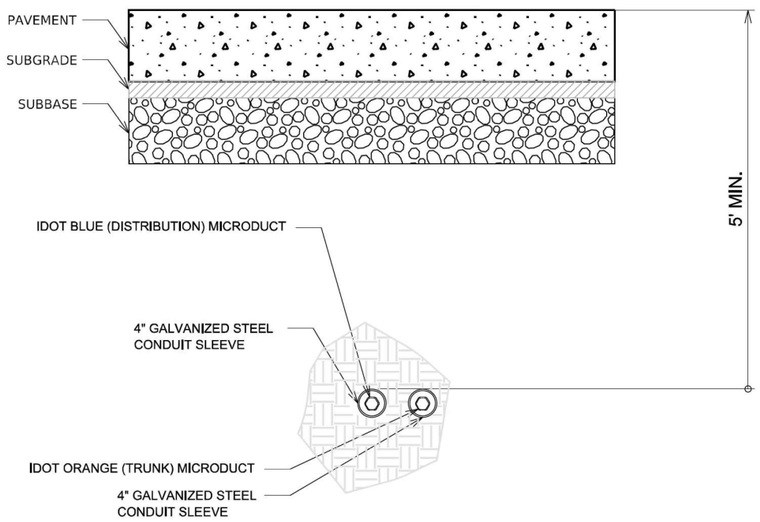

BORED CONDUIT UNDER ROADWAY

DATE PLOTTED = 3/19/2026 6:05:22 PM
PEN TABLE = 07072403.tbl
PLOT CONFIG = CGI-PDF.pltcfg
MODEL: $MODELNAMES
FILE NAME: pw://ciorba-pw.bentley.com:ciorba-pw-01/Documents/Projects/IL_DOT/D1/0021693.05/CADD Data/Shr/ITS/0021693.05-sht-ITS601.dgn

CiorbaGroup
8725 W. Higgins Rd, Ste 600, Chicago, IL 60631
P 773.775.4009 | www.ciorba.com

USER NAME = djohnson	DESIGNED - DTJ	REVISED -	
	DRAWN - DTJ	REVISED -	
PLOT SCALE = 0.16666667 ' / In.	CHECKED - JMV	REVISED -	
PLOT DATE = 3/19/2026	DATE - 03/18/2026	REVISED -	

STATE OF ILLINOIS
DEPARTMENT OF TRANSPORTATION

ITS DETAILS
MICRODUCT AND CONDUIT ROUTING

SCALE: | SHEET OF SHEETS | STA. | TO STA.

F.A.I RTE.	SECTION	COUNTY	TOTAL SHEETS	SHEET NO.
290	(0404-316-HB) BR 24	MULTIPLE*	276	116
		CONTRACT NO. 62W99		
	ILLINOIS FED. AID PROJECT			

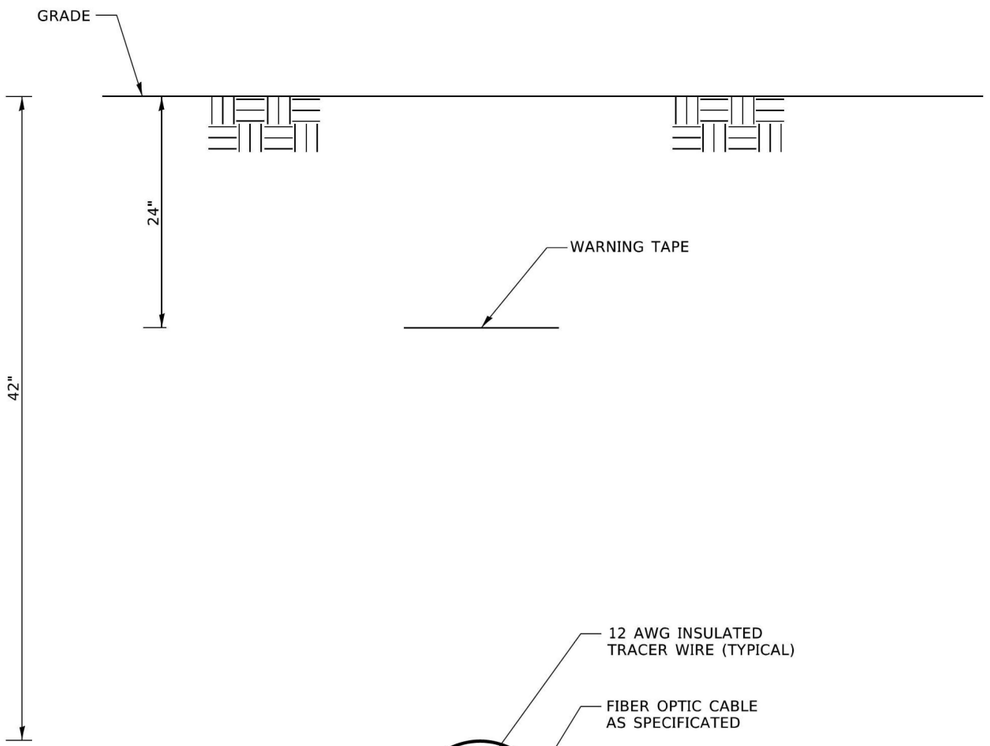

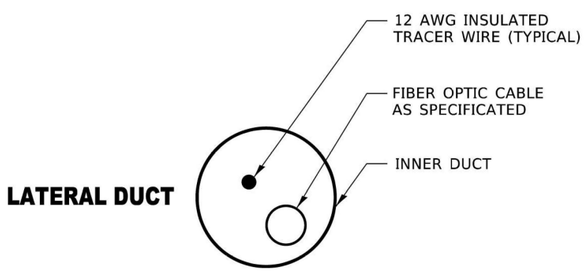

LATERAL DUCT

NOTES:

1. 1 ¼" INNER DUCT COLOR CONFIGURATION:

   BLACK FOR LATERAL

2. ALL LATERAL FIBER OPTIC CABLES SHALL BE STANDARD FIBER OPTIC CABLE, NOT MICRO-FIBER, FOR INSTALLATION PURPOSES.

DATE PLOTTED = 3/19/2026 6:05:51 PM
PEN TABLE = 0021693.05.tbl
PLOT CONFIG = CGI-PDF.pltcfg
MODEL: $MODELNAMES
FILE NAME: pw://ciorba-pw.bentley.com:ciorba-pw-01/Documents/Projects/IL_DOT/D1/0021693.05/CADD Data/Sht/ITS/0021693.05-sht-ITS610.dgn

CiorbaGroup
8725 W. Higgins Rd, Ste 600, Chicago, IL 60631
P 773.775.4009 | www.ciorba.com

USER NAME = djohnson	DESIGNED - DTJ	REVISED -	
	DRAWN - DTJ	REVISED -	
PLOT SCALE = 0.16666667 ' / In.	CHECKED - JMV	REVISED -	
PLOT DATE = 3/18/2026	DATE - 03/18/2026	REVISED -	

STATE OF ILLINOIS
DEPARTMENT OF TRANSPORTATION

ITS DETAILS
LATERAL FIBER OPTIC DUCT

SCALE: | SHEET OF SHEETS | STA. TO STA.

F.A.I RTE.	SECTION	COUNTY	TOTAL SHEETS	SHEET NO.
290	(0404-316-HB) BR 24	MULTIPLE*	276	117
		CONTRACT NO. 62W99		
		ILLINOIS	FED. AID PROJECT	

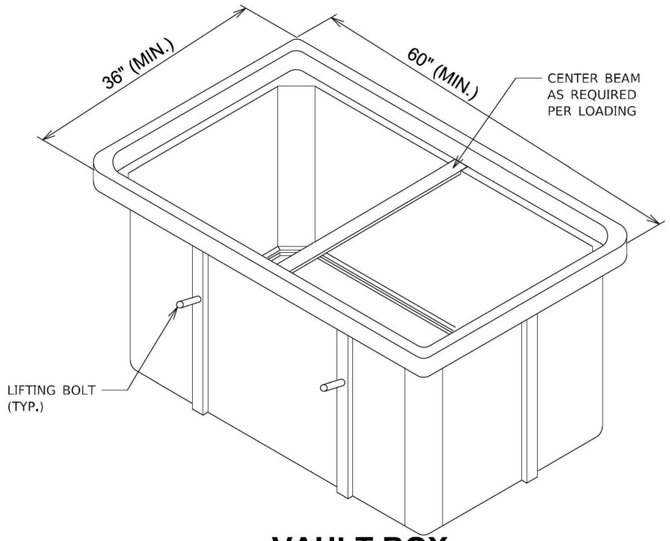

VAULT BOX ISOMETRIC VIEW

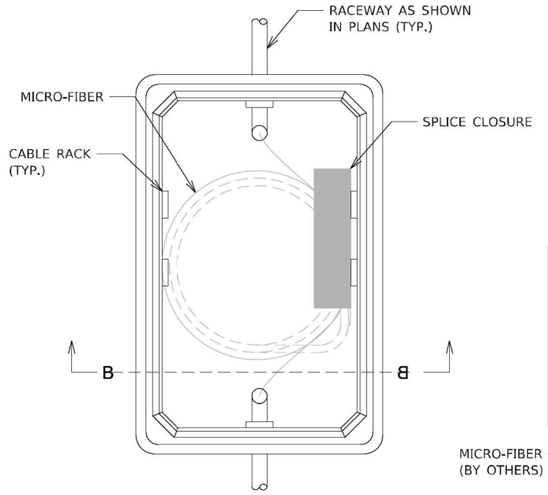

TOP VIEW

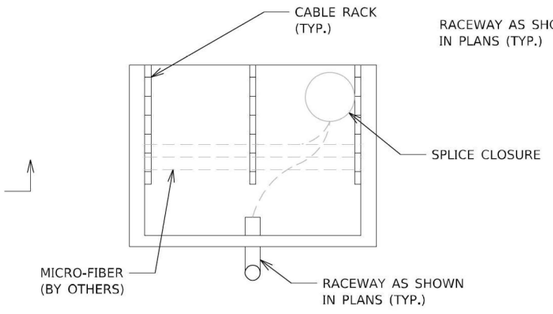

SECTION B-B

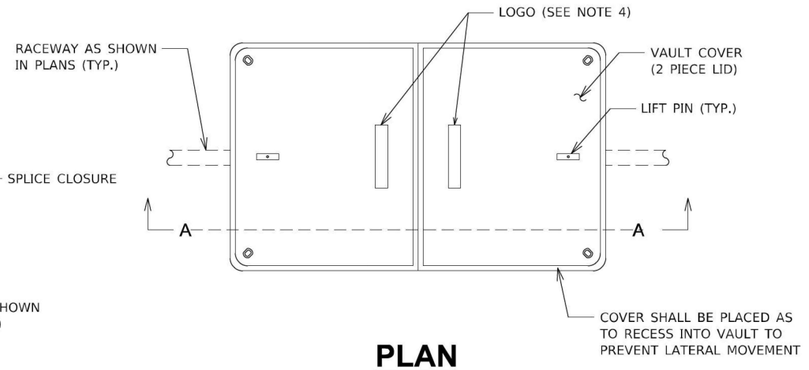

PLAN

NOTES:

1. GROUND ROD, 1-1/2" CONDUIT, #6 AWG GROUND WIRE, LOCATE POST AND ASSOCIATED WORK ARE INCLUDED AS PART OF COMMUNICATIONS VAULT AND WILL NOT BE PAID FOR SEPARATELY. ALL MATERIALS FOR MECHANICAL CONNECTION SHALL BE UL LISTED AND INSTALLED PER NEC ARTICLE 250.
2. #20 AWG TRACER CABLE SHALL BE SPLICED TO THE #20 AWG TRACER CABLE IN THE MICRODUCT USING A WATERPROOF SPLICE KIT AS RECOMENDED BY THE MICRODUCT MANUFACTURER. THE #20 AWG WIRE, SPLICE KIT AND ASSOCIATED WORK ARE INCLUDED AS PART OF COMMUNICATIONS VAULT AND WILL NOT BE PAID FOR SEPARATELY.
3. A WATERPROOF MICRODUCT PLUG(S) OR INNERDUCT PLUG SHALL BE INSTALLED AROUND EACH MICRODUCT OR INNERDUCT TO SEAL AROUND THE DUCT FOR ALL MICRODUCTS OR INNERDUCTS COMING INTO THE VAULT. THE PLUGS SHALL BE APPROPRIATELY SIZED AND INSTALLED AS RECOMMENDED BY THE MANUFACTURER AND IS INCLUDED AS PART OF THE MICRODUCT OR INNERDUCT PAY ITEM AND WILL NOT BE PAID SEPARATELY.
4. IDOT COMMUNICATIONS VAULTS SHALL HAVE A PERMANENTLY RECESSED LOGO THAT READS "IDOT".
5. COMMUNICATIONS VAULT SHALL HAVE AN OPEN BASE. ALL CONDUITS AS SHOWN ON THE PLANS SHALL ENTER THE VAULT VIA THE OPEN BASE.
6. ALL DIMENSIONS ARE MINIMUM AND A LARGER SIZE VAULT MAY BE USED, WITH THE APPROVAL OF THE ENGINEER, TO FACILITATE USING A MANUFACTURER'S STANDARD PRODUCT.

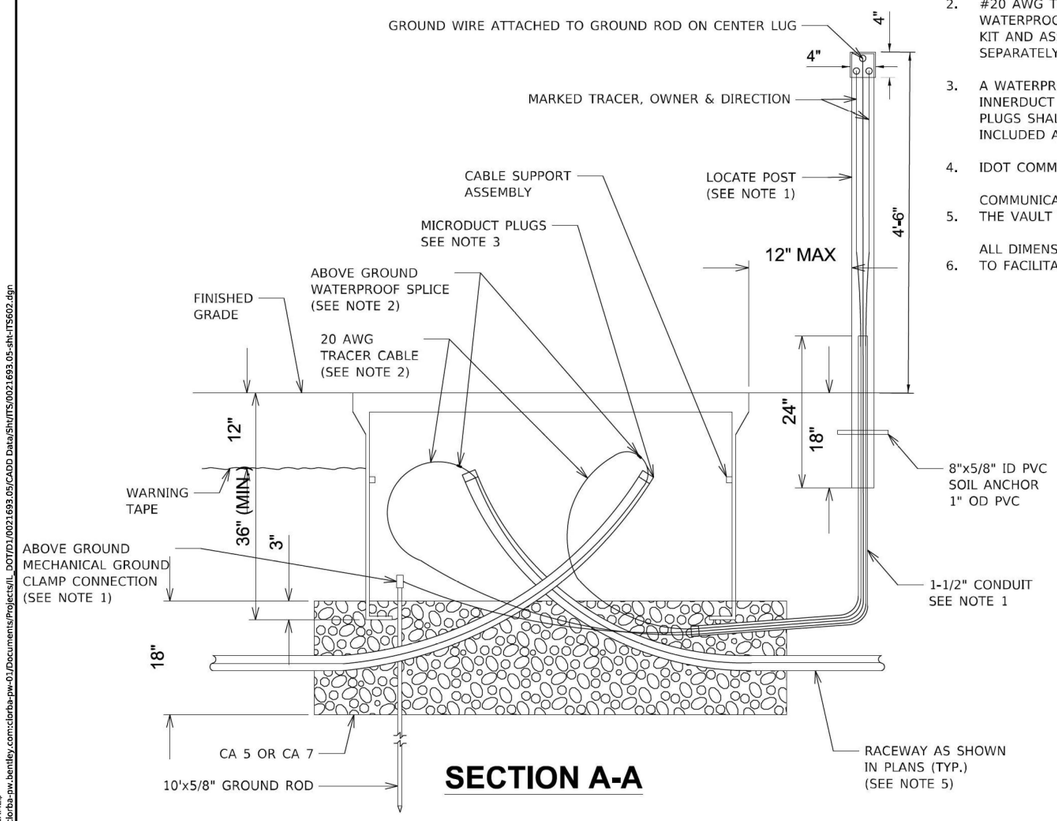

SECTION A-A

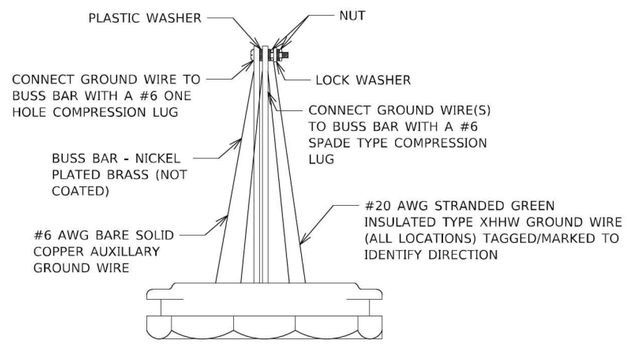

LOCATE POST TOP HAT BOND PLATE

N.T.S.

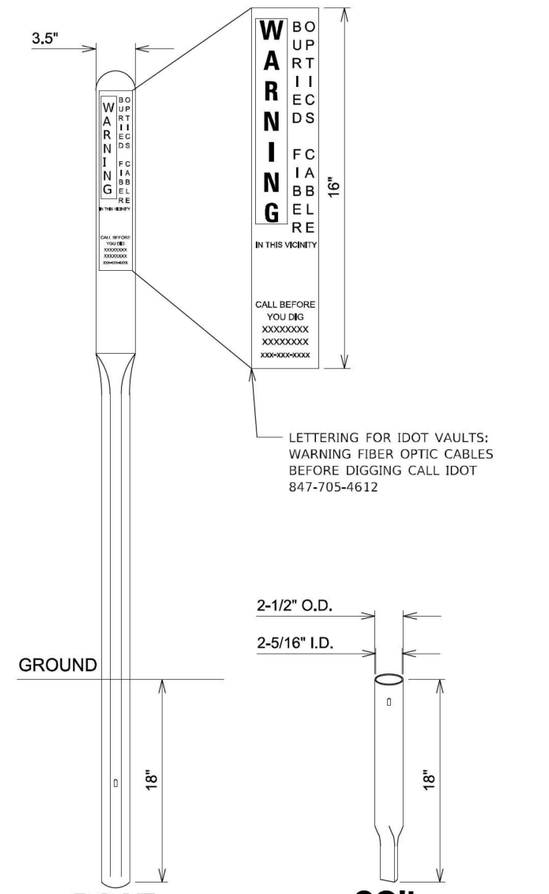

POST

SOIL ANCHOR

DATE PLOTTED = 3/19/2026 6:06:08 PM
PEN TABLE = 07272021.tbl
PLOT CONFIG = CGI-PDF.pltcfg
MODEL: $MODELNAME$
FILE NAME: pw://ciorba-pw.bentley.com:ciorba-pw-01/Documents/Projects/IL_DOT/D1J0021693.05/CADD Data/Shr/ITS/0021693.05-shr-ITS602.dgn

CiorbaGroup
8725 W. Higgins Rd, Ste 600, Chicago, IL 60631
P 773.775.4009 | www.ciorba.com

USER NAME	= djohnson	DESIGNED -	DTJ	REVISED	-
		DRAWN -	DTJ	REVISED	-
PLOT SCALE	= 0.16666667 ' / In.	CHECKED -	JMV	REVISED	-
PLOT DATE	= 3/19/2026	DATE -	03/18/2026	REVISED	-

STATE OF ILLINOIS
DEPARTMENT OF TRANSPORTATION

ITS DETAILS
COMMUNICATION VAULT

SCALE: | SHEET OF SHEETS | STA. | TO STA.

F.A.I RTE.	SECTION	COUNTY	TOTAL SHEETS	SHEET NO.
290	(0404-316-HB) BR 24	MULTIPLE*	276	118
		CONTRACT NO. 62W99		
	ILLINOIS FED. AID PROJECT			

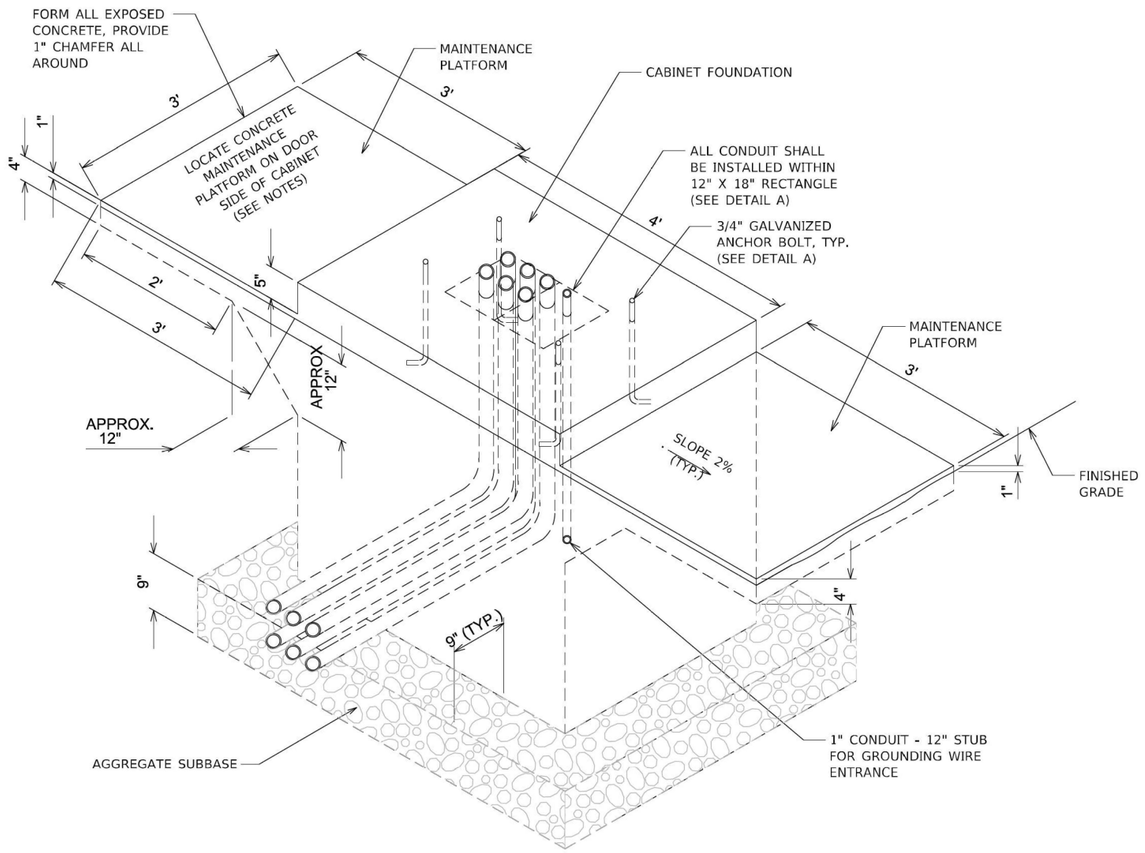

CONCRETE FOUNDATION FOR SURVEILLANCE CABINET MODEL 334 ELEVATION VIEW

NOTES:

1. INSTALL FOUR 3/4 INCH DIAMERTER X 12 INCH MINIMUM LENGTH APPROVED J-BOLTS TO ANCHOR THE CABINET BASES. THE ANCHOR BOLTS SHALL BE HOT-DIPPED GALVANIZED STEEL AND LOCATED AS SHOWN IN DETAIL A.
2. CONTROL CABINET BASE TOP SURFACES SHALL BE TROWEL FINISHED AND LEVEL. LEVELING OF TOP SURFACES AFTER CONCRETE BASE HAS CURED SHALL ONLY BE ACCOMPLISHED BY GRINDING.
3. REINFORCEMENT NOT SHOWN FOR CLARITY. CONTRACTOR SHALL INCLUDE HORIZANTAL AND VERTICAL REINFORCEMENT IN CONCRETE FOUNDATION WITH #5 U SHAPED BARS AT 9" MAX. SPACING AND LAPPED AT VERTICAL SURFACES FOR A DISTANCE OF 3'-3". REINFORCEMENT SHALL BE PLACED TO AVOID CONDUIT AND ANCHOR BOLTS. THE COST OF REINFORCEMENT SHALL BE INCLUDED IN THE UNIT PRICE OF CONCRETE FOUNDATION, SURVEILLANCE CABINET MODEL 334.
4. CONCRETE FORM DEPTH BELOW FINISHED GRADE SHALL BE 6" MAXIMUM. CONCRETE FORMS SHALL BE REMOVED AFTER CONCRETE HAS SET.
5. CONCRETE MAINTENANCE PLATFORM AND CABINET FOUNDATION FOR CABINET SHALL BE MONOLITHIC POUR.
6. WHEN REQUIRED TO CONNECT NONMETALLIC CONDUIT TO METALLIC CONDUIT, ONLY ADAPTER FITTINGS, U.L. LISTED FOR ELECTRICAL USE, SHALL BE USED.
7. CONDUIT HEIGHT ABOVE THE CONCRETE BASE SHALL BE 3 INCHES.
8. MINIMUM BENDING RADIUS OF CONDUIT = 6 X THE DIAMETER
9. ALL METALLIC CONDUIT ENDS SHALL BE REAMED AND THREADED.
10. PLUG ALL BELOW GRADE NONMETALLIC CONDUIT ENDS IN WHICH WIRE OR CABLE IS NOT BEING INSTALLED.
11. ALL CONDUIT ENDS AT THE TOP OF CONCRETE BASES SHALL BE CAPPED IF METALLIC OR PLUGGED IF NONMETALLIC IMMEDIATELY AFTER PLACEMENT AND BEFORE CONCRETE IS POURED. CONDUITS IN WHICH WIRE OR CABLE IS NOT BEING INSTALLED SHALL REMAIN CAPPED OR PLUGGED.
12. ALL METALLIC CONDUIT ENDS AT TOP OF CONCRETE BASES SHALL HAVE BUSHINGS AND ALL NONMETALLIC CONDUIT ENDS AT TOP OF CONCRETE BASES SHALL HAVE END BELLS.
13. REFER TO SPECIAL PROVISIONS FOR ADDITIONAL REQUIREMENTS.
14. THE CONTRACTOR SHALL INSTALL INSULATED BUSHINGS AND DUCT SEALANT AT ALL CONDUIT BEND TERMINATIONS IN FOUNDATIONS.
15. CONCRETE BASE TO BE FORMED AT LEAST 6" ABOVE THE GROUND SURFACE.
16. CAP ALL BELOW GRADE METALLIC CONDUIT ENDS IN WHICH WIRE OR CABLE IS NOT BEING INSTALLED.
17. AGGREGATE SUBBASE OF 9" DEPTH AND EXTENDING 9" BEYOND FACES OF CONCRETE BASE TO BE INSTALLED BELOW CONCRETE BASE. THE COST OF THE AGGREGATE SUBBASE SHALL BE INCLUDED IN THE UNIT PRICE OF CONCRETE FOUNDATION, SURVEILLANCE CABINET MODEL 334.

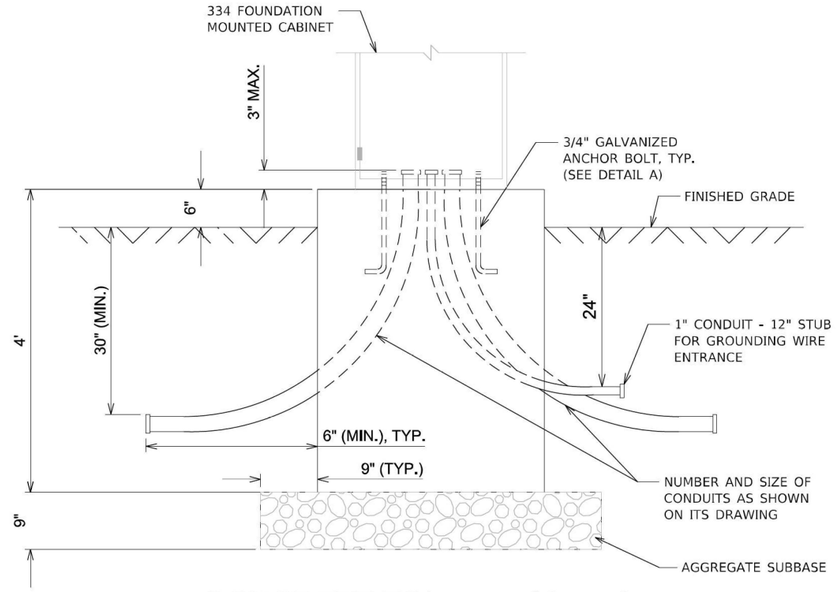

CONCRETE FOUNDATION FOR SURVEILLANCE CABINET MODEL 334 ELEVATION VIEW

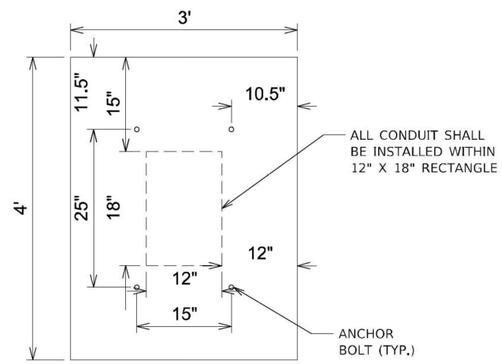

DETAIL A CABINET FOUNDATION ANCHOR BOLT AND CONDUIT LAYOUT

DATE PLOTTED = 3/19/2026 6:06:26 PM
PW TABLE = 0702.648.0.tbl
PLOT CONFIG = CGI-PDF.pltcfg
MODEL: $MODELNAMES
FILE NAME: pw://ciorba-pw.bentley.com:ciorba-pw-01/Documents/Projects/IL_DOT/D1/0021693.05/CADD Data/Shr/ITS/0021693.05-sht-ITS603.dgn

CiorbaGroup
8725 W. Higgins Rd, Ste 600, Chicago, IL 60631
P 773.775.4009 | www.ciorba.com

USER NAME = djohnson	DESIGNED - DTJ	REVISED -	
	DRAWN - DTJ	REVISED -	
PLOT SCALE = 0.16666667 ' / In.	CHECKED - JMV	REVISED -	
PLOT DATE = 3/19/2026	DATE - 03/18/2026	REVISED -	

STATE OF ILLINOIS
DEPARTMENT OF TRANSPORTATION

ITS DETAILS
CONCRETE FOUNDATION, SURVEILLANCE CABINET MODEL 334

SCALE: | SHEET OF SHEETS | STA. | TO STA.

F.A.I RTE.	SECTION	COUNTY	TOTAL SHEETS	SHEET NO.
290	(0404-316-HB) BR 24	MULTIPLE*	276	119
		CONTRACT NO. 62W99		
	ILLINOIS FED. AID PROJECT			

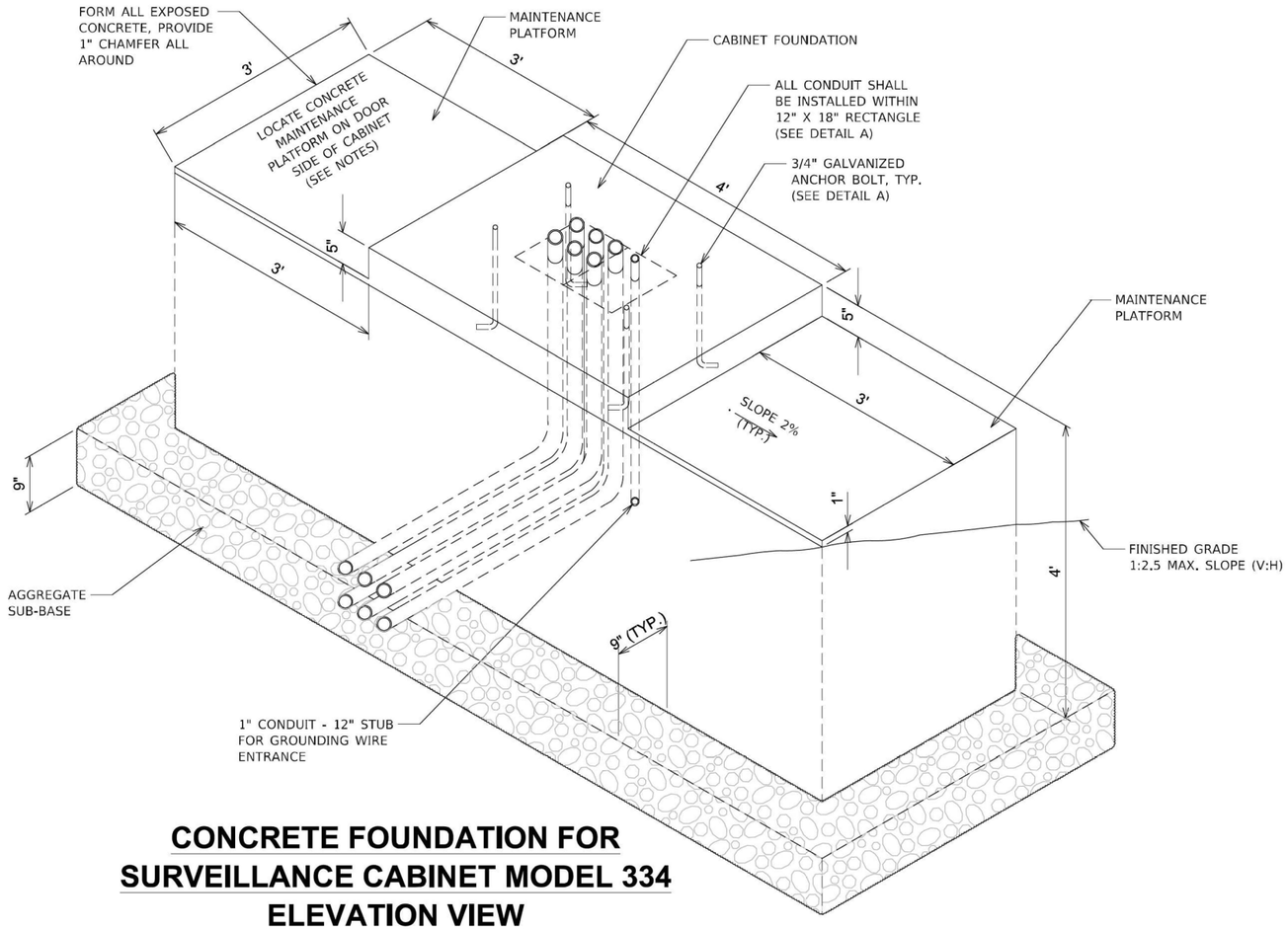

CONCRETE FOUNDATION FOR SURVEILLANCE CABINET MODEL 334 ELEVATION VIEW

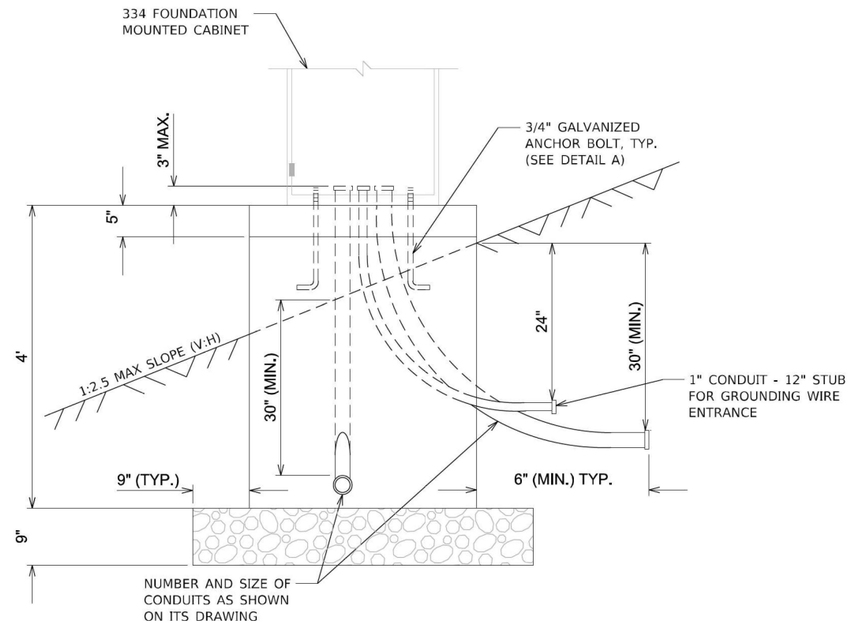

CONCRETE FOUNDATION FOR SURVEILLANCE CABINET MODEL 334 ELEVATION VIEW

NOTES:

1. INSTALL FOUR 3/4 INCH DIAMERTER X 12 INCH MINIMUM LENGTH APPROVED J-BOLTS TO ANCHOR THE CABINET BASES. THE ANCHOR BOLTS SHALL BE HOT-DIPPED GALVANIZED STEEL AND LOCATED AS SHOWN IN DETAIL A.
2. CONTROL CABINET BASE TOP SURFACES SHALL BE TROWEL FINISHED AND LEVEL. LEVELING OF TOP SURFACES AFTER CONCRETE BASE HAS CURED SHALL ONLY BE ACCOMPLISHED BY GRINDING.
3. REINFORCEMENT NOT SHOWN FOR CLARITY. CONTRACTOR SHALL INCLUDE HORIZANTAL AND VERTICAL REINFORCEMENT IN CONCRETE FOUNDATION WITH #5 U SHAPED BARS AT 9" MAX. SPACING AND LAPPED AT VERTICAL SURFACES FOR A DISTANCE OF 3'-3". REINFORCEMENT SHALL BE PLACED TO AVOID CONDUIT AND ANCHOR BOLTS. THE COST OF REINFORCEMENT SHALL BE INCLUDED IN THE UNIT PRICE OF CONCRETE FOUNDATION, SURVEILLANCE CABINET MODEL 334.
4. CONCRETE FORM DEPTH BELOW FINISHED GRADE SHALL BE 6" MAXIMUM. CONCRETE FORMS SHALL BE REMOVED AFTER CONCRETE HAS SET.
5. CONCRETE MAINTENANCE PLATFORM AND CABINET FOUNDATION FOR CABINET SHALL BE MONOLITHIC POUR.
6. WHEN REQUIRED TO CONNECT NONMETALLIC CONDUIT TO METALLIC CONDUIT, ONLY ADAPTER FITTINGS, U.L. LISTED FOR ELECTRICAL USE, SHALL BE USED.
7. CONDUIT HEIGHT ABOVE THE CONCRETE BASE SHALL BE 3 INCHES.
8. MINIMUM BENDING RADIUS OF CONDUIT = 6 X THE DIAMETER
9. ALL METALLIC CONDUIT ENDS SHALL BE REAMED AND THREADED.
10. PLUG ALL BELOW GRADE NONMETALLIC CONDUIT ENDS IN WHICH WIRE OR CABLE IS NOT BEING INSTALLED.
11. ALL CONDUIT ENDS AT THE TOP OF CONCRETE BASES SHALL BE CAPPED IF METALLIC OR PLUGGED IF NONMETALLIC IMMEDIATELY AFTER PLACEMENT AND BEFORE CONCRETE IS POURED. CONDUITS IN WHICH WIRE OR CABLE IS NOT BEING INSTALLED SHALL REMAIN CAPPED OR PLUGGED.
12. ALL METALLIC CONDUIT ENDS AT TOP OF CONCRETE BASES SHALL HAVE BUSHINGS AND ALL NONMETALLIC CONDUIT ENDS AT TOP OF CONCRETE BASES SHALL HAVE END BELLS.
13. REFER TO SPECIAL PROVISIONS FOR ADDITIONAL REQUIREMENTS.
14. THE CONTRACTOR SHALL INSTALL INSULATED BUSHINGS AND DUCT SEALANT AT ALL CONDUIT BEND TERMINATIONS IN FOUNDATIONS.
15. CONCRETE BASE TO BE FORMED AT LEAST 6" ABOVE THE GROUND SURFACE.
16. CAP ALL BELOW GRADE METALLIC CONDUIT ENDS IN WHICH WIRE OR CABLE IS NOT BEING INSTALLED.
17. AGGREGATE SUBBASE OF 9" DEPTH AND EXTENDING 9" BEYOND FACES OF CONCRETE BASE TO BE INSTALLED BELOW CONCRETE BASE. THE COST OF THE AGGREGATE SUBBASE SHALL BE INCLUDED IN THE UNIT PRICE OF CONCRETE FOUNDATION, SURVEILLANCE CABINET MODEL 334.

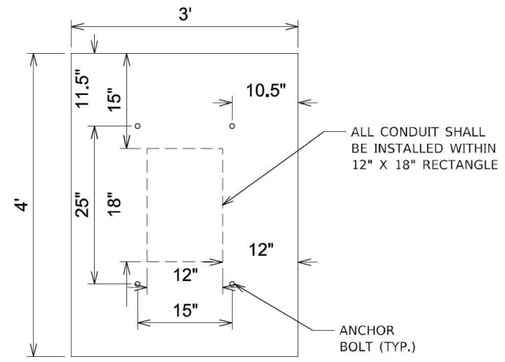

DETAIL A CABINET FOUNDATION ANCHOR BOLT AND CONDUIT LAYOUT

DATE PLOTTED = 3/19/2026 6:06:45 PM
PRINTER NAME = PDF2IMAGE.SS.NJ
PLOT CONFIG = CGI-PDF.pltcfg
MODEL: $MODELNAME$
FILE NAME: pw:\\ciorba-pw.bentley.com:ciorba-pw-01\Documents\Projects\IL_DOT\D1\0021693.05\CADD Data\Shts\ITS\0021693.05-ahl-ITS604.dgn

CiorbaGroup
8725 W. Higgins Rd, Ste 600, Chicago, IL 60631
P 773.775.4009 | www.ciorba.com

USER NAME = djohnson	DESIGNED - DTJ	REVISED -	
	DRAWN - DTJ	REVISED -	
PLOT SCALE = 0.16666667 ' / In.	CHECKED - JMV	REVISED -	
PLOT DATE = 3/19/2026	DATE - 03/18/2026	REVISED -	

STATE OF ILLINOIS
DEPARTMENT OF TRANSPORTATION

ITS DETAILS
CONCRETE FOUNDATION, SURVEILLANCE CBINET MODEL 334

SCALE: | SHEET OF SHEETS | STA. TO STA.

F.A.I RTE.	SECTION	COUNTY	TOTAL SHEETS	SHEET NO.
290	(0404-316-HB) BR 24	MULTIPLE*	276	120
		CONTRACT NO. 62W99		
	ILLINOIS FED. AID PROJECT			

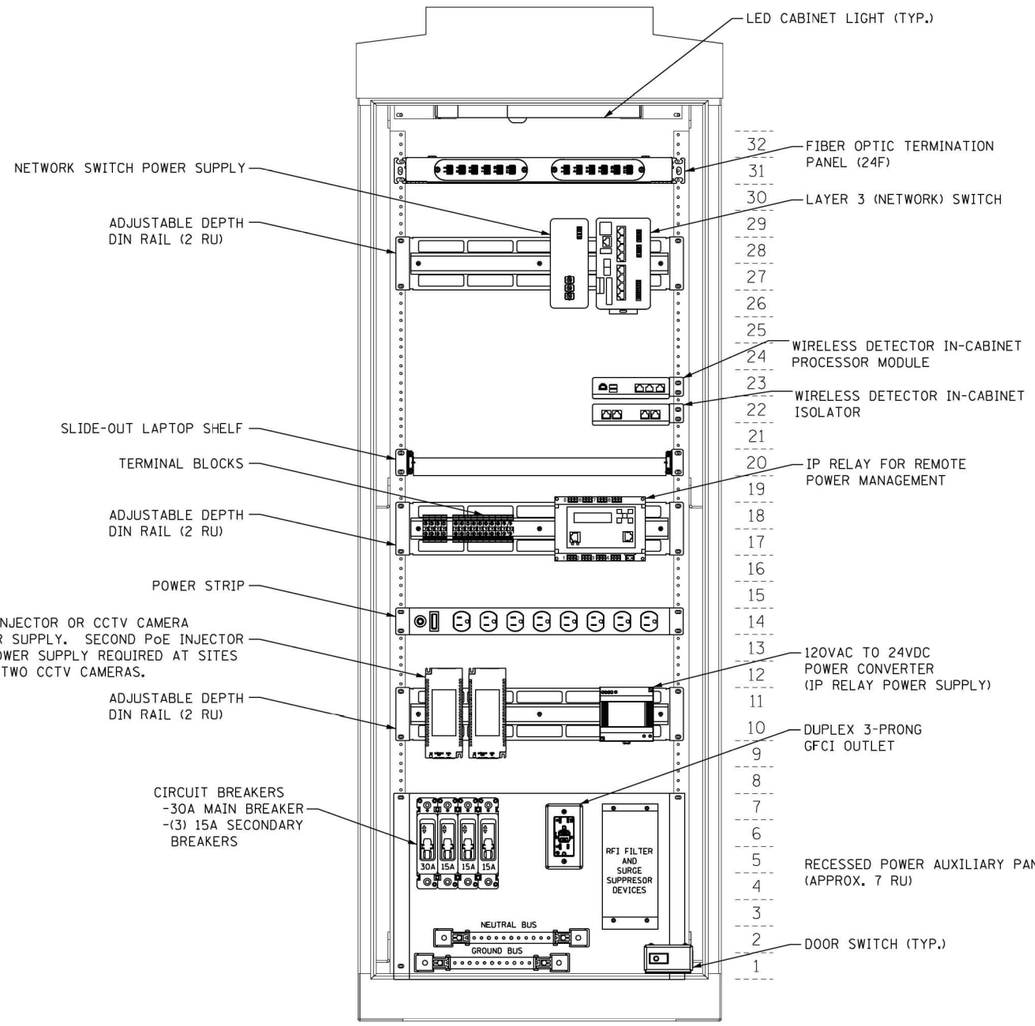

CCTV AND WIRELESS VEHICLE DETECTION SYSTEM SUGGESTED CABINET LAYOUT

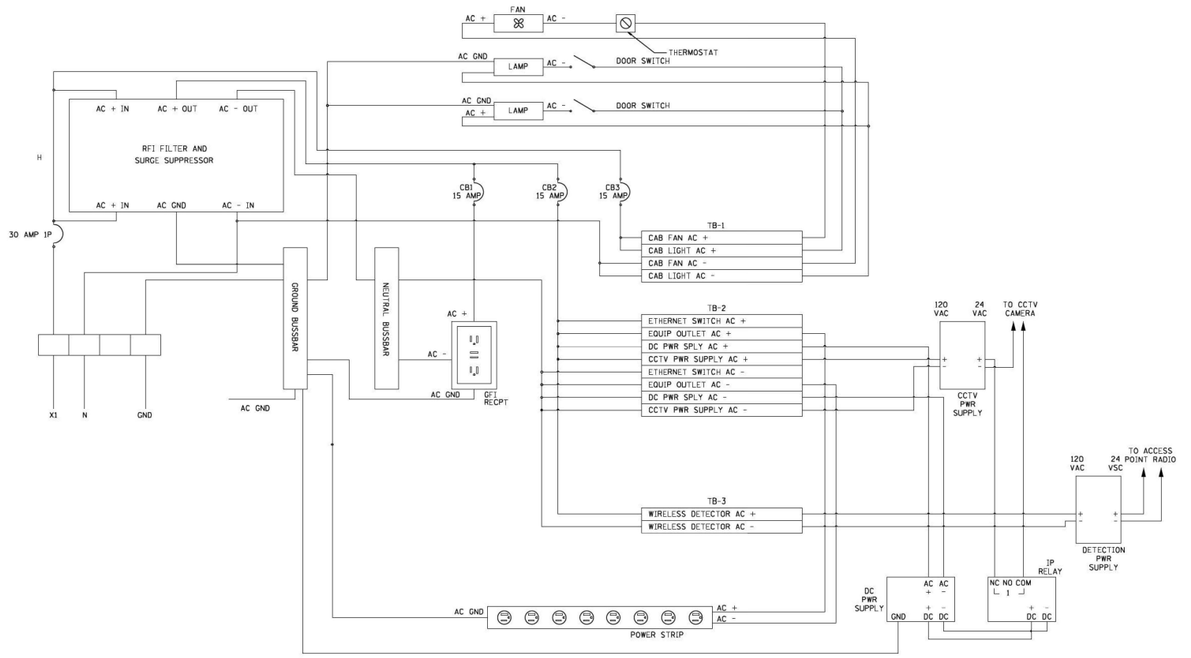

CABINET POWER DISTRIBUTION SINGLE LINE DIAGRAM

NOTES:

1. CONTRACTOR SHALL BE RESPONSIBLE FOR FINAL CABINET LAYOUT. AUXILIARY PANEL SIZING SHALL BE COORDINATED WITH CABINET MANUFACTURER.
2. CABINET FAN AND THERMOSTAT NOT SHOWN FOR CLARITY. CABINET MANUFACTURER SHALL DETERMINE FINAL LOCATIONS.
3. POWER DISTRIBUTION SINGLE LINE DIAGRAM SHOWS POWER CONFIGURATION FOR CCTV CAMERAS WITH SEPARATE POWER SUPPLY. CONTRACTOR SHALL ADJUST POWER WIRING AS REQUIRED FOR A POE CCTV CAMERA.

DATE PLOTTED = 3/19/2026 6:07:03 PM
PEN TABLE = 0021693.05.tbl
PLOT CONFIG = CGI-PDF.pltcfg
MODEL: $MODELNAME$
FILE NAME: pw://ciorba-pw.bentley.com:ciorba-pw-01/Documents/Projects/IL_DOT/D1/0021693.05/CADD Data/Sht/ITS/0021693.05-sht-ITS605.dgn

CiorbaGroup
8725 W. Higgins Rd, Ste 600, Chicago, IL 60631
P 773.775.4009 | www.ciorba.com

USER NAME = djohnson	DESIGNED - DTJ	REVISED -	
	DRAWN - DTJ	REVISED -	
PLOT SCALE = 0.16666667 ' / In.	CHECKED - JMV	REVISED -	
PLOT DATE = 3/18/2026	DATE - 03/18/2026	REVISED -	

STATE OF ILLINOIS
DEPARTMENT OF TRANSPORTATION

ITS DETAILS
CCTV AND WIRELESS VEHICLE DETECTION SYSTEM

SCALE: SHEET OF SHEETS STA. TO STA.

F.A.I RTE.	SECTION	COUNTY	TOTAL SHEETS	SHEET NO.
290	(0404-316-HB) BR 24	MULTIPLE*	276	121
		CONTRACT NO. 62W99		
		ILLINOIS	FED. AID PROJECT	

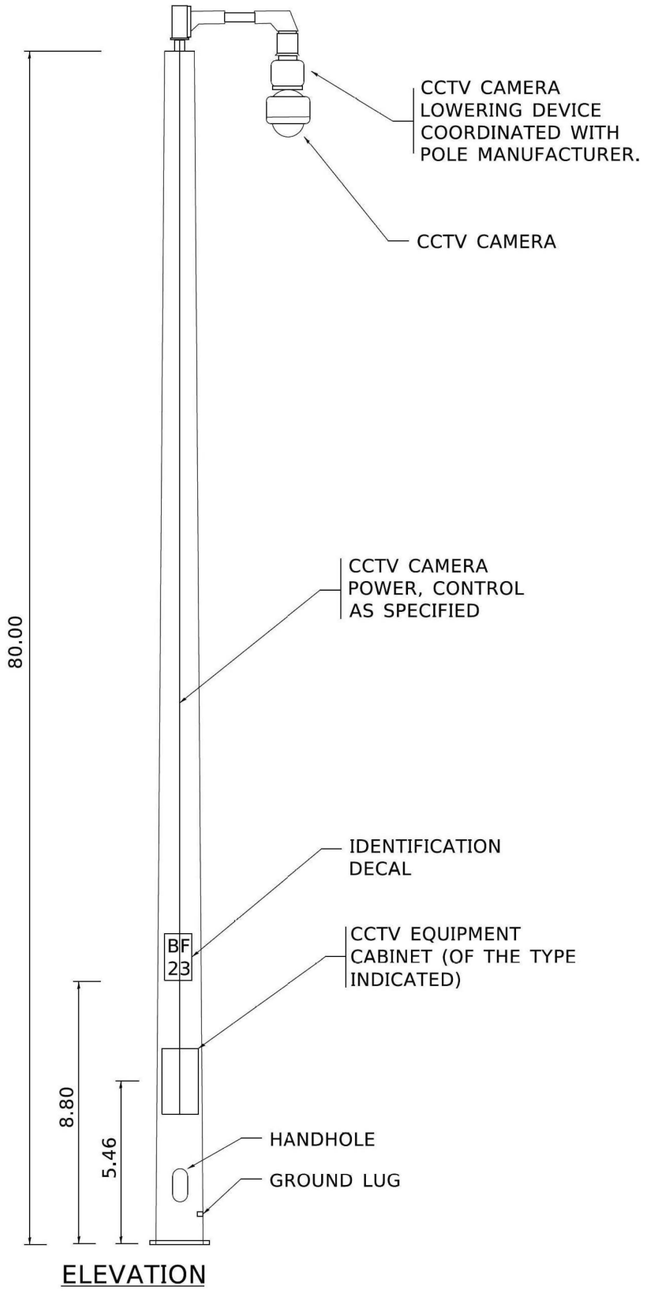

ELEVATION

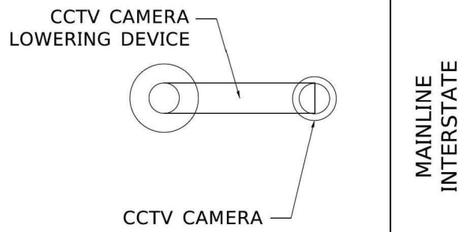

TOP VIEW

GENERAL NOTES:

1. LOCATIONS OF THE CCTV CAMERA INSTALLATIONS ARE APPROXIMATE. THE CONTRACTOR MAY ADJUST THE LOCATIONS OF THE INSTALLATIONS TO FACILITATE INSTALLATION WITH WRITTEN APPROVAL OF THE RESIDENT ENGINEER AND THE ELECTRICAL DESIGN SECTION. ALL STANDARD NON-FRANGIBLE SETBACK REQUIREMENTS AS WELL AS CLEAR ZONE REQUIREMENTS SHALL BE MAINTAINED.
2. THE POLE SHALL BE A MAXIMUM OF THREE SECTIONS FOR FIELD ASSEMBLY.
3. THE POLE SHAFTS SHALL BE A ROUND CROSS SECTION. THE BOTTOM SECTION SHALL HAVE A MINIMUM .3125 WALL THICKNESS AND A MINIMUM DIAMETER THE TOP AND BOTTOM TO PREVENT CONDENSATION BUILDUP ON THE INTERIOR OF THE POLE SHAFT.
4. CABLE SUPPORTS SHALL BE PROVIDED FOR ALL CABLES INSIDE OF POLE SO THAT NO CABLE LOADING IS EXCEEDED. CALCULATIONS SHALL BE SUBMITTED FOR THE CABLES BEING FURNISHED.
5. ALL EQUIPMENT SHALL BE GROUNDED.
6. DOCUMENTATION SHALL BE SUBMITTED THAT THE POLE IS FULLY COORDINATED WITH THE CAMERA LOWERING DEVICE.
7. ALL CABLES, INCLUDING LOWERING DEVICE CABLES, SHALL BE WITHIN THE POLE SHAFT. EXTERNAL CABLING WILL NOT BE PERMITTED.
8. UNLESS OTHERWISE INDICATED, OR AS DIRECTED BY THE ENGINEER, THE CAMERA LOWERING DEVICE SHALL BE ORIENTED PERPENDICULAR TO THE MAINLINE INTERSTATE FOR THE LEAST OBSTRUCTED VIEW OF THE INTERSTATE ROADWAY.

MATERIAL REQUIREMENTS		
COMPONENT	ASTM DESIGNATION	MIN. YIELD (KSI)
POLE SHAFT	A572, OR A1011	50
BASE PLATE	A572, OR A1011	50
POLE TOP PLATE	A572, OR A1011	50
ANCHOR BOLTS	F1554	55
GALVANIZING, STRUCTURE	A123	N/A
GALVANIZING, HARDWARE	A153	N/A

DATE PLOTTED = 3/19/2026 8:07:22 PM
PLOT NAME = 0021693.05.tbl
PLOT CONFIG = CGI-PDF.pltcfg
MODEL: $MODELNAMES
FILE NAME: pw://ciorba-pw.bentley.com:ciorba-pw-01/Documents/Projects/IL_DOT/D1/0021693.05/CADD Data/Sht/ITS/0021693.05-sht-ITS606.dgn

CiorbaGroup
8725 W. Higgins Rd, Ste 600, Chicago, IL 60631
P 773.775.4009 | www.ciorba.com

USER NAME = djohnson	DESIGNED - DTJ	REVISED -	STATE OF ILLINOIS DEPARTMENT OF TRANSPORTATION	ITS DETAILS CCTV CAMERA STRUCTURE, 80 FT. MOUNTING HEIGHT
	DRAWN - DTJ	REVISED -		
PLOT SCALE = 0.16666667 ' / In.	CHECKED - JMV	REVISED -		
PLOT DATE = 3/18/2026	DATE - 03/18/2026	REVISED -		SCALE: SHEET OF SHEETS STA. TO STA.

F.A.I RTE.	SECTION	COUNTY	TOTAL SHEETS	SHEET NO.
290	(0404-316-HB) BR 24	MULTIPLE*	276	122
		CONTRACT NO. 62W99		
	ILLINOIS FED. AID PROJECT			

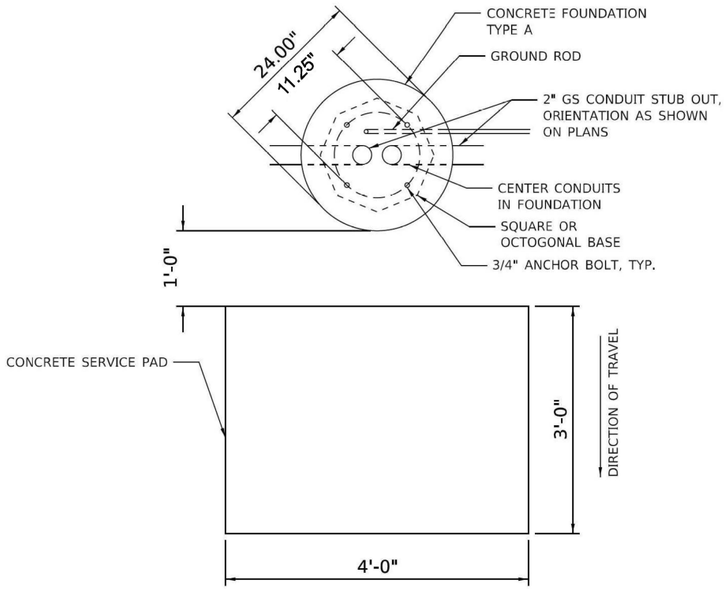

TOP VIEW
TYPE A FOUNDATION FOR SERVICE PEDESTAL

NOTES

1. TOP VIEW FOR CONCRETE FOUNDATIONS, TYPE A AND E SHOWN ON THIS SHEET ARE FOR INFORMATION ONLY ON CONDUITS ENERTING FOUNDATION AND ANOCHOR BOLT CIRCLE DIMENSIONS REQUIRED FOR EQUIPMENT INSTALLATION. FOR FURTHER FOUNDATION DETAILS, SEE HIGHWAY STANDARD 878001-11 (CONCRETE FOUNDATION DETAILS).

DATE PLOTTED = 4/30/2026 10:24:03 PM
PEN TABLE = 0703_6400_10.tbl
PLOT CONFIG = CGI-PDF.pltcfg
MODEL: $MODELNAMES
FILE NAME: pw://ciorba-pw.bentley.com:ciorba-pw-01/Documents/Projects/IL_DOT/D1/0021693.05/CADD Data/Shr/ITS/D162W99-sht-ITS607.dgn

CiorbaGroup
8725 W. Higgins Rd, Ste 600, Chicago, IL 60631
P 773.775.4009 | www.ciorba.com

USER NAME = amarotta	DESIGNED - DTJ	REVISED -	
	DRAWN - DTJ	REVISED -	
PLOT SCALE = 0.16666667 ' / In.	CHECKED - JMV	REVISED -	
PLOT DATE = 3/27/2026	DATE - 03/18/2026	REVISED -	

STATE OF ILLINOIS
DEPARTMENT OF TRANSPORTATION

ITS DETAILS
CONCRETE FOUNDATIONS

SCALE: | SHEET OF SHEETS | STA. | TO STA.

F.A.I RTE.	SECTION	COUNTY	TOTAL SHEETS	SHEET NO.
290	(0404-316-HB) BR 24	MULTIPLE*	276	123
		CONTRACT NO. 62W99		
	ILLINOIS FED. AID PROJECT			

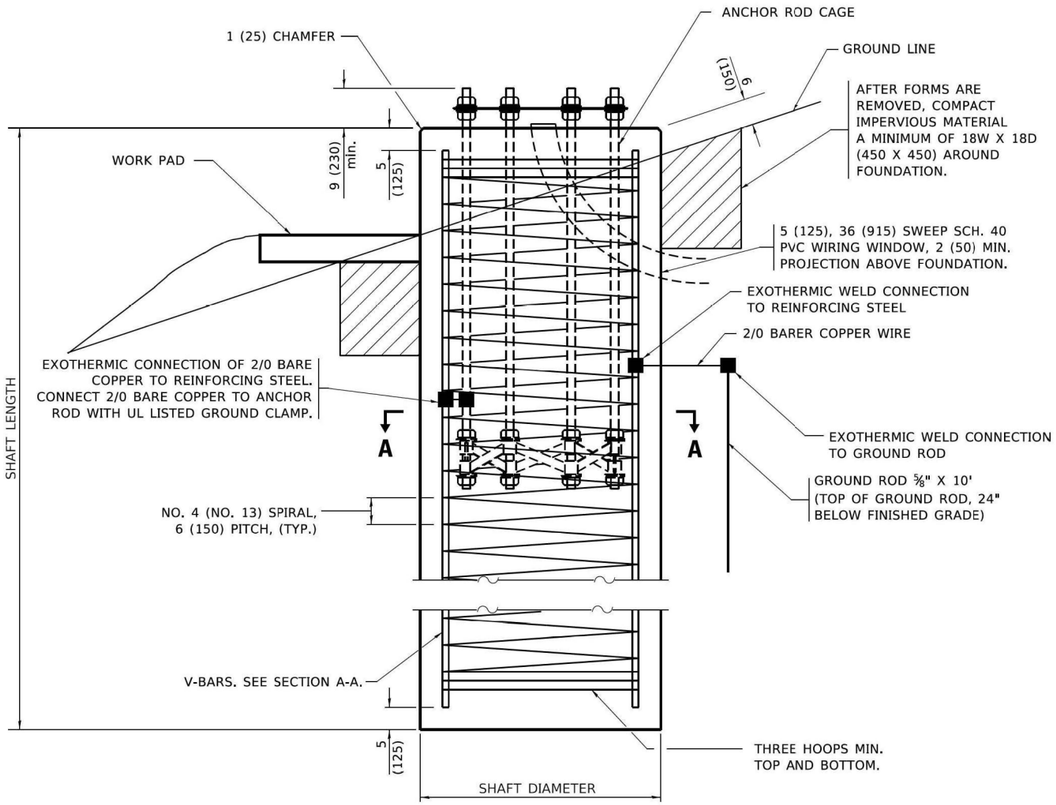

FOUNDATION ELEVATION

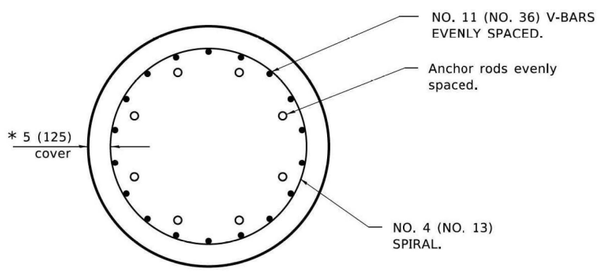

SECTION A–A

* SEE ROD AND REINFORCEMENT TABLE.

SHAFT LENGTH TABLE

		AVERAGE STRENGTH	HEIGHT
SOIL CONSISTENCY		Qu in tsf (Qu in kPa)	80' (24 m)
Cohesive	SOFT	< 0.5 (< 50)	20'-6" (6.2 m)
	MEDIUM	0.5 to 1 (50 to 100)	17'-0" (5.1 m)
	STIFF	1 to 2 (100 to 200)	14'-6" (4.4 m)
	VERY STIFF	2 to 4 (200 to 400)	13'-0" (3.8 m)
	HARD	> 4 (> 400)	11'-6" (3.5 m)
		N in BLOWS/FT. (N in BLOWS/0.3m)	
Granular	VERY LOOSE	< 5 (< 5)	16'-6" (5.0 m)
	LOOSE	5 to 10 (5 to 10)	15'-0" (4.6 m)
	MEDIUM	10 to 25 (10 to 25)	14'-6" (4.4 m)
	DENSE	25 to 50 (25 to 50)	14'-0" (4.1 m)
	VERY DENSE	> 50 (> 50)	13'-0" (3.9 m)

DATE PLOTTED = 3/19/2026 6:08:00 PM
PEN TABLE = 0021693.05.tbl
PLOT CONFIG = CGI-PDF.pltcfg
MODEL: $MODELNAMES
FILE NAME: pw://ciorba-pw.bentley.com:ciorba-pw-01/Documents/Projects/IL_DOT/D1/0021693.05/CADD Data/Sht/ITS/0021693.05-sht-ITS608.dgn

CiorbaGroup
8725 W. Higgins Rd, Ste 600, Chicago, IL 60631
P 773.775.4009 | www.ciorba.com

USER NAME = djohnson	DESIGNED - DTJ	REVISED -	
	DRAWN - DTJ	REVISED -	
PLOT SCALE = 0.16666667 ' / In.	CHECKED - JMV	REVISED -	
PLOT DATE = 3/18/2026	DATE - 03/18/2026	REVISED -	

STATE OF ILLINOIS
DEPARTMENT OF TRANSPORTATION

CCTV CAMERA STRUCTURE, 80 FT. MOUNTING HEIGHT FOUNDATION, SHEET 1 OF 2

SCALE: SHEET OF SHEETS STA. TO STA.

F.A.I RTE.	SECTION	COUNTY	TOTAL SHEETS	SHEET NO.
290	(0404-316-HB) BR 24	MULTIPLE*	276	124
		CONTRACT NO. 62W99		
		ILLINOIS FED. AID PROJECT		

ROD AND REINFORCEMENT TABLE					
TOWER HEIGHT	ANCHOR ROD DIAM. (MIN)	ROD CIRCLE DIAM. (MIN)	TOWER BASE DIAM. (MIN)	DRILLED SHAFT DIAM. (1)	V BAR QTY.
80' (25 m)	1½ (38)	30 (760)	24 (610)	4'-0" (1.2 m)	14

(1) DIAMETER BASED ON A 5 (125) CONC. COVER. THE MIN. COVER SHALL BE 3 (75) IN DRY SHAFT EXCAVATION AND 4 (100) IN A WET HOLE. WHEN ROCK IS ENCOUNTERED A 5 (125) COVER AGAINST SOIL AND A 2 (50) COVER AGAINST ROCK SHALL BE REQUIRED.

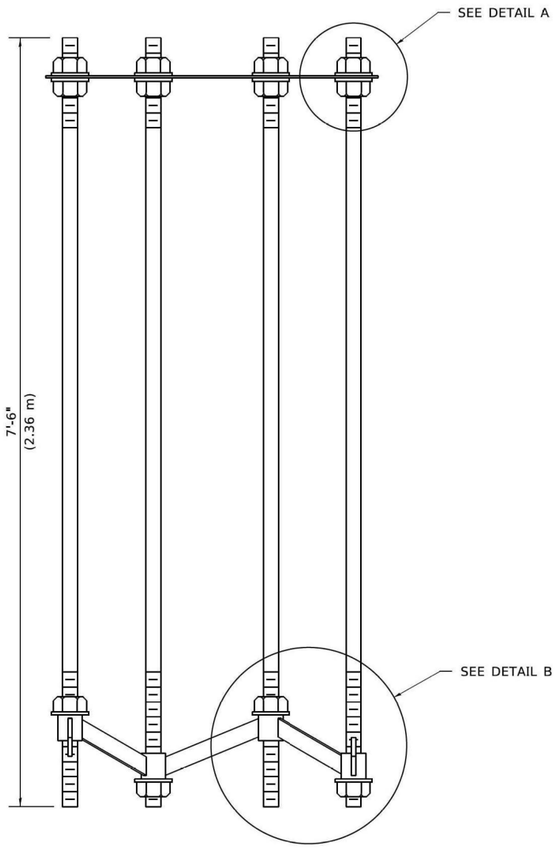

SECTION B–B

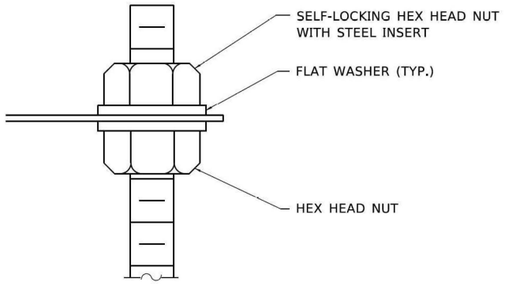

DETAIL A

GENERAL NOTES:

1. ANCHOR ROD QUANTITY, DIAMETER, AND LENGTH SHALL BE DETERMINED BY THE CCTV STRUCTURE MANUFACTURER AND APPROVED BY THE ENGINEER. EACH FOUNDATION SHALL HAVE A MINIMUM OF 8 ANCHOR RODS.
2. ALL FOUNDATION REINFORCEMENT STEEL SHALL BE EPOXY COATED.
3. THE COST OF REINFORCEMENT SHALL BE INCLUDED IN THE COST OF THE FOUNDATION.
4. STEEL ANCHOR ROD FORMS SHALL NOT BE REMOVED FOR A MINIMUM OF 3 DAYS AFTER CONCRETE IS POURED. THE TOWER SHALL NOT BE SET FOR A MINIMUM OF 7 DAYS OR AS APPROVED BY THE ENGINEER.
5. COORDINATE THE ROD CIRCLE DIAMETER OF THE STRUCTURE WITH THE DIAMETER OF THE ANCHOR ROD CAGE.
6. THE FOUNDATION SHALL BE POURED MONOLITHICALLY AND SHALL HAVE NO CONSTRUCTION JOINTS.
7. GROUNDING ELECTRODES SHALL BE INSTALLED IN AN ACCESS WELL WHEN THERE IS A CONFLICT IN USING THE METHOD SHOWN.
8. ALL DIMENSIONS ARE IN INCHES (MILLIMETERS) UNLESS OTHERWISE SHOWN.

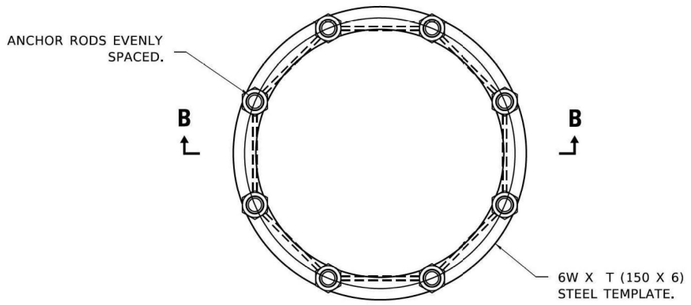

ANCHOR ROD CAGE (PLAN)

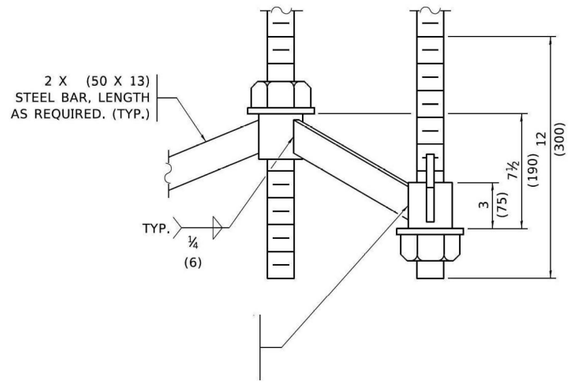

DETAIL B

DATE PLOTTED = 3/19/2026 6:08:19 PM
PEN TABLE = 0021693.05.tbl
PLOT CONFIG = CGI-PDF.pltcfg
MODEL: $MODELNAMES
FILE NAME: pw://ciorba-pw.bentley.com:ciorba-pw-01/Documents/Projects/IL_DOT/D1/0021693.05/CADD Data/Sht/ITS/0021693.05-sht-ITS609.dgn

CiorbaGroup
8725 W. Higgins Rd, Ste 600, Chicago, IL 60631
P 773.775.4009 | www.ciorba.com

USER NAME = djohnson	DESIGNED -	REVISED -	
	DRAWN - DTJ	REVISED -	
PLOT SCALE = 0.16666667 ' / In.	CHECKED - JMV	REVISED -	
PLOT DATE = 3/18/2026	DATE - 03/18/2026	REVISED -	

STATE OF ILLINOIS
DEPARTMENT OF TRANSPORTATION

CCTV CAMERA STRUCTURE, 80 FT. MOUNTING HEIGHT FOUNDATION, SHEET 2 OF 2

SCALE: SHEET OF SHEETS STA. TO STA.

F.A.I RTE.	SECTION	COUNTY	TOTAL SHEETS	SHEET NO.
290	(0404-316-HB) BR 24	MULTIPLE*	276	125
		CONTRACT NO. 62W99		
		ILLINOIS	FED. AID PROJECT	

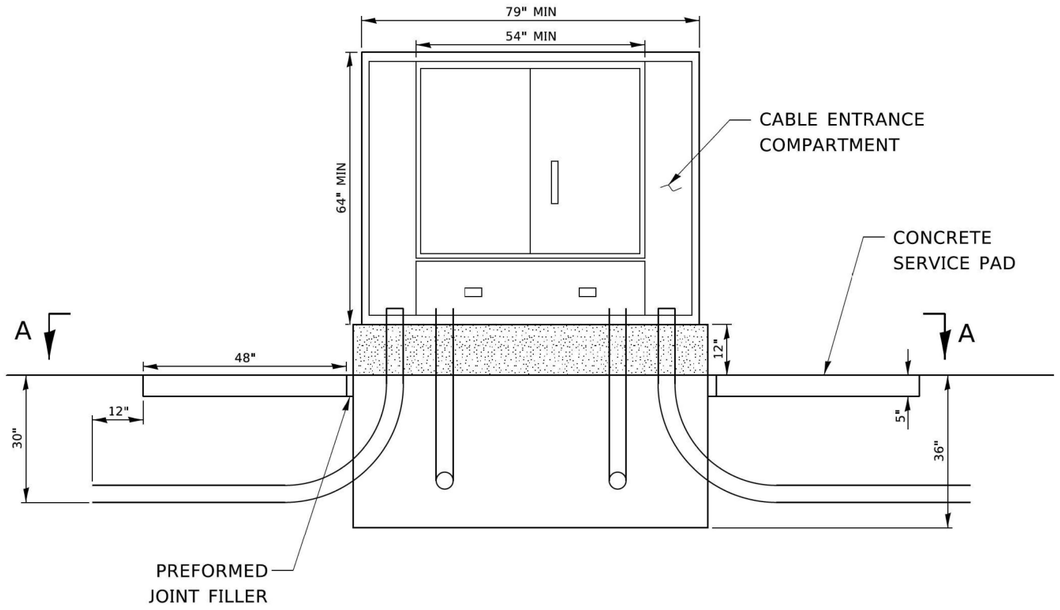

ELEVATION VIEW

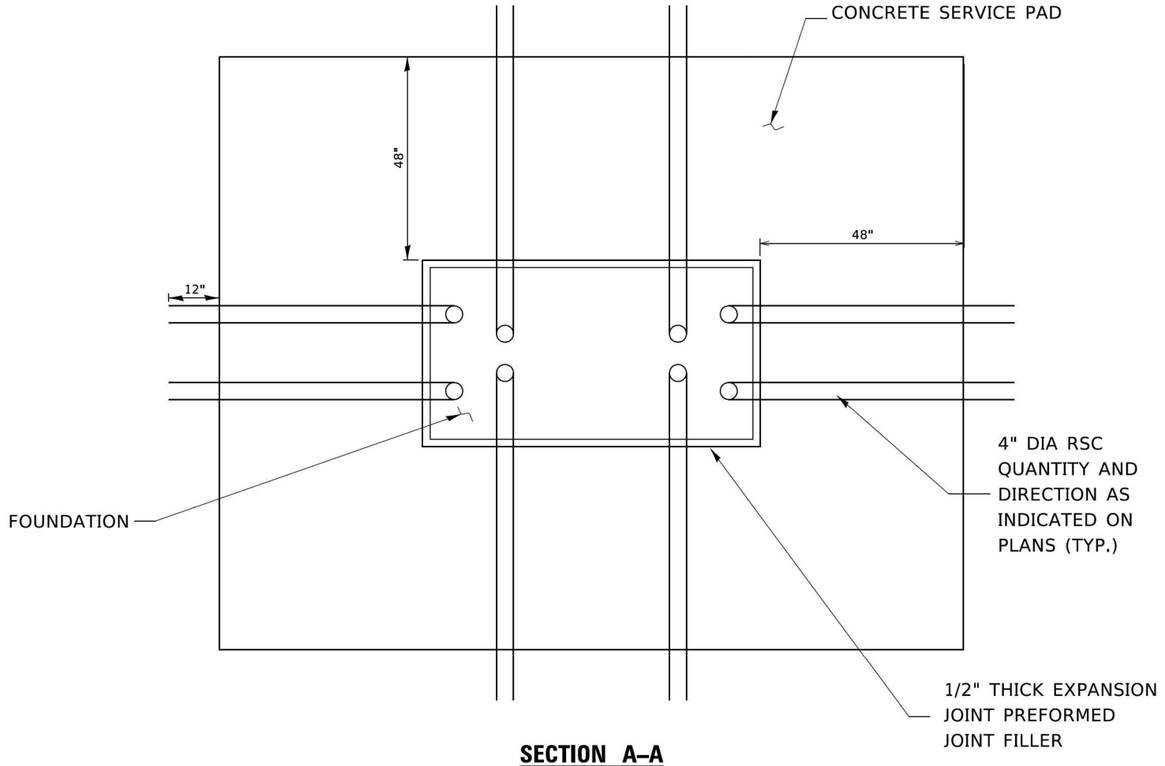

SECTION A–A

NOTES:

CABINET:
ALUMINUM 5052-H32

HARDWARE:
TYPE 304 STAINLESS STEEL

FINISH:
POLYESTER POWDER COATED GRAY

RACKS:
3/16" STEEL E.I.A. / T.I.A. SPACING (10-32 THREADS)

DOORS:
3 POINT LATCH, LATCH CONTROL SWITCH, PIANO HINGE, WIND STOP

CABLE ENTRANCE COMPARTMENT:
FOUR SLACK STORAGE BRACKETS WITH HEAVY DUTY VELCRO STRAPS TO SECURE CABLES, TWO ENTRY HOLES FOR BRINGING CABLES INTO THE MAIN CABINET

MAIN CABINET:
2-9"-23" ADJUSTABLE WIDTH RACKS, ADJUSTABLE FRONT TO REAR POSITION (43" TALL)
2-19"-23" ADJUSTABLE WIDTH RACKS, SWING OUT (40" TALL)
166" OF TOTAL INCHES OF RACK SPACE (95 RU)
4-15" WATT SHATTER-SHIELD LIGHT FIXTURES

DATE PLOTTED = 3/19/2026 6:08:35 PM
PEN TABLE = 0021693.05.tbl
PLOT CONFIG = CGI-PDF.pltcfg
MODEL: $MODELNAME$
FILE NAME: pw://ciorba-pw.bentley.com:ciorba-pw-01/Documents/Projects/IL_DOT/D1/0021693.05/CADD Data/Sht/ITS/0021693.05-sht-ITS611.dgn

CiorbaGroup
8725 W. Higgins Rd, Ste 600, Chicago, IL 60631
P 773.775.4009 | www.ciorba.com

USER NAME = djohnson	DESIGNED - DTJ	REVISED -	
	DRAWN - DTJ	REVISED -	
PLOT SCALE = 0.16666667 ' / In.	CHECKED - JMV	REVISED -	
PLOT DATE = 3/19/2026	DATE - 03/18/2026	REVISED -	

STATE OF ILLINOIS
DEPARTMENT OF TRANSPORTATION

ITS DETAILS
FIBER OPTIC INTERCONNECT CABINET

SCALE: | SHEET OF SHEETS | STA. TO STA.

F.A.I RTE.	SECTION	COUNTY	TOTAL SHEETS	SHEET NO.
290	(0404-316-HB) BR 24	MULTIPLE*	276	126
		CONTRACT NO. 62W99		
		ILLINOIS	FED. AID PROJECT	

Existing Structure:
SN 016-0982 built in 1969, Section S-0404-313-HB as FAI Rte. 290. Structure consists of a R.C. deck supported on three span steel plate girder bridge with 238'-4" back-to-back abutments, 74'-1 3/4" out-to-out deck with stub type abutments on concrete piles and multi-column piers on creosoted piles. In 1989, expansion joints replaced, backwall repairs, and approaches rebuilt. In, 1995, overlay replacement, expansion joints replaced, deck slab repairs, pin and connection replacement, and substructure repairs. In 2002, expansion joints replaced, pin and connection replacement, superstructure and substructure widening. In 2003, expansion joints replaced, substructure replacement, substructure widening, slopewall replacement, and substructure repairs. In 2010, expansion joints replaced.

Traffic will be maintained utilizing staged construction.

No Salvage.

SCOPE OF WORK

1. Perform partial deck slab repair.
2. Clean all existing drainage scuppers and flush downspouts.
3. Perform spalled and delaminated concrete repairs S. & N. abutments, piers 1 & 2.
4. Remove and replace slope wall panels.
5. Clean mud and debris at the toe of S. & N. slope walls.

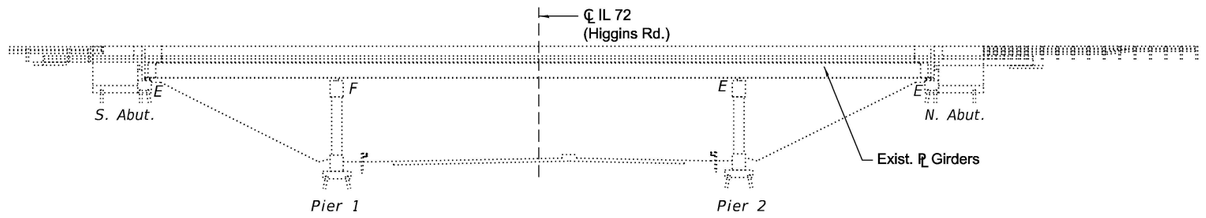

ELEVATION

LOADING HS 20-44
No future wearing surface allowed

DESIGN SPECIFICATIONS
2002 AASHTO LRFD Bridge Design Specifications, 17th, Edition

DESIGN STRESSES
FIELD UNITS
f'c = 4,000 psi (Superstructure)
f'c = 3,500 psi (Substructure)
fy = 60,000 psi (Reinforcement)

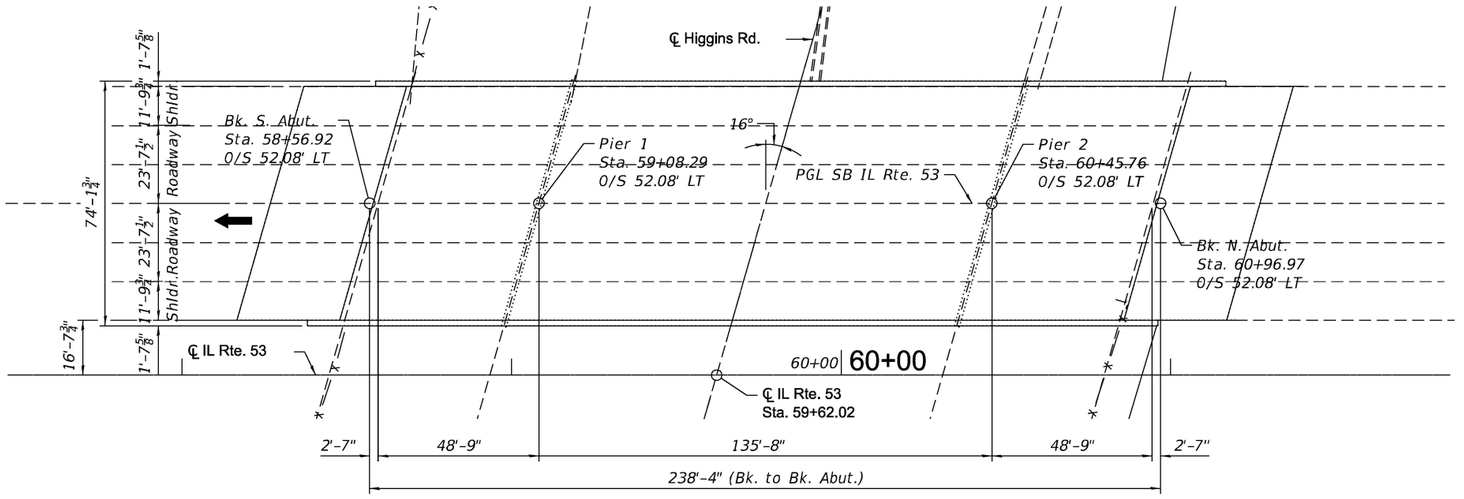

PLAN

Stations Increase

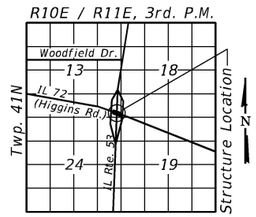

LOCATION SKETCH

Signature
Date 4/29/26
Exp. Date 11/30/26

GENERAL PLAN AND ELEVATION
IL RTE. 53 OVER
IL 72 (HIGGINS RD.)
SECTION 2017-065BR
COOK COUNTY
STATION 59+62.02
STRUCTURE NO. 016-0982

SA-01

MODEL: Default
FILE NAME: W:\24001656.05\IDOT Dist 1 IL 290 Mill and Overlay\CADD Data\Bridge\ORD-CADD Structural\016-0982 SB IL-53_I-290 Over IL-72_Higgins Rd\016-0982-01-GPE.dgn

IMEG
401 E. STATE ST. 4th Floor ROCKFORD, IL 61104 PH: 815.965.6400 www.imegcorp.com

USER NAME = Michael.A.Phares	DESIGNED - Patrick Pauser	REVISED -
	DRAWN - Patrick Pauser	REVISED -
	CHECKED - Ali Gharamti	REVISED -
PLOT DATE = 4/28/2026	DATE - 4/28/2026	REVISED -

STATE OF ILLINOIS
DEPARTMENT OF TRANSPORTATION

I-290 SOUTHBOUND
STRUCTURE NO. 016-0982

SCALE: | SHEET SA-01 OF SA-08 SHEETS | STA. | TO STA.

F.A.I. RTE.	SECTION	COUNTY	TOTAL SHEETS	SHEET NO.
290	(0404-316-HB) BR 24	COOK	276	127
		CONTRACT NO. 62W99		
	ILLINOIS	FED. AID PROJECT		

GENERAL NOTES

1. Plan dimensions and details relative to existing structure have been taken from existing plans and are subject to nominal construction variations. The Contractor shall field verify dimensions and details affecting new construction and make necessary approved adjustments prior to construction or ordering of materials. Such variations shall not be cause for additional compensation for a change in scope of the work, however, the Contractor will be paid for the quantity actually furnished at the unit price bid for the work.
2. Reinforcement bars designated (E) shall be epoxy coated.
3. Prior to pouring the new concrete deck, all heavy or loose rust, loose mill scale, and other loose or potentially detrimental foreign material shall be removed from the surfaces in contact with concrete. Tightly adhered paint may remain unless otherwise noted. Removal shall be accomplished by methods that will not damage the steel and the cost will be included in the pay item covering removal of the existing concrete.
4. Existing reinforcement extended into the removal area shall be cleaned, straightened and incorporated into the new construction. Any reinforcement bars that are damaged during concrete removal operations shall be replaced using an approved bar splicer or anchorage system at the Contractor's expense.
5. All Construction joints shall be bonded.
6. No field welding is permitted except as specified in the contract documents.
7. Stations and offsets called out on the plans are approximate. The Contractor shall field verify the stations and offsets during construction layout.

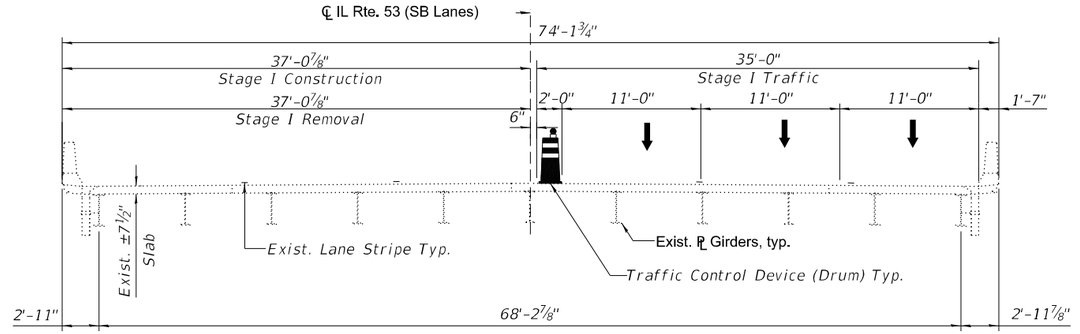

S.B. STAGE I CONSTRUCTION

(Looking North)
(At Rt L's to ℄ IL Rte. 53)

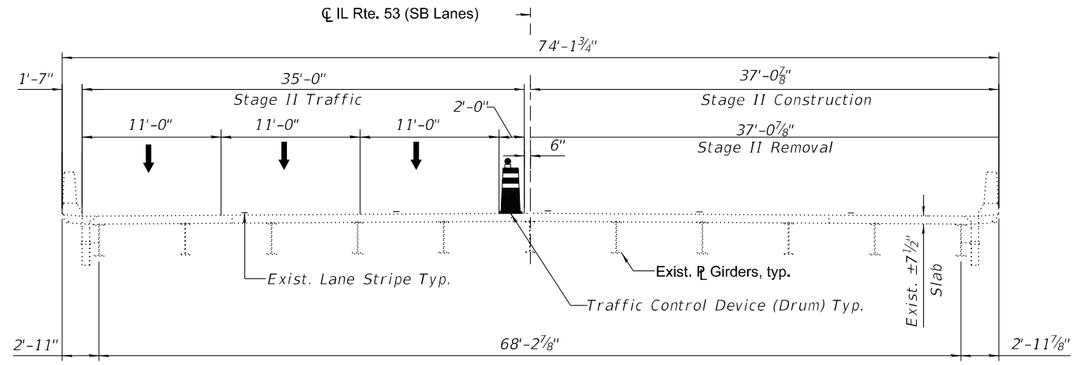

S.B. STAGE II CONSTRUCTION

(Looking North)
(At Rt L's to ℄ IL Rte. 53)

INDEX OF SHEETS

SA-01 General Plan and Elevation

SA-02 General Notes, Bill of Materials and Stage Construction Details

SA-03 Deck Repair Plan

SA-04 South Abutment Repair Plan

SA-05 North Abutment Repair Plan

SA-06 South Pier 1 Repair Plan

SA-07 North Pier 2 Repair Plan

SA-08 Slope wall Repair Plan

TOTAL BILL OF MATERIAL

ITEM	UNIT	SUPER	SUB	TOTAL
Structural Repair of Concrete (Depth Equal to or less than 5")	Sq. Ft.	0	341	341
Missing Reflective Marker Holes shall be Filled with Epoxy	Each	40	0	40
Slope Wall Repair	Sq. Ft.	0	1,599	1,599
Porous Granular Backfill	Cu. Yd.	0	60	60
Cleaning Bridge Scuppers & Downspouts	Each	12	0	12
Deck Slab Repair (Partial)	Sq. Ft.	30	0	30

IMEG
401 E. STATE ST. 4th Floor
ROCKFORD, IL
61104
PH: 815.965.6400
www.imegcorp.com

USER NAME = Michael.A.Phares	DESIGNED - Patrick Pauser	REVISED -	
	DRAWN - Patrick Pauser	REVISED -	
	CHECKED - Ali Gharamti	REVISED -	
PLOT DATE = 4/28/2026	DATE - 4/28/2026	REVISED -	

STATE OF ILLINOIS
DEPARTMENT OF TRANSPORTATION

INDEX, GENERAL NOTES, TOTAL BILL OF MATERIAL & STAGING
STRUCTURE NO. 016-0982

SCALE: | SHEET SA-02 OF SA-08 SHEETS | STA. | TO STA.

F.A.I. RTE.	SECTION	COUNTY	TOTAL SHEETS	SHEET NO.
290	(0404-316-HB) BR 24	COOK	276	128
		CONTRACT NO. 62W99		
	ILLINOIS FED. AID PROJECT			

MODEL: Default
FILE NAME: W:\24001656.05\IDOT Dist 1 IL 290 Mill and Over\ay\CADD Data\Bridge\ORD-CADD_Structural\016-0982 SB IL-53_I-290 Over IL-72_Higgins Rd\016-0982-02-GN_Index_BOM_Stage.dgn

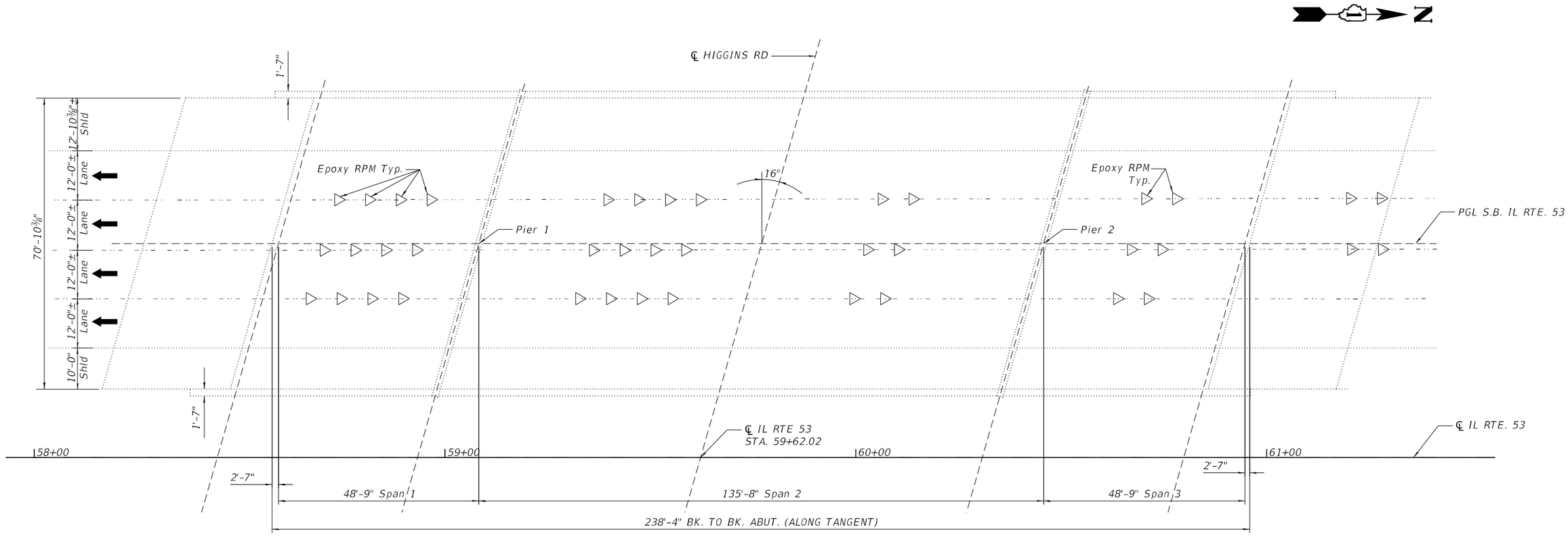

LEGEND

Deck Slab Repair (Partial)

Missing Reflective Marker Holes shall be Filled with Epoxy

BRIDGE DECK BILL OF MATERIAL

Item	Unit	Quantity
Deck Slab Repair (Partial)	Sq. Ft.	30
Missing Reflective Marker Holes shall be Filled with Epoxy	Each	40

NOTE:
Spalls at broken or missing raised reflective pavement markers shall be repaired by epoxy per specifications.

A contingency quantity of 30 Sq. Ft. for Deck Slab Repair (Partial) is included. Areas shall be determined in the field by the Engineer.

SA-03

MODEL: Default
FILE NAME: W:\24001656.05\IDOT Dist 1 IL 290 Mill and Overlay\CADD Data\Bridge\ORD-CADD_Structural\016-0982 SB IL-53_I-290 Over IL-72_Higgins Rd\016-0982-03-Deck Repair Plan.dgn

IMEG
401 E. STATE ST. 4th Floor
ROCKFORD, IL 61104
PH: 815.965.6400
www.imegcorp.com

USER NAME = Michael.A.Phares	DESIGNED - Patrick Pauser	REVISED -
	DRAWN - Patrick Pauser	REVISED -
	CHECKED - Ali Gharamti	REVISED -
PLOT DATE = 4/28/2026	DATE - 4/28/2026	REVISED -

STATE OF ILLINOIS
DEPARTMENT OF TRANSPORTATION

DECK BRIDGE PATCHING
STRUCTURE NO. 016-0982

SCALE: | SHEET SA-03 OF SA-08 SHEETS | STA. | TO STA.

F.A.I. RTE.	SECTION	COUNTY	TOTAL SHEETS	SHEET NO.
290	(0404-316-HB) BR 24	COOK	276	129
		CONTRACT NO. 62W99		
		ILLINOIS	FED. AID PROJECT	

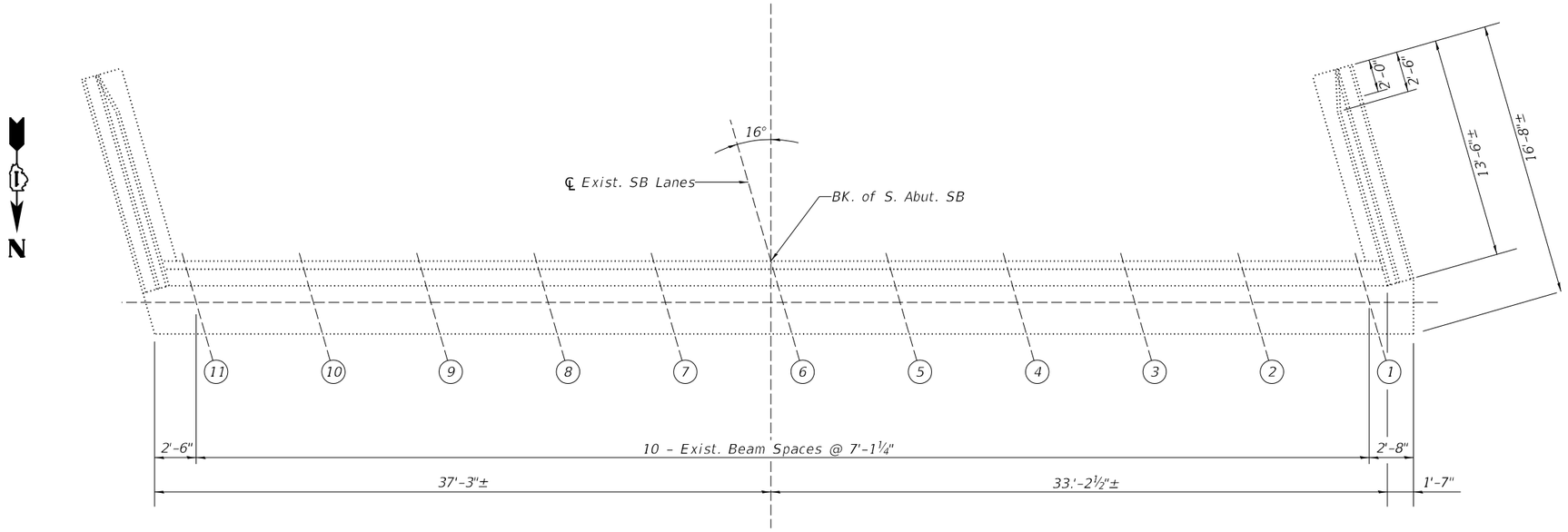

TOP PLAN (S. ABUTMENT S.B.)

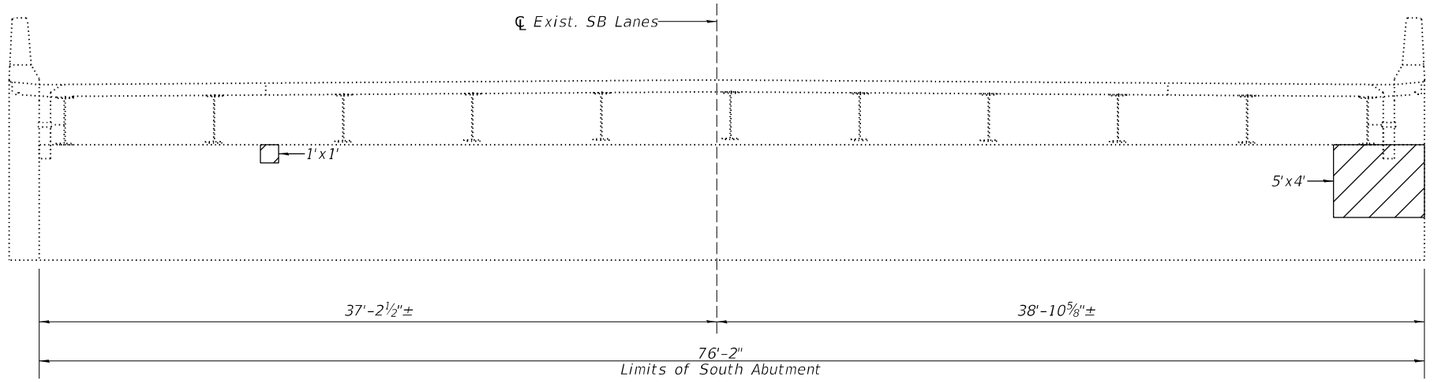

S. ABUTMENT ELEVATION (S.B.)

(LOOKING SOUTH)

BILL OF MATERIAL

ITEM	QUANTITY	UNIT
Structural Repair of Concrete (Depth equal to or less than 5")	21	SQ FT

LEGEND

Structural Repair of Concrete (Depth equal to or less than 5")

SA-04

MODEL: Default
FILE NAME: W:\24001656.05\IDOT Dist 1 IL 290 Mill and Overlay\CADD Data\Bridge\ORD-CADD_Structural\016-0982 SB IL-53_I-290 Over IL-72_Higgins Rd\016-0982-04-South Abutment Repair Plan.dgn

IMEG
401 E. STATE ST. 4th Floor ROCKFORD, IL 61104 PH: 815.965.6400 www.imegcorp.com

USER NAME = Michael.A.Phares	DESIGNED - Patrick Pauser	REVISED -	
	DRAWN - Patrick Pauser	REVISED -	
	CHECKED - Ali Gharamti	REVISED -	
PLOT DATE = 4/28/2026	DATE - 4/28/2026	REVISED -	

STATE OF ILLINOIS
DEPARTMENT OF TRANSPORTATION

SOUTH ABUTMENT REPAIRS
STRUCTURE NO. 016-0982

SCALE: | SHEET SA-04 OF SA-08 SHEETS | STA. | TO STA.

F.A.I. RTE.	SECTION	COUNTY	TOTAL SHEETS	SHEET NO.
290	(0404-316-HB) BR 24	COOK	276	130
		CONTRACT NO. 62W99		
	ILLINOIS FED. AID PROJECT			

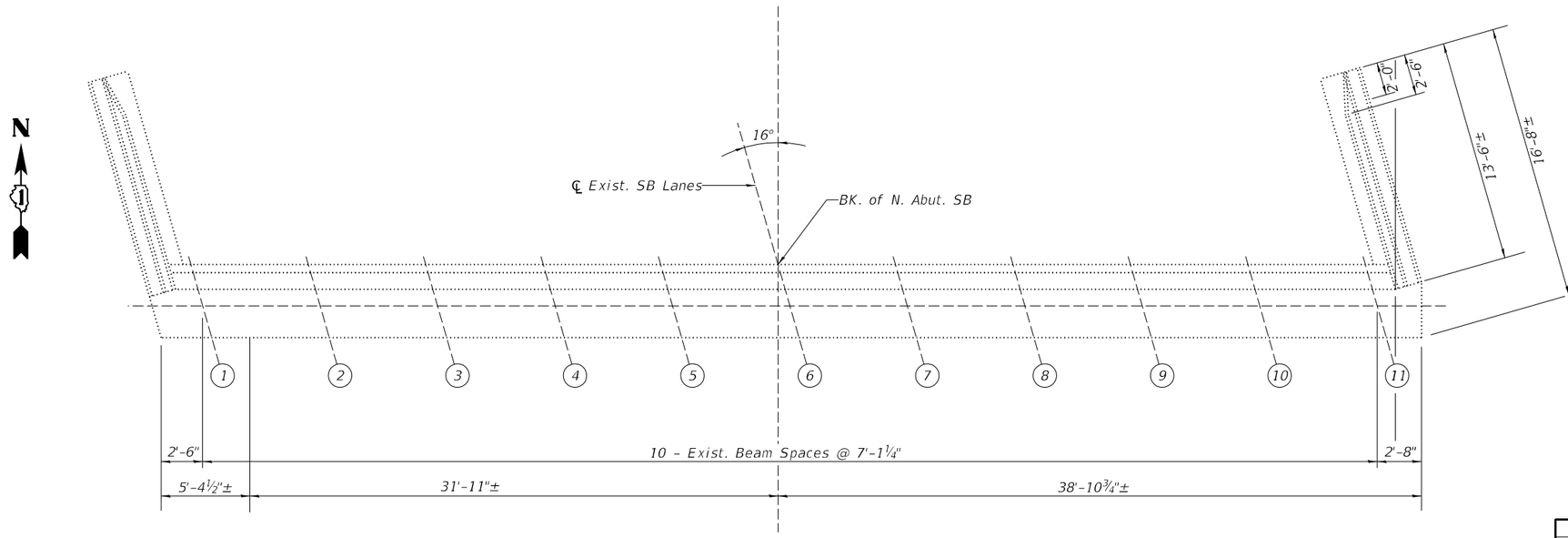

TOP PLAN (N. ABUTMENT S.B.)

BILL OF MATERIAL

ITEM	QUANTITY	UNIT
Structural Repair of Concrete (Depth equal to or less than 5")	33	SQ FT

LEGEND

Structural Repair of Concrete (Depth equal to or less than 5")

I.F. = Inside Face

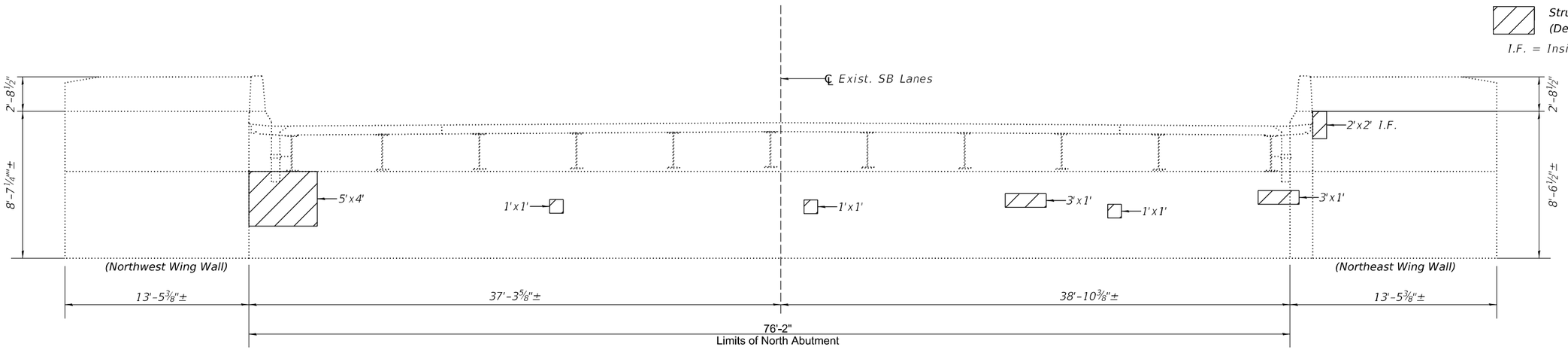

N. ABUTMENT ELEVATION (S.B.)

(LOOKING SOUTH)

SA-05

MODEL: Default
FILE NAME: W:\24001656.05\IDOT Dist 1 IL 290 Mill and Overlay\CADD Data\Bridge\ORD-CADD_Structural\016-0982 SB IL-53_I-290 Over IL-72_Higgins Rd\016-0982-05-North Abutment Repair Plan.dgn

IMEG
401 E. STATE ST. 4th Floor
ROCKFORD, IL
61104
PH: 815.965.6400
www.imegcorp.com

USER NAME = Michael.A.Phares	DESIGNED - Patrick Pauser	REVISED -	
	DRAWN - Patrick Pauser	REVISED -	
	CHECKED - Ali Gharamti	REVISED -	
PLOT DATE = 4/28/2026	DATE - 4/28/2026	REVISED -	

STATE OF ILLINOIS
DEPARTMENT OF TRANSPORTATION

NORTH ABUTMENT REPAIRS
STRUCTURE NO. 016-0982

SCALE: | SHEET SA-05 OF SA-08 SHEETS | STA. | TO STA.

F.A.I. RTE.	SECTION	COUNTY	TOTAL SHEETS	SHEET NO.
290	(0404-316-HB) BR 24	COOK	276	131
		CONTRACT NO. 62W99		
	ILLINOIS FED. AID PROJECT			

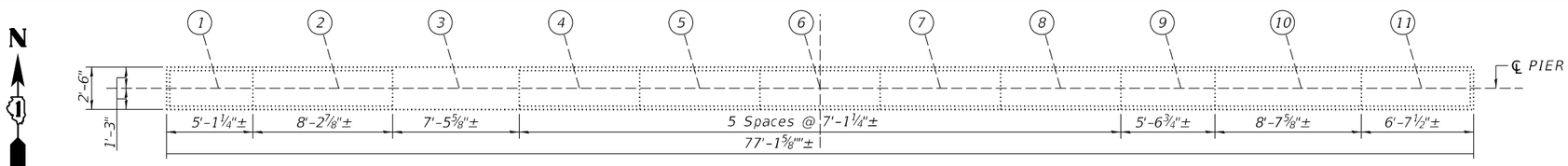

EXISTING TOP PLAN (PIER 1)

Notes:
Repair patch dimensions are called out horizontal by vertical.

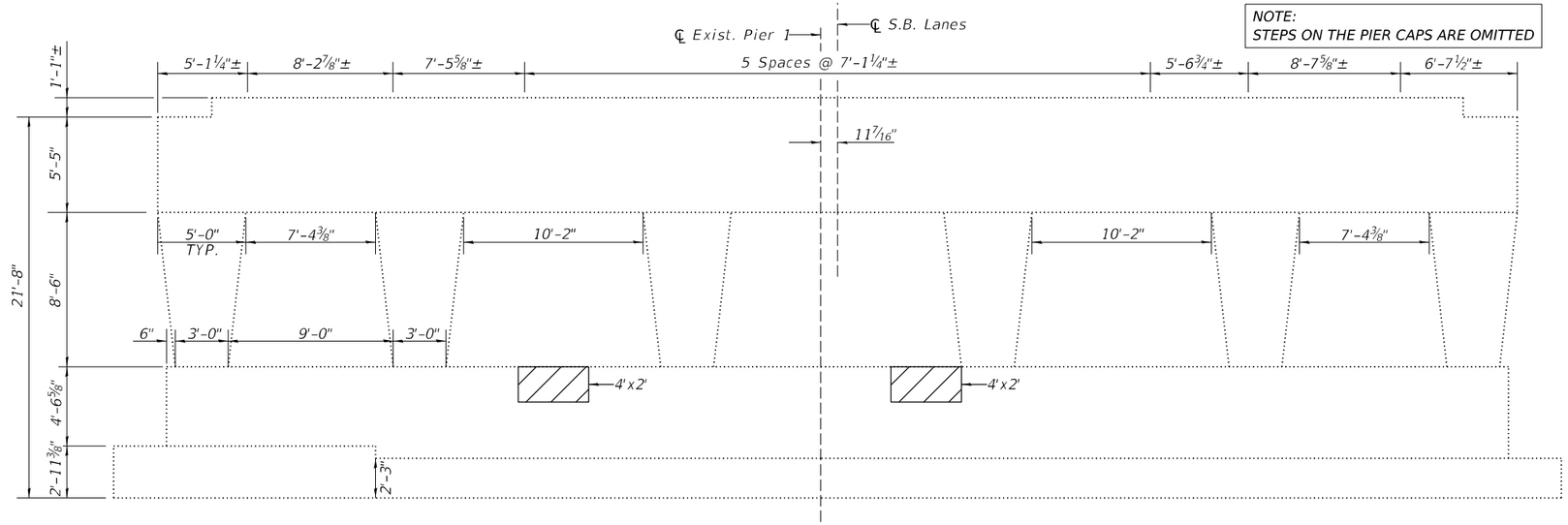

EXISTING ELEVATION (PIER 1)
(LOOKING NORTH)

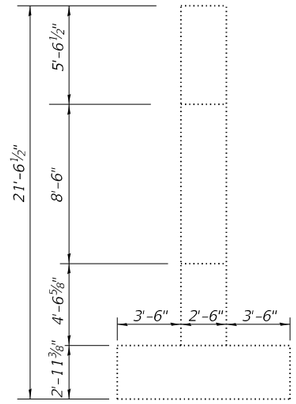

END VIEW
(WEST END)

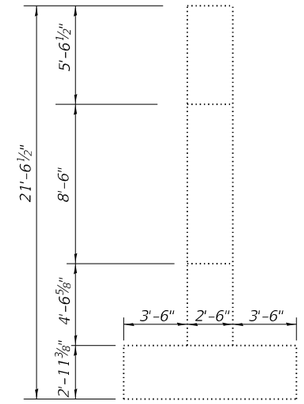

END VIEW
(ESST END)

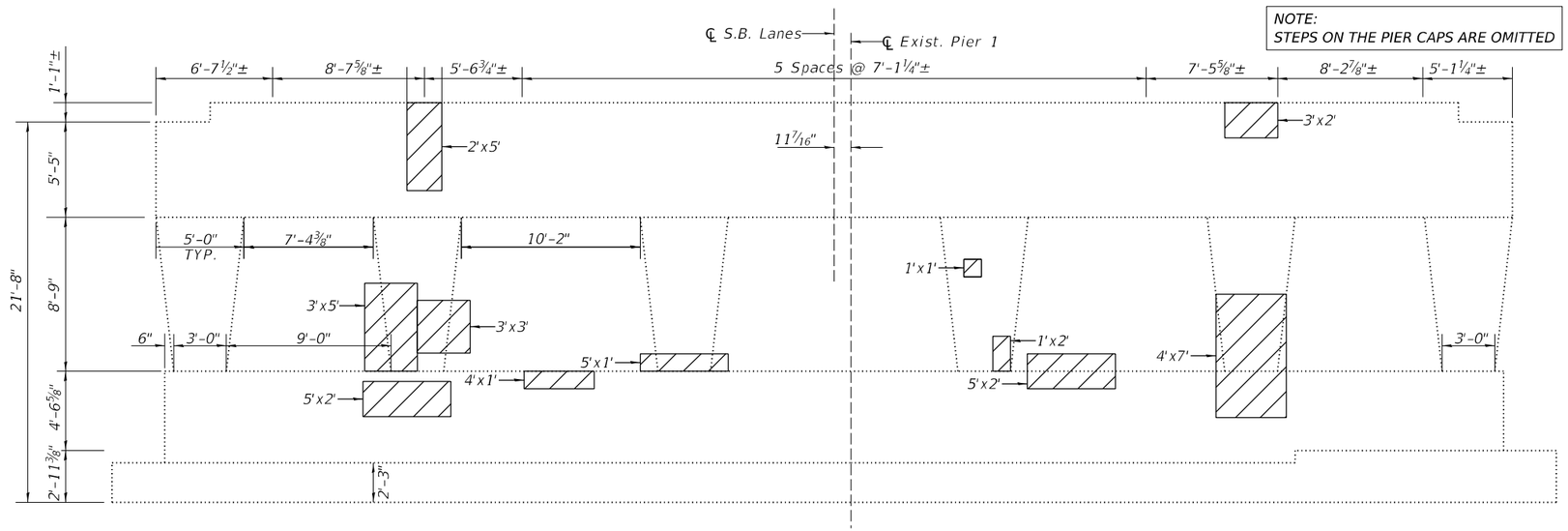

EXISTING ELEVATION (PIER 1)
(LOOKING SOUTH)

BILL OF MATERIAL

ITEM	QUANTITY	UNIT
Structural Repair of Concrete (Depth equal to or less than 5")	116	SQ FT

LEGEND

Structural Repair of Concrete (Depth equal to or less than 5")

T.F. = Top Face

SA-06

MODEL: Default
FILE NAME: W:\2400\656.05\IDOT Dist 1 IL 290 Mill and Overlay\CADD Data\Bridge\ORD-CADD_Structural\016-0982 SB IL-53_I-290 Over IL-72_Higgins Rd\016-0982-06-South Pier 1 Repair Plan.dgn

IMEG
401 E. STATE ST. 4th Floor
ROCKFORD, IL
61104
PH: 815.965.6400
www.imegcorp.com

USER NAME = Michael.A.Phares	DESIGNED - Patrick Pauser	REVISED -	
	DRAWN - Patrick Pauser	REVISED -	
	CHECKED - Ali Gharamti	REVISED -	
PLOT DATE = 4/28/2026	DATE - 4/28/2026	REVISED -	

STATE OF ILLINOIS
DEPARTMENT OF TRANSPORTATION

PIER 1 REPAIRS
STRUCTURE NO. 016-0982

SCALE: | SHEET SA-06 OF SA-08 SHEETS | STA. | TO STA.

F.A.I. RTE.	SECTION	COUNTY	TOTAL SHEETS	SHEET NO.
290	(0404-316-HB) BR 24	COOK	276	132
		CONTRACT NO. 62W99		
	ILLINOIS FED. AID PROJECT			

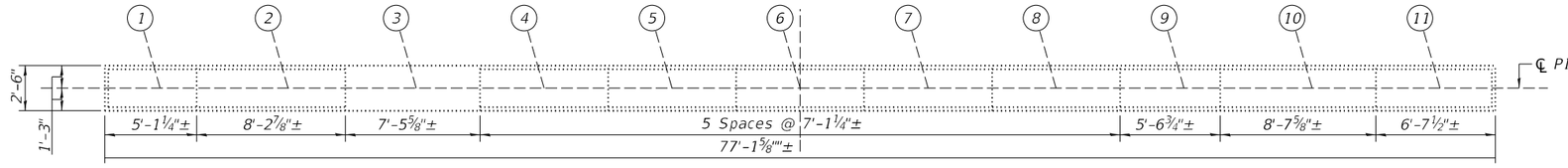

Notes:
Repair patch dimensions are called out horizontal by vertical.

EXISTING TOP PLAN (PIER 1)

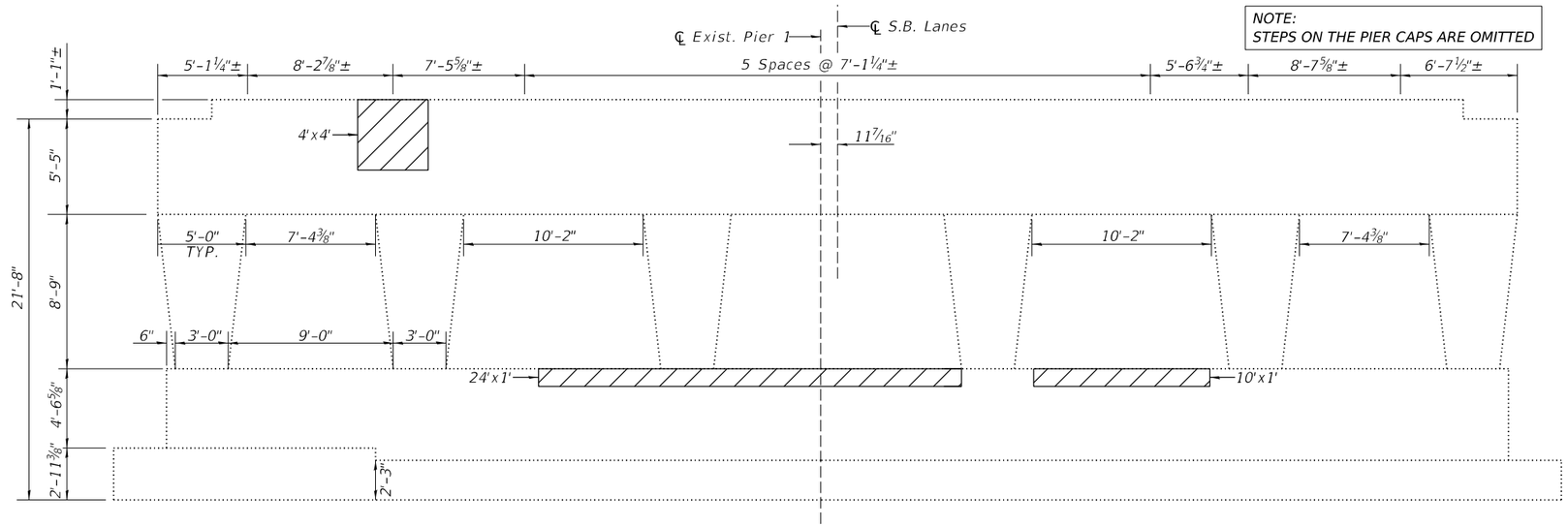

EXISTING ELEVATION (PIER 2)
(LOOKING NORTH)

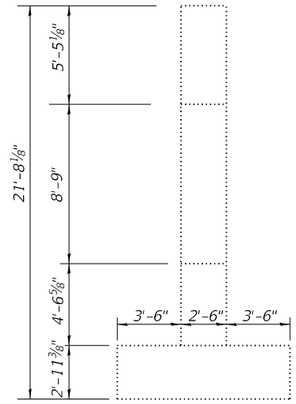

END VIEW
(WEST END)

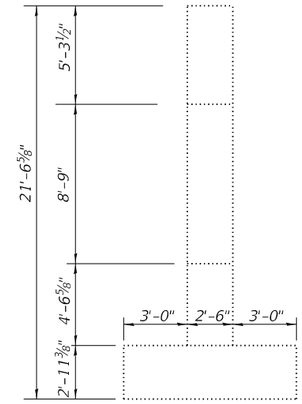

END VIEW
(ESST END)

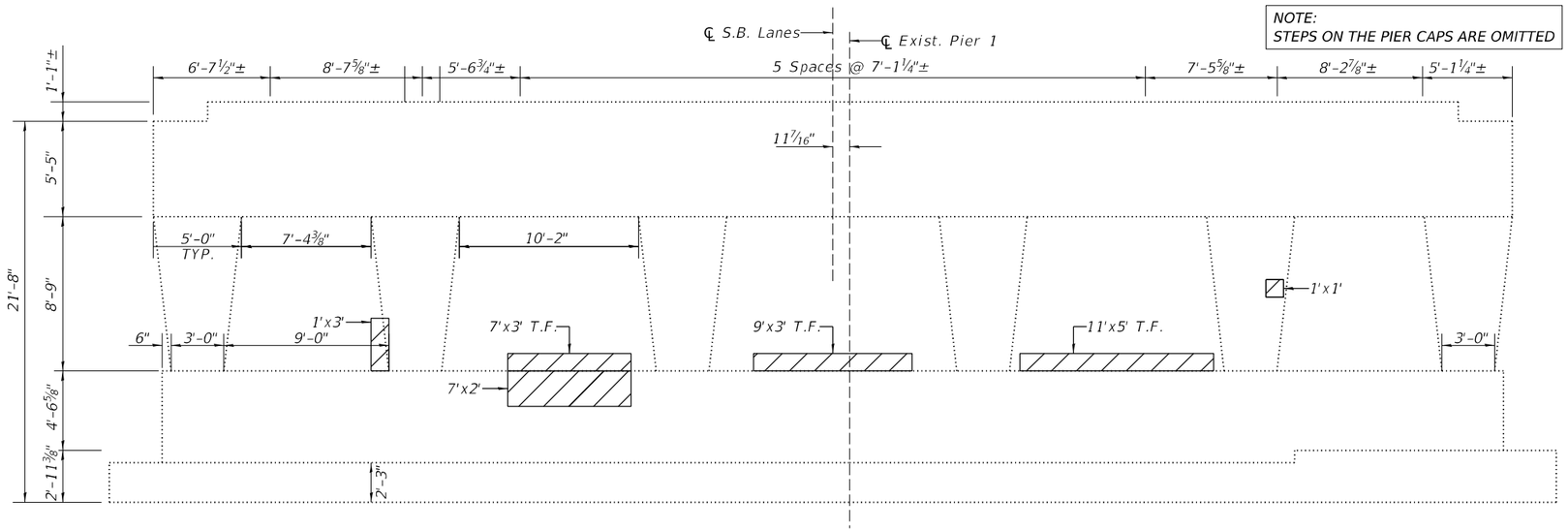

EXISTING ELEVATION (PIER 2)
(LOOKING SOUTH)

BILL OF MATERIAL

ITEM	QUANTITY	UNIT
Structural Repair of Concrete (Depth equal to or less than 5")	171	SQ FT

LEGEND

Structural Repair of Concrete (Depth equal to or less than 5")

T.F. = Top Face

SA-07

MODEL: Default
FILE NAME: W:\2400\656.05\IDOT Dist 1 IL 290 Mill and Overlay\CADD Data\Bridge\ORD-CADD_Structural\016-0982 SB IL-53_I-290 Over IL-72_Higgins Rd\016-0982-07-North Pier 2 Repair Plan.dgn

IMEG
401 E. STATE ST. 4th Floor ROCKFORD, IL 61104
PH: 815.965.8400 www.imegcorp.com

USER NAME = Michael.A.Phares	DESIGNED - Patrick Pauser	REVISED -	
	DRAWN - Patrick Pauser	REVISED -	
	CHECKED - Ali Gharamti	REVISED -	
PLOT DATE = 4/28/2026	DATE - 4/28/2026	REVISED -	

STATE OF ILLINOIS
DEPARTMENT OF TRANSPORTATION

PIER 2 REPAIRS
STRUCTURE NO. 016-0982

SCALE: | SHEET SA-07 OF SA-08 SHEETS | STA. | TO STA.

F.A.I. RTE.	SECTION	COUNTY	TOTAL SHEETS	SHEET NO.
290	(0404-316-HB) BR 24	COOK	276	133
		CONTRACT NO. 62W99		
	ILLINOIS FED. AID PROJECT			

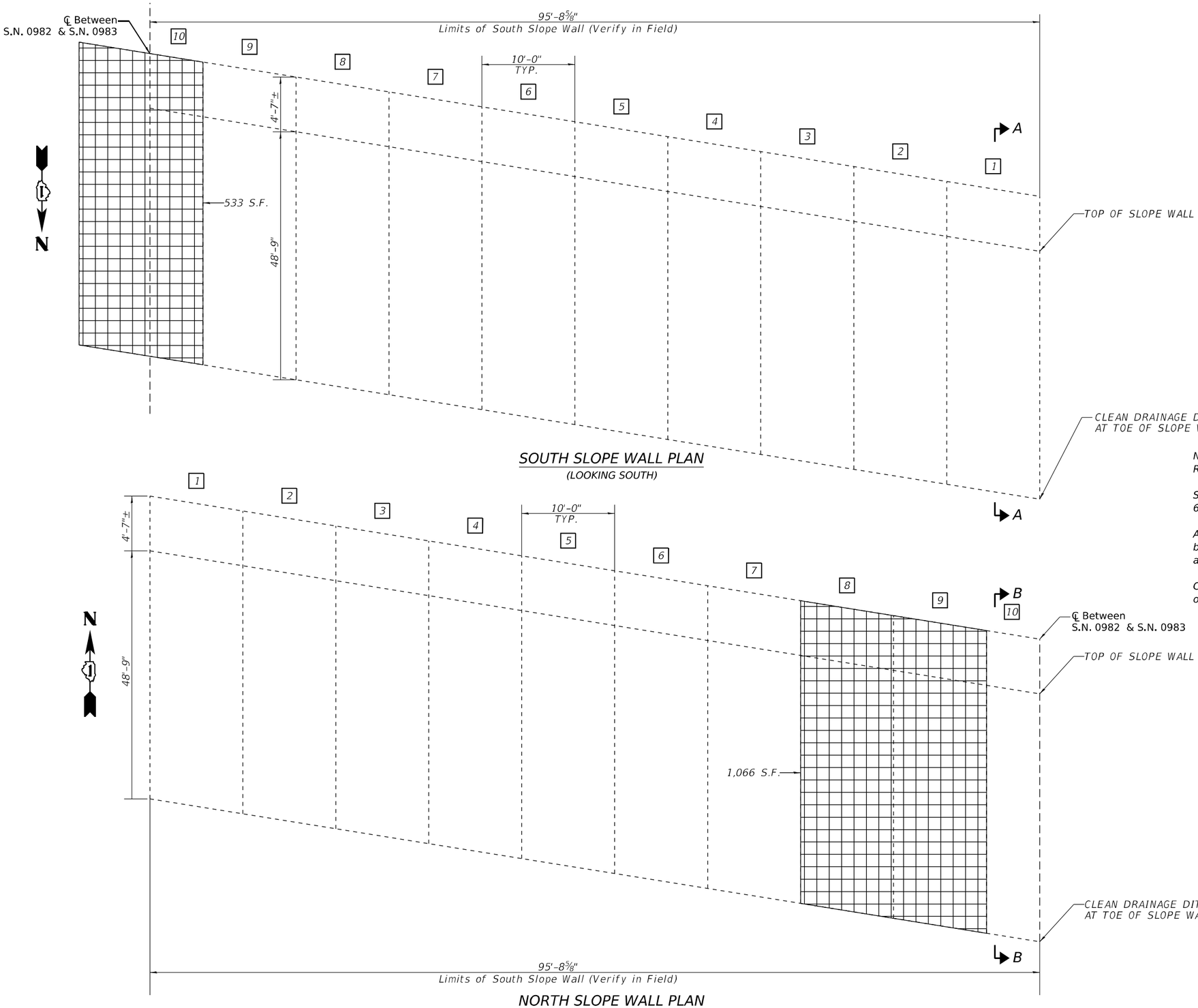

SOUTH SLOPE WALL PLAN
(LOOKING SOUTH)

NORTH SLOPE WALL PLAN
(LOOKING NORTH)

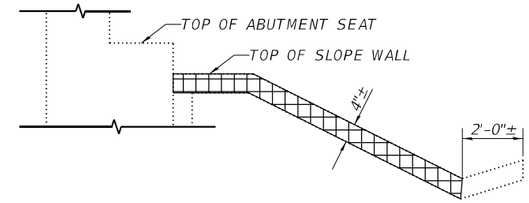

SECTION A-A

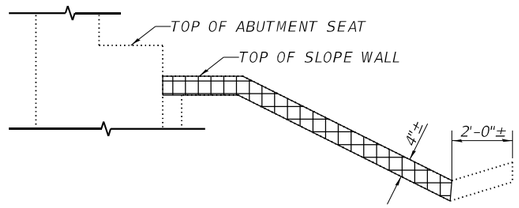

SECTION B-B

BILL OF MATERIAL

ITEM	QUANTITY	UNIT
Slope Wall Repair	1,599	SQ FT
Porous Granular Backfill	60	CU YD

LEGEND

Slope Wall Repair

Notes:
Repair patch dimensions are called out horizontal by vertical.

Slope wall shall be reinforced with welded wire fabric. 6" x 6" - W4.0xW4.0, weighing 58 lbs per 100 sq.ft.

Areas shown for Structural repair of concrete are estimated. Actual area should be determined by the Engineer at the time of repair. Install porous granular backfill as subbase for structural repair.

Cost of "clean drainage ditch at toe of slope wall" shall be included with the cost of "slope wall repair".

SA-08

MODEL: Default
FILE NAME: W:\24001656.05\IDOT Dist 1 IL 290 Mill and Over\Bay\CADD Data\Bridge\ORD-CADD_Structural\016-0982 SB IL-53 I-290 Over IL-72_Higgins Rd\016-0982-08-Slope Wall Repair Plan.dgn

IMEG
401 E. STATE ST. 4th Floor ROCKFORD, IL 61104
PH: 815.965.6400
www.imegcorp.com

USER NAME = Michael.A.Phares	DESIGNED - Patrick Pauser	REVISED -
	DRAWN - Patrick Pauser	REVISED -
	CHECKED - Ali Gharamti	REVISED -
PLOT DATE = 4/28/2026	DATE - 4/28/2026	REVISED -

STATE OF ILLINOIS
DEPARTMENT OF TRANSPORTATION

SLOPE WALL REPAIRS
STRUCTURE NO. 016-0982

SCALE: | SHEET SA-08 OF SA-08 SHEETS | STA. | TO STA.

F.A.I. RTE.	SECTION	COUNTY	TOTAL SHEETS	SHEET NO.
290	(0404-316-HB) BR 24	COOK	276	134
		CONTRACT NO. 62W99		
		ILLINOIS	FED. AID PROJECT	

Existing Structure:
SN 016-0983 built in 1969, Section S-0404-313-HB as FAI Rte. 290. Structure consists of a R.C. deck supported on three span steel plate girder bridge with 238'-4" back-to-back abutments, 74'-1 3/4" out-to-out deck with stub type abutments on concrete piles.
In 2003, deck, bearing and superstructure replacement, substructure widening, slope wall replacement and further substructure repairs were undertaken. In addition, new deck was constructed. In 2010, deck surface and parapet sealing were conducted.

Traffic will be maintained utilizing staged construction.

No Salvage.

SCOPE OF WORK

1. Perform partial deck slab repair.
2. Remove and replace transverse expansion joints at both abutments to Preformed Strip Seal Joint.
3. Clean all existing drainage scuppers and flush downspouts.
4. Perform spalled and delaminated concrete repairs S. & N. abutments, piers 1 & 2.
5. Remove and replace slope wall panels & perform spalled and concrete repairs S. & N. slope walls.
6. Clean mud and debris at the toe of S. & N. slope walls.

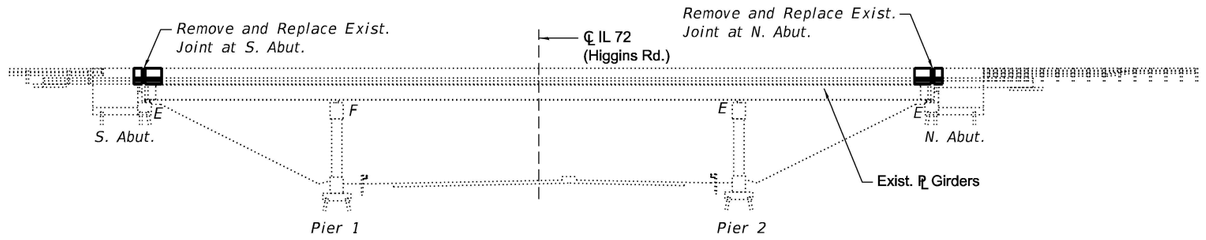

ELEVATION

LOADING HS 20-44
No future wearing surface allowed

DESIGN SPECIFICATIONS
2002 AASHTO LRFD Bridge Design Specifications, 17th, Edition

DESIGN STRESSES
FIELD UNITS
f'c = 4,000 psi (Superstructure)
f'c = 3,500 psi (Substructure)
fy = 60,000 psi (Reinforcement)

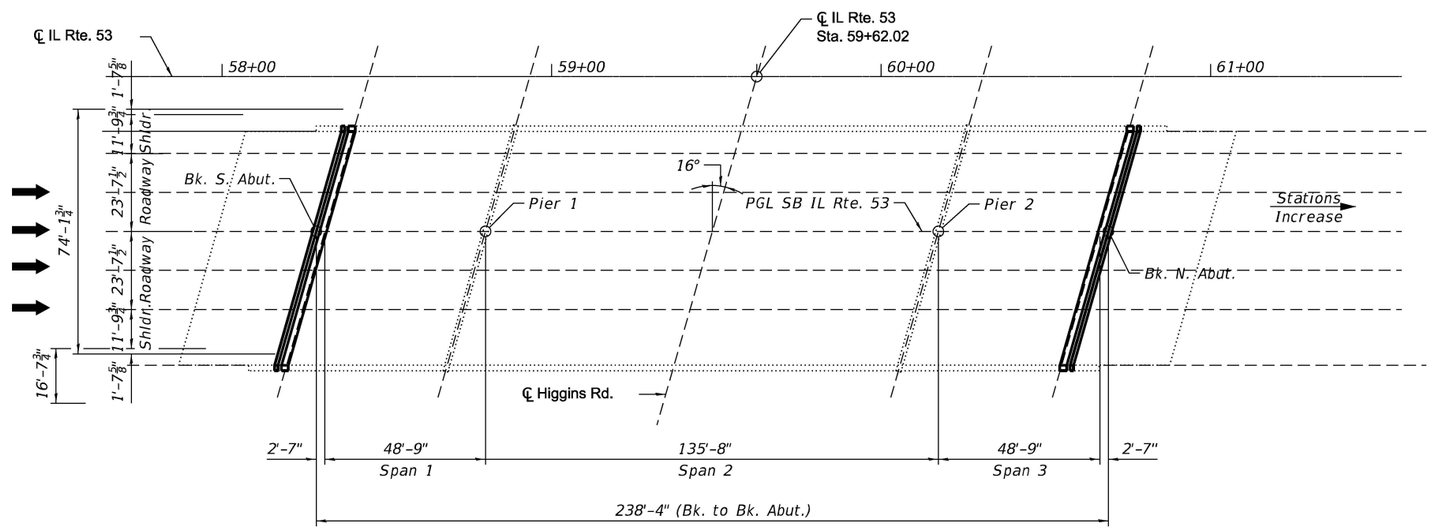

PLAN

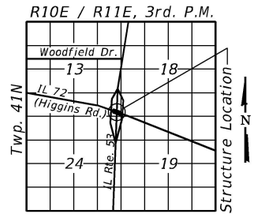

LOCATION SKETCH

ALI A. GHARAMTI
081-005060
LICENSED STRUCTURAL ENGINEER
EAST MOLINE
STATE OF ILLINOIS
Signature
Date 4/29/26
Exp. Date 11/30/26

GENERAL PLAN AND ELEVATION
IL RTE. 53 OVER
IL 72 (HIGGINS RD.)
SECTION 2017-065BR
COOK COUNTY
STATION 59+62.02
STRUCTURE NO. 016-0983

SB-01

IMEG
401 E. STATE ST. 4th Floor ROCKFORD, IL 61104
PH: 815.965.6400 www.imegcorp.com

USER NAME = Michael.A.Phares	DESIGNED - Patrick Pauser	REVISED -
	DRAWN - Patrick Pauser	REVISED -
	CHECKED - Ali Gharamti	REVISED -
PLOT DATE = 4/28/2026	DATE - 4/28/2026	REVISED -

STATE OF ILLINOIS
DEPARTMENT OF TRANSPORTATION

I-290 NORTHBOUND
STRUCTURE NO. 016-0983
SCALE: | SHEET SB-01 OF SB-13 SHEETS | STA. | TO STA.

F.A.I. RTE.	SECTION	COUNTY	TOTAL SHEETS	SHEET NO.
290	(0404-316-HB) BR 24	COOK	276	135
		CONTRACT NO. 62W99		
		ILLINOIS	FED. AID PROJECT	

MODEL: Default
FILE NAME: W:\2400\1656.05\IDOT Dist 1 IL 290 Mill and Overlay\CADD Data\Bridge\ORD-CADD Structural\016-0983 NB IL-53_I-290 Over IL-72_Higgins Rd\016-0983-01-GPE.dgn

GENERAL NOTES

1. Plan dimensions and details relative to existing structure have been taken from existing plans and are subject to nominal construction variations. The Contractor shall field verify dimensions and details affecting new construction and make necessary approved adjustments prior to construction or ordering of materials. Such variations shall not be cause for additional compensation for a change in scope of the work, however, the Contractor will be paid for the quantity actually furnished at the unit price bid for the work.
2. Reinforcement bars designated (E) shall be epoxy coated.
3. Expansion joints shall be fabricated and installed according to Manufacturer's recommendations and as approved by the Engineer.
4. Expansion joints shall be fabricated to confirm to the existing cross slopes of the bridge.
5. Existing reinforcement extended into the removal area shall be cleaned, straightened and incorporated into the new construction. Any reinforcement bars that are damaged during concrete removal operations shall be replaced using an approved bar splicer or anchorage system at the Contractor's expense.
7. Joint openings shall be adjusted according to Article 520.04 of the Standard Specification when the deck is poured at an ambient temperature other than 50° F.
8. All Construction joints shall be bonded.
9. No field welding is permitted except as specified in the contract documents.
10. Stations and offsets called out on the plans are approximate. The Contractor shall field verify the stations and offsets during construction layout.
11. Removal and re-installation of the existing name plate on the structure will be necessary for the construction of the approach slab parapet. This work and all materials shall be included in the contract unit price for "Relocating Name Plates".

INDEX OF SHEETS

SB-01 General Plan and Elevation

SB-02 General Notes, Bill of Materials and Stage Construction Details

SB-03 Temporary Concrete Barrier for Stage Construction

SB-04 Deck Repair Plan

SB-05 Expansion Joint Details - I

SB-06 Expansion Joint Details - II

SB-07 Preformed Joint Strip Seal

SB-08 South Abutment Repair Plan

SB-09 North Abutment Repair Plan

SB-10 South Pier 1 Repair Plan

SB-11 North Pier 2 Repair Plan

SB-12 Slope wall Repair Plan

SB-13 Bar Splicer Assembly and Mechanical Splicer Details

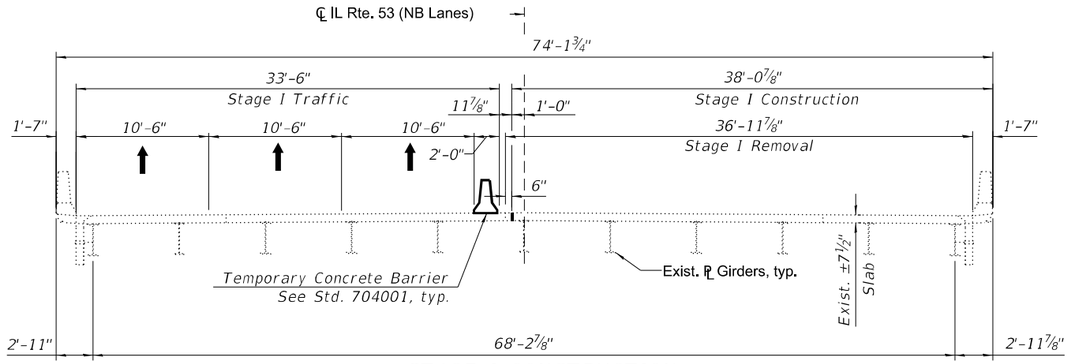

STAGE I CONSTRUCTION

(Looking North)
(At Rt L's to ℄ IL Rte. 53)

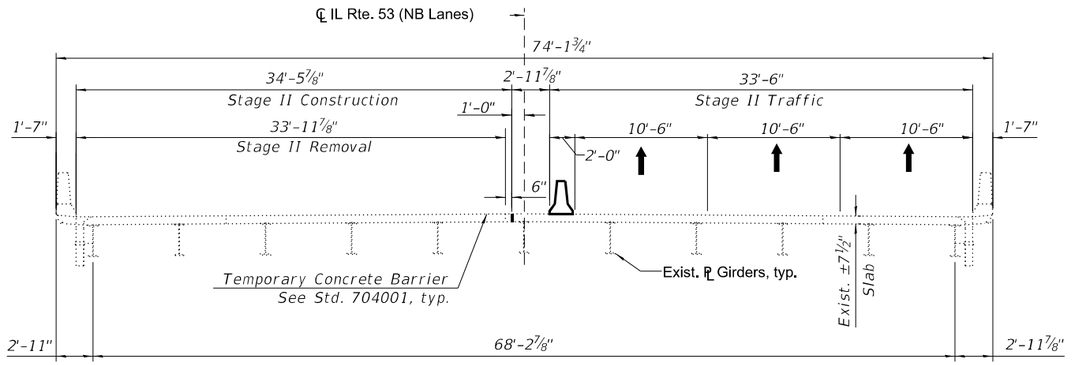

STAGE II CONSTRUCTION

(Looking North)
(At Rt L's to ℄ IL Rte. 53)

TOTAL BILL OF MATERIAL

ITEM	UNIT	SUPER	SUB	TOTAL
Concrete Removal	Cu. Yd.	6.0	0	6.0
Concrete Superstructure	Cu. Yd.	6.0	0	6.0
Reinforcement Bars, Epoxy Coated	Pound	1650	0	1650
Bar Splicers	Each	16	0	16
Preformed Joint Strip Seal	Foot	152	0	152
Structural Repair of Concrete (Depth Equal to or less than 5")	Sq. Ft.	0	319	319
Missing Reflective Marker Holes shall be Filled with Epoxy	Each	12	0	12
Slope Wall Repairs	Sq. Ft.	0	1,184	1,184
Porous Granular Backfill	Cu. Yd.	0	44	44
Relocating Name Plates	Each	1	0	1
Cleaning Bridge Scuppers & Downspouts	Each	12	0	12
Deck Slab Repair (Partial)	Sq. Ft.	30	0	30

IMEG
401 E. STATE ST. 4th Floor
ROCKFORD, IL
61104
PH: 815.965.6400
www.imegcorp.com

USER NAME = Michael.A.Phares	DESIGNED - Patrick Pauser	REVISED -	
	DRAWN - Patrick Pauser	REVISED -	
	CHECKED - Ali Gharamti	REVISED -	
PLOT DATE = 4/28/2026	DATE - 4/28/2026	REVISED -	

STATE OF ILLINOIS
DEPARTMENT OF TRANSPORTATION

INDEX, GENERAL NOTES, TOTAL BILL OF MATERIAL & STAGING
STRUCTURE NO. 016-0983

SCALE: | SHEET SB-02 OF SB-13 SHEETS | STA. | TO STA.

F.A.I. RTE.	SECTION	COUNTY	TOTAL SHEETS	SHEET NO.
290	(0404-316-HB) BR 24	COOK	276	136
		CONTRACT NO. 62W99		
		ILLINOIS	FED. AID PROJECT	

MODEL: Default
FILE NAME: W:\2400\1656.05\IDOT Dist 1 IL 290 Mill and Overlay\CADD Data\Bridge\ORD-CADD_Structural\016-0983 NB IL-53_I-290 Over IL-72_Higgins Rd\016-0983-02-GN_Index_BOM_Stage.dgn

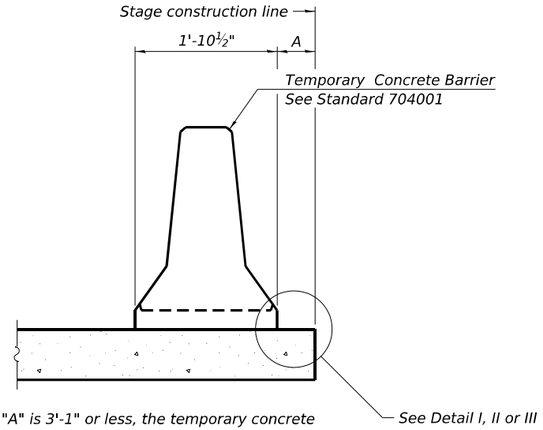

When "A" is 3'-1" or less, the temporary concrete barrier shall be restrained to the new slab according to Detail I, II or III. No restraint is required when "A" is greater than 3'-1".

NEW SLAB OR NEW DECK BEAM

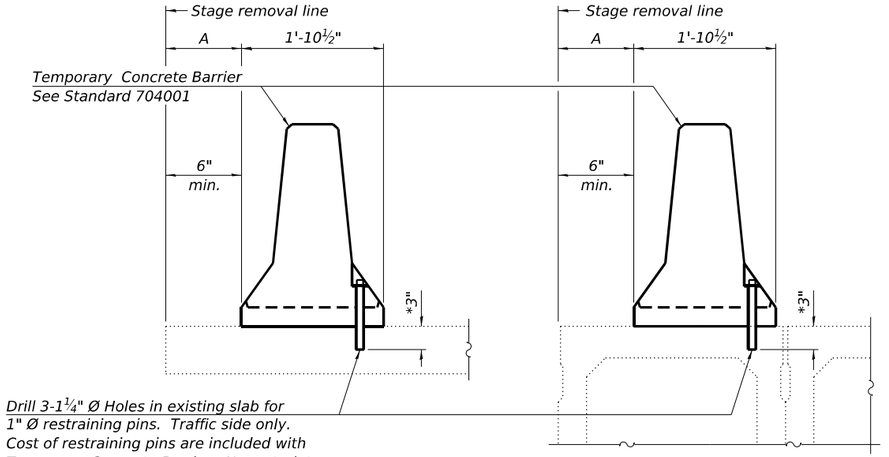

EXISTING SLAB

EXISTING DECK BEAM

* When hot-mix asphalt wearing surface is present, embedment shall be 3" plus the wearing surface depth.

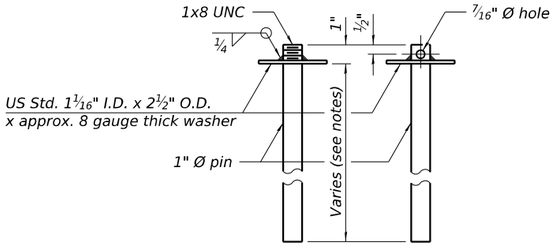

RESTRAINING PIN

SECTIONS THRU SLAB OR DECK BEAM

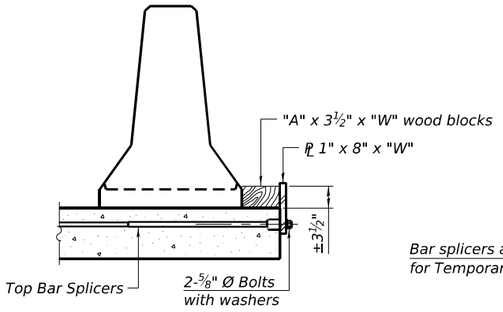

DETAIL I

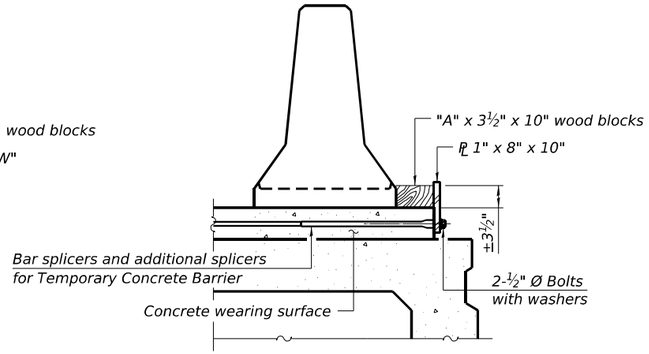

DETAIL II

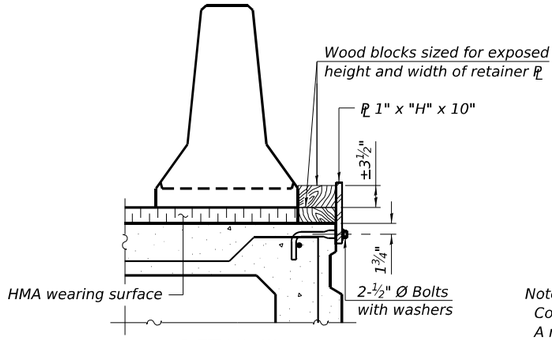

DETAIL III

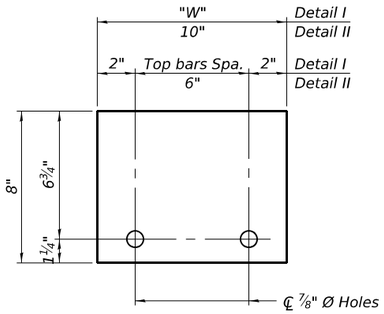

STEEL RETAINER ℄ 1" x 8" x "W"
(Detail I and II)

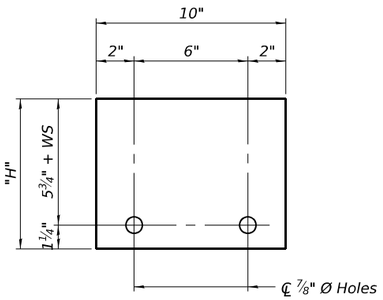

STEEL RETAINER ℄ 1" x "H" x 10"
(Detail III)

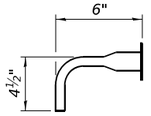

BAR SPLICER FOR #4 BAR - DETAIL III

RAILING CRITERIA

NCHRP 350 Test Level	3
Railing Weight (plf)	440

R-27

5-15-2023

Notes:

Cost of retainer assembly is included with Temporary Concrete Barrier.

A retainer assembly shall be located at the approximate ℄ of each temporary concrete barrier.

The retainer plate shall not be removed until the concrete on the adjacent stage is ready to be poured. For Detail III applications the retainer plate shall not be removed until just prior to placing the adjacent beam.

When the 'A' dimension is less than 1½", the wood block shall be omitted and the barrier shall be placed in direct contact with the steel retainer plate. For deck beam applications the minimum required 'A' distance is 6" to accommodate the shear key clamping device.

Detail I - Installation for a new bridge deck or bridge slab.

Detail II - Installation for a new deck beam with an initial concrete wearing surface. Additional bar splicers shall be provided at 6'-0" centers and paired with the bar splicers of the concrete wearing surface reinforcement to accommodate the installation of the retainer assemblies. The cost of the additional bar splicers is included with the concrete wearing surface.

Detail III - Installation for a new deck beam with no initial wearing surface or with an initial hot-mix asphalt (HMA) wearing surface present. The deck beam directly beneath the temporary concrete barrier shall be fabricated with bar splicer inserts in the side of the beam, as detailed, to accommodate the installation of the retainer assemblies. A pair of bar splicers, 6" apart, shall be placed at 6'-0" centers along the length of the beam. The cost of the bar splicers is included with the deck beam.

SB-03

IMEG
401 E. STATE ST. 4th Floor ROCKFORD, IL 61104
PH: 815.965.6400 www.imegcorp.com

USER NAME = Michael.A.Phares	DESIGNED - Patrick Pauser	REVISED -	
	DRAWN - Patrick Pauser	REVISED -	
	CHECKED - Ali Gharamti	REVISED -	
PLOT DATE = 4/28/2026	DATE - 4/28/2026	REVISED -	

STATE OF ILLINOIS
DEPARTMENT OF TRANSPORTATION

TEMPORARY CONCRETE BARRIER FOR STAGE CONSTRUCTION
STRUCTURE NO. 016-0983

SCALE: | SHEET SB-03 OF SB-13 SHEETS | STA. | TO STA.

F.A.I. RTE.	SECTION	COUNTY	TOTAL SHEETS	SHEET NO.
290	(0404-316-HB) BR 24	COOK	276	137
		CONTRACT NO. 62W99		
	ILLINOIS	FED. AID PROJECT		

MODEL: Default
FILE NAME: W:\24001656.05\IDOT Dist 1 IL 290 Mill and Overlay\CADD Data\Bridge\ORD-CADD_Structural\016-0983 NB IL-53_I-290 Over IL-72_Higgins Rd\016-0983-03-TCB.dgn

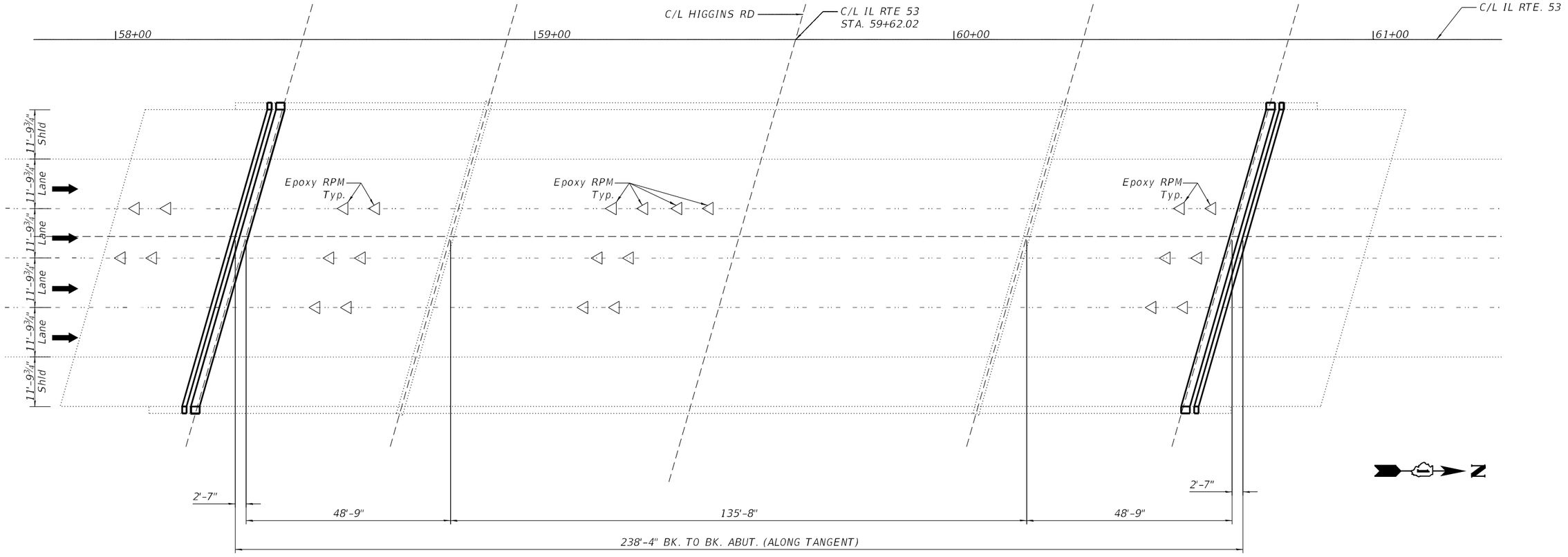

LEGEND

Deck Slab Repair (Partial)

Missing Reflective Marker Holes shall be Filled with Epoxy

BRIDGE DECK
BILL OF MATERIAL

Item	Unit	Quantity
Deck Slap Repair (Partial)	Sq. Ft.	30
Missing Reflective Marker Holes shall be Filled with Epoxy	Each	12

NOTE:
Spalls at broken or missing raised reflective pavement markers shall be repaired by epoxy per specifications.

A contingency quantity of 30 Sq. Ft. for Deck Slab Repair (Partial) is included. Areas shall be determined in the field by the Engineer.

No structural repair of concrete greater than 5" is required.

IMEG
401 E. STATE ST. 4th Floor
ROCKFORD, IL
61104
PH: 815.965.6400
www.imegcorp.com

USER NAME = Michael.A.Phares	DESIGNED - Patrick Pauser	REVISED -	
	DRAWN - Patrick Pauser	REVISED -	
	CHECKED - Ali Gharamti	REVISED -	
PLOT DATE = 4/28/2026	DATE - 4/28/2026	REVISED -	

STATE OF ILLINOIS
DEPARTMENT OF TRANSPORTATION

DECK BRIDGE PATCHING
STRUCTURE NO. 016-0983

SCALE: | SHEET SB-04 OF SB-13 SHEETS | STA. | TO STA.

F.A.I. RTE.	SECTION	COUNTY	TOTAL SHEETS	SHEET NO.
290	(0404-316-HB) BR 24	COOK	276	138
		CONTRACT NO. 62W99		
		ILLINOIS	FED. AID PROJECT	

MODEL: Default
FILE NAME: W:\2400\656.05\IDOT Dist 1 IL 290 Mill and Overlay\CADD Data\Bridge\ORD-CADD_Structural\016-0983 NB IL-53, I-290 Over IL-72_Higgins Rd\016-0983-04-Deck Repair Plan.dgn

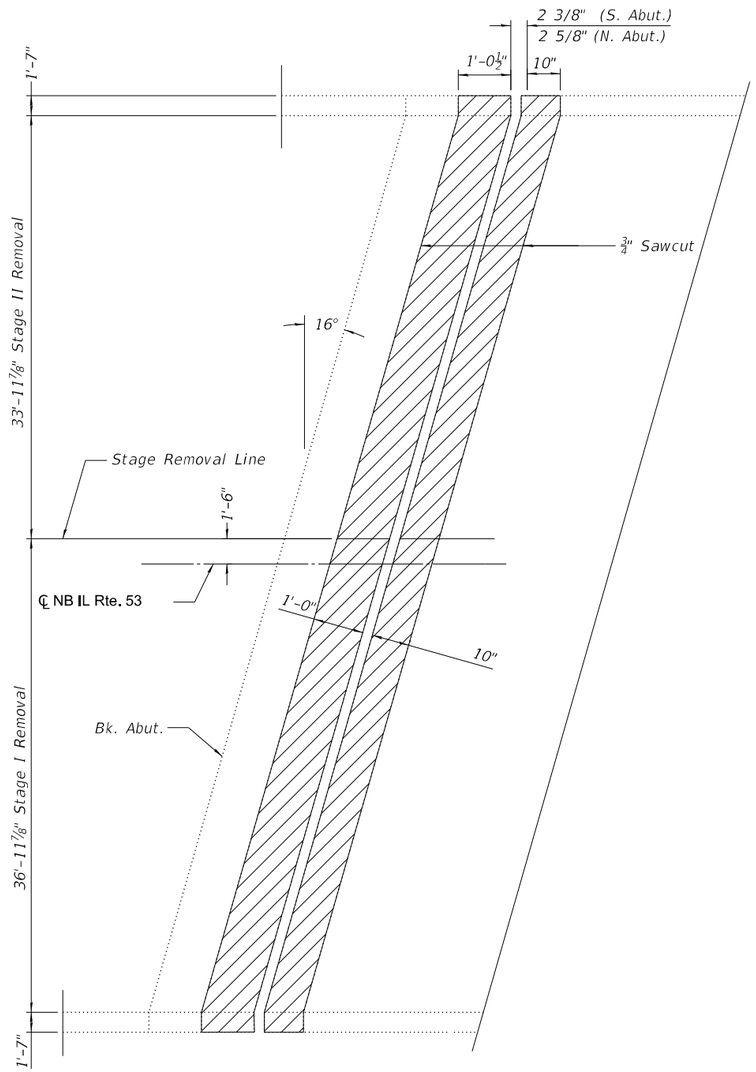

JOINT REMOVAL PLAN

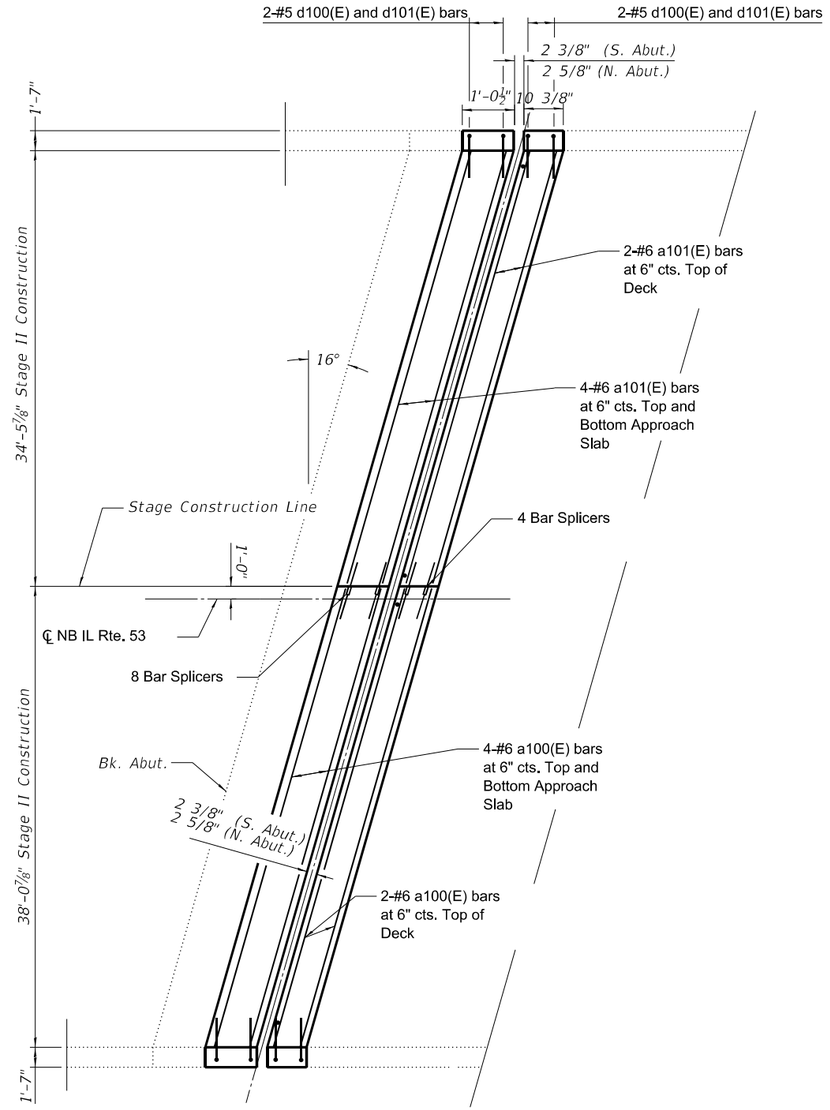

JOINT REPLACEMENT PLAN

NOTES:

1. South Abutment Shown, North Abutment similar.
2. Horizontal bars in approach parapets shall be cleaned, straightened, and reused in new construction.

LEGEND

Concrete Removal

MIN. BAR LAP

#6 bar = 4'-10"

SB-05

IMEG
401 E. STATE ST. 4th Floor
ROCKFORD, IL
61104
PH: 815.965.6400
www.imegcorp.com

USER NAME = Michael.A.Phares	DESIGNED - Patrick Pauser	REVISED -	
	DRAWN - Patrick Pauser	REVISED -	
	CHECKED - Ali Gharamti	REVISED -	
PLOT DATE = 4/28/2026	DATE - 4/28/2026	REVISED -	

STATE OF ILLINOIS
DEPARTMENT OF TRANSPORTATION

EXPANSION JOINT DETAILS - I
STRUCTURE NO. 016-0983

SCALE: | SHEET SB-05 OF SB-13 SHEETS | STA. | TO STA.

F.A.I. RTE.	SECTION	COUNTY	TOTAL SHEETS	SHEET NO.
290	(0404-316-HB) BR 24	COOK	276	139
		CONTRACT NO. 62W99		
	ILLINOIS FED. AID PROJECT			

MODEL: Default
FILE NAME: W:\2400\656.05\IDOT Dist 1 IL 290 Mill and Overlay\CADD Data\Bridge\ORD-CADD_Structural\016-0983 NB IL-53_I-290 Over IL-72_Higgins Rd\016-0983-05-JointDetails-I.dgn

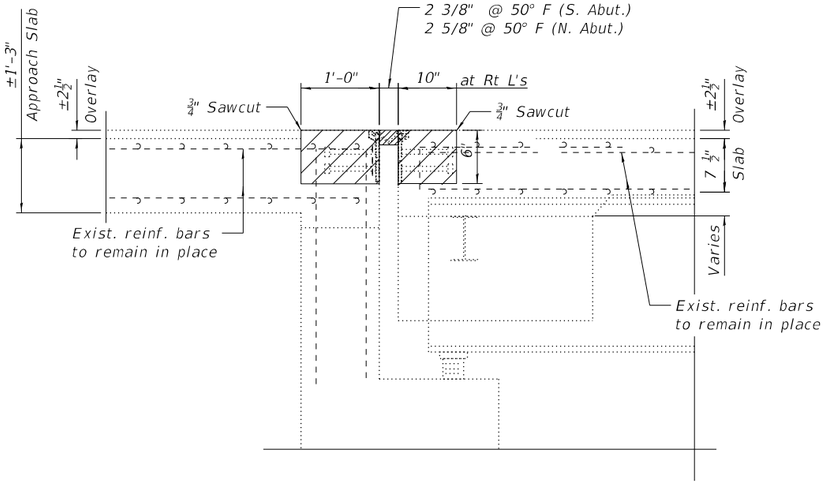

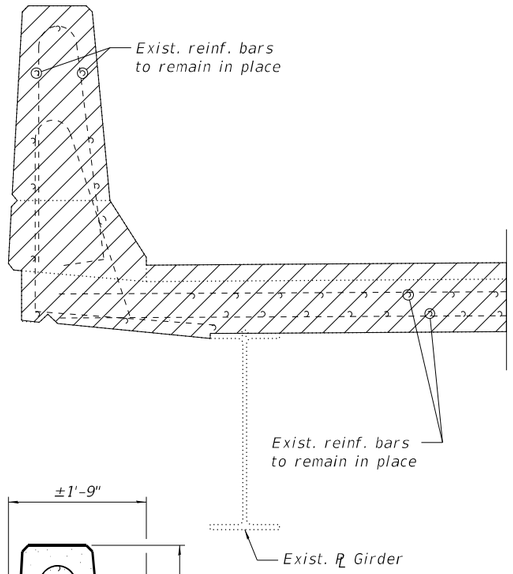

NOTES:

1. Hatched areas indicate Concrete Removal.
2. Existing reinforcement to remain in place shall be cleaned, straightened and resued. Cost included with Concrete Removal.
3. Any reinforcement bars that are damaged during concrete removal operations shall be repaired or replaced using an approved Bar Splicer or Anchorage System. Cost included with Concrete Removal.
4. Removal of exist. expansion joint will not be paid for separately. Cost included with Concrete Removal.
5. See Sheet 13 of 13 for Bar Splicers Details.
6. Bars indicated thus 4x2-#5 etc. indicates 4 lines of bars with 2 lengths per line.

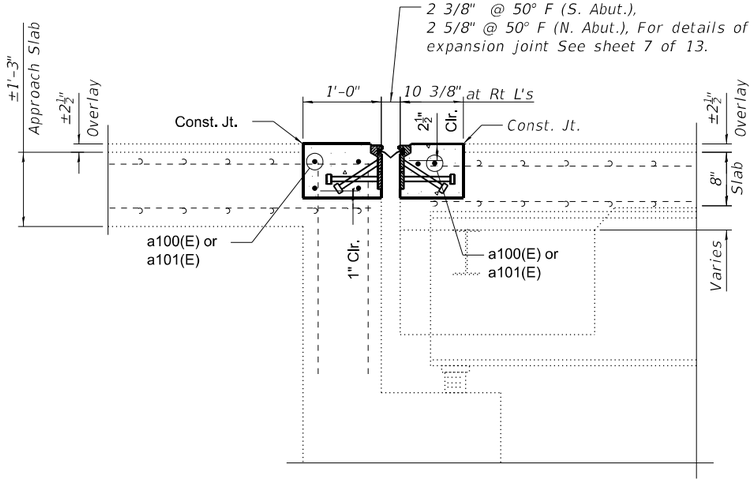

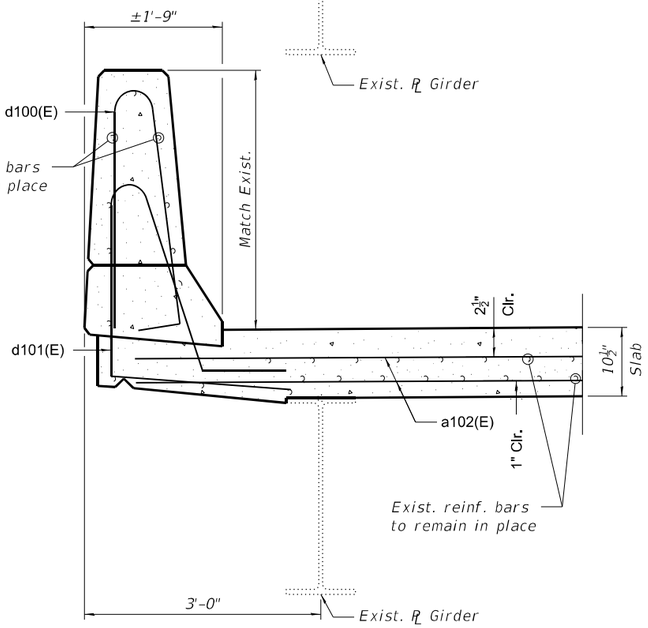

BILL OF MATERIAL BOTH ABUTMENTS

Bar	No.	Size	Length	Shape
a100(E)	12	#6	37'-8"	
a101(E)	12	#6	35'-6"	
a102(E)	12	#6	4'-0"	
d100(E)	16	#5	6'-10"	
d101(E)	16	#5	8'-2"	
Concrete Removal		Cu. Yd.	6.0	
Reinforcement Bars, Epoxy Coated		Pound	1650	
Concrete Superstructure		Cu. Yd.	6.0	

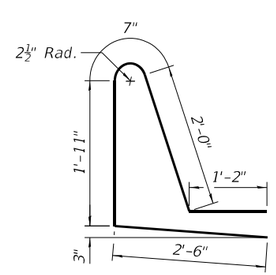

BAR d101(E)

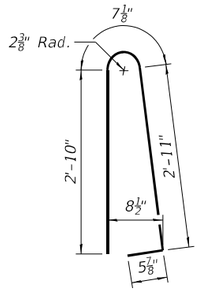

BAR d100(E)

IMEG
401 E. STATE ST. 4th Floor
ROCKFORD, IL 61104
PH: 815.965.8400
www.imegcorp.com

USER NAME = Michael.A.Phares	DESIGNED - Patrick Pauser	REVISED -	
	DRAWN - Patrick Pauser	REVISED -	
	CHECKED - Ali Gharamti	REVISED -	
PLOT DATE = 4/28/2026	DATE - 4/28/2026	REVISED -	

STATE OF ILLINOIS
DEPARTMENT OF TRANSPORTATION

EXPANSION JOINT DETAILS - II
STRUCTURE NO. 016-0983

SCALE: | SHEET SB-06 OF SB-13 SHEETS | STA. | TO STA.

F.A.I. RTE.	SECTION	COUNTY	TOTAL SHEETS	SHEET NO.
290	(0404-316-HB) BR 24	COOK	276	140
		CONTRACT NO. 62W99		
	ILLINOIS FED. AID PROJECT			

MODEL: Default
FILE NAME: W:\24001656.05\IDOT Dist 1 IL 290 Mill and Overlay\CADD Data\Bridge\ORD-CADD_Structural\016-0983 NB IL-53_I-290 Over IL-72_Higgins Rd\016-0983-06-JointDetails-II.dgn

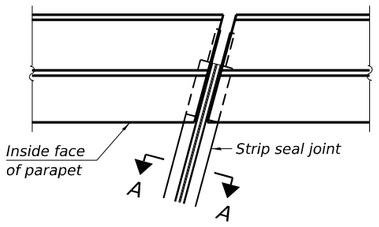

FOR SKEWS ≤ 30°

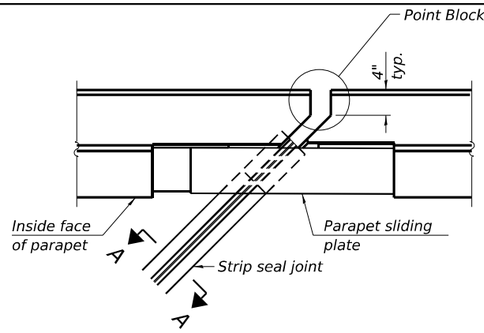

FOR SKEWS > 30°

PLAN AT PARAPET

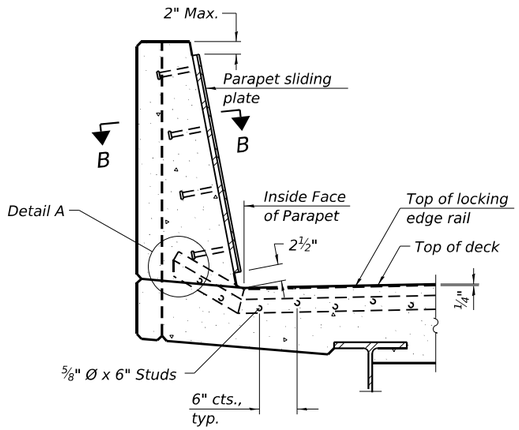

SECTION AT PARAPET

(Skews > 30° shown. Skews ≤ 30° similar except as shown in plan view.)

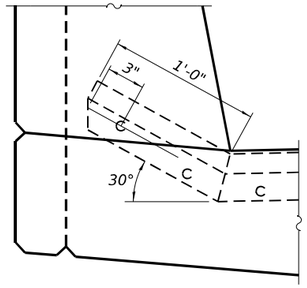

DETAIL A

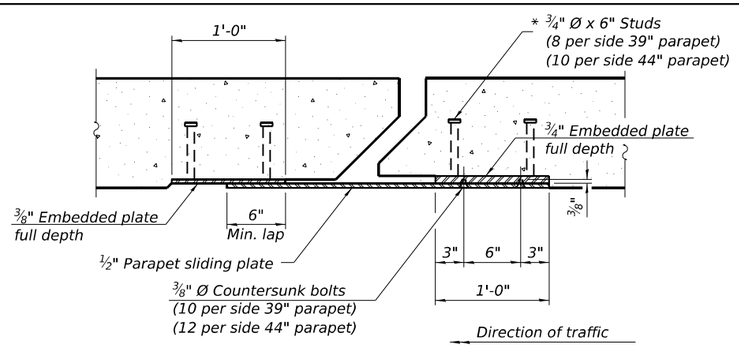

SECTION B-B

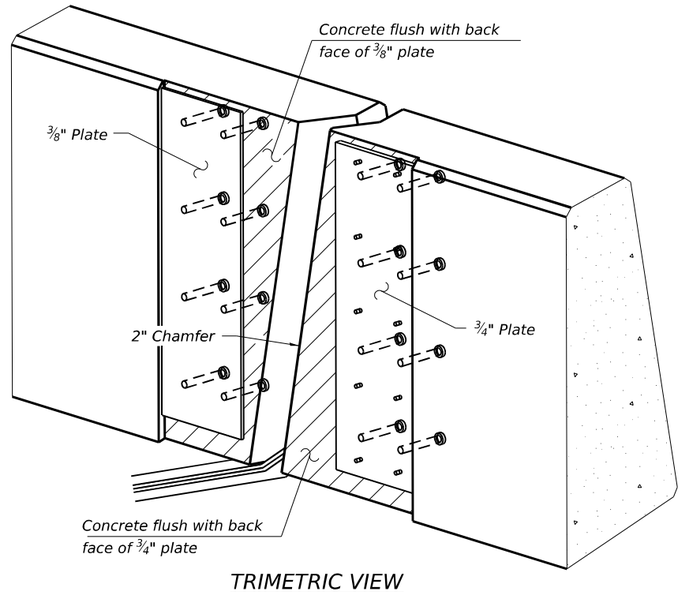

TRIMETRIC VIEW

(Showing embedded plates only)

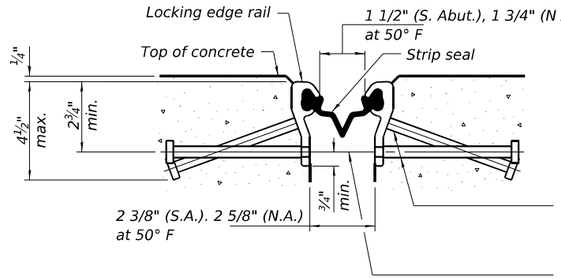

* ⅝" Ø x 6" studs @ 6" cts. (alternate angled/bent studs with horizontal studs)

⅜" Ø threaded rods in 7/16" Ø holes at 4'-0"± cts. for holding the proper joint opening based on the temperature during the deck pour. Place to miss studs. All rods shall be burned, or sawed off flush with the plates after concrete is set.

SHOWING ROLLED RAIL JOINT

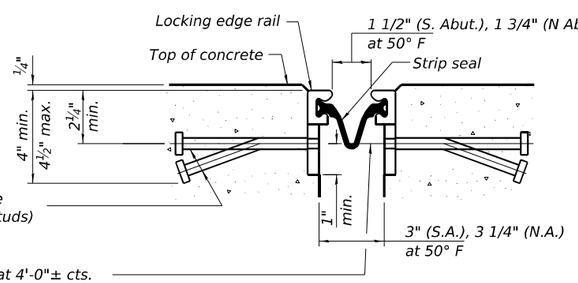

SHOWING WELDED RAIL JOINT

SECTION A-A

* Granular or solid flux filled headed studs conforming to Article 1006.32 of the Std. Specs., automatically end welded.

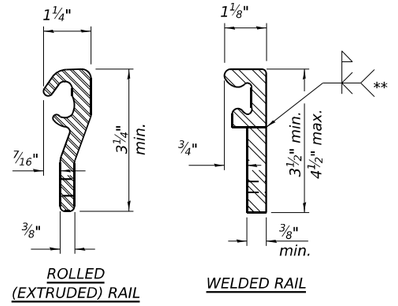

ROLLED (EXTRUDED) RAIL

WELDED RAIL

LOCKING EDGE RAILS

** Back gouge not required if complete joint penetration is verified by mock-up.

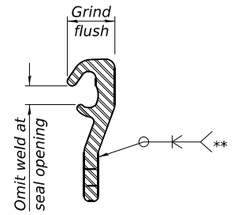

LOCKING EDGE RAIL SPLICE

The inside of the locking edge rail groove shall be free of weld residue. Rolled rail shown, welded rail similar.

Notes:

The strip seal shall be made continuous and shall have a minimum thickness of ¼". The configuration of the strip seal shall match the configuration of the locking edge rails. Open or "webbed" strip seal gland configurations are not permitted. The gland shall be sized for a maximum rated movement of 4 inches.

The locking edge rails depicted are configured for typical applications and are conceptual only. The actual configuration of the locking edge rails and matching strip seal may vary from manufacturer to manufacturer provided they fit the application and meet the minimum anchorage shown. Flanged edge rails, however, will not be allowed. Locking edge rails may exceed the 4½" maximum depth provided the anchorage system is revised according to the manufacturer's recommendation.

The manufacturer's recommended installation methods shall be followed.

All steel components shall be galvanized after fabrication according to Article 520.03 of the Standard Specifications.

The Maximum space between locking edge rail segments shall be c" and sealed with a suitable sealant; however, any rail joint within 10' measured perpendicular to the face of the curb or parapet shall be welded as shown in the locking edge rail splice detail.

Cost of parapet sliding plates, embedded plates, and anchorage studs included with Preformed Joint Strip Seal.

39" constant slope barrier shown, 44" constant slope barrier similar as noted.

The concrete opening below the strip seal will vary based on the locking edge rail chosen by the Contractor. Deck and parapet lengths shown elsewhere in the plans are dimensioned to the concrete opening, not the joint opening, and are based on the rolled locking edge rail. If the Contractor elects to use a different locking edge rail, dimensional adjustments may be required. One exception to this would be the strip seal joint at the end of the precast bridge approach slab. For these cases the pavement connector length shall be adjusted, not the length of the bridge approach slab.

BILL OF MATERIAL

Item	Unit	Total
Preformed Joint Strip Seal	Foot	152

EJ-SS

SB-07

MODEL: Default
FILE NAME: W:\24001656.05\IDOT Dist 1 IL 290 Mill and Overlay\CADD Data\Bridge\ORD-CADD_Structural\016-0983 NB IL-53_I-290 Over IL-72_Higgins Rd\016-0983-07-Strip Seal.dgn

IMEG
401 E. STATE ST. 4th Floor
ROCKFORD, IL
61104
PH: 815.965.6400
www.imegcorp.com

USER NAME = Michael.A.Phares	DESIGNED - Patrick Pauser	REVISED -	
	DRAWN - Patrick Pauser	REVISED -	
	CHECKED - Ali Gharamti	REVISED -	
PLOT DATE = 4/28/2026	DATE - 4/28/2026	REVISED -	

STATE OF ILLINOIS
DEPARTMENT OF TRANSPORTATION

PREFORMED JOINT STRIP SEAL
STRUCTURE NO. 016-0983

SCALE: | SHEET SB-07 OF SB-13 SHEETS | STA. | TO STA.

F.A.I. RTE.	SECTION	COUNTY	TOTAL SHEETS	SHEET NO.
290	(0404-316-HB) BR 24	COOK	276	141
		CONTRACT NO. 62W99		
		ILLINOIS	FED. AID PROJECT	

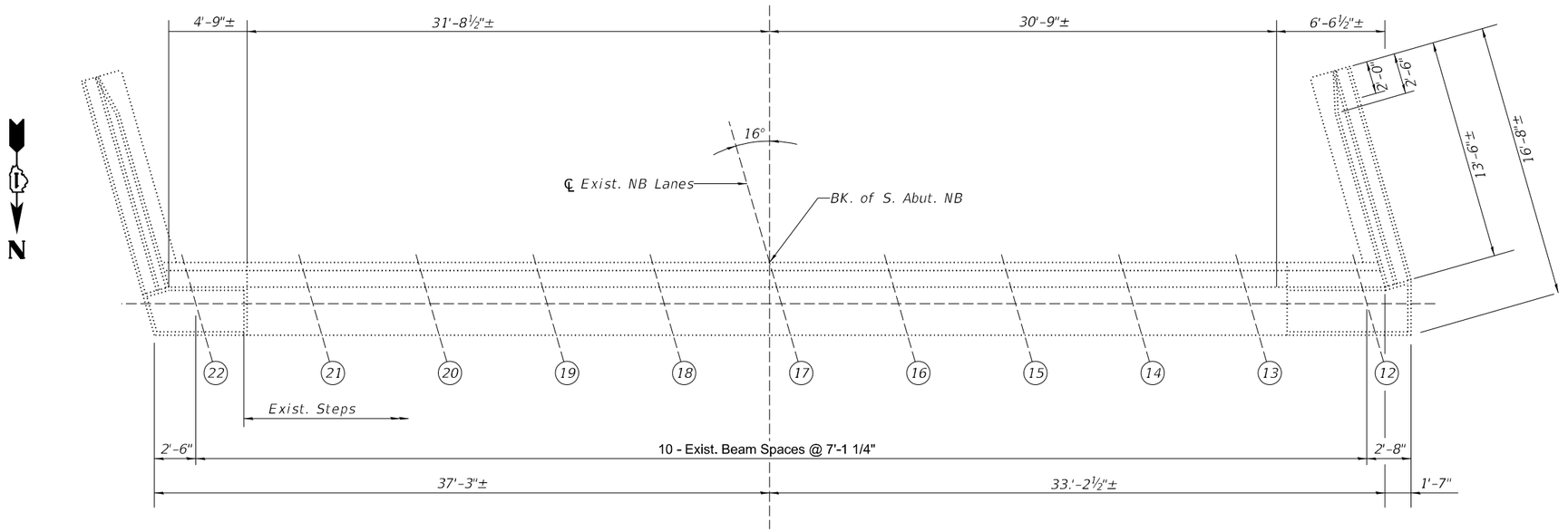

TOP PLAN (S. ABUTMENT N.B.)

BILL OF MATERIAL

ITEM	QUANTITY	UNIT
Structural Repair of Concrete (Depth equal to or less than 5")	14	SQ FT

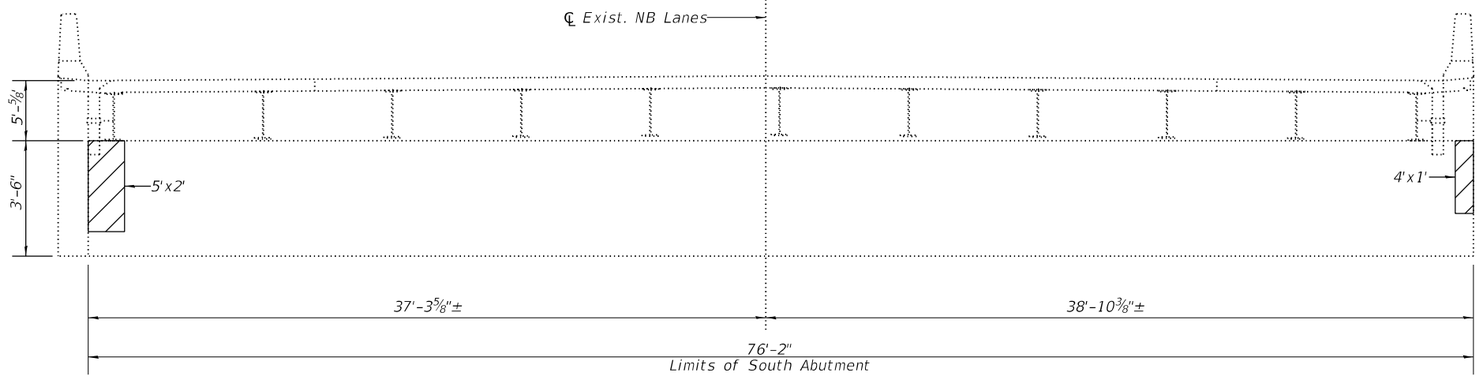

S. ABUTMENT ELEVATION (N.B.)

(LOOKING SOUTH)

LEGEND

Structural Repair of Concrete (Depth equal to or less than 5")

MODEL: Default
FILE NAME: W:\24001656.065\IDOT Dist 1 IL 290 Mill and Overlay\CADD Data\Bridge\ORD-CADD_Structural\016-0983 NB IL-53_I-290 Over IL-72_Higgins Rd\016-0983-06-South Abutment Repair Plan.dgn

IMEG
401 E. STATE ST. 4th Floor
ROCKFORD, IL 61104
PH: 815.965.6400
www.imegcorp.com

USER NAME = Michael.A.Phares	DESIGNED - Patrick Pauser	REVISED -
	DRAWN - Patrick Pauser	REVISED -
	CHECKED - Ali Gharamti	REVISED -
PLOT DATE = 4/28/2026	DATE - 4/28/2026	REVISED -

STATE OF ILLINOIS
DEPARTMENT OF TRANSPORTATION

SOUTH ABUTMENT REPAIRS
STRUCTURE NO. 016-0983

SCALE: | SHEET SB-08 OF SB-13 SHEETS | STA. | TO STA.

F.A.I. RTE.	SECTION	COUNTY	TOTAL SHEETS	SHEET NO.
290	(0404-316-HB) BR 24	COOK	276	142
		CONTRACT NO. 62W99		
	ILLINOIS FED. AID PROJECT			

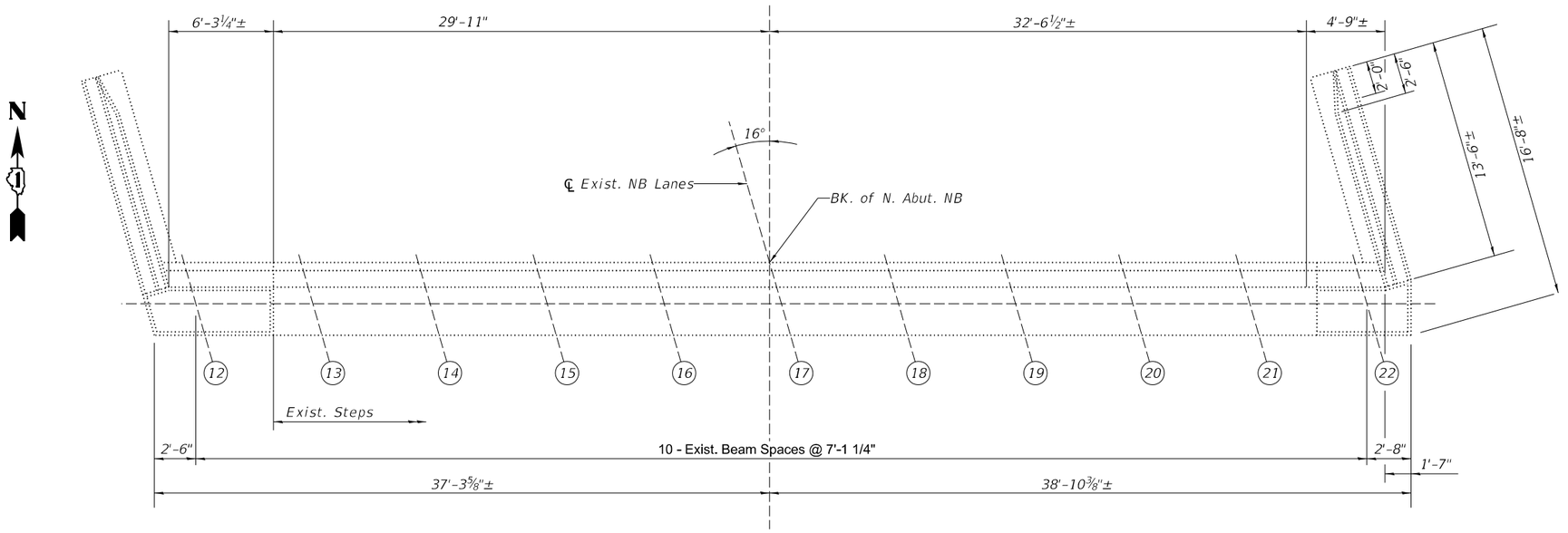

TOP PLAN (N. ABUTMENT N.B.)

BILL OF MATERIAL

ITEM	QUANTITY	UNIT
Structural Repair of Concrete (Depth equal to or less than 5")	25	SQ FT

LEGEND

Structural Repair of Concrete (Depth equal to or less than 5")

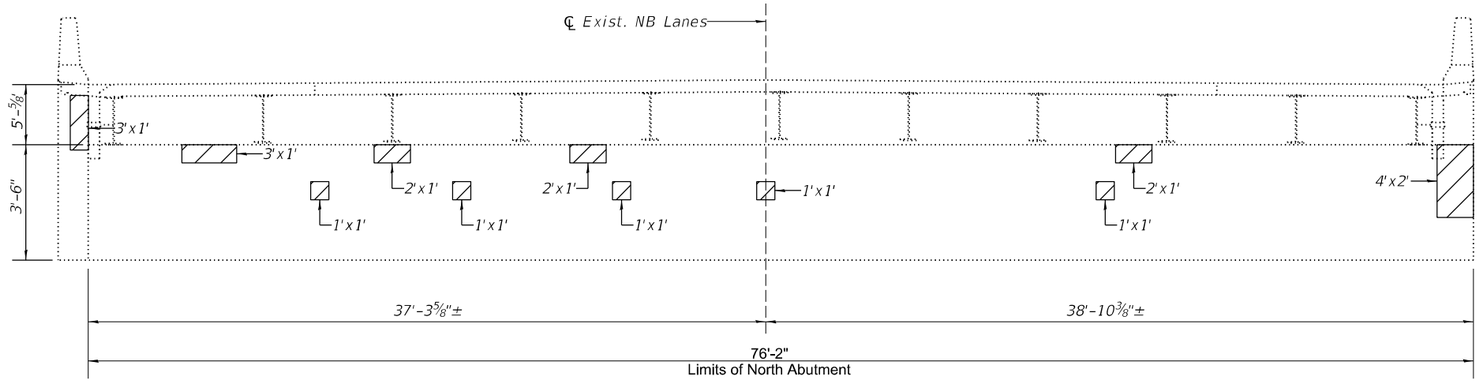

N. ABUTMENT ELEVATION (N.B.)

(LOOKING NORTH)

SB-09

IMEG
401 E. STATE ST. 4th Floor
ROCKFORD, IL
61104
PH: 815.965.6400
www.imegcorp.com

USER NAME = Michael.A.Phares	DESIGNED - Patrick Pauser	REVISED -	
	DRAWN - Patrick Pauser	REVISED -	
	CHECKED - Ali Gharamti	REVISED -	
PLOT DATE = 4/28/2026	DATE - 4/28/2026	REVISED -	

STATE OF ILLINOIS
DEPARTMENT OF TRANSPORTATION

NORTH ABUTMENT REPAIRS
STRUCTURE NO. 016-0983

SCALE: | SHEET SB-09 OF SB-13 SHEETS | STA. | TO STA.

F.A.I. RTE.	SECTION	COUNTY	TOTAL SHEETS	SHEET NO.
290	(0404-316-HB) BR 24	COOK	276	143
		CONTRACT NO. 62W99		
	ILLINOIS FED. AID PROJECT			

MODEL: Default
FILE NAME: W:\24001656.05\IDOT Dist 1 IL 290 Mill and Overlay\CADD Data\Bridges\ORD-CADD_Structural\016-0983 NB IL-53_I-290 Over IL-72_Higgins Rd\016-0983-09-North Abutment Repair Plan.dgn

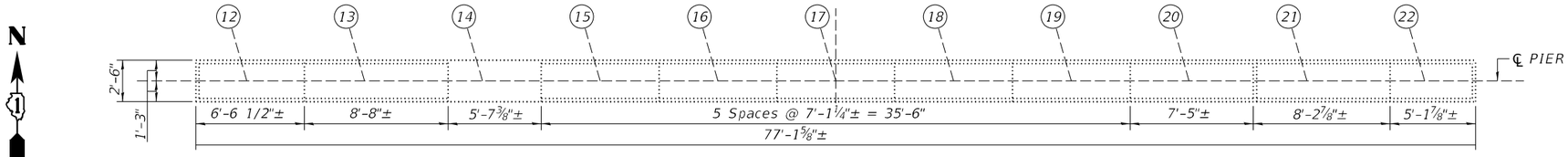

EXISTING TOP PLAN (PIER 1) N.B.

Notes:
Repair patch dimensions are called out horizontal by vertical.

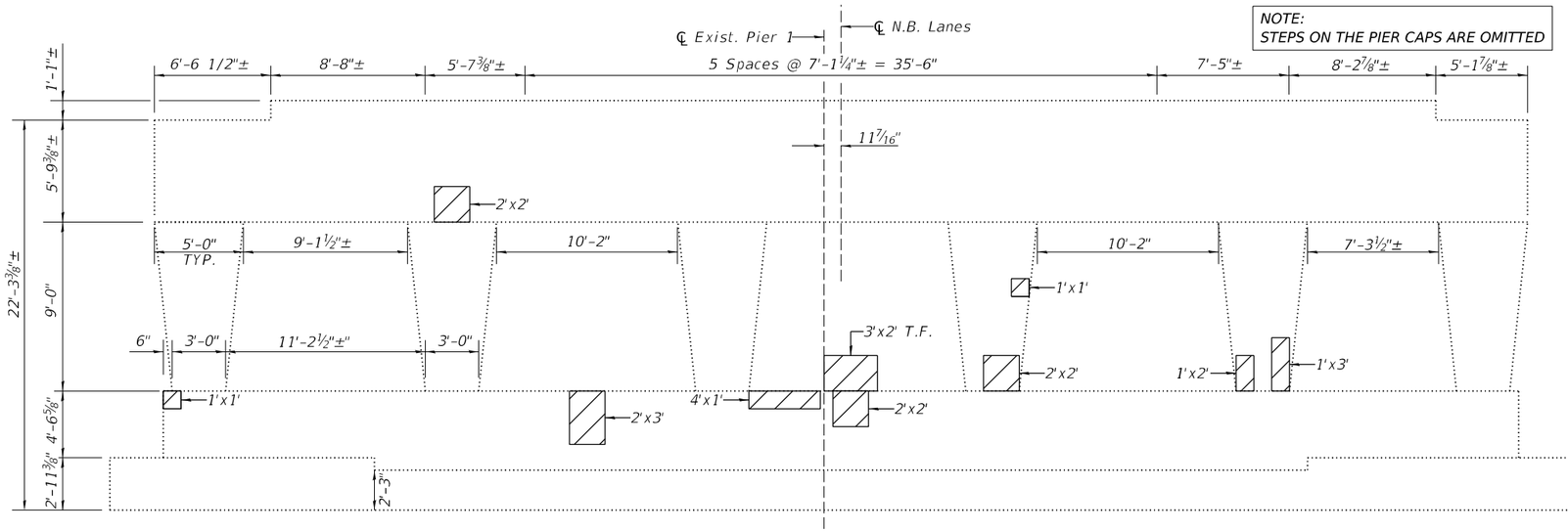

EXISTING ELEVATION (PIER 1) N.B.

(LOOKING NORTH)

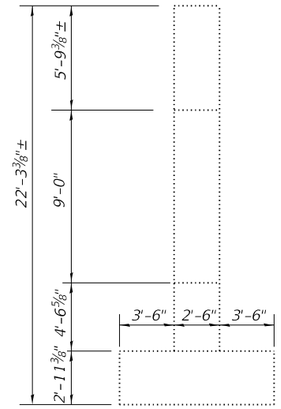

END VIEW

(WEST END)

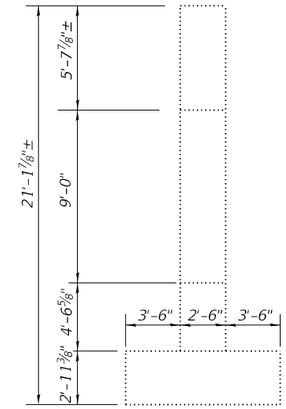

END VIEW

(EAST END)

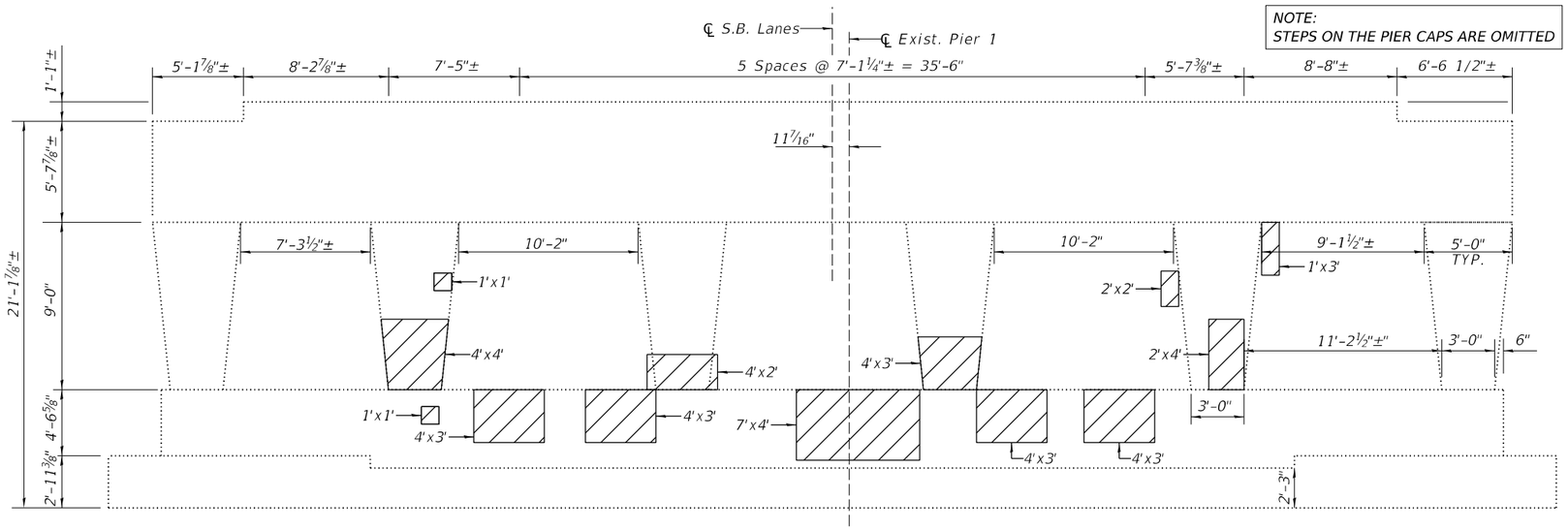

EXISTING ELEVATION (PIER 1) N.B.

(LOOKING SOUTH)

BILL OF MATERIAL

ITEM	QUANTITY	UNIT
Structural Repair of Concrete (Depth equal to or less than 5")	164	SQ FT

LEGEND

Structural Repair of Concrete (Depth equal to or less than 5")

T.F. = Top Face

IMEG
401 E. STATE ST. 4th Floor ROCKFORD, IL 61104
PH: 815.965.8400 www.imegcorp.com

USER NAME = Michael.A.Phares	DESIGNED - Patrick Pauser	REVISED -	
	DRAWN - Patrick Pauser	REVISED -	
	CHECKED - Ali Gharamti	REVISED -	
PLOT DATE = 4/28/2026	DATE - 4/28/2026	REVISED -	

STATE OF ILLINOIS
DEPARTMENT OF TRANSPORTATION

PIER 1 REPAIRS
STRUCTURE NO. 016-0983

SCALE: | SHEET SB-10 OF SB-13 SHEETS | STA. | TO STA.

F.A.I. RTE.	SECTION	COUNTY	TOTAL SHEETS	SHEET NO.
290	(0404-316-HB) BR 24	COOK	276	144
		CONTRACT NO. 62W99		
	ILLINOIS FED. AID PROJECT			

MODEL: Default
FILE NAME: W:\24001656.05\IDOT Dist 1 IL 290 Mill and Over\ay\CADD Data\Bridge\ORD-CADD_Structural\016-0983 NB IL-53_I-290 Over IL-72_Higgins Rd\016-0983-10-South Pier 1 Repair Plan.dgn

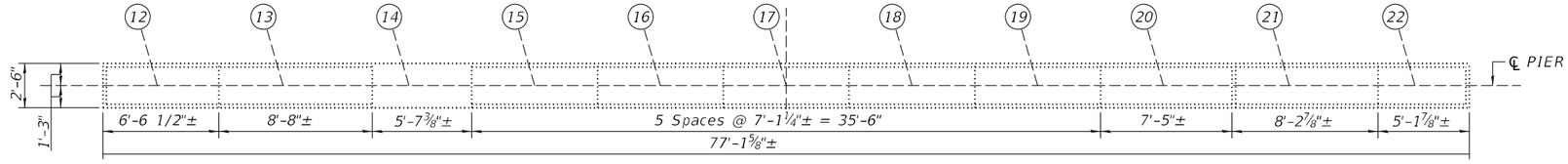

EXISTING TOP PLAN (PIER 2) N.B.

Notes:
Repair patch dimensions are called out horizontal by vertical.

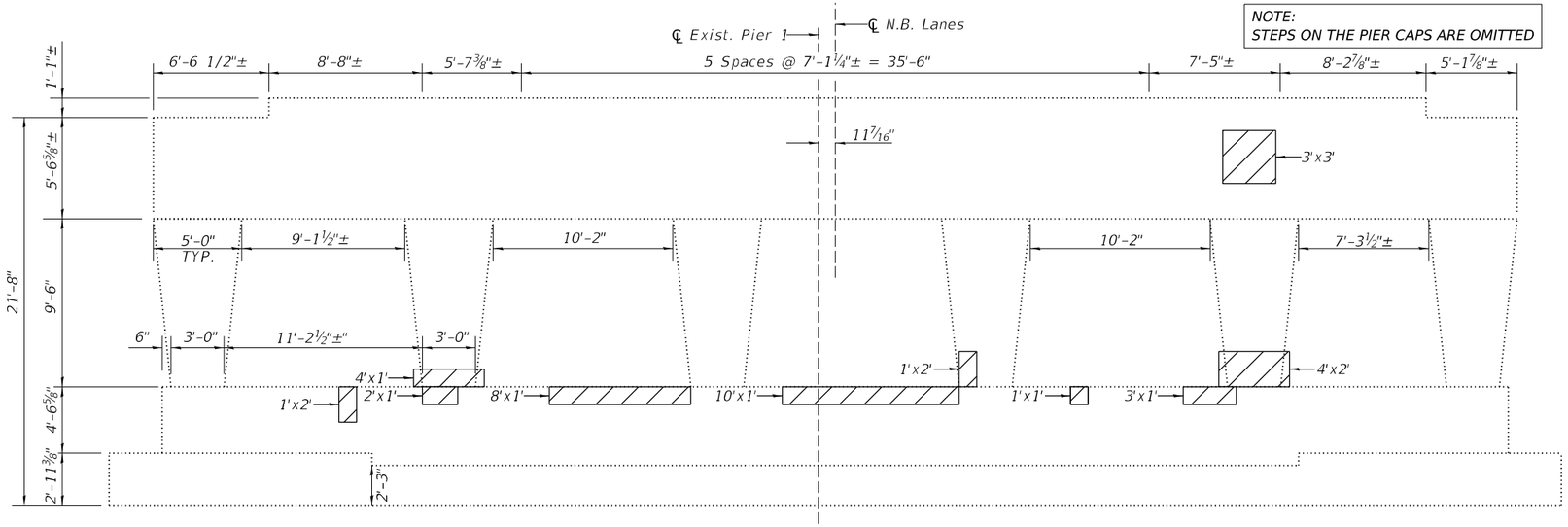

EXISTING ELEVATION (PIER 2) N.B.

(LOOKING NORTH)

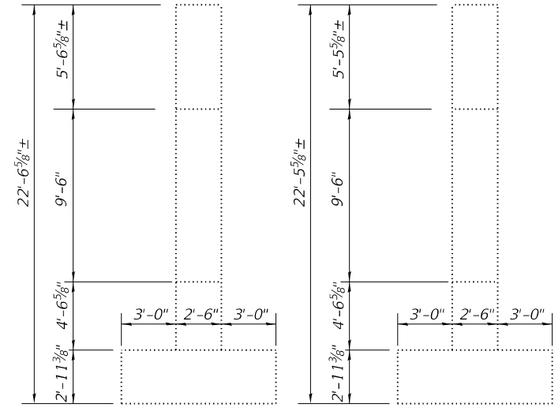

END VIEW

(WEST END)

END VIEW

(EAST END)

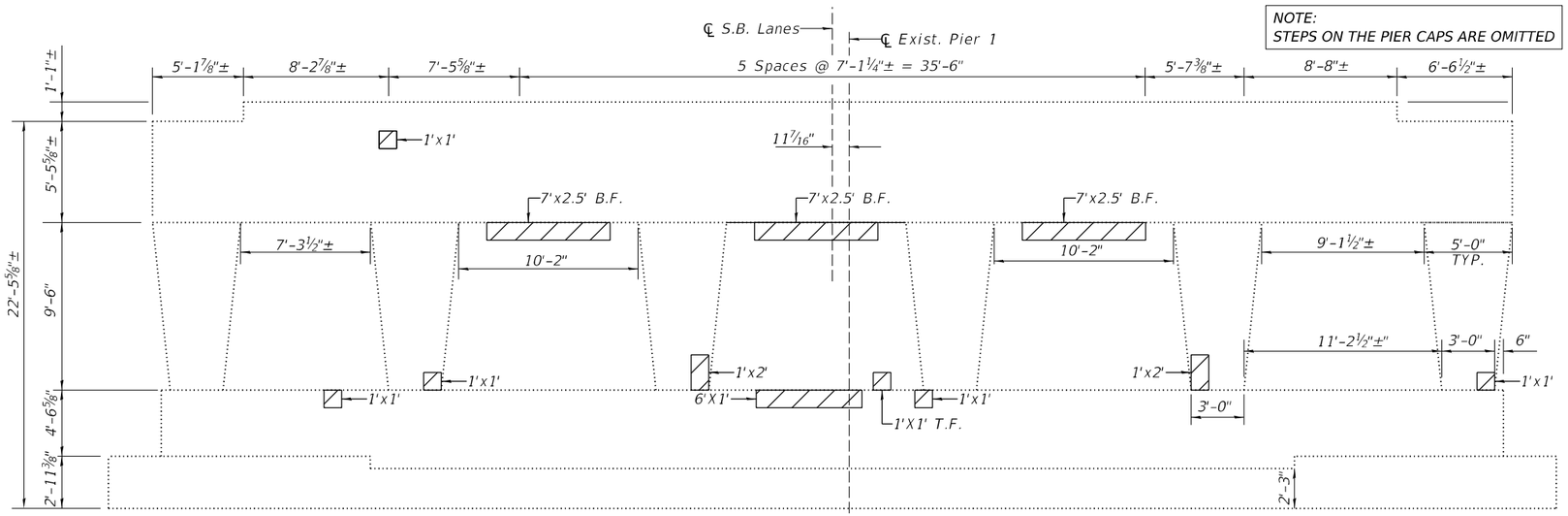

EXISTING ELEVATION (PIER 2) N.B.

(LOOKING SOUTH)

BILL OF MATERIAL

ITEM	QUANTITY	UNIT
Structural Repair of Concrete (Depth equal to or less than 5")	116	SQ FT

LEGEND

Structural Repair of Concrete (Depth equal to or less than 5")

B.F. = Bottom Face

T.F. = Top Face

SB-11

MODEL: Default
FILE NAME: W:\24001656.05\IDOT Dist 1 IL 290 Mill and Overlay\CADD Data\Bridge\ORD-CADD_Structural\016-0983 NB IL-53_I-290 Over IL-72_Higgins Rd\016-0983-11-North Pier 2 Repair Plan.dgn

IMEG
401 E. STATE ST. 4th Floor ROCKFORD, IL 61104 PH: 815.965.8400 www.imegcorp.com

USER NAME = Michael.A.Phares	DESIGNED - Patrick Pauser	REVISED -	
	DRAWN - Patrick Pauser	REVISED -	
	CHECKED - Ali Gharamti	REVISED -	
PLOT DATE = 4/28/2026	DATE - 4/28/2026	REVISED -	

STATE OF ILLINOIS
DEPARTMENT OF TRANSPORTATION

PIER 2 REPAIRS
STRUCTURE NO. 016-0983

SCALE: | SHEET SB-11 OF SB-13 SHEETS | STA. | TO STA.

F.A.I. RTE.	SECTION	COUNTY	TOTAL SHEETS	SHEET NO.
290	(0404-316-HB) BR 24	COOK	276	145
		CONTRACT NO. 62W99		
	ILLINOIS FED. AID PROJECT			

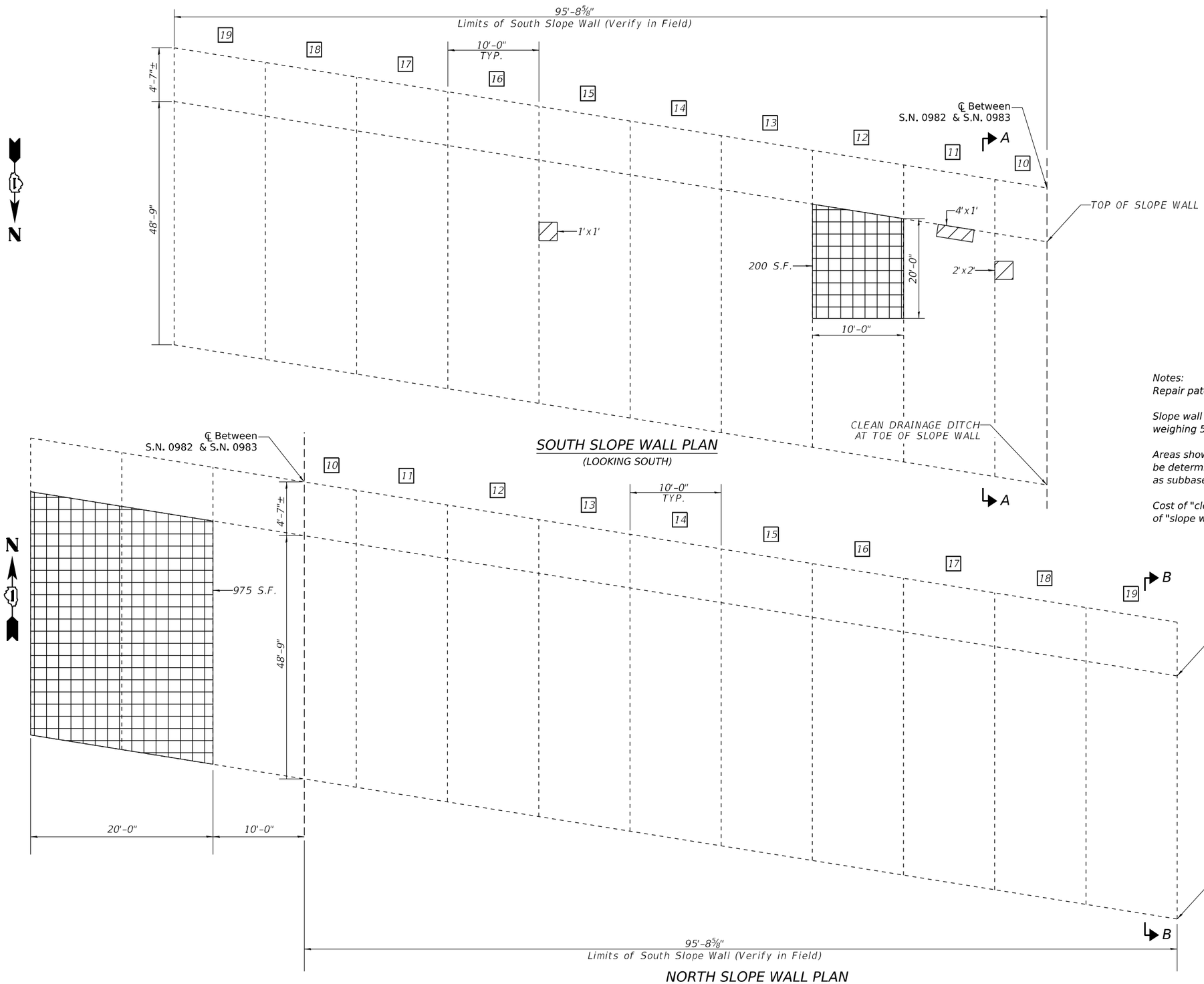

SOUTH SLOPE WALL PLAN
(LOOKING SOUTH)

NORTH SLOPE WALL PLAN
(LOOKING NORTH)

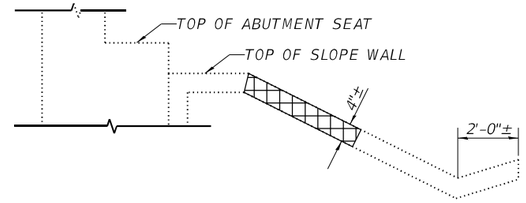

SECTION A-A

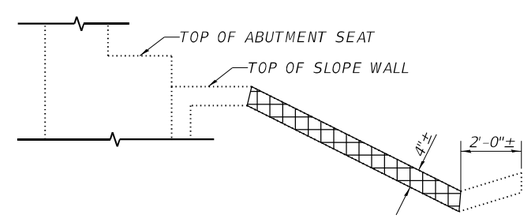

SECTION B-B

BILL OF MATERIAL

ITEM	QUANTITY	UNIT
Slope Wall Repair	1,184	SQ FT
Porous Granular Backfill	44	Cu Yd

LEGEND

Slope Wall Repair

Notes:
Repair patch dimensions are called out horizontal by vertical.

Slope wall shall be reinforced with welded wire fabric. 6" x 6" - W4.0xW4.0, weighing 58 lbs per 100 sq.ft.

Areas shown for Structural repair of concrete are estimated. Actual area should be determined by the Engineer at the time of repair. Install porous granular backfill as subbase for structural repair.

Cost of "clean drainage ditch at toe of slope wall" shall be included with the cost of "slope wall repair".

SB-12

IMEG
401 E. STATE ST. 4th Floor ROCKFORD, IL 61104
PH: 815.965.6400 www.imegcorp.com

USER NAME = Michael.A.Phares	DESIGNED - Patrick Pauser	REVISED -
	DRAWN - Patrick Pauser	REVISED -
	CHECKED - Ali Gharamti	REVISED -
PLOT DATE = 4/28/2026	DATE - 4/28/2026	REVISED -

STATE OF ILLINOIS
DEPARTMENT OF TRANSPORTATION

SLOPE WALL REPAIRS
STRUCTURE NO. 016-0983

SCALE: | SHEET SB-12 OF SB-13 SHEETS | STA. | TO STA.

F.A.I. RTE.	SECTION	COUNTY	TOTAL SHEETS	SHEET NO.
290	(0404-316-HB) BR 24	COOK	276	146
		CONTRACT NO. 62W99		
		ILLINOIS FED. AID PROJECT		

MODEL: Default
FILE NAME: W:\24001656.05\IDOT Dist 1 IL 290 Mill and Overlay\CADD Data\Bridge\ORD-CADD_Structural\016-0983 NB IL-53_I-290 Over IL-72_Higgins Rd\016-0983-12-Slope Wall Repair Plan.dgn

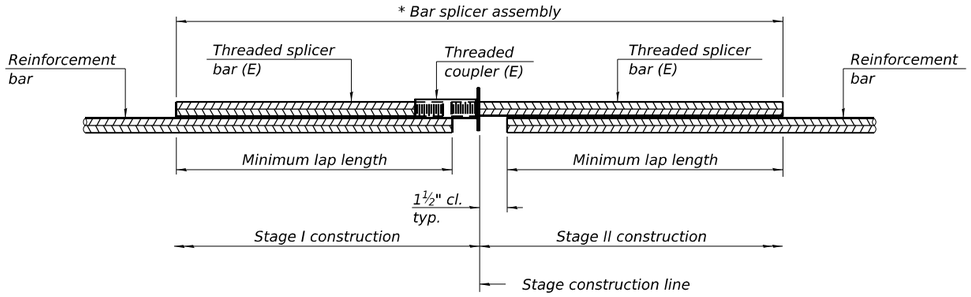

STANDARD BAR SPLICER ASSEMBLY PLAN

Only bar splicer assemblies as presented on the approved QPL list may be used.

Threaded splicer bar length = min. lap length + 1½" + thread length

** Epoxy not required on Bar Splicer Assembly components used in conjunction with black bars.*

Location	Bar size	No. assemblies required	Minimum lap length
Deck	#6	8	4'-10"
Hatchblock	#6	8	4'-10

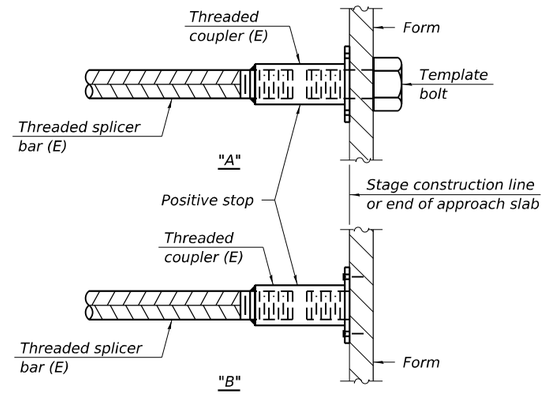

INSTALLATION AND SETTING METHODS

"A" : Set bar splicer assembly by means of a template bolt.
"B" : Set bar splicer assembly by nailing to wood forms or cementing to steel forms.
(E) : Indicates epoxy coating.

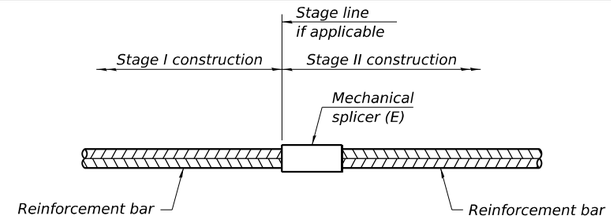

MECHANICAL BAR SPLICER

Location	Bar size	No. assemblies required

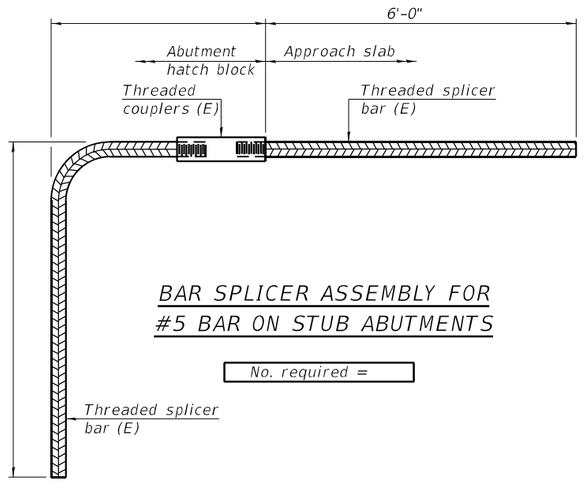

BAR SPLICER ASSEMBLY FOR #5 BAR ON STUB ABUTMENTS

No. required =

Notes:
Splicer bars shall be deformed with threaded ends and have a minimum 60 ksi yield strength.
All reinforcement shall be lapped and tied to the splicer bars.
Bar splicer assemblies shall be epoxy coated according to the requirements for reinforcement bars. See Section 508 of the Standard Specifications.
See approved list of bar splicer assemblies and mechanical splicers for alternatives.

BSD-1

4-4-2025

SB-13

MODEL: Default
FILE NAME: W:\24001656.05\IDOT Dist 1 IL 290 Mill and Overlay\CADD Data\Bridge\ORD-CADD_Structural\016-0983 NB IL-53_I-290 Over IL-72_Higgins Rd\016-0983-13-Bar Splicer.dgn

IMEG
401 E. STATE ST. 4th Floor ROCKFORD, IL 61104
PH: 815.965.6400
www.imegcorp.com

USER NAME = Michael.A.Phares	DESIGNED - Patrick Pauser	REVISED -	STATE OF ILLINOIS DEPARTMENT OF TRANSPORTATION	BAR SPLICER ASSEMBLY AND MECHANICAL SPLICER DETAILS STRUCTURE NO. 016-0983	
	DRAWN - Patrick Pauser	REVISED -			
	CHECKED - Ali Gharamti	REVISED -			
PLOT DATE = 4/28/2026	DATE - 4/28/2026	REVISED -		SCALE: SHEET SB-13 OF SB-13 SHEETS STA. TO STA.	

F.A.I. RTE.	SECTION	COUNTY	TOTAL SHEETS	SHEET NO.
290	(0404-316-HB) BR 24	COOK	276	147
		CONTRACT NO. 62W99		
	ILLINOIS FED. AID PROJECT			

Existing Structure: S.N. 016-0978 built in 1969 as F.A.I. Route 90, Section 0404-316-HB at Station 583+97.56. Structure consists of a three span steel WF beams with 168'-3" back to back abutments, varies 73'-1" to 75'-10½" out-to-out deck width, multi-column piers and stub abutments. In 1995, the overlay was removed and replaced. expansion joints were reconstructed at the abutments. the longitudinal joint was closed and the deck slab was repaired. In 2001, the rocker bearings were replaced at the abutments. In 2007, the overlay was removed and replaced, the deck slab was repaired, parapets were retrofitted, substructure, slopewall and expansion joint repairs were performed and the floor drains were modified.

Traffic will be maintained utilizing staged construction.

No Salvage.

SCOPE OF WORK

1. Perform partial deck slab repair.
2. Perform structural concrete repairs to parapet face.
3. Clean all existing drainage scuppers and flush downspouts.
4. Perform spalled and delaminated concrete repairs S. & N. abutments, piers 1 & 2.
5. Perform spalled and concrete repairs S. & N. slope walls.
6. Clean mud and debris at the toe of S. & N. slope walls.

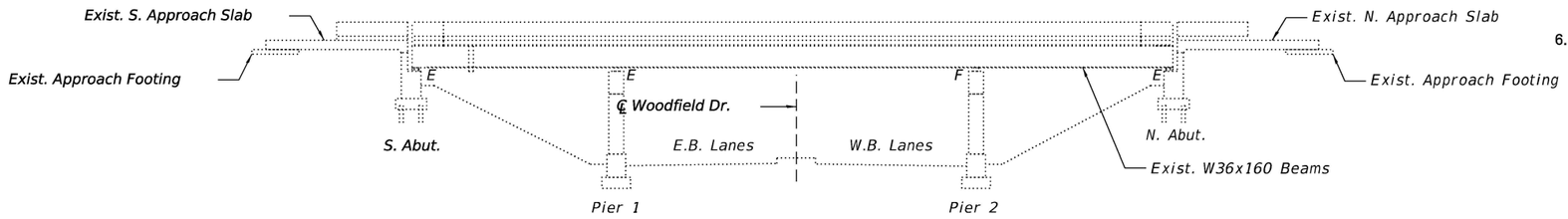

ELEVATION

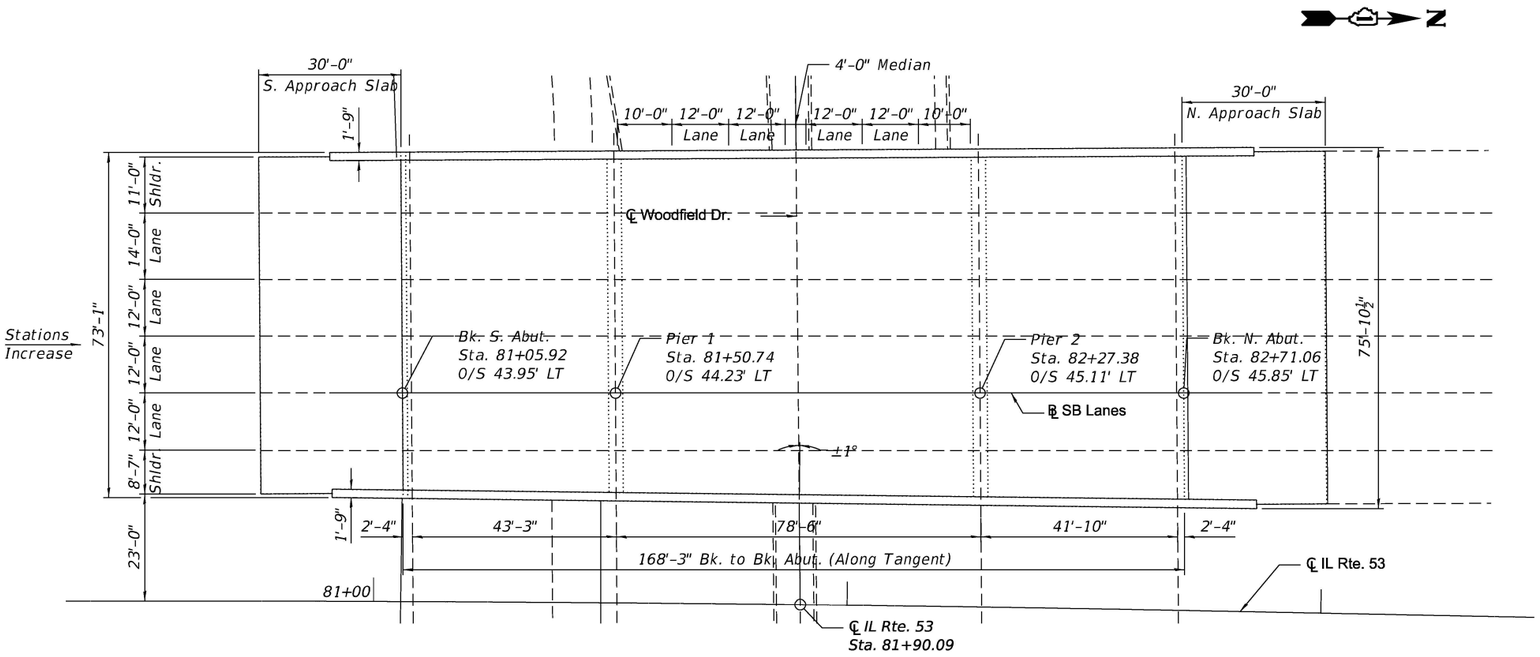

PLAN

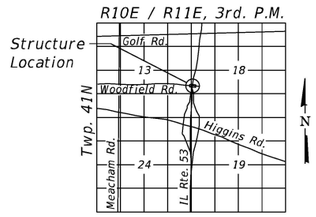

LOCATION SKETCH

LOADING HL-93

No future wearing surface allowed

DESIGN SPECIFICATIONS

2002 AASHTO LRFD Bridge Design Specifications, 17th Edition

DESIGN STRESSES

FIELD UNITS

f'c = 4,000 psi (Superstructure)
f'c = 3,500 psi (Substructure)
fy = 60,000 psi (Reinforcement)

ALI A. GHARAMTI
081-005060
LICENSED STRUCTURAL ENGINEER
EAST MOLINE
STATE OF ILLINOIS

Signature
Date 4/29/26
Exp. Date 11/30/26

GENERAL PLAN AND ELEVATION
IL RTE. 53 OVER WOODFIELD ROAD
SECTION 2017-065BR
COOK COUNTY
STA. 81+90.09
STRUCTURE NO. 016-0978

SC-01

MODEL: Default
FILE NAME: W:\24001656.05\IDOT Dist 1 IL 290 Mill and Overlay\CADD Data\Bridge\ORD-CADD_Structural\016-0978 SB IL-53_I-290 Over Woodfield Rd\016-0978-01-GPE.dgn

IMEG
401 E. STATE ST. 4th Floor ROCKFORD, IL 61104
PH: 815.965.6400
www.imegcorp.com

USER NAME = Michael.A.Phares	DESIGNED - Patrick Pauser	REVISED -
	DRAWN - Patrick Pauser	REVISED -
	CHECKED - Ali Gharamti	REVISED -
PLOT DATE = 4/28/2026	DATE - 4/28/2026	REVISED -

STATE OF ILLINOIS
DEPARTMENT OF TRANSPORTATION

I-290 SOUTHBOUND
STRUCTURE NO. 016-0978

SCALE: | SHEET SC-01 OF SC-07 SHEETS | STA. | TO STA.

F.A.I. RTE.	SECTION	COUNTY	TOTAL SHEETS	SHEET NO.
290	(0404-316-HB) BR 24	COOK	276	148
		CONTRACT NO. 62W99		
		ILLINOIS	FED. AID PROJECT	

GENERAL NOTES

1. Plan dimensions and details relative to existing structure have been taken from existing plans and are subject to nominal construction variations. The Contractor shall field verify dimensions and details affecting new construction and make necessary approved adjustments prior to construction or ordering of materials. Such variations shall not be cause for additional compensation for a change in scope of the work, however, the Contractor will be paid for the quantity actually furnished at the unit price bid for the work.

2. Existing reinforcement extended into the removal area shall be cleaned, straightened and incorporated into the new construction. Any reinforcement bars that are damaged during concrete removal operations shall be replaced using an approved bar splicer or anchorage system at the Constracot's expense.

3. All Construction joints shall be bonded.

4. No field welding is permitted except as specified in the contract documents.

5. Stations and offsets called out on the plans are approximate. The Contractor shall field verify the stations and offsets during construction layout.

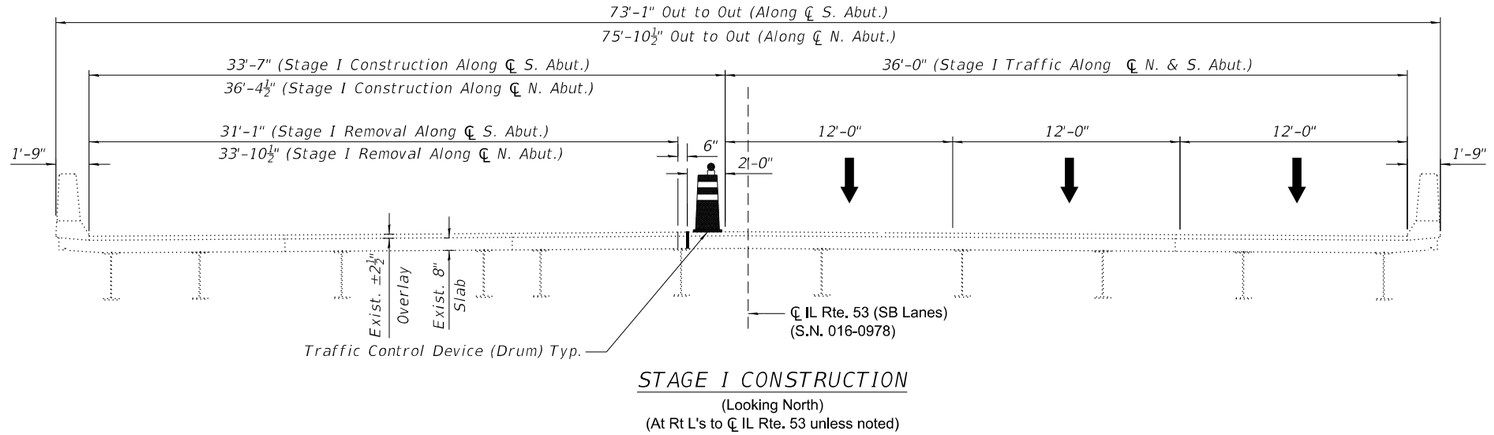

STAGE I CONSTRUCTION

(Looking North)
(At Rt L's to ℄ IL Rte. 53 unless noted)

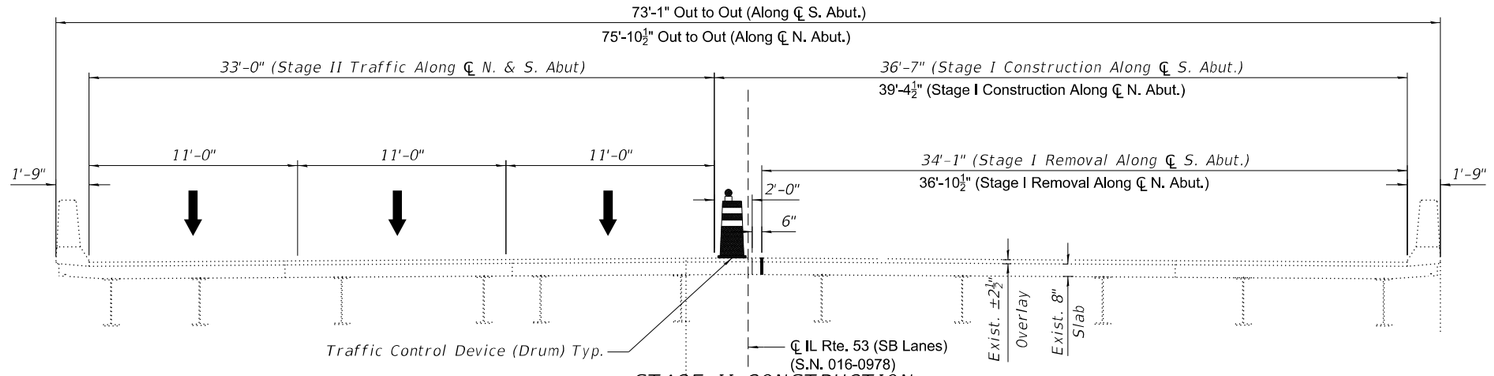

STAGE II CONSTRUCTION

(Looking North)
(At Rt L's to ℄ IL Rte. 53 unless noted)

INDEX OF SHEETS

SC-01 General Plan and Elevation

SC-02 General Notes, Bill of Materials and Stage Construction Details

SC-03 Bridge Deck Patching

SC-04 Parapet Repairs

SC-05 Pier 1 Repairs

SC-06 Pier 2 Repairs

SC-07 Substructure Repair Details

TOTAL BILL OF MATERIAL

ITEM	UNIT	SUPER	SUB	TOTAL
Structural Repair of Concrete (Depth Equal to or less than 5")	Sq. Ft.	37	215	282
Slope Wall Repair	Sq. Ft.	0	100	100
Porous Granular Backfill	Cu. Yd.	0	5	5
Missing Reflective Marker Holes shall be Filled with Epoxy	Each	6	0	6
Cleaning Bridge Scuppers & Downspouts	Each	8	0	8
Deck Slab Repair (Partial)	Sq. Ft.	30	0	30

IMEG
401 E. STATE ST. 4th Floor ROCKFORD, IL 61104
PH: 815.965.6400
www.imegcorp.com

USER NAME = Michael.A.Phares	DESIGNED - Patrick Pauser	REVISED -
	DRAWN - Patrick Pauser	REVISED -
	CHECKED - Ali Gharamti	REVISED -
PLOT DATE = 4/28/2026	DATE - 4/28/2026	REVISED -

STATE OF ILLINOIS
DEPARTMENT OF TRANSPORTATION

GENERAL NOTES, BILL OF MATERIAL AND STAGE CONST. DETAILS
STRUCTURE NO. 016-0978

SCALE: | SHEET SC-02 OF SC-07 SHEETS | STA. | TO STA.

F.A.I. RTE.	SECTION	COUNTY	TOTAL SHEETS	SHEET NO.
290	(0404-316-HB) BR 24	COOK	276	149
		CONTRACT NO. 62W99		
	ILLINOIS FED. AID PROJECT			

MODEL: Default
FILE NAME: W:\24001656.05\IDOT Dist 1 IL 290 Mill and Overlay\CADD Data\Bridge\ORD-CADD_Structural\016-0978 SB IL-53_I-290 Over Woodfield Rd\016-0978-02-Gennote_BOM_Stage.dgn

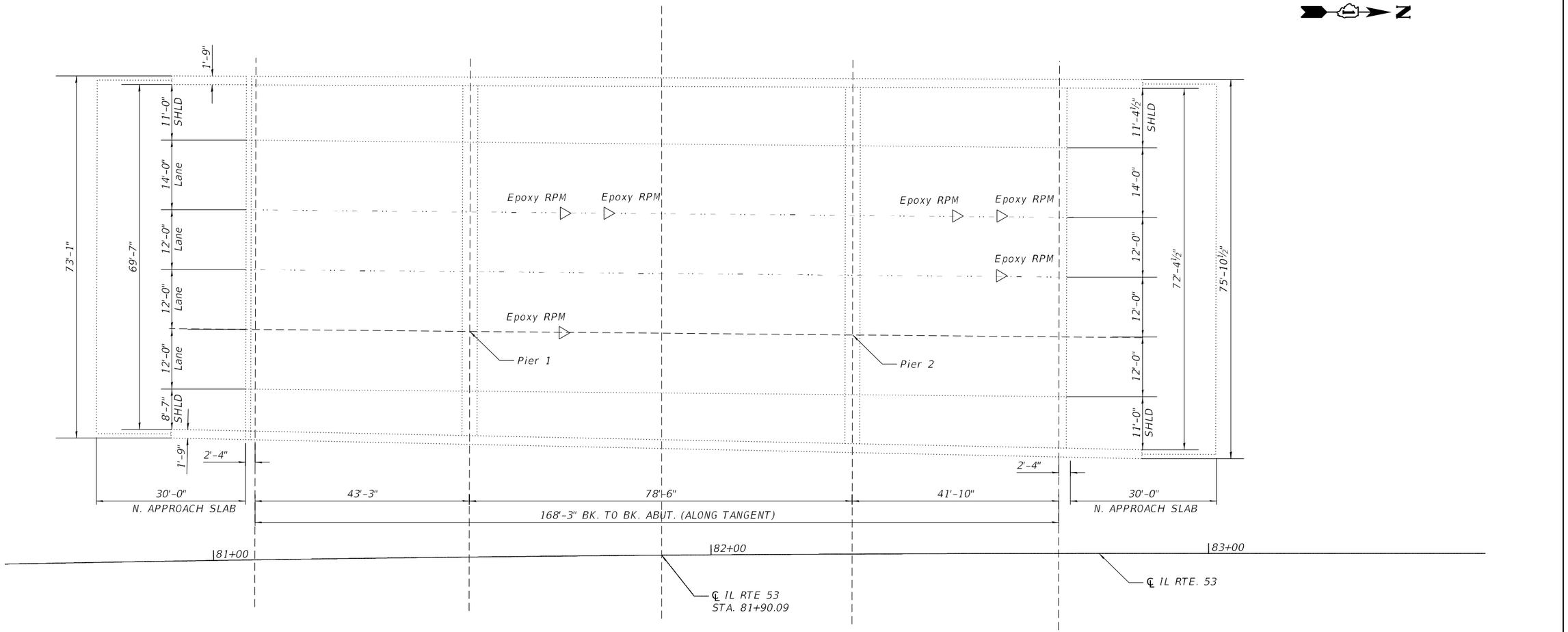

BRIDGE DECK
BILL OF MATERIAL

Item	Unit	Quantity
Deck Slab Repair (Partial)	Sq. Ft.	30
Missing Reflective Marker Holes shall be Filled with Epoxy	Each	6

NOTE:
Spalls at broken or missing raised reflective pavement markers shall be repaired by epoxy per specifications.

A contingency quantity of 30 Sq. Ft. for Deck Slab Repair (Partial) is included. Areas shall be determined in the field by the Engineer.

LEGEND

◁ Missing Reflective Marker Holes shall be Filled with Epoxy

SC-03

IMEG
401 E. STATE ST. 4th Floor
ROCKFORD, IL 61104
PH: 815.965.8400
www.imegcorp.com

USER NAME = Michael.A.Phares	DESIGNED - Patrick Pauser	REVISED -	
	DRAWN - Patrick Pauser	REVISED -	
	CHECKED - Ali Gharamti	REVISED -	
PLOT DATE = 4/28/2026	DATE - 4/28/2026	REVISED -	

STATE OF ILLINOIS
DEPARTMENT OF TRANSPORTATION

DECK BRIDGE PATCHING
STRUCTURE NO. 016-0978

SCALE: | SHEET SC-03 OF SC-07 SHEETS | STA. | TO STA.

F.A.I. RTE.	SECTION	COUNTY	TOTAL SHEETS	SHEET NO.
290	(0404-316-HB) BR 24	COOK	276	150
		CONTRACT NO. 62W99		
	ILLINOIS FED. AID PROJECT			

MODEL: Default
FILE NAME: W:\24001656.05\IDOT Dist 1 IL 290 Mill and Overlay\CADD Data\Bridge\ORD-CADD_Structural\016-0978 SB IL-53_I-290 Over Woodfield Rd\016-0978-03-Deck Repair Plan.dgn

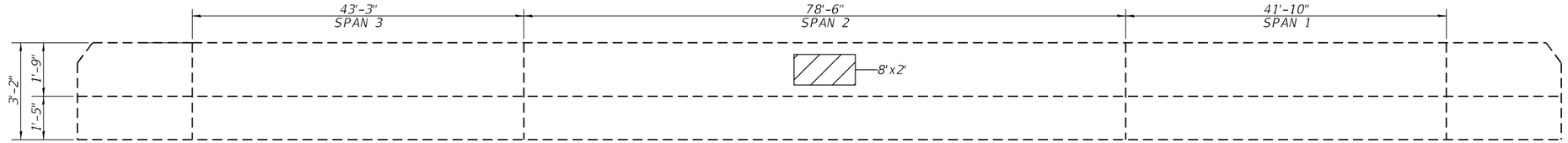

ELEVATION - WEST PARAPET
(LOOKING EAST)

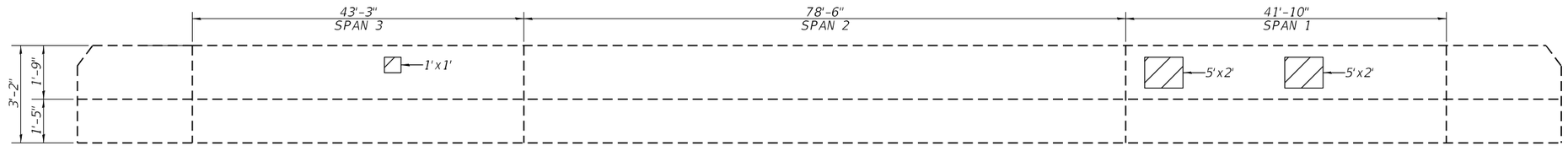

ELEVATION - EAST PARAPET
(LOOKING WEST)

Notes:
Repair patch dimensions are called out horizontal by vertical.

Structural repair of concrete areas shall be determined as equal to or less than 5".

BILL OF MATERIAL

ITEM	QUANTITY	UNIT
Structural Repair of Concrete (Depth equal to or less than 5")	37	SQ FT

LEGEND

Structural Repair of Concrete (Depth equal to or less than 5")

SC-04

MODEL: Default
FILE NAME: W:\24001656.05\IDOT Dist 1 IL 290 Mill and Overlay\CADD Data\Bridge\ORD-CADD_Structural\016-0978 SB IL-53_I-290 Over Woodfield Rd\016-0978-04-Parapet Wall Repair Plan.dgn

IMEG
401 E. STATE ST. 4th Floor
ROCKFORD, IL
61104
PH: 815.965.6400
www.imegcorp.com

USER NAME = Michael.A.Phares	DESIGNED - Patrick Pauser	REVISED -
	DRAWN - Patrick Pauser	REVISED -
	CHECKED - Ali Gharamti	REVISED -
PLOT DATE = 4/28/2026	DATE - 4/28/2026	REVISED -

STATE OF ILLINOIS
DEPARTMENT OF TRANSPORTATION

PARAPET WALL REPAIRS
STRUCTURE NO. 016-0978

SCALE: | SHEET SC-04 OF SC-07 SHEETS | STA. | TO STA.

F.A.I. RTE.	SECTION	COUNTY	TOTAL SHEETS	SHEET NO.
290	(0404-316-HB) BR 24	COOK	276	151
		CONTRACT NO. 62W99		
	ILLINOIS FED. AID PROJECT			

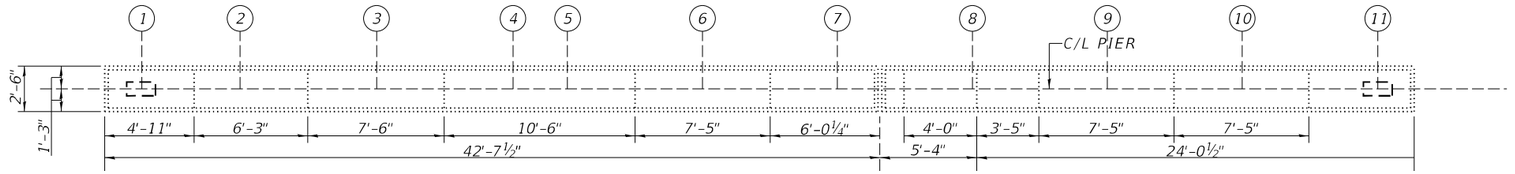

EXISTING TOP PLAN

NOTE:
STEPS ON THE PIER CAPS ARE OMITTED

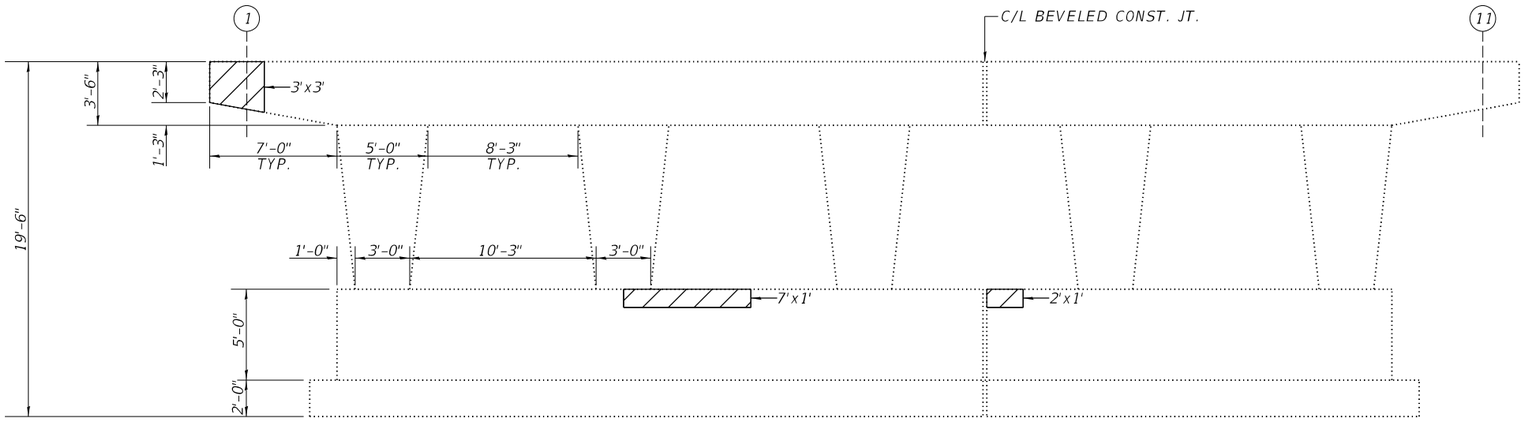

EXISTING ELEVATION
(LOOKING NORTH)

Notes:
Repair patch dimensions are called out horizontal by vertical.

Structural repair of concrete areas shall be determined as equal to or less than 5".

BILL OF MATERIAL

ITEM	QUANTITY	UNIT
Structural Repair of Concrete (Depth equal to or less than 5")	90	SQ FT

LEGEND

Structural Repair of Concrete (Depth equal to or less than 5")

T.F. = Top Face

NOTE:
STEPS ON THE PIER CAPS ARE OMITTED

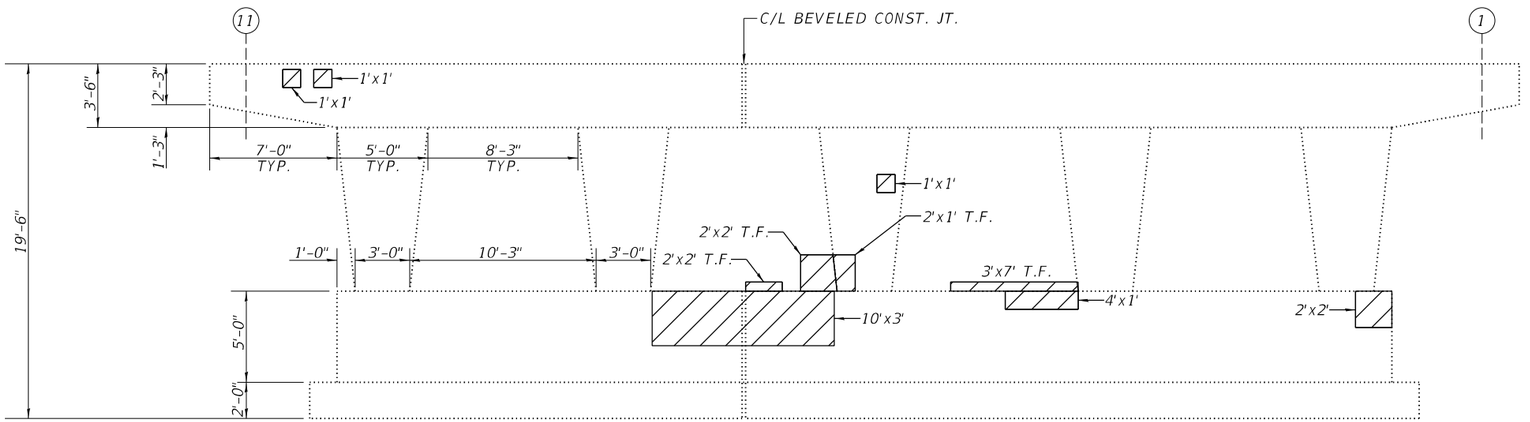

EXISTING ELEVATION
(LOOKING SOUTH)

SC-05

MODEL: Default
FILE NAME: W:\24001656.05\IDOT Dist 1 IL 290 Mill and Overlay\CADD Data\Bridge\ORD-CADD_Structural\016-0978 SB IL-53_I-290 Over Woodfield Rd\016-0978-05-South Pier 1 Repair Plan.dgn

IMEG
401 E. STATE ST. 4th Floor ROCKFORD, IL 61104
PH: 815.965.6400 www.imegcorp.com

USER NAME = Michael.A.Phares	DESIGNED - Patrick Pauser	REVISED -
	DRAWN - Patrick Pauser	REVISED -
	CHECKED - Ali Gharamti	REVISED -
PLOT DATE = 4/28/2026	DATE - 4/28/2026	REVISED -

STATE OF ILLINOIS
DEPARTMENT OF TRANSPORTATION

PIER 1 REPAIRS
STRUCTURE NO. 016-0978

SCALE: | SHEET SC-05 OF SC-07 SHEETS | STA. | TO STA.

F.A.I. RTE.	SECTION	COUNTY	TOTAL SHEETS	SHEET NO.
290	(0404-316-HB) BR 24	COOK	276	152
		CONTRACT NO. 62W99		
		ILLINOIS FED. AID PROJECT		

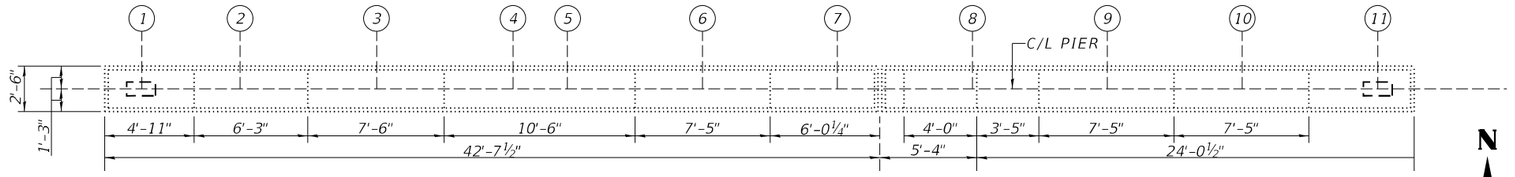

EXISTING TOP PLAN

NOTE:
STEPS ON THE PIER CAPS ARE OMITTED

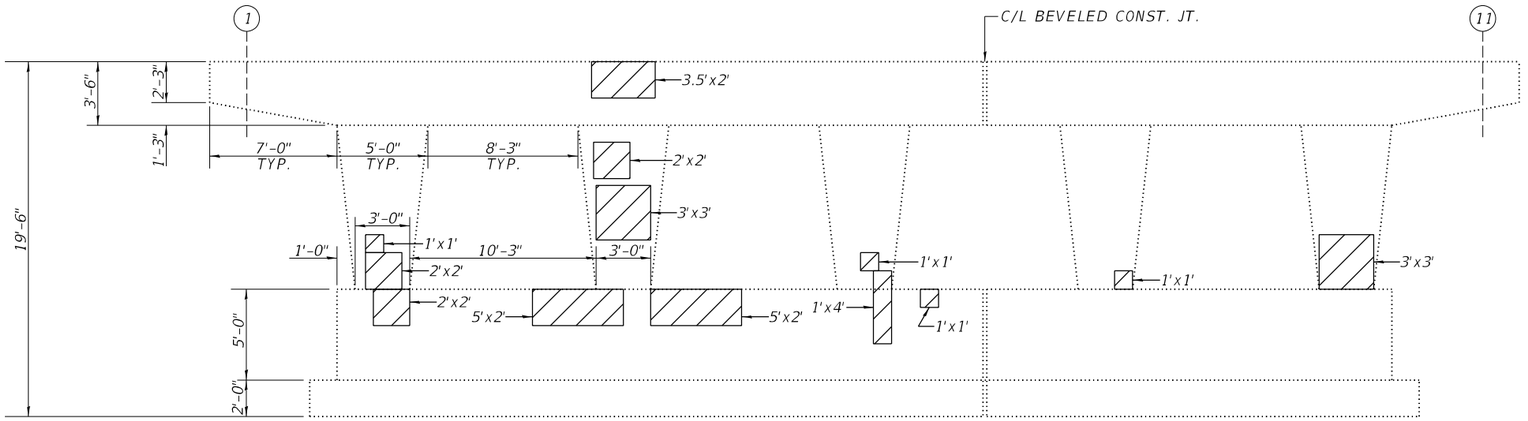

EXISTING ELEVATION
(LOOKING NORTH)

Notes:
Repair patch dimensions are called out horizontal by vertical.

Structural repair of concrete areas shall be determined as equal to or less than 5".

BILL OF MATERIAL

ITEM	QUANTITY	UNIT
Structural Repair of Concrete (Depth equal to or less than 5")	127	SQ FT

LEGEND

Structural Repair of Concrete (Depth equal to or less than 5")

T.F. = Top Face

NOTE:
STEPS ON THE PIER CAPS ARE OMITTED

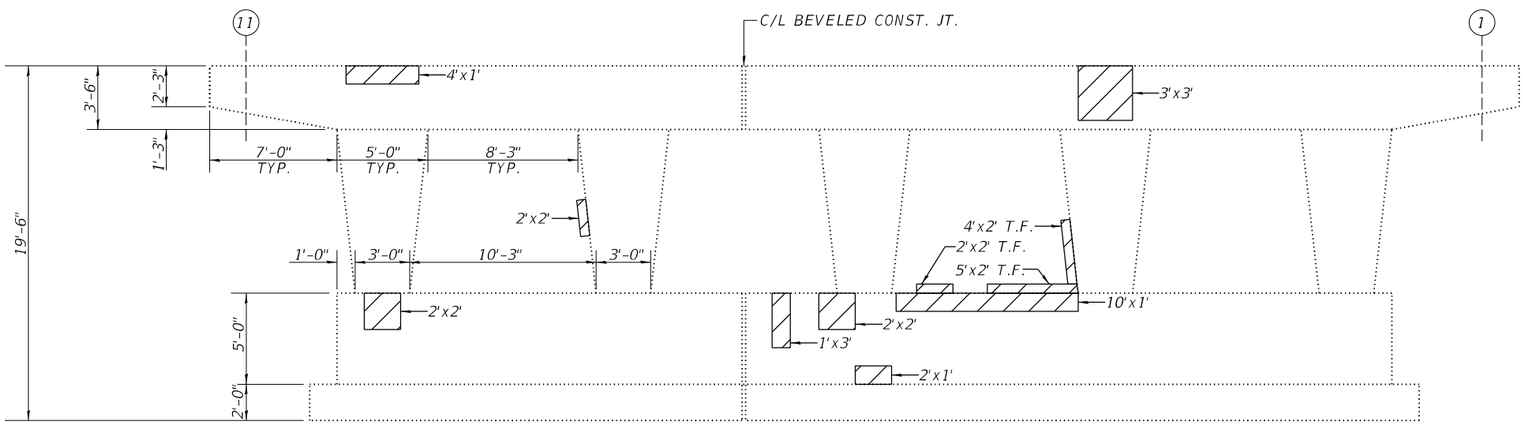

EXISTING ELEVATION
(LOOKING SOUTH)

MODEL: Default
FILE NAME: W:\24001656.05\IDOT Dist 1 IL 290 Mill and Overlay\CADD Data\Bridge\ORD-CADD_Structural\016-0978 SB IL-53_I-290 Over Woodfield Rd\016-0978-06-North Pier 2 Repair Plan.dgn

IMEG
401 E. STATE ST. 4th Floor
ROCKFORD, IL 61104
PH: 815.965.6400
www.imegcorp.com

USER NAME = Michael.A.Phares	DESIGNED - Patrick Pauser	REVISED -	
	DRAWN - Patrick Pauser	REVISED -	
	CHECKED - Ali Gharamti	REVISED -	
PLOT DATE = 4/28/2026	DATE - 4/28/2026	REVISED -	

STATE OF ILLINOIS
DEPARTMENT OF TRANSPORTATION

PIER 2 REPAIRS
STRUCTURE NO. 016-0978

SCALE: | SHEET SC-06 OF SC-07 SHEETS | STA. | TO STA.

F.A.I. RTE.	SECTION	COUNTY	TOTAL SHEETS	SHEET NO.
290	(0404-316-HB) BR 24	COOK	276	153
		CONTRACT NO. 62W99		
	ILLINOIS FED. AID PROJECT			

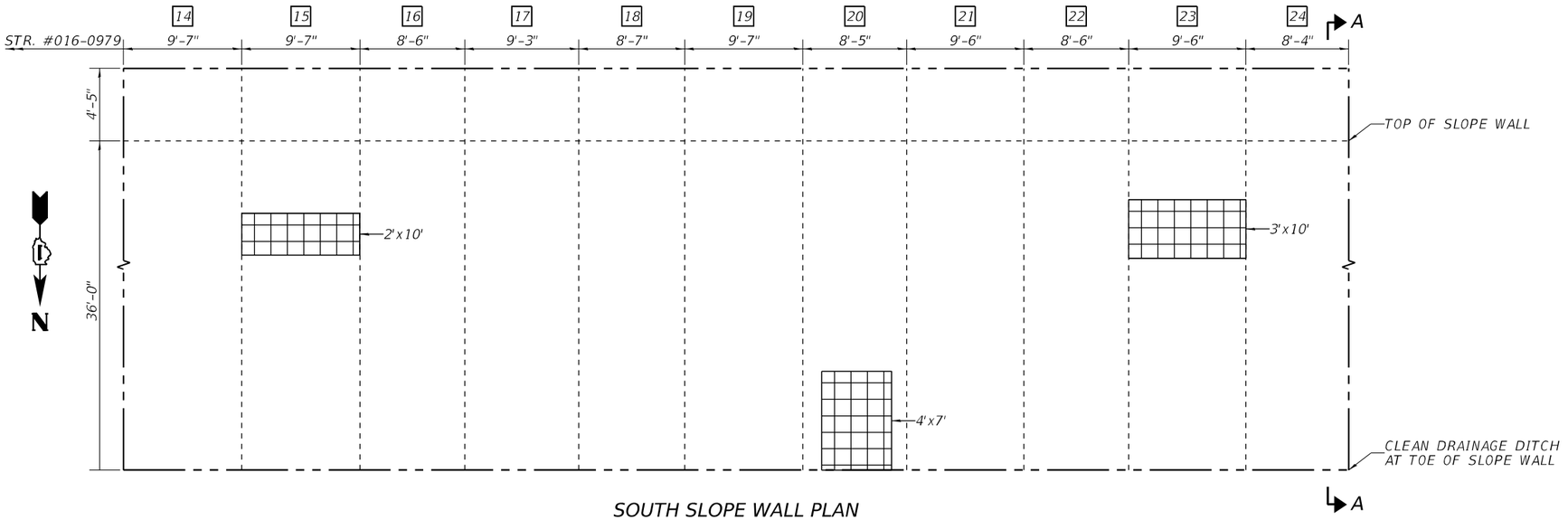

SOUTH SLOPE WALL PLAN
(LOOKING SOUTH)

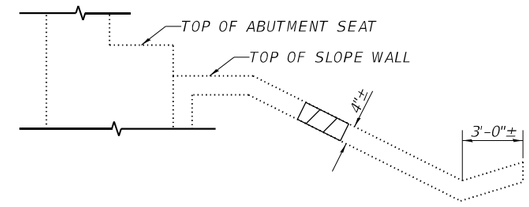

SECTION A-A

BILL OF MATERIAL

ITEM	QUANTITY	UNIT
Slope Wall Repair	100	SQ FT
Porous Granular Backfill	5	Cu. Yd.

LEGEND

Slope Wall Repair

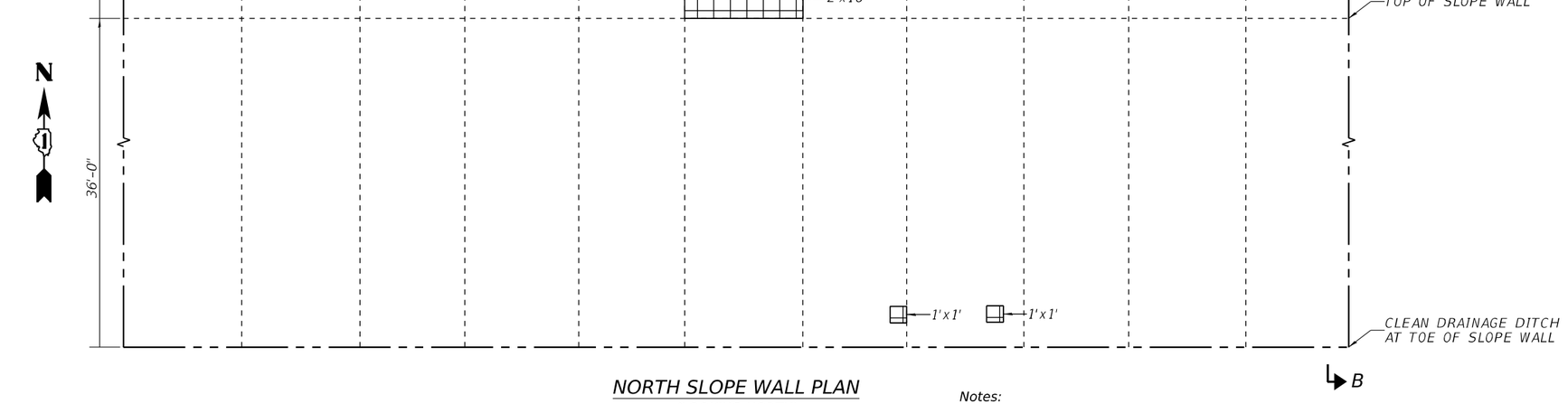

NORTH SLOPE WALL PLAN
(LOOKING NORTH)

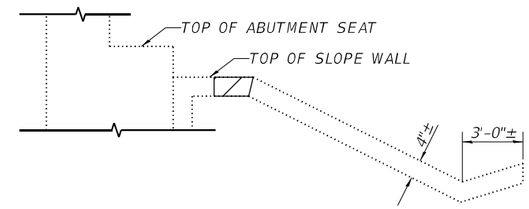

SECTION B-B

Notes:
Repair patch dimensions are called out horizontal by vertical.

Areas shown for Structural repair of concrete are estimated. Actual area should be determined by the Engineer at the time of repair. Install porous granular backfill as subbase for structural repair.

Cost of "clean drainage ditch at toe of slope wall" shall be included with the cost of "slope wall repair".

Slope wall shall be reinforced with welded wire fabric. 6" x 6" - W4.0xW4.0, weighing 58 lbs per 100 sq.ft.

SC-07

IMEG
401 E. STATE ST. 4th Floor ROCKFORD, IL 61104
PH: 815.965.6400
www.imegcorp.com

USER NAME = Michael.A.Phares	DESIGNED - Patrick Pauser	REVISED -
	DRAWN - Patrick Pauser	REVISED -
	CHECKED - Ali Gharamti	REVISED -
PLOT DATE = 4/28/2026	DATE - 4/28/2026	REVISED -

STATE OF ILLINOIS
DEPARTMENT OF TRANSPORTATION

SLOPE WALL REPAIRS
STRUCTURE NO. 016-0978

SCALE: | SHEET SC-07 OF SC-07 SHEETS | STA. | TO STA.

F.A.I. RTE.	SECTION	COUNTY	TOTAL SHEETS	SHEET NO.
290	(0404-316-HB) BR 24	COOK	276	154
		CONTRACT NO. 62W99		
	ILLINOIS FED. AID PROJECT			

MODEL: Default
FILE NAME: W:\240016\56.05\IDOT Dist 1 IL 290 Mill and Overlay\CADD Data\Bridge\ORD-CADD_Structural\016-0978 SB IL-53_I-290 Over Woodfield Rd\016-0978-07-Slope Wall Repair Plan.dgn

Existing Structure: S.N. 016-0979 built in 1969 as F.A.I. Route 90, Section 0404-316-HB at Station 583+97.56. Structure consists of a three span steel WF beams with 168'-3" back to back abutments, 85'-4"out-to-out deck width, multi-column piers and stub abutments. In 1981 expansion joints and partial depth deck were repaired. In 2003 the existing deck was removed and replaced with a new composite reinenforced concrete deck. Deck, abutments and piers were widened. 3-wide flange steel beams were added.

Traffic will be maintained utilizing staged construction.

No Salvage.

SCOPE OF WORK

1. Perform partial deck slab repair.
2. Remove and replace transverse expansion joints at both abutments to Preformed Strip Seal Joint.
3. Clean all existing drainage scuppers and flush downspouts.
4. Perform spalled and delaminated concrete repairs S. & N. abutments, piers 1 & 2.
5. Remove and replace slope wall panels & perform spalled and concrete repairs S. & N. slope walls.
6. Perform spalled and concrete repairs at wing walls.
7. Clean mud and debris at the toe of S. & N. slope walls.

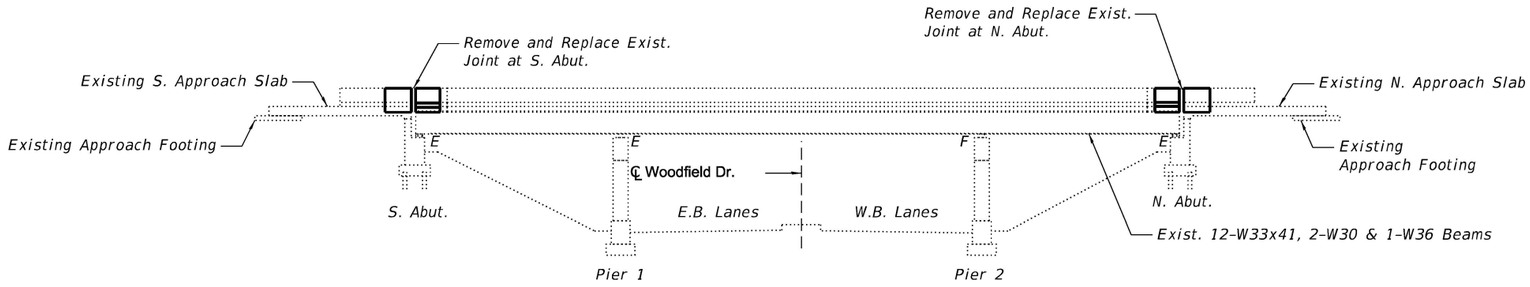

ELEVATION

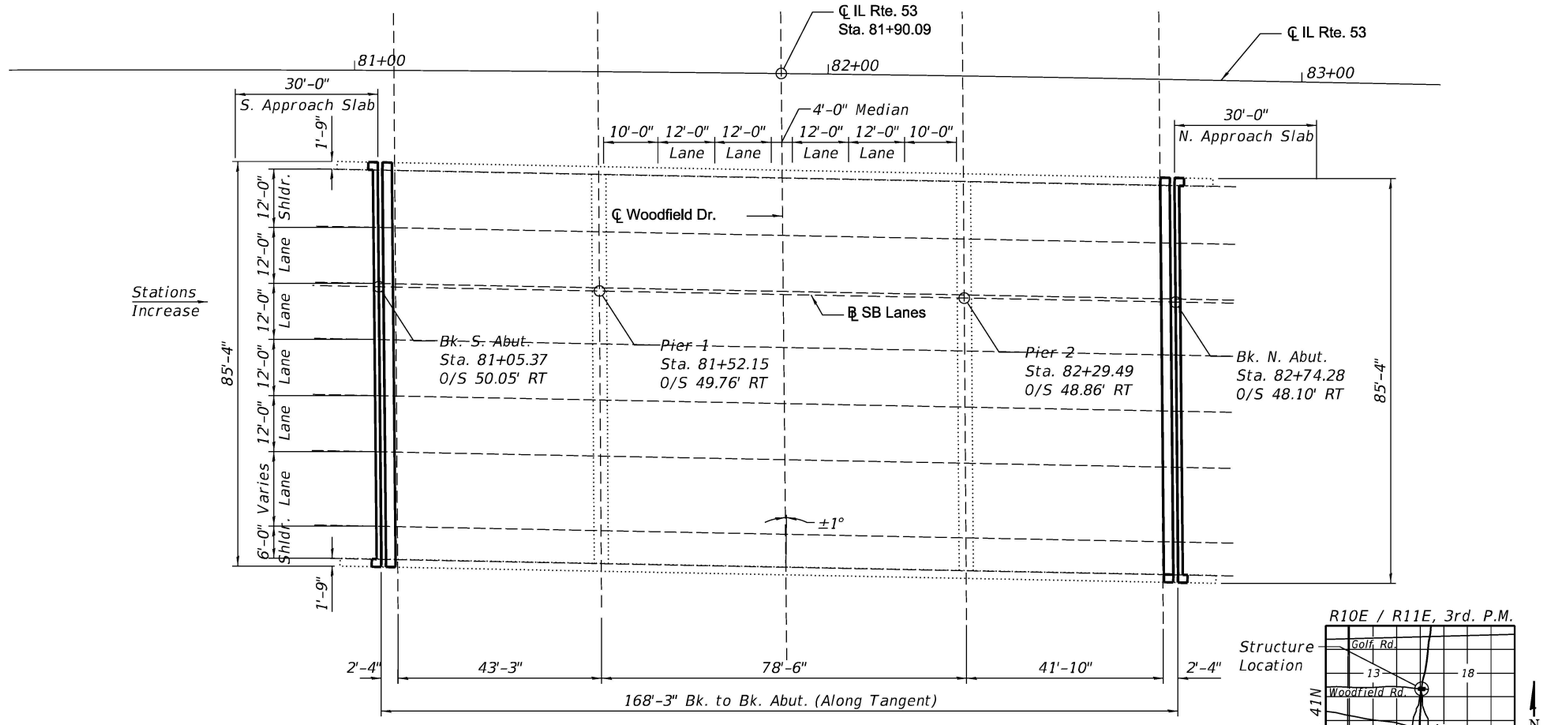

PLAN

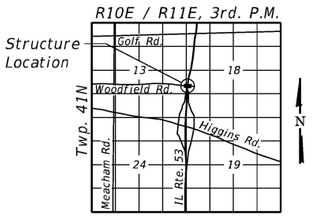

LOCATION SKETCH

LOADING HL-93

No future wearing surface allowed

DESIGN SPECIFICATIONS

2002 AASHTO LRFD Bridge Design Specifications, 17th Edition

DESIGN STRESSES

FIELD UNITS

f'c = 4,000 psi (Superstructure)
f'c = 3,500 psi (Substructure)
fy = 60,000 psi (Reinforcement)

ALI A. GHARAMTI
081-005060
LICENSED STRUCTURAL ENGINEER
EAST MOLINE
STATE OF ILLINOIS

Signature
Date 4/29/26
Exp. Date 11/30/26

GENERAL PLAN AND ELEVATION
IL RTE. 53 OVER WOODFIELD ROAD
SECTION 2017-065BR
COOK COUNTY
STA. 81+90.09
STRUCTURE NO. 016-0979

SD-01

MODEL: Default
FILE NAME: W:\24001656.05\IDOT Dist 1 IL 290 Mill and Overlay\CADD Data\Bridge\ORD-CADD Structural\016-0979 NB IL-53 I-290 Over Woodfield Rd\016-0979-01-GPE.dgn

IMEG
401 E. STATE ST, 4th Floor ROCKFORD, IL 61104
PH: 815.965.6400
www.imegcorp.com

USER NAME = Michael.A.Phares	DESIGNED - Patrick Pauser	REVISED -
	DRAWN - Patrick Pauser	REVISED -
	CHECKED - Ali Gharamti	REVISED -
PLOT DATE = 4/28/2026	DATE - 4/28/2026	REVISED -

STATE OF ILLINOIS
DEPARTMENT OF TRANSPORTATION

I-290 NORTHBOUND
STRUCTURE NO. 016-0979

SCALE: | SHEET SD-01 OF SD-14 SHEETS | STA. | TO STA.

F.A.I. RTE.	SECTION	COUNTY	TOTAL SHEETS	SHEET NO.
290	(0404-316-HB) BR 24	COOK	276	155
		CONTRACT NO. 62W99		
	ILLINOIS FED. AID PROJECT			

GENERAL NOTES

1. Plan dimensions and details relative to existing structure have been taken from existing plans and are subject to nominal construction variations. The Contractor shall field verify dimensions and details affecting new construction and make necessary approved adjustments prior to construction or ordering of materials. Such variations shall not be cause for additional compensation for a change in scope of the work, however, the Contractor will be paid for the quantity actually furnished at the unit price bid for the work.
2. Reinforcement bars designated (E) shall be epoxy coated.
3. Expansion joints shall be fabricated and installed according to Manufacturer's recommendations and as approved by the Engineer.
4. Expansion joints shall be fabricated to confirm to the existing cross slopes of the bridge.
5. Existing reinforcement extended into the removal area shall be cleaned, straightened and incorporated into the new construction. Any reinforcement bars that are damaged during concrete removal operations shall be replaced using an approved bar splicer or anchorage system at the Contractor's expense.
7. Joint openings shall be adjusted according to Article 520.04 of the Standard Specification when the deck is poured at an ambient temperature other than 50° F.
8. All Construction joints shall be bonded.
9. No field welding is permitted except as specified in the contract documents.
10. Stations and offsets called out on the plans are approximate. The Contractor shall field verify the stations and offsets during construction layout.
11. Removal and re-installation of the existing name plate on the structure will be necessary for the construction of the approach slab parapet. This work and all materials shall be included in the contract unit price for "Relocating Name Plates".

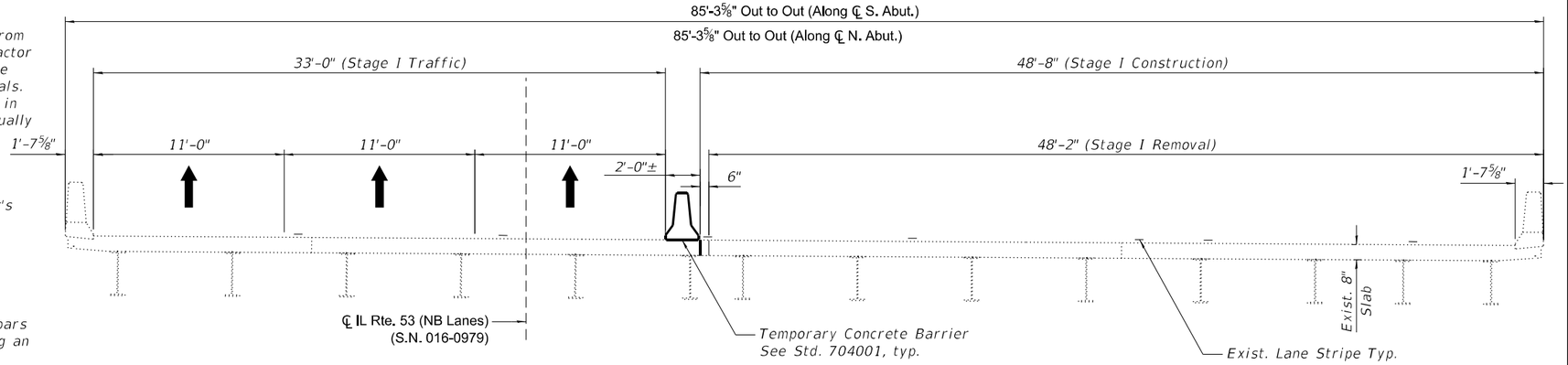

STAGE I CONSTRUCTION

(Looking North)
(At Rt L's to ℄ IL Rte. 53 unless noted)

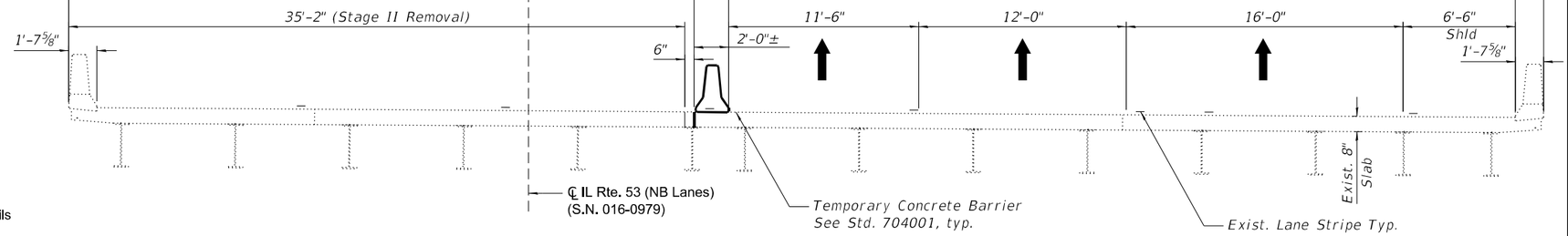

STAGE II CONSTRUCTION

(Looking North)
(At Rt L's to ℄ IL Rte. 53 unless noted)

INDEX OF SHEETS

SD-01 General Plan and Elevation

SD-02 General Notes, Bill of Materials and Stage Construction Details

SD-03 Temporary Concrete Barrier for Stage Construction

SD-04 Deck Repair Plan

SD-05 Expansion Joint Details - I

SD-06 Expansion Joint Details - II

SD-07 Preformed Joint Strip Seal

SD-08 South Abutment Repair Plan

SD-09 North Abutment Repair Plan

SD-10 South Pier 1 Repair Plan

SD-11 North Pier 2 Repair Plan

SD-12 Slope wall Repair Plan

SD-13 Wing Wall Plan

SD-14 Bar Splicer Assembly and Mechanical Splicer Details

TOTAL BILL OF MATERIAL

ITEM	UNIT	SUPER	SUB	TOTAL
Concrete Removal	Cu. Yd.	21	9	30
Concrete Superstructure	Cu. Yd.	21	9	30
Reinforcement Bars, Epoxy Coated	Pound	9290	0	9290
Preformed Joint Strip Seal	Foot	168	0	168
Structural Repair of Concrete (Depth Equal to or less than 5")	Sq. Ft.	0	203	203
Deck Slab Repair (Full Depth, Type II)	Sq. Ft.	18	0	18
Missing Reflective Marker Holes shall be Filled with Epoxy	Each	12	0	12
Relocating Name Plates	Each	1	0	1
Slope Wall Repair	Sq. Ft.	0	94	94
Porous Granular Backfill	Cu. Yd.	0	4	4
Cleaning Bridge Scuppers & Downspouts	Each	4	0	4
Deck Slab Repair (Partial)	Sq. Ft.	30	0	30
Bar Splicers	Each	32	0	32

SD-02

IMEG
401 E. STATE ST. 4th Floor
ROCKFORD, IL 61104
PH: 815.965.6400
www.imegcorp.com

USER NAME = Michael.A.Phares	DESIGNED - Patrick Pauser	REVISED -	
	DRAWN - Patrick Pauser	REVISED -	
	CHECKED - Ali Gharamti	REVISED -	
PLOT DATE = 4/28/2026	DATE - 4/28/2026	REVISED -	

STATE OF ILLINOIS
DEPARTMENT OF TRANSPORTATION

GENERAL NOTES, BILL OF MATERIAL AND STAGE CONST. DETAILS
STRUCTURE NO. 016-0979

SCALE: | SHEET SD-02 OF SD-14 SHEETS | STA. | TO STA.

F.A.I. RTE.	SECTION	COUNTY	TOTAL SHEETS	SHEET NO.
290	(0404-316-HB) BR 24	COOK	276	156
		CONTRACT NO. 62W99		
	ILLINOIS	FED. AID PROJECT		

MODEL: Default
FILE NAME: W:\24001656.05\IDOT Dist 1 IL 290 Mill and Overlay\CADD Data\Bridge\ORD-CADD_Structural\016-0979 NB IL-53_I-290 Over Woodfield Rd\016-0979-02-Gennote_BOM_Stage.dgn

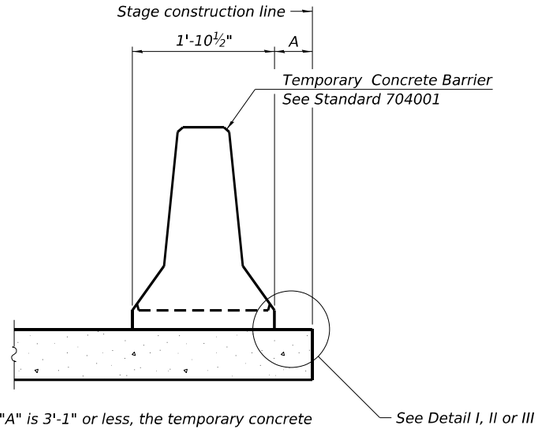

When "A" is 3'-1" or less, the temporary concrete barrier shall be restrained to the new slab according to Detail I, II or III. No restraint is required when "A" is greater than 3'-1".

NEW SLAB OR NEW DECK BEAM

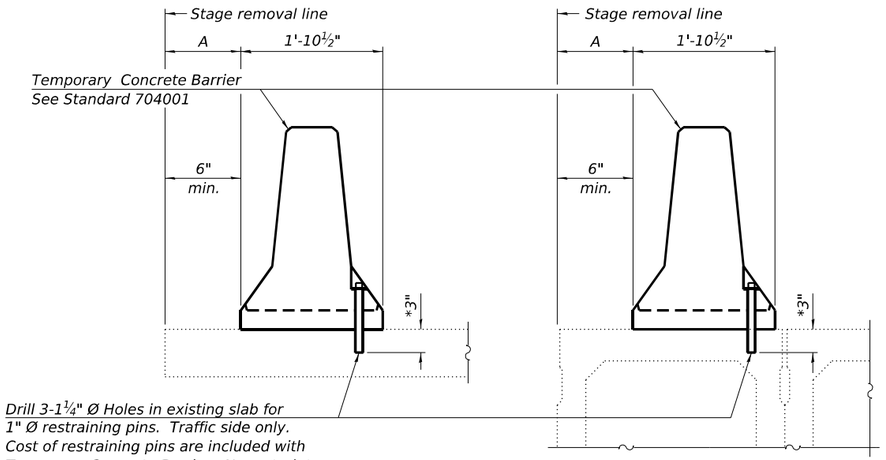

Drill 3-1¼" Ø Holes in existing slab for 1" Ø restraining pins. Traffic side only. Cost of restraining pins are included with Temporary Concrete Barrier. No restraint is required when "A" is greater than 3'-1".

EXISTING SLAB

* When hot-mix asphalt wearing surface is present, embedment shall be 3" plus the wearing surface depth.

EXISTING DECK BEAM

SECTIONS THRU SLAB OR DECK BEAM

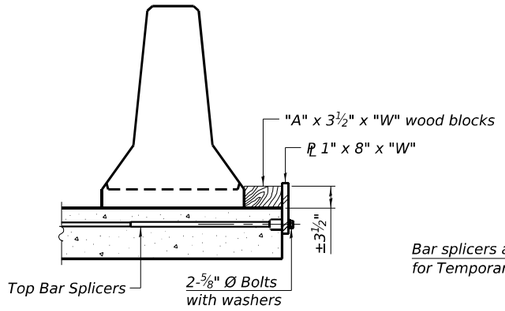

DETAIL I

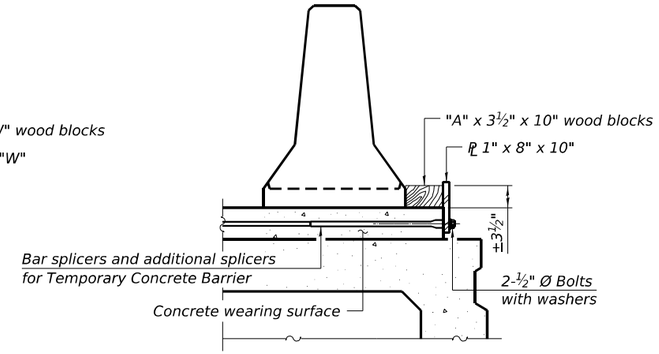

DETAIL II

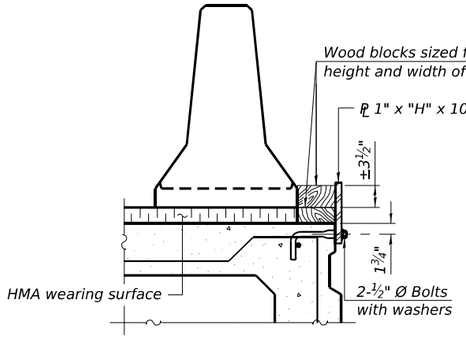

DETAIL III

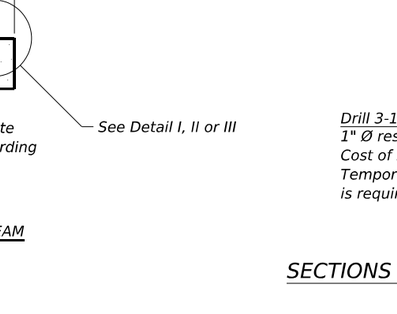

STEEL RETAINER ℄ 1" x 8" x "W"
(Detail I and II)

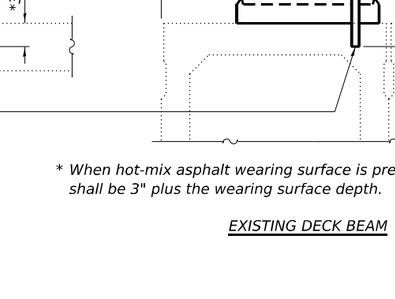

STEEL RETAINER ℄ 1" x "H" x 10"
(Detail III)

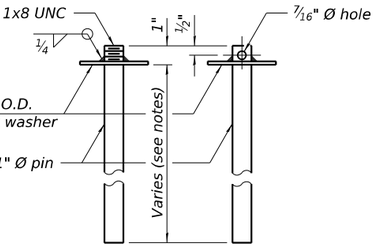

RESTRAINING PIN

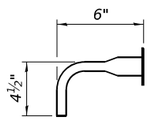

BAR SPLICER FOR #4 BAR - DETAIL III

RAILING CRITERIA

NCHRP 350 Test Level	3
Railing Weight (plf)	440

R-27

5-15-2023

Notes:

Cost of retainer assembly is included with Temporary Concrete Barrier.

A retainer assembly shall be located at the approximate ℄ of each temporary concrete barrier.

The retainer plate shall not be removed until the concrete on the adjacent stage is ready to be poured. For Detail III applications the retainer plate shall not be removed until just prior to placing the adjacent beam.

When the 'A' dimension is less than 1½", the wood block shall be omitted and the barrier shall be placed in direct contact with the steel retainer plate. For deck beam applications the minimum required 'A' distance is 6" to accommodate the shear key clamping device.

Detail I - Installation for a new bridge deck or bridge slab.

Detail II - Installation for a new deck beam with an initial concrete wearing surface. Additional bar splicers shall be provided at 6'-0" centers and paired with the bar splicers of the concrete wearing surface reinforcement to accommodate the installation of the retainer assemblies. The cost of the additional bar splicers is included with the concrete wearing surface.

Detail III - Installation for a new deck beam with no initial wearing surface or with an initial hot-mix asphalt (HMA) wearing surface present. The deck beam directly beneath the temporary concrete barrier shall be fabricated with bar splicer inserts in the side of the beam, as detailed, to accommodate the installation of the retainer assemblies. A pair of bar splicers, 6" apart, shall be placed at 6'-0" centers along the length of the beam. The cost of the bar splicers is included with the deck beam.

SD-03

MODEL: Default
FILE NAME: W:\240016\56.05\DOT Dist 1 IL 290 Mill and Overlay\CADD Data\Bridge\ORD-CADD_Structural\016-0979 NB IL-53_I-290 Over Woodfield Rd\016-0979-03-TCB.dgn

IMEG
401 E. STATE ST. 4th Floor ROCKFORD, IL 61104
PH: 815.965.8400 www.imegcorp.com

USER NAME = Michael.A.Phares	DESIGNED - Patrick Pauser	REVISED -
	DRAWN - Patrick Pauser	REVISED -
	CHECKED - Ali Gharamti	REVISED -
PLOT DATE = 4/28/2026	DATE - 4/28/2026	REVISED -

STATE OF ILLINOIS
DEPARTMENT OF TRANSPORTATION

TEMPORARY CONCRETE BARRIER FOR STAGE CONSTRUCTION
STRUCTURE NO. 016-0979

SCALE: | SHEET SD-03 OF SD-14 SHEETS | STA. | TO STA.

F.A.I. RTE.	SECTION	COUNTY	TOTAL SHEETS	SHEET NO.
290	(0404-316-HB) BR 24	COOK	276	157
		CONTRACT NO. 62W99		
	ILLINOIS FED. AID PROJECT			

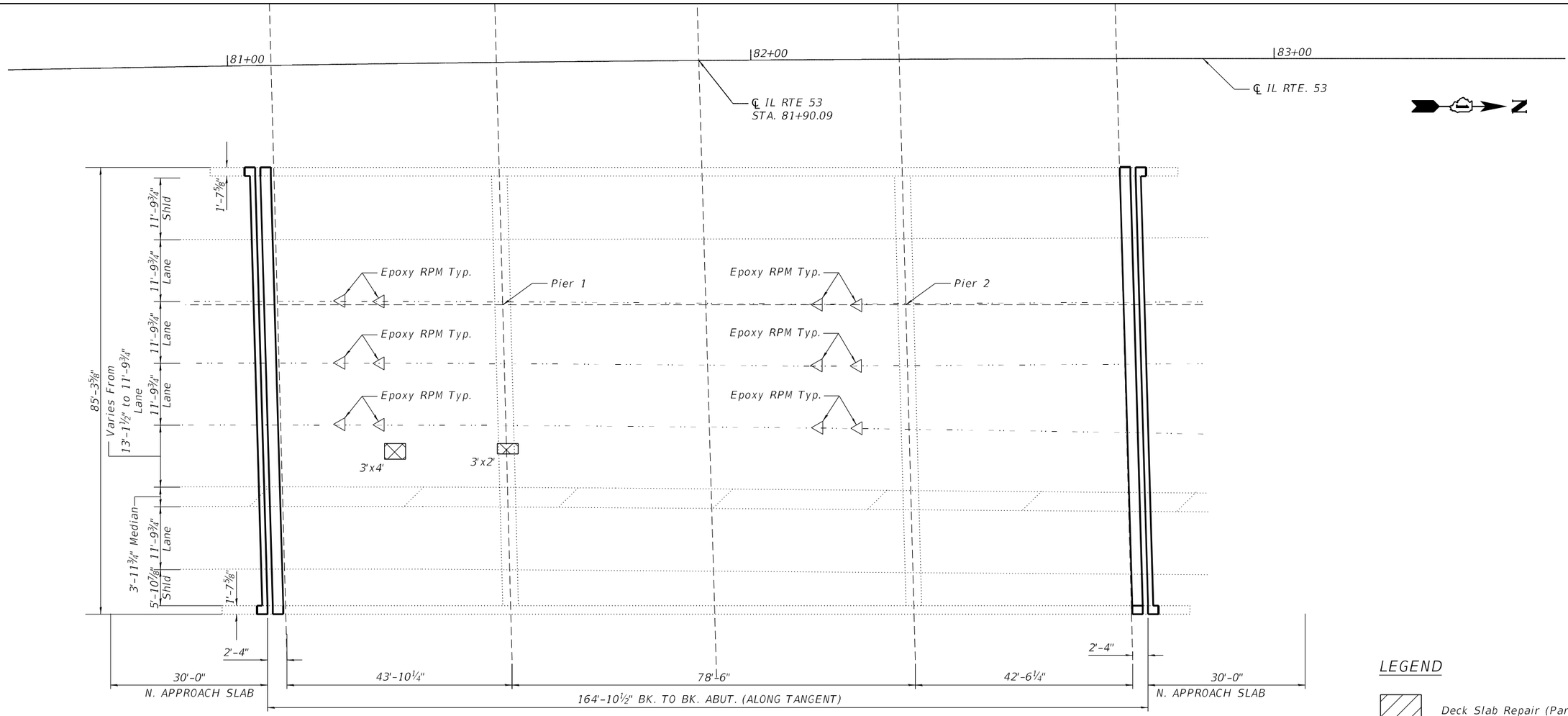

LEGEND

- Deck Slab Repair (Partial)
- Deck Slab Repair (Full Depth, Type II)
- ◁ Missing Reflective Marker Holes shall be Filled with Epoxy

BRIDGE DECK
BILL OF MATERIAL

Item	Unit	Quantity
Deck Slab Repair (Partial)	Sq. Ft.	30
Deck Slab Repair (Full Depth, Type II)	Sq. Ft.	18
Missing Reflective Marker Holes shall be Filled with Epoxy	Each	12

NOTE:
Spalls at broken or missing raised reflective pavement markers shall be repaired by epoxy per specifications.

A contingency quantity of 30 Sq. Ft. for Deck Slab Repair (Partial) is included. Areas shall be determined in the field by the Engineer.

SD-04

MODEL: Default
FILE NAME: W:\24001656.05\IDOT Dist 1 IL 290 Mill and Overlay\CADD Data\Bridge\ORD-CADD_Structural\016-0979 NB IL-53_I-290 Over Woodfield Rd\016-0979-04-Deck Repair Plan.dgn

IMEG
401 E. STATE ST. 4th Floor ROCKFORD, IL 61104
PH: 815.965.6400 www.imegcorp.com

USER NAME = Michael.A.Phares	DESIGNED - Patrick Pauser	REVISED -
	DRAWN - Patrick Pauser	REVISED -
	CHECKED - Ali Gharamti	REVISED -
PLOT DATE = 4/28/2026	DATE - 4/28/2026	REVISED -

STATE OF ILLINOIS
DEPARTMENT OF TRANSPORTATION

DECK BRIDGE PATCHING
STRUCTURE NO. 016-0979

SCALE: | SHEET SD-04 OF SD-14 SHEETS | STA. | TO STA.

F.A.I. RTE.	SECTION	COUNTY	TOTAL SHEETS	SHEET NO.
290	(0404-316-HB) BR 24	COOK	276	158
		CONTRACT NO. 62W99		
	ILLINOIS FED. AID PROJECT			

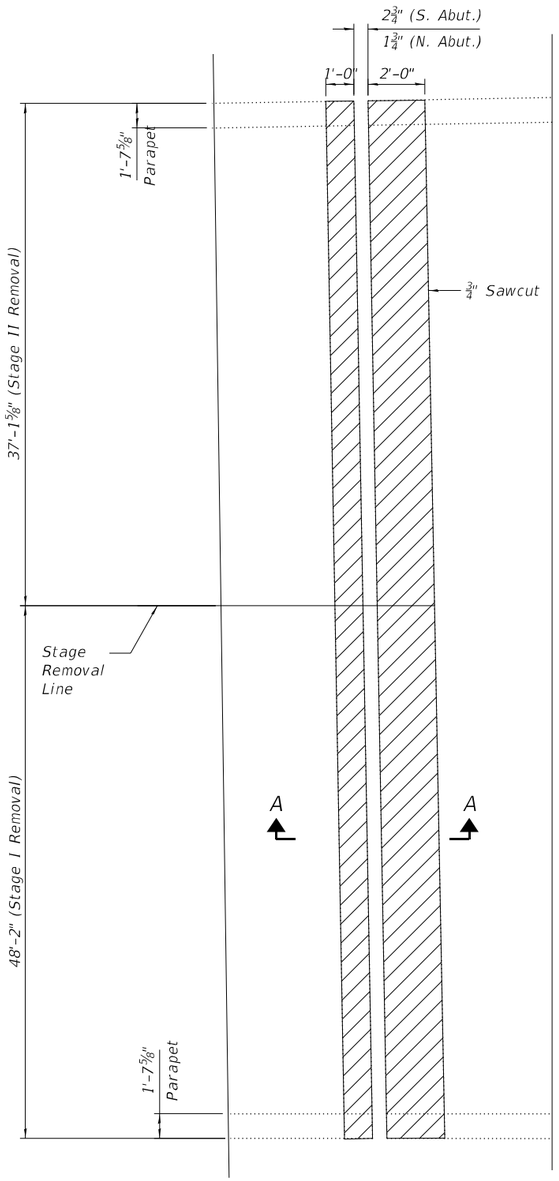

JOINT REMOVAL PLAN

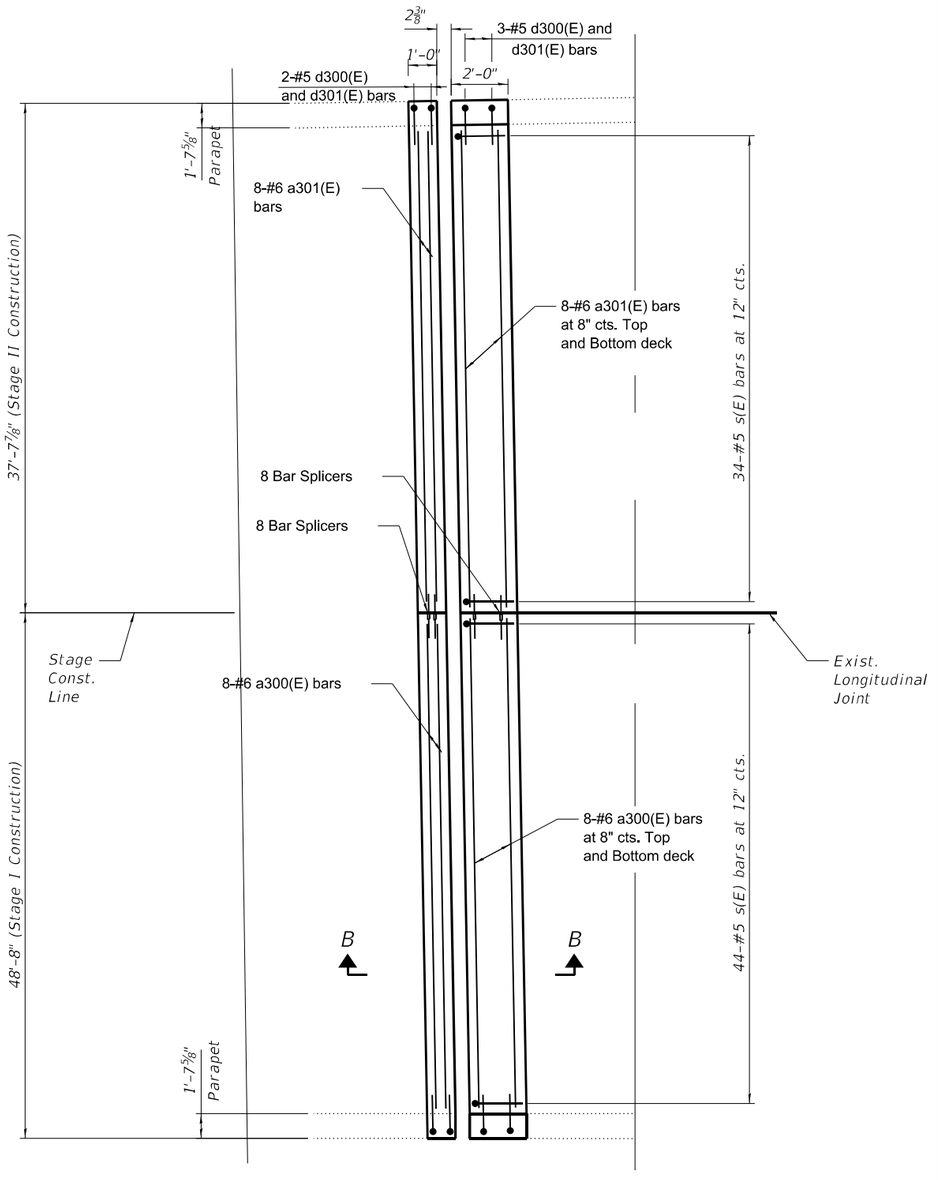

JOINT REPLACEMENT PLAN

LEGEND

Concrete Removal

NOTES:

1. South Abutment Shown, North Abutment similar.
2. See Sheets 4 of 11 to 7 of 11 for Approach Slab and Approach Parapet reinforcement details.

MIN. BAR LAP

#6 bar = 4'-10"

SD-05

MODEL: Default
FILE NAME: W:\24001656.05\IDOT Dist 1 IL 290 Mill and Overlay\CADD Data\Bridge\ORD-CADD_Structural\016-0979 NB IL-53_I-290 Over Woodfield Rd\016-0979-05-JointDetails-I.dgn

IMEG
401 E. STATE ST. 4th Floor ROCKFORD, IL 61104
PH: 815.965.6400 www.imegcorp.com

USER NAME = Michael.A.Phares	DESIGNED - Patrick Pauser	REVISED -
	DRAWN - Patrick Pauser	REVISED -
	CHECKED - Ali Gharamti	REVISED -
PLOT DATE = 4/28/2026	DATE - 4/28/2026	REVISED -

STATE OF ILLINOIS
DEPARTMENT OF TRANSPORTATION

EXPANSION JOINT DETAILS - I
STRUCTURE NO. 016-0979

SCALE: | SHEET SD-05 OF SD-14 SHEETS | STA. | TO STA.

F.A.I. RTE.	SECTION	COUNTY	TOTAL SHEETS	SHEET NO.
290	(0404-316-HB) BR 24	COOK	276	159
		CONTRACT NO. 62W99		
	ILLINOIS FED. AID PROJECT			

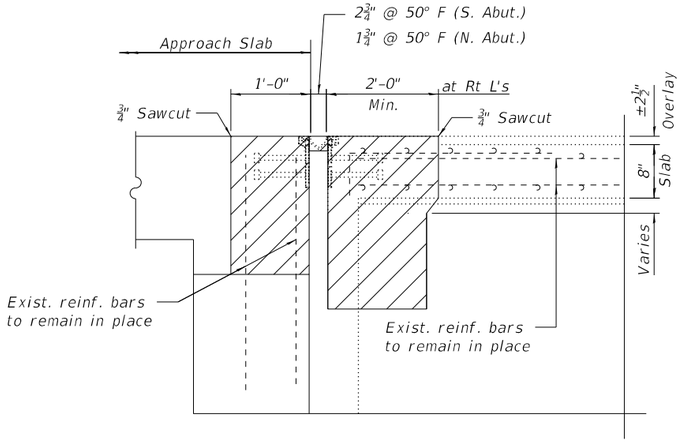

SECTION A-A

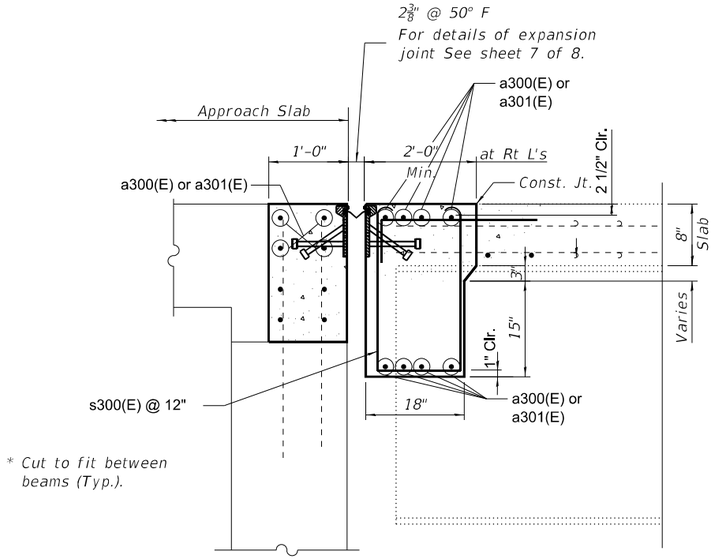

SECTION B-B

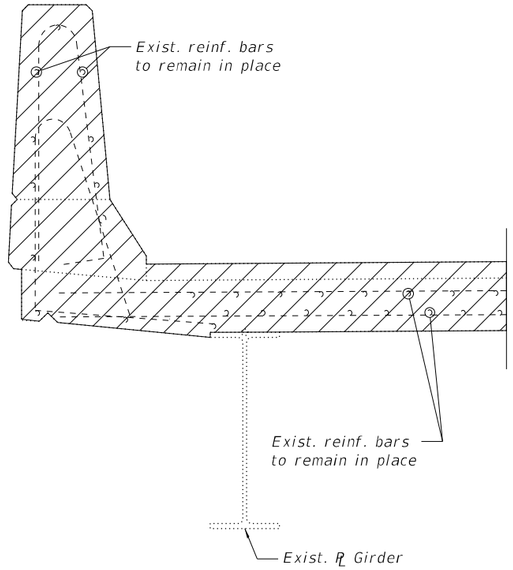

SECTION THRU BRIDGE DECK PARAPET

(Showing Removal)

NOTES:

1. Hatched areas indicate Concrete Removal.
2. Existing reinforcement to remain in place shall be cleaned, straightened and resued. Cost included with Concrete Removal.
3. Any reinforcement bars that are damaged during concrete removal operations shall be repaired or replaced using an approved bar splicer or anchorage system. Cost included with Concrete Removal.
4. Removal of exist. expansion joint will not be paid for separately. Cost included with Concrete Removal.
5. See Sheet 11 of 11 for Bar Splicers Details.
6. Reinforcement details for Approach Slab and Approach Parapet are shown on Approach Slab Sheets.
7. See Sheets 4 of 11 to 7 of 11 for Approach Slab Details.

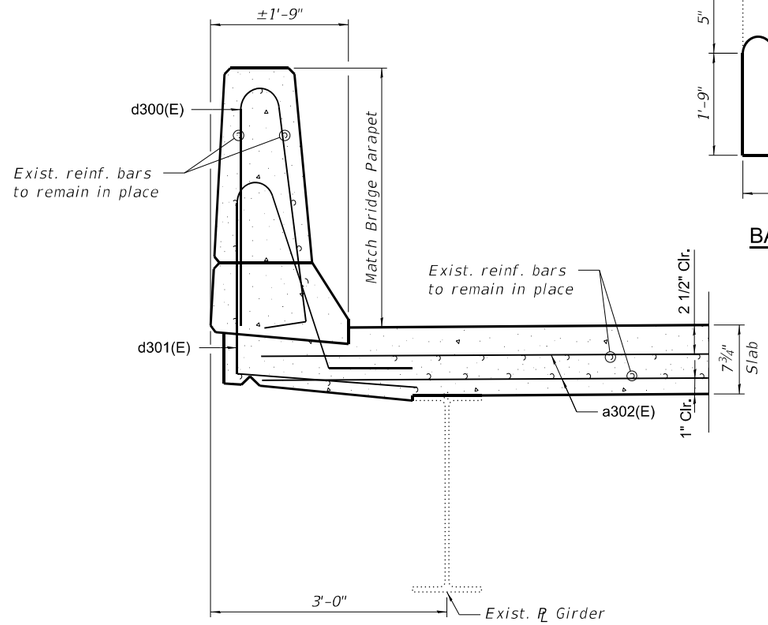

SECTION THRU BRIDGE DECK PARAPET

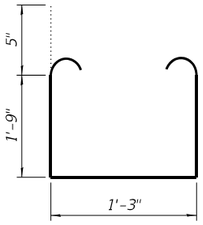

BAR s300(E)

BILL OF MATERIAL
BOTH ABUTMENTS

Bar	No.	Size	Length	Shape
a300(E)	64	#6	45'-0"	
a301(E)	64	#6	37'-0"	
a302(E)	16	#6	4'-0"	
d300(E)	24	#5	6'-10"	
d301(E)	24	#5	8'-2"	
s300(E)	156	#5	5'-9"	
Concrete Removal		Cu. Yd.	30	
Reinforcement Bars, Epoxy Coated		Pound	9290	
Concrete Superstructure		Cu. Yd.	30	

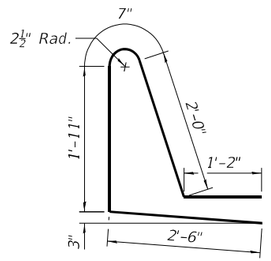

BAR d301(E)

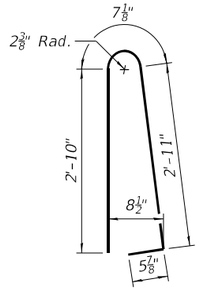

BAR d300(E)

SD-06

MODEL: Default
FILE NAME: W:\24001656.05\IDOT Dist 1 IL 290 Mill and Overlay\CADD Data\Bridge\ORD-CADD_Structural\016-0979 NB IL-53_I-290 Over Woodfield Rd\016-0979-06-JoinDetails-II.dgn

IMEG
401 E. STATE ST. 4th Floor
ROCKFORD, IL 61104
PH: 815.965.6400
www.imegcorp.com

USER NAME = Michael.A.Phares	DESIGNED - Patrick Pauser	REVISED -
	DRAWN - Patrick Pauser	REVISED -
	CHECKED - Ali Gharamti	REVISED -
PLOT DATE = 4/28/2026	DATE - 4/28/2026	REVISED -

STATE OF ILLINOIS
DEPARTMENT OF TRANSPORTATION

EXPANSION JOINT DETAILS - II
STRUCTURE NO. 016-0979

SCALE: | SHEET SD-06 OF SD-14 SHEETS | STA. | TO STA.

F.A.I. RTE.	SECTION	COUNTY	TOTAL SHEETS	SHEET NO.
290	(0404-316-HB) BR 24	COOK	276	160
		CONTRACT NO. 62W99		
		ILLINOIS	FED. AID PROJECT	

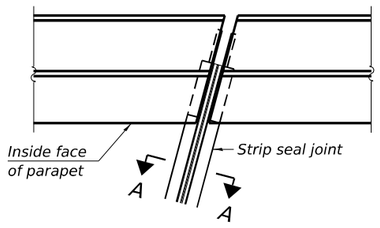

FOR SKEWS ≤ 30°

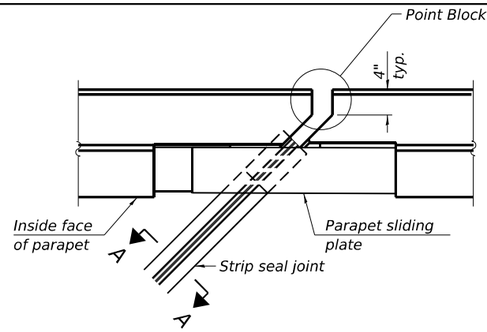

FOR SKEWS > 30°

PLAN AT PARAPET

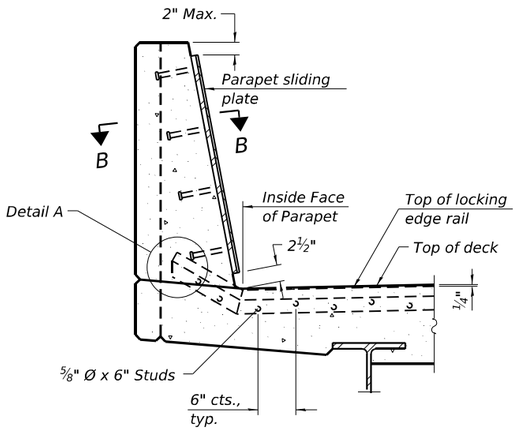

SECTION AT PARAPET

(Skews > 30° shown. Skews ≤ 30° similar except as shown in plan view.)

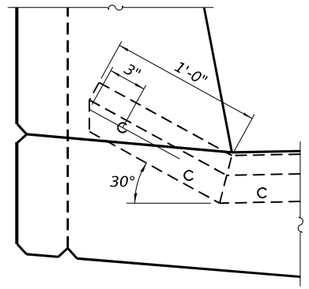

DETAIL A

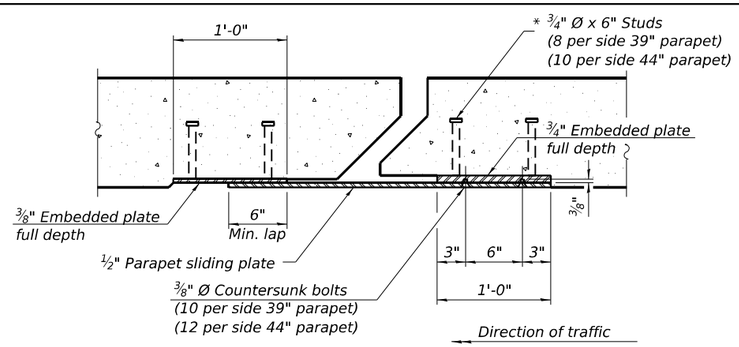

SECTION B-B

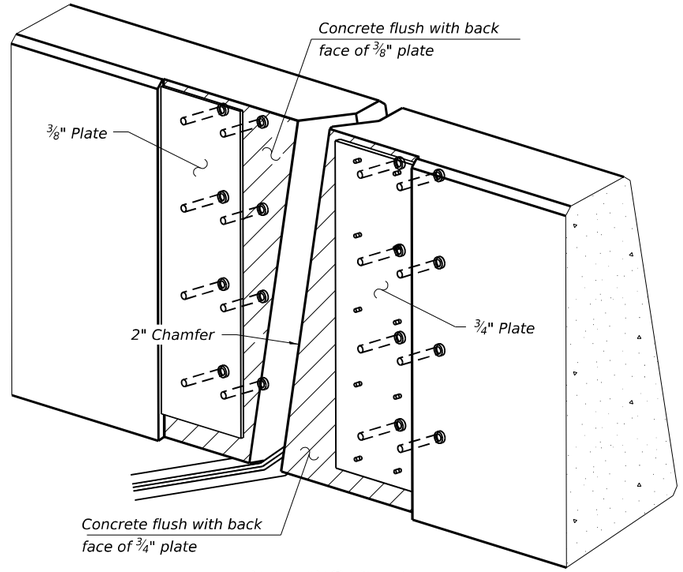

TRIMETRIC VIEW

(Showing embedded plates only)

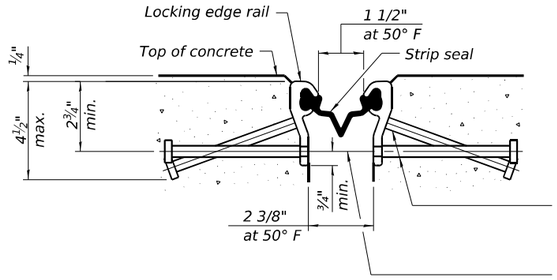

SHOWING ROLLED RAIL JOINT

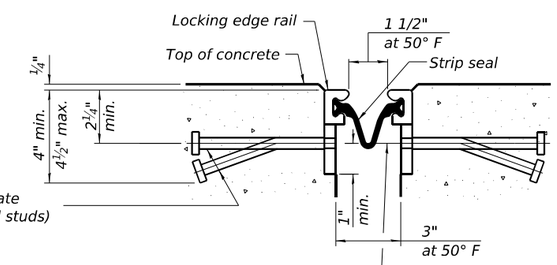

SHOWING WELDED RAIL JOINT

* ⅝" Ø x 6" studs @ 6" cts. (alternate angled/bent studs with horizontal studs)

⅜" Ø threaded rods in 7/16" Ø holes at 4'-0"± cts. for holding the proper joint opening based on the temperature during the deck pour. Place to miss studs. All rods shall be burned, or sawed off flush with the plates after concrete is set.

SECTION A-A

* Granular or solid flux filled headed studs conforming to Article 1006.32 of the Std. Specs., automatically end welded.

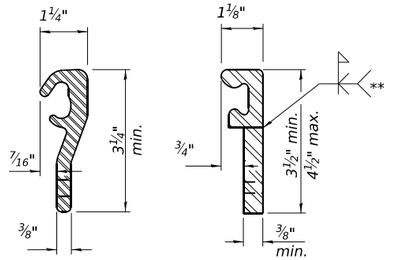

ROLLED (EXTRUDED) RAIL

WELDED RAIL

LOCKING EDGE RAILS

** Back gouge not required if complete joint penetration is verified by mock-up.

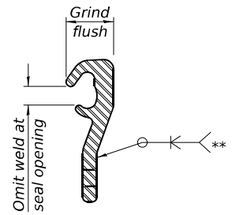

LOCKING EDGE RAIL SPLICE

The inside of the locking edge rail groove shall be free of weld residue. Rolled rail shown, welded rail similar.

BILL OF MATERIAL

Item	Unit	Total
Preformed Joint Strip Seal	Foot	168

Notes:

The strip seal shall be made continuous and shall have a minimum thickness of ¼". The configuration of the strip seal shall match the configuration of the locking edge rails. Open or "webbed" strip seal gland configurations are not permitted. The gland shall be sized for a maximum rated movement of 4 inches.

The locking edge rails depicted are configured for typical applications and are conceptual only. The actual configuration of the locking edge rails and matching strip seal may vary from manufacturer to manufacturer provided they fit the application and meet the minimum anchorage shown. Flanged edge rails, however, will not be allowed. Locking edge rails may exceed the 4½" maximum depth provided the anchorage system is revised according to the manufacturer's recommendation.

The manufacturer's recommended installation methods shall be followed.

All steel components shall be galvanized after fabrication according to Article 520.03 of the Standard Specifications.

The Maximum space between locking edge rail segments shall be c" and sealed with a suitable sealant; however, any rail joint within 10' measured perpendicular to the face of the curb or parapet shall be welded as shown in the locking edge rail splice detail.

Cost of parapet sliding plates, embedded plates, and anchorage studs included with Preformed Joint Strip Seal.

39" constant slope barrier shown, 44" constant slope barrier similar as noted.

The concrete opening below the strip seal will vary based on the locking edge rail chosen by the Contractor. Deck and parapet lengths shown elsewhere in the plans are dimensioned to the concrete opening, not the joint opening, and are based on the rolled locking edge rail. If the Contractor elects to use a different locking edge rail, dimensional adjustments may be required. One exception to this would be the strip seal joint at the end of the precast bridge approach slab. For these cases the pavement connector length shall be adjusted, not the length of the bridge approach slab.

EJ-SS

SD-07

MODEL: Default
FILE NAME: W:\240016\56.05\IDOT Dist 1 IL 290 Mill and Overlay\CADD Data\Bridge\ORD-CADD_Structural\016-0979 NB IL-53_I-290 Over Woodfield Rd\016-0979-SD-Strip Seal.dgn

IMEG
401 E. STATE ST. 4th Floor
ROCKFORD, IL
61104
PH: 815.965.6400
www.imegcorp.com

USER NAME = Michael.A.Phares	DESIGNED - Patrick Pauser	REVISED -
	DRAWN - Patrick Pauser	REVISED -
	CHECKED - Ali Gharamti	REVISED -
PLOT DATE = 4/28/2026	DATE - 4/28/2026	REVISED -

STATE OF ILLINOIS
DEPARTMENT OF TRANSPORTATION

PREFORMED JOINT STRIP SEAL
STRUCTURE NO. 016-0979

SCALE: | SHEET SD-07 OF SD-14 SHEETS | STA. | TO STA.

F.A.I. RTE.	SECTION	COUNTY	TOTAL SHEETS	SHEET NO.
290	(0404-316-HB) BR 24	COOK	276	161
		CONTRACT NO. 62W99		
		ILLINOIS	FED. AID PROJECT	

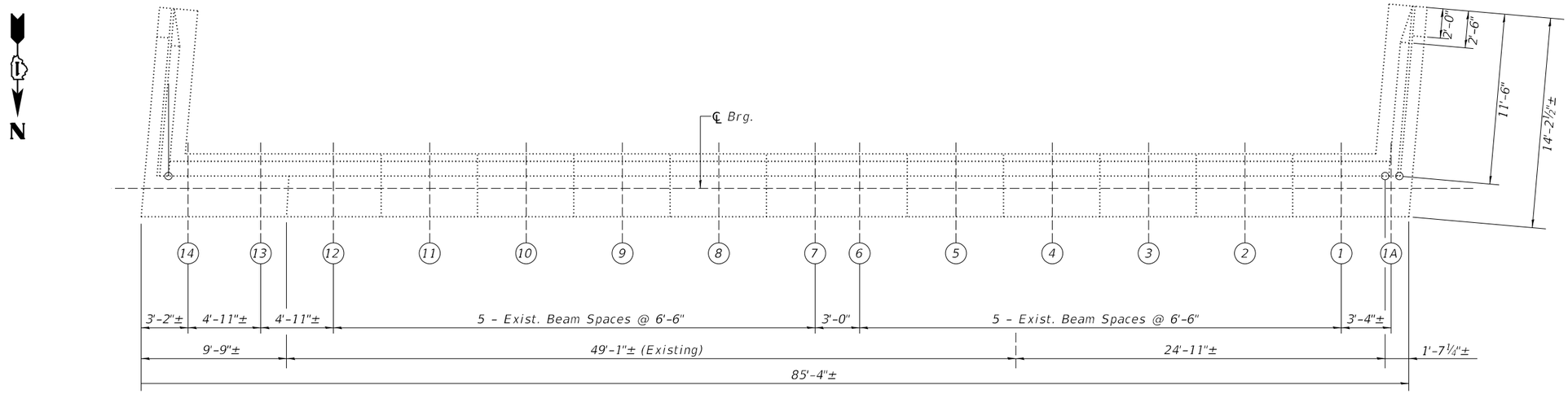

TOP PLAN (S. ABUTMENT)

BILL OF MATERIAL

ITEM	QUANTITY	UNIT
Structural Repair of Concrete (Depth equal to or less than 5")	60	SQ FT

LEGEND

Structural Repair of Concrete (Depth equal to or less than 5")

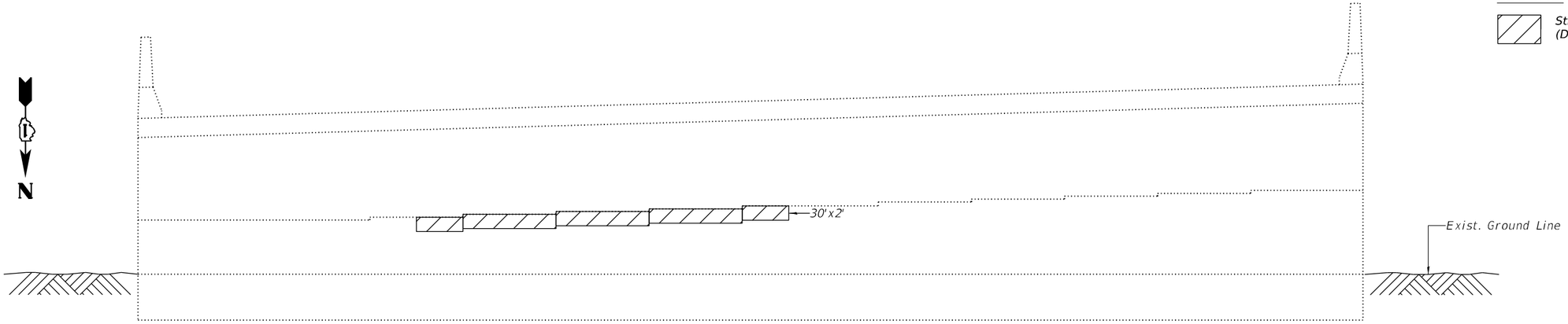

S. ABUTMENT ELEVATION (N.B.)

(LOOKING SOUTH)

SD-08

MODEL: Default
FILE NAME: W:\24001656.05\IDOT Dist 1 IL 290 Mill and Overlay\CADD Data\Bridge\ORD-CADD_Structural\016-0979 NB IL-53_I-290 Over Woodfield Rd\016-0979-08-South Abutment Repair Plan.dgn

IMEG
401 E. STATE ST. 4th Floor
ROCKFORD, IL 61104
PH: 815.965.6400
www.imegcorp.com

USER NAME = Michael.A.Phares	DESIGNED - Patrick Pauser	REVISED -	
	DRAWN - Patrick Pauser	REVISED -	
	CHECKED - Ali Gharamti	REVISED -	
PLOT DATE = 4/28/2026	DATE - 4/28/2026	REVISED -	

STATE OF ILLINOIS
DEPARTMENT OF TRANSPORTATION

SOUTH ABUTMENT REPAIRS
STRUCTURE NO. 016-0979

SCALE: | SHEET SD-08 OF SD-14 SHEETS | STA. | TO STA.

F.A.I. RTE.	SECTION	COUNTY	TOTAL SHEETS	SHEET NO.
290	(0404-316-HB) BR 24	COOK	276	162
		CONTRACT NO. 62W99		
		ILLINOIS	FED. AID PROJECT	

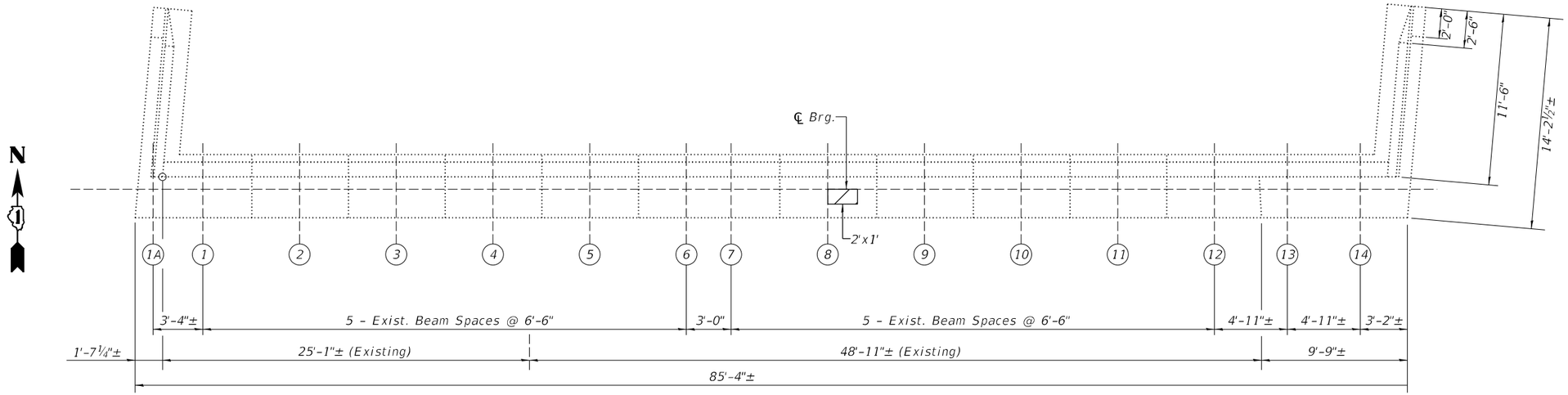

TOP PLAN (N. ABUTMENT)

BILL OF MATERIAL

DEFECTS	QUANTITY	UNIT
Structural Repair of Concrete (Depth equal to or less than 5")	12	SQ FT

LEGEND

Structural Repair of Concrete (Depth equal to or less than 5")

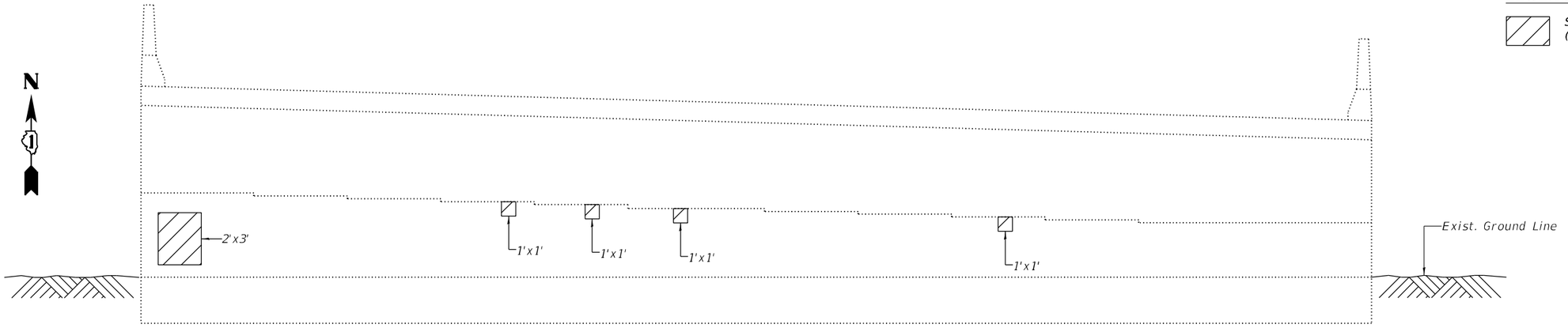

N. ABUTMENT ELEVATION (N.B.)

(LOOKING NORTH)

SD-09

MODEL: Default
FILE NAME: W:\24001656.05\IDOT Dist 1 IL 290 Mill and Overlay\CADD Data\Bridge\ORD-CADD_Structural\016-0979 NB IL-53_I-290 Over Woodfield Rd\016-0979-09-North Abutment Repair Plan.dgn

IMEG
401 E. STATE ST. 4th Floor
ROCKFORD, IL
61104
PH: 815.965.8400
www.imegcorp.com

USER NAME = Michael.A.Phares	DESIGNED - Patrick Pauser	REVISED -
	DRAWN - Patrick Pauser	REVISED -
	CHECKED - Ali Gharamti	REVISED -
PLOT DATE = 4/28/2026	DATE - 4/28/2026	REVISED -

STATE OF ILLINOIS
DEPARTMENT OF TRANSPORTATION

NORTH ABUTMENT REPAIRS
STRUCTURE NO. 016-0979

SCALE: | SHEET SD-09 OF SD-14 SHEETS | STA. | TO STA.

F.A.I. RTE.	SECTION	COUNTY	TOTAL SHEETS	SHEET NO.
290	(0404-316-HB) BR 24	COOK	276	163
		CONTRACT NO. 62W99		
	ILLINOIS	FED. AID PROJECT		

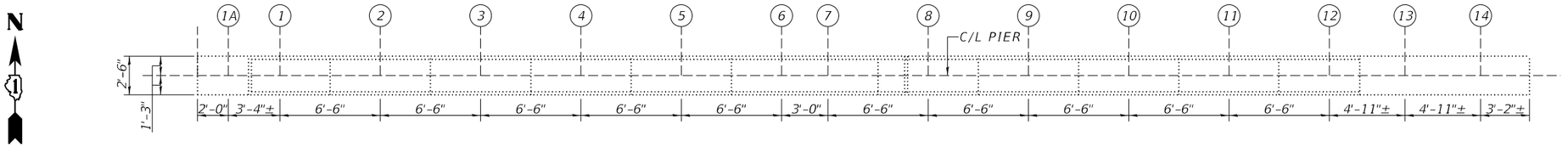

EXISTING TOP PLAN (PIER 1)

Notes:
Repair patch dimensions are called out horizontal by vertical.

NOTE:
STEPS ON THE PIER CAPS ARE OMITTED

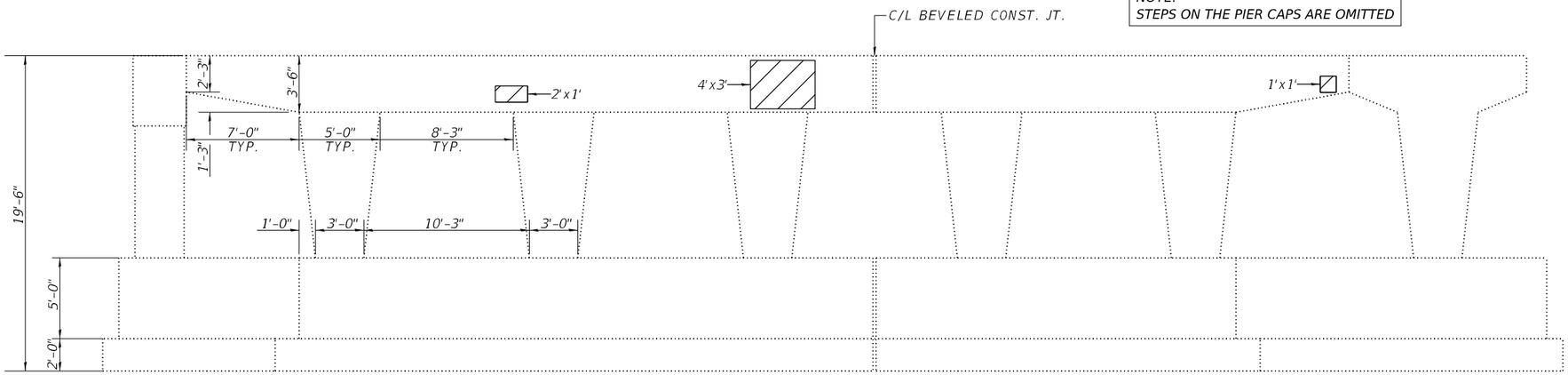

EXISTING ELEVATION (PIER 1)
(LOOKING NORTH)

NOTE:
STEPS ON THE PIER CAPS ARE OMITTED

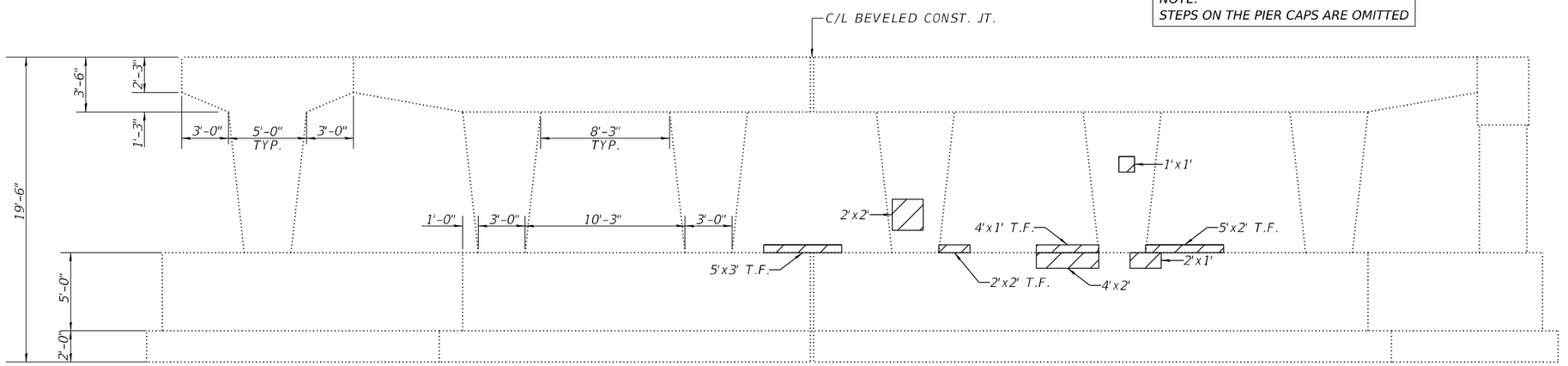

EXISTING ELEVATION (PIER 1)
(LOOKING SOUTH)

BILL OF MATERIAL

ITEM	QUANTITY	UNIT
Structural Repair of Concrete (Depth equal to or less than 5")	63	SQ FT

LEGEND

Structural Repair of Concrete (Depth equal to or less than 5")

T.F. = Top Face

SD-10

MODEL: Default
FILE NAME: W:\24001656.05\IDOT Dist 1 IL 290 Mill and Overlay\CADD Data\Bridge\ORD-CADD_Structural\016-0979 NB IL-53_I-290 Over Woodfield Rd\016-0979-10-South Pier 1 Repair Plan.dgn

IMEG
401 E. STATE ST. 4th Floor ROCKFORD, IL 61104
PH: 815.965.6400
www.imegcorp.com

USER NAME = Michael.A.Phares	DESIGNED - Patrick Pauser	REVISED -
	DRAWN - Patrick Pauser	REVISED -
	CHECKED - Ali Gharamti	REVISED -
PLOT DATE = 4/28/2026	DATE - 4/28/2026	REVISED -

STATE OF ILLINOIS
DEPARTMENT OF TRANSPORTATION

PIER 1 REPAIRS
STRUCTURE NO. 016-0979

SCALE: | SHEET SD-10 OF SD-14 SHEETS | STA. | TO STA.

F.A.I. RTE.	SECTION	COUNTY	TOTAL SHEETS	SHEET NO.
290	(0404-316-HB) BR 24	COOK	276	164
		CONTRACT NO. 62W99		
		ILLINOIS FED. AID PROJECT		

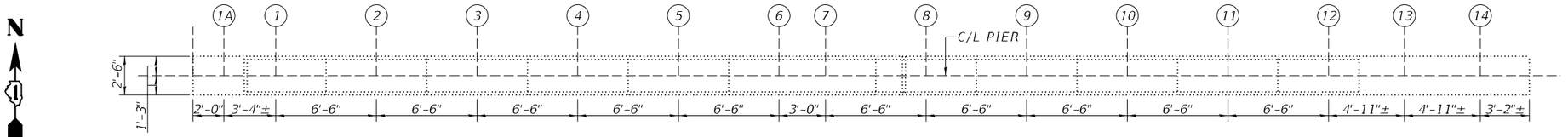

EXISTING TOP PLAN (PIER 2)

NOTE:
STEPS ON THE PIER CAPS ARE OMITTED

Notes:
Repair patch dimensions are called out horizontal by vertical.

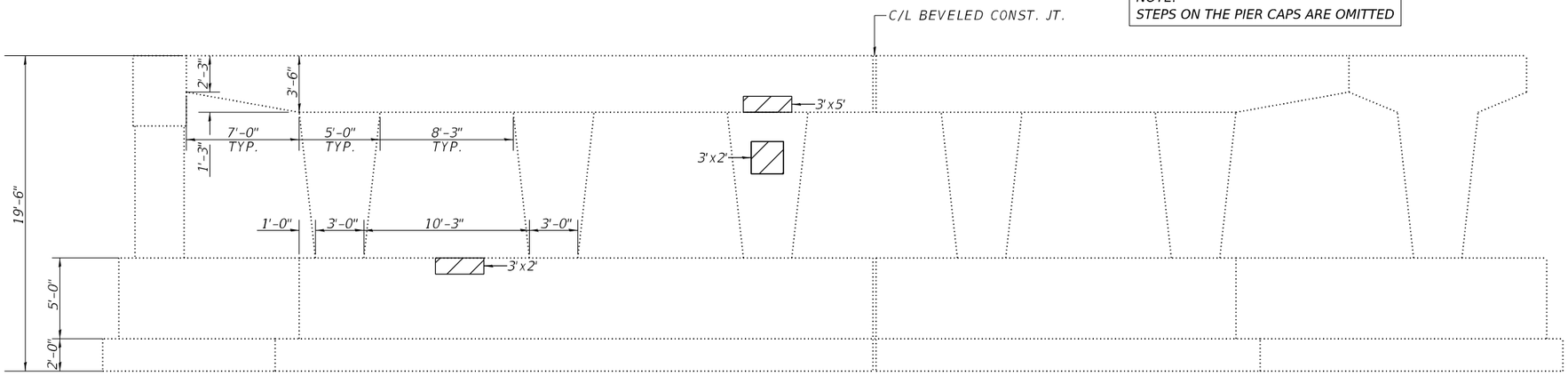

EXISTING ELEVATION (PIER 2)

(LOOKING NORTH)

NOTE:
STEPS ON THE PIER CAPS ARE OMITTED

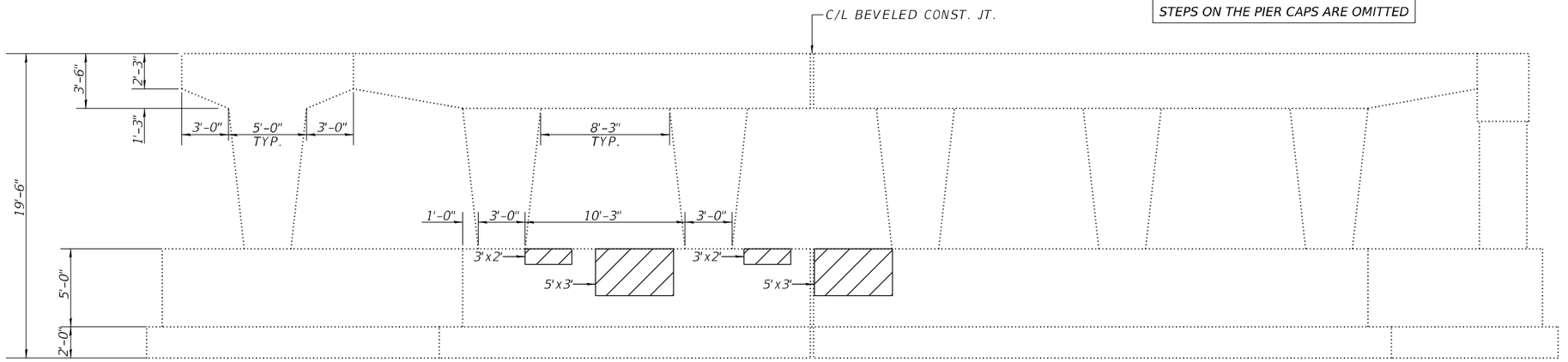

EXISTING ELEVATION (PIER 2)

(LOOKING SOUTH)

BILL OF MATERIAL

ITEM	QUANTITY	UNIT
Structural Repair of Concrete (Depth equal to or less than 5")	68	SQ FT

LEGEND

Structural Repair of Concrete (Depth equal to or less than 5")

T.F. = Top Face

SD-11

MODEL: Default
FILE NAME: W:\24001656.05\IDOT Dist 1 IL 290 Mill and Overlay\CADD Data\Bridge\ORD-CADD_Structural\016-0979 NB IL-53_I-290 Over Woodfield Rd\016-0979-11-North Pier 2 Repair Plan.dgn

IMEG
401 E. STATE ST. 4th Floor ROCKFORD, IL 61104
PH: 815.965.6400
www.imegcorp.com

USER NAME = Michael.A.Phares	DESIGNED - Patrick Pauser	REVISED -
	DRAWN - Patrick Pauser	REVISED -
	CHECKED - Ali Gharamti	REVISED -
PLOT DATE = 4/28/2026	DATE - 4/28/2026	REVISED -

STATE OF ILLINOIS
DEPARTMENT OF TRANSPORTATION

PIER 2 REPAIRS
STRUCTURE NO. 016-0979

SCALE: | SHEET SD-11 OF SD-14 SHEETS | STA. | TO STA.

F.A.I. RTE.	SECTION	COUNTY	TOTAL SHEETS	SHEET NO.
290	(0404-316-HB) BR 24	COOK	276	165
		CONTRACT NO. 62W99		
		ILLINOIS FED. AID PROJECT		

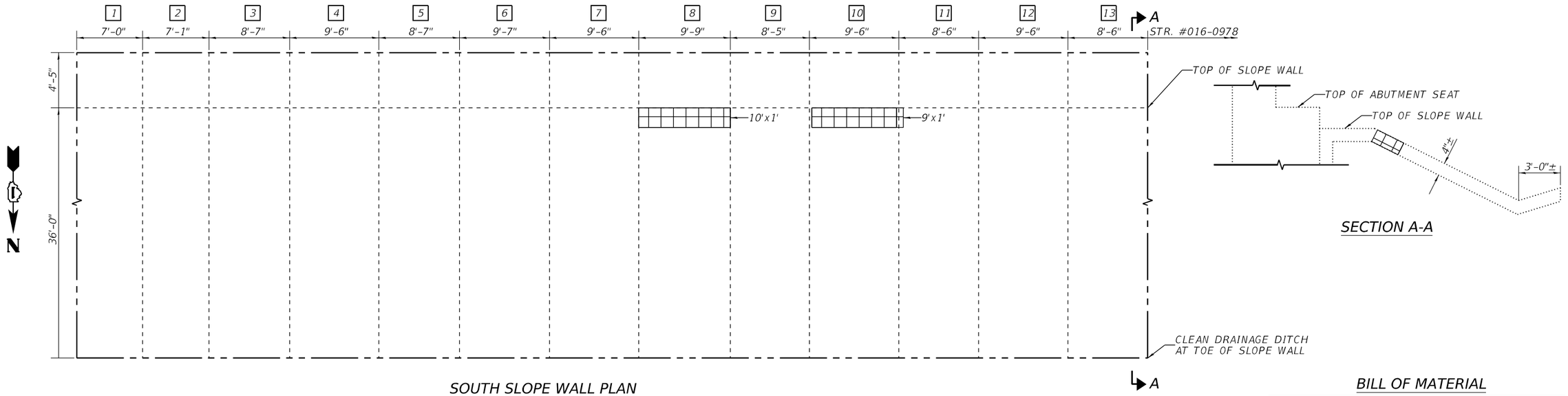

SOUTH SLOPE WALL PLAN
(LOOKING SOUTH)

SECTION A-A

BILL OF MATERIAL

ITEM	QUANTITY	UNIT
Slope Wall Repair	94	SQ FT
Porous Granular Backfill	4	Cu. Yd.

LEGEND

Slope Wall Repair

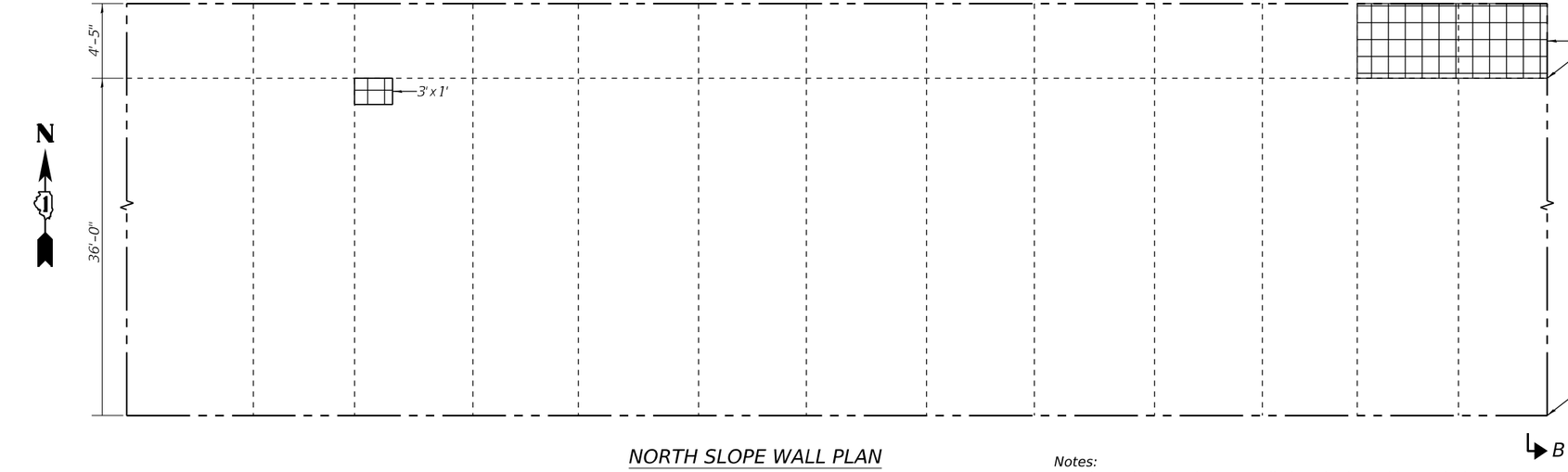

NORTH SLOPE WALL PLAN
(LOOKING NORTH)

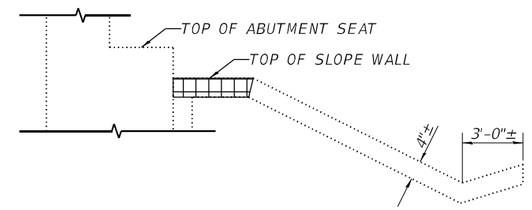

SECTION B-B

Notes:
Repair patch dimensions are called out horizontal by vertical.

Areas shown for Structural repair of concrete are estimated. Actual area should be determined by the Engineer at the time of repair. Install porous granular backfill as subbase for structural repair.

Cost of "clean drainage ditch at toe of slope wall" shall be included with the cost of "slope wall repair".

Slope wall shall be reinforced with welded wire fabric. 6" x 6" - W4.0xW4.0, weighing 58 lbs per 100 sq.ft.

SD-12

IMEG
401 E. STATE ST. 4th Floor
ROCKFORD, IL 61104
PH: 815.965.6400
www.imegcorp.com

USER NAME = Michael.A.Phares	DESIGNED - Patrick Pauser	REVISED -
	DRAWN - Patrick Pauser	REVISED -
	CHECKED - Ali Gharamti	REVISED -
PLOT DATE = 4/28/2026	DATE - 4/28/2026	REVISED -

STATE OF ILLINOIS
DEPARTMENT OF TRANSPORTATION

SLOPE WALL REPAIRS
STRUCTURE NO. 016-0979

SCALE: | SHEET SD-12 OF SD-14 SHEETS | STA. | TO STA.

F.A.I. RTE.	SECTION	COUNTY	TOTAL SHEETS	SHEET NO.
290	(0404-316-HB) BR 24	COOK	276	166
		CONTRACT NO. 62W99		
		ILLINOIS	FED. AID PROJECT	

MODEL: Default
FILE NAME: W:\24001656.05\IDOT Dist 1 IL 290 Mill and Overlay\CADD Data\Bridge\ORD-CADD_Structural\016-0979 NB IL-53, I-290 Over Woodfield Rd\016-0979-12-Slope Wall Repair Plan.dgn

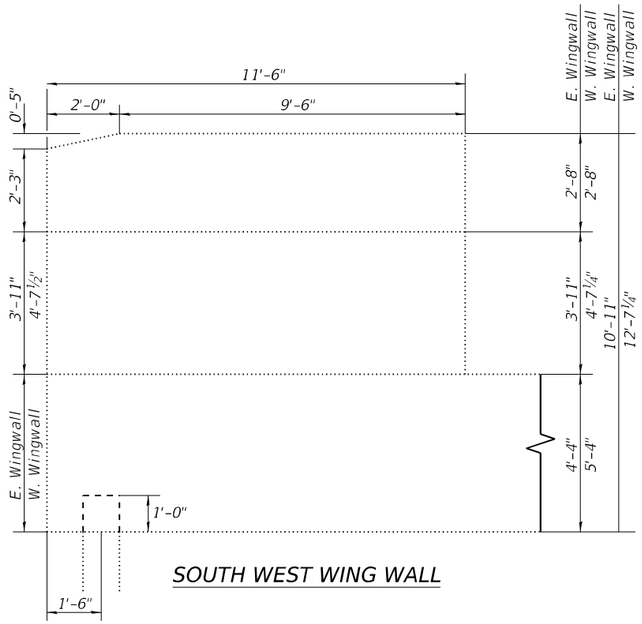

SOUTH WEST WING WALL

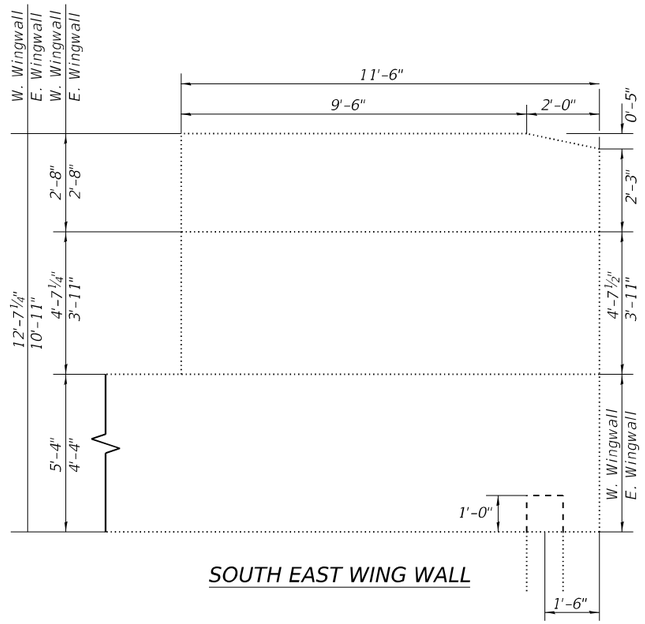

SOUTH EAST WING WALL

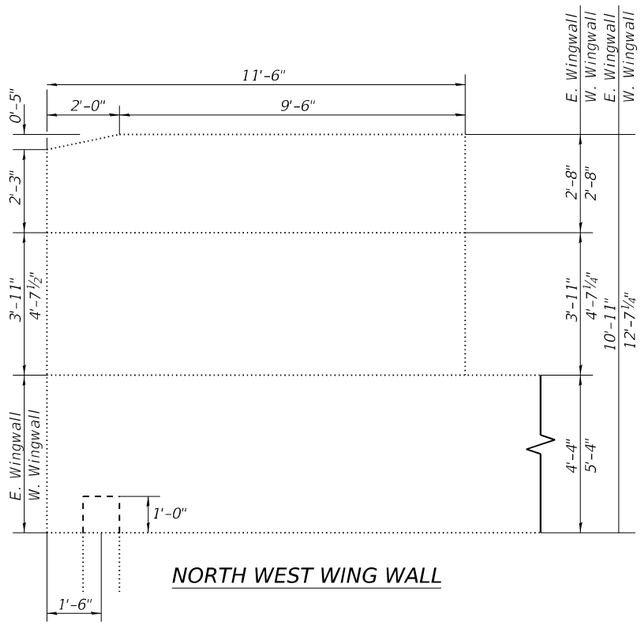

NORTH WEST WING WALL

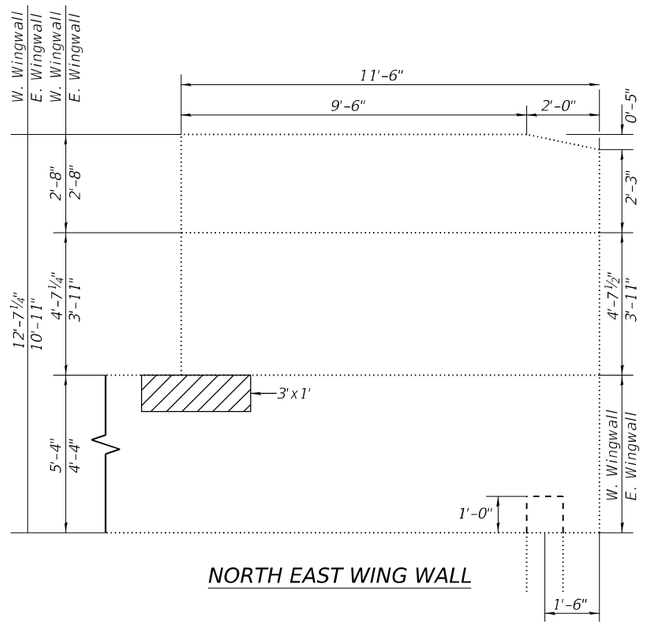

NORTH EAST WING WALL

BILL OF MATERIAL

ITEM	QUANTITY	UNIT
Structural Repair of Concrete (Depth equal to or less than 5")	3	SQ FT

LEGEND

Structural Repair of Concrete (Depth equal to or less than 5")

SD-13

MODEL: Default
FILE NAME: W:\24001656.05\IDOT Dist 1 IL 290 Mill and Overlay\CADD Data\Bridge\ORD-CADD_Structural\016-0979 NB IL-53_I-290 Over Woodfield Rd\016-0979-13-Wing Wall Repair Plan.dgn

IMEG
401 E. STATE ST. 4th Floor ROCKFORD, IL 61104
PH: 815.965.6400 www.imegcorp.com

USER NAME = Michael.A.Phares	DESIGNED - Patrick Pauser	REVISED -
	DRAWN - Patrick Pauser	REVISED -
	CHECKED - Ali Gharamti	REVISED -
PLOT DATE = 4/28/2026	DATE - 4/28/2026	REVISED -

STATE OF ILLINOIS
DEPARTMENT OF TRANSPORTATION

WING WALL REPAIRS
STRUCTURE NO. 016-0979

SCALE: | SHEET SD-13 OF SD-14 SHEETS | STA. | TO STA.

F.A.I. RTE.	SECTION	COUNTY	TOTAL SHEETS	SHEET NO.
290	(0404-316-HB) BR 24	COOK	276	167
		CONTRACT NO. 62W99		
		ILLINOIS	FED. AID PROJECT	

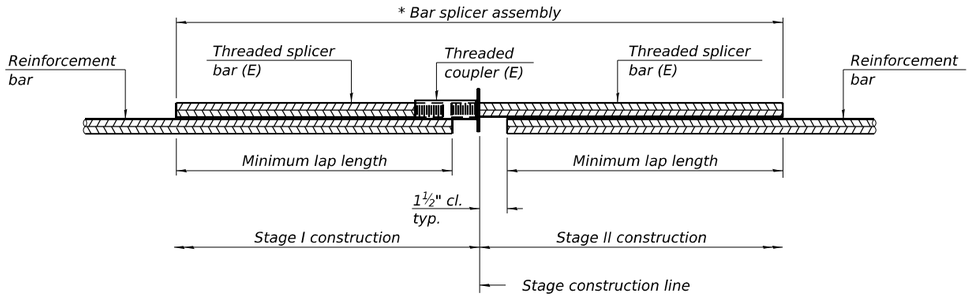

STANDARD BAR SPLICER ASSEMBLY PLAN

Only bar splicer assemblies as presented on the approved QPL list may be used.

Threaded splicer bar length = min. lap length + 1½" + thread length

** Epoxy not required on Bar Splicer Assembly components used in conjunction with black bars.*

Location	Bar size	No. assemblies required	Minimum lap length
Deck	#6	16	4'-10"
Hatchblock	#6	16	4'-10"

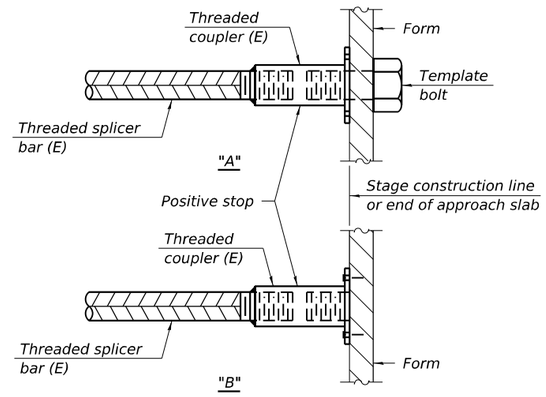

INSTALLATION AND SETTING METHODS

"A" : Set bar splicer assembly by means of a template bolt.
"B" : Set bar splicer assembly by nailing to wood forms or cementing to steel forms.
(E) : Indicates epoxy coating.

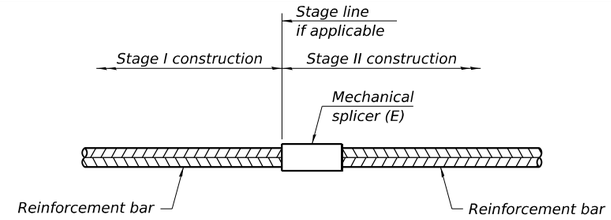

MECHANICAL BAR SPLICER

Location	Bar size	No. assemblies required

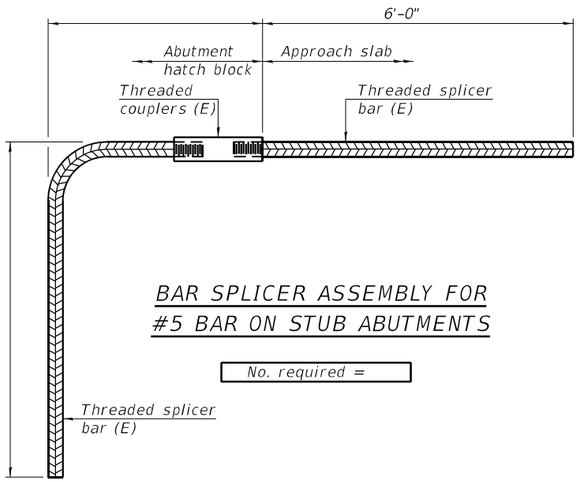

BAR SPLICER ASSEMBLY FOR #5 BAR ON STUB ABUTMENTS

No. required =

Notes:
Splicer bars shall be deformed with threaded ends and have a minimum 60 ksi yield strength.
All reinforcement shall be lapped and tied to the splicer bars.
Bar splicer assemblies shall be epoxy coated according to the requirements for reinforcement bars. See Section 508 of the Standard Specifications.
See approved list of bar splicer assemblies and mechanical splicers for alternatives.

BSD-1

4-4-2025

SB-14

MODEL: Default
FILE NAME: W:\24001656.05\IDOT Dist 1 IL 290 Mill and Overlay\CADD Data\Bridge\ORD-CADD_Structural\016-0979 NB IL-53_I-290 Over Woodfield Rd\016-0979-14-Bar Splicer.dgn

IMEG
401 E. STATE ST. 4th Floor ROCKFORD, IL 61104
PH: 815.965.6400
www.imegcorp.com

USER NAME = Michael.A.Phares	DESIGNED - Patrick Pauser	REVISED -
	DRAWN - Patrick Pauser	REVISED -
	CHECKED - Ali Gharamti	REVISED -
PLOT DATE = 4/28/2026	DATE - 4/28/2026	REVISED -

STATE OF ILLINOIS
DEPARTMENT OF TRANSPORTATION

BAR SPLICER ASSEMBLY AND MECHANICAL SPLICER DETAILS
STRUCTURE NO. 016-0979

SCALE: | SHEET SB-14 OF SB-14 SHEETS | STA. | TO STA.

F.A.I. RTE.	SECTION	COUNTY	TOTAL SHEETS	SHEET NO.
290	(0404-316-HB) BR 24	COOK	276	167A
		CONTRACT NO. 62W99		
		ILLINOIS	FED. AID PROJECT	

Existing Structure: S.N. 016-0977 was built in 1970 as a four span structure consisting of two 60" web welded plate girder spans and two P.P.C. concrete Beam approach spans carrying F.A.I. Route 290 over the Northwest Highway/I-90. Length of the bridge is 257'-91/4" End to End Deck and 49'-5" North and South Approach Span. Out to Out width of the bridge is 256'-01/4" at S. Abutment and 256'-23/8" at N. Abutment.

Traffic will be maintained utilizing staged construction.

No Salvage.

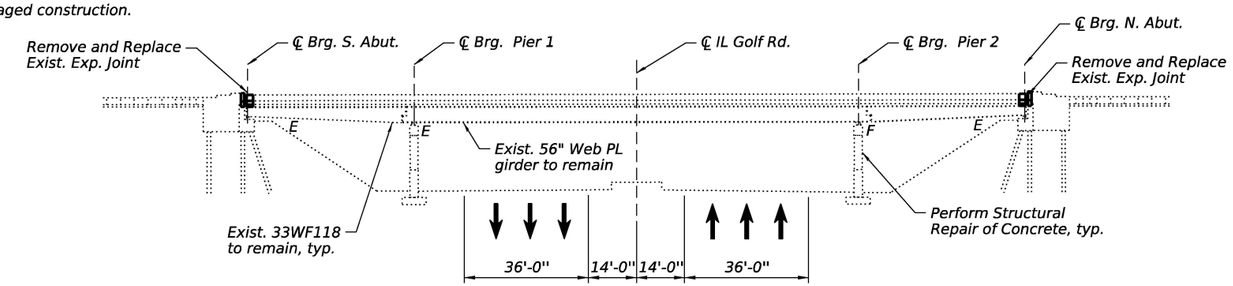

ELEVATION

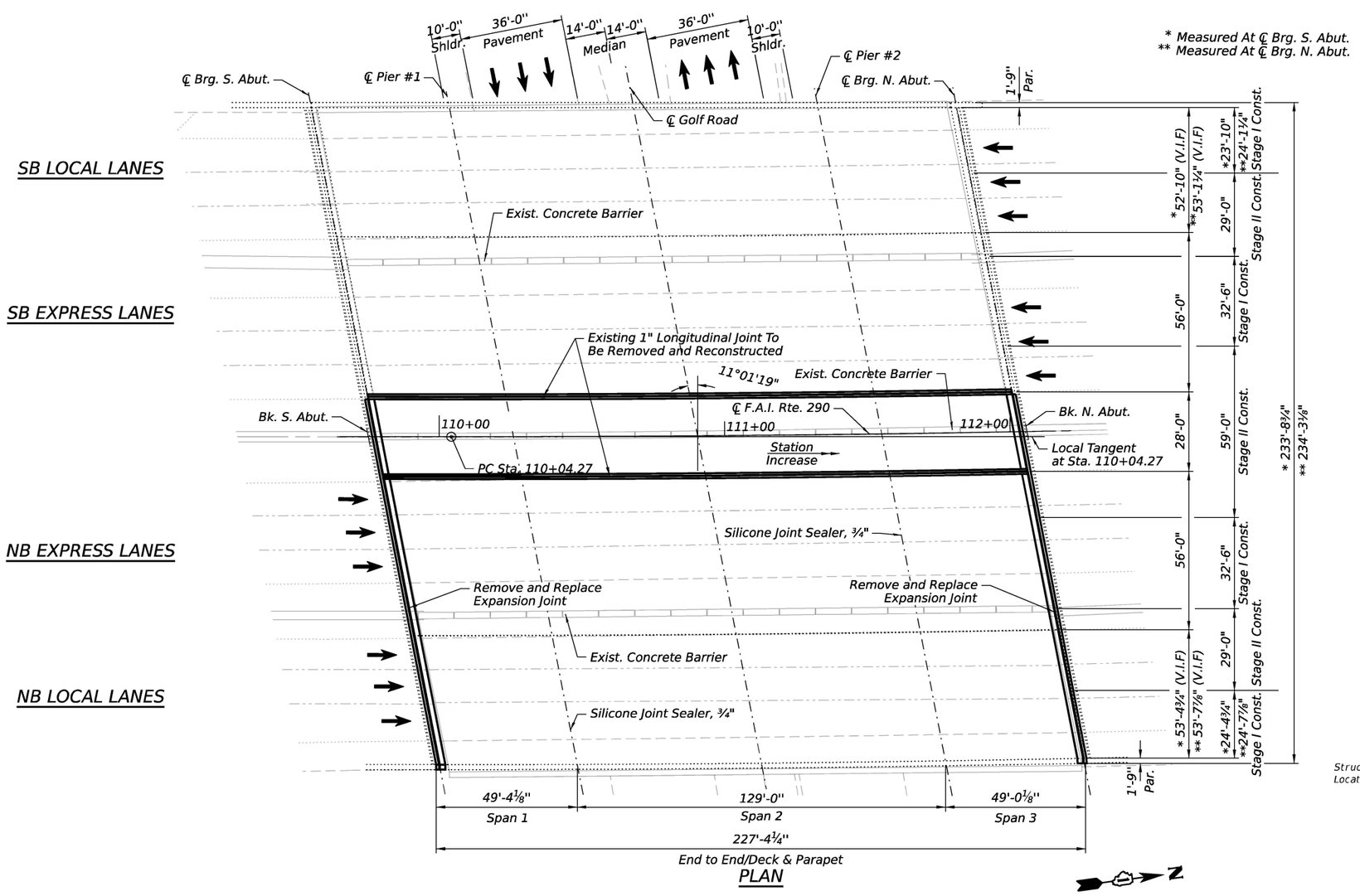

* Measured At ℄ Brg. S. Abut.
** Measured At ℄ Brg. N. Abut.

PLAN

SCOPE OF WORK

1. *Remove and replace all longitudinal joints with full depth patching along the joints to remove and replace the steel under it.*
2. *Remove and replace transverse expansion joints with strip seal.*
3. *Clean all drainage scuppers and flush downspouts.*
4. *Power wash and clean the joint between the median parapets.*
5. *Perform all full depth and partial depth patching in the deck.*
6. *Repair the existing patching where reflective pavement markings we removed with Polymer Concrete.*
7. *Clean and seal the joints at both piers using Silicone Joint Sealer, ¾".*
8. *Repairs spalled and delaminated areas on south and north abutments, wingwalls, and piers 1 and 2.*

STATE OF ILLINOIS
BRETT W. SAUTER
081-006844
LICENSED STRUCTURAL ENGINEER

DATE: 4/30/2026
SEAL EXPIRES: 11/30/2026

DESIGN SPECIFICATIONS

2002 AASHTO Standard Specifications For Highway Bridges, 17th Edition

LOADING HS 20-44

No future wearing surface allowed

DESIGN STRESSES

FIELD UNITS (NEW STRUCTURE)

f'c = 3,500 psi
f'c = 4,000 psi (Superstructure Concrete)
f'c = 3,500 psi (Substructure Concrete)
fy = 60,000 (Reinforcement)

FIELD UNITS (EXISTING STRUCTURE)

f'c = 3,000 psi (Superstructure and Substructure Concrete - Load Factor Design)
fy = 60,000 (Reinforcement)

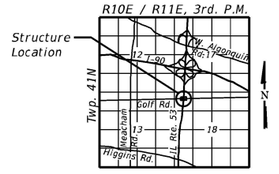

LOCATION SKETCH

GENERAL PLAN AND ELEVATION
IL RTE. 53 OVER IL RTE. 58 (GOLF RD.)
SECTION (0404-316-HB) BR24
COOK COUNTY
STA. 110+90.48
STRUCTURE NO. 016-0980

CiorbaGroup
8725 W. Higgins Rd, Ste 600, Chicago, IL 60631
P 773.775.4009 | www.ciorba.com

USER NAME =	DESIGNED - SIK	REVISED -	STATE OF ILLINOIS DEPARTMENT OF TRANSPORTATION
	CHECKED - BWS	REVISED -	
PLOT SCALE =	DRAWN - GUG	REVISED -	STRUCTURE NO. 016–0980
PLOT DATE =	CHECKED - BWS	REVISED -	SHEET SE-01 OF SE-20 SHEETS

F.A.I. RTE.	SECTION	COUNTY	TOTAL SHEETS	SHEET NO.
290	(0404-316-HB) BR24	COOK	276	168
		CONTRACT NO. 62W99		
	ILLINOIS FED. AID PROJECT			

MODEL: sMODELNAMES
FILE NAME: pw://ciorba-pw.bentley.com:ciorba-pw-01/Documents/Projects/IL_DOT/D1/0021693.06/CADD Data/Shr/Structural/016-0980/0160980-62W99-01-GFE.dgn
4/30/2026 6:57:00 PM

GENERAL NOTES

1. Plan dimensions and details relative to existing structure have been taken from existing plans and are subject to nominal construction variations. The Contractor shall field verify dimensions and details affecting new construction and make necessary approved adjustments prior to construction or ordering of materials. Such variations shall not be cause for additional compensation for a change in scope of the work, however, the Contractor will be paid for the quantity actually furnished at the unit price bid for the work.

2. Reinforcement bars designated (E) shall be epoxy coated.

3. Expansion joints shall be fabricated and installed according to Manufacturer's recommendations and as approved by the Engineer.

4. Expansion joints shall be fabricated to conform to the existing cross slopes of the bridge.

5. Prior to pouring the new concrete deck, all heavy or loose rust, loose mill scale, and other loose or potentially detrimental foreign material shall be removed from the surfaces in contact with concrete. Tightly adhered paint may remain unless otherwise noted. Removal shall be accomplished by methods that will not damage the steel and the cost will be included in the pay item covering removal of the existing concrete.

6. Existing reinforcement extended into the removal area shall be cleaned, straightened and incorporated into the new construction. Any reinforcement bars that are damaged during concrete removal operations shall be replaced using an approved bar splicer or anchorage system at the contractor's expense.

7. Joint openings shall be adjusted according to Article 520.04 of the Standard Specification when the deck is poured at an ambient temperature other than 50° F.

8. All Construction joints shall be bonded.

9. No field welding is permitted except as specified in the contract documents.

10. Stations called out on the plans are approximate. The Contractor shall field verify the stations during construction layout.

11. Protective Coat shall be applied to the new concrete for approach slab, deck, front face and top face of the parapets.

12. Quantity shown for Polymer Concrete Repair is estimated. The Contractor shall verify the locations and the areas before ordering the material and The Engineer shall show actual locations of the repairs on as-built plans.

13. The concrete median barrier cast openings (3"x1'-0") spaced at 5 ft at the base of the barrier should be cleaned and completely free from debris, after all repair work has been completed. Water used for cleaning shall be fresh and free of oils, acid, salt, alkali, organic matter, or any other substances harmful to the work area, including but not limited to the adjacent existing drainage system. The Contractor shall provide all water for the cleaning operation. The cost for cleaning the openings is inclided in Cleaning Drainage System. Any damage to the work area or drainage system, due to the cleaning operations, shall be repaired at no additional cost.

INDEX OF SHEETS

SE-01	General Plan and Elevation
SE-02	General Notes, Index of Sheets and Total Bill of Material
SE-03	Stage Construction
SE-04	Temporary Concrete Barrier
SE-05	Deck Repair Plan
SE-06	Parapet Repairs
SE-07	South Abutment Joint Removal and Reconstruction (Sheet 1 of 3)
SE-08	South Abutment Joint Removal and Reconstruction (Sheet 2 of 3)
SE-09	South Abutment Joint Removal and Reconstruction (Sheet 3 of 3)
SE-10	North Abutment Joint Removal and Reconstruction (Sheet 1 of 3)
SE-11	North Abutment Joint Removal and Reconstruction (Sheet 2 of 3)
SE-12	North Abutment Joint Removal and Reconstruction (Sheet 3 of 3)
SE-13	Longitudinal Joint Removal and Reconstruction
SE-14	Preformed Joint Strip Seal
SE-15	North Abutment Repairs
SE-16	South Abutment Repairs
SE-17	Wingwalls Repairs
SE-18	South Pier Repairs
SE-19	North Pier Repairs
SE-19A	Slope Wall Repairs
SE-20	Bar Splicer Assembly and Mechanical Splicer Details

TOTAL BILL OF MATERIAL

DESCRIPTION	UNIT	SUB	SUPER	TOTAL
Structural Repair Of Concrete (Depth Equal To Or Less Than 5 Inches)	Sq Ft	1,506	108	1,614
Structural Repair Of Concrete (Depth Greater Than 5 Inches)	Sq Ft	1,217	14	1,231
Deck Slab Repair (Full Depth, Type II)	Sq Yd		27	27
Deck Slab Repair (Partial)	Sq Yd		19	19
Stone Riprap, Class A3	Sq Yd	70		70
Concrete Removal	Cu Yd		60.6	60.6
Protective Shield	Sq Yd		337	337
Concrete Superstructure	Cu Yd		60.1	60.1
Protective Coat	Sq Yd		175	175
Reinforcement Bars, Epoxy Coated	Pound		11,360	11,360
Bar Splicers	Each		96	96
Preformed Joint Strip Seal	Foot		263	263
Concrete Sealer	Sq Ft	3,536		3,536
Debris Removal	Cu Yd	51		51
Silicone Joint Sealer, 3/4"	Foot		206	206
Silicone Joint Sealer, 1"	Foot		456	456
Polymer Concrete	Cu Ft		6	6
Temporary Shoring And Cribbing	Each	19		19
Slope Wall Repair	Sq Yd	70		70
Cleaning Drainage System	L Sum	0.4		0.4

*3"x1'-0" Cast Opening @ 5'-0" Cts. (Typ.)

*Cleaning of openings in concrete median cost is included in Cleaning Drainage System, see General Note 13

CAST OPENINGS IN MEDIAN BARRIER

CiorbaGroup
8725 W. Higgins Rd, Ste 600, Chicago, IL 60631
P 773.775.4009 | www.ciorba.com

USER NAME =	DESIGNED - SIK	REVISED -
	CHECKED - BWS	REVISED -
PLOT SCALE =	DRAWN - GUG	REVISED -
PLOT DATE =	CHECKED - BWS	REVISED -

STATE OF ILLINOIS
DEPARTMENT OF TRANSPORTATION

GENERAL NOTES, INDEX OF SHEETS AND TOTAL BILL OF MATERIAL
STRUCTURE NO. 016-0980

SHEET SE-02 OF SE-20 SHEETS

F.A.I. RTE.	SECTION	COUNTY	TOTAL SHEETS	SHEET NO.
290	(0404-316-HB) BR24	COOK	276	169
		CONTRACT NO. 62W99		
	ILLINOIS	FED. AID PROJECT		

MODEL: $MODELNAME$
FILE NAME: pw://ciorba-pw.bentley.com:ciorba-pw-01/Documents/Projects/IL_DOT/D1/0021693.06/CADD Data/Sht/Structural/016-0980/0160980-62W99-02-GenNotes.dgn
4/30/2026 6:57:10 PM

* Measured At ℄ Brg. S. Abut.
** Measured At ℄ Brg. N. Abut.

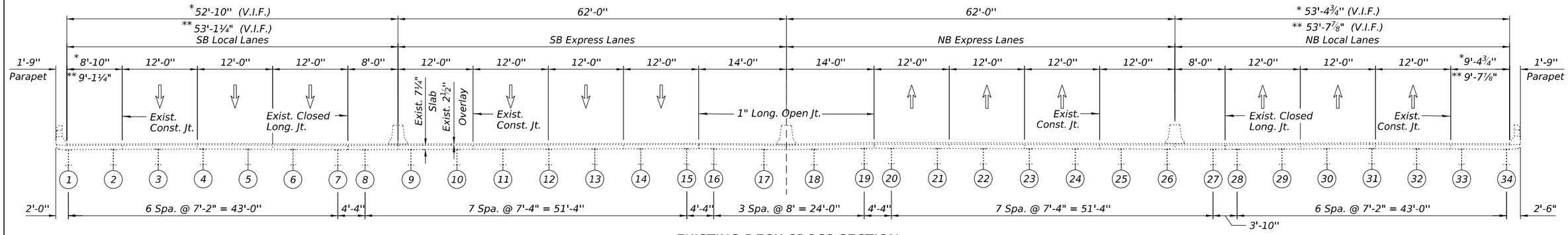

EXISTING DECK CROSS SECTION
(Looking North)

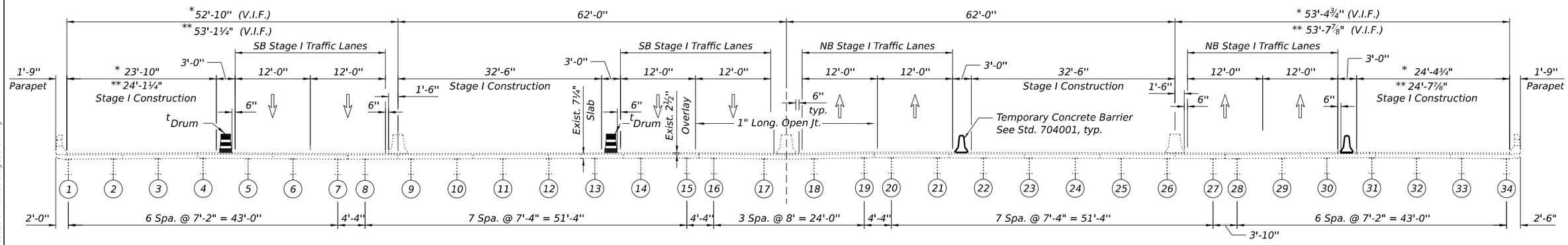

STAGE I CONSTRUCTION
(Looking North)

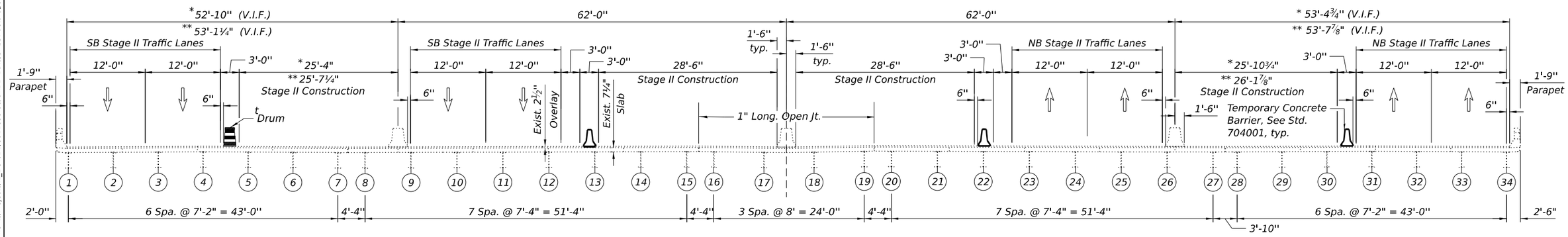

STAGE II CONSTRUCTION
(Looking North)

tDrum with steady burn monodirectional light/direction indicator barricade with steady burn monodirectional light (per Standard 701401-13)

MODEL: sMODELNAMES
FILE NAME: pw://ciorba-pw.bentley.com:ciorbapw-01/Documents/Projects/IL_DOT/D1/0021693.06/CADD Data/Sht/Structural/016-0980/0160980-62W99-03-StageConstr1.dgn
4/30/2026 6:57:20 PM

CiorbaGroup
8725 W. Higgins Rd, Ste 600, Chicago, IL 60631
P 773.775.4009 | www.ciorba.com

USER NAME =	DESIGNED - SIK	REVISED -
	CHECKED - BWS	REVISED -
PLOT SCALE =	DRAWN - GUG	REVISED -
PLOT DATE =	CHECKED - BWS	REVISED -

STATE OF ILLINOIS
DEPARTMENT OF TRANSPORTATION

STAGE CONSTRUCTION
STRUCTURE NO. 016–0980
SHEET SE-03 OF SE-20 SHEETS

F.A.I. RTE.	SECTION	COUNTY	TOTAL SHEETS	SHEET NO.
290	(0404-316-HB) BR24	COOK	276	170
		CONTRACT NO. 62W99		
	ILLINOIS	FED. AID PROJECT		

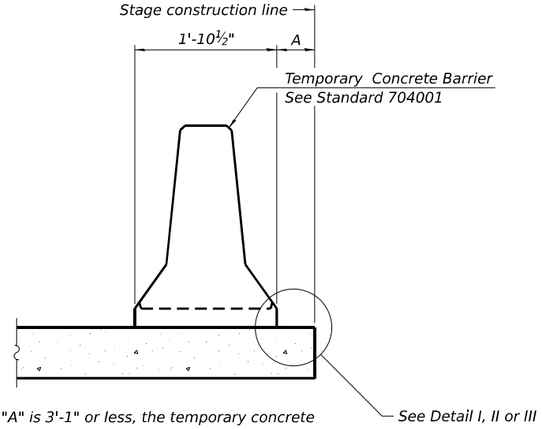

When "A" is 3'-1" or less, the temporary concrete barrier shall be restrained to the new slab according to Detail I, II or III. No restraint is required when "A" is greater than 3'-1".

NEW SLAB OR NEW DECK BEAM

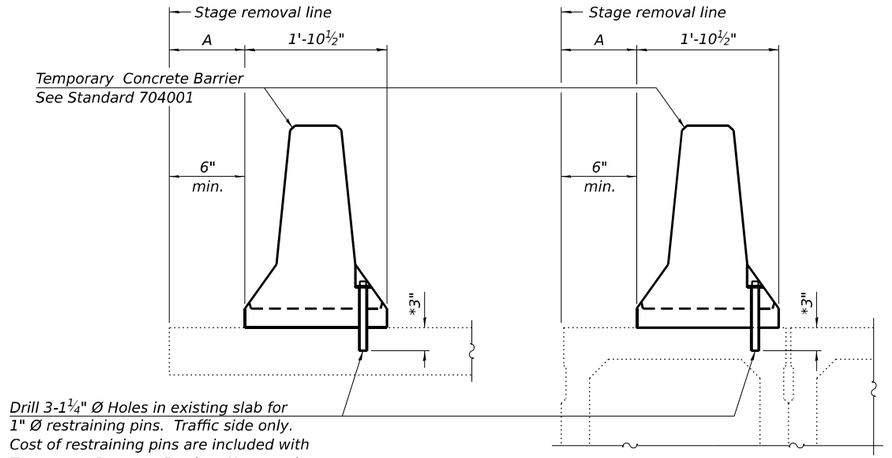

EXISTING SLAB

* When hot-mix asphalt wearing surface is present, embedment shall be 3" plus the wearing surface depth.

EXISTING DECK BEAM

SECTIONS THRU SLAB OR DECK BEAM

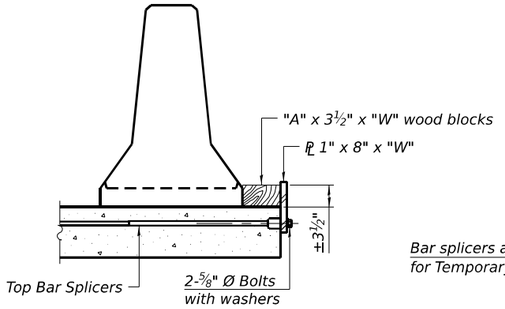

DETAIL I

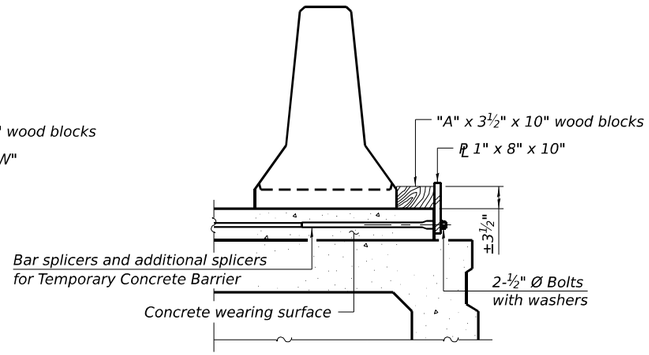

DETAIL II

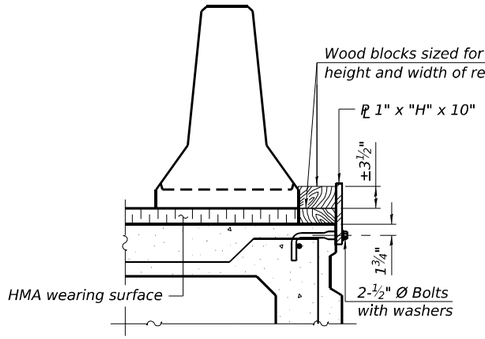

DETAIL III

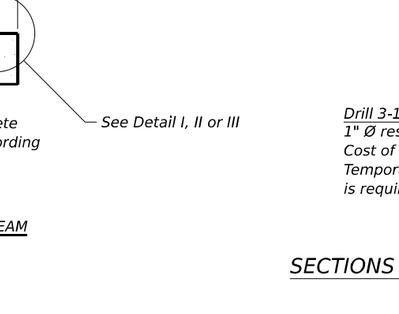

STEEL RETAINER ℄ 1" x 8" x "W"
(Detail I and II)

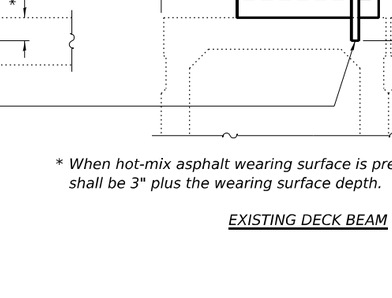

STEEL RETAINER ℄ 1" x "H" x 10"
(Detail III)

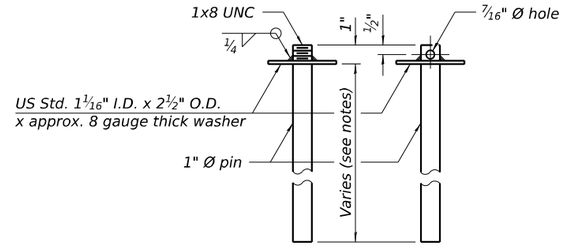

RESTRAINING PIN

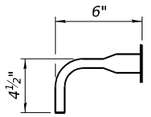

BAR SPLICER FOR #4 BAR - DETAIL III

RAILING CRITERIA

NCHRP 350 Test Level	3
Railing Weight (plf)	440

R-27

5-15-2023

Notes:

Cost of retainer assembly is included with Temporary Concrete Barrier.

A retainer assembly shall be located at the approximate ℄ of each temporary concrete barrier.

The retainer plate shall not be removed until the concrete on the adjacent stage is ready to be poured. For Detail III applications the retainer plate shall not be removed until just prior to placing the adjacent beam.

When the 'A' dimension is less than 1½", the wood block shall be omitted and the barrier shall be placed in direct contact with the steel retainer plate. For deck beam applications the minimum required 'A' distance is 6" to accommodate the shear key clamping device.

Detail I - Installation for a new bridge deck or bridge slab.

Detail II - Installation for a new deck beam with an initial concrete wearing surface. Additional bar splicers shall be provided at 6'-0" centers and paired with the bar splicers of the concrete wearing surface reinforcement to accommodate the installation of the retainer assemblies. The cost of the additional bar splicers is included with the concrete wearing surface.

Detail III - Installation for a new deck beam with no initial wearing surface or with an initial hot-mix asphalt (HMA) wearing surface present. The deck beam directly beneath the temporary concrete barrier shall be fabricated with bar splicer inserts in the side of the beam, as detailed, to accommodate the installation of the retainer assemblies. A pair of bar splicers, 6" apart, shall be placed at 6'-0" centers along the length of the beam. The cost of the bar splicers is included with the deck beam.

CiorbaGroup
8725 W. Higgins Rd, Ste 600, Chicago, IL 60631
P 773.775.4009 | www.ciorba.com

USER NAME =	DESIGNED - SIK	REVISED -
	CHECKED - BWS	REVISED -
PLOT SCALE =	DRAWN - GUG	REVISED -
PLOT DATE =	CHECKED - BWS	REVISED -

STATE OF ILLINOIS
DEPARTMENT OF TRANSPORTATION

TEMPORARY CONCRETE BARRIER
STRUCTURE NO. 016-0980

SHEET SE-04 OF SE-20 SHEETS

F.A.I. RTE.	SECTION	COUNTY	TOTAL SHEETS	SHEET NO.
290	(0404-316-HB) BR24	COOK	276	171
		CONTRACT NO. 62W99		
	ILLINOIS	FED. AID PROJECT		

MODEL: SMODELNAMES
FILE NAME: pw://ciorba-pw.bentley.com:ciorba-pw-01/Documents/Projects/IL_DOT/D1/0021693.06/CADD Data/Sht/Structural/016-0980/0160980-62W99-04-TempConcBar.dgn
4/30/2026 6:57:30 PM

NOTES:

1. Areas of deck repairs including polymer concrete shown are estimated. The Engineer shall show actual locations of deck repairs at the time of construction.
2. For Parapet Repairs, see Sheet SE-06.
3. For South and North Abutment Expansion Joints removal and reconstruction, see Sheets SE-07 thru SE-12.
3. For Longitudinal Expansion Joint removal and reconstruction, see Sheet SE-13.
4. Any reinforcement bars that are damaged during concrete removal operations shall be repaired or replaced using an approved bar splicer or anchorage system. Cost included to Concrete Removal.
5. The concrete median barrier cast openings (3"x1'-0") spaced at 5 ft at the base of the barrier should be cleaned and completely free from debris, after all repair work has been completed. Water used for cleaning shall be fresh and free of oils, acid, salt, alkali, organic matter, or any other substances harmful to the work area, including but not limited to the adjacent existing drainage system. The Contractor shall provide all water for the cleaning operation. The cost for cleaning the openings is inclided in Cleaning Drainage System. Any damage to the work area or drainage system, due to the cleaning operations, shall be repaired at no additional cost.

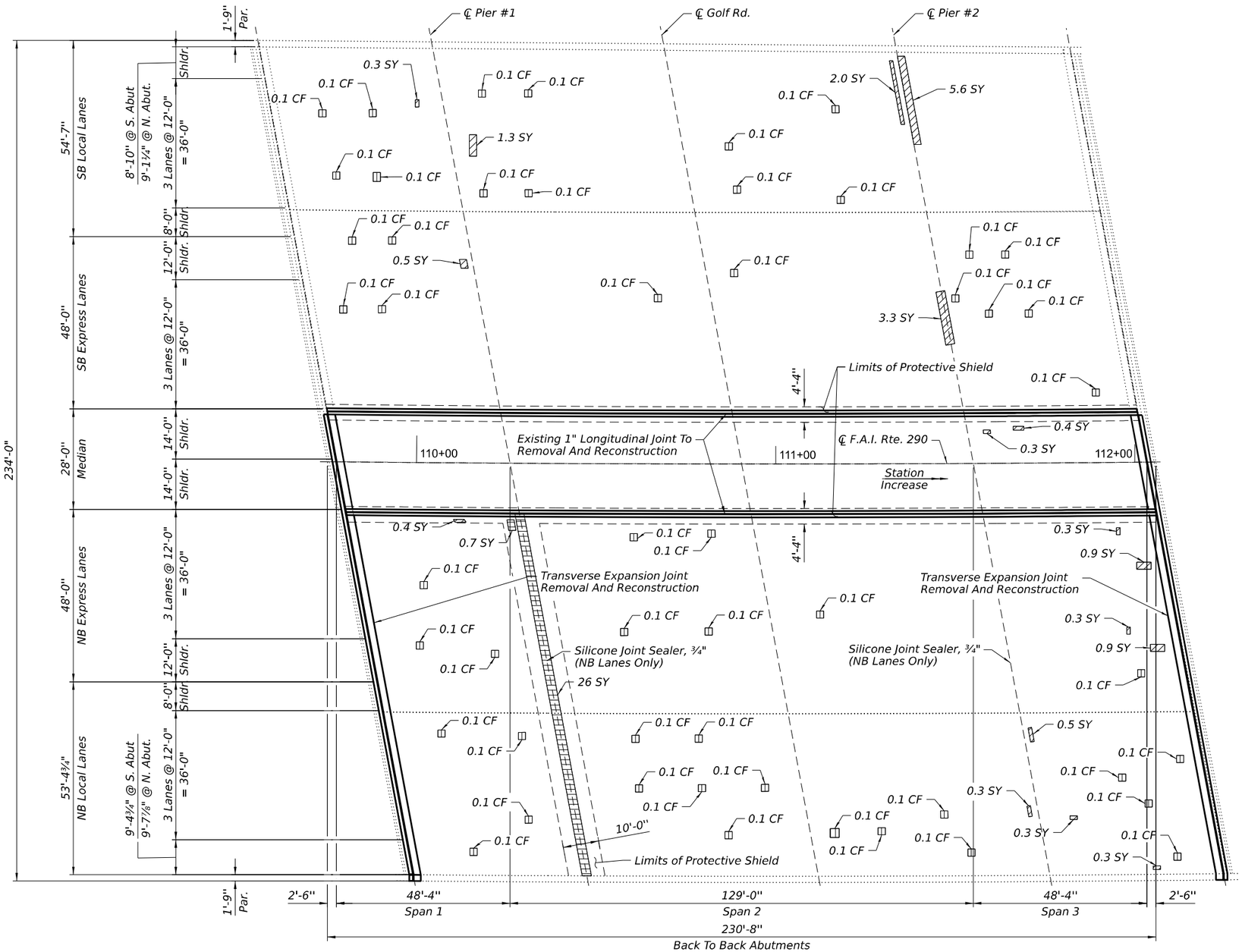

PLAN

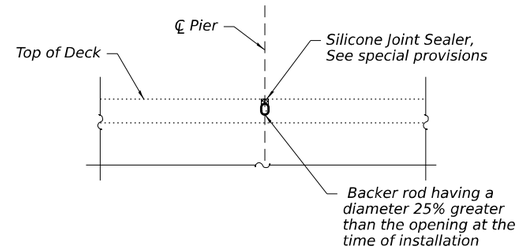

SILICONE JOINT SEALER DETAIL

BILL OF MATERIAL

ITEM	UNIT	QUANTITY
Protective Shield	Sq Yd	337
Deck Slab Repair (Partial)	Sq Yd	19
Deck Slab Repair (Full Depth, Type II)	Sq Yd	27
Silicone Joint Sealer, 3/4"	Foot	206
Polymer Concrete	Cu Ft	6

LEGEND

- Deck Slab Repair (Partial)
- Deck Slab Repair (Full Depth Repair, Type II)
- Polymer Concrete
- SY Square Yard
- CF Cubic Foot

CiorbaGroup
8725 W. Higgins Rd, Ste 600, Chicago, IL 60631
P 773.775.4009 | www.ciorba.com

USER NAME =	DESIGNED - SIK	REVISED -
	CHECKED - BWS	REVISED -
PLOT SCALE =	DRAWN - GUG	REVISED -
PLOT DATE =	CHECKED - BWS	REVISED -

STATE OF ILLINOIS
DEPARTMENT OF TRANSPORTATION

DECK REPAIR PLAN
STRUCTURE NO. 016–0980
SHEET SE-05 OF SE-20 SHEETS

F.A.I. RTE.	SECTION	COUNTY	TOTAL SHEETS	SHEET NO.
290	(0404-316-HB) BR24	COOK	276	172
		CONTRACT NO. 62W99		
	ILLINOIS	FED. AID PROJECT		

MODEL: sMODELNAMES
FILE NAME: pw:\\ciorba-pw.bentley.com:ciorba-pw-01\Documents\Projects\IL_DOT.D1\0021693.06\CADD Data\Sht\Structural\016-0980\016980-62W99-05-DeckRep.dgn
4/30/2026 6:57:41 PM

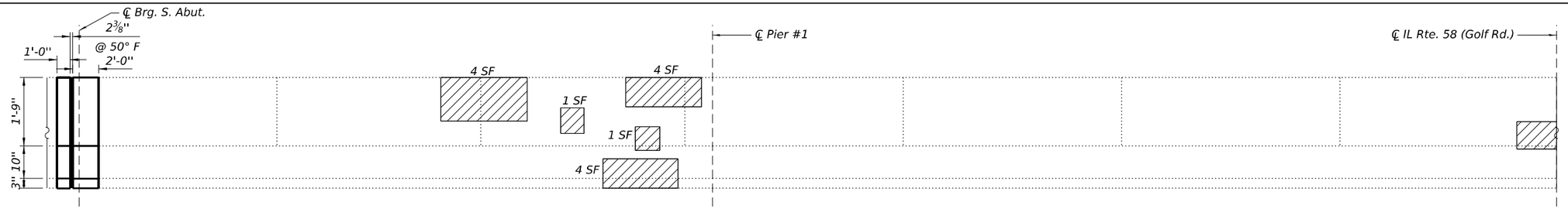

INSIDE ELEVATION - WEST PARAPET (SB LOCAL LANES) - PARTIAL

(Looking West)

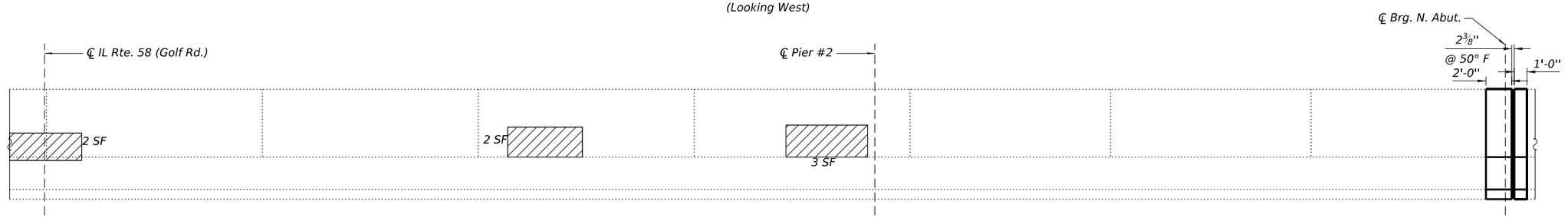

INSIDE ELEVATION - WEST PARAPET (SB LOCAL LANES) - PARTIAL

(Looking West)

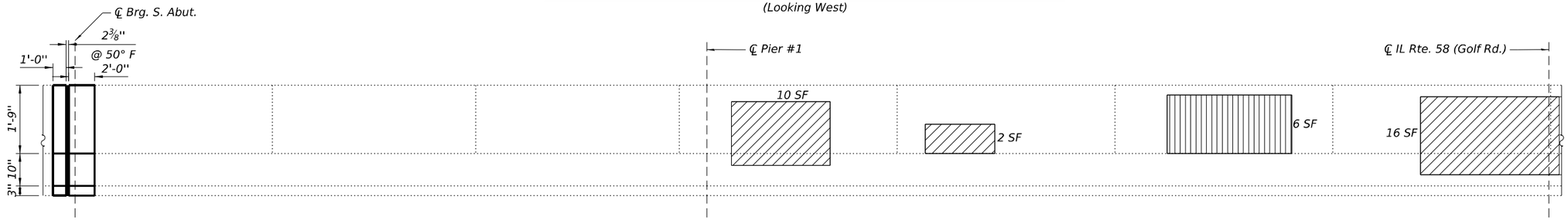

INSIDE ELEVATION - EAST PARAPET (NB LOCAL LANES) - PARTIAL

(Looking East)

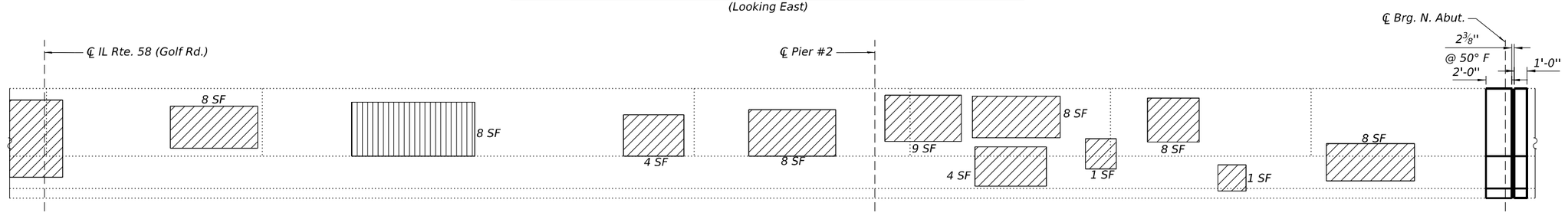

INSIDE ELEVATION - EAST PARAPET (NB LOCAL LANES) - PARTIAL

(Looking East)

NOTES:

1. For General Notes and Total Bill of Material, see Sheet SE-02.
2. For Parapet removal and reconstruction, see Sheets SE-07 thru SE-12.
3. Quantities and Limits shown are estimated for bidding purpose only. The actual areas to be repaired, and type(s) of repairs to be used will be determined by the Engineer in the field at the time of construction.

LEGEND:

	Structural Repair of Concrete (Depth Equal To Or Less Than 5 Inches)
	Structural Repair of Concrete (Depth Greater Than 5 Inches)
SF	Square Foot

BILL OF MATERIAL

Item	Unit	Quantity
Structural Repair Of Concrete (Depth Equal To Or Less Than 5 Inches)	Sq Ft	108
Structural Repair Of Concrete (Depth Greater Than 5 Inches)	Sq Ft	14

CiorbaGroup
8725 W. Higgins Rd, Ste 600, Chicago, IL 60631
P 773.775.4009 | www.ciorba.com

USER NAME =	DESIGNED - SIK	REVISED -	STATE OF ILLINOIS DEPARTMENT OF TRANSPORTATION	PARAPET AND RAILING REPAIRS STRUCTURE NO. 016–0980	
	CHECKED - BWS	REVISED -			
PLOT SCALE =	DRAWN - GUG	REVISED -			
PLOT DATE =	CHECKED - BWS	REVISED -		SHEET SE-06 OF SE-20 SHEETS	

F.A.I. RTE.	SECTION	COUNTY	TOTAL SHEETS	SHEET NO.
290	(0404-316-HB) BR24	COOK	276	173
		CONTRACT NO. 62W99		
	ILLINOIS	FED. AID PROJECT		

MODEL: sMODELNAMES
FILE NAME: pw://ciorba-pw.bentley.com:ciorba-pw-01/Documents/Projects/IL_DOT/D1/0021693.06/CADD Data/Sht/Structural/0160980/0160980-62W99-06-ParapetRailingRep.dgn
4/30/2026 6:57:51 PM

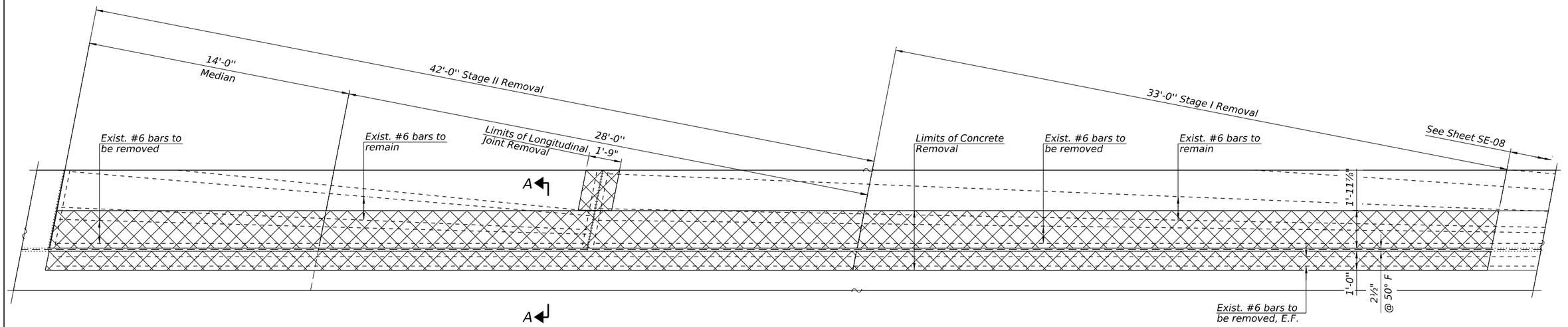

SOUTH ABUTMENT JOINT REMOVAL PLAN - PARTIAL

N

MIN. BAR LAP

#6 = 5'-3" (Deck)
#6 = 2'-4" (Hatchblock)

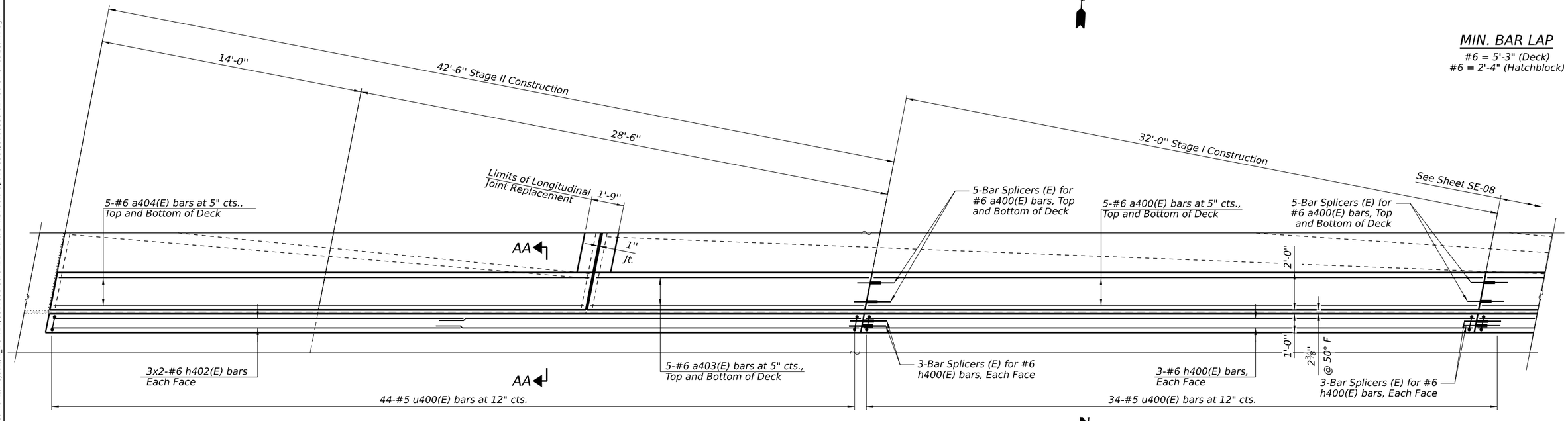

SOUTH ABUTMENT JOINT RECONSTRUCTION PLAN - PARTIAL

N

NOTES:

1. Work this sheet with sheet SE-08.
2. For Sections A-A and AA-AA, bar bend details and Bill of Material, see Sheet SE-09.
3. For Longitudinal joint removal and replacement, see sheet SE-13.

LEGEND

Concrete Removal

USER NAME =	DESIGNED - SIK	REVISED -	STATE OF ILLINOIS DEPARTMENT OF TRANSPORTATION
	CHECKED - BWS	REVISED -	
PLOT SCALE =	DRAWN - EK, SIK	REVISED -	
PLOT DATE =	CHECKED - BWS	REVISED -	

SOUTH ABUTMENT JOINT REMOVAL AND RECONSTRUCTION (SHEET 1 OF 3)
STRUCTURE NO. 016–0980
SHEET SE-07 OF SE-20 SHEETS

F.A.I. RTE.	SECTION	COUNTY	TOTAL SHEETS	SHEET NO.
290	(0404-316-HB) BR24	COOK	276	174
		CONTRACT NO. 62W99		
	ILLINOIS	FED. AID PROJECT		

MODEL: sMODELNAMES
FILE NAME: pw://clorba-pw.bentley.com:clorba-pw-01/Documents/Projects/IL_DOT.DJ/0021693.06/CADD Data/Sht/Structural/016-0980/016980-62W99-07-SAbutJoint1.dgn
4/30/2026 6:58:04 PM

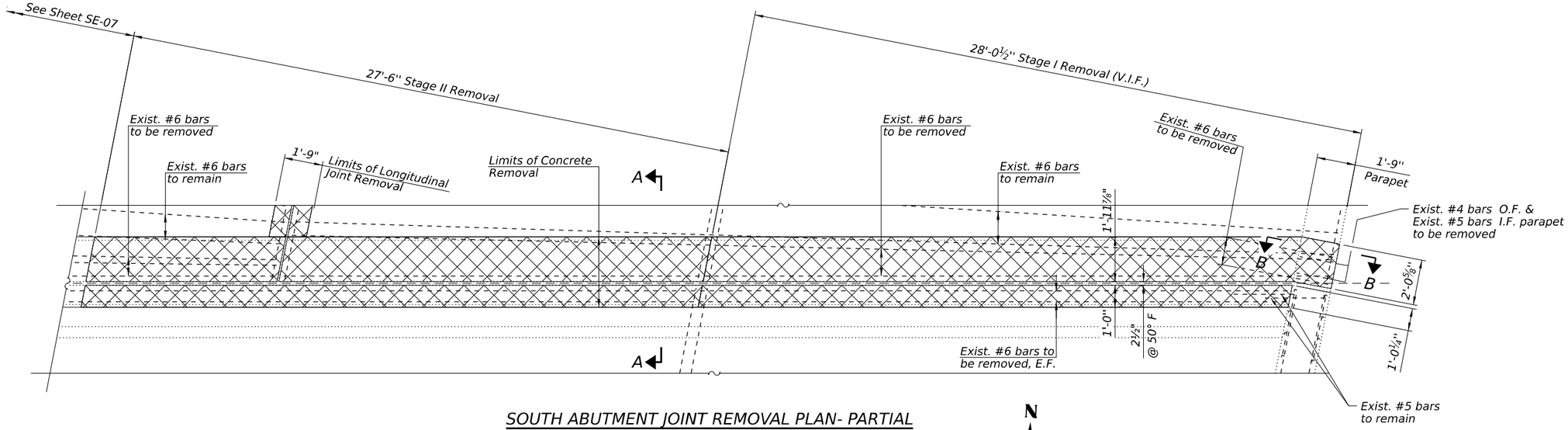

SOUTH ABUTMENT JOINT REMOVAL PLAN- PARTIAL

N

MIN. BAR LAP

#6 = 5'-3" (Deck)
#6 = 2'-4" (Hatchblock)

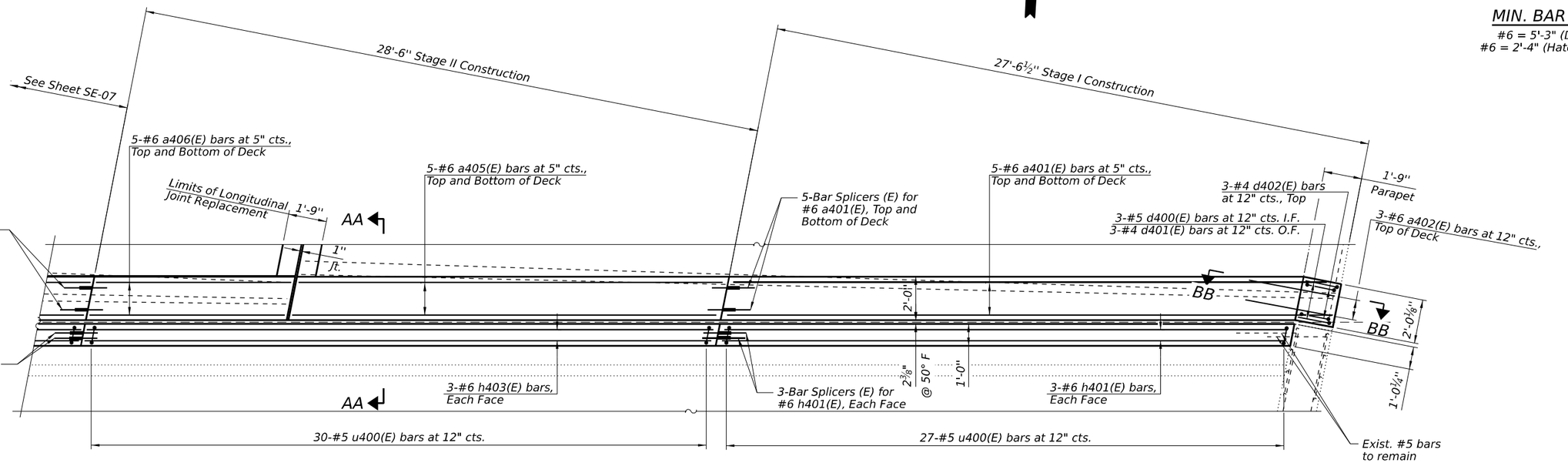

SOUTH ABUTMENT JOINT RECONSTRUCTION PLAN-PARTIAL

N

NOTES:

1. Work this sheet with sheet SE-07.
2. For Sections A-A, B-B, AA-AA, and BB-BB, bar bend details and Bill of Material, see Sheet SE-09.
3. For Longitudinal joint removal and replacement, see sheet SE-13.

LEGEND

Concrete Removal

CiorbaGroup
8725 W. Higgins Rd, Ste 600, Chicago, IL 60631
P 773.775.4009 | www.ciorba.com

USER NAME =		DESIGNED -	SIK	REVISED -	
		CHECKED -	BWS	REVISED -	
PLOT SCALE =		DRAWN -	ETK, SIK	REVISED -	
PLOT DATE =		CHECKED -	BWS	REVISED -	

STATE OF ILLINOIS
DEPARTMENT OF TRANSPORTATION

SOUTH ABUTMENT JOINT REMOVAL AND RECONSTRUCTION (SHEET 2 OF 3)
STRUCTURE NO. 016-0980
SHEET SE-08 OF SE-20 SHEETS

F.A.I. RTE.	SECTION	COUNTY	TOTAL SHEETS	SHEET NO.
290	(0404-316-HB) BR24	COOK	276	175
		CONTRACT NO. 62W99		
		ILLINOIS	FED. AID PROJECT	

MODEL: SMODELNAMES
FILE NAME: pw://ciorba-pw.bentley.com:ciorba-pw-01/Documents/Projects/IL_DOT/D1/0021693.06/CADD Data/Sht/Structural/016-0980/016098062W99-08-SAbutJoint2.dgn
4/30/2026 6:58:14 PM

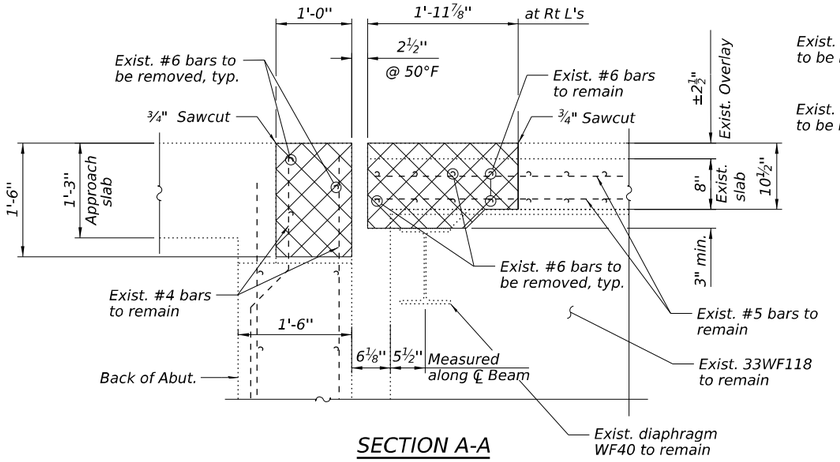

SECTION A-A

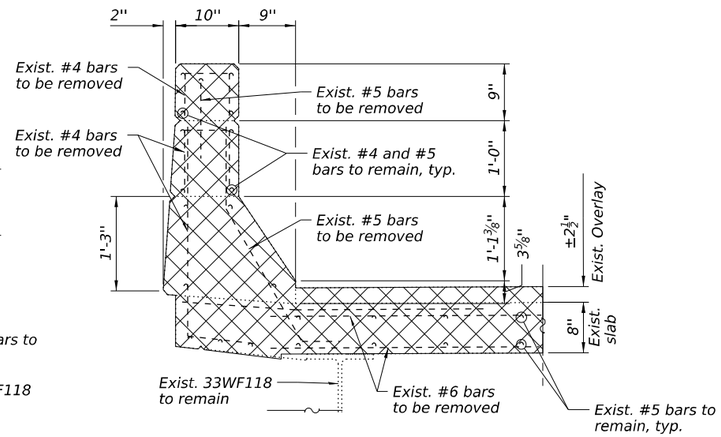

SECTION B-B

NOTES:

1. *Existing reinforcement bars extending into the removal area shall be cleaned, straightened and incorporated into the new construction. Any reinforcement bars that are damaged during concrete removal shall be replaced with approved bar splicer or anchorage system. Cost included with Concrete Removal.*
2. *Removal of exist. expansion joint will not be paid for seperately. Cost included with Concrete Removal.*
3. *For preformed joint strip details, see sheet SE-14.*
4. *For bar splicer assembly details, see sheet SE-20.*

BILL OF MATERIAL

Bar	No.	Size	Length	Shape
a400(E)	10	#6	32'-3"	
a401(E)	10	#6	27'-9"	
a402(E)	3	#6	4'-0"	
a403(E)	10	#6	14'-5"	
a404(E)	10	#6	28'-2"	
a405(E)	10	#6	19'-5"	
a406(E)	10	#6	8'-10"	
d400(E)	3	#5	4'-4"	
d401(E)	3	#4	4'-6"	
d402(E)	3	#4	2'-1"	
h400(E)	6	#6	32'-3"	
h401(E)	6	#6	26'-1"	
h402(E)	12	#6	22'-8"	
h403(E)	6	#6	27'-9"	
u400(E)	135	#5	2'-7"	
Concrete Removal			Cu Yd	17.8
Concrete Superstructure			Cu Yd	17.8
Protective Coat			Sq Yd	45
Reinforcement Bars, Epoxy Coated			Pound	3,560

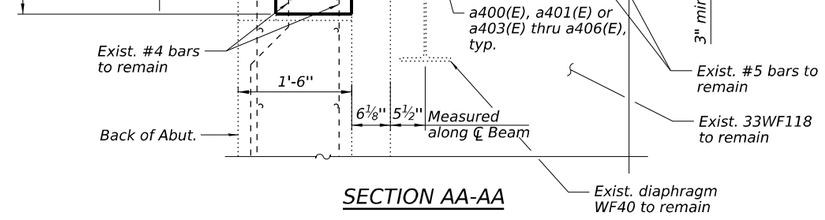

SECTION AA-AA

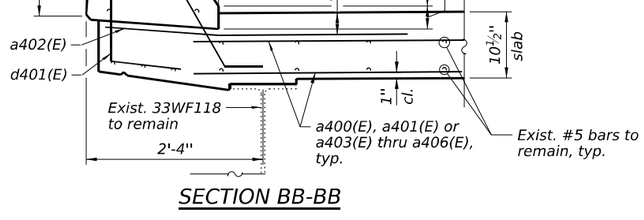

SECTION BB-BB

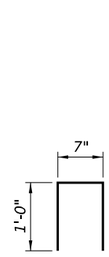

BAR u400(E)

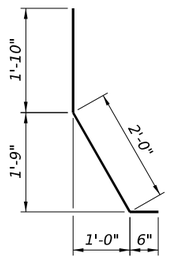

BAR d400(E)

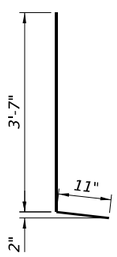

BAR d401(E)

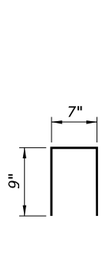

BAR d402(E)

LEGEND

Concrete Removal

MODEL: sMODELNAMES
FILE NAME: pw://ciorba-pw.bentley.com:ciorba-pw-01/Documents/Projects/IL_DOT/D1/0021693.06/CADD Data/SHI/Structural/016-0980/016098016-0980-62W99-09-SAbutJtJoint3.dgn
4/30/2026 6:58:25 PM

CiorbaGroup
8725 W. Higgins Rd, Ste 600, Chicago, IL 60631
P 773.775.4009 | www.ciorba.com

USER NAME =	DESIGNED - SIK	REVISED -	
	CHECKED - BWS	REVISED -	
PLOT SCALE =	DRAWN - ETK, SIK	REVISED -	
PLOT DATE =	CHECKED - BWS	REVISED -	

STATE OF ILLINOIS
DEPARTMENT OF TRANSPORTATION

SOUTH ABUTMENT JOINT REMOVAL AND RECONSTRUCTION (SHEET 3 OF 3)
STRUCTURE NO. 016–0980

SHEET SE-09 OF SE-20 SHEETS

F.A.I. RTE:	SECTION	COUNTY	TOTAL SHEETS	SHEET NO.
290	(0404-316-HB) BR24	COOK	276	176
		CONTRACT NO. 62W99		
	ILLINOIS	FED. AID PROJECT		

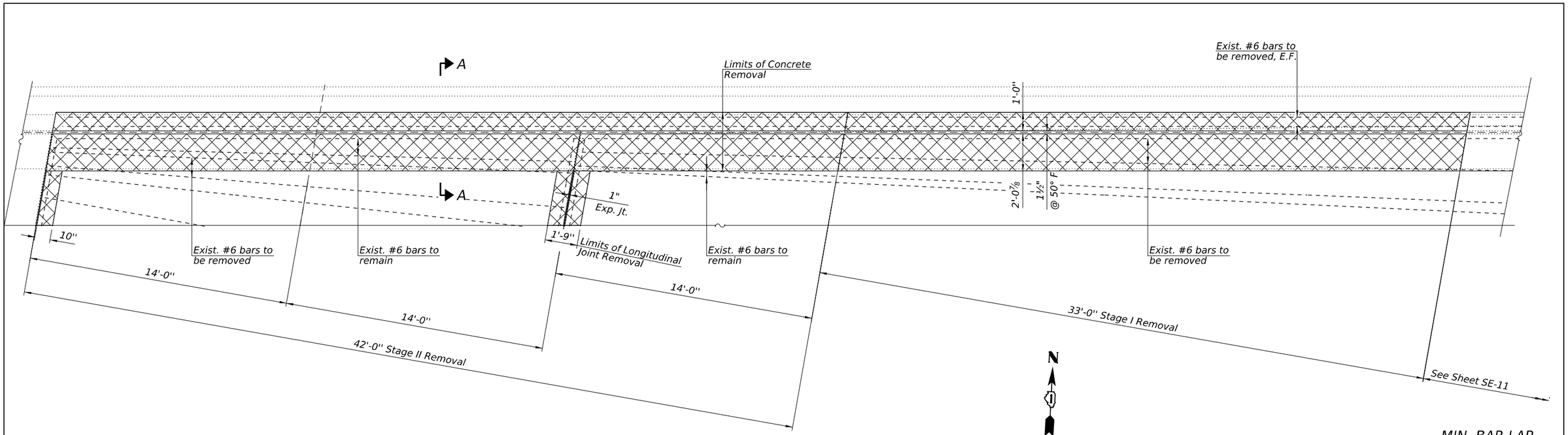

NORTH ABUTMENT JOINT REMOVAL PLAN - PARTIAL

MIN. BAR LAP
#6 = 5'-3" (Deck)
#6 = 2'-4" (Hatchblock)

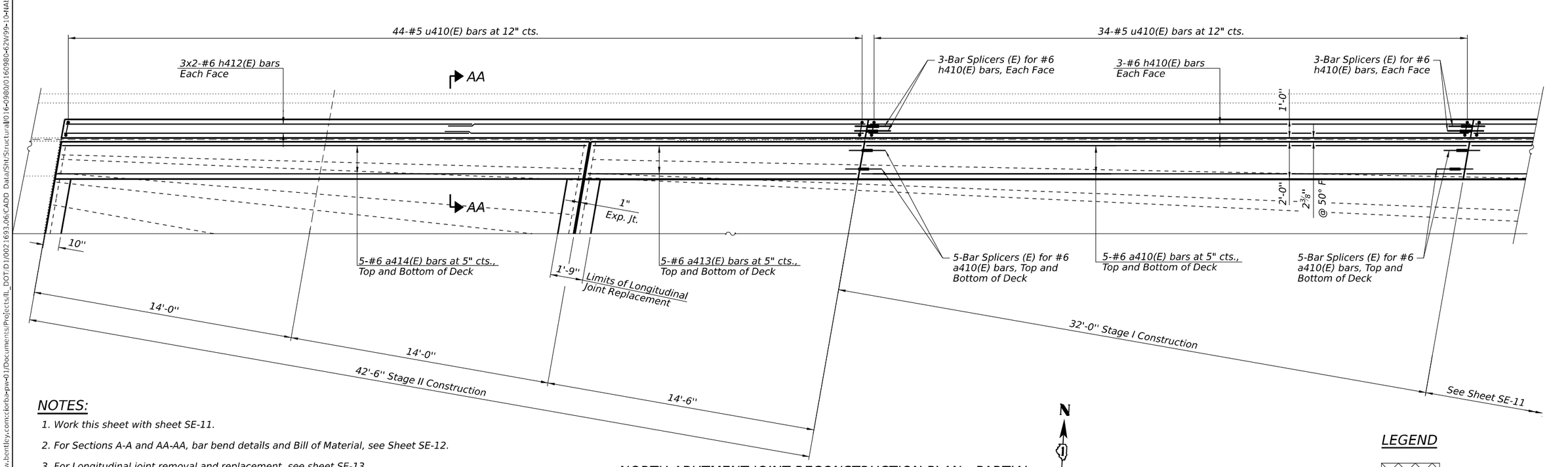

NORTH ABUTMENT JOINT RECONSTRUCTION PLAN - PARTIAL

NOTES:

1. Work this sheet with sheet SE-11.
2. For Sections A-A and AA-AA, bar bend details and Bill of Material, see Sheet SE-12.
3. For Longitudinal joint removal and replacement, see sheet SE-13.
4. Bars noted thus 3x2-#6 etc. indicates 3 lines of #6 bars with 2 lengths per line.

LEGEND

Concrete Removal

CiorbaGroup
8725 W. Higgins Rd, Ste 600, Chicago, IL 60631
P 773.775.4009 | www.ciorba.com

USER NAME =	DESIGNED - SIK	REVISED -
	CHECKED - BWS	REVISED -
PLOT SCALE =	DRAWN - ETK, SIK	REVISED -
PLOT DATE =	CHECKED - BWS	REVISED -

STATE OF ILLINOIS
DEPARTMENT OF TRANSPORTATION

NORTH ABUTMENT JOINT REMOVAL AND RECONSTRUCTION (SHEET 1 OF 3)
STRUCTURE NO. 016–0980

SHEET SE-10 OF SE-20 SHEETS

F.A.I. RTE.	SECTION	COUNTY	TOTAL SHEETS	SHEET NO.
290	(0404-316-HB) BR24	COOK	276	177
		CONTRACT NO. 62W99		
	ILLINOIS	FED. AID PROJECT		

MODEL: sMODELNAMES
FILE NAME: pw:\\ciorba-pw.bentley.com:ciorba-pw-01\Documents\Projects\IL_DOT.D1\00021693.06\CADD Data\Sht\Structural\016-0980\016098C-62W99-10-NAbutJoint1.dgn
4/30/2026 6:58:38 PM

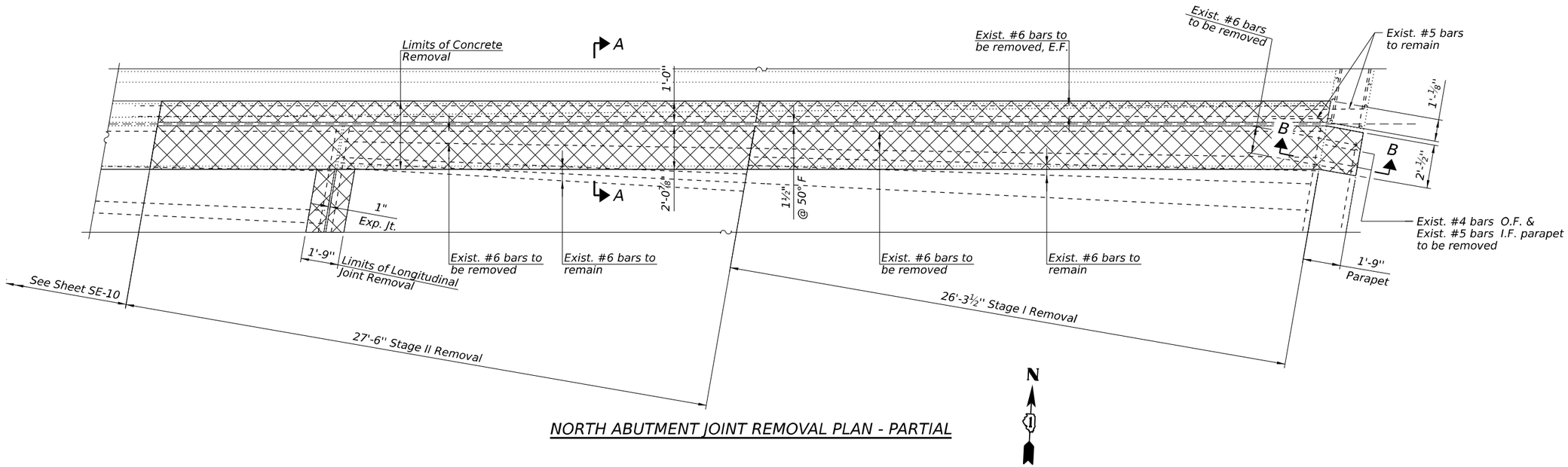

NORTH ABUTMENT JOINT REMOVAL PLAN - PARTIAL

MIN. BAR LAP

#6 = 5'-3" (Deck)
#6 = 2'-4" (Hatchblock)

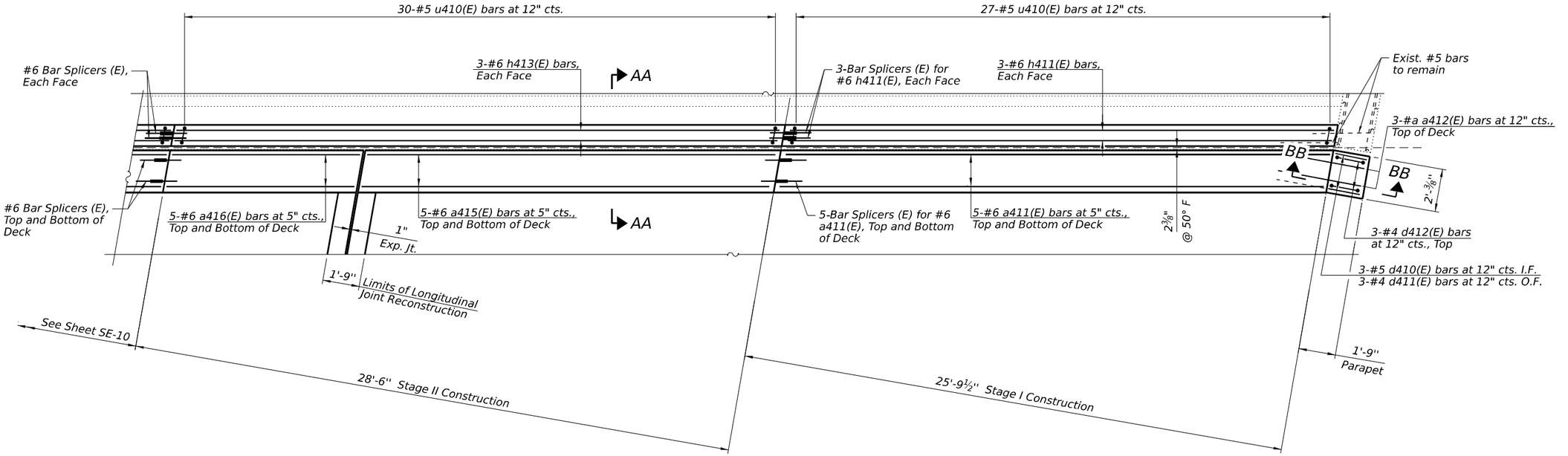

NOTES:

1. Work this sheet with sheet SE-11.
2. For Sections A-A, B-B, AA-AA, and BB-BB, bar bend details and Bill of Material, see Sheet SE-12.
3. For Longitudinal joint removal and replacement, see sheet SE-13.

NORTH ABUTMENT JOINT RECONSTRUCTION PLAN - PARTIAL

N

LEGEND

Concrete Removal

CiorbaGroup
8725 W. Higgins Rd, Ste 600, Chicago, IL 60631
P 773.775.4009 | www.ciorba.com

USER NAME =	DESIGNED - SIK	REVISED -
	CHECKED - BWS	REVISED -
PLOT SCALE =	DRAWN - ETK, SIK	REVISED -
PLOT DATE =	CHECKED - BWS	REVISED -

STATE OF ILLINOIS
DEPARTMENT OF TRANSPORTATION

NORTH ABUTMENT JOINT REMOVAL AND RECONSTRUCTION (SHEET 2 OF 3)
STRUCTURE NO. 016–0980

SHEET SE-11 OF SE-20 SHEETS

F.A.I. RTE.	SECTION	COUNTY	TOTAL SHEETS	SHEET NO.
290	(0404-316-HB) BR24	COOK	276	178
		CONTRACT NO. 62W99		
	ILLINOIS	FED. AID PROJECT		

MODEL: sMODELNAMES
FILE NAME: pw:\\ciorba-pw.bentley.com:ciorba-pw-01\Documents\Projects\IL_DOT.D1\0021693.06\CADD Data\Sht\Structural\016-0980\016980-62W99-11-NAbutJoint2.dgn
4/30/2026 6:58:48 PM

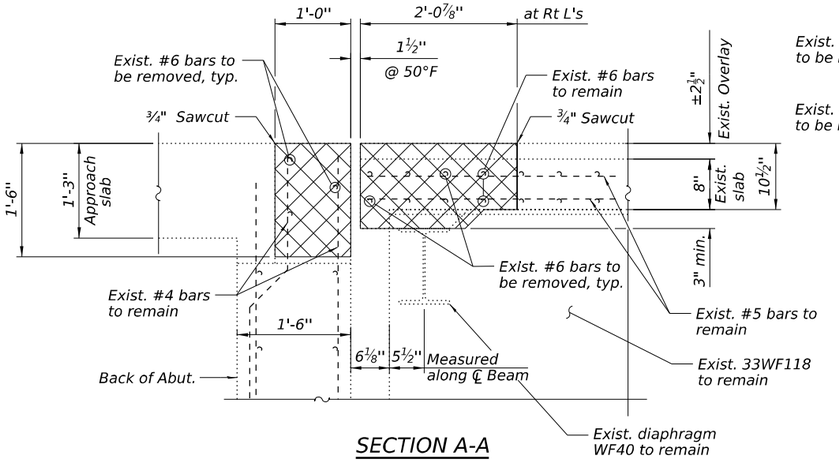

SECTION A-A

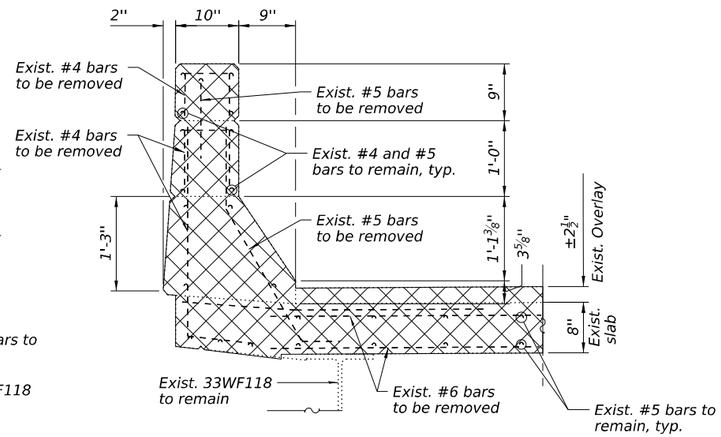

SECTION B-B

NOTES:

1. *Existing reinforcement bars extending into the removal area shall be cleaned, straightened and incorporated into the new construction. Any reinforcement bars that are damaged during concrete removal shall be replaced with approved bar splicer or anchorage system. Cost included with Concrete Removal.*
2. *Removal of exist. expansion joint will not be paid for seperately. Cost included with Concrete Removal.*
3. *For preformed joint strip details, see sheet SE-14.*
4. *For bar splicer assembly details, see sheet SE-20.*

BILL OF MATERIAL

Bar	No.	Size	Length	Shape
a410(E)	10	#6	32'-2"	
a411(E)	10	#6	27'-9"	
a412(E)	3	#6	4'-0"	
a413(E)	10	#6	14'-4"	
a414(E)	10	#6	28'-0"	
a415(E)	10	#6	19'-4"	
a416(E)	10	#6	8'-10"	
d410(E)	3	#5	4'-4"	
d411(E)	3	#4	4'-6"	
d412(E)	3	#4	2'-1"	
h410(E)	6	#6	32'-2"	
h411(E)	6	#6	25'-10"	
h412(E)	12	#6	22'-7"	
h413(E)	6	#6	28'-7"	
u410(E)	135	#5	2'-7"	
Concrete Removal		Cu Yd	18.2	
Concrete Superstructure		Cu Yd	17.7	
Protective Coat		Sq Yd	45	
Reinforcement Bars, Epoxy Coated		Pound	3,560	

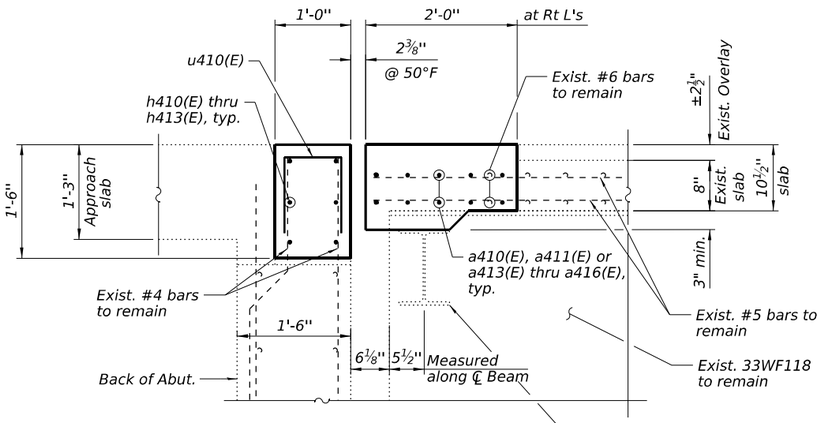

SECTION AA-AA

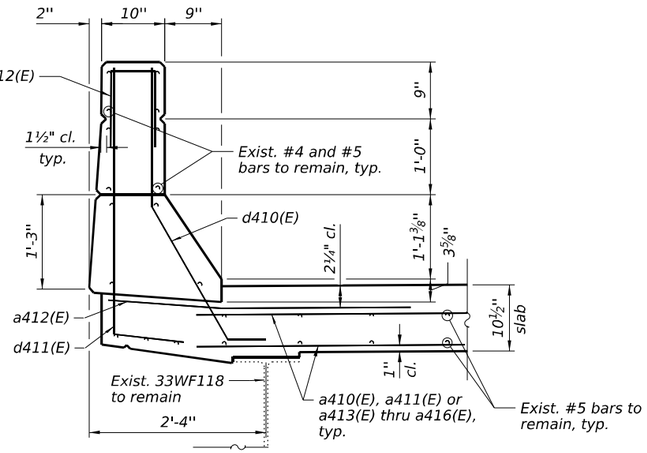

SECTION BB-BB

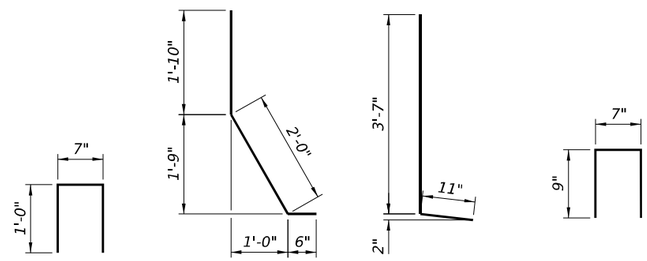

BAR u410(E) | BAR d410(E) | BAR d411(E) | BAR d412(E)

LEGEND

Concrete Removal

CiorbaGroup
8725 W. Higgins Rd, Ste 600, Chicago, IL 60631
P 773.775.4009 | www.ciorba.com

USER NAME =	DESIGNED - SIK	REVISED -
	CHECKED - BWS	REVISED -
PLOT SCALE =	DRAWN - ETK, SIK	REVISED -
PLOT DATE =	CHECKED - BWS	REVISED -

STATE OF ILLINOIS
DEPARTMENT OF TRANSPORTATION

NORTH ABUTMENT JOINT REMOVAL AND RECONSTRUCTION (SHEET 3 OF 3)
STRUCTURE NO. 016–0980
SHEET SE-12 OF SE-20 SHEETS

F.A.I. RTE.	SECTION	COUNTY	TOTAL SHEETS	SHEET NO.
290	(0404-316-HB) BR24	COOK	276	179
		CONTRACT NO. 62W99		
	ILLINOIS	FED. AID PROJECT		

MODEL: sMODELNAMES
FILE NAME: pw://ciorba-pw.bentley.com:ciorba-pw-01/Documents/Projects/IL_DOT/D1/0021693.06/CADD Data/Shr/Structural/016-0980/0160980-62W99-NAbutJtJoint3.dgn
4/30/2026 6:58:59 PM

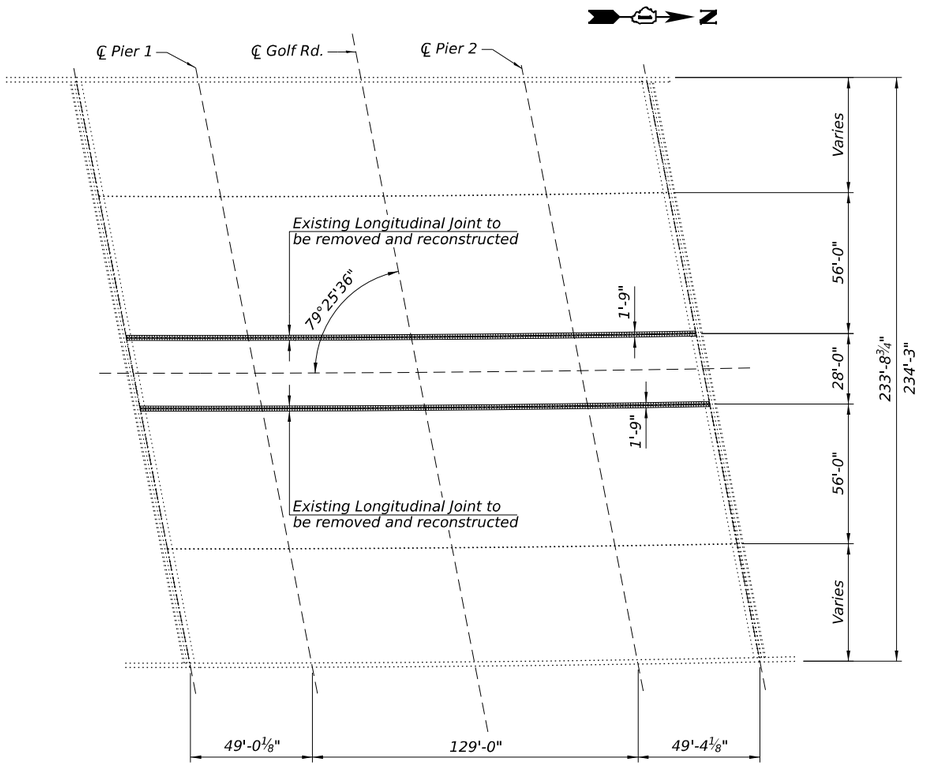

DECK PLAN

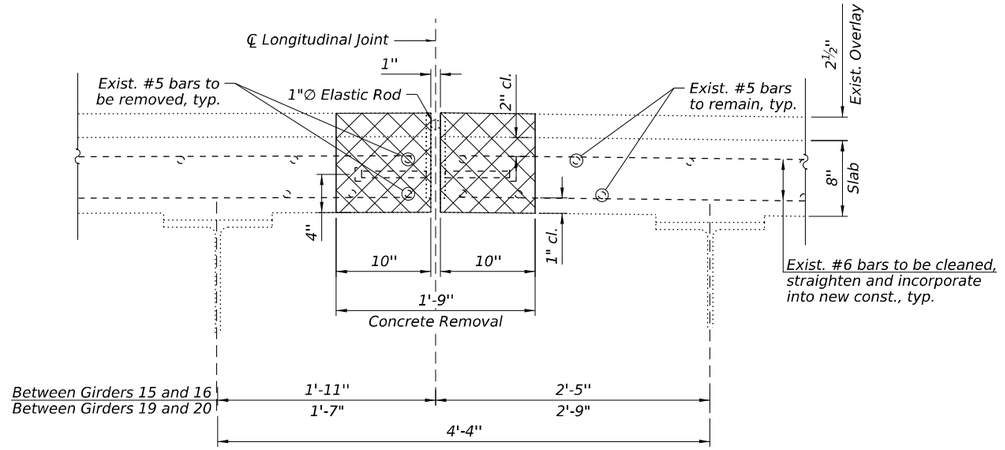

LONGITUDINAL JOINT REMOVAL

MIN. BAR LAP

#5 = 3'-10"

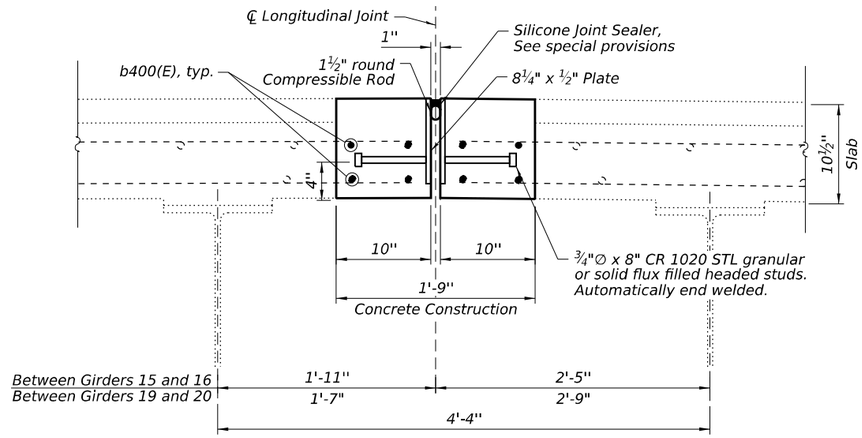

LONGITUDINAL JOINT REPLACEMENT

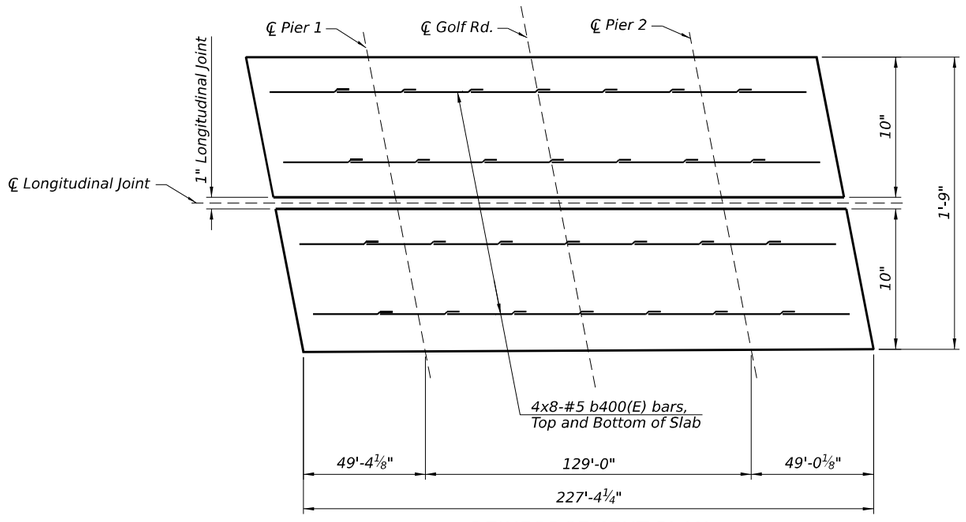

REINFORCEMENT PLAN

(2 Locations)

NOTES:

1. Cost of removing steel plates, studs, 1" elastic rod shall be included in Concrete Removal.
2. Cost of new steel plates, studs shall be included in Concrete Superstructure.

BILL OF MATERIAL

(Includes 2 longitudinal joints)

Bar	No.	Size	Length	Shape
b400(E)	128	#5	31'-9"	———
Concrete Removal			Cu Yd	24.6
Concrete Superstructure			Cu Yd	24.6
Protective Coat			Sq Yd	85
Reinforcement Bars, Epoxy Coated			Pound	4,240
Silicone Joint Sealer, 1"			Foot	456

LEGEND

Concrete Removal

CiorbaGroup
8725 W. Higgins Rd, Ste 600, Chicago, IL 60631
P 773.775.4009 | www.ciorba.com

USER NAME =	DESIGNED - SIK	REVISED -
	CHECKED - BWS	REVISED -
PLOT SCALE =	DRAWN - GUG	REVISED -
PLOT DATE =	CHECKED - BWS	REVISED -

STATE OF ILLINOIS
DEPARTMENT OF TRANSPORTATION

LONGITUDINAL JOINT REMOVAL AND RECONSTRUCTION
STRUCTURE NO. 016–0980

SHEET SE-13 OF SE-20 SHEETS

F.A.I. RTE.	SECTION	COUNTY	TOTAL SHEETS	SHEET NO.
290	(0404-316-HB) BR24	COOK	276	180
		CONTRACT NO. 62W99		
	ILLINOIS	FED. AID PROJECT		

MODEL: SMODELNAMES
FILE NAME: pw://ciorba-pw.bentley.com:ciorba-pw01/Documents/Projects/IL_DOT/D1/0021693.06/CADD Data/Str/Structural/016-0980/0160980-62W99-13-LongitudinalJoint.dgn
4/30/2026 6:59:11 PM

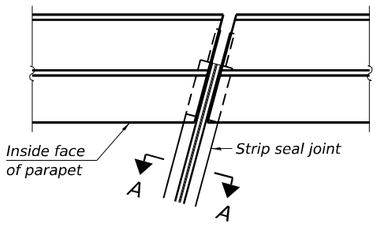

FOR SKEWS ≤ 30°

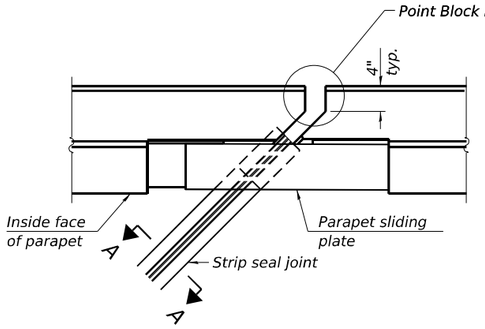

FOR SKEWS > 30°

PLAN AT PARAPET

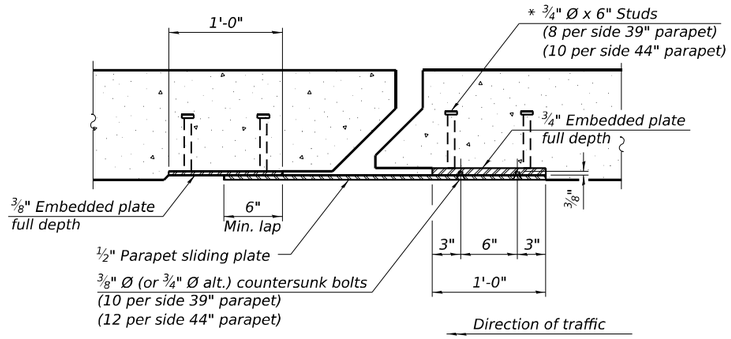

SECTION B-B

(¾" Ø countersunk bolts extending into concrete shall have hex nuts tack welded to the back of the embedded plates with end caps provided.)

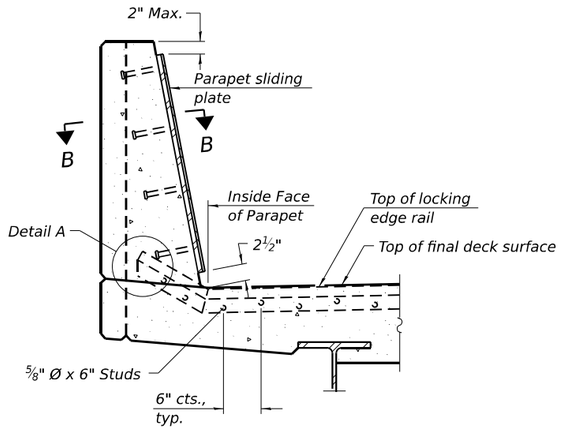

SECTION AT PARAPET

(Skews > 30° shown. Skews ≤ 30° similar except as shown in plan view.)

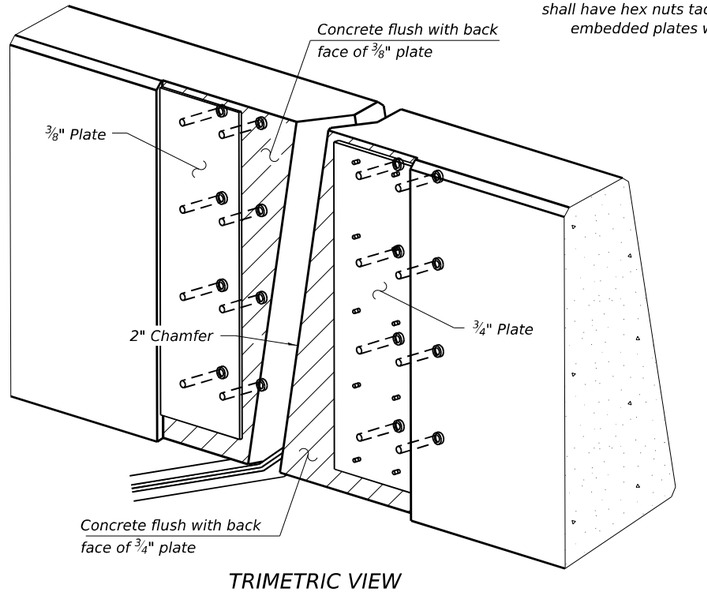

TRIMETRIC VIEW

(Showing embedded plates only)

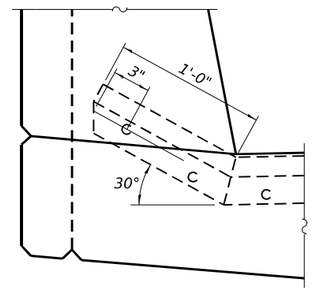

DETAIL A

(Kick-up at parapet locations shown. See sheet of for kick-up at curb locations.)

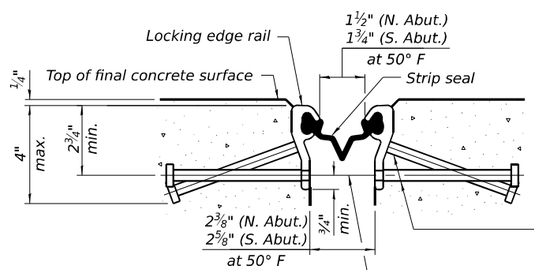

SHOWING ROLLED RAIL JOINT

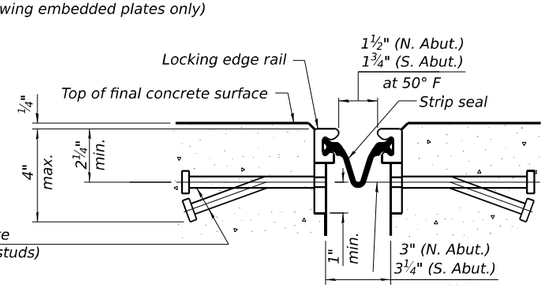

SHOWING WELDED RAIL JOINT

* ⅝" Ø x 6" studs @ 6" cts. (alternate angled/bent studs with horizontal studs)

⅜" Ø threaded rods in 7/16" Ø holes at 4'-0"± cts. for holding the proper joint opening based on the temperature during the deck pour. Place to miss studs. All rods shall be burned, or sawed off flush with the plates after concrete is set.

SECTION A-A

* Granular or solid flux filled headed studs conforming to Article 1006.32 of the Std. Specs., automatically end welded.

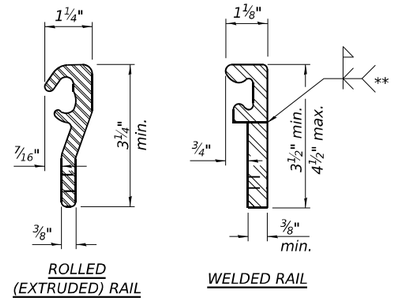

LOCKING EDGE RAILS

** Back gouge not required if complete joint penetration is verified by mock-up.

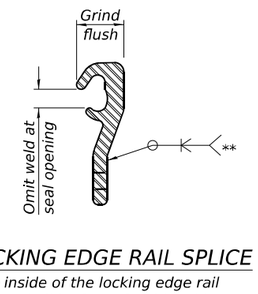

LOCKING EDGE RAIL SPLICE

The inside of the locking edge rail groove shall be free of weld residue. Rolled rail shown, welded rail similar.

Notes:

The strip seal shall be made continuous and shall have a minimum thickness of ¼". The configuration of the strip seal shall match the configuration of the locking edge rails. Open or "webbed" strip seal gland configurations are not permitted. The gland shall be sized for a maximum rated movement of 4 inches.

The locking edge rails depicted are configured for typical applications and are conceptual only. The actual configuration of the locking edge rails and matching strip seal may vary from manufacturer to manufacturer provided they fit the application and meet the minimum anchorage shown. Flanged edge rails, however, will not be allowed. Locking edge rails may exceed the 4½" maximum depth provided the anchorage system is revised according to the manufacturer's recommendation.

The manufacturer's recommended installation methods shall be followed.

All steel components shall be galvanized after fabrication according to Article 520.03 of the Standard Specifications.

The Maximum space between locking edge rail segments shall be 3/16" and sealed with a suitable sealant; however, any rail joint within 10' measured perpendicular to the face of the curb or parapet shall be welded as shown in the locking edge rail splice detail.

Cost of parapet sliding plates, embedded plates, and anchorage studs included with Preformed Joint Strip Seal.

39" constant slope barrier shown, 44" constant slope barrier similar as noted.

The concrete opening below the strip seal will vary based on the locking edge rail chosen by the Contractor. Deck and parapet lengths shown elsewhere in the plans are dimensioned to the concrete opening, not the joint opening, and are based on the rolled locking edge rail. If the Contractor elects to use a different locking edge rail, dimensional adjustments may be required. One exception to this would be the strip seal joint at the end of the precast bridge approach slab. For these cases the pavement connector length shall be adjusted, not the length of the bridge approach slab.

BILL OF MATERIAL

Item	Unit	Total
Preformed Joint Strip Seal	Foot	263

EJ-SS

CiorbaGroup
8725 W. Higgins Rd, Ste 600, Chicago, IL 60631
P 773.775.4009 | www.ciorba.com

USER NAME =		DESIGNED -	SIK	REVISED -	
		CHECKED -	BWS	REVISED -	
PLOT SCALE =		DRAWN -	GUG	REVISED -	
PLOT DATE =		CHECKED -	BWS	REVISED -	

STATE OF ILLINOIS
DEPARTMENT OF TRANSPORTATION

PREFORMED JOINT STRIP SEAL
STRUCTURE NO. 016–0980

SHEET SE-14 OF SE-20 SHEETS

F.A.I. RTE.	SECTION	COUNTY	TOTAL SHEETS	SHEET NO.
290	(0404-316-HB) BR24	COOK	276	181
		CONTRACT NO. 62W99		
	ILLINOIS	FED. AID PROJECT		

MODEL: SMODELNAMES
FILE NAME: pw://ciorba-pw.bentley.com:ciorba-pw01/Documents/Projects/IL_DOT/D1/002169.06/CADD Data/Sht/Structural/0160980/016098062W99-14-PrefJoint.dgn

4/30/2026 6:59:21 PM

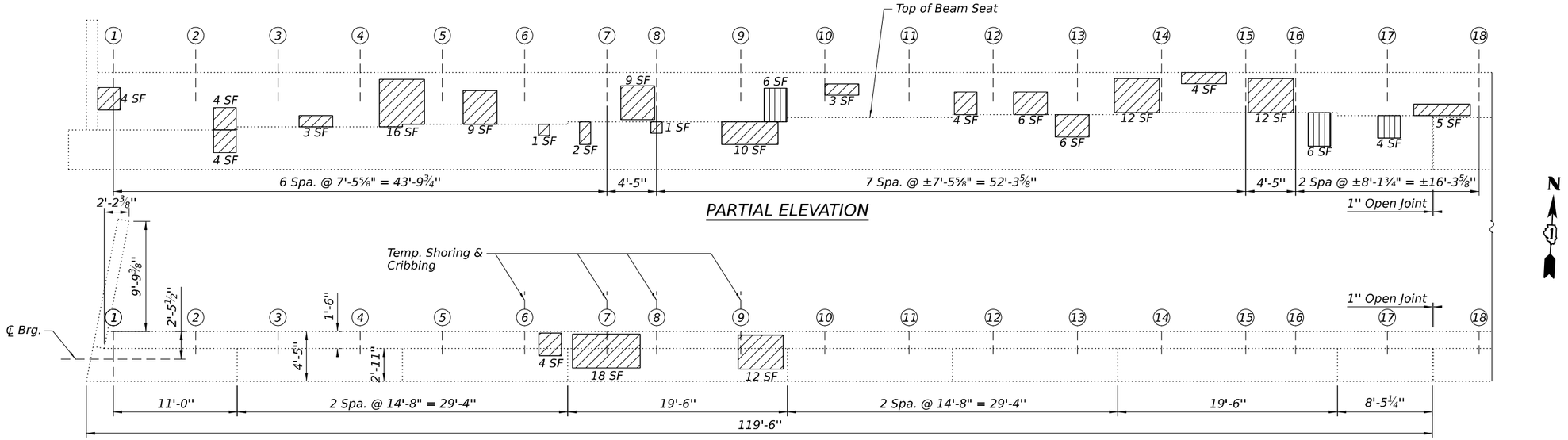

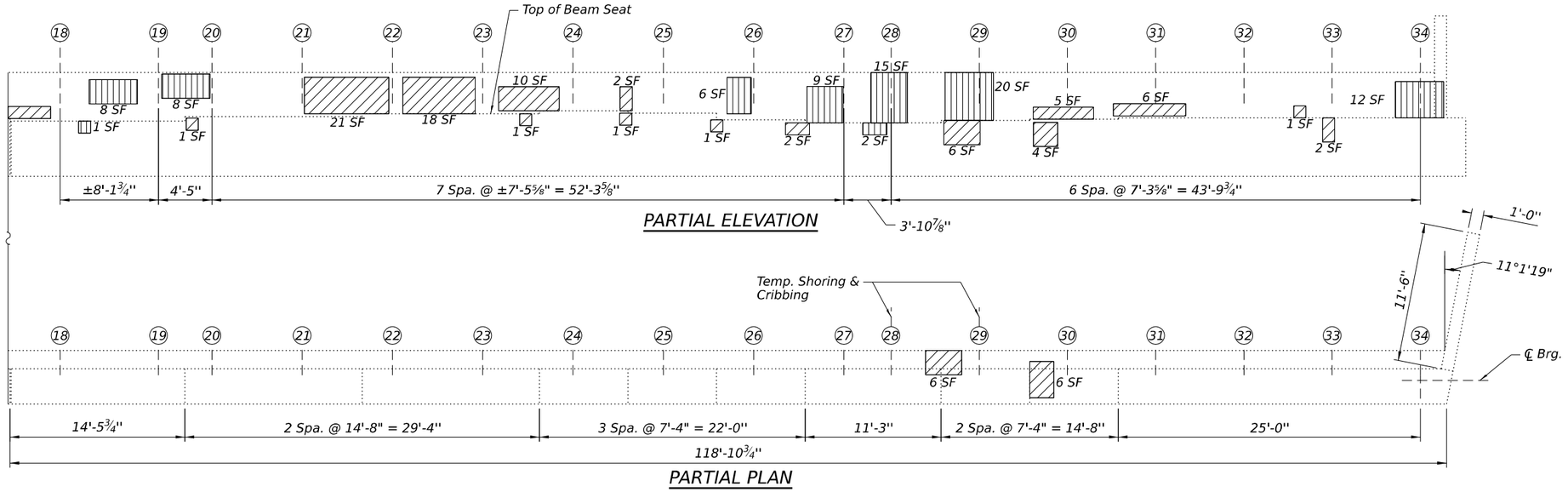

NOTES:

1. *Quantities and limits shown are estimated for bidding purposes only. The actual areas to be repaired, and the type(s) of repairs to be used, will be determined by the Engineer in the field at the time of construction.*
2. *Temporary shoring and cribbing shall be installed prior to the start of the structural repair of concrete and shall be removed after completing the structural repair of concrete.*
3. *Reactions provided are for the maximum girder spacing and length within the span indicated. Contractor shall verify loading at each shoring location Cost included in pay item "Temporary Shoring and Cribbing".*
4. *Concrete Sealer shall be applied to the abutment seat and the bottom 2 feet of the abutment backwall.*

SUMMARY OF REACTIONS		
		North Abut.
R DL	(k)	27.6
R LL	(k)	41.6
R IM	(k)	12.0
R Total	(k)	81.2

BILL OF MATERIAL

Item	Unit	Quantity
Concrete Sealer	Sq Ft	1,173
Structural Repair Of Concrete (Depth Equal To Or Less Than 5 Inches)	Sq Ft	242
Structural Repair Of Concrete (Depth Greater Than 5 Inches)	Sq Ft	97
Temporary Shoring and Cribbing	Each	6

LEGEND:

Structural Repair of Concrete (Depth Equal To Or Less Than 5 Inches)

Structural Repair of Concrete (Depth Greater Than 5 Inches)

CiorbaGroup
8725 W. Higgins Rd, Ste 600, Chicago, IL 60631
P 773.775.4009 | www.ciorba.com

USER NAME =	DESIGNED - SIK	REVISED -
	CHECKED - BWS	REVISED -
PLOT SCALE =	DRAWN - GUG	REVISED -
PLOT DATE =	CHECKED - BWS	REVISED -

STATE OF ILLINOIS
DEPARTMENT OF TRANSPORTATION

NORTH ABUTMENT REPAIRS
STRUCTURE NO. 016–0980
SHEET SE-15 OF SE-20 SHEETS

F.A.I. RTE.	SECTION	COUNTY	TOTAL SHEETS	SHEET NO.
290	(0404-316-HB) BR24	COOK	276	182
		CONTRACT NO. 62W99		
		ILLINOIS	FED. AID PROJECT	

MODEL: SMODELNAMES
FILE NAME: pw://ciorba-pw.bentley.com:ciorba-pw-01/Documents/Projects/IL_DOT/D1/0021693.06/CADD Data/Sht/Structural/016-0980/0160980-62W99-15-NAbutRep.dgn
4/30/2026 6:59:32 PM

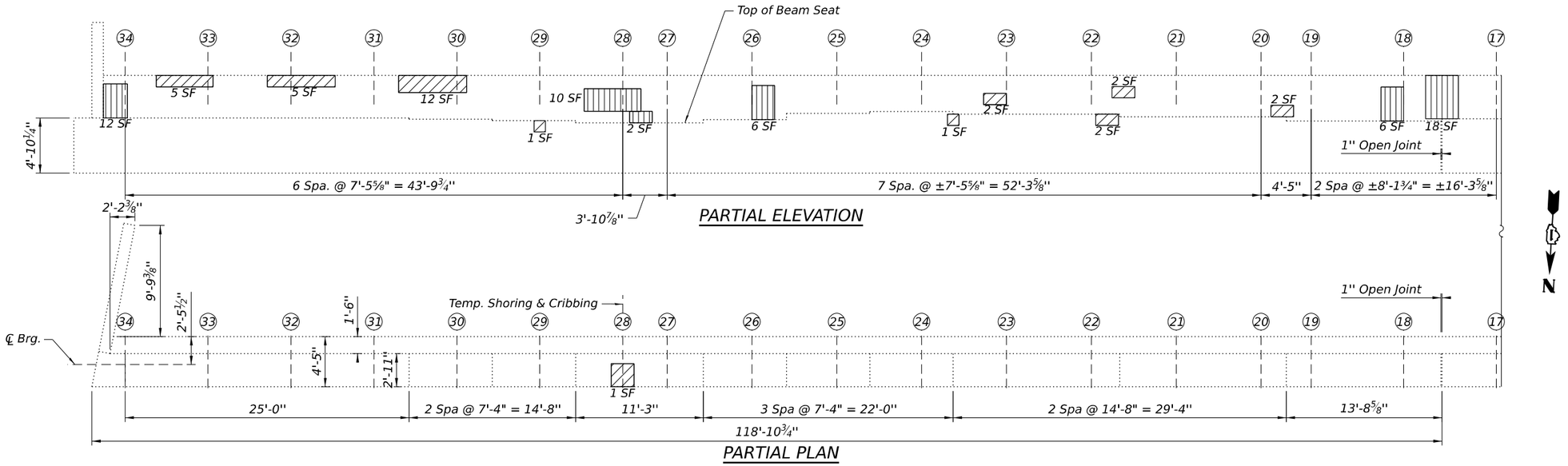

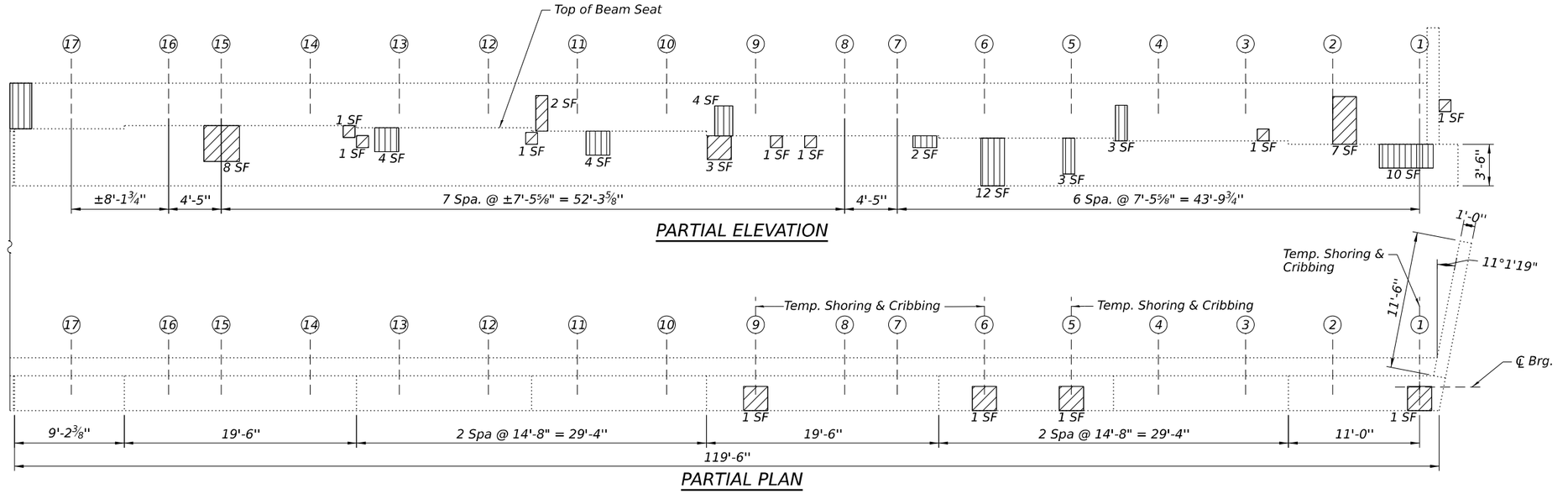

NOTES:

1. *Quantities and limits shown are estimated for bidding purposes only. The actual areas to be repaired, and the type(s) of repairs to be used, will be determined by the Engineer in the field at the time of construction.*
2. *Temporary shoring and cribbing shall be installed prior to the start of the structural repair of concrete and shall be removed after completing the structural repair of concrete.*
3. *Reactions provided are for the maximum girder spacing and length within the span indicated. Contractor shall verify loading at each shoring location Cost included in pay item "Temporary Shoring and Cribbing".*
4. *Concrete Sealer shall be applied to the abutment seat and the bottom 2 feet of the abutment backwall.*

SUMMARY OF REACTIONS		
		South Abut.
R DL	(k)	27.6
R LL	(k)	41.6
R IM	(k)	12.0
R Total	(k)	81.2

BILL OF MATERIAL

Item	Unit	Quantity
Concrete Sealer	Sq Ft	1,173
Structural Repair Of Concrete (Depth Equal To Or Less Than 5 Inches)	Sq Ft	64
Structural Repair Of Concrete (Depth Greater Than 5 Inches)	Sq Ft	96
Temporary Shoring And Cribbing	Each	5

LEGEND:

Structural Repair of Concrete (Depth Equal To Or Less Than 5 Inches)

Structural Repair of Concrete (Depth Greater Than 5 Inches)

CiorbaGroup
8725 W. Higgins Rd, Ste 600, Chicago, IL 60631
P 773.775.4009 | www.ciorba.com

USER NAME =		DESIGNED -	SIK	REVISED -	
		CHECKED -	BWS	REVISED -	
PLOT SCALE =		DRAWN -	GUG	REVISED -	
PLOT DATE =		CHECKED -	BWS	REVISED -	

STATE OF ILLINOIS
DEPARTMENT OF TRANSPORTATION

SOUTH ABUTMENT REPAIRS
STRUCTURE NO. 016–0980
SHEET SE-16 OF SE-20 SHEETS

F.A.I. RTE.	SECTION	COUNTY	TOTAL SHEETS	SHEET NO.
290	(0404-316-HB) BR24	COOK	276	183
		CONTRACT NO. 62W99		
	ILLINOIS	FED. AID PROJECT		

MODEL: SMODELNAMES
FILE NAME: pw://ciorba-pw.bentley.com:ciorba-pw-01/Documents/Projects/IL_DOT/D1/002.1693.06/CADD Data/Sht/Structural/016-0980/016098062W99-16-SAbutRep.dgn
4/30/2026 6:59:43 PM

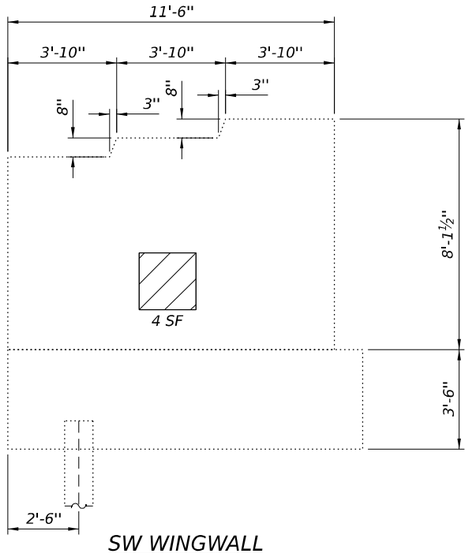

SW WINGWALL

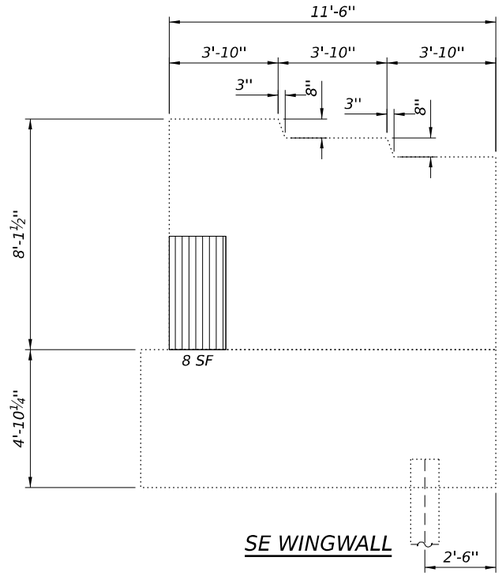

SE WINGWALL

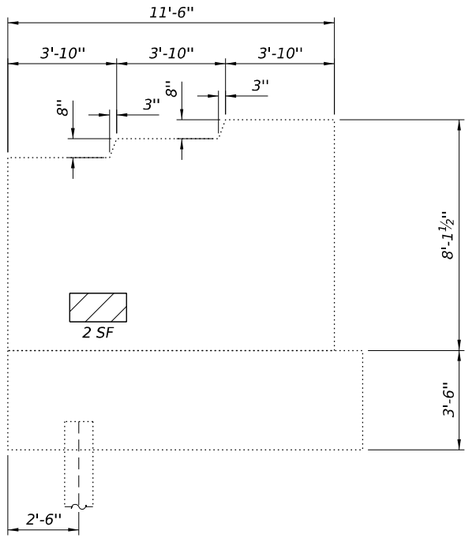

NW WINGWALL

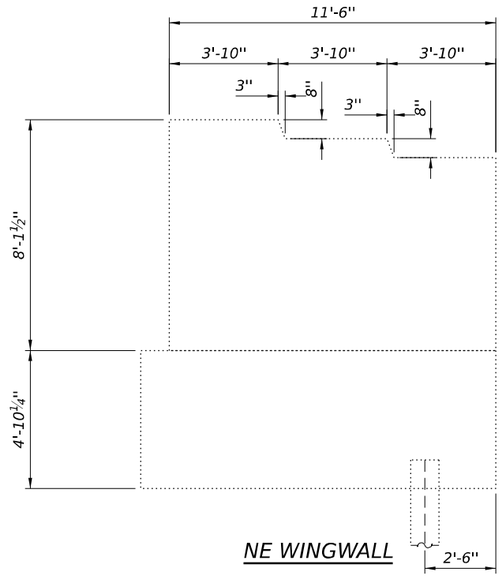

NE WINGWALL

NOTES:

1. *Quantities and limits shown are estimated for bidding purposes only. The actual areas to be repaired, and the type(s) of repairs to be used, will be determined by the Engineer in the field at the time of construction.*

LEGEND:

Structural Repair of Concrete (Depth Equal To Or Less Than 5 Inches)

Structural Repair of Concrete (Depth Greater Than 5 Inches)

BILL OF MATERIAL

Item	Unit	Quantity
Structural Repair Of Concrete (Depth Equal To Or Less Than 5 Inches)	Sq Ft	6
Structural Repair Of Concrete (Depth Greater Than 5 Inches)	Sq Ft	8

CiorbaGroup
8725 W. Higgins Rd, Ste 600, Chicago, IL 60631
P 773.775.4009 | www.ciorba.com

USER NAME =	DESIGNED - SIK	REVISED -
	CHECKED - BWS	REVISED -
PLOT SCALE =	DRAWN - GUG	REVISED -
PLOT DATE =	CHECKED - BWS	REVISED -

STATE OF ILLINOIS
DEPARTMENT OF TRANSPORTATION

WINGWALLS REPAIRS
STRUCTURE NO. 016–0980

SHEET SE-17 OF SE-20 SHEETS

F.A.I. RTE.	SECTION	COUNTY	TOTAL SHEETS	SHEET NO.
290	(0404-316-HB) BR24	COOK	276	184
		CONTRACT NO. 62W99		
	ILLINOIS	FED. AID PROJECT		

MODEL: SMODELNAMES
FILE NAME: pw:\\ciorba-pw.bentley.com:ciorba-pw-01\Documents\Projects\IL_DOT\D1\0021693.06\CADD Data\Sht\Structural\016-0980\016098062W99-17-WingwallRep.dgn
4/30/2026 6:59:54 PM

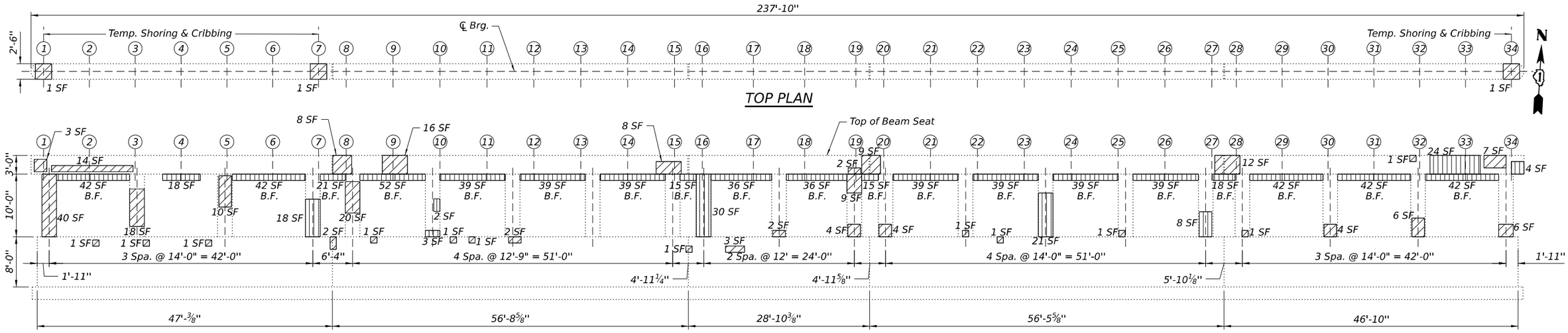

ELEVATION
(Looking North)

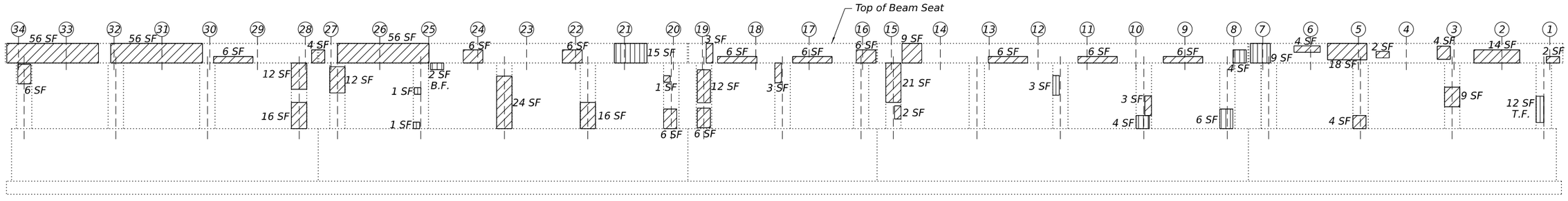

ELEVATION
(Looking South)

NOTES:

1. Quantities and limits shown are estimated for bidding purposes only. The actual areas to be repaired, and the type(s) of repairs to be used, will be determined by the Engineer in the field at the time of construction.
2. Temporary shoring and cribbing shall be installed prior to the start of the structural repair of concrete and shall be removed after completing the structural repair of concrete.
3. Reactions provided are for the maximum girder spacing and length within the span indicated. Contractor shall verify loading at each shoring location Cost included in pay item "Temporary Shoring and Cribbing".
4. Concrete Sealer is to be applied to the top of the pier caps.

SUMMARY OF REACTIONS		
		South Pier
R DL	(k)	27.6
R LL	(k)	41.6
R IM	(k)	12.0
R Total	(k)	81.2

BILL OF MATERIAL

Item	Unit	Quantity
Concrete Sealer	Sq Ft	595
Structural Repair Of Concrete (Depth Equal To Or Less Than 5 Inches)	Sq Ft	659
Structural Repair Of Concrete (Depth Greater Than 5 Inches)	Sq Ft	861
Temporary Shoring And Cribbing	Each	3

LEGEND:

Structural Repair of Concrete (Depth Equal To Or Less Than 5 Inches)

Structural Repair of Concrete (Depth Greater Than 5 Inches)

B.F. Bottom Face

T.F. Top Face

CiorbaGroup
8725 W. Higgins Rd, Ste 600, Chicago, IL 60631
P 773.775.4009 | www.ciorba.com

USER NAME =		DESIGNED -	SIK	REVISED -	
		CHECKED -	BWS	REVISED -	
PLOT SCALE =		DRAWN -	GUG	REVISED -	
PLOT DATE =		CHECKED -	BWS	REVISED -	

STATE OF ILLINOIS
DEPARTMENT OF TRANSPORTATION

SOUTH PIER REPAIRS
STRUCTURE NO. 016–0980
SHEET SE-18 OF SE-20 SHEETS

F.A.I. RTE.	SECTION	COUNTY	TOTAL SHEETS	SHEET NO.
290	(0404-316-HB) BR24	COOK	276	185
		CONTRACT NO. 62W99		
	ILLINOIS	FED. AID PROJECT		

MODEL: sMODELNAMES
FILE NAME: pw://ciorba-pw.bentley.com:ciorba-pw-01/Documents/Projects/IL_DOT/D1/0021693.06/CADD Data/Sht/Structural/016-0980/0160980-62W99-18-SPierRep.dgn
4/30/2026 7:00:05 PM

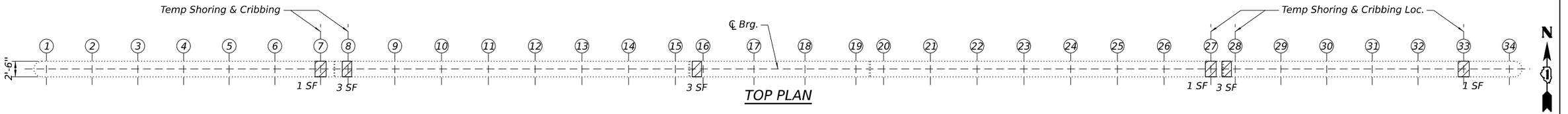

TOP PLAN

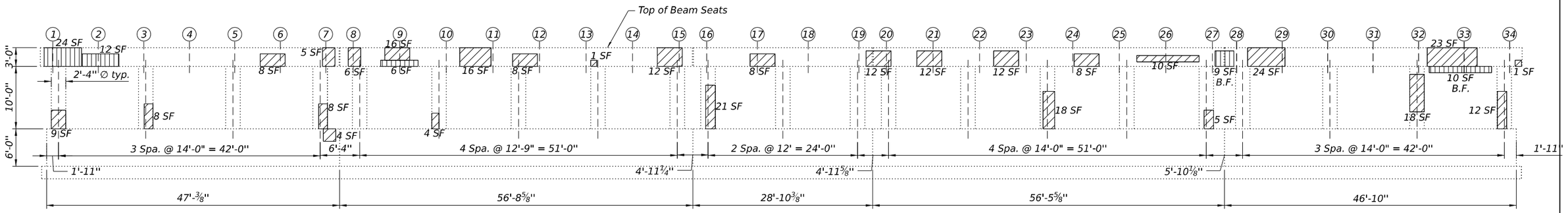

ELEVATION
(Looking North)

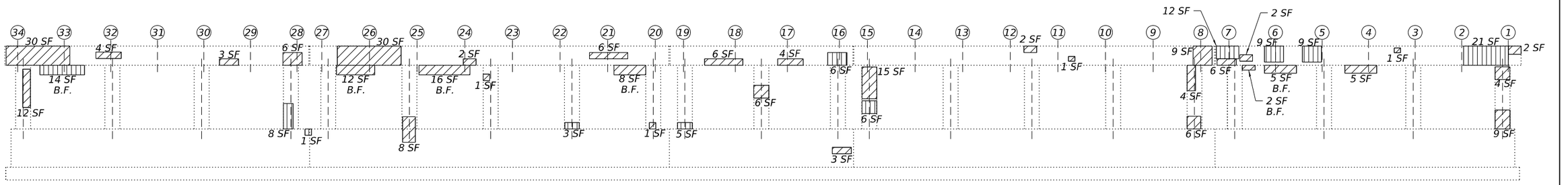

ELEVATION
(Looking South)

NOTES:

1. Quantities and limits shown are estimated for bidding purposes only. The actual areas to be repaired, and the type(s) of repairs to be used, will be determined by the Engineer in the field at the time of construction.
2. Temporary shoring and cribbing shall be installed prior to the start of the structural repair of concrete and shall be removed after completing the structural repair of concrete.
3. Reactions provided are for the maximum girder spacing and length within the span indicated. Contractor shall verify loading at each shoring location Cost included in pay item "Temporary Shoring and Cribbing".
4. Concrete Sealer is to be applied to the top of the pier caps.

SUMMARY OF REACTIONS		
		North Pier
R DL	(k)	27.6
R LL	(k)	41.6
R IM	(k)	12.0
R Total	(k)	81.2

BILL OF MATERIAL

Item	Unit	Quantity
Concrete Sealer	Sq Ft	595
Structural Repair Of Concrete (Depth Equal To Or Less Than 5 Inches)	Sq Ft	535
Structural Repair Of Concrete (Depth Greater Than 5 Inches)	Sq Ft	155
Temporary Shoring And Cribbing	Each	5

LEGEND:

Structural Repair of Concrete (Depth Equal To Or Less Than 5 Inches)

Structural Repair of Concrete (Depth Greater Than 5 Inches)

B.F. Bottom Face

CiorbaGroup
8725 W. Higgins Rd, Ste 600, Chicago, IL 60631
P 773.775.4009 | www.ciorba.com

USER NAME =	DESIGNED - SIK	REVISED -	
	CHECKED - BWS	REVISED -	
PLOT SCALE =	DRAWN - GUG	REVISED -	
PLOT DATE =	CHECKED - BWS	REVISED -	

STATE OF ILLINOIS
DEPARTMENT OF TRANSPORTATION

NORTH PIER REPAIRS
STRUCTURE NO. 016–0980
SHEET SE-19 OF SE-20 SHEETS

F.A.I. RTE.	SECTION	COUNTY	TOTAL SHEETS	SHEET NO.
290	(0404-316-HB) BR24	COOK	276	186
		CONTRACT NO. 62W99		
	ILLINOIS	FED. AID PROJECT		

MODEL: SMODELNAMES
FILE NAME: pw://ciorba-pw.bentley.com:ciorba-pw-01/Documents/Projects/IL_DOT/D1/0021693.06/CADD Data/Sht/Structural/016-0980/016980-62W99-19-NPierRep.dgn

4/30/2026 7:00:17 PM

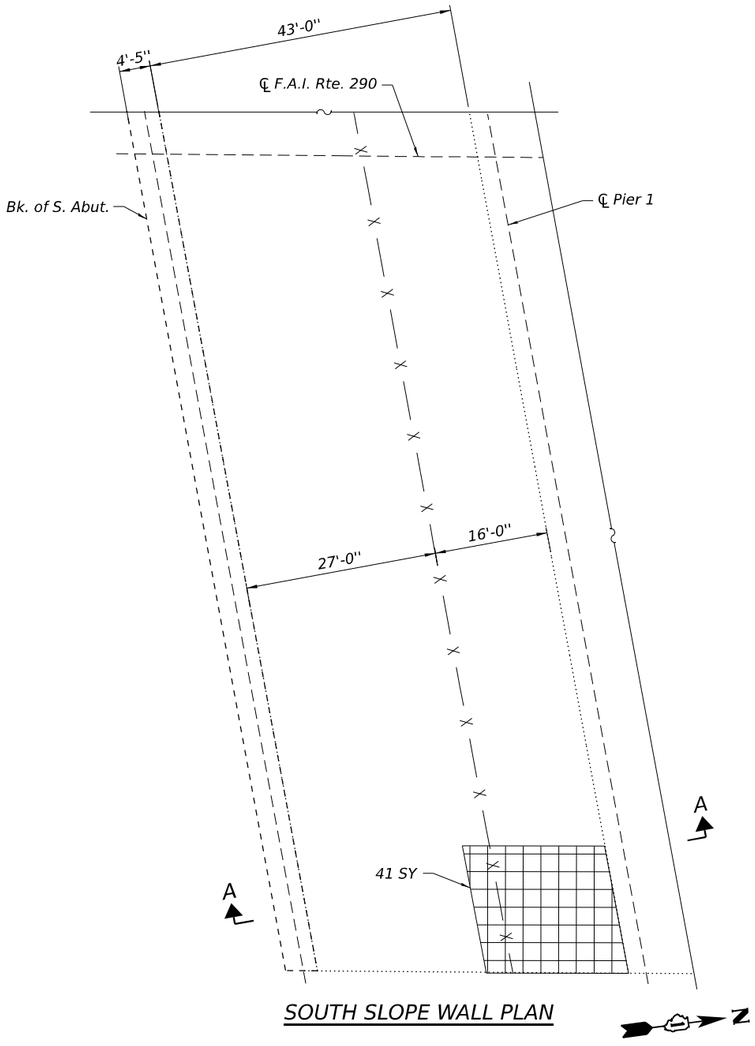

SOUTH SLOPE WALL PLAN

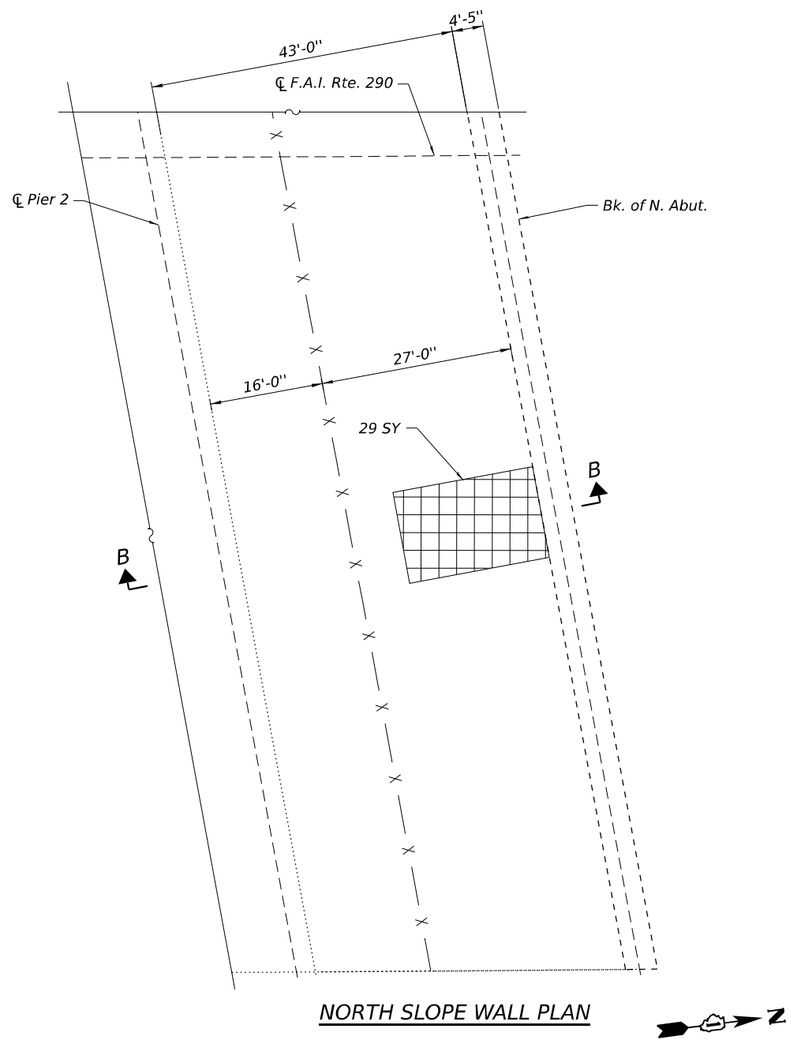

NORTH SLOPE WALL PLAN

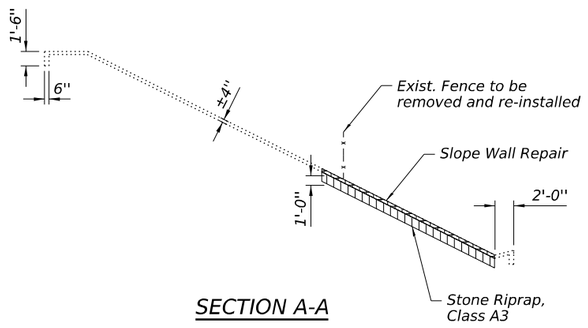

SECTION A-A

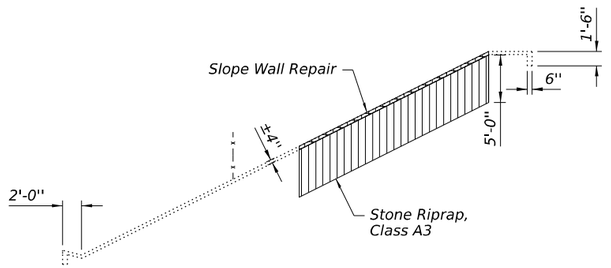

SECTION B-B

NOTES:

1. Quantities and limits shown are estimated for bidding purposes only. The actual areas to be repaired, and the type(s) of repairs to be used, will be determined by the Engineer in the field at the time of construction.
2. Existing Chain Link Fence shall be removed and re-installed in order to perform Slope Wall Repair. Cost Included with the cost of Slope Wall Repair.

BILL OF MATERIAL

Item	Unit	Quantity
Slope Wall Repair	Sq Yd	70
Debris Removal	Cu Yd	51
Stone Riprap, Class A3	Sq Yd	70

LEGEND:

— X — Exist. Fence

Slope Wall Repair

Stone Riprap, Class A3

CiorbaGroup
8725 W. Higgins Rd, Ste 600, Chicago, IL 60631
P 773.775.4009 | www.ciorba.com

USER NAME =	DESIGNED - SIK	REVISED -
	CHECKED - BWS	REVISED -
PLOT SCALE =	DRAWN - GUG	REVISED -
PLOT DATE =	CHECKED - BWS	REVISED -

STATE OF ILLINOIS
DEPARTMENT OF TRANSPORTATION

NORTH ABUTMENT REPAIRS
STRUCTURE NO. 016–0980
SHEET SE-19A OF SE-20 SHEETS

F.A.I. RTE.	SECTION	COUNTY	TOTAL SHEETS	SHEET NO.
290	(0404-316-HB) BR24	COOK	276	186A
		CONTRACT NO. 62W99		
	ILLINOIS	FED. AID PROJECT		

MODEL: sMODELNAMES
FILE NAME: pw:\\ciorba-pw.bentley.com:ciorba-pw-01\Documents\Projects\IL_DOT.D1\0021693.06\CADD Data\Sht\Structural\016-0980\016980-62W99-19A-SlopeWallRep.dgn
4/30/2026 7:00:27 PM

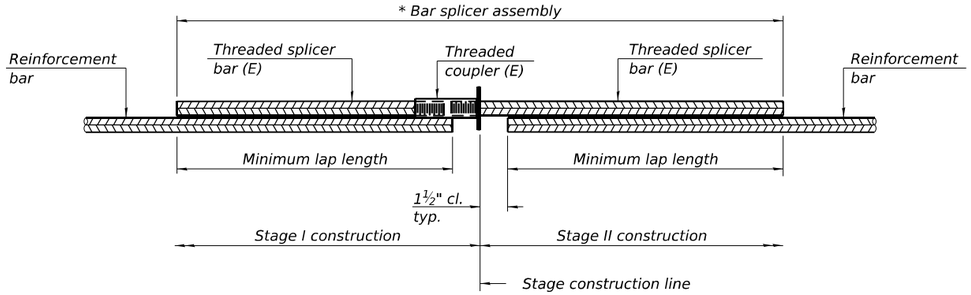

STANDARD BAR SPLICER ASSEMBLY PLAN

Only bar splicer assemblies as presented on the approved QPL list may be used.

Threaded splicer bar length = min. lap length + 1½" + thread length

** Epoxy not required on Bar Splicer Assembly components used in conjunction with black bars.*

Location	Bar size	No. assemblies required	Minimum lap length
North Abut. Jt. (Deck)	#6	30	5'-3"
North Abut. Jt. (Hatchblock)	#6	18	2'-4"
South Abut. Jt. (Deck)	#6	30	5'-3"
South Abut. Jt. (Hatchblock)	#6	18	2'-4"

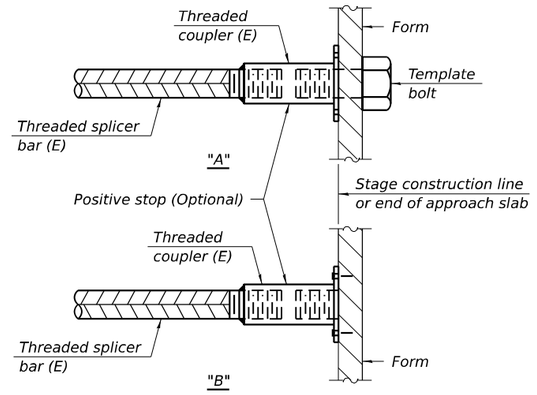

INSTALLATION AND SETTING METHODS

"A" : Set bar splicer assembly by means of a template bolt.
"B" : Set bar splicer assembly by nailing to wood forms or cementing to steel forms.
(E) : Indicates epoxy coating.

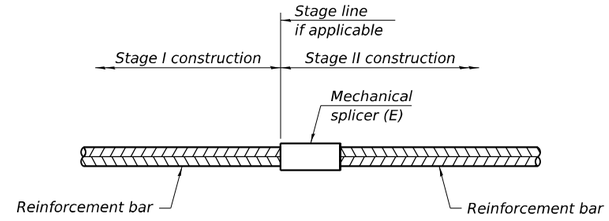

STANDARD MECHANICAL SPLICER

Location	Bar size	No. assemblies required

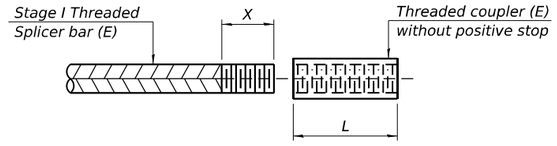

THREADING OF ASSEMBLIES

The threaded length "X" shall be no more than L/2. The bar should be tightened until 0-1 thread(s) is/are exposed.

Notes:

Splicer bars shall be deformed with threaded ends and have a minimum 60 ksi yield strength.

All reinforcement shall be lapped and tied to the splicer bars.

Bar splicer assemblies shall be epoxy coated according to the requirements for reinforcement bars. See Section 508 of the Standard Specifications.

See approved list of bar splicer assemblies and mechanical splicers for alternatives.

BSD-1 4-4-2025

CiorbaGroup
8725 W. Higgins Rd, Ste 600, Chicago, IL 60631
P 773.775.4009 | www.ciorba.com

USER NAME =	DESIGNED - SIK	REVISED -
	CHECKED - BWS	REVISED -
PLOT SCALE =	DRAWN - GUG	REVISED -
PLOT DATE =	CHECKED - BWS	REVISED -

STATE OF ILLINOIS
DEPARTMENT OF TRANSPORTATION

BAR SPLICER ASSEMBLY AND MECHANICAL SPLICER DETAILS
STRUCTURE NO. 016–0980
SHEET SE-20 OF SE-20 SHEETS

F.A.I. RTE.	SECTION	COUNTY	TOTAL SHEETS	SHEET NO.
290	(0404-316-HB) BR24	COOK	276	187
		CONTRACT NO. 62W99		
	ILLINOIS	FED. AID PROJECT		

MODEL: sMODELNAMES
FILE NAME: pw:/ciorba-pw.bentley.com:ciorba-pw-01/Documents/Projects/IL_DOT.DJ/0021693.06/CADD Data/Sht/Structural/016-0980/016980-62W99-20-BarSplicer.dgn
4/30/2026 7:00:37 PM

Existing Structure: S.N. 016-0977 was built in 1970 as a four span structure consisting of two 60" web welded plate girder spans and two P.P.C. concrete Beam approach spans carrying F.A.I. Route 290 over the Northwest Highway/I-90. Length of the bridge is 257'-91/4" End to End Deck and 49'-5" North and South Approach Span. Out to Out width of the bridge is 256'-01/4" at S. Abutment and 256'-23/8" at N. Abutment.

Traffic will be maintained utilizing staged construction.

No Salvage.

DESIGN SPECIFICATIONS

2002 AASHTO Standard Specifications For Highway Bridges, 17th Edition

LOADING HS 20-44

No future wearing surface allowed

DESIGN STRESSES

FIELD UNITS (NEW STRUCTURE)

f'c = 3,500 psi
f'c = 4,000 psi (Superstructure Concrete)
f'c = 3,500 psi (Substructure Concrete)
fy = 60,000 (Reinforcement)

FIELD UNITS (EXISTING STRUCTURE)

f'c = 3,000 psi (Superstructure and Substructure Concrete - Load Factor Design)
fs = 27,000 psi, M223, Grade 50 (Structural Steel)
fy = 60,000 (Reinforcement)

SCOPE OF WORK

1. *Remove and Replace existing permanent shielding.*
2. *Remove and Replace all longitudinal joints with full depth patching along the joints to remove and replace the steel under it.*
3. *Remove and Replace transverse expansion joints with strip seal in NB lanes only (Express and Local).*
4. *Power wash and clean the joint between median parapets.*
5. *Perform full depth patching in the approach spans.*
6. *Repair the existing patching where reflective pavement markings we removed with Polymer Concrete.*
7. *Reconstruct Southeast, Southwest, and Northwest pile caps.*
8. *Reconstruct the approach shoulder pavement as shown in plans.*
9. *Repair erosion within the vaulted abutments with CLSM and riprap as indicated in plans.*
10. *Replace existing vault doors with new hinged metal doors.*
11. *Repair spalled and delaminated areas on abutments, piers, and approach bents.*
12. *Clean all drainage scuppers and flush downspouts.*

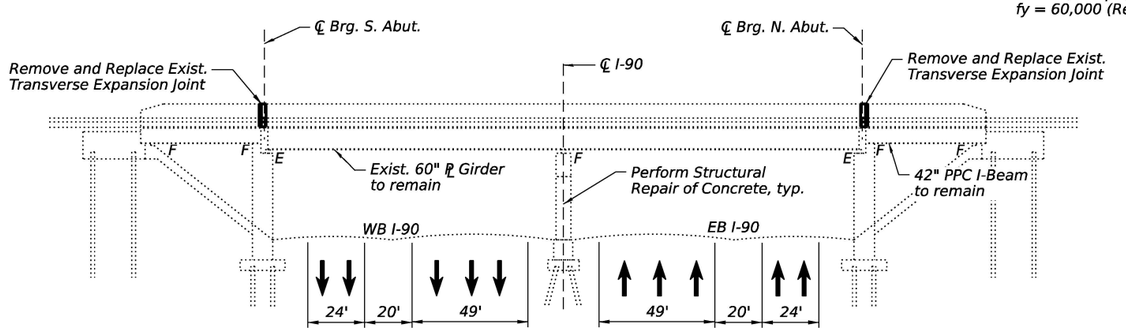

ELEVATION

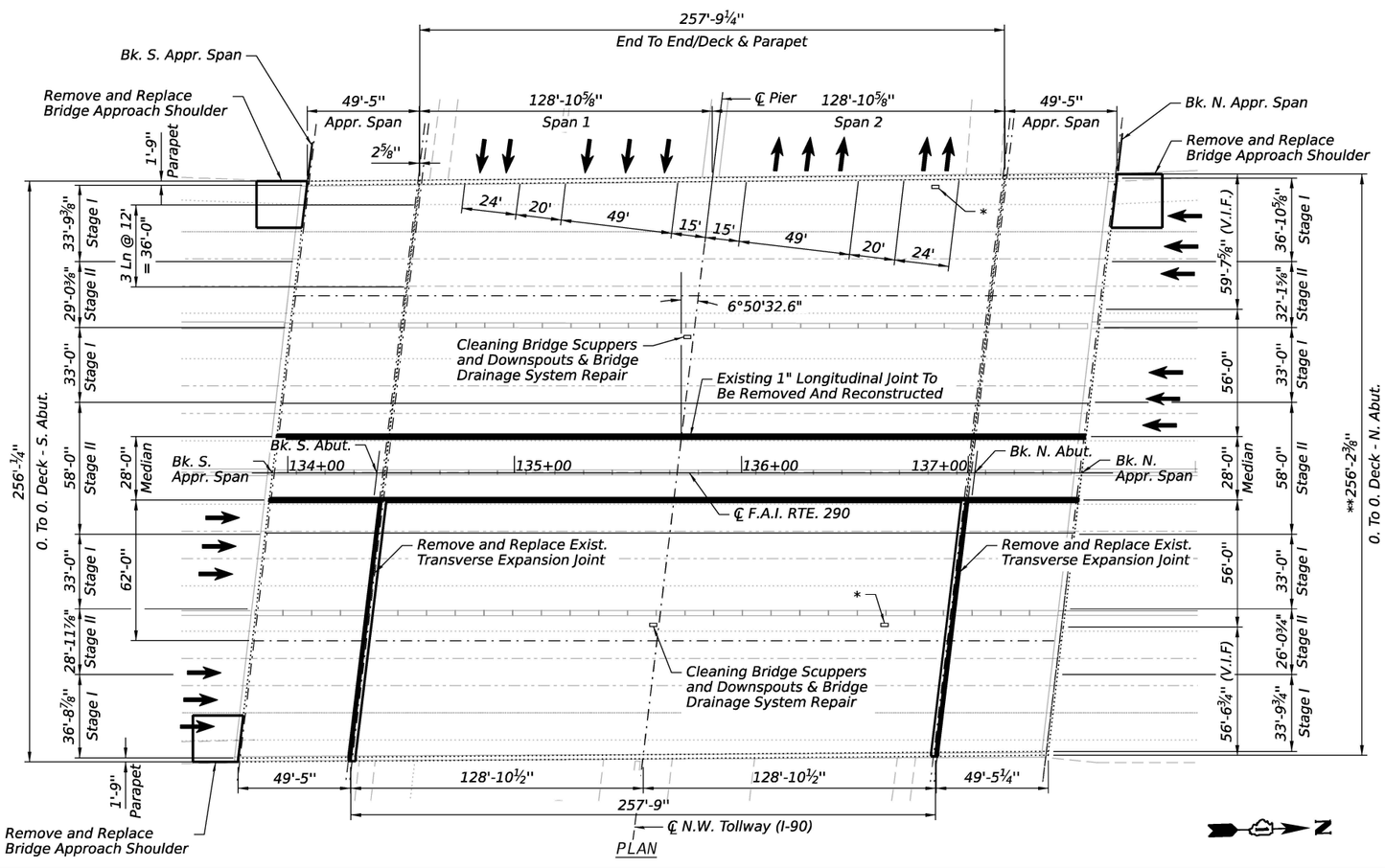

PLAN

* *Verify location of the drains in field. Cleaning Drainage System*

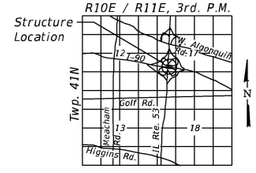

LOCATION SKETCH

STATE OF ILLINOIS
LICENSED STRUCTURAL ENGINEER
BRETT W. SAUTER
081-006844

DATE: 4/30/2026
SEAL EXPIRES: 11/30/2026

GENERAL PLAN AND ELEVATION
IL RTE. 53 OVER I-90
F.A.I. 290
SECTION (0404-316-HB) BR 24
COOK COUNTY
STA. 135+68.15
STRUCTURE NO. 016-0977

MODEL: $MODELNAME$
FILE NAME: pw://ciorba-pw.bentley.com:ciorba-pw-01/Documents/Projects/IL_DOT/D1/0021693.06/CADD Data/Sht/StructuralN016-0977/0160977-62W99-01-GPE.dgn

4/30/2026 7:29:00 PM

CiorbaGroup
8725 W. Higgins Rd, Ste 600, Chicago, IL 60631
P 773.775.4009 | www.ciorba.com

USER NAME =	DESIGNED - SIK	REVISED -
	CHECKED - BWS	REVISED -
PLOT SCALE =	DRAWN - ETK, SIK	REVISED -
PLOT DATE =	CHECKED - BWS	REVISED -

STATE OF ILLINOIS
DEPARTMENT OF TRANSPORTATION

STRUCTURE NO. 016–0977

SHEET SF-01 OF SF-24 SHEETS

F.A.I. RTE.	SECTION	COUNTY	TOTAL SHEETS	SHEET NO.
290	(0404-316-HB) BR24	COOK	276	188
		CONTRACT NO.	62W99	
	ILLINOIS	FED. AID PROJECT		

GENERAL NOTES

1. Plan dimensions and details relative to existing structure have been taken from existing plans and are subject to nominal construction variations. The Contractor shall field verify dimensions and details affecting new construction and make necessary approved adjustments prior to construction or ordering of materials. Such variations shall not be cause for additional compensation for a change in scope of the work, however, the Contractor will be paid for the quantity actually furnished at the unit price bid for the work.
2. Reinforcement bars designated (E) shall be epoxy coated.
3. Expansion joints shall be fabricated and installed according to Manufacturer's recommendations and as approved by the Engineer.
4. Expansion joints shall be fabricated to conform to the existing cross slopes of the bridge.
5. Prior to pouring the new concrete deck, all heavy or loose rust, loose mill scale, and other loose or potentially detrimental foreign material shall be removed from the surfaces in contact with concrete. Tightly adhered paint may remain unless otherwise noted. Removal shall be accomplished by methods that will not damage the steel and the cost will be included in the pay item covering removal of the existing concrete.
6. Existing reinforcement extended into the removal area shall be cleaned, straightened and incorporated into the new construction. Any reinforcement bars that are damaged during concrete removal operations shall be replaced using an approved bar splicer or anchorage system at the contractor's expense.
7. Joint openings shall be adjusted according to Article 520.04 of the Standard Specification when the deck is poured at an ambient temperature other than 50° F.
8. All Construction joints shall be bonded.
9. No field welding is permitted except as specified in the contract documents.
10. Stations called out on the plans are approximate. The Contractor shall field verify the stations during construction layout.
11. Protective Coat shall be applied to the top of reconstructed transverse joint areas, deck, front face and top face of the parapets.
12. The Contractor shall take the necessary precautions for the protection of passing vehicles, bicycles, and pedestrians from falling objects and/or materials until completion of work.
13. The Contractor shall exercise extreme caution during Concrete Removal to avoid damaging the steel beams and diaphragms to remain. Any damage to the existing steel beams and/or diaphragms to remain caused by the Contractor in the performance of his/her work shall be repaired by the Contractor, to the satisfaction of the Engineer, at no cost to the Department.
14. Concrete Sealer shall be applied to the designated areas of the abutments and piers.
15. Prior to the application of the Concrete Sealer, the Contractor shall clean all existing debris from the and pier seats. The method of debris removal shall not damage the existing concrete and shall be approved by the Engineer. The debris shall be disposed of according to Art 202.03 of the Std Specs. The cost of cleanings included in the cost of Concrete Sealer.
16. Areas of deck slab repairs shown are estimated. The Engineer shall show actual locations of deck slab repairs on as-built plans. See special provision "Deck Slab Repair" for additional requirements pertaining to deck slab repair.
17. The Contractor shall use extreme care during concrete removal as not to damage the PPC I-Beam in the approach spans.

INDEX OF SHEETS

SF-01 General Plan and Elevation
SF-02 General Notes, Index of Sheets, and Total Bill of Material
SF-03 Stage Construction
SF-04 Temporary Concrete Barrier
SF-05 Deck Repair Plan
SF-06 Parapet Repairs
SF-07 Drainage Repair Plan
SF-08 South Abutment Joint Removal and Reconstruction I
SF-09 South Abutment Joint Removal and Reconstruction II
SF-10 North Abutment Joint Removal and Reconstruction I
SF-11 North Abutment Joint Removal and Reconstruction II
SF-12 Longitudinal Joint Removal and Reconstruction
SF-13 Approach Shoulder Pavement Details
SF-14 Preformed Joint Strip Seal
SF-14A Pier Repairs
SF-15 South Abument Repairs
SF-16 North Abument Repairs
SF-17 South Abutment Wingwalls Repairs
SF-18 North Abutment Wingwalls Repairs
SF-19 South Approach Bent Repairs
SF-20 North Approach Bent Repairs
SF-21 PPC Diaphragms Repairs
SF-22 Access Door Installation
SF-23 Vaulted Abutment Erosion Repair
SF-24 Bar Splicer Assembly and Mechanical Splicer Details

TOTAL BILL OF MATERIAL

DESCRIPTION	UNIT	SUB	SUPER	TOTAL
Deck Slab Repair (Full Depth, Type I)	Sq Yd		1	1
Deck Slab Repair (Full Depth, Type II)	Sq Yd		43	43
Deck Slab Repair (Partial)	Sq Yd		2	2
Structural Repair Of Concrete (Depth Equal To Or Less Than 5 Inches)	Sq Ft	5,430	48	5,478
Structural Repair Of Concrete (Depth Greater Than 5 Inches)	Sq Ft	747	2	749
Stone Riprap, Class A2	Ton	9		9
Aggregate Subgrade Improvement 12"	Sq Yd	102		102
Pavement Connector (HMA) For Bridge Approach Slab	Sq Yd	105		105
Concrete Removal	Cu Yd		73.5	73.5
Protective Shield	Sq Yd		614	614
Concrete Structures	Cu Yd	4.5		4.5
Concrete Superstructure	Cu Yd		64.5	64.5
Protective Coat	Sq Yd		160	160
Reinforcement Bars, Epoxy Coated	Pound	900	9,840	10,740
Bar Splicers	Each		60	60
Preformed Joint Strip Seal	Foot		286	286
Bridge Approach Shoulder Removal	Sq Yd	153		153
Silicone Joint Sealer, 1"	Foot		714	714
Polymer Concrete	Cu Ft		1	1
Temporary Shoring And Cribbing	Each		15	15
Access Door	Each	4		4
Protective Shield (Permanent)	Sq Yd		1,183	1,183
Protective Shield (Permanent) Removal	Sq Ft		10,627	10,627
Bridge Drainage System Repair	Foot		45	45
Cleaning Drainage System	L Sum		0.6	0.6
Cleaning Bridge Scuppers And Downspouts	Each		4	4

CiorbaGroup
8725 W. Higgins Rd, Ste 600, Chicago, IL 60631
P 773.775.4009 | www.ciorba.com

USER NAME =	DESIGNED - SIK	REVISED -
	CHECKED - BWS	REVISED -
PLOT SCALE =	DRAWN - ETK, SIK	REVISED -
PLOT DATE =	CHECKED - BWS	REVISED -

STATE OF ILLINOIS
DEPARTMENT OF TRANSPORTATION

GENERAL NOTES, INDEX OF SHEETS AND TOTAL BILL OF MATERIAL
STRUCTURE NO. 016-0977
SHEET SF-02 OF SF-24 SHEETS

F.A.I. RTE.	SECTION	COUNTY	TOTAL SHEETS	SHEET NO.
290	(0404-316-HB) BR24	COOK	276	189
		CONTRACT NO. 62W99		
	ILLINOIS	FED. AID PROJECT		

MODEL: sMODELNAMES
FILE NAME: pw:/ciorba-pw.bentley.com:ciorba-pw-01/Documents/Projects/IL_DOT.DJ/0021693.06/CADD Data/Sht/Structural/016-0977/016097-62W99-02-GenNotes.dgn
4/30/2026 7:09:59 PM

* Measured At ℄ Brg. S. Abut.
** Measured At ℄ Brg. N. Abut.

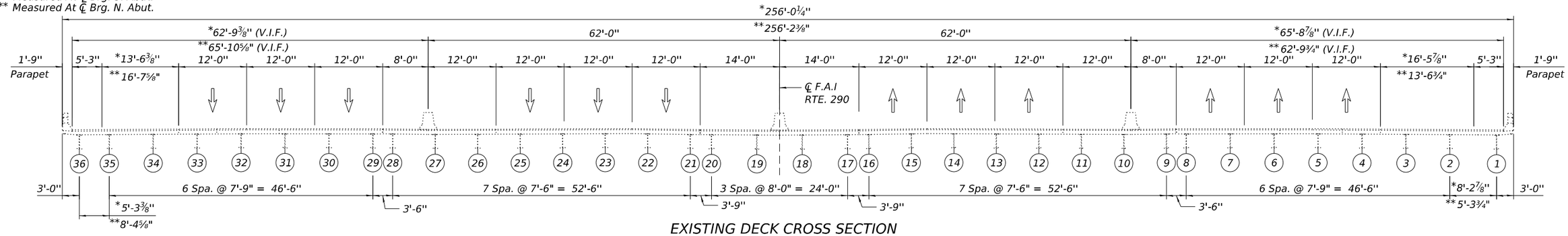

EXISTING DECK CROSS SECTION
(Looklng North)

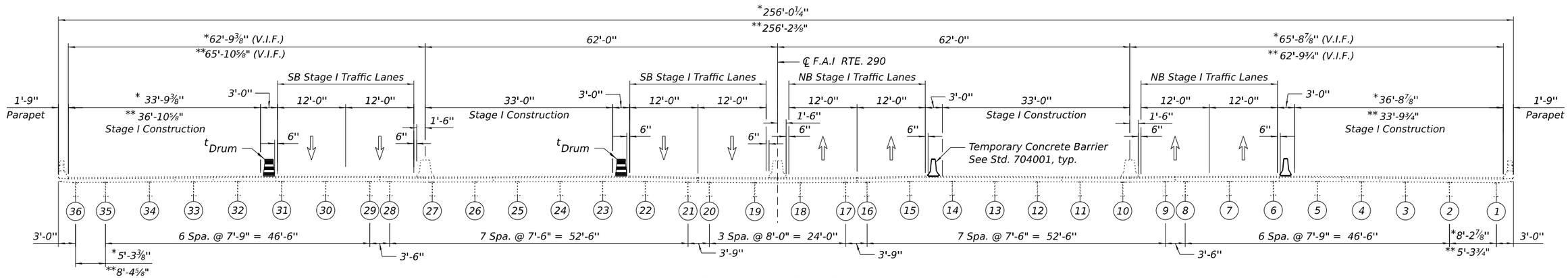

STAGE I CONSTRUCTION
(Looking North)

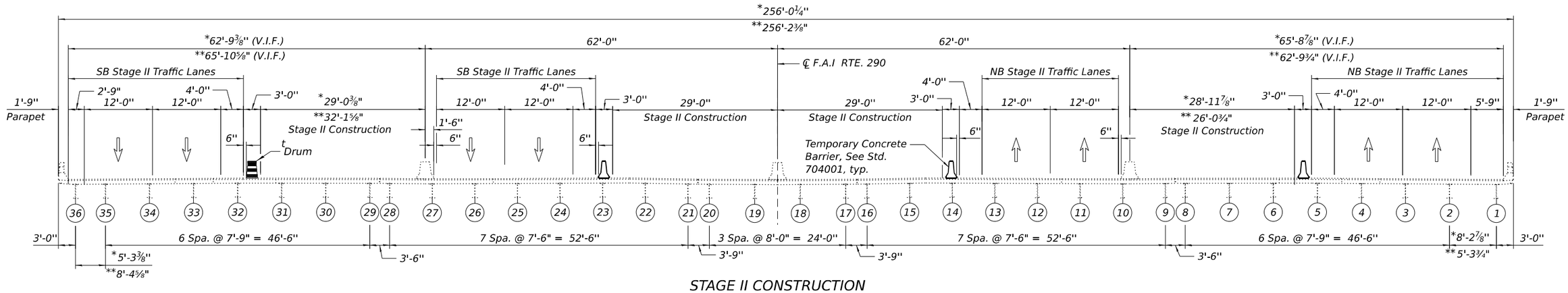

STAGE II CONSTRUCTION
(Looking North)

tDrum with steady burn monodirectional light/direction indicator barricade with steady burn monodirectional light (per Standard 701401-13)

MODEL: sMODELNAMES
FILE NAME: pw://ciorba-pw.bentley.com:ciorba-pw-01/Documents/Projects/IL_DOT/D1/0021693.06/CADD Data/Sht/Structural/016-0977/016097-62W99-03-StageConstr1.dgn
4/30/2026 7:10:11 PM

CiorbaGroup
8725 W. Higgins Rd, Ste 600, Chicago, IL 60631
P 773.775.4009 | www.ciorba.com

USER NAME =	DESIGNED - SIK	REVISED -	
	CHECKED - BWS	REVISED -	
PLOT SCALE =	DRAWN - ETK, SIK	REVISED -	
PLOT DATE =	CHECKED - BWS	REVISED -	

STATE OF ILLINOIS
DEPARTMENT OF TRANSPORTATION

STAGE CONSTRUCTION
STRUCTURE NO. 016–0977
SHEET SF-03 OF SF-24 SHEETS

F.A.I. RTE.	SECTION	COUNTY	TOTAL SHEETS	SHEET NO.
290	(0404-316-HB) BR24	COOK	276	190
		CONTRACT NO. 62W99		
	ILLINOIS FED. AID PROJECT			

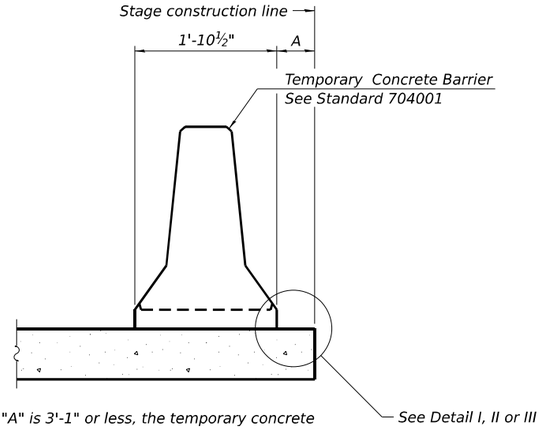

When "A" is 3'-1" or less, the temporary concrete barrier shall be restrained to the new slab according to Detail I, II or III. No restraint is required when "A" is greater than 3'-1".

NEW SLAB OR NEW DECK BEAM

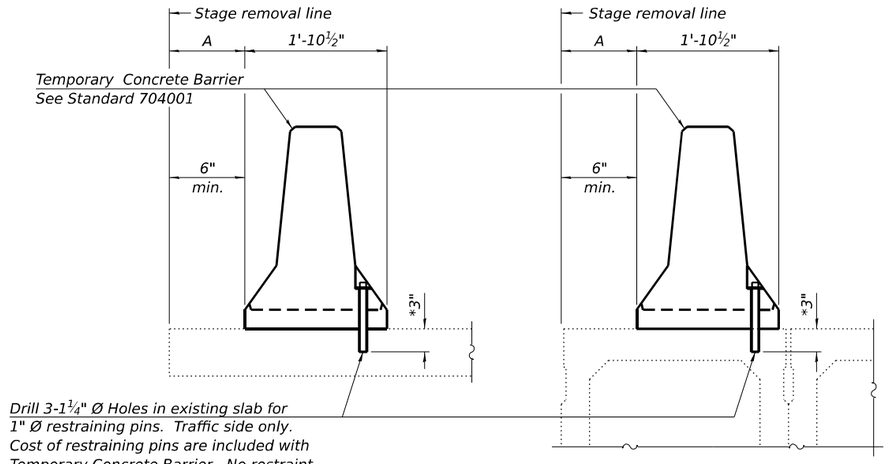

Drill 3-1¼" Ø Holes in existing slab for 1" Ø restraining pins. Traffic side only. Cost of restraining pins are included with Temporary Concrete Barrier. No restraint is required when "A" is greater than 3'-1".

EXISTING SLAB

* When hot-mix asphalt wearing surface is present, embedment shall be 3" plus the wearing surface depth.

EXISTING DECK BEAM

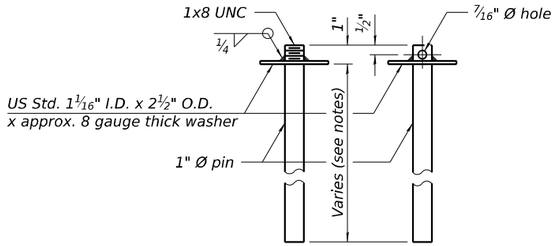

RESTRAINING PIN

SECTIONS THRU SLAB OR DECK BEAM

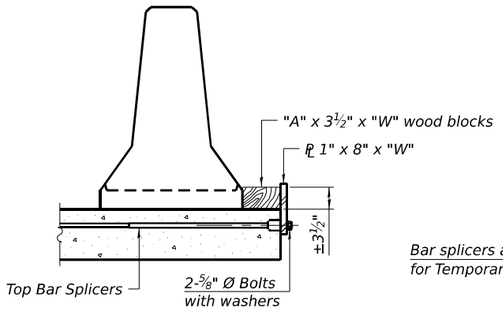

DETAIL I

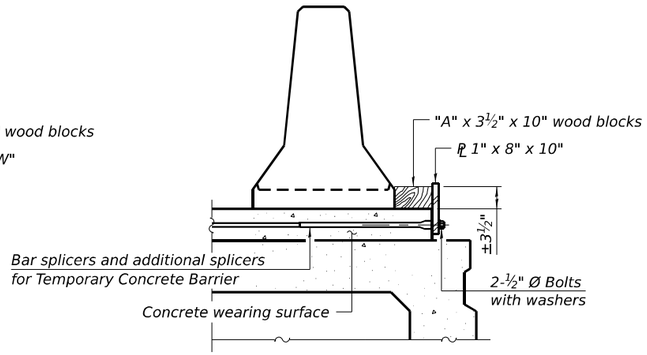

DETAIL II

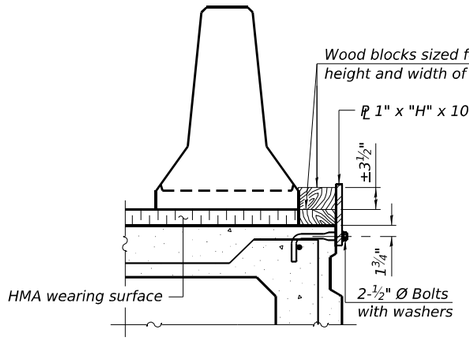

DETAIL III

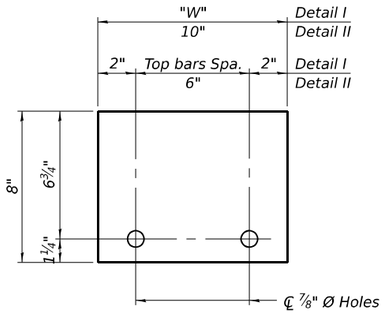

STEEL RETAINER ℄ 1" x 8" x "W"
(Detail I and II)

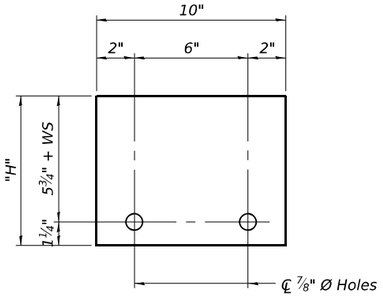

STEEL RETAINER ℄ 1" x "H" x 10"
(Detail III)

BAR SPLICER FOR #4 BAR - DETAIL III

RAILING CRITERIA

NCHRP 350 Test Level	3
Railing Weight (plf)	440

R-27

5-15-2023

Notes:

Cost of retainer assembly is included with Temporary Concrete Barrier.

A retainer assembly shall be located at the approximate ℄ of each temporary concrete barrier.

The retainer plate shall not be removed until the concrete on the adjacent stage is ready to be poured. For Detail III applications the retainer plate shall not be removed until just prior to placing the adjacent beam.

When the 'A' dimension is less than 1½", the wood block shall be omitted and the barrier shall be placed in direct contact with the steel retainer plate. For deck beam applications the minimum required 'A' distance is 6" to accommodate the shear key clamping device.

Detail I - Installation for a new bridge deck or bridge slab.

Detail II - Installation for a new deck beam with an initial concrete wearing surface. Additional bar splicers shall be provided at 6'-0" centers and paired with the bar splicers of the concrete wearing surface reinforcement to accommodate the installation of the retainer assemblies. The cost of the additional bar splicers is included with the concrete wearing surface.

Detail III - Installation for a new deck beam with no initial wearing surface or with an initial hot-mix asphalt (HMA) wearing surface present. The deck beam directly beneath the temporary concrete barrier shall be fabricated with bar splicer inserts in the side of the beam, as detailed, to accommodate the installation of the retainer assemblies. A pair of bar splicers, 6" apart, shall be placed at 6'-0" centers along the length of the beam. The cost of the bar splicers is included with the deck beam.

CiorbaGroup
8725 W. Higgins Rd, Ste 600, Chicago, IL 60631
P 773.775.4009 | www.ciorba.com

USER NAME =	DESIGNED - SIK	REVISED -
	CHECKED - BWS	REVISED -
PLOT SCALE =	DRAWN - ETK, SIK	REVISED -
PLOT DATE =	CHECKED - BWS	REVISED -

STATE OF ILLINOIS
DEPARTMENT OF TRANSPORTATION

TEMPORARY CONCRETE BARRIER
STRUCTURE NO. 016–0977
SHEET SF-04 OF SF-24 SHEETS

F.A.I. RTE.	SECTION	COUNTY	TOTAL SHEETS	SHEET NO.
290	(0404-316-HB) BR24	COOK	276	191
		CONTRACT NO. 62W99		
	ILLINOIS	FED. AID PROJECT		

MODEL: sMODELNAMES
FILE NAME: pw://ciorba-pw.bentley.com:ciorba-pw-01/Documents/Projects/IL_DOT/D1/0021693.06/CADD Data/Sht/Structural/0160977-62W99-04-TempConcBar.dgn
4/30/2026 7:10:22 PM

NOTES

1. Areas of deck repairs including polymer concrete shown are estimated. The Engineer shall show actual locations of deck repairs at the time of construction.
2. For South and North Abutment Expansion Joints removal and reconstruction, see Sheets SF-08 thru SF-11.
3. For Longitudinal Joint Removal and Reconstruction, see Sheet SF-12.
4. For Parapet Repairs, see Sheet SF-06.
5. Any reinforcement bars that are damaged during concrete removal operations shall be repaired or replaced using an approved bar splicer or anchorage system at the contractor's expense.
6. Protective shield is used under longitudinal and transverse expansion joints replacement areas only. Limits shown on plans.

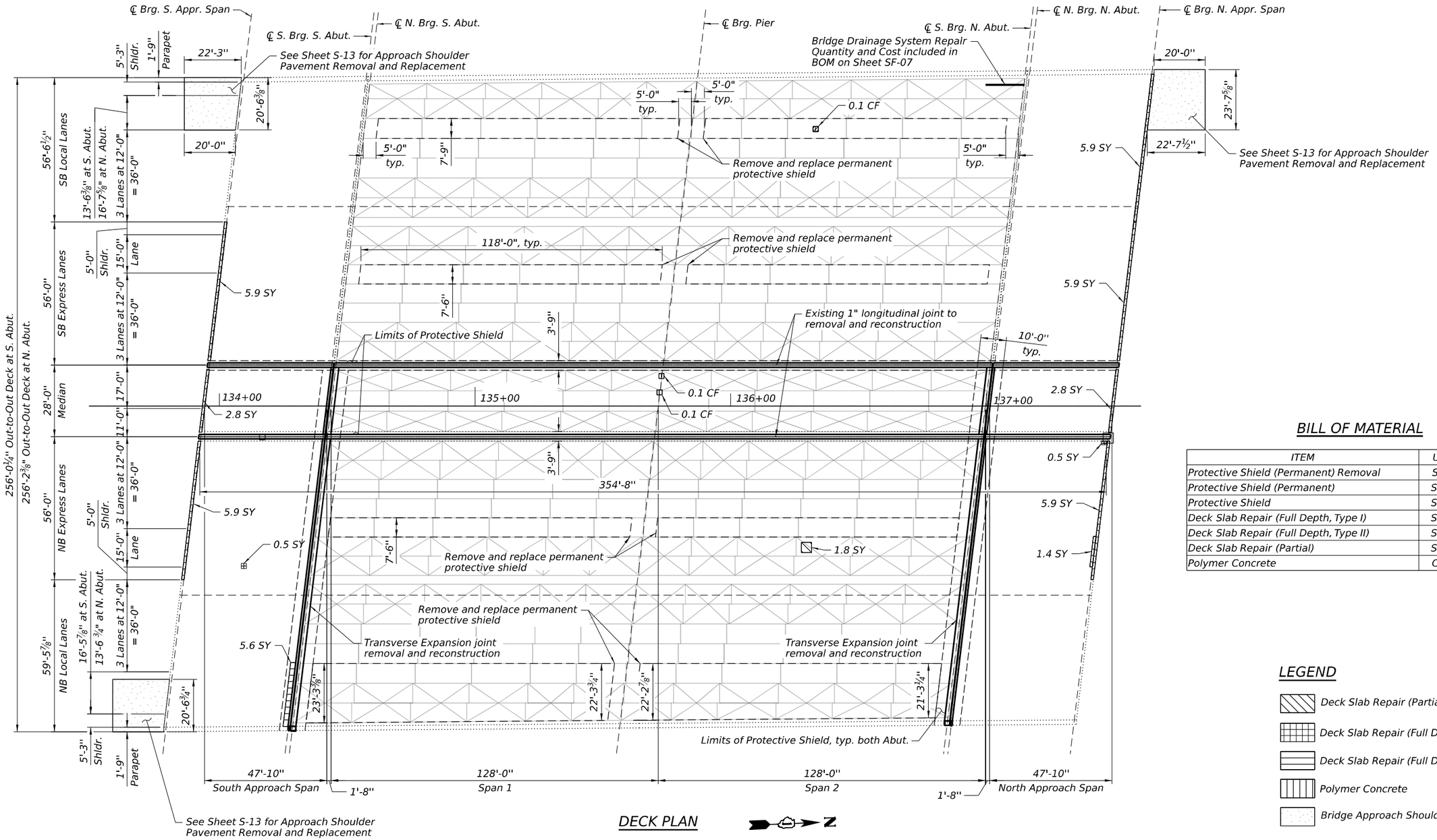

BILL OF MATERIAL

ITEM	UNIT	QUANTITY
Protective Shield (Permanent) Removal	Sq Ft	10,627
Protective Shield (Permanent)	Sq Yd	1,183
Protective Shield	Sq Yd	614
Deck Slab Repair (Full Depth, Type I)	Sq Yd	1
Deck Slab Repair (Full Depth, Type II)	Sq Yd	43
Deck Slab Repair (Partial)	Sq Yd	2
Polymer Concrete	Cu Ft	1

LEGEND

- Deck Slab Repair (Partial)
- Deck Slab Repair (Full Depth Repair, Type I)
- Deck Slab Repair (Full Depth Repair, Type II)
- Polymer Concrete
- Bridge Approach Shoulder Removal
- SY Square Yard
- CF Cubic Foot

CiorbaGroup
8725 W. Higgins Rd, Ste 600, Chicago, IL 60631
P 773.775.4009 | www.ciorba.com

USER NAME =		DESIGNED -	SIK	REVISED -	
		CHECKED -	BWS	REVISED -	
PLOT SCALE =		DRAWN -	ETK, SIK	REVISED -	
PLOT DATE =		CHECKED -	BWS	REVISED -	

STATE OF ILLINOIS
DEPARTMENT OF TRANSPORTATION

DECK REPAIR PLAN
STRUCTURE NO. 016–0977
SHEET SF-05 OF SF-24 SHEETS

F.A.I. RTE.	SECTION	COUNTY	TOTAL SHEETS	SHEET NO.
290	(0404-316-HB) BR24	COOK	276	192
		CONTRACT NO. 62W99		
	ILLINOIS FED. AID PROJECT			

MODEL: SMODELNAMES
FILE NAME: pw://ciorba-pw.bentley.com:ciorba-pw-01/Documents/Projects/IL_DOT/D1/002 1693.06/CADD Data/Sht/Structural/016-0977/016097-62W99-05-DeckRepair.dgn
4/30/2026 7:10:39 PM

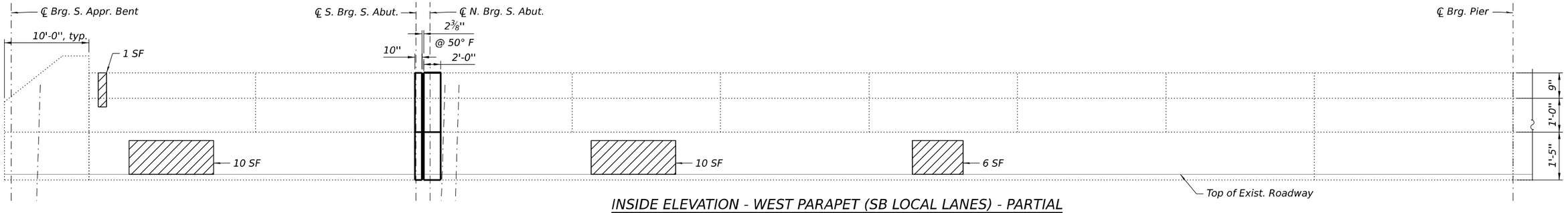

INSIDE ELEVATION - WEST PARAPET (SB LOCAL LANES) - PARTIAL

(Looking West)

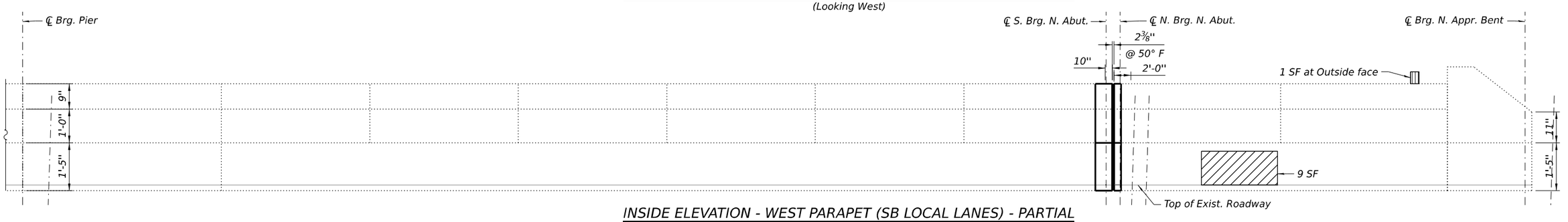

INSIDE ELEVATION - WEST PARAPET (SB LOCAL LANES) - PARTIAL

(Looking West)

INSIDE ELEVATION - EAST PARAPET (NB LOCAL LANES) - PARTIAL

(Looking East)

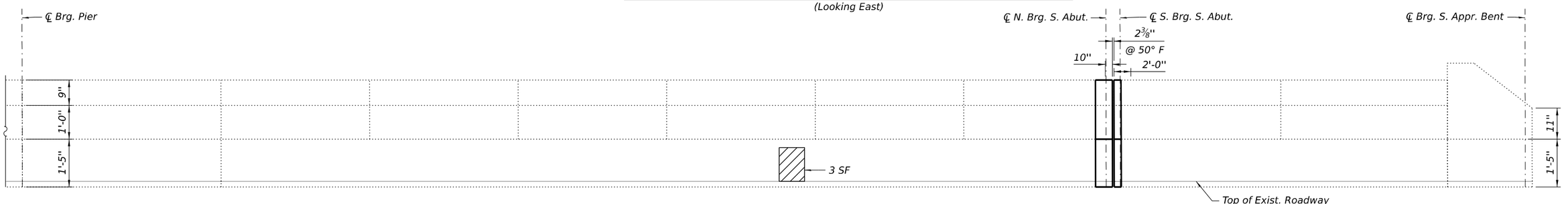

INSIDE ELEVATION - EAST PARAPET (NB LOCAL LANES) - PARTIAL

(Looking East)

NOTES:

1. For General Notes and Total Bill of Material, see Sheet SF-02.
2. For joints removal and reconstruction, see Sheets SF-08 thru SF-11.
3. Quantities and Limits shown are estimated for bidding purpose only. The actual areas to be repaired, and type(s) of repairs to be used will be determined by the Engineer in the field at the time of construction.

BILL OF MATERIAL

Item	Unit	Quantity
Structural Repair Of Concrete (Depth Equal To Or Less Than 5 Inches)	Sq Ft	48
Structural Repair Of Concrete (Depth Greater Than 5 Inches)	Sq Ft	2

LEGEND:

- Structural Repair of Concrete (Depth Equal To Or Less Than 5 Inches)
- Structural Repair of Concrete (Depth Greater Than 5 Inches)
- SF — Square Foot

CiorbaGroup
8725 W. Higgins Rd, Ste 600, Chicago, IL 60631
P 773.775.4009 | www.ciorba.com

USER NAME =	DESIGNED - SIK	REVISED -
	CHECKED - BWS	REVISED -
PLOT SCALE =	DRAWN - ETK, SIK	REVISED -
PLOT DATE =	CHECKED - BWS	REVISED -

STATE OF ILLINOIS
DEPARTMENT OF TRANSPORTATION

PARAPET REPAIRS
STRUCTURE NO. 016–0977
SHEET SF-06 OF SF-24 SHEETS

F.A.I. RTE.	SECTION	COUNTY	TOTAL SHEETS	SHEET NO.
290	(0404-316-HB) BR24	COOK	276	193
		CONTRACT NO. 62W99		
	ILLINOIS	FED. AID PROJECT		

MODEL: SMODELNAMES
FILE NAME: pw://ciorba-pw.bentley.com:ciorba-pw-01/Documents/Projects/IL_DOT/D1/0021693.06/CADD Data/Sht/Structural/016-0977/016097-62W99-06-ParapetRailingRep.dgn
4/30/2026 7:11:37 PM

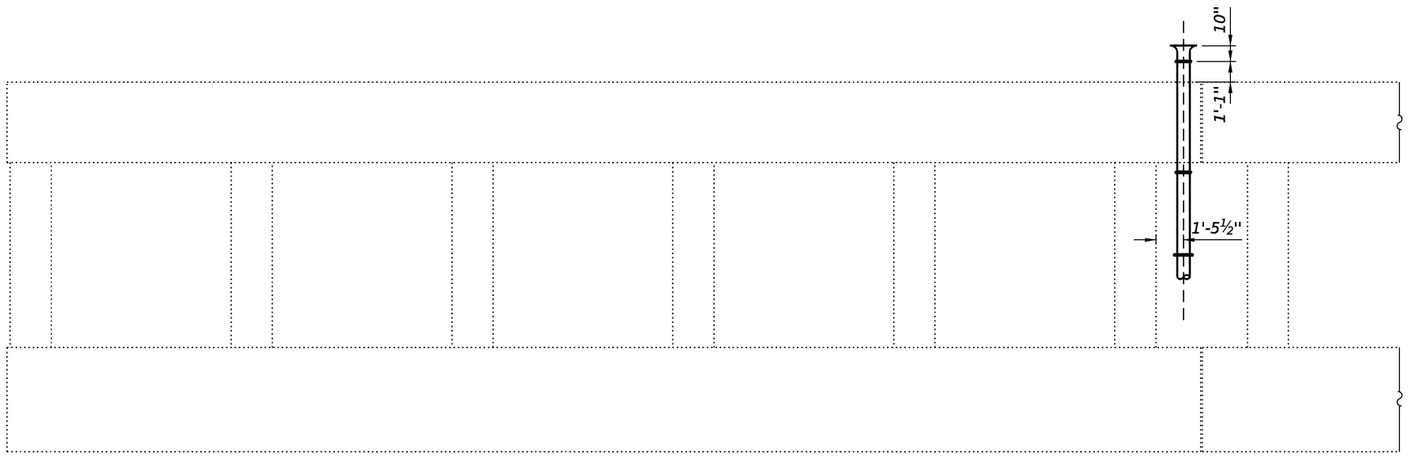

PIER ELEVATION (WEST END)

(Looking North)
One at Each End of Pier

NOTES

1. *Cleaning the horizontal drainage pipes is included in Cleaning Drainage System.*
2. *The concrete median barrier cast openings (3"x1'-0") spaced at 5 ft at the base of the barrier should be cleaned and completely free from debris, after all repair work has been completed. Water used for cleaning shall be fresh and free of oils, acid, salt, alkali, organic matter, or any other substances harmful to the work area, including but not limited to the adjacent existing drainage system. The Contractor shall provide all water for the cleaning operation. The cost for cleaning the openings is inclided in Cleaning Drainage System. Any damage to the work area or drainage system, due to the cleaning operations, shall be repaired at no additional cost.*

BILL OF MATERIAL

Item	Unit	Quantity
Bridge Drainage System Repair	Foot	45
Cleaning Drainage System	L Sum	0.6

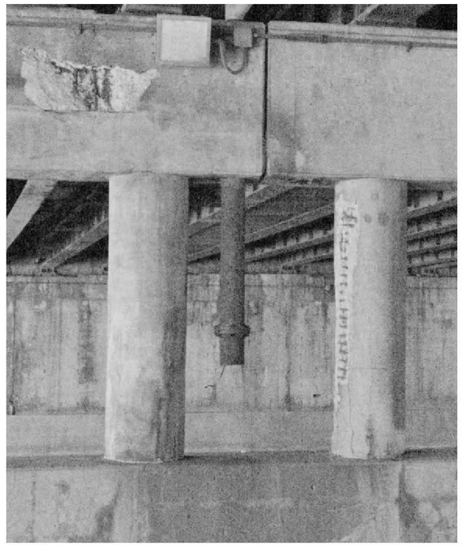

PIER - EAST END

(Looking South)

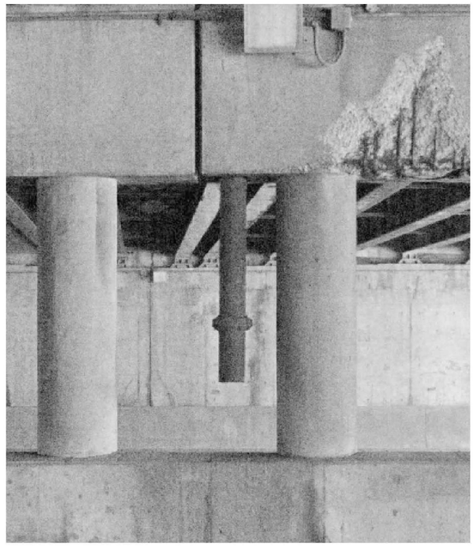

PIER - WEST END

(Looking South)

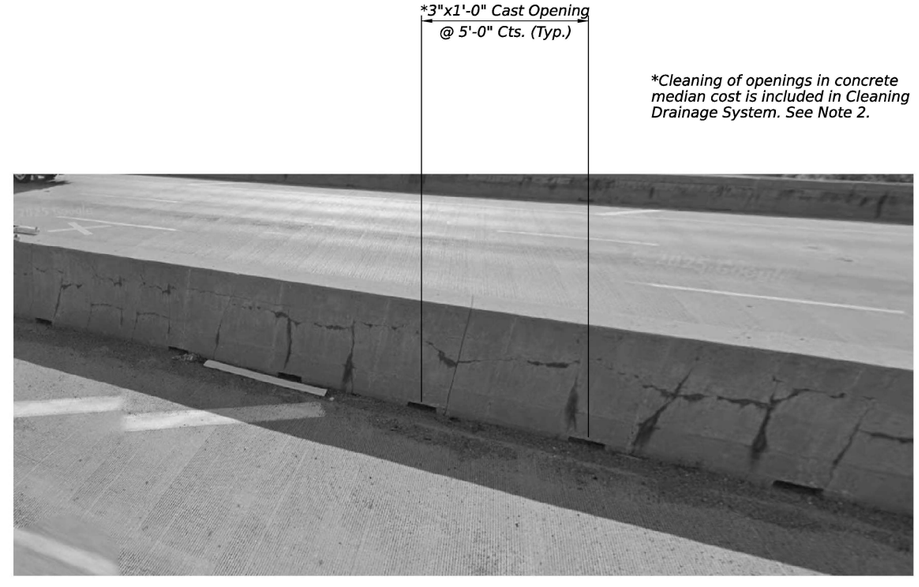

**Cleaning of openings in concrete median cost is included in Cleaning Drainage System. See Note 2.*

CAST OPENINGS IN MEDIAN BARRIER

CiorbaGroup
8725 W. Higgins Rd, Ste 600, Chicago, IL 60631
P 773.775.4009 | www.ciorba.com

USER NAME =		DESIGNED -	SIK	REVISED -	
		CHECKED -	BWS	REVISED -	
PLOT SCALE =		DRAWN -	GUG	REVISED -	
PLOT DATE =		CHECKED -	BWS	REVISED -	

STATE OF ILLINOIS
DEPARTMENT OF TRANSPORTATION

DRAINAGE REPAIR PLAN
STRUCTURE NO. 016–0977

SHEET SF-07 OF SF-24 SHEETS

F.A.I. RTE.	SECTION	COUNTY	TOTAL SHEETS	SHEET NO.
290	(0404-316-HB) BR24	COOK	276	194
		CONTRACT NO. 62W99		
	ILLINOIS FED. AID PROJECT			

MODEL: $MODELNAME$
FILE NAME: pw://ciorba-pw.bentley.com:ciorba-pw-01/Documents/Projects/IL_DOT/D1/0021693.06/CADD Data/Sht/Structural/0116-0977/0160977-62W99-07-DrainageRep.dgn
4/30/2026 7:11:50 PM

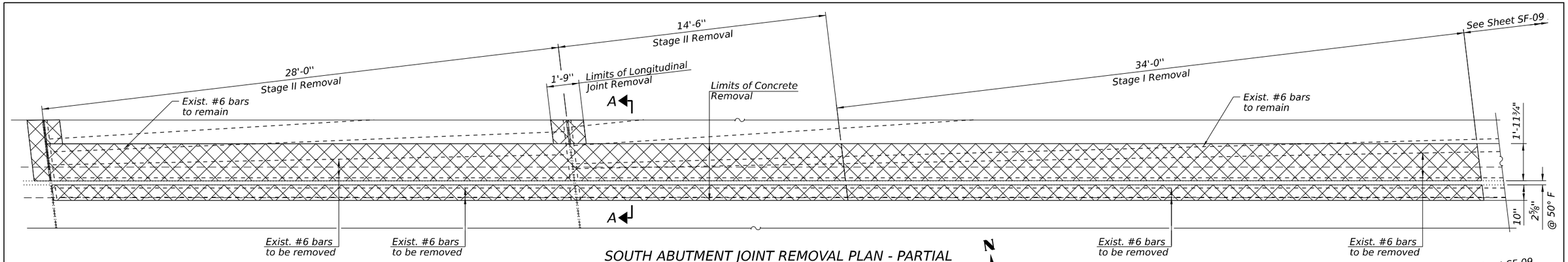

SOUTH ABUTMENT JOINT REMOVAL PLAN - PARTIAL

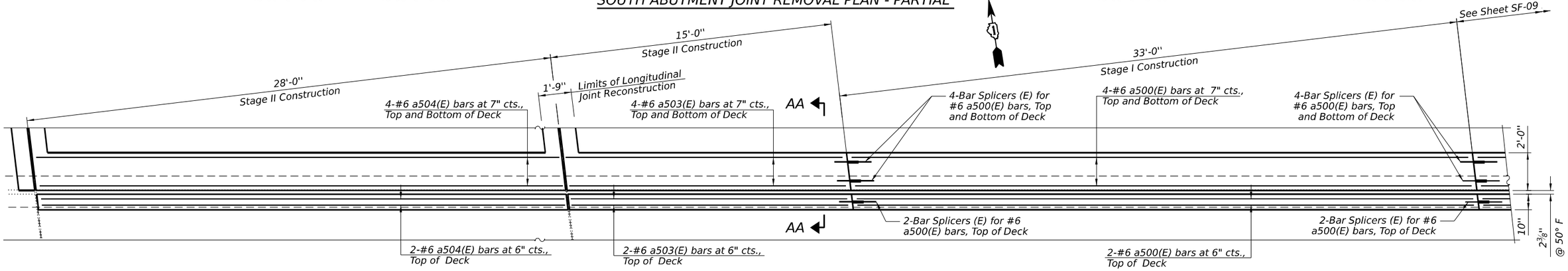

SOUTH ABUTMENT JOINT RECONSTRUCTION PLAN - PARTIAL

MIN. BAR LAP

#6 = 5'-3" (Deck)
#6 = 2'-4" (Hatchblock)

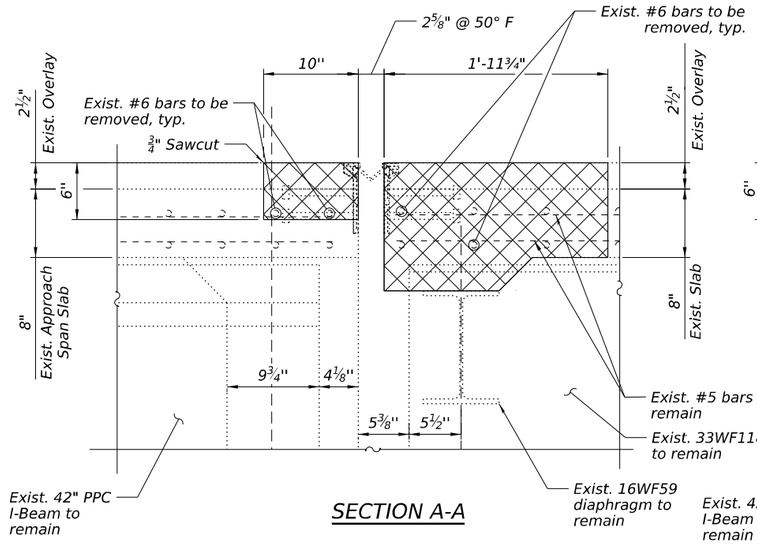

SECTION A-A

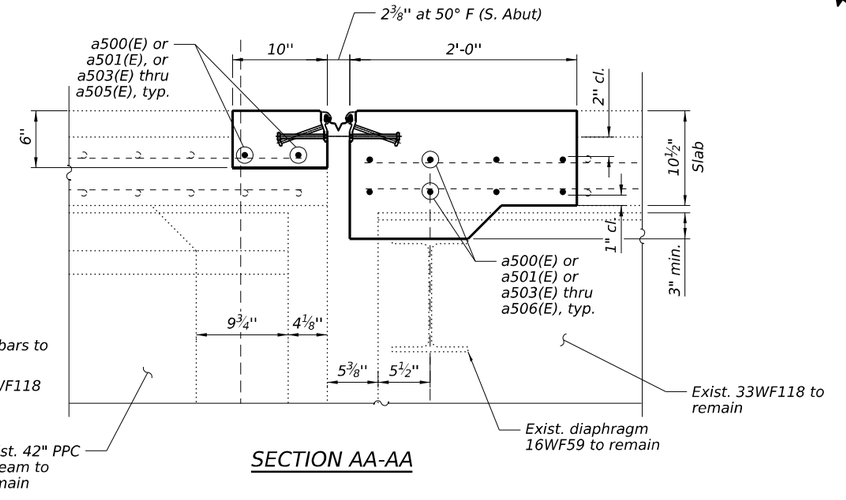

SECTION AA-AA

NOTES:

1. For bend details, see sheet SF-09.
2. For preformed joint strip seal details, see Sheet SF-14.
3. For bar splicer assembly details, see Sheet SF-24.
4. Removal and disposal of existing expansion joints is included with Concrete Removal.

BILL OF MATERIAL

Bar	No.	Size	Length	Shape
a500(E)	10	#6	33'-0"	
a501(E)	16	#6	21'-8"	
a502(E)	4	#6	4'-0"	
a503(E)	10	#6	14'-9"	
a504(E)	10	#6	27'-9"	
a505(E)	10	#6	28'-11"	
a506(E)	4	#6	20'-2"	
d500(E)	4	#5	4'-4"	
d501(E)	4	#4	4'-5"	
d502(E)	4	#4	2'-1"	
Concrete Removal			Cu Yd	14.6
Concrete Superstructure			Cu Yd	14.6
Protective Coat			Sq Yd	47
Reinforcement Bars, Epoxy Coated			Pound	2,270

LEGEND

Concrete Removal

CiorbaGroup
8725 W. Higgins Rd, Ste 600, Chicago, IL 60631
P 773.775.4009 | www.ciorba.com

USER NAME =	DESIGNED - SIK	REVISED -
	CHECKED - BWS	REVISED -
PLOT SCALE =	DRAWN - ETK, SIK	REVISED -
PLOT DATE =	CHECKED - BWS	REVISED -

STATE OF ILLINOIS
DEPARTMENT OF TRANSPORTATION

SOUTH ABUTMENT JOINT REMOVAL AND RECONSTRUCTION I
STRUCTURE NO. 016–0977
SHEET SF-08 OF SF-24 SHEETS

F.A.I. RTE.	SECTION	COUNTY	TOTAL SHEETS	SHEET NO.
290	(0404-316-HB) BR24	COOK	276	195
		CONTRACT NO. 62W99		
	ILLINOIS	FED. AID PROJECT		

MODEL: sMODELNAMES
FILE NAME: pw://ciorba-pw.bentley.com:ciorba-pw-01/Documents/Projects/IL_DOT.DJ/0021693.06/CADD Data/Sht/Structural/0160977-62W99-08-SAbutJoint1.dgn
4/30/2026 7:12:05 PM

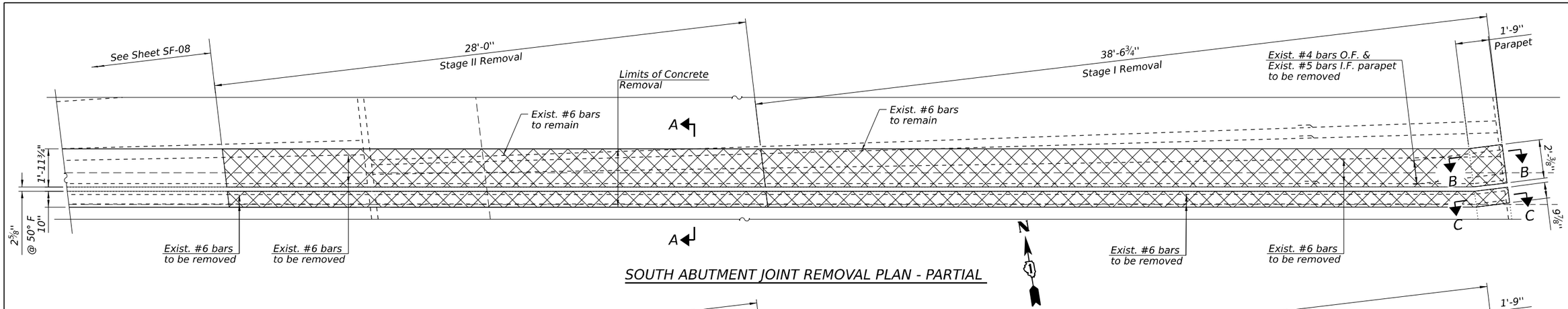

SOUTH ABUTMENT JOINT REMOVAL PLAN - PARTIAL

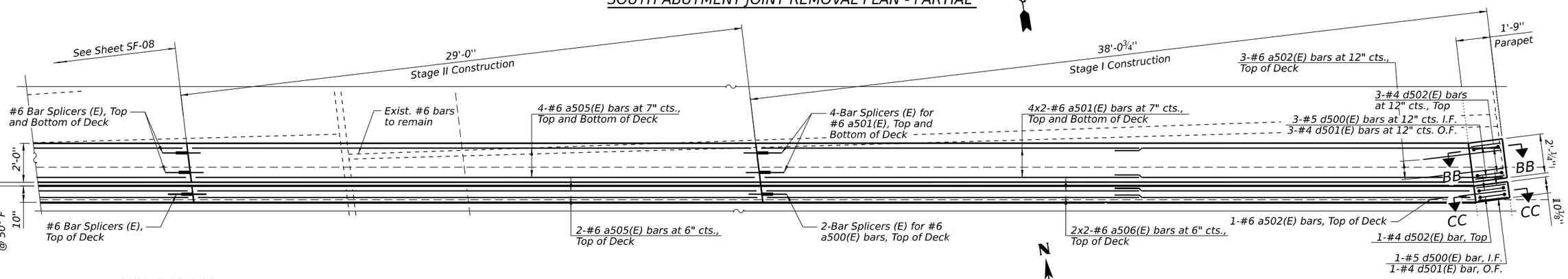

SOUTH ABUTMENT JOINT RECONSTRUCTION PLAN - PARTIAL

MIN. BAR LAP

#6 = 5'-3" (Deck)
#6 = 2'-4" (Hatchblock)

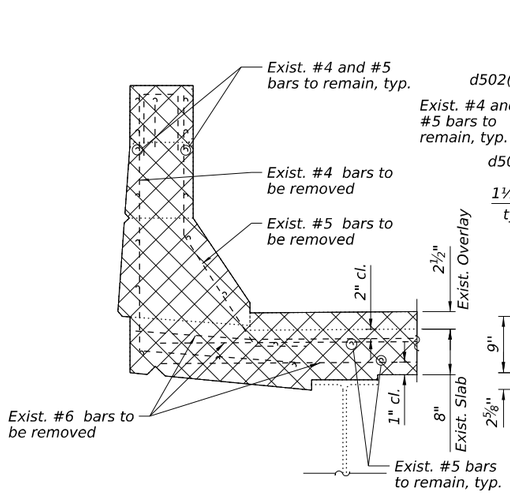

SECTION B-B

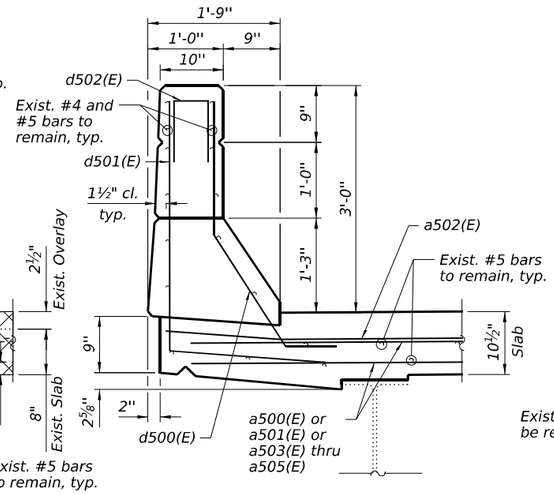

SECTION BB-BB

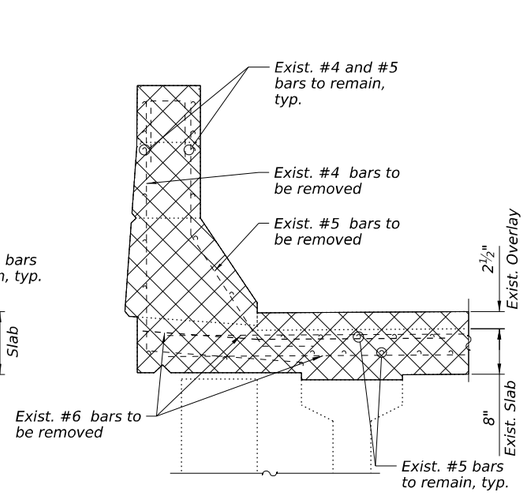

SECTION C-C

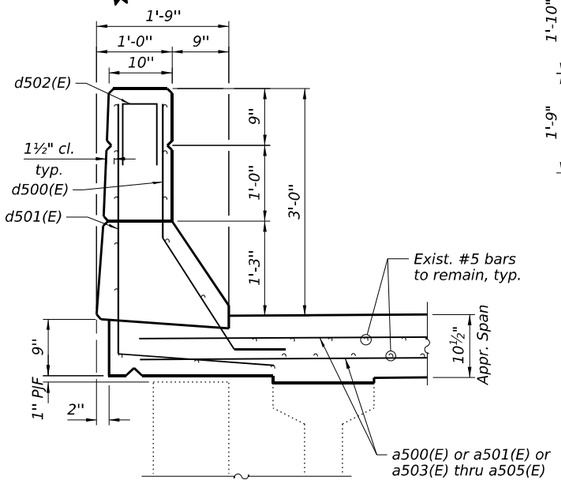

SECTION CC-CC

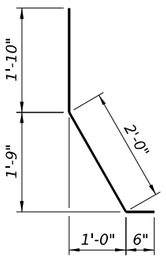

BAR d500(E)

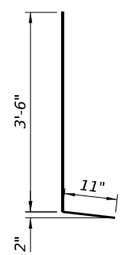

BAR d501(E)

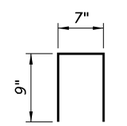

BAR d502(E)

LEGEND

Concrete Removal

NOTE:

1. For notes and Bill of Material, see sheet SF-08.

CiorbaGroup
8725 W. Higgins Rd, Ste 600, Chicago, IL 60631
P 773.775.4009 | www.ciorba.com

USER NAME =	DESIGNED - SIK	REVISED -
	CHECKED - BWS	REVISED -
PLOT SCALE =	DRAWN - ETK, SIK	REVISED -
PLOT DATE =	CHECKED - BWS	REVISED -

STATE OF ILLINOIS
DEPARTMENT OF TRANSPORTATION

SOUTH ABUTMENT JOINT REMOVAL AND RECONSTRUCTION II
STRUCTURE NO. 016–0977
SHEET SF-09 OF SF-24 SHEETS

F.A.I. RTE.	SECTION	COUNTY	TOTAL SHEETS	SHEET NO.
290	(0404-316-HB) BR24	COOK	276	196
		CONTRACT NO. 62W99		
	ILLINOIS	FED. AID PROJECT		

MODEL: sMODELNAMES
FILE NAME: pw://ciorba-pw.bentley.com:ciorba-pw-01/Documents/Projects/IL_DOT/D1/0021693.06/CADD Data/Shl/Structural/0160977-62W99-SAbutJoint2.dgn
4/30/2026 7:12:20 PM

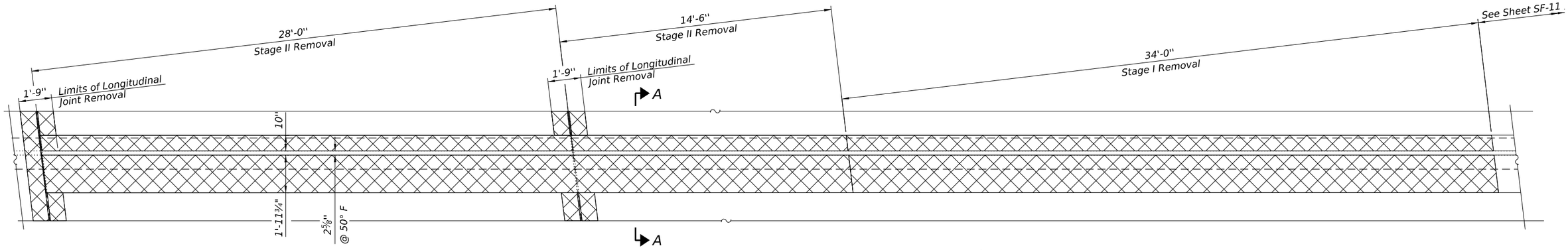

NORTH ABUTMENT JOINT REMOVAL PLAN - PARTIAL

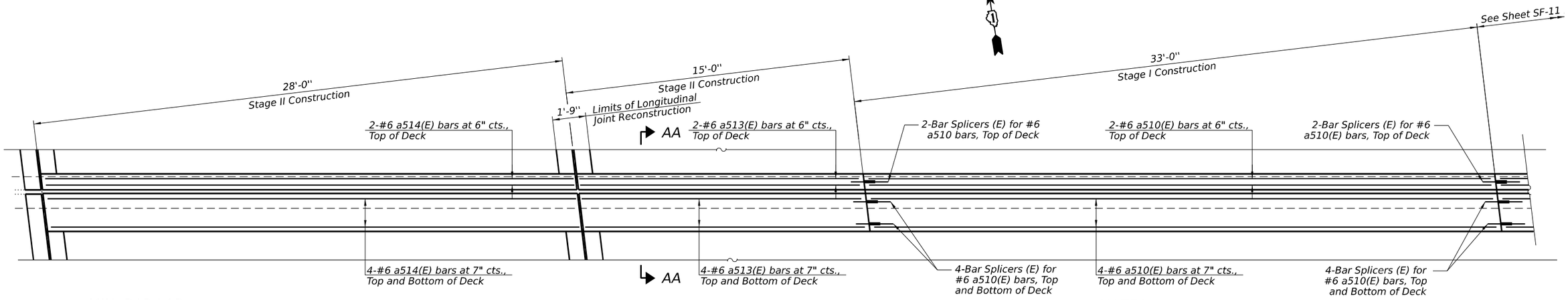

MIN. BAR LAP

#6 = 5'-3" (Deck)
#6 = 2'-4" (Hatchblock)

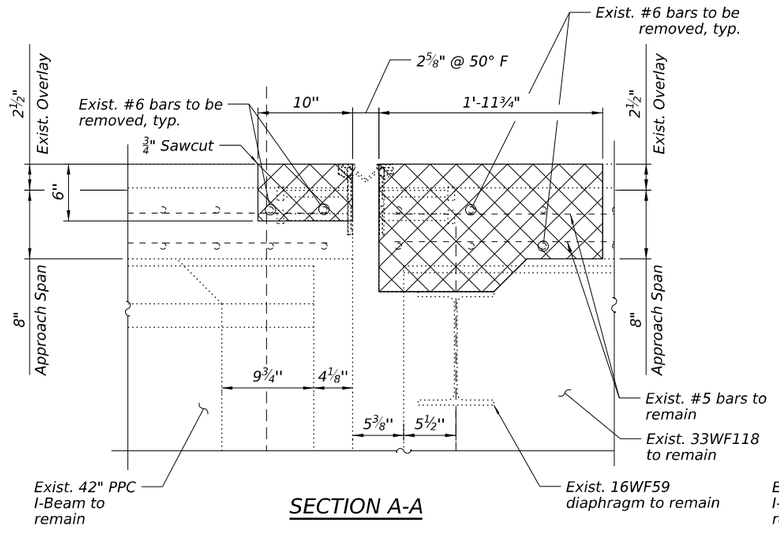

SECTION A-A

NORTH ABUTMENT JOINT RECONSTRUCTION PLAN - PARTIAL

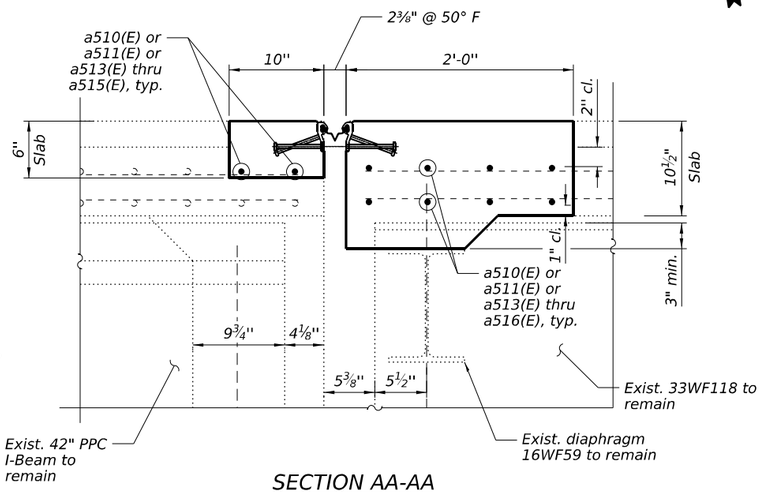

SECTION AA-AA

NOTES:

1. For bend details, see sheet SF-11.
2. For preformed joint strip seal details, see Sheet SF-14.
3. For bar splicer assembly details, see Sheet SF-24.
4. Removal and disposal of existing expansion joints is included with Concrete Removal.

BILL OF MATERIAL

Bar	No.	Size	Length	Shape
a510(E)	10	#6	33'-0"	
a511(E)	16	#6	20'-7"	
a512(E)	4	#6	4'-0"	
a513(E)	10	#6	14'-9"	
a514(E)	10	#6	27'-9"	
a515(E)	10	#6	28'-11"	
a516(E)	4	#6	19'-2"	
d510(E)	4	#5	4'-4"	
d511(E)	4	#4	4'-5"	
d512(E)	4	#4	2'-1"	
Concrete Removal			Cu Yd	14.1
Concrete Superstructure			Cu Yd	14.1
Protective Coat			Sq Yd	46
Reinforcement Bars, Epoxy Coated			Pound	2,240

LEGEND

Concrete Removal

CiorbaGroup
8725 W. Higgins Rd, Ste 600, Chicago, IL 60631
P 773.775.4009 | www.ciorba.com

USER NAME =		DESIGNED - SIK	REVISED -	STATE OF ILLINOIS DEPARTMENT OF TRANSPORTATION	NORTH ABUTMENT JOINT REMOVAL AND RECONSTRUCTION I STRUCTURE NO. 016–0977
		CHECKED - BWS	REVISED -		SHEET SF-10 OF SF-24 SHEETS
PLOT SCALE =		DRAWN - ETK, SIK	REVISED -		
PLOT DATE =		CHECKED - BWS	REVISED -		

F.A.I. RTE.	SECTION	COUNTY	TOTAL SHEETS	SHEET NO.
290	(0404-316-HB) BR24	COOK	276	197
		CONTRACT NO. 62W99		
		ILLINOIS	FED. AID PROJECT	

MODEL: SMODELNAMES
FILE NAME: pw://ciorba-pw.bentley.com:ciorba-pw-01/Documents/Projects/IL_DOT/D1/0021693.06/CADD Data/Sht/Structural/0116-0977/0116097 7-62W99-10-NAbutJoint1.dgn

4/30/2026 7:12:34 PM

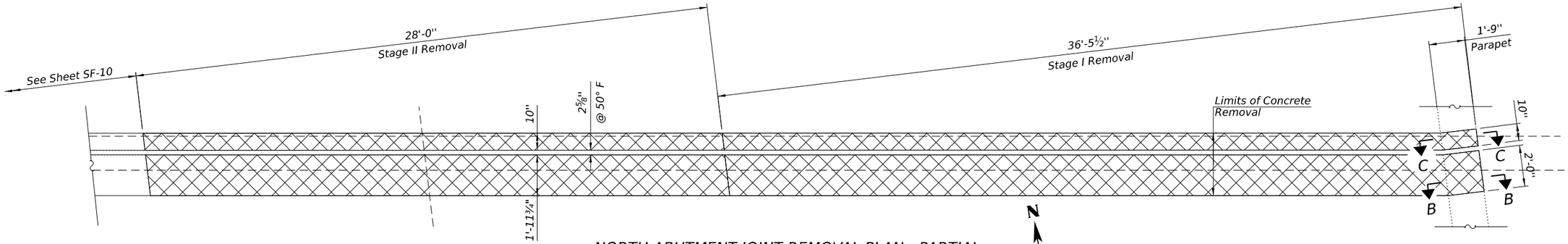

NORTH ABUTMENT JOINT REMOVAL PLAN - PARTIAL

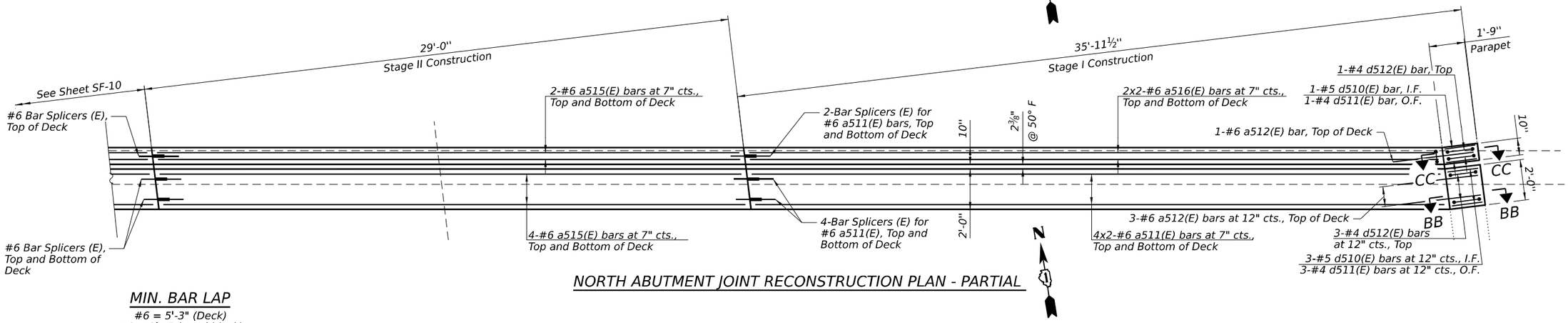

NORTH ABUTMENT JOINT RECONSTRUCTION PLAN - PARTIAL

MIN. BAR LAP

#6 = 5'-3" (Deck)
#6 = 2'-4" (Hatchblock)

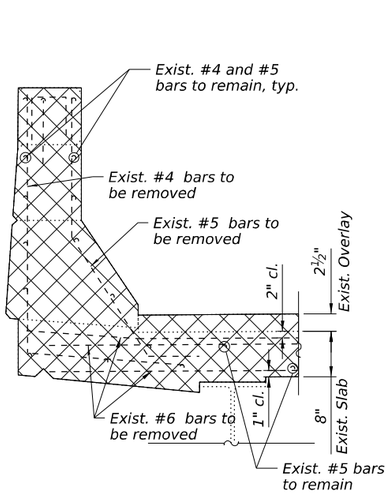

SECTION B-B

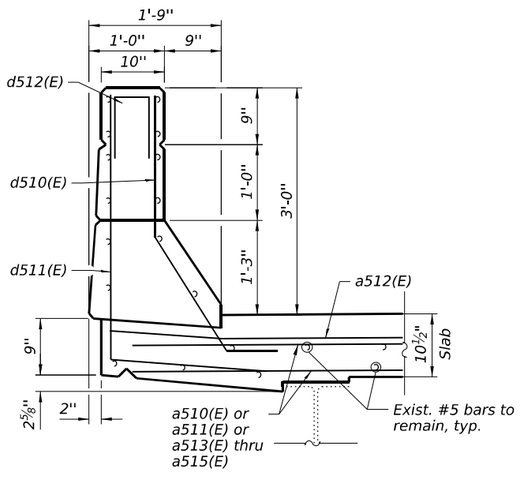

SECTION BB-BB

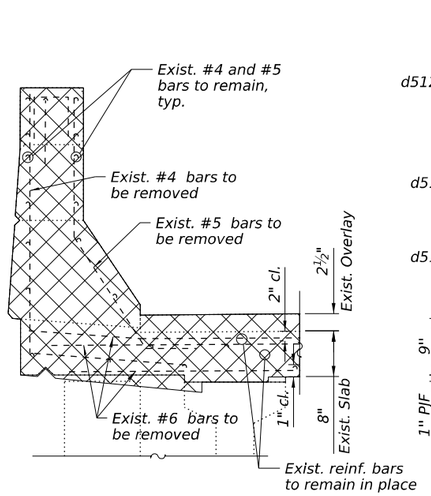

SECTION C-C

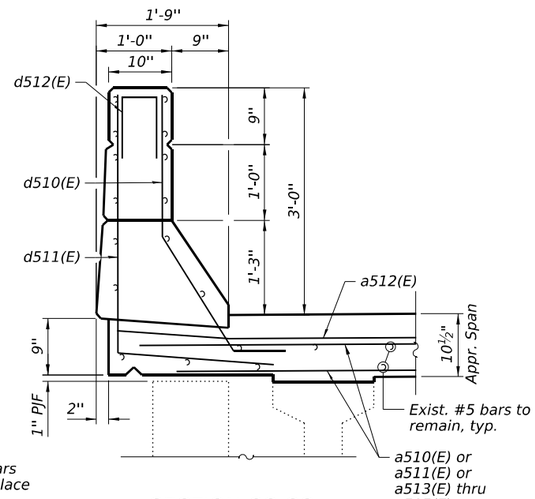

SECTION CC-CC

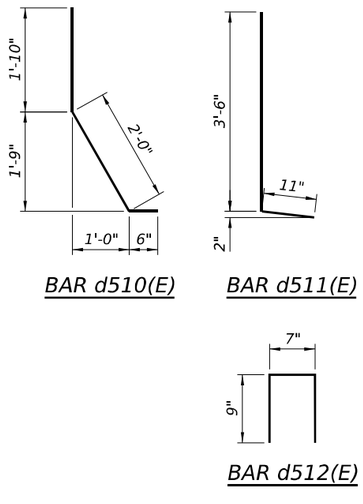

BAR d510(E)

BAR d511(E)

BAR d512(E)

LEGEND

Concrete Removal

NOTE:

1. For notes and Bill of Material, see sheet SF-10.

CiorbaGroup
8725 W. Higgins Rd, Ste 600, Chicago, IL 60631
P 773.775.4009 | www.ciorba.com

USER NAME =	DESIGNED - SIK	REVISED -
	CHECKED - BWS	REVISED -
PLOT SCALE =	DRAWN - ETK, SIK	REVISED -
PLOT DATE =	CHECKED - BWS	REVISED -

STATE OF ILLINOIS
DEPARTMENT OF TRANSPORTATION

NORTH ABUTMENT JOINT REMOVAL AND RECONSTRUCTION II
STRUCTURE NO. 016-0977

SHEET SF-11 OF SF-24 SHEETS

F.A.I. RTE.	SECTION	COUNTY	TOTAL SHEETS	SHEET NO.
290	(0404-316-HB) BR24	COOK	276	198
		CONTRACT NO. 62W99		
	ILLINOIS	FED. AID PROJECT		

MODEL: sMODELNAMES
FILE NAME: pw:\\ciorba-pw.bentley.com:ciorba-pw-01\Documents\Projects\IL_DOT\D1\0021693.06\CADD Data\Sht\Structural\016-0977\016097-62W99-11-NAbutJoint2.dgn

4/30/2026 7:12:47 PM

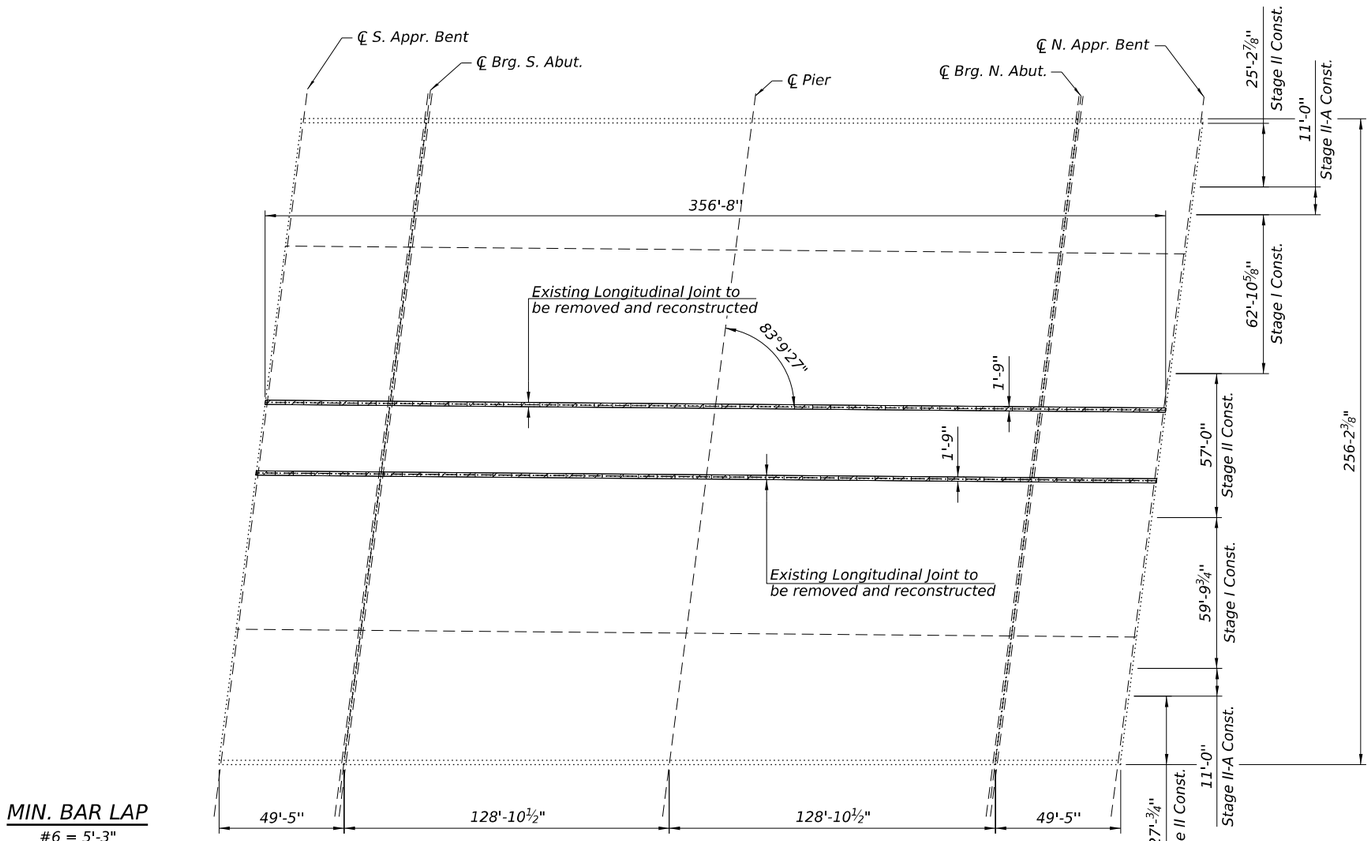

MIN. BAR LAP

#6 = 5'-3"

DECK PLAN

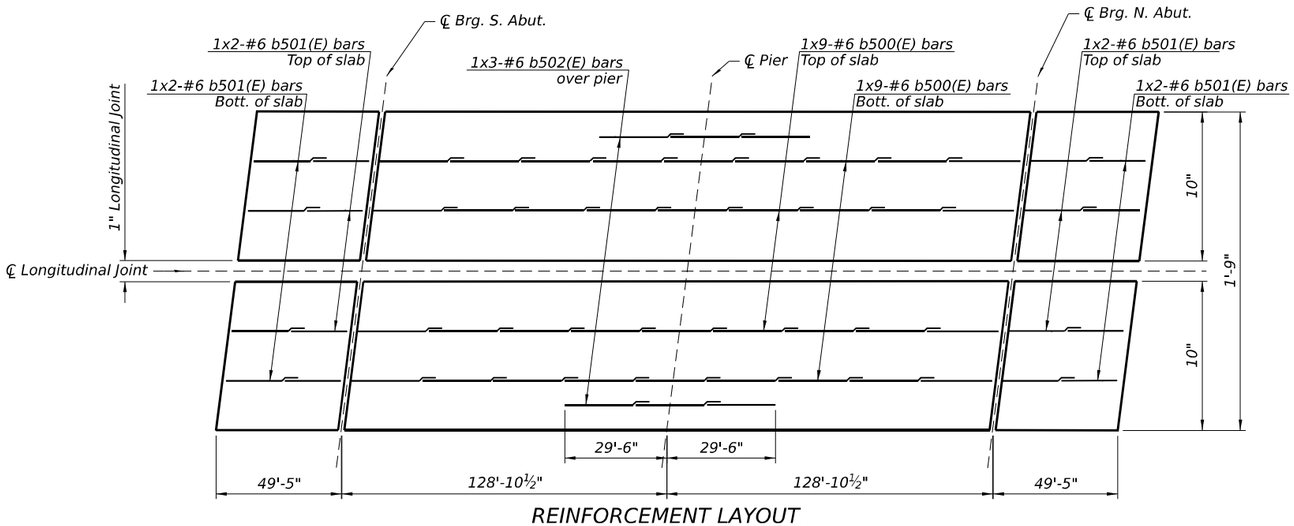

REINFORCEMENT LAYOUT

(2 Locations)

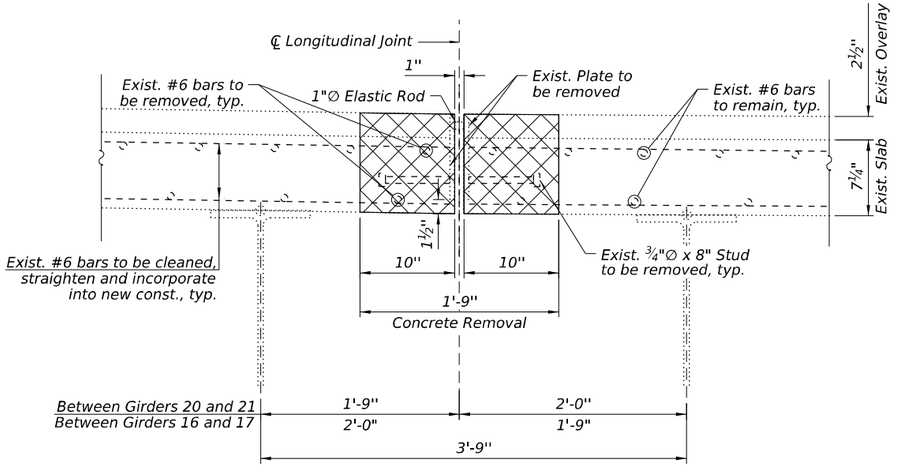

LONGITUDINAL JOINT REMOVAL

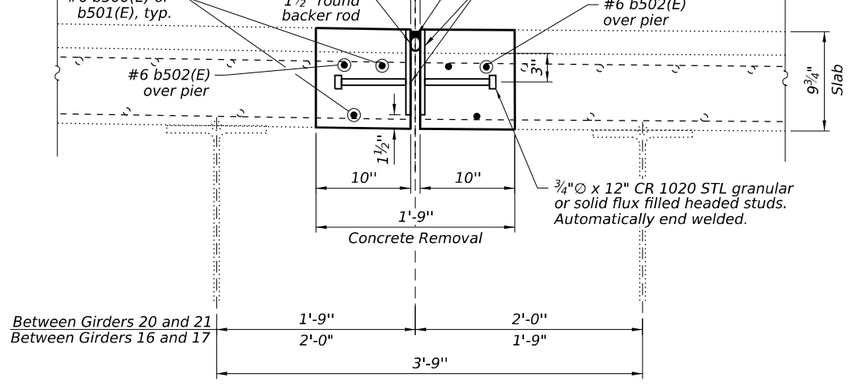

LONGITUDINAL JOINT RECONSTRUCTION

BILL OF MATERIAL

(Includes 2 longitudinal joints)

Bar	No.	Size	Length	Shape
b500(E)	72	#6	33'-4"	——
b501(E)	32	#6	27'-0"	——
b502(E)	12	#6	23'-2"	——
Concrete Removal			Cu Yd	35.8
Concrete Superstructure			Cu Yd	35.8
Protective Coat			Sq Yd	67
Reinforcement Bars, Epoxy Coated			Pound	5,330
Silicone Joint Sealer, 1"			Foot	714

NOTES:

1. Cost of removing steel plates, studs, 1" elastic rod shall be included in Concrete Removal.
2. Cost of new steel plates, studs shall be included in Concrete Superstructure

LEGEND

Concrete Removal

CiorbaGroup
8725 W. Higgins Rd, Ste 600, Chicago, IL 60631
P 773.775.4009 | www.ciorba.com

USER NAME =	DESIGNED - SIK	REVISED -	
	CHECKED - BWS	REVISED -	
PLOT SCALE =	DRAWN - ETK, SIK	REVISED -	
PLOT DATE =	CHECKED - BWS	REVISED -	

STATE OF ILLINOIS
DEPARTMENT OF TRANSPORTATION

LONGITUDINAL JOINT REMOVAL AND RECONSTRUCTION
STRUCTURE NO. 016-0977

SHEET SF-12 OF SF-24 SHEETS

F.A.I. RTE.	SECTION	COUNTY	TOTAL SHEETS	SHEET NO.
290	(0404-316-HB) BR24	COOK	276	199
		CONTRACT NO. 62W99		
	ILLINOIS	FED. AID PROJECT		

MODEL: SMODELNAMES
FILE NAME: pw:\\ciorba-pw.bentley.com:ciorba-pw-01\Documents\Projects\IL_DOTD1\0021693.06\CADD Data\Sht\Structural\016-0977\0160977-62W99-12-Longjoint.dgn
4/30/2026 7:13:00 PM

NOTE:

1. Cost for existing guardrail removal and re-attachement is included with Pavement Connector (HMA) pay item.

BILL OF MATERIAL

Item	Unit	Quantity
Aggregate Subgrade Improvement, 12"	Cu Yd	102
Pavement Connector (Hma) For Bridge Approach Slab	Sq Yd	105
Bridge Approach Shoulder Removal	Sq Yd	153

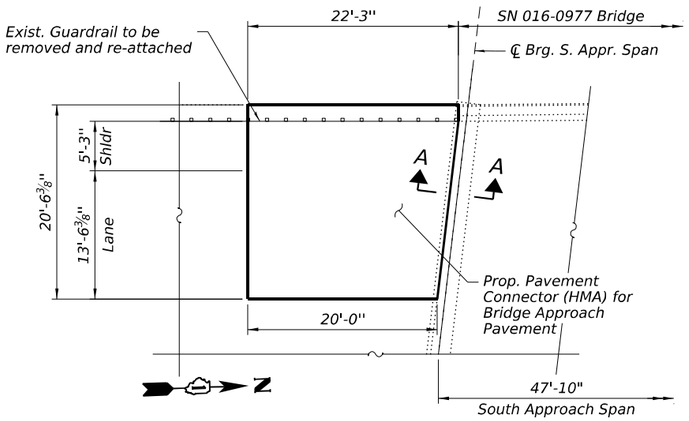

SW APPROACH CONNECTOR PLAN

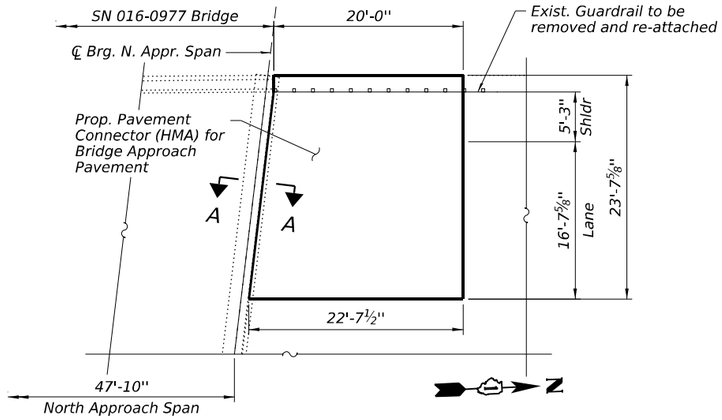

NW APPROACH CONNECTOR PLAN

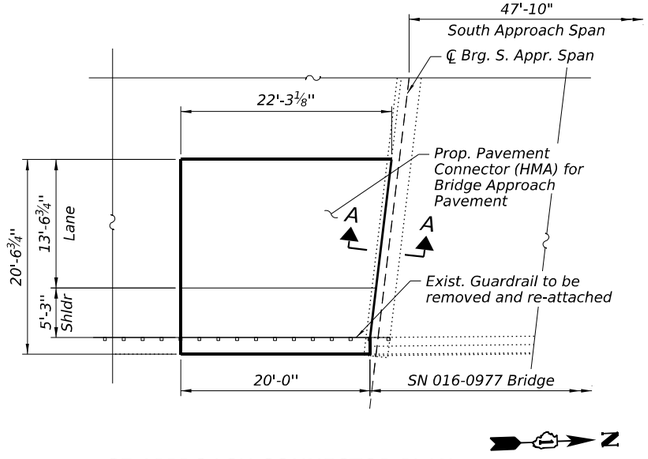

SE APPROACH CONNECTOR PLAN

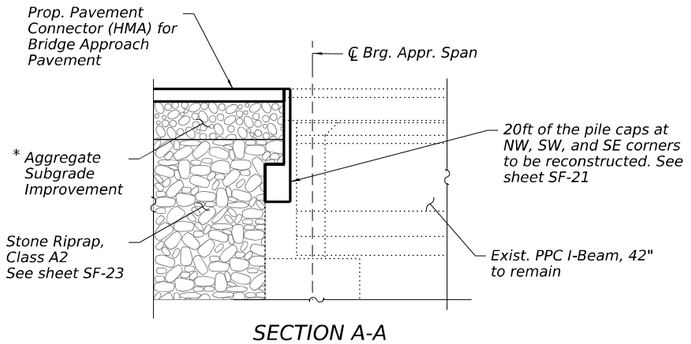

SECTION A-A

* The aggregate gradation for the aggregate subgrade improvement 12" lower 9 inches shall be cs 1 or rr 1.

The subgrade stability shall be verified by proof rolling with a fully loaded tandem-axle truck.

Any aggregate subgrade contaminated and/or damaged by the contractor's vehicles and/or equipment is to be removed and replaced as directed by the engineer at the contractor's expense.

CiorbaGroup
8725 W. Higgins Rd, Ste 600, Chicago, IL 60631
P 773.775.4009 | www.ciorba.com

USER NAME =	DESIGNED - SIK	REVISED -	
	CHECKED - BWS	REVISED -	
PLOT SCALE =	DRAWN - ETK, SIK	REVISED -	
PLOT DATE =	CHECKED - BWS	REVISED -	

STATE OF ILLINOIS
DEPARTMENT OF TRANSPORTATION

APPROACH SHOULDER PAVEMENT DETAILS
STRUCTURE NO. 016–0977
SHEET SF-13 OF SF-24 SHEETS

F.A.I. RTE.	SECTION	COUNTY	TOTAL SHEETS	SHEET NO.
290	(0404-316-HB) BR24	COOK	276	200
		CONTRACT NO. 62W99		
	ILLINOIS	FED. AID PROJECT		

MODEL: sMODELNAMES
FILE NAME: pw://ciorba-pw.bentley.com:ciorba-pw-01/Documents/Projects/IL_DOT/D1/0021693.06/CADD Data/SN/Structural/016-0977/0160977-62W99-13-Approach\SNDtlRepl.dgn
4/30/2026 7:13:12 PM

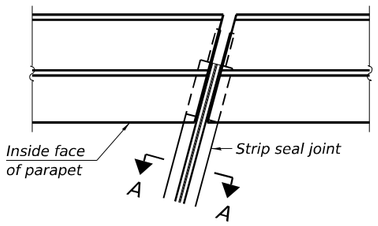

FOR SKEWS ≤ 30°

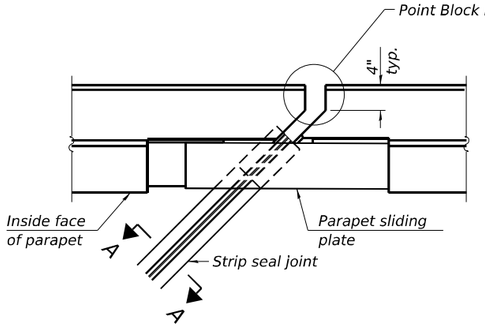

FOR SKEWS > 30°

PLAN AT PARAPET

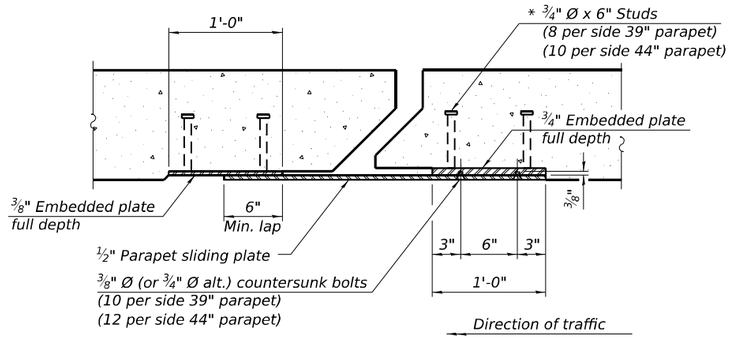

SECTION B-B

(¾" Ø countersunk bolts extending into concrete shall have hex nuts tack welded to the back of the embedded plates with end caps provided.)

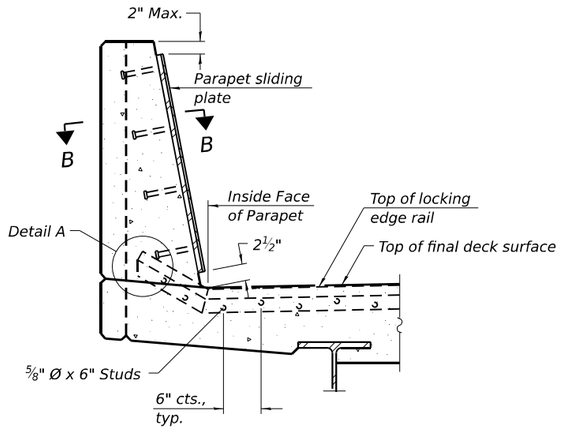

SECTION AT PARAPET

(Skews > 30° shown. Skews ≤ 30° similar except as shown in plan view.)

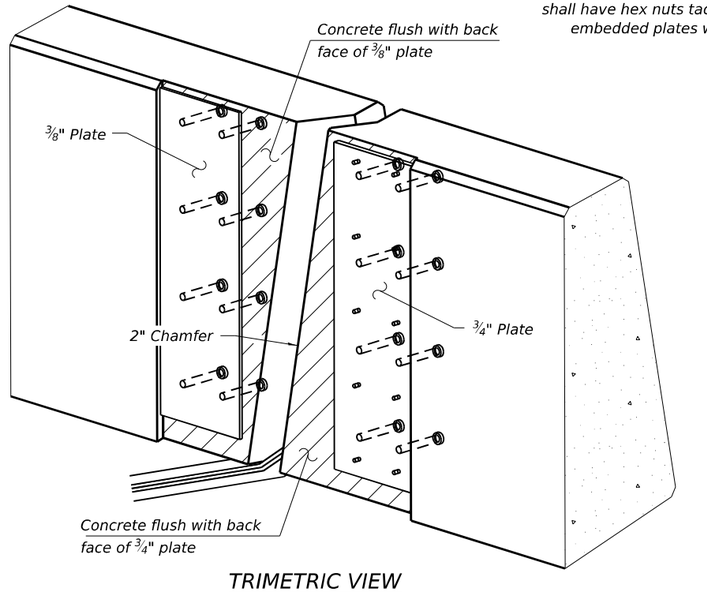

TRIMETRIC VIEW

(Showing embedded plates only)

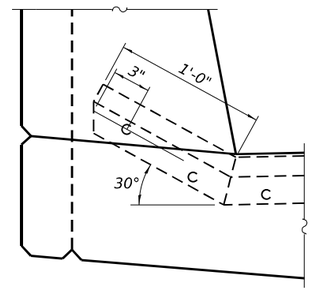

DETAIL A

(Kick-up at parapet locations shown. See sheet of for kick-up at curb locations.)

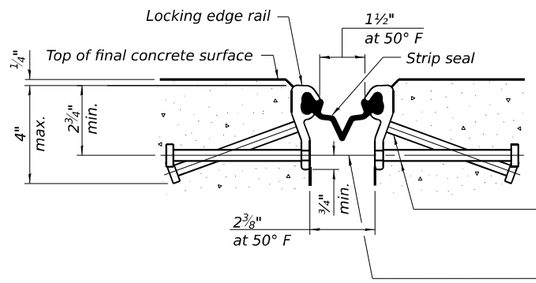

SHOWING ROLLED RAIL JOINT

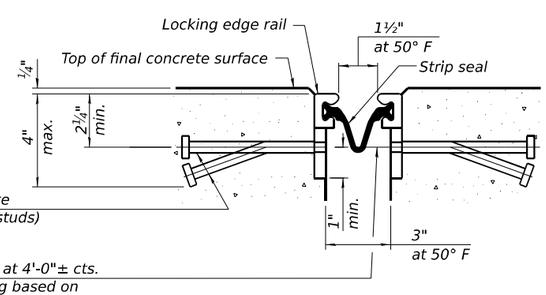

SHOWING WELDED RAIL JOINT

SECTION A-A

* Granular or solid flux filled headed studs conforming to Article 1006.32 of the Std. Specs., automatically end welded.

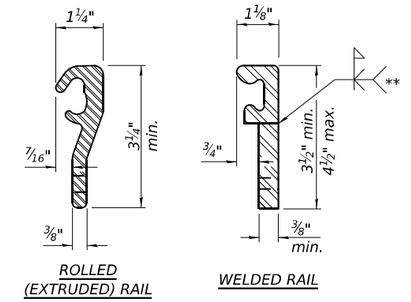

ROLLED (EXTRUDED) RAIL

WELDED RAIL

LOCKING EDGE RAIL SPLICE

The inside of the locking edge rail groove shall be free of weld residue. Rolled rail shown, welded rail similar.

LOCKING EDGE RAILS

** Back gouge not required if complete joint penetration is verified by mock-up.

Notes:

The strip seal shall be made continuous and shall have a minimum thickness of ¼". The configuration of the strip seal shall match the configuration of the locking edge rails. Open or "webbed" strip seal gland configurations are not permitted. The gland shall be sized for a maximum rated movement of 4 inches.

The locking edge rails depicted are configured for typical applications and are conceptual only. The actual configuration of the locking edge rails and matching strip seal may vary from manufacturer to manufacturer provided they fit the application and meet the minimum anchorage shown. Flanged edge rails, however, will not be allowed. Locking edge rails may exceed the 4½" maximum depth provided the anchorage system is revised according to the manufacturer's recommendation.

The manufacturer's recommended installation methods shall be followed.

All steel components shall be galvanized after fabrication according to Article 520.03 of the Standard Specifications.

The Maximum space between locking edge rail segments shall be 3/16" and sealed with a suitable sealant; however, any rail joint within 10' measured perpendicular to the face of the curb or parapet shall be welded as shown in the locking edge rail splice detail.

Cost of parapet sliding plates, embedded plates, and anchorage studs included with Preformed Joint Strip Seal.

39" constant slope barrier shown, 44" constant slope barrier similar as noted.

The concrete opening below the strip seal will vary based on the locking edge rail chosen by the Contractor. Deck and parapet lengths shown elsewhere in the plans are dimensioned to the concrete opening, not the joint opening, and are based on the rolled locking edge rail. If the Contractor elects to use a different locking edge rail, dimensional adjustments may be required. One exception to this would be the strip seal joint at the end of the precast bridge approach slab. For these cases the pavement connector length shall be adjusted, not the length of the bridge approach slab.

BILL OF MATERIAL

Item	Unit	Total
Preformed Joint Strip Seal	Foot	286

EJ-SS 4-4-2025

CiorbaGroup
8725 W. Higgins Rd, Ste 600, Chicago, IL 60631
P 773.775.4009 | www.ciorba.com

USER NAME =		DESIGNED -	SIK	REVISED -	
		CHECKED -	BWS	REVISED -	
PLOT SCALE =		DRAWN -	ETK, SIK	REVISED -	
PLOT DATE =		CHECKED -	BWS	REVISED -	

STATE OF ILLINOIS
DEPARTMENT OF TRANSPORTATION

PREFORMED JOINT STRIP SEAL
STRUCTURE NO. 016–0977

SHEET SF-14 OF SF-24 SHEETS

F.A.I. RTE.	SECTION	COUNTY	TOTAL SHEETS	SHEET NO.
290	(0404-316-HB) BR24	COOK	276	201
		CONTRACT NO. 62W99		
	ILLINOIS	FED. AID PROJECT		

MODEL: SMODELNAMES
FILE NAME: pw://ciorba-pw.bentley.com:ciorba-pw01/Documents/Projects/IL_DOT/D1/002 1693.06/CADD Data/Sht/Structural/016-0977/016097-62W99-14-PrefJoint.dgn

4/30/2026 7:13:22 PM

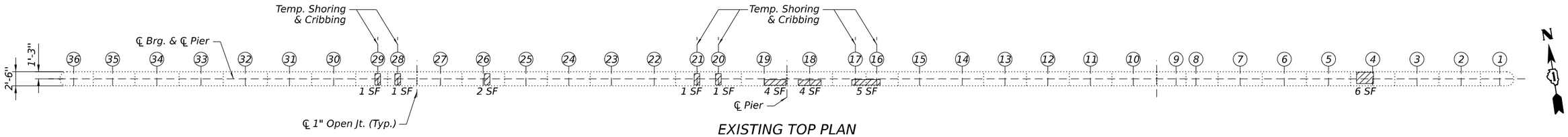

EXISTING TOP PLAN

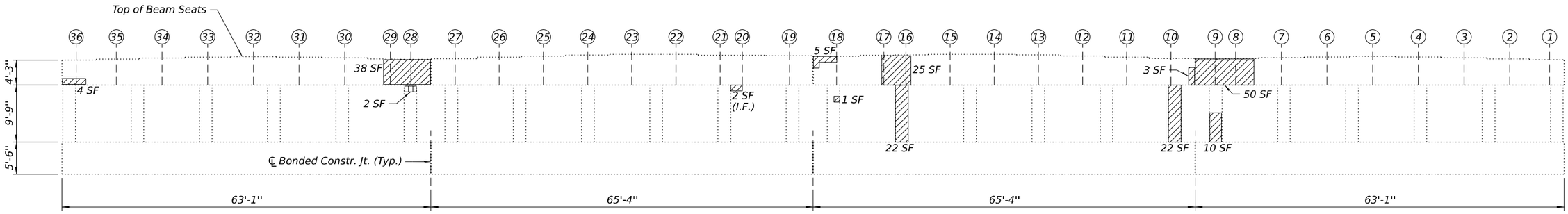

PIER ELEVATION (SOUTH FACE)

(Looking North)

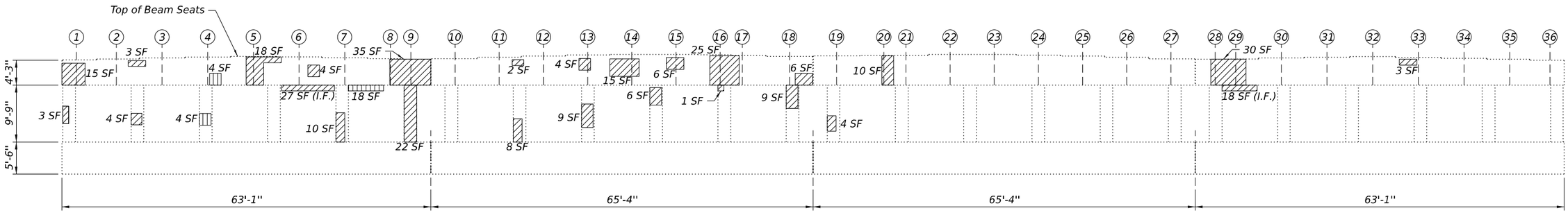

PIER ELEVATION (NORTH FACE)

(Looking South)

NOTES:

1. *Quantities and limits shown are estimated for bidding purposes only. The actual areas to be repaired, and the type(s) of repairs to be used, will be determined by the Engineer in the field at the time of construction.*

BILL OF MATERIAL

Item	Unit	Quantity
Structural Repair Of Concrete (Depth Equal To Or Less Than 5 Inches)	Sq Ft	504
Structural Repair Of Concrete (Depth Greater Than 5 Inches)	Sq Ft	28
Temporary Shoring And Cribbing	Each	6

LEGEND:

Structual Repair of Concrete (Depth Equal To Or Less Than 5 Inches)

Structual Repair of Concrete (Depth More Than 5 Inches)

CiorbaGroup
8725 W. Higgins Rd, Ste 600, Chicago, IL 60631
P 773.775.4009 | www.ciorba.com

USER NAME =	DESIGNED - SIK	REVISED -	
	CHECKED - BWS	REVISED -	
PLOT SCALE =	DRAWN - ETK, SIK	REVISED -	
PLOT DATE =	CHECKED - BWS	REVISED -	

STATE OF ILLINOIS
DEPARTMENT OF TRANSPORTATION

PIER REPAIRS
STRUCTURE NO. 016–0977
SHEET SF-14A OF SF-24 SHEETS

F.A.I. RTE.	SECTION	COUNTY	TOTAL SHEETS	SHEET NO.
290	(0404-316-HB) BR24	COOK	276	201A
		CONTRACT NO. 62W99		
	ILLINOIS	FED. AID PROJECT		

MODEL: sMODELNAMES
FILE NAME: pw://ciorba-pw.bentley.com:ciorba-pw-01/Documents/Projects/IL_DOT.DJ/0021693.06/CADD Data/Sht/Structural/0160977-62W99-14A-PierRep.dgn
4/30/2026 7:13:35 PM

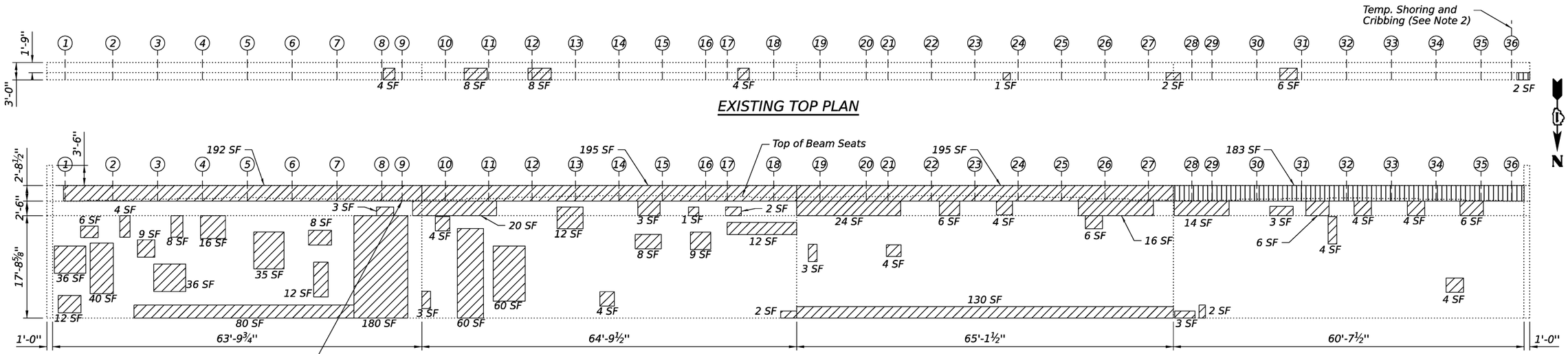

SOUTH ABUTMENT ELEVATION (NORTH FACE)

(Looking South)

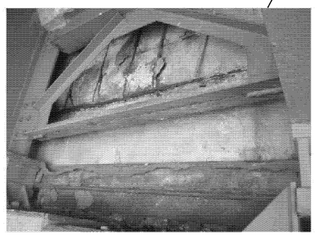

Repair concrete in abutment backwall and PPC beams diaphragm with shortcrete. If not possible, remove and reinstall steel cross frames. Cost included in Structural Repair of Concrete.

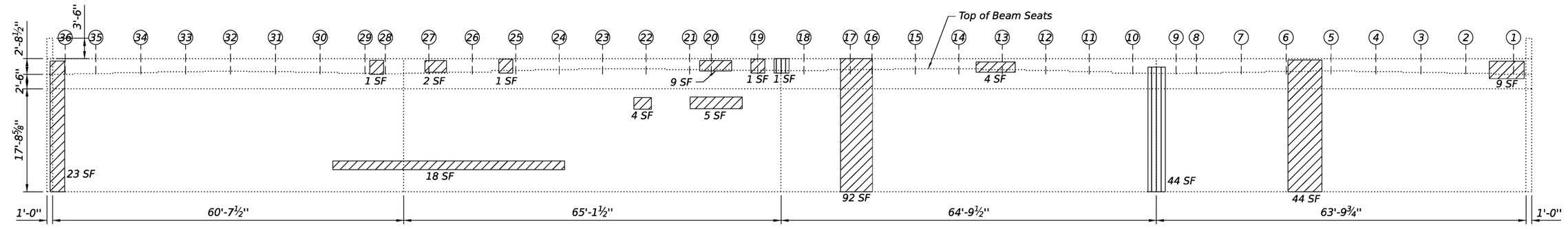

SOUTH ABUTMENT ELEVATION (SOUTH FACE)

(Looking North)

NOTES:

1. *Quantities and limits shown are estimated for bidding purposes only. The actual areas to be repaired, and the type(s) of repairs to be used, will be determined by the Engineer in the field at the time of construction.*
2. *Temporary shoring and cribbing shall be installed prior to the start of the structural repair of concrete and shall be removed after completing the structural repair of concrete.*
3. *Reactions provided are for the maximum girder spacing and length within the span indicated. Contractor shall verify loading at each shoring location Cost included in pay item "Temporary Shoring and Cribbing".*

BILL OF MATERIAL

Item	Unit	Quantity
Structural Repair Of Concrete (Depth Equal To Or Less Than 5 Inches)	Sq Ft	1756.0
Structural Repair Of Concrete (Depth Greater Than 5 Inches)	Sq Ft	230
Temporary Shoring and Cribbing	Each	1

SUMMARY OF REACTIONS		
		South Abut.
R DL	(k)	47.6
R LL	(k)	46.2
R IM	(k)	9.2
R Total	(k)	79.9

LEGEND:

Structual Repair of Concrete (Depth Equal To Or Less Than 5 Inches)

Structual Repair of Concrete (Depth Greater Than 5 Inches)

CiorbaGroup
8725 W. Higgins Rd, Ste 600, Chicago, IL 60631
P 773.775.4009 | www.ciorba.com

USER NAME =	DESIGNED - SIK	REVISED -	
	CHECKED - BWS	REVISED -	
PLOT SCALE =	DRAWN - ETK, SIK	REVISED -	
PLOT DATE =	CHECKED - BWS	REVISED -	

STATE OF ILLINOIS
DEPARTMENT OF TRANSPORTATION

SOUTH ABUTMENT REPAIRS
STRUCTURE NO. 016–0977

SHEET SF-15 OF SF-24 SHEETS

F.A.I. RTE.	SECTION	COUNTY	TOTAL SHEETS	SHEET NO.
290	(0404-316-HB) BR24	COOK	276	202
		CONTRACT NO. 62W99		
	ILLINOIS	FED. AID PROJECT		

MODEL: $MODELNAME$
FILE NAME: pw://ciorba-pw.bentley.com:ciorba-pw-01/Documents/Projects/IL_DOT/D1/0021693.06/CADD Data/Sht/Structural/016-0977/160977-62W99-15-SAbutRep.dgn
4/30/2026 7:13:47 PM

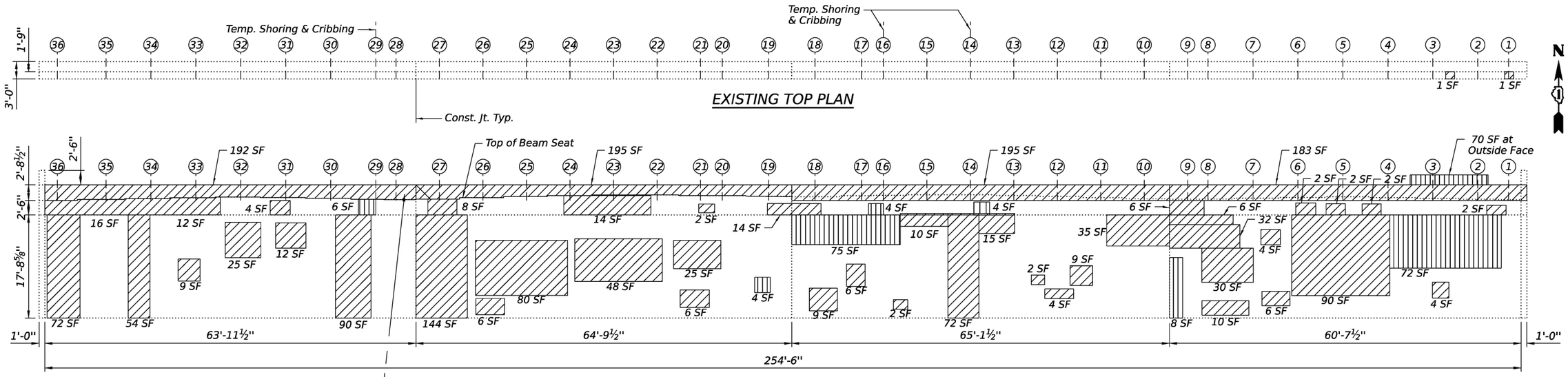

EXISTING TOP PLAN

NORTH ABUTMENT ELEVATION (SOUTH FACE)

(Looking North)

Repair concrete in abutment backwall and PPC beams diaphragm with shortcrete. If not possible, remove and reinstall steel cross frames. Cost included in Structural Repair of Concrete.

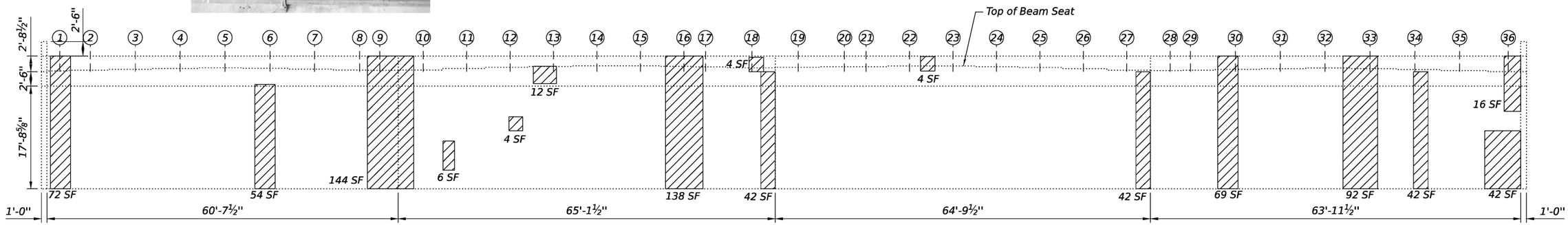

NORTH ABUTMENT ELEVATION (NORTH FACE)

(Looking South)

NOTES:

1. *Quantities and limits shown are estimated for bidding purposes only. The actual areas to be repaired, and the type(s) of repairs to be used, will be determined by the Engineer in the field at the time of construction.*
2. *Temporary shoring and cribbing shall be installed prior to the start of the structural repair of concrete and shall be removed after completing the structural repair of concrete.*
3. *Reactions provided are for the maximum girder spacing and length within the span indicated. Contractor shall verify loading at each shoring location Cost included in pay item "Temporary Shoring and Cribbing".*

BILL OF MATERIAL

Item	Unit	Quantity
Structural Repair Of Concrete (Depth Equal To Or Less Than 5 Inches)	Sq Ft	2,551
Structural Repair Of Concrete (Depth Greater Than 5 Inches)	Sq Ft	243
Temporary Shoring and Cribbing	Each	3

SUMMARY OF REACTIONS		
		South Abut.
R DL	(k)	47.6
R LL	(k)	46.2
R IM	(k)	9.2
R Total	(k)	79.9

LEGEND:

Structural Repair of Concrete (Depth Equal To Or Less Than 5 Inches)

Structural Repair of Concrete (Depth Greater Than 5 Inches)

CiorbaGroup
8725 W. Higgins Rd, Ste 600, Chicago, IL 60631
P 773.775.4009 | www.ciorba.com

USER NAME =		DESIGNED -	SIK	REVISED -	
		CHECKED -	BWS	REVISED -	
PLOT SCALE =		DRAWN -	ETK, SIK	REVISED -	
PLOT DATE =		CHECKED -	BWS	REVISED -	

STATE OF ILLINOIS
DEPARTMENT OF TRANSPORTATION

NORTH ABUTMENT REPAIRS
STRUCTURE NO. 016–0977

SHEET SF-16 OF SF-24 SHEETS

F.A.I. RTE.	SECTION	COUNTY	TOTAL SHEETS	SHEET NO.
290	(0404-316-HB) BR24	COOK	276	203
		CONTRACT NO. 62W99		
	ILLINOIS	FED. AID PROJECT		

MODEL: $MODELNAME$
FILE NAME: pw://ciorba-pw.bentley.com:ciorba-pw-01/Documents/Projects/IL_DOT/D1/0021693.06/CADD Data/Shl/Structural/016-0977/0160977-62W99-16-NAbutRep.dgn

4/30/2026 7:13:59 PM

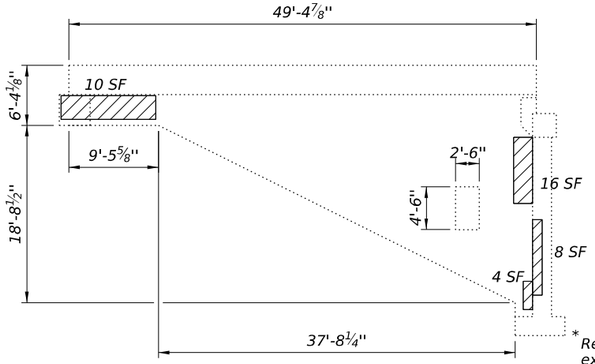

SE WINGWALL (OUTSIDE FACE)

(Looking West)

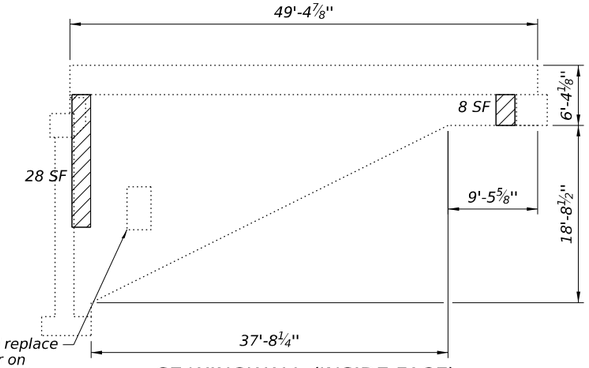

SE WINGWALL (INSIDE FACE)

(Looking East)

* Remove and replace existing door on both curtain walls. For details see sheet SF-23.

* Contractor shall field verify dimensions of Access Door before sawcutting the walls.

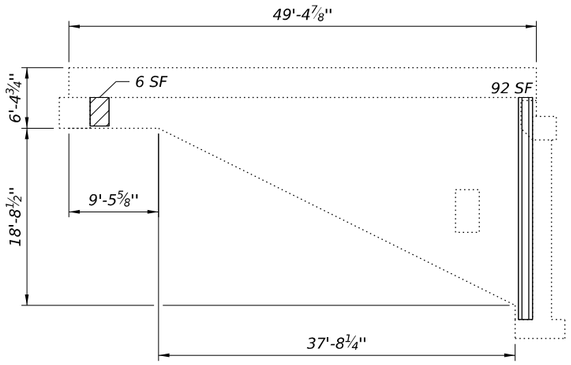

SW WINGWALL (INSIDE FACE)

(Looking West)

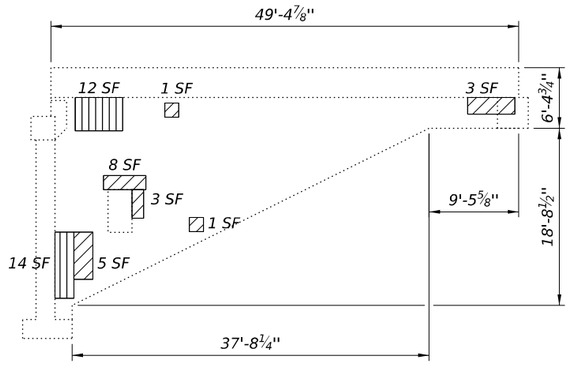

SW WINGWALL (OUTSIDE FACE)

(Looking East)

NOTES:

1. Quantities and limits shown are estimated for bidding purposes only. The actual areas to be repaired, and the type(s) of repairs to be used, will be determined by the Engineer in the field at the time of construction.
2. For Pile Caps Reconstruction, see Sheet SF-21.

BILL OF MATERIAL

Item	Unit	Quantity
Structural Repair Of Concrete (Depth Equal To Or Less Than 5 Inches)	Sq Ft	101
Structural Repair Of Concrete (Depth Greater Than 5 Inches)	Sq Ft	118

LEGEND:

Structual Repair of Concrete (Depth Equal To Or Less Than 5 Inches)

Structual Repair of Concrete (Depth Greater Than 5 Inches)

CiorbaGroup
8725 W. Higgins Rd, Ste 600, Chicago, IL 60631
P 773.775.4009 | www.ciorba.com

USER NAME =		DESIGNED -	SIK	REVISED -	
		CHECKED -	BWS	REVISED -	
PLOT SCALE =		DRAWN -	ETK, SIK	REVISED -	
PLOT DATE =		CHECKED -	BWS	REVISED -	

STATE OF ILLINOIS
DEPARTMENT OF TRANSPORTATION

SOUTH ABUTMENT WINGWALLS REPAIRS
STRUCTURE NO. 016–0977

SHEET SF-17 OF SF-24 SHEETS

F.A.I. RTE.	SECTION	COUNTY	TOTAL SHEETS	SHEET NO.
290	(0404-316-HB) BR24	COOK	276	204
		CONTRACT NO. 62W99		
	ILLINOIS	FED. AID PROJECT		

MODEL: sMODELNAMES
FILE NAME: pw:\\ciorba-pw.bentley.com:ciorba-pw-01\Documents\Projects\IL_DOT.D1\0021693.06\CADD Data\Sht\Structural\016-0977\016097-62W99-17-SWingwallRep.dgn
4/30/2026 7:14:11 PM

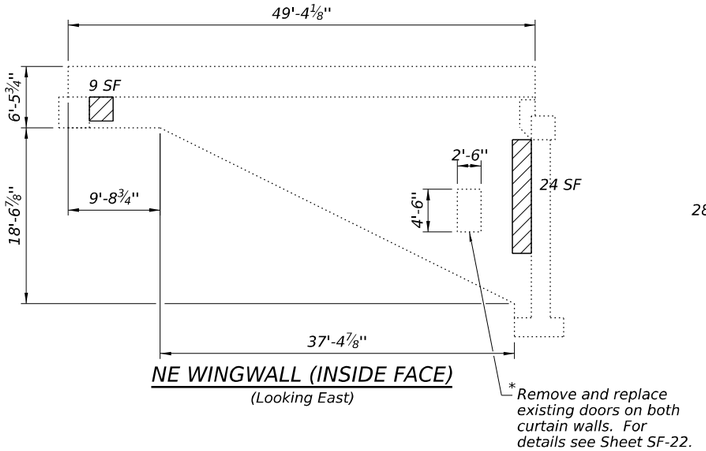

NE WINGWALL (INSIDE FACE)

(Looking East)

* Remove and replace existing doors on both curtain walls. For details see Sheet SF-22.

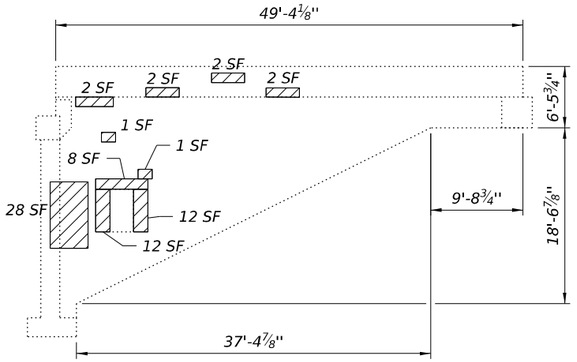

NE WINGWALL (OUTSIDE FACE)

(Looking West)

* Contractor shall field verify dimensions of Access Door before sawcutting the walls.

NW WINGWALL (OUTSIDE FACE)

(Looking East)

NW WINGWALL (INSIDE FACE)

(Looking West)

NOTES:

1. Quantities and limits shown are estimated for bidding purposes only. The actual areas to be repaired, and the type(s) of repairs to be used, will be determined by the Engineer in the field at the time of construction.
2. For Pile Caps Reconstruction, see Sheet SF-21.
3. Concrete Removal of NW Wingwall included in the Bill of Material on sheet SF-21.

BILL OF MATERIAL

Item	Unit	Quantity
Structural Repair Of Concrete (Depth Equal To Or Less Than 5 Inches)	Sq Ft	276
Structural Repair Of Concrete (Depth Greater Than 5 Inches)	Sq Ft	16

LEGEND:

Structual Repair of Concrete (Depth Equal To Or Less Than 5 Inches)

Structual Repair of Concrete (Depth Greater Than 5 Inches)

Concrete Removal

CiorbaGroup
8725 W. Higgins Rd, Ste 600, Chicago, IL 60631
P 773.775.4009 | www.ciorba.com

USER NAME =	DESIGNED - SIK	REVISED -	
	CHECKED - BWS	REVISED -	
PLOT SCALE =	DRAWN - ETK, SIK	REVISED -	
PLOT DATE =	CHECKED - BWS	REVISED -	

STATE OF ILLINOIS
DEPARTMENT OF TRANSPORTATION

NORTH ABUTMENT WINGWALLS REPAIRS
STRUCTURE NO. 016–0977

SHEET SF-18 OF SF-24 SHEETS

F.A.I. RTE.	SECTION	COUNTY	TOTAL SHEETS	SHEET NO.
290	(0404-316-HB) BR24	COOK	276	205
		CONTRACT NO. 62W99		
	ILLINOIS	FED. AID PROJECT		

MODEL: sMODELNAMES
FILE NAME: pw://ciorba-pw.bentley.com:ciorba-pw-01/Documents/Projects/IL_DOT/D1/0021693.06/CADD Data/Sht/Structural/016-0977/0160977-62W99-18-NWWingwallRep.dgn
4/30/2026 7:14:23 PM

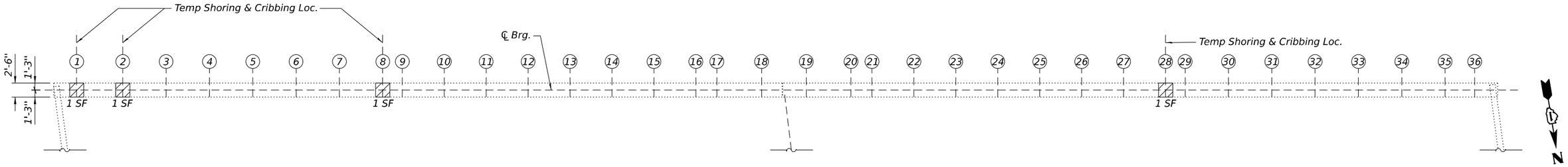

SOUTH APPROACH BENT PLAN

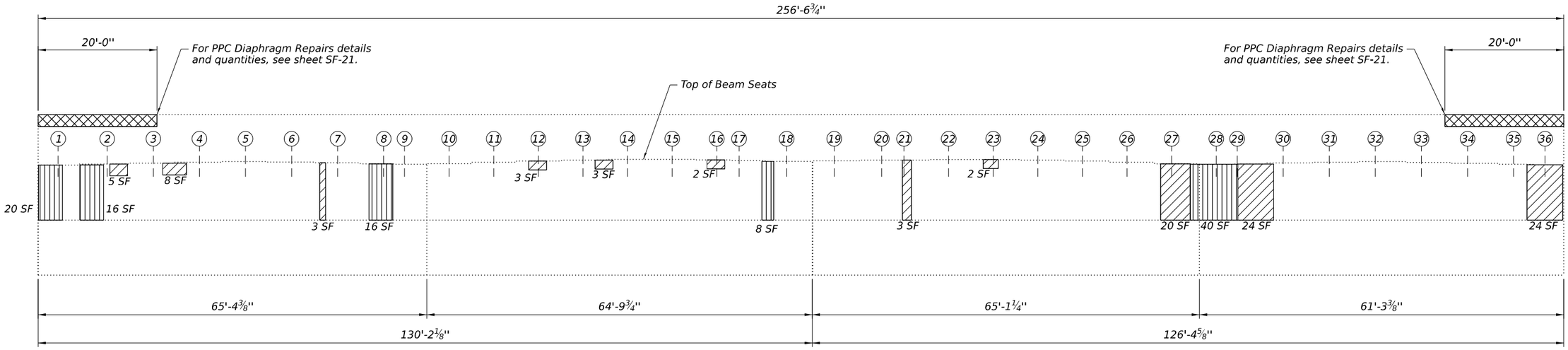

SOUTH APPROACH BENT ELEVATION

(Looking South)

NOTES:

1. Quantities and limits shown are estimated for bidding purposes only. The actual areas to be repaired, and the type(s) of repairs to be used, will be determined by the Engineer in the field at the time of construction.
2. Temporary shoring and cribbing shall be installed prior to the start of the structural repair of concrete and shall be removed after completing the structural repair of concrete.
3. Reactions provided are for the maximum girder spacing and length within the span indicated. Contractor shall verify loading at each shoring location Cost included in pay item "Temporary Shoring and Cribbing".

SUMMARY OF REACTIONS		
		South Abut.
R DL	(k)	47.6
R LL	(k)	46.2
R IM	(k)	9.2
R Total	(k)	79.9

BILL OF MATERIAL

Item	Unit	Quantity
Structural Repair Of Concrete (Depth Equal To Or Less Than 5 Inches)	Sq Ft	101
Structural Repair Of Concrete (Depth Greater Than 5 Inches)	Sq Ft	100
Temporary Shoring And Cribbing	Each	4

LEGEND:

- Structural Repair of Concrete (Depth Equal To Or Less Than 5 Inches)
- Structural Repair of Concrete (Depth Greater Than To 5 Inches)
- Concrete Removal

CiorbaGroup
8725 W. Higgins Rd, Ste 600, Chicago, IL 60631
P 773.775.4009 | www.ciorba.com

USER NAME =		DESIGNED -	SIK	REVISED -	
		CHECKED -	BWS	REVISED -	
PLOT SCALE =		DRAWN -	ETK, SIK	REVISED -	
PLOT DATE =		CHECKED -	BWS	REVISED -	

STATE OF ILLINOIS
DEPARTMENT OF TRANSPORTATION

SOUTH APPROACH BENT REPAIRS
STRUCTURE NO. 016–0977

SHEET SF-19 OF SF-24 SHEETS

F.A.I. RTE.	SECTION	COUNTY	TOTAL SHEETS	SHEET NO.
290	(0404-316-HB) BR24	COOK	276	206
		CONTRACT NO. 62W99		
	ILLINOIS	FED. AID PROJECT		

MODEL: sMODELNAMES
FILE NAME: pw://ciorba-pw.bentley.com:ciorba-pw-01/Documents/Projects/IL_DOT/D1/0021693.06/CADD Data/Sht/Structural/016-0977/0160977-62W99-19-SApprBentRep.dgn
4/30/2026 7:14:34 PM

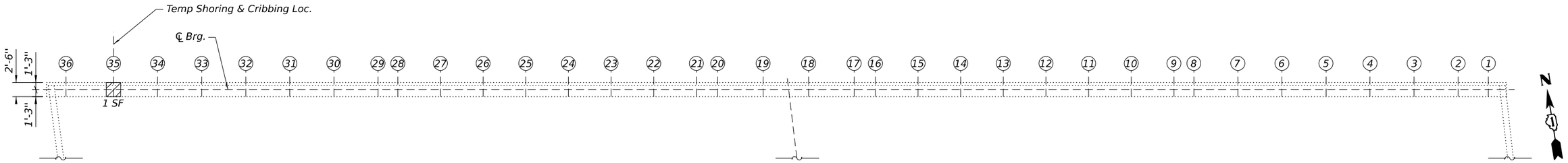

NORTH APPROACH BENT PLAN

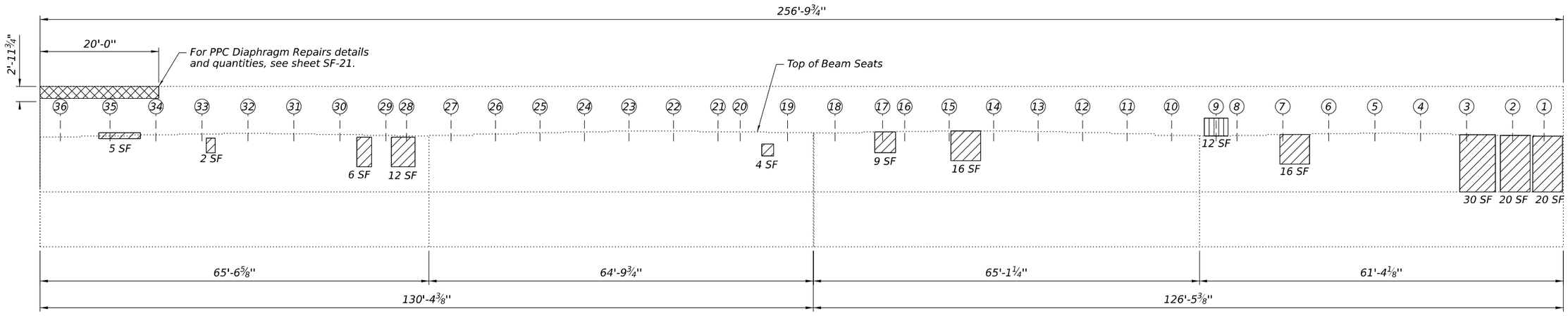

NORTH APPROACH BENT ELEVATION

(Looking North)

NOTES:

1. *Quantities and limits shown are estimated for bidding purposes only. The actual areas to be repaired, and the type(s) of repairs to be used, will be determined by the Engineer in the field at the time of construction.*

SUMMARY OF REACTIONS		
		South Abut.
R DL	(k)	47.6
R LL	(k)	46.2
R IM	(k)	9.2
R Total	(k)	79.9

BILL OF MATERIAL

Item	Unit	Quantity
Structural Repair Of Concrete (Depth Equal To Or Less Than 5 Inches)	Sq Ft	141
Structural Repair Of Concrete (Depth Greater Than 5 Inches)	Sq Ft	12
Temporary Shoring And Cribbing	Each	1

LEGEND:

- Structural Repair of Concrete (Depth Equal To Or Less Than 5 Inches)
- Structural Repair of Concrete (Depth Equal To Or Less Than 5 Inches)
- Concrete Removal

CiorbaGroup
8725 W. Higgins Rd, Ste 600, Chicago, IL 60631
P 773.775.4009 | www.ciorba.com

USER NAME =		DESIGNED -	SIK	REVISED -	
		CHECKED -	BWS	REVISED -	
PLOT SCALE =		DRAWN -	ETK, SIK	REVISED -	
PLOT DATE =		CHECKED -	BWS	REVISED -	

STATE OF ILLINOIS
DEPARTMENT OF TRANSPORTATION

NORTH APPROACH BENT REPAIRS
STRUCTURE NO. 016–0977
SHEET SF-20 OF SF-24 SHEETS

F.A.I. RTE.	SECTION	COUNTY	TOTAL SHEETS	SHEET NO.
290	(0404-316-HB) BR24	COOK	276	207
		CONTRACT NO. 62W99		
	ILLINOIS	FED. AID PROJECT		

MODEL: sMODELNAMES
FILE NAME: pw://ciorba-pw.bentley.com:ciorba-pw-01/Documents/Projects/IL_DOT.DJ/0021693.06/CADD Data/Sht/Structural/016-0977/160977-62W99-20-NApprBentRep.dgn
4/30/2026 7:14:46 PM

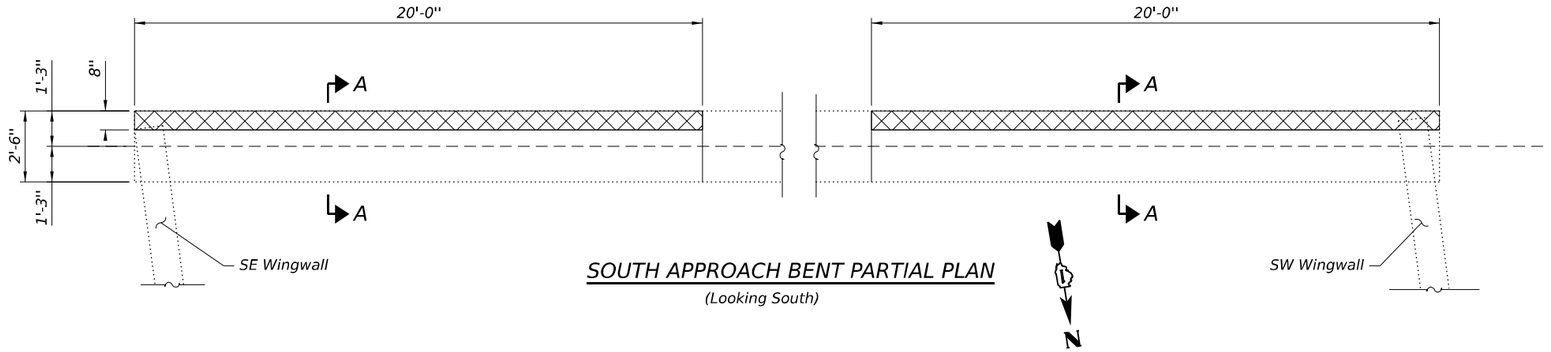

SOUTH APPROACH BENT PARTIAL PLAN

(Looking South)

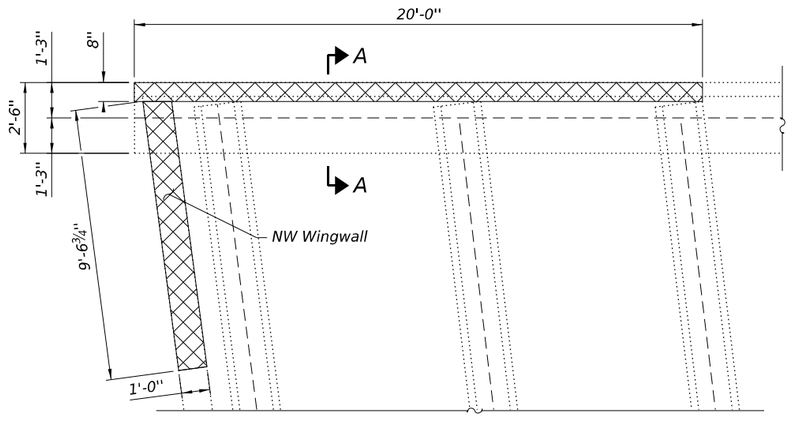

NORTH APPROACH BENT PARTIAL PLAN

(Looking North)

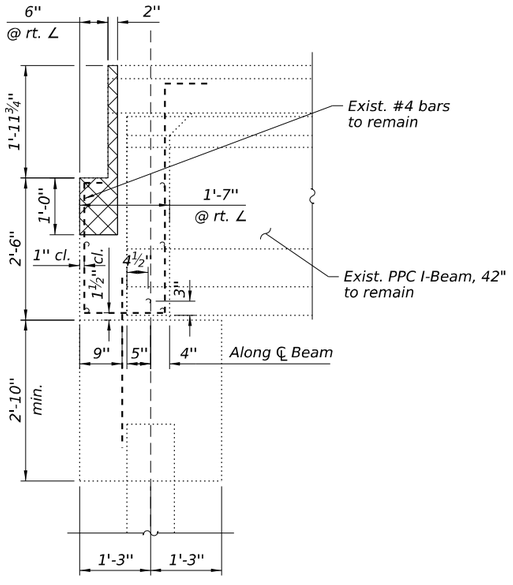

SECTION A-A

(Removal)

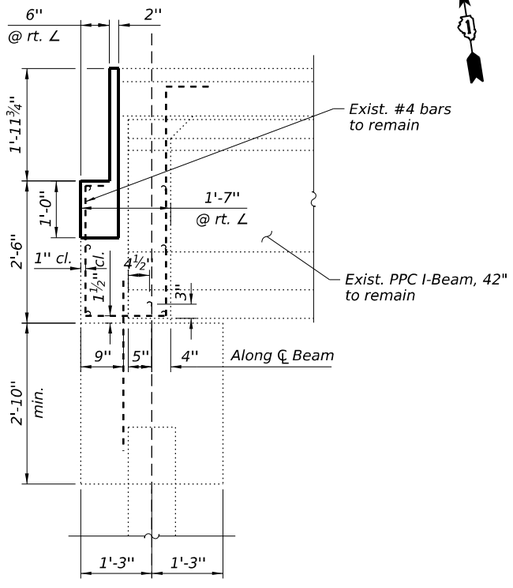

SECTION A-A

(Reconstruction)

NOTES:

1. Quantities and limits shown are estimated for bidding purposes only. The actual areas to be repaired, and the type(s) of repairs to be used, will be determined by the Engineer in the field at the time of construction.
2. Care shall be taken when removing concrete near PPC beam ends.
3. For Northwest Wingwall Elevation view, see Sheet SF-18.

BILL OF MATERIAL

Item	Unit	Quantity
Concrete Removal	Cu Yd	4.5
Concrete Structures	Cu Yd	4.5
Reinforcement Bars, Epoxy Coated	Pound	900

LEGEND:

Concrete Removal

CiorbaGroup
8725 W. Higgins Rd, Ste 600, Chicago, IL 60631
P 773.775.4009 | www.ciorba.com

USER NAME =	DESIGNED - SIK	REVISED -
	CHECKED - BWS	REVISED -
PLOT SCALE =	DRAWN - ETK, SIK	REVISED -
PLOT DATE =	CHECKED - BWS	REVISED -

STATE OF ILLINOIS
DEPARTMENT OF TRANSPORTATION

PPC DIAPHRAGMS REPAIRS
STRUCTURE NO. 016–0977
SHEET SF-21 OF SF-24 SHEETS

F.A.I. RTE.	SECTION	COUNTY	TOTAL SHEETS	SHEET NO.
290	(0404-316-HB) BR24	COOK	276	208
		CONTRACT NO. 62W99		
	ILLINOIS	FED. AID PROJECT		

MODEL: sMODELNAMES
FILE NAME: pw://ciorba-pw.bentley.com:ciorba-pw-01/Documents/Projects/IL_DOT/D1/0021693.06/CADD Data/Sht/Structural/016-0977/0160977-62W99-21-PileCapsReconstr.dgn
4/30/2026 7:14:59 PM

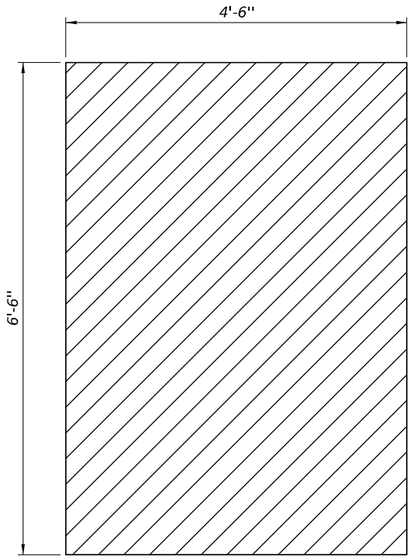

CONCRETE REMOVAL DETAILS

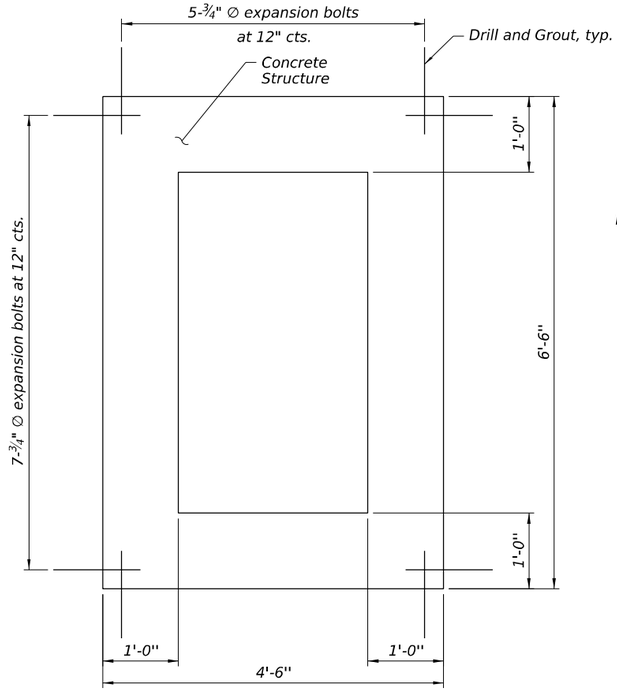

CONCRETE FILL AT ACCESS HOLE

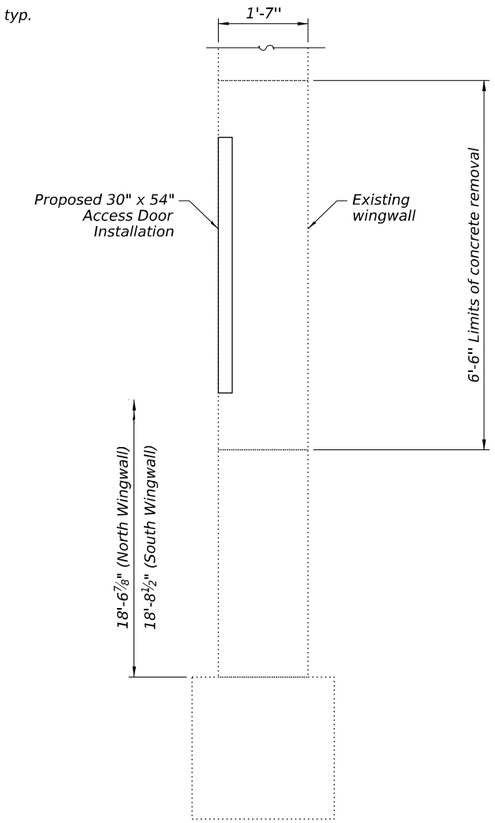

SECTION VIEW

NOTES:

1. For locations of Access Door instalation see sheets SF-17 and SF-18.
2. Cost of new door and all components including removal of concrete is included in cost of Access Door.
3. Expansion bolts shall be ¾" ∅ hooked bolts shall extend 9" min. into existing concrete.
4. Paint all aluminum surfaces in contact with concrete with epoxy paint.

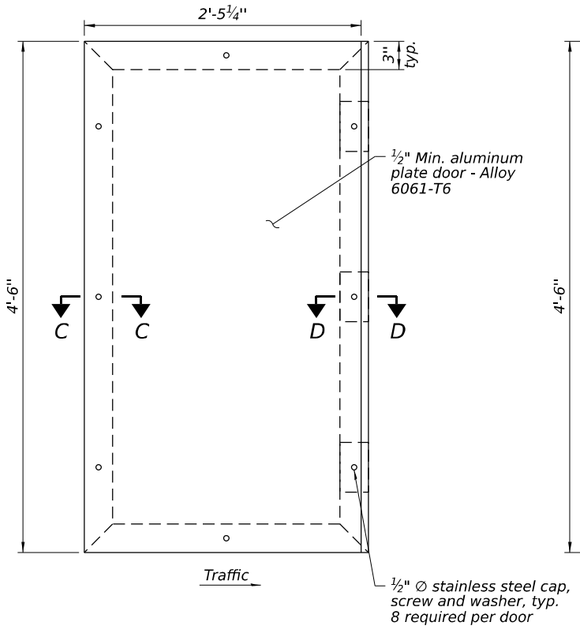

ACCESS DOOR

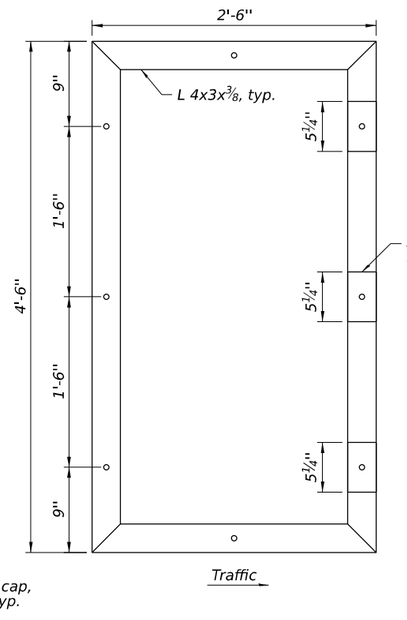

ACCESS DOOR FRAME

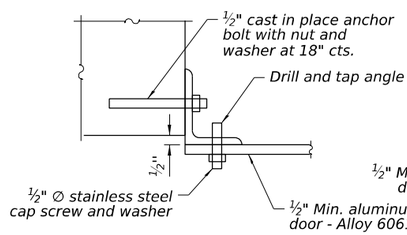

SECTION C-C

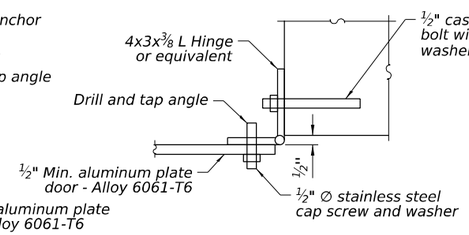

SECTION D-D

BILL OF MATERIAL

Item	Unit	Quantity
Access Door	Each	4

CiorbaGroup
8725 W. Higgins Rd, Ste 600, Chicago, IL 60631
P 773.775.4009 | www.ciorba.com

USER NAME =		DESIGNED - SIK	REVISED -	STATE OF ILLINOIS DEPARTMENT OF TRANSPORTATION	ACCESS DOOR INSTALLATION STRUCTURE NO. 016–0977
		CHECKED - BWS	REVISED -		
PLOT SCALE =		DRAWN - ETK, SIK	REVISED -		SHEET SF-22 OF SF-24 SHEETS
PLOT DATE =		CHECKED - BWS	REVISED -		

F.A.I. RTE.	SECTION	COUNTY	TOTAL SHEETS	SHEET NO.
290	(0404-316-HB) BR24	COOK	276	209
		CONTRACT NO. 62W99		
	ILLINOIS	FED. AID PROJECT		

MODEL: SMODELNAMES
FILE NAME: pw://ciorba-pw.bentley.com:ciorba-pw-01/Documents/Projects/IL_DOT/D1/002 1693.06/CADD Data/Sht/Structural/016-0977/016977-62W99-22-AccessDoorReplacement.dgn
4/30/2026 7:15:10 PM

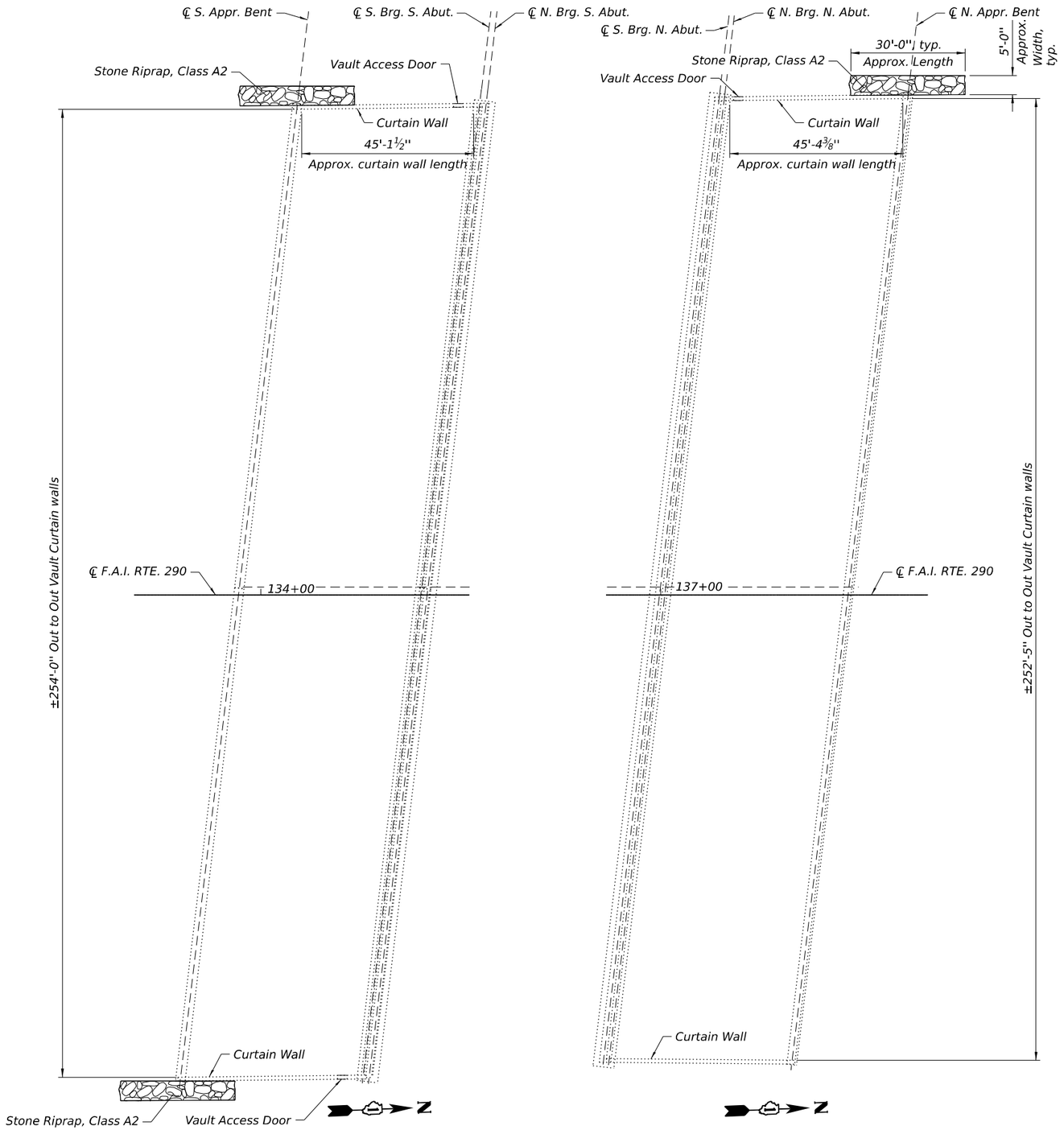

SOUTH ABUTMENT VAULT INTERIOR PLAN

NORTH ABUTMENT VAULT INTERIOR PLAN

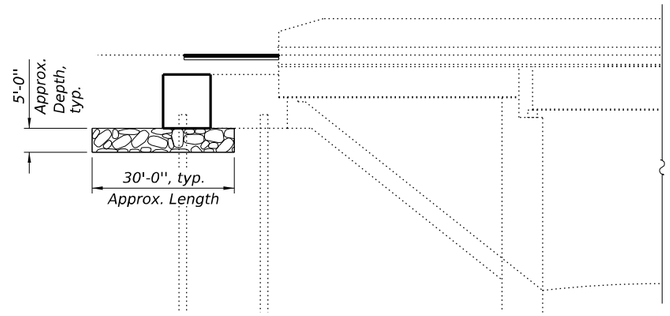

ABUTMENT VAULT CURTAIN WALL ELEVATION

(Southeast Abutment Vault shown)
(Looking West)

BILL OF MATERIAL

Item	Unit	Quantity
Stone Riprap, Class A2	Ton	9.0

MODEL: sMODELNAMES
FILE NAME: pw:\\ciorba-pw.bentley.com:ciorba-pw-01\Documents\Projects\IL_DOT.D1\0021693.06\CADD Data\Sht\Structural\016-0977\016097-62W99-23-ErosionRepair.dgn
4/30/2026 7:15:23 PM

CiorbaGroup
8725 W. Higgins Rd, Ste 600, Chicago, IL 60631
P 773.775.4009 | www.ciorba.com

USER NAME =	DESIGNED - SIK	REVISED -
	CHECKED - BWS	REVISED -
PLOT SCALE =	DRAWN - ETK, SIK	REVISED -
PLOT DATE =	CHECKED - BWS	REVISED -

STATE OF ILLINOIS
DEPARTMENT OF TRANSPORTATION

VAULTED ABUTMENT EROSION REPAIR
STRUCTURE NO. 016–0977

SHEET SF-23 OF SF-24 SHEETS

F.A.I. RTE.	SECTION	COUNTY	TOTAL SHEETS	SHEET NO.
290	(0404-316-HB) BR24	COOK	276	210
		CONTRACT NO. 62W99		
	ILLINOIS	FED. AID PROJECT		

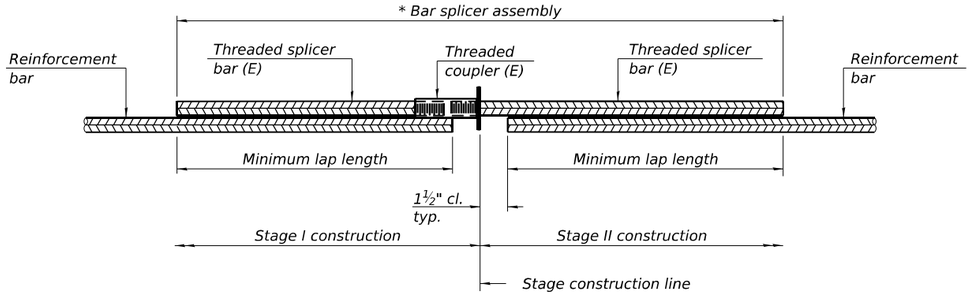

STANDARD BAR SPLICER ASSEMBLY PLAN

Only bar splicer assemblies as presented on the approved QPL list may be used.

Threaded splicer bar length = min. lap length + 1½" + thread length

** Epoxy not required on Bar Splicer Assembly components used in conjunction with black bars.*

Location	Bar size	No. assemblies required	Minimum lap length
North Abut. Jt. (Deck)	#6	24	5'-3"
North Abut. Jt. (Hatchblock)	#6	6	2'-4"
South Abut. Jt. (Deck)	#6	24	5'-3"
South Abut. Jt. (Hatchblock)	#6	6	2'-4"

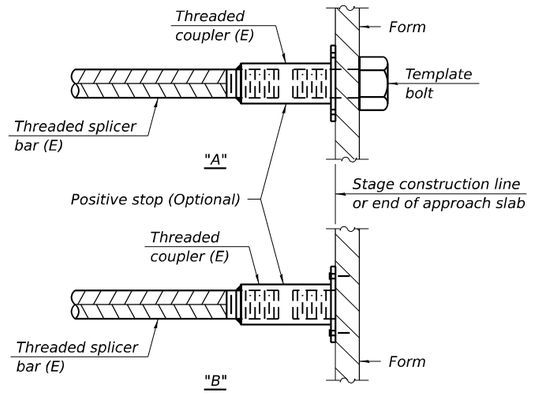

INSTALLATION AND SETTING METHODS

"A" : Set bar splicer assembly by means of a template bolt.
"B" : Set bar splicer assembly by nailing to wood forms or cementing to steel forms.
(E) : Indicates epoxy coating.

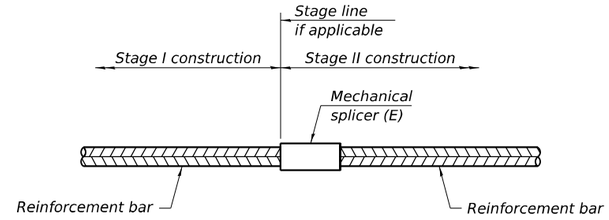

STANDARD MECHANICAL SPLICER

Location	Bar size	No. assemblies required

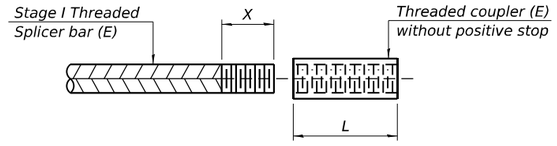

THREADING OF ASSEMBLIES

The threaded length "X" shall be no more than L/2. The bar should be tightened until 0-1 thread(s) is/are exposed.

Notes:

Splicer bars shall be deformed with threaded ends and have a minimum 60 ksi yield strength.

All reinforcement shall be lapped and tied to the splicer bars.

Bar splicer assemblies shall be epoxy coated according to the requirements for reinforcement bars. See Section 508 of the Standard Specifications.

See approved list of bar splicer assemblies and mechanical splicers for alternatives.

BSD-1 4-4-2025

CiorbaGroup
8725 W. Higgins Rd, Ste 600, Chicago, IL 60631
P 773.775.4009 | www.ciorba.com

USER NAME =	DESIGNED - SIK	REVISED -	
	CHECKED - BWS	REVISED -	
PLOT SCALE =	DRAWN - ETK, SIK	REVISED -	
PLOT DATE =	CHECKED - BWS	REVISED -	

STATE OF ILLINOIS
DEPARTMENT OF TRANSPORTATION

BAR SPLICER ASSEMBLY AND MECHANICAL SPLICER DETAILS
STRUCTURE NO. 016–0977
SHEET SF-24 OF SF-24 SHEETS

F.A.I. RTE.	SECTION	COUNTY	TOTAL SHEETS	SHEET NO.
290	(0404-316-HB) BR24	COOK	276	211
		CONTRACT NO. 62W99		
	ILLINOIS	FED. AID PROJECT		

MODEL: sMODELNAMES
FILE NAME: pw:/ciorba-pw.bentley.com:ciorba-pw-01/Documents/Projects/IL_DOT.DJ/0021693.06/CADD Data/Sht/Structural/016-0977/016097-62W99-24-BarSplicer.dgn
4/30/2026 7:15:34 PM

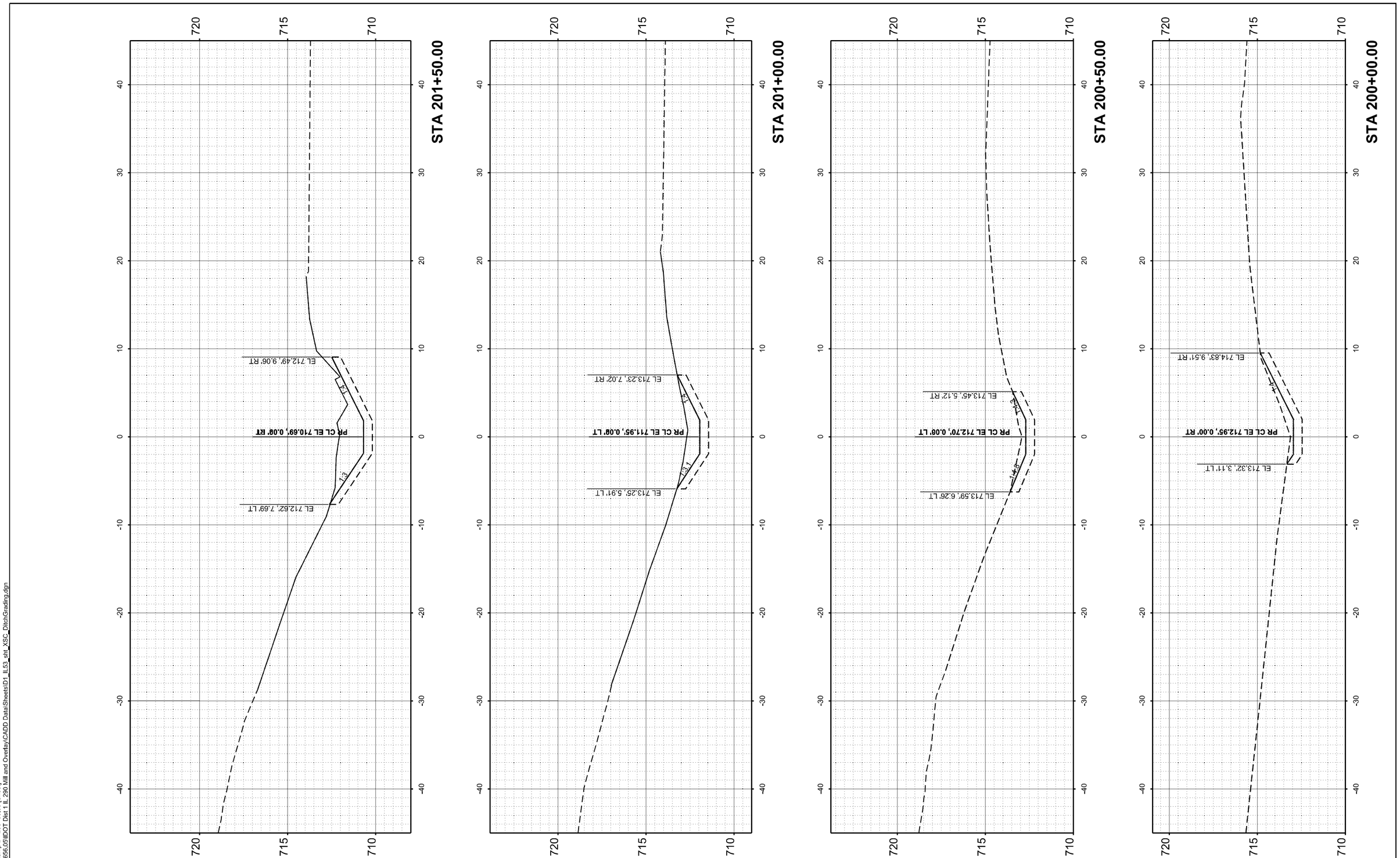

MODEL: NB_Higgins-Ramp B - 200+00.00 [Sheet]
FILE NAME: W:\24001656.05\IDOT Dist 1 IL 290 Mill and Overlay\CADD Data\Sheets\D1_IL53_sht_XSC_DitchGrading.dgn

IMEG
401 E. STATE ST. 4th Floor
ROCKFORD, IL
61104
PH: 815.965.6400
www.imegcorp.com

USER NAME = Marc.A.Personette	DESIGNED - Brad Lange	REVISED -
	DRAWN - Marc Personette	REVISED -
	CHECKED - Corey Stout	REVISED -
PLOT DATE = 3/16/2026	DATE - 3/16/2026	REVISED -

STATE OF ILLINOIS
DEPARTMENT OF TRANSPORTATION

I-290/IL 53 HMA RESURFACING AND BRIDGE REPAIRS
CROSS SECTIONS - NB DITCH GRADING - IL 72 TO RAMP B

SCALE: 1" = 5' | SHEET 1 OF 6 SHEETS | STA. 200+00.00 | TO STA. 201+50.00

F.A.I RTE.	SECTION	COUNTY	TOTAL SHEETS	SHEET NO.
290	(0404-316-HB) BR 24	COOK	276	212
		CONTRACT NO. 62W99		
	ILLINOIS	FED. AID PROJECT		

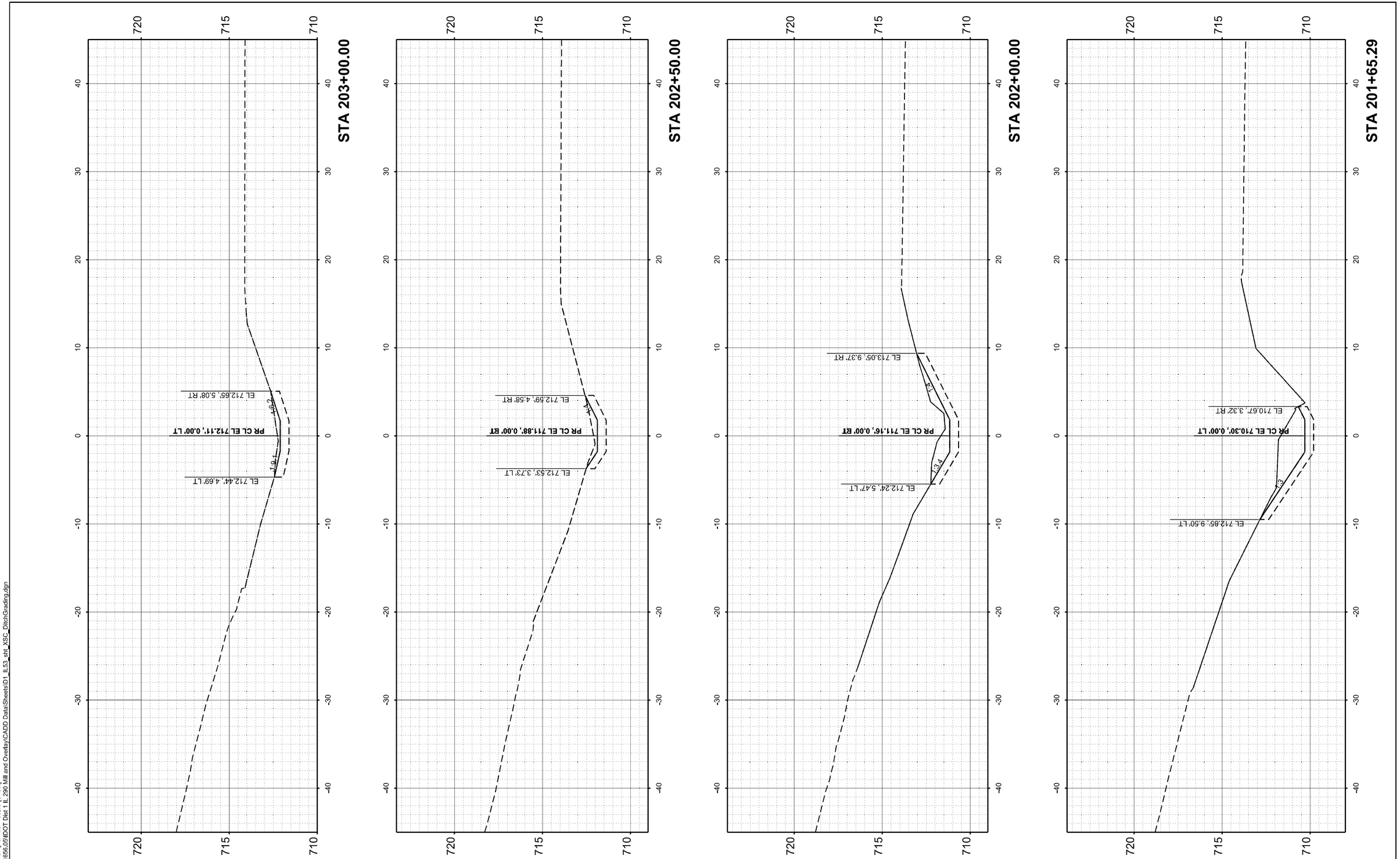

MODEL: NB_Higgins-Ramp B - 201+65.29 [Sheet]
FILE NAME: W:\24001656.05\IDOT Dist 1 IL 290 Mill and Overlay\CADD Data\Sheets\D1_IL53_sht_XSC_DitchGrading.dgn

IMEG
401 E. STATE ST. 4th Floor ROCKFORD, IL 61104
PH: 815.965.6400 www.imegcorp.com

USER NAME = Marc.A.Personette	DESIGNED - Brad Lange	REVISED -	
	DRAWN - Marc Personette	REVISED -	
	CHECKED - Corey Stout	REVISED -	
PLOT DATE = 3/16/2026	DATE - 3/16/2026	REVISED -	

STATE OF ILLINOIS
DEPARTMENT OF TRANSPORTATION

I-290/IL 53 HMA RESURFACING AND BRIDGE REPAIRS
CROSS SECTIONS - NB DITCH GRADING - IL 72 TO RAMP B

SCALE: 1" = 5' | SHEET 2 OF 6 SHEETS | STA. 201+65.29 TO STA. 203+00.00

F.A.I RTE.	SECTION	COUNTY	TOTAL SHEETS	SHEET NO.
290	(0404-316-HB) BR 24	COOK	276	213
		CONTRACT NO. 62W99		
	ILLINOIS	FED. AID PROJECT		

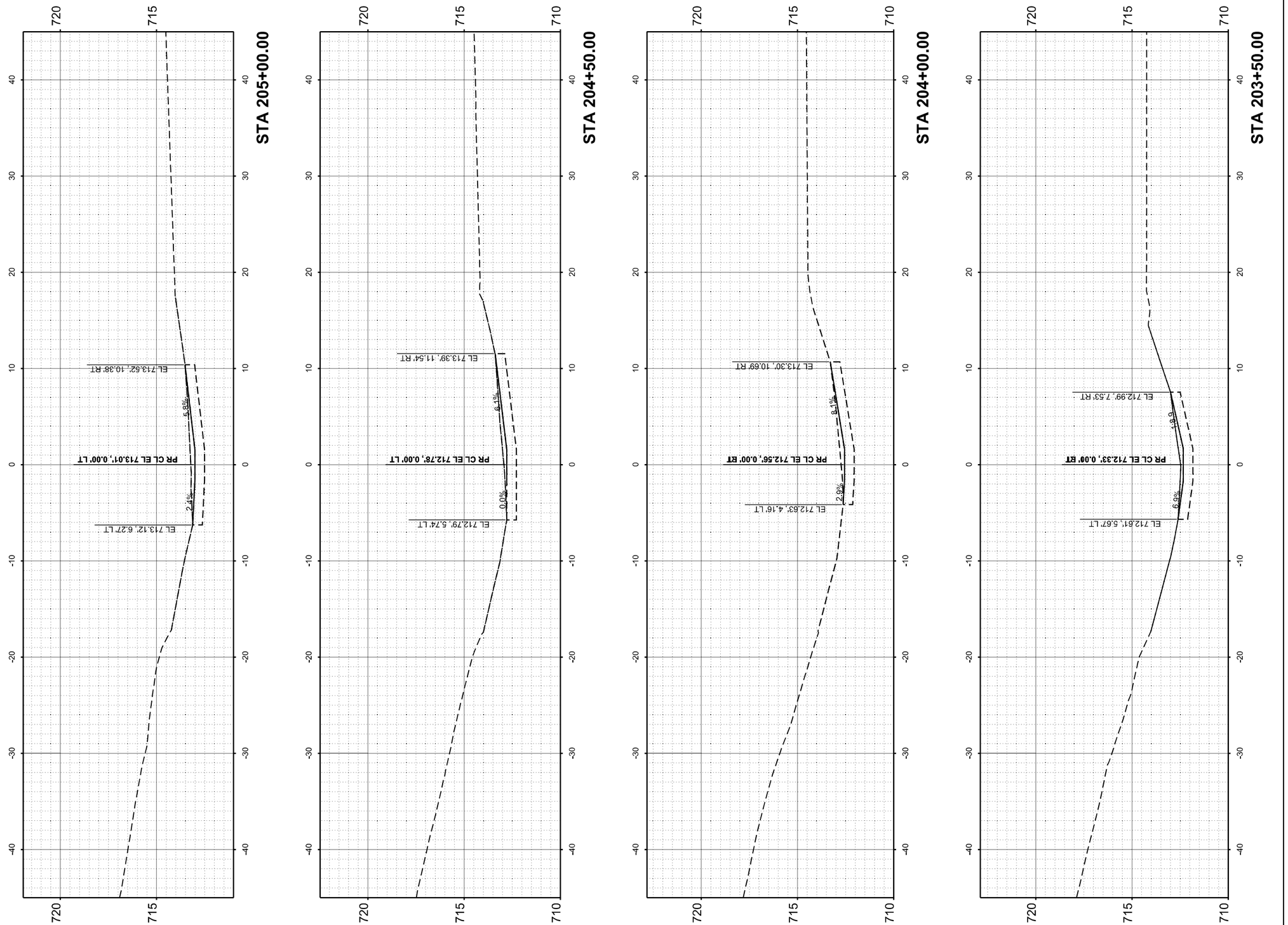

MODEL: NB_Higgins-Ramp B - 203+50.00 [Sheet]
FILE NAME: W:\24001656.05\IDOT Dist 1 IL 290 Mill and Overlay\CADD Data\Sheets\D1_IL53_stn_XSC_DitchGrading.dgn

IMEG
401 E. STATE ST. 4th Floor
ROCKFORD, IL
61104
PH: 815.965.6400
www.imegcorp.com

USER NAME = Marc.A.Personette	DESIGNED - Brad Lange	REVISED -	
	DRAWN - Marc Personette	REVISED -	
	CHECKED - Corey Stout	REVISED -	
PLOT DATE = 3/16/2026	DATE - 3/16/2026	REVISED -	

STATE OF ILLINOIS
DEPARTMENT OF TRANSPORTATION

I-290/IL 53 HMA RESURFACING AND BRIDGE REPAIRS
CROSS SECTIONS - NB DITCH GRADING - IL 72 TO RAMP B

SCALE: 1" = 5' | SHEET 3 OF 6 SHEETS | STA. 203+50.00 | TO STA. 205+00.00

F.A.I RTE.	SECTION	COUNTY	TOTAL SHEETS	SHEET NO.
290	(0404-316-HB) BR 24	COOK	276	214
		CONTRACT NO. 62W99		
	ILLINOIS	FED. AID PROJECT		

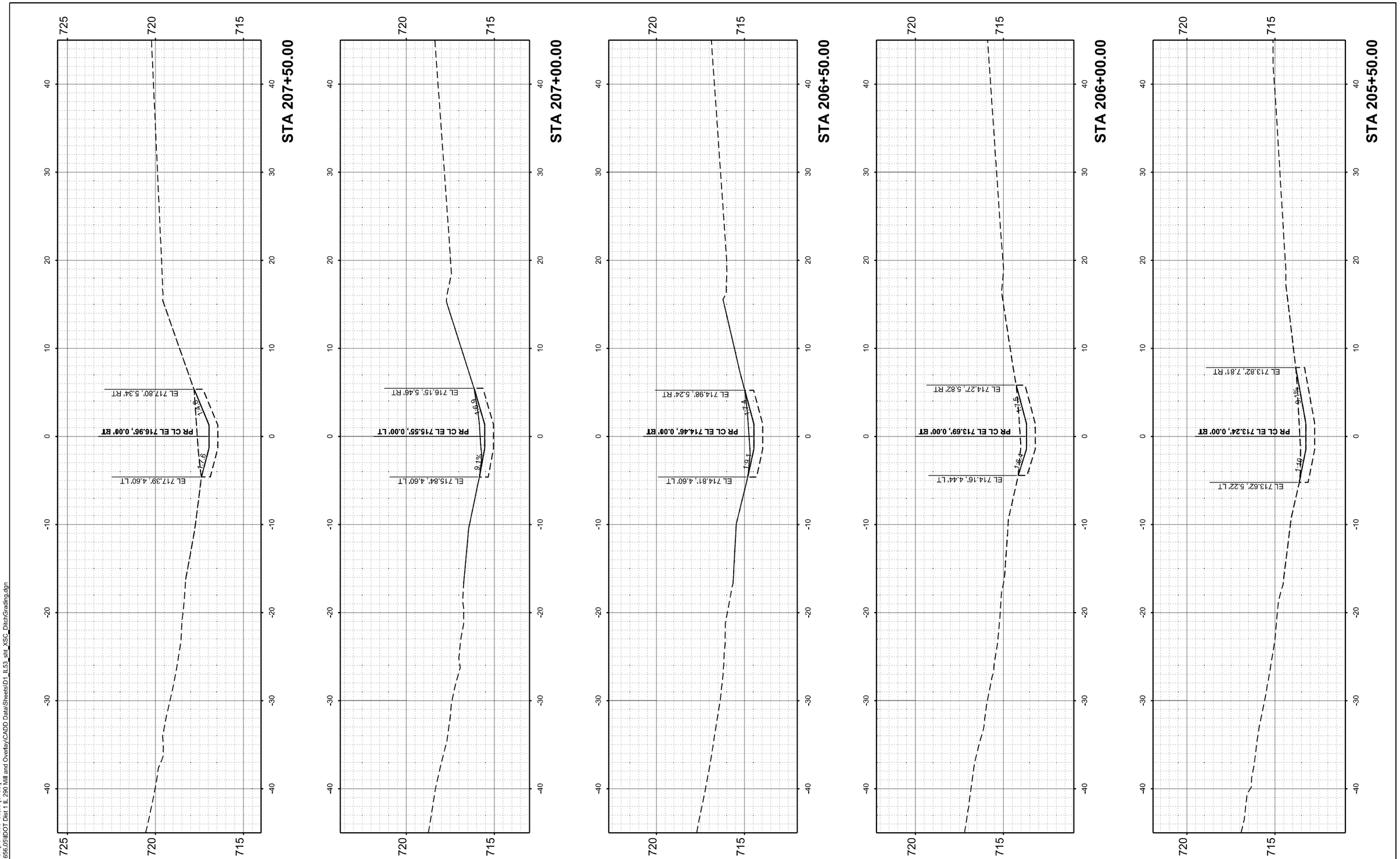

MODEL: NB_Higgins-Ramp B - 205+50.00 [Sheet]
FILE NAME: W:\24001656.05\IDOT Dist 1 IL 290 Mill and Overlay\CADD Data\Sheets\D1_IL53_sht_XSC_DitchGrading.dgn

IMEG
401 E. STATE ST. 4th Floor
ROCKFORD, IL 61104
PH: 815.965.6400
www.imegcorp.com

USER NAME = Marc.A.Personette	DESIGNED - Brad Lange	REVISED -	
	DRAWN - Marc Personette	REVISED -	
	CHECKED - Corey Stout	REVISED -	
PLOT DATE = 3/16/2026	DATE - 3/16/2026	REVISED -	

STATE OF ILLINOIS
DEPARTMENT OF TRANSPORTATION

I-290/IL 53 HMA RESURFACING AND BRIDGE REPAIRS
CROSS SECTIONS - NB DITCH GRADING - IL 72 TO RAMP B

SCALE: 1" = 5' | SHEET 4 OF 6 SHEETS | STA. 205+50.00 | TO STA. 207+50.00

F.A.I RTE.	SECTION	COUNTY	TOTAL SHEETS	SHEET NO.
290	(0404-316-HB) BR 24	COOK	276	215
		CONTRACT NO. 62W99		
		ILLINOIS	FED. AID PROJECT	

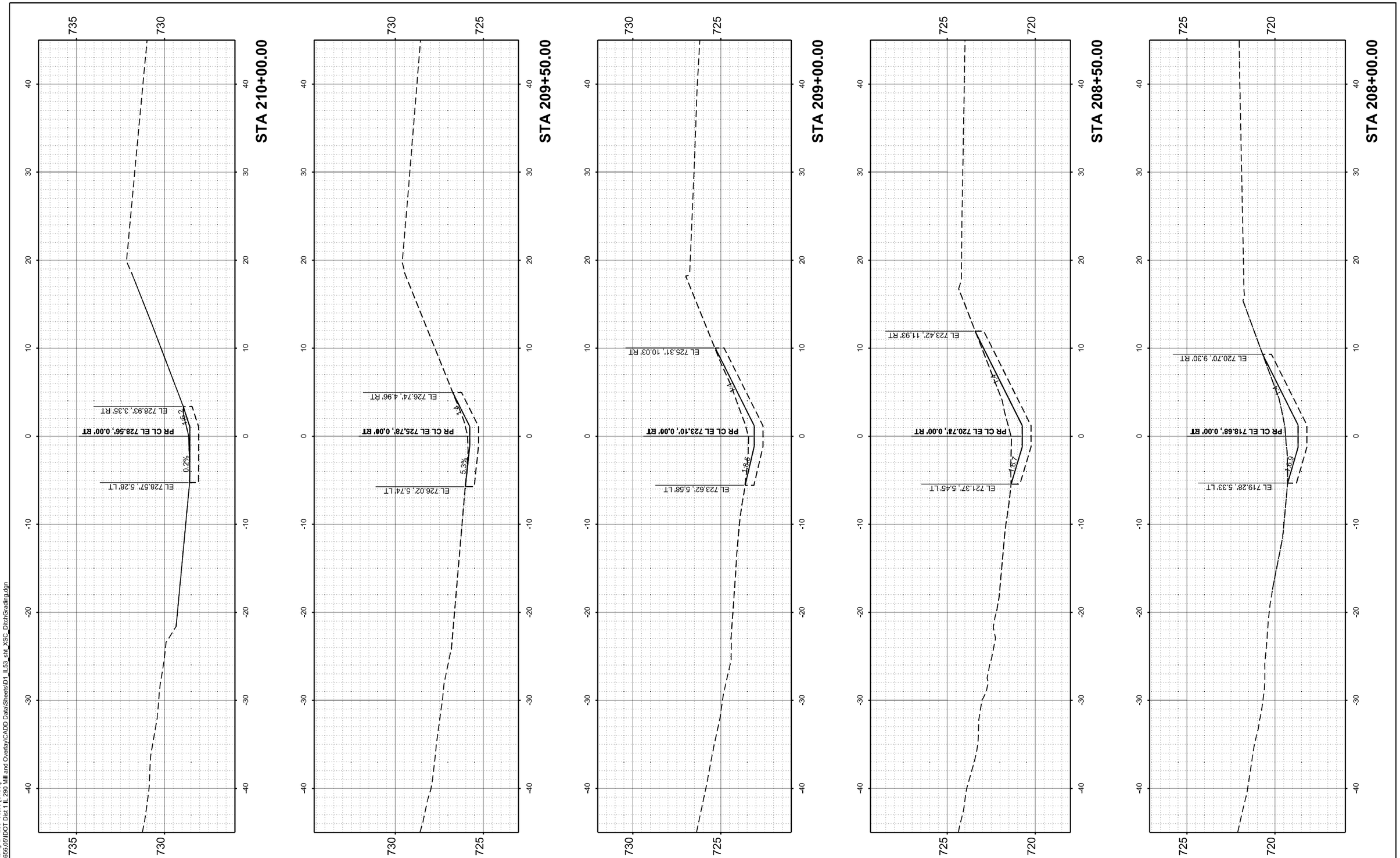

MODEL: NB_Higgins-Ramp B - 208+00.00 [Sheet]
FILE NAME: W:\24001656.05\IDOT Dist 1 IL 290 Mill and Overlay\CADD Data\Sheets\D1_IL53_sht_XSC_DitchGrading.dgn

IMEG
401 E. STATE ST. 4th Floor
ROCKFORD, IL 61104
PH: 815.965.6400
www.imegcorp.com

USER NAME = Marc.A.Personette	DESIGNED - Brad Lange	REVISED -	
	DRAWN - Marc Personette	REVISED -	
	CHECKED - Corey Stout	REVISED -	
PLOT DATE = 3/16/2026	DATE - 3/16/2026	REVISED -	

STATE OF ILLINOIS
DEPARTMENT OF TRANSPORTATION

I-290/IL 53 HMA RESURFACING AND BRIDGE REPAIRS
CROSS SECTIONS - NB DITCH GRADING - IL 72 TO RAMP B

SCALE: 1" = 5' | SHEET 5 OF 6 SHEETS | STA. 208+00.00 TO STA. 210+00.00

F.A.I RTE.	SECTION	COUNTY	TOTAL SHEETS	SHEET NO.
290	(0404-316-HB) BR 24	COOK	276	216
		CONTRACT NO. 62W99		
	ILLINOIS	FED. AID PROJECT		

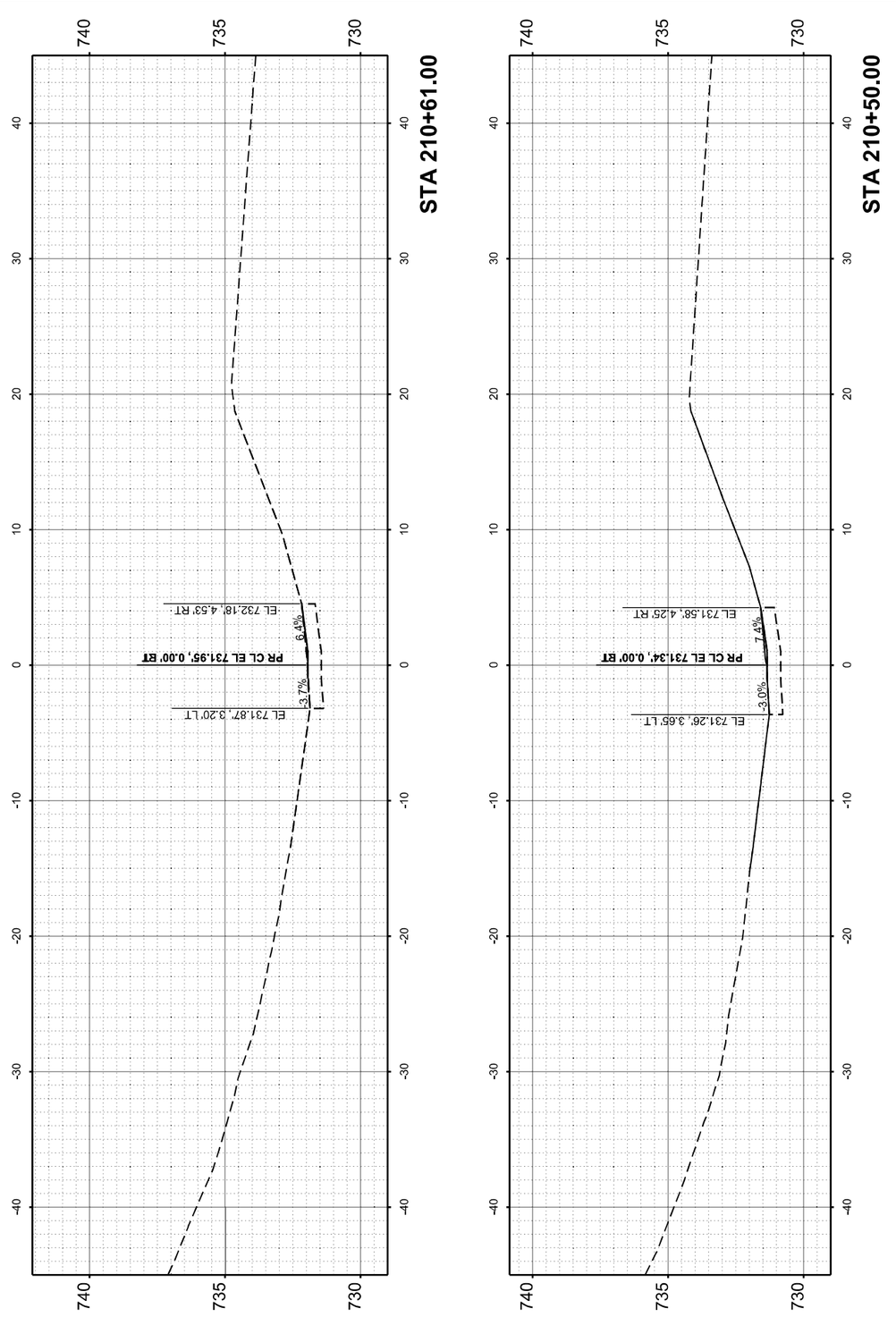

MODEL: NB_Higgins-Ramp B - 210+50.00 [Sheet]
FILE NAME: W:\24001656.05\IDOT Dist 1 IL 290 Mill and Overlay\CADD Data\Sheets\D1_IL53_stit_XSC_DitchGrading.dgn

IMEG
401 E. STATE ST. 4th Floor
ROCKFORD, IL 61104
PH: 815.965.6400
www.imegcorp.com

USER NAME = Marc.A.Personette	DESIGNED - Brad Lange	REVISED -	
	DRAWN - Marc Personette	REVISED -	
	CHECKED - Corey Stout	REVISED -	
PLOT DATE = 3/16/2026	DATE - 3/16/2026	REVISED -	

STATE OF ILLINOIS
DEPARTMENT OF TRANSPORTATION

I-290/IL 53 HMA RESURFACING AND BRIDGE REPAIRS
CROSS SECTIONS - NB DITCH GRADING - IL 72 TO RAMP B

SCALE: 1" = 5' | SHEET 6 OF 6 SHEETS | STA. 210+50.00 | TO STA. 210+61.00

F.A.I RTE.	SECTION	COUNTY	TOTAL SHEETS	SHEET NO.
290	(0404-316-HB) BR 24	COOK	276	217
		CONTRACT NO. 62W99		
	ILLINOIS	FED. AID PROJECT		

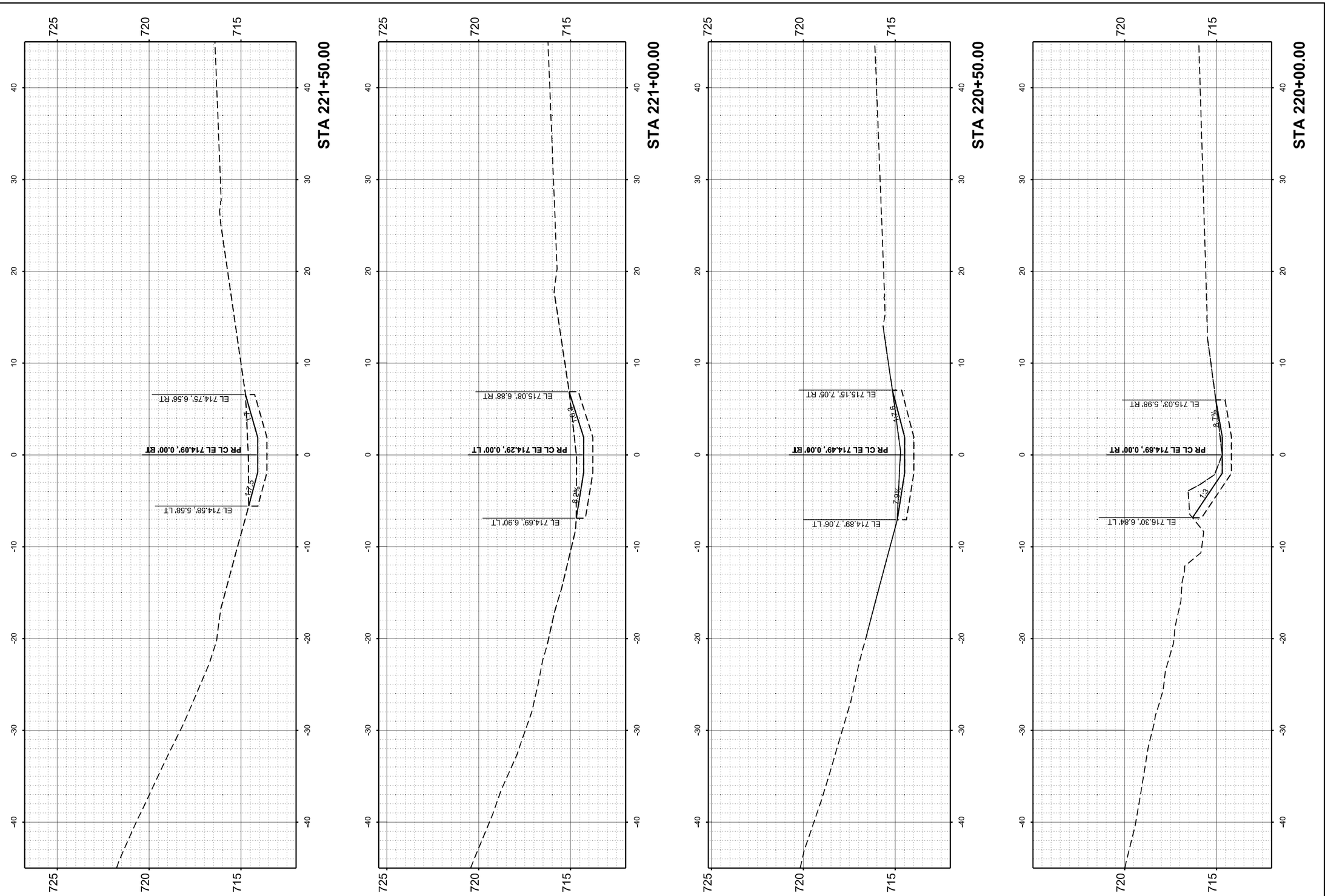

MODEL: NB_Ramp B-Woodfield - 220+00.00 [Sheet]
FILE NAME: W:\24001656.05\DOT Dist 1 IL 290 Mill and Overlay\CADD Data\Sheets\D1_IL53_sht_XSC_DitchGrading.dgn

IMEG
401 E. STATE ST. 4th Floor
ROCKFORD, IL
61104
PH: 815.965.6400
www.imegcorp.com

USER NAME = Marc.A.Personette	DESIGNED - Brad Lange	REVISED -
	DRAWN - Marc Personette	REVISED -
	CHECKED - Corey Stout	REVISED -
PLOT DATE = 3/16/2026	DATE - 3/16/2026	REVISED -

STATE OF ILLINOIS
DEPARTMENT OF TRANSPORTATION

I-290/IL 53 HMA RESURFACING AND BRIDGE REPAIRS
CROSS SECTIONS - NB DITCH GRADING - RAMP B TO WOODFIELD RD

SCALE: 1" = 5' | SHEET 1 OF 10 SHEETS | STA. 220+00.00 | TO STA. 221+50.00

F.A.I RTE.	SECTION	COUNTY	TOTAL SHEETS	SHEET NO.
290	(0404-316-HB) BR 24	COOK	276	218
		CONTRACT NO. 62W99		
	ILLINOIS FED. AID PROJECT			

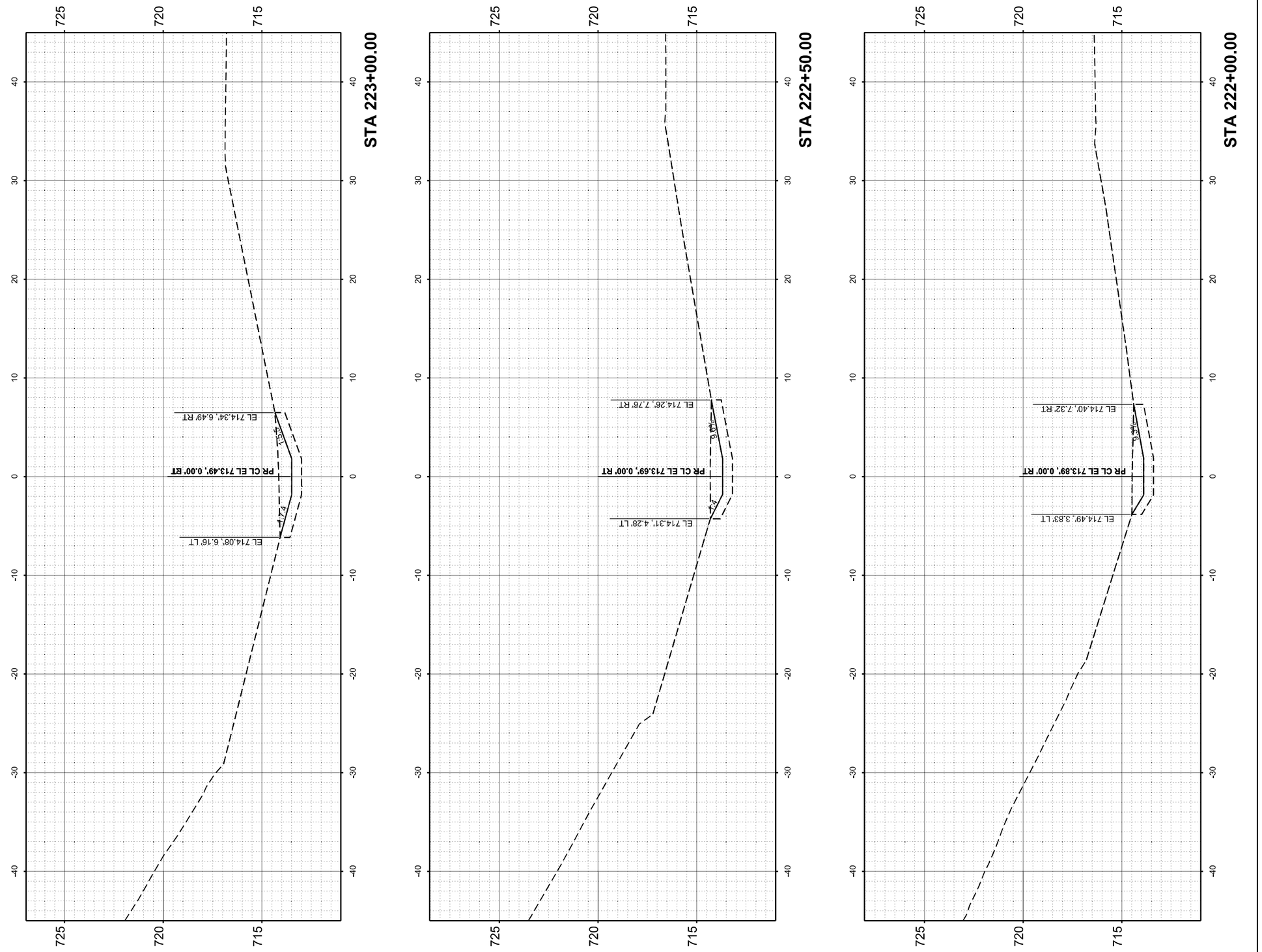

MODEL: NB_Ramp B-Woodfield - 222+00.00 [Sheet]
FILE NAME: W:\24001656.05\IDOT Dist 1 IL 290 Mill and Overlay\CADD Data\Sheets\D1_IL53_stit_XSC_DitchGrading.dgn

IMEG
401 E. STATE ST. 4th Floor ROCKFORD, IL 61104
PH: 815.965.6400 www.imegcorp.com

USER NAME = Marc.A.Personette	DESIGNED - Brad Lange	REVISED -
	DRAWN - Marc Personette	REVISED -
	CHECKED - Corey Stout	REVISED -
PLOT DATE = 3/16/2026	DATE - 3/16/2026	REVISED -

STATE OF ILLINOIS
DEPARTMENT OF TRANSPORTATION

I-290/IL 53 HMA RESURFACING AND BRIDGE REPAIRS
CROSS SECTIONS - NB DITCH GRADING - RAMP B TO WOODFIELD RD

SCALE: 1" = 5' | SHEET 2 OF 10 SHEETS | STA. 222+00.00 | TO STA. 223+00.00

F.A.I RTE.	SECTION	COUNTY	TOTAL SHEETS	SHEET NO.
290	(0404-316-HB) BR 24	COOK	276	219
		CONTRACT NO. 62W99		
	ILLINOIS	FED. AID PROJECT		

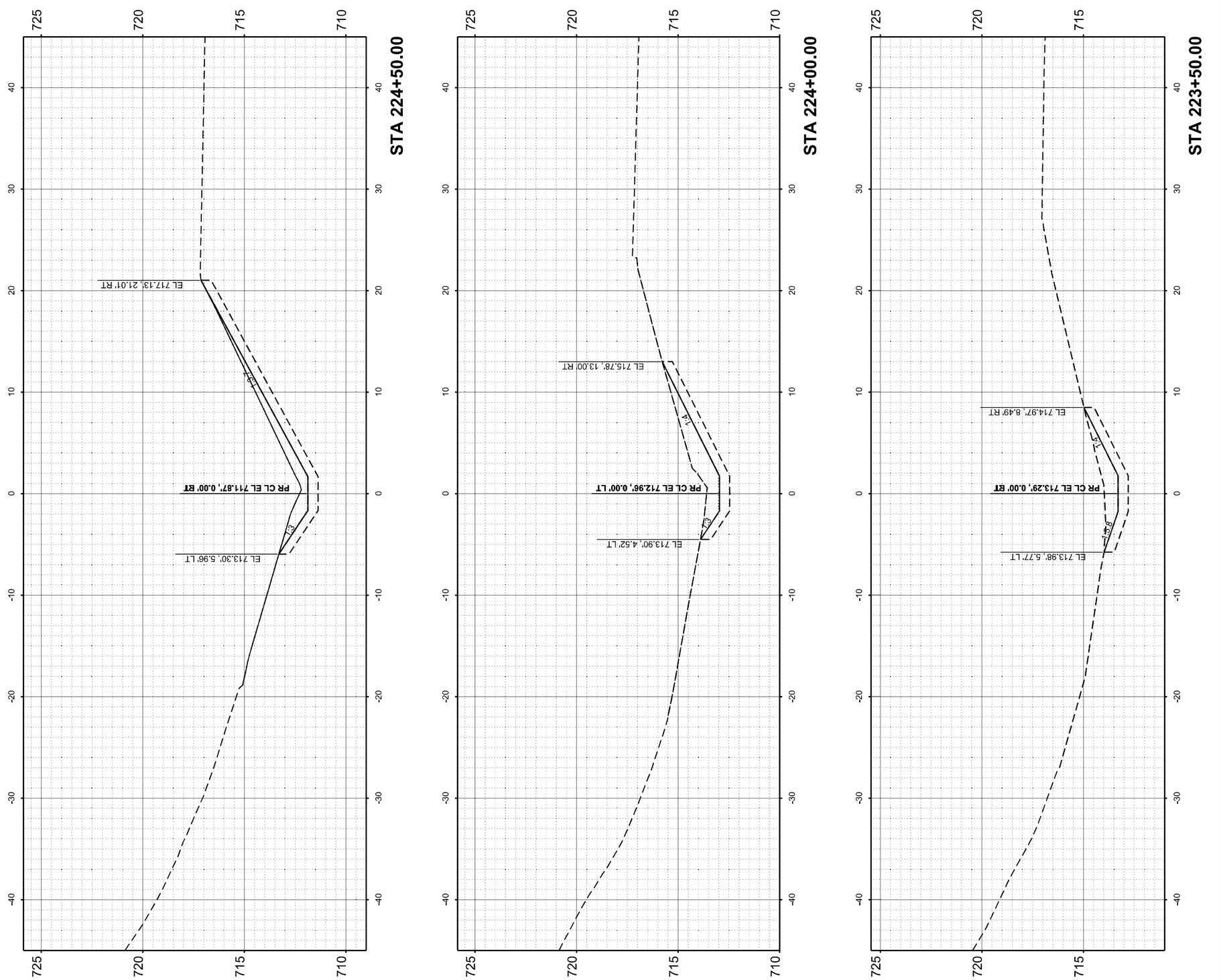

MODEL: NB_Ramp B-Woodfield - 223+50.00 [Sheet]
FILE NAME: W:\24001656.05\IDOT Dist 1 IL 290 Mill and Overlay\CADD Data\Sheets\D1_IL53_sht_XSC_DitchGrading.dgn

IMEG
401 E. STATE ST. 4th Floor
ROCKFORD, IL
61104
PH: 815.965.6400
www.imegcorp.com

USER NAME = Marc.A.Personette	DESIGNED - Brad Lange	REVISED -	
	DRAWN - Marc Personette	REVISED -	
	CHECKED - Corey Stout	REVISED -	
PLOT DATE = 3/16/2026	DATE - 3/16/2026	REVISED -	

STATE OF ILLINOIS
DEPARTMENT OF TRANSPORTATION

I-290/IL 53 HMA RESURFACING AND BRIDGE REPAIRS
CROSS SECTIONS - NB DITCH GRADING - RAMP B TO WOODFIELD RD

SCALE: 1" = 5' | SHEET 3 OF 10 SHEETS | STA. 223+50.00 | TO STA. 224+50.00

F.A.I RTE.	SECTION	COUNTY	TOTAL SHEETS	SHEET NO.
290	(0404-316-HB) BR 24	COOK	276	220
		CONTRACT NO. 62W99		
	ILLINOIS	FED. AID PROJECT		

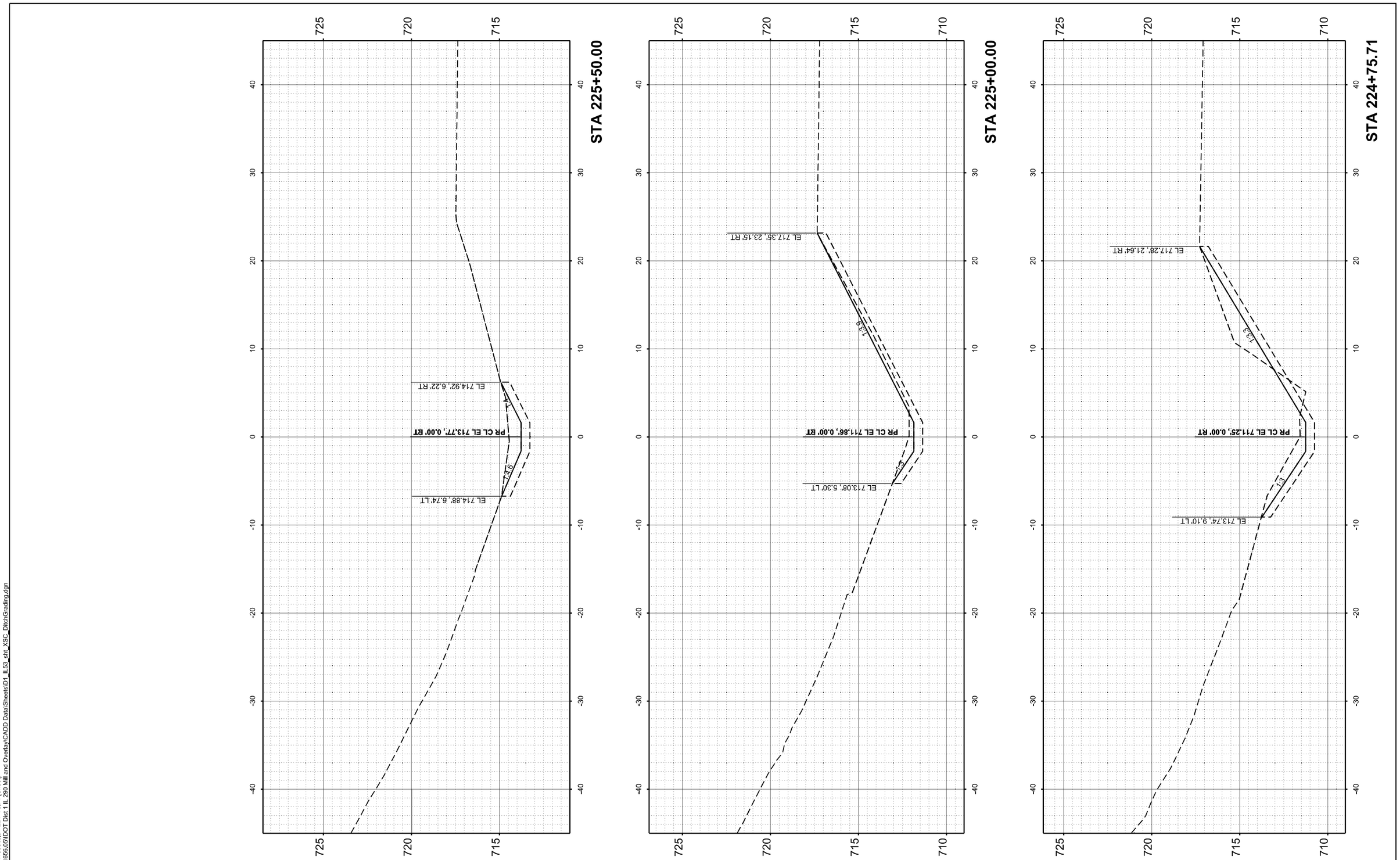

MODEL: NB_Ramp B-Woodfield - 224+75.71 [Sheet]
FILE NAME: W:\24001656.05\IDOT Dist 1 IL 290 Mill and Overlay\CADD Data\Sheets\D1_IL53_sht_XSC_DitchGrading.dgn

IMEG
401 E. STATE ST. 4th Floor
ROCKFORD, IL 61104
PH: 815.965.6400
www.imegcorp.com

USER NAME = Marc.A.Personette	DESIGNED - Brad Lange	REVISED -
	DRAWN - Marc Personette	REVISED -
	CHECKED - Corey Stout	REVISED -
PLOT DATE = 3/16/2026	DATE - 3/16/2026	REVISED -

STATE OF ILLINOIS
DEPARTMENT OF TRANSPORTATION

I-290/IL 53 HMA RESURFACING AND BRIDGE REPAIRS
CROSS SECTIONS - NB DITCH GRADING - RAMP B TO WOODFIELD RD

SCALE: 1" = 5' | SHEET 4 OF 10 SHEETS | STA. 224+75.71 | TO STA. 225+50.00

F.A.I RTE.	SECTION	COUNTY	TOTAL SHEETS	SHEET NO.
290	(0404-316-HB) BR 24	COOK	276	221
		CONTRACT NO. 62W99		
	ILLINOIS FED. AID PROJECT			

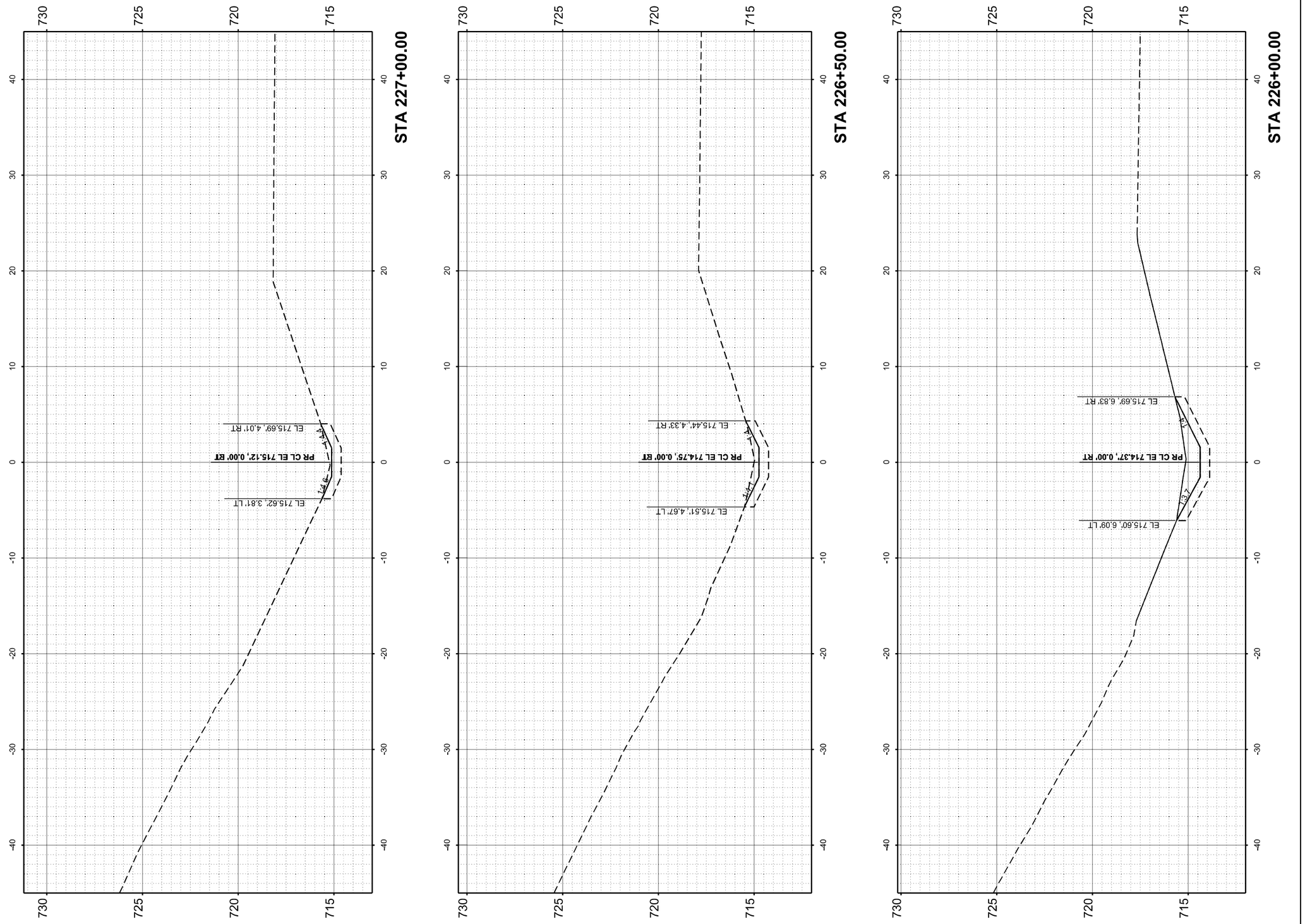

MODEL: NB_Ramp B-Woodfield - 226+00.00 [Sheet]
FILE NAME: W:\24001656.05\IDOT Dist 1 IL 290 Mill and Overlay\CADD Data\Sheets\D1_IL53_sht_XSC_DitchGrading.dgn

IMEG
401 E. STATE ST. 4th Floor
ROCKFORD, IL 61104
PH: 815.965.6400
www.imegcorp.com

USER NAME = Marc.A.Personette	DESIGNED - Brad Lange	REVISED -
	DRAWN - Marc Personette	REVISED -
	CHECKED - Corey Stout	REVISED -
PLOT DATE = 3/16/2026	DATE - 3/16/2026	REVISED -

STATE OF ILLINOIS
DEPARTMENT OF TRANSPORTATION

I-290/IL 53 HMA RESURFACING AND BRIDGE REPAIRS
CROSS SECTIONS - NB DITCH GRADING - RAMP B TO WOODFIELD RD

SCALE: 1" = 5' | SHEET 5 OF 10 SHEETS | STA. 226+00.00 | TO STA. 227+00.00

F.A.I RTE.	SECTION	COUNTY	TOTAL SHEETS	SHEET NO.
290	(0404-316-HB) BR 24	COOK	276	222
		CONTRACT NO. 62W99		
	ILLINOIS FED. AID PROJECT			

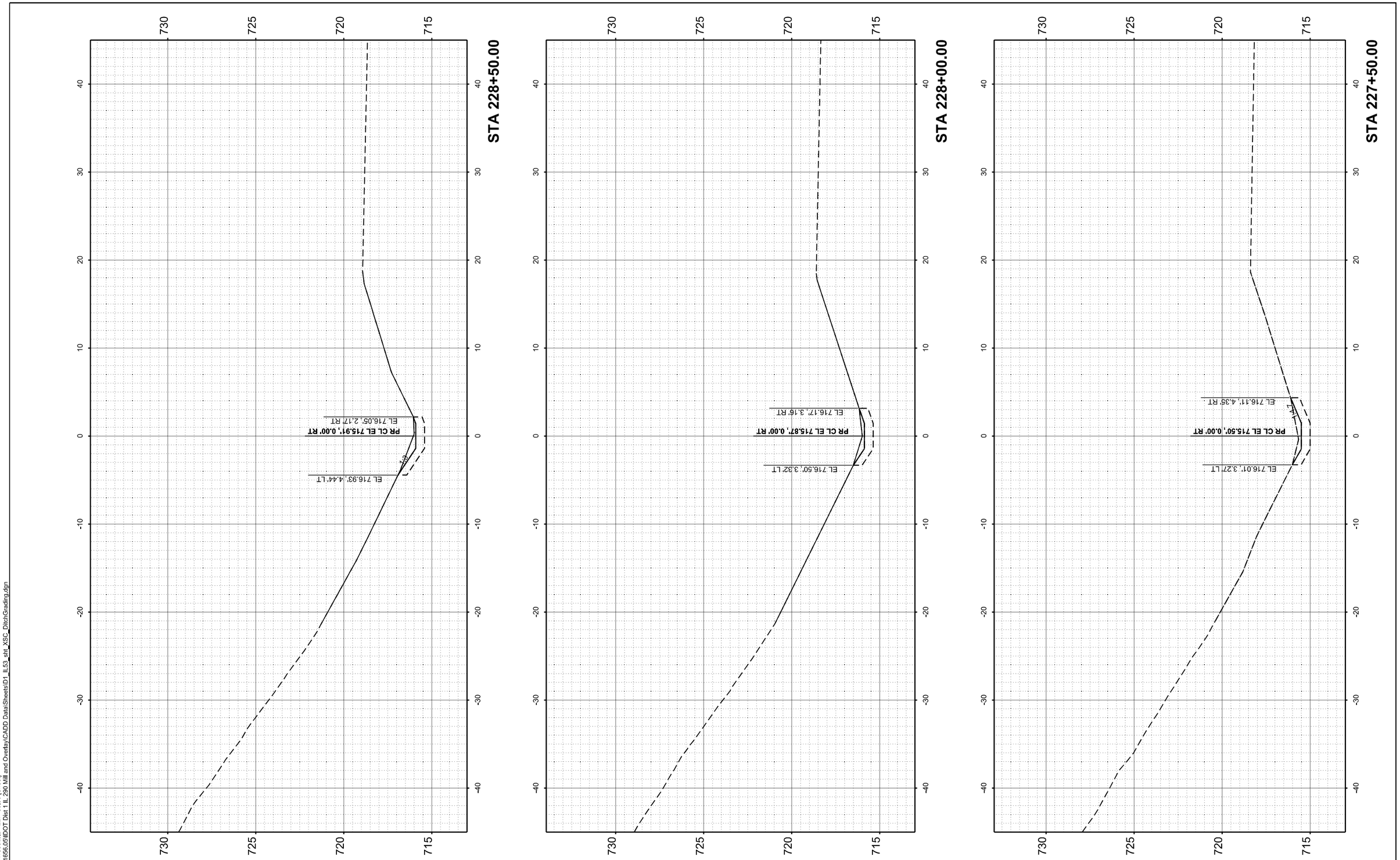

MODEL: NB_Ramp B-Woodfield - 227+50.00 [Sheet]
FILE NAME: W:\24001656.05\IDOT Dist 1 IL 290 Mill and Overlay\CADD Data\Sheets\D1_IL53_sht_XSC_DitchGrading.dgn

IMEG
401 E. STATE ST. 4th Floor
ROCKFORD, IL
61104
PH: 815.965.6400
www.imegcorp.com

USER NAME = Marc.A.Personette	DESIGNED - Brad Lange	REVISED -	
	DRAWN - Marc Personette	REVISED -	
	CHECKED - Corey Stout	REVISED -	
PLOT DATE = 3/16/2026	DATE - 3/16/2026	REVISED -	

STATE OF ILLINOIS
DEPARTMENT OF TRANSPORTATION

I-290/IL 53 HMA RESURFACING AND BRIDGE REPAIRS
CROSS SECTIONS - NB DITCH GRADING - RAMP B TO WOODFIELD RD

SCALE: 1" = 5' | SHEET 6 OF 10 SHEETS | STA. 227+50.00 | TO STA. 228+50.00

F.A.I RTE.	SECTION	COUNTY	TOTAL SHEETS	SHEET NO.
290	(0404-316-HB) BR 24	COOK	276	223
		CONTRACT NO. 62W99		
	ILLINOIS FED. AID PROJECT			

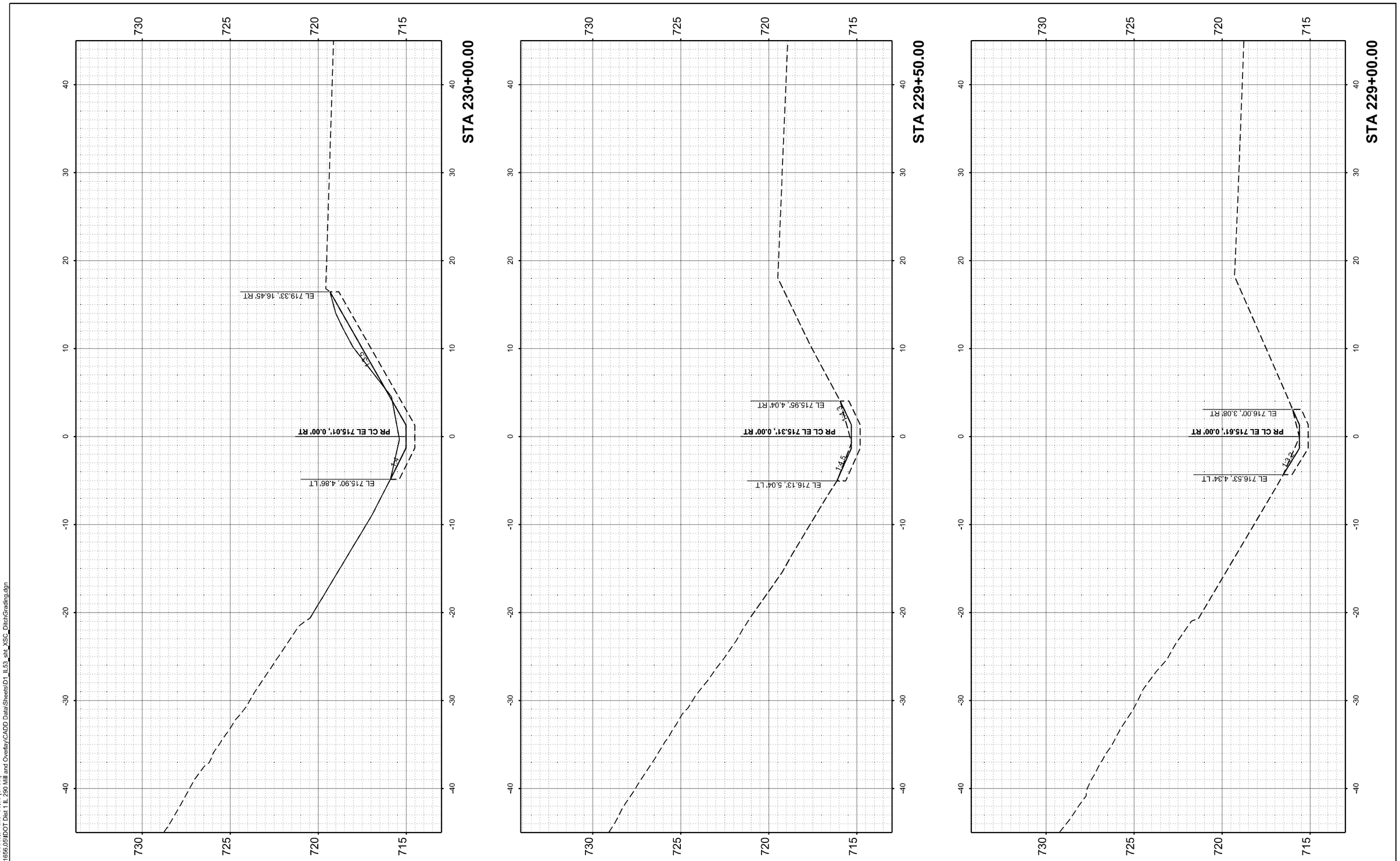

MODEL: NB_Ramp B-Woodfield - 229+00.00 [Sheet]
FILE NAME: W:\24001656.05\IDOT Dist 1 IL 290 Mill and Overlay\CADD Data\Sheets\D1_IL53_4IN_XSC_DitchGrading.dgn

IMEG
401 E. STATE ST. 4th Floor
ROCKFORD, IL
61104
PH: 815.965.6400
www.imegcorp.com

USER NAME = Marc.A.Personette	DESIGNED - Brad Lange	REVISED -
	DRAWN - Marc Personette	REVISED -
	CHECKED - Corey Stout	REVISED -
PLOT DATE = 3/16/2026	DATE - 3/16/2026	REVISED -

STATE OF ILLINOIS
DEPARTMENT OF TRANSPORTATION

I-290/IL 53 HMA RESURFACING AND BRIDGE REPAIRS
CROSS SECTIONS - NB DITCH GRADING - RAMP B TO WOODFIELD RD

SCALE: 1" = 5' | SHEET 7 OF 10 SHEETS | STA. 229+00.00 | TO STA. 230+00.00

F.A.I RTE.	SECTION	COUNTY	TOTAL SHEETS	SHEET NO.
290	(0404-316-HB) BR 24	COOK	276	224
		CONTRACT NO. 62W99		
	ILLINOIS FED. AID PROJECT			

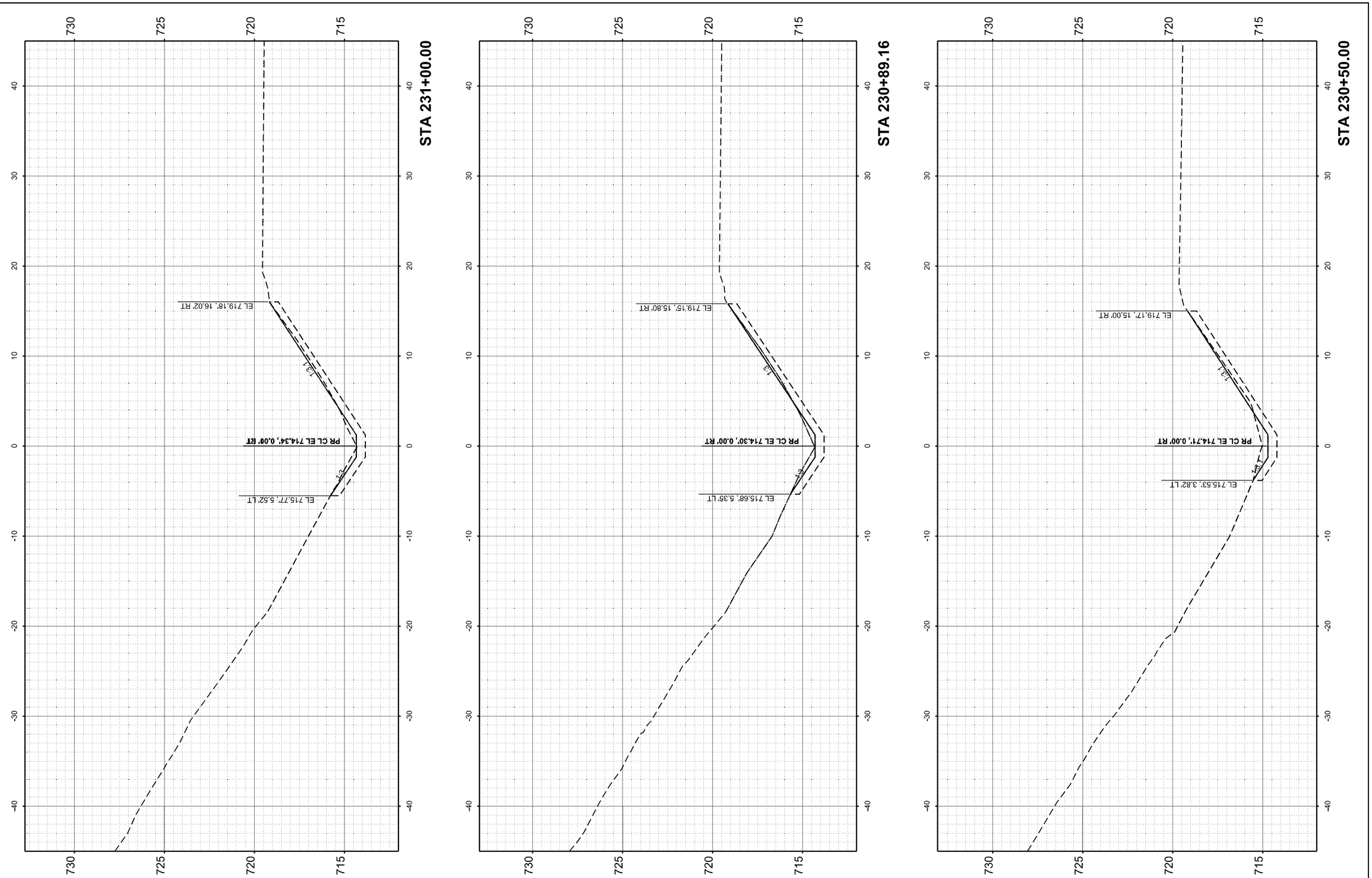

MODEL: NB_Ramp B-Woodfield - 230+50.00 [Sheet]
FILE NAME: W:\2400\1656.05\IDOT Dist 1 IL 290 Mill and Overlay\CADD Data\Sheets\D1_IL53_stit_XSC_DitchGrading.dgn

IMEG
401 E. STATE ST. 4th Floor
ROCKFORD, IL 61104
PH: 815.965.6400
www.imegcorp.com

USER NAME = Marc.A.Personette	DESIGNED - Brad Lange	REVISED -	
	DRAWN - Marc Personette	REVISED -	
	CHECKED - Corey Stout	REVISED -	
PLOT DATE = 3/16/2026	DATE - 3/16/2026	REVISED -	

STATE OF ILLINOIS
DEPARTMENT OF TRANSPORTATION

I-290/IL 53 HMA RESURFACING AND BRIDGE REPAIRS
CROSS SECTIONS - NB DITCH GRADING - RAMP B TO WOODFIELD RD

SCALE: 1" = 5' | SHEET 8 OF 10 SHEETS | STA. 230+50.00 | TO STA. 231+00.00

F.A.I RTE.	SECTION	COUNTY	TOTAL SHEETS	SHEET NO.
290	(0404-316-HB) BR 24	COOK	276	225
		CONTRACT NO. 62W99		
		ILLINOIS	FED. AID PROJECT	

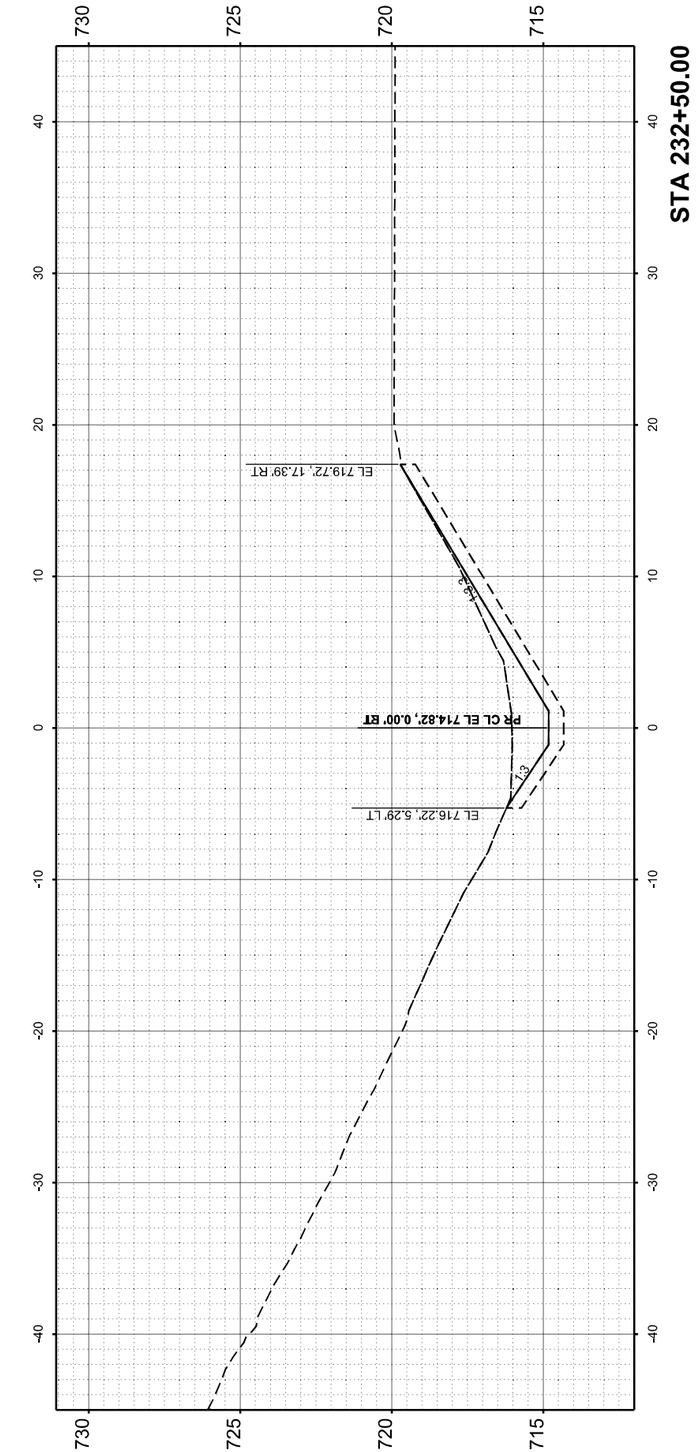

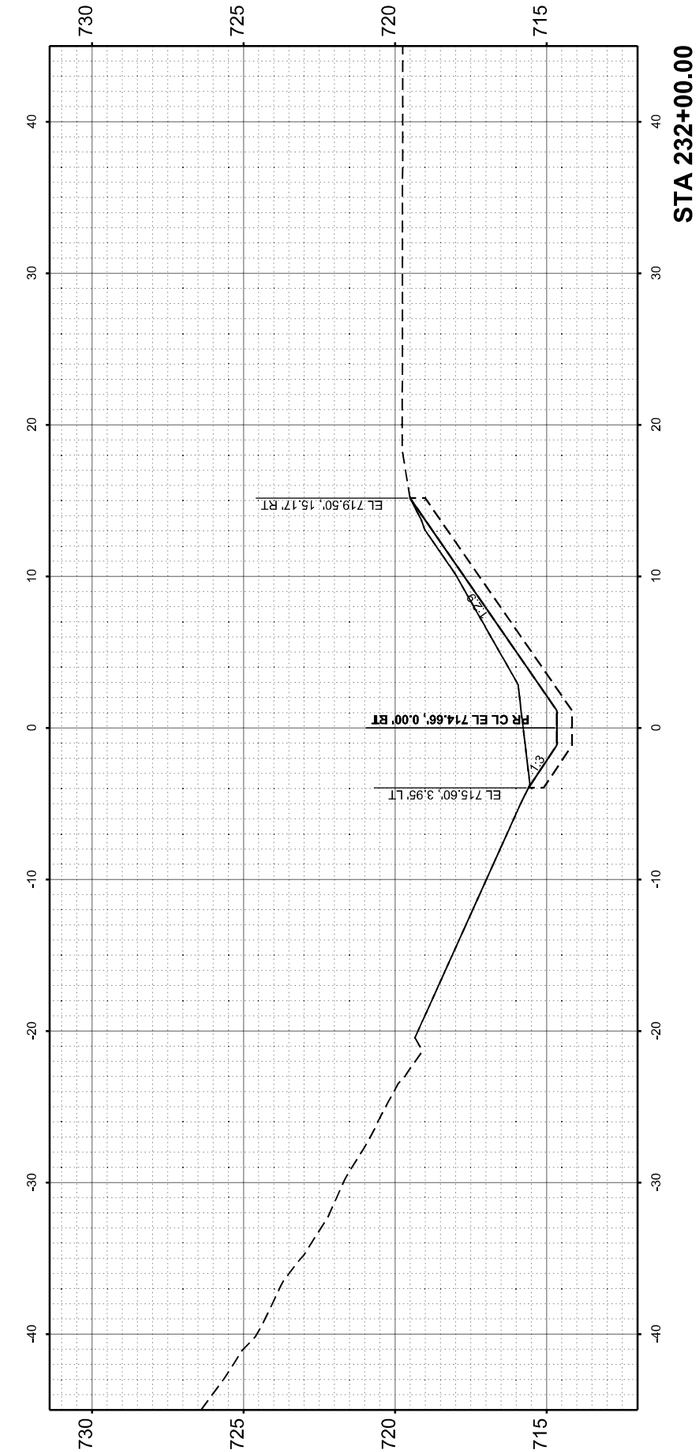

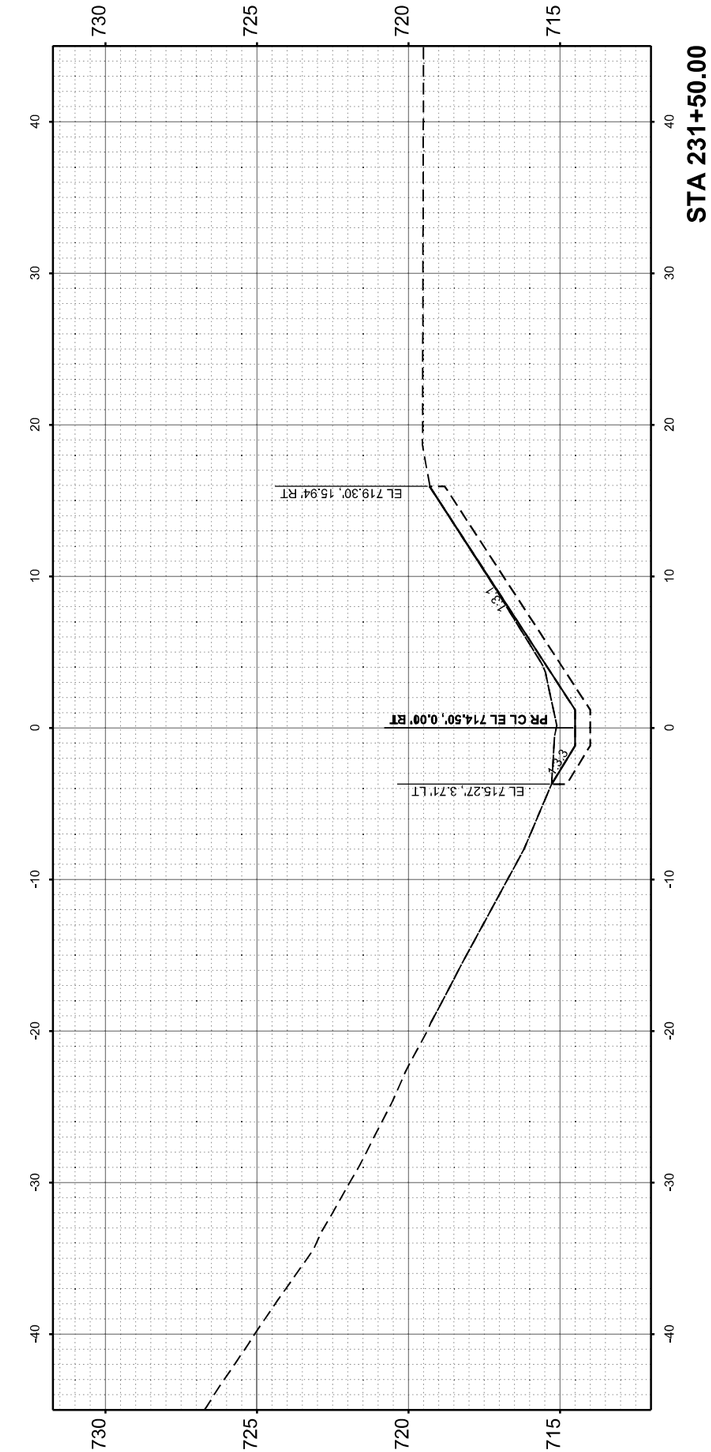

MODEL: NB_Ramp B-Woodfield - 231+50.00 [Sheet]
FILE NAME: W:\24001656.05\IDOT Dist 1 IL 290 Mill and Overlay\CADD Data\Sheets\D1_IL53_sht_XSC_DitchGrading.dgn

IMEG
401 E. STATE ST. 4th Floor
ROCKFORD, IL
61104
PH: 815.965.6400
www.imegcorp.com

USER NAME = Marc.A.Personette	DESIGNED - Brad Lange	REVISED -
	DRAWN - Marc Personette	REVISED -
	CHECKED - Corey Stout	REVISED -
PLOT DATE = 3/16/2026	DATE - 3/16/2026	REVISED -

STATE OF ILLINOIS
DEPARTMENT OF TRANSPORTATION

I-290/IL 53 HMA RESURFACING AND BRIDGE REPAIRS
CROSS SECTIONS - NB DITCH GRADING - RAMP B TO WOODFIELD RD

SCALE: 1" = 5' | SHEET 9 OF 10 SHEETS | STA. 231+50.00 | TO STA. 232+50.00

F.A.I RTE.	SECTION	COUNTY	TOTAL SHEETS	SHEET NO.
290	(0404-316-HB) BR 24	COOK	276	226
		CONTRACT NO. 62W99		
	ILLINOIS	FED. AID PROJECT		

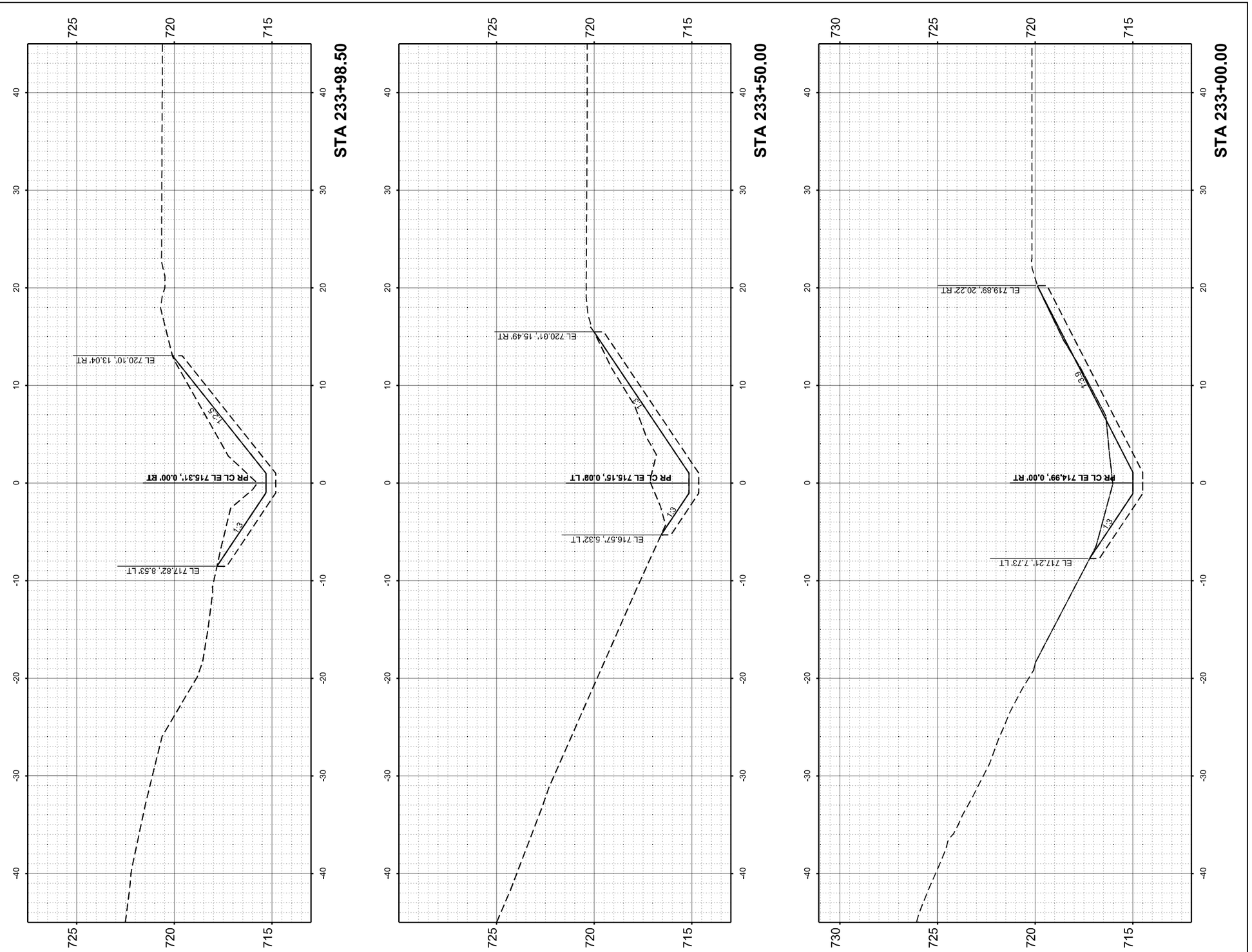

MODEL: NB_Ramp B-Woodfield - 233+00.00 [Sheet]
FILE NAME: W:\24001656.05\IDOT Dist 1 IL 290 Mill and Overlay\CADD Data\Sheets\D1_IL53_stn_XSC_DitchGrading.dgn

IMEG
401 E. STATE ST. 4th Floor ROCKFORD, IL 61104 PH: 815.965.6400 www.imegcorp.com

USER NAME = Marc.A.Personette	DESIGNED - Brad Lange	REVISED -	
	DRAWN - Marc Personette	REVISED -	
	CHECKED - Corey Stout	REVISED -	
PLOT DATE = 3/16/2026	DATE - 3/16/2026	REVISED -	

STATE OF ILLINOIS
DEPARTMENT OF TRANSPORTATION

I-290/IL 53 HMA RESURFACING AND BRIDGE REPAIRS
CROSS SECTIONS - NB DITCH GRADING - RAMP B TO WOODFIELD RD

SCALE: 1" = 5' | SHEET 10 OF 10 SHEETS | STA. 233+00.00 | TO STA. 233+98.50

F.A.I RTE.	SECTION	COUNTY	TOTAL SHEETS	SHEET NO.
290	(0404-316-HB) BR 24	COOK	276	227
		CONTRACT NO. 62W99		
		ILLINOIS	FED. AID PROJECT	

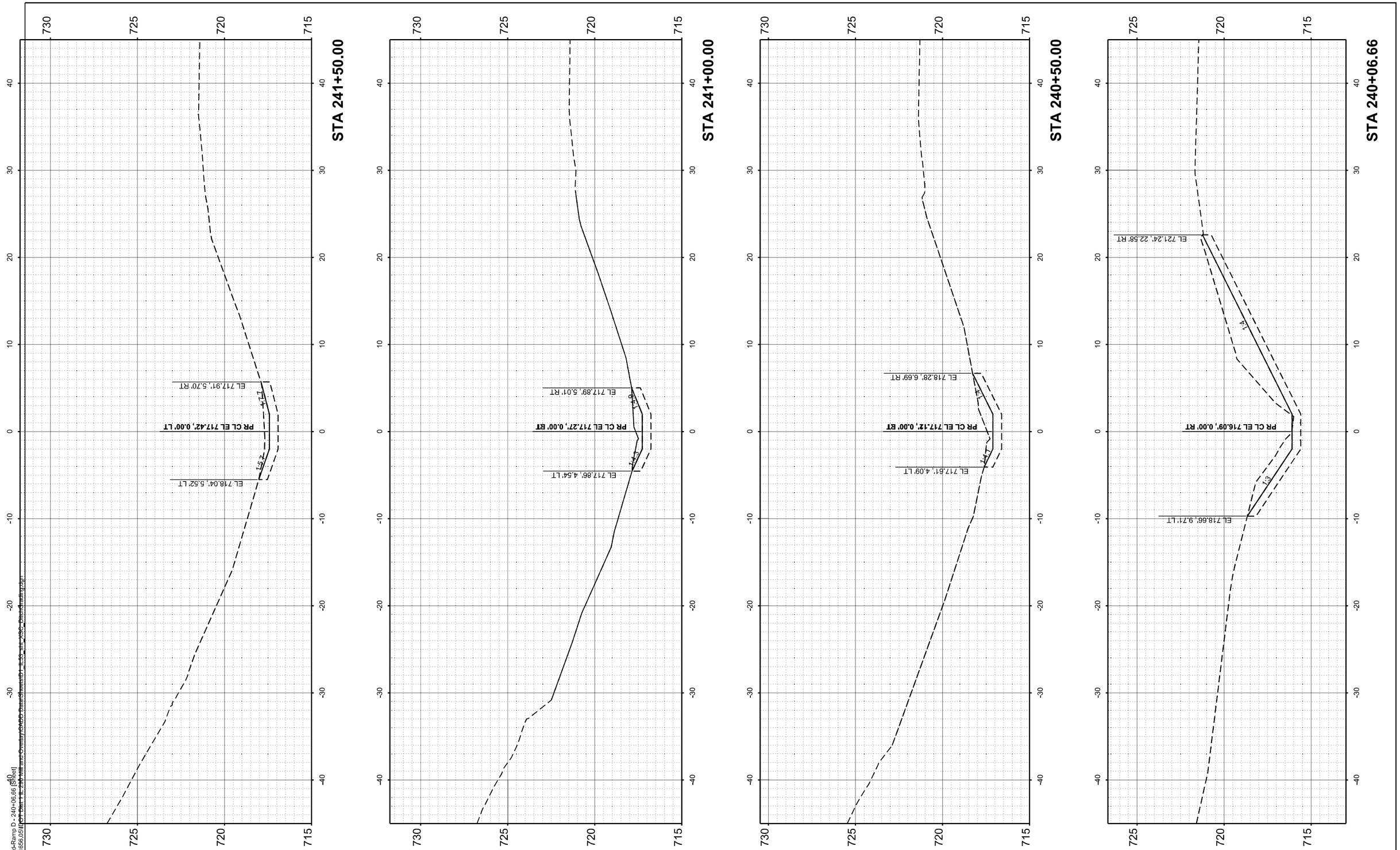

MODEL: NB_Woodfield-Ramp D - 240+06.66 [Sheet]
FILE NAME: W:\240016\56.05\01 Dist 1 IL 290 Mill and Overlay\0400 Data\Sheets\01 IL 53 SH_XSC_Ditch Grading.dgn

IMEG 401 E. STATE ST. 4th Floor ROCKFORD, IL 61104 PH: 815.965.6400 www.imegcorp.com	USER NAME = Marc.A.Personette	DESIGNED - Brad Lange	REVISED -	
		DRAWN - Marc Personette	REVISED -	
		CHECKED - Corey Stout	REVISED -	
	PLOT DATE = 3/16/2026	DATE - 3/16/2026	REVISED -	

STATE OF ILLINOIS
DEPARTMENT OF TRANSPORTATION

I-290/IL 53 HMA RESURFACING AND BRIDGE REPAIRS
CROSS SECTIONS - NB DITCH GRADING - WOODFIELD RD TO RAMP D

SCALE: 1" = 5' | SHEET 1 OF 9 SHEETS | STA. 240+06.66 | TO STA. 241+50.00

F.A.I RTE.	SECTION	COUNTY	TOTAL SHEETS	SHEET NO.
290	(0404-316-HB) BR 24	COOK	276	228
		CONTRACT NO. 62W99		
	ILLINOIS	FED. AID PROJECT		

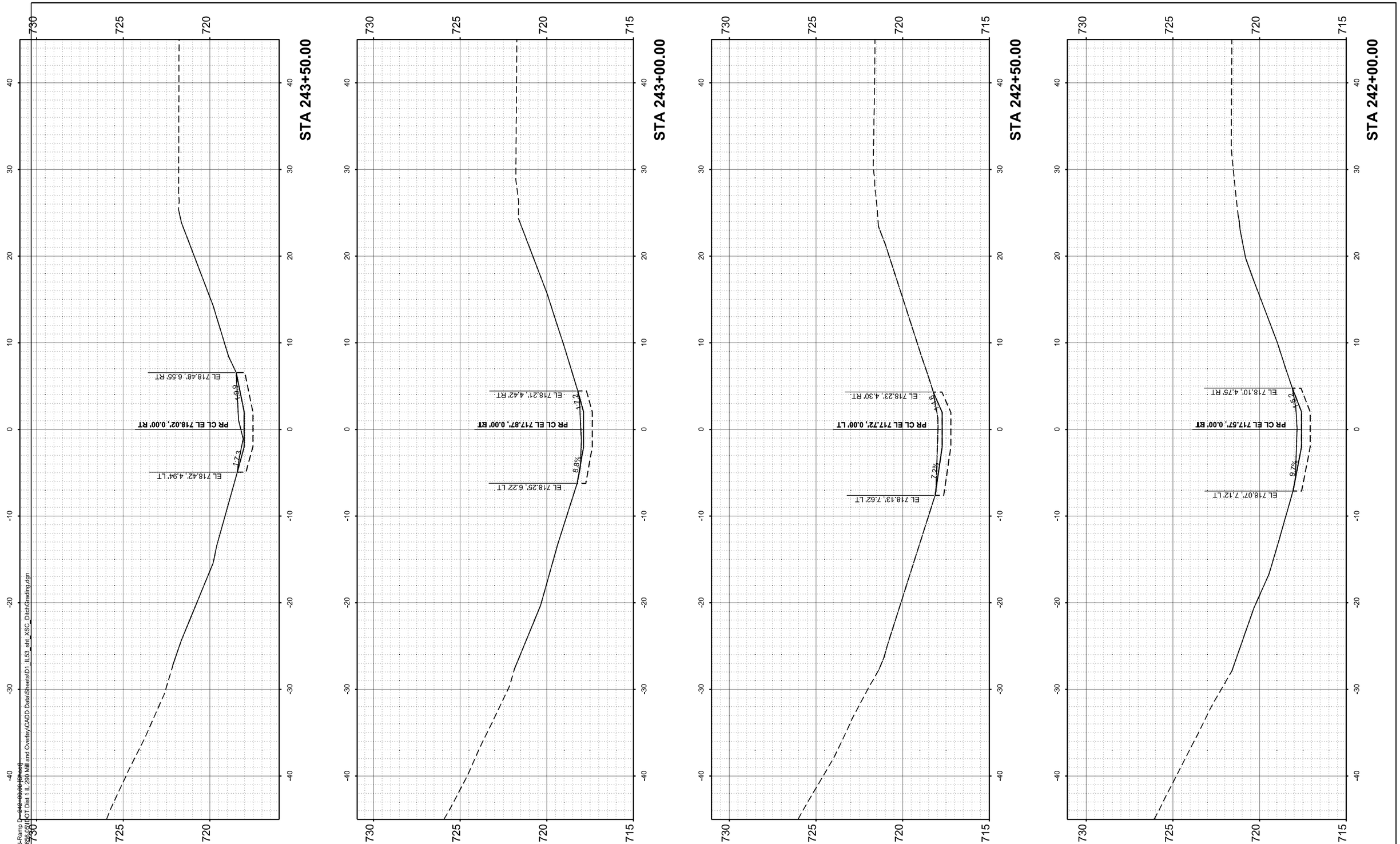

MODEL: NB_Woodfield-Ramp D_242+00.00 (Hwy)
FILE NAME: W:\2400165\Roadway\IDOT Dist 1 IL 290 Mill and Overlay\CADD Data\Sheets\D1_IL53_sht_XSC_DitchGrading.dgn

IMEG
401 E. STATE ST. 4th Floor
ROCKFORD, IL
61104
PH: 815.965.6400
www.imegcorp.com

USER NAME = Marc.A.Personette	DESIGNED - Brad Lange	REVISED -	
	DRAWN - Marc Personette	REVISED -	
	CHECKED - Corey Stout	REVISED -	
PLOT DATE = 3/16/2026	DATE - 3/16/2026	REVISED -	

STATE OF ILLINOIS
DEPARTMENT OF TRANSPORTATION

I-290/IL 53 HMA RESURFACING AND BRIDGE REPAIRS
CROSS SECTIONS - NB DITCH GRADING - WOODFIELD RD TO RAMP D

SCALE: 1" = 5' | SHEET 2 OF 9 SHEETS | STA. 242+00.00 | TO STA. 243+50.00

F.A.I RTE.	SECTION	COUNTY	TOTAL SHEETS	SHEET NO.
290	(0404-316-HB) BR 24	COOK	276	229
		CONTRACT NO. 62W99		
		ILLINOIS	FED. AID PROJECT	

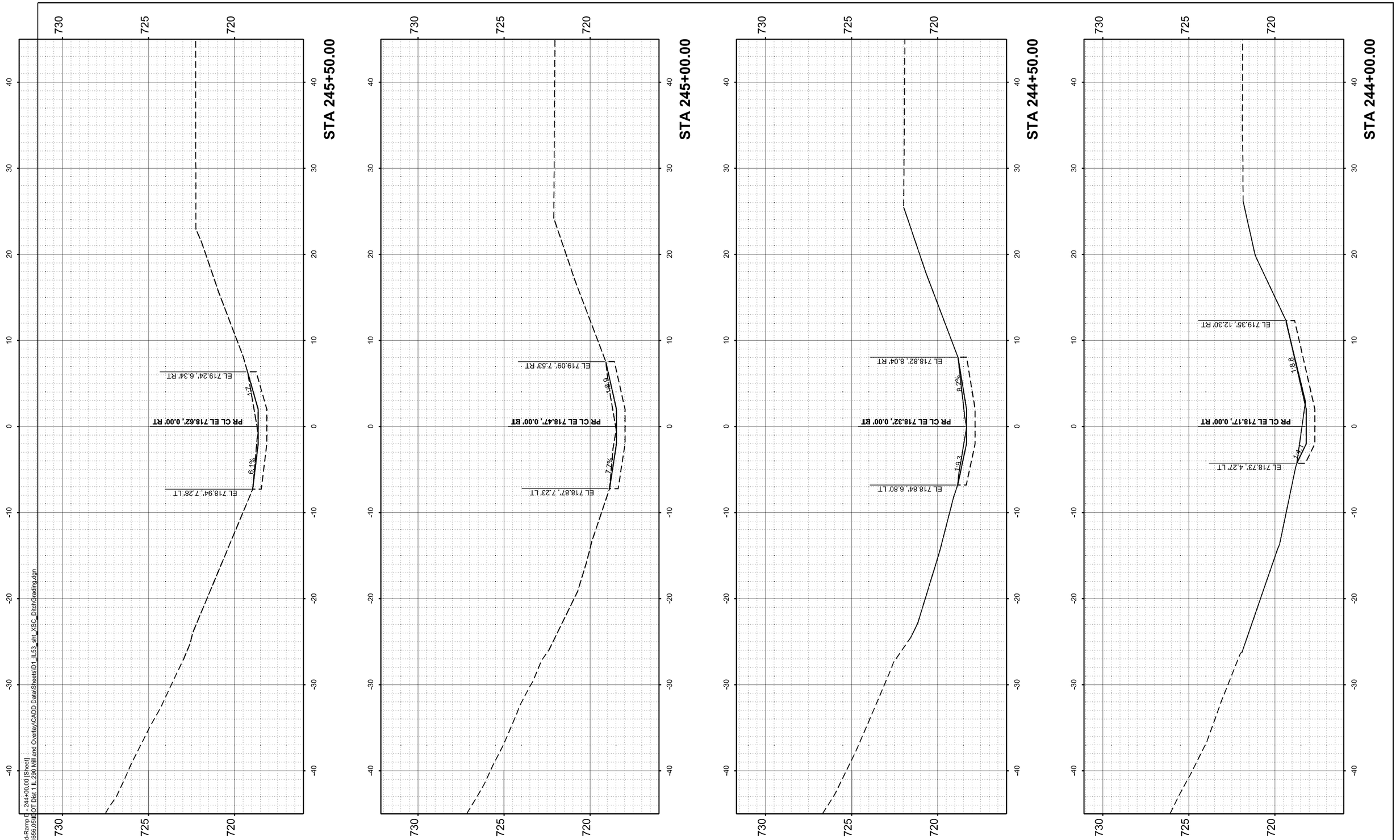

MODEL: NB_Woodfield-Ramp D - 244+00.00 [Sheet]
FILE NAME: W:\2400\1656.05\IDOT Dist 1 IL 290 Mill and Overlay\CADD Data\Sheets\D1_IL53_sht_XSC_DitchGrading.dgn

IMEG
401 E. STATE ST. 4th Floor
ROCKFORD, IL
61104
PH: 815.965.6400
www.imegcorp.com

USER NAME = Marc.A.Personette	DESIGNED - Brad Lange	REVISED -	
	DRAWN - Marc Personette	REVISED -	
	CHECKED - Corey Stout	REVISED -	
PLOT DATE = 3/16/2026	DATE - 3/16/2026	REVISED -	

STATE OF ILLINOIS
DEPARTMENT OF TRANSPORTATION

I-290/IL 53 HMA RESURFACING AND BRIDGE REPAIRS
CROSS SECTIONS - NB DITCH GRADING - WOODFIELD RD TO RAMP D

SCALE: 1" = 5' | SHEET 3 OF 9 SHEETS | STA. 244+00.00 TO STA. 245+50.00

F.A.I RTE.	SECTION	COUNTY	TOTAL SHEETS	SHEET NO.
290	(0404-316-HB) BR 24	COOK	276	230
		CONTRACT NO. 62W99		
	ILLINOIS FED. AID PROJECT			

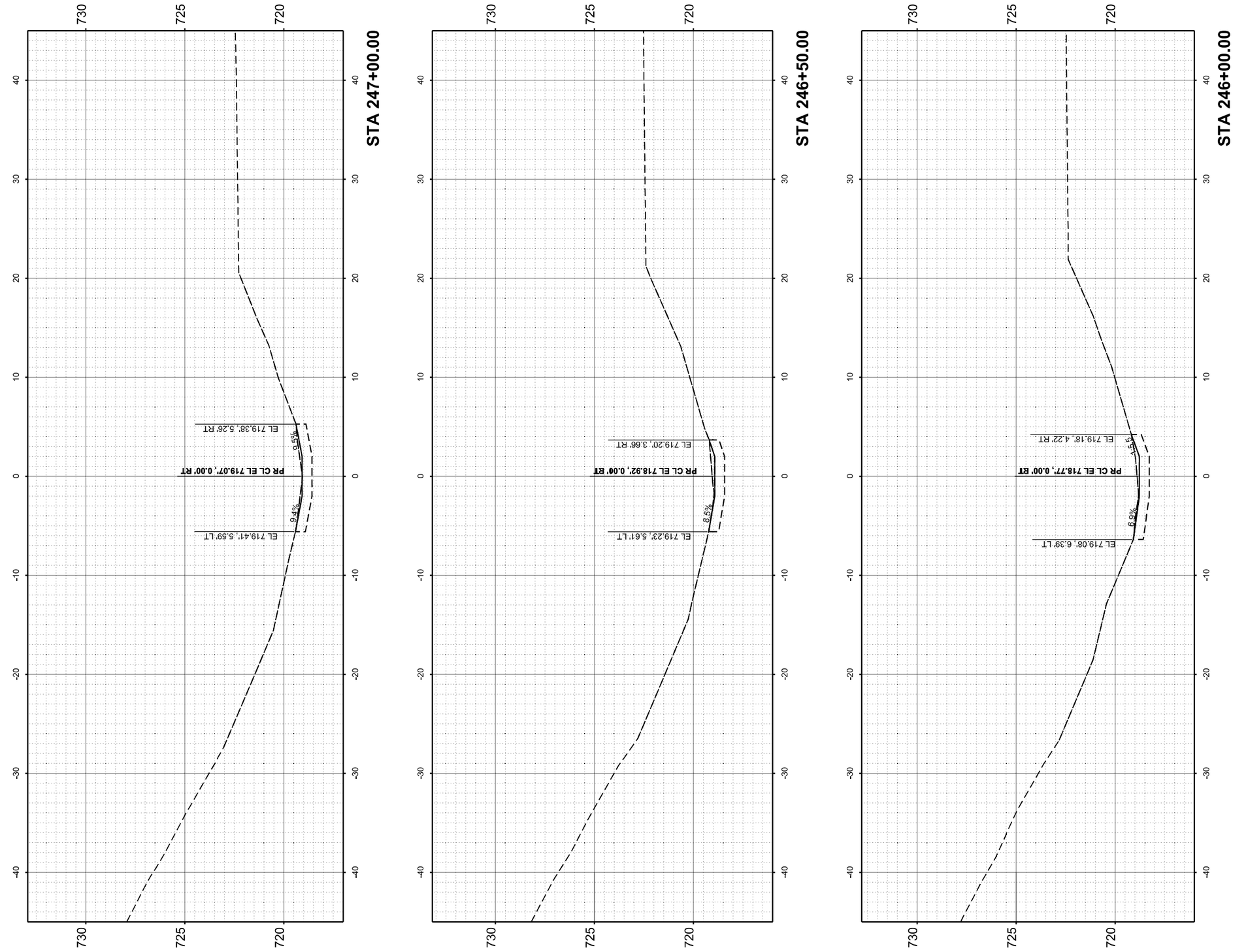

MODEL: NB_Woodfield-Ramp D - 246+00.00 [Sheet]
FILE NAME: W:\24001656.05\IDOT Dist 1 IL 290 Mill and Overlay\CADD Data\Sheets\D1_IL53_sht_XSC_DitchGrading.dgn

IMEG
401 E. STATE ST. 4th Floor
ROCKFORD, IL 61104
PH: 815.965.6400
www.imegcorp.com

USER NAME = Marc.A.Personette	DESIGNED - Brad Lange	REVISED -
	DRAWN - Marc Personette	REVISED -
	CHECKED - Corey Stout	REVISED -
PLOT DATE = 3/16/2026	DATE - 3/16/2026	REVISED -

STATE OF ILLINOIS
DEPARTMENT OF TRANSPORTATION

I-290/IL 53 HMA RESURFACING AND BRIDGE REPAIRS
CROSS SECTIONS - NB DITCH GRADING - WOODFIELD RD TO RAMP D

SCALE: 1" = 5' | SHEET 4 OF 9 SHEETS | STA. 246+00.00 | TO STA. 247+00.00

F.A.I RTE.	SECTION	COUNTY	TOTAL SHEETS	SHEET NO.
290	(0404-316-HB) BR 24	COOK	276	231
		CONTRACT NO. 62W99		
	ILLINOIS	FED. AID PROJECT		

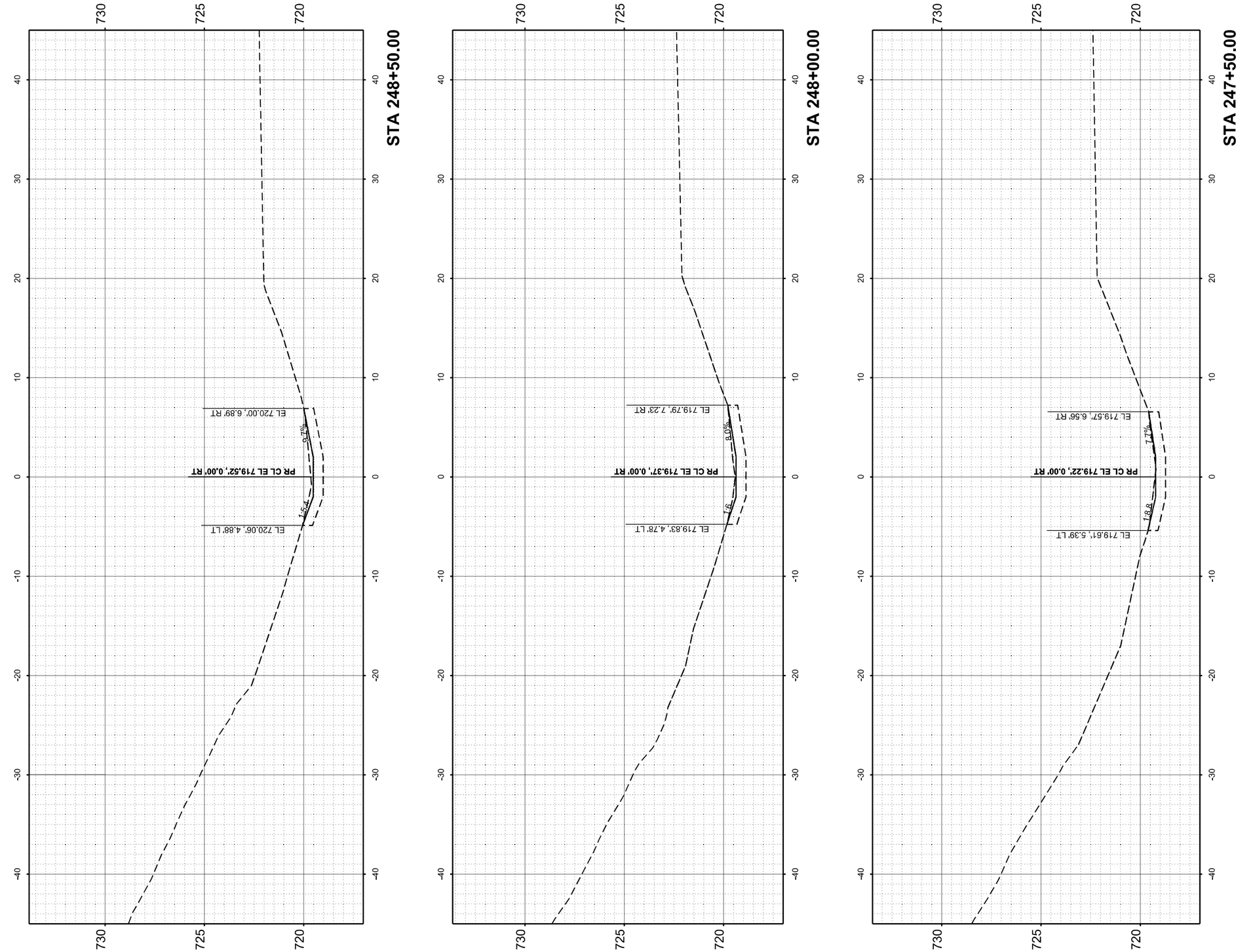

MODEL: NB_Woodfield-Ramp D - 247+50.00 [Sheet]
FILE NAME: W:\24001656.05\IDOT Dist 1 IL 290 Mill and Overlay\CADD Data\Sheets\D1_IL53_sth_XSC_DitchGrading.dgn

IMEG
401 E. STATE ST. 4th Floor
ROCKFORD, IL 61104
PH: 815.965.6400
www.imegcorp.com

USER NAME = Marc.A.Personette	DESIGNED - Brad Lange	REVISED -	
	DRAWN - Marc Personette	REVISED -	
	CHECKED - Corey Stout	REVISED -	
PLOT DATE = 3/16/2026	DATE - 3/16/2026	REVISED -	

STATE OF ILLINOIS
DEPARTMENT OF TRANSPORTATION

I-290/IL 53 HMA RESURFACING AND BRIDGE REPAIRS
CROSS SECTIONS - NB DITCH GRADING - WOODFIELD RD TO RAMP D

SCALE: 1" = 5' | SHEET 5 OF 9 SHEETS | STA. 247+50.00 | TO STA. 248+50.00

F.A.I RTE.	SECTION	COUNTY	TOTAL SHEETS	SHEET NO.
290	(0404-316-HB) BR 24	COOK	276	232
		CONTRACT NO. 62W99		
	ILLINOIS	FED. AID PROJECT		

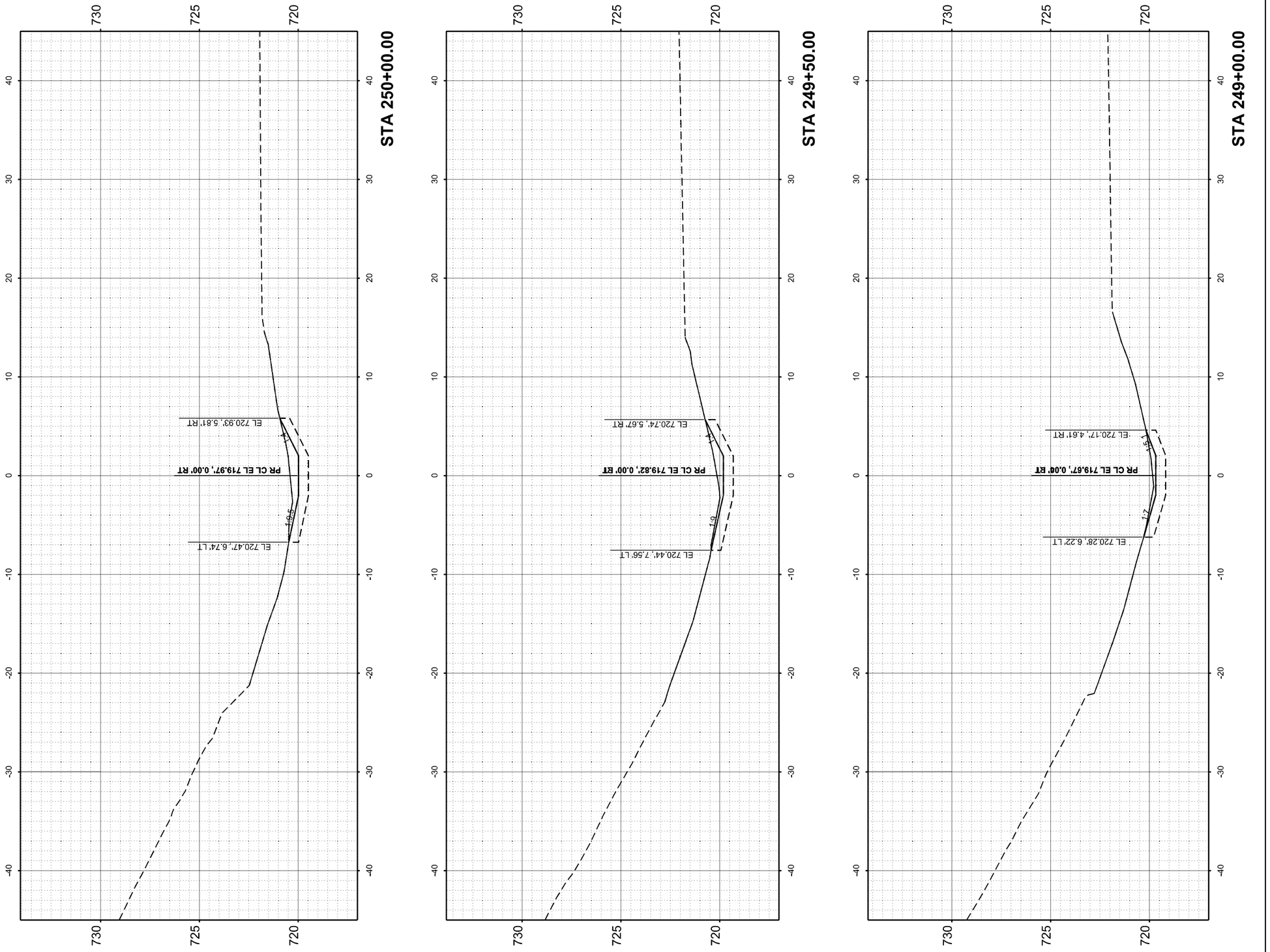

MODEL: NB_Woodfield-Ramp D - 249+00.00 [Sheet]
FILE NAME: W:\24001656.05\IDOT Dist 1 IL 290 Mill and Overlay\CADD Data\Sheets\D1_IL53_4IH_XSC_DitchGrading.dgn

IMEG
401 E. STATE ST. 4th Floor
ROCKFORD, IL 61104
PH: 815.965.6400
www.imegcorp.com

USER NAME = Marc.A.Personette	DESIGNED - Brad Lange	REVISED -
	DRAWN - Marc Personette	REVISED -
	CHECKED - Corey Stout	REVISED -
PLOT DATE = 3/16/2026	DATE - 3/16/2026	REVISED -

STATE OF ILLINOIS
DEPARTMENT OF TRANSPORTATION

I-290/IL 53 HMA RESURFACING AND BRIDGE REPAIRS
CROSS SECTIONS - NB DITCH GRADING - WOODFIELD RD TO RAMP D

SCALE: 1" = 5' | SHEET 6 OF 9 SHEETS | STA. 249+00.00 | TO STA. 250+00.00

F.A.I RTE.	SECTION	COUNTY	TOTAL SHEETS	SHEET NO.
290	(0404-316-HB) BR 24	COOK	276	233
		CONTRACT NO. 62W99		
	ILLINOIS FED. AID PROJECT			

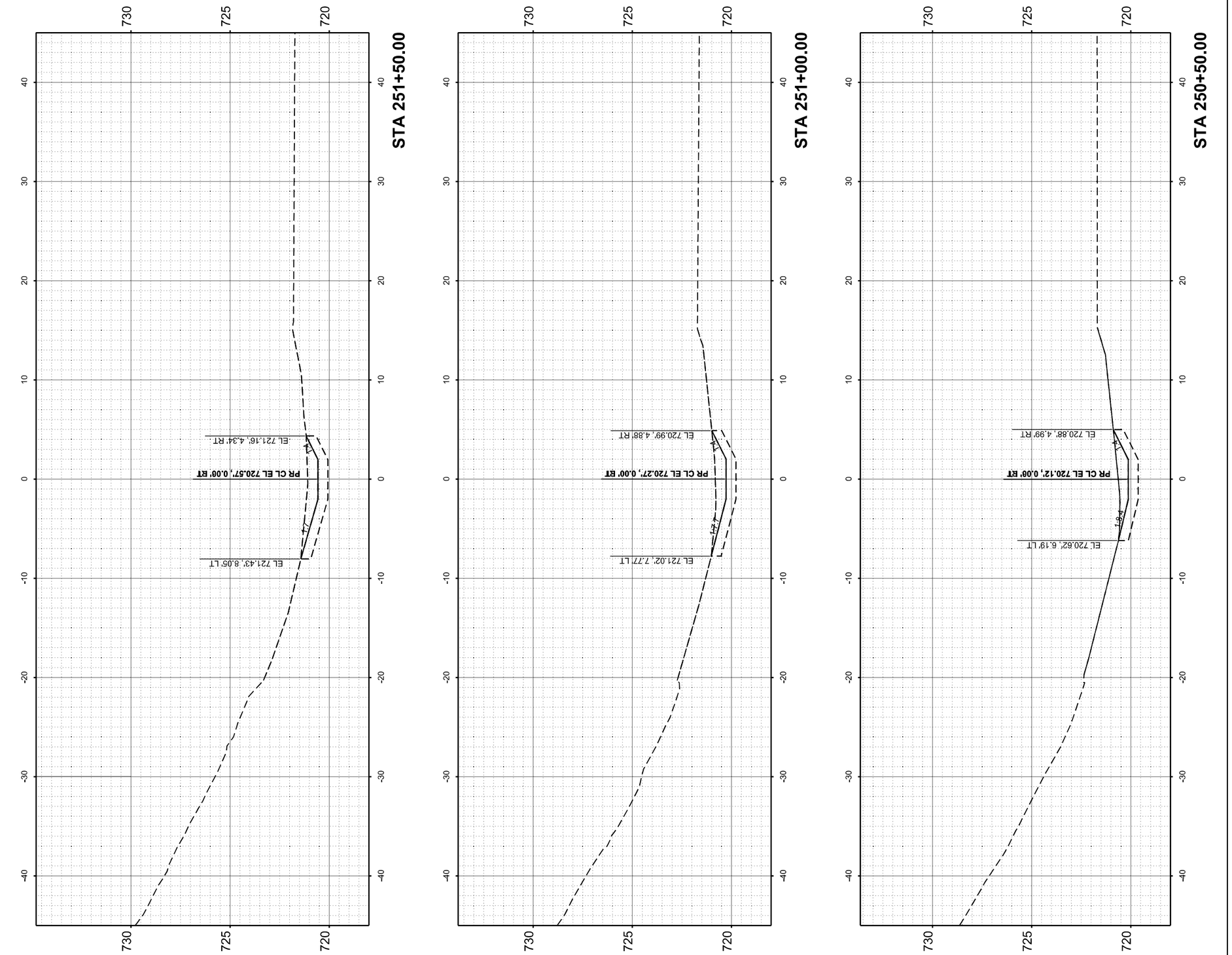

MODEL: NB_Woodfield-Ramp D - 250+50.00 [Sheet]
FILE NAME: W:\24001656.05\IDOT Dist 1 IL 290 Mill and Overlay\CADD Data\Sheets\D1_IL53_sht_XSC_DitchGrading.dgn

IMEG
401 E. STATE ST. 4th Floor
ROCKFORD, IL 61104
PH: 815.965.6400
www.imegcorp.com

USER NAME = Marc.A.Personette	DESIGNED - Brad Lange	REVISED -	
	DRAWN - Marc Personette	REVISED -	
	CHECKED - Corey Stout	REVISED -	
PLOT DATE = 3/16/2026	DATE - 3/16/2026	REVISED -	

STATE OF ILLINOIS
DEPARTMENT OF TRANSPORTATION

I-290/IL 53 HMA RESURFACING AND BRIDGE REPAIRS
CROSS SECTIONS - NB DITCH GRADING - WOODFIELD RD TO RAMP D

SCALE: 1" = 5' | SHEET 7 OF 9 SHEETS | STA. 250+50.00 | TO STA. 251+50.00

F.A.I RTE.	SECTION	COUNTY	TOTAL SHEETS	SHEET NO.
290	(0404-316-HB) BR 24	COOK	276	234
		CONTRACT NO. 62W99		
	ILLINOIS	FED. AID PROJECT		

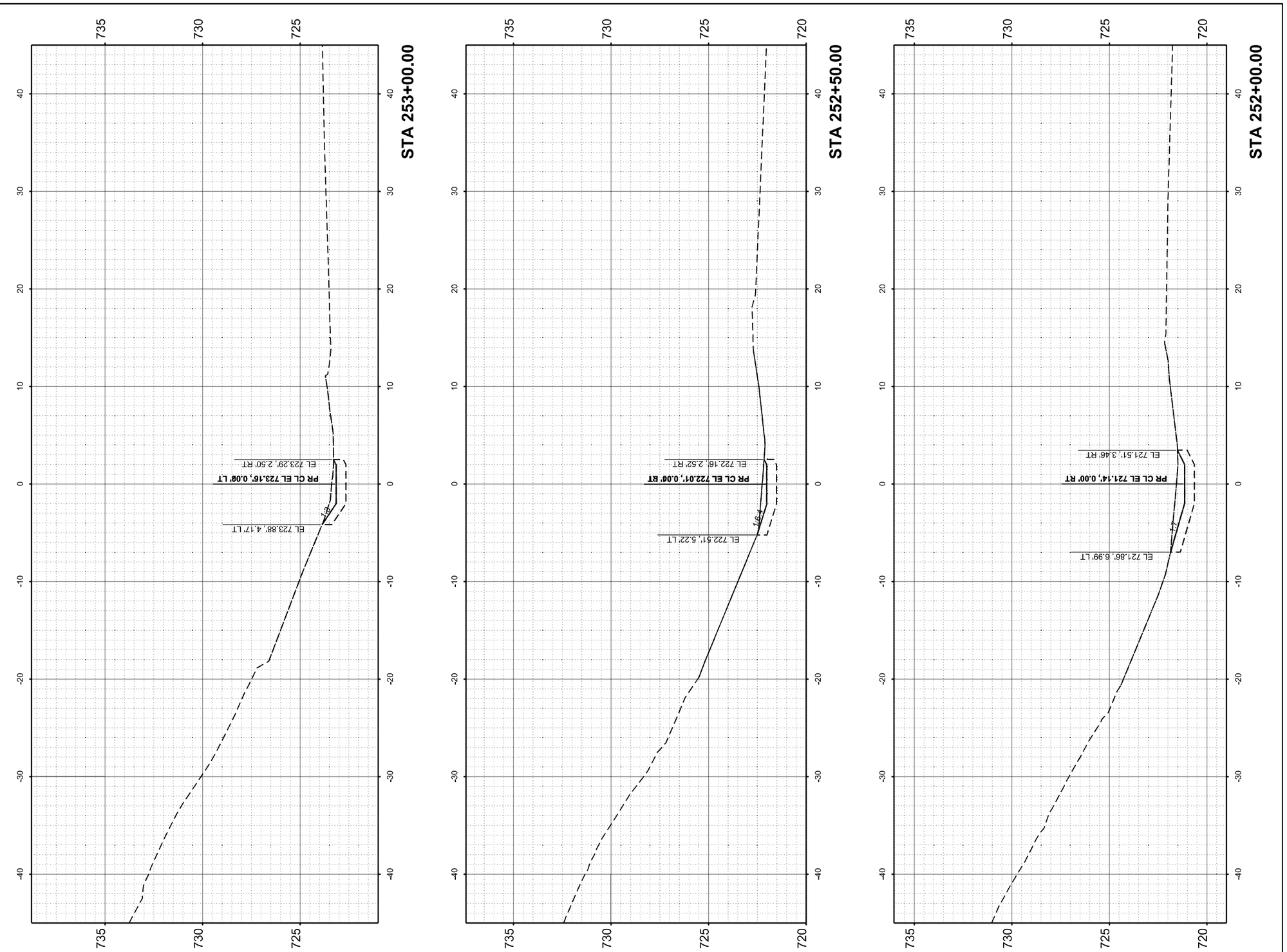

MODEL: NB_Woodfield-Ramp D - 252+00.00 [Sheet]
FILE NAME: W:\24001656.05\IDOT Dist 1 IL 290 Mill and Overlay\CADD Data\Sheets\D1_IL53_stit_XSC_DitchGrading.dgn

IMEG
401 E. STATE ST. 4th Floor
ROCKFORD, IL 61104
PH: 815.965.6400
www.imegcorp.com

USER NAME = Marc.A.Personette	DESIGNED - Brad Lange	REVISED -	
	DRAWN - Marc Personette	REVISED -	
	CHECKED - Corey Stout	REVISED -	
PLOT DATE = 3/16/2026	DATE - 3/16/2026	REVISED -	

STATE OF ILLINOIS
DEPARTMENT OF TRANSPORTATION

I-290/IL 53 HMA RESURFACING AND BRIDGE REPAIRS
CROSS SECTIONS - NB DITCH GRADING - WOODFIELD RD TO RAMP D

SCALE: 1" = 5' | SHEET 8 OF 9 SHEETS | STA. 252+00.00 | TO STA. 253+00.00

F.A.I RTE.	SECTION	COUNTY	TOTAL SHEETS	SHEET NO.
290	(0404-316-HB) BR 24	COOK	276	235
		CONTRACT NO. 62W99		
		ILLINOIS	FED. AID PROJECT	

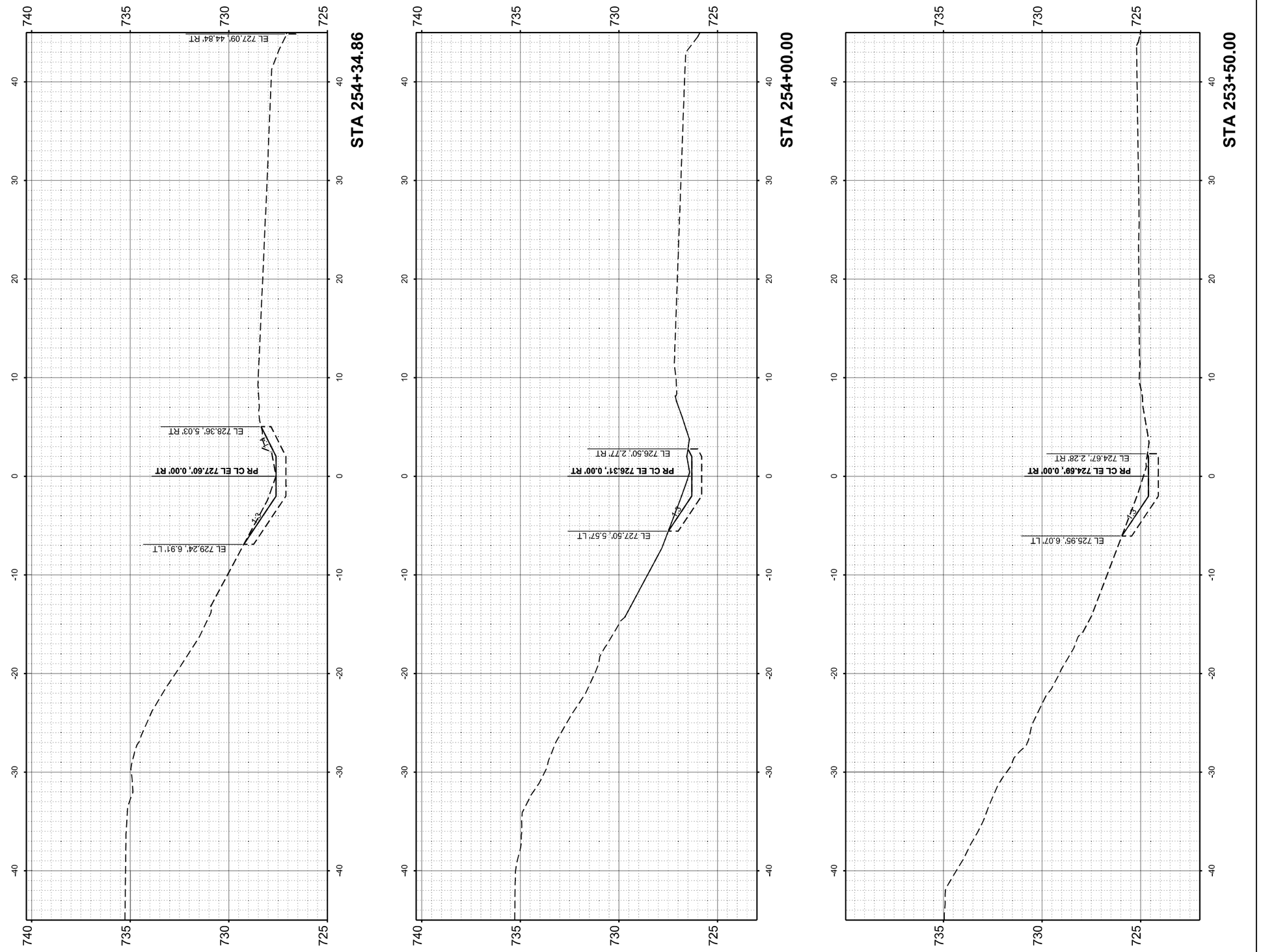

MODEL: NB_Woodfield-Ramp D - 253+50.00 [Sheet]
FILE NAME: W:\24001656.05\IDOT Dist 1 IL 290 Mill and Overlay\CADD Data\Sheets\D1_IL53_sht_XSC_DitchGrading.dgn

IMEG
401 E. STATE ST. 4th Floor
ROCKFORD, IL 61104
PH: 815.965.6400
www.imegcorp.com

USER NAME = Marc.A.Personette	DESIGNED - Brad Lange	REVISED -
	DRAWN - Marc Personette	REVISED -
	CHECKED - Corey Stout	REVISED -
PLOT DATE = 3/16/2026	DATE - 3/16/2026	REVISED -

STATE OF ILLINOIS
DEPARTMENT OF TRANSPORTATION

I-290/IL 53 HMA RESURFACING AND BRIDGE REPAIRS
CROSS SECTIONS - NB DITCH GRADING - WOODFIELD RD TO RAMP D

SCALE: 1" = 5' | SHEET 1 OF 9 SHEETS | STA. 253+50.00 | TO STA. 254+34.86

F.A.I RTE.	SECTION	COUNTY	TOTAL SHEETS	SHEET NO.
290	(0404-316-HB) BR 24	COOK	276	236
		CONTRACT NO. 62W99		
	ILLINOIS	FED. AID PROJECT		

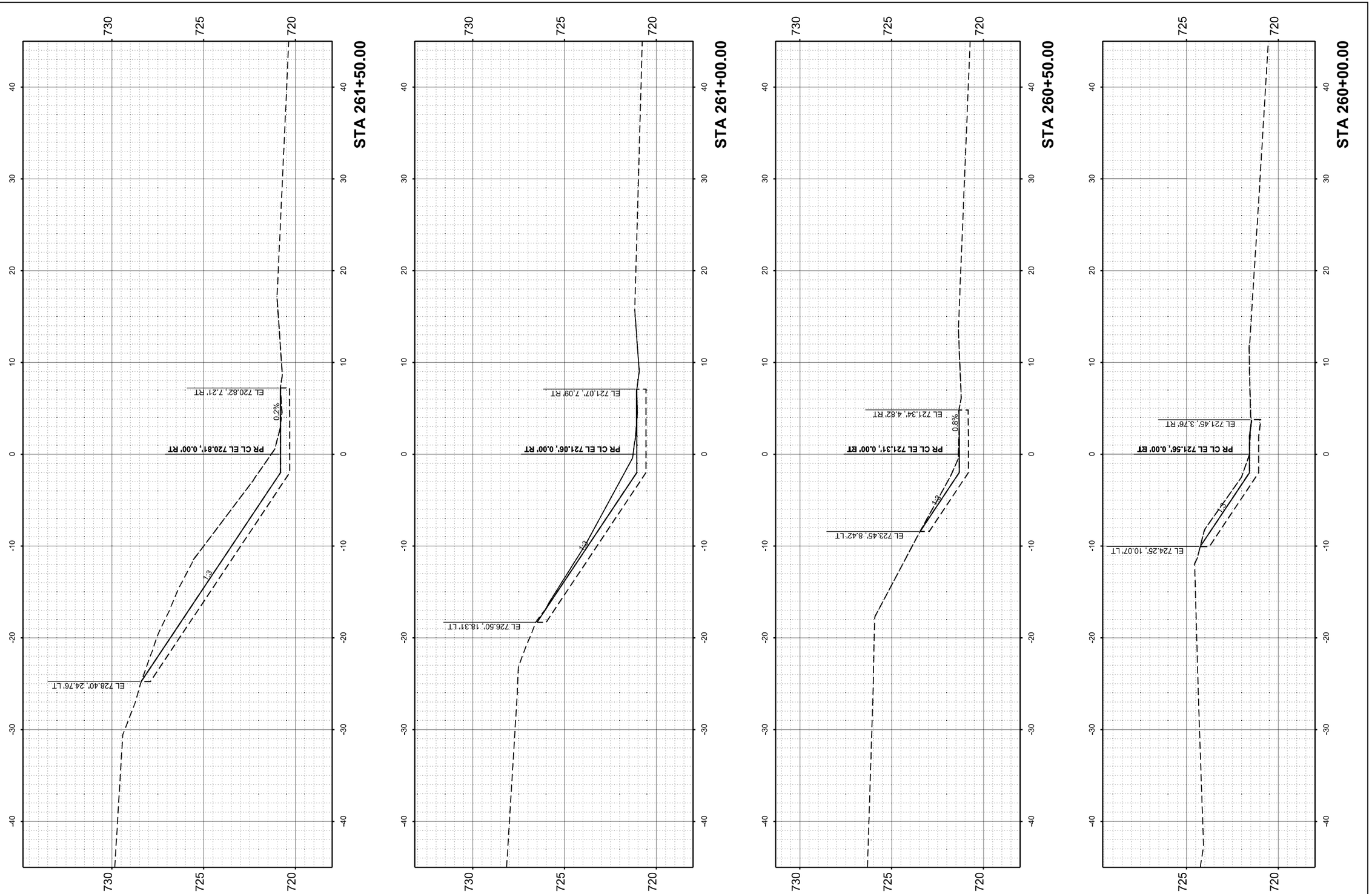

MODEL: NB_Ramp D-Golf - 260+00.00 [Sheet]
FILE NAME: W:\24001656.05\IDOT Dist 1 IL 290 Mill and Overlay\CADD Data\Sheets\D1_IL53_stlt_XSC_DitchGrading.dgn

IMEG
401 E. STATE ST. 4th Floor ROCKFORD, IL 61104
PH: 815.965.6400 www.imegcorp.com

USER NAME = Marc.A.Personette		DESIGNED - Brad Lange		REVISED -	
		DRAWN - Marc Personette		REVISED -	
		CHECKED - Corey Stout		REVISED -	
PLOT DATE = 3/16/2026		DATE - 3/16/2026		REVISED -	

STATE OF ILLINOIS
DEPARTMENT OF TRANSPORTATION

I-290/IL 53 HMA RESURFACING AND BRIDGE REPAIRS
CROSS SECTIONS - NB DITCH GRADING - RAMP D TO IL 58

SCALE: 1" = 5' | SHEET 1 OF 11 SHEETS | STA. 260+00.00 | TO STA. 261+50.00

F.A.I RTE.	SECTION	COUNTY	TOTAL SHEETS	SHEET NO.
290	(0404-316-HB) BR 24	COOK	276	237
		CONTRACT NO. 62W99		
	ILLINOIS FED. AID PROJECT			

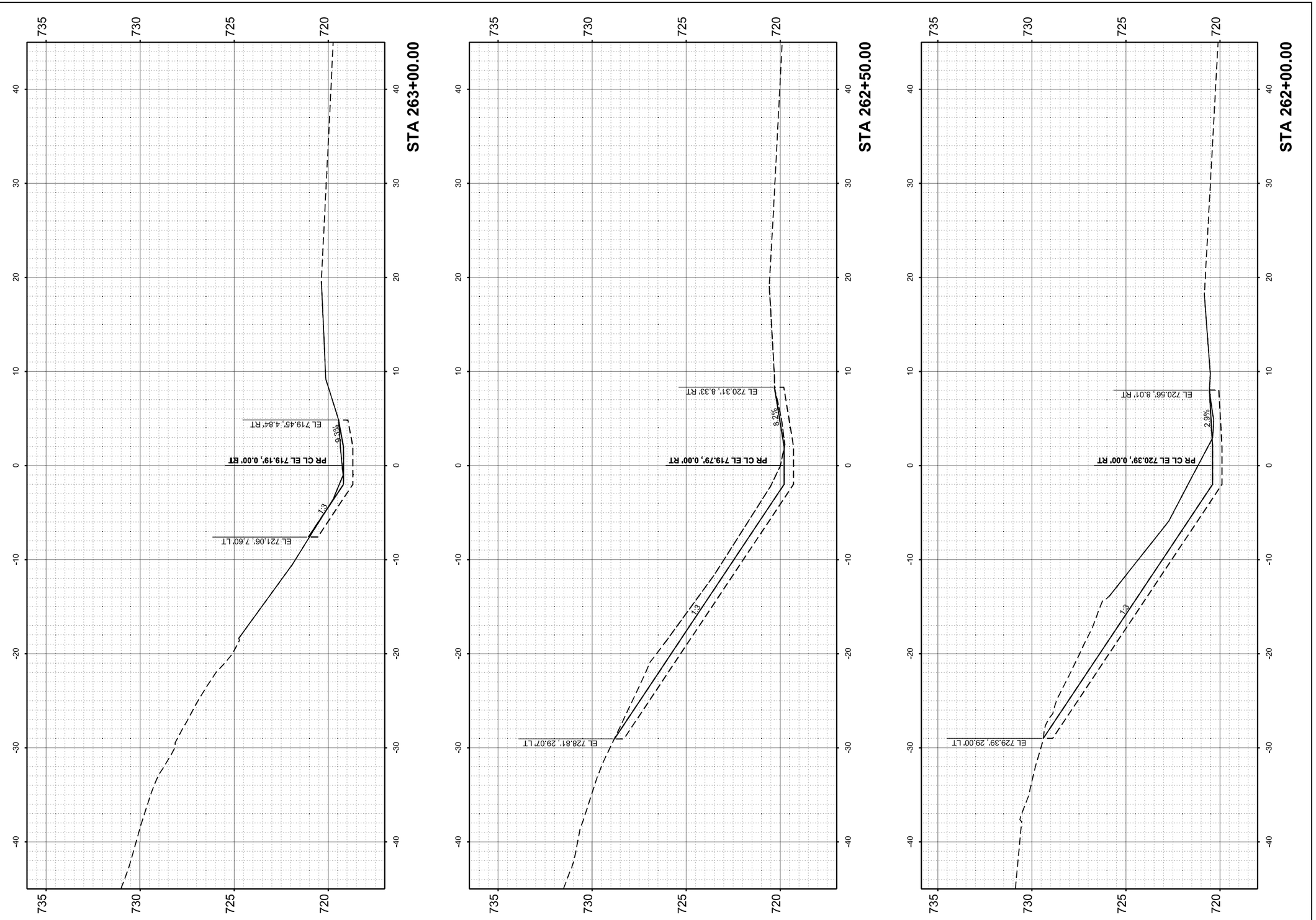

MODEL: NB_Ramp D-Golf - 262+00.00 [Sheet]
FILE NAME: W:\24001656.05\IDOT Dist 1 IL 290 Mill and Overlay\CADD Data\Sheets\D1_IL53_stit_XSC_DitchGrading.dgn

IMEG
401 E. STATE ST. 4th Floor ROCKFORD, IL 61104
PH: 815.965.6400 www.imegcorp.com

USER NAME = Marc.A.Personette	DESIGNED - Brad Lange	REVISED -	
	DRAWN - Marc Personette	REVISED -	
	CHECKED - Corey Stout	REVISED -	
PLOT DATE = 3/16/2026	DATE - 3/16/2026	REVISED -	

STATE OF ILLINOIS
DEPARTMENT OF TRANSPORTATION

I-290/IL 53 HMA RESURFACING AND BRIDGE REPAIRS
CROSS SECTIONS - NB DITCH GRADING - RAMP D TO IL 58

SCALE: 1" = 5' | SHEET 2 OF 11 SHEETS | STA. 262+00.00 | TO STA. 263+00.00

F.A.I RTE.	SECTION	COUNTY	TOTAL SHEETS	SHEET NO.
290	(0404-316-HB) BR 24	COOK	276	238
		CONTRACT NO. 62W99		
	ILLINOIS FED. AID PROJECT			

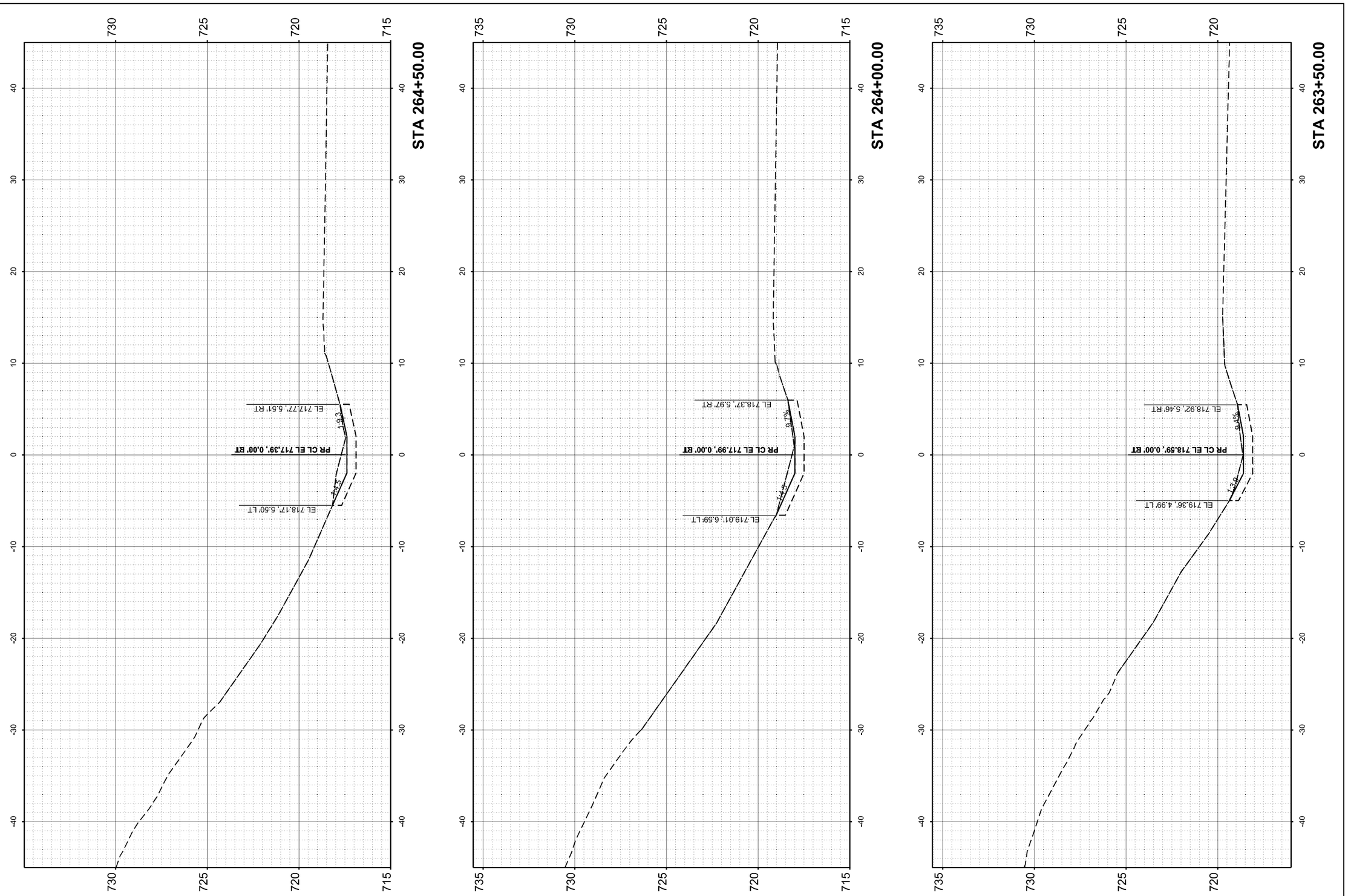

MODEL: NB_Ramp D-Golf - 263+50.00 [Sheet]
FILE NAME: W:\24001656.05\IDOT Dist 1 IL 290 Mill and Overlay\CADD Data\Sheets\D1_IL53_stit_XSC_DitchGrading.dgn

IMEG
401 E. STATE ST. 4th Floor ROCKFORD, IL 61104
PH: 815.965.6400 www.imegcorp.com

USER NAME = Marc.A.Personette	DESIGNED - Brad Lange	REVISED -	
	DRAWN - Marc Personette	REVISED -	
	CHECKED - Corey Stout	REVISED -	
PLOT DATE = 3/16/2026	DATE - 3/16/2026	REVISED -	

STATE OF ILLINOIS
DEPARTMENT OF TRANSPORTATION

I-290/IL 53 HMA RESURFACING AND BRIDGE REPAIRS
CROSS SECTIONS - NB DITCH GRADING - RAMP D TO IL 58

SCALE: 1" = 5' | SHEET 3 OF 11 SHEETS | STA. 263+50.00 | TO STA. 264+50.00

F.A.I RTE.	SECTION	COUNTY	TOTAL SHEETS	SHEET NO.
290	(0404-316-HB) BR 24	COOK	276	239
		CONTRACT NO. 62W99		
		ILLINOIS	FED. AID PROJECT	

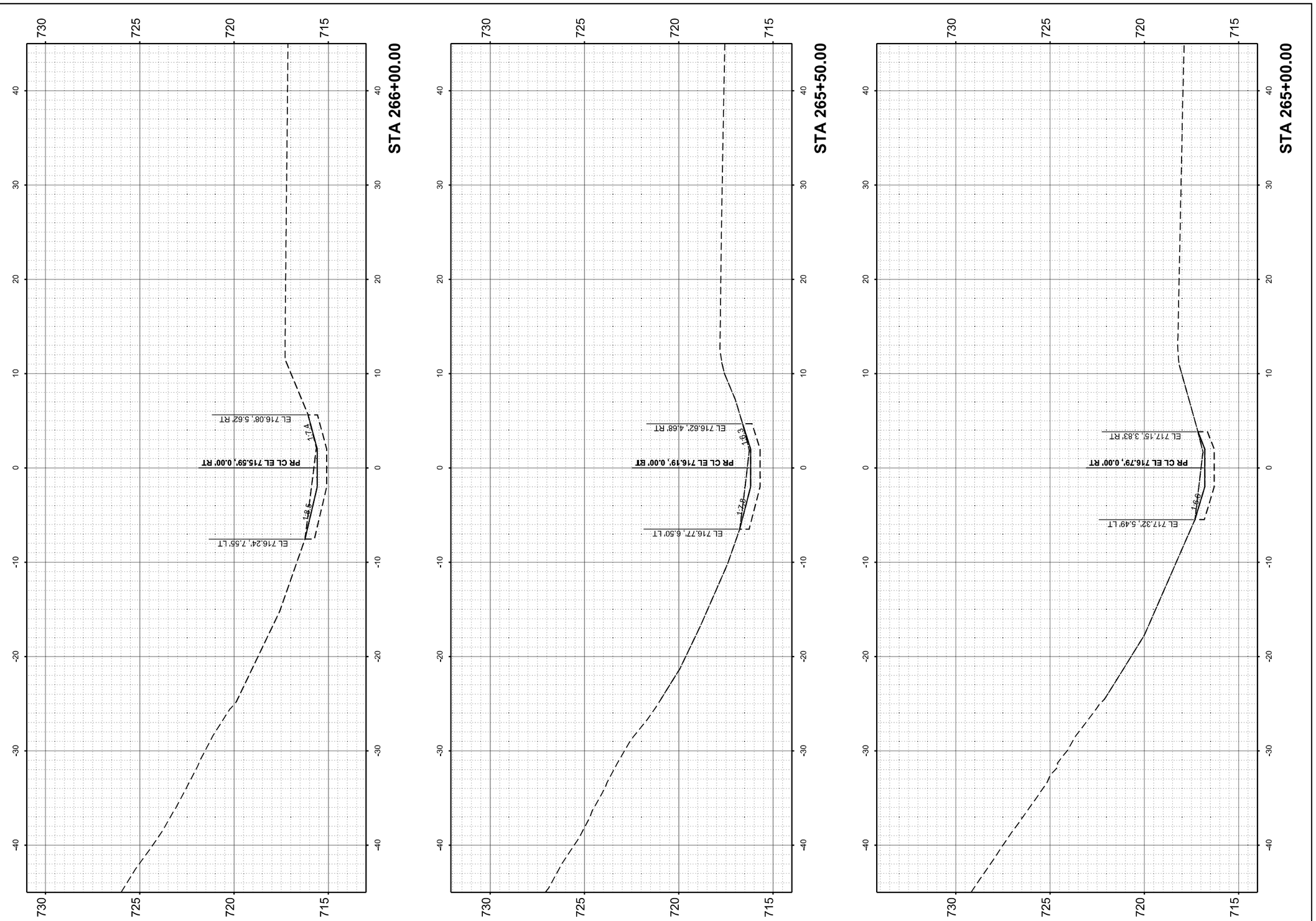

MODEL: NB_Ramp D-Golf - 265+00.00 [Sheet]
FILE NAME: W:\24001656.05\IDOT Dist 1 IL 290 Mill and Overlay\CADD Data\Sheets\D1_IL53_sht_XSC_DitchGrading.dgn

IMEG
401 E. STATE ST. 4th Floor
ROCKFORD, IL
61104
PH: 815.965.6400
www.imegcorp.com

USER NAME = Marc.A.Personette	DESIGNED - Brad Lange	REVISED -	
	DRAWN - Marc Personette	REVISED -	
	CHECKED - Corey Stout	REVISED -	
PLOT DATE = 3/16/2026	DATE - 3/16/2026	REVISED -	

STATE OF ILLINOIS
DEPARTMENT OF TRANSPORTATION

I-290/IL 53 HMA RESURFACING AND BRIDGE REPAIRS
CROSS SECTIONS - NB DITCH GRADING - RAMP D TO IL 58

SCALE: 1" = 5' | SHEET 4 OF 11 SHEETS | STA. 265+00.00 | TO STA. 266+00.00

F.A.I RTE.	SECTION	COUNTY	TOTAL SHEETS	SHEET NO.
290	(0404-316-HB) BR 24	COOK	276	240
		CONTRACT NO. 62W99		
	ILLINOIS FED. AID PROJECT			

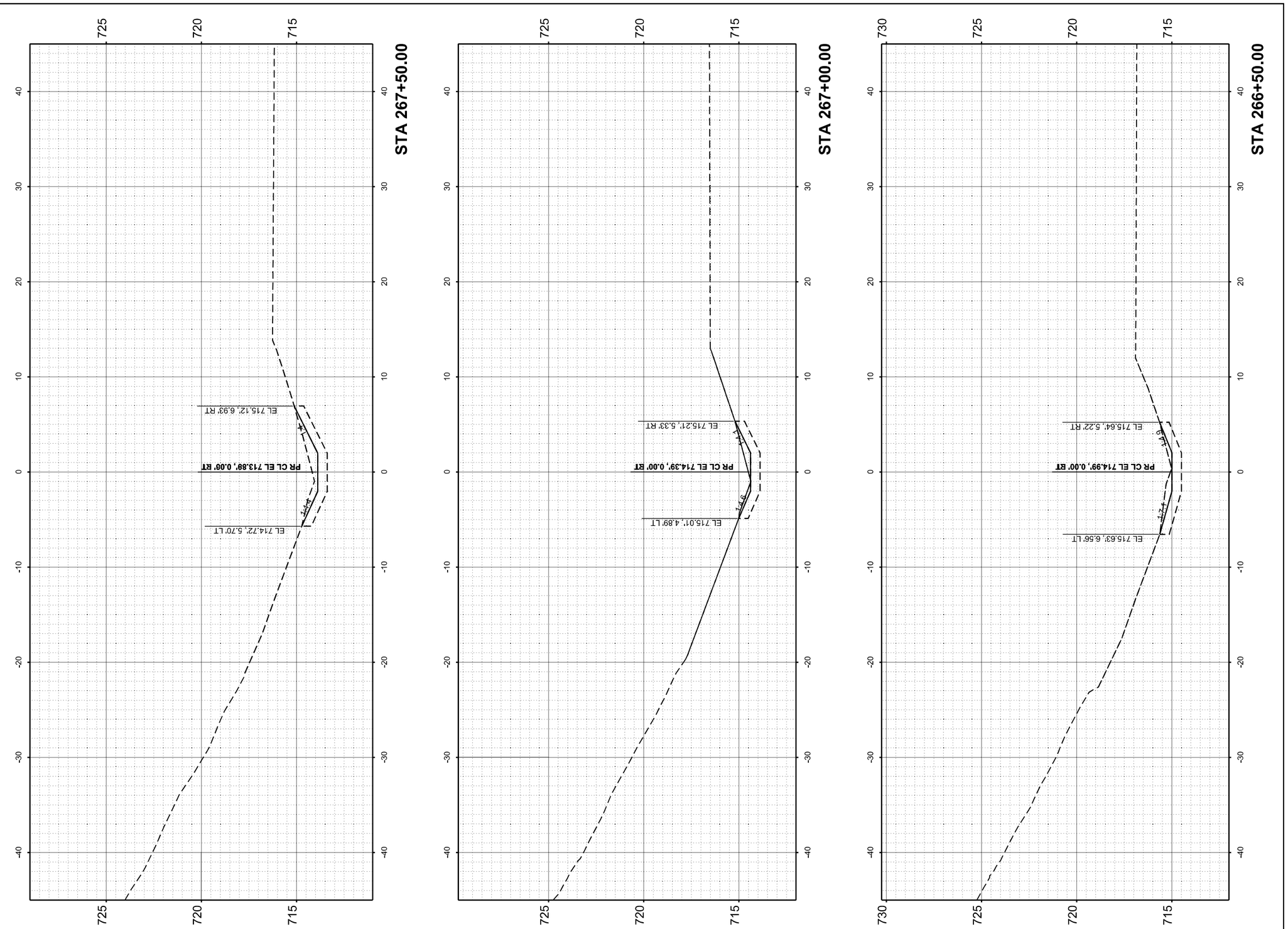

MODEL: NB_Ramp D-Gdf - 266+50.00 [Sheet]
FILE NAME: W:\24001656.05\IDOT Dist 1 IL 290 Mill and Overlay\CADD Data\Sheets\D1_IL53_sht_XSC_DitchGrading.dgn

IMEG
401 E. STATE ST. 4th Floor
ROCKFORD, IL 61104
PH: 815.965.6400
www.imegcorp.com

USER NAME = Marc.A.Personette	DESIGNED - Brad Lange	REVISED -
	DRAWN - Marc Personette	REVISED -
	CHECKED - Corey Stout	REVISED -
PLOT DATE = 3/16/2026	DATE - 3/16/2026	REVISED -

STATE OF ILLINOIS
DEPARTMENT OF TRANSPORTATION

I-290/IL 53 HMA RESURFACING AND BRIDGE REPAIRS
CROSS SECTIONS - NB DITCH GRADING - RAMP D TO IL 58

SCALE: 1" = 5' | SHEET 5 OF 11 SHEETS | STA. 266+50.00 | TO STA. 267+50.00

F.A.I RTE.	SECTION	COUNTY	TOTAL SHEETS	SHEET NO.
290	(0404-316-HB) BR 24	COOK	276	241
		CONTRACT NO. 62W99		
	ILLINOIS FED. AID PROJECT			

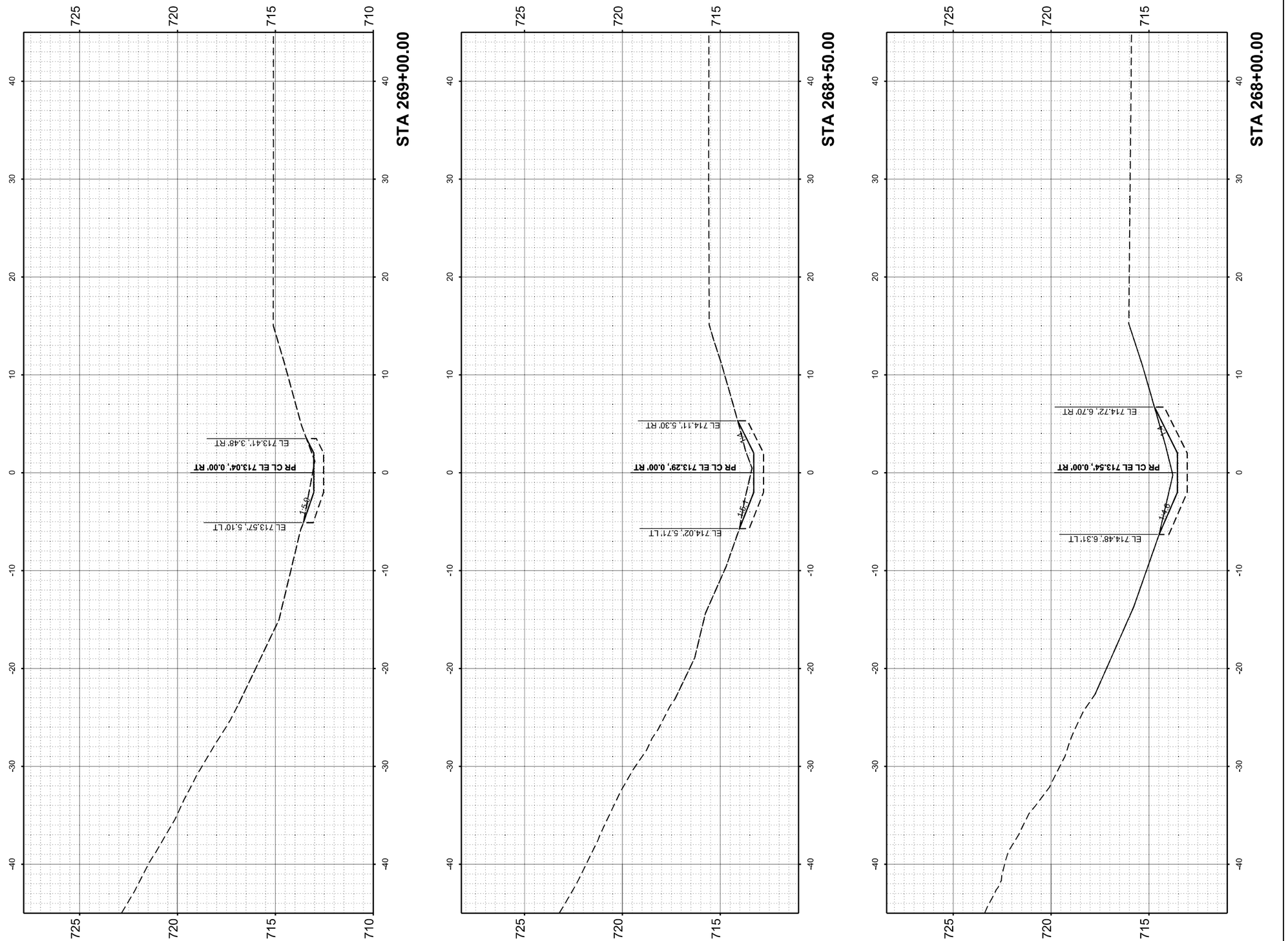

MODEL: NB_Ramp D-Golf - 268+00.00 [Sheet]
FILE NAME: W:\24001656.05\IDOT Dist 1 IL 290 Mill and Overlay\CADD Data\Sheets\D1_IL53_stit_XSC_DitchGrading.dgn

IMEG
401 E. STATE ST. 4th Floor ROCKFORD, IL 61104
PH: 815.965.6400 www.imegcorp.com

USER NAME = Marc.A.Personette	DESIGNED - Brad Lange	REVISED -
	DRAWN - Marc Personette	REVISED -
	CHECKED - Corey Stout	REVISED -
PLOT DATE = 3/16/2026	DATE - 3/16/2026	REVISED -

STATE OF ILLINOIS
DEPARTMENT OF TRANSPORTATION

I-290/IL 53 HMA RESURFACING AND BRIDGE REPAIRS
CROSS SECTIONS - NB DITCH GRADING - RAMP D TO IL 58

SCALE: 1" = 5' | SHEET 6 OF 11 SHEETS | STA. 268+00.00 | TO STA. 269+00.00

F.A.I RTE.	SECTION	COUNTY	TOTAL SHEETS	SHEET NO.
290	(0404-316-HB) BR 24	COOK	276	242
		CONTRACT NO. 62W99		
	ILLINOIS	FED. AID PROJECT		

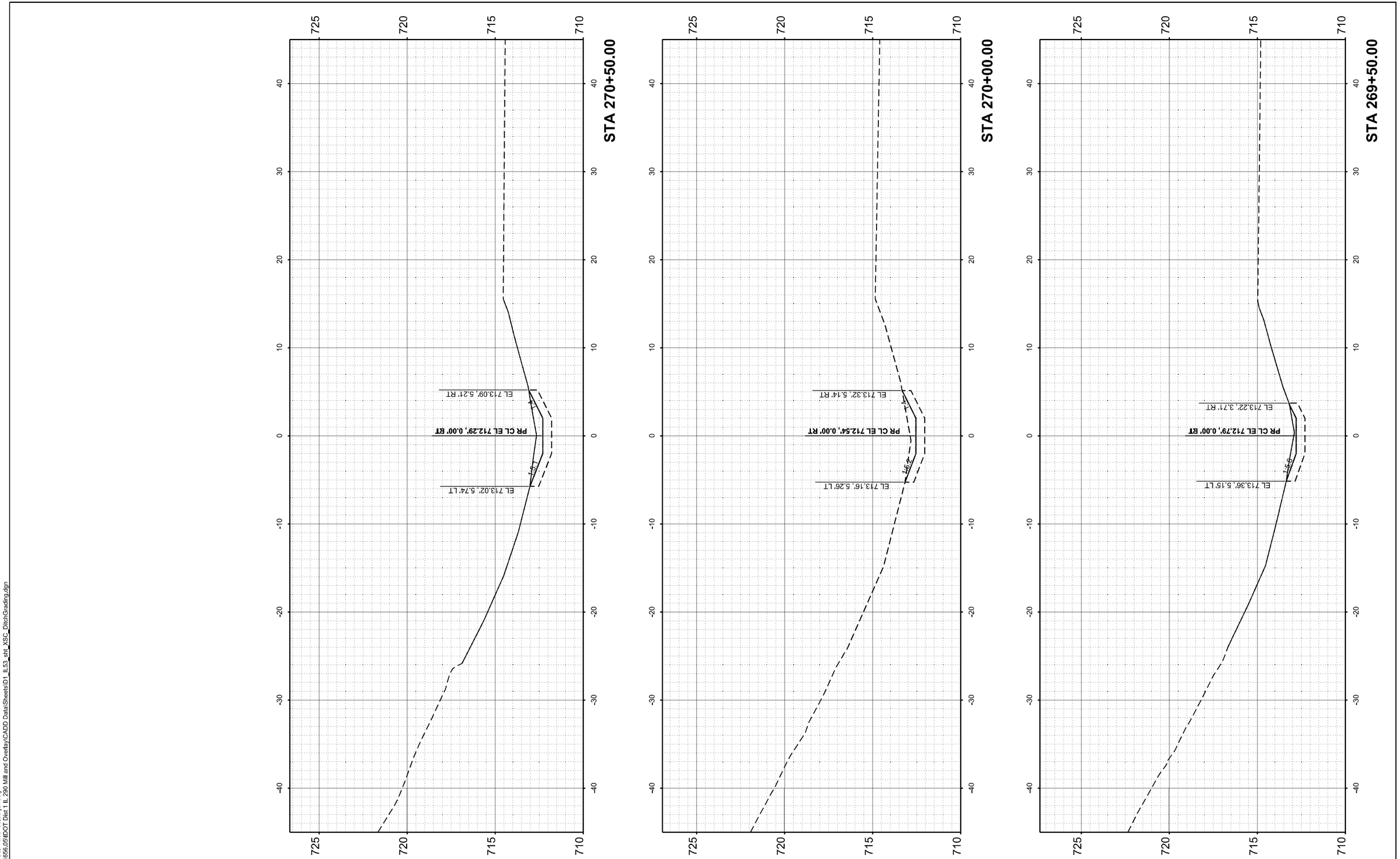

MODEL: NB_Ramp D-Golf - 269+50.00 [Sheet]
FILE NAME: W:\240016\56.05\IDOT Dist 1 IL 290 Mill and Overlay\CADD Data\Sheets\D1_IL53_sht_XSC_DitchGrading.dgn

IMEG
401 E. STATE ST. 4th Floor
ROCKFORD, IL 61104
PH: 815.965.6400
www.imegcorp.com

USER NAME = Marc.A.Personette	DESIGNED - Brad Lange	REVISED -	
	DRAWN - Marc Personette	REVISED -	
	CHECKED - Corey Stout	REVISED -	
PLOT DATE = 3/16/2026	DATE - 3/16/2026	REVISED -	

STATE OF ILLINOIS
DEPARTMENT OF TRANSPORTATION

I-290/IL 53 HMA RESURFACING AND BRIDGE REPAIRS
CROSS SECTIONS - NB DITCH GRADING - RAMP D TO IL 58

SCALE: 1" = 5' | SHEET 7 OF 11 SHEETS | STA. 269+50.00 TO STA. 270+50.00

F.A.I RTE.	SECTION	COUNTY	TOTAL SHEETS	SHEET NO.
290	(0404-316-HB) BR 24	COOK	276	243
		CONTRACT NO. 62W99		
	ILLINOIS FED. AID PROJECT			

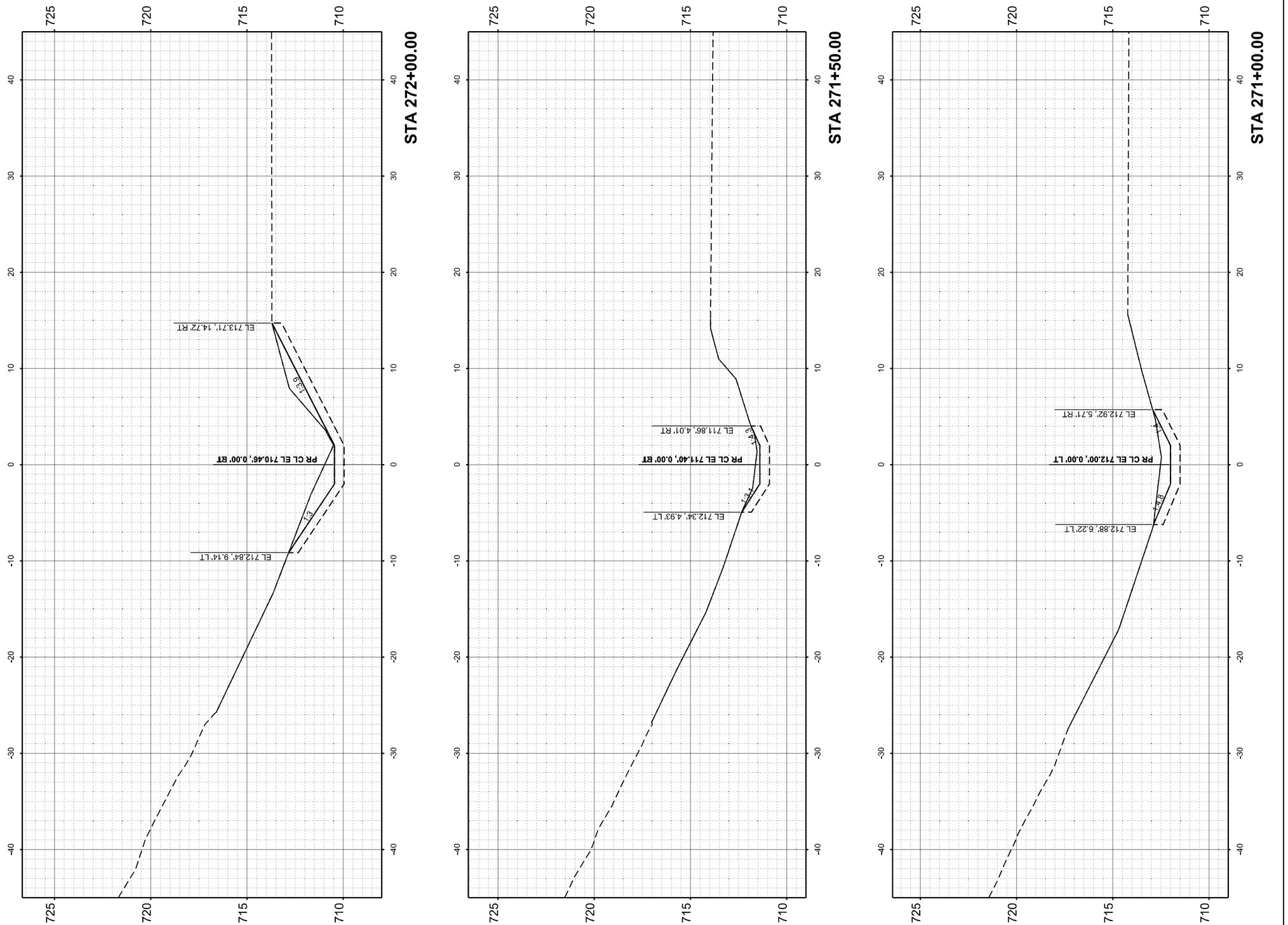

MODEL: NB_Ramp D-Golf - 271+00.00 [Sheet]
FILE NAME: W:\24001656.05\IDOT Dist 1 IL 290 Mill and Overlay\CADD Data\Sheets\D1_IL53_stit_XSC_DitchGrading.dgn

IMEG
401 E. STATE ST. 4th Floor ROCKFORD, IL 61104
PH: 815.965.6400 www.imegcorp.com

USER NAME = Marc.A.Personette	DESIGNED - Brad Lange	REVISED -
	DRAWN - Marc Personette	REVISED -
	CHECKED - Corey Stout	REVISED -
PLOT DATE = 3/16/2026	DATE - 3/16/2026	REVISED -

STATE OF ILLINOIS
DEPARTMENT OF TRANSPORTATION

I-290/IL 53 HMA RESURFACING AND BRIDGE REPAIRS
CROSS SECTIONS - NB DITCH GRADING - RAMP D TO IL 58

SCALE: 1" = 5' | SHEET 8 OF 11 SHEETS | STA. 271+00.00 | TO STA. 272+00.00

F.A.I RTE.	SECTION	COUNTY	TOTAL SHEETS	SHEET NO.
290	(0404-316-HB) BR 24	COOK	276	244
		CONTRACT NO. 62W99		
	ILLINOIS	FED. AID PROJECT		

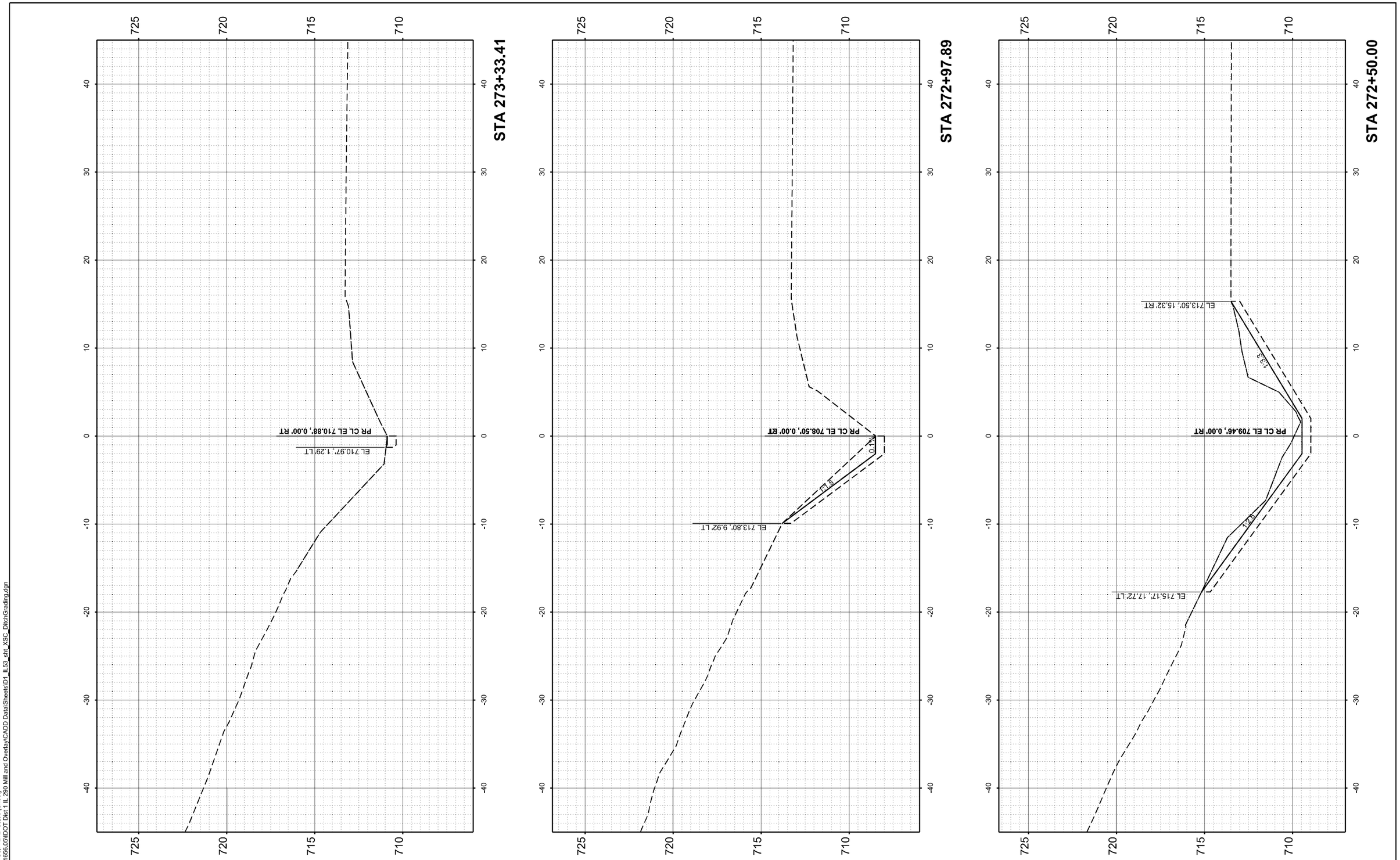

MODEL: NB_Ramp D-Golf - 272+50.00 [Sheet]
FILE NAME: W:\2400\1656.05\IDOT Dist 1 IL 290 Mill and Overlay\CADD Data\Sheets\D1_IL53_sht_XSC_DitchGrading.dgn

IMEG
401 E. STATE ST. 4th Floor ROCKFORD, IL 61104
PH: 815.965.6400 www.imegcorp.com

USER NAME = Marc.A.Personette	DESIGNED - Brad Lange	REVISED -	
	DRAWN - Marc Personette	REVISED -	
	CHECKED - Corey Stout	REVISED -	
PLOT DATE = 3/16/2026	DATE - 3/16/2026	REVISED -	

STATE OF ILLINOIS
DEPARTMENT OF TRANSPORTATION

I-290/IL 53 HMA RESURFACING AND BRIDGE REPAIRS
CROSS SECTIONS - NB DITCH GRADING - RAMP D TO IL 58

SCALE: 1" = 5' | SHEET 9 OF 11 SHEETS | STA. 272+50.00 | TO STA. 273+33.41

F.A.I RTE.	SECTION	COUNTY	TOTAL SHEETS	SHEET NO.
290	(0404-316-HB) BR 24	COOK	276	245
		CONTRACT NO. 62W99		
		ILLINOIS	FED. AID PROJECT	

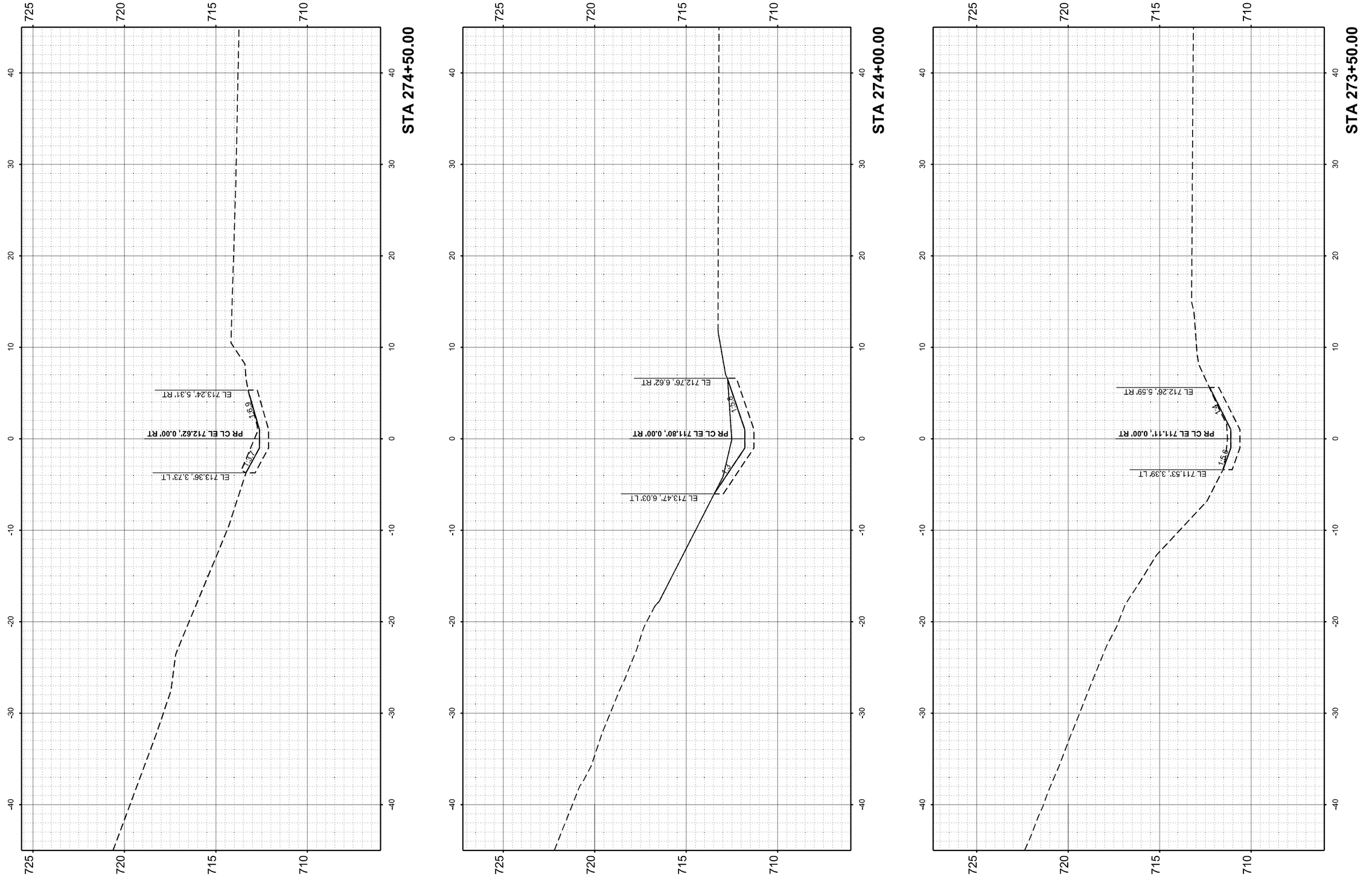

MODEL: NB_Ramp D-Golf - 273+50.00 [Sheet]
FILE NAME: W:\24001656.05\IDOT Dist 1 IL 290 Mill and Overlay\CADD Data\Sheets\D1_IL53_sht_XSC_DitchGrading.dgn

IMEG
401 E. STATE ST. 4th Floor
ROCKFORD, IL 61104
PH: 815.965.6400
www.imegcorp.com

USER NAME = Marc.A.Personette	DESIGNED - Brad Lange	REVISED -	
	DRAWN - Marc Personette	REVISED -	
	CHECKED - Corey Stout	REVISED -	
PLOT DATE = 3/16/2026	DATE - 3/16/2026	REVISED -	

STATE OF ILLINOIS
DEPARTMENT OF TRANSPORTATION

I-290/IL 53 HMA RESURFACING AND BRIDGE REPAIRS
CROSS SECTIONS - NB DITCH GRADING - RAMP D TO IL 58

SCALE: 1" = 5' | SHEET 10 OF 11 SHEETS | STA. 273+50.00 | TO STA. 274+50.00

F.A.I RTE.	SECTION	COUNTY	TOTAL SHEETS	SHEET NO.
290	(0404-316-HB) BR 24	COOK	276	246
		CONTRACT NO. 62W99		
		ILLINOIS	FED. AID PROJECT	

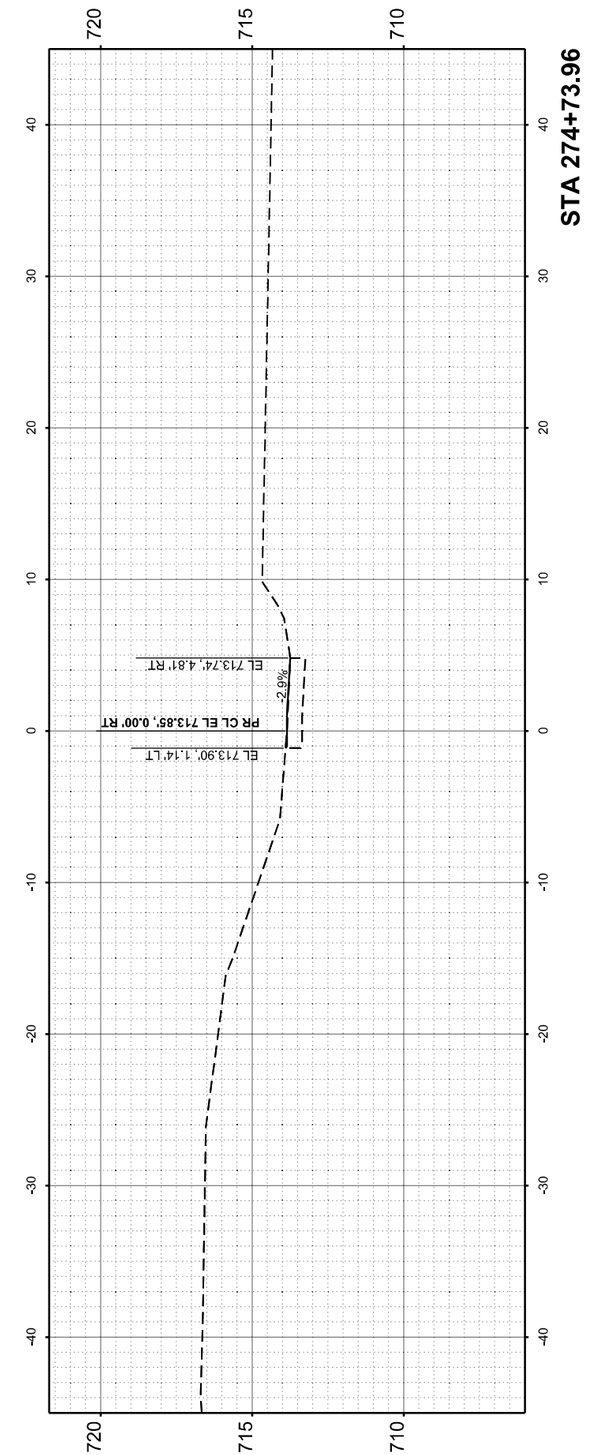

MODEL: NB_Ramp D-Golf - 274+73.96 [Sheet]
FILE NAME: W:\24001656.05\IDOT Dist 1 IL 290 Mill and Overlay\CADD Data\Sheets\D1_IL53_sht_XSC_DitchGrading.dgn

IMEG
401 E. STATE ST. 4th Floor
ROCKFORD, IL
61104
PH: 815.965.6400
www.imegcorp.com

USER NAME = Marc.A.Personette	DESIGNED - Brad Lange	REVISED -
	DRAWN - Marc Personette	REVISED -
	CHECKED - Corey Stout	REVISED -
PLOT DATE = 3/16/2026	DATE - 3/16/2026	REVISED -

STATE OF ILLINOIS
DEPARTMENT OF TRANSPORTATION

I-290/IL 53 HMA RESURFACING AND BRIDGE REPAIRS
CROSS SECTIONS - NB DITCH GRADING - RAMP D TO IL 58

SCALE: 1" = 5' | SHEET 11 OF 11 SHEETS | STA. 274+73.96 | TO STA. 274+73.96

F.A.I RTE.	SECTION	COUNTY	TOTAL SHEETS	SHEET NO.
290	(0404-316-HB) BR 24	COOK	276	247
		CONTRACT NO. 62W99		
	ILLINOIS	FED. AID PROJECT		

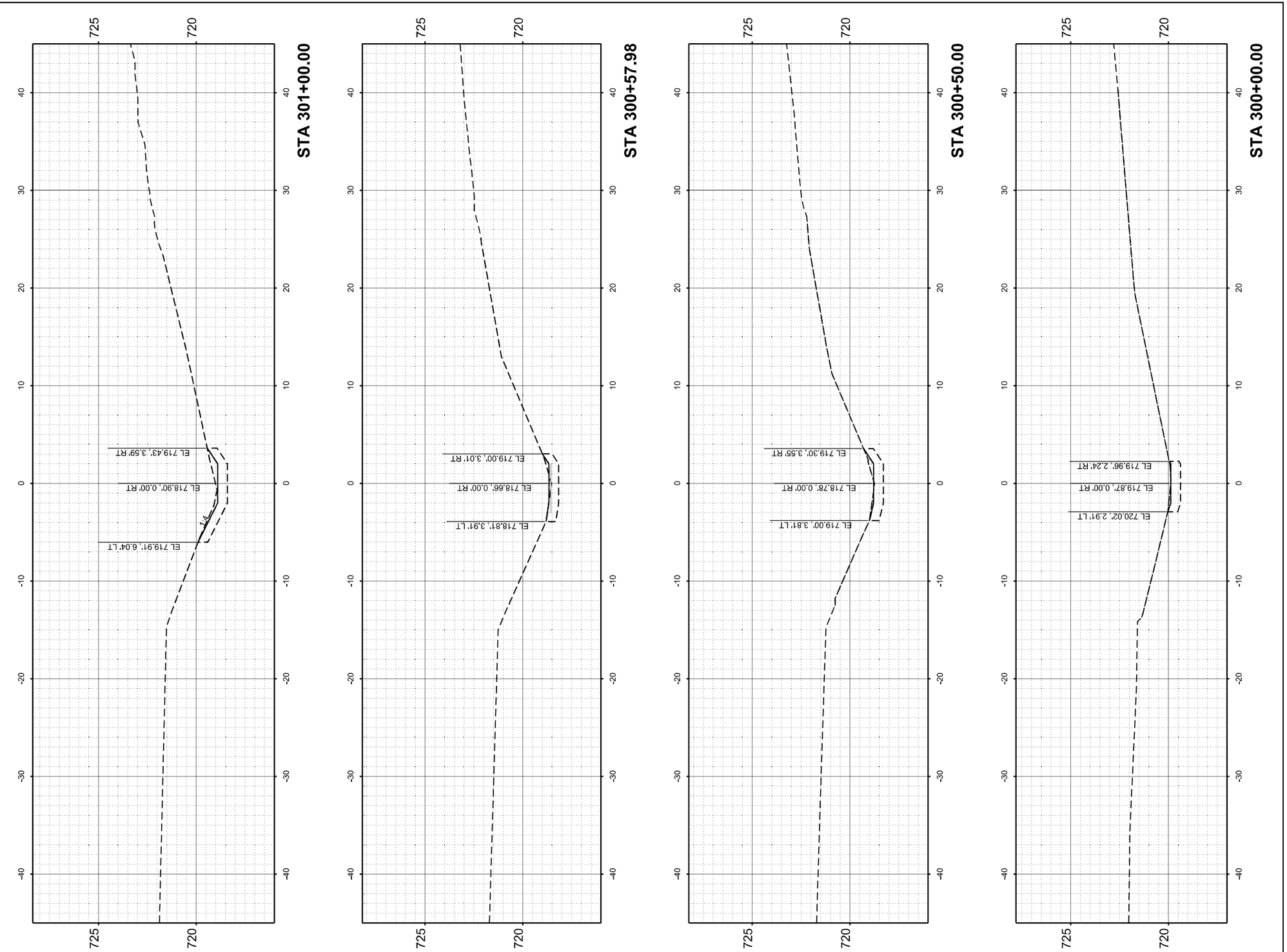

MODEL: SB_Higgins-Ramp A - 300+00.00 [Sheet]
FILE NAME: W:\24001656.05\IDOT Dist 1 IL 290 Mill and Overlay\CADD Data\Sheets\D1_IL53_sht_XSC_DitchGrading.dgn

IMEG
401 E. STATE ST. 4th Floor
ROCKFORD, IL 61104
PH: 815.965.6400
www.imegcorp.com

USER NAME = Marc.A.Personette	DESIGNED - Brad Lange	REVISED -	
	DRAWN - Marc Personette	REVISED -	
	CHECKED - Corey Stout	REVISED -	
PLOT DATE = 3/16/2026	DATE - 3/16/2026	REVISED -	

STATE OF ILLINOIS
DEPARTMENT OF TRANSPORTATION

I-290/IL 53 HMA RESURFACING AND BRIDGE REPAIRS
CROSS SECTIONS - SB DITCH GRADING - IL 72 TO RAMP A

SCALE: 1" = 5' | SHEET 1 OF 6 SHEETS | STA. 300+00.00 | TO STA. 301+00.00

F.A.I RTE.	SECTION	COUNTY	TOTAL SHEETS	SHEET NO.
290	(0404-316-HB) BR 24	COOK	276	248
		CONTRACT NO. 62W99		
		ILLINOIS	FED. AID PROJECT	

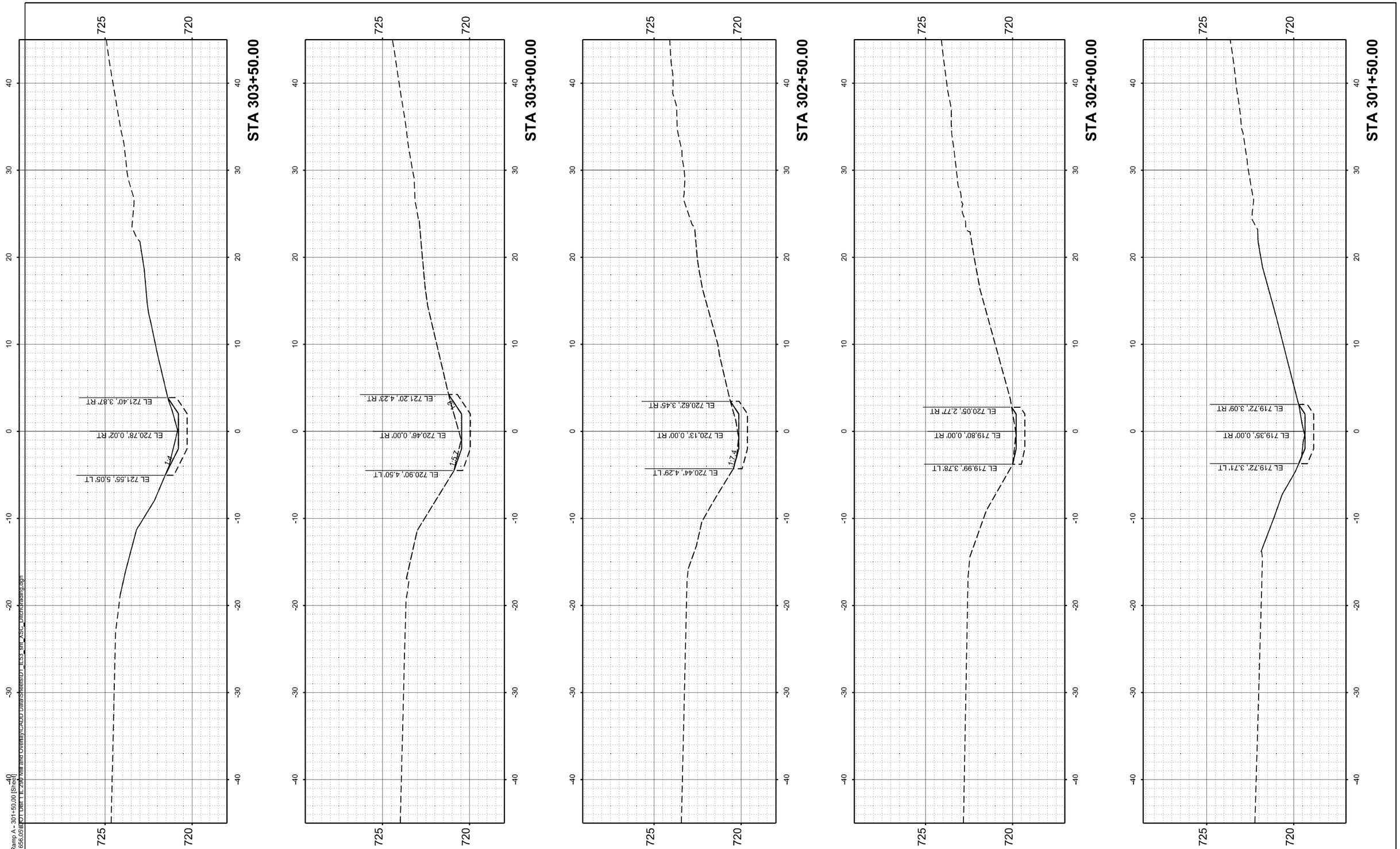

MODEL: SB_Higgins-Ramp A - 301+50.00 [Sheet]
FILE NAME: W:\24001656.05\IDOT Dist 1\I-290 Mill and Overlay\CADD Data\Sheets\D - I-53 - SB - XSC_DitchGrading.dgn

IMEG
401 E. STATE ST. 4th Floor ROCKFORD, IL 61104
PH: 815.965.6400 www.imegcorp.com

USER NAME = Marc.A.Personette	DESIGNED - Brad Lange	REVISED -	
	DRAWN - Marc Personette	REVISED -	
	CHECKED - Corey Stout	REVISED -	
PLOT DATE = 3/16/2026	DATE - 3/16/2026	REVISED -	

STATE OF ILLINOIS
DEPARTMENT OF TRANSPORTATION

I-290/IL 53 HMA RESURFACING AND BRIDGE REPAIRS
CROSS SECTIONS - SB DITCH GRADING - IL 72 TO RAMP A

SCALE: 1" = 5' | SHEET 2 OF 6 SHEETS | STA. 301+50.00 | TO STA. 303+50.00

F.A.I RTE.	SECTION	COUNTY	TOTAL SHEETS	SHEET NO.
290	(0404-316-HB) BR 24	COOK	276	249
		CONTRACT NO. 62W99		
	ILLINOIS	FED. AID PROJECT		

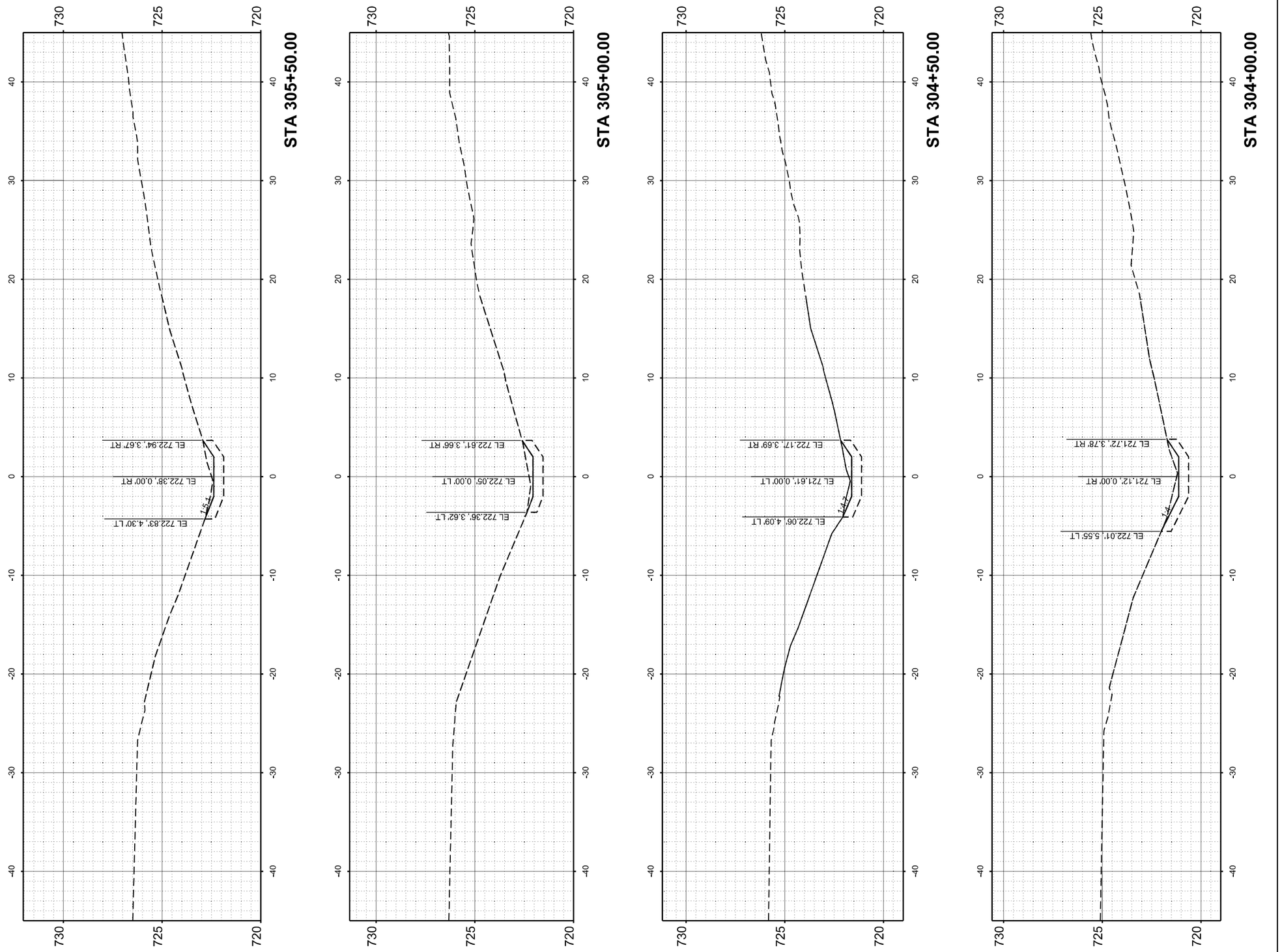

MODEL: SB_Higgins-Ramp A - 304+00.00 [Sheet]
FILE NAME: W:\24001656.05\IDOT Dist 1 IL 290 Mill and Overlay\CADD Data\Sheets\D1_IL53_stm_XSC_DitchGrading.dgn

IMEG
401 E. STATE ST. 4th Floor ROCKFORD, IL 61104
PH: 815.965.6400 www.imegcorp.com

USER NAME = Marc.A.Personette	DESIGNED - Brad Lange	REVISED -
	DRAWN - Marc Personette	REVISED -
	CHECKED - Corey Stout	REVISED -
PLOT DATE = 3/16/2026	DATE - 3/16/2026	REVISED -

STATE OF ILLINOIS
DEPARTMENT OF TRANSPORTATION

I-290/IL 53 HMA RESURFACING AND BRIDGE REPAIRS
CROSS SECTIONS - SB DITCH GRADING - IL 72 TO RAMP A

SCALE: 1" = 5' | SHEET 3 OF 6 SHEETS | STA. 304+00.00 | TO STA. 305+50.00

F.A.I RTE.	SECTION	COUNTY	TOTAL SHEETS	SHEET NO.
290	(0404-316-HB) BR 24	COOK	276	250
		CONTRACT NO. 62W99		
	ILLINOIS	FED. AID PROJECT		

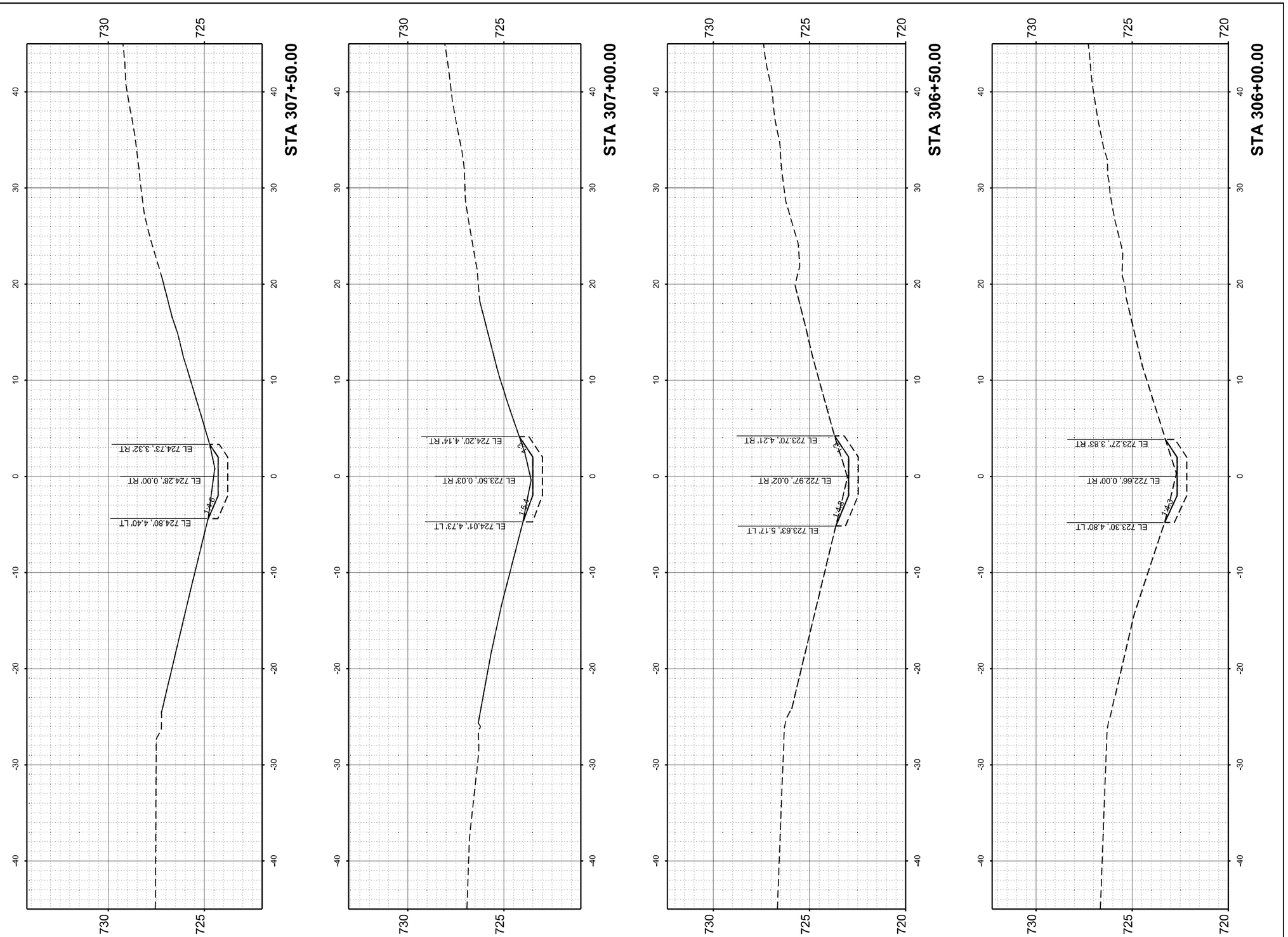

MODEL: SB_Higgins-Ramp A - 306+00.00 [Sheet]
FILE NAME: W:\24001656.051\IDOT Dist 1 IL 290 Mill and Overlay\CADD Data\SheetsID1_IL53_sht_XSC_DitchGrading.dgn

IMEG
401 E. STATE ST. 4th Floor
ROCKFORD, IL 61104
PH: 815.965.6400
www.imegcorp.com

USER NAME = Marc.A.Personette	DESIGNED - Brad Lange	REVISED -	
	DRAWN - Marc Personette	REVISED -	
	CHECKED - Corey Stout	REVISED -	
PLOT DATE = 3/16/2026	DATE - 3/16/2026	REVISED -	

STATE OF ILLINOIS
DEPARTMENT OF TRANSPORTATION

I-290/IL 53 HMA RESURFACING AND BRIDGE REPAIRS
CROSS SECTIONS - SB DITCH GRADING - IL 72 TO RAMP A

SCALE: 1" = 5' | SHEET 4 OF 6 SHEETS | STA. 306+00.00 | TO STA. 307+50.00

F.A.I RTE.	SECTION	COUNTY	TOTAL SHEETS	SHEET NO.
290	(0404-316-HB) BR 24	COOK	276	251
		CONTRACT NO. 62W99		
	ILLINOIS FED. AID PROJECT			

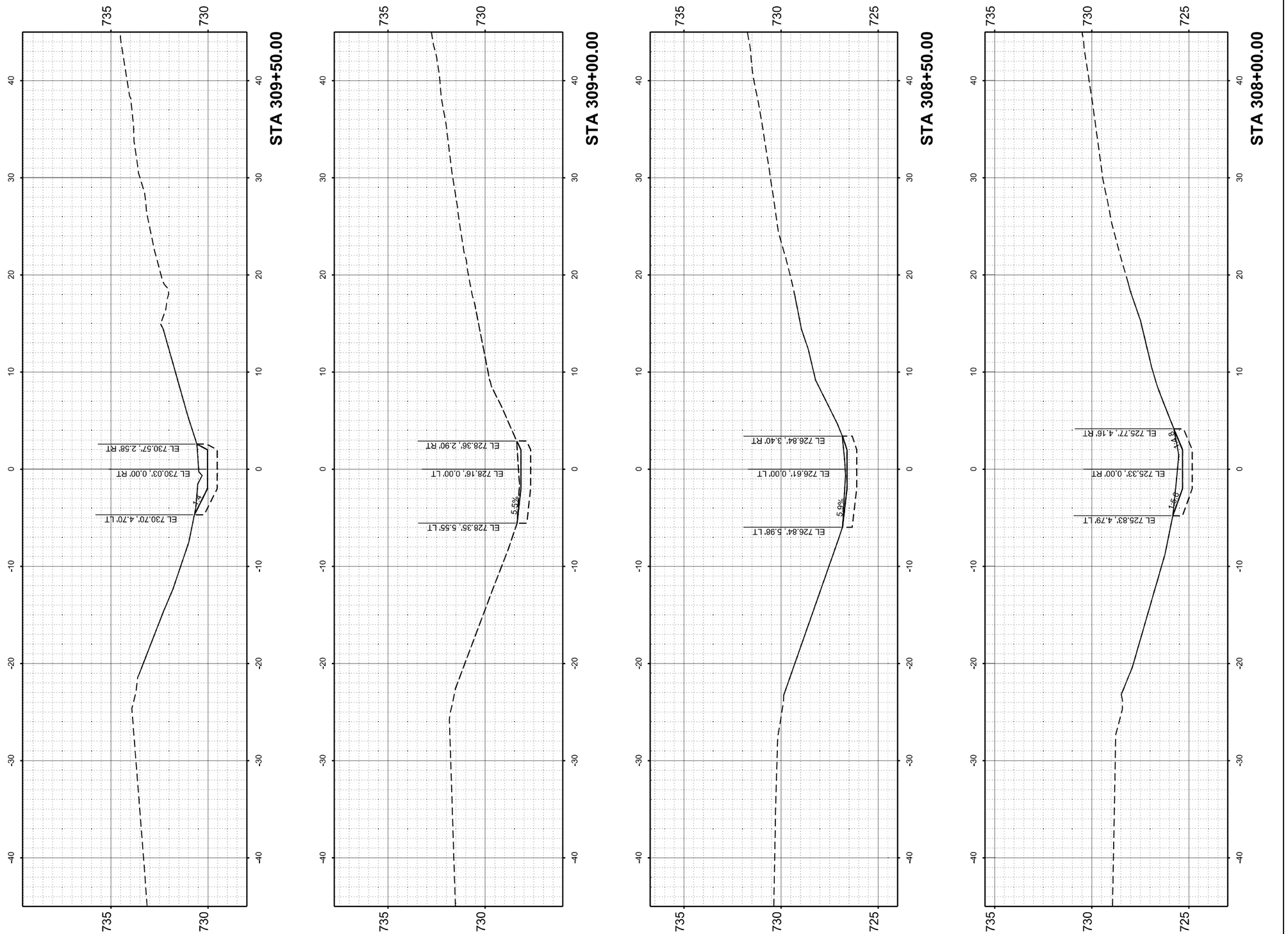

MODEL: SB_Higgins-Ramp A - 308+00.00 [Sheet]
FILE NAME: W:\24001656.05\IDOT Dist 1 IL 290 Mill and Overlay\CADD Data\Sheets\D1_IL53_stm_XSC_DitchGrading.dgn

IMEG
401 E. STATE ST. 4th Floor ROCKFORD, IL 61104
PH: 815.965.6400 www.imegcorp.com

USER NAME = Marc.A.Personette	DESIGNED - Brad Lange	REVISED -
	DRAWN - Marc Personette	REVISED -
	CHECKED - Corey Stout	REVISED -
PLOT DATE = 3/16/2026	DATE - 3/16/2026	REVISED -

STATE OF ILLINOIS
DEPARTMENT OF TRANSPORTATION

I-290/IL 53 HMA RESURFACING AND BRIDGE REPAIRS
CROSS SECTIONS - SB DITCH GRADING - IL 72 TO RAMP A

SCALE: 1" = 5' | SHEET 5 OF 6 SHEETS | STA. 308+00.00 | TO STA. 309+50.00

F.A.I RTE.	SECTION	COUNTY	TOTAL SHEETS	SHEET NO.
290	(0404-316-HB) BR 24	COOK	276	252
		CONTRACT NO. 62W99		
	ILLINOIS	FED. AID PROJECT		

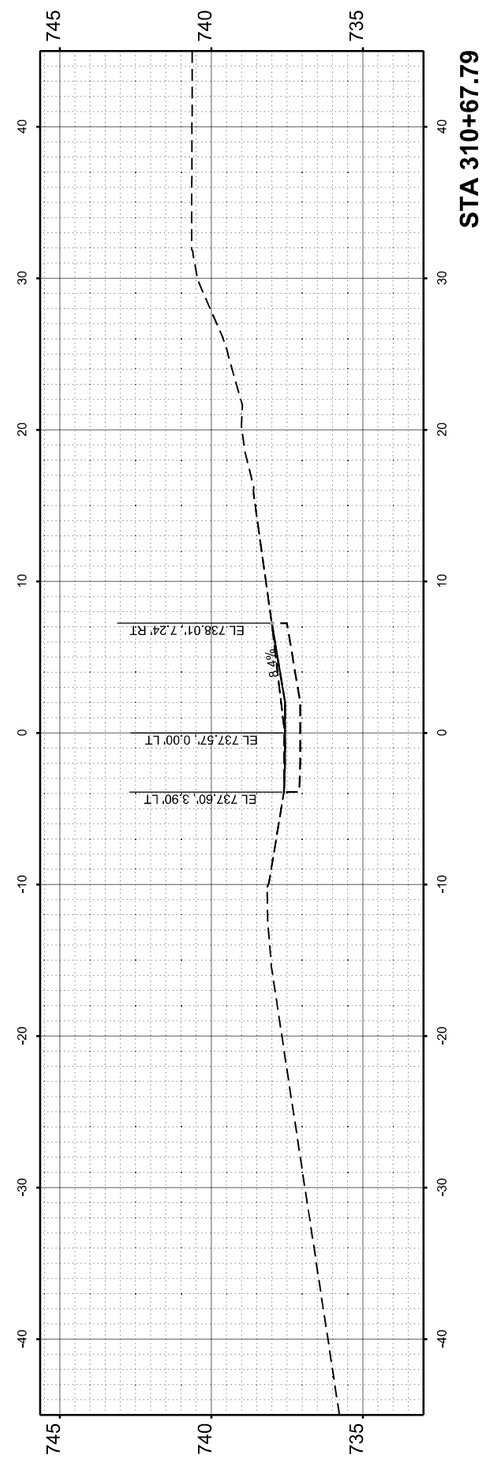

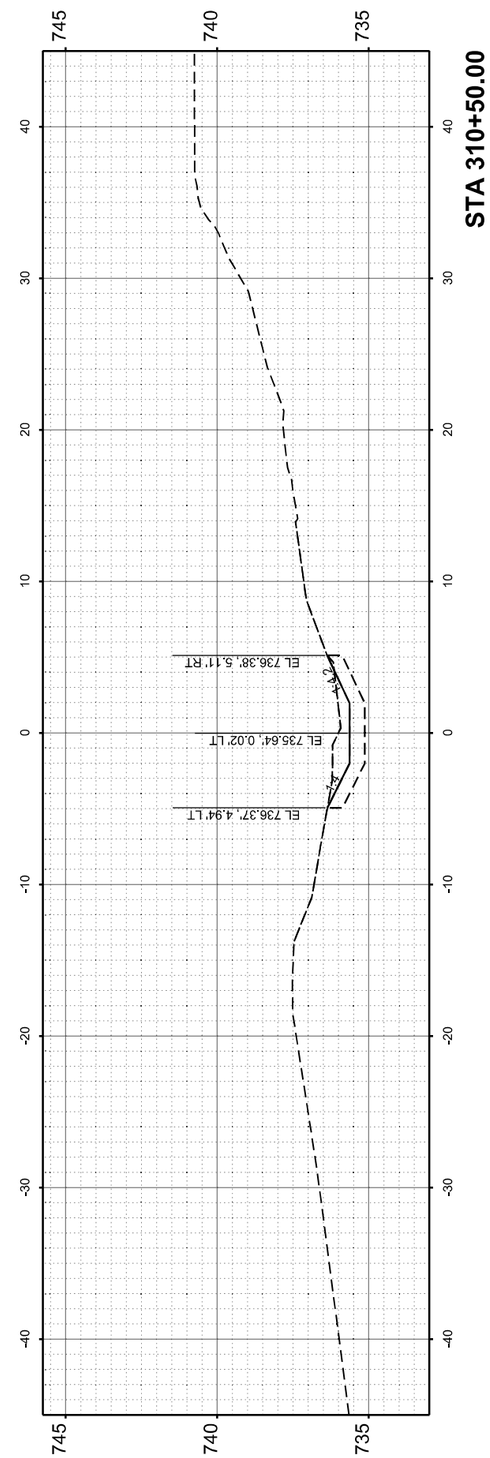

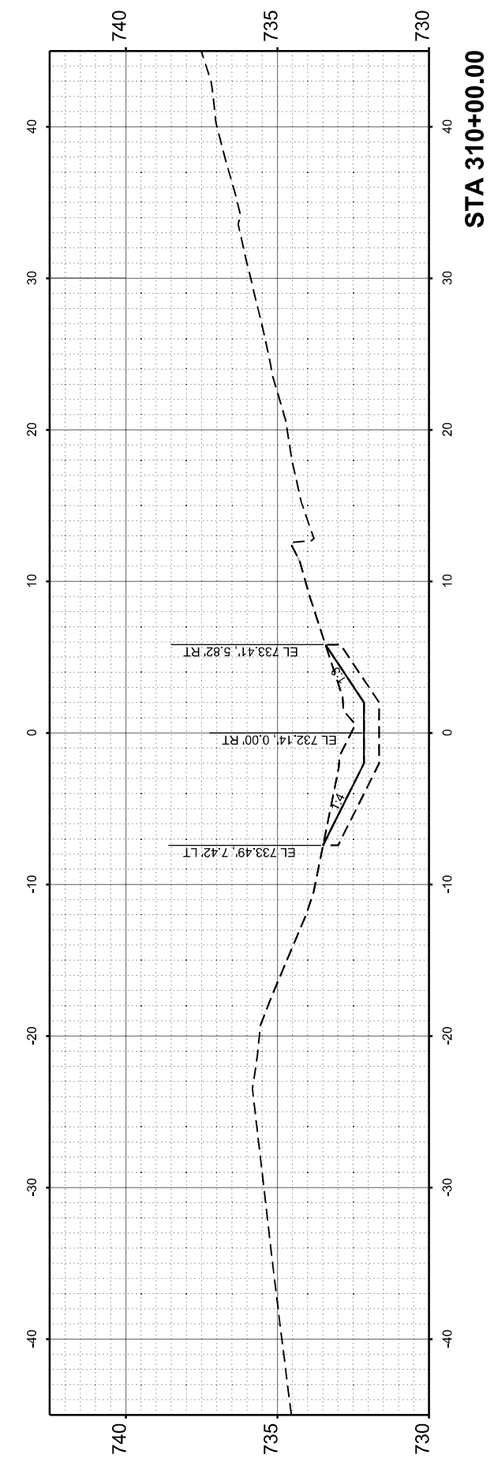

MODEL: SB_Higgins-Ramp A - 310+00.00 [Sheet]
FILE NAME: W:\24001656.05\IDOT Dist 1 IL 290 Mill and Overlay\CADD Data\Sheets\D1_IL53_4IH_XSC_DitchGrading.dgn

IMEG
401 E. STATE ST. 4th Floor ROCKFORD, IL 61104
PH: 815.965.6400 www.imegcorp.com

USER NAME = Marc.A.Personette	DESIGNED - Brad Lange	REVISED -
	DRAWN - Marc Personette	REVISED -
	CHECKED - Corey Stout	REVISED -
PLOT DATE = 3/16/2026	DATE - 3/16/2026	REVISED -

STATE OF ILLINOIS
DEPARTMENT OF TRANSPORTATION

I-290/IL 53 HMA RESURFACING AND BRIDGE REPAIRS
CROSS SECTIONS - SB DITCH GRADING - IL 72 TO RAMP A

SCALE: 1" = 5' | SHEET 6 OF 6 SHEETS | STA. 310+00.00 | TO STA. 310+67.79

F.A.I RTE.	SECTION	COUNTY	TOTAL SHEETS	SHEET NO.
290	(0404-316-HB) BR 24	COOK	276	253
		CONTRACT NO. 62W99		
	ILLINOIS FED. AID PROJECT			

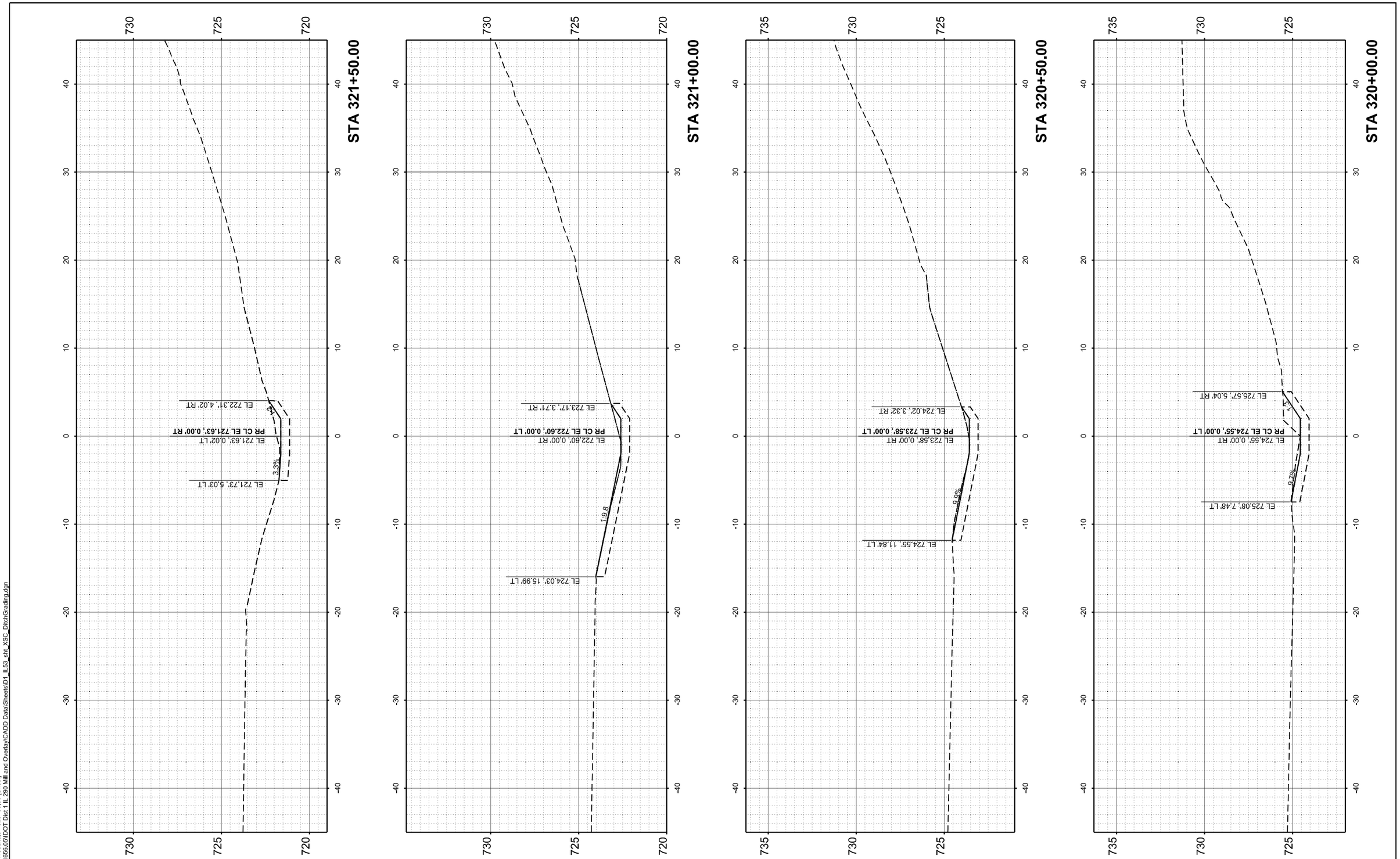

MODEL: SB_Ramp A-Woodfield - 320+00.00 [Sheet]
FILE NAME: W:\24001656.051\DOT Dist 1 IL 290 Mill and Overlay\CADD Data\Sheets\D1_IL53_sth_XSC_DitchGrading.dgn

IMEG
401 E. STATE ST. 4th Floor
ROCKFORD, IL
61104
PH: 815.965.6400
www.imegcorp.com

USER NAME = Marc.A.Personette	DESIGNED - Brad Lange	REVISED -	
	DRAWN - Marc Personette	REVISED -	
	CHECKED - Corey Stout	REVISED -	
PLOT DATE = 3/16/2026	DATE - 3/16/2026	REVISED -	

STATE OF ILLINOIS
DEPARTMENT OF TRANSPORTATION

I-290/IL 53 HMA RESURFACING AND BRIDGE REPAIRS
CROSS SECTIONS - SB DITCH GRADING - RAMP A TO WOODFIELD RD

SCALE: 1" = 5' | SHEET 1 OF 7 SHEETS | STA. 320+00.00 | TO STA. 321+50.00

F.A.I RTE.	SECTION	COUNTY	TOTAL SHEETS	SHEET NO.
290	(0404-316-HB) BR 24	COOK	276	254
		CONTRACT NO. 62W99		
	ILLINOIS FED. AID PROJECT			

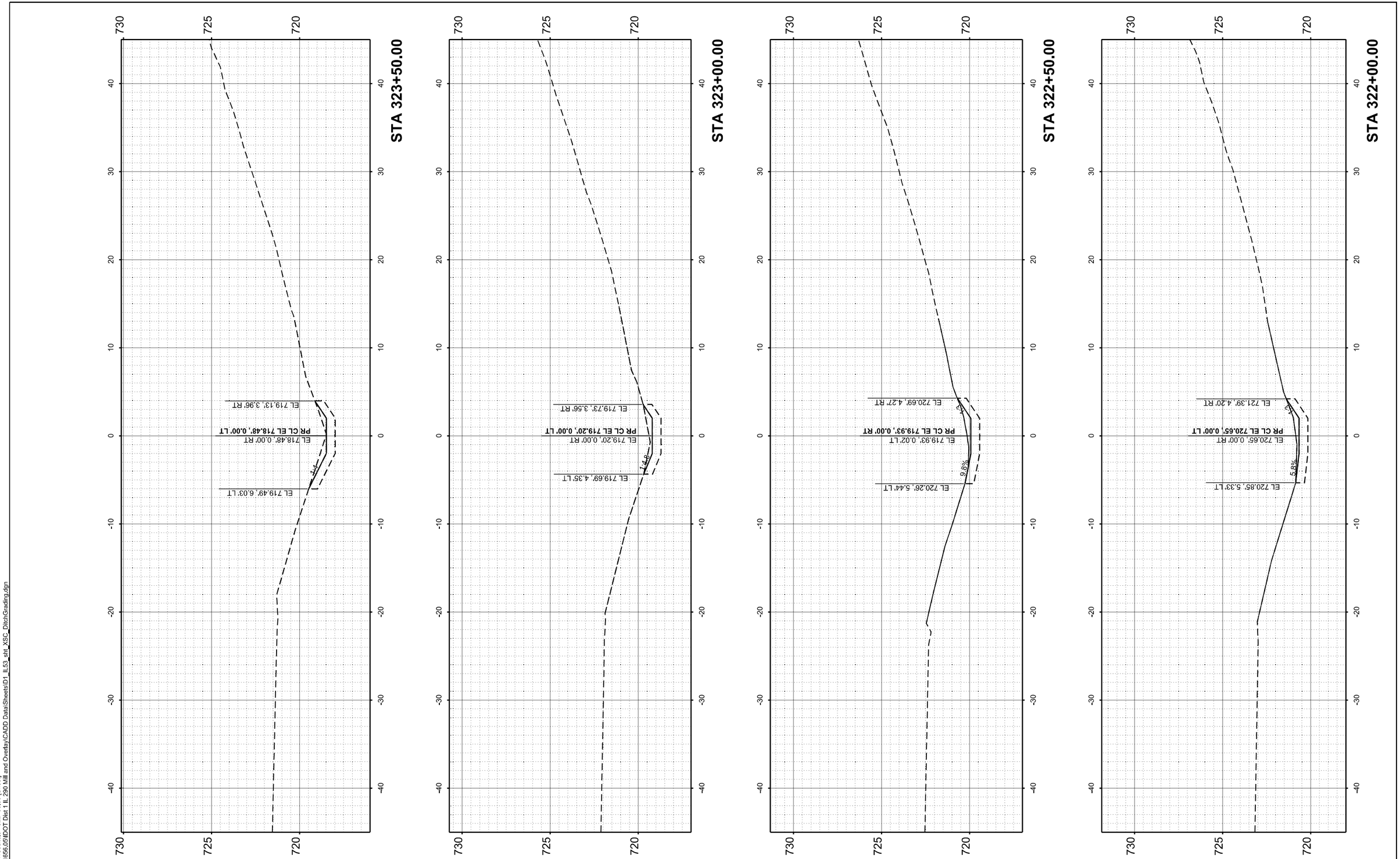

MODEL: SB_Ramp A-Woodfield - 322+00.00 [Sheet]
FILE NAME: W:\24001656.05\IDOT Dist 1 IL 290 Mill and Overlay\CADD Data\Sheets\D1_IL53_sht_XSC_DitchGrading.dgn

IMEG
401 E. STATE ST. 4th Floor
ROCKFORD, IL 61104
PH: 815.965.6400
www.imegcorp.com

USER NAME = Marc.A.Personette	DESIGNED - Brad Lange	REVISED -	
	DRAWN - Marc Personette	REVISED -	
	CHECKED - Corey Stout	REVISED -	
PLOT DATE = 3/16/2026	DATE - 3/16/2026	REVISED -	

STATE OF ILLINOIS
DEPARTMENT OF TRANSPORTATION

I-290/IL 53 HMA RESURFACING AND BRIDGE REPAIRS
CROSS SECTIONS - SB DITCH GRADING - RAMP A TO WOODFIELD RD

SCALE: 1" = 5' | SHEET 2 OF 7 SHEETS | STA. 322+00.00 | TO STA. 323+50.00

F.A.I RTE.	SECTION	COUNTY	TOTAL SHEETS	SHEET NO.
290	(0404-316-HB) BR 24	COOK	276	255
		CONTRACT NO. 62W99		
	ILLINOIS	FED. AID PROJECT		

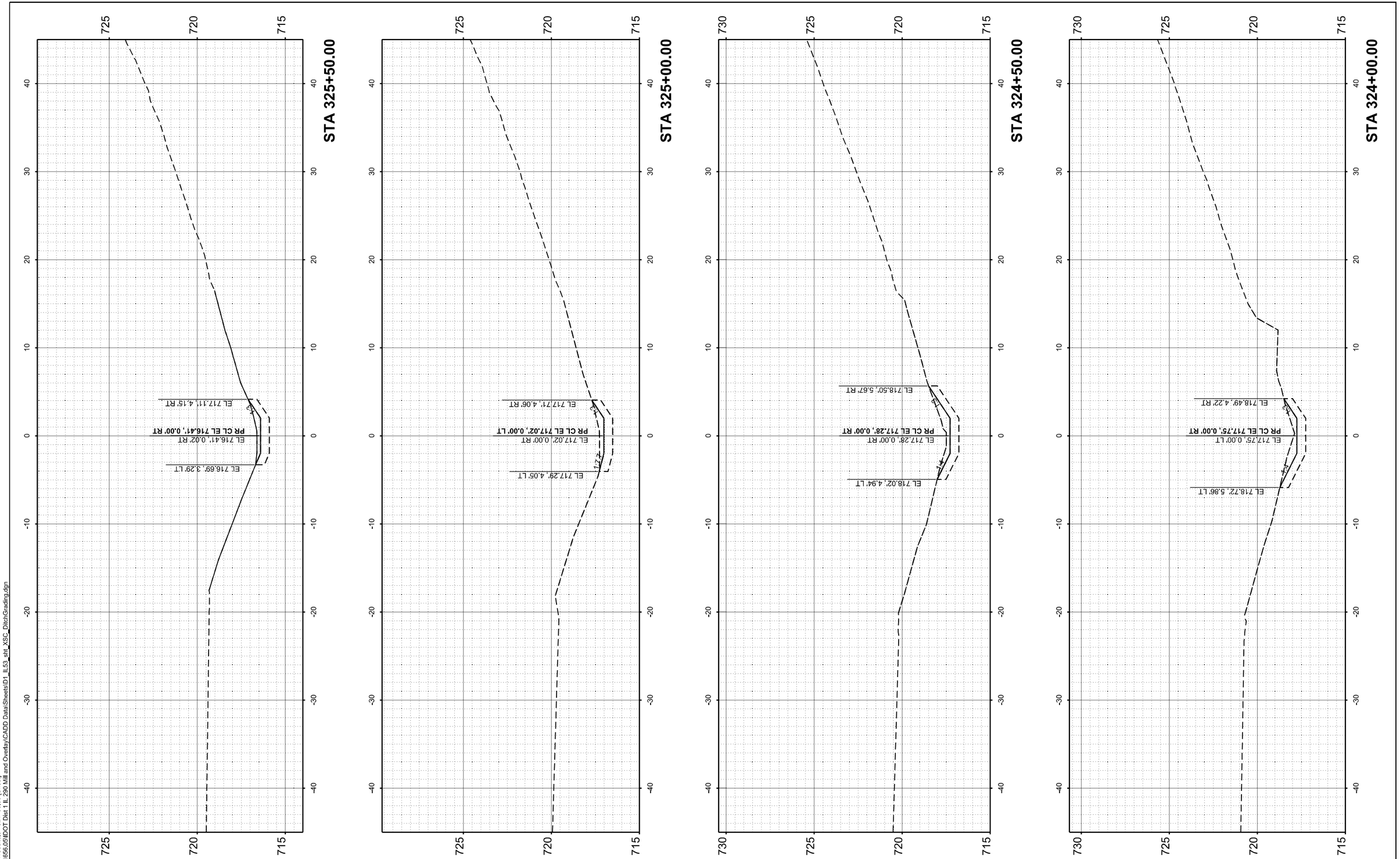

MODEL: SB_Ramp A-Woodfield - 324+00.00 [Sheet]
FILE NAME: W:\24001656.05\IDOT Dist 1 IL 290 Mill and Overlay\CADD Data\Sheets\D1_IL53_sht_XSC_DitchGrading.dgn

IMEG
401 E. STATE ST. 4th Floor
ROCKFORD, IL 61104
PH: 815.965.6400
www.imegcorp.com

USER NAME = Marc.A.Personette	DESIGNED - Brad Lange	REVISED -	
	DRAWN - Marc Personette	REVISED -	
	CHECKED - Corey Stout	REVISED -	
PLOT DATE = 3/16/2026	DATE - 3/16/2026	REVISED -	

STATE OF ILLINOIS
DEPARTMENT OF TRANSPORTATION

I-290/IL 53 HMA RESURFACING AND BRIDGE REPAIRS
CROSS SECTIONS - SB DITCH GRADING - RAMP A TO WOODFIELD RD

SCALE: 1" = 5' | SHEET 3 OF 7 SHEETS | STA. 324+00.00 | TO STA. 325+50.00

F.A.I RTE.	SECTION	COUNTY	TOTAL SHEETS	SHEET NO.
290	(0404-316-HB) BR 24	COOK	276	256
		CONTRACT NO. 62W99		
	ILLINOIS	FED. AID PROJECT		

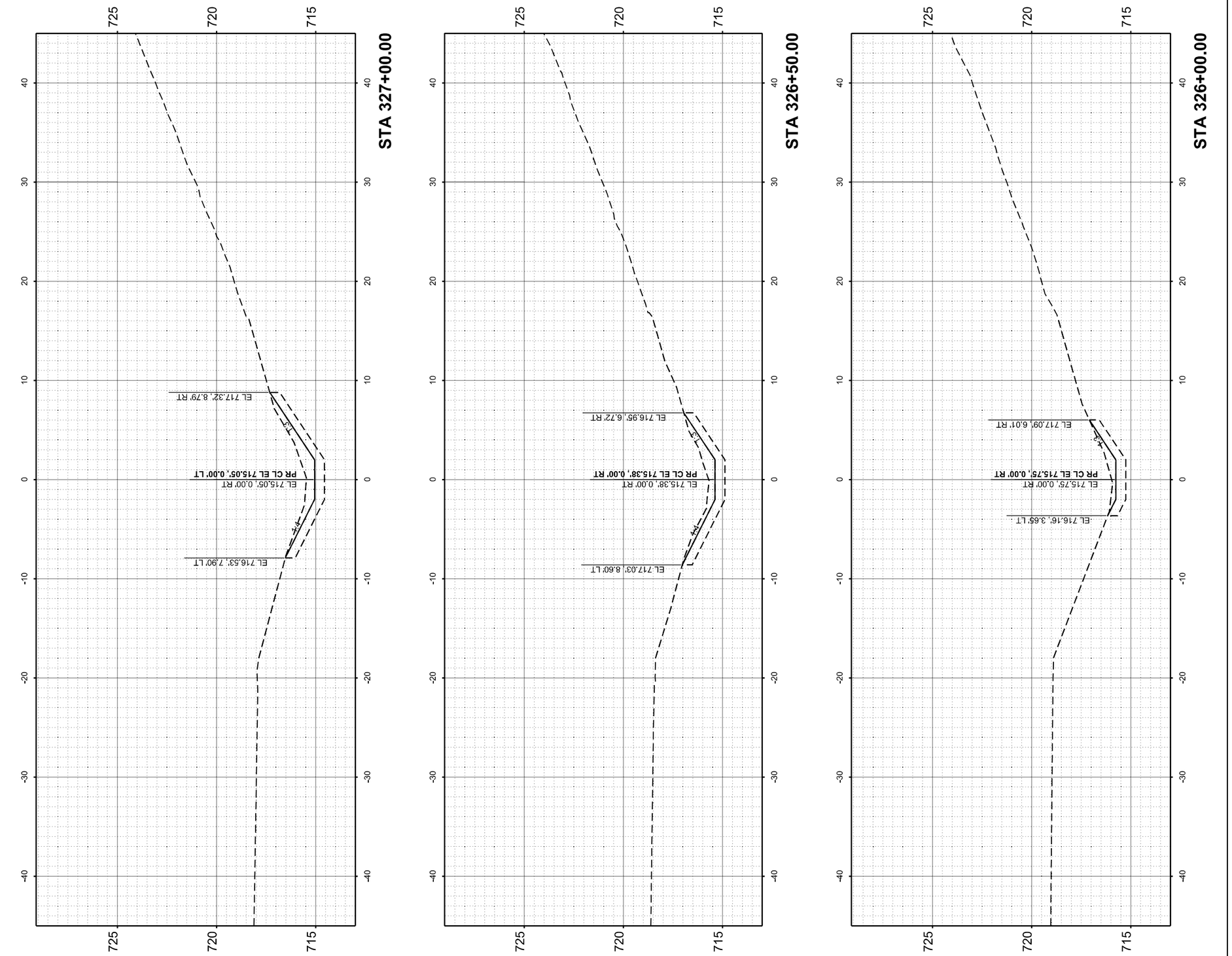

MODEL: SB_Ramp A-Woodfield - 326+00.00 [Sheet]
FILE NAME: W:\24001656.05\IDOT Dist 1 IL 290 Mill and Overlay\CADD Data\Sheets\D1_IL53_4IN_XSC_DitchGrading.dgn

IMEG
401 E. STATE ST. 4th Floor
ROCKFORD, IL 61104
PH: 815.965.6400
www.imegcorp.com

USER NAME = Marc.A.Personette	DESIGNED - Brad Lange	REVISED -
	DRAWN - Marc Personette	REVISED -
	CHECKED - Corey Stout	REVISED -
PLOT DATE = 3/16/2026	DATE - 3/16/2026	REVISED -

STATE OF ILLINOIS
DEPARTMENT OF TRANSPORTATION

I-290/IL 53 HMA RESURFACING AND BRIDGE REPAIRS
CROSS SECTIONS - SB DITCH GRADING - RAMP A TO WOODFIELD RD

SCALE: 1" = 5' | SHEET 4 OF 7 SHEETS | STA. 326+00.00 | TO STA. 327+00.00

F.A.I RTE.	SECTION	COUNTY	TOTAL SHEETS	SHEET NO.
290	(0404-316-HB) BR 24	COOK	276	257
		CONTRACT NO. 62W99		
	ILLINOIS FED. AID PROJECT			

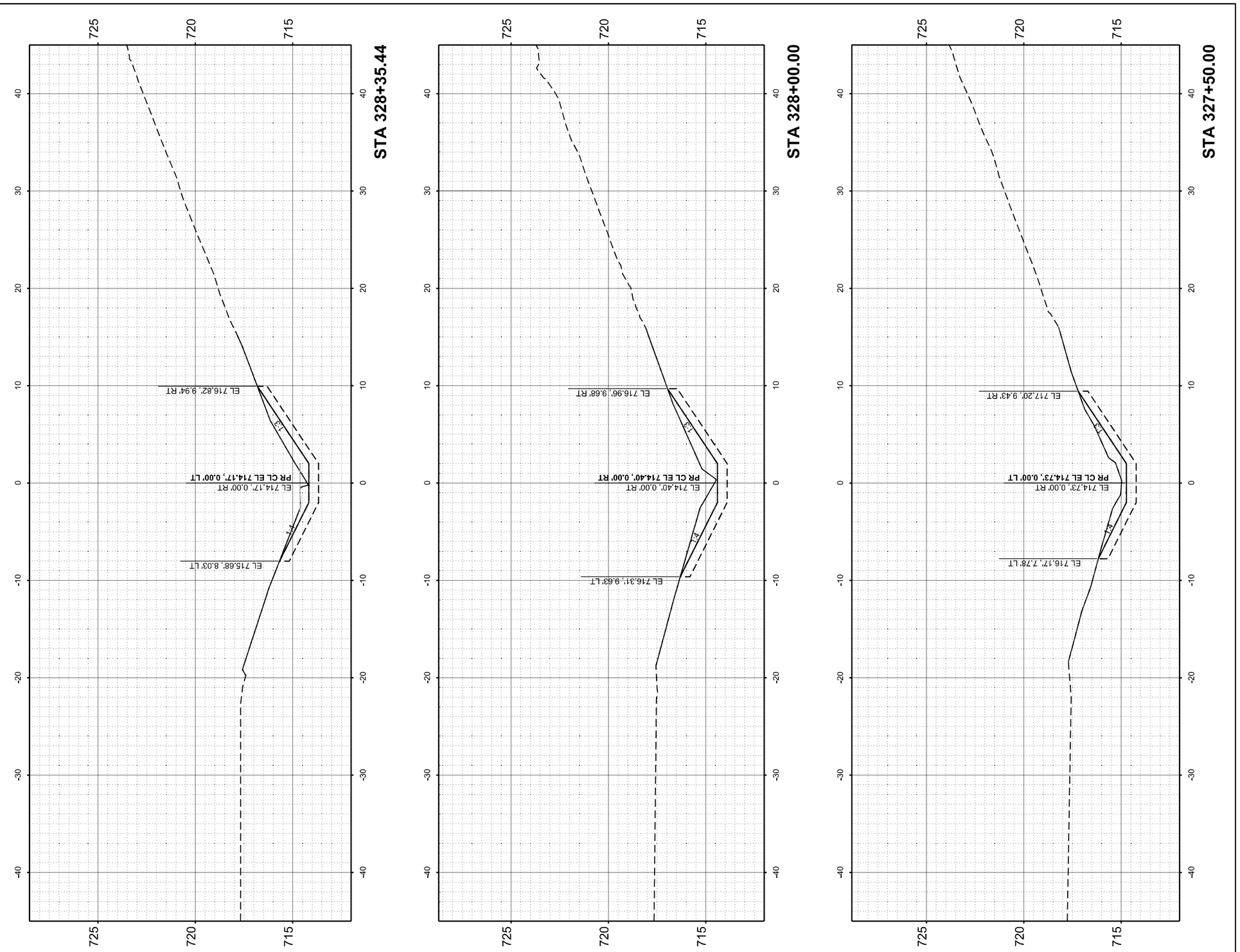

MODEL: SB_Ramp A-Woodfield - 327+50.00 [Sheet]
FILE NAME: W:\24001656.05\IDOT Dist 1 IL 290 Mill and Overlay\CADD Data\Sheets\D1_IL53_sht_XSC_DitchGrading.dgn

IMEG
401 E. STATE ST. 4th Floor
ROCKFORD, IL 61104
PH: 815.965.6400
www.imegcorp.com

USER NAME = Marc.A.Personette	DESIGNED - Brad Lange	REVISED -
	DRAWN - Marc Personette	REVISED -
	CHECKED - Corey Stout	REVISED -
PLOT DATE = 3/16/2026	DATE - 3/16/2026	REVISED -

STATE OF ILLINOIS
DEPARTMENT OF TRANSPORTATION

I-290/IL 53 HMA RESURFACING AND BRIDGE REPAIRS
CROSS SECTIONS - SB DITCH GRADING - RAMP A TO WOODFIELD RD

SCALE: 1" = 5' | SHEET 5 OF 7 SHEETS | STA. 327+50.00 | TO STA. 328+35.44

F.A.I RTE.	SECTION	COUNTY	TOTAL SHEETS	SHEET NO.
290	(0404-316-HB) BR 24	COOK	276	258
		CONTRACT NO. 62W99		
	ILLINOIS FED. AID PROJECT			

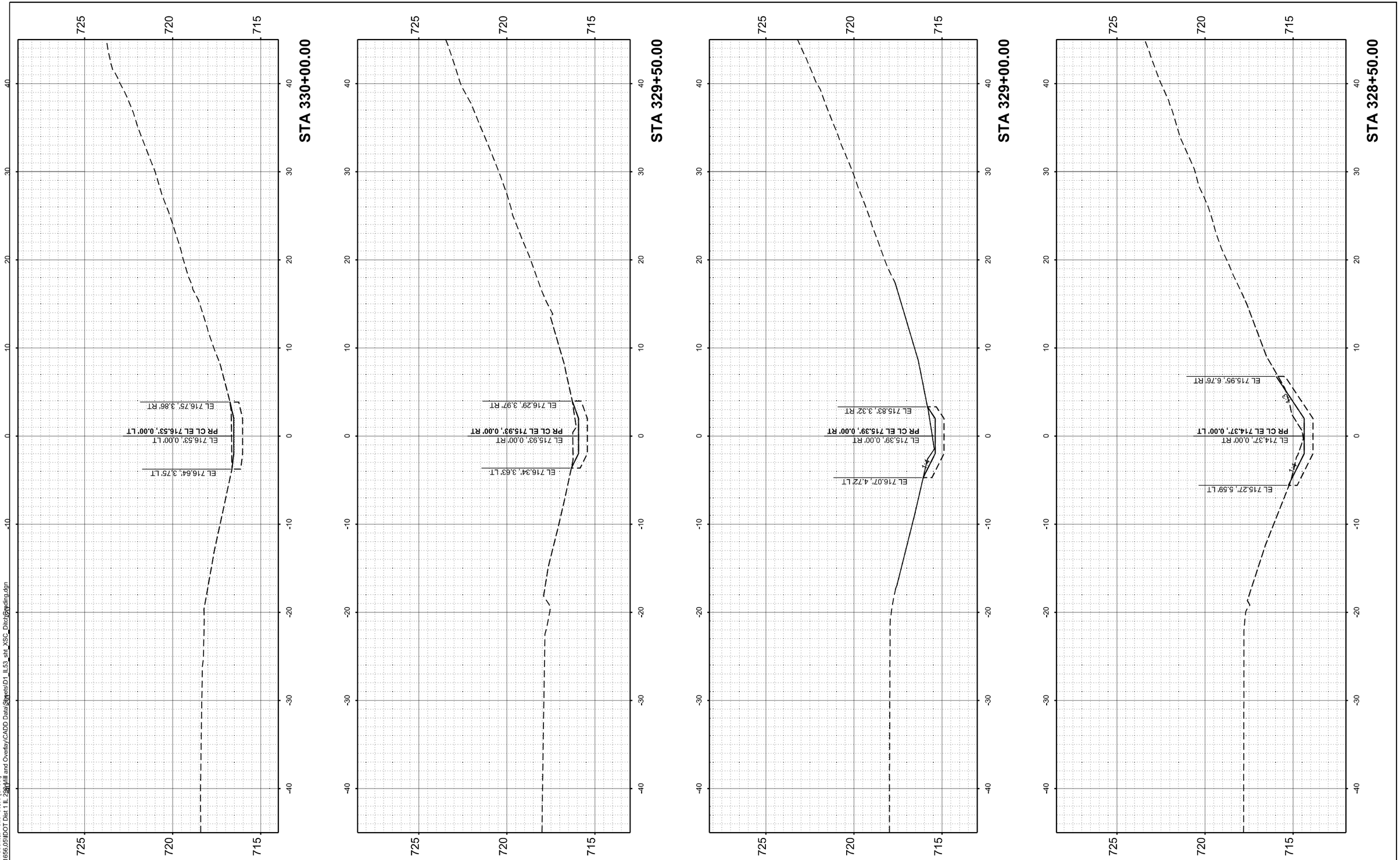

MODEL: SB_Ramp A-Woodfield - 328+50.00 [Sheet]
FILE NAME: W:\24001656.05\IDOT Dist 1 IL 2&4\Mill and Overlay\CADD Data\Sheets\D1_IL53_sht_XSC_DitchGrading.dgn

IMEG
401 E. STATE ST. 4th Floor
ROCKFORD, IL
61104
PH: 815.965.6400
www.imegcorp.com

USER NAME = Marc.A.Personette	DESIGNED - Brad Lange	REVISED -
	DRAWN - Marc Personette	REVISED -
	CHECKED - Corey Stout	REVISED -
PLOT DATE = 3/16/2026	DATE - 3/16/2026	REVISED -

STATE OF ILLINOIS
DEPARTMENT OF TRANSPORTATION

I-290/IL 53 HMA RESURFACING AND BRIDGE REPAIRS
CROSS SECTIONS - SB DITCH GRADING - RAMP A TO WOODFIELD RD

SCALE: 1" = 5' | SHEET 6 OF 7 SHEETS | STA. 328+50.00 | TO STA. 330+00.00

F.A.I RTE.	SECTION	COUNTY	TOTAL SHEETS	SHEET NO.
290	(0404-316-HB) BR 24	COOK	276	259
		CONTRACT NO. 62W99		
	ILLINOIS	FED. AID PROJECT		

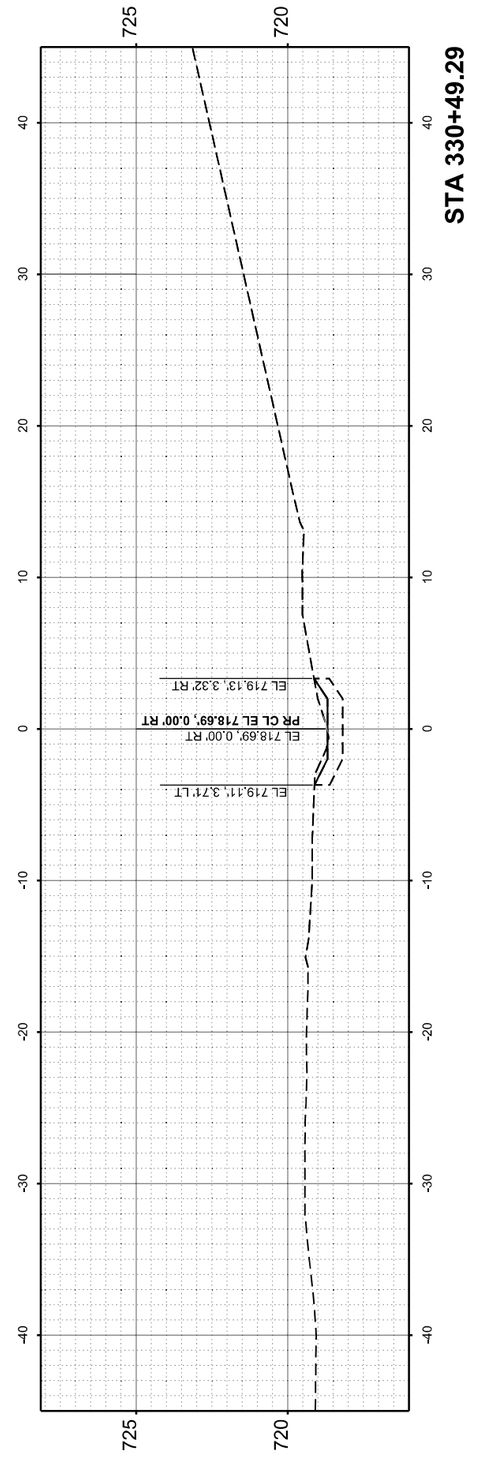

MODEL: SB_Ramp A-Woodfield - 330+49.29 [Sheet]
FILE NAME: W:\24001656.05\IDOT Dist 1 IL 290 Mill and Overlay\CADD Data\Sheets\D1_IL53_sht_XSC_DitchGrading.dgn

IMEG
401 E. STATE ST. 4th Floor
ROCKFORD, IL
61104
PH: 815.965.6400
www.imegcorp.com

USER NAME = Marc.A.Personette	DESIGNED - Brad Lange	REVISED -
	DRAWN - Marc Personette	REVISED -
	CHECKED - Corey Stout	REVISED -
PLOT DATE = 3/16/2026	DATE - 3/16/2026	REVISED -

STATE OF ILLINOIS
DEPARTMENT OF TRANSPORTATION

I-290/IL 53 HMA RESURFACING AND BRIDGE REPAIRS
CROSS SECTIONS - SB DITCH GRADING - RAMP A TO WOODFIELD RD

SCALE: 1" = 5' | SHEET 7 OF 7 SHEETS | STA. 330+49.29 | TO STA. 330+49.29

F.A.I RTE.	SECTION	COUNTY	TOTAL SHEETS	SHEET NO.
290	(0404-316-HB) BR 24	COOK	276	260
		CONTRACT NO. 62W99		
	ILLINOIS	FED. AID PROJECT		

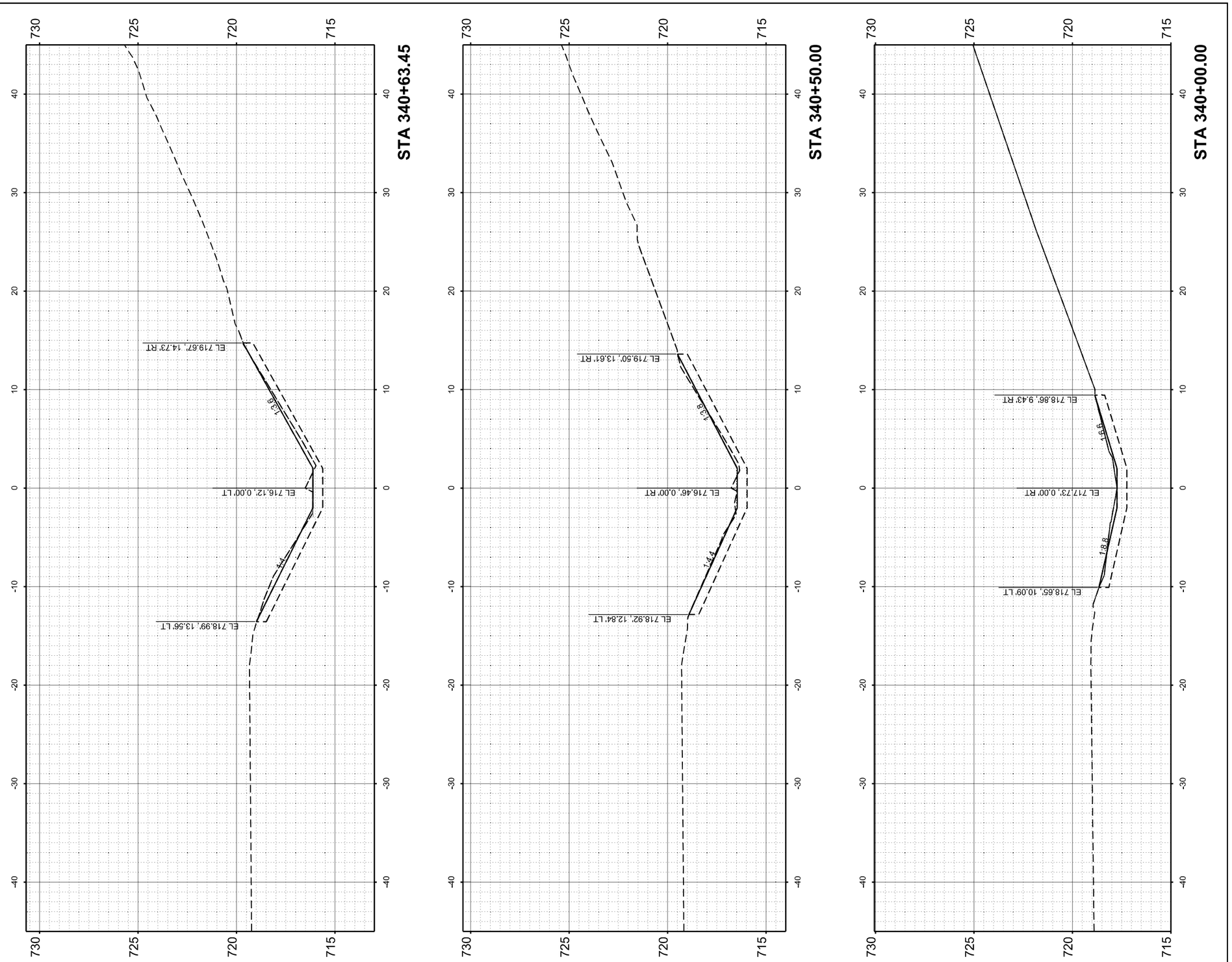

MODEL: SB_Woodfield-Ramp C - 340+00.00 [Sheet]
FILE NAME: W:\24001656.05\IDOT Dist 1 IL 290 Mill and Overlay\CADD Data\Sheets\D1_IL53_sht_XSC_DitchGrading.dgn

IMEG
401 E. STATE ST. 4th Floor ROCKFORD, IL 61104
PH: 815.965.6400 www.imegcorp.com

USER NAME = Marc.A.Personette	DESIGNED - Brad Lange	REVISED -	
	DRAWN - Marc Personette	REVISED -	
	CHECKED - Corey Stout	REVISED -	
PLOT DATE = 3/16/2026	DATE - 3/16/2026	REVISED -	

STATE OF ILLINOIS
DEPARTMENT OF TRANSPORTATION

I-290/IL 53 HMA RESURFACING AND BRIDGE REPAIRS
CROSS SECTIONS - SB DITCH GRADING - WOODFIELD RD TO RAMP C

SCALE: 1" = 5' | SHEET 1 OF 10 SHEETS | STA. 340+00.00 | TO STA. 340+63.45

F.A.I RTE.	SECTION	COUNTY	TOTAL SHEETS	SHEET NO.
290	(0404-316-HB) BR 24	COOK	276	261
		CONTRACT NO. 62W99		
	ILLINOIS FED. AID PROJECT			

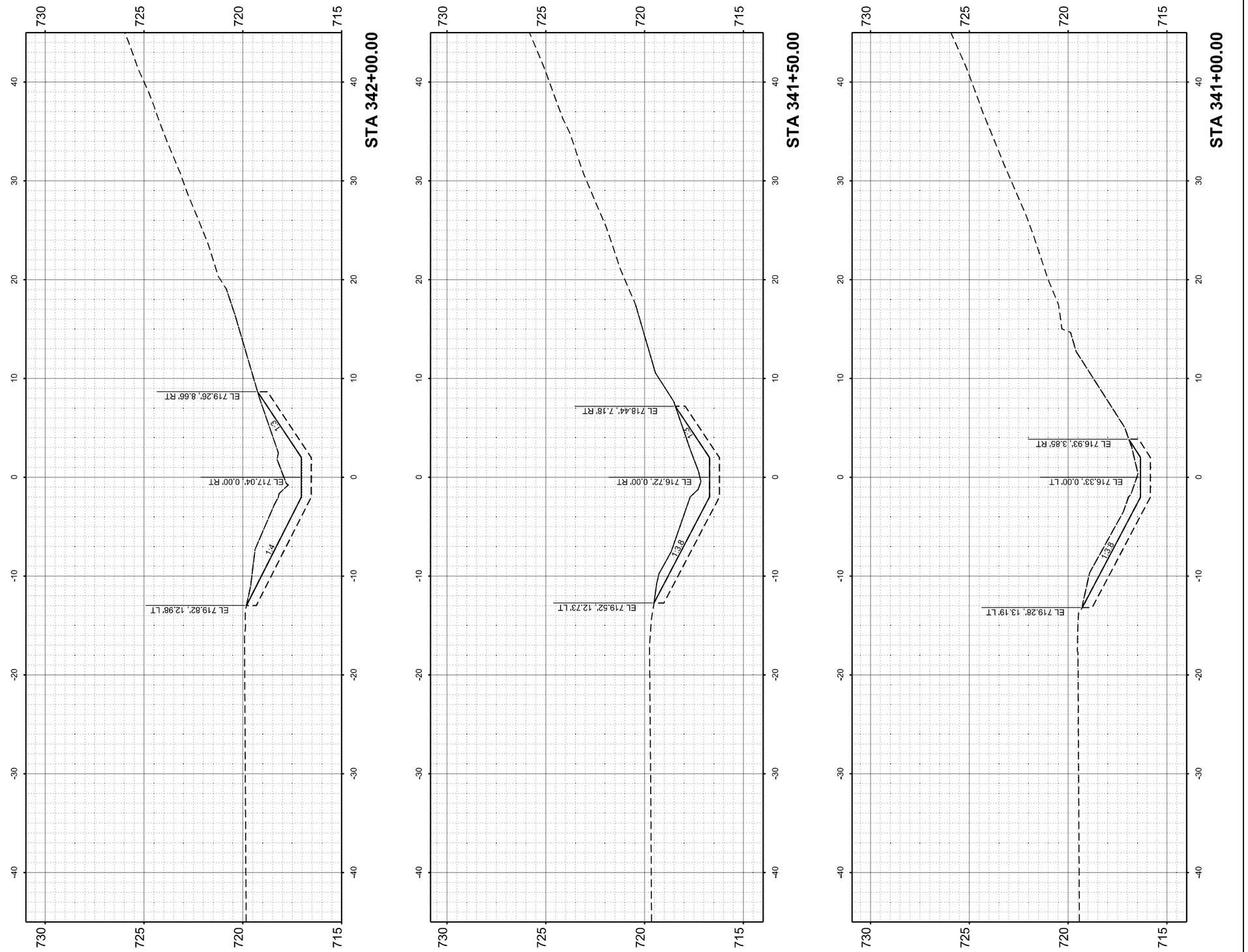

MODEL: SB_Woodfield-Ramp C - 341+00.00 [Sheet]
FILE NAME: W:\24001656.05\IDOT Dist 1 IL 290 Mill and Overlay\CADD Data\Sheets\D1_IL53_sht_XSC_DitchGrading.dgn

IMEG
401 E. STATE ST. 4th Floor
ROCKFORD, IL
61104
PH: 815.965.6400
www.imegcorp.com

USER NAME = Marc.A.Personette	DESIGNED - Brad Lange	REVISED -	
	DRAWN - Marc Personette	REVISED -	
	CHECKED - Corey Stout	REVISED -	
PLOT DATE = 3/16/2026	DATE - 3/16/2026	REVISED -	

STATE OF ILLINOIS
DEPARTMENT OF TRANSPORTATION

I-290/IL 53 HMA RESURFACING AND BRIDGE REPAIRS
CROSS SECTIONS - SB DITCH GRADING - WOODFIELD RD TO RAMP C

SCALE: 1" = 5' | SHEET 2 OF 10 SHEETS | STA. 341+00.00 TO STA. 342+00.00

F.A.I RTE.	SECTION	COUNTY	TOTAL SHEETS	SHEET NO.
290	(0404-316-HB) BR 24	COOK	276	262
		CONTRACT NO. 62W99		
	ILLINOIS FED. AID PROJECT			

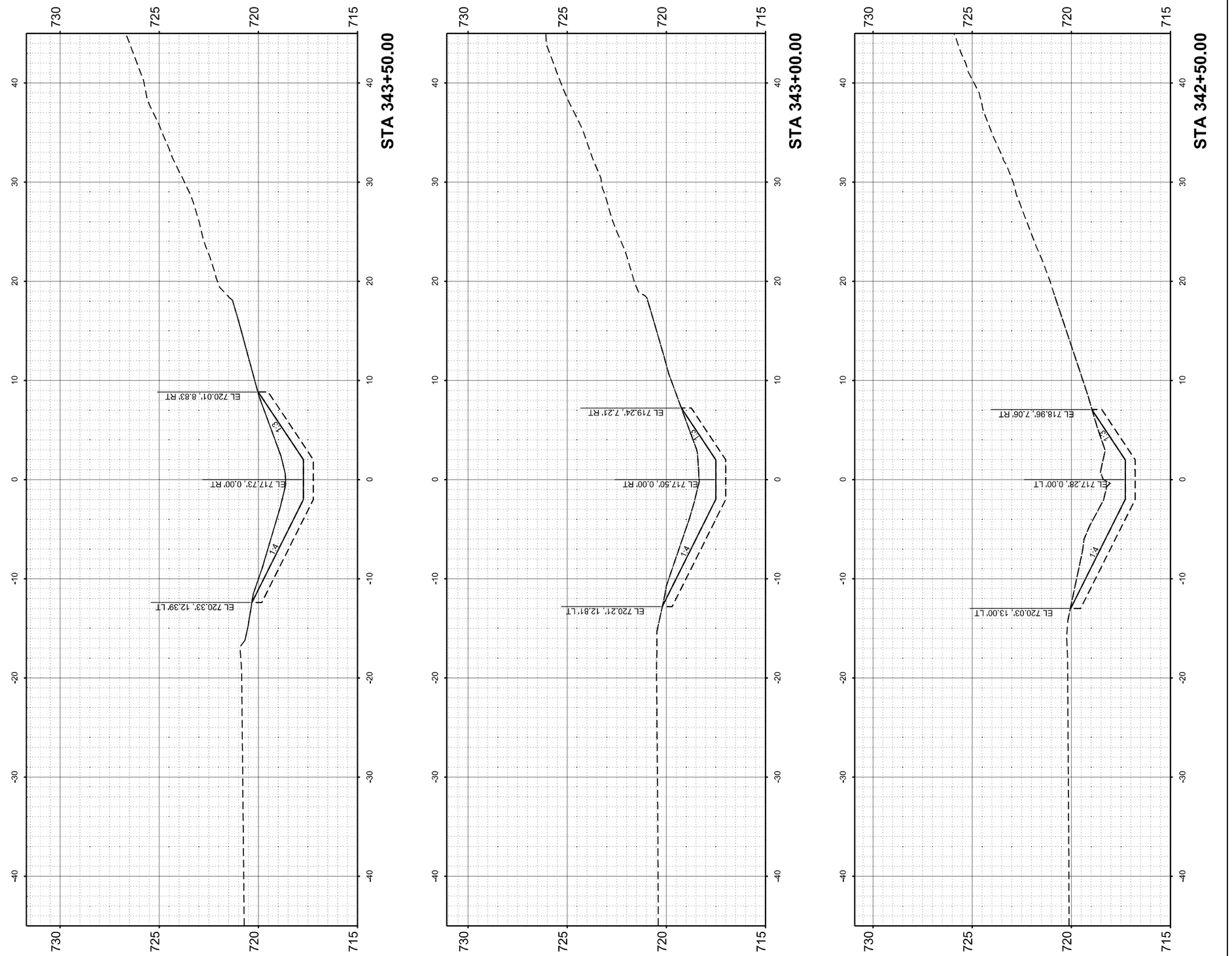

MODEL: SB_Woodfield-Ramp C - 342+50.00 [Sheet]
FILE NAME: W:\24001656.05\IDOT Dist 1 IL 290 Mill and Overlay\CADD Data\Sheets\D1_IL53_sht_XSC_DitchGrading.dgn

IMEG
401 E. STATE ST. 4th Floor ROCKFORD, IL 61104
PH: 815.965.6400 www.imegcorp.com

USER NAME = Marc.A.Personette	DESIGNED - Brad Lange	REVISED -
	DRAWN - Marc Personette	REVISED -
	CHECKED - Corey Stout	REVISED -
PLOT DATE = 3/16/2026	DATE - 3/16/2026	REVISED -

STATE OF ILLINOIS
DEPARTMENT OF TRANSPORTATION

I-290/IL 53 HMA RESURFACING AND BRIDGE REPAIRS
CROSS SECTIONS - SB DITCH GRADING - WOODFIELD RD TO RAMP C

SCALE: 1" = 5' | SHEET 3 OF 10 SHEETS | STA. 342+50.00 | TO STA. 343+50.00

F.A.I RTE.	SECTION	COUNTY	TOTAL SHEETS	SHEET NO.
290	(0404-316-HB) BR 24	COOK	276	263
		CONTRACT NO. 62W99		
	ILLINOIS	FED. AID PROJECT		

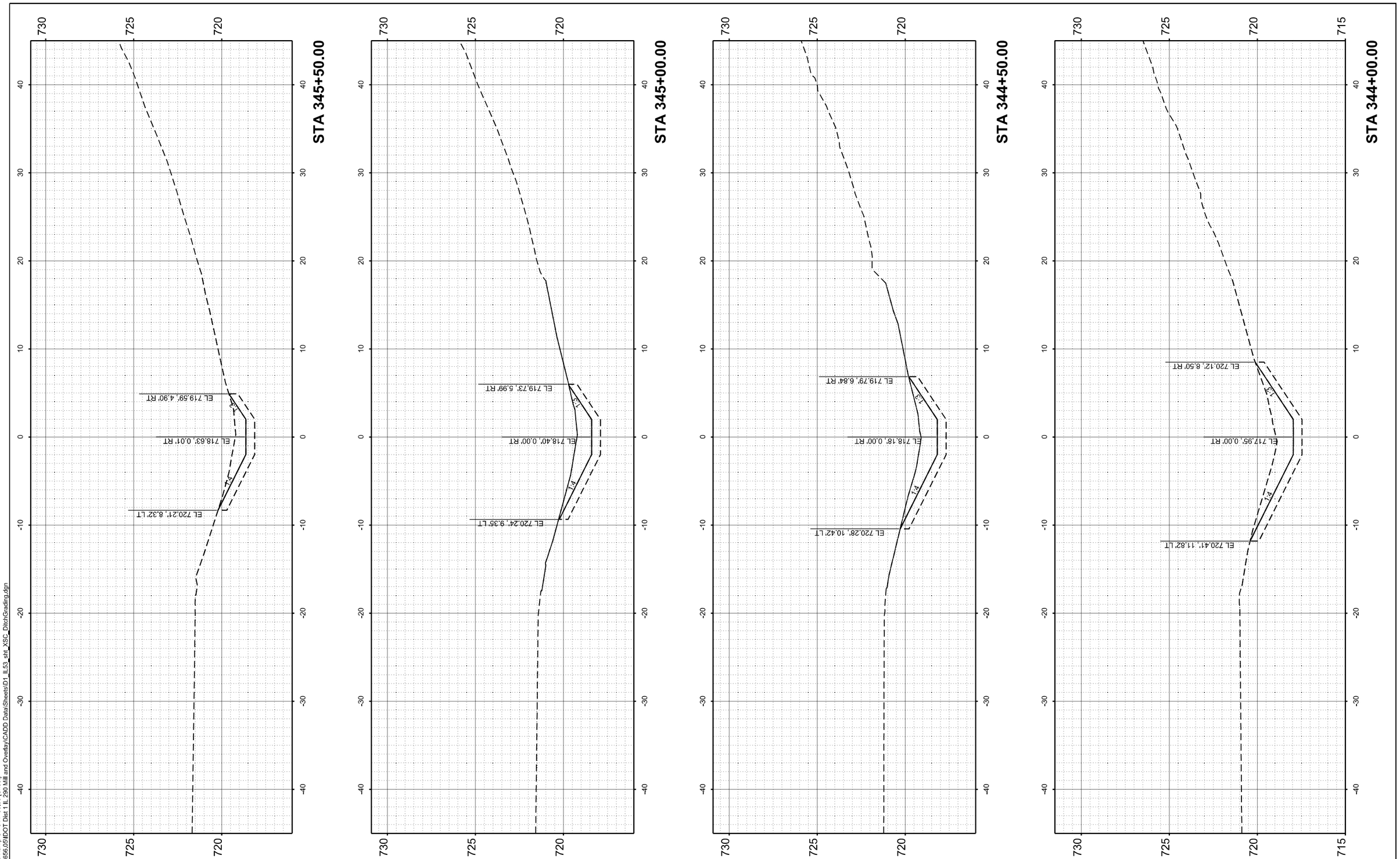

MODEL: SB_Woodfield-Ramp C - 344+00.00 [Sheet]
FILE NAME: W:\24001656.05\IDOT Dist 1 IL 290 Mill and Overlay\CADD Data\Sheets\D1_IL53_sht_XSC_DitchGrading.dgn

IMEG
401 E. STATE ST. 4th Floor
ROCKFORD, IL 61104
PH: 815.965.6400
www.imegcorp.com

USER NAME = Marc.A.Personette	DESIGNED - Brad Lange	REVISED -	
	DRAWN - Marc Personette	REVISED -	
	CHECKED - Corey Stout	REVISED -	
PLOT DATE = 3/16/2026	DATE - 3/16/2026	REVISED -	

STATE OF ILLINOIS
DEPARTMENT OF TRANSPORTATION

I-290/IL 53 HMA RESURFACING AND BRIDGE REPAIRS
CROSS SECTIONS - SB DITCH GRADING - WOODFIELD RD TO RAMP C

SCALE: 1" = 5' | SHEET 4 OF 10 SHEETS | STA. 344+00.00 | TO STA. 345+50.00

F.A.I RTE.	SECTION	COUNTY	TOTAL SHEETS	SHEET NO.
290	(0404-316-HB) BR 24	COOK	276	264
		CONTRACT NO. 62W99		
	ILLINOIS FED. AID PROJECT			

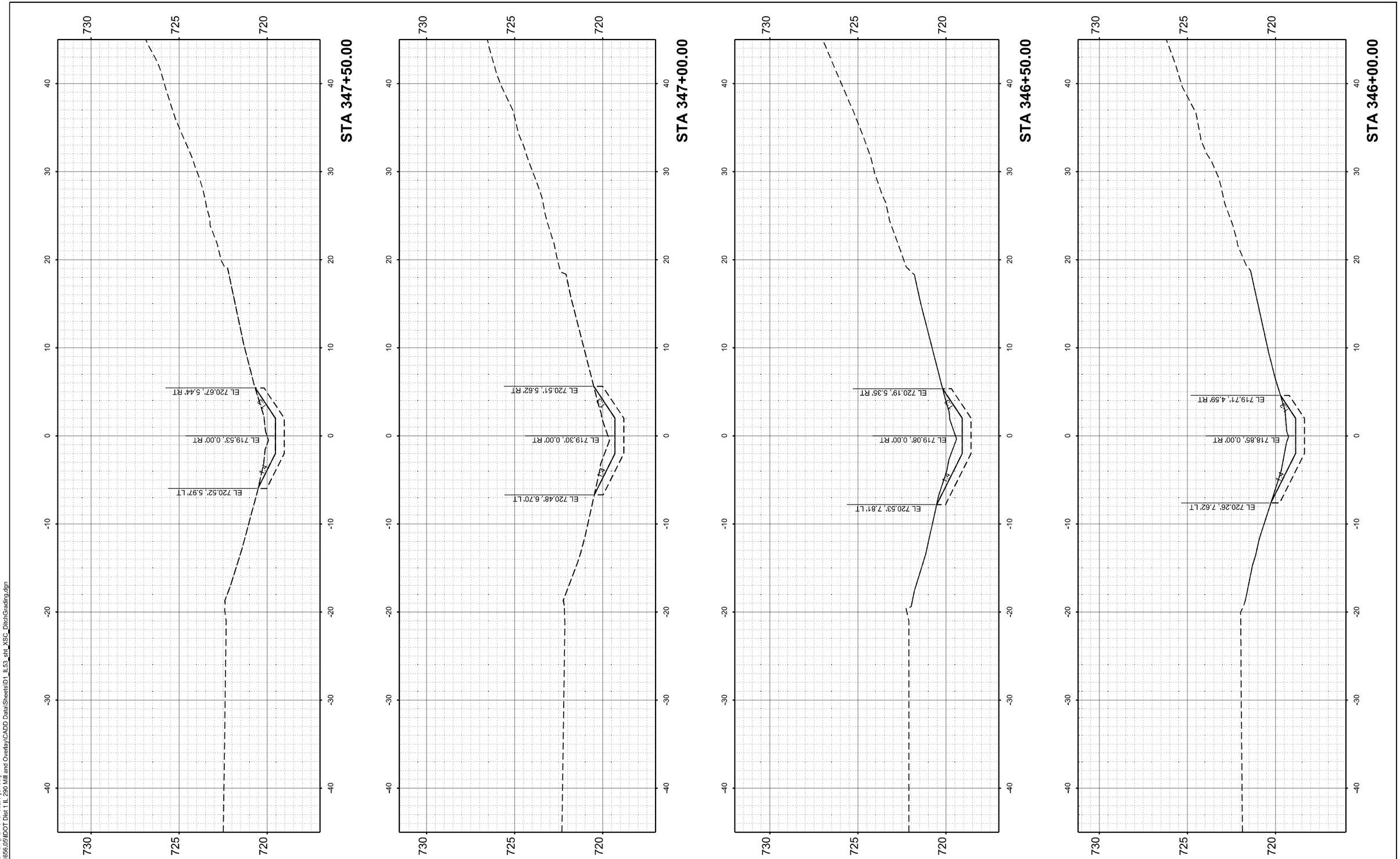

MODEL: SB_Woodfield-Ramp C - 346+00.00 [Sheet]
FILE NAME: W:\24001656.05\IDOT Dist 1 IL 290 Mill and Overlay\CADD Data\Sheets\D1_IL53_sht_XSC_DitchGrading.dgn

IMEG
401 E. STATE ST. 4th Floor ROCKFORD, IL 61104
PH: 815.965.6400
www.imegcorp.com

USER NAME = Marc.A.Personette	DESIGNED - Brad Lange	REVISED -	
	DRAWN - Marc Personette	REVISED -	
	CHECKED - Corey Stout	REVISED -	
PLOT DATE = 3/16/2026	DATE - 3/16/2026	REVISED -	

STATE OF ILLINOIS
DEPARTMENT OF TRANSPORTATION

I-290/IL 53 HMA RESURFACING AND BRIDGE REPAIRS
CROSS SECTIONS - SB DITCH GRADING - WOODFIELD RD TO RAMP C

SCALE: 1" = 5' | SHEET 5 OF 10 SHEETS | STA. 346+00.00 | TO STA. 347+50.00

F.A.I RTE.	SECTION	COUNTY	TOTAL SHEETS	SHEET NO.
290	(0404-316-HB) BR 24	COOK	276	265
		CONTRACT NO. 62W99		
	ILLINOIS FED. AID PROJECT			

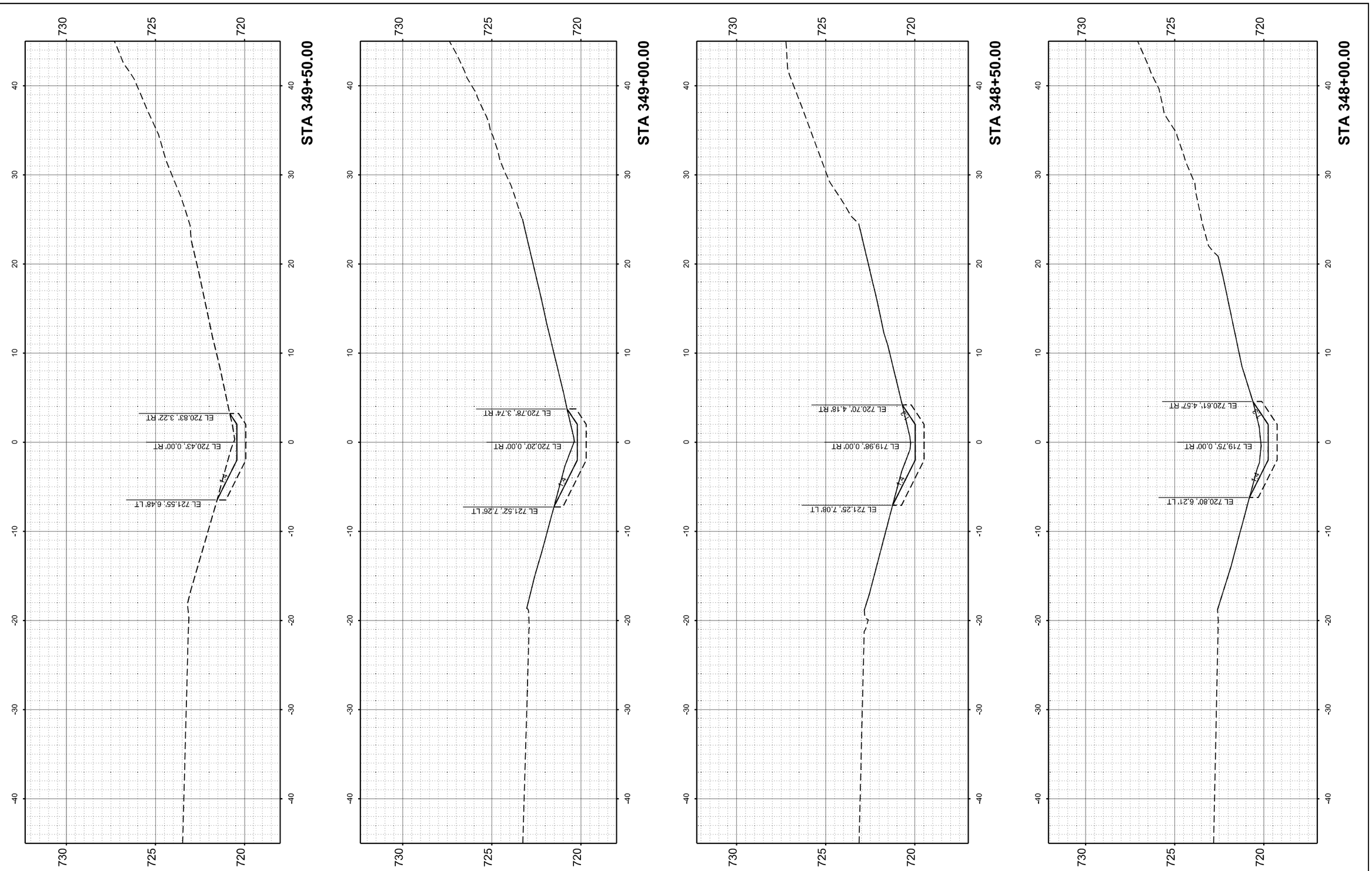

MODEL: SB_Woodfield-Ramp C - 348+00.00 [Sheet]
FILE NAME: W:\24001656.05\IDOT Dist 1 IL 290 Mill and Overlay\CADD Data\Sheets\D1_IL53_sht_XSC_DitchGrading.dgn

IMEG
401 E. STATE ST. 4th Floor
ROCKFORD, IL
61104
PH: 815.965.6400
www.imegcorp.com

USER NAME = Marc.A.Personette	DESIGNED - Brad Lange	REVISED -	
	DRAWN - Marc Personette	REVISED -	
	CHECKED - Corey Stout	REVISED -	
PLOT DATE = 3/16/2026	DATE - 3/16/2026	REVISED -	

STATE OF ILLINOIS
DEPARTMENT OF TRANSPORTATION

I-290/IL 53 HMA RESURFACING AND BRIDGE REPAIRS
CROSS SECTIONS - SB DITCH GRADING - WOODFIELD RD TO RAMP C

SCALE: 1" = 5' | SHEET 6 OF 10 SHEETS | STA. 348+00.00 | TO STA. 349+50.00

F.A.I RTE.	SECTION	COUNTY	TOTAL SHEETS	SHEET NO.
290	(0404-316-HB) BR 24	COOK	276	266
		CONTRACT NO. 62W99		
	ILLINOIS FED. AID PROJECT			

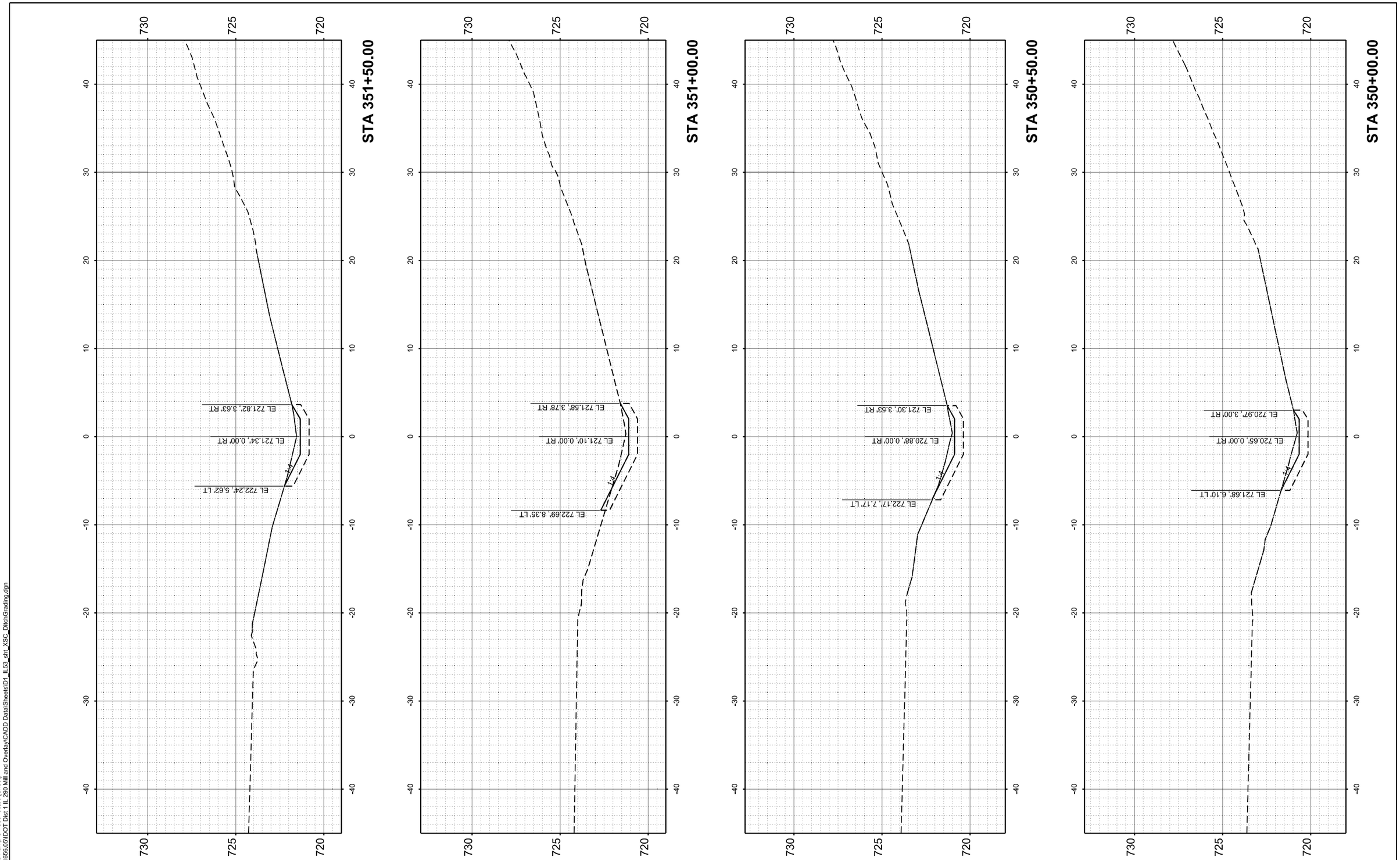

MODEL: SB_Woodfield-Ramp C - 350+00.00 [Sheet]
FILE NAME: W:\24001656.05\DOT Dist 1 IL 290 Mill and Overlay\CADD Data\Sheets\D1_IL53_sht_XSC_DitchGrading.dgn

IMEG
401 E. STATE ST. 4th Floor
ROCKFORD, IL 61104
PH: 815.965.6400
www.imegcorp.com

USER NAME = Marc.A.Personette	DESIGNED - Brad Lange	REVISED -
	DRAWN - Marc Personette	REVISED -
	CHECKED - Corey Stout	REVISED -
PLOT DATE = 3/16/2026	DATE - 3/16/2026	REVISED -

STATE OF ILLINOIS
DEPARTMENT OF TRANSPORTATION

I-290/IL 53 HMA RESURFACING AND BRIDGE REPAIRS
CROSS SECTIONS - SB DITCH GRADING - WOODFIELD RD TO RAMP C

SCALE: 1" = 5' | SHEET 7 OF 10 SHEETS | STA. 350+00.00 | TO STA. 351+50.00

F.A.I RTE.	SECTION	COUNTY	TOTAL SHEETS	SHEET NO.
290	(0404-316-HB) BR 24	COOK	276	267
		CONTRACT NO. 62W99		
	ILLINOIS FED. AID PROJECT			

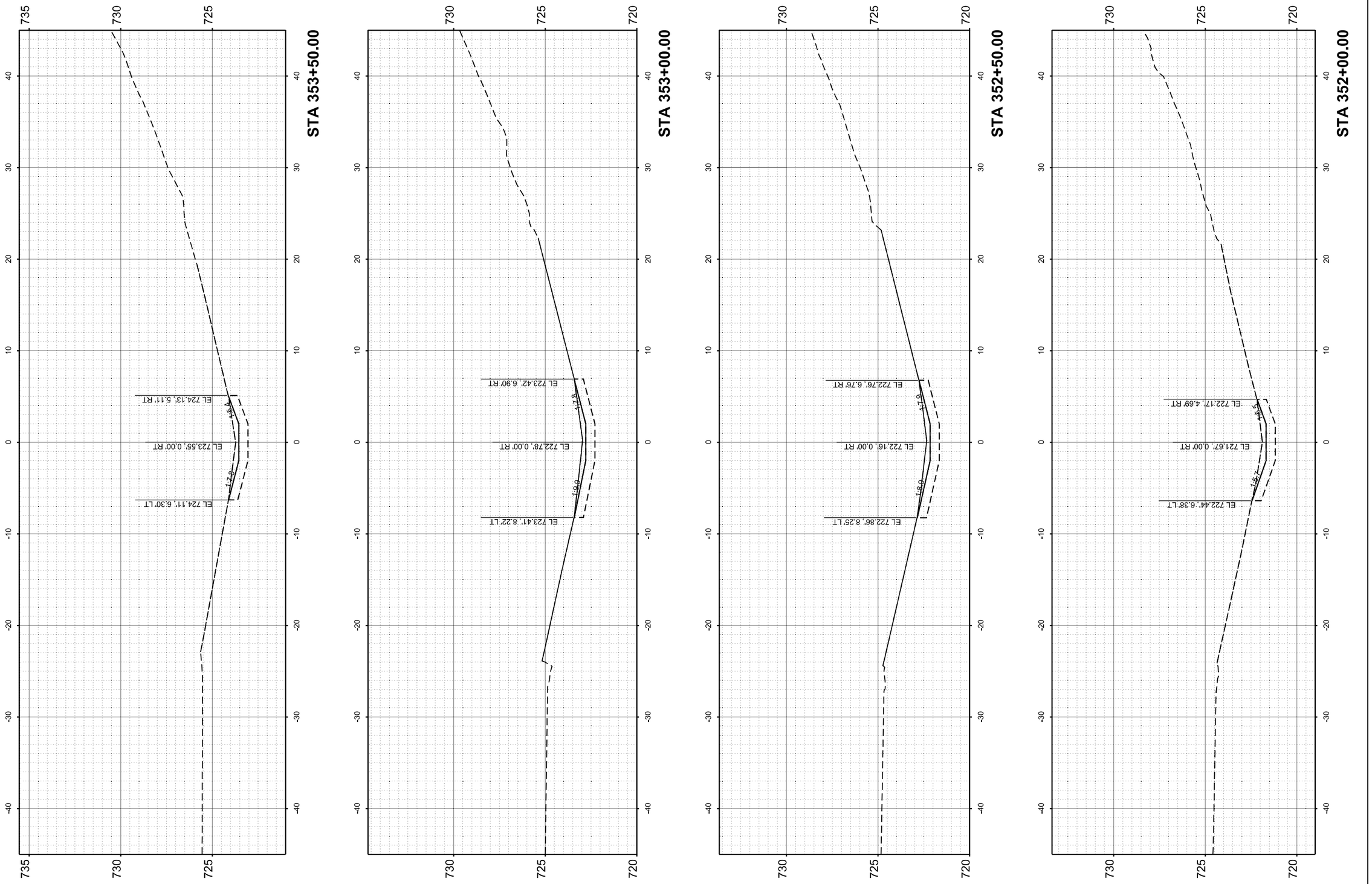

MODEL: SB_Woodfield-Ramp C - 352+00.00 [Sheet]
FILE NAME: W:\24001656.05\IDOT Dist 1 IL 290 Mill and Overlay\CADD Data\Sheets\D1_IL53_sht_XSC_DitchGrading.dgn

IMEG
401 E. STATE ST. 4th Floor
ROCKFORD, IL
61104
PH: 815.965.6400
www.imegcorp.com

USER NAME = Marc.A.Personette	DESIGNED - Brad Lange	REVISED -	
	DRAWN - Marc Personette	REVISED -	
	CHECKED - Corey Stout	REVISED -	
PLOT DATE = 3/16/2026	DATE - 3/16/2026	REVISED -	

STATE OF ILLINOIS
DEPARTMENT OF TRANSPORTATION

I-290/IL 53 HMA RESURFACING AND BRIDGE REPAIRS
CROSS SECTIONS - SB DITCH GRADING - WOODFIELD RD TO RAMP C

SCALE: 1" = 5' | SHEET 8 OF 10 SHEETS | STA. 352+00.00 | TO STA. 353+50.00

F.A.I RTE.	SECTION	COUNTY	TOTAL SHEETS	SHEET NO.
290	(0404-316-HB) BR 24	COOK	276	268
		CONTRACT NO. 62W99		
	ILLINOIS FED. AID PROJECT			

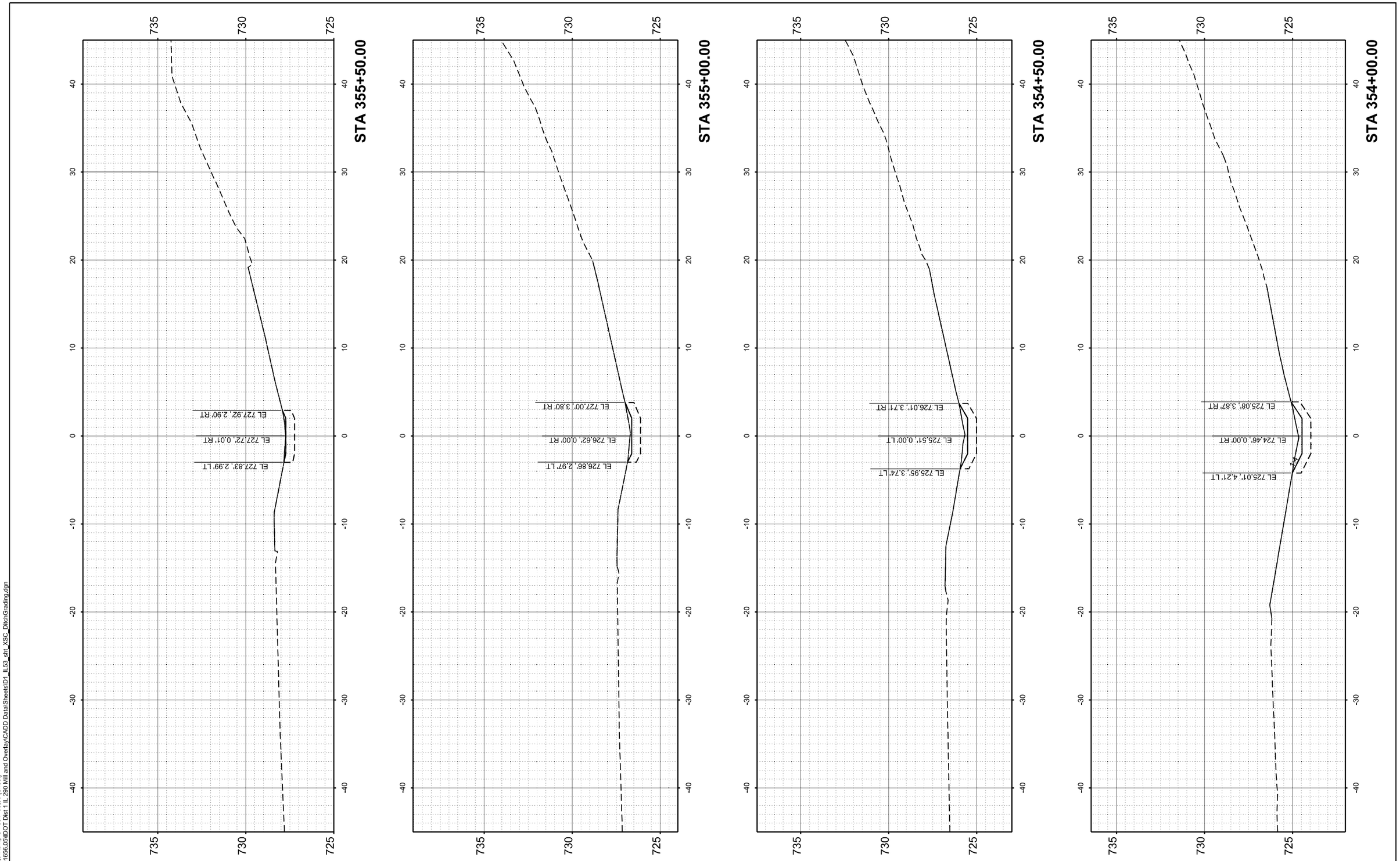

MODEL: SB_Woodfield-Ramp C - 354+00.00 [Sheet]
FILE NAME: W:\24001656.05\IDOT Dist 1 IL 290 Mill and Overlay\CADD Data\Sheets\D1_IL53_stit_XSC_DitchGrading.dgn

IMEG
401 E. STATE ST. 4th Floor ROCKFORD, IL 61104
PH: 815.965.6400 www.imegcorp.com

USER NAME = Marc.A.Personette	DESIGNED - Brad Lange	REVISED -	
	DRAWN - Marc Personette	REVISED -	
	CHECKED - Corey Stout	REVISED -	
PLOT DATE = 3/16/2026	DATE - 3/16/2026	REVISED -	

STATE OF ILLINOIS
DEPARTMENT OF TRANSPORTATION

I-290/IL 53 HMA RESURFACING AND BRIDGE REPAIRS
CROSS SECTIONS - SB DITCH GRADING - WOODFIELD RD TO RAMP C

SCALE: 1" = 5' | SHEET 9 OF 10 SHEETS | STA. 354+00.00 | TO STA. 355+50.00

F.A.I RTE.	SECTION	COUNTY	TOTAL SHEETS	SHEET NO.
290	(0404-316-HB) BR 24	COOK	276	269
		CONTRACT NO. 62W99		
	ILLINOIS	FED. AID PROJECT		

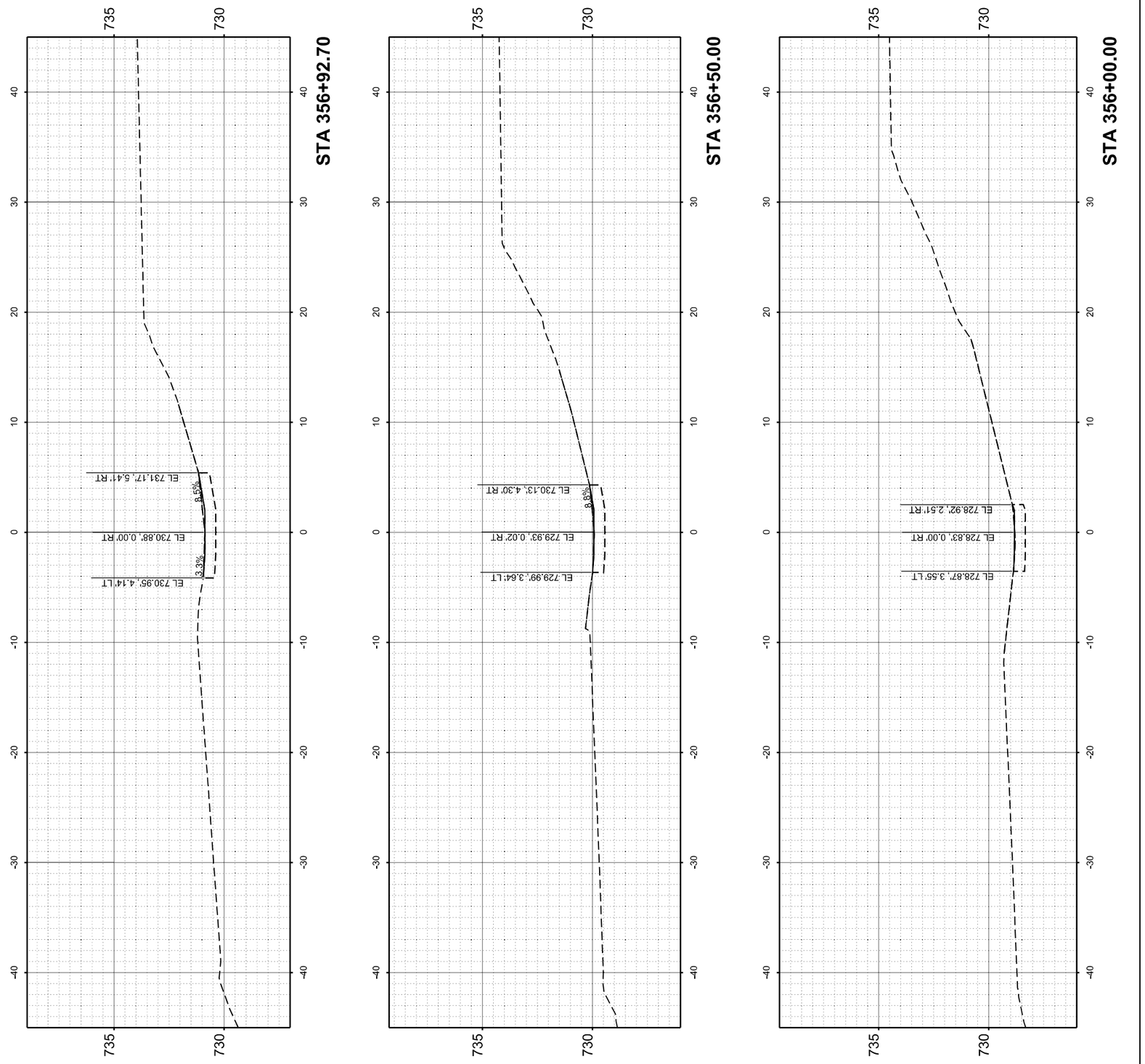

MODEL: SB_Woodfield-Ramp C - 356+00.00 [Sheet]
FILE NAME: W:\24001656.05\IDOT Dist 1 IL 290 Mill and Overlay\CADD Data\Sheets\D1_IL53_stit_XSC_DitchGrading.dgn

IMEG
401 E. STATE ST. 4th Floor ROCKFORD, IL 61104
PH: 815.965.6400 www.imegcorp.com

USER NAME = Marc.A.Personette	DESIGNED - Brad Lange	REVISED -	
	DRAWN - Marc Personette	REVISED -	
	CHECKED - Corey Stout	REVISED -	
PLOT DATE = 3/16/2026	DATE - 3/16/2026	REVISED -	

STATE OF ILLINOIS
DEPARTMENT OF TRANSPORTATION

I-290/IL 53 HMA RESURFACING AND BRIDGE REPAIRS
CROSS SECTIONS - SB DITCH GRADING - WOODFIELD RD TO RAMP C

SCALE: 1" = 5' | SHEET 10 OF 10 SHEETS | STA. 356+00.00 | TO STA. 356+92.70

F.A.I RTE.	SECTION	COUNTY	TOTAL SHEETS	SHEET NO.
290	(0404-316-HB) BR 24	COOK	276	270
		CONTRACT NO. 62W99		
	ILLINOIS FED. AID PROJECT			

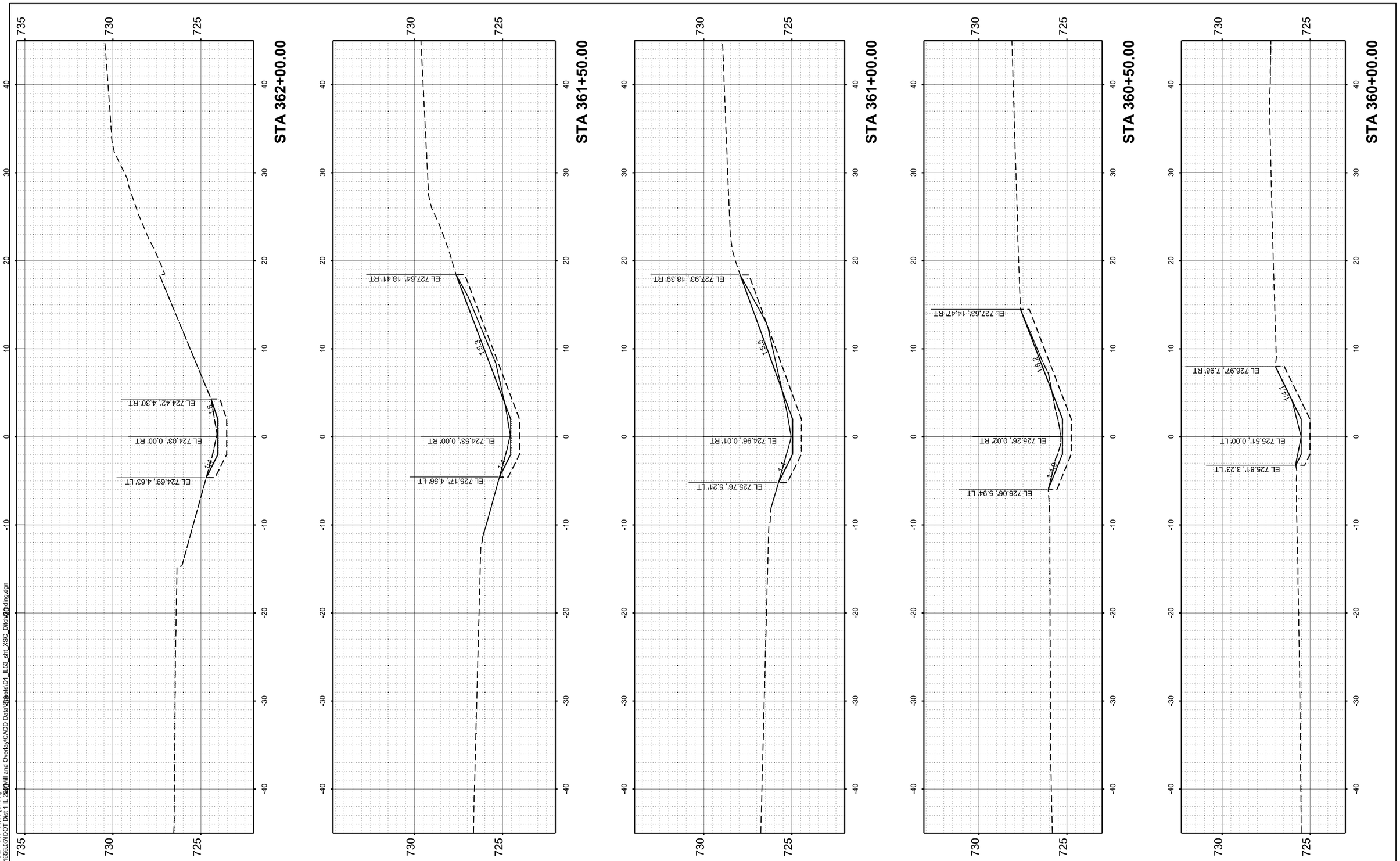

MODEL: SB_Ramp C-Gdf - 360+00.00 [Sheet]
FILE NAME: W:\24001656.05\IDOT Dist 1 IL 24\Mill and Overlay\CADD Data\Sheets\D1_IL53_4IN_XSC_DitchGrading.dgn

IMEG
401 E. STATE ST. 4th Floor
ROCKFORD, IL 61104
PH: 815.965.6400
www.imegcorp.com

USER NAME = Marc.A.Personette	DESIGNED - Brad Lange	REVISED -
	DRAWN - Marc Personette	REVISED -
	CHECKED - Corey Stout	REVISED -
PLOT DATE = 3/16/2026	DATE - 3/16/2026	REVISED -

STATE OF ILLINOIS
DEPARTMENT OF TRANSPORTATION

I-290/IL 53 HMA RESURFACING AND BRIDGE REPAIRS
CROSS SECTIONS - SB DITCH GRADING - RAMP C TO IL 58

SCALE: 1" = 5' | SHEET 1 OF 6 SHEETS | STA. 360+00.00 | TO STA. 362+00.00

F.A.I RTE.	SECTION	COUNTY	TOTAL SHEETS	SHEET NO.
290	(0404-316-HB) BR 24	COOK	276	271
		CONTRACT NO. 62W99		
	ILLINOIS FED. AID PROJECT			

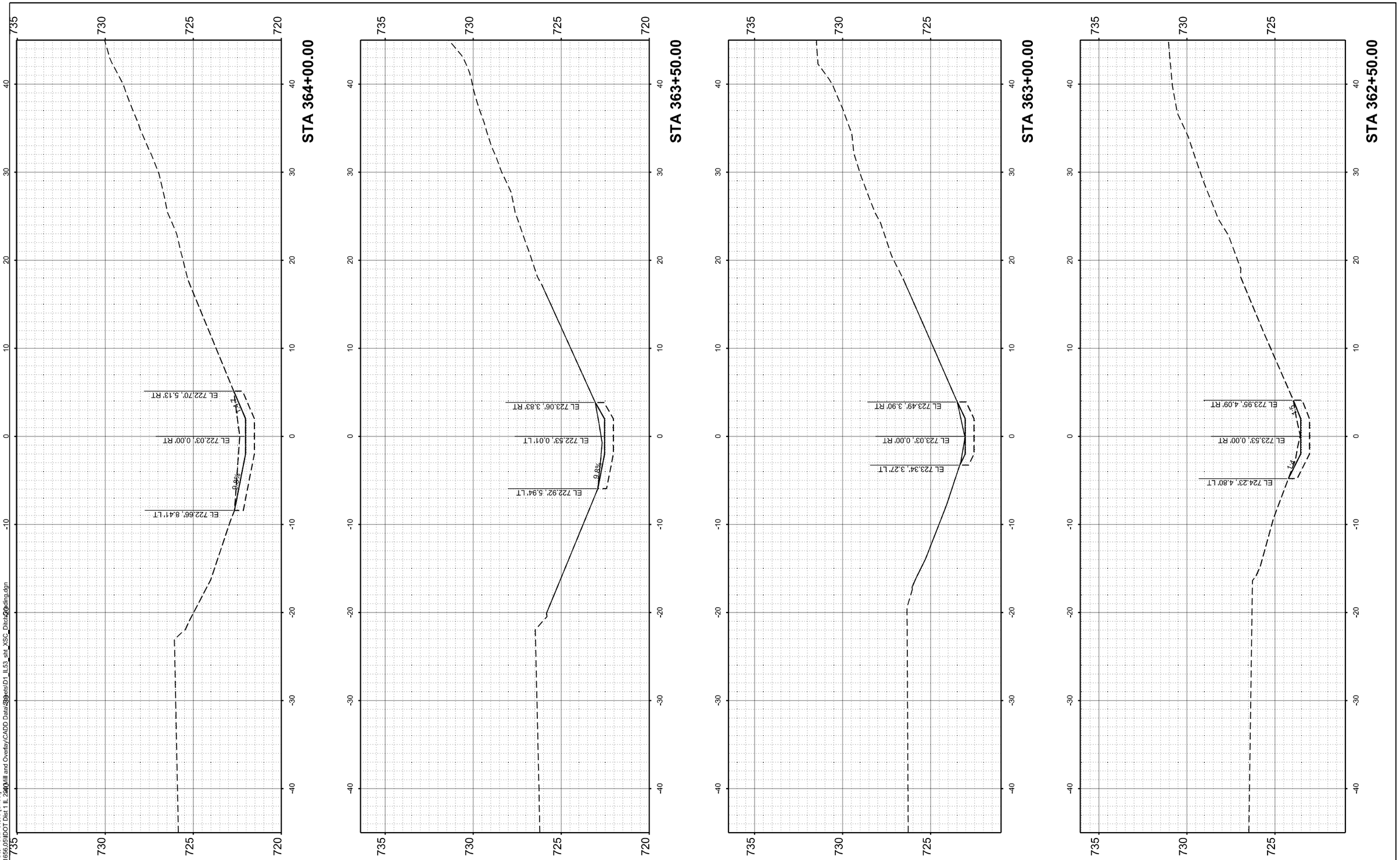

MODEL: SB_Ramp C-Golf - 362+50.00 [Sheet]
FILE NAME: W:\24001656.051\IDOT Dist 1 IL 290\Mill and Overlay\CADD Data\Sheets\D1_IL53_sht_XSC_DitchGrading.dgn

IMEG
401 E. STATE ST. 4th Floor
ROCKFORD, IL
61104
PH: 815.965.6400
www.imegcorp.com

USER NAME = Marc.A.Personette	DESIGNED - Brad Lange	REVISED -	
	DRAWN - Marc Personette	REVISED -	
	CHECKED - Corey Stout	REVISED -	
PLOT DATE = 3/16/2026	DATE - 3/16/2026	REVISED -	

STATE OF ILLINOIS
DEPARTMENT OF TRANSPORTATION

I-290/IL 53 HMA RESURFACING AND BRIDGE REPAIRS
CROSS SECTIONS - SB DITCH GRADING - RAMP C TO IL 58

SCALE: 1" = 5' | SHEET 2 OF 6 SHEETS | STA. 362+50.00 | TO STA. 364+00.00

F.A.I RTE.	SECTION	COUNTY	TOTAL SHEETS	SHEET NO.
290	(0404-316-HB) BR 24	COOK	276	272
		CONTRACT NO. 62W99		
	ILLINOIS	FED. AID PROJECT		

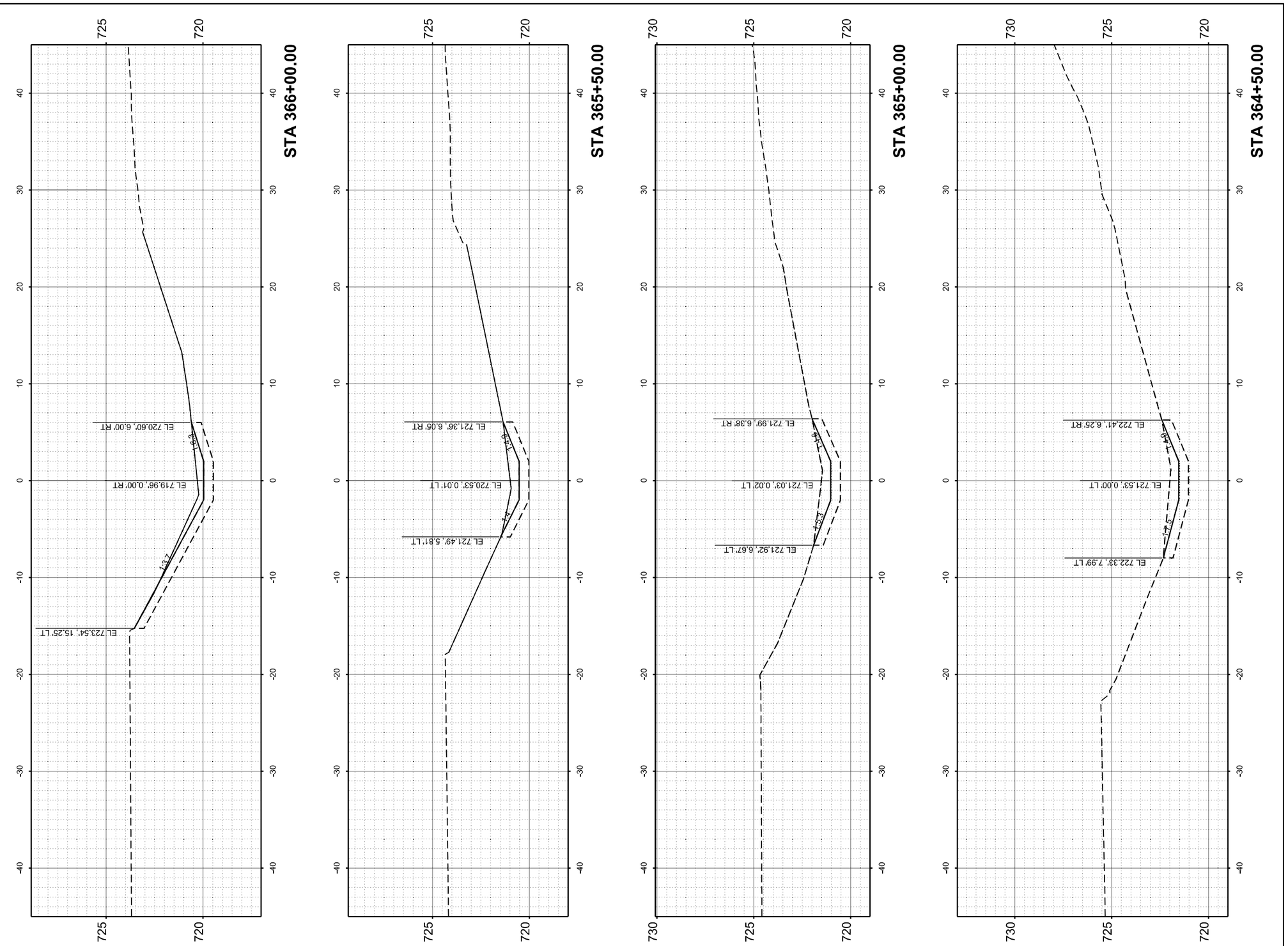

MODEL: SB_Ramp C-Golf - 364+50.00 [Sheet]
FILE NAME: W:\24001656.01\IDOT Dist 1 IL 290 Mill and Overlay\CADD Data\Sheets\D1_IL53_sht_XSC_DitchGrading.dgn

IMEG
401 E. STATE ST. 4th Floor ROCKFORD, IL 61104
PH: 815.965.6400
www.imegcorp.com

USER NAME = Marc.A.Personette	DESIGNED - Brad Lange	REVISED -
	DRAWN - Marc Personette	REVISED -
	CHECKED - Corey Stout	REVISED -
PLOT DATE = 3/16/2026	DATE - 3/16/2026	REVISED -

STATE OF ILLINOIS
DEPARTMENT OF TRANSPORTATION

I-290/IL 53 HMA RESURFACING AND BRIDGE REPAIRS
CROSS SECTIONS - SB DITCH GRADING - RAMP C TO IL 58

SCALE: 1" = 5' | SHEET 3 OF 6 SHEETS | STA. 364+50.00 | TO STA. 366+00.00

F.A.I RTE.	SECTION	COUNTY	TOTAL SHEETS	SHEET NO.
290	(0404-316-HB) BR 24	COOK	276	273
		CONTRACT NO. 62W99		
	ILLINOIS FED. AID PROJECT			

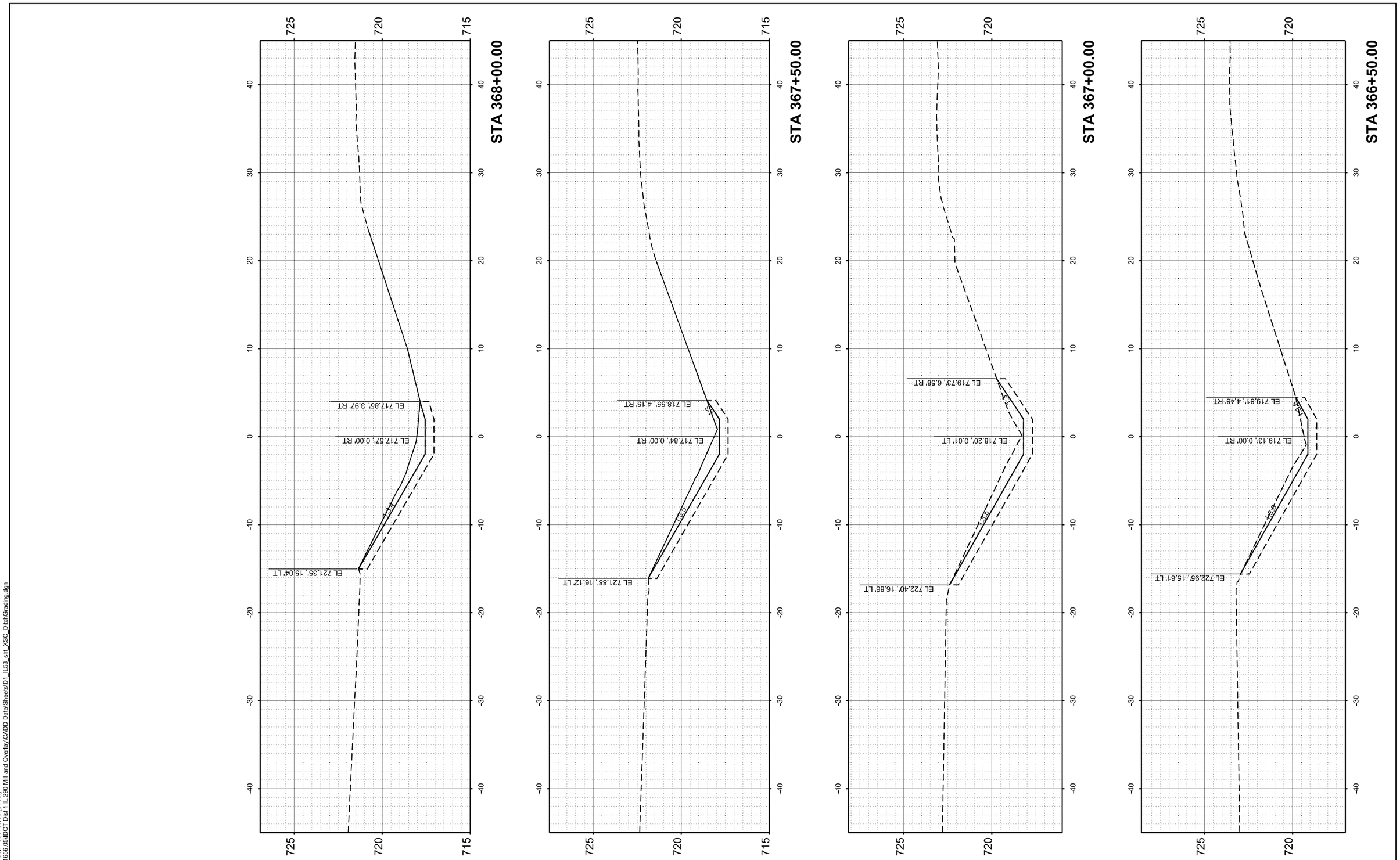

MODEL: SB_Ramp C-Golf - 366+50.00 [Sheet]
FILE NAME: W:\240016\56.05\IDOT Dist 1 IL 290 Mill and Overlay\CADD Data\Sheets\D1_IL53_sht_XSC_DitchGrading.dgn

IMEG
401 E. STATE ST. 4th Floor
ROCKFORD, IL 61104
PH: 815.965.6400
www.imegcorp.com

USER NAME = Marc.A.Personette	DESIGNED - Brad Lange	REVISED -	
	DRAWN - Marc Personette	REVISED -	
	CHECKED - Corey Stout	REVISED -	
PLOT DATE = 3/16/2026	DATE - 3/16/2026	REVISED -	

STATE OF ILLINOIS
DEPARTMENT OF TRANSPORTATION

I-290/IL 53 HMA RESURFACING AND BRIDGE REPAIRS
CROSS SECTIONS - SB DITCH GRADING - RAMP C TO IL 58

SCALE: 1" = 5' | SHEET 4 OF 6 SHEETS | STA. 366+50.00 | TO STA. 368+00.00

F.A.I RTE.	SECTION	COUNTY	TOTAL SHEETS	SHEET NO.
290	(0404-316-HB) BR 24	COOK	276	274
		CONTRACT NO. 62W99		
	ILLINOIS	FED. AID PROJECT		

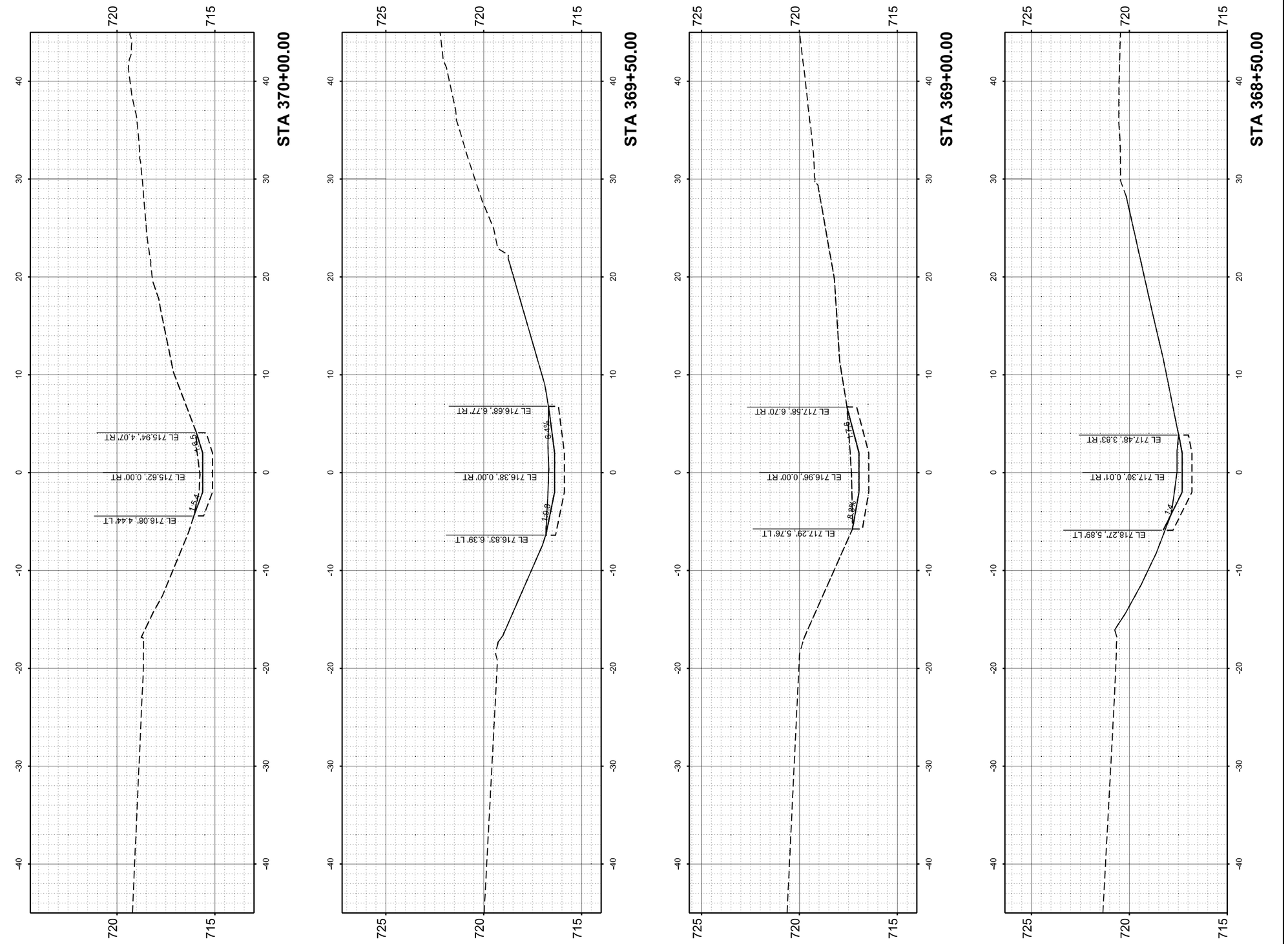

MODEL: SB_Ramp C-Golf - 368+50.00 [Sheet]
FILE NAME: W:\24001656.01\IDOT Dist 1 IL 290 Mill and Overlay\CADD Data\Sheets\D1_IL53_sht_XSC_DitchGrading.dgn

IMEG
401 E. STATE ST. 4th Floor ROCKFORD, IL 61104
PH: 815.965.6400 www.imegcorp.com

USER NAME = Marc.A.Personette	DESIGNED - Brad Lange	REVISED -	
	DRAWN - Marc Personette	REVISED -	
	CHECKED - Corey Stout	REVISED -	
PLOT DATE = 3/16/2026	DATE - 3/16/2026	REVISED -	

STATE OF ILLINOIS
DEPARTMENT OF TRANSPORTATION

I-290/IL 53 HMA RESURFACING AND BRIDGE REPAIRS
CROSS SECTIONS - SB DITCH GRADING - RAMP C TO IL 58

SCALE: 1" = 5' | SHEET 5 OF 6 SHEETS | STA. 368+50.00 | TO STA. 370+00.00

F.A.I RTE.	SECTION	COUNTY	TOTAL SHEETS	SHEET NO.
290	(0404-316-HB) BR 24	COOK	276	275
		CONTRACT NO. 62W99		
	ILLINOIS FED. AID PROJECT			

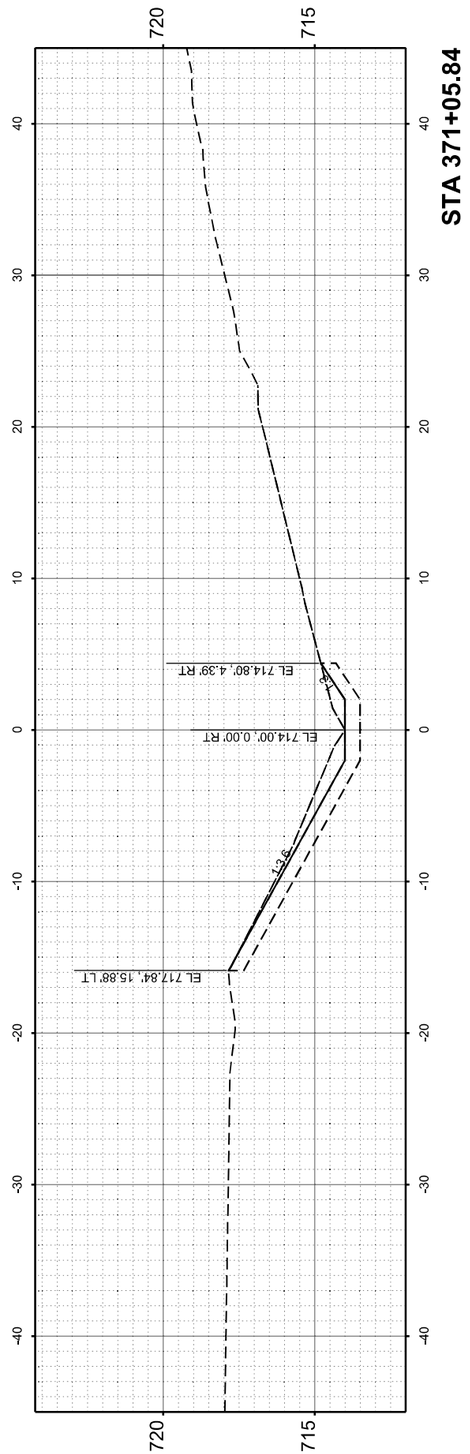

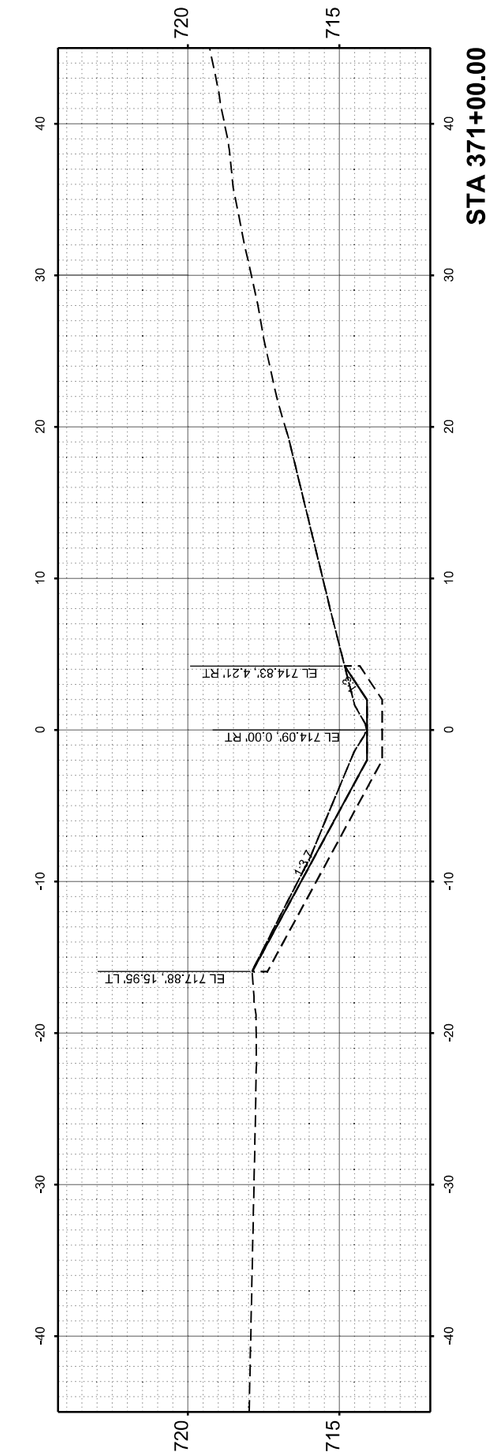

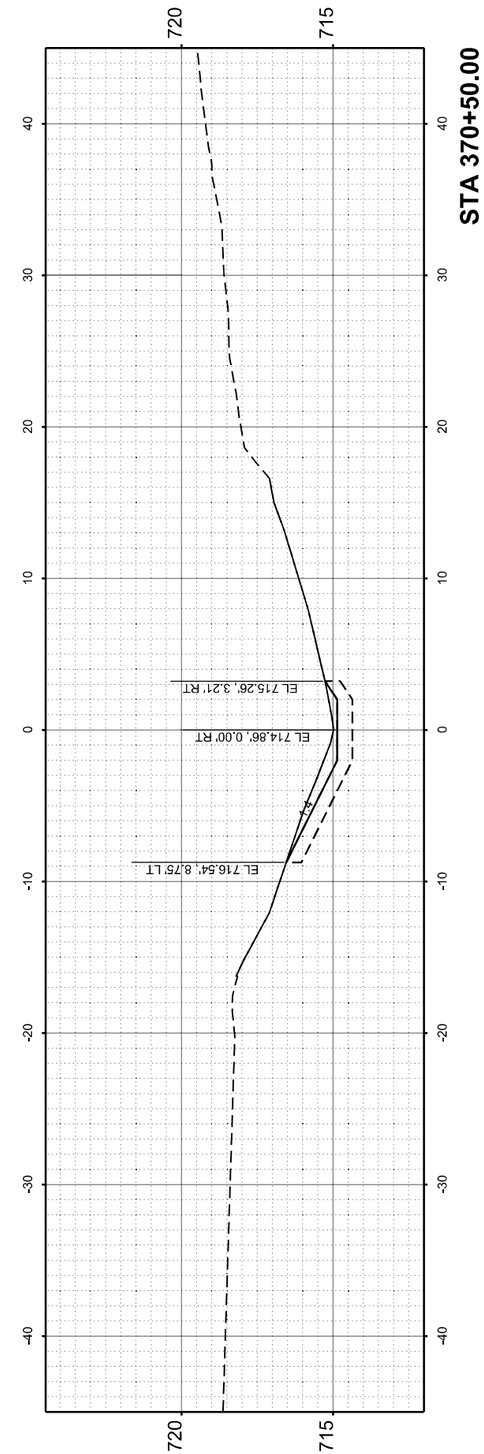

MODEL: SB_Ramp C-Golf - 370+50.00 [Sheet]
FILE NAME: W:\24001656.05\IDOT Dist 1 IL 290 Mill and Overlay\CADD Data\Sheets\D1_IL53_sht_XSC_DitchGrading.dgn

IMEG
401 E. STATE ST. 4th Floor
ROCKFORD, IL
61104
PH: 815.965.6400
www.imegcorp.com

USER NAME = Marc.A.Personette	DESIGNED - Brad Lange	REVISED -	
	DRAWN - Marc Personette	REVISED -	
	CHECKED - Corey Stout	REVISED -	
PLOT DATE = 3/16/2026	DATE - 3/16/2026	REVISED -	

STATE OF ILLINOIS
DEPARTMENT OF TRANSPORTATION

I-290/IL 53 HMA RESURFACING AND BRIDGE REPAIRS
CROSS SECTIONS - SB DITCH GRADING - RAMP C TO IL 58

SCALE: 1" = 5' | SHEET 6 OF 6 SHEETS | STA. 370+50.00 | TO STA. 371+05.84

F.A.I RTE.	SECTION	COUNTY	TOTAL SHEETS	SHEET NO.
290	(0404-316-HB) BR 24	COOK	276	276
		CONTRACT NO. 62W99		
	ILLINOIS FED. AID PROJECT			