01-16-2026 LETTING ITEM 208

F.A.U. RTE.	SECTION	COUNTY	TOTAL SHEETS	SHEET NO.
0403	21-00047-00-WR	WILL	149	1
	ILLINOIS	CONTRACT NO. 61M01		

FOR INDEX OF SHEETS SEE SHEET 2

FOR LIST OF APPLICABLE HIGHWAY STANDARDS SEE SHEET 2

STATE OF ILLINOIS
DEPARTMENT OF TRANSPORTATION
PLANS FOR PROPOSED FEDERAL AID HIGHWAY

FAU 0403 (SEIL ROAD) WIDENING
RAVEN ROAD TO SARVER DRIVE
SECTION 21–00047–00–WR
PROJECT NO: 50FP(334)
VILLAGE OF SHOREWOOD
WILL COUNTY
JOB NO: C–91–193–21

TRAFFIC DATA (SEIL ROAD)
FUNCTIONAL CLASSIFICATION: MAJOR COLLECTOR
POSTED SPEED = 35 MPH
ADT = 6,500 (2021)
ADT = 10,400 (2050)

TRAFFIC DATA (STATES LANE)
FUNCTIONAL CLASSIFICATION: LOCAL ROAD
POSTED SPEED = 25 MPH
ADT = 1,500 (2021)
ADT = 2,600 (2050)

TRAFFIC DATA (RAVEN ROAD)
FUNCTIONAL CLASSIFICATION: LOCAL ROAD
POSTED SPEED = 25 MPH
ADT = 1,800 (2021)
ADT = 3,400 (2050)

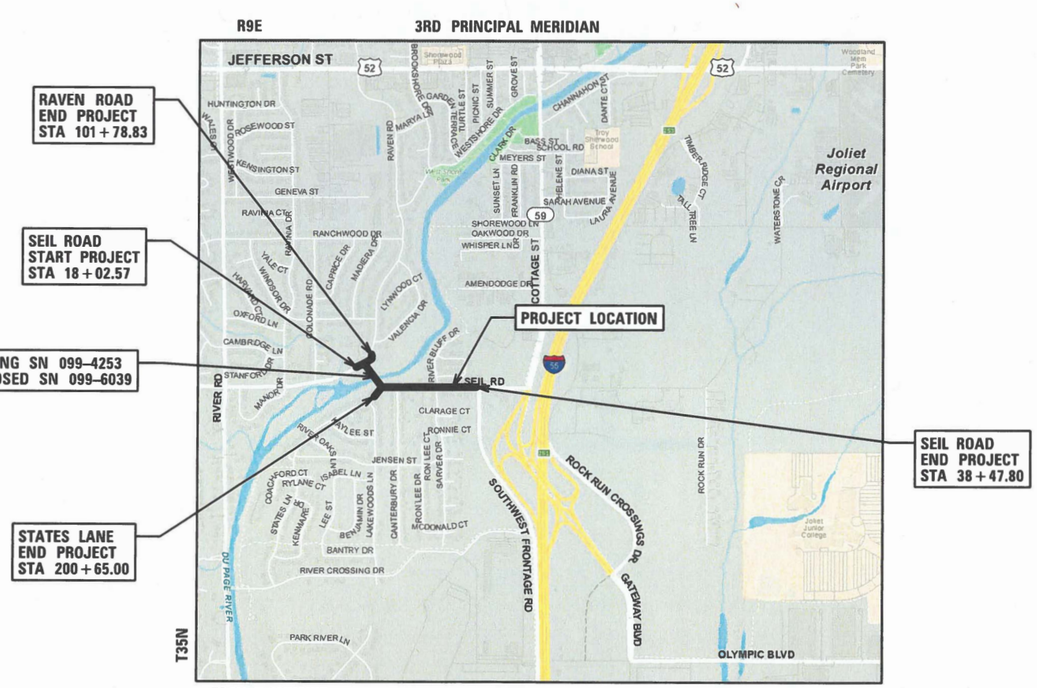

LOCATION MAP
N.T.S.

GROSS LENGTH = 2,045.23 FT = 0.39 MILE
NET LENGTH = 2,045.23 FT = 0.39 MILE

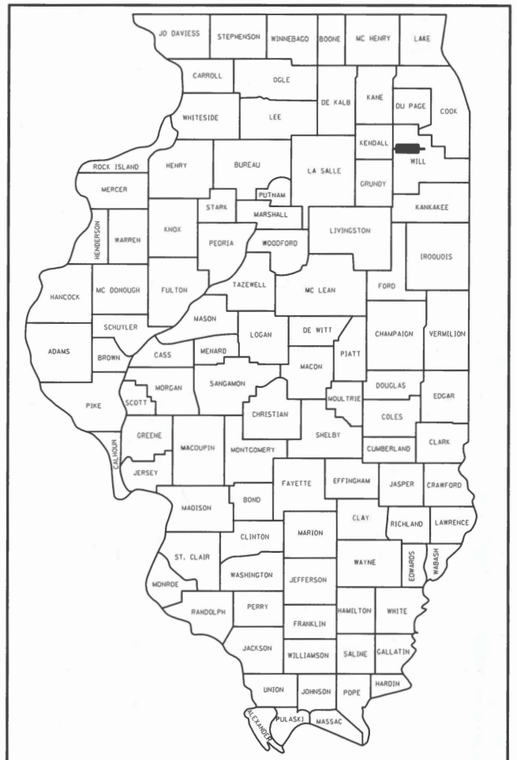

LOCATION OF SECTION INDICATED THUS:–

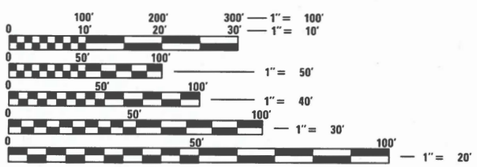

FULL SIZE PLANS HAVE BEEN PREPARED USING STANDARD ENGINEERING SCALES. REDUCED SIZED PLANS WILL NOT CONFORM TO STANDARD SCALES. IN MAKING MEASUREMENTS ON REDUCED PLANS, THE ABOVE SCALES MAY BE USED.

J.U.L.I.E.
JOINT UTILITY LOCATION INFORMATION FOR EXCAVATION
1–800–892–0123
OR 811

STATE OF ILLINOIS
DEPARTMENT OF TRANSPORTATION

APPROVED 9/30/2025
VILLAGE OF SHOREWOOD PRESIDENT

PASSED October 31, 2025
DISTRICT 1 ENGINEER OF LOCAL ROADS AND STREETS

RELEASING FOR BID BASED ON LIMITED REVIEW November 3, 2025
REGIONAL ENGINEER

CHRISTOPHER B. BURKE ENGINEERING, LTD.
16221 W. 159th Street, Suite 201
Lockport, Illinois 60441
(815) 770-2850
PROFESSIONAL DESIGN FIRM NO. 184-001175
EXPIRATION DATE: 04/30/27

FEDERAL AID PROGRAM ENGINEER: CARMEN E. RAMOS, P.E., SCHAMBURG, IL

ENGINEER 10/6/2025 DATE
MAJID MOBASSERI, PE, SE
ILLINOIS REGISTRATION No. 062-047793
ILLINOIS REGISTRATION No. 081-005058
EXPIRATION DATE: 11/2026

ENGINEER 10/6/2025 DATE
ANTHONY J. DERICCO, PE
ILLINOIS REGISTRATION No. 062-57484
EXPIRATION DATE: 11/2027

ENGINEER 10/6/2025 DATE
ALEX SCHAEFER, PE
ILLINOIS REGISTRATION No. 062-071146
EXPIRATION DATE: 11/2027

ENGINEER 10/6/2025 DATE
MIROSLAW ANTAS, PE
ILLINOIS REGISTRATION No. 062-060781
EXPIRATION DATE: 11/2027

CONTRACT NO. 61M01

PRINTED BY THE AUTHORITY OF THE STATE OF ILLINOIS

FILE NAME = CVR_D2103.sht

INDEX OF SHEETS

HIGHWAY STANDARDS

000001-09 – STANDARD SYMBOLS, ABBREVIATIONS, AND PATTERNS

280001-07 – TEMPORARY EROSION CONTROL SYSTEMS

420406 – PAVEMENT CONNECTOR (HMA) FOR BRIDGE APPROACH SLAB

424001-12 – PERPENDICULAR CURB RAMPS FOR SIDEWALKS

424006-06 – DIAGONAL CURB RAMPS FOR SIDEWALKS

424011-05 – CORNER PARALLEL CURB RAMPS FOR SIDEWALKS

424026-04 – ENTRANCE/ALLEY PEDESTRIAN CROSSINGS

542301-03 – PRECAST REINFORCED CONCRETE FLARED END SECTION

602001-02 – CATCH BASIN TYPE A

602011-02 – CATCH BASIN TYPE C

602301-04 – INLET - TYPE A

602306-03 – INLET - TYPE B

602401-07 – PRECAST MANHOLE TYPE A 4’ DIAMETER

602402-03 – PRECAST MANHOLE TYPE A 5’ DIAMETER

602406-11 – PRECAST MANHOLE TYPE A 6’ DIAMETER

602411-09 – PRECAST MANHOLE TYPE A 7’ DIAMETER

602416-09 – PRECAST MANHOLE TYPE A 8’ DIAMETER

602601-06 – PRECAST REINFORCED CONCRETE FLAT SLAB TOP

602701-02 – MANHOLE STEPS

604001-05 – FRAME AND LIDS TYPE 1

604036-03 – GRATE TYPE 8

604091-05 – FRAME AND GRATE TYPE 24

606001-09 – CONCRETE CURB TYPE B AND COMBINATION CONCRETE CURB AND GUTTER

631011-10 – TRAFFIC BARRIER TERMINAL, TYPE 2

631026-06 – TRAFFIC BARRIER TERMINAL, TYPE 5

631031-18 – TRAFFIC BARRIER TERMINAL, TYPE 6

701001-02 – OFF-ROAD OPERATIONS, 2L, 2W, MORE THAN 15’ AWAY

701006-05 – OFF-ROAD OPERATIONS, 2L, 2W, 15’ TO 24” FROM PAVEMENT EDGE

701101-05 – OFF ROAD OPERATIONS, MULTILANE, 15’ TO 24” FROM PAVEMENT EDGE

701301-04 – LANE CLOSURE, 2L, 2W, SHORT TIME OPERATIONS

701311-03 – LANE CLOSURE, 2L, 2W, MOVING OPERATIONS, DAY ONLY

701427-05 – LANE CLOSURE, MULTILANE, INTERMITTENT OR MOVING OPERATIONS, SPEED ≥ 40 MPH

701501-06 – URBAN LANE CLOSURE, 2L, 2W, UNDIVIDED

701701-10 – URBAN LANE CLOSURE, MULTILANE INTERSECTION

701801-06 – SIDEWALK, CORNER OR CROSSWALK CLOSURE

701901-11 – TRAFFIC CONTROL DEVICES

720001-01 – SIGN PANEL MOUNTING DETAILS

720006-04 – SIGN PANEL ERECTION DETAILS

725001-01 – OBJECT AND TERMINAL MARKERS

728001-01 – TELESCOPING STEEL SIGN SUPPORT

782006-01 – GUARDRAIL AND BARRIER WALL REFLECTOR MOUNTING DETAILS

DISTRICT 1 STANDARD DETAILS

BD-7 – DETAIL OF STORM SEWER CONNECTION TO EXISTING SEWER

BD-32 – BUTT JOINT AND HMA TAPER DETAILS

BD-34 – DETAILS FOR DEPRESSED CURB & GUTTER AND SHOULDER TREATMENT AT TBT TY. 1 SPL.

TC-10 – TRAFFIC CONTROL AND PROTECTION FOR SIDE ROADS, INTERSECTIONS AND DRIVEWAYS

TC-13 – DISTRICT ONE TYPICAL PAVEMENT MARKINGS

TC-16 – SHORT TERM PAVEMENT MARKING LETTERS AND SYMBOLS

TC-22 – ARTERIAL ROAD INFORMATION SIGN

TC-26 – DRIVEWAY ENTRANCE SIGNING

COMMITMENTS

1. TREES THREE (3) INCHES IN DIAMETER AT BREAST HEIGHT SHALL NOT BE CLEARED FROM APRIL 1ST THROUGH SEPTEMBER 30TH OF ANY GIVEN YEAR.

GENERAL NOTES

UTILITIES

1. THE CONTRACTOR SHALL BE RESPONSIBLE FOR CONTACTING THE OWNERS OF ALL EXISTING FACILITIES SO THAT THE UTILITIES AND THEIR APPURTENANCES MAY BE LOCATED AND ADJUSTED OR MOVED, IF NECESSARY, PRIOR TO THE START OF CONSTRUCTION OPERATIONS. THE CONTRACTOR SHALL COOPERATE WITH ALL UTILITY OWNERS AS PROVIDED FOR IN THE STANDARD SPECIFICATIONS.

2. THE LOCATIONS OF EXISTING DRAINAGE STRUCTURES, STORM AND SANITARY SEWERS, WATER SERVICE LINES AND OTHER UTILITY LINES ARE APPROXIMATE, AND THE VILLAGE AND ENGINEER DO NOT GUARANTEE THEIR ACCURACY. THEIR EXACT HORIZONTAL AND VERTICAL LOCATIONS ARE TO BE DETERMINED IN THE FIELD BY THE CONTRACTOR.

3. BEFORE STARTING ANY EXCAVATION, THE CONTRACTOR SHALL CALL "JULIE" AT 8-1-1 FOR FIELD LOCATIONS OF BURIED ELECTRIC, TELEPHONE, GAS AND CABLE TELEVISION FACILITIES (48 HOURS NOTIFICATIONS IS REQUIRED).

4. A PRIVATE UTILITY POLE PROVIDING ELECTRIC SERVICE TO 24330 W. SEIL ROAD IS LOCATED WITHIN THE PROPOSED RIGHT-OF-WAY AND IN CONFLICT WITH PROPOSED IMPROVEMENTS. THIS POLE WILL BE RELOCATED BY THE PROPERTY OWNER PRIOR TO CONSTRUCTION.

5. THE EXISTING NICOR GAS MAIN LOCATED EAST OF STATES LANE WILL BE RELOCATED BY NICOR AFTER THE STORM SEWER IN THE NORTH PARKWAY OF SEIL ROAD IS COMPLETE. THE CONTRACTOR SHALL COORDINATE SCHEDULES WITH NICOR DURING CONSTRUCTION. SEE STATUS OF UTILITIES SPECIAL PROVISION FOR MORE INFORMATION.

WATER FOR CONSTRUCTION PURPOSES

6. THE CONTRACTOR CAN OBTAIN MUNICIPAL WATER IN BULK, AT NO CHARGE, AS LONG AS THERE IS NO "WATERING BAN" IN EFFECT. THE INDISCRIMINATE USE OF FIRE HYDRANTS IS STRICTLY PROHIBITED. THE CONTRACTOR MAY OBTAIN WATER ONLY UNDER THE DIRECTION OF THE SHOREWOOD PUBLIC WORKS DEPARTMENT AT THE TIME OF CONSTRUCTION. WATER FOR CONSTRUCTION SHALL BE OBTAINED FROM THE VILLAGE'S WATER FILL STATION LOCATED AT THE PUBLIC WORKS FACILITY. THE CONTRACTOR SHALL PROVIDE THE WATER TRUCK AND DRIVER REQUIRED TO OBTAIN AND TRANSPORT THIS WATER. THE VILLAGE RESERVES THE RIGHT TO RESTRICT OR REFUSE THE USE OF VILLAGE WATER IF DEEMED NECESSARY.

MISCELLANEOUS

7. ALL SAWCUTTING SHALL BE PERFORMED PRIOR TO BEGINNING REMOVAL.

8. WHEN REMOVING PAVEMENT, CURB AND GUTTER, SHOULDER, AND/OR OTHER STRUCTURES, THE USE OF ANY TYPE OF CONCRETE BREAKERS, WHICH MIGHT DAMAGE UNDERGROUND PUBLIC OR PRIVATE UTILITIES, WILL NOT BE PERMITTED. UNDER NO CIRCUMSTANCES WILL THE USE OF A FROST BALL BE PERMITTED. THE CONTRACTOR IS PROHIBITED FROM BREAKING UP CONCRETE BY DROPPING IT ON THE PAVEMENT OR IN ANY OTHER MANNER WHICH MAY DAMAGE EXISTING OR PROPOSED PAVEMENTS OR OTHER ROADWAY APPURTENANCES.

9. NO CONSTRUCTION SHALL BEGIN UNTIL ALL PROPER TEMPORARY SIGNS AND BARRICADES HAVE BEEN INSTALLED.

10. THE CONTRACTOR SHALL CONTACT THE DISTRICT ONE TRAFFIC CONTROL SUPERVISOR AT KALPANA.KANNAN-HOSADURGA@ILLINOIS.GOV A MINIMUM OF 72 HOURS IN ADVANCE OF BEGINNING WORK.

11. THE CONTRACTOR SHALL CONTACT IDOT'S BUREAU OF MATERIALS (PHONE 847-705-4337) AT LEAST 24 HOURS BEFORE PLACING HOT MIX ASPHALT OR PORTLAND CEMENT CONCRETE.

12. THE CONTRACTOR SHALL TAKE EXTRA CARE IN GRADING AND EXCAVATING NEAR TREES WHICH ARE NOT MARKED FOR REMOVAL SO AS NOT TO CAUSE INJURY TO THE ROOT SYSTEM OR TRUNKS. ANY DAMAGE DONE TO EXISTING ITEMS BY THE CONTRACTOR SHALL BE REPAIRED BY THE CONTRACTOR.

13. THE CONTRACTOR WILL BE REQUIRED TO RELOCATE OR REMOVE AND REPLACE SIGNS OR MAILBOXES WHICH INTERFERE WITH CONSTRUCTION OPERATIONS, AND TO TEMPORARILY RESET ALL SUCH SIGNS AND MAILBOXES DURING CONSTRUCTION OPERATIONS. IF EXISTING SIGNS, MAILBOXES, OR MAILBOX POSTS ARE DAMAGED DURING THE REMOVAL AND REPLACEMENT PROCESS, THE SIGN, MAILBOX, OR MAILBOX POST SHALL BE REPLACED.

14. DURING THE CONSTRUCTION OPERATIONS WHEN ANY LOOSE MATERIAL IS DEPOSITED IN THE FLOW LINE OF DITCHES, GUTTERS OR DRAINAGE STRUCTURES SO THE NATURAL FLOW OF WATER IS OBSTRUCTED, THE MATERIAL SHALL BE REMOVED AT THE CLOSE OF EACH WORKING DAY. AT THE CONCLUSION OF THE CONSTRUCTION OPERATIONS ALL DRAINAGE STRUCTURES SHALL BE FREE FROM ALL DIRT AND DEBRIS CAUSED BY THE CONSTRUCTION.

15. THE SUBGRADE STABILITY SHALL BE VERIFIED BY PROOF ROLLING WITH A FULLY LOADED TANDEM-AXLE TRUCK.

16. GEOTECHNICAL FABRIC FOR GROUND STABILIZATION AND/OR AGGREGATE SUBGRADE IMPROVEMENT (CU YD) HAVE BEEN PROVIDED FOR USE AT THE LOCATIONS INDICATED FOR SOILS THAT TEND TO BE UNSTABLE AND/OR UNSUITABLE. THE ACTUAL NEED FOR REMOVAL AND REPLACEMENT WITH ABOVE ITEM WILL BE DETERMINED IN THE FIELD AT THE TIME OF CONSTRUCTION BY THE GEOTECHNICAL ENGINEER. ALL POTENTIALLY UNSTABLE SOILS SHOULD BE TESTED WITH A STATIC OR DYNAMIC CONE PENETROMETER AND TREATED IN ACCORDANCE WITH ARTICLE 301.04 OF THE SSRBC AND IDOT SUBGRADE STABILITY MANUAL. IF UNSTABLE AND/OR UNSUITABLE SOILS ARE NOT ENCOUNTERED, THEN THE QUANTITY SHALL BE DEDUCTED AND NO ADDITIONAL COMPENSATION WILL BE DUE TO THE CONTRACTOR.

17. ANY AGGREGATE SUBGRADE IMPROVEMENT CONTAMINATED AND/OR DAMAGED BY THE CONTRACTOR'S VEHICLES AND/OR EQUIPMENT IS TO BE REMOVED AND REPLACED AS DIRECTED BY THE ENGINEER.

18. THE AGGREGATE GRADATION FOR THE LOWER 9 INCHES OF AGGREGATE SUBGRADE IMPROVEMENT 12" SHALL BE CS1 OR RR1.

19. BACKFILLING STORM SEWER CONSTRUCTED UNDER THE ROADWAY SPECIFIED UNDER ART. 550.07(b, c) OF THE SSRBC WILL NOT BE ALLOWED.

20. AT THE END OF EACH DAY, IT SHALL BE THE CONTRACTOR'S RESPONSIBILITY TO ASSURE THAT ALL STREETS, SIDEWALKS, AND PARKING LOTS ADJACENT TO THE PROJECT ARE FREE OF ALL CONSTRUCTION RELATED DEBRIS INCLUDING DIRT, STONE, NAILS, ETC.

21. THE LOCATION AND ELEVATION OF EXISTING UTILITIES ARE APPROXIMATE. THE EXACT LOCATIONS AND ELEVATIONS ARE TO BE VERIFIED BY THE CONTRACTOR. THE CONTRACTOR SHALL COORDINATE CONSTRUCTION ACTIVITIES WITH ALL UTILITY COMPANIES AND GOVERNMENT AGENCIES AFFECTED BY THE WORK.

22. PAVEMENT AND CURBS TO REMAIN SHALL BE PROTECTED FROM DAMAGE, AND, IF DAMAGED, SHALL BE REPLACED PROMPTLY BY THE CONTRACTOR IN CONFORMANCE WITH IDOT STANDARD SPECIFICATIONS IN MATERIALS AND WORKMANSHIP.

23. ALL DIMENSIONS, INCLUDING RADII, ARE GIVEN TO THE EDGE OF PAVEMENT UNLESS OTHERWISE NOTED.

24. PHOSPHORUS FERTILIZER HAS BEEN INTENTIONALLY OMITTED FROM THE CONTRACT DUE TO THE PROXIMITY TO THE EXISTING RIVER. A PHOSPHORUS-FREE FERTILIZER SHALL BE USED (MIDDLE NUMBER SHOULD EQUAL 0).

DRAINAGE AND UTILITIES GENERAL NOTES

25. WHEN EXISTING DRAINAGE FACILITIES ARE DISTURBED, THE CONTRACTOR SHALL PROVIDE AND MAINTAIN TEMPORARY OUTLETS AND CONNECTIONS FOR ALL PRIVATE OR PUBLIC DRAINS, SEWERS OR CATCH BASINS. THE CONTRACTOR SHALL PROVIDE FACILITIES TO TAKE IN ALL STORM WATER WHICH WILL BE RECEIVED BY THESE DRAINS AND SEWERS AND DISCHARGE THE SAME. THE CONTRACTOR SHALL PROVIDE AND MAINTAIN AN EFFICIENT PUMPING PLAN, IF NECESSARY, AND A TEMPORARY OUTLET AND BE PREPARED AT ALL TIMES TO DISPOSE OF THE WATER RECEIVED FROM THESE TEMPORARY CONNECTIONS UNTIL SUCH TIME AS THE PERMANENT CONNECTIONS WITH SEWERS ARE BUILT AND IN SERVICE.

26. THE CONTRACTOR SHALL CONFIRM ALL SEWER PIPE SIZES AND INVERTS PRIOR TO ORDERING STRUCTURES. ANY MODIFICATIONS OF STRUCTURES DUE TO THE FAILURE OF THE CONTRACTOR TO PERFORM THIS TASK MAY LEAD TO THE REJECTION OF THE STRUCTURE IN THE FIELD.

27. ANY EXISTING DRAINAGE FACILITIES DISTURBED OR DAMAGED DURING CONSTRUCTION SHALL BE REPAIRED OR REPLACED BY THE CONTRACTOR. THIS WORK SHALL BE PERFORMED TO THE SATISFACTION OF THE ENGINEER.

28. THE EXISTING STORM SEWER TO REMAIN SHALL BE INSPECTED BY THE CONTRACTOR BEFORE CONSTRUCTION STARTS. ANY EXISTING ACCUMULATED MATERIAL SHALL BE DOCUMENTED BY THE CONTRACTOR. ANY UNDOCUMENTED ACCUMULATION OF MATERIAL FOUND IN THE STRUCTURES OR PIPES AFTER CONSTRUCTION IS COMPLETED SHALL BE REMOVED BY THE CONTRACTOR.

29. EXISTING DRY UTILITY CONDUITS HAVE BEEN ABANDONED WITHIN THE PROJECT LIMITS. ANY ABANDONED UTILITY CONDUITS THAT ARE ENCOUNTERED AND IN CONFLICT WITH PROPOSED IMPROVEMENTS SHALL BE REMOVED AND DISPOSED OF.

WATER MAIN

30. FOR WATER MAIN SHUT OFFS, THE CONTRACTOR SHALL GIVE THE VILLAGE A MINIMUM OF 48 HOURS NOTICE TO THE PUBLIC WORKS DEPARTMENT. THE VILLAGE SHALL PROVIDE NOTIFICATION FORMS AND DETERMINE THE LIMIT OF THE AFFECTED AREAS. THE CONTRACTOR SHALL BE RESPONSIBLE FOR DISTRIBUTION OF THE NOTIFICATION FORMS TO ALL AFFECTED RESIDENTS. THERE WILL BE NO SHUT DOWN OF MAINS BETWEEN FRIDAY 12 AM THROUGH MONDAY AT 7 AM OR ON OBSERVED HOLIDAYS AND SUNDAY.

31. THE CONTRACTOR SHALL NOT OPEN OR SHUT ANY WATER VALVES OR FIRE HYDRANTS WITHOUT PRIOR AUTHORIZATION FROM THE VILLAGE PUBLIC WORKS DEPARTMENT. UNAUTHORIZED USE SHALL SUBJECT THE OFFENDER TO ARREST AND PROSECUTION.

32. WATER MAIN SHALL BE INSTALLED AT A MINIMUM DEPTH OF 5.5' BELOW FINISHED GRADE AND NO DEEPER THAN 8' FROM FINISHED GRADE WITHOUT THE PRIOR WRITTEN APPROVAL OF THE PUBLIC WORKS DEPARTMENT.

33. CHANGES IN DIRECTION OF WATER MAIN SHALL BE INSTALLED WITH APPROVED RETAINER FITTINGS AND THRUST BLOCKING. TWO BELLS BEFORE AND AFTER ANY FITTING OR VALVE SHALL HAVE RESTRAINED JOINTS.

34. PRESSURE TESTING OF WATER MAIN SHALL INCLUDE HYDRANTS BY PRESSURE TESTING AGAINST INTERNAL VALVE OF HYDRANT.

35. ALL EXISTING BUFFALO BOXES LOCATED IN DRIVEWAYS AND SIDEWALKS SHALL BE RELOCATED AS DIRECTED BY THE ENGINEER.

36. ALL EXISTING WATER MAIN TO BE TAKEN OUT OF SERVICE AFTER ACCEPTANCE OF NEW WATER MAIN SHALL BE ABANDONED IN PLACE, UNLESS OTHERWISE DIRECTED BY THE VILLAGE. ALL ABANDONED WATER MAIN SHALL BE PLUGGED AT BOTH ENDS WITH A MINIMUM OF TWO (2) FEET OF NON-SHRINK CONCRETE/MORTAR PLUGS.

37. PAY LIMITS FOR REMOVAL AND REPLACEMENT OF WATER SERVICES EXTEND FROM THE MAIN TO THE B-BOX OR WATER METER. ANY WORK REQUIRED BEYOND THESE PAY LIMITS DUE TO DAMAGE OR BREAKAGE BY CONTRACTOR SHALL BE REPAIRED.

38. ALL WATER SERVICES ON STREETS WITH WATER MAIN REPLACEMENT SHALL BE REPLACED TO THE BUFFALO BOX OR WATER METER.

39. WATER MAIN FITTINGS (I.E. BENDS, ELBOWS, TEES, REDUCERS, CUT IN SLEEVES, ETC.) MAY NOT BE SPECIFICALLY REFERENCED ON THE PLANS.

IEPA WATER MAIN PROTECTION NOTES

HORIZONTAL SEPARATION

40. WATER MAINS SHALL BE LAID AT LEAST TEN (10'-0") FEET HORIZONTALLY FROM ANY EXISTING OR PROPOSED DRAIN. STORM SEWER, SANITARY SEWER, OR SEWER SERVICES CONNECTION.

41. WATER MAINS MAY BE LAID CLOSER THAN TEN (10'-0") FEET TO A SEWER LINE WHEN:

    A. LOCAL CONDITIONS PREVENT A LATERAL SEPARATION OF TEN (10'-0") FEET;
    B. THE WATER MAIN INVERT IS AT LEAST EIGHTEEN (18") ABOVE THE CROWN OF THE SEWER; AND
    C. THE WATER MAIN IS EITHER IN A SEPARATE TRENCH OR IN THE SAME TRENCH ON AN UNDISTURBED EARTH SHELF LOCATED TO ONE SIDE OF THE SEWER.

42. BOTH THE WATER MAIN AND DRAIN OR SEWER SHALL BE CONSTRUCTED WITH PIPE EQUIVALENT TO WATER MAIN STANDARDS OF CONSTRUCTION WHEN IT IS IMPOSSIBLE TO MEET 1. OR 2. ABOVE. THE DRAIN OR SEWER SHALL BE PRESSURE TESTED TO THE MAXIMUM EXPECTED SURCHARGE HEAD BEFORE BACKFILLING.

VERTICAL SEPARATION

43. A WATER MAIN SHALL BE LAID SO THAT ITS INVERT IS EIGHTEEN (18") INCHES ABOVE THE CROWN OF THE DRAIN OR SEWER WHENEVER WATER MAINS CROSS STORM SEWERS, SANITARY SEWERS, OR SEWER SERVICE CONNECTIONS. THE VERTICAL SEPARATION SHALL BE MAINTAINED FOR THAT PORTION OF THE WATER MAIN LOCATED WITHIN TEN (10'-0") FEET HORIZONTALLY OF ANY SEWER OR DRAIN CROSSED. A LENGTH OF WATER MAIN PIPE SHALL BE ENTERED OVER THE SEWER TO BE CROSSED WITH JOINTS EQUIDISTANCE FROM THE SEWER OR DRAIN.

44. BOTH THE WATER MAINS AND SEWER SHALL BE CONSTRUCTED WITH SEWER PIPE EQUIVALENT TO WATER MAIN STANDARDS OF CONSTRUCTION WHEN:

    A. IT IS IMPOSSIBLE TO OBTAIN THE PROPER VERTICAL SEPARATION AS DESCRIBED IN 1. ABOVE; OR
    B. THE WATER MAIN PASSES UNDER A SEWER OR DRAIN.

45. A VERTICAL SEPARATION OF EIGHTEEN (18") INCHES BETWEEN THE INVERT OF THE SEWER OR DRAIN AND THE CROWN OF THE WATER MAIN SHALL BE MAINTAINED WHERE A WATERMAIN CROSSES UNDER A SEWER. SUPPORT THE SEWER OR DRAIN LINES TO PREVENT SETTLING AND BREAKING THE WATER MAIN.

46. CONSTRUCTION SHALL EXTEND ON EACH SIDE OF THE CROSSING UNTIL THE NORMAL DISTANCE FROM THE WATERMAIN TO THE SEWER OR DRAIN LINE IS AT LEAST TEN (10'-0") FEET.

47. FOR STORM SEWER AND WATER MAIN CROSSINGS, REINFORCED CONCRETE PIPE WITH RUBBER GASKETS MEETING ASTM C-443 SHALL BE ALLOWED.

FUNDING SOURCE					LOCAL/STATE			LBFP 80% FED 20 % LOCAL
CONSTRUCTION TYPE CODE					0004	0021	0042	0010
	CODE NO.	ITEM	UNIT	TOTAL QUANTITY	ROADWAY	LIGHTING	TRAINEES	STRUCTURAL
~	20101100	TREE TRUNK PROTECTION	EACH	19	19			
~	20101200	TREE ROOT PRUNING	EACH	22	22			
~	20101300	TREE PRUNING (1 TO 10 INCH DIAMETER)	EACH	5	5			
~	20101350	TREE PRUNING (OVER 10 INCH DIAMETER)	EACH	17	17			
	20200100	EARTH EXCAVATION	CU YD	5333	5333			
	20200200	ROCK EXCAVATION	CU YD	792	792			
	20201200	REMOVAL AND DISPOSAL OF UNSUITABLE MATERIAL	CU YD	3570	3570			
	20800150	TRENCH BACKFILL	CU YD	3270	3244	26		
	21001000	GEOTECHNICAL FABRIC FOR GROUND STABILIZATION	SQ YD	9420	9420			
~	21101605	TOPSOIL FURNISH AND PLACE, 2"	SQ YD	360	360			
~	21101625	TOPSOIL FURNISH AND PLACE, 6"	SQ YD	11150	11150			
~	25000110	SEEDING, CLASS 1A	ACRE	1.5	1.5			
~	25000312	SEEDING, CLASS 4A	ACRE	0.5	0.5			
~	25000314	SEEDING, CLASS 4B	ACRE	0.5	0.5			
~	25000400	NITROGEN FERTILIZER NUTRIENT	POUND	140	140			
~	25000600	POTASSIUM FERTILIZER NUTRIENT	POUND	140	140			
~	25100645	WILDLIFE FRIENDLY EROSION CONTROL BLANKET	SQ YD	11150	11150			
~	25200200	SUPPLEMENTAL WATERING	UNIT	2	2			
	28000250	TEMPORARY EROSION CONTROL SEEDING	POUND	265	265			
	28000305	TEMPORARY DITCH CHECKS	FOOT	120	120			

~ DENOTES SPECIALTY ITEM

FUNDING SOURCE					LOCAL/STATE			LBFP 80% FED 20 % LOCAL
CONSTRUCTION TYPE CODE					0004	0021	0042	0010
CODE NO.	ITEM		UNIT	TOTAL QUANTITY	ROADWAY	LIGHTING	TRAINEES	STRUCTURAL
28000400	PERIMETER EROSION BARRIER		FOOT	4070	4070			
28000500	INLET AND PIPE PROTECTION		EACH	5	5			
28000510	INLET FILTERS		EACH	75	75			
28001105	TEMPORARY WILDLIFE FRIENDLY EROSION CONTROL BLANKET		SQ YD	11150	11150			
28100105	STONE RIPRAP, CLASS A3		SQ YD	39				39
28100107	STONE RIPRAP, CLASS A4		SQ YD	265				265
28200200	FILTER FABRIC		SQ YD	304				304
30300001	AGGREGATE SUBGRADE IMPROVEMENT		CU YD	983	983			
30300112	AGGREGATE SUBGRADE IMPROVEMENT 12"		SQ YD	9405	9405			
31101200	SUBBASE GRANULAR MATERIAL, TYPE B 4"		SQ YD	1120	1120			
35101800	AGGREGATE BASE COURSE, TYPE B 6"		SQ YD	300	300			
35102000	AGGREGATE BASE COURSE, TYPE B 8"		SQ YD	2070	2070			
35300300	PORTLAND CEMENT CONCRETE BASE COURSE 8"		SQ YD	285	285			
35400300	PORTLAND CEMENT CONCRETE BASE COURSE WIDENING 8"		SQ YD	135	135			
40600290	BITUMINOUS MATERIALS (TACK COAT)		POUND	4040	4040			
40600400	MIXTURE FOR CRACKS, JOINTS, AND FLANGEWAYS		TON	5	5			
40600982	HOT-MIX ASPHALT SURFACE REMOVAL - BUTT JOINT		SQ YD	25	25			
40603085	HOT-MIX ASPHALT BINDER COURSE, IL-19.0, N70		TON	3090	3090			
40604060	HOT-MIX ASPHALT SURFACE COURSE, IL-9.5, MIX "D", N50		TON	141	141			
40604062	HOT-MIX ASPHALT SURFACE COURSE, IL-9.5, MIX "D", N70		TON	998	998			

~ DENOTES SPECIALTY ITEM

FUNDING SOURCE					LOCAL/STATE			LBFP 80% FED 20 % LOCAL
CONSTRUCTION TYPE CODE					0004	0021	0042	0010
CODE NO.	ITEM	UNIT	TOTAL QUANTITY		ROADWAY	LIGHTING	TRAINEES	STRUCTURAL
42000070	PAVEMENT CONNECTOR (HMA) FOR BRIDGE APPROACH SLAB	SQ YD	120					120
42300200	PORTLAND CEMENT CONCRETE DRIVEWAY PAVEMENT, 6 INCH	SQ YD	520		520			
42400200	PORTLAND CEMENT CONCRETE SIDEWALK 5 INCH	SQ FT	5400		5400			
42400800	DETECTABLE WARNINGS	SQ FT	290		290			
44000100	PAVEMENT REMOVAL	SQ YD	6940		6940			
44000157	HOT-MIX ASPHALT SURFACE REMOVAL, 2"	SQ YD	1522		1522			
44000200	DRIVEWAY PAVEMENT REMOVAL	SQ YD	810		810			
44000500	COMBINATION CURB AND GUTTER REMOVAL	FOOT	2310		2310			
44000600	SIDEWALK REMOVAL	SQ FT	2630		2630			
48101620	AGGREGATE SHOULDERS, TYPE B 10"	SQ YD	35		35			
50100100	REMOVAL OF EXISTING STRUCTURES	EACH	1					1
50200100	STRUCTURE EXCAVATION	CU YD	602					602
50200400	ROCK EXCAVATION FOR STRUCTURES	CU YD	18					18
50200450	REMOVAL AND DISPOSAL OF UNSUITABLE MATERIAL FOR STRUCTURES	CU YD	35					35
50300225	CONCRETE STRUCTURES	CU YD	481.3					481.3
50300255	CONCRETE SUPERSTRUCTURE	CU YD	386.8					386.8
50300260	BRIDGE DECK GROOVING	SQ YD	1200					1200
50300300	PROTECTIVE COAT	SQ YD	1975					1975
50301350	CONCRETE SUPERSTRUCTURE (APPROACH SLAB)	CU YD	134					134
50401305	FURNISHING AND ERECTING PRECAST PRESTRESSED CONCRETE BEAMS, IL27N	FOOT	1632					1632

~ DENOTES SPECIALTY ITEM

		FUNDING SOURCE			LOCAL/STATE			LBFP
								80% FED 20 % LOCAL
		CONSTRUCTION TYPE CODE			0004	0021	0042	0010
	CODE NO.	ITEM	UNIT	TOTAL QUANTITY	ROADWAY	LIGHTING	TRAINEES	STRUCTURAL
	50500505	STUD SHEAR CONNECTORS	EACH	140				140
	50800205	REINFORCEMENT BARS, EPOXY COATED	POUND	207710				207710
~	50901750	PARAPET RAILING	FOOT	236				236
	51500100	NAME PLATES	EACH	1				1
	51603000	DRILLED SHAFT IN SOIL	CU YD	7.9				7.9
	51604000	DRILLED SHAFT IN ROCK	CU YD	39.1				39.1
	52100010	ELASTOMERIC BEARING ASSEMBLY, TYPE I	EACH	16				16
	52100520	ANCHOR BOLTS, 1"	EACH	32				32
	52200105	FURNISHING SOLDIER PILES (W SECTION)	FOOT	242.2				242.2
	52200200	DRILLING AND SETTING SOLDIER PILES (IN SOIL)	CU FT	511				511
	52200205	DRILLING AND SETTING SOLDIER PILES (IN ROCK)	CU FT	484				484
	52200250	UNTREATED TIMBER LAGGING	SQ FT	932				932
	52200800	SEGMENTAL CONCRETE BLOCK WALL	SQ FT	321				321
	52200900	CONCRETE STRUCTURES (RETAINING WALL)	CU YD	33.7				33.7
	54213657	PRECAST REINFORCED CONCRETE FLARED END SECTIONS 12"	EACH	1	1			
	54213669	PRECAST REINFORCED CONCRETE FLARED END SECTIONS 24"	EACH	1	1			
	54213675	PRECAST REINFORCED CONCRETE FLARED END SECTIONS 30"	EACH	1	1			
	550A0050	STORM SEWERS, CLASS A, TYPE 1 12"	FOOT	432	432			
	550A0090	STORM SEWERS, CLASS A, TYPE 1 18"	FOOT	42	42			
	550A0120	STORM SEWERS, CLASS A, TYPE 1 24"	FOOT	119	119			

~ DENOTES SPECIALTY ITEM

FUNDING SOURCE					LOCAL/STATE			LBFP 80% FED 20 % LOCAL
CONSTRUCTION TYPE CODE					0004	0021	0042	0010
CODE NO.	ITEM		UNIT	TOTAL QUANTITY	ROADWAY	LIGHTING	TRAINEES	STRUCTURAL
550A0140	STORM SEWERS, CLASS A, TYPE 1 30"		FOOT	162	162			
550A0160	STORM SEWERS, CLASS A, TYPE 1 36"		FOOT	81	81			
550A0190	STORM SEWERS, CLASS A, TYPE 1 48"		FOOT	30	30			
550A0340	STORM SEWERS, CLASS A, TYPE 2 12"		FOOT	514	514			
550A0360	STORM SEWERS, CLASS A, TYPE 2 15"		FOOT	156	156			
550A0380	STORM SEWERS, CLASS A, TYPE 2 18"		FOOT	205	205			
550A0410	STORM SEWERS, CLASS A, TYPE 2 24"		FOOT	28	28			
550A0450	STORM SEWERS, CLASS A, TYPE 2 36"		FOOT	211	211			
550A0470	STORM SEWERS, CLASS A, TYPE 2 42"		FOOT	576	576			
550A0480	STORM SEWERS, CLASS A, TYPE 2 48"		FOOT	175	175			
550A2320	STORM SEWERS, RUBBER GASKET, CLASS A, TYPE 1 12"		FOOT	36	36			
550A2330	STORM SEWERS, RUBBER GASKET, CLASS A, TYPE 1 15"		FOOT	13	13			
55100100	STORM SEWER REMOVAL 4"		FOOT	43	43			
55100400	STORM SEWER REMOVAL 10"		FOOT	6	6			
55100500	STORM SEWER REMOVAL 12"		FOOT	404	404			
55100700	STORM SEWER REMOVAL 15"		FOOT	355	355			
55100900	STORM SEWER REMOVAL 18"		FOOT	30	30			
55101200	STORM SEWER REMOVAL 24"		FOOT	406	406			
55101600	STORM SEWER REMOVAL 36"		FOOT	545	545			
55101800	STORM SEWER REMOVAL 42"		FOOT	155	155			

~ DENOTES SPECIALTY ITEM

		FUNDING SOURCE			LOCAL/STATE			LBFP 80% FED 20 % LOCAL
		CONSTRUCTION TYPE CODE			0004	0021	0042	0010
	CODE NO.	ITEM	UNIT	TOTAL QUANTITY	ROADWAY	LIGHTING	TRAINEES	STRUCTURAL
	55101900	STORM SEWER REMOVAL 48"	FOOT	50	50			
~	56100600	WATER MAIN 6"	FOOT	30	30			
~	56100900	WATER MAIN 12"	FOOT	400	400			
~	56105200	WATER VALVES 12"	EACH	6	6			
~	56105702	INSERTING VALVES 12"	EACH	2	2			
~	56106600	ADJUSTING WATER MAIN 12"	FOOT	120	120			
~	56300100	ADJUSTING SANITARY SEWERS, 8-INCH DIAMETER OR LESS	FOOT	150	150			
~	56400500	FIRE HYDRANTS TO BE REMOVED	EACH	4	4			
~	56400820	FIRE HYDRANT WITH AUXILIARY VALVE AND VALVE BOX	EACH	4	4			
~	56500600	DOMESTIC WATER SERVICE BOXES TO BE ADJUSTED	EACH	11	11			
	58600101	GRANULAR BACKFILL FOR STRUCTURES	CU YD	192				192
	59100100	GEOCOMPOSITE WALL DRAIN	SQ YD	176				176
	60146304	PIPE UNDERDRAINS FOR STRUCTURES 4"	FOOT	282				282
	60200105	CATCH BASINS, TYPE A, 4'-DIAMETER, TYPE 1 FRAME, OPEN LID	EACH	5	5			
	60200805	CATCH BASINS, TYPE A, 4'-DIAMETER, TYPE 8 GRATE	EACH	5	5			
	60201340	CATCH BASINS, TYPE A, 4'-DIAMETER, TYPE 24 FRAME AND GRATE	EACH	15	15			
	60204505	CATCH BASINS, TYPE A, 5'-DIAMETER, TYPE 8 GRATE	EACH	2	2			
	60205040	CATCH BASINS, TYPE A, 5'-DIAMETER, TYPE 24 FRAME AND GRATE	EACH	5	5			
	60207605	CATCH BASINS, TYPE C, TYPE 8 GRATE	EACH	4	4			
	60208240	CATCH BASINS, TYPE C, TYPE 24 FRAME AND GRATE	EACH	6	6			

~ DENOTES SPECIALTY ITEM

FUNDING SOURCE				LOCAL/STATE			LBFP 80% FED 20 % LOCAL
CONSTRUCTION TYPE CODE				0004	0021	0042	0010
CODE NO.	ITEM	UNIT	TOTAL QUANTITY	ROADWAY	LIGHTING	TRAINEES	STRUCTURAL
60218400	MANHOLES, TYPE A, 4'-DIAMETER, TYPE 1 FRAME, CLOSED LID	EACH	4	4			
60221100	MANHOLES, TYPE A, 5'-DIAMETER, TYPE 1 FRAME, CLOSED LID	EACH	3	3			
60223800	MANHOLES, TYPE A, 6'-DIAMETER, TYPE 1 FRAME, CLOSED LID	EACH	4	4			
60224446	MANHOLES, TYPE A, 7'-DIAMETER, TYPE 1 FRAME, CLOSED LID	EACH	2	2			
60224456	MANHOLES, TYPE A, 8'-DIAMETER, TYPE 24 FRAME AND GRATE	EACH	1	1			
60224459	MANHOLES, TYPE A, 8'-DIAMETER, TYPE 1 FRAME, CLOSED LID	EACH	3	3			
60236200	INLETS, TYPE A, TYPE 8 GRATE	EACH	1	1			
60237470	INLETS, TYPE A, TYPE 24 FRAME AND GRATE	EACH	1	1			
60240301	INLETS, TYPE B, TYPE 8 GRATE	EACH	2	2			
60240328	INLETS, TYPE B, TYPE 24 FRAME AND GRATE	EACH	2	2			
60248900	VALVE VAULTS, TYPE A, 5'-DIAMETER, TYPE 1 FRAME, CLOSED LID	EACH	6	6			
60500040	REMOVING MANHOLES	EACH	4	4			
60500050	REMOVING CATCH BASINS	EACH	13	13			
60500060	REMOVING INLETS	EACH	3	3			
60600605	CONCRETE CURB, TYPE B	FOOT	335	335			
60603800	COMBINATION CONCRETE CURB AND GUTTER, TYPE B-6.12	FOOT	470	470			
60605000	COMBINATION CONCRETE CURB AND GUTTER, TYPE B-6.24	FOOT	3480	3480			
60608552	COMBINATION CONCRETE CURB AND GUTTER, TYPE M-4.06	FOOT	845	845			
60608562	COMBINATION CONCRETE CURB AND GUTTER, TYPE M-4.12	FOOT	245	245			
60608582	COMBINATION CONCRETE CURB AND GUTTER, TYPE M-4.24	FOOT	185	185			

~ DENOTES SPECIALTY ITEM

		FUNDING SOURCE			LOCAL/STATE			LBFP 80% FED 20 % LOCAL
		CONSTRUCTION TYPE CODE			0004	0021	0042	0010
	CODE NO.	ITEM	UNIT	TOTAL QUANTITY	ROADWAY	LIGHTING	TRAINEES	STRUCTURAL
~	63100045	TRAFFIC BARRIER TERMINAL, TYPE 2	EACH	1				1
~	63100070	TRAFFIC BARRIER TERMINAL, TYPE 5	EACH	1				1
~	63100085	TRAFFIC BARRIER TERMINAL, TYPE 6	EACH	1				1
~	63100167	TRAFFIC BARRIER TERMINAL, TYPE 1 (SPECIAL) TANGENT	EACH	1				1
~	63200310	GUARDRAIL REMOVAL	FOOT	532	532			
	67000400	ENGINEER'S FIELD OFFICE, TYPE A	CAL MO	14	14			
	67100100	MOBILIZATION	L SUM	1	1			
	70107025	CHANGEABLE MESSAGE SIGN	CAL MO	24	24			
	70300100	SHORT TERM PAVEMENT MARKING	FOOT	1865	1865			
	70300150	SHORT TERM PAVEMENT MARKING REMOVAL	SQ FT	622	622			
	70300211	TEMPORARY PAVEMENT MARKING LETTERS AND SYMBOLS - PAINT	SQ FT	200	200			
	70300221	TEMPORARY PAVEMENT MARKING - LINE 4"- PAINT	FOOT	15200	15200			
	70300241	TEMPORARY PAVEMENT MARKING - LINE 6"- PAINT	FOOT	925	925			
	70300251	TEMPORARY PAVEMENT MARKING - LINE 8"- PAINT	FOOT	800	800			
	70300261	TEMPORARY PAVEMENT MARKING - LINE 12"- PAINT	FOOT	60	60			
	70300281	TEMPORARY PAVEMENT MARKING - LINE 24"- PAINT	FOOT	100	100			
~	72000100	SIGN PANEL - TYPE 1	SQ FT	450	450			
~	72501000	TERMINAL MARKER - DIRECT APPLIED	EACH	1	1			
~	72800100	TELESCOPING STEEL SIGN SUPPORT	FOOT	793	793			
~	78005110	EPOXY PAVEMENT MARKING - LINE 4"	FOOT	1020	1020			

~ DENOTES SPECIALTY ITEM

		FUNDING SOURCE			LOCAL/STATE			LBFP 80% FED 20 % LOCAL
		CONSTRUCTION TYPE CODE			0004	0021	0042	0010
	CODE NO.	ITEM	UNIT	TOTAL QUANTITY	ROADWAY	LIGHTING	TRAINEES	STRUCTURAL
~	78005150	EPOXY PAVEMENT MARKING - LINE 12"	FOOT	70	70			
~	78009000	MODIFIED URETHANE PAVEMENT MARKING - LETTERS AND SYMBOLS	SQ FT	460	460			
~	78009004	MODIFIED URETHANE PAVEMENT MARKING - LINE 4"	FOOT	7350	7350			
~	78009006	MODIFIED URETHANE PAVEMENT MARKING - LINE 6"	FOOT	1415	1415			
~	78009012	MODIFIED URETHANE PAVEMENT MARKING - LINE 12"	FOOT	1135	1135			
~	78009024	MODIFIED URETHANE PAVEMENT MARKING - LINE 24"	FOOT	70	70			
~	78011000	GROOVING FOR RECESSED PAVEMENT MARKING, LETTERS AND SYMBOLS	SQ FT	460	460			
~	78011025	GROOVING FOR RECESSED PAVEMENT MARKING 5"	FOOT	7350	7350			
~	78011035	GROOVING FOR RECESSED PAVEMENT MARKING 7"	FOOT	1415	1415			
~	78011065	GROOVING FOR RECESSED PAVEMENT MARKING 13"	FOOT	1135	1135			
~	78011125	GROOVING FOR RECESSED PAVEMENT MARKING 25"	FOOT	70	70			
~	78200005	GUARDRAIL REFLECTORS, TYPE A	EACH	5				5
	78300201	PAVEMENT MARKING REMOVAL - GRINDING	SQ FT	910	910			
~	80400100	ELECTRIC SERVICE INSTALLATION	EACH	1		1		
~	80400200	ELECTRIC UTILITY SERVICE CONNECTION	L SUM	1		1		
~	81028200	UNDERGROUND CONDUIT, GALVANIZED STEEL, 2" DIA.	FOOT	50		50		
~	81028210	UNDERGROUND CONDUIT, GALVANIZED STEEL, 2 1/2" DIA.	FOOT	495		495		
~	81028730	UNDERGROUND CONDUIT, COILABLE NONMETALLIC CONDUIT, 1 1/4" DIA.	FOOT	4790		4790		
~	81200215	CONDUIT EMBEDDED IN STRUCTURE, 1 1/4" DIA., PVC	FOOT	305		305		
~	81200270	CONDUIT EMBEDDED IN STRUCTURE, 4" DIA., PVC	FOOT	310		310		

~ DENOTES SPECIALTY ITEM

		FUNDING SOURCE			LOCAL/STATE			LBFP
								80% FED 20 % LOCAL
		CONSTRUCTION TYPE CODE			0004	0021	0042	0010
	CODE NO.	ITEM	UNIT	TOTAL QUANTITY	ROADWAY	LIGHTING	TRAINEES	STRUCTURAL
~	81301290	JUNCTION BOX, STAINLESS STEEL, EMBEDDED IN STRUCTURE, 12" X 12" X 6"	EACH	2		2		
~	81400200	HEAVY-DUTY HANDHOLE	EACH	2		2		
~	81400730	HANDHOLE, COMPOSITE CONCRETE	EACH	9		9		
~	81702120	ELECTRIC CABLE IN CONDUIT, 600V (XLP-TYPE USE) 1/C NO. 8	FOOT	22900		22900		
~	81702150	ELECTRIC CABLE IN CONDUIT, 600V (XLP-TYPE USE) 1/C NO. 2	FOOT	165		165		
~	82500350	LIGHTING CONTROLLER, BASE MOUNTED, 240VOLT, 100AMP	EACH	1		1		
~	D2003760	EVERGREEN, THUJA OCCIDENTALIS (AMERICAN ARBORVITAE), 5' HEIGHT, BALLED AND BURLAPPED	EACH	28	28			
	X0321690	BRICK WALL REMOVAL	FOOT	65	65			
	X0326806	WASHOUT BASIN	L SUM	1	1			
	X0327036	BIKE PATH REMOVAL	SQ YD	125	125			
	X0327487	TRIAXIAL GEOGRID REINFORCEMENT, TYPE I	SQ YD	1615	1615			
	X4021000	TEMPORARY ACCESS (PRIVATE ENTRANCE)	EACH	11	11			
	X4022000	TEMPORARY ACCESS (COMMERCIAL ENTRANCE)	EACH	2	2			
	X4023000	TEMPORARY ACCESS (ROAD)	EACH	3	3			
	X4060280	HOT-MIX ASPHALT DRIVEWAY PAVEMENT, 3"	SQ YD	300	300			
	X4200408	PORTLAND CEMENT CONCRETE PAVEMENT 8" (SPECIAL)	SQ YD	434	434			
	X4400110	TEMPORARY PAVEMENT REMOVAL	SQ YD	225	225			
	X4420210	TEMPORARY PATCHING	SQ YD	500	500			
	X5021510	COFFERDAMS (SPECIAL)	EACH	2				2
~	X5091725	BICYCLE RAILING (SPECIAL)	FOOT	311				311

~ DENOTES SPECIALTY ITEM

		FUNDING SOURCE			LOCAL/STATE			LBFP
								80% FED 20 % LOCAL
		CONSTRUCTION TYPE CODE			0004	0021	0042	0010
	CODE NO.	ITEM	UNIT	TOTAL QUANTITY	ROADWAY	LIGHTING	TRAINEES	STRUCTURAL
	X5220102	RETAINING WALL REMOVAL	FOOT	50				50
	X5230176	DRAINAGE SCUPPERS, DS-12	EACH	3				3
	X5230190	DRAINAGE SCUPPERS, DS-33	EACH	1				1
	X5400005	BOX CULVERT REMOVAL	FOOT	160	160			
	X5427602	REMOVE EXISTING FLARED END SECTION	EACH	14	14			
	X5510011	PROPOSED STORM SEWER CONNECTION TO EXISTING MANHOLE	EACH	1	1			
	X5510012	PROPOSED STORM SEWER CONNECTION TO EXISTING STORM SEWER	EACH	8	8			
~	X5620116	WATER SERVICE CONNECTION (SHORT)	EACH	2	2			
~	X5620118	WATER SERVICE CONNECTION (LONG)	EACH	4	4			
~	X5630706	CONNECTION TO EXISTING WATER MAIN 6"	EACH	2	2			
~	X6020087	CONFLICT MANHOLES	EACH	2	2			
~	X6026050	SANITARY MANHOLES TO BE ADJUSTED	EACH	4	4			
~	X6026051	SANITARY MANHOLES TO BE RECONSTRUCTED	EACH	8	8			
~	X6026623	VALVE BOX	EACH	4	4			
~	X6026632	VALVE BOXES TO BE REMOVED	EACH	4	4			
	X6640104	FENCE REMOVAL	FOOT	85	85			
~	X6640618	ORNAMENTAL FENCE	FOOT	184	184			
	X7010216	TRAFFIC CONTROL AND PROTECTION, (SPECIAL)	L SUM	1	1			
	X7200061	TEMPORARY INFORMATION SIGNING	SQ FT	104	104			
	X7240205	REMOVE SIGN COMPLETE	EACH	14	14			

~ DENOTES SPECIALTY ITEM

		FUNDING SOURCE			LOCAL/STATE			LBFP 80% FED 20 % LOCAL
		CONSTRUCTION TYPE CODE			0004	0021	0042	0010
	CODE NO.	ITEM	UNIT	TOTAL QUANTITY	ROADWAY	LIGHTING	TRAINEES	STRUCTURAL
	X7240502	RELOCATE SIGN, SPECIAL	EACH	2	2			
~	X8250500	LIGHTING UNIT COMPLETE (SPECIAL)	EACH	29		29		
~	X8360210	LIGHT POLE FOUNDATION, 24" DIAMETER, SPECIAL	FOOT	240		240		
~	X8360215	LIGHT POLE FOUNDATION, 24" DIAMETER, OFFSET	FOOT	56		56		
	XX005913	TEMPORARY ACCESS CAUSEWAY	L SUM	1				1
	XX008195	EXPLORATION EXCAVATION (UTILITY)	FOOT	250	250			
	Z0013798	CONSTRUCTION LAYOUT	L SUM	1	1			
	Z0017400	DRAINAGE & UTILITY STRUCTURES TO BE ADJUSTED	EACH	6	6			
	Z0056648	STORM SEWERS, TYPE 1, WATER MAIN QUALITY PIPE, 12"	FOOT	96	96			
	Z0056657	STORM SEWERS, TYPE 1, WATER MAIN QUALITY PIPE, 36"	FOOT	54	54			
	Z0056682	STORM SEWERS, TYPE 2, WATER MAIN QUALITY PIPE, 42"	FOOT	240	240			
	Z0062456	TEMPORARY PAVEMENT	SQ YD	225	225			
	Z0076600	TRAINEES	HOUR	1500			1500	
	Z0076604	TRAINEES TRAINING PROGRAM GRADUATE	HOUR	1500			1500	

~ DENOTES SPECIALTY ITEM

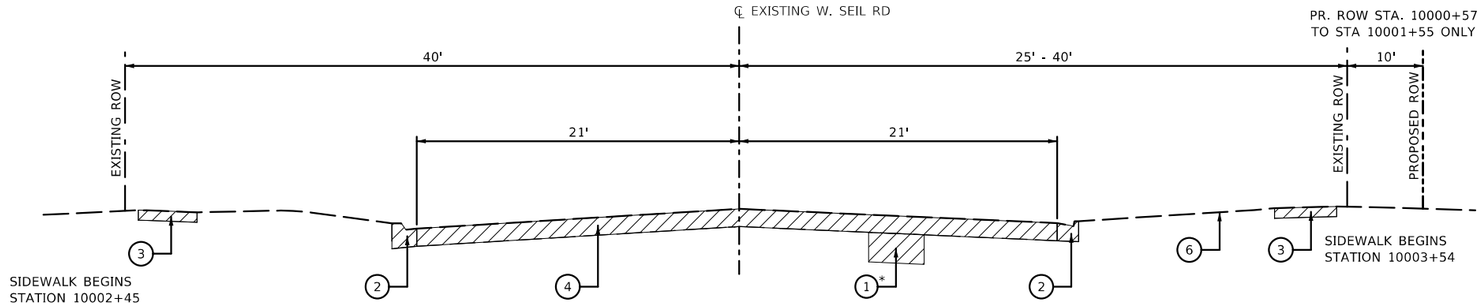

EXISTING TYPICAL SECTION

EX. W. SEIL ROAD ℄

STA 10000+56.94 TO STA 10004+33.66

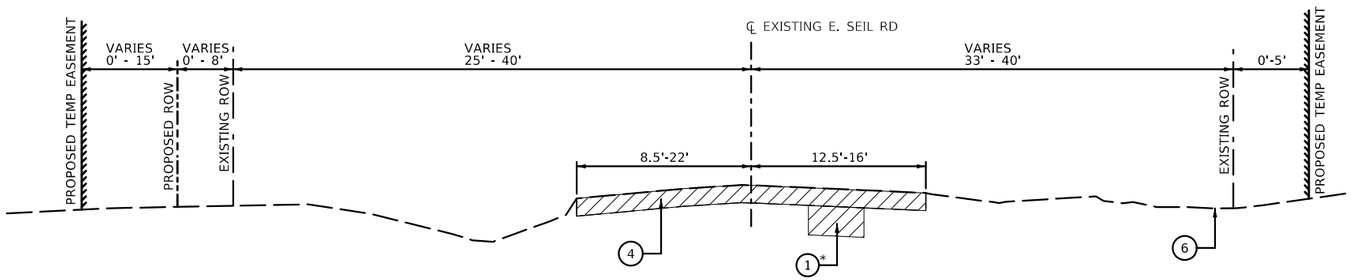

EXISTING TYPICAL SECTION

EX. E. SEIL ROAD ℄

STA 10104+13.14 TO STA 10114+51.25

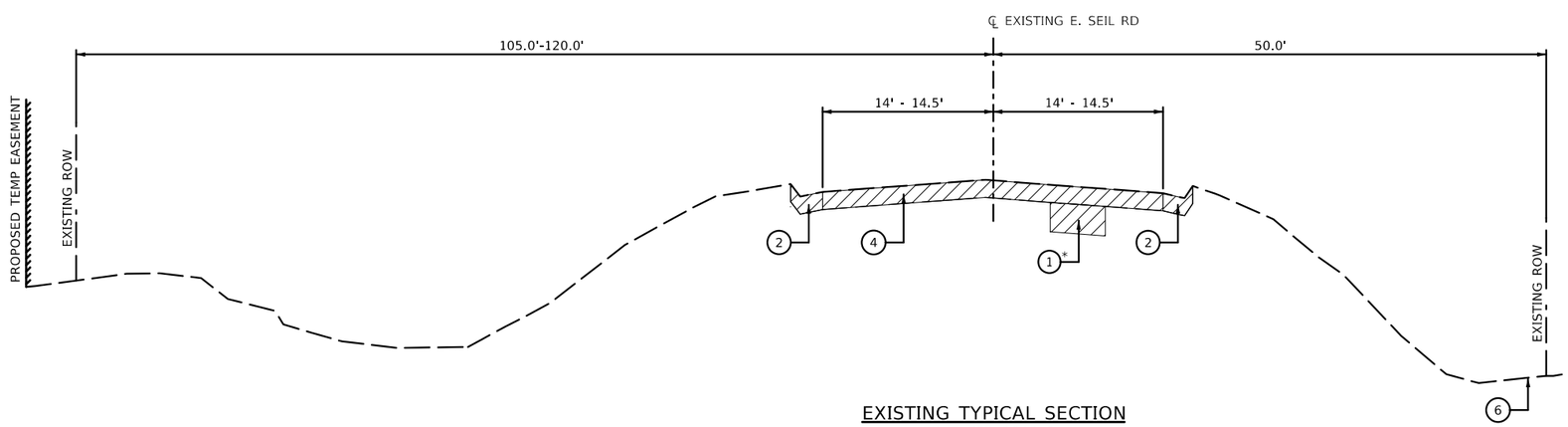

EXISTING TYPICAL SECTION

EX. E. SEIL ROAD ℄

STA 10100+82.00 TO STA 10102+26.72

EXISTING LEGEND

*(1) REMOVAL AND DISPOSAL OF UNSUITABLE MATERIAL (20201200)

(2) COMBINATION CURB AND GUTTER REMOVAL (44000500)

(3) SIDEWALK REMOVAL (44000600)

(4) PAVEMENT REMOVAL (44000100)

(5) HOT-MIX ASPHALT SURFACE REMOVAL, 2" (44000157)

(6) EXISTING GROUND

(7) EXISTING HMA PAVEMENT TO REMAIN

*(8) BIKE PATH REMOVAL (X0327036)

* AT LOCATIONS AS DIRECTED BY THE ENGINEER

REMOVAL ITEMS

PROPOSED LEGEND

(A) TOPSOIL FURNISH AND PLACE, 6" (21101625)

(B) SEEDING CLASS 1A (25000110) & WILDLIFE FRIENDLY EROSION CONTROL BLANKET (25100645)

(C) SEEDING, CLASS 4A (25000312) OR SEEDING CLASS 4B (25000314) & WILDLIFE FRIENDLY EROSION CONTROL BLANKET (25100645) - SEE LANDSCAPING PLANS

•(D) AGGREGATE SUBGRADE IMPROVEMENT (30300001)

(E) AGGREGATE SUBGRADE IMPROVEMENT 12" (30300112)

(F) AGGREGATE BASE COURSE, TYPE B 8" (35102000)

(G) HOT-MIX ASPHALT BINDER COURSE, IL-19.0, N70, 8" (40603085)

(H) HOT-MIX ASPHALT SURFACE COURSE, IL-9.5 MIX "D", N70; 2" (40604062)

(I) HOT-MIX ASPHALT SURFACE COURSE, IL-9.5 MIX "D", N50; 2" (40604060)

(J) COMBINATION CONCRETE CURB AND GUTTER, TYPE B-6.12 (60603800)

(K) COMBINATION CONCRETE CURB AND GUTTER, TYPE B-6.24 (60605000)

(L) COMBINATION CONCRETE CURB AND GUTTER, TYPE M-4.06 (60608552)

(M) COMBINATION CONCRETE CURB AND GUTTER, TYPE M-4.12 (60608562)

(N) COMBINATION CONCRETE CURB AND GUTTER, TYPE M-4.24 (60608582)

(O) PORTLAND CEMENT CONCRETE SIDEWALK, 5" (42400200), SEE NOTE 1

(P) SUBBASE GRANULAR MATERIAL, TYPE B 4" (31101200)

(Q) PORTLAND CEMENT CONCRETE PAVEMENT 8", SPECIAL (X4200408)

(R) GEOTECHNICAL FABRIC FOR GROUND STABILIZATION (21001000)

(S) PORTLAND CEMENT CONCRETE BASE COURSE 8" (35300300) FOR WIDENING GREATER THAN 6' OR PORTLAND CEMENT CONCRETE BASE COURSE WIDENING 8" (35400300) FOR WIDENING 6' OR LESS

(T) TRIAXIAL GEOGRID REINFORCEMENT, TYPE I (X0327487)

(U) AGGREGATE SHOULDERS, TYPE B 10" (48101620)

(V) TOPSOIL FURNISH AND PLACE, 2" (21101605)

NOTES: •AT LOCATIONS AS DIRECTED BY THE ENGINEER

1. PROPOSED PCC SIDEWALK THICKNESS SHALL BE INCREASED TO 6" AT ALL RESIDENTIAL DRIVEWAYS.
2. THE PROPSED HMA SURFACE COURSE, IL-9.5, N70 SHALL BE INSTALLED 1/4" ABOVE THE GUTTER AT THE EDGE OF PAVEMENT.
3. SEE ROUNDABOUT GRADING PLANS FOR DETAILED SLOPE INFORMATION.
4. EXISTING AGGREGATE SHOULDER TO BE REMOVED SHALL BE MEASURED AND PAID FOR AS EARTH EXCAVATION.
5. SEE STRUCTURAL PLANS FOR PROPOSED BRIDGE TYPICAL SECTIONS AND DETAILS.
6. DUE TO DIFFERENCES BETWEEN THE EXISTING AND PROPOSED ROADWAY CONFIGURATIONS, EXISTING AND PROPOSED ALIGNMENTS/BASELINES HAVE BEEN PROVIDED FOR REFERENCE.

CHRISTOPHER B. BURKE ENGINEERING, LTD.
16021 W. 159th Street, Suite 201
Lockport, Illinois 60441
(815) 770-2650

USER NAME = aschaefer	DESIGNED - AJS/JRS	REVISED -	
	DRAWN - JRS/PWN	REVISED -	
PLOT SCALE = N.T.S.	CHECKED - AJS	REVISED -	
PLOT DATE = 11/2/2025	DATE -	REVISED -	

STATE OF ILLINOIS
DEPARTMENT OF TRANSPORTATION

SEIL ROAD WIDENING
EXISTING TYPICAL SECTIONS

SCALE: N.T.S. | SHEET 1 OF 5 SHEETS | STA. TO STA.

F.A.U. RTE.	SECTION	COUNTY	TOTAL SHEETS	SHEET NO.
0403	21-00047-00-WR	WILL	149	16

CONTRACT NO. 61M01

ILLINOIS FED. AID PROJECT

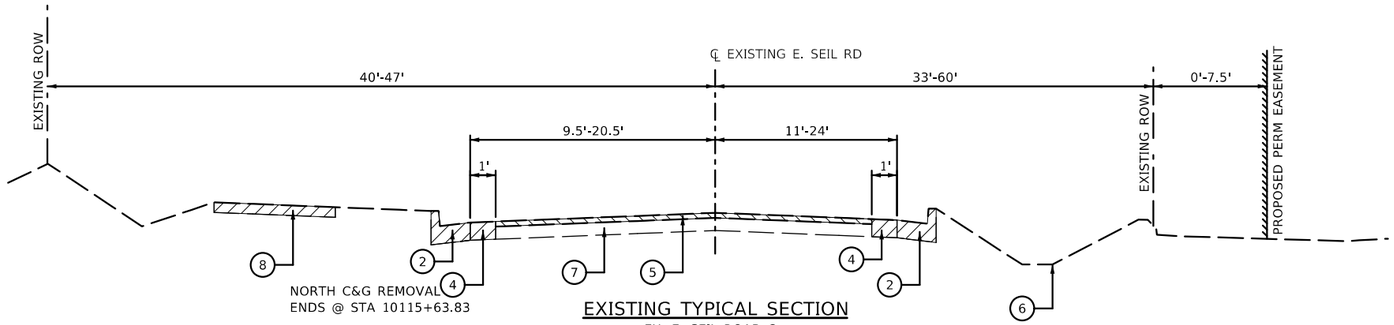

EXISTING TYPICAL SECTION

EX. E. SEIL ROAD ℄
STA 10114+51.25 TO STA 10119+00.11

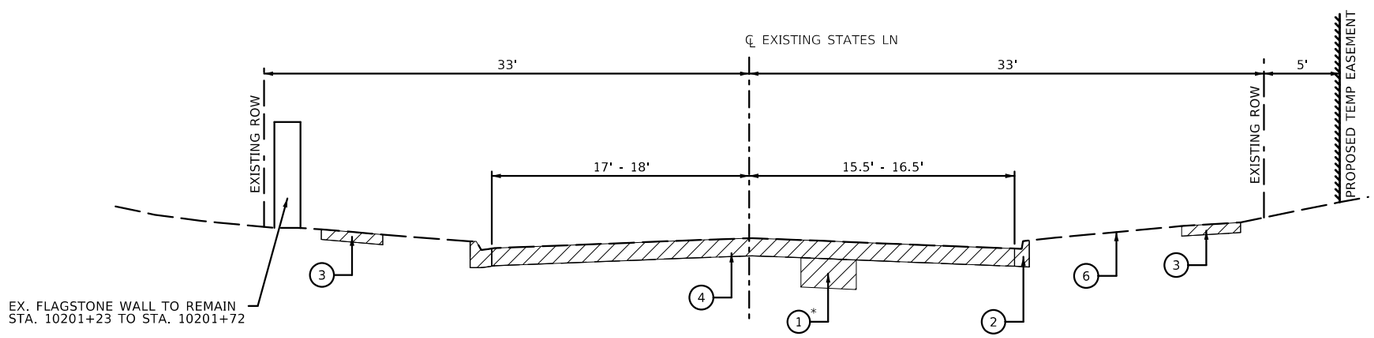

EXISTING TYPICAL SECTION

EX. STATES LANE ℄
STA 10200+36.35 TO STA 10202+00.00

HOT-MIX ASPHALT MIXTURE REQUIREMENTS		
MIXTURE TYPE	AIR VOIDS @ NDES	QMP
ROADWAY PAVEMENT RECONSTRUCTION HOT-MIX ASPHALT SURFACE COURSE, IL-9.5, MIX "D", N70, 2" HOT-MIX ASPHALT BINDER COURSE, IL-19.0, N70, 8"	 4% @ 70 GYR. 4% @ 70 GYR.	 LR 1030-2 LR 1030-2
HMA RESURFACING & OVER WIDENING AREAS HOT-MIX ASPHALT SURFACE COURSE, IL 9.5, MIX "D", N70, 2"	4% @ 70 GYR.	LR 1030-2
HMA SHARED-USE PATH HOT-MIX ASPHALT SURFACE COURSE, IL 9.5, MIX "D", N50, 2"	4% @ 50 GYR.	LR 1030-2
HMA DRIVEWAY PAVEMENT, 3" HOT-MIX ASPHALT SURFACE COURSE, IL 9.5, MIX "D", N50, 3" (IN 2 LIFTS)	4% @ 50 GYR.	LR 1030-2
HMA PAVEMENT CONNECTOR FOR BRIDGE APPROACH SLAB HOT-MIX ASPHALT SURFACE COURSE, IL-9.5, MIX "D", N70, 2" HOT-MIX ASPHALT BINDER COURSE, IL-19.0, N70, 8"-13"	 4% @ 70 GYR. 4% @ 70 GYR.	 LR 1030-2 LR 1030-2
HMA TEMPORARY PAVEMENT HOT-MIX ASPHALT BINDER COURSE, IL-19.0, N50, 4"	4% @ 50 GYR.	LR 1030-2
HMA TEMPORARY PATCHING HOT-MIX ASPHALT BINDER COURSE, IL-19.0, N50, 2 1/2"	4% @ 50 GYR.	LR 1030-2
QMP DESIGNATION: QUALITY CONTROL/QUALITY ASSURANCE PER LR 1030-2		

HMA TABLE NOTES:

1. THE UNIT WEIGHT USED TO CALCULATE ALL HOT-MIX ASPHALT MATERIAL IS 112 LB/SQ YD/IN.

2. THE "AC TYPE" FOR POLYMERIZED HMA MIXES SHALL BE "SBS/SBR PG 76-22" AND FOR NON POLYMERIZED HMA THE "AC TYPE" SHALL BE "PG 64-22" UNLESS MODIFIED BY RECLAIMED MATERIALS SPECIFICATIONS.

3. THE CONTRACTOR SHALL HAVE THE OPTION BETWEEN HMA OR PCC TEMPORARY PAVEMENT. PC CONCRETE PAVEMENT SHALL CONSIST OF CLASS PV CONCRETE MEETING THE REQUIREMENTS OF ART. 1020 OF THE STANDARD SPECIFICATIONS; THICKNESS SHALL BE 6". TEMPORARY PCC PAVEMENT DOES NOT REQUIRE DOWEL BARS.

EXISTING LEGEND

*1 REMOVAL AND DISPOSAL OF UNSUITABLE MATERIAL (20201200)
2 COMBINATION CURB AND GUTTER REMOVAL (44000500)
3 SIDEWALK REMOVAL (44000600)
4 PAVEMENT REMOVAL (44000100)
5 HOT-MIX ASPHALT SURFACE REMOVAL, 2" (44000157)
6 EXISTING GROUND
7 EXISTING HMA PAVEMENT TO REMAIN
*8 BIKE PATH REMOVAL (X0327036)

* AT LOCATIONS AS DIRECTED BY THE ENGINEER

REMOVAL ITEMS

PROPOSED LEGEND

A TOPSOIL FURNISH AND PLACE, 6" (21101625)
B SEEDING CLASS 1A (25000110) & WILDLIFE FRIENDLY EROSION CONTROL BLANKET (25100645)
C SEEDING, CLASS 4A (25000312) OR SEEDING CLASS 4B (25000314) & WILDLIFE FRIENDLY EROSION CONTROL BLANKET (25100645) - SEE LANDSCAPING PLANS
• D AGGREGATE SUBGRADE IMPROVEMENT (30300001)
E AGGREGATE SUBGRADE IMPROVEMENT 12" (30300112)
F AGGREGATE BASE COURSE, TYPE B 8" (35102000)
G HOT-MIX ASPHALT BINDER COURSE, IL-19.0, N70, 8" (40603085)
H HOT-MIX ASPHALT SURFACE COURSE, IL-9.5 MIX "D", N70; 2" (40604062)
I HOT-MIX ASPHALT SURFACE COURSE, IL-9.5 MIX "D", N50; 2" (40604060)
J COMBINATION CONCRETE CURB AND GUTTER, TYPE B-6.12 (60603800)
K COMBINATION CONCRETE CURB AND GUTTER, TYPE B-6.24 (60605000)
L COMBINATION CONCRETE CURB AND GUTTER, TYPE M-4.06 (60608552)
M COMBINATION CONCRETE CURB AND GUTTER, TYPE M-4.12 (60608562)
N COMBINATION CONCRETE CURB AND GUTTER, TYPE M-4.24 (60608582)
O PORTLAND CEMENT CONCRETE SIDEWALK, 5" (42400200), SEE NOTE 1
P SUBBASE GRANULAR MATERIAL, TYPE B 4" (31101200)
Q PORTLAND CEMENT CONCRETE PAVEMENT 8", SPECIAL (X4200408)
R GEOTECHNICAL FABRIC FOR GROUND STABILIZATION (21001000)
S PORTLAND CEMENT CONCRETE BASE COURSE 8" (35300300) FOR WIDENING GREATER THAN 6' OR PORTLAND CEMENT CONCRETE BASE COURSE WIDENING 8" (35400300) FOR WIDENING 6' OR LESS
T TRIAXIAL GEOGRID REINFORCEMENT, TYPE I (X0327487)
U AGGREGATE SHOULDERS, TYPE B 10" (48101620)
V TOPSOIL FURNISH AND PLACE, 2" (21101605)

•AT LOCATIONS AS DIRECTED BY THE ENGINEER

NOTES:

1. PROPOSED PCC SIDEWALK THICKNESS SHALL BE INCREASED TO 6" AT ALL RESIDENTIAL DRIVEWAYS.
2. THE PROPSED HMA SURFACE COURSE, IL-9.5, N70 SHALL BE INSTALLED 1/4" ABOVE THE GUTTER AT THE EDGE OF PAVEMENT.
3. SEE ROUNDABOUT GRADING PLANS FOR DETAILED SLOPE INFORMATION.
4. EXISTING AGGREGATE SHOULDER TO BE REMOVED SHALL BE MEASURED AND PAID FOR AS EARTH EXCAVATION.
5. SEE STRUCTURAL PLANS FOR PROPOSED BRIDGE TYPICAL SECTIONS AND DETAILS.
6. DUE TO DIFFERENCES BETWEEN THE EXISTING AND PROPOSED ROADWAY CONFIGURATIONS, EXISTING AND PROPOSED ALIGNMENTS/BASELINES HAVE BEEN PROVIDED FOR REFERENCE.

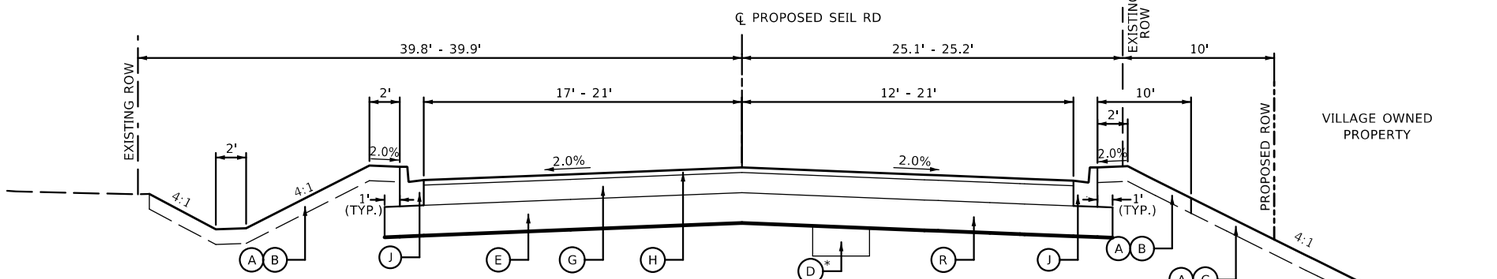

PROPOSED SEIL RD

℄ SEIL RD STA 18+02.57 TO STA 18+82.92
(LOOKING NORTHEAST)

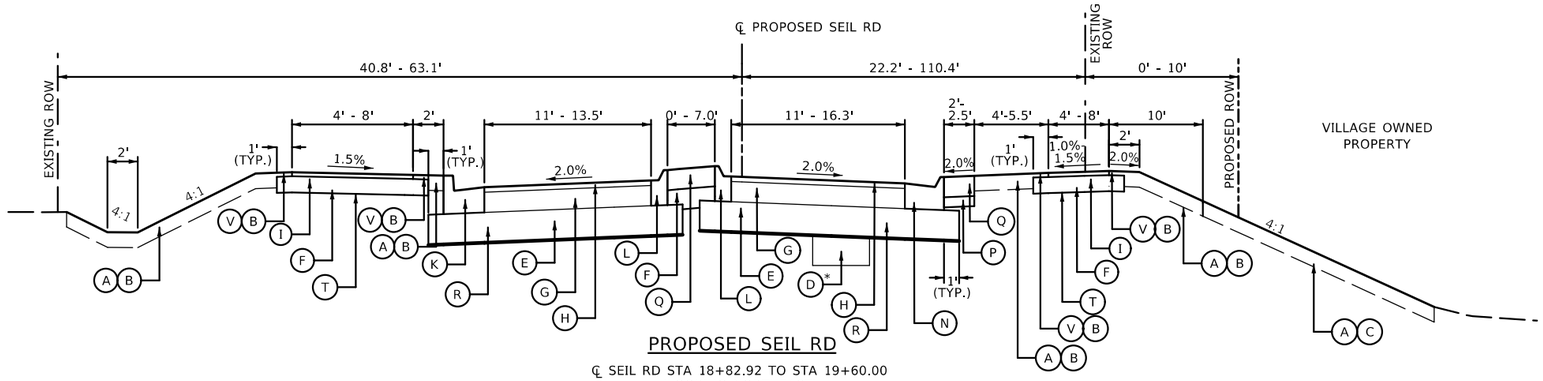

PROPOSED SEIL RD

℄ SEIL RD STA 18+82.92 TO STA 19+60.00
(LOOKING NORTHEAST)

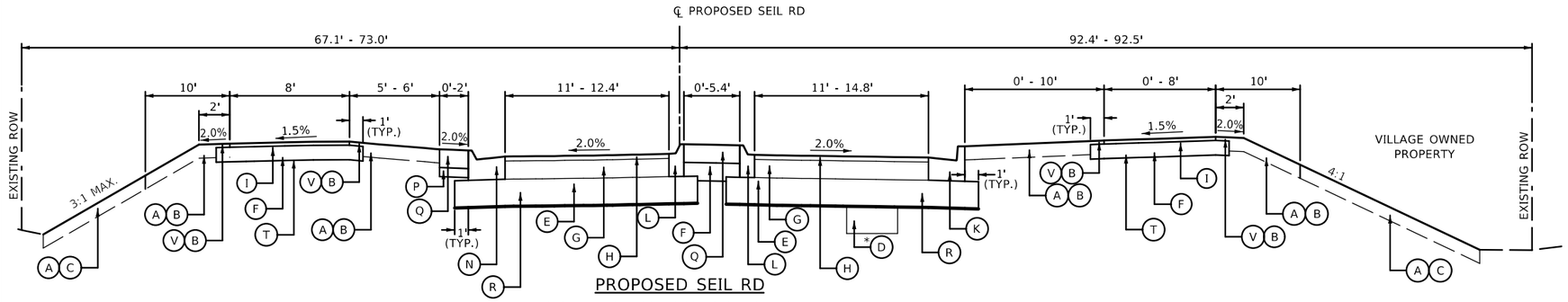

PROPOSED SEIL RD

℄ SEIL RD STA 20+40.00 TO STA 21+19.54
(LOOKING SOUTHEAST)

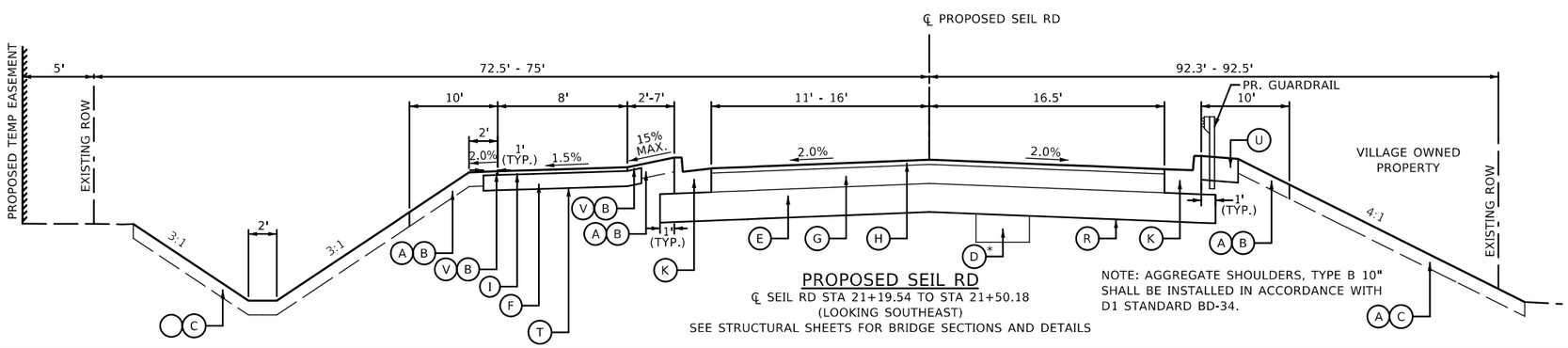

PROPOSED SEIL RD

℄ SEIL RD STA 21+19.54 TO STA 21+50.18
(LOOKING SOUTHEAST)
SEE STRUCTURAL SHEETS FOR BRIDGE SECTIONS AND DETAILS

NOTE: AGGREGATE SHOULDERS, TYPE B 10" SHALL BE INSTALLED IN ACCORDANCE WITH D1 STANDARD BD-34.

EXISTING LEGEND

- *(1) REMOVAL AND DISPOSAL OF UNSUITABLE MATERIAL (20201200)
- (2) COMBINATION CURB AND GUTTER REMOVAL (44000500)
- (3) SIDEWALK REMOVAL (44000600)
- (4) PAVEMENT REMOVAL (44000100)
- (5) HOT-MIX ASPHALT SURFACE REMOVAL, 2" (44000157)
- (6) EXISTING GROUND
- (7) EXISTING HMA PAVEMENT TO REMAIN
- *(8) BIKE PATH REMOVAL (X0327036)

* AT LOCATIONS AS DIRECTED BY THE ENGINEER

REMOVAL ITEMS

PROPOSED LEGEND

- (A) TOPSOIL FURNISH AND PLACE, 6" (21101625)
- (B) SEEDING CLASS 1A (25000110) & WILDLIFE FRIENDLY EROSION CONTROL BLANKET (25100645)
- (C) SEEDING, CLASS 4A (25000312) OR SEEDING CLASS 4B (25000314) & WILDLIFE FRIENDLY EROSION CONTROL BLANKET (25100645) - SEE LANDSCAPING PLANS
- •(D) AGGREGATE SUBGRADE IMPROVEMENT (30300001)
- (E) AGGREGATE SUBGRADE IMPROVEMENT 12" (30300112)
- (F) AGGREGATE BASE COURSE, TYPE B 8" (35102000)
- (G) HOT-MIX ASPHALT BINDER COURSE, IL-19.0, N70, 8" (40603085)
- (H) HOT-MIX ASPHALT SURFACE COURSE, IL-9.5 MIX "D", N70; 2" (40604062)
- (I) HOT-MIX ASPHALT SURFACE COURSE, IL-9.5 MIX "D", N50; 2" (40604060)
- (J) COMBINATION CONCRETE CURB AND GUTTER, TYPE B-6.12 (60603800)
- (K) COMBINATION CONCRETE CURB AND GUTTER, TYPE B-6.24 (60605000)
- (L) COMBINATION CONCRETE CURB AND GUTTER, TYPE M-4.06 (60608552)
- (M) COMBINATION CONCRETE CURB AND GUTTER, TYPE M-4.12 (60608562)
- (N) COMBINATION CONCRETE CURB AND GUTTER, TYPE M-4.24 (60608582)
- (O) PORTLAND CEMENT CONCRETE SIDEWALK, 5" (42400200), SEE NOTE 1
- (P) SUBBASE GRANULAR MATERIAL, TYPE B 4" (31101200)
- (Q) PORTLAND CEMENT CONCRETE PAVEMENT 8", SPECIAL (X4200408)
- (R) GEOTECHNICAL FABRIC FOR GROUND STABILIZATION (21001000)
- (S) PORTLAND CEMENT CONCRETE BASE COURSE 8" (35300300) FOR WIDENING GREATER THAN 6' OR PORTLAND CEMENT CONCRETE BASE COURSE WIDENING 8" (35400300) FOR WIDENING 6' OR LESS
- (T) TRIAXIAL GEOGRID REINFORCEMENT, TYPE I (X0327487)
- (U) AGGREGATE SHOULDERS, TYPE B 10" (48101620)
- (V) TOPSOIL FURNISH AND PLACE, 2" (21101605)

•AT LOCATIONS AS DIRECTED BY THE ENGINEER

NOTES:

1. PROPOSED PCC SIDEWALK THICKNESS SHALL BE INCREASED TO 6" AT ALL RESIDENTIAL DRIVEWAYS.
2. THE PROPSED HMA SURFACE COURSE, IL-9.5, N70 SHALL BE INSTALLED 1/4" ABOVE THE GUTTER AT THE EDGE OF PAVEMENT.
3. SEE ROUNDABOUT GRADING PLANS FOR DETAILED SLOPE INFORMATION.
4. EXISTING AGGREGATE SHOULDER TO BE REMOVED SHALL BE MEASURED AND PAID FOR AS EARTH EXCAVATION.
5. SEE STRUCTURAL PLANS FOR PROPOSED BRIDGE TYPICAL SECTIONS AND DETAILS.
6. DUE TO DIFFERENCES BETWEEN THE EXISTING AND PROPOSED ROADWAY CONFIGURATIONS, EXISTING AND PROPOSED ALIGNMENTS/BASELINES HAVE BEEN PROVIDED FOR REFERENCE.

CHRISTOPHER B. BURKE ENGINEERING, LTD.
16021 W. 159th Street, Suite 201
Lockport, Illinois 60441
(815) 770-2650

USER NAME = aschaefer	DESIGNED - AJS/JRS	REVISED -
	DRAWN - JRS/PWN	REVISED -
PLOT SCALE = N.T.S.	CHECKED - AJS	REVISED -
PLOT DATE = 11/2/2025	DATE -	REVISED -

STATE OF ILLINOIS
DEPARTMENT OF TRANSPORTATION

SEIL ROAD WIDENING
PROPOSED TYPICAL SECTIONS

SCALE: N.T.S. | SHEET 3 OF 5 SHEETS | STA. TO STA.

F.A.U. RTE.	SECTION	COUNTY	TOTAL SHEETS	SHEET NO.
0403	21-00047-00-WR	WILL	149	18

CONTRACT NO. 61M01

ILLINOIS FED. AID PROJECT

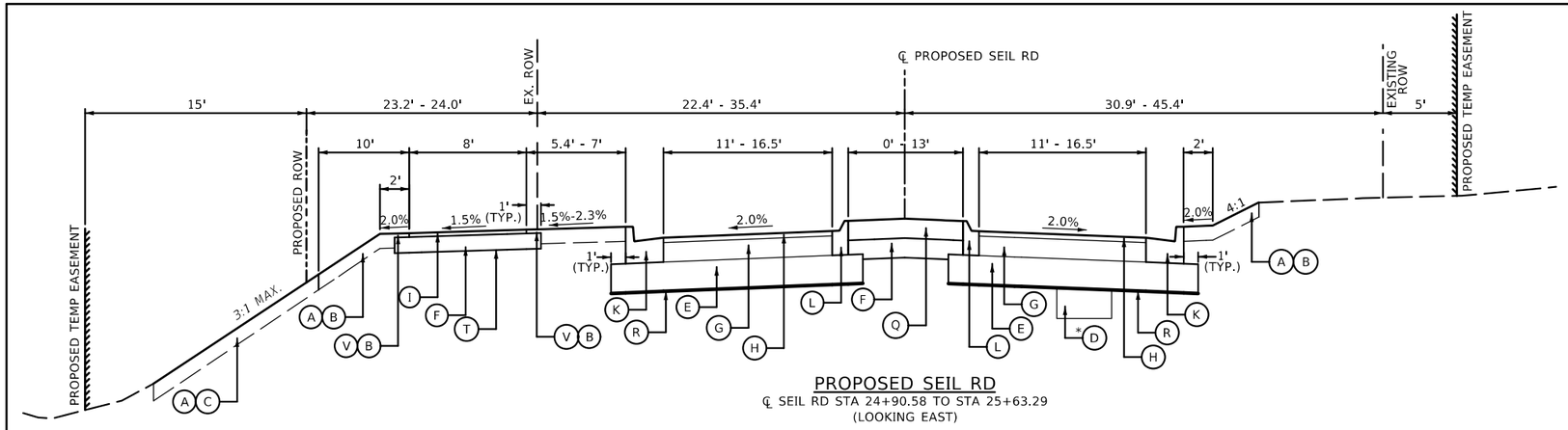

PROPOSED SEIL RD

℄ SEIL RD STA 24+90.58 TO STA 25+63.29
(LOOKING EAST)

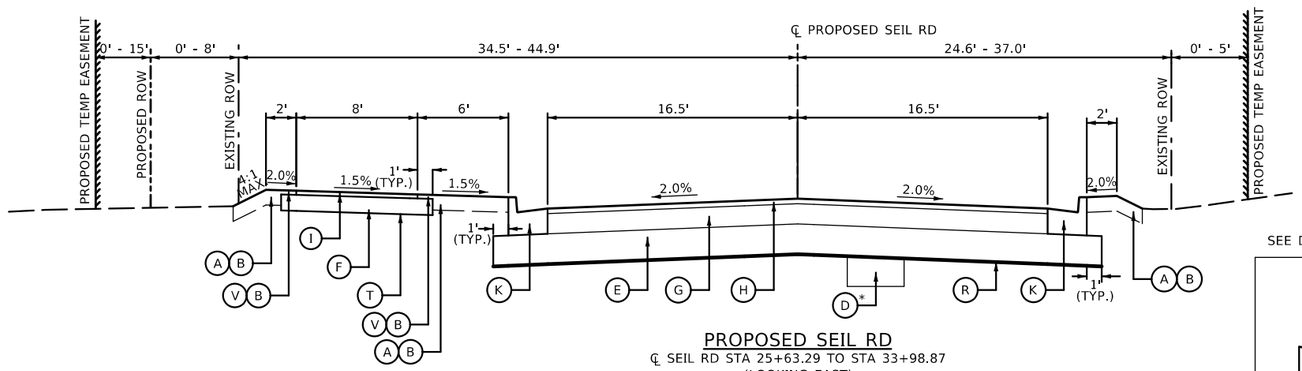

PROPOSED SEIL RD

℄ SEIL RD STA 25+63.29 TO STA 33+98.87
(LOOKING EAST)

SOUTH PARKWAY SHOWN FOR
STA. 26+63.29 TO STA. 31+28.00
AND STA. 33+30.00 TO 33+98.87
SEE DETAIL "A" FOR STA. 31+28.00 TO 33+30.00

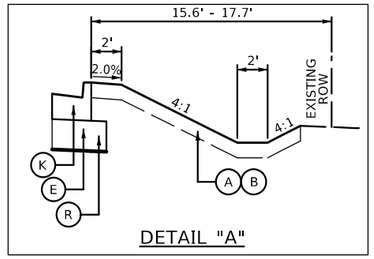

DETAIL "A"

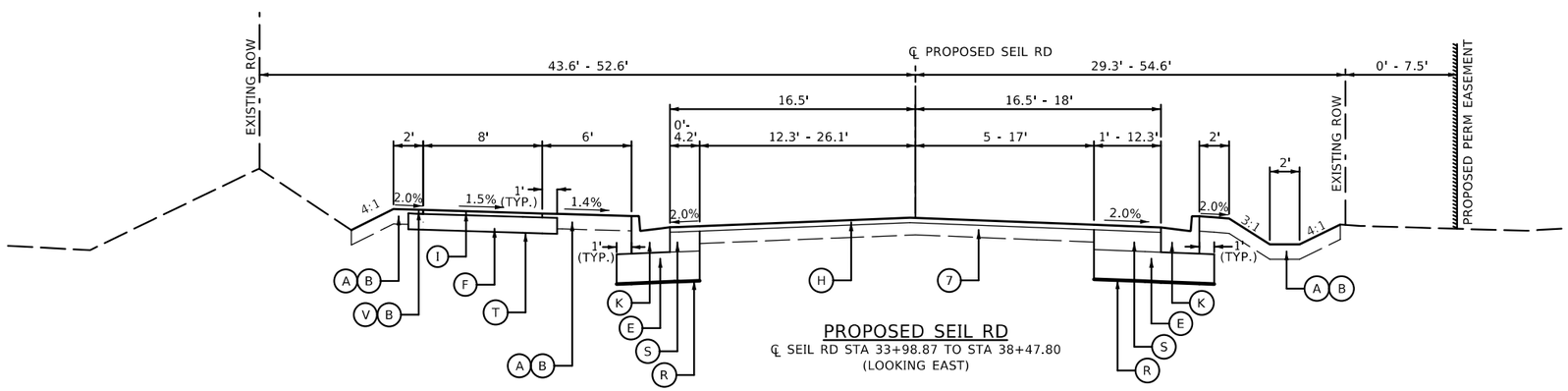

PROPOSED SEIL RD

℄ SEIL RD STA 33+98.87 TO STA 38+47.80
(LOOKING EAST)

NORTH EOP WIDENING
ENDS AT STA. 35+11.37

EXISTING LEGEND

*(1) REMOVAL AND DISPOSAL OF UNSUITABLE MATERIAL (20201200)
(2) COMBINATION CURB AND GUTTER REMOVAL (44000500)
(3) SIDEWALK REMOVAL (44000600)
(4) PAVEMENT REMOVAL (44000100)
(5) HOT-MIX ASPHALT SURFACE REMOVAL, 2" (44000157)
(6) EXISTING GROUND
(7) EXISTING HMA PAVEMENT TO REMAIN
*(8) BIKE PATH REMOVAL (X0327036)

* AT LOCATIONS AS DIRECTED BY THE ENGINEER

REMOVAL ITEMS

PROPOSED LEGEND

(A) TOPSOIL FURNISH AND PLACE, 6" (21101625)
(B) SEEDING CLASS 1A (25000110) & WILDLIFE FRIENDLY EROSION CONTROL BLANKET (25100645)
(C) SEEDING, CLASS 4A (25000312) OR SEEDING CLASS 4B (25000314) & WILDLIFE FRIENDLY EROSION CONTROL BLANKET (25100645) - SEE LANDSCAPING PLANS
•(D) AGGREGATE SUBGRADE IMPROVEMENT (30300001)
(E) AGGREGATE SUBGRADE IMPROVEMENT 12" (30300112)
(F) AGGREGATE BASE COURSE, TYPE B 8" (35102000)
(G) HOT-MIX ASPHALT BINDER COURSE, IL-19.0, N70, 8" (40603085)
(H) HOT-MIX ASPHALT SURFACE COURSE, IL-9.5 MIX "D", N70; 2" (40604062)
(I) HOT-MIX ASPHALT SURFACE COURSE, IL-9.5 MIX "D", N50; 2" (40604060)
(J) COMBINATION CONCRETE CURB AND GUTTER, TYPE B-6.12 (60603800)
(K) COMBINATION CONCRETE CURB AND GUTTER, TYPE B-6.24 (60605000)
(L) COMBINATION CONCRETE CURB AND GUTTER, TYPE M-4.06 (60608552)
(M) COMBINATION CONCRETE CURB AND GUTTER, TYPE M-4.12 (60608562)
(N) COMBINATION CONCRETE CURB AND GUTTER, TYPE M-4.24 (60608582)
(O) PORTLAND CEMENT CONCRETE SIDEWALK, 5" (42400200), SEE NOTE 1
(P) SUBBASE GRANULAR MATERIAL, TYPE B 4" (31101200)
(Q) PORTLAND CEMENT CONCRETE PAVEMENT 8", SPECIAL (X4200408)
(R) GEOTECHNICAL FABRIC FOR GROUND STABILIZATION (21001000)
(S) PORTLAND CEMENT CONCRETE BASE COURSE 8" (35300300) FOR WIDENING GREATER THAN 6' OR PORTLAND CEMENT CONCRETE BASE COURSE WIDENING 8" (35400300) FOR WIDENING 6' OR LESS
(T) TRIAXIAL GEOGRID REINFORCEMENT, TYPE I (X0327487)
(U) AGGREGATE SHOULDERS, TYPE B 10" (48101620)
(V) TOPSOIL FURNISH AND PLACE, 2" (21101605)

•AT LOCATIONS AS DIRECTED BY THE ENGINEER

NOTES:

1. PROPOSED PCC SIDEWALK THICKNESS SHALL BE INCREASED TO 6" AT ALL RESIDENTIAL DRIVEWAYS.
2. THE PROPSED HMA SURFACE COURSE, IL-9.5, N70 SHALL BE INSTALLED 1/4" ABOVE THE GUTTER AT THE EDGE OF PAVEMENT.
3. SEE ROUNDABOUT GRADING PLANS FOR DETAILED SLOPE INFORMATION.
4. EXISTING AGGREGATE SHOULDER TO BE REMOVED SHALL BE MEASURED AND PAID FOR AS EARTH EXCAVATION.
5. SEE STRUCTURAL PLANS FOR PROPOSED BRIDGE TYPICAL SECTIONS AND DETAILS.
6. DUE TO DIFFERENCES BETWEEN THE EXISTING AND PROPOSED ROADWAY CONFIGURATIONS, EXISTING AND PROPOSED ALIGNMENTS/BASELINES HAVE BEEN PROVIDED FOR REFERENCE.

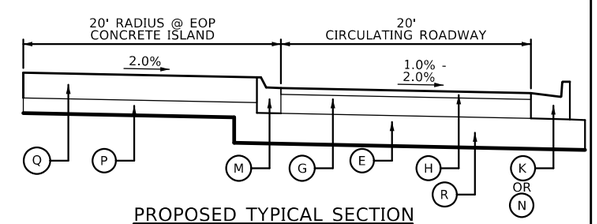

PROPOSED TYPICAL SECTION

ROUNDABOUT CIRCULATING ROADWAY
SEIL RD & RAVEN RD
SEIL RD & STATES LN

CHRISTOPHER B. BURKE ENGINEERING, LTD.
16021 W. 159th Street, Suite 201
Lockport, Illinois 60441
(815) 770-2850

USER NAME = aschaefer	DESIGNED - AJS/JRS	REVISED -	
	DRAWN - JRS/PWN	REVISED -	
PLOT SCALE = N.T.S.	CHECKED - AJS	REVISED -	
PLOT DATE = 11/2/2025	DATE -	REVISED -	

STATE OF ILLINOIS
DEPARTMENT OF TRANSPORTATION

SEIL ROAD WIDENING
PROPOSED TYPICAL SECTIONS

SCALE: N.T.S. | SHEET 4 OF 5 SHEETS | STA. TO STA.

F.A.U. RTE.	SECTION	COUNTY	TOTAL SHEETS	SHEET NO.
0403	21-00047-00-WR	WILL	149	19
		CONTRACT NO. 61M01		
		ILLINOIS FED. AID PROJECT		

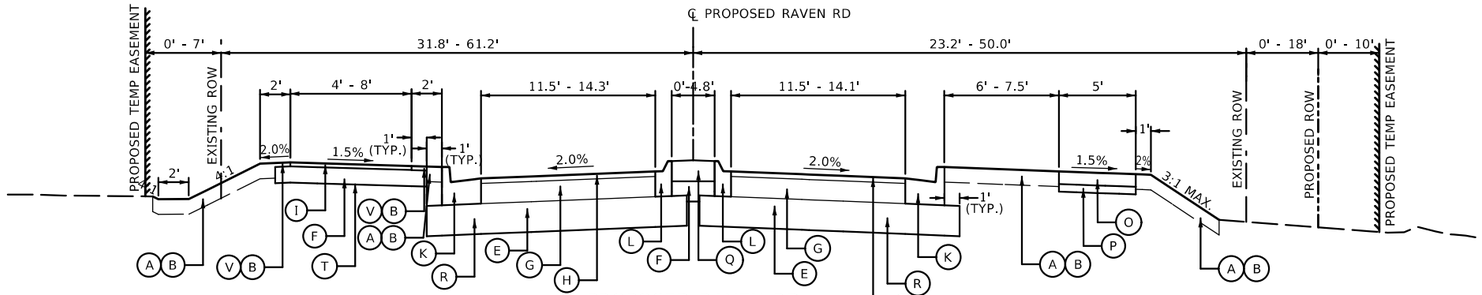

PROPOSED RAVEN RD

℄ RAVEN RD STA 100+40.00 TO STA 100+98.57
(LOOKING NORTHEAST)

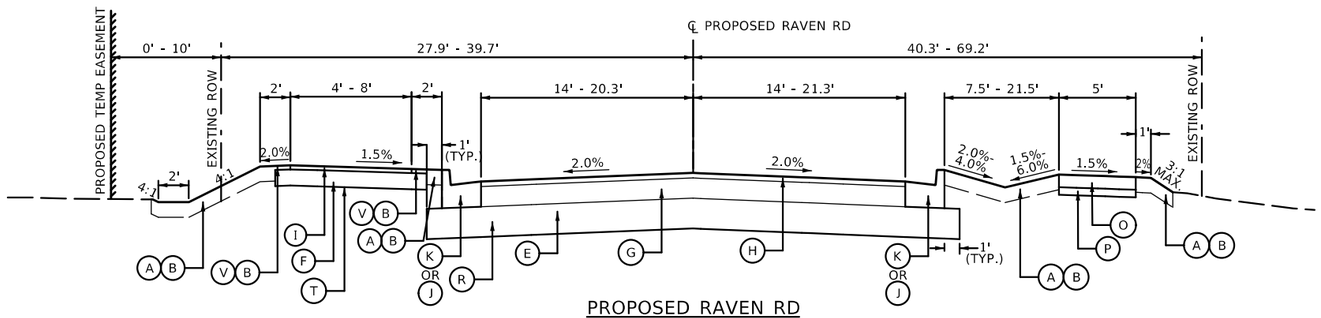

PROPOSED RAVEN RD

℄ RAVEN RD STA 100+98.57 TO STA 101+78.83
(LOOKING NORTHEAST)

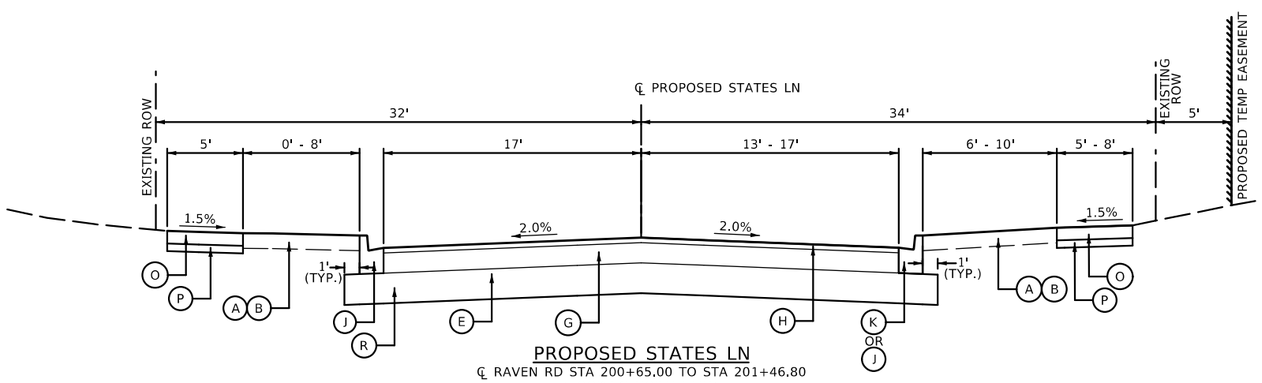

PROPOSED STATES LN

℄ RAVEN RD STA 200+65.00 TO STA 201+46.80
(LOOKING NORTHEAST)

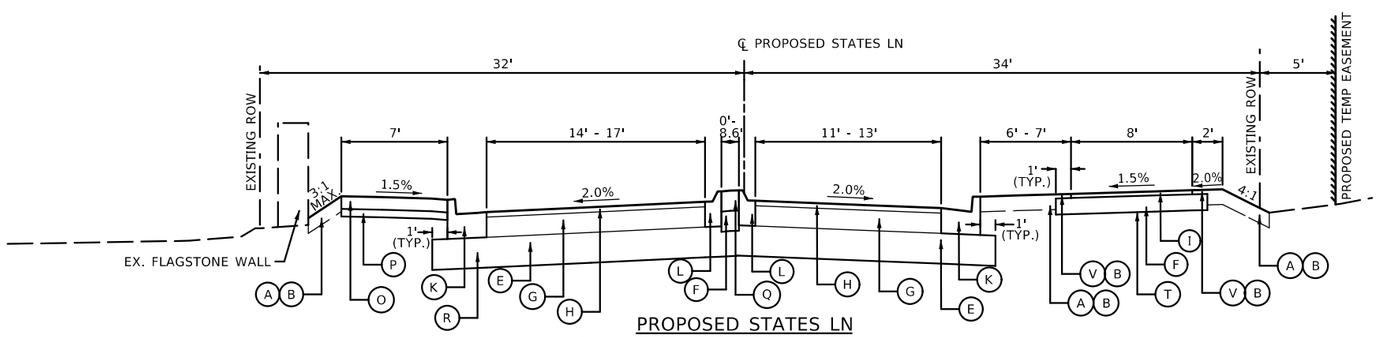

PROPOSED STATES LN

℄ RAVEN RD STA 201+46.80 TO STA 202+29.87
(LOOKING NORTHEAST)

EXISTING LEGEND

*1 REMOVAL AND DISPOSAL OF UNSUITABLE MATERIAL (20201200)
2 COMBINATION CURB AND GUTTER REMOVAL (44000500)
3 SIDEWALK REMOVAL (44000600)
4 PAVEMENT REMOVAL (44000100)
5 HOT-MIX ASPHALT SURFACE REMOVAL, 2" (44000157)
6 EXISTING GROUND
7 EXISTING HMA PAVEMENT TO REMAIN
*8 BIKE PATH REMOVAL (X0327036)

* AT LOCATIONS AS DIRECTED BY THE ENGINEER

REMOVAL ITEMS

PROPOSED LEGEND

A TOPSOIL FURNISH AND PLACE, 6" (21101625)
B SEEDING CLASS 1A (25000110) & WILDLIFE FRIENDLY EROSION CONTROL BLANKET (25100645)
C SEEDING, CLASS 4A (25000312) OR SEEDING CLASS 4B (25000314) & WILDLIFE FRIENDLY EROSION CONTROL BLANKET (25100645) - SEE LANDSCAPING PLANS
•D AGGREGATE SUBGRADE IMPROVEMENT (30300001)
E AGGREGATE SUBGRADE IMPROVEMENT 12" (30300112)
F AGGREGATE BASE COURSE, TYPE B 8" (35102000)
G HOT-MIX ASPHALT BINDER COURSE, IL-19.0, N70, 8" (40603085)
H HOT-MIX ASPHALT SURFACE COURSE, IL-9.5 MIX "D", N70; 2" (40604062)
I HOT-MIX ASPHALT SURFACE COURSE, IL-9.5 MIX "D", N50; 2" (40604060)
J COMBINATION CONCRETE CURB AND GUTTER, TYPE B-6.12 (60603800)
K COMBINATION CONCRETE CURB AND GUTTER, TYPE B-6.24 (60605000)
L COMBINATION CONCRETE CURB AND GUTTER, TYPE M-4.06 (60608552)
M COMBINATION CONCRETE CURB AND GUTTER, TYPE M-4.12 (60608562)
N COMBINATION CONCRETE CURB AND GUTTER, TYPE M-4.24 (60608582)
O PORTLAND CEMENT CONCRETE SIDEWALK, 5" (42400200), SEE NOTE 1
P SUBBASE GRANULAR MATERIAL, TYPE B 4" (31101200)
Q PORTLAND CEMENT CONCRETE PAVEMENT 8", SPECIAL (X4200408)
R GEOTECHNICAL FABRIC FOR GROUND STABILIZATION (21001000)
S PORTLAND CEMENT CONCRETE BASE COURSE 8" (35300300) FOR WIDENING GREATER THAN 6' OR PORTLAND CEMENT CONCRETE BASE COURSE WIDENING 8" (35400300) FOR WIDENING 6' OR LESS
T TRIAXIAL GEOGRID REINFORCEMENT, TYPE I (X0327487)
U AGGREGATE SHOULDERS, TYPE B 10" (48101620)
V TOPSOIL FURNISH AND PLACE, 2" (21101605)

•AT LOCATIONS AS DIRECTED BY THE ENGINEER

NOTES:

1. PROPOSED PCC SIDEWALK THICKNESS SHALL BE INCREASED TO 6" AT ALL RESIDENTIAL DRIVEWAYS.
2. THE PROPSED HMA SURFACE COURSE, IL-9.5, N70 SHALL BE INSTALLED 1/4" ABOVE THE GUTTER AT THE EDGE OF PAVEMENT.
3. SEE ROUNDABOUT GRADING PLANS FOR DETAILED SLOPE INFORMATION.
4. EXISTING AGGREGATE SHOULDER TO BE REMOVED SHALL BE MEASURED AND PAID FOR AS EARTH EXCAVATION.
5. SEE STRUCTURAL PLANS FOR PROPOSED BRIDGE TYPICAL SECTIONS AND DETAILS.
6. DUE TO DIFFERENCES BETWEEN THE EXISTING AND PROPOSED ROADWAY CONFIGURATIONS, EXISTING AND PROPOSED ALIGNMENTS/BASELINES HAVE BEEN PROVIDED FOR REFERENCE.

CHRISTOPHER B. BURKE ENGINEERING, LTD.
16221 W. 159th Street, Suite 201
Lockport, Illinois 60441
(815) 770-2650

USER NAME = eschaefer	DESIGNED - AJS/JRS	REVISED -
	DRAWN - JRS/PWN	REVISED -
PLOT SCALE = N.T.S.	CHECKED - AJS	REVISED -
PLOT DATE = 11/2/2025	DATE -	REVISED -

STATE OF ILLINOIS
DEPARTMENT OF TRANSPORTATION

SEIL ROAD WIDENING
PROPOSED TYPICAL SECTIONS

SCALE: N.T.S. | SHEET 5 OF 5 SHEETS | STA. TO STA.

F.A.U. RTE.	SECTION	COUNTY	TOTAL SHEETS	SHEET NO.
0403	21-00047-00-WR	WILL	149	20

CONTRACT NO. 61M01

ILLINOIS FED. AID PROJECT

EARTHWORK SCHEDULE

STATION			20201200 REMOVAL & DISPOSAL OF UNSUITABLE MATERIAL	20200100 EARTH EXCAVATION	EARTH EXCAVATION VOLUME USED (15% SHRINKAGE)	EMBANKMENT	EARTHWORK BALANCE WASTE (+) OR SHORTAGE (-)
SEIL ROAD			(CU YD)	(CU YD)	(CU YD)	(CU YD)	(CU YD)
18+03	TO	18+36	7	77	65	4	61
18+36	TO	18+50	9	33	28	6	22
18+50	TO	19+00	55	86	73	60	13
19+00	TO	19+35	40	26	22	67	-45
19+35	TO	19+50	18	5	4	47	-43
19+50	TO	19+87	36	32	27	217	-190
19+87	TO	20+00	12	80	68	113	-45
20+00	TO	20+50	95	301	256	522	-266
20+50	TO	20+72	65	73	62	238	-176
20+72	TO	21+00	90	192	163	300	-137
21+00	TO	21+50	167	535	455	597	-142
21+50	TO	21+78	103	442	376	387	-11
21+78	TO	21+84	20	139	118	39	79
21+84	TO	22+16	137	683	581	1	580
22+16	TO	23+94	OMISSION FOR BRIDGE				
23+94	TO	24+25	77	15	13	264	-251
24+25	TO	24+40	36	2	2	133	-131
24+40	TO	25+00	114	27	23	321	-298
25+00	TO	25+17	26	25	21	20	1
25+17	TO	25+50	51	77	65	20	45
25+50	TO	26+00	75	132	112	37	75
26+00	TO	26+50	106	120	102	63	39
26+50	TO	26+83	58	145	123	46	77
26+83	TO	27+00	29	78	66	26	40
27+00	TO	27+50	96	105	89	72	17
27+50	TO	27+73	19	51	43	10	33
27+73	TO	28+00	20	70	60	11	49
28+00	TO	28+20	14	59	50	16	34
28+20	TO	28+50	22	84	71	23	48
28+50	TO	29+00	51	114	97	39	58
29+00	TO	29+50	50	104	88	38	50
29+50	TO	30+00	52	100	85	46	39
30+00	TO	30+50	54	99	84	61	23
30+50	TO	30+89	30	78	66	29	37
30+89	TO	31+00	8	21	18	2	16
31+00	TO	31+13	11	26	22	10	12

EARTHWORK SCHEDULE

STATION			20201200 REMOVAL & DISPOSAL OF UNSUITABLE MATERIAL	20200100 EARTH EXCAVATION	EARTH EXCAVATION VOLUME USED (15% SHRINKAGE)	EMBANKMENT	EARTHWORK BALANCE WASTE (+) OR SHORTAGE (-)
SEIL ROAD			(CU YD)	(CU YD)	(CU YD)	(CU YD)	(CU YD)
31+13	TO	31+50	38	65	55	44	11
31+50	TO	32+00	67	73	62	39	23
32+00	TO	32+50	68	78	66	25	41
32+50	TO	33+00	71	111	94	26	68
33+00	TO	33+29	29	85	72	11	61
33+29	TO	33+46	5	56	48	3	45
33+46	TO	33+50	0	15	13	0	13
33+50	TO	33+61	1	44	37	0	37
33+61	TO	34+00	17	104	88	3	85
34+00	TO	34+17	8	16	14	1	13
34+17	TO	34+50	17	27	23	6	17
34+50	TO	35+00	35	33	28	18	10
35+00	TO	35+11	9	7	6	4	2
35+11	TO	35+31	9	11	9	3	6
35+31	TO	35+50	4	8	7	3	4
35+50	TO	36+00	23	14	12	23	-11
36+00	TO	36+23	6	10	9	7	2
36+23	TO	36+50	8	12	10	9	1
36+50	TO	37+00	14	27	23	16	7
37+00	TO	37+04	0	3	3	0	3
37+04	TO	37+50	13	24	20	17	3
37+50	TO	38+00	14	19	16	19	-3
38+00	TO	38+03	0	1	1	0	1
38+03	TO	38+48	9	16	14	6	8
RAVEN ROAD							
100+65	TO	101+00	24	6	5	88	-83
101+00	TO	101+50	30	48	41	52	-11
101+50	TO	101+79	21	56	48	12	36
STATES LANE							
200+65	TO	200+80	6	28	24	2	22
200+80	TO	201+00	5	38	32	3	29
201+00	TO	201+50	23	54	46	26	20
201+50	TO	202+00	33	8	7	99	-92
202+00	TO	202+05	4	0	0	17	-17
TOTALS			2464	5333	4534	4467	67

SUMMARY	
20201200	20200100
REMOVAL & DISPOSAL OF UNSUITABLE MATERIAL	EARTH EXCAVATION
(CU YD)	(CU YD)
2,464	5,333

IT IS ANTICATED THAT TOPSOIL STRIPPED FROM THE SITE WILL BE REMOVED AND NEW TOPSOIL WILL BE FURNISHED TO SITE. TOPSOIL STRIPPING WILL BE PAID FOR AS REMOVAL & DISPOSAL OF UNSUITABLE MATERIAL. BASED ON EXISTING TOPSOIL DEPTHS, A QUANITY OF 2,464 CY OF TOPSOIL WILL BE EXCAVATED TO CONSTRUCT THE PROPOSED FINAL GRADING & ROADWAY IMPROVEMENTS AS SHOWN ON THE CROSS SECTIONS. ADDITIONAL QUANTITY FOR REMOVAL AND DISPOSAL OF UNSUITABLE MATERIAL HAS BEEN INCLUDED IN THE SUMMARY OF QUANTITIES FOR LANDSCAPED AREAS DISTURBED OUTSIDE OF THE ROADWAY IMPROVEMENTS.

EXCAVATED MATERIALS SHALL NOT BE ALLOWED TO BE STORED/STOCKPILED ON OR WITHIN 100 FEET OF A DESIGNATED FLOOD PLAIN.

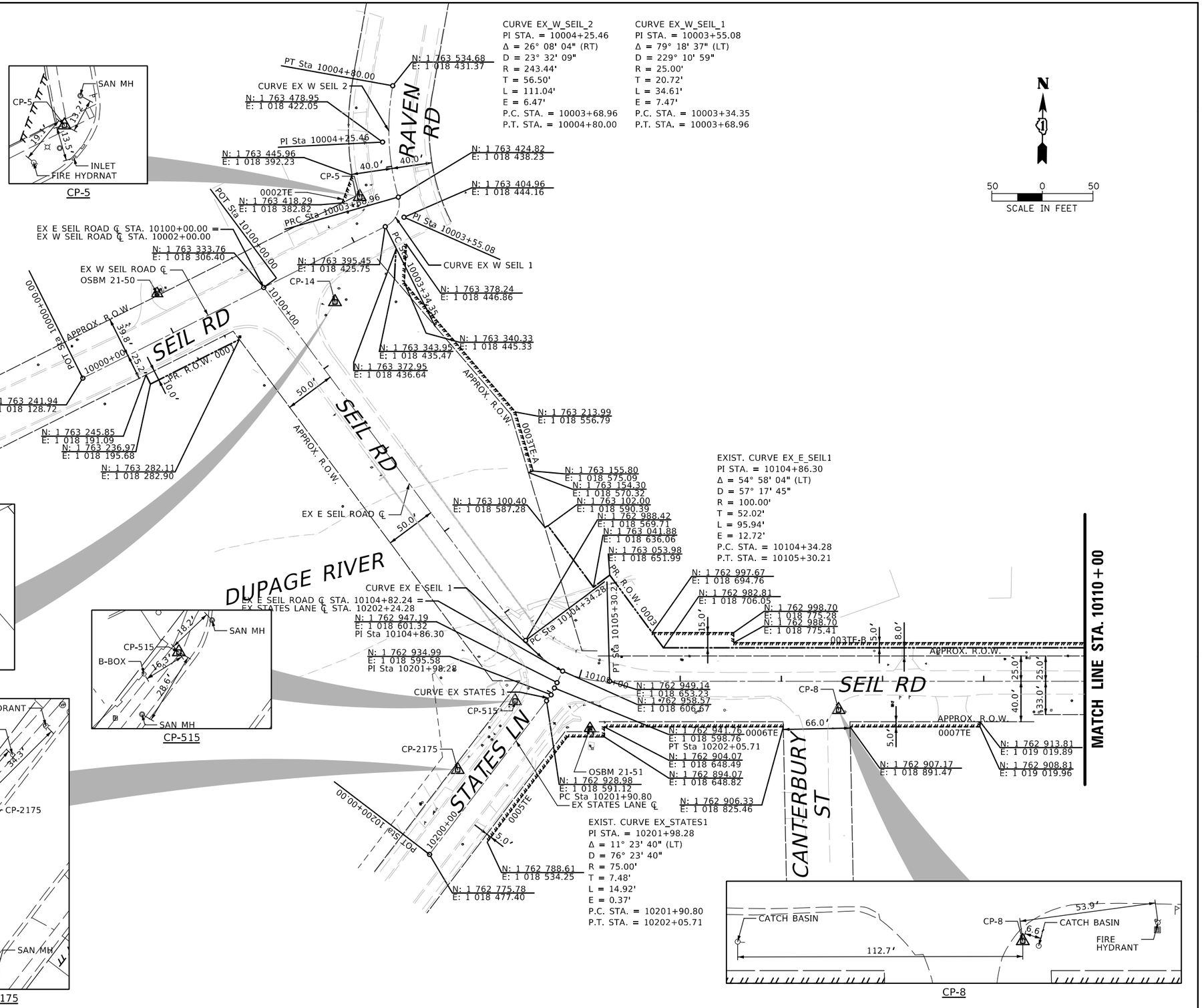

HORIZONTAL CONTROL POINTS

⊡	NORTHING	EASTING	STATION	OFFSET	DESCRIPTION
5	1 763 424.55	1 018 400.19	10003+78.21	36.7' LT	X-CUT
8	1 762 923.69	1 018 879.90	10107+56.54	28.3' RT	IRON ROD W/ CAP
14	1 763 320.36	1 018 377.08	10002+56.63	44.4' RT	IRON PIPE
515	1 762 928.42	1 018 559.95	10201+71.77	24.7' LT	X-CUT
2175	1 762 859.76	1 018 504.18	10200+83.40	28.6' LT	X-CUT

⊠ ELEVATION BENCHMARKS
DATUM: NAVD'88 (GPS OBSERVED)

NO.	DESCRIPTION	ELEV.
OSBM	SQUARE CUT ON SOUTHWEST CORNER OF	565.53
21-50	CONCRETE BASE OF ATT PANEL BOX ON THE	
	NORTHWEST SIDE OF SEIL ROAD ON WEST	
	SIDE OF BRIDGE	
OSBM	NORTHWEST CORNER OF CONC. PAD AT THE	572.80
21-51	SOUTHEAST CORER OF STATES LANE & SEIL	
	ROAD AT THE NORTHERY ATT PANEL BOX	

CHRISTOPHER B. BURKE ENGINEERING, LTD.
9575 W. 159th Street, Suite 201
Lockport, Illinois 60441
(815) 770-2850

USER NAME = aschaefer	DESIGNED - AJS/JRS	REVISED -	
	DRAWN - PWN/JRS	REVISED -	
PLOT SCALE = 100'	CHECKED - AJS	REVISED -	
PLOT DATE = 11/2/2025	DATE -	REVISED -	

STATE OF ILLINOIS
DEPARTMENT OF TRANSPORTATION

SEIL ROAD WIDENING
ALIGNMENT, TIES, AND BENCHMARKS
EXISTING ROADWAY

SCALE: 100' | SHEET 1 OF 3 SHEETS | STA. 10100+00 TO STA. 10110+00

F.A.U. RTE.	SECTION	COUNTY	TOTAL SHEETS	SHEET NO.
0403	21-00047-00-WR	WILL	149	22

CONTRACT NO. 61M01

ILLINOIS FED. AID PROJECT

HORIZONTAL CONTROL POINTS

	NORTHING	EASTING	STATION	OFFSET	DESCRIPTION
9	1 762 938.95	1 019 311.12	10111+87.91	18.6' RT	HCS
10	1 762 935.97	1 019 550.61	10114+27.36	24.6' RT	HCS
11	1 762 939.90	1 019 912.70	10117+89.47	25.3' RT	HCS

ELEVATION BENCHMARKS
DATUM: NAVD'88 (GPS OBSERVED)

NO.	DESCRIPTION	ELEV.
OSBM	SOUTHWEST BOLT OF FIRE HYDRANT AT THE	590.90
21-52	NORTHWEST CORNER OF RIVER BLUFF DRIVE &	
	SEIL ROAD	

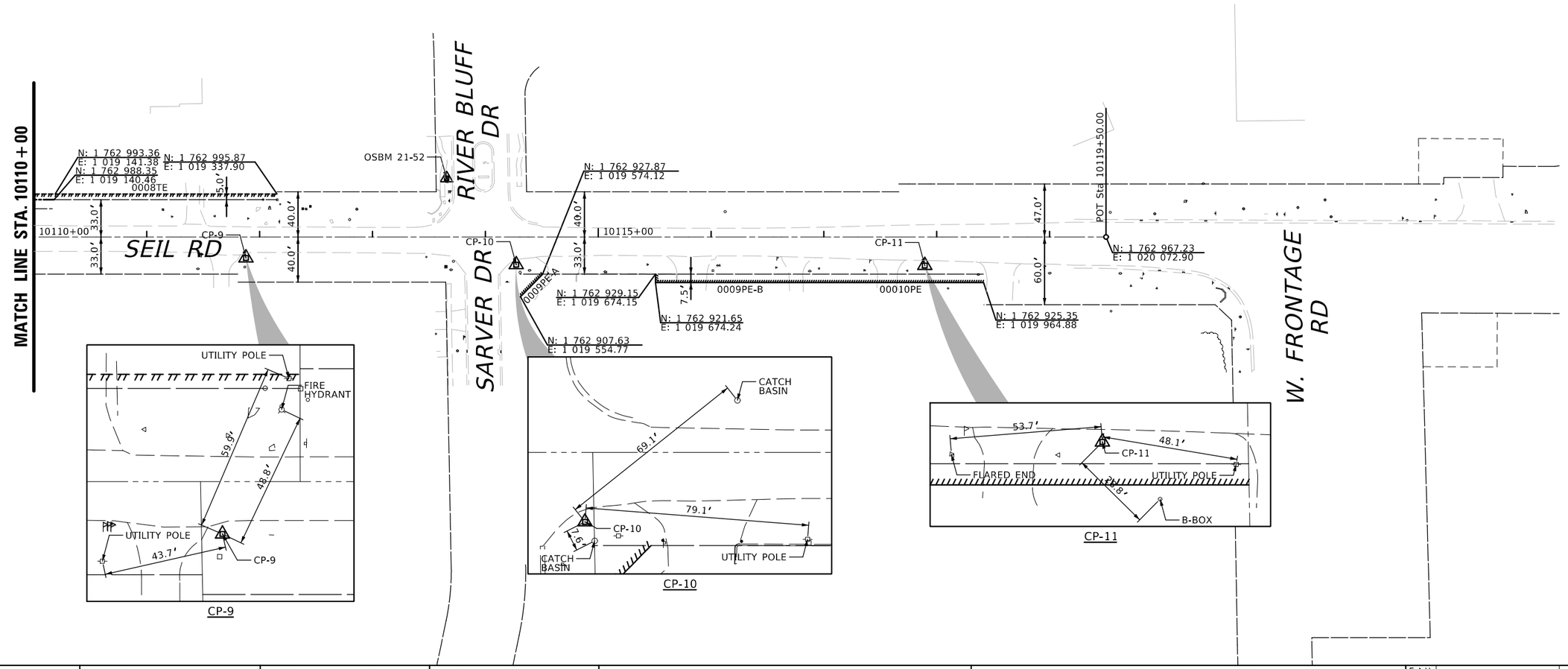

CP-9

CP-10

CP-11

CHRISTOPHER B. BURKE ENGINEERING, LTD.
9023 W. 159th Street, Suite 201
Lockport, Illinois 60441
(815) 770-2650

USER NAME = aschaefer	DESIGNED - AJS/JRS	REVISED -
	DRAWN - PWN/JRS	REVISED -
PLOT SCALE = 100'	CHECKED - AJS	REVISED -
PLOT DATE = 11/2/2025	DATE -	REVISED -

STATE OF ILLINOIS
DEPARTMENT OF TRANSPORTATION

SEIL ROAD WIDENING
ALIGNMENT, TIES, AND BENCHMARKS
EXISTING ROADWAY

SCALE: 100' | SHEET 2 OF 3 SHEETS | STA. 10110+00 TO STA. 10119+50

F.A.U. RTE.	SECTION	COUNTY	TOTAL SHEETS	SHEET NO.
0403	21-00047-00-WR	WILL	149	23

CONTRACT NO. 61M01

ILLINOIS FED. AID PROJECT

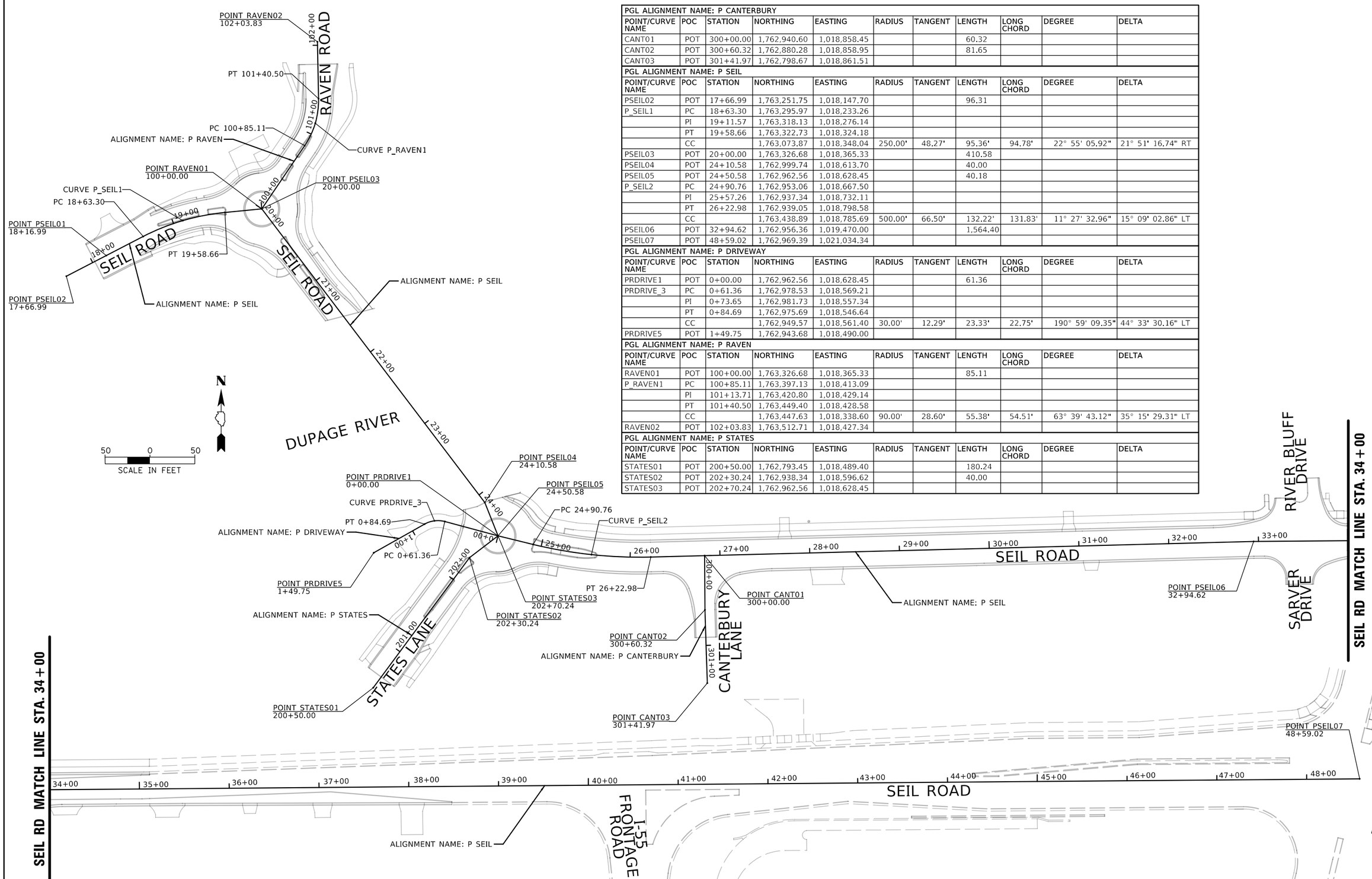

PGL ALIGNMENT NAME: P CANTERBURY										
POINT/CURVE NAME	POC	STATION	NORTHING	EASTING	RADIUS	TANGENT	LENGTH	LONG CHORD	DEGREE	DELTA
CANT01	POT	300+00.00	1,762,940.60	1,018,858.45			60.32			
CANT02	POT	300+60.32	1,762,880.28	1,018,858.95			81.65			
CANT03	POT	301+41.97	1,762,798.67	1,018,861.51						
PGL ALIGNMENT NAME: P SEIL										
POINT/CURVE NAME	POC	STATION	NORTHING	EASTING	RADIUS	TANGENT	LENGTH	LONG CHORD	DEGREE	DELTA
PSEIL02	POT	17+66.99	1,763,251.75	1,018,147.70			96.31			
P_SEIL1	PC	18+63.30	1,763,295.97	1,018,233.26						
	PI	19+11.57	1,763,318.13	1,018,276.14						
	PT	19+58.66	1,763,322.73	1,018,324.18						
	CC		1,763,073.87	1,018,348.04	250.00'	48.27'	95.36'	94.78'	22° 55' 05.92"	21° 51' 16.74" RT
PSEIL03	POT	20+00.00	1,763,326.68	1,018,365.33			410.58			
PSEIL04	POT	24+10.58	1,762,999.74	1,018,613.70			40.00			
PSEIL05	POT	24+50.58	1,762,962.56	1,018,628.45			40.18			
P_SEIL2	PC	24+90.76	1,762,953.06	1,018,667.50						
	PI	25+57.26	1,762,937.34	1,018,732.11						
	PT	26+22.98	1,762,939.05	1,018,798.58						
	CC		1,763,438.89	1,018,785.69	500.00'	66.50'	132.22'	131.83'	11° 27' 32.96"	15° 09' 02.86" LT
PSEIL06	POT	32+94.62	1,762,956.36	1,019,470.00			1,564.40			
PSEIL07	POT	48+59.02	1,762,969.39	1,021,034.34						
PGL ALIGNMENT NAME: P DRIVEWAY										
POINT/CURVE NAME	POC	STATION	NORTHING	EASTING	RADIUS	TANGENT	LENGTH	LONG CHORD	DEGREE	DELTA
PRDRIVE1	POT	0+00.00	1,762,962.56	1,018,628.45			61.36			
PRDRIVE_3	PC	0+61.36	1,762,978.53	1,018,569.21						
	PI	0+73.65	1,762,981.73	1,018,557.34						
	PT	0+84.69	1,762,975.69	1,018,546.64						
	CC		1,762,949.57	1,018,561.40	30.00'	12.29'	23.33'	22.75'	190° 59' 09.35"	44° 33' 30.16" LT
PRDRIVE5	POT	1+49.75	1,762,943.68	1,018,490.00						
PGL ALIGNMENT NAME: P RAVEN										
POINT/CURVE NAME	POC	STATION	NORTHING	EASTING	RADIUS	TANGENT	LENGTH	LONG CHORD	DEGREE	DELTA
RAVEN01	POT	100+00.00	1,763,326.68	1,018,365.33			85.11			
P_RAVEN1	PC	100+85.11	1,763,397.13	1,018,413.09						
	PI	101+13.71	1,763,420.80	1,018,429.14						
	PT	101+40.50	1,763,449.40	1,018,428.58						
	CC		1,763,447.63	1,018,338.60	90.00'	28.60'	55.38'	54.51'	63° 39' 43.12"	35° 15' 29.31" LT
RAVEN02	POT	102+03.83	1,763,512.71	1,018,427.34						
PGL ALIGNMENT NAME: P STATES										
POINT/CURVE NAME	POC	STATION	NORTHING	EASTING	RADIUS	TANGENT	LENGTH	LONG CHORD	DEGREE	DELTA
STATES01	POT	200+50.00	1,762,793.45	1,018,489.40			180.24			
STATES02	POT	202+30.24	1,762,938.34	1,018,596.62			40.00			
STATES03	POT	202+70.24	1,762,962.56	1,018,628.45						

CHRISTOPHER B. BURKE ENGINEERING, LTD.
16021 W. 159th Street, Suite 201
Lockport, Illinois 60441
(815) 770-2850

USER NAME = aschaefer	DESIGNED - AJS/JRS	REVISED -
	DRAWN - PWN/JRS	REVISED -
PLOT SCALE = 100'	CHECKED - AJS	REVISED -
PLOT DATE = 11/2/2025	DATE -	REVISED -

STATE OF ILLINOIS
DEPARTMENT OF TRANSPORTATION

SEIL ROAD WIDENING
ALIGNMENT, TIES, AND BENCHMARKS
PROPOSED ROADWAY

SCALE: 100' | SHEET 3 OF 3 SHEETS | STA. 17+66.99 TO STA. 48+59.02

F.A.U. RTE.	SECTION	COUNTY	TOTAL SHEETS	SHEET NO.
0403	21-00047-00-WR	WILL	149	24

CONTRACT NO. 61M01

ILLINOIS FED. AID PROJECT

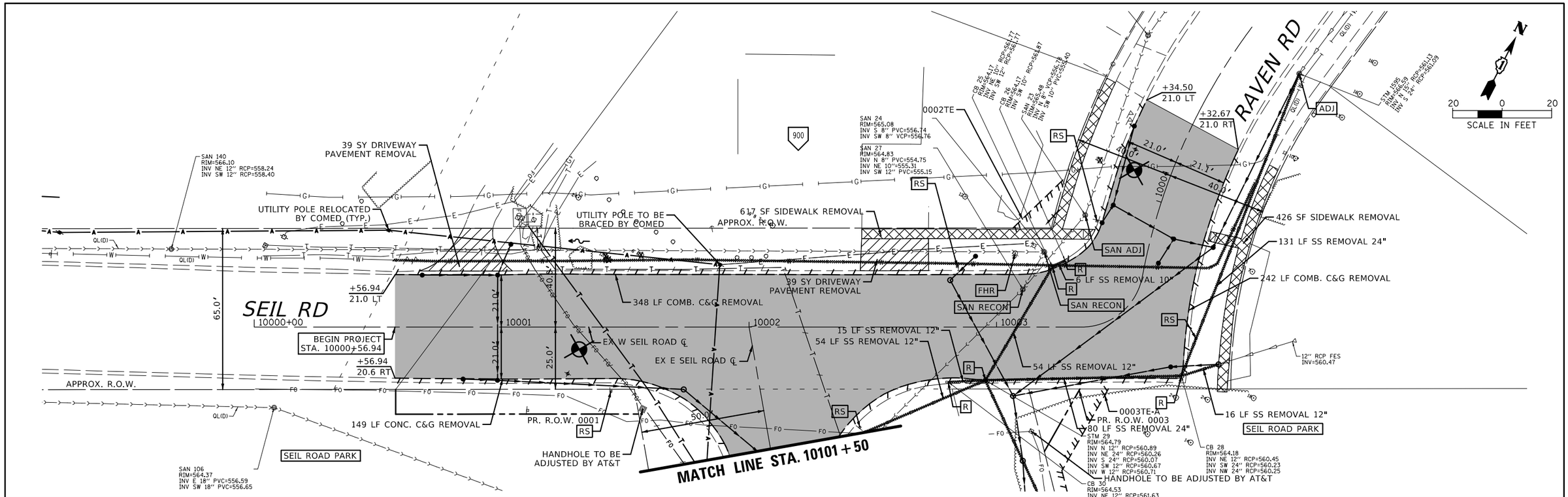

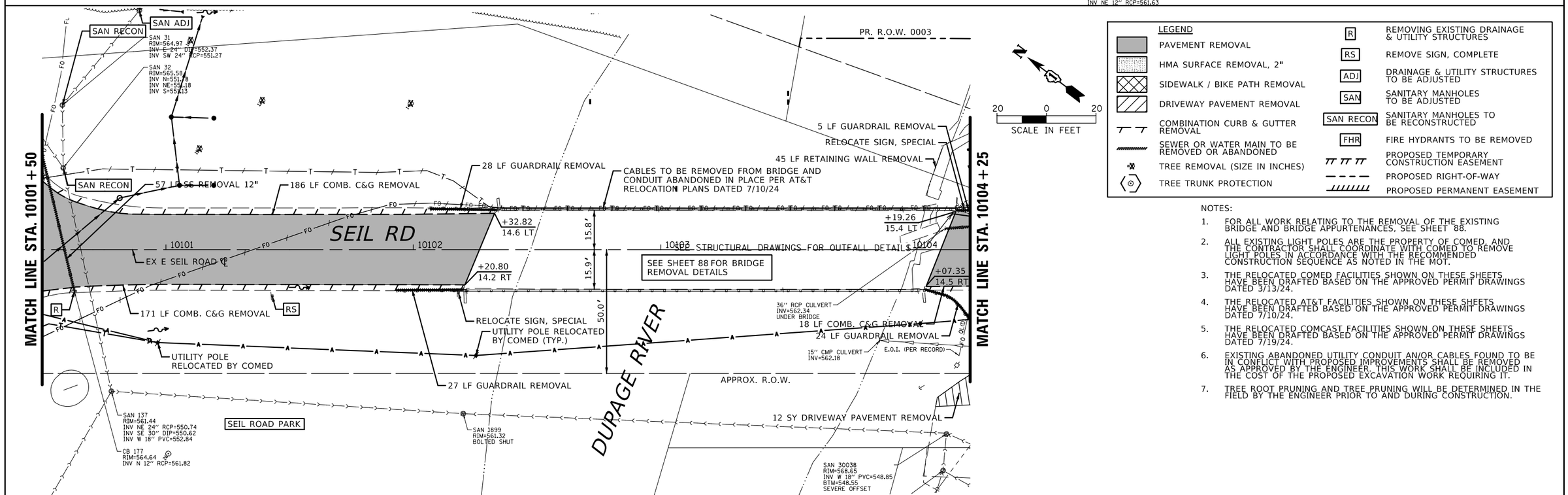

LEGEND

- PAVEMENT REMOVAL
- HMA SURFACE REMOVAL, 2"
- SIDEWALK / BIKE PATH REMOVAL
- DRIVEWAY PAVEMENT REMOVAL
- COMBINATION CURB & GUTTER REMOVAL
- SEWER OR WATER MAIN TO BE REMOVED OR ABANDONED
- TREE REMOVAL (SIZE IN INCHES)
- TREE TRUNK PROTECTION
- R — REMOVING EXISTING DRAINAGE & UTILITY STRUCTURES
- RS — REMOVE SIGN, COMPLETE
- ADJ — DRAINAGE & UTILITY STRUCTURES TO BE ADJUSTED
- SAN — SANITARY MANHOLES TO BE ADJUSTED
- SAN RECON — SANITARY MANHOLES TO BE RECONSTRUCTED
- FHR — FIRE HYDRANTS TO BE REMOVED
- PROPOSED TEMPORARY CONSTRUCTION EASEMENT
- PROPOSED RIGHT-OF-WAY
- PROPOSED PERMANENT EASEMENT

NOTES:

1. FOR ALL WORK RELATING TO THE REMOVAL OF THE EXISTING BRIDGE AND BRIDGE APPURTENANCES, SEE SHEET 88.
2. ALL EXISTING LIGHT POLES ARE THE PROPERTY OF COMED, AND THE CONTRACTOR SHALL COORDINATE WITH COMED TO REMOVE LIGHT POLES IN ACCORDANCE WITH THE RECOMMENDED CONSTRUCTION SEQUENCE AS NOTED IN THE MOT.
3. THE RELOCATED COMED FACILITIES SHOWN ON THESE SHEETS HAVE BEEN DRAFTED BASED ON THE APPROVED PERMIT DRAWINGS DATED 3/13/24.
4. THE RELOCATED AT&T FACILITIES SHOWN ON THESE SHEETS HAVE BEEN DRAFTED BASED ON THE APPROVED PERMIT DRAWINGS DATED 7/10/24.
5. THE RELOCATED COMCAST FACILITIES SHOWN ON THESE SHEETS HAVE BEEN DRAFTED BASED ON THE APPROVED PERMIT DRAWINGS DATED 7/19/24.
6. EXISTING ABANDONED UTILITY CONDUIT AN/OR CABLES FOUND TO BE IN CONFLICT WITH PROPOSED IMPROVEMENTS SHALL BE REMOVED AS APPROVED BY THE ENGINEER. THIS WORK SHALL BE INCLUDED IN THE COST OF THE PROPOSED EXCAVATION WORK REQUIRING IT.
7. TREE ROOT PRUNING AND TREE PRUNING WILL BE DETERMINED IN THE FIELD BY THE ENGINEER PRIOR TO AND DURING CONSTRUCTION.

CHRISTOPHER B. BURKE ENGINEERING, LTD.
16021 W. 159th Street, Suite 201
Lockport, Illinois 60441
(815) 770-2650

USER NAME = aschaefer	DESIGNED - AJS/JRS	REVISED -	
	DRAWN - PWN/JRS	REVISED -	
PLOT SCALE = 40'	CHECKED - AJS	REVISED -	
PLOT DATE = 11/2/2025	DATE -	REVISED -	

STATE OF ILLINOIS
DEPARTMENT OF TRANSPORTATION

SEIL ROAD WIDENING
EXISTING CONDITIONS AND REMOVAL PLAN

SCALE: 40' | SHEET 1 OF 3 SHEETS | STA. 10000+00 TO STA. 10004+80

F.A.U. RTE.	SECTION	COUNTY	TOTAL SHEETS	SHEET NO.
0403	21-00047-00-WR	WILL	149	25

CONTRACT NO. 61M01

ILLINOIS FED. AID PROJECT

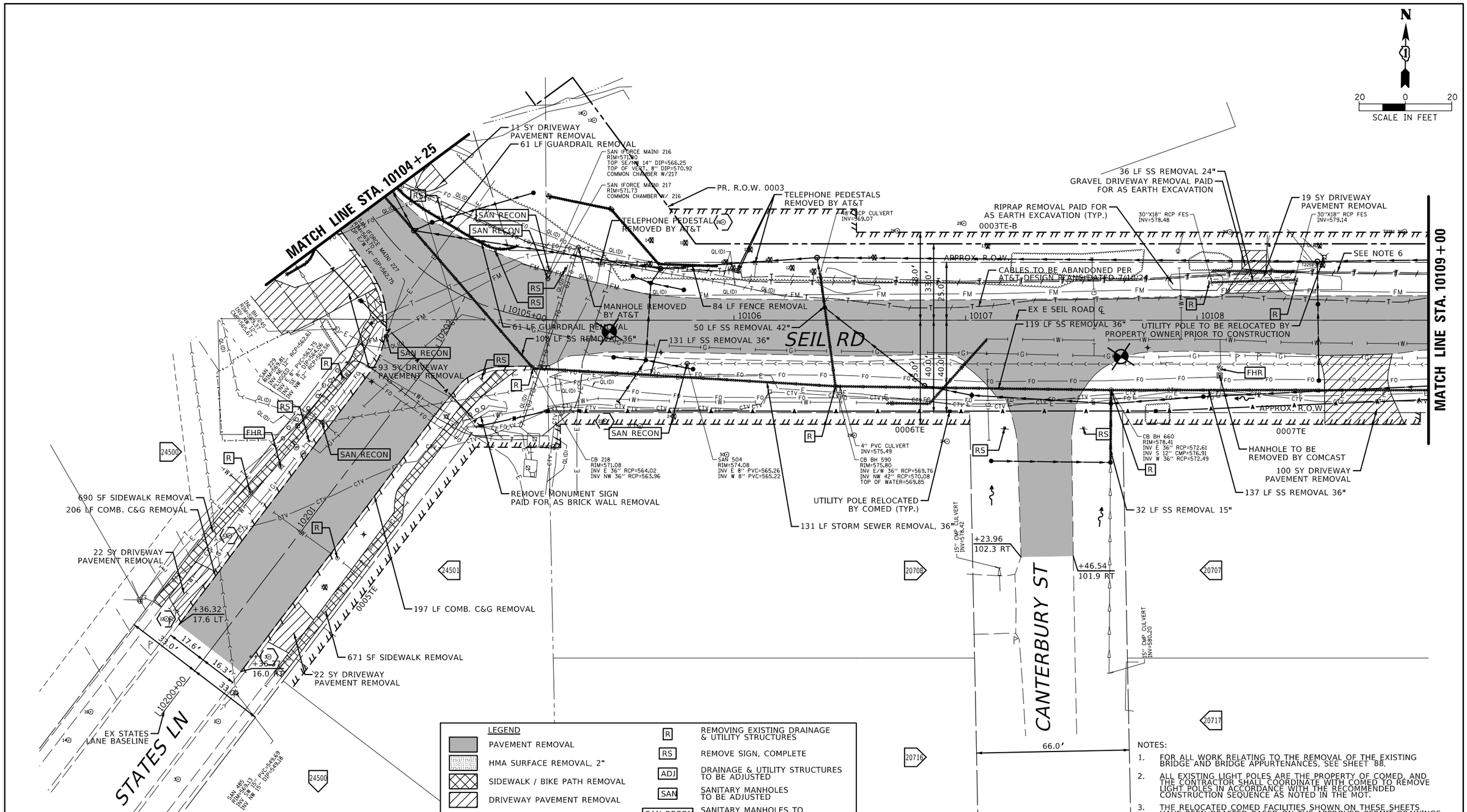

LEGEND

PAVEMENT REMOVAL	R — REMOVING EXISTING DRAINAGE & UTILITY STRUCTURES
HMA SURFACE REMOVAL, 2"	RS — REMOVE SIGN, COMPLETE
SIDEWALK / BIKE PATH REMOVAL	ADJ — DRAINAGE & UTILITY STRUCTURES TO BE ADJUSTED
DRIVEWAY PAVEMENT REMOVAL	SAN — SANITARY MANHOLES TO BE ADJUSTED
COMBINATION CURB & GUTTER REMOVAL	SAN RECON — SANITARY MANHOLES TO BE RECONSTRUCTED
SEWER OR WATER MAIN TO BE REMOVED OR ABANDONED	FHR — FIRE HYDRANTS TO BE REMOVED
TREE REMOVAL (SIZE IN INCHES)	PROPOSED TEMPORARY CONSTRUCTION EASEMENT
TREE TRUNK PROTECTION	PROPOSED RIGHT-OF-WAY
	PROPOSED PERMANENT EASEMENT

NOTES:

1. FOR ALL WORK RELATING TO THE REMOVAL OF THE EXISTING BRIDGE AND BRIDGE APPURTENANCES, SEE SHEET 88.
2. ALL EXISTING LIGHT POLES ARE THE PROPERTY OF COMED, AND THE CONTRACTOR SHALL COORDINATE WITH COMED TO REMOVE LIGHT POLES IN ACCORDANCE WITH THE RECOMMENDED CONSTRUCTION SEQUENCE AS NOTED IN THE MOT.
3. THE RELOCATED COMED FACILITIES SHOWN ON THESE SHEETS HAVE BEEN DRAFTED BASED ON THE APPROVED PERMIT DRAWINGS DATED 3/13/24.
4. THE RELOCATED AT&T FACILITIES SHOWN ON THESE SHEETS HAVE BEEN DRAFTED BASED ON THE APPROVED PERMIT DRAWINGS DATED 7/10/24.
5. THE RELOCATED COMCAST FACILITIES SHOWN ON THESE SHEETS HAVE BEEN DRAFTED BASED ON THE APPROVED PERMIT DRAWINGS DATED 7/19/24.
6. EXISTING ABANDONED UTILITY CONDUIT AN/OR CABLES FOUND TO BE IN CONFLICT WITH PROPOSED IMPROVEMENTS SHALL BE REMOVED AS APPROVED BY THE ENGINEER. THIS WORK SHALL BE INCLUDED IN THE COST OF THE PROPOSED EXCAVATION WORK REQUIRING IT.
7. TREE ROOT PRUNING AND TREE PRUNING WILL BE DETERMINED IN THE FIELD BY THE ENGINEER PRIOR TO AND DURING CONSTRUCTION.

CHRISTOPHER B. BURKE ENGINEERING, LTD.
9575 W. 159th Street, Suite 201
Lockport, Illinois 60441
(815) 770-2850

USER NAME = aschaefer	DESIGNED - AJS/JRS	REVISED -	
	DRAWN - PWN/JRS	REVISED -	
PLOT SCALE = 40'	CHECKED - AJS	REVISED -	
PLOT DATE = 11/2/2025	DATE -	REVISED -	

STATE OF ILLINOIS
DEPARTMENT OF TRANSPORTATION

SEIL ROAD WIDENING
EXISTING CONDITIONS AND REMOVAL PLAN

SCALE: 40' | SHEET 2 OF 3 SHEETS | STA. 10104+25 TO STA. 10109+00

F.A.U. RTE.	SECTION	COUNTY	TOTAL SHEETS	SHEET NO.
0403	21-00047-00-WR	WILL	149	26

CONTRACT NO. 61M01

ILLINOIS FED. AID PROJECT

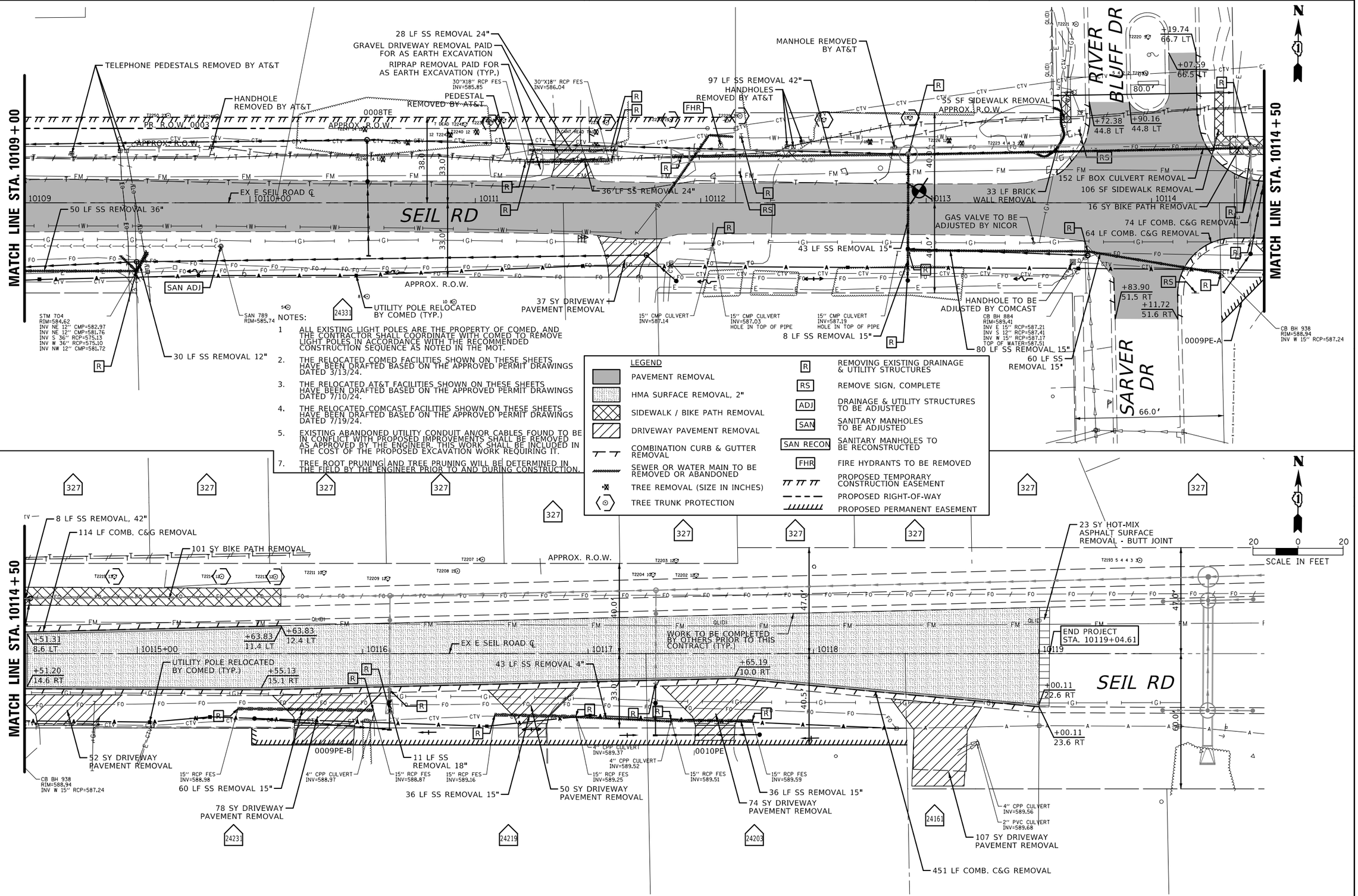

NOTES:

1. ALL EXISTING LIGHT POLES ARE THE PROPERTY OF COMED, AND THE CONTRACTOR SHALL COORDINATE WITH COMED TO REMOVE LIGHT POLES IN ACCORDANCE WITH THE RECOMMENDED CONSTRUCTION SEQUENCE AS NOTED IN THE MOT.
2. THE RELOCATED COMED FACILITIES SHOWN ON THESE SHEETS HAVE BEEN DRAFTED BASED ON THE APPROVED PERMIT DRAWINGS DATED 3/13/24.
3. THE RELOCATED AT&T FACILITIES SHOWN ON THESE SHEETS HAVE BEEN DRAFTED BASED ON THE APPROVED PERMIT DRAWINGS DATED 7/10/24.
4. THE RELOCATED COMCAST FACILITIES SHOWN ON THESE SHEETS HAVE BEEN DRAFTED BASED ON THE APPROVED PERMIT DRAWINGS DATED 7/19/24.
5. EXISTING ABANDONED UTILITY CONDUIT AN/OR CABLES FOUND TO BE IN CONFLICT WITH PROPOSED IMPROVEMENTS SHALL BE REMOVED AS APPROVED BY THE ENGINEER. THIS WORK SHALL BE INCLUDED IN THE COST OF THE PROPOSED EXCAVATION WORK REQUIRING IT.
7. TREE ROOT PRUNING AND TREE PRUNING WILL BE DETERMINED IN THE FIELD BY THE ENGINEER PRIOR TO AND DURING CONSTRUCTION.

CHRISTOPHER B. BURKE ENGINEERING, LTD.
16221 W. 159th Street, Suite 201
Lockport, Illinois 60441
(815) 770-2650

USER NAME = eschaefer	DESIGNED - AJS/JRS	REVISED -	
	DRAWN - PWN/JRS	REVISED -	
PLOT SCALE = 40'	CHECKED - AJS	REVISED -	
PLOT DATE = 11/2/2025	DATE -	REVISED -	

STATE OF ILLINOIS
DEPARTMENT OF TRANSPORTATION

SEIL ROAD WIDENING
EXISTING CONDITIONS AND REMOVAL PLAN

SCALE: 40' | SHEET 3 OF 3 SHEETS | STA. 10109+00 TO STA. 10119+50

F.A.U. RTE.	SECTION	COUNTY	TOTAL SHEETS	SHEET NO.
0403	21-00047-00-WR	WILL	149	27

CONTRACT NO. 61M01

ILLINOIS FED. AID PROJECT

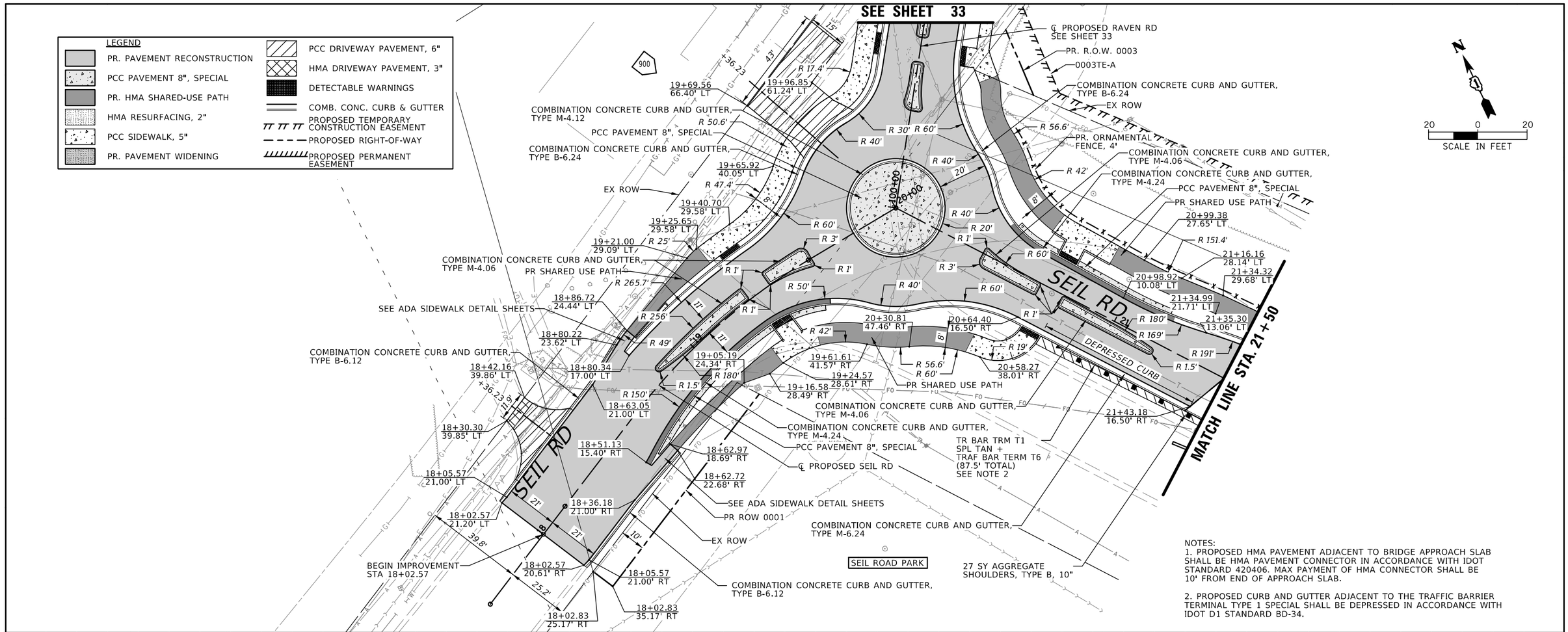

NOTES:
1. PROPOSED HMA PAVEMENT ADJACENT TO BRIDGE APPROACH SLAB SHALL BE HMA PAVEMENT CONNECTOR IN ACCORDANCE WITH IDOT STANDARD 420406. MAX PAYMENT OF HMA CONNECTOR SHALL BE 10' FROM END OF APPROACH SLAB.

2. PROPOSED CURB AND GUTTER ADJACENT TO THE TRAFFIC BARRIER TERMINAL TYPE 1 SPECIAL SHALL BE DEPRESSED IN ACCORDANCE WITH IDOT D1 STANDARD BD-34.

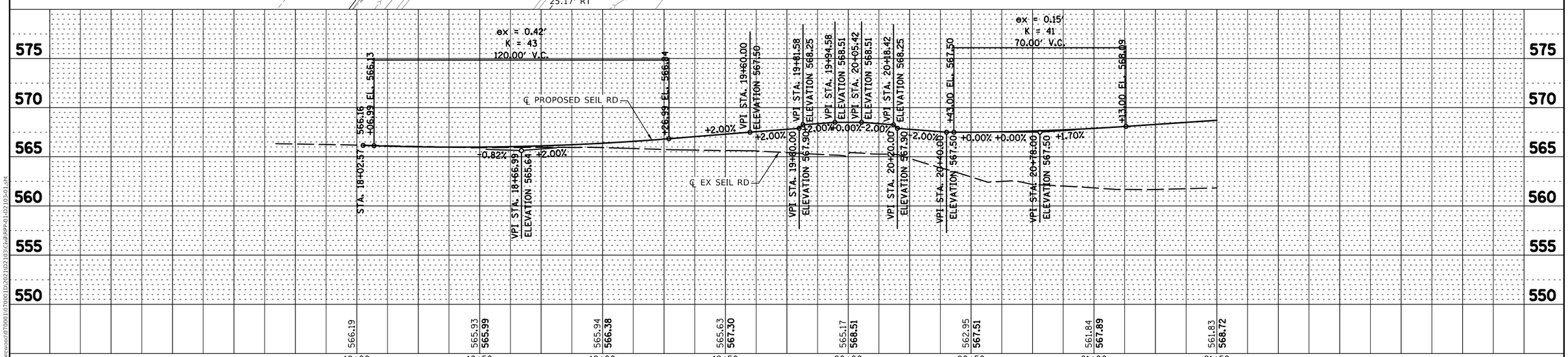

PLAN
SURVEYED
PLOTTED
ALIGNMENT CHECKED
RT. OF WAY CHECKED
CADD FILE NAME
NOTE BOOK
NO.
BY
DATE

PROFILE
SURVEYED
PLOTTED
GRADES CHECKED
B.M. NOTED
STRUCTURE NOTATNS CHKD
NOTE BOOK
NO.
BY
DATE

MODEL: Default
FILE NAME: \\s\Shorewood\070001\070001D\2021\D221103\Civil\BPP-01-D221103-01.sht

CHRISTOPHER B. BURKE ENGINEERING, LTD.
16221 W. 159th Street, Suite 201
Lockport, IL 60441
(815) 770-2850

USER NAME = aschaefer	DESIGNED - AJS/JRS	REVISED -	
	DRAWN - PWN/JRS	REVISED -	
PLOT SCALE = 40'	CHECKED - AJS	REVISED -	
PLOT DATE = 11/2/2025	DATE -	REVISED -	

STATE OF ILLINOIS
DEPARTMENT OF TRANSPORTATION

SEIL ROAD WIDENING
ROADWAY PLAN AND PROFILE

SCALE: 40' | SHEET 1 OF 7 SHEETS | STA. 18+00 TO STA. 21+50

F.A.U. RTE.	SECTION	COUNTY	TOTAL SHEETS	SHEET NO.
0403	21-00047-00-WR	WILL	149	28
		CONTRACT NO.61M01		
		ILLINOIS	FED. AID PROJECT	

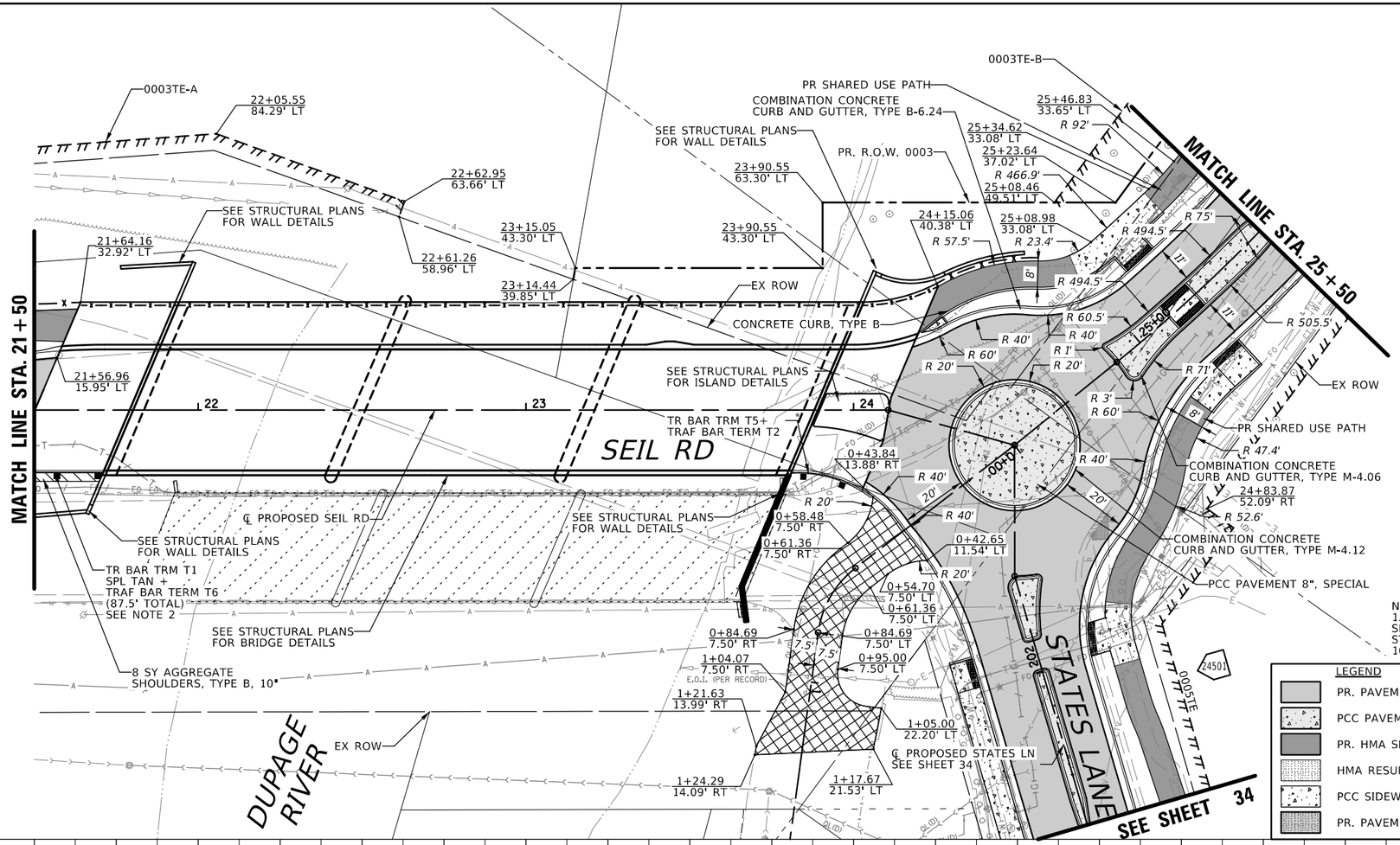

NOTES:
1. PROPOSED HMA PAVEMENT ADJACENT TO BRIDGE APPROACH SLAB SHALL BE HMA PAVEMENT CONNECTOR IN ACCORDANCE WITH IDOT STANDARD 420406. MAX PAYMENT OF HMA CONNECTOR SHALL BE 10' FROM END OF APPROACH SLAB.

LEGEND

- PR. PAVEMENT RECONSTRUCTION
- PCC PAVEMENT 8", SPECIAL
- PR. HMA SHARED-USE PATH
- HMA RESURFACING, 2"
- PCC SIDEWALK, 5"
- PR. PAVEMENT WIDENING
- PCC DRIVEWAY PAVEMENT, 6"
- HMA DRIVEWAY PAVEMENT, 3"
- DETECTABLE WARNINGS
- COMB. CONC. CURB & GUTTER
- PROPOSED TEMPORARY CONSTRUCTION EASEMENT
- PROPOSED RIGHT-OF-WAY
- PROPOSED PERMANENT EASEMENT

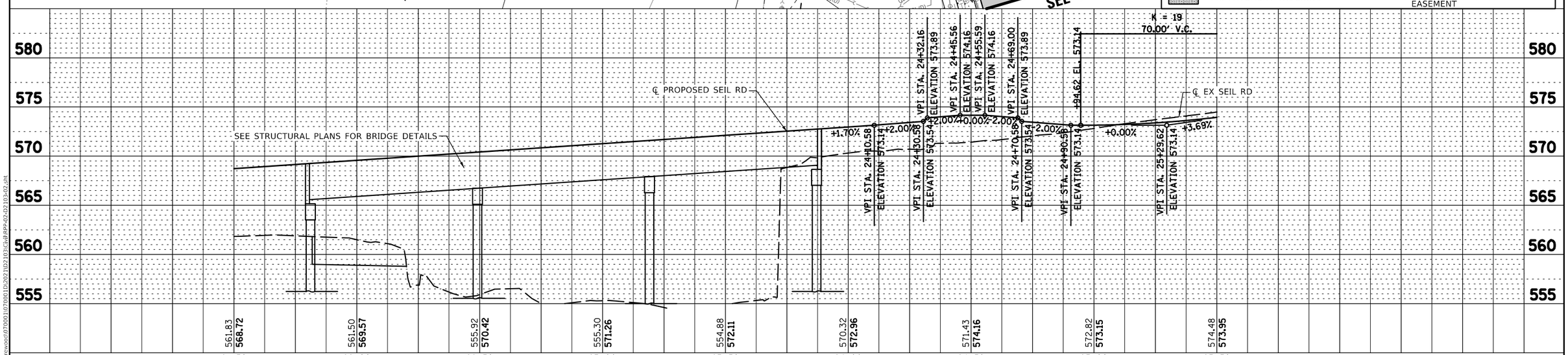

PLAN	
SURVEYED	
PLOTTED	
ALIGNMENT CHECKED	
RT. OF WAY CHECKED	
CADD FILE NAME	
NOTE BOOK NO.	
BY	DATE

PROFILE	
SURVEYED	
PLOTTED	
GRADES CHECKED	
B.M. NOTED	
STRUCTURE NOTAT'NS CHKD	
NOTE BOOK NO.	
BY	DATE

MODEL: Default
FILE NAME: \\pshorewood\0700001\0700D1D\2021\D2103\Grd\BPP-02-D2103-02.sht

CHRISTOPHER B. BURKE ENGINEERING, LTD.
16221 W. 159th Street, Suite 201
Lockport, Illinois 60441
(815) 770-2800

USER NAME = aschaefer	DESIGNED - AJS/JRS	REVISED -	
	DRAWN - PWN/JRS	REVISED -	
PLOT SCALE = 40'	CHECKED - AJS	REVISED -	
PLOT DATE = 11/2/2025	DATE -	REVISED -	

STATE OF ILLINOIS
DEPARTMENT OF TRANSPORTATION

SEIL ROAD WIDENING
ROADWAY PLAN AND PROFILE

SCALE: 40' | SHEET 2 OF 7 SHEETS | STA. 21+50 TO STA. 25+50

F.A.U. RTE.	SECTION	COUNTY	TOTAL SHEETS	SHEET NO.
0403	21-00047-00-WR	WILL	149	29

CONTRACT NO.61M01

ILLINOIS | FED. AID PROJECT

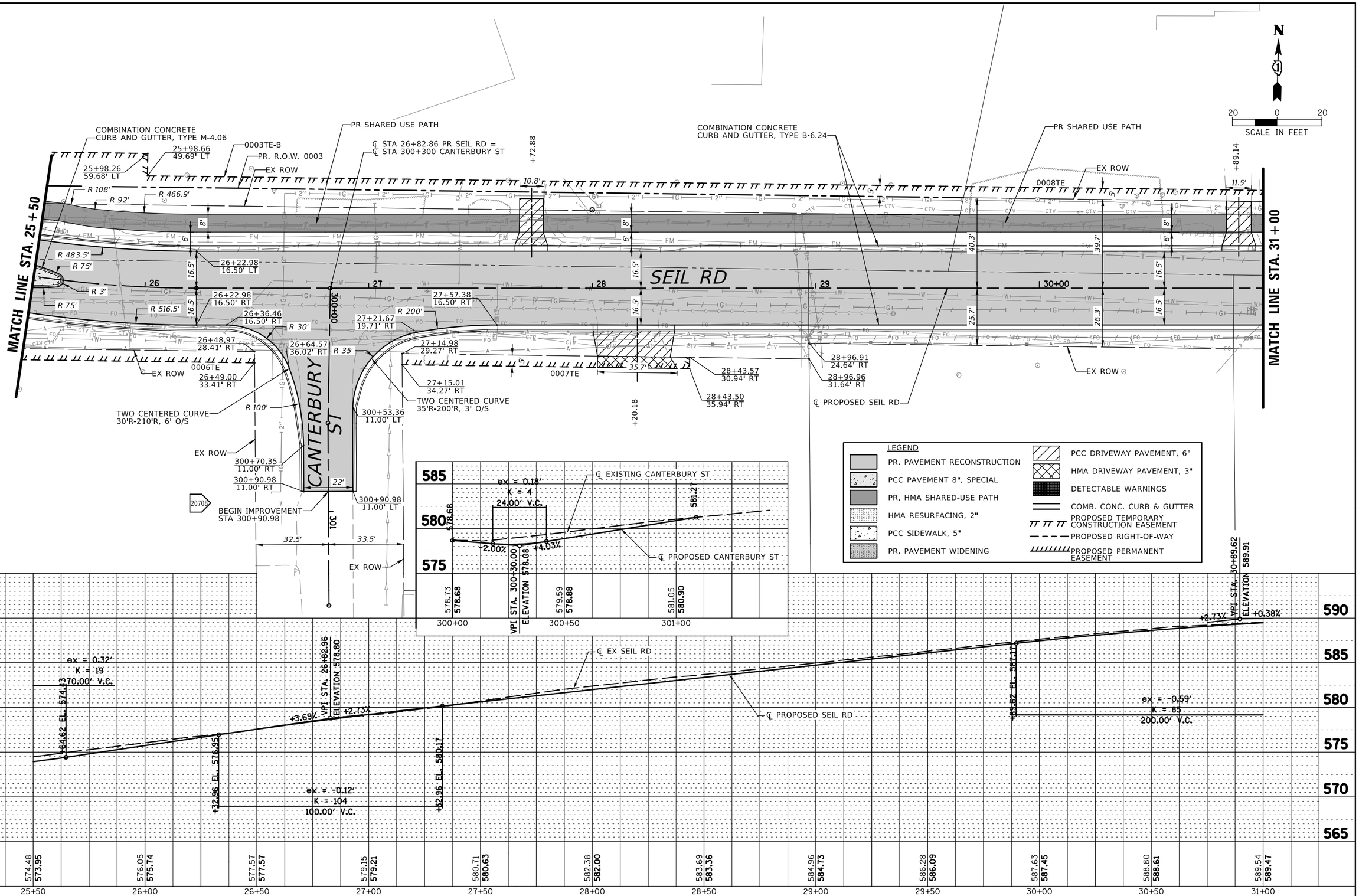

PLAN	SURVEYED	PLOTTED	ALIGNMENT CHECKED	RT. OF WAY CHECKED	CADD FILE NAME	NOTE BOOK NO.	BY	DATE

PROFILE	SURVEYED	PLOTTED	GRADES CHECKED	B.M. NOTED	STRUCTURE NOTATNS CHKD	NOTE BOOK NO.	BY	DATE

MODEL: Default
FILE NAME: N:\Shorewood\070001\070001D\2021\02103\Civil\RPP-03-02103-03.sht

CHRISTOPHER B. BURKE ENGINEERING, LTD.
16221 W. 159th Street, Suite 201
Lockport, Illinois 60441
(815) 770-2800

USER NAME = aschaefer	DESIGNED - AJS/JRS	REVISED -	
	DRAWN - PWN/JRS	REVISED -	
PLOT SCALE = 40'	CHECKED - AJS	REVISED -	
PLOT DATE = 11/2/2025	DATE -	REVISED -	

STATE OF ILLINOIS
DEPARTMENT OF TRANSPORTATION

SEIL ROAD WIDENING
ROADWAY PLAN AND PROFILE

SCALE: 40' | SHEET 3 OF 7 SHEETS | STA. 25+50 TO STA. 31+00

F.A.U. RTE.	SECTION	COUNTY	TOTAL SHEETS	SHEET NO.
0403	21-00047-00-WR	WILL	149	30

CONTRACT NO.61M01

ILLINOIS | FED. AID PROJECT

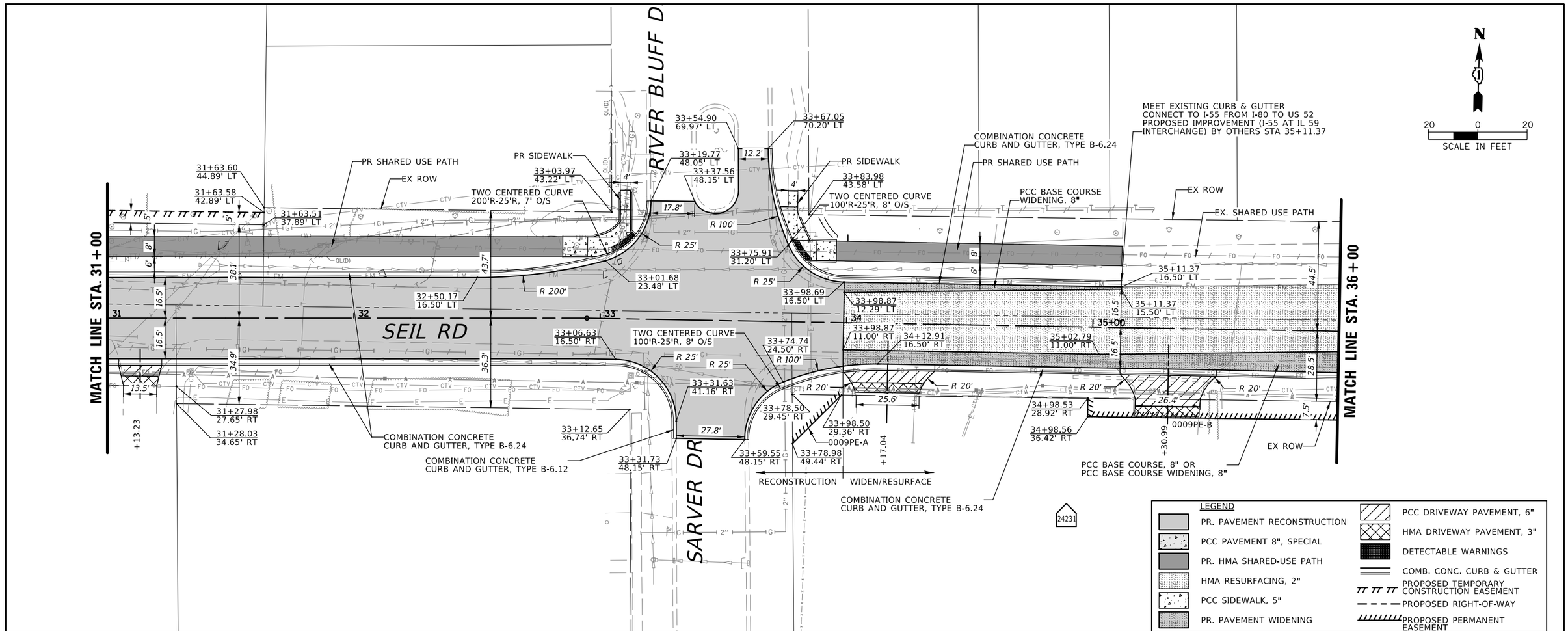

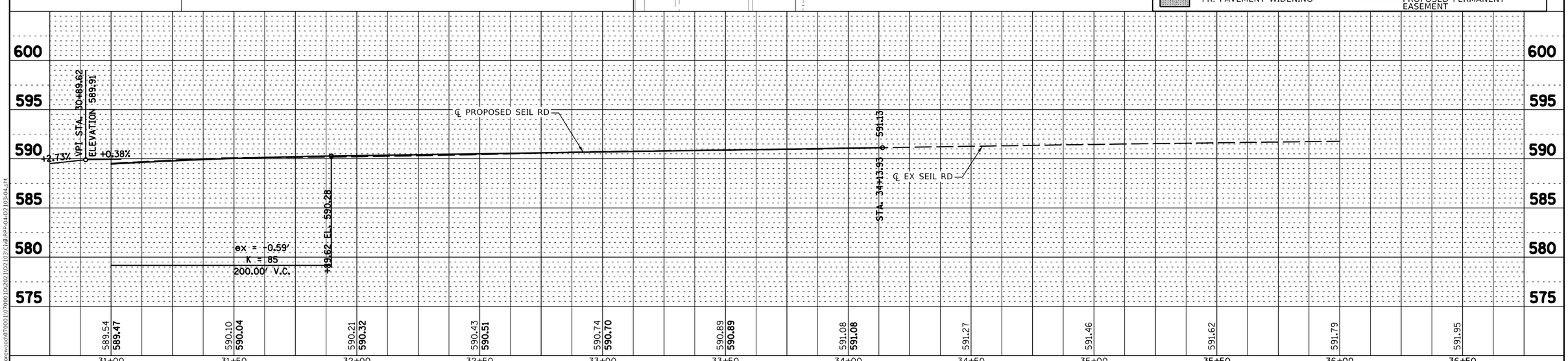

PLAN	BY	DATE
SURVEYED		
PLOTTED		
ALIGNMENT CHECKED		
RT. OF WAY CHECKED		
CADD FILE NAME		
NOTE BOOK NO.		

PROFILE	BY	DATE
SURVEYED		
PLOTTED		
GRADES CHECKED		
B.M. NOTED		
STRUCTURE NOTAT'NS CH'KD		
NOTE BOOK NO.		

MODEL: Default
FILE NAME: \\pshorewood\0700011\0700D1D\2021\D2103\Grd\BPP-04-D2103-04.sht

CHRISTOPHER B. BURKE ENGINEERING, LTD.
16221 W. 159th Street, Suite 201
Lockport, Illinois 60441
(815) 770-2800

USER NAME = aschaefer	DESIGNED - AJS/JRS	REVISED -	
	DRAWN - PWN/JRS	REVISED -	
PLOT SCALE = 40'	CHECKED - AJS	REVISED -	
PLOT DATE = 11/2/2025	DATE -	REVISED -	

STATE OF ILLINOIS
DEPARTMENT OF TRANSPORTATION

SEIL ROAD WIDENING
ROADWAY PLAN AND PROFILE

SCALE: 40' | SHEET 4 OF 7 SHEETS | STA. 31+00 TO STA. 36+00

F.A.U. RTE.	SECTION	COUNTY	TOTAL SHEETS	SHEET NO.
0403	21-00047-00-WR	WILL	149	31

CONTRACT NO.61M01

ILLINOIS | FED. AID PROJECT

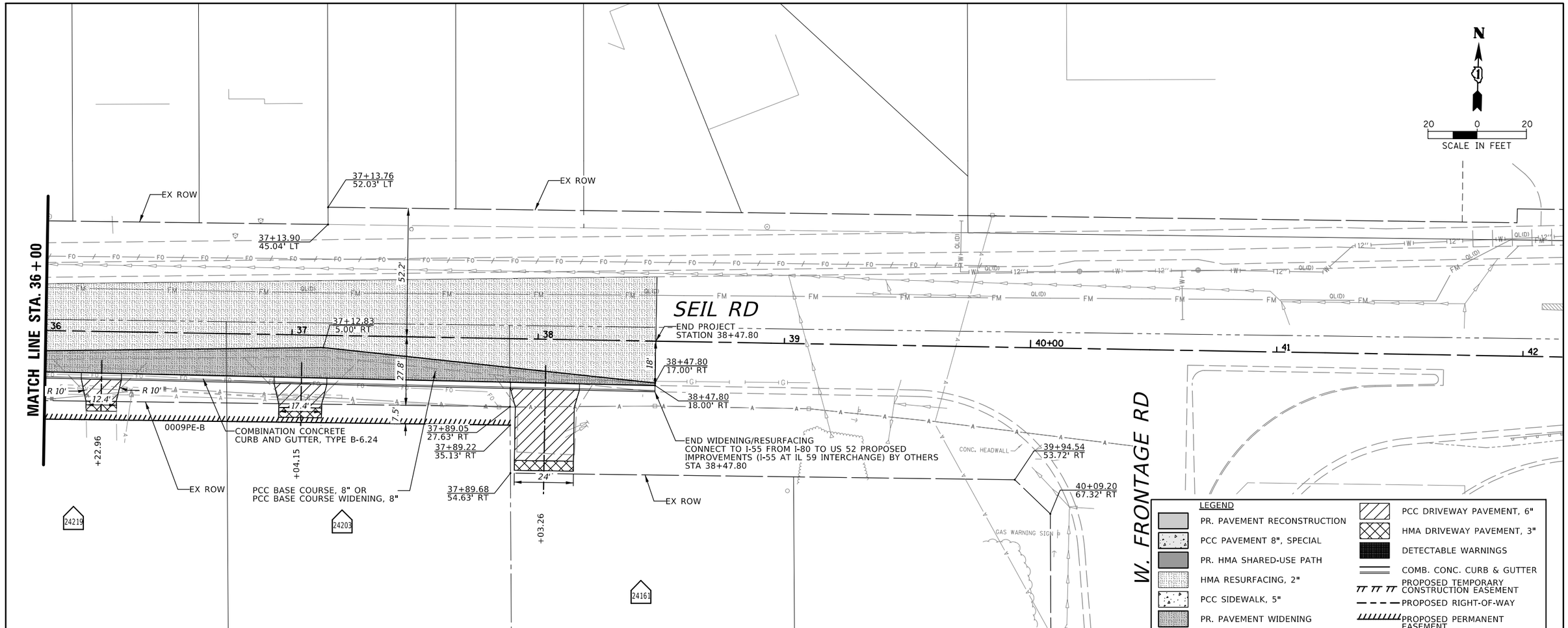

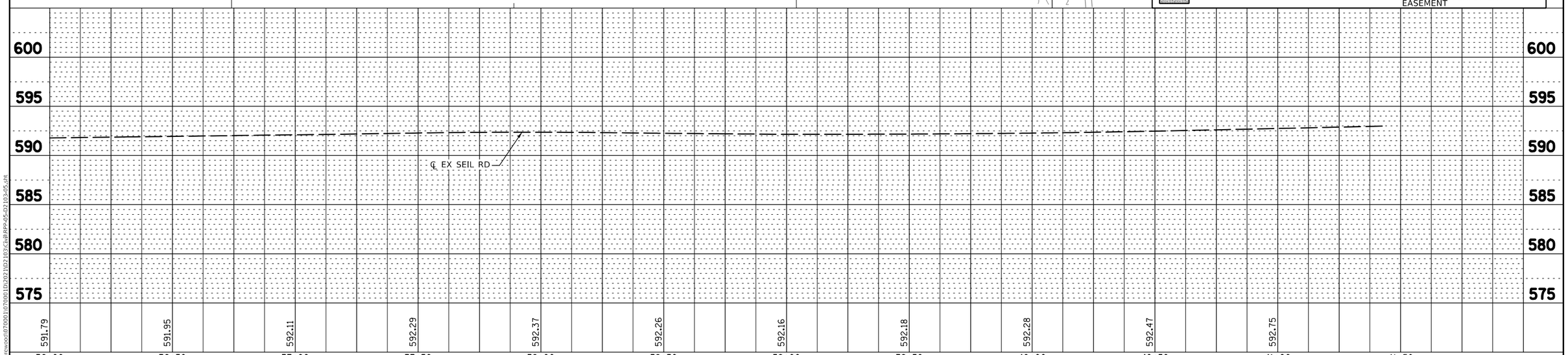

PLAN		
NOTE BOOK NO.	SURVEYED	DATE
	PLOTTED	
	ALIGNMENT CHECKED	BY
	RT. OF WAY CHECKED	
	CADD FILE NAME	

PROFILE		
NOTE BOOK NO.	SURVEYED	DATE
	PLOTTED	
	GRADES CHECKED	BY
	B.M. NOTED	
	STRUCTURE NOTATIONS CHKD	

MODEL: Default
FILE NAME: \\Shorewood\070001\D\2021\102103\Civil\RP-05-02103-05.sht

CHRISTOPHER B. BURKE ENGINEERING, LTD.
16221 W. 159th Street, Suite 201
Lockport, Illinois 60441
(815) 770-2850

USER NAME = aschaefer	DESIGNED - AJS/JRS	REVISED -
	DRAWN - PWN/JRS	REVISED -
PLOT SCALE = 40'	CHECKED - AJS	REVISED -
PLOT DATE = 11/2/2025	DATE -	REVISED -

STATE OF ILLINOIS
DEPARTMENT OF TRANSPORTATION

SEIL ROAD WIDENING
ROADWAY PLAN AND PROFILE

SCALE: 40' | SHEET 5 OF 7 SHEETS | STA. 36+00 TO STA. 42+00

F.A.U. RTE.	SECTION	COUNTY	TOTAL SHEETS	SHEET NO.
0403	21-00047-00-WR	WILL	149	32
		CONTRACT NO.61M01		
		ILLINOIS	FED. AID PROJECT	

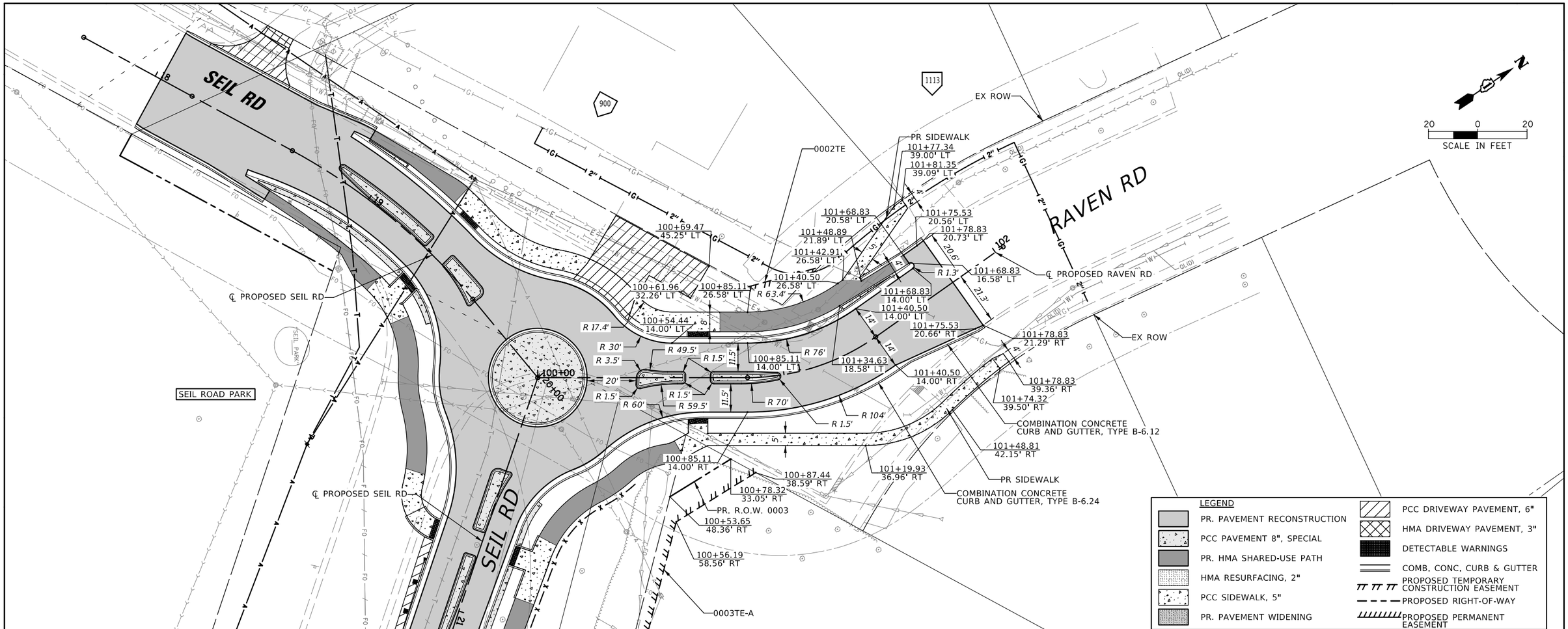

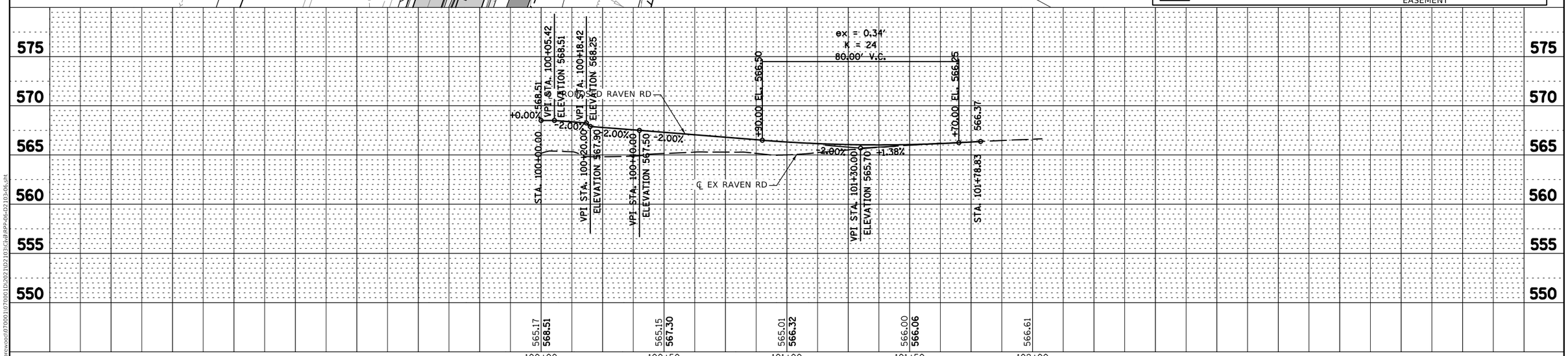

PLAN		BY	DATE
SURVEYED			
PLOTTED			
ALIGNMENT CHECKED			
RT. OF WAY CHECKED			
CADD FILE NAME			
NOTE BOOK			
NO.			

PROFILE		BY	DATE
SURVEYED			
PLOTTED			
GRADES CHECKED			
B.M. NOTED			
STRUCTURE NOTAT'NS CHKD			
NOTE BOOK			
NO.			

MODEL: Default
FILE NAME: N:\Shareware\0700010700010D\2021\2103\Civil\RP-06-D2103-06.sht

CHRISTOPHER B. BURKE ENGINEERING, LTD.
16221 W. 159th Street, Suite 201
Lockport, Illinois 60441
(815) 770-2650

USER NAME = aschaefer	DESIGNED - AJS/JRS	REVISED -	
	DRAWN - PWN/JRS	REVISED -	
PLOT SCALE = 40'	CHECKED - AJS	REVISED -	
PLOT DATE = 11/2/2025	DATE -	REVISED -	

STATE OF ILLINOIS
DEPARTMENT OF TRANSPORTATION

SEIL ROAD WIDENING
ROADWAY PLAN AND PROFILE

SCALE: 40' | SHEET 6 OF 7 SHEETS | STA. 100+00 TO STA. 101+78.83

F.A.U. RTE.	SECTION	COUNTY	TOTAL SHEETS	SHEET NO.
0403	21-00047-00-WR	WILL	149	33
		CONTRACT NO.61M01		
		ILLINOIS FED. AID PROJECT		

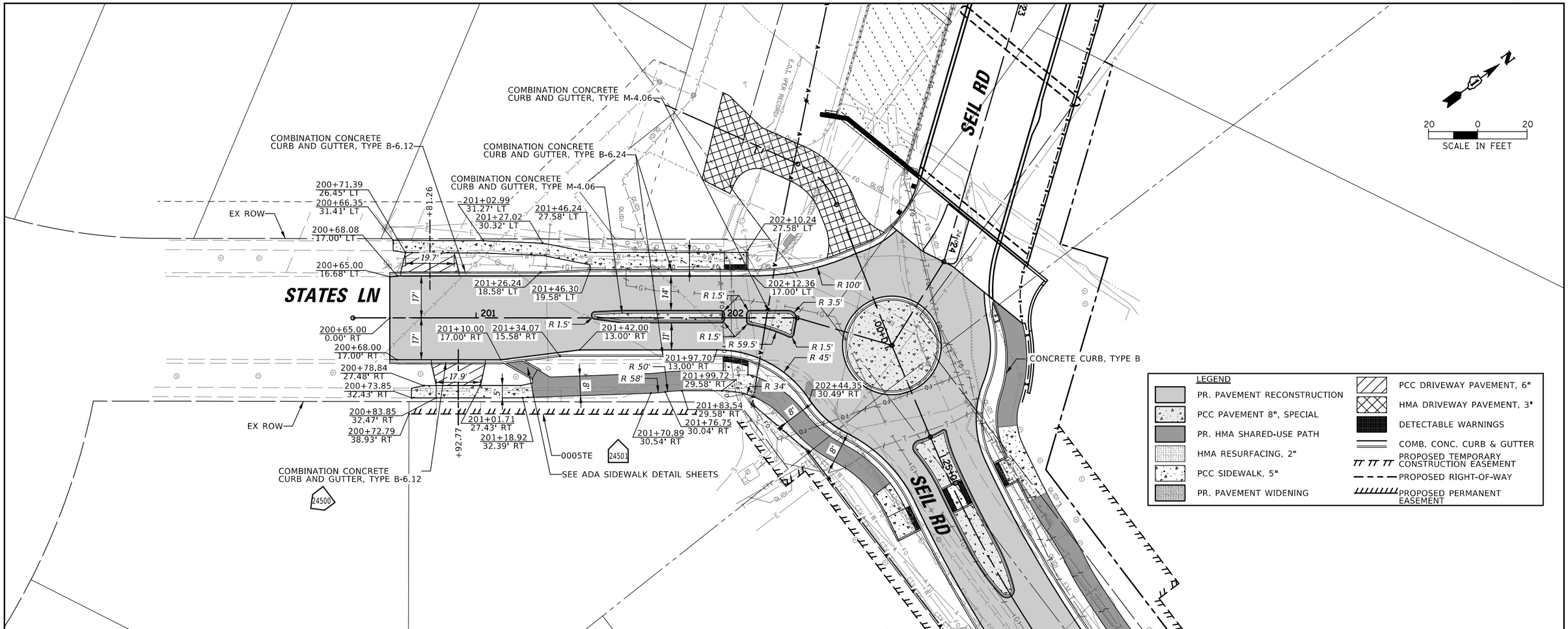

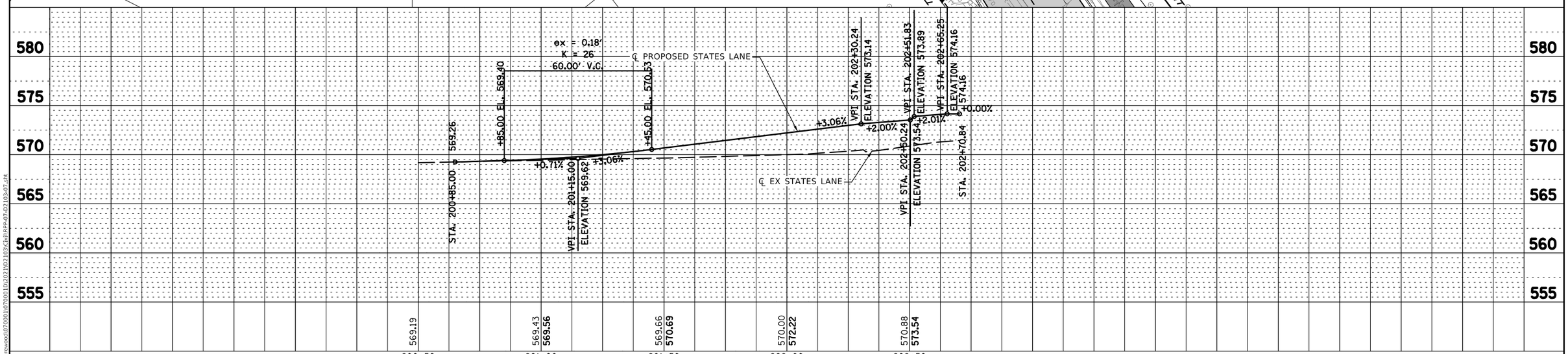

CHRISTOPHER B. BURKE ENGINEERING, LTD. 16221 W. 159th Street, Suite 201 Lockport, Illinois 60441 (815) 770-2800	USER NAME = aschaefer	DESIGNED - AJS/JRS	REVISED -
		DRAWN - PWN/JRS	REVISED -
	PLOT SCALE = 40'	CHECKED - AJS	REVISED -
	PLOT DATE = 11/2/2025	DATE -	REVISED -

STATE OF ILLINOIS
DEPARTMENT OF TRANSPORTATION

SEIL ROAD WIDENING
ROADWAY PLAN AND PROFILE

SCALE: 40' | SHEET 7 OF 7 SHEETS | STA. 200+65 TO STA. 202+00

F.A.U. RTE.	SECTION	COUNTY	TOTAL SHEETS	SHEET NO.
0403	21-00047-00-WR	WILL	149	34

CONTRACT NO.61M01

ILLINOIS | FED. AID PROJECT

PLAN
NOTE BOOK NO.
SURVEYED
PLOTTED
ALIGNMENT CHECKED
RT. OF WAY CHECKED
CADD FILE NAME
BY
DATE

PROFILE
NOTE BOOK NO.
SURVEYED
PLOTTED
GRADES CHECKED
B.M. NOTED
STRUCTURE NOTATNS CHKD
BY
DATE

MODEL: Default
FILE NAME: N:\Shorewood\070001\070001D\2022\102103\Civil\RPP-07-02103-07.sht

GENERAL NOTES

1. THE CONTRACTOR SHALL NOTIFY NORIEL NORIEGA AT THE VILLAGE OF SHOREWOOD AT 815-553-2321 AT LEAST 48 HOURS IN ADVANCE OF BEGINNING WORK.

2. THE CONTRACTOR SHALL CONTACT THE IDOT ARTERIAL TRAFFIC CONTROL SUPERVISOR AT (847) 705-4470 A MINIMUM OF 72 HOURS IN ADVANCE OF BEGINNING WORK.

3. ROADWORK REQUIRING A CLOSURE OF A LANE (IN ADDITION TO THE STAGING SHOWN IN THE PLANS), WHICH HAS BEEN OPENED PREVIOUSLY TO TRAFFIC, WILL BE ALLOWED AT THE DISCRETION OF THE ENGINEER AND UNDER THE FOLLOWING CONDITIONS:

   a. THE LANE CLOSURE SHALL ONLY BE IN EFFECT WHILE WORKERS ARE PRESENT IN OR WITHIN TWO (2) FEET OF TRAFFIC.

   b. ALL TRAFFIC CONTROL DEVICES PERTAINING TO THE LANE CLOSURE SHALL BE REMOVED FROM THE ROADWAY AT THE END OF THE WORKDAY.

   c. LANE CLOSURES SHALL BE IN ACCORDANCE WITH IDOT STANDARDS 701001, 701006, 701501, 701502, 701701 AND 701801 AND AS DIRECTED BY THE ENGINEER.

4. ALL AREAS UNDERCUT FOR AGGREGATE SUBGRADE IMPROVEMENT SHALL NOT BE LEFT UNFILLED OVERNIGHT. DROP-OFFS GREATER THAN 24 INCHES SHALL NOT BE LEFT UNFILLED OVERNIGHT.

5. DRIVEWAY ACCESS AND ACCESS TO SIDE ROADS SHALL BE MAINTAINED AT ALL TIMES THROUGH THE USE OF "TEMPORARY ACCESS (PRIVATE ENTRANCE)" AND "TEMPORARY ACCESS (COMMERCIAL ENTRANCE)" AND "TEMPORARY ACCESS (ROAD)". DRIVEWAYS AND SIDE ROADS SHALL BE CONSTRUCTED IN STAGES, ONE HALF AT A TIME.

6. IF DRIVEWAY ACCESS CANNOT BE MAINTAINED, PEDESTRIAN ACCESS SHALL BE PROVIDED TO PROPERTY AS APPROVED BY THE ENGINEER.

7. UTILITY TRENCHES SHALL BE BACKFILLED OR COVERED WITH STEEL PLATES AT THE END OF EACH DAY. NO SEPARATE PAYMENT SHALL BE MADE FOR STEEL PLATES.

8. SPACING OF TYPE II BARRICADES OR DRUMS SHALL BE AS FOLLOWS: 50' C-C ON TANGENTS, 20' C-C IN TAPERS/SHIFTS, 12' C-C AROUND RADII.

9. ALL SIGNAGE TO BE IN ACCORDANCE WITH MANUAL ON UNIFORM TRAFFIC CONTROL DEVICES (MUTCD). MAINTENANCE OF TRAFFIC SHOWN IS THE MINIMUM REQUIRED; THE CONTRACTOR SHALL PROVIDE ADDITIONAL TRAFFIC CONTROL MEASURES AS DIRECTED BY RESIDENT ENGINEER.

10. TEMPORARY INFORMATION SIGNING SHALL BE PLACED AT ALL COMMERCIAL DRIVEWAY ENTRANCES THAT ARE OPEN TO TRAFFIC WITHIN THE ACTIVE WORK ZONE. THESE SIGNS SHALL BE REMOVED IF THE ENTRANCE IS UNDER CONSTRUCTION AND ACCESS IS TEMPORARILY RESTRICTED.

11. THE HMA SURFACE COURSE SHALL NOT BE PLACED UNTIL AFTER STAGE 2. TRAFFIC CONTROL AND PROTECTION FOR THIS WORK SHALL BE PER IDOT STANDARD 701502.

12. SEE HIGHWAY STANDARDS AND DISTRICT ONE DETAILS FOR ADDITIONAL REQUIREMENTS AND INFORMATION.

CONSTRUCTION STAGING

PRE-STAGE – CONSTRUCT PROPOSED STORM SEWER ALONG NORTH SEIL ROAD PARKWAY FROM STA. 25+00 TO STA. 32+40 AND COMPLETE ALL WATER MAIN RELOCATIONS.

1. PLACE AND MAINTAIN SEDIMENT AND EROSION CONTROL MEASURES AS PER THE PLANS AND AS DIRECTED BY THE ENGINEER.

2. INSTALL AND BACKFILL ALL PROPOSED STORM SEWER. INSTALL NORTH HALF OF LATERALS CROSSING SEIL ROAD AND CAP FOR FUTURE CONNECTION DURING STAGE 1.

3. NICOR TO INSTALL NEW 2" GAS MAIN ALONG SEIL ROAD EAST OF STATES LANE AFTER STORM SEWER IN NORTH PARKWAY OF SEIL ROAD IS COMPLETE.

4. INSTALL AND BACKFILL ALL WATER MAIN RELOCATIONS.

5. PLACE TEMPORARY PATCHING OVER ALL SEWER/UTILITY TRENCHES LOCATED WITHIN TRAVEL LANES AS DIRECTED BY THE ENGINEER.

6. PLACE TEMPORARY PAVEMENT MARKINGS AND TRAFFIC CONTROL AS SHOWN ON THE STAGE 1 MAINTENANCE OF TRAFFIC PLANS. ANY EXISTING PAVEMENT MARKINGS IN CONFLICT WITH THE STAGE 1 PAVEMENT MARKINGS SHALL BE REMOVED.

STAGE 1 – PERFORM FULL CLOSURE OF SEIL ROAD BETWEEN RAVEN ROAD AND CANTERBURY STREET AND CLOSE THE SOUTH HALF OF SEIL ROAD FROM CANTERBURY STREET TO THE EAST PROJECT LIMIT. FULLY REMOVE EXISTING BRIDGE STRUCTURE, COMPLETE CONSTRUCTION OF THE PROPOSED BRIDGE, CONSTRUCT THE RAVEN ROAD AND STATES LANE ROUNDABOUTS, RECONSTRUCT/WIDEN FULL WIDTH OF SEIL ROAD FROM RAVEN ROAD TO CANTERBURY STREET, AND RECONSTRUCT/WIDEN SOUTH HALF OF SEIL ROAD FROM CANTERBURY STREET TO EAST PROJECT LIMIT.

1. PLACE AND MAINTAIN SEDIMENT AND EROSION CONTROL MEASURES AS PER THE PLANS AND AS DIRECTED BY THE ENGINEER.

2. COMPLETE ALL REMOVAL AND PROPOSED WORK AS SHOWN ON THE PLANS.

3. PLACE AGGREGATE SUBGRADE IMPROVEMENT AND BINDER COURSE IN PROPOSED FULL DEPTH PAVEMENT LOCATIONS.

4. COMPLETE LANDSCAPING.

5. PLACE TEMPORARY PAVEMENT MARKINGS AND TRAFFIC CONTROL AS SHOWN ON THE STAGE 2 MAINTENANCE OF TRAFFIC PLANS. ANY EXISTING OR TEMPORARY PAVEMENT MARKINGS REMAINING FROM STAGE 1 IN CONFLICT WITH STAGE 2 PAVEMENT MARKINGS SHALL BE REMOVED.

STAGE 2 – RECONSTRUCT/WIDEN THE NORTH HALF OF SEIL ROAD FROM CANTERBURY STREET TO EAST PROJECT LIMIT.

1. REMOVE ALL DETOUR SIGNAGE AND OPEN SEIL ROAD TO TWO-WAY TRAFFIC IN ACCORDANCE WITH THE MOT PLAN.

2. PLACE AND MAINTAIN SEDIMENT AND EROSION CONTROL MEASURES AS PER THE PLANS AND AS DIRECTED BY THE ENGINEER.

3. COMPLETE ALL REMOVAL AND PROPOSED WORK AS SHOWN ON THE PLANS.

4. PLACE AGGREGATE SUBGRADE IMPROVEMENT AND BINDER COURSE IN PROPOSED FULL DEPTH PAVEMENT LOCATIONS.

5. COMPLETE LANDSCAPING.

6. UPON COMPLETION, PLACE ANY REQUIRED TEMPORARY OR SHORT-TERM PAVEMENT MARKINGS FOR REMAINING WORK. ANY EXISTING OR TEMPORARY PAVEMENT MARKINGS REMAINING FROM STAGE 2 IN CONFLICT WITH STAGE 3 PAVEMENT MARKINGS SHALL BE REMOVED.

STAGE 3 – PLACEMENT OF FINAL ROADWAY SURFACE

1. COMPLETE ANY REMAINING HMA SURFACE REMOVAL AND CLEAN (SWEEP) PRIOR TO PLACING SURFACE COURSE.

2. PLACE ALL ROADWAY HMA SURFACE COURSE.

3. PLACE FINAL PAVEMENT MARKINGS.

4. COMPLETE ANY REMAINING PUNCH LIST ITEMS.

5. UPON APPROVAL FROM THE ENGINEER, REMOVE ALL TEMPORARY EROSION CONTROL ITEMS.

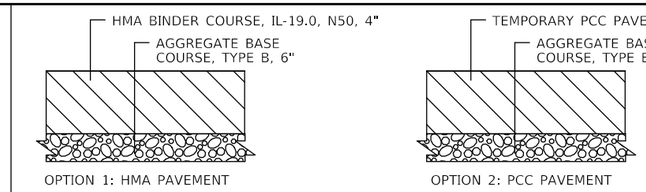

NOTE:
CONTRACTOR SHALL HAVE THE OPTION OF CONSTRUCTING TEMPORARY PAVEMENT USING EITHER HMA OR PCC PAVEMENT. THE HMA OR PCC PAVEMENT SHALL BE PAID FOR AS TEMPORARY PAVEMENT REGARDLESS OF MATERIAL CHOSEN, AND THE AGGREGATE BASE COURSE SHALL BE INCLUDED IN THE COST OF TEMPORARY PAVEMENT.

TEMPORARY PAVEMENT DETAIL

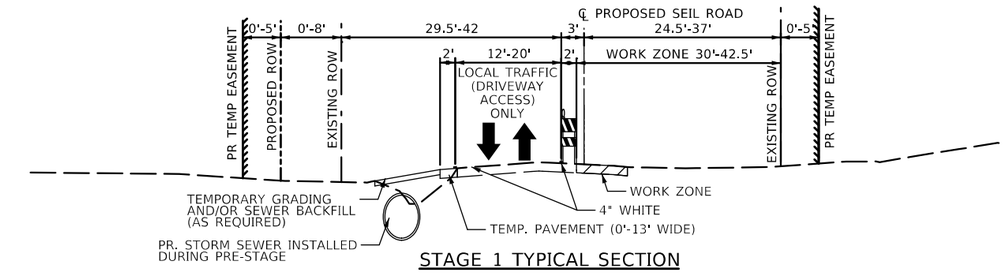

STAGE 1 TYPICAL SECTION
℄ PR. SEIL ROAD
STA. 27+30 TO STA. 33+50 (LOOKING EAST)

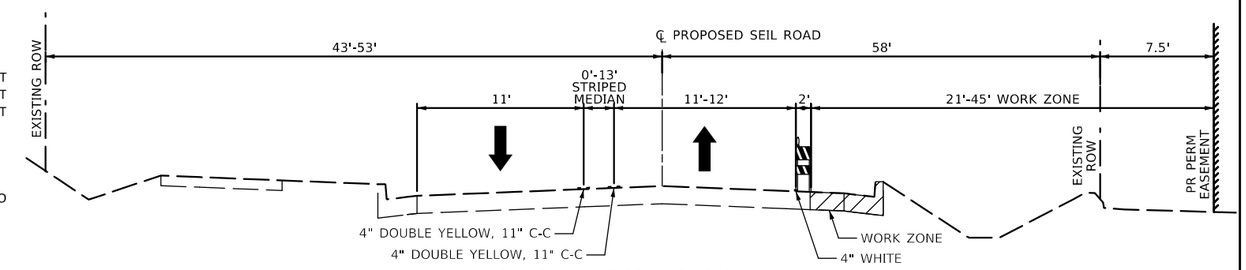

STAGE 1 TYPICAL SECTION
℄ PR. SEIL ROAD
STA. 33+50 TO STA. 40+30 (LOOKING EAST)

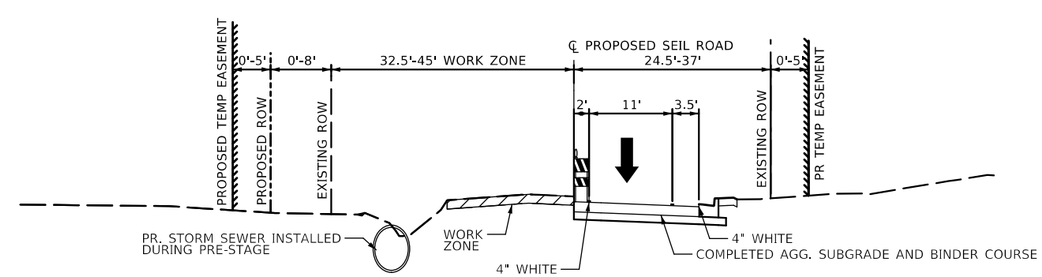

STAGE 2 TYPICAL SECTION
℄ PR. SEIL ROAD
STA. 27+25 TO STA. 34+00 (LOOKING EAST)

CHRISTOPHER B. BURKE ENGINEERING, LTD.
16021 W. 159th Street, Suite 201
Lockport, Illinois 60441
(815) 770-2650

USER NAME = aschaefer	DESIGNED - AJS/JRS	REVISED -	
	DRAWN - JRS/PWN	REVISED -	
PLOT SCALE = N.T.S.	CHECKED - AJS	REVISED -	
PLOT DATE = 11/2/2025	DATE -	REVISED -	

STATE OF ILLINOIS
DEPARTMENT OF TRANSPORTATION

SEIL ROAD WIDENING
MAINTENANCE OF TRAFFIC GENERAL NOTES, CONSTRUCTION STAGING AND TYPICAL SECTIONS

SCALE: N.T.S. | SHEET 1 OF 1 SHEETS | STA. TO STA.

F.A.U. RTE.	SECTION	COUNTY	TOTAL SHEETS	SHEET NO.
0403	21-00047-00-WR	WILL	149	35

CONTRACT NO. 61M01

ILLINOIS FED. AID PROJECT

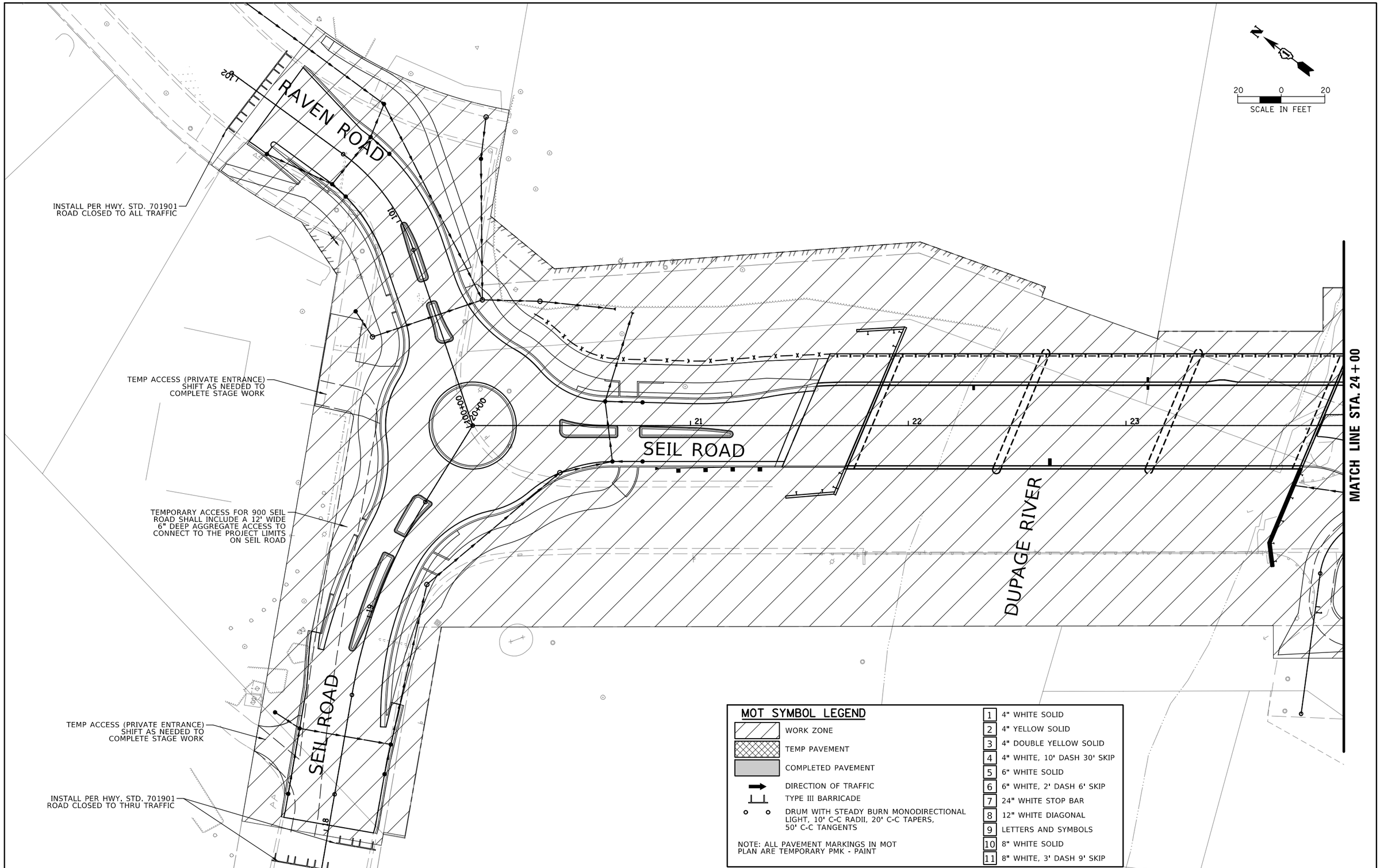

CHRISTOPHER B. BURKE ENGINEERING, LTD.
9575 W. 159th Street, Suite 201
Lockport, Illinois 60441
(815) 770-2850

USER NAME = aschaefer	DESIGNED - AJS/JRS	REVISED -
	DRAWN - PWN/JRS	REVISED -
PLOT SCALE = 40'	CHECKED - AJS	REVISED -
PLOT DATE = 11/2/2025	DATE -	REVISED -

STATE OF ILLINOIS
DEPARTMENT OF TRANSPORTATION

SEIL ROAD WIDENING
MAINTENANCE OF TRAFFIC – STAGE 1

SCALE: 40' | SHEET 1 OF 5 SHEETS | STA. 17+75 TO STA. 24+00

F.A.U. RTE.	SECTION	COUNTY	TOTAL SHEETS	SHEET NO.
0403	21-00047-00-WR	WILL	149	36
		CONTRACT NO. 61M01		
		ILLINOIS FED. AID PROJECT		

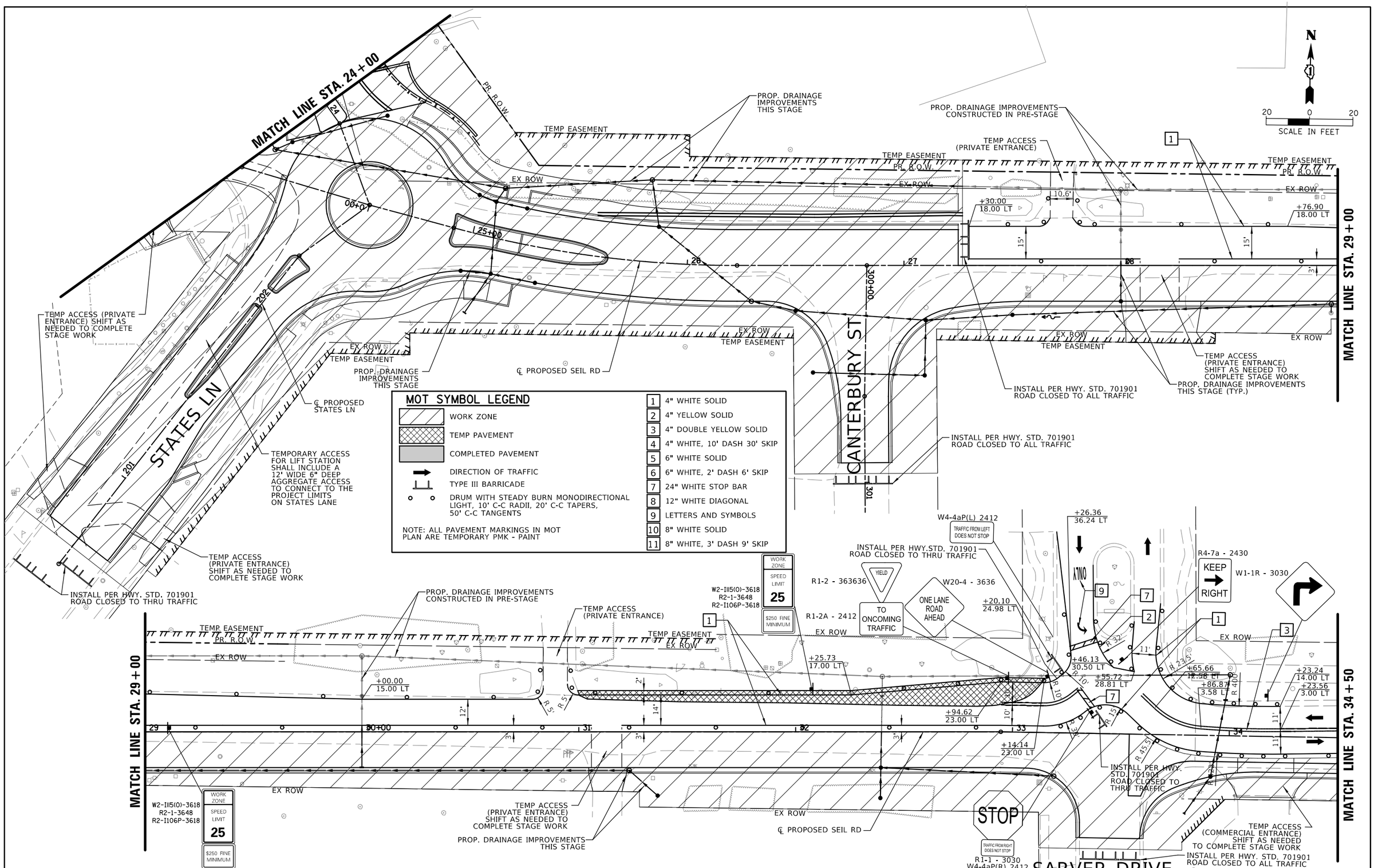

CHRISTOPHER B. BURKE ENGINEERING, LTD.
16221 W. 159th Street, Suite 201
Lockport, Illinois 60441
(815) 770-2850

USER NAME = aschaefer	DESIGNED - AJS/JRS	REVISED -	
	DRAWN - PWN/JRS	REVISED -	
PLOT SCALE = 40'	CHECKED - AJS	REVISED -	
PLOT DATE = 11/2/2025	DATE -	REVISED -	

STATE OF ILLINOIS
DEPARTMENT OF TRANSPORTATION

SEIL ROAD WIDENING
MAINTENANCE OF TRAFFIC – STAGE 1

SCALE: 40' | SHEET 2 OF 5 SHEETS | STA. 24+00 TO STA. 34+50

F.A.U. RTE.	SECTION	COUNTY	TOTAL SHEETS	SHEET NO.
0403	21-00047-00-WR	WILL	149	37

CONTRACT NO. 61M01

ILLINOIS FED. AID PROJECT

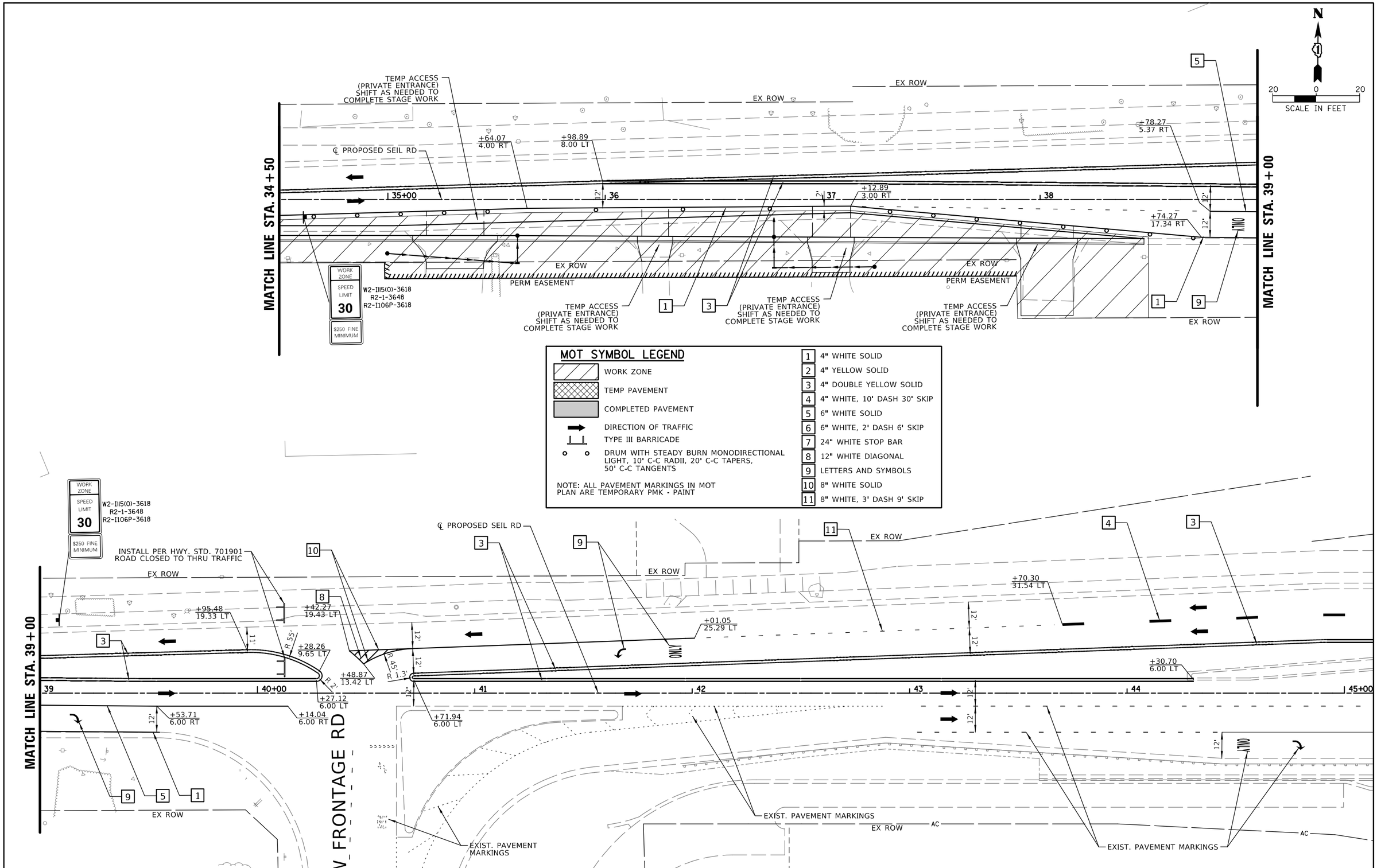

CHRISTOPHER B. BURKE ENGINEERING, LTD. 16021 W. 159th Street, Suite 201 Lockport, Illinois 60441 (815) 770-2650	USER NAME = aschaefer	DESIGNED - AJS/JRS	REVISED -
		DRAWN - PWN/JRS	REVISED -
	PLOT SCALE = 40'	CHECKED - AJS	REVISED -
	PLOT DATE = 11/2/2025	DATE -	REVISED -

STATE OF ILLINOIS
DEPARTMENT OF TRANSPORTATION

SEIL ROAD WIDENING
MAINTENANCE OF TRAFFIC – STAGE 1

SCALE: 40' | SHEET 3 OF 5 SHEETS | STA. 34+50 TO STA. 45+00

F.A.U. RTE.	SECTION	COUNTY	TOTAL SHEETS	SHEET NO.
0403	21-00047-00-WR	WILL	149	38
		CONTRACT NO. 61M01		
		ILLINOIS FED. AID PROJECT		

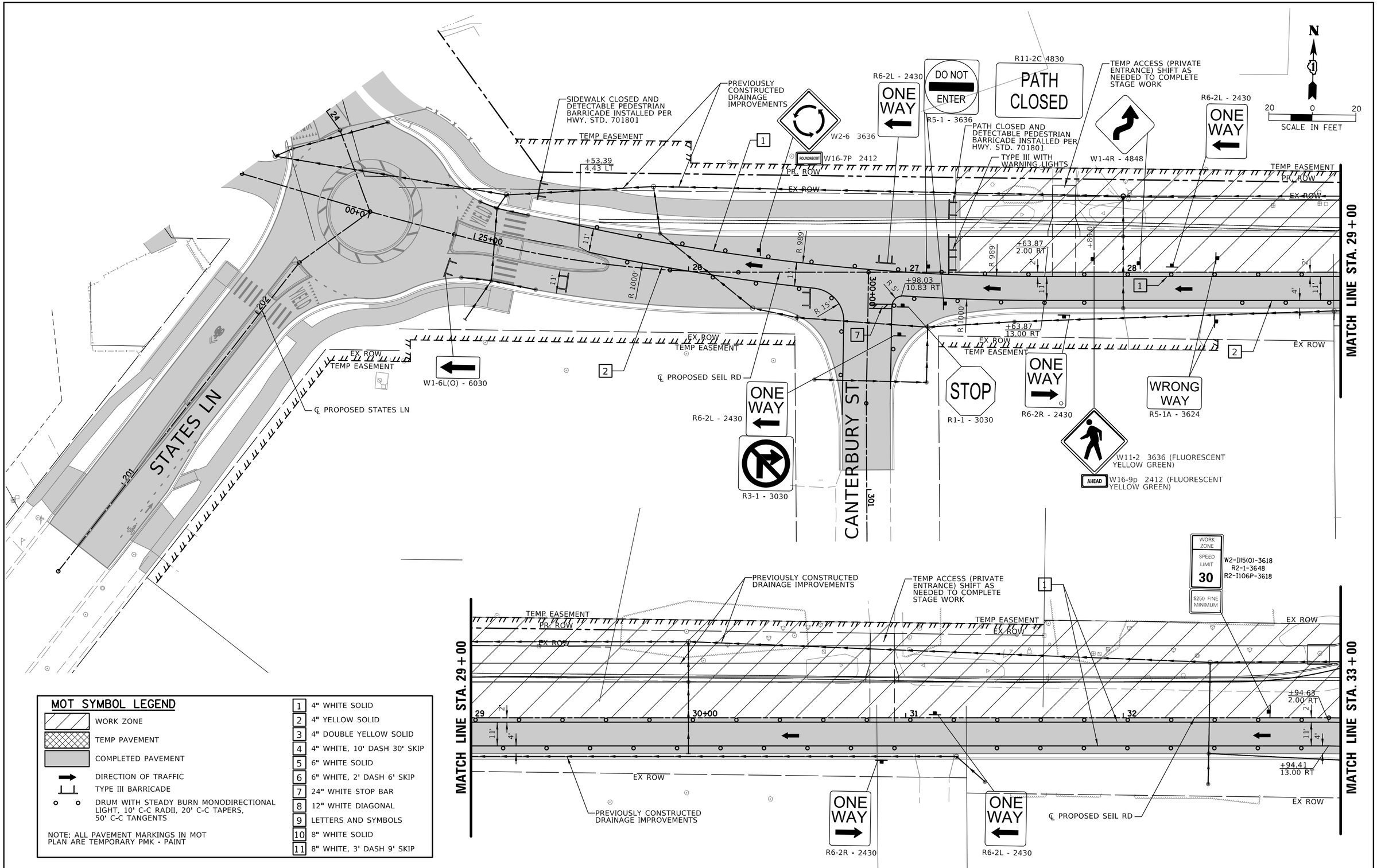

MOT SYMBOL LEGEND

- WORK ZONE
- TEMP PAVEMENT
- COMPLETED PAVEMENT
- DIRECTION OF TRAFFIC
- TYPE III BARRICADE
- DRUM WITH STEADY BURN MONODIRECTIONAL LIGHT, 10' C-C RADII, 20' C-C TAPERS, 50' C-C TANGENTS

NOTE: ALL PAVEMENT MARKINGS IN MOT PLAN ARE TEMPORARY PMK - PAINT

1	4" WHITE SOLID
2	4" YELLOW SOLID
3	4" DOUBLE YELLOW SOLID
4	4" WHITE, 10' DASH 30' SKIP
5	6" WHITE SOLID
6	6" WHITE, 2' DASH 6' SKIP
7	24" WHITE STOP BAR
8	12" WHITE DIAGONAL
9	LETTERS AND SYMBOLS
10	8" WHITE SOLID
11	8" WHITE, 3' DASH 9' SKIP

CHRISTOPHER B. BURKE ENGINEERING, LTD.
9023 W. 159th Street, Suite 201
Lockport, Illinois 60441
(815) 770-2850

USER NAME = aschaefer	DESIGNED - AJS/JRS	REVISED -	
	DRAWN - PWN/JRS	REVISED -	
PLOT SCALE = 40'	CHECKED - AJS	REVISED -	
PLOT DATE = 11/2/2025	DATE -	REVISED -	

STATE OF ILLINOIS
DEPARTMENT OF TRANSPORTATION

SEIL ROAD WIDENING
MAINTENANCE OF TRAFFIC – STAGE 2

SCALE: 40' | SHEET 4 OF 5 SHEETS | STA. 24+00 TO STA. 33+00

F.A.U. RTE.	SECTION	COUNTY	TOTAL SHEETS	SHEET NO.
0403	21-00047-00-WR	WILL	149	39

CONTRACT NO. 61M01

ILLINOIS FED. AID PROJECT

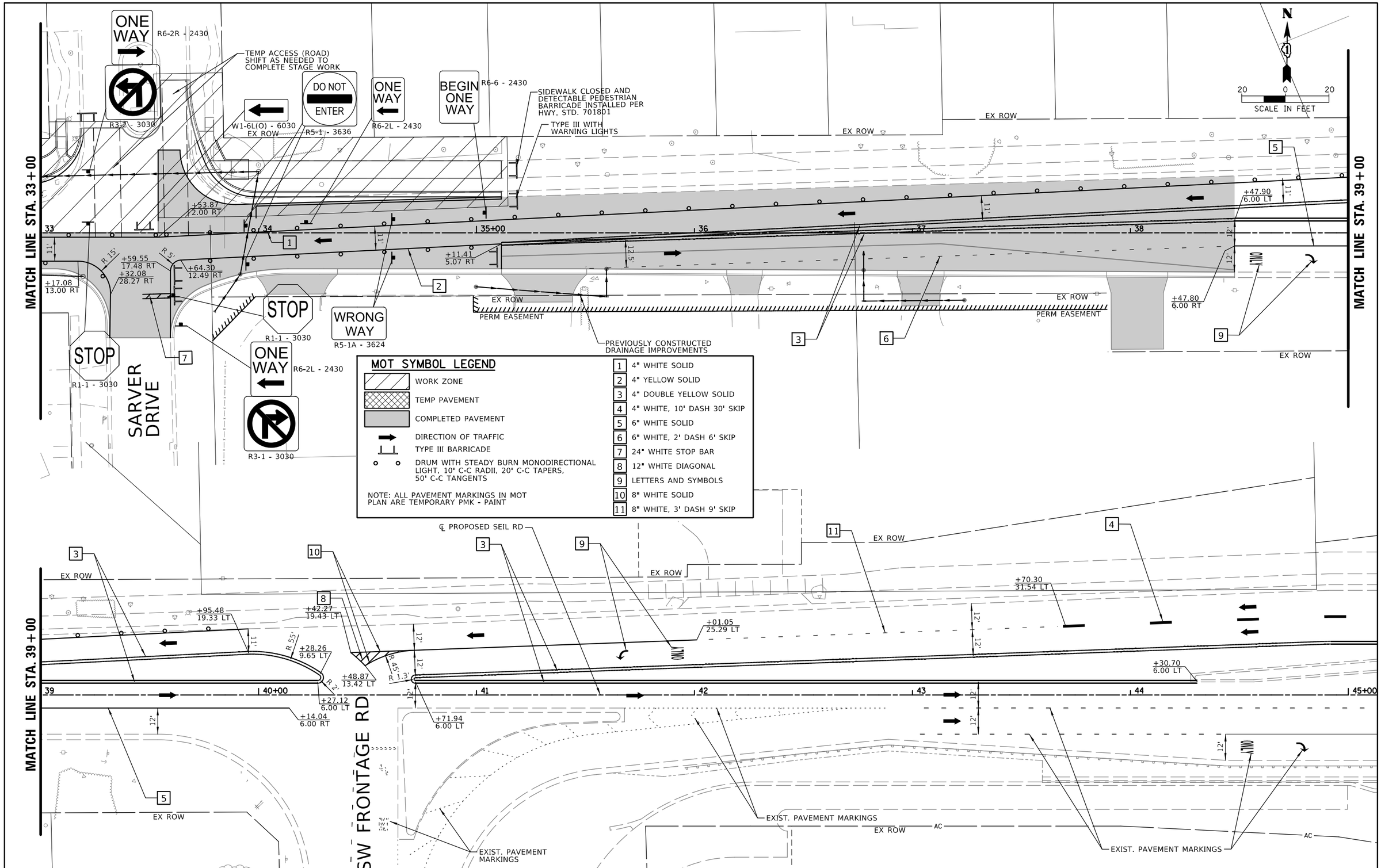

CHRISTOPHER B. BURKE ENGINEERING, LTD. 16021 W. 159th Street, Suite 201 Lockport, Illinois 60441 (815) 770-2650	USER NAME = eschaefer	DESIGNED - AJS/JRS	REVISED -
		DRAWN - PWN/JRS	REVISED -
	PLOT SCALE = 40'	CHECKED - AJS	REVISED -
	PLOT DATE = 11/2/2025	DATE -	REVISED -

STATE OF ILLINOIS
DEPARTMENT OF TRANSPORTATION

SEIL ROAD WIDENING
MAINTENANCE OF TRAFFIC – STAGE 2

SCALE: 40' | SHEET 5 OF 5 SHEETS | STA. 33+00 TO STA. 45+00

F.A.U. RTE.	SECTION	COUNTY	TOTAL SHEETS	SHEET NO.
0403	21-00047-00-WR	WILL	149	40
		CONTRACT NO. 61M01		
	ILLINOIS FED. AID PROJECT			

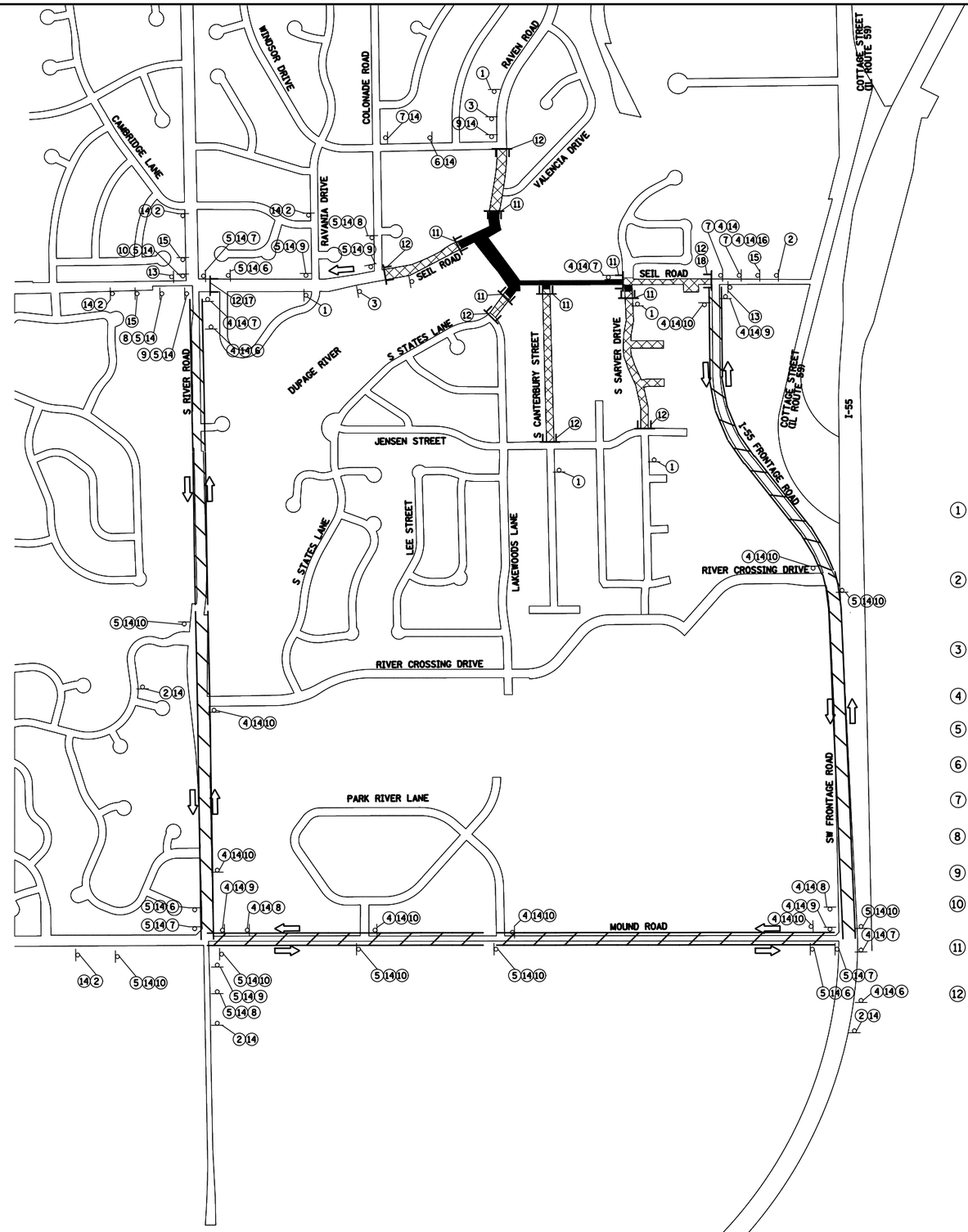

N

N.T.S.

1	ROAD CLOSED AHEAD	W20-3-4848
2	DETOUR AHEAD	W20-2-4848
3	ROAD CLOSED 500 FT	W20-3-4848
4	WEST	M3-4P(O) 2412
5	EAST	M3-2P(O) 2412
6	DETOUR ↰	M4-9(MOD)-3021
7	DETOUR ←	M4-9L-3021
8	DETOUR ↱	M4-9(MOD)-3021
9	DETOUR →	M4-9R-3021
10	DETOUR ↑	M4-9(MOD)-3021
11	ROAD CLOSED	R11-2-4830
12	ROAD CLOSED TO THRU TRAFFIC	R11-4-6030
12A	ROAD CLOSED LOCAL TRAFFIC ONLY	R11-3A-6030
13	END DETOUR	M4-8A-2418
14	Seil Road	D3-1-3612
15	Seil Road CLOSED AT Colonade Road USE Mound Road	SPECIAL-4836 6" UPPERCASE/4.5" LOWERCASE BLACK LETTERS ON ORANGE BACKGROUND
16	East Seil Road CLOSED AT Frontage Road USE Mound Road	SPECIAL-4836 6" UPPERCASE/4.5" LOWERCASE BLACK LETTERS ON ORANGE BACKGROUND
17	DETOUR	M4-10R-4818
18	DETOUR	M4-10L-4818
19	WRONG WAY	R5-1A-3018
20	ONE WAY	R6-1-3612
21	ONE WAY	R6-2-3612

LEGEND:

- ROAD CLOSED TO THRU TRAFFIC
- ROAD CLOSED
- DETOUR ROUTE
- DETOUR SIGN
- TYPE III BARRICADE
- (#) DETOUR SIGN TYPE
- DIRECTION OF TRAVEL

CHRISTOPHER B. BURKE ENGINEERING, LTD.
16021 W. 159th Street, Suite 201
Lockport, Illinois 60441
(815) 770-2650

USER NAME = aschaefer	DESIGNED - AJS/JRS	REVISED -
	DRAWN - JRS/PWN	REVISED -
PLOT SCALE = N.T.S.	CHECKED - AJS	REVISED -
PLOT DATE = 11/2/2025	DATE -	REVISED -

STATE OF ILLINOIS
DEPARTMENT OF TRANSPORTATION

SEIL ROAD WIDENING
DETOUR PLAN – STAGE 1

SCALE: N.T.S. | SHEET 1 OF 2 SHEETS | STA. TO STA.

F.A.U. RTE.	SECTION	COUNTY	TOTAL SHEETS	SHEET NO.
0403	21-00047-00-WR	WILL	149	41
		CONTRACT NO. 61M01		
		ILLINOIS FED. AID PROJECT		

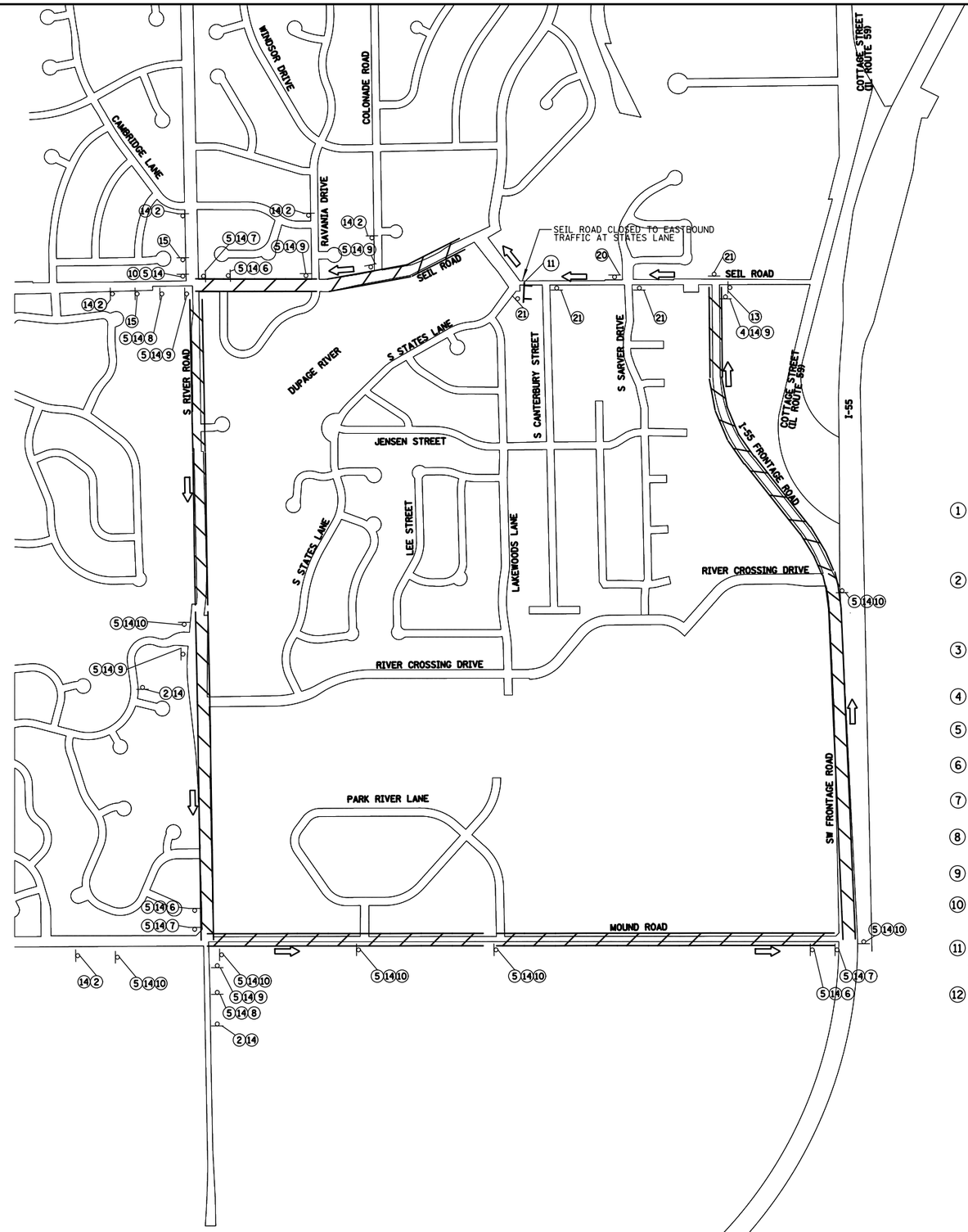

N

N.T.S.

1	ROAD CLOSED AHEAD	W20-3-4848	
2	DETOUR AHEAD	W20-2-4848	
3	ROAD CLOSED 500 FT	W20-3-4848	
4	WEST	M3-4P(O) 2412	
5	EAST	M3-2P(O) 2412	
6	DETOUR ↰	M4-9(MOD)-3021	
7	DETOUR ←	M4-9L-3021	
8	DETOUR ↱	M4-9(MOD)-3021	
9	DETOUR →	M4-9R-3021	
10	DETOUR ↑	M4-9(MOD)-3021	
11	ROAD CLOSED	R11-2-4830	
12	ROAD CLOSED TO THRU TRAFFIC	R11-4-6030	
12A	ROAD CLOSED LOCAL TRAFFIC ONLY	R11-3A-6030	
13	END DETOUR	M4-8A-2418	
14	Seil Road	D3-1-3612	
15	Seil Road CLOSED AT Colonade Road USE Mound Road	SPECIAL-4836 6" UPPERCASE/4.5" LOWERCASE BLACK LETTERS ON ORANGE BACKGROUND	
16	East Seil Road CLOSED AT Frontage Road USE Mound Road	SPECIAL-4836 6" UPPERCASE/4.5" LOWERCASE BLACK LETTERS ON ORANGE BACKGROUND	
17	DETOUR	M4-10R-4818	
18	DETOUR	M4-10L-4818	
19	WRONG WAY	R5-1A-3018	
20	ONE WAY	R6-1-3612	
21	ONE WAY	R6-2-3612	

LEGEND:

- ROAD CLOSED TO THRU TRAFFIC
- ROAD CLOSED
- DETOUR ROUTE
- DETOUR SIGN
- TYPE III BARRICADE
- (#) DETOUR SIGN TYPE
- DIRECTION OF TRAVEL

CHRISTOPHER B. BURKE ENGINEERING, LTD.
16021 W. 159th Street, Suite 201
Lockport, Illinois 60441
(815) 770-2650

USER NAME = aschaefer	DESIGNED - AJS/JRS	REVISED -	
	DRAWN - JRS/PWN	REVISED -	
PLOT SCALE = N.T.S.	CHECKED - AJS	REVISED -	
PLOT DATE = 11/2/2025	DATE -	REVISED -	

STATE OF ILLINOIS
DEPARTMENT OF TRANSPORTATION

SEIL ROAD WIDENING
DETOUR PLAN – STAGE 2

SCALE: N.T.S. | SHEET 2 OF 2 SHEETS | STA. TO STA.

F.A.U. RTE.	SECTION	COUNTY	TOTAL SHEETS	SHEET NO.
0403	21-00047-00-WR	WILL	149	41
		CONTRACT NO. 61M01		
		ILLINOIS FED. AID PROJECT		

SOIL EROSION CONTROL AND SEDIMENT CONTROL NOTES

1. SOIL EROSION AND SEDIMENT CONTROL (SESC) FEATURES MUST BE CONSTRUCTED PRIOR TO THE COMMENCEMENT OF UPLAND DISTURBANCE. SOIL DISTURBANCE MUST BE PHASED OR ENACTED IN SUCH A MANNER AS TO MINIMIZE EROSION. SOIL STABILIZATION MEASURES MUST CONSIDER THE TIME OF YEAR, SITE CONDITIONS AND THE USE OF TEMPORARY AND/OR PERMANENT MEASURES.

2. UNLESS OTHERWISE INDICATED, ALL VEGETATIVE AND STRUCTURAL EROSION AND SEDIMENT CONTROL PRACTICES WILL BE INSTALLED AT MINIMUM ACCORDING TO THE STANDARDS AND SPECIFICATIONS IN THE ILLINOIS URBAN MANUAL, REVISED TO LATEST VERSION AS AMENDED. A COPY OF THE APPROVED SOIL EROSION AND SEDIMENT CONTROL (SESC) PLAN MUST BE MAINTAINED ON THE SITE AT ALL TIMES.

3. THE EROSION AND SEDIMENT CONTROLS SHOWN ON THE PLANS ARE THE MINIMUM REQUIREMENTS. ADDITIONAL MEASURES MAY BE REQUIRED AS DIRECTED BY THE VILLAGE, OR THEIR AUTHORIZED REPRESENTATIVE. ALL ADDITIONAL MEASURES MUST BE IN PLACE WITHIN 3 DAYS OF DISTURBANCE AND ANY EMERGENCY SESC MEASURES MUST BE INSTALLED IMMEDIATELY.

4. THE CONTRACTOR MUST CLEAN UP, GRADE THE WORK AREAS AS THE PROJECT PROGRESSES, AND INSTALL EROSION PROTECTION TO ELIMINATE THE CONCENTRATION OF RUNOFF, OR MUST INSTALL APPROPRIATE SEDIMENT CONTROL DEVICES TO TRAP SEDIMENT. PAVEMENT MUST BE CLEANED DAILY OR AS NECESSARY TO REMOVE TRACK-OUT MATERIAL.

5. IT SHALL BE THE RESPONSIBILITY OF THE CONTRACTOR TO DIVERT ALL WATER (GROUND, STORM, AND CONSTRUCTION) DURING CONSTRUCTION IN ORDER TO KEEP THE CONSTRUCTION AREAS FREED OF WATER, BYPASS PUMPING, INCLUDING SILT BAGS AND AN ENERGY DISSIPATION SURFACE FOR THE PUMPS, SHALL NOT BE MEASURED AND PAID FOR SEPARATELY BUT SHALL BE INCLUDED IN THE COST OF THE STORM SEWER OR WATER MAIN. IT SHALL BE THE CONTRACTOR'S RESPONSIBILITY TO SIZE THE PUMPS APPROPRIATELY.

6. DURING DE-WATERING/PUMPING OPERATIONS, ONLY UNCONTAMINATED WATER SHOULD BE ALLOWED TO DISCHARGE TO PROTECTED NATURAL AREAS, WATERS OF THE STATE, OR TO A STORM SEWER SYSTEM (IN ACCORDANCE WITH LOCAL PERMITS). INLET HOSES SHOULD BE PLACED IN A STABILIZED SUMP PIT OR FLOATED AT THE SURFACE OF THE WATER IN ORDER TO LIMIT THE AMOUNT OF SEDIMENT INTAKE. PUMPING OPERATIONS MAY BE DISCHARGED TO A STABILIZED AREA THAT CONSISTS OF AN ENERGY DISSIPATING DEVICE (E.G., STONE), SEDIMENT FILTER BAG, OR BOTH. ADEQUATE EROSION AND SEDIMENT CONTROLS SHOULD BE USED DURING DE-WATERING OPERATIONS AS NECESSARY. DEWATERING SEDIMENT LADEN WATER DIRECTLY INTO FIELD TILES, STORM WATER STRUCTURES, OR "WATERS OF THE US" IS PROHIBITED.

7. SEDIMENT CONTROL BMPS SHALL BE CONSTRUCTED AT ALL LOCATIONS WHERE CONSTRUCTION TRAFFIC ENTERS OF LEAVES THE SITE. THESE LOCATIONS SHALL BE DETERMINED IN THE FIELD, AS NEEDED. GRAVELED ROADS, RUMBLE STRIPS, ACCESS DRIVES, PARKING AREAS OF SUFFICIENT WIDTH AND LENGTH, AND VEHICLE WASH DOWN FACILITIES IF NECESSARY, MUST BE PROVIDED TO PREVENT THE DEPOSIT OF SOIL FROM BEING TRACKED ONTO PUBLIC OR PRIVATE ROADWAYS. ANY SOIL REACHING PUBLIC OR PRIVATE ROADWAY MUST BE REMOVED IMMEDIATELY.

8. STOCK PILES OR SOIL MUST NOT BE LOCATED IN FLOOD PLAINS, RIPARIAN AREAS (VEGETATED FLOOD PLAINS), WETLANDS AND WATERS OF THE U.S., UNLESS OTHERWISE AUTHORIZED BY THE RELEVANT PERMITTING AUTHORITY. IF A STOCKPILE IS TO REMAIN IN PLACE FOR MORE THAN THREE DAYS, PERIMETER SEDIMENT BARRIER MUST BE PROVIDED AT THE CONTRACTOR'S EXPENSE.

9. ALL PROPOSED AND EXISTING STORM SEWER INLET STRUCTURES (INCLUDING INLETS LOCATED WITHIN THE HAUL ROUTES) MUST BE PROTECTED WITH STORM SEWER INLET PROTECTION (I.E. INLET FILTERS) PER INLET PROTECTION DETAILS IN THE PLANS.

10. STABILIZATION OF DISTURBED AREAS MUST, AT A MINIMUM, BE INITIATED IMMEDIATELY WHENEVER ANY CLEARING, GRADING, EXCAVATING, OR OTHER EARTH DISTURBING ACTIVITIES HAVE PERMANENTLY CEASED ON ANY PORTION OF THE SITE AND WILL NOT RESUME FOR A PERIOD EXCEEDING 14 CALENDAR DAYS. STABILIZATION OF DISTURBED AREAS MUST BE INITIATED WITHIN 1 WORKING DAY OF PERMANENT OR TEMPORARY CESSATION OF EARTH DISTURBING ACTIVITIES AND SHALL BE COMPLETED AS SOON AS POSSIBLE BUT NOT LATER THAN 14 DAYS FROM THE INITIATION OF STABILIZATION WORK IN AN AREA. EXCEPTIONS TO THESE TIME FRAMES ARE SPECIFIED AS FOLLOWS:

    - WHERE THE INITIATION OF STABILIZATION MEASURES IS PRECLUDED BY SNOW COVER, STABILIZATION MEASURES SHALL BE INITIATED AS SOON AS PRACTICABLE.

    - ON AREAS WHERE CONSTRUCTION ACTIVITY CEASED AND WILL RESUME AFTER 14 DAYS, A TEMPORARY STABILIZATION METHOD CAN BE USED.

11. THE VILLAGE SHALL PROVIDE A QUALIFIED PERSON WHO WILL BE RESPONSIBLE FOR CONDUCTING SITE INSPECTIONS IN COMPLIANCE WITH THE ILR10 NPDES PERMIT. AFTER EACH INSPECTION, A REPORT SHOULD BE PREPARED BY THE PERSON WHO PERFORMED THE INSPECTION. THE INSPECTION REPORT SHOULD BE MAINTAINED ON SITE AS PART OF THE PLAN. INSPECTIONS SHOULD BE CONDUCTED AT LEAST ONCE EVERY SEVEN CALENDAR DAYS AND WITHIN 24 HOURS OF THE END OF A STORM, OR BY THE END OF THE FOLLOWING BUSINESS OR WORK DAY, THAT IS 0.5 INCHES OR GREATER.

    INSPECTIONS MAY BE REDUCED TO ONCE PER MONTH WHEN CONSTRUCTION ACTIVITIES HAVE CEASED DUE TO FROZEN CONDITIONS. INSPECTIONS MUST COMMENCE WHEN CONSTRUCTION ACTIVITIES ARE CONDUCTED, OR IF THERE IS A 0.5" OR GREATER RAIN EVENT, OR DISCHARGE DUE TO SNOWMELT OCCURS.

12. THE WILL / SOUTH COOK SOIL AND WATER CONSERVATION DISTRICT (WSCSWCD) MUST BE NOTIFIED ONE WEEK PRIOR TO THE PRE-CONSTRUCTION MEETING, ONE WEEK PRIOR TO THE COMMENCEMENT OF LAND DISTURBING ACTIVITIES, AND ONE WEEK PRIOR TO THE FINAL INSPECTION.

13. PRIOR TO COMMENCING LAND-DISTURBING ACTIVITIES IN AREAS OTHER THAN INDICATED ON THESE PLANS, A SUPPLEMENTARY EROSION CONTROL PLAN SHALL BE SUBMITTED FOR REVIEW BY THE WSCSWCD.

14. THE CONTRACTOR IS RESPONSIBLE FOR THE INSTALLATION OF ANY ADDITIONAL EROSION CONTROL MEASURES NECESSARY TO PREVENT EROSION AND SEDIMENTATION AS DETERMINED BY THE WSCSWCD.

15. IT IS THE RESPONSIBILITY OF THE LANDOWNER AND/OR GENERAL CONTRACTOR TO INFORM ANY SUB-CONTRACTOR(S), WHO MAY PERFORM WORK ON THIS SITE/PROJECT, OF THE REQUIREMENTS IN IMPLEMENTING AND MAINTAINING THESE EROSION CONTROL PLANS AND ASSURE COMPLIANCE WITH ALL APPLICABLE LOCAL, STATE, AND FEDERAL REGULATIONS.

LEGEND

- INLET FILTER OR INLET & PIPE PROTECTION
- SEEDING, CLASS 1A & WILDLIFE FRIENDLY EROSION CONTROL BLANKET
- SEEDING, CLASS 4A & WILDLIFE FRIENDLY EROSION CONTROL BLANKET
- SEEDING, CLASS 4B & WILDLIFE FRIENDLY EROSION CONTROL BLANKET
- TEMPORARY DITCH CHECK
- PERIMETER EROSION CONTROL BARRIER

NOTE: ALL SEEDING AREAS SHALL BE PREPARED WITH A MINIMUM OF 6" OF TOPSOIL UNLESS OTHERWISE NOTED IN THE TYPICAL SECTIONS.

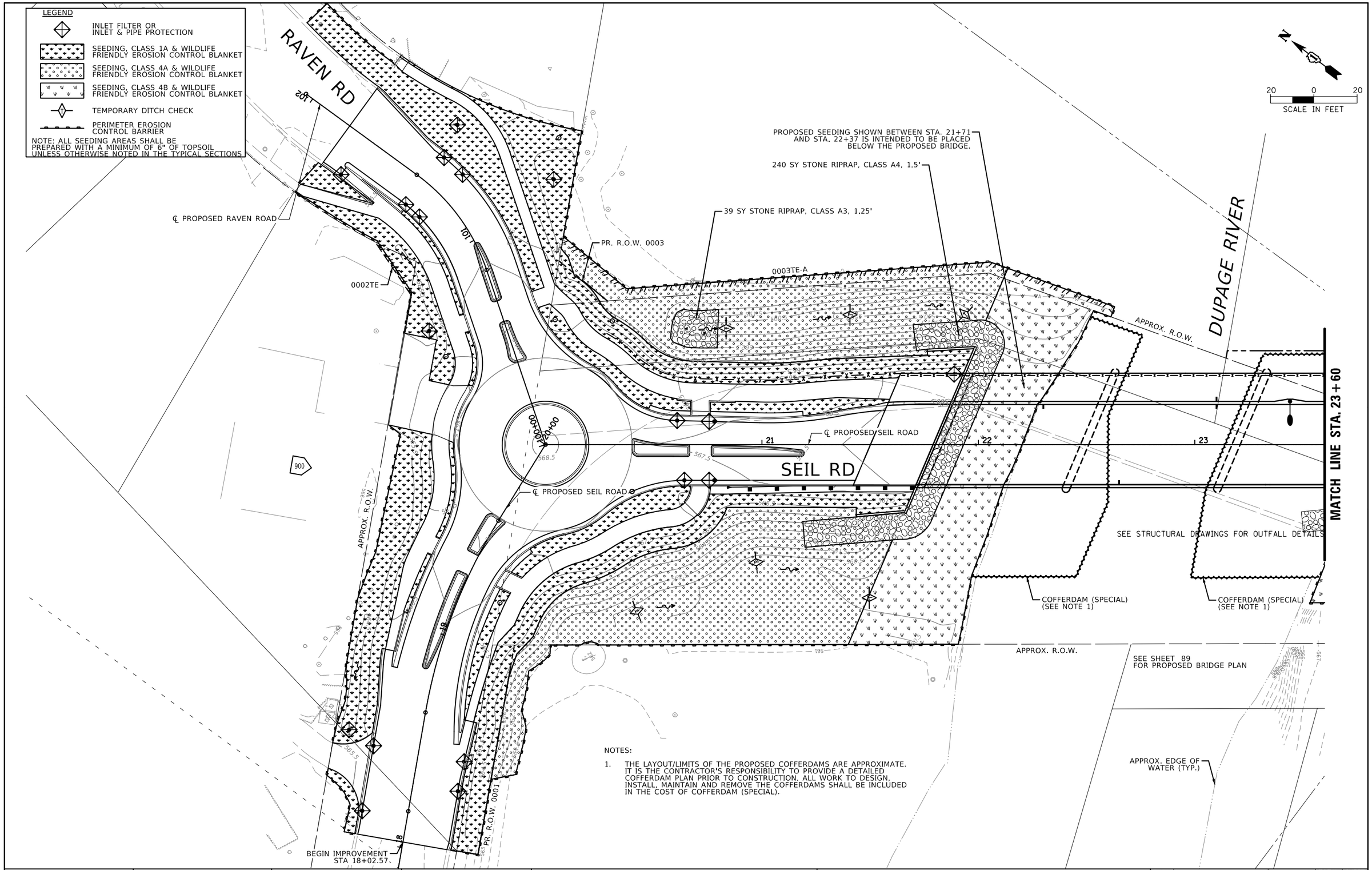

NOTES:

1. THE LAYOUT/LIMITS OF THE PROPOSED COFFERDAMS ARE APPROXIMATE. IT IS THE CONTRACTOR'S RESPONSIBILITY TO PROVIDE A DETAILED COFFERDAM PLAN PRIOR TO CONSTRUCTION. ALL WORK TO DESIGN, INSTALL, MAINTAIN AND REMOVE THE COFFERDAMS SHALL BE INCLUDED IN THE COST OF COFFERDAM (SPECIAL).

CHRISTOPHER B. BURKE ENGINEERING, LTD.
16221 W. 159th Street, Suite 201
Lockport, Illinois 60441
(815) 770-2850

USER NAME = aschaefer	DESIGNED - AJS/JRS	REVISED -	
	DRAWN - PWN/JRS	REVISED -	
PLOT SCALE = 40'	CHECKED - AJS	REVISED -	
PLOT DATE = 11/2/2025	DATE -	REVISED -	

STATE OF ILLINOIS
DEPARTMENT OF TRANSPORTATION

SEIL ROAD WIDENING
LANDSCAPING & EROSION CONTROL PLAN

SCALE: 40' | SHEET 1 OF 3 SHEETS | STA. 17+90 TO STA. 23+60

F.A.U. RTE.	SECTION	COUNTY	TOTAL SHEETS	SHEET NO.
0403	21-00047-00-WR	WILL	149	44
		CONTRACT NO. 61M01		
	ILLINOIS	FED. AID PROJECT		

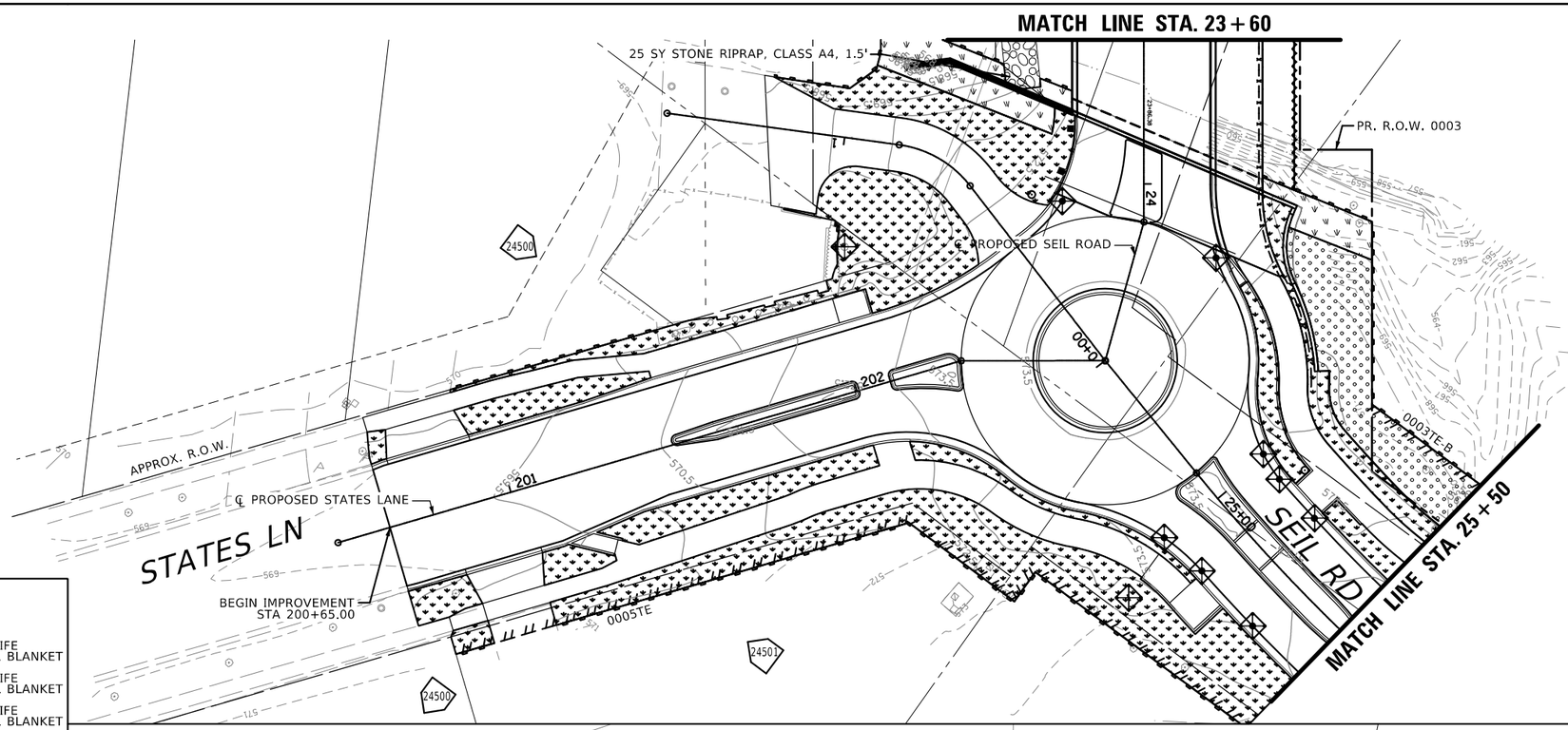

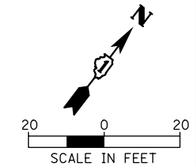

LEGEND

- INLET FILTER OR INLET & PIPE PROTECTION
- SEEDING, CLASS 1A & WILDLIFE FRIENDLY EROSION CONTROL BLANKET
- SEEDING, CLASS 4A & WILDLIFE FRIENDLY EROSION CONTROL BLANKET
- SEEDING, CLASS 4B & WILDLIFE FRIENDLY EROSION CONTROL BLANKET
- TEMPORARY DITCH CHECK
- PERIMETER EROSION CONTROL BARRIER

NOTE: ALL SEEDING AREAS SHALL BE PREPARED WITH A MINIMUM OF 6" OF TOPSOIL UNLESS OTHERWISE NOTED IN THE TYPICAL SECTIONS.

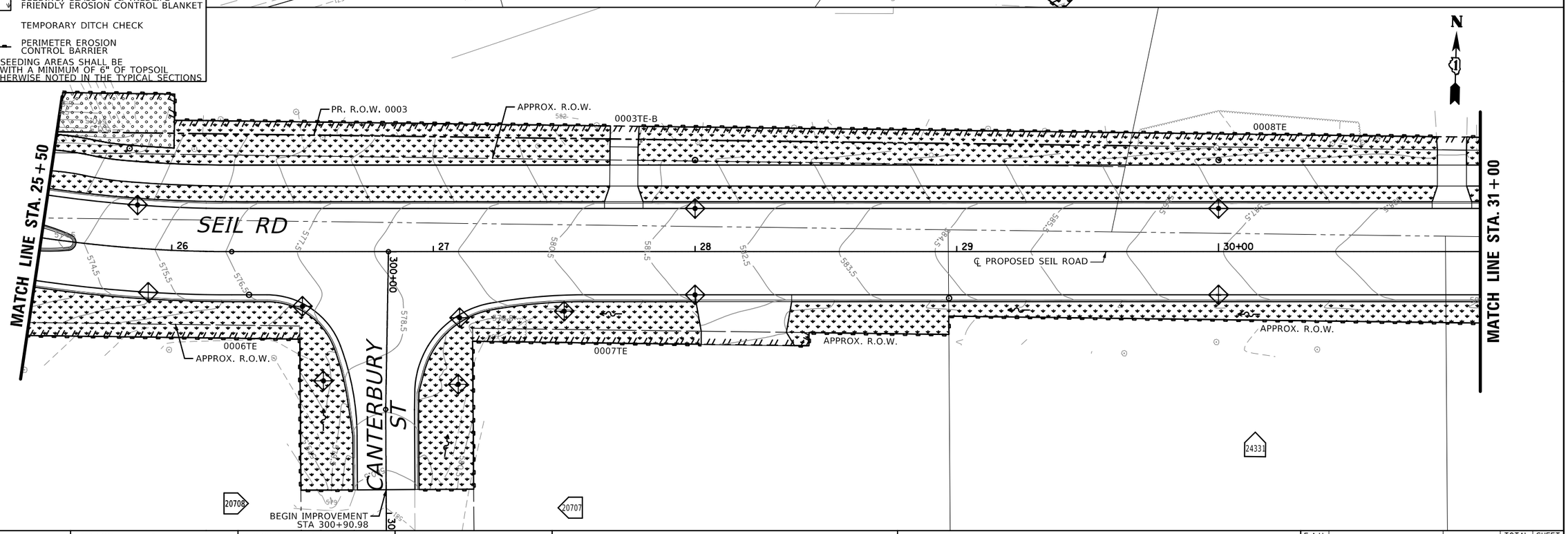

CHRISTOPHER B. BURKE ENGINEERING, LTD.
9023 W. 159th Street, Suite 201
Lockport, Illinois 60441
(815) 770-2650

USER NAME = aschaefer	DESIGNED - AJS/JRS	REVISED -
	DRAWN - PWN/JRS	REVISED -
PLOT SCALE = 40'	CHECKED - AJS	REVISED -
PLOT DATE = 11/2/2025	DATE -	REVISED -

STATE OF ILLINOIS
DEPARTMENT OF TRANSPORTATION

SEIL ROAD WIDENING
LANDSCAPING & EROSION CONTROL PLAN

SCALE: 40' | SHEET 2 OF 3 SHEETS | STA. 23+60 TO STA. 31+00

F.A.U. RTE.	SECTION	COUNTY	TOTAL SHEETS	SHEET NO.
0403	21-00047-00-WR	WILL	149	45

CONTRACT NO. 61M01

ILLINOIS FED. AID PROJECT

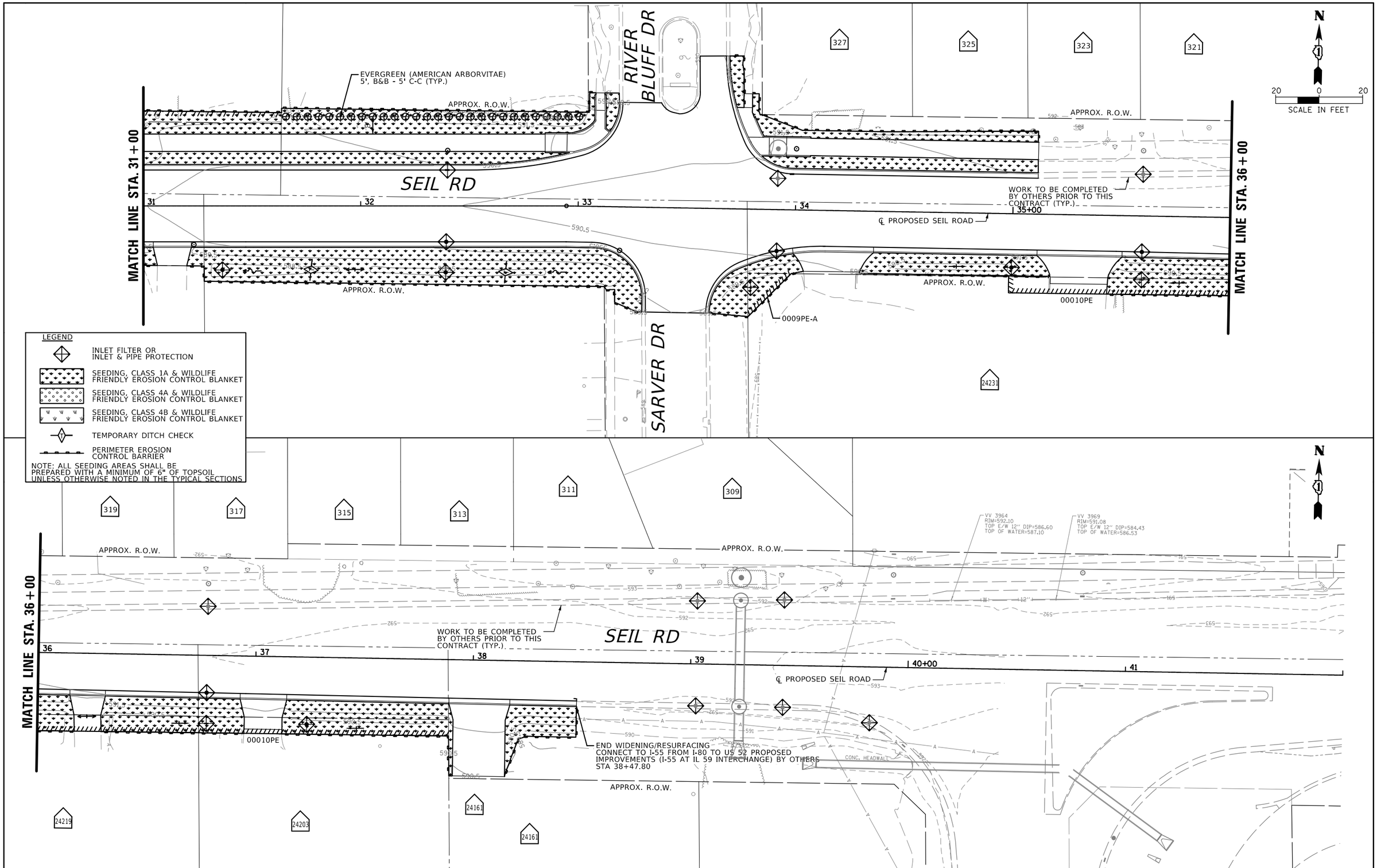

CHRISTOPHER B. BURKE ENGINEERING, LTD. 9021 W. 159th Street, Suite 201 Lockport, Illinois 60441 (815) 770-2850	USER NAME = aschaefer	DESIGNED - AJS/JRS	REVISED -
		DRAWN - PWN/JRS	REVISED -
	PLOT SCALE = 40'	CHECKED - AJS	REVISED -
	PLOT DATE = 11/2/2025	DATE -	REVISED -

STATE OF ILLINOIS
DEPARTMENT OF TRANSPORTATION

SEIL ROAD WIDENING
LANDSCAPING & EROSION CONTROL PLAN

SCALE: 40' | SHEET 3 OF 3 SHEETS | STA. 31+00 TO STA. 42+00

F.A.U. RTE.	SECTION	COUNTY	TOTAL SHEETS	SHEET NO.
0403	21-00047-00-WR	WILL	149	46
		CONTRACT NO. 61M01		
		ILLINOIS FED. AID PROJECT		

DRAINAGE GENERAL NOTES:

1. MAINTAINING DRAINAGE; IT SHALL BE THE CONTRACTOR'S RESPONSIBILITY TO MAINTAIN DRAINAGE FLOWS AT ALL TIMES DURING THE PERFORMANCE OF THE WORK. METHODS USED BY THE CONTRACTOR SHALL BE SUBJECT TO APPROVAL OF THE ENGINEER.

2. LENGTHS AND SIZES OF EXISTING STORM SEWERS AS SHOWN ON THE PLANS SHALL BE VERIFIED IN THE FIELD PRIOR TO INSTALLATION OF PROPOSED DRAINAGE ITEMS. THE INVERTS OF PROPOSED DRAINAGE ITEMS CONNECTING TO EXISTING SEWERS OR STRUCTURES MAY REQUIRE REVISIONS TO MEET EXISTING FIELD CONDITIONS. ANY ADJUSTMENTS SHALL BE AS DIRECTED BY THE ENGINEER.

3. EXISTING DRAINAGE STRUCTURES TO BE LEFT IN PLACE SHALL BE PROTECTED DURING CONSTRUCTION. IF IN THE OPINION OF THE ENGINEER, THE DRAINAGE STRUCTURES ARE DAMAGED DUE TO THE CONTRACTOR'S OPERATION, THEY SHALL BE REPLACED IN KIND AT NO ADDITIONAL COST.

4. DURING CONSTRUCTION OPERATIONS, IF ANY LOOSE MATERIAL IS DEPOSITED IN THE FLOW LINE OF THE GUTTER OR DRAINAGE STRUCTURES, DITCHES, ETC. SO THAT THE NATURAL FLOW OF WATER IS OBSTRUCTED, THE LOOSE MATERIAL SHALL BE REMOVED AT THE CLOSE OF EACH WORK DAY. AT THE CONCLUSION OF THE CONSTRUCTION OPERATIONS, ALL DRAINAGE STRUCTURES AND FLOW LINES ARE TO BE FREE FROM DIRT AND DEBRIS. THE CONTRACTORS FAILURE TO PROVIDE THE ABOVE WILL PRECLUDE ANY POSSIBLE ADDED COMPENSATION REQUESTED DUE TO DELAYS OR UNSUITABLE MATERIAL CREATED AS A RESULT THEREOF.

5. ALL EXISTING FIELD DRAINAGE TILE AND OFF-SITE STORM SEWER ENCOUNTERED OR DAMAGED DURING CONSTRUCTION ARE TO BE RESTORED TO THEIR ORIGINAL CONDITIONS. PROPERLY REROUTED AND /OR CONNECTED TO THE STORM SEWER SYSTEM OR PROPOSED DITCHES UNLESS OTHERWISE SPECIFIED.

6. THE CONTRACTOR SHALL VERIFY WHEN FLAT SLAB TOPS ARE REQUIRED ON MANHOLES, INLETS, CATCH BASINS, AND OTHER DRAINAGE STRUCTURES. NO ADDITIONAL COMPENSATION SHALL BE PROVIDED FOR THE USE OF FLAT SLAB TOPS, UNLESS NOTED OTHERWISE ON PLANS.

7. THE LOCATION OF EXISTING DRAINAGE STRUCTURES, STORM SEWERS, WATER MAINS, SANITARY SEWERS, AND ANY OTHER PUBLIC OR PRIVATE UTILITIES AS SHOWN ON THE PLANS IS APPROXIMATE, AND THEIR EXACT LOCATION IS TO BE DETERMINED IN THE FIELD BY THE CONTRACTOR.

8. THE INFORMATION PROVIDED IS ESTIMATED BASED UPON EXISTING SURVEY AND WILL REQUIRE ADJUSTMENT BY THE CONTRACTOR AS NECESSARY TO FULFILL THE INTENT OF THE DRAINAGE PLANS.

9. THE CONTRACTOR SHALL VERIFY EXISTING DRAINAGE STRUCTURE DATA IN FIELD PRIOR TO INSTALLATION OF DRAINAGE ITEMS. GRADES, ELEVATIONS, SIZES, AND LENGTHS OF EXISTING STORM SEWER WERE DETERMINED FROM AVAILABLE RECORD DRAWINGS AND FIELD SURVEY. THE INVERTS OF THE PROPOSED DRAINAGE STRUCTURES MAY REQUIRE REVISIONS TO MEET EXISTING FIELD CONDITIONS. ANY ADJUSTMENTS SHALL BE AS DIRECTED BY THE ENGINEER. THE COST OF THIS WORK IS TO BE INCLUDED IN THE UNIT PRICES OF THE ITEMS TO BE INSTALLED OR REPAIRED AND NO ADDITIONAL COMPENSATION WILL BE ALLOWED.

10. DRAINAGE STRUCTURE ELEVATIONS: RIM ELEVATIONS GIVEN ON THE PLANS ARE ONLY TO ASSIST THE CONTRACTOR IN DETERMINING THE APPROXIMATE OVERALL HEIGHT OF THE STRUCTURE. FRAMES OF ALL NEW, ADJUSTED OR RECONSTRUCTED STRUCTURES, WILL BE ADJUSTED TO THE FINAL ELEVATION OF THE AREA IN WHICH THEY ARE LOCATED AS PART OF THE STRUCTURE COST. DRAINAGE STRUCTURE GRADES SHALL BE VERIFIED IN THE FIELD PRIOR TO FABRICATION AND INSTALLATION OF DRAINAGE ITEMS. GRADES OR SEWER LINES WERE DETERMINED FROM AVAILABLE PLANS AND SURVEY. THE INVERTS OF THE PROPOSED SEWERS CONNECTING TO EXISTING DRAINAGE STRUCTURES MAY REQUIRE REVISIONS TO MEET EXISTING FIELD CONDITIONS. ANY ADJUSTMENTS SHALL BE AS DIRECTED BY THE ENGINEER.

11. THE RIM ELEVATION OF ALL DRAINAGE STRUCTURES SHALL BE CONSTRUCTED FLUSH WITH EXISTING GROUND.

12. ANY COST ASSOCIATED WITH CONSTRUCTING A PROPOSED CATCH BASIN, INLET OR MANHOLE OVER AN EXISTING STORM SEWER SHALL BE CONSIDERED INCLUDED IN THE COST OF THE STRUCTURE. ANY COST ASSOCIATED WITH CONNECTING A PROPOSED CATCH BASIN, INLET OR MANHOLE TO AN EXISTING STORM SEWER SHALL BE CONSIDERED INCLUDED IN THE COST OF THE STRUCTURE.

13. ANY COST ASSOSCIATED WITH TEMPORARY PUMPING TO AVOID FLOODING, SHALL BE CONSIDERED INCLUDED IN THE COST OF PROPOSED STORM SEWER.

GENERAL DETAILS

DESCRIPTION	ELEVATION
HEADWALL, END SECTION, OR FLARED END SECTION	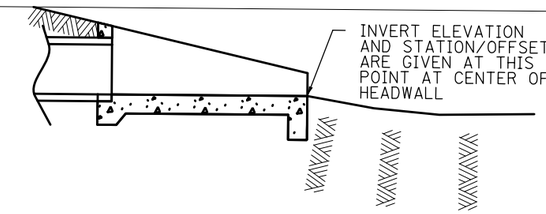
TYPE 1 AND TYPE 8 FRAME AND GRATE	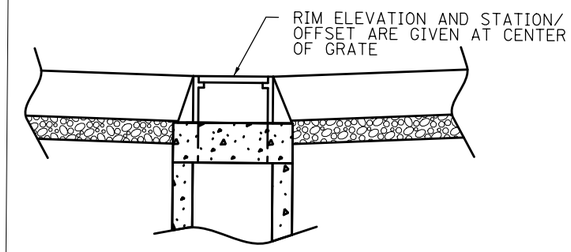
FRAMES AND GRATES WITHIN CURB AND GUTTER SECTIONS (EXCLUDING TYPE 1)	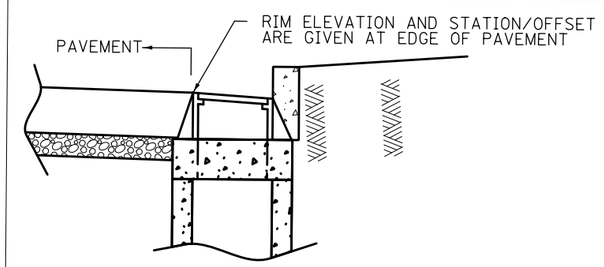

CHRISTOPHER B. BURKE ENGINEERING, LTD.
16021 W. 159th Street, Suite 201
Lockport, Illinois 60441
(815) 770-2850

USER NAME = aschaefer	DESIGNED - MA	REVISED -
	DRAWN - MA	REVISED -
PLOT SCALE = 100'	CHECKED - JOC	REVISED -
PLOT DATE = 11/2/2025	DATE -	REVISED -

STATE OF ILLINOIS
DEPARTMENT OF TRANSPORTATION

SEIL ROAD WIDENING
DRAINAGE NOTES

SCALE: | SHEET 1 OF 1 SHEETS | STA. TO STA.

F.A.U. RTE.	SECTION	COUNTY	TOTAL SHEETS	SHEET NO.
0403	21-00047-00-WR	WILL	149	47

CONTRACT NO. 61M01

ILLINOIS FED. AID PROJECT

DRAINAGE STRUCTURE SCHEDULE

STRUCTURE NO.	STRUCTURE TYPE	STATION	OFFSET	RIM	INV (N)	INV (S)	INV (W)	INV (E)	PAY ITEM
S101	CATCH BASINS, TYPE A, 4'-DIAMETER, TYPE 1 FRAME, OPEN LID	18+13.56	21.00' LT	565.66				562.09	60200105
S102	CATCH BASINS, TYPE A, 4'-DIAMETER, TYPE 1 FRAME, OPEN LID	18+44.04	21.00' LT	565.57	561.47	561.47	561.95		60200105
S103	CATCH BASINS, TYPE A, 4'-DIAMETER, TYPE 8 GRATE	18+49.39	33.40' LT	563.93		561.52			60200805
S104	CATCH BASINS, TYPE A, 4'-DIAMETER, TYPE 1 FRAME, OPEN LID	18+30.05	21.00' RT	565.58				561.90	60200105
S105	CATCH BASINS, TYPE A, 4'-DIAMETER, TYPE 1 FRAME, OPEN LID	18+43.98	21.49' RT	565.56	561.35		561.84	561.35	60200105
S106	MANHOLES, TYPE A, 5'-DIAMETER, TYPE 1 FRAME, CLOSED LID	19+24.25	18.32' RT	566.77			561.15	561.15	60221100
S107	MANHOLES, TYPE A, 5'-DIAMETER, TYPE 1 FRAME, CLOSED LID	20+40.00	21.66' RT	567.44			560.94	560.94	60221100
S108	CATCH BASINS, TYPE A, 5'-DIAMETER, TYPE 24 FRAME & GRATE	20+64.16	16.50' RT	567.23	560.39		560.89	563.10	60205040
S109	CATCH BASINS, TYPE A, 4'-DIAMETER, TYPE 24 FRAME & GRATE	20+78.00	16.50' RT	567.32			563.15		60201340
S110	CATCH BASINS, TYPE A, 4'-DIAMETER, TYPE 24 FRAME & GRATE	20+78.00	10.63' LT	567.47			563.27		60201340
S111	CATCH BASINS, TYPE A, 5'-DIAMETER, TYPE 24 FRAME & GRATE	20+60.82	11.08' LT	567.32	560.31	560.31		563.20	60205040
S112	PRECAST REINFORCED CONCRETE FLARED END SECTIONS 24"	20+73.03	50.58' LT	-			560.25		54213669
S201	DRAINAGE SCUPPERS, DS-12	22+29.67	16.50' LT	569.74					Z0018004
S202	DRAINAGE SCUPPERS, DS-33	22+64.67	16.50' RT	570.34					Z0018010
S203	DRAINAGE SCUPPERS, DS-12	23+09.66	21.98' LT	571.13					Z0018004
S204	DRAINAGE SCUPPERS, DS-12	23+09.66	16.56' LT	571.10					Z0018004
S205	48" WALL OPENING	23+76.42	27.40' RT	-			562.34		N/A
S206	MANHOLES, TYPE A, 7'-DIAMETER, TYPE 1 FRAME, CLOSED LID	24+02.98	31.16' RT	573.14	568.65		562.95	563.85	60224446
S207	CATCH BASINS, TYPE A, 4'-DIAMETER, TYPE 24 FRAME & GRATE	24+04.80	22.65' RT	572.94			568.70	568.80	60201340
S208	CATCH BASINS, TYPE C, TYPE 24 FRAME & GRATE	24+14.80	21.98' LT	573.05			569.00		60208240
S209	MANHOLES, TYPE A, 8'-DIAMETER, TYPE 1 FRAME, CLOSED LID	25+07.72	22.42' LT	574.38		568.21	565.94	566.04	60224459
S210	CATCH BASINS, TYPE A, 4'-DIAMETER, TYPE 24 FRAME & GRATE	25+07.20	16.50' LT	572.89	568.27	568.37	568.72	568.72	60201340
S211	CATCH BASINS, TYPE C, TYPE 24 FRAME & GRATE	24+98.68	17.65' LT	572.99				568.82	60208240
S212	CATCH BASINS, TYPE C, TYPE 24 FRAME & GRATE	25+22.24	16.50' LT	573.00			568.83		60208240
S213	CATCH BASINS, TYPE A, 4'-DIAMETER, TYPE 24 FRAME & GRATE	25+12.12	16.50' RT	572.90	568.48	569.46	568.73	569.61	60201340
S214	CATCH BASINS, TYPE C, TYPE 24 FRAME & GRATE	24+98.77	18.36' RT	573.02				569.18	60208240
S215	CATCH BASINS, TYPE C, TYPE 24 FRAME & GRATE	25+32.25	16.50' RT	573.19			570.58		60208240
S216	INLETS, TYPE A, TYPE 8 GRATE	25+04.76	36.67' RT	573.18	570.14				60236200
S301	MANHOLES, TYPE A, 8'-DIAMETER, TYPE 24 FRAME AND GRATE	26+29.60	16.50' RT	576.50	570.10			570.20	60224456
S302	CATCH BASINS, TYPE A, 5'-DIAMETER, TYPE 24 FRAME & GRATE	26+50.00	20.89' RT	577.25			570.42	571.44	60205040
S303	CATCH BASINS, TYPE A, 5'-DIAMETER, TYPE 24 FRAME & GRATE	27+10.04	25.24' RT	578.82		573.16	572.81	572.91	60205040
S304	CATCH BASINS, TYPE A, 4'-DIAMETER, TYPE 8 GRATE	27+09.53	50.70' RT	579.57	573.23		573.73		60200805
S305	CATCH BASINS, TYPE C, TYPE 8 GRATE	26+58.01	49.37' RT	578.13				573.96	60207605
S306	CATCH BASINS, TYPE A, 5'-DIAMETER, TYPE 8 GRATE	27+50.00	22.76' RT	580.33			573.57	573.67	60204505
S307	MANHOLES, TYPE A, 7'-DIAMETER, TYPE 1 FRAME, CLOSED LID	28+97.05	17.79' RT	584.24		575.10	573.82	580.07	60224446
S308	CATCH BASINS, TYPE A, 5'-DIAMETER, TYPE 24 FRAME & GRATE	25+85.75	16.50' LT	574.74	570.03	570.03			60205040
S309	MANHOLES, TYPE A, 8'-DIAMETER, TYPE 1 FRAME, CLOSED LID	25+80.71	37.81' LT	576.20		569.83	567.00	567.50	60224459
S310	MANHOLES, TYPE A, 6'-DIAMETER, TYPE 1 FRAME, CLOSED LID	28+00.00	35.28' LT	582.26		577.17	575.28	575.38	60223800
S311	CATCH BASINS, TYPE A, 4'-DIAMETER, TYPE 24 FRAME & GRATE	28+00.00	35.00' LT	581.67	577.25	577.57			60201340
S312	CATCH BASINS, TYPE C, TYPE 24 FRAME & GRATE	28+00.00	16.50' LT	581.67	579.17				60208240
S313	MANHOLES, TYPE A, 6'-DIAMETER, TYPE 1 FRAME, CLOSED LID	30+00.00	35.00' LT	587.74		582.63	580.76	580.86	60223800
S314	CATCH BASINS, TYPE A, 4'-DIAMETER, TYPE 24 FRAME & GRATE	30+00.00	16.50' LT	587.13	582.71	582.71			60201340
S315	INLETS, TYPE A, TYPE 24 FRAME AND GRATE	30+00.00	16.50' RT	587.13	584.03				60237470
S401	MANHOLES, TYPE A, 4'-DIAMETER, TYPE 1 FRAME, CLOSED LID	31+23.28	17.79' RT	589.37		583.72	582.87		60218400
S402	CATCH BASINS, TYPE A, 4'-DIAMETER, TYPE 8 GRATE	31+36.38	29.44' RT	587.97	583.80				60200805
S403	INLETS, TYPE B, TYPE 24 FRAME AND GRATE	32+39.90	16.29' LT	590.15	586.42	586.42			60240328
S404	CATCH BASINS, TYPE A, 4'-DIAMETER, TYPE 24 FRAME & GRATE	32+39.32	16.50' RT	590.14	586.57	586.57		586.57	60201340
S405	CATCH BASINS, TYPE A, 4'-DIAMETER, TYPE 8 GRATE	32+39.08	30.53' RT	588.33	586.63				60200805
S406	MANHOLES, TYPE A, 4'-DIAMETER, TYPE 1 FRAME, CLOSED LID	33+19.43	20.02' RT	590.29		EX 587.41	586.92		60218400
S407	PRECAST REINFORCED CONCRETE FLARED END SECTIONS 12"	33+79.94	36.02' RT	-	588.63				54213657
S408	CATCH BASINS, TYPE A, 4'-DIAMETER, TYPE 24 FRAME & GRATE	33+91.62	19.02' RT	590.18	587.80	587.90			60201340
S409	CATCH BASINS, TYPE C, TYPE 8 GRATE	34+99.75	24.75' RT	590.40				588.70	60207605
S410	INLETS, TYPE B, TYPE 8 GRATE	35+59.64	29.34' RT	589.80	588.45		588.45		60240301
S411	CATCH BASINS, TYPE A, 4'-DIAMETER, TYPE 24 FRAME & GRATE	35+59.62	16.56' RT	590.75	588.40	588.40			60201340
S412	MANHOLES, TYPE A, 6'-DIAMETER, TYPE 1 FRAME, CLOSED LID	32+40.00	25.50' LT	590.62		586.37	583.72	583.72	60223800
S413	MANHOLES, TYPE A, 8'-DIAMETER, TYPE 1 FRAME, CLOSED LID	34+00.00	28.12' LT	591.14		587.55	583.84	EX 586.55	60224459
S414	INLETS, TYPE B, TYPE 24 FRAME AND GRATE	33+98.00	16.51' LT	590.80	587.60	587.60			60240328
S501	CATCH BASINS, TYPE A, 4'-DIAMETER, TYPE 24 FRAME & GRATE	36+77.62	17.15' RT	590.35	588.10	588.10			60201340
S502	INLETS, TYPE B, TYPE 8 GRATE	36+77.68	31.31' RT	589.77	588.17			588.17	60240301
S503	CATCH BASINS, TYPE C, TYPE 8 GRATE	37+23.86	30.92' RT	590.01			588.37		60207605
S601	PRECAST REINFORCED CONCRETE FLARED END SECTIONS 30"	100+30.28	78.01' RT	-	560.25				54213675
S602	MANHOLES, TYPE A, 5'-DIAMETER, TYPE 1 FRAME, CLOSED LID	100+44.20	47.52' RT	565.50	560.28	560.28			60221100
S603	MANHOLES, TYPE A, 6'-DIAMETER, TYPE 1 FRAME, CLOSED LID	100+53.26	22.65' RT	567.20	560.34	560.34	561.35	560.34	60223800
S604	MANHOLES, TYPE A, 4'-DIAMETER, TYPE 1 FRAME, CLOSED LID	100+53.26	30.56' LT	566.84	561.58			561.58	60218400
S605	CATCH BASINS, TYPE C, TYPE 8 GRATE	100+66.87	34.17' LT	565.03		561.65			60207605
S606	CATCH BASINS, TYPE A, 4'-DIAMETER, TYPE 8 GRATE	101+04.93	46.04' RT	563.77			560.40	560.40	60200805
S607	MANHOLES, TYPE A, 4'-DIAMETER, TYPE 1 FRAME, CLOSED LID	101+14.15	58.79' RT	564.88			560.45	EX 560.45	60218400
S608	CATCH BASINS, TYPE A, 5'-DIAMETER, TYPE 8 GRATE	101+39.31	29.67' RT	565.64	560.96	560.46	561.35		60204505
S609	CATCH BASINS, TYPE A, 4'-DIAMETER, TYPE 24 FRAME & GRATE	101+35.71	14.00' RT	565.75		561.70	561.50	561.40	60201340
S610	CATCH BASINS, TYPE A, 4'-DIAMETER, TYPE 24 FRAME & GRATE	101+25.71	14.00' RT	565.78	561.75				60201340
S611	CATCH BASINS, TYPE A, 4'-DIAMETER, TYPE 24 FRAME & GRATE	101+35.71	14.00' LT	565.75	561.75	561.75		561.65	60201340
S612	CATCH BASINS, TYPE A, 4'-DIAMETER, TYPE 24 FRAME & GRATE	101+25.71	14.00' LT	565.78	561.80				60201340
S613	CATCH BASINS, TYPE A, 4'-DIAMETER, TYPE 1 FRAME, OPEN LID	101+68.83	20.58' LT	565.82		561.90			60200105

STORM SEWER SCHEDULE

PIPE NO.	FROM	TO	LENGTH (FT)	DIA. (IN)	PIPE TYPE	SLOPE (%)	TRENCH BACKFILL (CY)	PAY ITEM
P101	S101	S102	30	12	STORM SEWERS, TYPE 1, WATER MAIN QUALITY PIPE, 12"	0.47	4.00	Z0056648
P102	S103	S102	13	15	STORM SEWERS, RUBBER GASKET, CLASS A, TYPE 1 15"	0.38	1.60	550A2330
P103	S102	S105	42	18	STORM SEWERS, CLASS A, TYPE 1 18"	0.29	4.40	550A0090
P104	S104	S105	14	12	STORM SEWERS, CLASS A, TYPE 1 12"	0.43	1.80	550A0050
P105	S105	S106	75	18	STORM SEWERS, CLASS A, TYPE 2 18"	0.27	15.40	550A0380
P106	S106	S107	80	18	STORM SEWERS, CLASS A, TYPE 2 18"	0.26	28.60	550A0380
P107	S107	S108	25	18	STORM SEWERS, CLASS A, TYPE 2 18"	0.20	10.20	550A0380
P108	S109	S108	11	12	STORM SEWERS, CLASS A, TYPE 2 12"	0.45	1.50	550A0340
P109	S108	S111	28	24	STORM SEWERS, CLASS A, TYPE 2 24"	0.29	19.10	550A0410
P110	S110	S111	15	12	STORM SEWERS, CLASS A, TYPE 2 12"	0.47	2.00	550A0340
P111	S111	S112	41	24	STORM SEWERS, CLASS A, TYPE 1 24"	0.15	4.80	550A0120
P201	S206	S205	30	48	STORM SEWERS, CLASS A, TYPE 1 48"	2.03	0.00	550A0190
P202	S207	S206	9	12	STORM SEWERS, CLASS A, TYPE 2 12"	0.56	1.40	550A0340
P203	S208	S207	45	12	STORM SEWERS, CLASS A, TYPE 2 12"	0.44	5.90	550A0340
P204	S209	S206	105	48	STORM SEWERS, CLASS A, TYPE 2 48"	1.99	110.50	550A0480
P205	S310	S209	70	48	STORM SEWERS, CLASS A, TYPE 2 48"	1.37	53.30	550A0480
P206	S210	S209	6	15	STORM SEWERS, CLASS A, TYPE 2 15"	1.00	1.60	550A0360
P207	S211	S210	8	12	STORM SEWERS, CLASS A, TYPE 2 12"	1.25	1.10	550A0340
P208	S212	S210	15	12	STORM SEWERS, CLASS A, TYPE 2 12"	0.73	2.00	550A0340
P209	S213	S210	33	15	STORM SEWERS, CLASS A, TYPE 2 15"	0.33	5.50	550A0360
P210	S214	S213	14	12	STORM SEWERS, CLASS A, TYPE 2 12"	3.21	1.80	550A0340
P211	S215	S213	20	12	STORM SEWERS, CLASS A, TYPE 1 12"	4.85	2.60	550A0050
P212	S216	S213	22	12	STORM SEWERS, RUBBER GASKET, CLASS A, TYPE 1 12"	3.09	2.90	550A2320
P301	S301	S308	54	36	STORM SEWERS, TYPE 1, WATER MAIN QUALITY PIPE 36"	0.13	9.10	Z0056657
P302	S302	S301	20	36	STORM SEWERS, CLASS A, TYPE 2 36"	1.10	10.40	550A0450
P303	S303	S302	59	36	STORM SEWERS, CLASS A, TYPE 1 36"	2.32	14.40	550A0160
P304	S304	S303	25	18	STORM SEWERS, CLASS A, TYPE 2 18"	0.28	9.00	550A0340
P305	S305	S304	52	15	STORM SEWERS, CLASS A, TYPE 2 15"	0.44	12.30	550A0360
P306	S306	S303	40	36	STORM SEWERS, CLASS A, TYPE 2 36"	1.65	12.80	550A0450
P307	S307	S306	147	36	STORM SEWERS, CLASS A, TYPE 2 36"	0.10	149.10	550A0450
P308	EX	S307	4	36	STORM SEWERS, CLASS A, TYPE 2 36"	1.00	4.80	550A0450
P309	S401	S307	226	12	STORM SEWERS, CLASS A, TYPE 2 12"	1.24	58.10	550A0340
P310	S308	S309	22	36	STORM SEWERS, CLASS A, TYPE 1 36"	0.91	0.00	550A0160
P311	S310	S309	216	42	STORM SEWERS, CLASS A, TYPE 2 42"	3.60	120.10	550A0470
P312	S311	S310	18	12	STORM SEWERS, CLASS A, TYPE 2 12"	0.44	3.50	550A0340
P313	S312	S311	33	12	STORM SEWERS, TYPE 1, WATER MAIN QUALITY PIPE, 12"	4.85	4.40	Z0056648
P314	S313	S310	200	42	STORM SEWERS, CLASS A, TYPE 2 42"	2.69	111.20	550A0470
P315	S314	S313	18	12	STORM SEWERS, CLASS A, TYPE 2 12"	0.44	3.50	550A0340
P316	S315	S314	33	12	STORM SEWERS, TYPE 1, WATER MAIN QUALITY PIPE, 12"	4.00	4.40	Z0056648
P401	S402	S401	18	12	STORM SEWERS, CLASS A, TYPE 2 12"	0.44	3.90	550A0340
P402	S412	S314	240	42	STORM SEWERS, TYPE 2, WATER MAIN QUALITY PIPE, 42"	1.19	107.50	Z0056682
P403	S403	S412	9	12	STORM SEWERS, CLASS A, TYPE 1 12"	0.56	1.20	550A0050
P404	S404	S403	33	12	STORM SEWERS, CLASS A, TYPE 1 12"	0.45	4.40	550A0050
P405	S405	S404	14	12	STORM SEWERS, CLASS A, TYPE 1 12"	0.43	1.80	550A0050
P406	S406	S404	80	12	STORM SEWERS, CLASS A, TYPE 1 12"	0.44	10.60	550A0050
P407	S407	S408	21	12	STORM SEWERS, CLASS A, TYPE 1 12"	3.48	2.80	550A0050
P408	S408	S414	36	12	STORM SEWERS, CLASS A, TYPE 1 12"	0.56	4.80	550A0050
P409	S409	S410	60	12	STORM SEWERS, CLASS A, TYPE 1 12"	0.42	7.90	550A0050
P410	S410	S411	13	12	STORM SEWERS, CLASS A, TYPE 1 12"	0.38	1.70	550A0050
P411	S413	S412	160	42	STORM SEWERS, CLASS A, TYPE 2 42"	0.08	97.60	550A0470
P412	S414	S413	11	12	STORM SEWERS, CLASS A, TYPE 1 12"	0.45	1.50	550A0050
P501	S501	EX	9	12	STORM SEWERS, CLASS A, TYPE 1 12"	0.67	1.20	550A0050
P502	S502	S501	14	12	STORM SEWERS, CLASS A, TYPE 1 12"	0.50	1.80	550A0050
P503	S503	S502	46	12	STORM SEWERS, CLASS A, TYPE 1 12"	0.43	6.10	550A0050
P601	S602	S601	34	30	STORM SEWERS, CLASS A, TYPE 1 30"	0.09	0.00	550A0140
P602	S603	S602	27	30	STORM SEWERS, CLASS A, TYPE 1 30"	0.22	8.90	550A0140
P603	S604	S603	53	12	STORM SEWERS, CLASS A, TYPE 2 12"	0.43	14.70	550A0340
P604	S605	S604	14	12	STORM SEWERS, RUBBER GASKET, CLASS A, TYPE 1 12"	0.50	2.10	550A2320
P605	S606	S603	65	15	STORM SEWERS, CLASS A, TYPE 2 15"	0.09	15.30	550A0360
P606	S607	S606	19	12	STORM SEWERS, CLASS A, TYPE 1 12"	0.26	2.50	550A0050
P607	S608	S603	101	30	STORM SEWERS, CLASS A, TYPE 1 30"	0.12	33.10	550A0140
P608	EX	S608	78	24	STORM SEWERS, CLASS A, TYPE 1 24"	0.17	16.00	550A0120
P609	S609	S608	16	12	STORM SEWERS, CLASS A, TYPE 2 12"	0.31	2.40	550A0340
P610	S610	S609	12	12	STORM SEWERS, CLASS A, TYPE 2 12"	0.42	1.60	550A0340
P611	S611	S609	28	12	STORM SEWERS, CLASS A, TYPE 2 12"	0.54	3.70	550A0340
P612	S612	S611	8	12	STORM SEWERS, CLASS A, TYPE 2 12"	0.62	1.10	550A0340
P613	S613	S611	33	12	STORM SEWERS, CLASS A, TYPE 1 12"	0.45	4.40	550A0050
					TRENCH BACKFILL TOTAL		**1170**	**20800150**

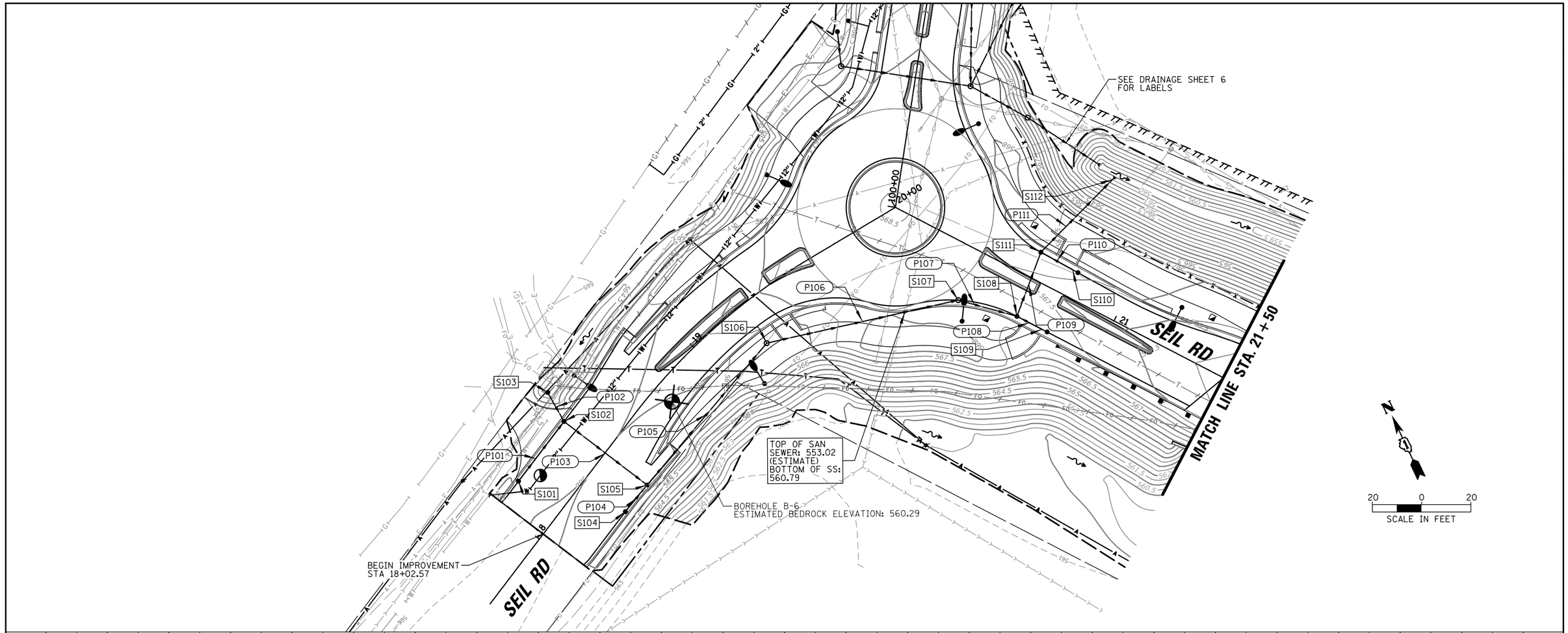

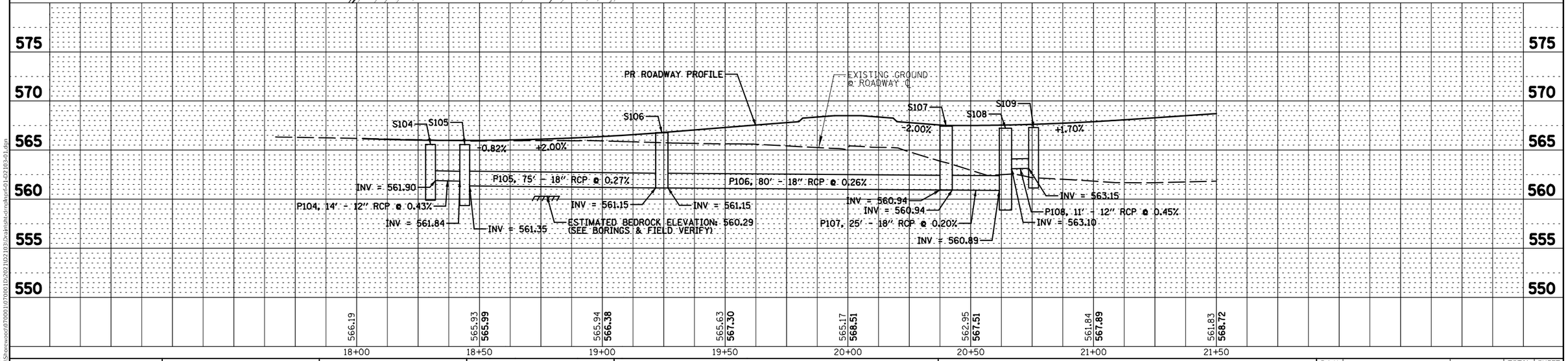

PLAN	BY	DATE
SURVEYED		
PLOTTED		
ALIGNMENT CHECKED		
RT. OF WAY CHECKED		
CADD FILE NAME		
NOTE BOOK NO.		

PROFILE	BY	DATE
SURVEYED		
PLOTTED		
GRADES CHECKED		
B.M. NOTED		
STRUCTURE NOTAT'NS CHK'D		
NOTE BOOK NO.		

MODEL: Default
FILE NAME: N:\Shorewood\0700011D\2021\D2103\Drain\sht-drnpln\rd-01-D2103-01.dgn

CHRISTOPHER B. BURKE ENGINEERING, LTD.
16231 W. 159th Street, Suite 201
Lockport, Illinois 60441
(815) 770-2850

USER NAME = aschaefer	DESIGNED - MA	REVISED -	
	DRAWN - MA	REVISED -	
PLOT SCALE = 40'	CHECKED - JOC	REVISED -	
PLOT DATE = 11/2/2025	DATE -	REVISED -	

STATE OF ILLINOIS
DEPARTMENT OF TRANSPORTATION

SEIL ROAD WIDENING
DRAINAGE PLAN AND PROFILE

SCALE: | SHEET 1 OF 7 SHEETS | STA. 18+02 TO STA. 21+50

F.A.U. RTE.	SECTION	COUNTY	TOTAL SHEETS	SHEET NO.
0403	21-00047-00-WR	WILL	149	50
		CONTRACT NO. 61M01		
	ILLINOIS	FED. AID PROJECT	P-91-020-19	

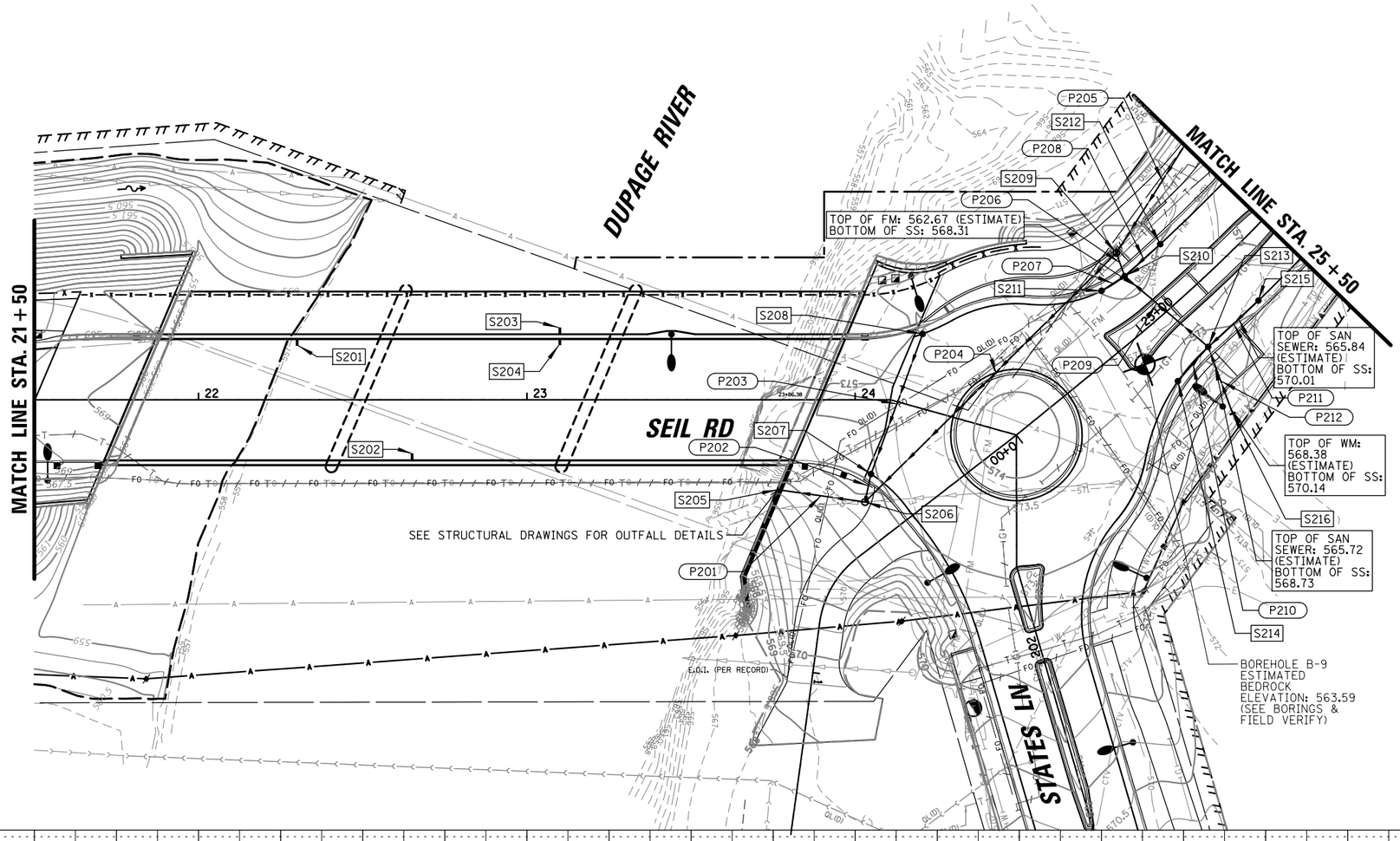

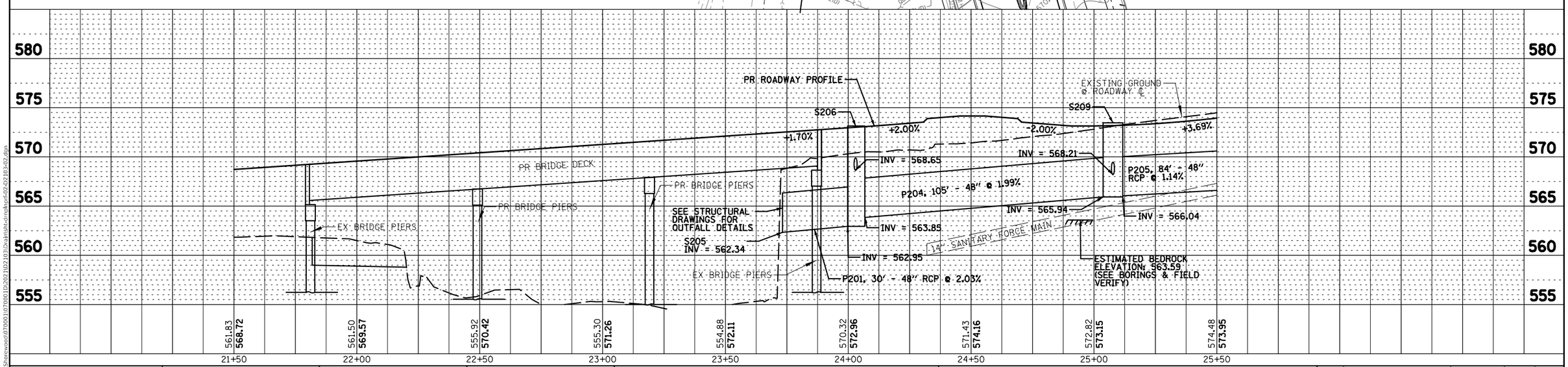

CHRISTOPHER B. BURKE ENGINEERING, LTD. 16224 W. 159th Street, Suite 201 Lockport, Illinois 60441 (815) 776-2850	USER NAME = aschaefer	DESIGNED - MA	REVISED -
		DRAWN - MA	REVISED -
	PLOT SCALE = 40'	CHECKED - JOC	REVISED -
	PLOT DATE = 11/2/2025	DATE -	REVISED -

STATE OF ILLINOIS
DEPARTMENT OF TRANSPORTATION

SEIL ROAD WIDENING
DRAINAGE PLAN AND PROFILE

SCALE: | SHEET 2 OF 7 SHEETS | STA. 21+50 TO STA. 25+50

F.A.U. RTE.	SECTION	COUNTY	TOTAL SHEETS	SHEET NO.
0403	21-00047-00-WR	WILL	149	51

CONTRACT NO. 61M01

ILLINOIS | FED. AID PROJECT P-91-020-19

PLAN: SURVEYED / PLOTTED / ALIGNMENT CHECKED / RT. OF WAY CHECKED / CADD FILE NAME / NOTE BOOK NO. / BY / DATE

PROFILE: SURVEYED / PLOTTED / GRADES CHECKED / B.M. NOTED / STRUCTURE NOTATNS CHKD / NOTE BOOK NO. / BY / DATE

MODEL: Default
FILE NAME: ‘:\Shorewood\070001\070001D\2021\22103\Drafn\sht-drn\hnprf-02-022103-02.dgn

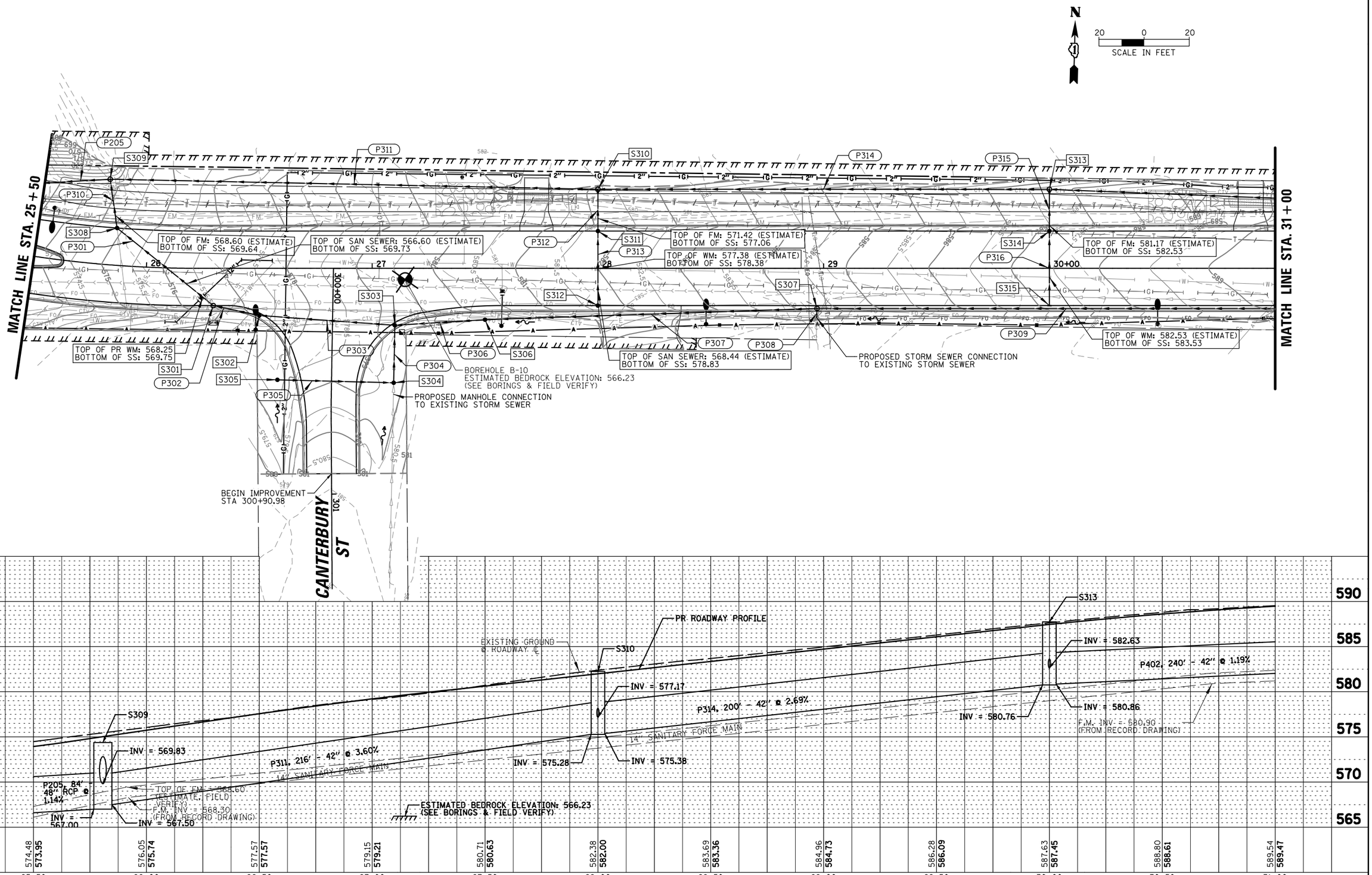

PLAN		
SURVEYED		DATE
PLOTTED		
ALIGNMENT CHECKED		BY
RT. OF WAY CHECKED		
CADD FILE NAME		
NOTE BOOK NO.		

PROFILE		
SURVEYED		DATE
PLOTTED		
GRADES CHECKED		BY
B.M. NOTED		
STRUCTURE NOTATNS CHKD		
NOTE BOOK NO.		

MODEL: Default
FILE NAME: \\pShorewood\0700011D\0700011D\2021\D21031\Drain\sht-drn\hsrf-03-D21031-03.dgn

CHRISTOPHER B. BURKE ENGINEERING, LTD.
16231 W. 159th Street, Suite 201
Lockport, Illinois 60441
(815) 770-2850

USER NAME = aschaefer	DESIGNED - MA	REVISED -	
	DRAWN - MA	REVISED -	
PLOT SCALE = 40'	CHECKED - JOC	REVISED -	
PLOT DATE = 11/2/2025	DATE -	REVISED -	

STATE OF ILLINOIS
DEPARTMENT OF TRANSPORTATION

SEIL ROAD WIDENING
DRAINAGE PLAN AND PROFILE

SCALE: | SHEET 3 OF 7 SHEETS | STA. 25+50 TO STA. 31+00

F.A.U. RTE.	SECTION	COUNTY	TOTAL SHEETS	SHEET NO.
0403	21-00047-00-WR	WILL	149	52

CONTRACT NO. 61M01

ILLINOIS | FED. AID PROJECT | P-91-020-19

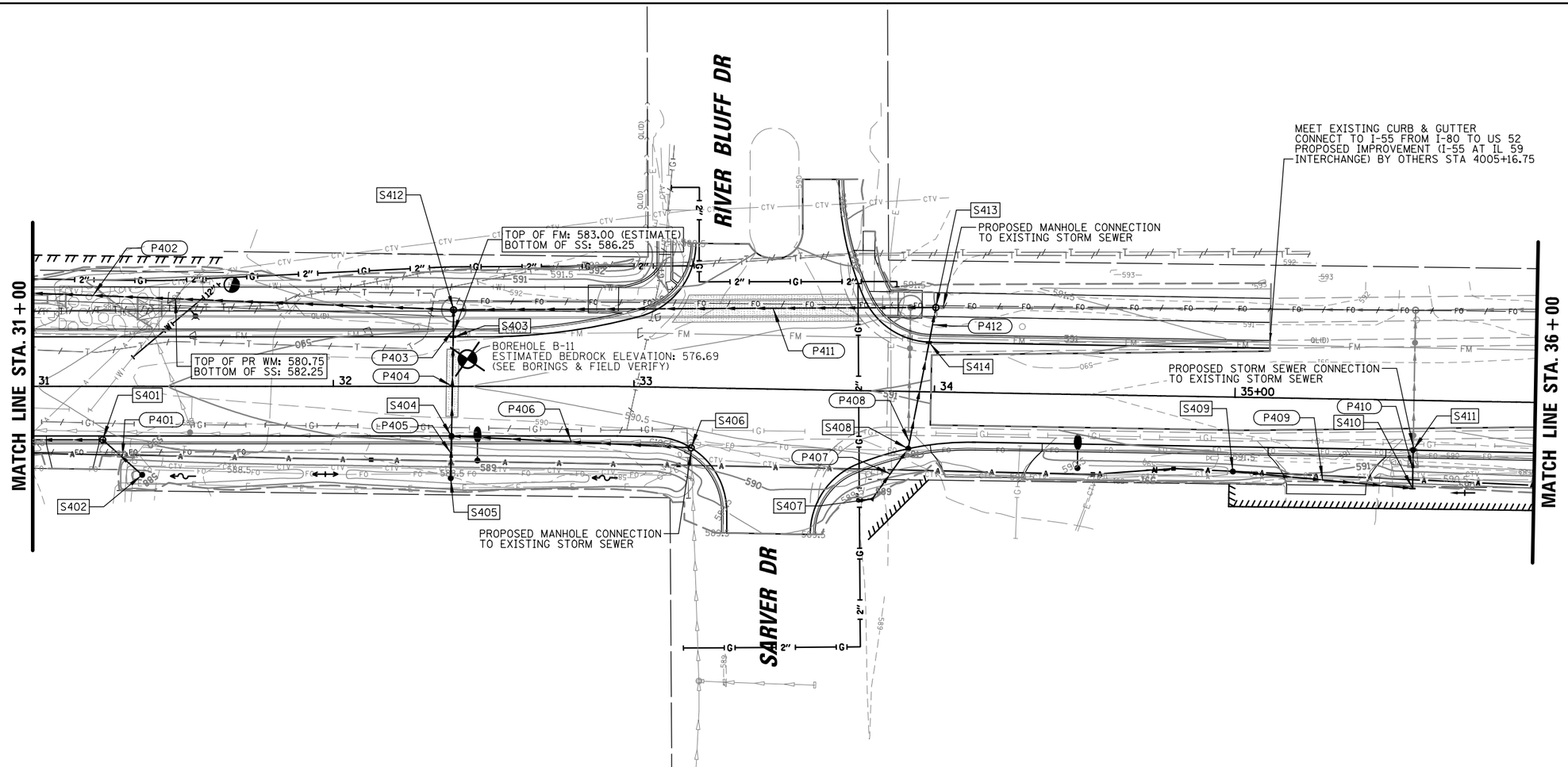

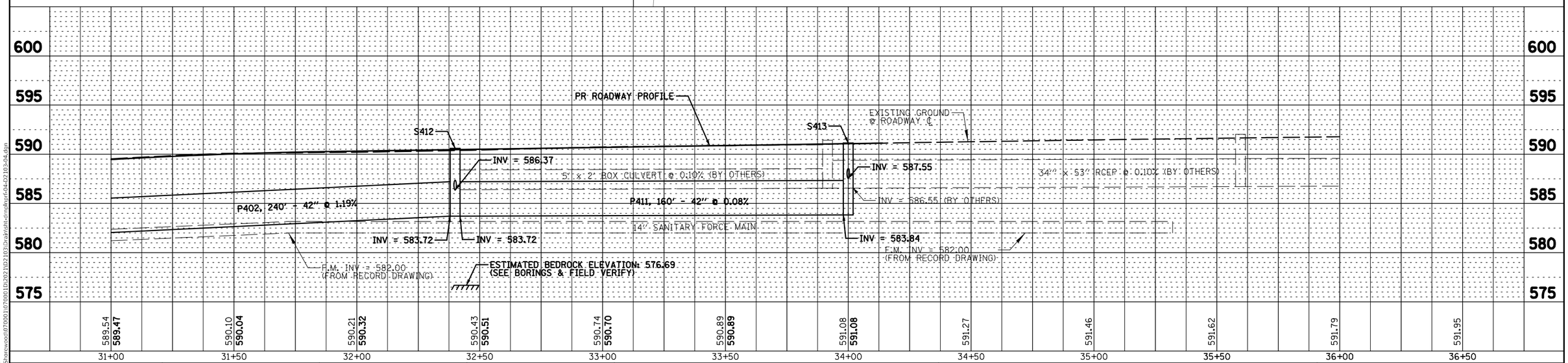

PLAN
SURVEYED
PLOTTED
ALIGNMENT CHECKED
RT. OF WAY CHECKED
CADD FILE NAME
NOTE BOOK
NO.
BY
DATE

PROFILE
SURVEYED
PLOTTED
GRADES CHECKED
B.M. NOTED
STRUCTURE NOTAT'NS CH'KD
NOTE BOOK
NO.
BY
DATE

MODEL: Default
FILE NAME: \\pShorewood\0700011070001D1D2021\D2103\Drain\sht-drnplnprf-04-D2103-04.dgn

CHRISTOPHER B. BURKE ENGINEERING, LTD.
16021 W. 159th Street, Suite 201
Lockport, Illinois 60441
(815) 776-2850

USER NAME = aschaefer	DESIGNED - MA	REVISED -	
	DRAWN - MA	REVISED -	
PLOT SCALE = 40'	CHECKED - JOC	REVISED -	
PLOT DATE = 11/2/2025	DATE -	REVISED -	

STATE OF ILLINOIS
DEPARTMENT OF TRANSPORTATION

SEIL ROAD WIDENING
DRAINAGE PLAN AND PROFILE

SCALE: | SHEET 4 OF 7 SHEETS | STA. 31+00 TO STA. 36+00

F.A.U. RTE.	SECTION	COUNTY	TOTAL SHEETS	SHEET NO.
0403	21-00047-00-WR	WILL	149	53

CONTRACT NO. 61M01

ILLINOIS | FED. AID PROJECT | P-91-020-19

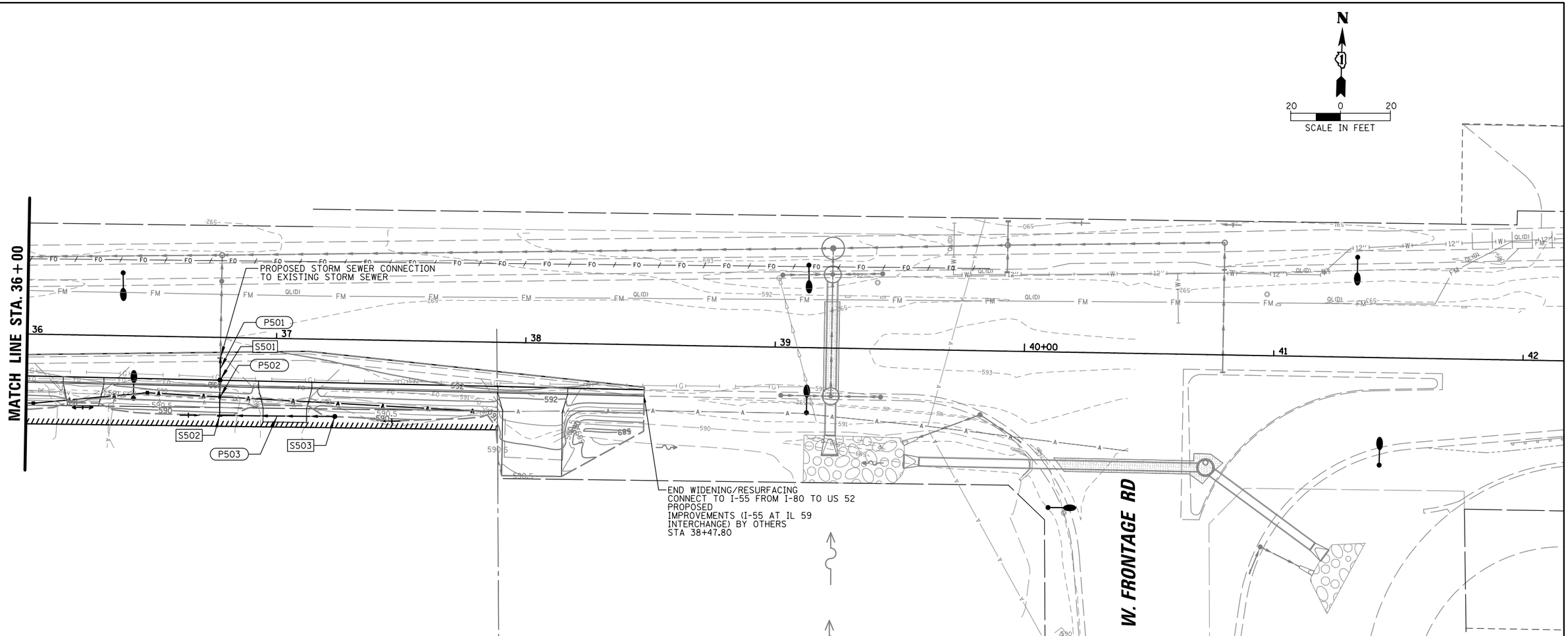

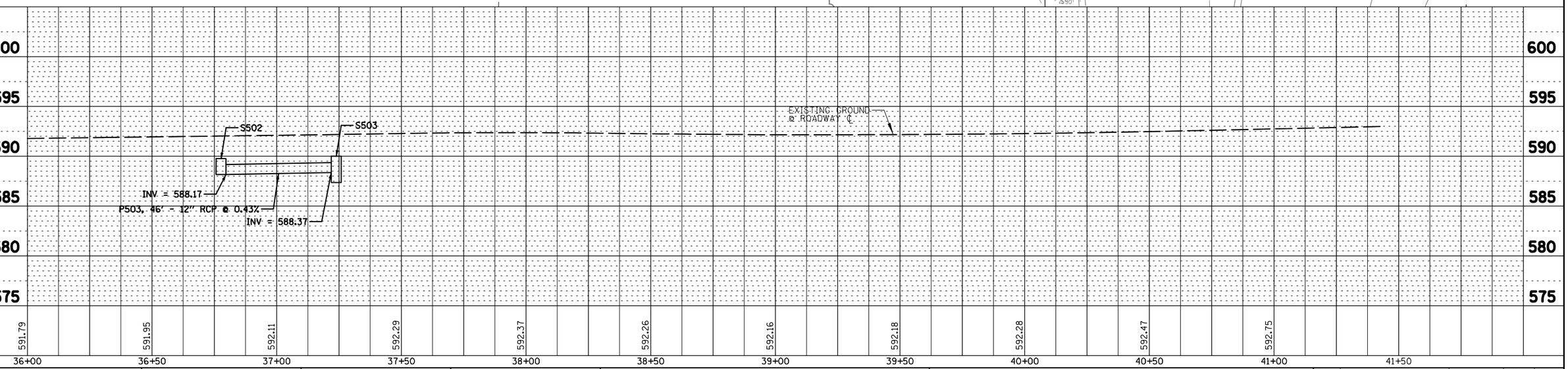

PLAN	BY	DATE
SURVEYED		
PLOTTED		
ALIGNMENT CHECKED		
RT. OF WAY CHECKED		
CADD FILE NAME		
NOTE BOOK		
NO.		

PROFILE	BY	DATE
SURVEYED		
PLOTTED		
GRADES CHECKED		
B.M. NOTED		
STRUCTURE NOTATNS CHKD		
NOTE BOOK		
NO.		

MODEL: Default
FILE NAME: N:\Storewood\070001\070001D\20211021\2103\Drainlsht-drndnprf-05-D2103-05.dgn

CHRISTOPHER B. BURKE ENGINEERING, LTD.
16221 W. 159th Street, Suite 201
Lockport, Illinois 60441
(815) 770-2850

USER NAME = aschaefer	DESIGNED - MA	REVISED -
	DRAWN - MA	REVISED -
PLOT SCALE = 40'	CHECKED - JOC	REVISED -
PLOT DATE = 11/2025	DATE -	REVISED -

STATE OF ILLINOIS
DEPARTMENT OF TRANSPORTATION

SEIL ROAD WIDENING
DRAINAGE PLAN AND PROFILE

SCALE: | SHEET 5 OF 7 SHEETS | STA. 36+00 TO STA. 38+47

F.A.U. RTE.	SECTION	COUNTY	TOTAL SHEETS	SHEET NO.
0403	21-00047-00-WR	WILL	149	54
		CONTRACT NO. 61M01		
		ILLINOIS FED. AID PROJECT		P-91-020-19

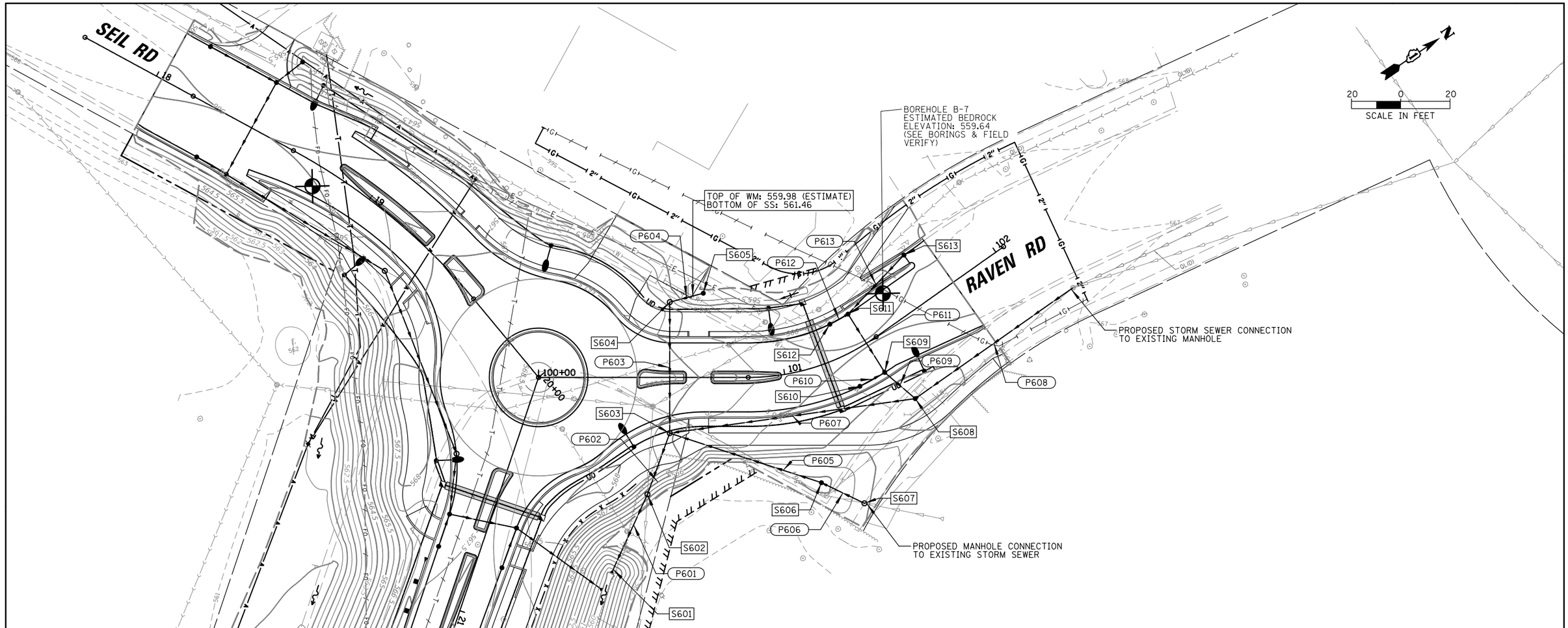

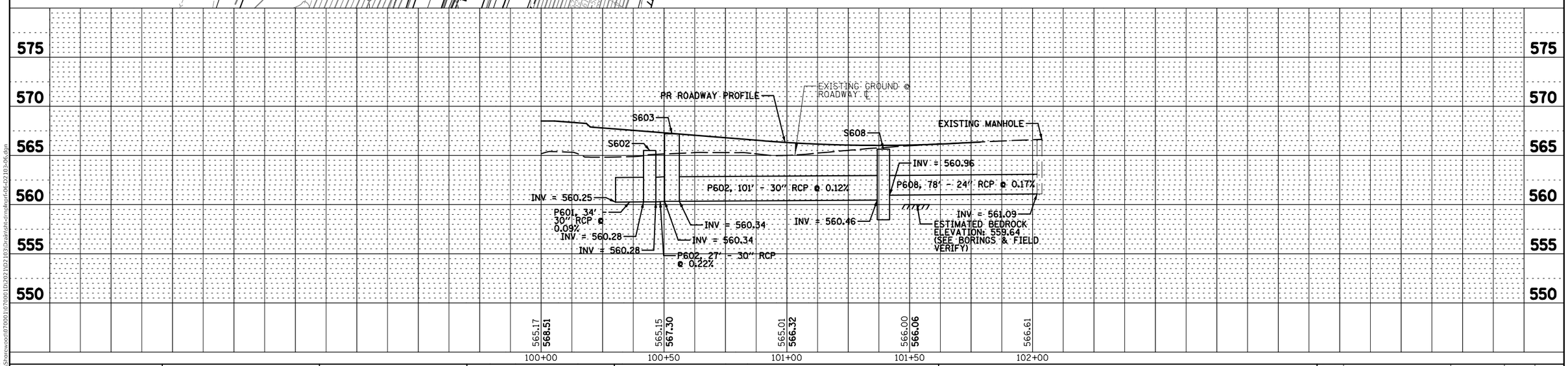

PLAN
SURVEYED
PLOTTED
ROADWAY CHECKED
R/W & EASEMENT CHECKED
RT. OF WAY CHECKED
CADD FILE NAME
NOTE BOOK NO.
BY
DATE

PROFILE
SURVEYED
PLOTTED
GRADES CHECKED
B.M. NOTED
STRUCTURE NOTATNS CHKD
NOTE BOOK NO.
BY
DATE

MODEL: Default
FILE NAME: N:\Shorewood\0700010700010\D2021\D2103\Drain\dsht-drnaln\drl-06-D2103-06.dgn

CHRISTOPHER B. BURKE ENGINEERING, LTD.
16231 W. 159th Street, Suite 201
Lockport, Illinois 60441
(815) 770-2850

USER NAME = aschaefer	DESIGNED - MA	REVISED -
	DRAWN - MA	REVISED -
PLOT SCALE = 40'	CHECKED - JOC	REVISED -
PLOT DATE = 11/2/2025	DATE -	REVISED -

STATE OF ILLINOIS
DEPARTMENT OF TRANSPORTATION

SEIL ROAD WIDENING
DRAINAGE PLAN AND PROFILE

SCALE: | SHEET 6 OF 7 SHEETS | STA. 100+00 TO STA. 101+78

F.A.U. RTE.	SECTION	COUNTY	TOTAL SHEETS	SHEET NO.
0403	21-00047-00-WR	WILL	149	55
		CONTRACT NO. 61M01		
	ILLINOIS	FED. AID PROJECT	P-91-020-19	

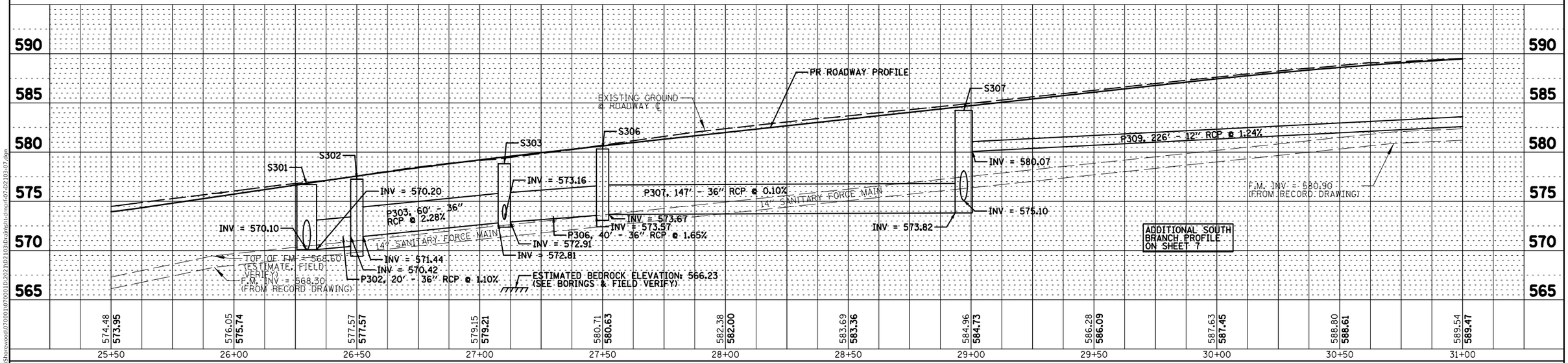

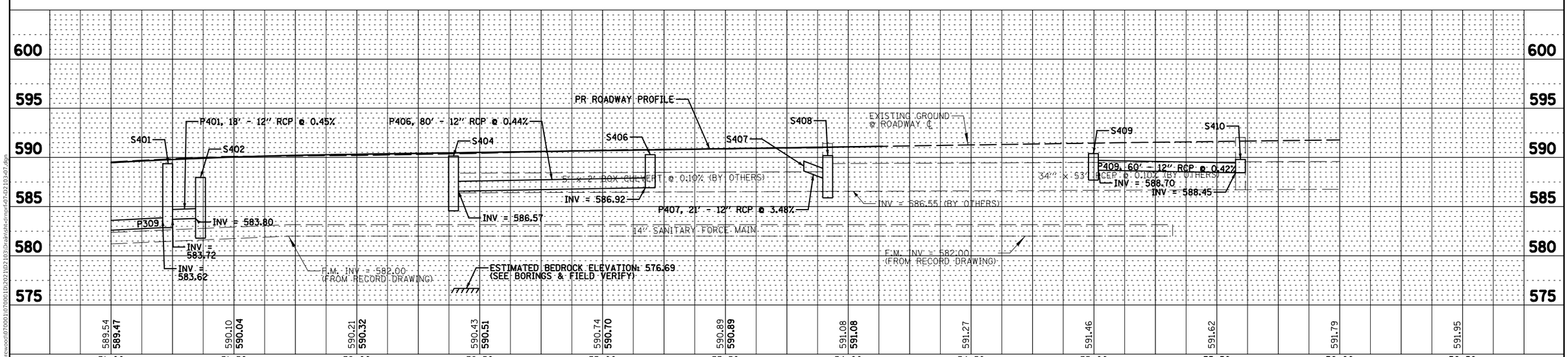

PLAN			
SURVEYED			
PLOTTED			
ALIGNMENT CHECKED			
RT. OF WAY CHECKED			
CADD FILE NAME			
NOTE BOOK			
NO.			
BY			
DATE			

PROFILE			
SURVEYED			
PLOTTED			
GRADES CHECKED			
B.M. NOTED			
STRUCTURE NOTATNS CHKD			
NOTE BOOK			
NO.			
BY			
DATE			

N:\Shorewood\070001\070001D\2021\D2103\Drain\sht-drnprf-07-D2103-07.dgn

MODEL: Default
FILE NAME: N:\Shorewood\070001\070001D\2021\D2103\Drain\sht-drnprf-07-D2103-07.dgn

CHRISTOPHER B. BURKE ENGINEERING, LTD.
16211 W. 159th Street, Suite 201
Lockport, Illinois 60441
(815) 776-2850

USER NAME = aschaefer	DESIGNED - MA	REVISED -
	DRAWN - MA	REVISED -
PLOT SCALE = 40'	CHECKED - JOC	REVISED -
PLOT DATE = 11/2/2025	DATE -	REVISED -

STATE OF ILLINOIS
DEPARTMENT OF TRANSPORTATION

SEIL ROAD WIDENING
DRAINAGE PROFILE (SOUTH SIDE)

SCALE: | SHEET 7 OF 7 SHEETS | STA. 25+50 TO STA. 36+00

F.A.U. RTE.	SECTION	COUNTY	TOTAL SHEETS	SHEET NO.
0403	21-00047-00-WR	WILL	149	56
		CONTRACT NO. 61M01		
	ILLINOIS	FED. AID PROJECT	P-91-020-19	

NOTES:

1. SEE DRAINAGE PLANS FOR DRAINAGE STRUCTURE AND PIPE INFORMATION.

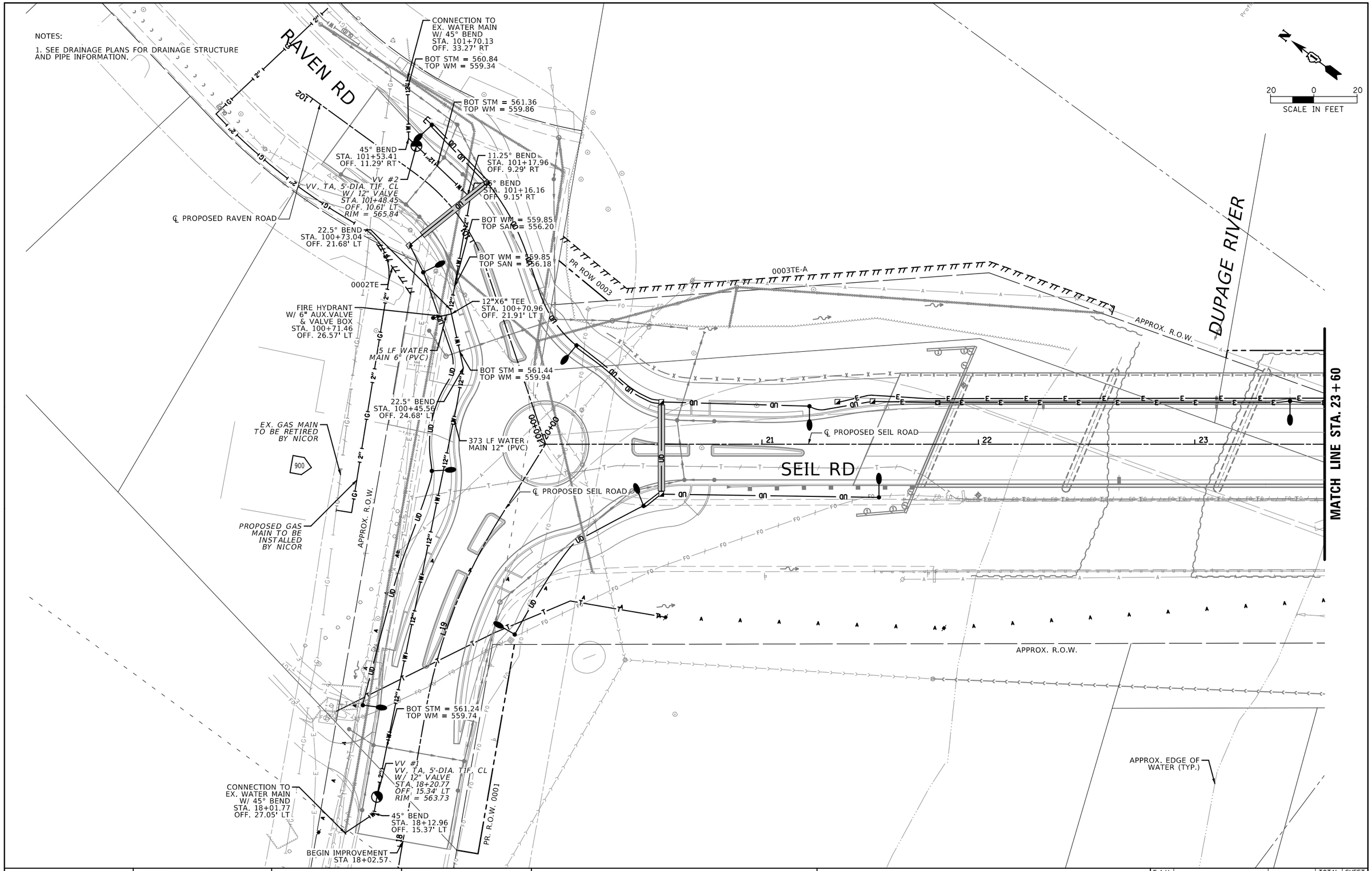

CHRISTOPHER B. BURKE ENGINEERING, LTD. 16221 W. 159th Street, Suite 201 Lockport, Illinois 60441 (815) 770-2850	USER NAME = aschaefer	DESIGNED - AJS/JRS	REVISED -
		DRAWN - PWN/JRS	REVISED -
	PLOT SCALE = 40'	CHECKED - AJS	REVISED -
	PLOT DATE = 11/2/2025	DATE -	REVISED -

STATE OF ILLINOIS
DEPARTMENT OF TRANSPORTATION

SEIL ROAD WIDENING
PROPOSED UTILITY PLAN

SCALE: 40' | SHEET 1 OF 3 SHEETS | STA. 18+02.57 TO STA. 23+60

F.A.U. RTE.	SECTION	COUNTY	TOTAL SHEETS	SHEET NO.
0403	21-00047-00-WR	WILL	149	57
		CONTRACT NO. 61M01		
		ILLINOIS FED. AID PROJECT		

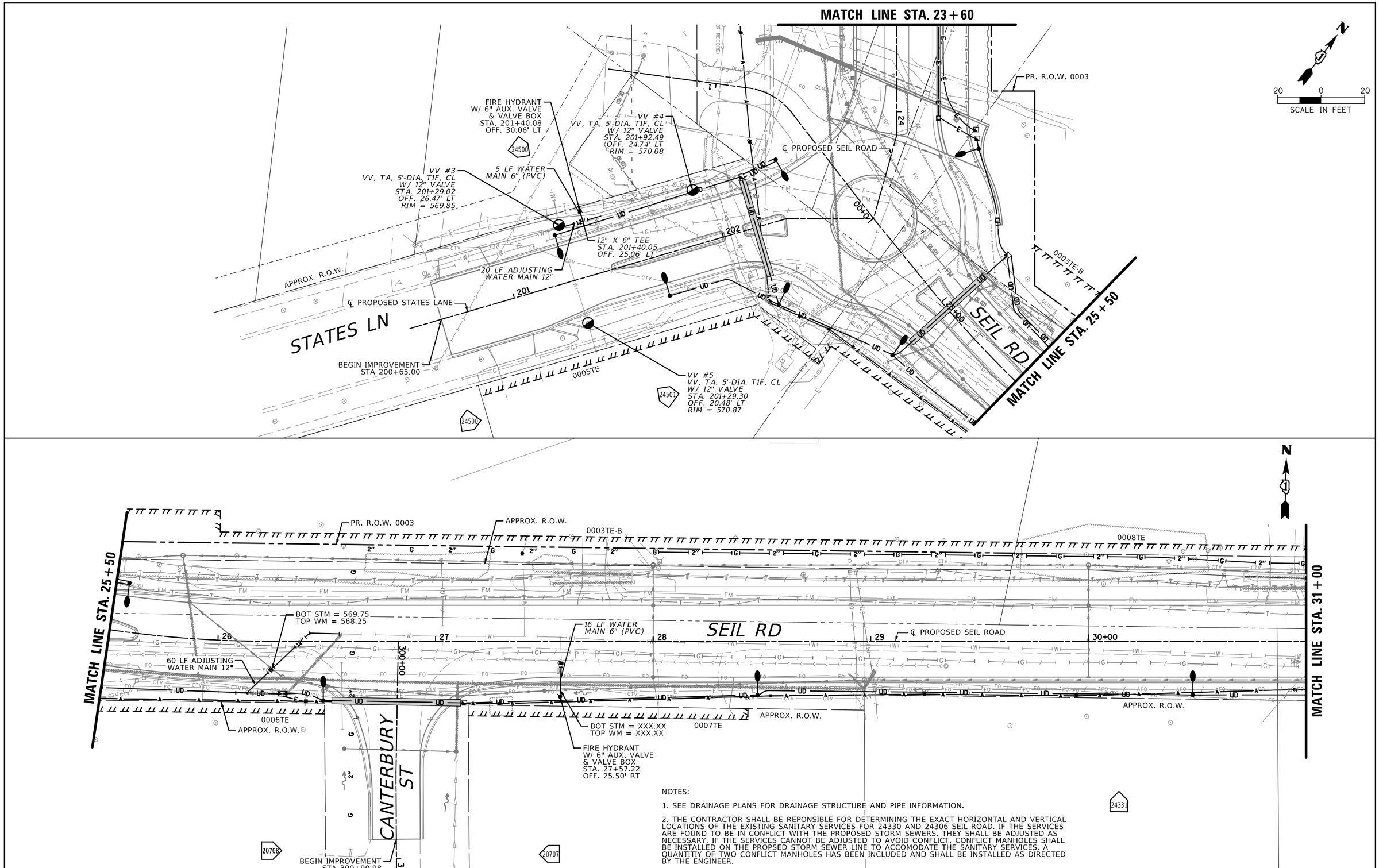

NOTES:

1. SEE DRAINAGE PLANS FOR DRAINAGE STRUCTURE AND PIPE INFORMATION.

2. THE CONTRACTOR SHALL BE REPONSIBLE FOR DETERMINING THE EXACT HORIZONTAL AND VERTICAL LOCATIONS OF THE EXISTING SANITARY SERVICES FOR 24330 AND 24306 SEIL ROAD. IF THE SERVICES ARE FOUND TO BE IN CONFLICT WITH THE PROPOSED STORM SEWERS, THEY SHALL BE ADJUSTED AS NECESSARY. IF THE SERVICES CANNOT BE ADJUSTED TO AVOID CONFLICT, CONFLICT MANHOLES SHALL BE INSTALLED ON THE PROPSED STORM SEWER LINE TO ACCOMODATE THE SANITARY SERVICES. A QUANTITIY OF TWO CONFLICT MANHOLES HAS BEEN INCLUDED AND SHALL BE INSTALLED AS DIRECTED BY THE ENGINEER.

CHRISTOPHER B. BURKE ENGINEERING, LTD.
16021 W. 159th Street, Suite 201
Lockport, Illinois 60441
(815) 770-2850

USER NAME = aschaefer	DESIGNED - AJS/JRS	REVISED -	
	DRAWN - PWN/JRS	REVISED -	
PLOT SCALE = 40'	CHECKED - AJS	REVISED -	
PLOT DATE = 11/2/2025	DATE -	REVISED -	

STATE OF ILLINOIS
DEPARTMENT OF TRANSPORTATION

SEIL ROAD WIDENING
PROPOSED UTILITY PLAN

SCALE: 40' | SHEET 2 OF 3 SHEETS | STA. 23+60 TO STA. 31+00

F.A.U. RTE.	SECTION	COUNTY	TOTAL SHEETS	SHEET NO.
0403	21-00047-00-WR	WILL	149	58
		CONTRACT NO. 61M01		
		ILLINOIS FED. AID PROJECT		

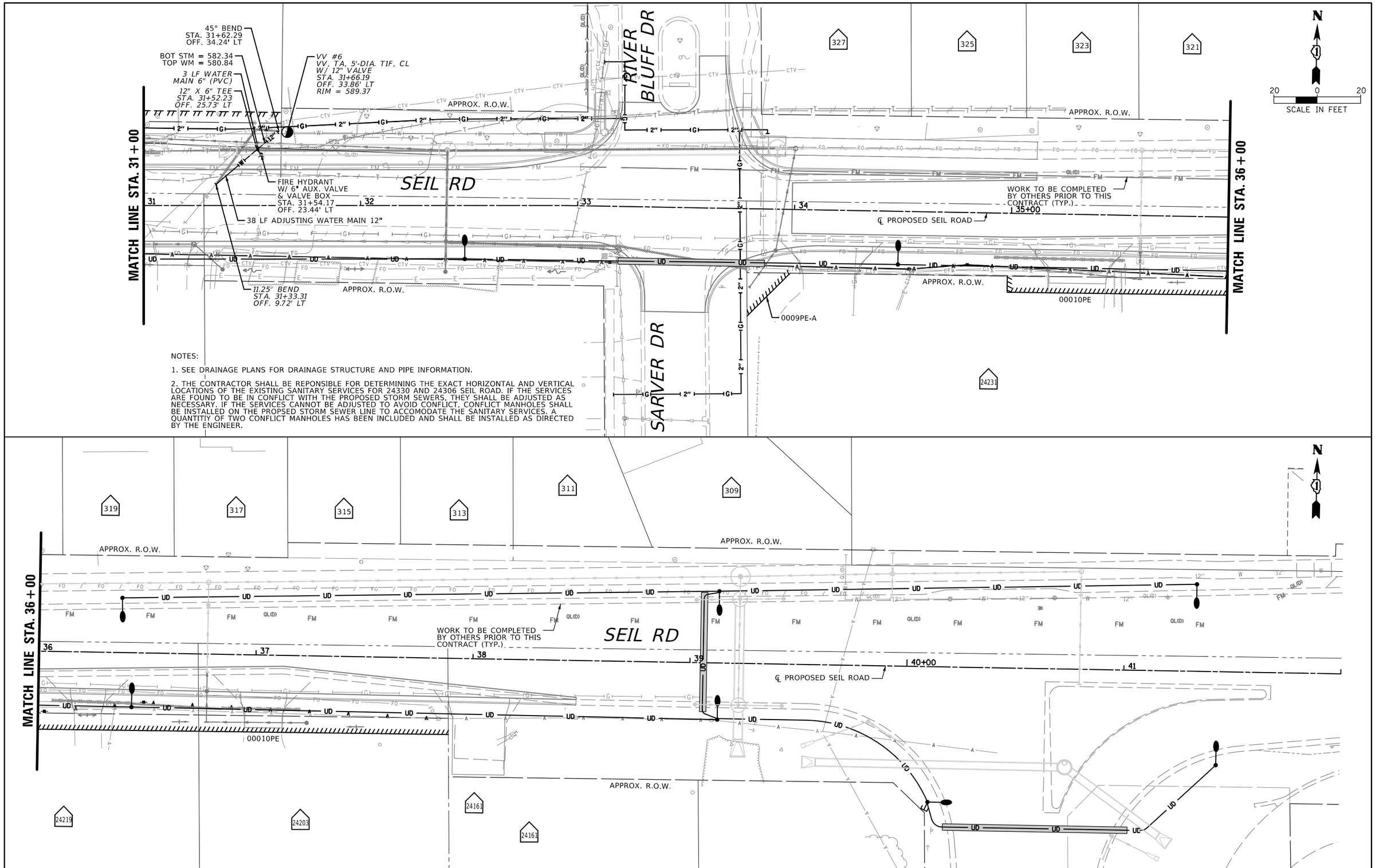

NOTES:

1. SEE DRAINAGE PLANS FOR DRAINAGE STRUCTURE AND PIPE INFORMATION.

2. THE CONTRACTOR SHALL BE REPONSIBLE FOR DETERMINING THE EXACT HORIZONTAL AND VERTICAL LOCATIONS OF THE EXISTING SANITARY SERVICES FOR 24330 AND 24306 SEIL ROAD. IF THE SERVICES ARE FOUND TO BE IN CONFLICT WITH THE PROPOSED STORM SEWERS, THEY SHALL BE ADJUSTED AS NECESSARY. IF THE SERVICES CANNOT BE ADJUSTED TO AVOID CONFLICT, CONFLICT MANHOLES SHALL BE INSTALLED ON THE PROPSED STORM SEWER LINE TO ACCOMODATE THE SANITARY SERVICES. A QUANTITIY OF TWO CONFLICT MANHOLES HAS BEEN INCLUDED AND SHALL BE INSTALLED AS DIRECTED BY THE ENGINEER.

CHRISTOPHER B. BURKE ENGINEERING, LTD.
16221 W. 159th Street, Suite 201
Lockport, Illinois 60441
(815) 770-2850

USER NAME = eschaefer	DESIGNED - AJS/JRS	REVISED -	
	DRAWN - PWN/JRS	REVISED -	
PLOT SCALE = 40'	CHECKED - AJS	REVISED -	
PLOT DATE = 11/2/2025	DATE -	REVISED -	

STATE OF ILLINOIS
DEPARTMENT OF TRANSPORTATION

SEIL ROAD WIDENING
PROPOSED UTILITY PLAN

SCALE: 40' | SHEET 3 OF 3 SHEETS | STA. 31+00 TO STA. 42+00

F.A.U. RTE.	SECTION	COUNTY	TOTAL SHEETS	SHEET NO.
0403	21-00047-00-WR	WILL	149	59

CONTRACT NO. 61M01

ILLINOIS FED. AID PROJECT

PART OF THE SOUTHWEST & SOUTHEAST QUARTER OF SECTION 16, TWP. 35 N., R. 9 E. OF THE 3RD. P.M., IN WILL COUNTY, ILLINOIS.
PART OF THE NORTHWEST & NORTHEAST QUARTER OF SECTION 21, TWP. 35 N., R. 9 E. OF THE 3RD. P.M., IN WILL COUNTY, ILLINOIS.

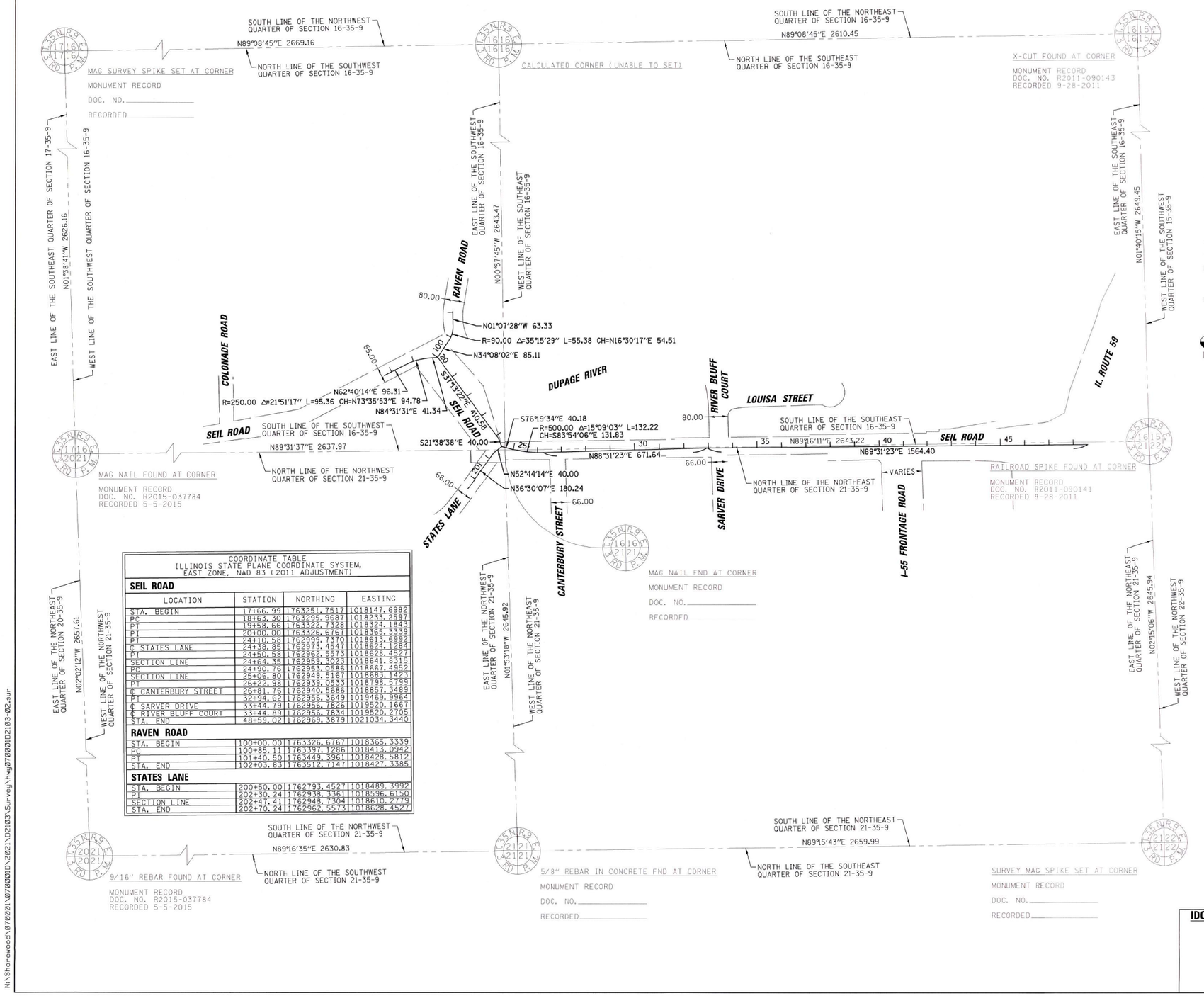

COORDINATE TABLE
ILLINOIS STATE PLANE COORDINATE SYSTEM,
EAST ZONE, NAD 83 (2011 ADJUSTMENT)

LOCATION	STATION	NORTHING	EASTING
SEIL ROAD			
STA. BEGIN	17+66.99	1763251.7517	1018147.6982
PC	18+63.30	1763295.9687	1018233.2597
PT	19+58.66	1763322.7328	1018324.1843
PT	20+00.00	1763326.6767	1018365.3339
PT	24+10.58	1762999.7370	1018613.6992
℄ STATES LANE	24+38.85	1762973.4547	1018624.1284
PT	24+50.58	1762962.5573	1018628.4527
SECTION LINE	24+64.35	1762959.3023	1018641.8315
PC	24+90.76	1762953.0586	1018667.4952
SECTION LINE	25+06.80	1762949.5167	1018683.1423
PT	26+22.98	1762939.0533	1018798.5799
℄ CANTERBURY STREET	26+81.76	1762940.5686	1018857.3489
PT	32+94.62	1762956.3649	1019469.9964
℄ SARVER DRIVE	33+44.79	1762956.7826	1019520.1667
℄ RIVER BLUFF COURT	33+44.89	1762956.7834	1019520.2705
STA. END	48+59.02	1762969.3879	1021034.3440
RAVEN ROAD			
STA. BEGIN	100+00.00	1763326.6767	1018365.3339
PC	100+85.11	1763397.1286	1018413.0942
PT	101+40.50	1763449.3961	1018428.5812
STA. END	102+03.83	1763512.7147	1018427.3385
STATES LANE			
STA. BEGIN	200+50.00	1762793.4527	1018489.3992
PI	202+30.24	1762938.3361	1018596.6150
SECTION LINE	202+47.41	1762943.7304	1018610.2779
STA. END	202+70.24	1762962.5573	1018628.4527

LEGEND

SECTION CORNER — QUARTER SECTION CORNER

N

GRAPHIC SCALE FEET — SCALE: 1"= 200'

- SECTION / QUARTER SECTION LINE
- PLATTED LOT LINES
- PROPERTY (DEED) LINE
- APPARENT PROPERTY LINE
- EXISTING CENTERLINE
- PROPOSED CENTERLINE
- EXISTING RIGHT OF WAY LINE
- PROPOSED RIGHT OF WAY LINE
- EXISTING EASEMENT
- PROPOSED EASEMENT
- EXISTING ACCESS CONTROL LINE
- PROPOSED ACCESS CONTROL LINE
- MEASURED DIMENSION (129.32')
- COMPUTED DIMENSION (129.32' (COMP))
- RECORDED DIMENSION ((129.32'))
- EXISTING BUILDING

○ IRON PIPE OR ROD FOUND — ⊕ "MAG" NAIL SET
+ CUT CROSS FOUND OR SET — ● 5/8" REBAR SET

■ **STAKING OF PROPOSED RIGHT OF WAY.** SET DIVISION OF HIGHWAYS SURVEY MARKER TO MONUMENT THE POSITION SHOWN. IDENTIFIED BY INSCRIPTION DATA AND SURVEYORS REGISTRATION NUMBER.

■ M **STAKING OF PROPOSED RIGHT OF WAY IN CULTIVATED AREAS.** BURIED 5/8 INCH METAL ROD 20 INCHES BELOW GROUND TO MARK FUTURE SURVEY MARKER POSITION IDENTIFIED BY COLORED PLASTIC CAP BEARING SURVEYORS REGISTRATION NUMBER.

PERMANENT SURVEY MARKER, I.D.O.T. STANDARD 2135 (TO BE SET BY OTHERS)

RIGHT OF WAY STAKING PROPOSED TO BE SET

STATE OF ILLINOIS)
) SS
COUNTY OF COOK)

THIS IS TO CERTIFY THAT I, KENNETH J. RASMUSSEN, AN ILLINOIS PROFESSIONAL LAND SURVEYOR, (WE, CHRISTOPHER B. BURKE ENGINEERING, LTD. AN ILLINOIS PROFESSIONAL DESIGN FIRM LAND SURVEYING CORPORATION, NUMBER 184.001175-0014,) HAVE SURVEYED THE PLAT OF HIGHWAYS SHOWN HEREON IN SECTION 16 & 21, TOWNSHIP 35 NORTH, RANGE 9 EAST OF THE THIRD PRINCIPAL MERIDIAN, WILL COUNTY, THAT THE SURVEY IS TRUE AND COMPLETE AS SHOWN TO THE BEST OF MY KNOWLEDGE AND BELIEF, THAT THE PLAT CORRECTLY REPRESENTS SAID SURVEY, THAT ALL MONUMENTS FOUND AND ESTABLISHED ARE OF PERMANENT QUALITY AND OCCUPY THE POSITIONS SHOWN THEREON AND THAT THE MONUMENTS ARE SUFFICIENT TO ENABLE THE SURVEY TO BE RETRACED, MADE FOR THE DEPARTMENT OF TRANSPORTATION, STATE OF ILLINOIS.

DATED AT ROSEMONT, ILLINOIS THIS 13 DAY OF December A.D. 2023

Kenneth J. Rasmussen

KENNETH J. RASMUSSEN 035-003650 PROFESSIONAL LAND SURVEYOR STATE OF ILLINOIS ROSEMONT, ILLINOIS

ILLINOIS PROFESSIONAL LAND SURVEYOR NO. 35-003650
LICENSE EXPIRATION DATE: 11-30-2024

THIS PROFESSIONAL SERVICE CONFORMS TO THE CURRENT ILLINOIS MINIMUM STANDARDS FOR A BOUNDARY SURVEY.

NOTE:

ALL DIMENSION ARE MEASURED UNLESS OTHERWISE SPECIFIED

BEARINGS AND DISTANCES SHOWN HEREON ARE ON THE ILLINOIS STATE PLANE COORDINATE SYSTEM, EAST ZONE, NORTH AMERICAN DATUM OF 1983 (2011 ADJUSTMENT) "GRID".

ALL MEASURED AND CALCULATED DISTANCES ARE "GRID" NOT "GROUND". TO OBTAIN GROUND DISTANCES, DIVIDE GRID DISTANCES BY THE COMBINATION FACTOR OF 0.99995372753.

AREAS SHOWN ON THIS PLAT ARE "GROUND"

CHRISTOPHER B. BURKE ENGINEERING, LTD.
9575 W. Higgins Road, Suite 600
Rosemont, Illinois 60018
(847) 823-0500

PLAT OF HIGHWAYS

STATE OF ILLINOIS
DEPARTMENT OF TRANSPORTATION
SEIL ROAD

LIMITS: SEIL ROAD (RAVEN TO FRONTAGE) COUNTY: WILL
SECTION: 21-00047-00-WR JOB NO.: R-91-013-21
STA. 17+66.99 TO STA. 48+59.02
SCALE: 1"= 200' SHEET 2 OF 5 SHEETS

IDOT USE ONLY

BUREAU OF LAND ACQUISITION
201 WEST CENTER COURT
SCHAUMBURG, ILLINOIS 60196

N:\Shorewood\07020101\07020101\2021\021203\Survey\Hwy07020101021203-02.sur

PART OF THE SOUTHWEST & SOUTHEAST QUARTER OF SECTION 16, TWP. 35 N., R. 9 E. OF THE 3RD. P.M., IN WILL COUNTY, ILLINOIS.
PART OF THE NORTHWEST & NORTHEAST QUARTER OF SECTION 21, TWP. 35 N., R. 9 E. OF THE 3RD. P.M., IN WILL COUNTY, ILLINOIS.

RAVEN ROAD STATION OFFSET TABLE

PT #	STATION	OFFSET
05	101+35.93	36.35 LT
06	101+05.81	27.90 LT
07	100+86.02	36.93 LT
08	100+32.96	8.43 RT
09	100+60.14	23.18 RT
10	100+78.32	33.09 RT
11	100+53.65	48.36 RT
23	100+87.44	38.59 RT
24	100+56.19	58.56 RT

PARCEL NUMBER	TOTAL HOLDINGS ACRES	PART TAKEN ACRES	AREA IN EXISTING R.O.W. ACRES	REMAINDER AREA ACRES	EASEMENT AREA ACRES	EASEMENT AREA SQUARE FEET	PARCEL INDEX NUMBER
0001	5.781	0.022	N/A	5.759	N/A	N/A	05-06-16-300-021
0002TE	0.410	N/A	N/A	0.410	TE= 0.004	154	05-06-16-406-008
0003 0003TE-A 0003TE-B	11.371	0.836	0.616	10.535	 TE-A= 0.034 TE-B= 0.068	 1500 2952	05-06-16-404-033 05-06-16-400-034
0005TE	0.305	N/A	N/A	0.305	TE= 0.019	824	05-06-21-104-001

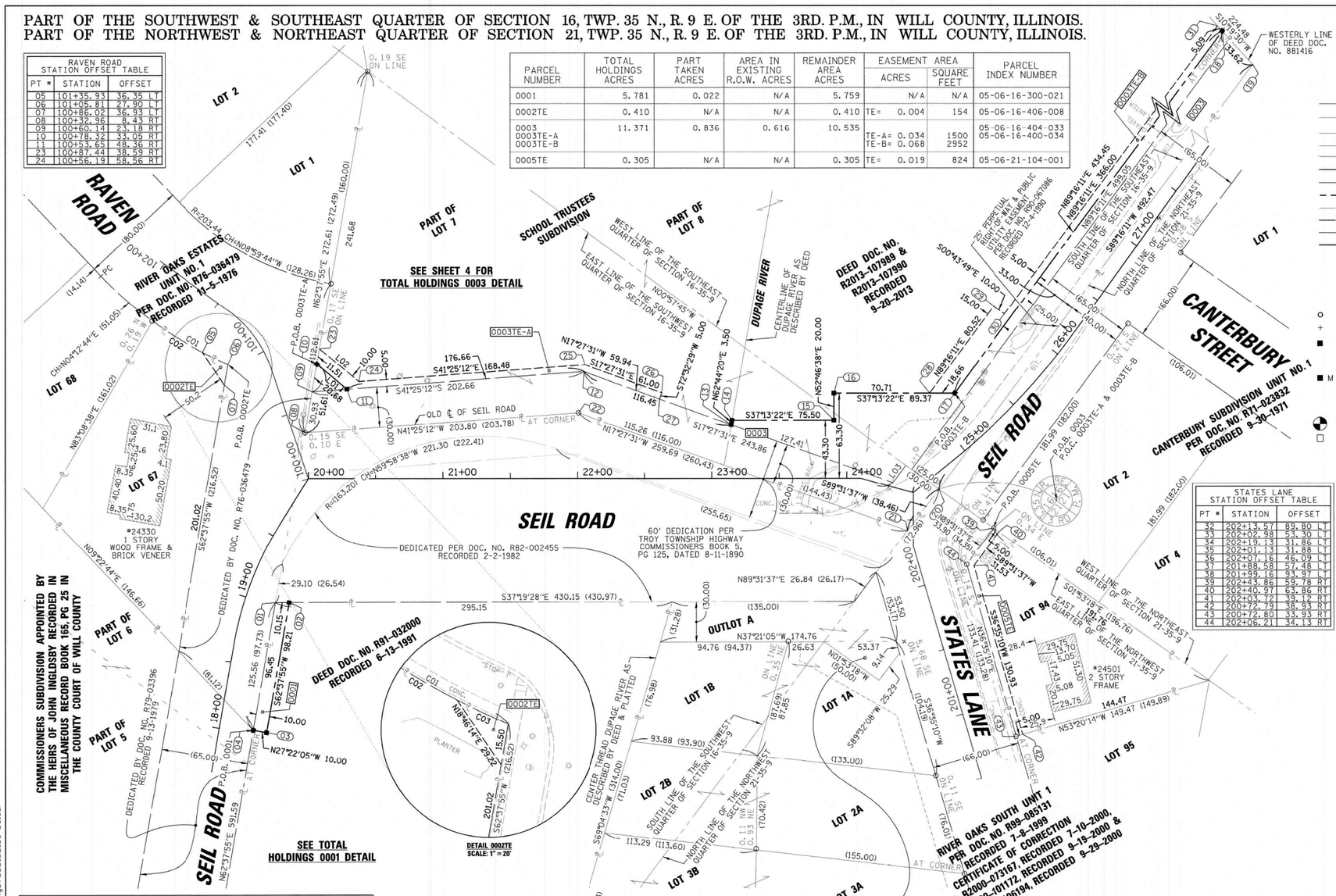

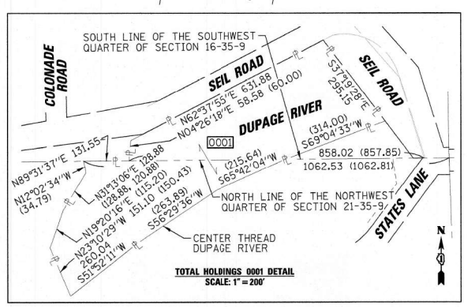

TOTAL HOLDINGS 0001 DETAIL
SCALE: 1" = 200'

COORDINATE TABLE
ILLINOIS STATE PLANE COORDINATE SYSTEM, EAST ZONE, NAD 83 (2011 ADJUSTMENT)

PT#	STATION	OFFSET		NORTHING	EASTING
01	19+02.96	22.24	RT	1763290.19	1018276.75
02	19+06.77	31.81	RT	1763282.11	1018282.90
03	18+02.83	35.17	RT	1763236.97	1018195.88
04	18+02.83	25.17	RT	1763245.85	1018191.09
09	20+02.74	64.39	LT	1763363.45	1018418.27
10	20+06.28	84.77	LT	1763372.95	1018436.64
11	20+28.67	66.30	LT	1763343.95	1018435.47
12	22+04.85	79.23	LT	1763211.48	1018552.34
13	23+14.44	39.85	LT	1763100.40	1018587.28
14	23+15.05	43.30	LT	1763102.00	1018590.39
15	23+90.55	43.30	LT	1763041.88	1018636.06
16	23+90.55	63.30	LT	1763053.98	1018651.99
17	25+23.64	37.02	LT	1762982.81	1018706.05
18	29+66.02	40.47	LT	1762988.35	1019140.46
19	29+59.14	7.55	LT	1762955.27	1019134.44
20	24+66.95	9.98	RT	1762948.99	1018642.00
21	24+59.58	28.31	RT	1762948.67	1018609.25
22	22+00.70	48.84	LT	1763196.41	1018525.63
23	20+08.25	96.11	LT	1763378.24	1018446.86

COORDINATE TABLE
ILLINOIS STATE PLANE COORDINATE SYSTEM, EAST ZONE, NAD 83 (2011 ADJUSTMENT)

PT#	STATION	OFFSET		NORTHING	EASTING
24	20+37.52	71.96	LT	1763340.33	1018445.33
25	22+05.55	84.29	LT	1763213.99	1018556.79
26	22+62.95	63.66	LT	1763155.80	1018575.09
27	22+61.26	58.96	LT	1763154.30	1018570.32
28	25+08.46	49.51	LT	1762997.67	1018694.76
29	25+98.26	59.68	LT	1762998.70	1018775.28
30	25+98.66	49.69	LT	1762988.70	1018775.41
31	29+67.06	45.45	LT	1762993.36	1019141.38
39	24+80.37	58.16	RT	1762899.00	1018643.65
40	24+81.71	62.38	RT	1762894.00	1018643.82
41	24+51.14	70.68	RT	1762893.74	1018612.29

LINE TABLE

LINE	BEARING	LENGTH
L01	S02°18'15"W	29.03
L02	N03°18'15"E	37.95
L03	S89°31'37"W	16.00

CURVE TABLE

CURVE	RADIUS	DELTA	LENGTH	CHORD BEARING	CHORD LENGTH
C01	(283.44)	13°09'28"	65.09 (65.00)	S07°32'00"E	64.95
C02	(283.44)	8°54'43"	44.08	S05°24'37"E	44.04
C03	(283.44)	4°14'46"	21.00	S11°59'21"E	21.00

STATES LANE STATION OFFSET TABLE

PT #	STATION	OFFSET
32	202+13.57	89.80 LT
33	202+02.98	53.30 LT
34	202+19.13	31.86 LT
35	202+01.13	31.88 LT
36	202+07.16	46.09 LT
37	201+88.58	57.48 LT
38	201+99.18	93.97 LT
39	202+43.86	59.78 RT
40	202+40.97	63.86 RT
41	202+03.72	39.12 RT
42	200+72.79	38.93 RT
43	200+72.80	33.93 RT
44	202+06.21	34.13 RT

LEGEND

SECTION CORNER
QUARTER SECTION CORNER

SECTION / QUARTER SECTION LINE
PLATTED LOT LINES
PROPERTY (DEED) LINE
APPARENT PROPERTY LINE
EXISTING CENTERLINE
PROPOSED CENTERLINE
EXISTING RIGHT OF WAY LINE
PROPOSED RIGHT OF WAY LINE
EXISTING EASEMENT
PROPOSED EASEMENT
EXISTING ACCESS CONTROL LINE
PROPOSED ACCESS CONTROL LINE
MEASURED DIMENSION
COMPUTED DIMENSION
RECORDED DIMENSION
EXISTING BUILDING

GRAPHIC SCALE FEET
SCALE: 1"= 40'

IRON PIPE OR ROD FOUND
CUT CROSS FOUND OR SET
"MAG" NAIL SET
5/8" REBAR SET

STAKING OF PROPOSED RIGHT OF WAY. SET DIVISION OF HIGHWAYS SURVEY MARKER TO MONUMENT THE POSITION SHOWN. IDENTIFIED BY INSCRIPTION DATA AND SURVEYORS REGISTRATION NUMBER.

STAKING OF PROPOSED RIGHT OF WAY IN CULTIVATED AREAS. BURIED 5/8 INCH METAL ROD 20 INCHES BELOW GROUND TO MARK FUTURE SURVEY MARKER POSITION IDENTIFIED BY COLORED PLASTIC CAP BEARING SURVEYORS REGISTRATION NUMBER.

PERMANENT SURVEY MARKER, I.D.O.T. STANDARD 2135 (TO BE SET BY OTHERS)

RIGHT OF WAY STAKING PROPOSED TO BE SET

STATE OF ILLINOIS)
)SS
COUNTY OF COOK)

THIS IS TO CERTIFY THAT I, KENNETH J. RASMUSSEN, AN ILLINOIS PROFESSIONAL LAND SURVEYOR, I WE, CHRISTOPHER B. BURKE ENGINEERING, LTD. AN ILLINOIS PROFESSIONAL DESIGN FIRM LAND SURVEYING CORPORATION, NUMBER 184.001175-0014, I HAVE SURVEYED THE PLAT OF HIGHWAYS SHOWN HEREON IN SECTION 16 & 21, TOWNSHIP 35 NORTH, RANGE 9 EAST OF THE THIRD PRINCIPAL MERIDIAN, WILL COUNTY, THAT THE SURVEY IS TRUE AND COMPLETE AS SHOWN TO THE BEST OF MY KNOWLEDGE AND BELIEF. THAT THE PLAT CORRECTLY REPRESENTS SAID SURVEY. THAT ALL MONUMENTS FOUND AND ESTABLISHED ARE OF PERMANENT QUALITY AND OCCUPY THE POSITIONS SHOWN THEREON AND THAT THE MONUMENTS ARE SUFFICIENT TO ENABLE THE SURVEY TO BE RETRACED. MADE FOR THE DEPARTMENT OF TRANSPORTATION, STATE OF ILLINOIS.

DATED AT ROSEMONT, ILLINOIS THIS 26 DAY OF March 20 24 A.D.

Kenneth J. Rasmussen

ILLINOIS PROFESSIONAL LAND SURVEYOR NO. 35-3240
LICENSE EXPIRATION DATE: 11-30-2024

THIS PROFESSIONAL SERVICE CONFORMS TO THE CURRENT ILLINOIS MINIMUM STANDARDS FOR A BOUNDARY SURVEY

KENNETH J. RASMUSSEN 3240 PROFESSIONAL LAND SURVEYOR STATE OF ILLINOIS ROSEMONT, ILLINOIS

NOTE:

ALL DIMENSION ARE MEASURED UNLESS OTHERWISE SPECIFIED

BEARINGS AND DISTANCES SHOWN HEREON ARE ON THE ILLINOIS STATE PLANE COORDINATE SYSTEM, EAST ZONE, NORTH AMERICAN DATUM OF 1983 (2011 ADJUSTMENT) "GRID".

ALL MEASURED AND CALCULATED DISTANCES ARE "GRID" NOT "GROUND". TO OBTAIN GROUND DISTANCES, DIVIDE GRID DISTANCES BY THE COMBINATION FACTOR OF 0.9999537253.

AREAS SHOWN ON THIS PLAT ARE "GROUND"

CHRISTOPHER B. BURKE ENGINEERING, LTD.
9575 W. Higgins Road, Suite 600
Rosemont, Illinois 60018
(847) 823-0500

PLAT OF HIGHWAYS
STATE OF ILLINOIS
DEPARTMENT OF TRANSPORTATION
SEIL ROAD

LIMITS: SEIL ROAD (RAVEN TO FRONTAGE) COUNTY: WILL
SECTION: 21-00047-00-WR JOB NO.: R-91-013-21
STA. 17+66.99 TO STA. 24+64.35
SCALE: 1"= 40' SHEET 3 OF 5 SHEETS

IDOT USE ONLY

BUREAU OF LAND ACQUISITION
201 WEST CENTER COURT
SCHAUMBURG, ILLINOIS 60196

REVISION DATE: 03-26-2024 REVISION MADE BY: AJK

N:\Shorewood\0720021\0720021D\2021\D2103\Survey\hwy0720021D2103-03.sur

CHRISTOPHER B. BURKE ENGINEERING, LTD.
16221 W. 159th Street, Suite 201
Lockport, Illinois 60441
(815) 770-2650

USER NAME = aschaefer	DESIGNED - AJS/JRS	REVISED -	
	DRAWN - JRS/PWN	REVISED -	
PLOT SCALE = N.T.S.	CHECKED - AJS	REVISED -	
PLOT DATE = 11/2/2025	DATE -	REVISED -	

STATE OF ILLINOIS
DEPARTMENT OF TRANSPORTATION

SEIL ROAD WIDENING
PLAT OF HIGHWAYS (FOR REFERENCE ONLY)

SCALE: N.T.S. | SHEET 2 OF 4 SHEETS | STA. TO STA.

F.A.U. RTE.	SECTION	COUNTY	TOTAL SHEETS	SHEET NO.
0403	21-00047-00-WR	WILL	149	61

CONTRACT NO. 61M01
ILLINOIS FED. AID PROJECT

PART OF THE SOUTHWEST & SOUTHEAST QUARTER OF SECTION 16, TWP. 35 N., R. 9 E. OF THE 3RD. P.M., IN WILL COUNTY, ILLINOIS.
PART OF THE NORTHWEST & NORTHEAST QUARTER OF SECTION 21, TWP. 35 N., R. 9 E. OF THE 3RD. P.M., IN WILL COUNTY, ILLINOIS.

COORDINATE TABLE
ILLINOIS STATE PLANE COORDINATE SYSTEM, EAST ZONE, NAD 83 (2011 ADJUSTMENT)

PT#	STATION	OFFSET		NORTHING	EASTING
15	23+90.55	43.30	LT	1763041.88	1018636.06
16	23+90.55	63.30	LT	1763053.98	1018651.99
17	25+23.64	37.02	LT	1762982.81	1018706.05
18	29+66.02	40.47	LT	1762988.35	1019140.46
19	29+59.14	7.55	LT	1762955.27	1019134.44
20	24+66.95	9.98	RT	1762948.99	1018642.00
28	25+08.46	49.51	LT	1762997.67	1018694.76
29	25+98.26	59.68	LT	1763038.70	1018775.28
30	25+98.66	49.69	LT	1762988.70	1018775.41
31	29+67.06	45.45	LT	1762993.36	1019141.38
39	24+80.37	58.16	RT	1762899.00	1018643.65
40	24+81.11	62.98	RT	1762894.00	1018643.82
45	24+77.63	48.52	RT	1762903.01	1018643.32
46	26+48.97	28.41	RT	1762911.33	1018825.30
47	26+49.00	33.41	RT	1762906.33	1018825.46
48	24+83.87	57.09	RT	1762904.07	1018648.29
49	24+86.56	61.73	RT	1762894.07	1018648.82
50	27+14.98	29.27	RT	1762912.17	1018891.30
51	28+43.57	30.94	RT	1762913.81	1019019.89
52	28+43.50	35.94	RT	1762908.81	1019019.96
53	27+15.01	34.27	RT	1762907.17	1018891.47
54	31+63.58	42.89	LT	1762995.87	1019337.90
55	31+63.51	37.89	LT	1762990.87	1019337.96

PARCEL NUMBER	TOTAL HOLDINGS ACRES	PART TAKEN ACRES	AREA IN EXISTING R.O.W. ACRES	REMAINDER AREA ACRES	EASEMENT AREA ACRES	EASEMENT AREA SQUARE FEET	PARCEL INDEX NUMBER
0003 0003TE-A 0003TE-B	11.371	0.836	0.616	10.535	TE-A= 0.034 TE-B= 0.068	1500 2952	05-06-16-404-033 05-06-16-400-034
0006TE	0.443	N/A	N/A	0.443	TE= 0.022	960	05-06-21-201-001
0007TE	0.443	N/A	N/A	0.443	TE= 0.015	643	05-06-21-202-001
0008TE	0.918	N/A	0.152	0.918	TE= 0.023	985	05-06-16-400-004

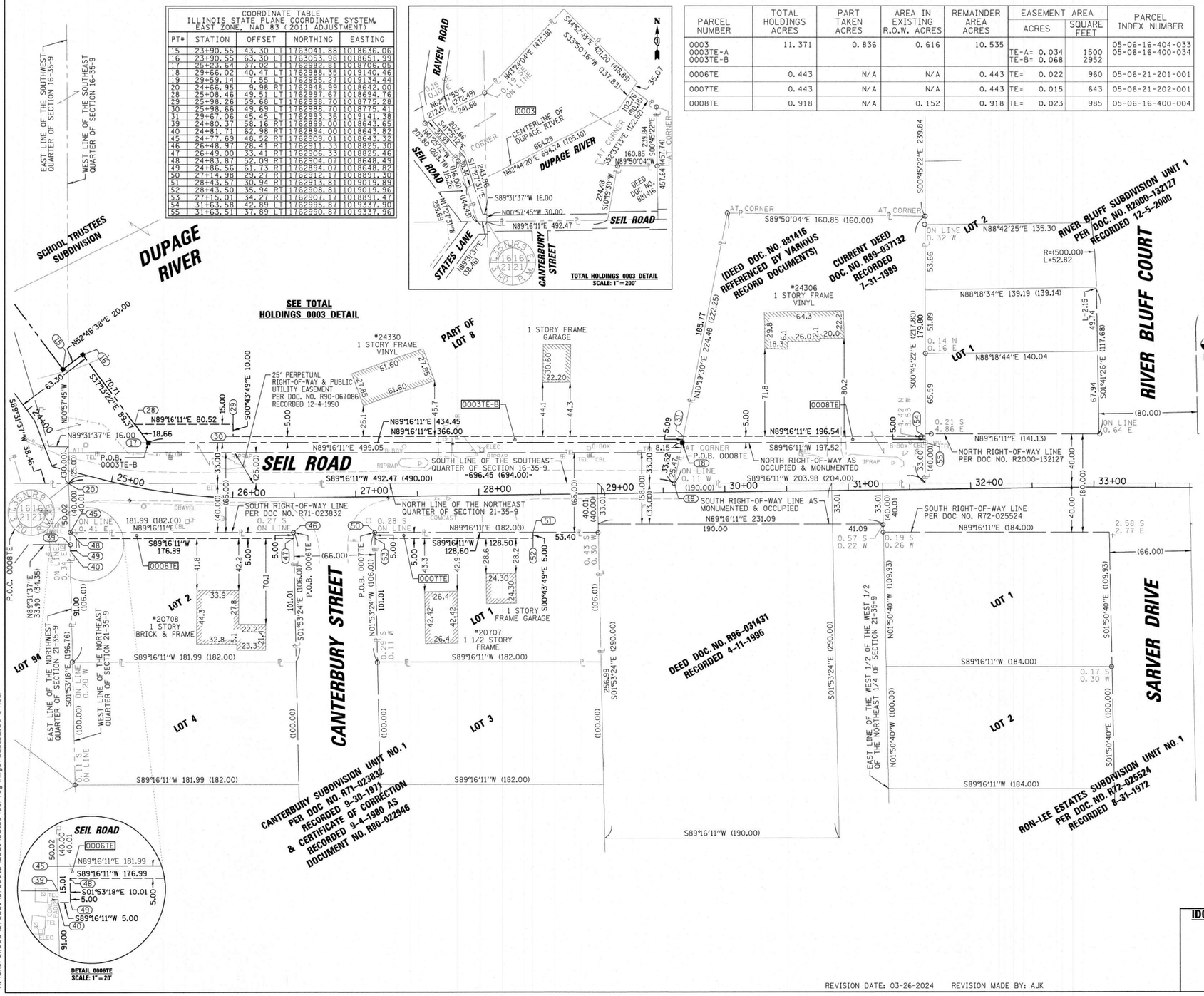

LEGEND

SECTION CORNER — QUARTER SECTION CORNER

GRAPHIC SCALE FEET — SCALE: 1"= 40'

- SECTION / QUARTER SECTION LINE
- PLATTED LOT LINES
- PROPERTY (DEED) LINE
- APPARENT PROPERTY LINE
- EXISTING CENTERLINE
- PROPOSED CENTERLINE
- EXISTING RIGHT OF WAY LINE
- PROPOSED RIGHT OF WAY LINE
- EXISTING EASEMENT
- PROPOSED EASEMENT
- EXISTING ACCESS CONTROL LINE
- PROPOSED ACCESS CONTROL LINE
- 129.32' MEASURED DIMENSION
- 129.32' (COMP) COMPUTED DIMENSION
- (129.32') RECORDED DIMENSION
- EXISTING BUILDING
- IRON PIPE OR ROD FOUND
- "MAG" NAIL SET
- CUT CROSS FOUND OR SET
- 5/8" REBAR SET

STAKING OF PROPOSED RIGHT OF WAY. SET DIVISION OF HIGHWAYS SURVEY MARKER TO MONUMENT THE POSITION SHOWN. IDENTIFIED BY INSCRIPTION DATA AND SURVEYORS REGISTRATION NUMBER.

STAKING OF PROPOSED RIGHT OF WAY IN CULTIVATED AREAS. BURIED 5/8 INCH METAL ROD 20 INCHES BELOW GROUND TO MARK FUTURE SURVEY MARKER POSITION IDENTIFIED BY COLORED PLASTIC CAP BEARING SURVEYORS REGISTRATION NUMBER.

PERMANENT SURVEY MARKER, I.D.O.T. STANDARD 2135 (TO BE SET BY OTHERS)

RIGHT OF WAY STAKING PROPOSED TO BE SET

STATE OF ILLINOIS)
)SS
COUNTY OF COOK)

THIS IS TO CERTIFY THAT I, KENNETH J. RASMUSSEN, AN ILLINOIS PROFESSIONAL LAND SURVEYOR, I WE, CHRISTOPHER B. BURKE ENGINEERING, LTD. AN ILLINOIS PROFESSIONAL DESIGN FIRM LAND SURVEYING CORPORATION, NUMBER 184.001175-0014, I HAVE SURVEYED THE PLAT OF HIGHWAYS SHOWN HEREON IN SECTION 16 & 21, TOWNSHIP 35 NORTH, RANGE 9 EAST OF THE THIRD PRINCIPAL MERIDIAN, WILL COUNTY, THAT THE SURVEY IS TRUE AND COMPLETE AS SHOWN TO THE BEST OF MY KNOWLEDGE AND BELIEF, THAT THE PLAT CORRECTLY REPRESENTS SAID SURVEY, THAT ALL MONUMENTS FOUND AND ESTABLISHED ARE OF PERMANENT QUALITY AND OCCUPY THE POSITIONS SHOWN THEREON AND THAT THE MONUMENTS ARE SUFFICIENT TO ENABLE THE SURVEY TO BE RETRACED, MADE FOR THE DEPARTMENT OF TRANSPORTATION, STATE OF ILLINOIS.

DATED AT ROSEMONT, ILLINOIS THIS 26 DAY OF March, 2024 A. D.

ILLINOIS PROFESSIONAL LAND SURVEYOR NO. 35-2240
LICENSE EXPIRATION DATE: 11-30-2024

THIS PROFESSIONAL SERVICE CONFORMS TO THE CURRENT ILLINOIS MINIMUM STANDARDS FOR A BOUNDARY SURVEY.

NOTE:

ALL DIMENSION ARE MEASURED UNLESS OTHERWISE SPECIFIED

BEARINGS AND DISTANCES SHOWN HEREON ARE ON THE ILLINOIS STATE PLANE COORDINATE SYSTEM, EAST ZONE, NORTH AMERICAN DATUM OF 1983 (2011 ADJUSTMENT) "GRID".

ALL MEASURED AND CALCULATED DISTANCES ARE "GRID" NOT "GROUND". TO OBTAIN GROUND DISTANCES, DIVIDE GRID DISTANCES BY THE COMBINATION FACTOR OF 0.99995372753.

AREAS SHOWN ON THIS PLAT ARE "GROUND"

CHRISTOPHER B. BURKE ENGINEERING, LTD.
9575 W. Higgins Road, Suite 600
Rosemont, Illinois 60018
(847) 823-0500

PLAT OF HIGHWAYS

STATE OF ILLINOIS
DEPARTMENT OF TRANSPORTATION
SEIL ROAD

IDOT USE ONLY

LIMITS: SEIL ROAD (RAVEN TO FRONTAGE) COUNTY: WILL
SECTION: 21-00047-00-WR JOB NO.: R-91-013-21
STA. 24+64.35 TO STA. 33+77.80
SCALE: 1"= 40' SHEET 4 OF 5 SHEETS

BUREAU OF LAND ACQUISITION
201 WEST CENTER COURT
SCHAUMBURG, ILLINOIS 60196

REVISION DATE: 03-26-2024 REVISION MADE BY: AJK

PART OF THE SOUTHWEST & SOUTHEAST QUARTER OF SECTION 16, TWP. 35 N., R. 9 E. OF THE 3RD. P.M., IN WILL COUNTY, ILLINOIS.
PART OF THE NORTHWEST & NORTHEAST QUARTER OF SECTION 21, TWP. 35 N., R. 9 E. OF THE 3RD. P.M., IN WILL COUNTY, ILLINOIS.

STATE OF ILLINOIS)
) SS
COUNTY OF COOK)

THIS IS TO CERTIFY THAT I, KENNETH J. RASMUSSEN, AN ILLINOIS PROFESSIONAL LAND SURVEYOR, (WE, CHRISTOPHER B. BURKE ENGINEERING, LTD. AN ILLINOIS PROFESSIONAL DESIGN FIRM LAND SURVEYING CORPORATION, NUMBER 184.001175-0014,) HAVE SURVEYED THE PLAT OF HIGHWAYS SHOWN HEREON IN SECTION 16 & 21, TOWNSHIP 35 NORTH, RANGE 9 EAST OF THE THIRD PRINCIPAL MERIDIAN, WILL COUNTY, THAT THE SURVEY IS TRUE AND COMPLETE AS SHOWN TO THE BEST OF MY KNOWLEDGE AND BELIEF, THAT THE PLAT CORRECTLY REPRESENTS SAID SURVEY, THAT ALL MONUMENTS FOUND AND ESTABLISHED ARE OF PERMANENT QUALITY AND OCCUPY THE POSITIONS SHOWN THEREON AND THAT THE MONUMENTS ARE SUFFICIENT TO ENABLE THE SURVEY TO BE RETRACED, MADE FOR THE DEPARTMENT OF TRANSPORTATION, STATE OF ILLINOIS.

DATED AT ROSEMONT, ILLINOIS THIS 12 DAY OF April 2023 A.D.

Kenneth J. Rasmussen

ILLINOIS PROFESSIONAL LAND SURVEYOR NO. 35-3240
LICENSE EXPIRATION DATE: 11-30-2024

THIS PROFESSIONAL SERVICE CONFORMS TO THE CURRENT ILLINOIS MINIMUM STANDARDS FOR A BOUNDARY SURVEY

KENNETH J. RASMUSSEN 3240 PROFESSIONAL LAND SURVEYOR STATE OF ILLINOIS ROSEMONT, ILLINOIS

COORDINATE TABLE
ILLINOIS STATE PLANE COORDINATE SYSTEM, EAST ZONE, NAD 83 (2011 ADJUSTMENT)

PT#	STATION	OFFSET	NORTHING	EASTING
56	33+78.50	29.45 RT	1762927.62	1019554.12
57	33+98.50	29.36 RT	1762927.87	1019574.12
58	33+78.98	49.44 RT	1762907.63	1019554.77
59	34+98.53	28.92 RT	1762929.15	1019674.15
60	36+74.03	28.14 RT	1762931.38	1019849.63
61	36+74.20	35.64 RT	1762923.89	1019849.87
62	34+98.56	36.42 RT	1762921.65	1019674.24
63	37+89.05	27.63 RT	1762932.85	1019964.64
64	37+89.22	35.13 RT	1762925.35	1019964.88

PARCEL NUMBER	TOTAL HOLDINGS ACRES	PART TAKEN ACRES	AREA IN EXISTING R.O.W. ACRES	REMAINDER AREA ACRES	EASEMENT AREA ACRES	EASEMENT AREA SQUARE FEET	PARCEL INDEX NUMBER
0009PE-A	2.225	N/A	0.224	2.225	PE-A= 0.005	200	05-06-21-205-004
0009PE-B					PE-B= 0.030	1317	
0010PE	0.866	N/A	0.087	0.866	PE= 0.020	836	05-06-21-200-021

LEGEND

SECTION CORNER
QUARTER SECTION CORNER

SECTION / QUARTER SECTION LINE
PLATTED LOT LINES
PROPERTY (DEED) LINE
APPARENT PROPERTY LINE
EXISTING CENTERLINE
PROPOSED CENTERLINE
EXISTING RIGHT OF WAY LINE
PROPOSED RIGHT OF WAY LINE
EXISTING EASEMENT
PROPOSED EASEMENT
EXISTING ACCESS CONTROL LINE
PROPOSED ACCESS CONTROL LINE
129.32' MEASURED DIMENSION
129.32' (COMP) COMPUTED DIMENSION
(129.32') RECORDED DIMENSION
EXISTING BUILDING

IRON PIPE OR ROD FOUND
CUT CROSS FOUND OR SET
"MAG" NAIL SET
5/8" REBAR SET

STAKING OF PROPOSED RIGHT OF WAY. SET DIVISION OF HIGHWAYS SURVEY MARKER TO MONUMENT THE POSITION SHOWN. IDENTIFIED BY INSCRIPTION DATA AND SURVEYORS REGISTRATION NUMBER.

M STAKING OF PROPOSED RIGHT OF WAY IN CULTIVATED AREAS. BURIED 5/8 INCH METAL ROD 20 INCHES BELOW GROUND TO MARK FUTURE SURVEY MARKER POSITION IDENTIFIED BY COLORED PLASTIC CAP BEARING SURVEYORS REGISTRATION NUMBER.

PERMANENT SURVEY MARKER, I.D.O.T. STANDARD 2135 (TO BE SET BY OTHERS)

RIGHT OF WAY STAKING PROPOSED TO BE SET

N

GRAPHIC SCALE FEET
0 40
SCALE: 1"= 40'

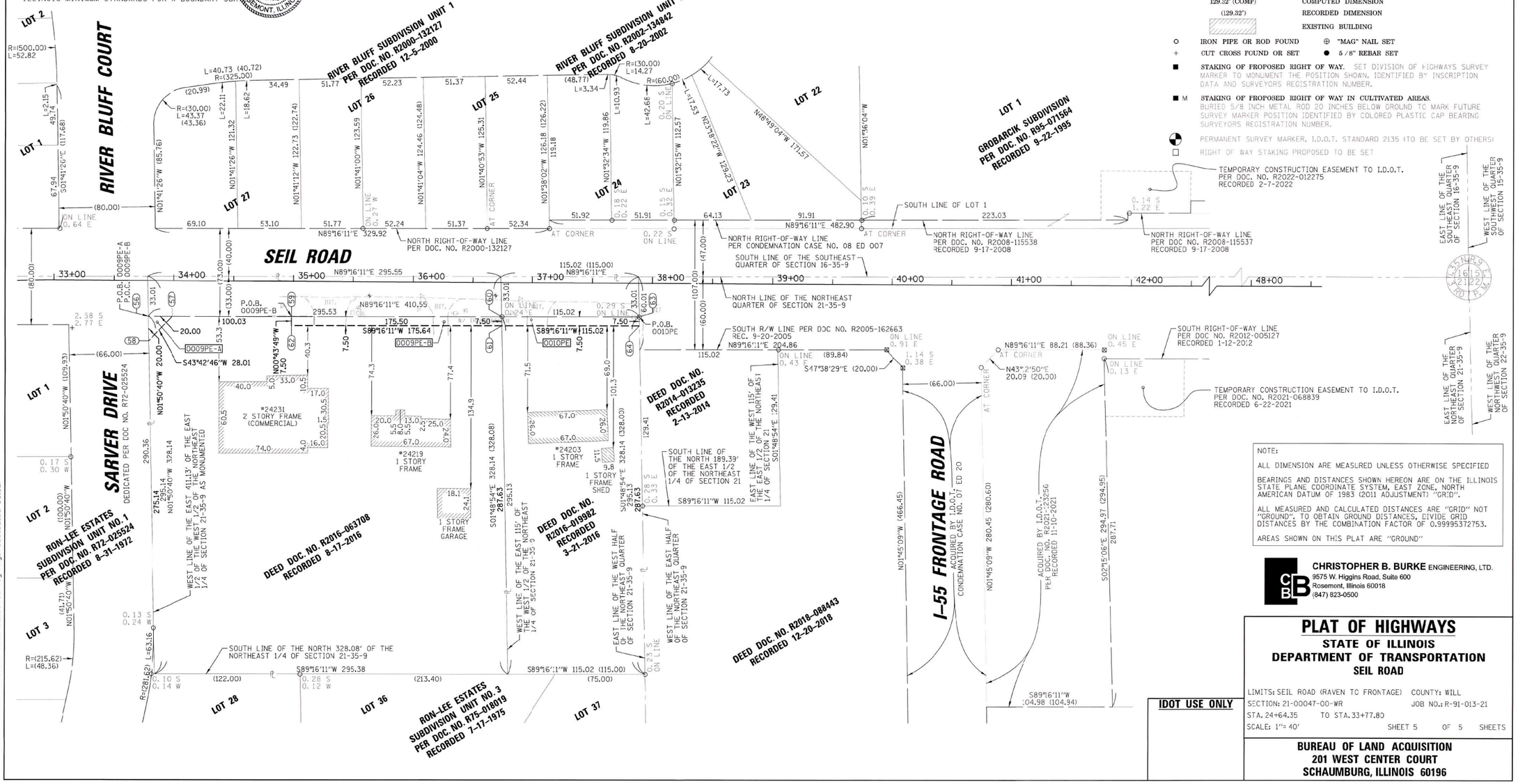

NOTE:

ALL DIMENSION ARE MEASURED UNLESS OTHERWISE SPECIFIED

BEARINGS AND DISTANCES SHOWN HEREON ARE ON THE ILLINOIS STATE PLANE COORDINATE SYSTEM, EAST ZONE, NORTH AMERICAN DATUM OF 1983 (2011 ADJUSTMENT) "GRID".

ALL MEASURED AND CALCULATED DISTANCES ARE "GRID" NOT "GROUND". TO OBTAIN GROUND DISTANCES, DIVIDE GRID DISTANCES BY THE COMBINATION FACTOR OF 0.99995372753.

AREAS SHOWN ON THIS PLAT ARE "GROUND"

CHRISTOPHER B. BURKE ENGINEERING, LTD.
9575 W. Higgins Road, Suite 600
Rosemont, Illinois 60018
(847) 823-0500

PLAT OF HIGHWAYS
STATE OF ILLINOIS
DEPARTMENT OF TRANSPORTATION
SEIL ROAD

LIMITS: SEIL ROAD (RAVEN TO FRONTAGE) COUNTY: WILL
SECTION: 21-00047-00-WR JOB NO.: R-91-013-21
STA. 24+64.35 TO STA. 33+77.80
SCALE: 1"= 40' SHEET 5 OF 5 SHEETS

IDOT USE ONLY

BUREAU OF LAND ACQUISITION
201 WEST CENTER COURT
SCHAUMBURG, ILLINOIS 60196

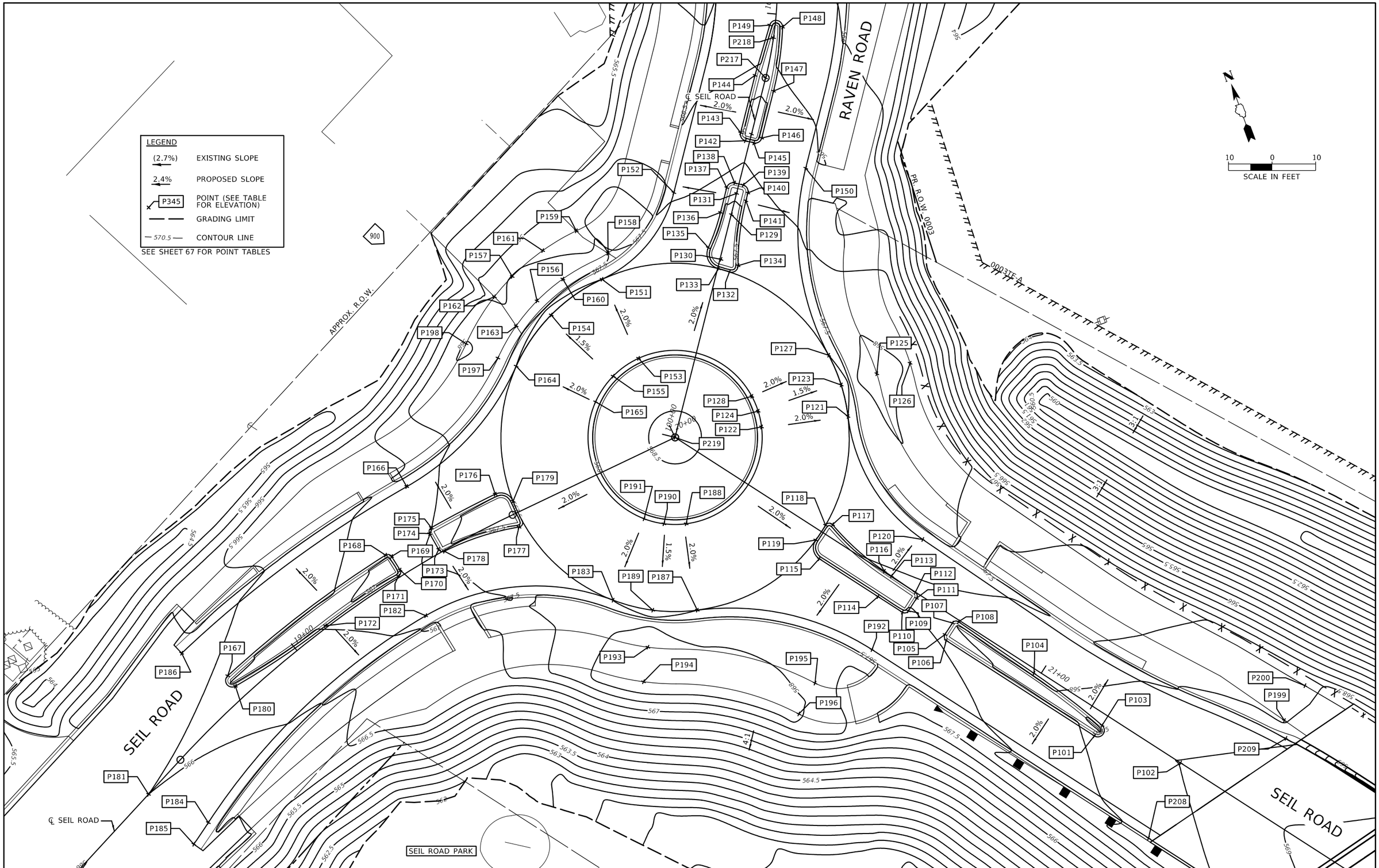

CHRISTOPHER B. BURKE ENGINEERING, LTD. 9021 W. 159th Street, Suite 201 Lockport, Illinois 60441 (815) 770-2650	USER NAME = aschaefer	DESIGNED - AJS/JRS	REVISED -
		DRAWN - PWN/JRS	REVISED -
	PLOT SCALE = 20'	CHECKED - AJS	REVISED -
	PLOT DATE = 11/2/2025	DATE -	REVISED -

STATE OF ILLINOIS
DEPARTMENT OF TRANSPORTATION

SEIL ROAD WIDENING
ROUNDABOUT GRADING PLAN

SCALE: 20' | SHEET 1 OF 4 SHEETS | STA. TO STA.

F.A.U. RTE.	SECTION	COUNTY	TOTAL SHEETS	SHEET NO.
0403	21-00047-00-WR	WILL	149	64
		CONTRACT NO. 61M01		
		ILLINOIS FED. AID PROJECT		

LEGEND

(2.7%)	EXISTING SLOPE
2.4%	PROPOSED SLOPE
P345	POINT (SEE TABLE FOR ELEVATION)
	GRADING LIMIT
570.5	CONTOUR LINE

SEE SHEET 67 FOR POINT TABLES

N

10 0 10
SCALE IN FEET

SEIL ROAD

23+86.38

PR. R.O.W. 0003

0003TE-B

0004TE

0005TE

0006TE

℄ SEIL ROAD

℄ STATES LANE

STATES LANE

APPROX. R.O.W.

24501

P345 P357 P344 P366 P380 P346 P342 P347 P354 P381 P343 P308 P358 P341 P378 P398 P305 P307 P304 P306 P383 P373 P340 P300 P402 P313 P311 P315 P382 P372 P375 P401 P376 P371 P302 P301 P303 P309 P377 P399 P400 P385 P386 P388 P379 P335 P387 P337 P336 P384 P333 P331 P330 P334 P389 P332 P322 P339 P323 P327 P324 P310 P312 P314 P320 P396 P316 P318 P321 P319 P317 P338 P329 P328 P325 P326

1.4% 1.5% 1.6% 2.0% 2.4% 2.7%

24+00 25+00 26+00 0+00 1+00 2+00

CHRISTOPHER B. BURKE ENGINEERING, LTD. 16221 W. 159th Street, Suite 201 Lockport, Illinois 60441 (815) 770-2650	USER NAME = aschaefer	DESIGNED - AJS/JRS	REVISED -
		DRAWN - PWN/JRS	REVISED -
	PLOT SCALE = 20'	CHECKED - AJS	REVISED -
	PLOT DATE = 11/2/2025	DATE -	REVISED -

STATE OF ILLINOIS
DEPARTMENT OF TRANSPORTATION

SEIL ROAD WIDENING
ROUNDABOUT GRADING PLAN

SCALE: 20' | SHEET 2 OF 4 SHEETS | STA. TO STA.

F.A.U. RTE.	SECTION	COUNTY	TOTAL SHEETS	SHEET NO.
0403	21-00047-00-WR	WILL	149	65

CONTRACT NO. 61M01

ILLINOIS FED. AID PROJECT

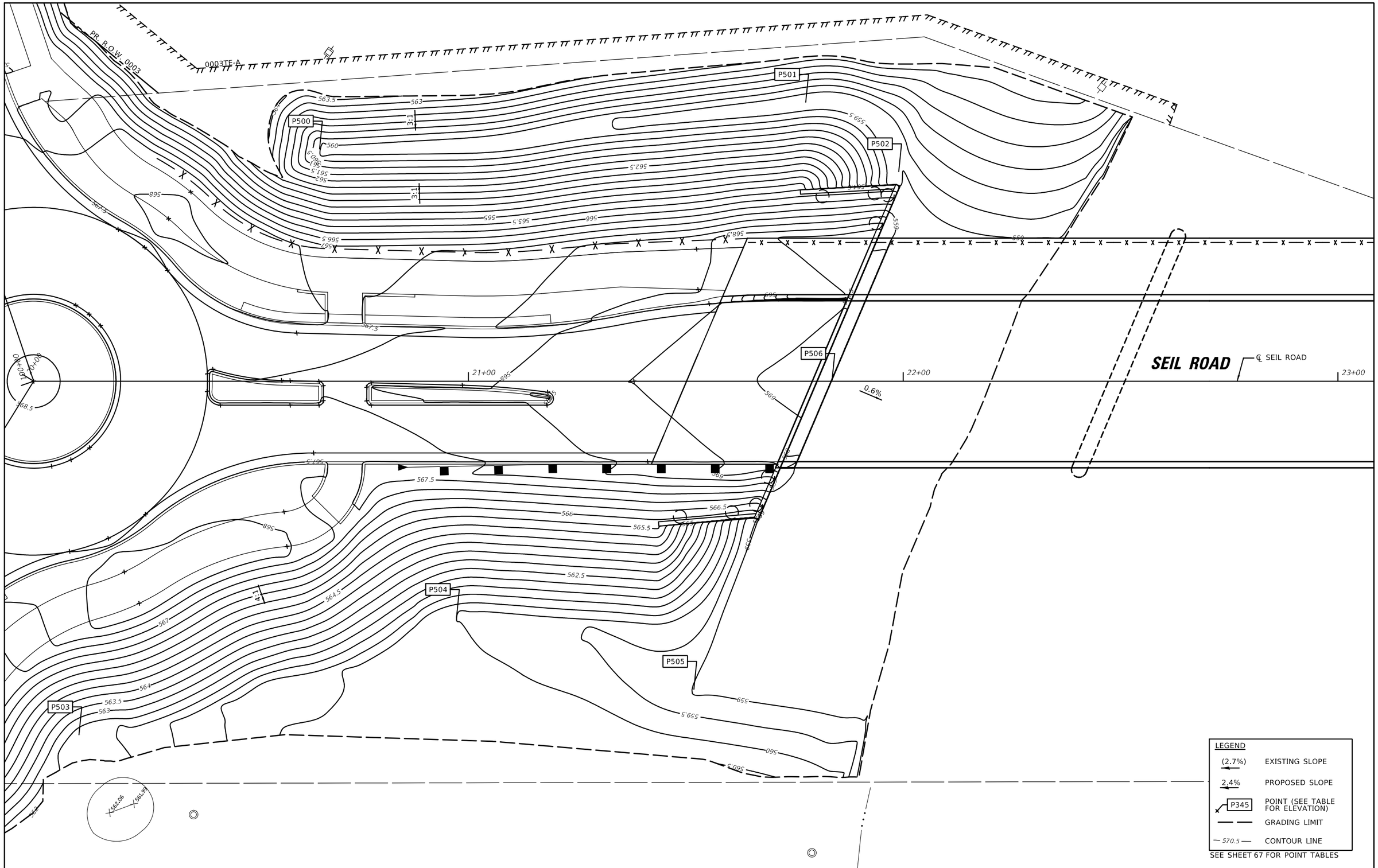

SEE SHEET 67 FOR POINT TABLES

CHRISTOPHER B. BURKE ENGINEERING, LTD.
16021 W. 159th Street, Suite 201
Lockport, Illinois 60441
(815) 770-2850

USER NAME = aschaefer	DESIGNED - AJS/JRS	REVISED -	
	DRAWN - PWN/JRS	REVISED -	
PLOT SCALE = 20'	CHECKED - AJS	REVISED -	
PLOT DATE = 11/2/2025	DATE -	REVISED -	

STATE OF ILLINOIS
DEPARTMENT OF TRANSPORTATION

SEIL ROAD WIDENING
COMPENSATORY STORAGE GRADING PLAN

SCALE: 20' | SHEET 3 OF 4 SHEETS | STA. TO STA.

F.A.U. RTE.	SECTION	COUNTY	TOTAL SHEETS	SHEET NO.
0403	21-00047-00-WR	WILL	149	66
		CONTRACT NO. 61M01		
	ILLINOIS	FED. AID PROJECT		

SEIL ROAD (SHEET 64)

POINT NO.	NORTHING	EASTING	ELEV	STATION	OFFSET
P101	1763229.35	1018432.36	568.07	21+18.04	5.50' RT
P102	1763216.72	1018448.87	568.52	21+38.09	0.00' RT
P103	1763231.00	1018434.86	568.23	21+18.25	2.51' RT
P104	1763247.59	1018424.26	567.90	20+98.63	0.92' RT
P105	1763262.94	1018408.10	567.55	20+76.62	4.50' RT
P106	1763261.54	1018407.91	567.54	20+77.62	5.50' RT
P107	1763264.84	1018410.59	567.62	20+76.62	1.37' RT
P108	1763264.63	1018412.01	567.65	20+77.64	0.37' RT
P109	1763270.91	1018402.05	567.48	20+66.62	4.50' RT
P110	1763271.10	1018400.65	567.46	20+65.62	5.50' RT
P111	1763272.99	1018404.80	567.55	20+66.62	1.05' RT
P112	1763274.37	1018405.00	567.56	20+65.64	0.05' RT
P113	1763279.76	1018401.13	567.55	20+59.01	0.13' LT
P114	1763276.38	1018396.63	567.42	20+58.98	5.50' RT
P115	1763289.17	1018386.92	567.49	20+42.93	5.50' RT
P116	1763281.36	1018399.98	567.52	20+57.05	0.18' LT
P117	1763295.48	1018392.46	567.45	20+41.25	2.73' LT
P118	1763295.90	1018390.88	567.50	20+39.96	1.73' LT
P119	1763293.47	1018387.64	567.50	20+39.93	2.33' RT
P120	1763285.19	1018410.77	567.32	20+60.52	11.09' LT
P121	1763317.61	1018404.29	567.50	20+30.79	25.54' LT
P122	1763322.14	1018384.81	567.90	20+15.39	12.77' LT
P123	1763324.94	1018405.30	567.60	20+25.55	30.77' LT
P124	1763325.81	1018385.32	567.90	20+12.78	15.39' LT
P125	1763324.57	1018413.87	568.10	20+31.04	37.38' LT
P126	1763324.22	1018421.86	567.98	20+36.15	43.53' LT
P127	1763332.34	1018404.93	567.50	20+19.45	34.95' LT
P128	1763329.51	1018385.13	567.90	20+09.72	17.48' LT
P151	1763366.54	1018361.98	567.50	20+00.00	40.00' LT
P153	1763346.61	1018363.66	567.90	20+00.00	20.00' LT
P154	1763362.83	1018348.21	567.60	19+86.41	37.62' LT
P155	1763344.75	1018356.77	567.90	19+93.20	18.81' LT
P156	1763366.97	1018346.25	567.63	19+84.85	41.93' LT
P157	1763374.20	1018342.83	567.51	19+82.13	49.45' LT
P158	1763371.70	1018365.31	567.50	20+00.00	45.02' LT
P159	1763379.01	1018360.23	567.42	19+99.92	52.58' LT
P160	1763369.67	1018353.54	567.59	19+92.37	43.93' LT
P161	1763377.39	1018351.43	567.47	19+91.00	51.81' LT
P162	1763371.22	1018337.39	567.45	19+76.43	47.01' LT
P163	1763363.22	1018339.80	567.54	19+78.06	38.81' LT
P164	1763354.53	1018336.62	567.50	19+74.08	30.46' LT
P165	1763340.60	1018350.98	567.90	19+87.04	15.23' LT
P166	1763337.14	1018303.55	566.77	19+40.70	17.00' LT

SEIL ROAD (SHEET 64)

POINT NO.	NORTHING	EASTING	ELEV	STATION	OFFSET
P167	1763310.39	1018250.07	566.08	18+84.38	6.00' LT
P168	1763324.02	1018293.60	566.76	19+28.98	6.00' LT
P169	1763323.25	1018294.79	566.80	19+29.96	5.00' LT
P170	1763319.66	1018295.56	566.88	19+29.96	1.33' LT
P171	1763318.47	1018294.76	566.88	19+28.94	0.33' LT
P172	1763313.49	1018275.09	566.52	19+08.67	0.47' LT
P173	1763321.06	1018305.52	567.08	19+39.96	0.82' LT
P174	1763325.18	1018304.81	567.00	19+39.96	5.00' LT
P175	1763326.34	1018305.63	567.00	19+40.94	6.00' LT
P176	1763328.55	1018322.04	567.42	19+57.12	6.00' LT
P177	1763319.58	1018324.61	567.47	19+58.78	3.18' RT
P178	1763320.23	1018306.61	567.11	19+40.91	0.18' RT
P179	1763325.64	1018325.35	567.50	19+60.10	2.79' LT
P180	1763307.53	1018250.91	566.26	18+84.06	3.04' LT
P181	1763291.01	1018223.66	566.00	18+52.50	0.00' RT
P182	1763307.79	1018297.51	566.67	19+29.37	10.69' RT
P183	1763296.42	1018339.17	567.50	19+71.07	27.62' RT
P184	1763280.20	1018234.35	565.73	18+57.03	14.51' RT
P185	1763276.70	1018229.51	565.69	18+51.13	15.40' RT
P186	1763318.87	1018241.90	565.82	18+80.34	17.00' LT
P187	1763287.65	1018356.55	567.50	20+25.76	30.60' RT
P188	1763307.16	1018360.94	567.90	20+12.88	15.30' RT
P189	1763291.15	1018346.94	567.60	19+78.30	33.61' RT
P190	1763308.92	1018356.14	567.90	19+89.15	16.80' RT
P191	1763311.55	1018352.25	567.90	19+85.53	13.81' RT
P192	1763265.41	1018391.15	567.23	20+64.40	16.50' RT
P193	1763283.53	1018343.00	568.10	19+73.65	40.82' RT
P194	1763276.43	1018339.32	568.22	19+69.31	47.54' RT
P195	1763262.66	1018376.24	567.93	20+57.57	30.04' RT
P196	1763257.28	1018370.31	568.05	20+58.27	38.01' RT
P197	1763357.72	1018333.33	567.91	19+71.11	33.95' LT
P198	1763363.29	1018327.59	568.03	19+65.92	40.05' LT
P199	1763217.73	1018474.59	568.49	21+52.84	21.10' LT
P200	1763223.64	1018481.77	568.34	21+52.48	30.38' LT
P208	1763203.02	1018436.04	568.12	21+41.24	18.50' RT
P209	1763213.75	1018473.52	568.38	21+55.37	17.83' LT
P219	1763326.68	1018365.33	568.51	20+00.00	0.00' RT

SEIL ROAD (SHEET 65)

POINT NO.	NORTHING	EASTING	ELEV	STATION	OFFSET
P300	1762951.00	1018699.14	573.25	25+22.29	4.50' LT
P301	1762944.02	1018687.56	573.13	25+12.20	4.50' RT
P302	1762943.23	1018686.39	573.10	25+11.23	5.51' RT
P303	1762944.21	1018668.82	573.11	24+94.09	8.30' RT
P304	1762955.27	1018682.53	573.07	25+05.01	5.50' LT
P305	1762959.56	1018669.69	573.13	24+91.36	6.83' LT
P306	1762954.04	1018688.48	573.10	25+11.14	5.50' LT
P307	1762965.24	1018688.59	572.87	25+08.98	16.50' LT
P308	1762983.49	1018662.54	573.14	24+78.75	28.40' LT
P309	1762932.23	1018685.34	572.90	25+12.32	16.50' RT
P310	1762926.88	1018646.55	573.14	24+76.59	30.39' RT
P311	1762944.72	1018637.50	573.54	24+63.59	15.19' RT
P312	1762923.42	1018636.70	573.24	24+67.85	36.08' RT
P313	1762942.99	1018632.58	573.54	24+59.21	18.04' RT
P314	1762922.62	1018626.30	573.14	24+57.93	39.32' RT
P315	1762942.59	1018627.38	573.54	24+54.25	19.66' RT
P316	1762918.93	1018637.65	673.65	24+69.83	40.22' RT
P317	1762911.11	1018639.30	573.77	24+73.28	47.43' RT
P318	1762917.86	1018626.33	573.55	24+59.08	43.93' RT
P319	1762909.88	1018626.95	573.68	24+61.57	51.54' RT
P320	1762922.80	1018648.62	573.55	24+79.57	33.86' RT
P321	1762915.66	1018652.24	573.67	24+84.77	39.94' RT
P340	1762951.82	1018700.29	573.25	25+23.30	5.50' LT
P341	1762973.03	1018645.49	573.54	24+64.66	14.21' LT
P342	1762992.75	1018654.69	573.24	24+32.19	35.52' LT
P343	1762977.66	1018641.57	573.54	24+41.38	17.76' LT
P344	1762998.27	1018658.81	573.70	24+28.58	41.39' LT
P345	1763004.80	1018663.28	573.82	24+24.16	47.95' LT
P346	1762988.48	1018669.33	573.64	24+84.17	34.85' LT
P347	1762993.48	1018675.53	573.76	24+89.01	41.18' LT
P349	1762940.98	1018698.42	573.25	25+23.33	5.50' RT
P354	1762990.46	1018590.18	572.82	24+03.74	24.34' RT
P357	1763005.60	1018636.78	572.93	24+13.64	23.61' LT
P358	1762974.84	1018590.39	573.14	24+25.12	30.85' RT
P366	1762999.23	1018644.41	573.14	24+22.37	28.36' LT
P371	1762948.95	1018685.89	573.68	25+09.61	0.00' RT
P372	1762952.44	1018670.08	573.69	24+93.42	0.00' RT
P373	1762952.87	1018689.26	573.13	25+12.15	4.51' LT
P374	1762942.13	1018697.61	573.25	25+22.34	4.50' RT
P375	1762946.38	1018699.44	573.68	25+23.40	0.00' RT
P376	1762943.59	1018717.25	574.02	25+41.43	0.00' RT
P377	1762941.36	1018736.00	574.62	25+60.31	0.00' RT
P378	1762971.41	1018589.45	573.14	24+27.96	32.99' RT

SEIL ROAD (SHEET 65)

POINT NO.	NORTHING	EASTING	ELEV	STATION	OFFSET
P380	1762998.20	1018646.61	573.14	24+24.14	30.02' LT
P381	1762980.38	1018637.53	573.54	24+37.36	15.01' LT
P382	1762948.27	1018665.81	573.14	24+90.26	5.05' RT
P383	1762958.74	1018668.27	573.14	24+90.17	5.71' LT
P396	1762917.98	1018629.03	573.58	24+61.68	43.18' RT
P398	1762962.56	1018628.45	574.16	24+50.58	0.00' RT
P399	1762938.13	1018716.59	573.61	25+41.52	5.50' RT
P400	1762938.03	1018736.35	574.24	25+60.98	3.28' RT
P401	1762943.77	1018737.14	574.26	25+61.21	2.51' LT
P402	1762949.03	1018718.08	573.61	25+41.51	5.50' LT

RAVENS LANE(SHEET 64)

POINT NO.	NORTHING	EASTING	ELEV	STATION	OFFSET
P129	1763370.30	1018394.98	567.56	100+52.74	0.06' RT
P130	1763361.48	1018389.22	567.82	100+42.21	0.24' RT
P131	1763374.50	1018397.77	567.46	100+57.79	0.01' RT
P132	1763358.11	1018390.07	567.50	100+39.90	2.84' RT
P133	1763359.68	1018387.93	567.50	100+40.00	0.19' RT
P134	1763358.78	1018392.41	567.46	100+41.77	4.40' RT
P135	1763365.00	1018387.40	567.41	100+44.10	3.24' LT
P136	1763371.66	1018392.81	567.20	100+52.65	2.50' LT
P137	1763376.50	1018396.09	567.08	100+58.50	2.50' LT
P138	1763376.90	1018398.17	567.08	100+60.00	1.00' LT
P139	1763375.78	1018399.83	567.08	100+60.00	1.00' RT
P140	1763373.70	1018400.23	567.09	100+58.50	2.50' RT
P141	1763372.18	1018399.20	567.13	100+56.67	2.50' RT
P142	1763385.18	1018403.79	566.88	100+70.00	1.00' LT
P143	1763387.26	1018403.39	566.82	100+71.50	2.50' LT
P144	1763398.52	1018411.02	566.55	100+85.11	2.50' LT
P145	1763384.06	1018405.44	566.88	100+70.00	1.00' RT
P146	1763384.46	1018407.52	566.82	100+71.50	2.50' RT
P147	1763393.65	1018413.76	566.60	100+82.61	2.50' RT
P148	1763406.77	1018420.75	566.33	100+97.19	1.75' RT
P149	1763408.22	1018418.15	566.34	100+97.33	1.23' LT
P150	1763374.49	1018414.66	566.67	100+67.26	14.00' RT
P152	1763379.60	1018384.29	566.93	100+54.44	14.00' LT
P216	1763386.12	1018405.63	567.18	100+71.82	0.00' RT
P217	1763397.13	1018413.09	566.91	100+85.11	0.00' RT
P218	1763405.20	1018417.97	566.73	100+94.55	0.00' RT

STATES LANE(SHEET 65)

POINT N0,	NORTHING	EASTING	ELEV	STATION	OFFSET
P322	1762913.15	1018596.19	572.20	202+09.74	14.64' RT
P323	1762906.83	1018589.60	572.09	202+00.74	13.10' RT
P324	1762904.45	1018587.71	572.01	201+97.70	13.00' RT
P325	1762880.05	1018555.97	571.00	201+59.21	2.00' RT
P326	1762872.02	1018548.14	570.67	201+48.10	0.48' RT
P327	1762912.23	1018579.78	572.28	201+99.24	2.00' RT
P328	1762873.90	1018545.82	570.63	201+48.23	2.50' LT
P329	1762883.04	1018551.96	570.98	201+59.23	3.00' LT
P330	1762915.20	1018575.77	572.26	201+99.24	3.00' LT
P331	1762915.52	1018577.86	572.32	202+00.74	1.50' LT
P332	1762914.33	1018579.47	572.34	202+00.74	0.50' RT
P333	1762922.75	1018583.22	572.46	202+09.74	1.50' LT
P334	1762921.09	1018585.47	572.46	202+09.74	1.30' RT
P335	1762924.15	1018586.33	573.06	202+12.72	0.17' RT
P336	1762930.78	1018592.87	573.35	202+21.94	1.48' RT
P337	1762933.72	1018597.24	573.55	202+26.90	3.25' RT
P338	1762881.57	1018553.99	571.51	201+59.26	0.50' LT
P339	1762913.72	1018577.78	572.79	201+99.24	0.50' LT
P379	1762934.07	1018572.31	572.23	202+12.36	17.00' LT
P384	1762924.85	1018582.90	572.47	202+11.24	3.00' LT
P385	1762937.10	1018591.97	572.98	202+26.48	3.00' LT
P386	1762937.23	1018597.49	573.14	202+29.87	1.36' RT
P387	1762930.99	1018600.75	573.06	202+26.79	7.70' RT
P388	1762933.40	1018601.07	573.14	202+28.92	6.52' RT
P389	1762921.22	1018587.41	572.47	202+11.00	2.78' RT

COMPENSATORY STORAGE (SHEET 66)

POINT NO.	NORTHING	EASTING	ELEV	STATION	OFFSET
P500	1763306.65	1018447.68	560.00	20+65.76	53.46' LT
P501	1763224.10	1018523.88	559.20	21+77.59	64.20' LT
P502	1763197.41	1018524.11	559.01	21+98.98	48.24' LT
P503	1763269.18	1018306.86	562.40	19+30.61	50.40' RT
P504	1763216.36	1018380.93	560.00	20+97.28	54.31' RT
P505	1763162.89	1018400.77	559.00	21+51.86	70.86' RT
P506	1763180.46	1018476.41	559.00	21+83.63	0.00' RT

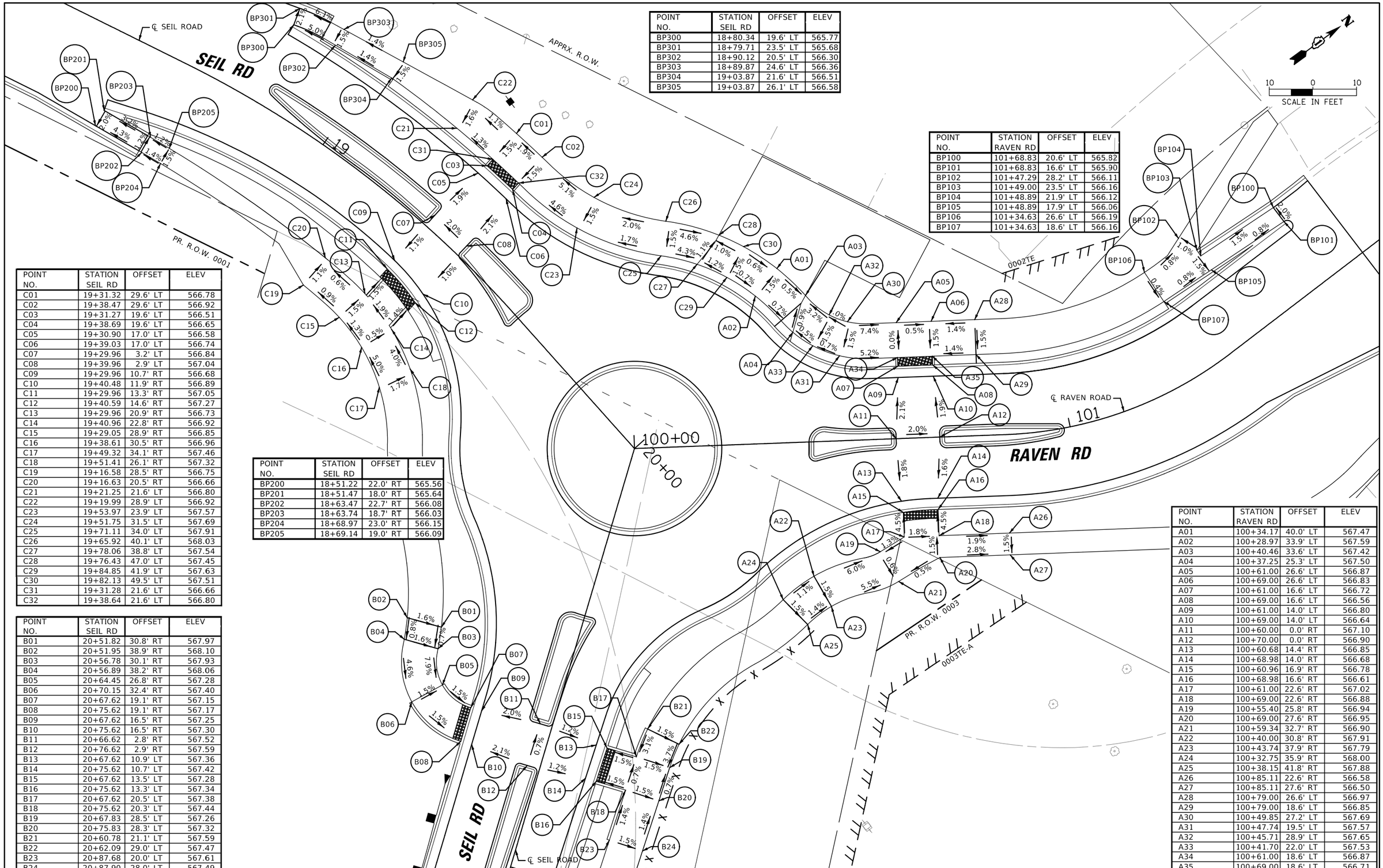

POINT NO.	STATION SEIL RD	OFFSET	ELEV
BP300	18+80.34	19.6' LT	565.77
BP301	18+79.71	23.5' LT	565.68
BP302	18+90.12	20.5' LT	566.30
BP303	18+89.87	24.6' LT	566.36
BP304	19+03.87	21.6' LT	566.51
BP305	19+03.87	26.1' LT	566.58

POINT NO.	STATION RAVEN RD	OFFSET	ELEV
BP100	101+68.83	20.6' LT	565.82
BP101	101+68.83	16.6' LT	565.90
BP102	101+47.29	28.2' LT	566.11
BP103	101+49.00	23.5' LT	566.16
BP104	101+48.89	21.9' LT	566.12
BP105	101+48.89	17.9' LT	566.06
BP106	101+34.63	26.6' LT	566.19
BP107	101+34.63	18.6' LT	566.16

POINT NO.	STATION SEIL RD	OFFSET	ELEV
C01	19+31.32	29.6' LT	566.78
C02	19+38.47	29.6' LT	566.92
C03	19+31.27	19.6' LT	566.51
C04	19+38.69	19.6' LT	566.65
C05	19+30.90	17.0' LT	566.58
C06	19+39.03	17.0' LT	566.74
C07	19+29.96	3.2' LT	566.84
C08	19+39.96	2.9' LT	567.04
C09	19+29.96	10.7' RT	566.68
C10	19+40.48	11.9' RT	566.89
C11	19+29.96	13.3' RT	567.05
C12	19+40.59	14.6' RT	567.27
C13	19+29.96	20.9' RT	566.73
C14	19+40.96	22.8' RT	566.92
C15	19+29.05	28.9' RT	566.85
C16	19+38.61	30.5' RT	566.96
C17	19+49.32	34.1' RT	567.46
C18	19+51.41	26.1' RT	567.32
C19	19+16.58	28.5' RT	566.75
C20	19+16.63	20.5' RT	566.66
C21	19+21.25	21.6' LT	566.80
C22	19+19.99	28.9' LT	566.92
C23	19+53.97	23.9' LT	567.57
C24	19+51.75	31.5' LT	567.69
C25	19+71.11	34.0' LT	567.91
C26	19+65.92	40.1' LT	568.03
C27	19+78.06	38.8' LT	567.54
C28	19+76.43	47.0' LT	567.45
C29	19+84.85	41.9' LT	567.63
C30	19+82.13	49.5' LT	567.51
C31	19+31.28	21.6' LT	566.66
C32	19+38.64	21.6' LT	566.80

POINT NO.	STATION SEIL RD	OFFSET	ELEV
BP200	18+51.22	22.0' RT	565.56
BP201	18+51.47	18.0' RT	565.64
BP202	18+63.47	22.7' RT	566.08
BP203	18+63.74	18.7' RT	566.03
BP204	18+68.97	23.0' RT	566.15
BP205	18+69.14	19.0' RT	566.09

POINT NO.	STATION SEIL RD	OFFSET	ELEV
B01	20+51.82	30.8' RT	567.97
B02	20+51.95	38.9' RT	568.10
B03	20+56.78	30.1' RT	567.93
B04	20+56.89	38.2' RT	568.06
B05	20+64.45	26.8' RT	567.28
B06	20+70.15	32.4' RT	567.40
B07	20+67.62	19.1' RT	567.15
B08	20+75.62	19.1' RT	567.17
B09	20+67.62	16.5' RT	567.25
B10	20+75.62	16.5' RT	567.30
B11	20+66.62	2.8' RT	567.52
B12	20+76.62	2.9' RT	567.59
B13	20+67.62	10.9' LT	567.36
B14	20+75.62	10.7' LT	567.42
B15	20+67.62	13.5' LT	567.28
B16	20+75.62	13.3' LT	567.34
B17	20+67.62	20.5' LT	567.38
B18	20+75.62	20.3' LT	567.44
B19	20+67.83	28.5' LT	567.26
B20	20+75.83	28.3' LT	567.32
B21	20+60.78	21.1' LT	567.59
B22	20+62.09	29.0' LT	567.47
B23	20+87.68	20.0' LT	567.61
B24	20+87.90	28.0' LT	567.49

POINT NO.	STATION RAVEN RD	OFFSET	ELEV
A01	100+34.17	40.0' LT	567.47
A02	100+28.97	33.9' LT	567.59
A03	100+40.46	33.6' LT	567.42
A04	100+37.25	25.3' LT	567.50
A05	100+61.00	26.6' LT	566.87
A06	100+69.00	26.6' LT	566.83
A07	100+61.00	16.6' LT	566.72
A08	100+69.00	16.6' LT	566.56
A09	100+61.00	14.0' LT	566.80
A10	100+69.00	14.0' LT	566.64
A11	100+60.00	0.0' RT	567.10
A12	100+70.00	0.0' RT	566.90
A13	100+60.68	14.4' RT	566.85
A14	100+68.98	14.0' RT	566.68
A15	100+60.96	16.9' RT	566.78
A16	100+68.98	16.6' RT	566.61
A17	100+61.00	22.6' RT	567.02
A18	100+69.00	22.6' RT	566.88
A19	100+55.40	25.8' RT	566.94
A20	100+69.00	27.6' RT	566.95
A21	100+59.34	32.7' RT	566.90
A22	100+40.00	30.8' RT	567.91
A23	100+43.74	37.9' RT	567.79
A24	100+32.75	35.9' RT	568.00
A25	100+38.15	41.8' RT	567.88
A26	100+85.11	22.6' RT	566.58
A27	100+85.11	27.6' RT	566.50
A28	100+79.00	26.6' LT	566.97
A29	100+79.00	18.6' LT	566.85
A30	100+49.85	27.2' LT	567.69
A31	100+47.74	19.5' LT	567.57
A32	100+45.71	28.9' LT	567.65
A33	100+41.70	22.0' LT	567.53
A34	100+61.00	18.6' LT	566.87
A35	100+69.00	18.6' LT	566.71

CHRISTOPHER B. BURKE ENGINEERING, LTD.
16021 W. 159th Street, Suite 201
Lockport, Illinois 60441
(815) 770-2650

USER NAME = eschaefer	DESIGNED - AJS/JRS	REVISED -
	DRAWN - PWN/JRS	REVISED -
PLOT SCALE = 20'	CHECKED - AJS	REVISED -
PLOT DATE = 11/2/2025	DATE -	REVISED -

STATE OF ILLINOIS
DEPARTMENT OF TRANSPORTATION

SEIL ROAD WIDENING
ADA SIDEWALK DETAILS

SCALE: 20' | SHEET 1 OF 3 SHEETS | STA. TO STA.

F.A.U. RTE.	SECTION	COUNTY	TOTAL SHEETS	SHEET NO.
0403	21-00047-00-WR	WILL	149	68
		CONTRACT NO. 61M01		
	ILLINOIS FED. AID PROJECT			

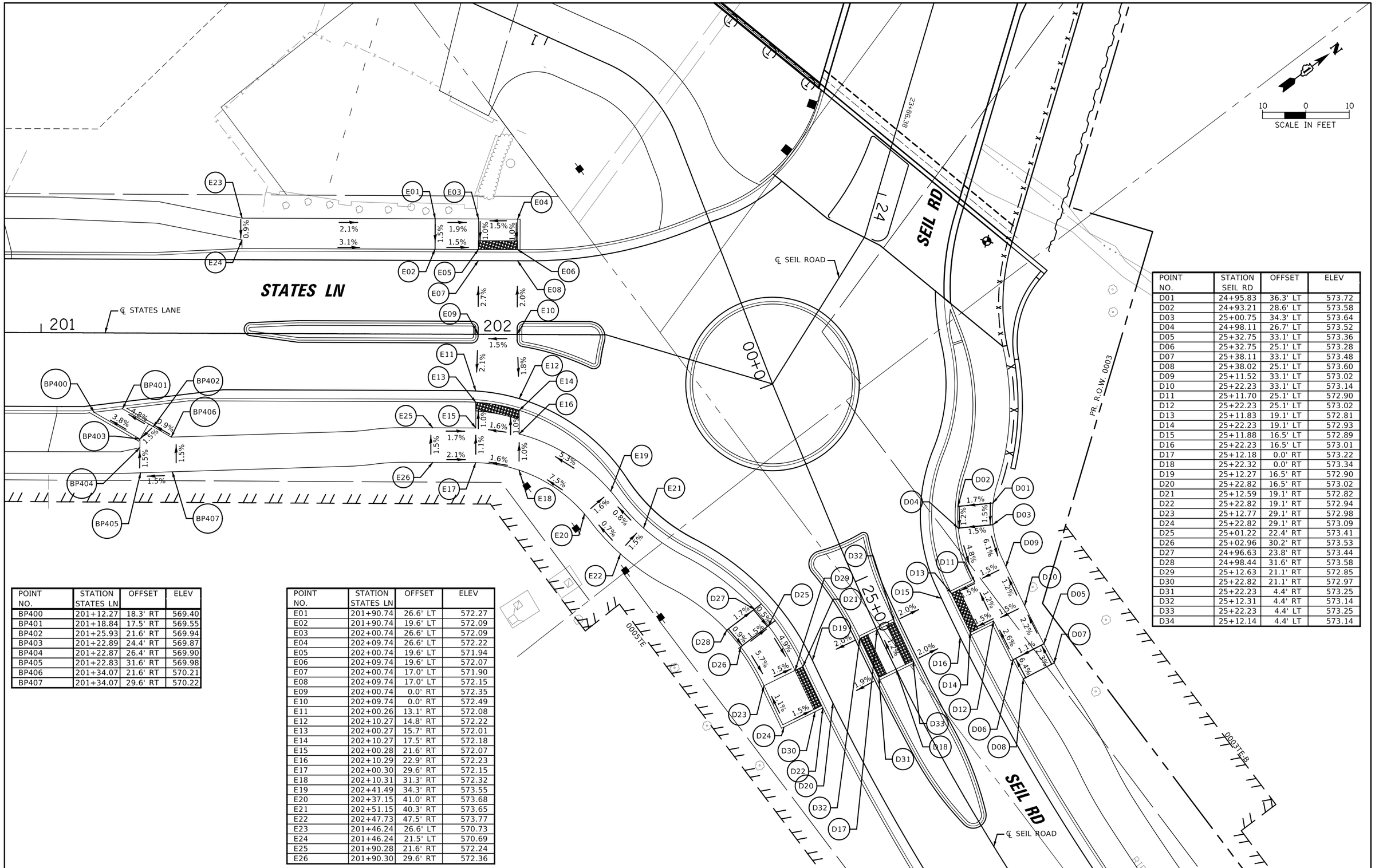

POINT NO.	STATION STATES LN	OFFSET	ELEV
BP400	201+12.27	18.3' RT	569.40
BP401	201+18.84	17.5' RT	569.55
BP402	201+25.93	21.6' RT	569.94
BP403	201+22.89	24.4' RT	569.87
BP404	201+22.87	26.4' RT	569.90
BP405	201+22.83	31.6' RT	569.98
BP406	201+34.07	21.6' RT	570.21
BP407	201+34.07	29.6' RT	570.22

POINT NO.	STATION STATES LN	OFFSET	ELEV
E01	201+90.74	26.6' LT	572.27
E02	201+90.74	19.6' LT	572.09
E03	202+00.74	26.6' LT	572.09
E04	202+09.74	26.6' LT	572.22
E05	202+00.74	19.6' LT	571.94
E06	202+09.74	19.6' LT	572.07
E07	202+00.74	17.0' LT	571.90
E08	202+09.74	17.0' LT	572.15
E09	202+00.74	0.0' RT	572.35
E10	202+09.74	0.0' RT	572.49
E11	202+00.26	13.1' RT	572.08
E12	202+10.27	14.8' RT	572.22
E13	202+00.27	15.7' RT	572.01
E14	202+10.27	17.5' RT	572.18
E15	202+00.28	21.6' RT	572.07
E16	202+10.29	22.9' RT	572.23
E17	202+00.30	29.6' RT	572.15
E18	202+10.31	31.3' RT	572.32
E19	202+41.49	34.3' RT	573.55
E20	202+37.15	41.0' RT	573.68
E21	202+51.15	40.3' RT	573.65
E22	202+47.73	47.5' RT	573.77
E23	201+46.24	26.6' LT	570.73
E24	201+46.24	21.5' LT	570.69
E25	201+90.28	21.6' RT	572.24
E26	201+90.30	29.6' RT	572.36

POINT NO.	STATION SEIL RD	OFFSET	ELEV
D01	24+95.83	36.3' LT	573.72
D02	24+93.21	28.6' LT	573.58
D03	25+00.75	34.3' LT	573.64
D04	24+98.11	26.7' LT	573.52
D05	25+32.75	33.1' LT	573.36
D06	25+32.75	25.1' LT	573.28
D07	25+38.11	33.1' LT	573.48
D08	25+38.02	25.1' LT	573.60
D09	25+11.52	33.1' LT	573.02
D10	25+22.23	33.1' LT	573.14
D11	25+11.70	25.1' LT	572.90
D12	25+22.23	25.1' LT	573.02
D13	25+11.83	19.1' LT	572.81
D14	25+22.23	19.1' LT	572.93
D15	25+11.88	16.5' LT	572.89
D16	25+22.23	16.5' LT	573.01
D17	25+12.18	0.0' RT	573.22
D18	25+22.32	0.0' RT	573.34
D19	25+12.27	16.5' RT	572.90
D20	25+22.82	16.5' RT	573.02
D21	25+12.59	19.1' RT	572.82
D22	25+22.82	19.1' RT	572.94
D23	25+12.77	29.1' RT	572.98
D24	25+22.82	29.1' RT	573.09
D25	25+01.22	22.4' RT	573.41
D26	25+02.96	30.2' RT	573.53
D27	24+96.63	23.8' RT	573.44
D28	24+98.44	31.6' RT	573.58
D29	25+12.63	21.1' RT	572.85
D30	25+22.82	21.1' RT	572.97
D31	25+22.23	4.4' RT	573.25
D32	25+12.31	4.4' RT	573.14
D33	25+22.23	4.4' LT	573.25
D34	25+12.14	4.4' LT	573.14

CHRISTOPHER B. BURKE ENGINEERING, LTD.
16021 W. 159th Street, Suite 201
Lockport, Illinois 60441
(815) 770-2650

USER NAME = eschaefer	DESIGNED - AJS/JRS	REVISED -
	DRAWN - PWN/JRS	REVISED -
PLOT SCALE = 20'	CHECKED - AJS	REVISED -
PLOT DATE = 11/2/2025	DATE -	REVISED -

STATE OF ILLINOIS
DEPARTMENT OF TRANSPORTATION

SEIL ROAD WIDENING
ADA SIDEWALK DETAILS

SCALE: 20' | SHEET 2 OF 3 SHEETS | STA. TO STA.

F.A.U. RTE.	SECTION	COUNTY	TOTAL SHEETS	SHEET NO.
0403	21-00047-00-WR	WILL	149	69

CONTRACT NO. 61M01

ILLINOIS FED. AID PROJECT

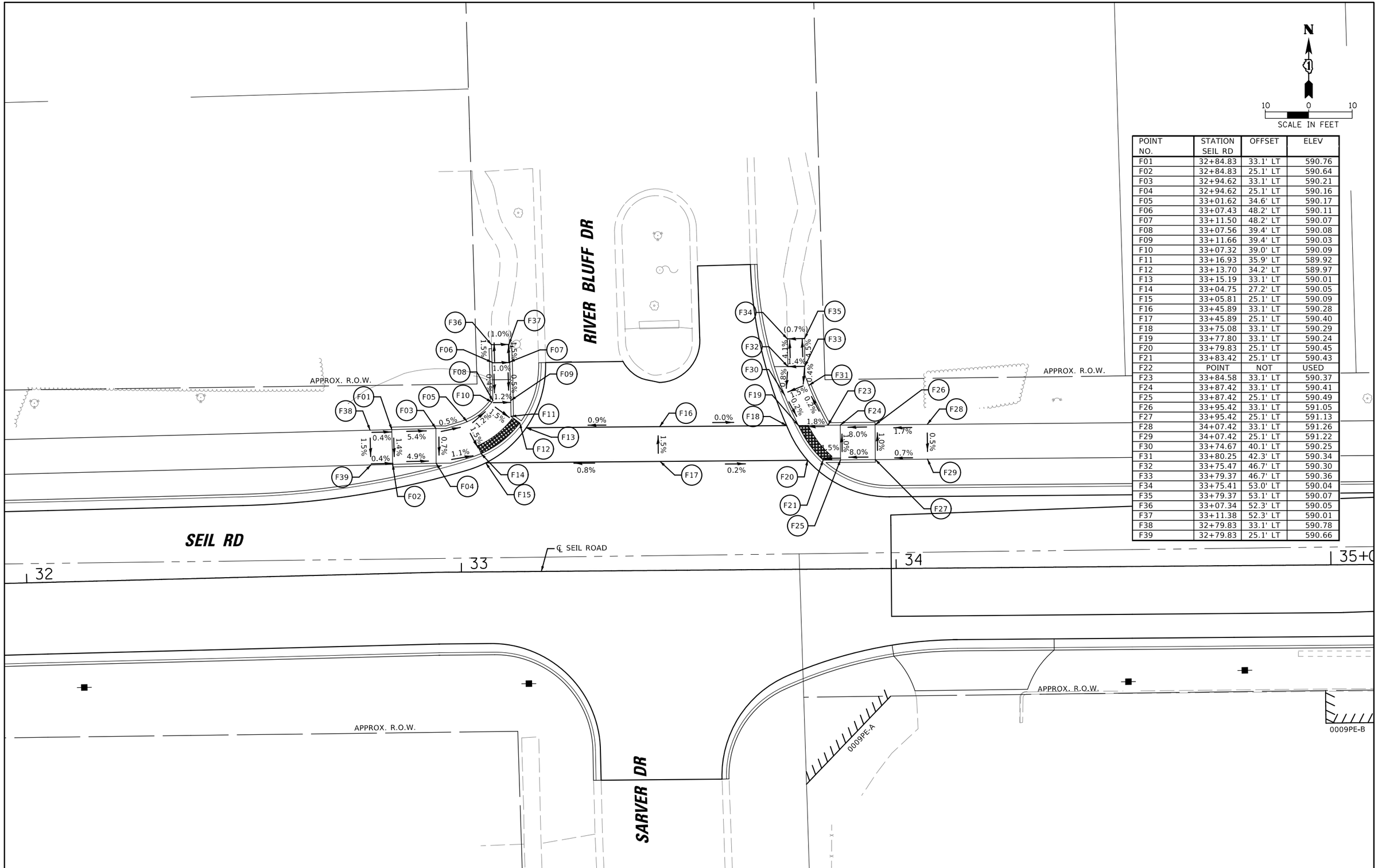

POINT NO.	STATION SEIL RD	OFFSET	ELEV
F01	32+84.83	33.1' LT	590.76
F02	32+84.83	25.1' LT	590.64
F03	32+94.62	33.1' LT	590.21
F04	32+94.62	25.1' LT	590.16
F05	33+01.62	34.6' LT	590.17
F06	33+07.43	48.2' LT	590.11
F07	33+11.50	48.2' LT	590.07
F08	33+07.56	39.4' LT	590.08
F09	33+11.66	39.4' LT	590.03
F10	33+07.32	39.0' LT	590.09
F11	33+16.93	35.9' LT	589.92
F12	33+13.70	34.2' LT	589.97
F13	33+15.19	33.1' LT	590.01
F14	33+04.75	27.2' LT	590.05
F15	33+05.81	25.1' LT	590.09
F16	33+45.89	33.1' LT	590.28
F17	33+45.89	25.1' LT	590.40
F18	33+75.08	33.1' LT	590.29
F19	33+77.80	33.1' LT	590.24
F20	33+79.83	25.1' LT	590.45
F21	33+83.42	25.1' LT	590.43
F22	POINT	NOT	USED
F23	33+84.58	33.1' LT	590.37
F24	33+87.42	33.1' LT	590.41
F25	33+87.42	25.1' LT	590.49
F26	33+95.42	33.1' LT	591.05
F27	33+95.42	25.1' LT	591.13
F28	34+07.42	33.1' LT	591.26
F29	34+07.42	25.1' LT	591.22
F30	33+74.67	40.1' LT	590.25
F31	33+80.25	42.3' LT	590.34
F32	33+75.47	46.7' LT	590.30
F33	33+79.37	46.7' LT	590.36
F34	33+75.41	53.0' LT	590.04
F35	33+79.37	53.1' LT	590.07
F36	33+07.34	52.3' LT	590.05
F37	33+11.38	52.3' LT	590.01
F38	32+79.83	33.1' LT	590.78
F39	32+79.83	25.1' LT	590.66

CHRISTOPHER B. BURKE ENGINEERING, LTD.
16221 W. 159th Street, Suite 201
Lockport, Illinois 60441
(815) 770-2650

USER NAME = eschaefer	DESIGNED - AJS/JRS	REVISED -
	DRAWN - PWN/JRS	REVISED -
PLOT SCALE = 20'	CHECKED - AJS	REVISED -
PLOT DATE = 11/2/2025	DATE -	REVISED -

STATE OF ILLINOIS
DEPARTMENT OF TRANSPORTATION

SEIL ROAD WIDENING
ADA SIDEWALK DETAILS

SCALE: 20' | SHEET 3 OF 3 SHEETS | STA. TO STA.

F.A.U. RTE.	SECTION	COUNTY	TOTAL SHEETS	SHEET NO.
0403	21-00047-00-WR	WILL	149	70

CONTRACT NO. 61M01

ILLINOIS FED. AID PROJECT

PAVEMENT MARKING LEGEND

- A MODIFIED URETHANE PAVEMENT MARKING - LINE 4", DOUBLE YELLOW
- B MODIFIED URETHANE PAVEMENT MARKING - LINE 6", WHITE
- C MODIFIED URETHANE PAVEMENT MARKING - LINE 6", WHITE DOTTED (2' LINE - 6' SKIP, UNLESS OTHERWISE NOTED)
- D MODIFIED URETHANE PAVEMENT MARKING - LINE 12" YELLOW 50' C-C (MIN. 5)
- E MODIFIED URETHANE PAVEMENT MARKING - LINE 12" WHITE (3' C-C)
- F MODIFIED URETHANE PAVEMENT MARKING - LINE 24" WHITE
- G MODIFIED URETHANE PAVEMENT MARKING, LETTERS & SYMBOLS
- H MODIFIED URETHANE PAVEMENT MARKING - LINE 4" WHITE
- I MODIFIED URETHANE PAVEMENT MARKING - LINE 4" YELLOW
- J MODIFIED URETHANE PAVEMENT MARKING - LINE 12" YELLOW
- K EPOXY PAVEMENT MARKING - LINE 4" DOUBLE YELLOW
- L EPOXY PAVEMENT MARKING - LINE 12" YELLOW
- M MODIFIED URETHANE PAVEMENT MARKING - LINE 6", WHITE DOTTED (2' LINE - 2' SKIP, UNLESS OTHERWISE NOTED)

NOTE: ALL MODIFIED URETHANE PAVEMENT MARKINGS SHALL BE RECESSED.

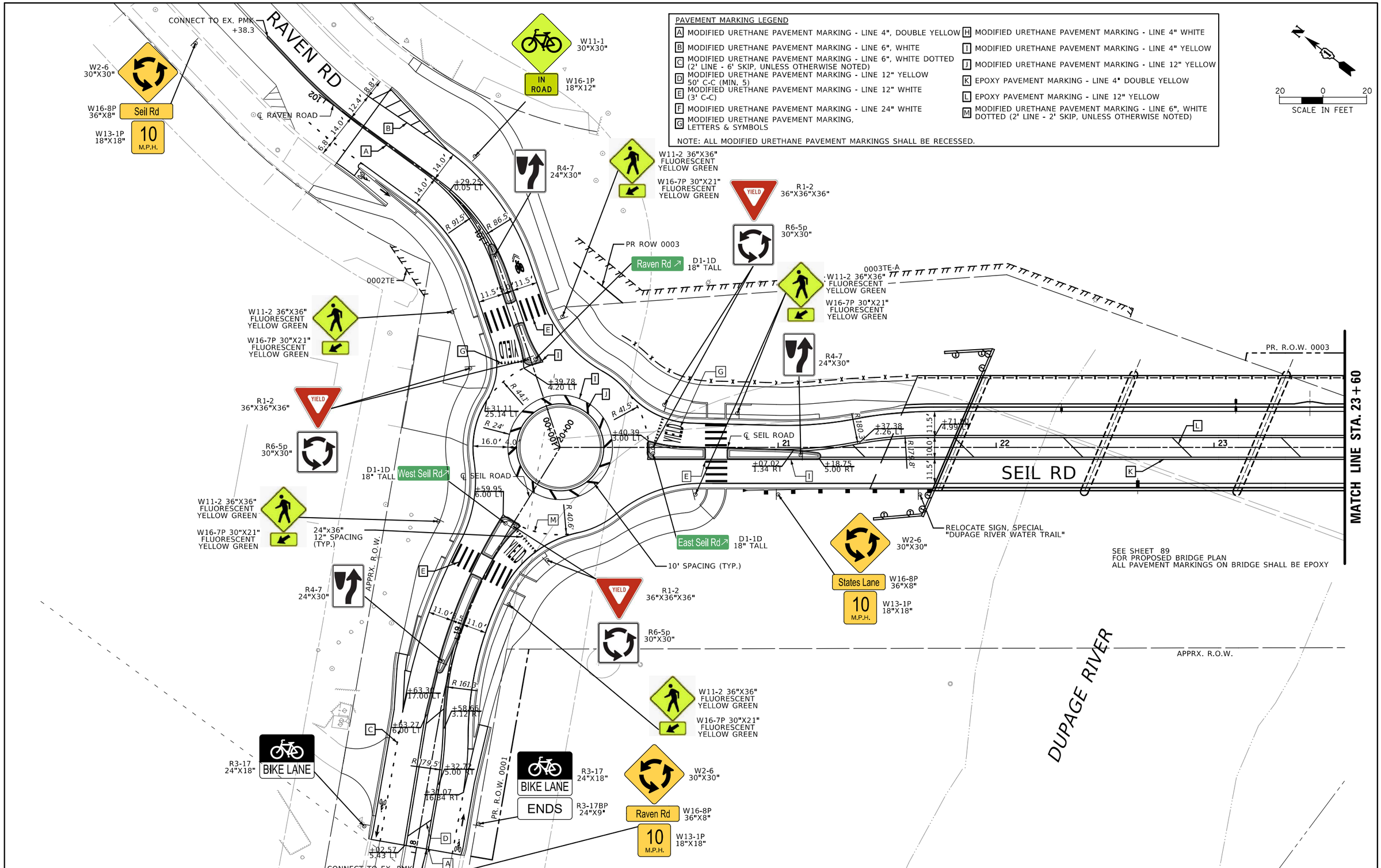

CHRISTOPHER B. BURKE ENGINEERING, LTD. 16021 W. 159th Street, Suite 201 Lockport, Illinois 60441 (815) 770-2650	USER NAME = aschaefer	DESIGNED - AJS/JRS	REVISED -
		DRAWN - PWN/JRS	REVISED -
	PLOT SCALE = 40'	CHECKED - AJS	REVISED -
	PLOT DATE = 11/2/2025	DATE -	REVISED -

STATE OF ILLINOIS
DEPARTMENT OF TRANSPORTATION

SEIL ROAD WIDENING
PAVEMENT MARKING AND SIGNAGE PLAN

SCALE: 40' | SHEET 1 OF 3 SHEETS | STA. 18+00 TO STA. 23+60

F.A.U. RTE.	SECTION	COUNTY	TOTAL SHEETS	SHEET NO.
0403	21-00047-00-WR	WILL	149	71
		CONTRACT NO. 61M01		
		ILLINOIS FED. AID PROJECT		

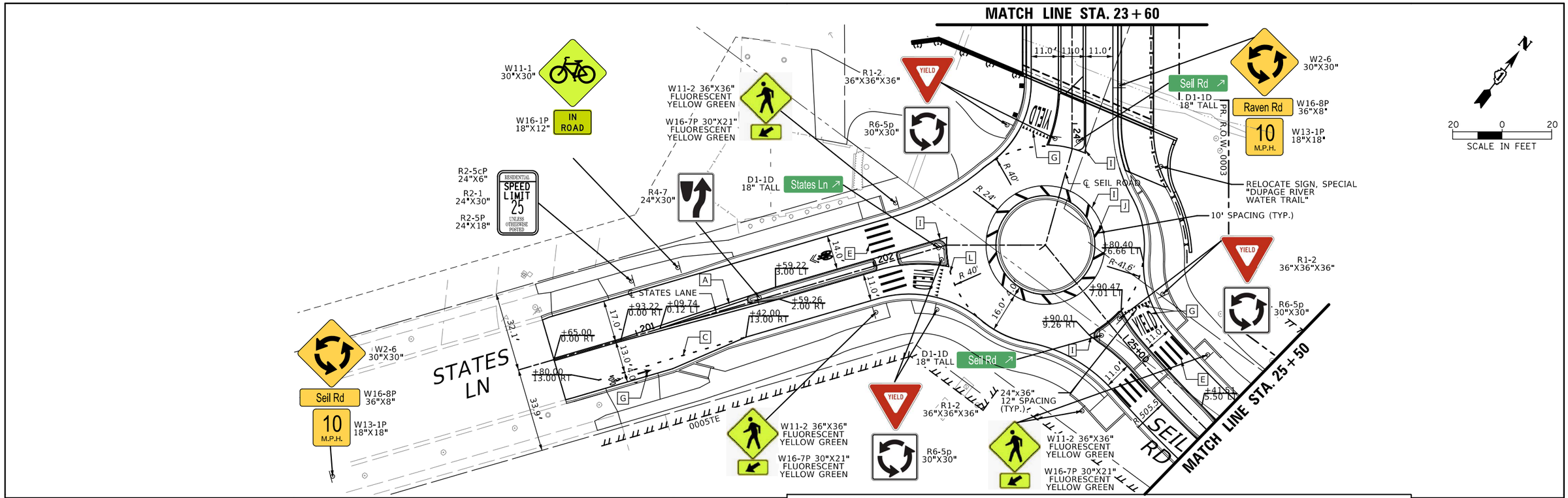

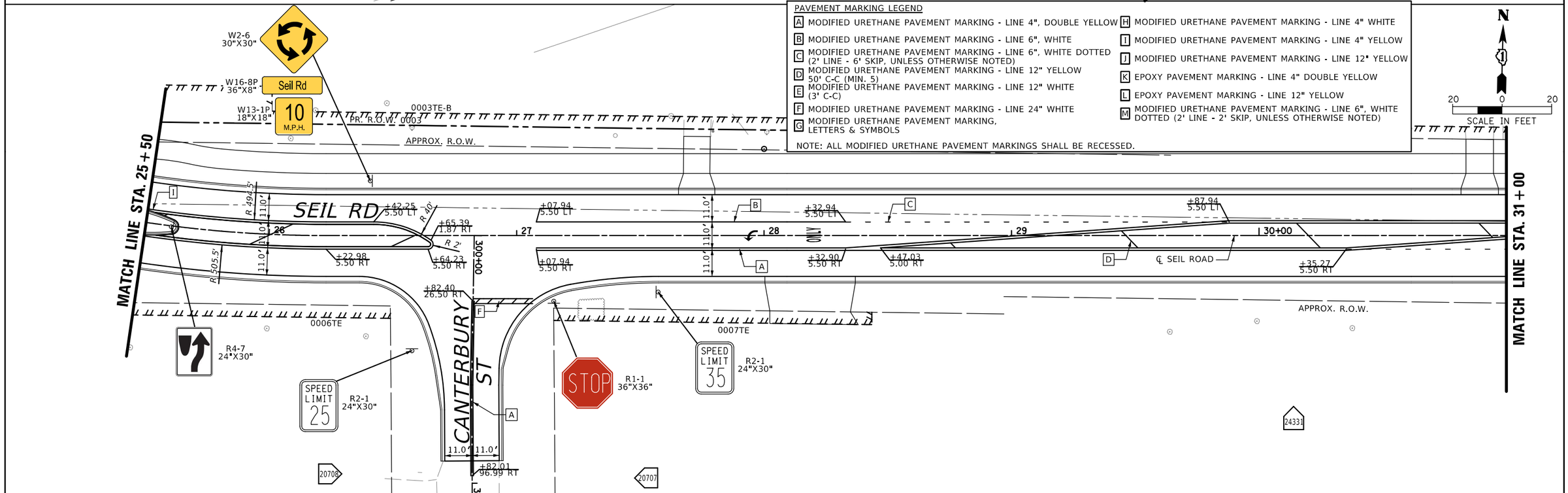

PAVEMENT MARKING LEGEND

- A MODIFIED URETHANE PAVEMENT MARKING - LINE 4", DOUBLE YELLOW
- B MODIFIED URETHANE PAVEMENT MARKING - LINE 6", WHITE
- C MODIFIED URETHANE PAVEMENT MARKING - LINE 6", WHITE DOTTED (2' LINE - 6' SKIP, UNLESS OTHERWISE NOTED)
- D MODIFIED URETHANE PAVEMENT MARKING - LINE 12" YELLOW 50' C-C (MIN. 5)
- E MODIFIED URETHANE PAVEMENT MARKING - LINE 12" WHITE (3' C-C)
- F MODIFIED URETHANE PAVEMENT MARKING - LINE 24" WHITE
- G MODIFIED URETHANE PAVEMENT MARKING, LETTERS & SYMBOLS
- H MODIFIED URETHANE PAVEMENT MARKING - LINE 4" WHITE
- I MODIFIED URETHANE PAVEMENT MARKING - LINE 4" YELLOW
- J MODIFIED URETHANE PAVEMENT MARKING - LINE 12" YELLOW
- K EPOXY PAVEMENT MARKING - LINE 4" DOUBLE YELLOW
- L EPOXY PAVEMENT MARKING - LINE 12" YELLOW
- M MODIFIED URETHANE PAVEMENT MARKING - LINE 6", WHITE DOTTED (2' LINE - 2' SKIP, UNLESS OTHERWISE NOTED)

NOTE: ALL MODIFIED URETHANE PAVEMENT MARKINGS SHALL BE RECESSED.

CHRISTOPHER B. BURKE ENGINEERING, LTD.
9020 W. 159th Street, Suite 201
Lockport, Illinois 60441
(815) 770-2650

USER NAME = aschaefer	DESIGNED - AJS/JRS	REVISED -
	DRAWN - PWN/JRS	REVISED -
PLOT SCALE = 40'	CHECKED - AJS	REVISED -
PLOT DATE = 11/2/2025	DATE -	REVISED -

STATE OF ILLINOIS
DEPARTMENT OF TRANSPORTATION

SEIL ROAD WIDENING
PAVEMENT MARKING AND SIGNAGE PLAN

SCALE: 40' | SHEET 2 OF 3 SHEETS | STA. 23+60 TO STA. 31+00

F.A.U. RTE.	SECTION	COUNTY	TOTAL SHEETS	SHEET NO.
0403	21-00047-00-WR	WILL	149	72

CONTRACT NO. 61M01

ILLINOIS FED. AID PROJECT

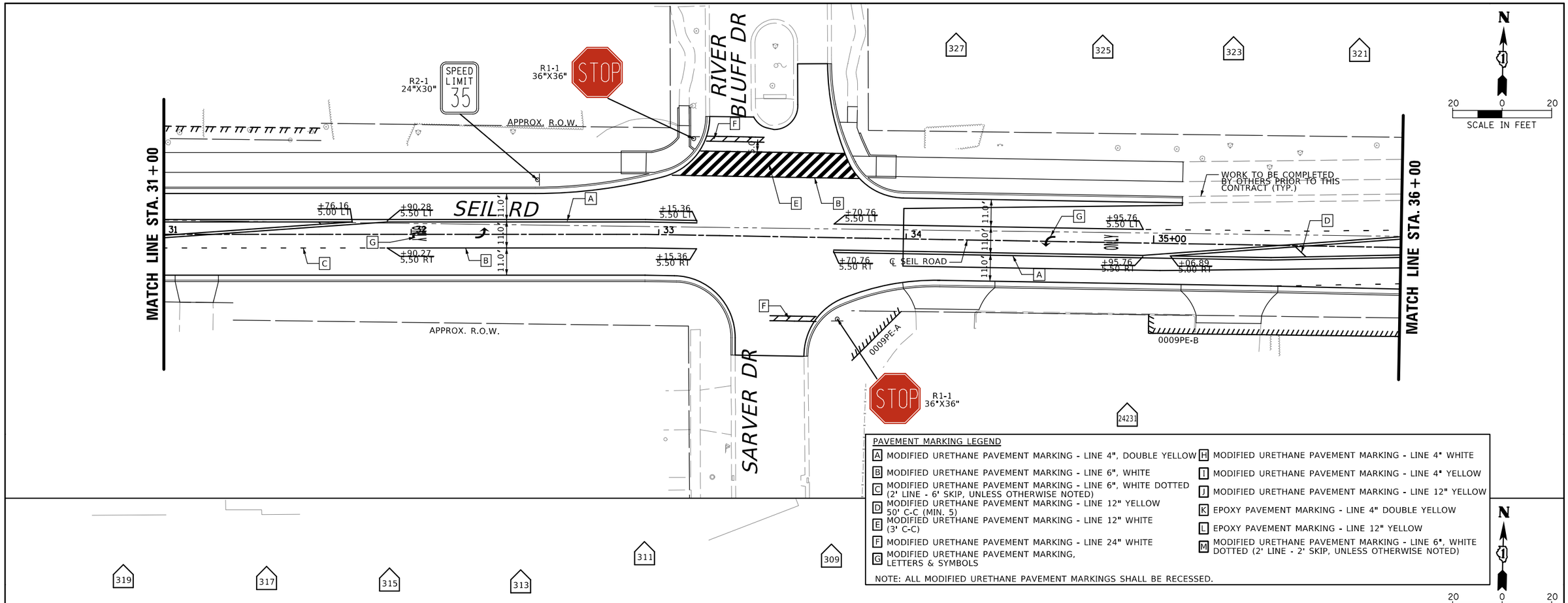

PAVEMENT MARKING LEGEND

- A MODIFIED URETHANE PAVEMENT MARKING - LINE 4", DOUBLE YELLOW
- B MODIFIED URETHANE PAVEMENT MARKING - LINE 6", WHITE
- C MODIFIED URETHANE PAVEMENT MARKING - LINE 6", WHITE DOTTED (2' LINE - 6' SKIP, UNLESS OTHERWISE NOTED)
- D MODIFIED URETHANE PAVEMENT MARKING - LINE 12" YELLOW 50' C-C (MIN. 5)
- E MODIFIED URETHANE PAVEMENT MARKING - LINE 12" WHITE (3' C-C)
- F MODIFIED URETHANE PAVEMENT MARKING - LINE 24" WHITE
- G MODIFIED URETHANE PAVEMENT MARKING, LETTERS & SYMBOLS
- H MODIFIED URETHANE PAVEMENT MARKING - LINE 4" WHITE
- I MODIFIED URETHANE PAVEMENT MARKING - LINE 4" YELLOW
- J MODIFIED URETHANE PAVEMENT MARKING - LINE 12" YELLOW
- K EPOXY PAVEMENT MARKING - LINE 4" DOUBLE YELLOW
- L EPOXY PAVEMENT MARKING - LINE 12" YELLOW
- M MODIFIED URETHANE PAVEMENT MARKING - LINE 6", WHITE DOTTED (2' LINE - 2' SKIP, UNLESS OTHERWISE NOTED)

NOTE: ALL MODIFIED URETHANE PAVEMENT MARKINGS SHALL BE RECESSED.

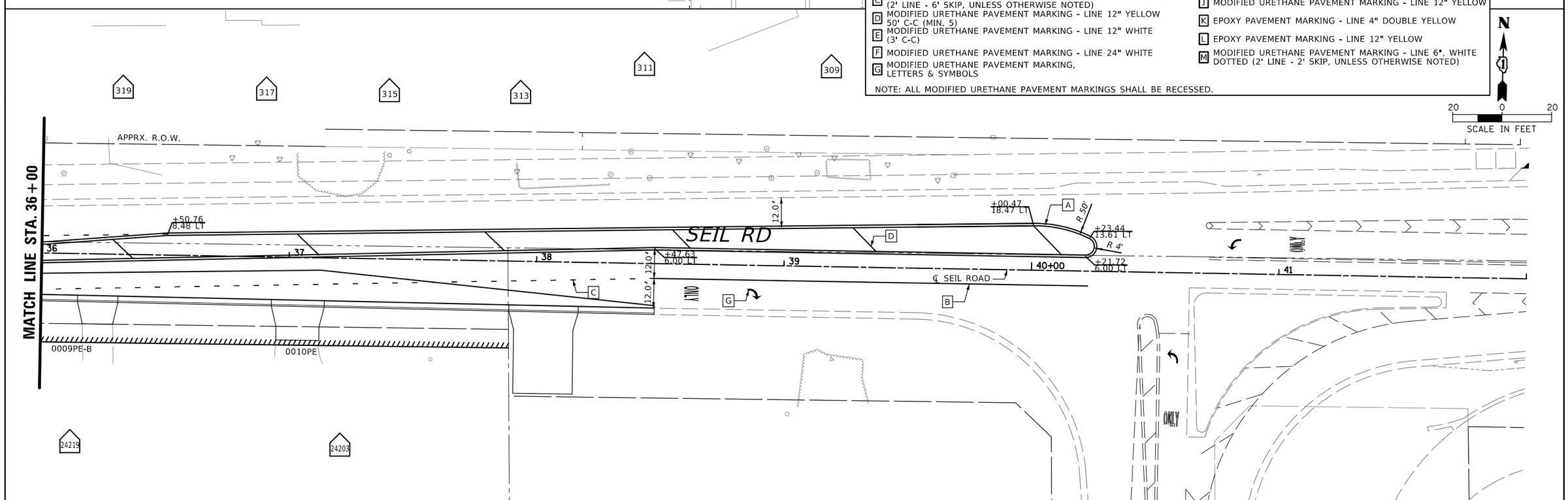

CHRISTOPHER B. BURKE ENGINEERING, LTD.
16221 W. 159th Street, Suite 201
Lockport, Illinois 60441
(815) 770-2850

USER NAME = aschaefer	DESIGNED - AJS/JRS	REVISED -	
	DRAWN - PWN/JRS	REVISED -	
PLOT SCALE = 40'	CHECKED - AJS	REVISED -	
PLOT DATE = 11/2/2025	DATE -	REVISED -	

STATE OF ILLINOIS
DEPARTMENT OF TRANSPORTATION

SEIL ROAD WIDENING
PAVEMENT MARKING AND SIGNAGE PLAN

SCALE: 40' | SHEET 3 OF 3 SHEETS | STA. 31+00 TO STA. 42+00

F.A.U. RTE.	SECTION	COUNTY	TOTAL SHEETS	SHEET NO.
0403	21-00047-00-WR	WILL	149	73

CONTRACT NO. 61M01

ILLINOIS FED. AID PROJECT

LIGHTING GENERAL NOTES

1. THE EXACT LOCATIONS OF ALL UTILITIES SHALL BE VERIFIED BY THE CONTRACTOR BEFORE THE INSTALLATION OF ANY EQUIPMENT. FOR THE LOCATIONS OF THE UTILITIES, CALL JULIE AT (800) 892-0123.
2. BEFORE INSTALLING LIGHT STANDARDS NEAR OVERHEAD AND UNDERGROUND ELECTRIC UTILITIES CONTRACTOR SHALL CALL COM ED FOR LOCATION APPROVAL AND MINIMUM CLEARANCE REQUIREMENTS.
3. THE CONTRACTOR SHALL BE SOLELY RESPONSIBLE FOR JOB SITE SAFETY AS WELL AS SUPERVISION/DIRECTION AND MEANS/METHODS OF CONSTRUCTION.
4. ALL WORK SHALL BE IN ACCORDANCE WITH THE LATEST EDITION OF THE FOLLOWING SPECIFICATIONS, WHICH ARE HEREBY MADE A PART HEREOF:
   - A. "STANDARD SPECIFICATIONS FOR ROAD AND BRIDGE CONSTRUCTION", AS PREPARED BY IDOT.
   - B. "THE NATIONAL ELECTRICAL CODE".
   - C. MUNICIPAL CODES & STANDARDS.
5. NO MATERIALS SHALL BE DELIVERED TO THE JOB SITE UNTIL ALL PERTINENT EQUIPMENT SUBMITTALS HAVE BEEN REVIEWED BY THE ENGINEER.
6. ALL UNDERGROUND WIRING SHALL BE XLP TYPE-USE, EXTRA ABRASION RESISTANCE, 600 VOLTS, BURIED A MINIMUM 30 INCHES BELOW FINISHED GRADE, FOLLOWING THE ROADWAY OR SIDEWALK EDGE.
7. NO POLES SHALL BE ERECTED UNTIL THE RESPECTIVE FOUNDATIONS HAVE CURED, (IF APPLICABLE) AND HAVE BEEN REVIEWED BY THE ENGINEER.
8. TO MAINTAIN THE STRUCTURAL INTEGRITY OF LIGHT POLES WITH MAST ARMS, THEY SHALL NOT BE ERECTED AND LEFT TO STAND WITHOUT LUMINAIRES.
9. ALL POLE HANDHOLES SHALL FACE AWAY FROM TRAFFIC.
10. THE CONTRACTOR SHALL BE RESPONSIBLE FOR THE ESTABLISHMENT OF THE TOP OF FOUNDATION ELEVATION WITH THE FINISHED GRADE.
11. THE CONTRACTOR SHALL STAKE ALL POLE LOCATIONS PRIOR TO REQUESTING A JULIE UTILITY LOCATE. ONCE ALL LOCATIONS ARE STAKED CONTRACTOR SHALL SET UP A MEETING WITH THE VILLAGE AND ENGINEER FOR POLE LOCATION APPROVAL.
12. THE ELECTRICAL CONTRACTOR SHALL FURNISH TWO SETS OF FULL SIZE RECORD DRAWINGS TO THE ENGINEER UPON COMPLETION OF THE LIGHTING AND ELECTRICAL IMPROVEMENTS. THE DRAWINGS SHALL SHOW THE INSTALLED LOCATIONS OF ALL LIGHT POLES, UNDERGROUND CONDUITS/WIRING, HANDHOLES, JUNCTION BOXES & CONTROLLER CABINETS. THE DRAWINGS WILL BE REVIEWED BY THE ENGINEER.
13. UPON COMPLETION OF THE PROPOSED LIGHTING IMPROVEMENTS, THE CONTRACTOR SHALL PERFORM ELECTRICAL TESTING AND VERIFY THAT THE INSTALLATION COMPLIES WITH THE LATEST EDITION OF THE STANDARD SPECIFICATIONS FOR ROAD AND BRIDGE CONSTRUCTION IN ILLINOIS.
14. THE CONTRACTOR SHALL BE RESPONSIBLE FOR TIMELY NOTIFICATION AND ALL COORDINATION WITH COM ED FOR NEW ELECTRIC SERVICE TO THE PROPOSED LIGHTING CONTROLLER.
15. THE CONTRACTOR SHALL LABEL ALL WIRES WITH WIRE MARKERS INDICATING THE CIRCUIT ID IN EVERY CONTROLLER, POLE BASE, HANDHOLE AND SPLICE/CONNECTION POINT. WIRE MARKERS SHALL BE WHITE NYLON WITH INTEGRAL MECHANICAL FASTENER WITH MINIMUM ¾" X 1" WRITABLE AREA.
16. THE LIGHT POLE LOCATIONS SHALL COMPLY WITH THE MINIMUM CLEAR WIDTH FOR AN ACCESSIBLE ROUTE FOR SIDEWALKS PER CURRENT AMERICAN WITH DISABILITIES ACT (ADA) REQUIREMENTS.
17. THE CONTRACTOR SHALL USE A STANDARD FOUNDATION WHENEVER POSSIBLE. WHEN UTILITY CONFLICT PROHIBITS USE OF STANDARD FOUNDATION THE CONTRACTOR MAY USE AN OFFSET FOUNDATION AT THE DIRECTION OF THE ENGINEER.

ABBREVIATIONS

A	AMPS	HH	HAND HOLE
BOC	BACK OF CURB	HPS	HIGH PRESSURE SODIUM
CKT	CIRCUIT	PVC	POLYVINYL CHLORIDE
DIA	DIAMETER	RGS	RIGID GALVANIZED STEEL
EIS	EMBEDDED IN STRUCTURE	ROW	RIGHT OF WAY
FT	FOOT	STA	STATION
FOC	FACE OF CURB	V	VOLTS
GND	GROUND	W	WATTS
HD	HEAVY DUTY		
HDPE	HIGH DENSITY POLYETHYLENE		

LIGHTING BILL OF MATERIALS

DESCRIPTION	UNIT	QUANTITY
TRENCH BACKFILL	CU YD	26
ELECTRIC SERVICE INSTALLATION	EACH	1
ELECTRIC UTILITY SERVICE CONNECTION	L SUM	1
UNDERGROUND CONDUIT, GALVANIZED STEEL, 2" DIA.	FOOT	50
UNDERGROUND CONDUIT, GALVANIZED STEEL, 2 1/2" DIA.	FOOT	495
UNDERGROUND CONDUIT, COILABLE NONMETALLIC CONDUIT, 1 1/4" DIA.	FOOT	4790
CONDUIT EMBEDDED IN STRUCTURE, 1 1/4" DIA., PVC	FOOT	305
CONDUIT EMBEDDED IN STRUCTURE, 4" DIA., PVC	FOOT	310
JUNCTION BOX, STAINLESS STEEL, EMBEDDED IN STRUCTURE, 12" X 12" X 6"	EACH	2
HEAVY-DUTY HANDHOLE	EACH	2
HANDHOLE, COMPOSITE CONCRETE	EACH	9
ELECTRIC CABLE IN CONDUIT, 600V (XLP-TYPE USE) 1/C NO. 8	FOOT	22900
ELECTRIC CABLE IN CONDUIT, 600V (XLP-TYPE USE) 1/C NO. 2	FOOT	165
LIGHTING CONTROLLER, BASE MOUNTED, 240VOLT, 100AMP	EACH	1
LIGHTING UNIT COMPLETE, SPECIAL	EACH	29
LIGHT POLE FOUNDATION, 24" DIAMETER, SPECIAL	FOOT	240
LIGHT POLE FOUNDATION, 24" DIAMETER, OFFSET	FOOT	56

CAUTION
NOTICE TO CONTRACTOR

THE CONTRACTOR IS SPECIFICALLY CAUTIONED THE LOCATION AND/OR ELEVATION OF EXISTING AND PROPOSED UTILITIES AS SHOWN ON THESE PLANS. THE INFORMATION IS NOT TO BE RELIED ON AS BEING EXACT OR COMPLETE. THE CONTRACTOR MUST CALL THE LOCAL UTILITY LOCATION CENTER AT LEAST 72 HOURS BEFORE ANY EXCAVATION TO REQUEST EXACT FIELD LOCATIONS OF THE UTILITIES. IT SHALL BE THE RESPONSIBILITY OF THE CONTRACTOR TO INFORM ENGINEER OF ANY EXISTING UTILITIES WHICH CONFLICT WITH THE PROPOSED IMPROVEMENTS.

THE VILLAGE OF SHOREWOOD WILL OWN AND MAINTAIN THE PROPOSED ROADWAY LIGHTING SYSTEM.

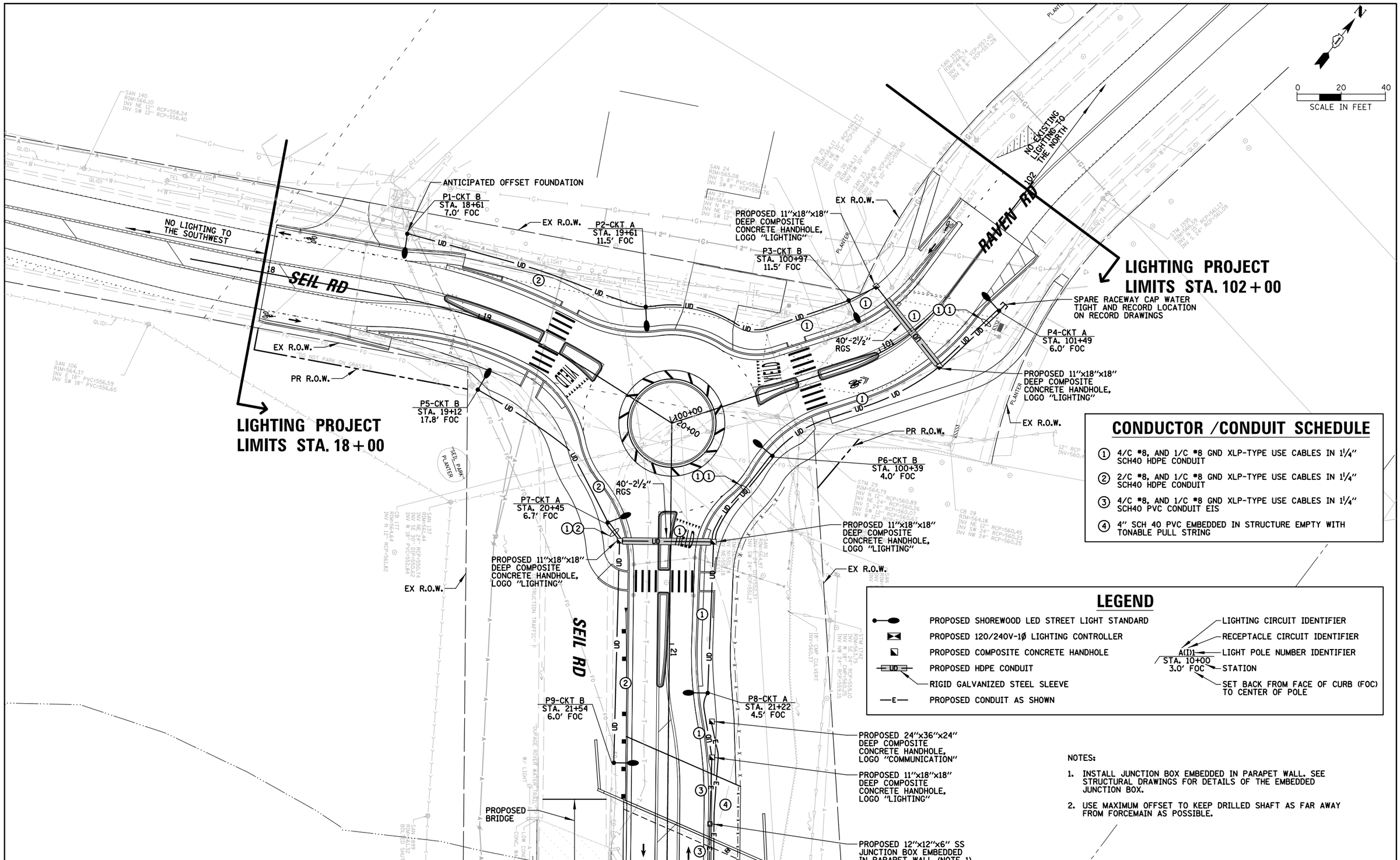

CONDUCTOR /CONDUIT SCHEDULE

1. 4/C #8, AND 1/C #8 GND XLP-TYPE USE CABLES IN 1¼" SCH40 HDPE CONDUIT
2. 2/C #8, AND 1/C #8 GND XLP-TYPE USE CABLES IN 1¼" SCH40 HDPE CONDUIT
3. 4/C #8, AND 1/C #8 GND XLP-TYPE USE CABLES IN 1¼" SCH40 PVC CONDUIT EIS
4. 4" SCH 40 PVC EMBEDDED IN STRUCTURE EMPTY WITH TONABLE PULL STRING

LEGEND

- PROPOSED SHOREWOOD LED STREET LIGHT STANDARD
- PROPOSED 120/240V-1Ø LIGHTING CONTROLLER
- PROPOSED COMPOSITE CONCRETE HANDHOLE
- UD — PROPOSED HDPE CONDUIT
- RIGID GALVANIZED STEEL SLEEVE
- —E— PROPOSED CONDUIT AS SHOWN

A(1)1 — LIGHTING CIRCUIT IDENTIFIER; RECEPTACLE CIRCUIT IDENTIFIER
LIGHT POLE NUMBER IDENTIFIER
STA. 10+00 — STATION
3.0' FOC — SET BACK FROM FACE OF CURB (FOC) TO CENTER OF POLE

NOTES:

1. INSTALL JUNCTION BOX EMBEDDED IN PARAPET WALL. SEE STRUCTURAL DRAWINGS FOR DETAILS OF THE EMBEDDED JUNCTION BOX.
2. USE MAXIMUM OFFSET TO KEEP DRILLED SHAFT AS FAR AWAY FROM FORCEMAIN AS POSSIBLE.

CHRISTOPHER B. BURKE ENGINEERING, LTD.
16021 W. 159th Street, Suite 201
Lockport, Illinois 60441
(815) 770-2650

USER NAME = aschaefer	DESIGNED AJD	REVISED -	
	DRAWN RJJ/HD	REVISED -	
PLOT SCALE = 40'	CHECKED AJD	REVISED -	
PLOT DATE = 11/2/2025	DATE 11/2/2025	REVISED -	

STATE OF ILLINOIS
DEPARTMENT OF TRANSPORTATION

SEIL ROAD WIDENING
PROPOSED LIGHTING PLAN (1 OF 5)

SCALE: 40' | SHEET 2 OF 8 LGTTSHEETS | STA. TO STA.

F.A.U. RTE.	SECTION	COUNTY	TOTAL SHEETS	SHEET NO.
0403	21-00047-00-WR	WILL	149	75

CONTRACT NO. 61M01

ILLINOIS FED. AID PROJECT

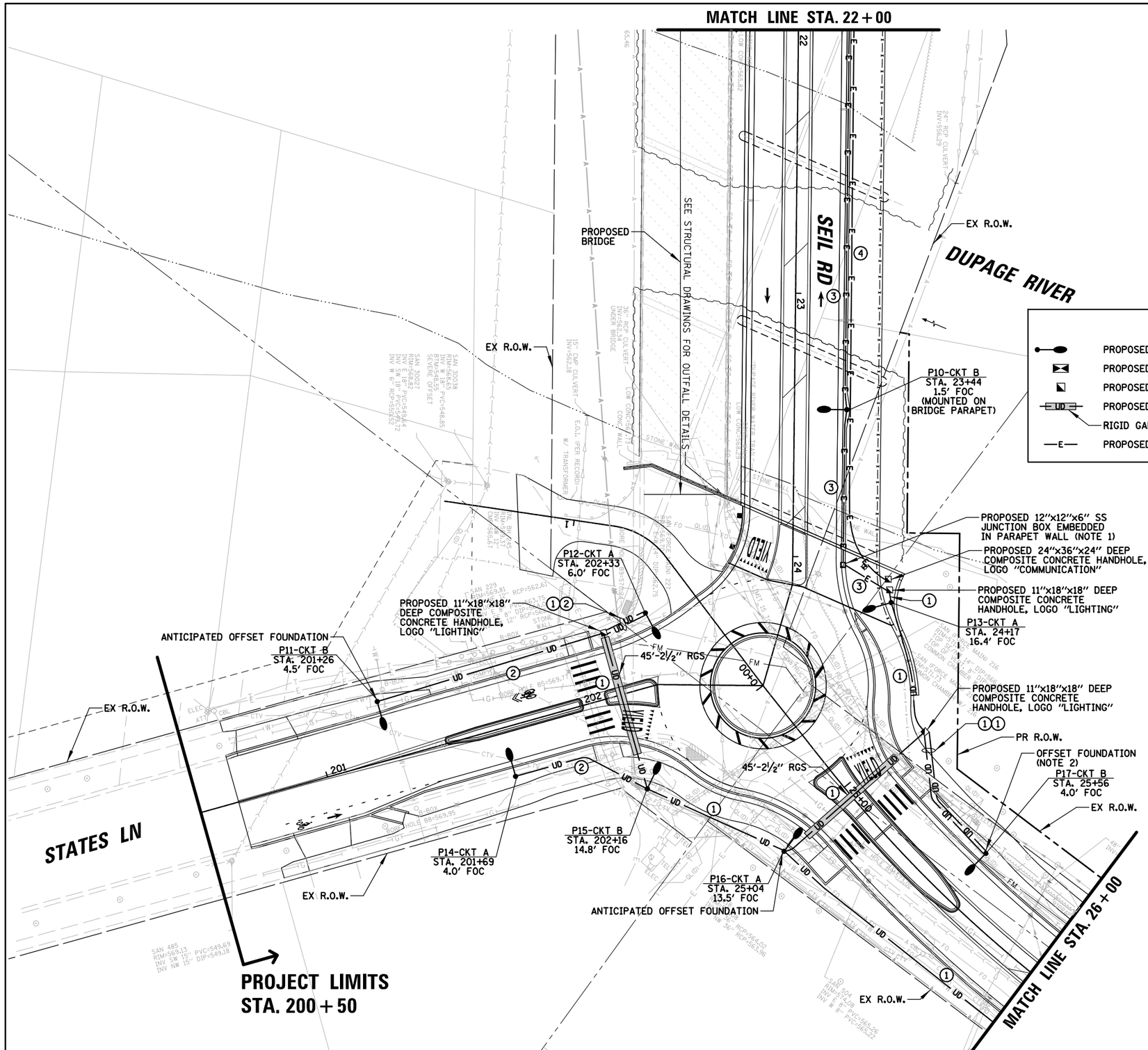

CONDUCTOR /CONDUIT SCHEDULE

1. 4/C #8, AND 1/C #8 GND XLP-TYPE USE CABLES IN 1¼" SCH40 HDPE CONDUIT
2. 2/C #8, AND 1/C #8 GND XLP-TYPE USE CABLES IN 1¼" SCH40 HDPE CONDUIT
3. 4/C #8, AND 1/C #8 GND XLP-TYPE USE CABLES IN 1¼" SCH40 PVC CONDUIT EIS
4. 4" SCH 40 PVC EMBEDDED IN STRUCTURE EMPTY WITH TONABLE PULL STRING

0 20 40
SCALE IN FEET

LEGEND

- PROPOSED SHOREWOOD LED STREET LIGHT STANDARD
- PROPOSED 120/240V-1Ø LIGHTING CONTROLLER
- PROPOSED COMPOSITE CONCRETE HANDHOLE
- PROPOSED HDPE CONDUIT
- RIGID GALVANIZED STEEL SLEEVE
- PROPOSED CONDUIT AS SHOWN

A(1)1 — LIGHTING CIRCUIT IDENTIFIER
RECEPTACLE CIRCUIT IDENTIFIER
LIGHT POLE NUMBER IDENTIFIER
STA. 10+00 — STATION
3.0' FOC — SET BACK FROM FACE OF CURB (FOC) TO CENTER OF POLE

NOTES:

1. INSTALL JUNCTION BOX EMBEDDED IN PARAPET WALL. SEE STRUCTURAL DRAWINGS FOR DETAILS OF THE EMBEDDED JUNCTION BOX.
2. USE MAXIMUM OFFSET TO KEEP DRILLED SHAFT AS FAR AWAY FROM FORCEMAIN AS POSSIBLE.

CHRISTOPHER B. BURKE ENGINEERING, LTD.
16021 W. 159th Street, Suite 201
Lockport, Illinois 60441
(815) 770-2650

USER NAME = eschaefer	DESIGNED AJD	REVISED -
	DRAWN RJJ/HD	REVISED -
PLOT SCALE = 40'	CHECKED AJD	REVISED -
PLOT DATE = 11/2/2025	DATE 11/2/2025	REVISED -

STATE OF ILLINOIS
DEPARTMENT OF TRANSPORTATION

SEIL ROAD WIDENING
PROPOSED LIGHTING PLAN (2 OF 5)

SCALE: 40' | SHEET 3 OF 8 LGTG SHEETS | STA. | TO STA.

F.A.U. RTE.	SECTION	COUNTY	TOTAL SHEETS	SHEET NO.
0403	21-00047-00-WR	WILL	149	76

CONTRACT NO. 61M01

ILLINOIS FED. AID PROJECT

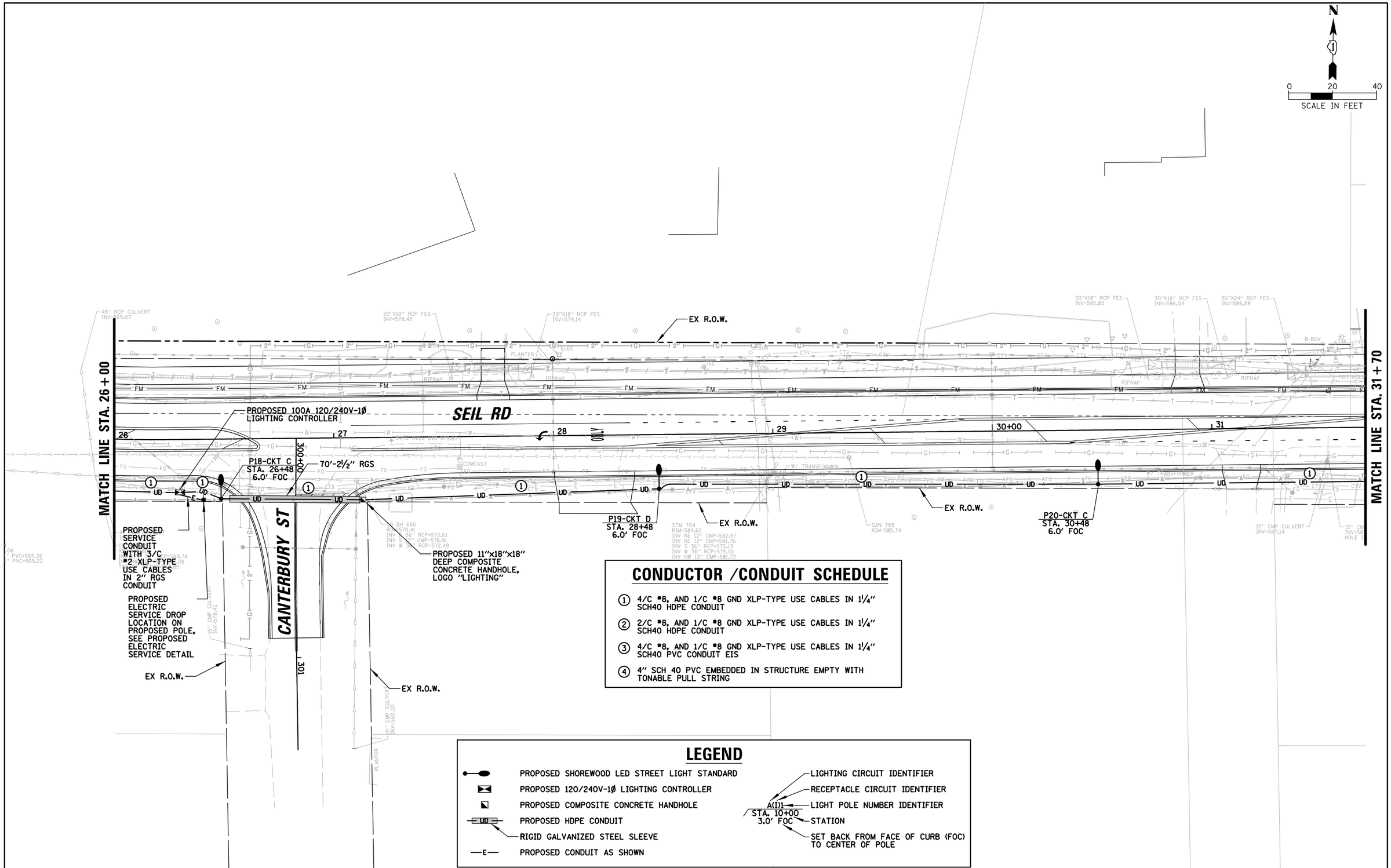

CHRISTOPHER B. BURKE ENGINEERING, LTD.
9027 W. 159th Street, Suite 201
Lockport, Illinois 60441
(815) 770-2650

USER NAME = aschaefer	DESIGNED AJD	REVISED -
	DRAWN RJJ/HD	REVISED -
PLOT SCALE = 40'	CHECKED AJD	REVISED -
PLOT DATE = 11/2/2025	DATE 11/2/2025	REVISED -

STATE OF ILLINOIS
DEPARTMENT OF TRANSPORTATION

SEIL ROAD WIDENING
PROPOSED LIGHTING PLAN (3 OF 5)

SCALE: 40' | SHEET 4 OF 8 SHEETS | STA. | TO STA.

F.A.U. RTE.	SECTION	COUNTY	TOTAL SHEETS	SHEET NO.
0403	21-00047-00-WR	WILL	149	77
		CONTRACT NO. 61M01		
		ILLINOIS FED. AID PROJECT		

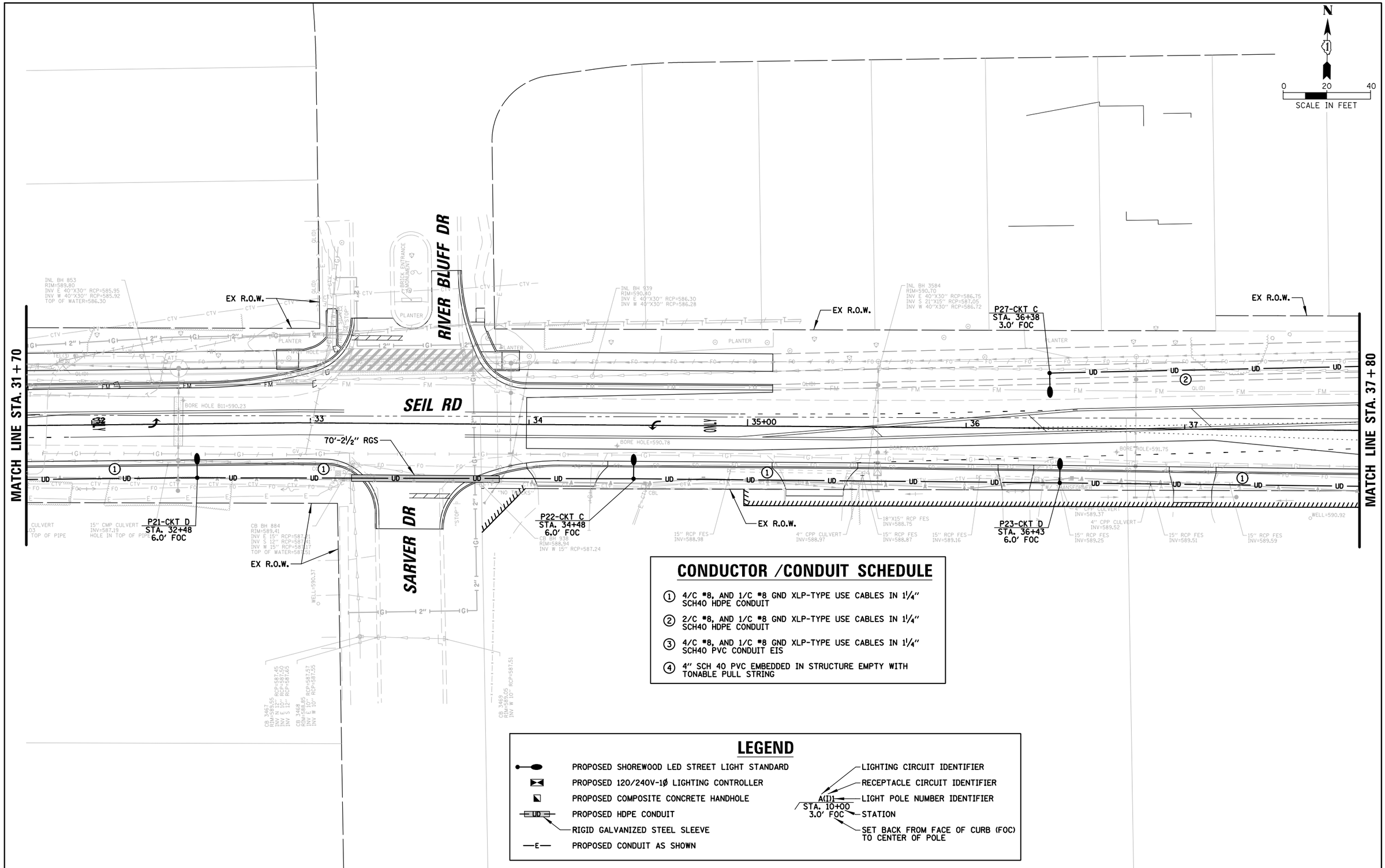

CONDUCTOR /CONDUIT SCHEDULE

1. 4/C #8, AND 1/C #8 GND XLP-TYPE USE CABLES IN 1¼" SCH40 HDPE CONDUIT
2. 2/C #8, AND 1/C #8 GND XLP-TYPE USE CABLES IN 1¼" SCH40 HDPE CONDUIT
3. 4/C #8, AND 1/C #8 GND XLP-TYPE USE CABLES IN 1¼" SCH40 PVC CONDUIT EIS
4. 4" SCH 40 PVC EMBEDDED IN STRUCTURE EMPTY WITH TONABLE PULL STRING

LEGEND

- PROPOSED SHOREWOOD LED STREET LIGHT STANDARD
- PROPOSED 120/240V-1Ø LIGHTING CONTROLLER
- PROPOSED COMPOSITE CONCRETE HANDHOLE
- UD — PROPOSED HDPE CONDUIT
  - RIGID GALVANIZED STEEL SLEEVE
- —E— PROPOSED CONDUIT AS SHOWN

A(I)1 — LIGHTING CIRCUIT IDENTIFIER
RECEPTACLE CIRCUIT IDENTIFIER
LIGHT POLE NUMBER IDENTIFIER
STA. 10+00 — STATION
3.0' FOC — SET BACK FROM FACE OF CURB (FOC) TO CENTER OF POLE

CHRISTOPHER B. BURKE ENGINEERING, LTD.
16021 W. 159th Street, Suite 201
Lockport, Illinois 60441
(815) 770-2650

USER NAME = aschaefer	DESIGNED AJD	REVISED -	
	DRAWN RJJ/HD	REVISED -	
PLOT SCALE = 40'	CHECKED AJD	REVISED -	
PLOT DATE = 11/2/2025	DATE 11/2/2025	REVISED -	

STATE OF ILLINOIS
DEPARTMENT OF TRANSPORTATION

SEIL ROAD WIDENING
PROPOSED LIGHTING PLAN (4 OF 5)

SCALE: 40' | SHEET 5 OF 8 LGTG SHEETS | STA. TO STA.

F.A.U. RTE.	SECTION	COUNTY	TOTAL SHEETS	SHEET NO.
0403	21-00047-00-WR	WILL	149	78

CONTRACT NO. 61M01

ILLINOIS FED. AID PROJECT

N

0 20 40
SCALE IN FEET

MATCH LINE STA. 37+80

EX R.O.W.

P28-CKT D
STA. 39+13
3.0' FOC

P29-CKT C
STA. 41+33
3.0' FOC

EXISTING LIGHTING TO THE EAST

SEIL RD

38 39 40+00 41 42 43

55'-2½" RGS

P24-CKT C
STA. 39+13
6.0' FOC

P25-CKT D
STA. 40+10
6.0' FOC

P26-CKT D
STA. 41+43
6.0' FOC

EXISTING IDOT LIGHT POLE TO REMAIN

LIGHTING PROJECT LIMITS STA. 43+00

W. FRONTAGE RD

85'-2½" RGS

SPARE RACEWAY CAP WATER TIGHT AND RECORD LOCATION ON RECORD DRAWINGS

CONDUCTOR /CONDUIT SCHEDULE

1. 4/C #8, AND 1/C #8 GND XLP-TYPE USE CABLES IN 1¼" SCH40 HDPE CONDUIT
2. 2/C #8, AND 1/C #8 GND XLP-TYPE USE CABLES IN 1¼" SCH40 HDPE CONDUIT
3. 4/C #8, AND 1/C #8 GND XLP-TYPE USE CABLES IN 1¼" SCH40 PVC CONDUIT EIS
4. 4" SCH 40 PVC EMBEDDED IN STRUCTURE EMPTY WITH TONABLE PULL STRING

LEGEND

- PROPOSED SHOREWOOD LED STREET LIGHT STANDARD
- PROPOSED 120/240V-1Ø LIGHTING CONTROLLER
- PROPOSED COMPOSITE CONCRETE HANDHOLE
- UD — PROPOSED HDPE CONDUIT
- RIGID GALVANIZED STEEL SLEEVE
- —E— PROPOSED CONDUIT AS SHOWN

A(1)1 — LIGHTING CIRCUIT IDENTIFIER
RECEPTACLE CIRCUIT IDENTIFIER
LIGHT POLE NUMBER IDENTIFIER
STA. 10+00 — STATION
3.0' FOC — SET BACK FROM FACE OF CURB (FOC) TO CENTER OF POLE

CHRISTOPHER B. BURKE ENGINEERING, LTD.
16021 W. 159th Street, Suite 201
Lockport, Illinois 60441
(815) 770-2650

USER NAME = aschaefer	DESIGNED AJD	REVISED -	
	DRAWN RJJ/HD	REVISED -	
PLOT SCALE = 40'	CHECKED AJD	REVISED -	
PLOT DATE = 11/2/2025	DATE 11/2/2025	REVISED -	

STATE OF ILLINOIS
DEPARTMENT OF TRANSPORTATION

SEIL ROAD WIDENING
PROPOSED LIGHTING PLAN (5 OF 5)

SCALE: 40' | SHEET 6 OF 8 LGTTG SHEETS | STA. TO STA.

F.A.U. RTE.	SECTION	COUNTY	TOTAL SHEETS	SHEET NO.
0403	21-00047-00-WR	WILL	149	79

CONTRACT NO. 61M01

ILLINOIS FED. AID PROJECT

ITEM	SPECIFICATION
1 MAIN CIRCUIT BREAKER	100 AMPERE, 2P, 240V SERVICE RATING, 10KAIC
2 LAMPHOLDER CIRCUIT BREAKER	20 AMPERE, 1P, 120V RATING, 10KAIC
3 PHOTOELECTRIC CONTROL CIRCUIT BREAKER	15 AMPERE, 1P, 120V RATING, 10KAIC
4 AUXILIARY RELAY	120 V OPERATED DPDT 60 HZ COIL 2 NO & 2 NC CONTACTS
5 CABINET RECEPTACLE AND BOX	COMMERCIAL GRADE GFCI 20A/120V, MOUNTED IN A WEATHERPROOF CAST ALUMINUM SINGLE GANG BOX WITH WEATHERPROOF COVER
6 CABINET LIGHT	5 WATT LED STRIP LIGHT, 60K HOUR RATING, 65K COLOR TEMPERATURE, DOOR SWITCH CONTROLLED, FASTENED TO TOP OF CABINET
7 CONTACTOR	100 AMPERE, 2P, 120V COIL, MECHANICALLY HELD
8 BRANCH LINE CIRCUIT BREAKERS	(5) 20A, 2P, 240V RATING, 10KAIC
9 POWER DISTRIBUTION BLOCK	600 VOLT, INSULATED, SIZE AS REQ'D, 10KAIC
10 SERVICE CABLES	3-600V (XLP-TYPE USE) NO. #2
11 LAMPHOLDER WIRE	2-600V XLP NO. 12
12 CONTROL WIRE	2-600V XLP NO. 12
13 SURGE ARRESTOR	10 K AMPERE RATING
14 PHOTOELECTRIC CONTROL WIRE	3-600V XLP NO. 12
15 DOOR SWITCH	20A/120V, DOOR MOUNTED SNAP ACTION TYPE PLUNGER SWITCH
16 HAND-AUTO-OFF CONTROL SWITCH	20A, 3 POS. MTD IN CAST ALUM. ENCLOSURE
17 PHOTOCELL	120V, MTD. ON CABINET, DELAY TYPE, SPST-NC
18 TERMINAL BLOCK	3 TERMINAL, SCREW TYPE, MAX. #10 WIRE SIZE
19 CIRCUIT BREAKER DIST. BLOCKS	30A, 600V, 10 KAIC - WIRE RANGE: LINE SIDE LUG (1) #2/0-#14 AWG, LOAD SIDE LUGS (2) #4-#14 AWG

NOTES:

1. ALL ITEMS LISTED IN LIGHTING CONTROLLER COMPONENT SCHEDULE SHALL BE CONSIDERED INCLUDED IN THE PRICE BID FOR "LIGHTING CONTROLLER, BASE MOUNTED, 240 VOLT, 100 AMP" INCLUDING CABINET AND FOUNDATION.
2. THE LIGHTING CONTROLLER TOGETHER WITH ALL OF ITS COMPONENTS SHALL BE UL LISTED AS AN "ENCLOSED INDUSTRIAL CONTROL PANEL" UNDER UL508A.
3. CONNECTION OF SURGE ARRESTOR TO LINE SIDE OF MAIN CIRCUIT BREAKER SHALL NOT BE "DOUBLE LUGGED."
4. THE MAIN CIRCUIT BREAKER AND LAMPHOLDER CIRCUIT BREAKER SHALL BE LABELED "SERVICE DISCONNECT".
5. ALL SWITCHES AND CONTROLS SHALL BE IDENTIFIED USING TWO COLOR ENGRAVED NAMEPLATES.
6. THE PANEL MANUFACTURER SHALL LABEL THE CABINET WITH THE APPROPRIATE ARC FLASH WARNING AND PERSONNEL PROTECTION EQUIPMENT REQUIRED FOR SERVICING.
7. ALL EXPOSED BUS BARS SHALL BE INSULATED.
8. ALL WIRING SHALL BE COPPER.

PROPOSED LIGHTING CONTROLLER COMPONENT SCHEDULE

LIGHTING CONTROLLER				
CIRCUIT ID	110W LED LUMINAIRE		TOTAL CIRCUIT LOAD	
	QTY.	LOAD/FIXT. (WATTS)	(WATTS)	AMPS (VOLTS)
A	8	68 W	544 W	2.3A (240V)
B	9	68 W	612 W	2.6A (240V)
C	6	68 W	408 W	1.7A (240V)
D	6	68 W	408 W	1.7A (240V)
TOTAL	29	N/A	1972 W	8.3A (240V)

PROPOSED LIGHTING/ELECTRICAL CIRCUIT LOADS

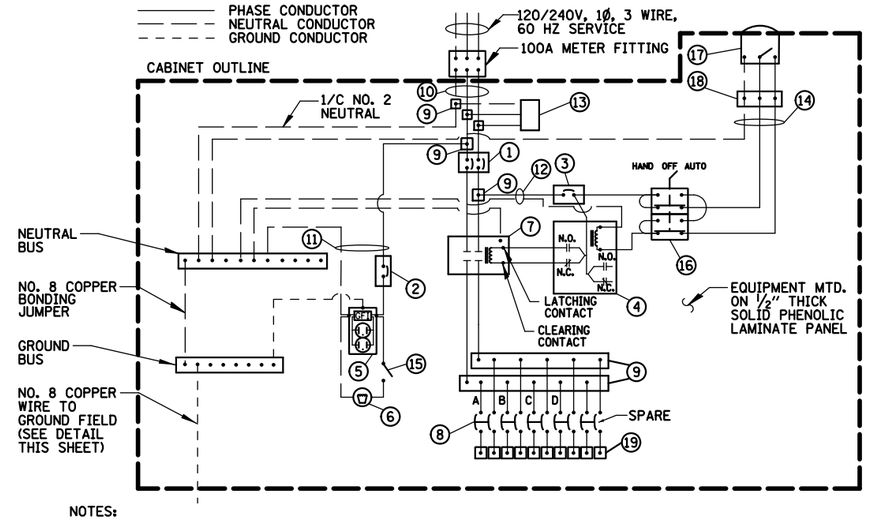

NOTES:

1. ALL GROUND CONDUCTORS SHALL BE GREEN AND NEUTRAL CONDUCTORS SHALL BE WHITE. PHASE CONDUCTORS SHALL BE COLOR CODED IN ACCORDANCE WITH SECTION 1066.02 OF THE STANDARD SPECIFICATIONS. CONTRACTOR SHALL ONLY USE SOLID COLOR CODED INSULATIONS. COLOR STRIPPING OF PHASE CONDUCTORS SHALL NOT BE ALLOWED.
2. IN ADDITION TO THE TERMINATIONS SHOWN, THE NEUTRAL AND GROUND BUS BARS SHALL EACH ACCOMMODATE A MINIMUM OF 8 ADDITIONAL TERMINATIONS (#2-#14).

PROPOSED LIGHTING CONTROLLER WIRING DETAIL

N.T.S.

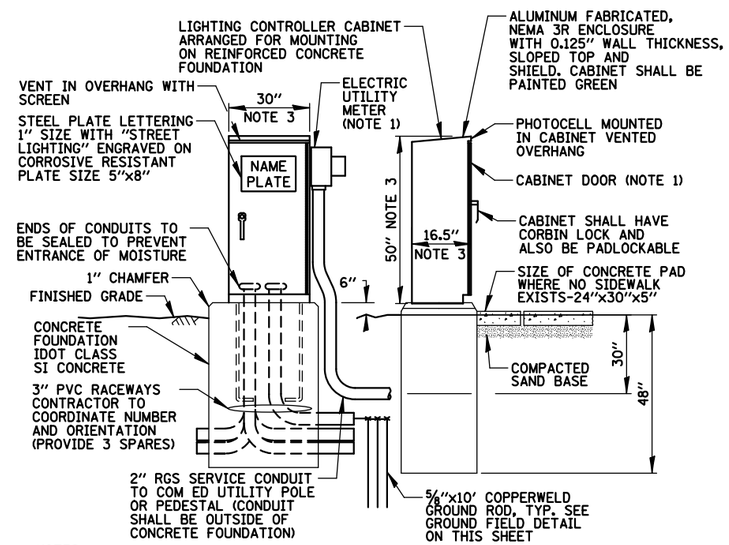

NOTES:

1. SEE DETAIL ON THIS SHEET FOR CABINET METER FITTING & DOOR ORIENTATION. METER AND DISCONNECT SHALL BE CECHA APPROVED. METER FITTING AND SERVICE CONDUIT SHALL BE PAINTED BLACK.
2. ALL ITEMS SHOWN ABOVE (INCLUDING FOUNDATION, ELECTRIC METER & GROUND FIELD) SHALL BE INCLUDED IN THE PRICE BID FOR "LIGHTING CONTROLLER, BASE MOUNTED, 240 VOLT, 100 AMP", EXCEPT FOR THE SERVICE CONDUIT/WIRE WHICH WILL BE PAID FOR SEPARATELY.
3. CABINET DIMENSIONS SHOWN ARE APPROXIMATE. CABINET SHALL BE AS COMPACT AS POSSIBLE, CONTRACTOR TO COORDINATE.

PROPOSED LIGHTING CONTROLLER CABINET AND FOUNDATION

N.T.S.

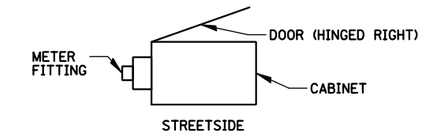

PROPOSED CABINET METER FITTING & DOOR ORIENTATION

N.T.S.

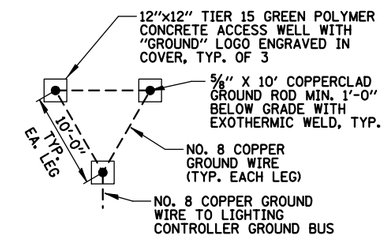

GROUND FIELD DETAIL (TYP.)

N.T.S.

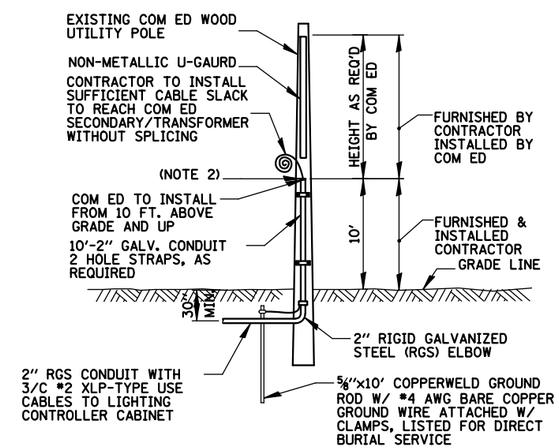

NOTES:

1. ALL WORK SHALL CONFORM TO COM ED'S BOOK OF "INFORMATION AND REQUIREMENTS FOR THE SUPPLY OF ELECTRIC SERVICE."
2. CONTRACTOR SHALL PROVIDE CONDUIT BUSHING AND SEALING COMPOUND AT TOP OF RISER.
3. ALL MATERIAL ABOVE (EXCEPT FOR POLE) SHALL BE INCLUDED IN THE PRICE BID FOR "ELECTRIC SERVICE INSTALLATION". THE HORIZONTAL SERVICE CONDUIT AND WIRING FROM POLE TO CONTROLLER SHALL BE PAID FOR SEPARATELY.

COM ED OVERHEAD CONNECTION POLE

N.T.S.

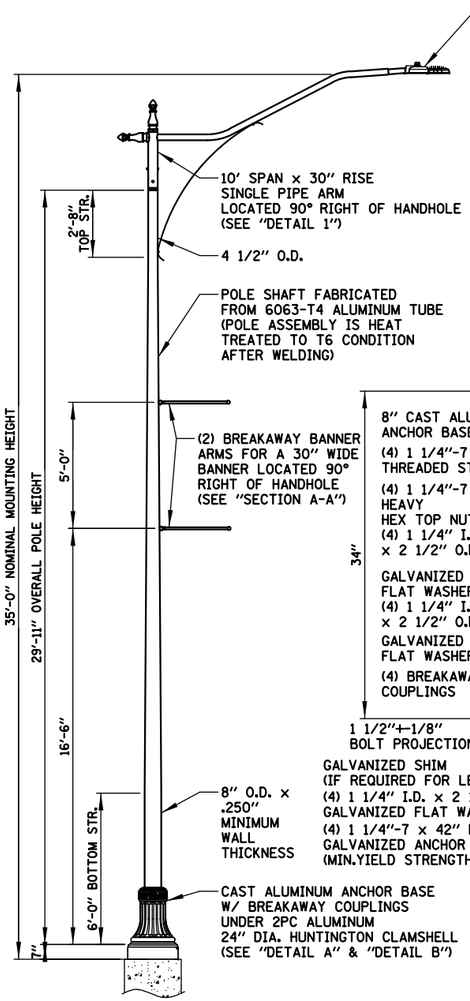

LIGHT POLE DETAIL

N.T.S.

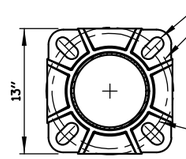

DETAIL B

N.T.S.

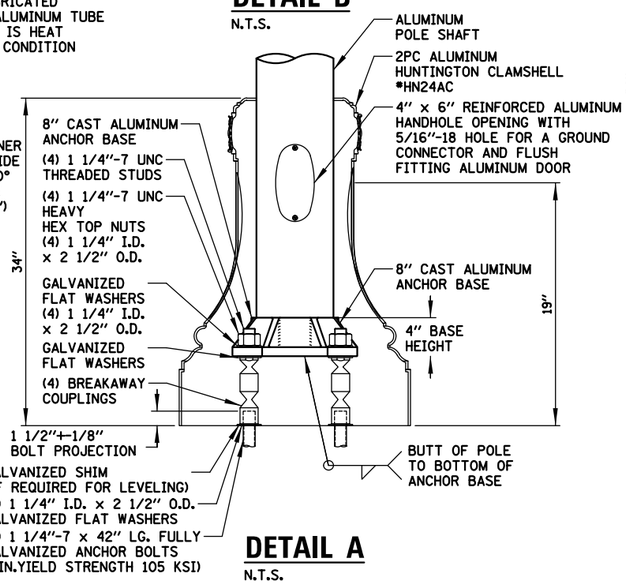

DETAIL A

N.T.S.

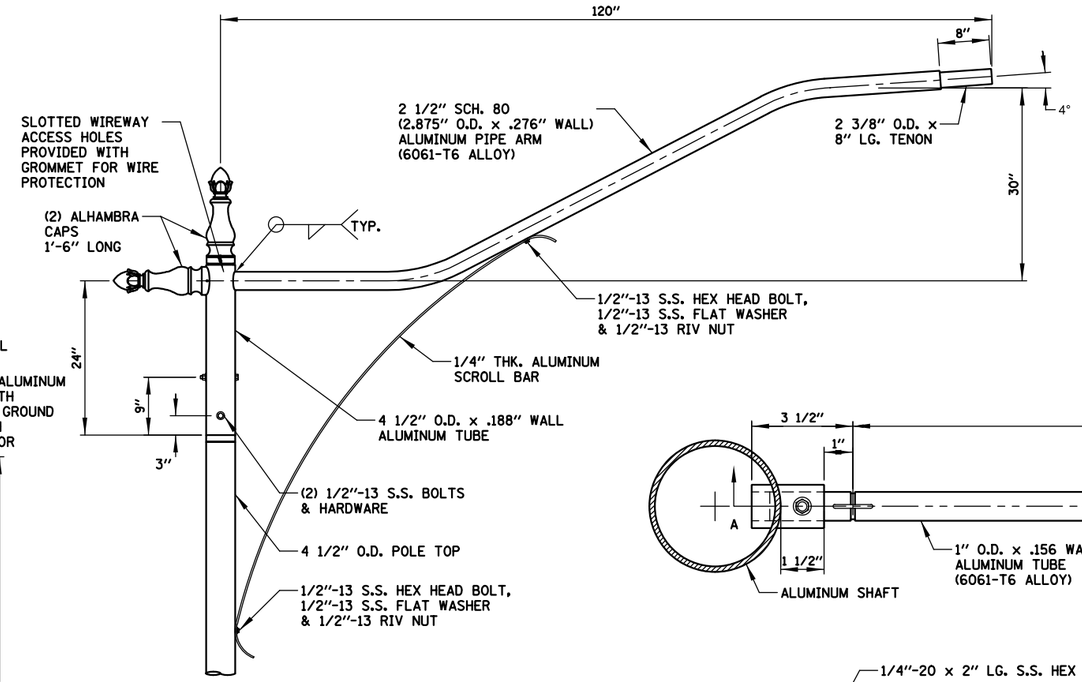

DETAIL 1: LUMINAIRE ARM

N.T.S.

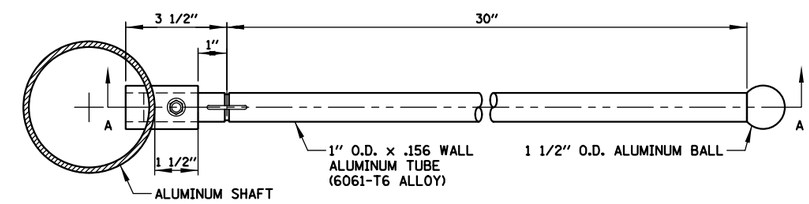

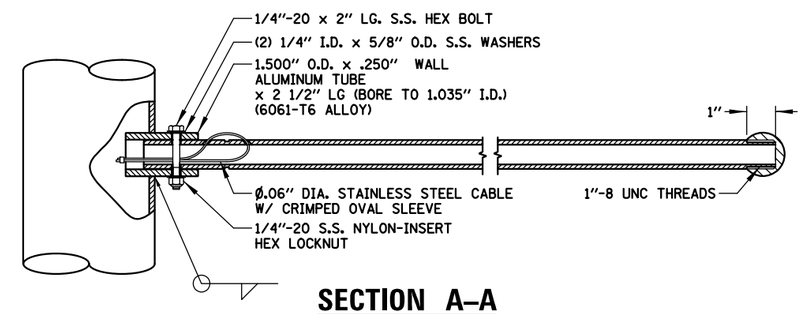

SECTION A–A

N.T.S.

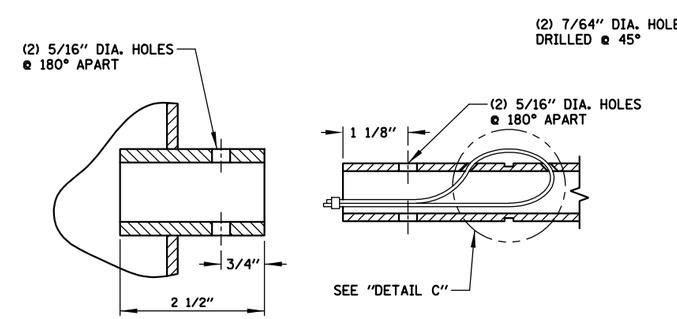

COUPLING DETAIL

N.T.S.

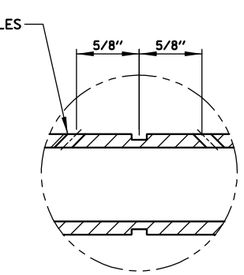

CABLE OMITTED FOR CLARITY

DETAIL C

N.T.S.

SPECIFICATION NOTES:

1. PAID FOR UNDER "LIGHTING UNIT COMPLETE, SPECIAL" (SEE SPECIAL PROVISION)
2. DECORATIVE POLE ASSEMBLY SHALL BE VALMONT OR PRE APPROVED EQUIVALENT, FACTORY PAINTED BLACK WITH 5 YEAR WARRANTY.
3. SYSTEM INCLUSIVE OF POLE, COUPLINGS, BANNER ARMS, AND HUNTINGTON DECORATIVE CLAM-SHELL BASE SHALL CARRY FHWA BREAKAWAY RATING AND BE LISTED AS SUCH.
4. BANNER ARMS SHALL BE BREAKAWAY AND ATTACHED VIA COUPLING CONNECTION. PROTECTIVE CAPS SHALL BE PROVIDED PER POLE TO COVER COUPLINGS IF NOT IN USE.
5. CONTRACTOR IS TO FOLLOW MANUFACTURER'S GUIDELINES FOR PROPER FINISH TOUCH UP TO REPAIR ALL DAMAGE INCURRED DURING INSTALLATION. TOUCH UP TO BE CONDUCTED BY CONTRACTOR TRAINED BY MANUFACTURER. VILLAGE SHALL INSPECT PRIOR TO SIGN OFF ON INSTALLATION.
6. PAINT IS TGIC SUPER DURABLE POWDER TOP COAT FORMULATED TO MEET AAMA 2604 5 YEAR COLOR AND GLOSS RETENTION STANDARD. THIS TOP COAT IS TO BE APPLIED TO A DFT OF 3.0 MILS. CONTRACTOR TO FOLLOW MANUFACTURERS GUIDELINES FOR PROPER FINISH TOUCHUP TO REPAIR ANY DAMAGE THAT OCCURRED DURING TRANSPORTATION OR INSTALLATION.
7. ANCHOR BOLTS SHALL BE F1554 GRADE 105.

CHRISTOPHER B. BURKE ENGINEERING, LTD.
9027 W. 159th Street, Suite 201
Lockport, Illinois 60441
(815) 770-2650

USER NAME = aschaefer	DESIGNED AJD	REVISED -	STATE OF ILLINOIS DEPARTMENT OF TRANSPORTATION
	DRAWN RJJ/HD	REVISED -	
PLOT SCALE = N.T.S.	CHECKED AJD	REVISED -	
PLOT DATE = 11/2/2025	DATE 11/2/2025	REVISED -	

SEIL ROAD WIDENING
LIGHTING DETAILS (2 OF 8)

SCALE: N.T.S. | SHEET 8 OF 8 SHEETS | STA. | TO STA.

F.A.U. RTE.	SECTION	COUNTY	TOTAL SHEETS	SHEET NO.
0403	21-00047-00-WR	WILL	149	81
		CONTRACT NO. 61M01		

ILLINOIS FED. AID PROJECT

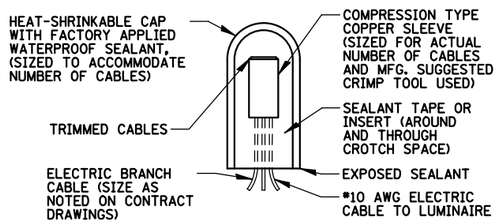

SPLICING ELECTRIC CABLE

N.T.S.

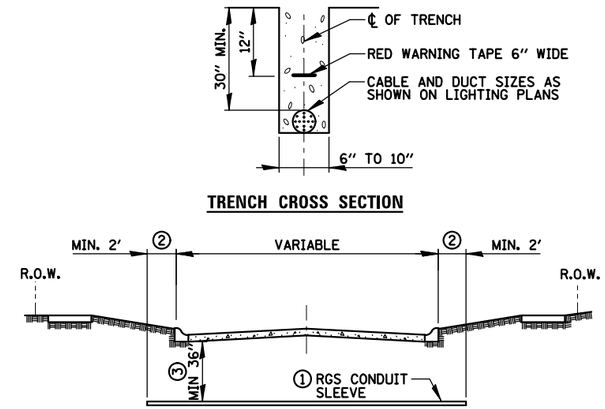

① SLEEVE SHALL BE HEAVY WALL RIGID GALVANIZED STEEL (RGS) CONDUIT.

② SLEEVE SHALL EXTEND A MINIMUM OF 2 FT. BEYOND BACK OF CURB.

③ SLEEVE SHALL BE A MINIMUM OF 36" BELOW ROADWAY OR CURB BOTTOM.

ELECTRIC CONDUIT INSTALLATION

N.T.S.

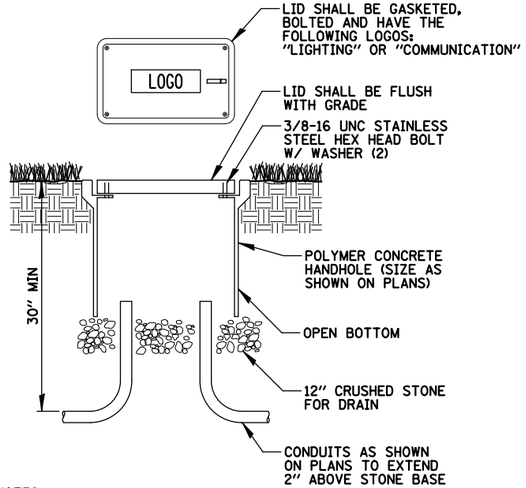

NOTES:

1. NO SPLICING ALLOWED IN HANDHOLE.
2. POLYMER CONCRETE HANDHOLE AND LID SHALL BE GREY.
3. BOX & LID SHALL MEET/EXCEED ANSI TIER 15 LOADING REQUIREMENTS, AND BE TESTED IN ACCORDANCE WITH THE LATEST EDITION OF THE ANSI/SCTE 77 "SPECIFICATION FOR UNDERGROUND ENCLOSURE INTEGRITY", AND THE PROVISIONS OF PARAGRAPHS 5.2.3 AND 5.2.4 OF WESTERN UNDERGROUND COMMITTEE GUIDE 3.6.

POLYMER CONCRETE HANDHOLE

N.T.S.

PHASE CONDUCTOR
GROUND CONDUCTOR
NEUTRAL CONDUCTOR

① 5A FUSE FOR LUMINAIRES 2-POLE BREAKAWAY FUSE HOLDER & INSULATING BOOTS

② #10 XLP-TYPE USE POLE WIRES COLOR TO MATCH BRANCH WIRING

③ MULTIPLE COMPRESSION FITTINGS (SPLICE), TYP.

④ CONCRETE FOUNDATION

⑤ WIRES AS SHOWN ON PLANS

⑥ PROPOSED LIGHTING DUCT PULLED THROUGH PVC RACEWAY

⑦ POLE GROUND LUG

⑧ NO. 6 GROUND WIRE MECHANICALLY CLAMPED TO GROUND ROD

⑨ GROUND ROD

⑩ WIRE COLOR R=RED B=BLACK G=GREEN

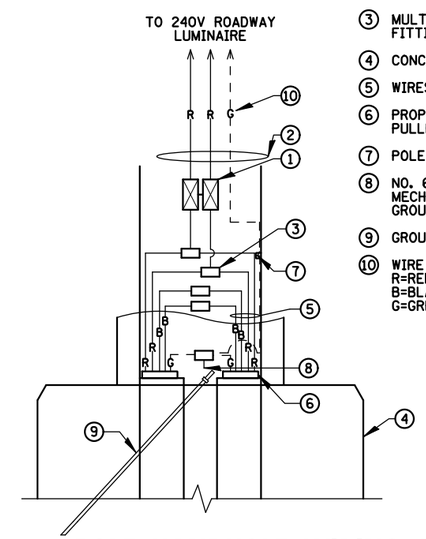

POLE HANDHOLE WIRING DIAGRAM

N.T.S.

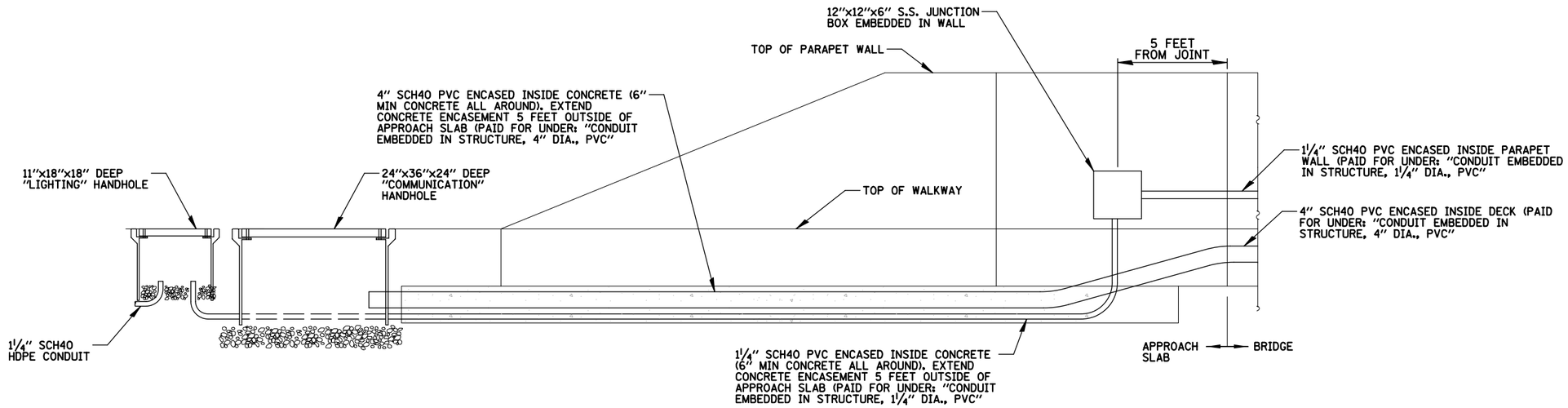

VIEW A–A

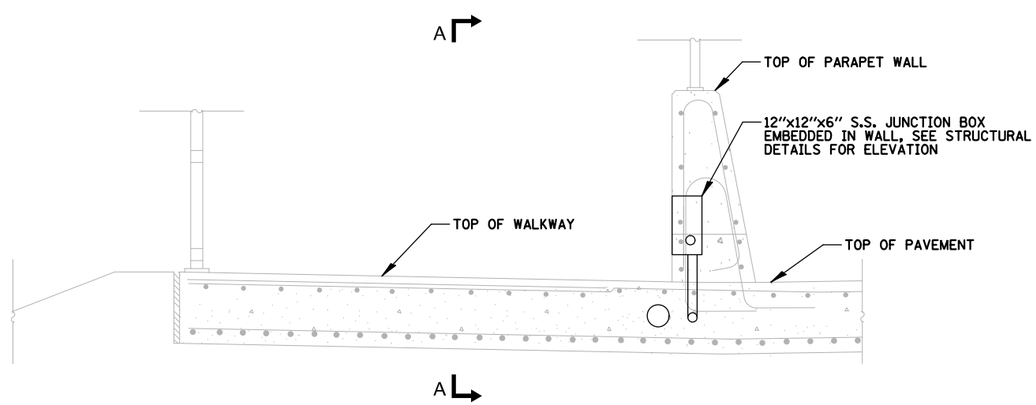

EAST APPROACH SLAB CROSS SECTION (LOOKING EAST)

NOTES:

1. THIS WORK IS PAID FOR UNDER "JUNCTION BOX, STAINLESS STEEL, EMBEDDED IN STRUCTURE, 12"x12"x6"", "CONDUIT EMBEDDED IN STRUCTURE, 1¼" DIA., PVC", AND "CONDUIT EMBEDDED IN STRUCTURE, 4" DIA., PVC" RESPECTIVELY. HANDHOLE PAID FOR SEPARATELY.

EMBEDDED JUNCTION BOX DETAIL

N.T.S.

CHRISTOPHER B. BURKE ENGINEERING, LTD.
16021 W. 159th Street, Suite 201
Lockport, Illinois 60441
(815) 770-2650

USER NAME = aschaefer	DESIGNED AJD	REVISED –	STATE OF ILLINOIS DEPARTMENT OF TRANSPORTATION
	DRAWN RJJ/HD	REVISED –	
PLOT SCALE = N.T.S.	CHECKED AJD	REVISED –	
PLOT DATE = 11/2/2025	DATE 11/2/2025	REVISED –	

SEIL ROAD WIDENING
LIGHTING DETAILS (4 OF 8)

SCALE: N.T.S. | SHEET 10 OF 8 LGT SHEETS | STA. | TO STA.

F.A.U. RTE.	SECTION	COUNTY	TOTAL SHEETS	SHEET NO.
0403	21-00047-00-WR	WILL	149	83

CONTRACT NO. 61M01

ILLINOIS FED. AID PROJECT

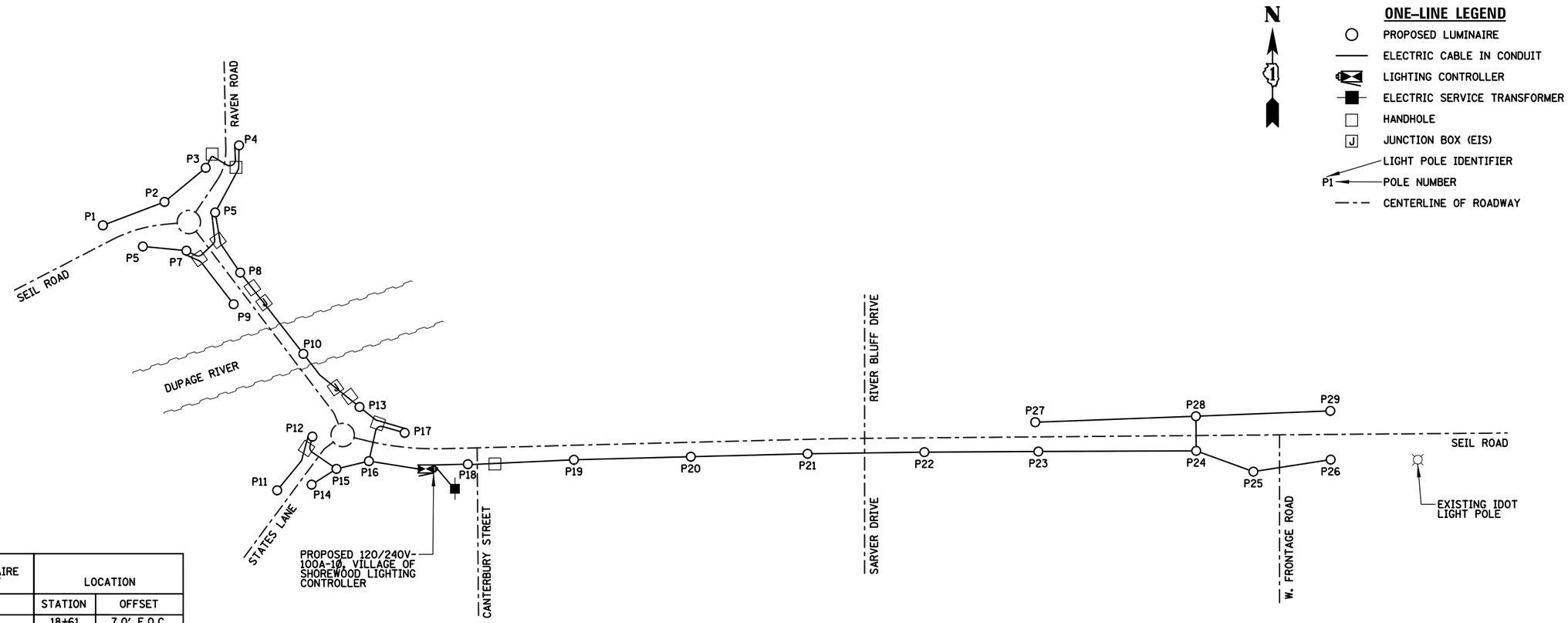

LIGHTING ONE-LINE DIAGRAM

N.T.S.

LIGHT POLE IDENTIFIER	LUMINAIRE CKT	LOCATION	
		STATION	OFFSET
P1	B	18+61	7.0' F.O.C.
P2	A	19+61	11.5' F.O.C.
P3	B	100+97	11.5' F.O.C.
P4	A	101+49	6.0' F.O.C.
P5	B	19+12	17.8' F.O.C.
P6	B	100+39	4.0' F.O.C.
P7	A	20+45	6.7' F.O.C.
P8	A	21+22	4.5' F.O.C.
P9	B	21+54	6.0' F.O.C.
P10	B	23+44	1.5' F.O.C.
P11	B	201+26	4.5' F.O.C.
P12	A	202+33	6.0' F.O.C.
P13	A	24+17	16.4' F.O.C.
P14	A	201+69	4.0' F.O.C.
P15	B	202+16	14.8' F.O.C.
P16	A	25+04	13.5' F.O.C.
P17	B	25+56	4.0' F.O.C.
P18	C	26+48	6.0' F.O.C.
P19	D	28+48	6.0' F.O.C.
P20	C	30+48	6.0' F.O.C.
P21	D	32+48	6.0' F.O.C.
P22	C	34+48	6.0' F.O.C.
P23	D	36+43	6.0' F.O.C.
P24	C	39+13	6.0' F.O.C.
P25	D	40+10	6.0' F.O.C.
P26	D	41+43	6.0' F.O.C.
P27	C	36+38	3.0' F.O.C.
P28	D	39+13	3.0' F.O.C.
P29	C	41+33	3.0' F.O.C.

F.O.C. - FACE OF CURB

LUMINAIRE AND POLE SCHEDULE

CHRISTOPHER B. BURKE ENGINEERING, LTD.
9575 W. 159th Street, Suite 201
Lockport, Illinois 60441
(815) 770-2850

USER NAME = eschaefer	DESIGNED AJD	REVISED -
	DRAWN RJJ/HD	REVISED -
PLOT SCALE = N.T.S.	CHECKED AJD	REVISED -
PLOT DATE = 11/2/2025	DATE 11/2/2025	REVISED -

STATE OF ILLINOIS
DEPARTMENT OF TRANSPORTATION

SEIL ROAD WIDENING
LIGHTING DETAILS (5 OF 8)

SCALE: N.T.S. | SHEET 11 OF $LGTTSHEETS | STA. | TO STA.

F.A.U. RTE.	SECTION	COUNTY	TOTAL SHEETS	SHEET NO.
0403	21-00047-00-WR	WILL	149	84

CONTRACT NO. 61M01

ILLINOIS FED. AID PROJECT

LIGHT POLE FOUNDATION DEPTH TABLE
30 FT. (9.144 m) TO 35 FT. (10.668 m) MOUNTING HEIGHT

SOIL CONDITIONS	DESIGN DEPTH "D" OF FOUNDATION	
	SINGLE ARM POLE	~~TWIN ARM POLE~~
SOFT CLAY Qu = 0.375 TON/SQ. FT.	11'-0" (3.35 m)	~~12'-8" (3.85 m)~~
MEDIUM CLAY Qu = 0.75 TON/SQ.FT	9'-0" (2.74 m)	~~14'-10" (4.52 m)~~
STIFF CLAY Qu = 1.50 TON/SQ. FT.	7'-6" (2.29 m)	~~8'-7" (2.62 m)~~
LOOSE SAND ∅ = 34°	9'-6" (2.90 m)	~~10'-7" (3.22 m)~~
MEDIUM SAND ∅ = 37.5°	9'-0" (2.74 m)	~~9'-10" (2.99 m)~~
DENSE SAND ∅ = 40°	8'-3" (2.51 m)	~~9'-7" (2.91 m)~~

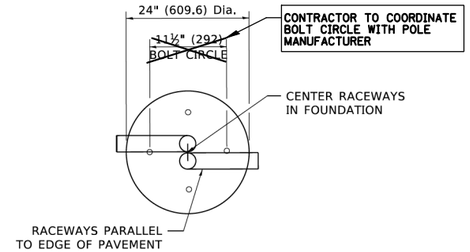

TOP VIEW

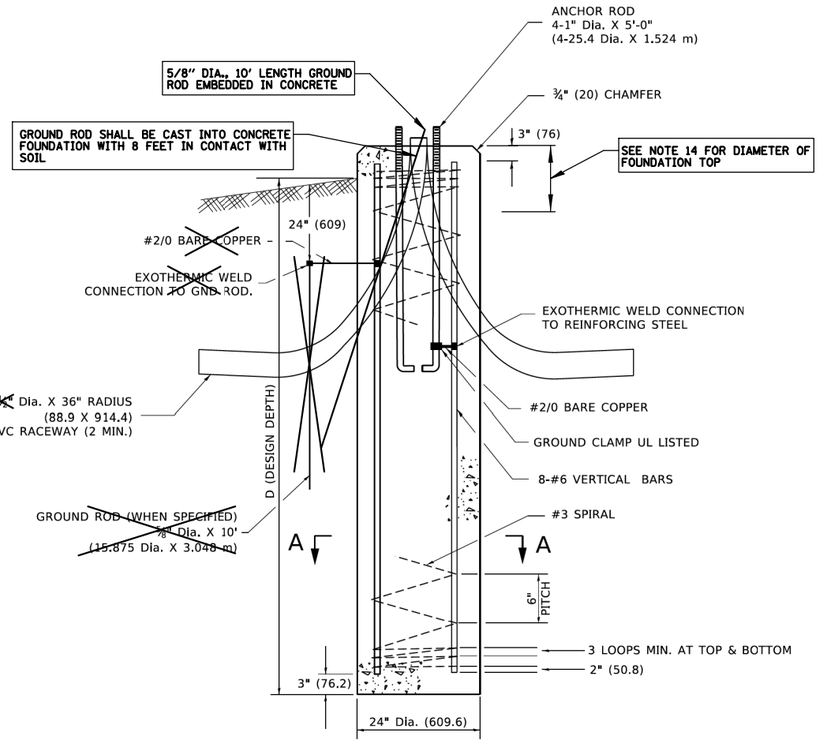

FOUNDATION DETAIL

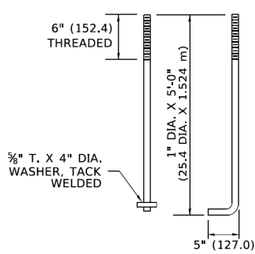

ANCHOR BOLT DETAIL

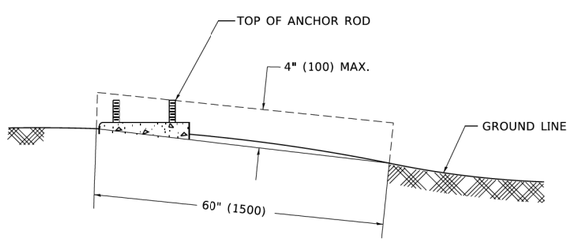

FOUNDATION EXTENSION DETAIL

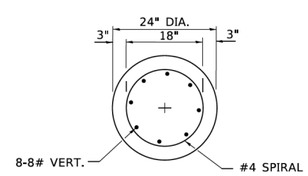

SECTION A–A

NOTES

1. ALL DIMENSIONS ARE IN INCHES (MILLIMETERS) UNLESS OTHERWISE SHOWN.
2. THE ANCHOR RODS AND RACEWAYS SHALL BE PROPERLY SECURED IN PLACE BEFORE THE CONCRETE IN PLACED.
3. THE FOUNDATION SHALL NOT PROTRUDE MORE THAN 4 IN. (100 mm) ABOVE THE FINISHED GRADE WITHIN A 60 IN. (1.5 m) CHORD ACROSS THE FOUNDATION, WITH ANCHOR RODS INCLUDED, IN ACCORDANCE WITH AASHTO GUIDELINES. IF THE FOUNDATION HEIGHT, INCLUDING ANCHOR RODS, EXTENDS BEYOND THESE SPECIFIED LIMITS, THE FOUNDATION SHALL BE REPLACED AT THE CONTRACTOR'S EXPENSE. SEE FOUNDATION EXTENSION DETAIL.
4. THE HOLE FOR THE FOUNDATION SHALL BE MADE BY DRILLING WITH AN AUGER, OF THE SAME DIAMETER AS THE FOUNDATION. IF SOIL CONDITIONS REQUIRE THE USE OF A LINER TO FORM THE HOLE, THE LINER SHALL BE WITHDRAWN AS THE CONCRETE IS DEPOSITED.
5. THE TOP OF THE FOUNDATION SHALL BE CONSTRUCTED LEVEL. A LINER OR FORM SHALL BE USED TO PRODUCE A UNIFORM SMOOTH SIDE TO THE TOP OF THE FOUNDATION. FOUNDATION TOP SHALL BE CHAMFERED 3#4-IN. (20 mm).
6. THE CONCRETE SHALL BE CLASS SI. CONCRETE SHALL CURE ACCORDING TO ARTICLE 1020.13 BEFORE LIGHT POLES ARE INSTALLED.
7. THE ANCHOR ROD SHALL BE A HOOK ROD TYPE. COLD BENDING OF THE ANCHOR ROD WILL NOT BE ALLOWED. THE RADIUS OF THE HOOK BEND SHALL NOT BE LESS THAN 4 TIMES THE NOMINAL DIAMETER OF THE ANCHOR ROD. A TACK WELDED ANCHOR ROD MAY BE SUBSTITUTED WITH THE APPROVAL OF THE ENGINEER.
8. ANCHOR RODS, NUTS AND WASHERS SHALL BE COMPLETELY GALVANIZED BY EITHER THE HOT-DIPPED PROCESS CONFORMING WITH AASHTO M 232, THE MECHANICAL PLATING METHOD CONFORMING TO AASHTO M 298, CLASS 50 WITH A MAXIMUM COATING THICKNESS OF 150 UM(6 MILS) OR THE ELECTROLYTIC PROCESS ACCORDING TO ASTM F 1136.
9. THE ANCHOR RODS SHALL BE THREADED A MINIMUM OF 6 INCHES (150 mm) WITH A MINIMUM OF 3 INCHES (75 mm) OF THREADED ANCHOR ROD EMBEDDED IN THE FOUNDATION.
10. ANCHOR RODS SHALL PROJECT 23#4" (69.9 mm) ABOVE THE TOP OF THE FOUNDATION. IF BREAKAWAY COUPLINGS ARE SPECIFIED, THE CONTRACTOR SHALL CAREFULLY COORDINATE THE ANCHOR ROD PROJECTION WITH THE INSTALLATION REQUIREMENTS OF THE BREAKAWAY COUPLINGS.
11. THE CONTRACTOR SHALL USE A #3 SPIRAL AT 6" (152.4 mm) PITCH OR MAY SUBSTITUTE #3 TIES AT 12" (304.8 mm) O.C. WITH THE APPROVAL OF THE ENGINEER.
12. THE CABLE TRENCHES AND FOUNDATION SHALL BE BACK FILLED AND COMPACTED AS SPECIFIED BEFORE THE LIGHT POLE IS ERECTED.
13. THE RACEWAYS SHALL PROJECT 1" (25.4 mm) ABOVE THE TOP OF THE FOUNDATION.
14. **TOP 12" OF FOUNDATIONS SHALL BE 28" DIAMETER.**

PAID FOR UNDER "LIGHT POLE FOUNDATION, 24" DIAMETER, SPECIAL" (SEE SPECIAL PROVISION).

IDOT STANDARD BE–300 MODIFIED FOR THIS PROJECT

LIGHT POLE FOUNDATION

N.T.S.

FOUNDATION DESIGN TABLE

TYPE OF SOIL	DESIGN DEPTH OF FOUNDATION		REINFORCEMENT IN FOUNDATION			
	SINGLE ARM D	TWIN ARM D	SINGLE ARM		TWIN ARM	
			VERT BARS	SPIRAL	VERT BARS	SPIRAL
SOFT CLAY	13'-0" (3.962 m)	15'-0" (4.572 m)	8-#6X12'-6" (3.810 m)	#3X122' (37.186 m)	8-#6X14'-3" (4.343 m)	#3X141' (42.977 m)
MEDIUM CLAY	9'-6" (2.896 m)	10'-9" (3.277 m)	8-#6X9'-0" (2.743 m)	#3X90' (27.432 m)	8-#6X10'-0" (3.048 m)	#3X100' (30.480 m)
STIFF CLAY	7'-0" (2.134 m)	8'-0" (2.438 m)	8-#6X6'-6" (1.981 m)	#3X66' (20.112 m)	8-#6X7'-6" (2.286 m)	#3X76' (23.165 m)
LOOSE SAND	9'-0" (2.743 m)	10'-0" (3.048 m)	8-#6X8'-6" (2.591 m)	#3X85' (25.908 m)	8-#6X9'-6" (2.896 m)	#3X94' (28.651 m)
MEDIUM SAND	8'-3" (2.515 m)	9'-0" (2.743 m)	8-#6X8'-0" (2.438 m)	#3X78' (23.774 m)	8-#6X8'-6" (2.591 m)	#3X85' (25.908 m)
DENSE SAND	7'-9" (2.362 m)	9'-0" (2.743 m)	8-#6X7'-6" (2.286 m)	#3X73' (22.250 m)	8-#6X8'-6" (2.591 m)	#3X85' (25.908 m)
ROCK OR SOLIDIFIED SLAG	5'-0" (1.524 m)	5'-0" (1.524 m)	NONE	NONE	NONE	NONE

BILL OF MATERIAL

MARK	NO.	SIZE	LENGTH	SHAPE
a	10	6	SEE BELOW	—
s	12	4	8'-0" (2.438 m)	▭
s_1	3	3	7'-6" (2.286 m)	▭
v_1	8	6	2'-9" (0.838 m)	—
v_2				

OFFSET SCHEDULE

SEWER DIAM. d IN.	PILE OFFSET from ℄-MED'N FT.	LENGTH of BAR a FT.
UP TO 24" (609.6 mm)	3'-3" (0.991 m)	#6 x 5'-3" (1.600 m)
27" (685.8 m)TO 36" (914.4 mm)	3'-9" (1.143 m)	5'-9" (1.753 m)
42" (1066.8 mm) TO 48" (1219.2 mm)	4'-6" (1.372 m)	6'-6" (1.981 m)
54" (1371.6 mm) TO 60" (1524.0 mm)	5'-0" (1.524 m)	7'-0" (2.134 m)
66" (1676.4 mm) TO 72" (1828.8 mm)	5'-6" (1.676 m)	7'-6" (2.286 m)

NOTES

1. ALL DIMENSIONS ARE IN INCHES (MILLIMETERS) UNLESS OTHERWISE SHOWN.
2. THE ENGINEER SHALL DETERMINE THE CLASS OF SOIL DURING EXCAVATION AND SELECT THE DESIGN DEPTH OF FOUNDATION FROM THE DESIGN TABLE.
3. EXCAVATION OF THE POLE FOUNDATION SHALL BE MADE WITH AN AUGER, 24" (609.6 mm) ~~OR 30" (762.0 mm)~~ IN DIAMETER.
4. THE ANCHOR ROD SHALL BE A HOOK ROD TYPE. COLD BENDING OF THE ANCHOR ROD WILL NOT BE ALLOWED. THE RADIUS OF THE HOOK BEND SHALL NOT BE LESS THAN 4 TIMES THE NOMINAL DIAMETER OF THE ANCHOR ROD. A TACK WELDED ANCHOR ROD MAY BE SUBSTITUTED WITH THE APPROVAL OF THE ENGINEER.
5. THE ANCHOR BOLTS AND RACEWAYS SHALL BE PROPERLY SECURED IN PLACE BEFORE THE CONCRETE IS PLACED IN THE FORM.
6. THE ANCHOR RODS SHALL BE ACCORDING TO ASTM F1554 GRADE 725 (GRADE 105). NUTS SHALL BE HEXAGON NUTS ACCORDING TO ASTM A 194 2H OR ASTM A 563 DH, AND WASHERS SHALL BE ACCORDING TO ASTM F 436.
7. THE CONTRACTOR SHALL COORDINATE EXTENSION OF ANCHOR BOLTS ABOVE TOP OF FOUNDATION WITH THE BREAKAWAY DEVICE MANUFACTURER'S REQUIREMENTS. IF LIGHT POLE IS MOUNTED WITHOUT BREAKAWAY DEVICE, ANCHOR BOLTS SHALL PROJECT 23#4" (69.9 mm) ABOVE TOP OF THE FOUNDATION. THE CONTRACTOR SHALL CONFIRM ANCHOR BOLT EXTENTION WITH ENGINEER.
8. RACEWAYS SHALL PROJECT 1" (25.4 mm) ABOVE THE TOP OF THE FOUNDATION.
9. THE CABLE TRENCH SHALL BE BACKFILLED AND FIRMLY COMPACTED BEFORE THE LIGHT IS ERECTED.
10. **CONTRACTOR SHALL COORDINATE BOLT CIRCLE AND BOLT DIAMETER.**

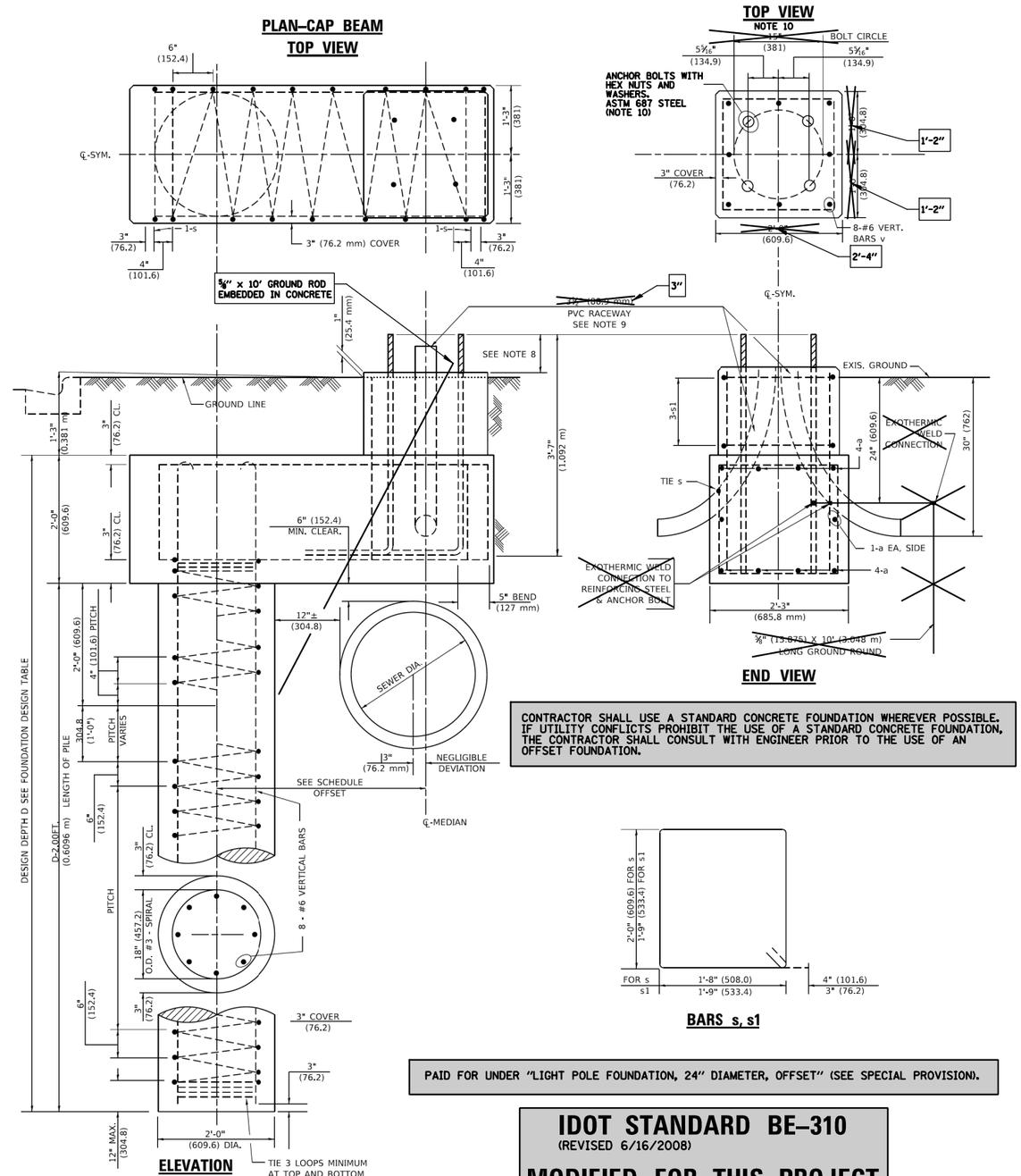

CONTRACTOR SHALL USE A STANDARD CONCRETE FOUNDATION WHEREVER POSSIBLE. IF UTILITY CONFLICTS PROHIBIT THE USE OF A STANDARD CONCRETE FOUNDATION, THE CONTRACTOR SHALL CONSULT WITH ENGINEER PRIOR TO THE USE OF AN OFFSET FOUNDATION.

PAID FOR UNDER "LIGHT POLE FOUNDATION, 24" DIAMETER, OFFSET" (SEE SPECIAL PROVISION).

IDOT STANDARD BE–310
(REVISED 6/16/2008)
MODIFIED FOR THIS PROJECT

LIGHT POLE FOUNDATION OFFSET

N.T.S.

ComEd
An Exelon Company

Service and Meter Application
Switch and Load Information Sheet

Please complete a separate sheet for each switch – existing or new:

Project Name: Seil Road Lighting
Site Address: 20707 S. Canterbury St.
Switch Name and Location: Controller #1, SE Corner W. Seil Rd. & S. Canterbury St.

Service Voltage (check one):

☒ 120/240V 1-phase, 3-wire
☐ 120/240V 3-phase, 4-wire
☐ 120/208V 3-phase, 4-wire
☐ Other:
☐ 277/480V 3-phase, 4-wire
☐ 480V 3-phase 3-wire (B-phase Grounded)
☐ 480V 3-phase 3-wire (Ungrounded – requires ground detection equip.)

☐ 4kV ☐ 12kV ☐ 34kV 3-phase, 3-wire
☐ 4kV ☐ 12kV ☐ 3-phase, 4-wire

Other Items (check all that apply):

☒ New Construction Sq. Ft.
☐ Building Addition Sq. Ft.
☐ Relocating Existing Service Entrance
☐ Hi-Rise/ Vault Service
☒ Underground Service
☐ Overhead Service
☐ Commercial – No. of units Sq. Ft.
☐ Residential – No. of units Sq. Ft.

Date of Ground Breaking (est.):
Date to Energize: July 2023
Date to Final Grade (est.):
Hours of Operation Per Day: ☐ 8 ☒ 12 ☐ 16 ☐ 24

Switch Size (amps): 100 (If switchgear is 1,200 Amps or larger, customer must submit drawings for ComEd approval)
Switch Rating (percentage): 80
Secondary Conductors: 1 (Number) Sets of 3 (No. of conductors) /C 2 (Size) ☒ CU or ☐ AL (Type)

Total Connected Load Information:

(KW or HP)	Description:	Connected Load:	
		1-phase	3-phase
Lighting:	Roadway Lighting	7.7 Kw	
VAC:			
Receptacle:			
Process Heat:			
Water Heat:			
Space Heat:			
Motors*:			
Welders**:			
TOTAL LOAD:		7.7 Kw	

*Motor Load Detail included above:

Description	Quantity	Size (HP)	Efficiency Rating	Phase / Voltage	Nema Code	Starts Per Hr. or Day	Starting Amps	Use

**Welder Detail included above:

Description	Quantity	Size (kVA)	Type	Max. Inst. Demand	P.F. at Peak	Welds Per Minute	Cycles Per Weld	Hours Per Day Use

COMED CONTACT: ANNETTE KISALA
(630)-947-3064
(Annette.Kisala@exeloncorp.com)

ComEd
An Exelon Company

Service and Meter Application
Project Information Sheet

Project Name: Seil Road Lighting
Site Address: 20707 S. Canterbury St. City: Shorewood Zip: 60404

Total Number of Service Entrance Locations (meters/switches) Requested: 1

Legal Name of Entity (Electric Consumer): Village of Shorewood
☐ Corporation ☐ Partnership ☐ Sole Proprietor ☒ Other: Municipality
Tax I.D.: Existing Account Number: 1953133135

Principle(s) to Sign Contracts For Service, Easements, Etc.:

Property Owner: Phone:
Building Owner: Phone:
Building Manager: Noriel Noriega Phone: (815) 553-2323

Mailing Address For Contracts:

Company: Village of Shorewood Phone: (815) 725-2150 Fax:
Address: One Towne Center Boulevard City: Shorewood Zip: 60404

Mailing Address For Electric Bills:

Company: Village of Shorewood Phone: (815) 725-2150 Fax:
Address: One Towne Center Boulevard City: Shorewood Zip: 60404

Project Contacts:

Consulting Engineer: Rich Jezierny E-mail: rjezierny@cbbel.com
Firm Name: Christopher Burke Engineering, Ltd. Phone: (847) 823-0500 Fax: (847) 823-0520
Address: 9575 W. Higgins Rd. , Suite 600 City: Rosemont Zip: 60018

Electrical Contractor:

Consulting Engineer: E-mail:
Firm Name: Phone: Fax:
Address: City: Zip:

Other:

Consulting Engineer: E-mail:
Firm Name: Phone: Fax:
Address: City: Zip:

The Following Documents May Be Required:

1. Plat of Survey with legal description of property (for easement, if required)
2. Site Plan showing building relative to property lines – mark service entrance location(s)
3. Civil drawings (showing water, sewer, gas, phone, electric, pavement, grading, etc.)
4. Complete electrical drawings and/or load detail sheets

Information Provided By:

Print Name: Rich Jezierny
Signature:
Date: 7/8/2022

ELECTRICAL SERVICE APPLICATION
FOR INFORMATIONAL PURPOSES ONLY

Bench Mark: OSBM-21-50. Square cut on southwest corner of concrete base of ATT panel box on the northwest side of Seil Road on west side of bridge. Elev. 565.53

Existing Structure: SN 099-4253 was constructed in 1981 as part of IDOT Section 80-18104-02-BR. The structure consists of three simple spans with a length of 187'-7 5/8" back-to-back of abutments. The span lengths are 61'-on", 62'-1 1/8", 61'-5". The bridge has a skew angle of 23 degrees. The superstructure consists of 8- 27"x48" PPC deck beams with a 2.8" HMA wearing. The out to out width of deck is 32'-0" with type S steel railings on both sides. The deck provides one lane of traffic in each direction. The east abutment is supported on bed rock. The west abutment is a stub abutment, supported on steel H piles. Both piers are solid web wall type piers supported on spread footings at the top of bed rock. The existing structure will be removed. An existing stone wall abutment remains from the original truss bridge (SN 099-3132) that crossed the river north of SN 099-4253. This wall will be removed during construction.

Traffic will be detoured during construction.

No Salvage

STATION 22+84.10
BUILT BY
STATE OF ILLINOIS
F.A.U. 0403-SEC 21-00047-00-WR
LOADING HL-93
STRUCTURE NO. 099-6039

NAME PLATE

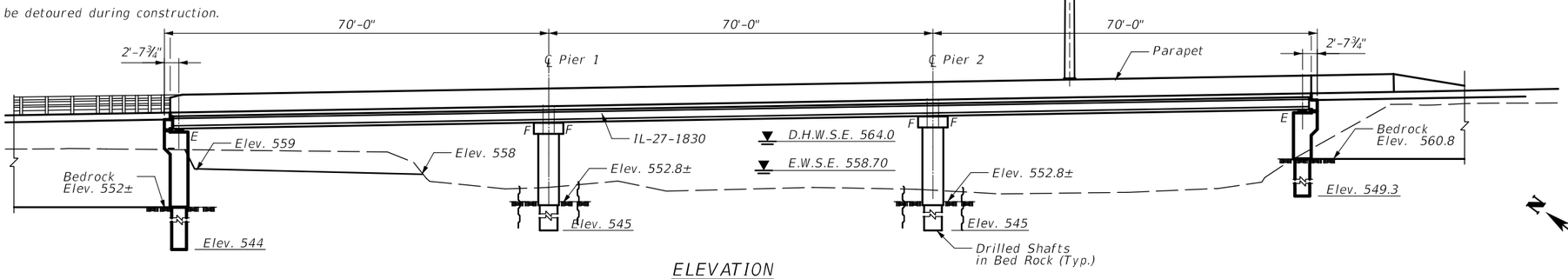

ELEVATION

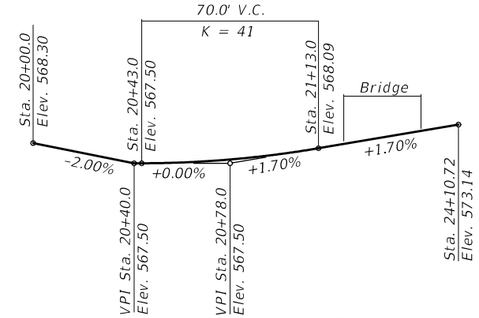

PROFILE GRADE

LOADING HL-93

Allow 50#/sq. ft. for future wearing surface.

DESIGN SPECIFICATIONS

2020 AASHTO LRFD Bridge Design Specifications, 9th Edition

SEISMIC DATA

Seismic Performance Zone (SPZ) = 1
Design Spectral Acceleration at 1.0 sec. (SD1) = 0.069g
Design Spectral Acceleration at 0.2 sec. (SDS) = 0.14g
Soil Site Class = B

DESIGN STRESSES

FIELD UNITS

f'c = 3,500 psi (Concrete Structures and Retaining Walls)
f'c = 4,000 psi (Superstructure and Drilled Shaft)
Fy = 50,000 psi (Soldier Piles)
fy = 60,000 psi (Reinforcement)

PRECAST PRESTRESSED UNITS

f'c = 8,500 psi
f'ci = 6,500 psi
f'pu = 270,000 psi (0.6ø Low relax strands)
f'pbt = 201,960 psi (0.6ø Low relax strands)

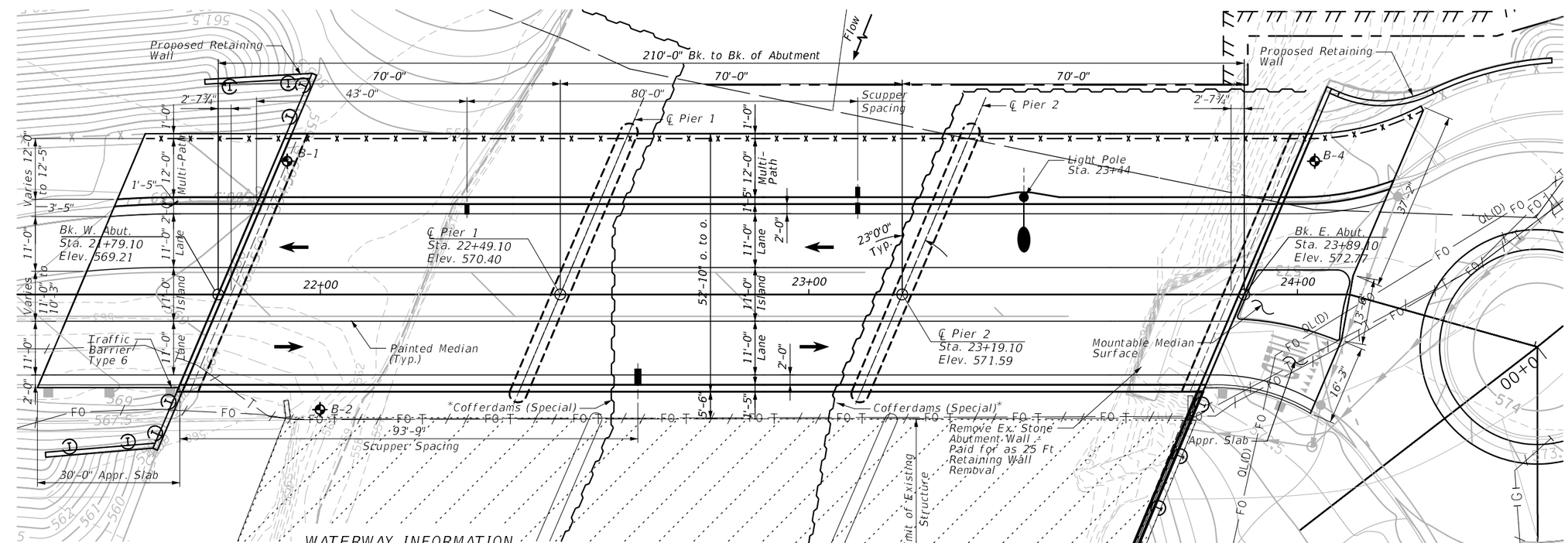

WATERWAY INFORMATION

Drainage Area = 329 square miles					Existing Overtopping Elev. = 565.7 at Sta. 24+67 Proposed Overtopping Elev. = 567.5 at Sta. 20+43				
Flood Event	Freq. Yr.	Discharge ft³/s	Waterway Opening - ft² Existing	Waterway Opening - ft² Proposed	Natural H.W.E. - ft Existing Face/Proposed Face	Head - ft Existing	Head - ft Proposed	Headwater Elevation – ft Existing	Headwater Elevation – ft Proposed
	10	8626	1025	1174	563.08/563.12	0.71	0.61	563.79	563.73
Design	30	11000	1167	1339	563.98/564.00	0.79	0.71	564.77	564.71
	50	12200	1238	1416	564.40/564.41	0.84	0.75	565.24	565.16
Base	100	13918	1330	1526	564.97/564.99	1.52	0.63	566.49	565.62
Scour Design Check	200	15550	1420	1638	565.51/565.54	1.13	0.95	566.64	566.49
Overtop Existing	65	12850	1273	-	564.62/ -	1.06	-	565.71	-
Overtop Proposed	>500	-	-	-	-	-	-	-	-
Max. Calc.	500	17800	1538	1871	566.29/566.33	2.64	1.25	568.93	567.58

PLAN

* Limits of Cofferdam (Special) shown are conceptual and are for bidding purposes only. The plan quantity is listed as 2 Each for Cofferdam (Special), and this is meant to cover the entire limits of the substructure removal and construction. The contractor may elect to construct additional/smaller cofferdams or adjust the limits shown; however, no adjustments to the pay quantity of 2 Each shall be allowed.

DESIGN SCOUR ELEVATION TABLE

Event/Limit State	Design Scour Elevations (ft.) NW Abutment	Pier 1	Pier 2	SE Abutment	Item 113
Q100	550.30	552.30	552.30	559.80	5
Q200	550.30	552.30	552.30	559.80	
Design	550.30	552.30	552.30	559.80	
Check	550.30	552.30	552.30	559.80	

STATE OF ILLINOIS
MAJID MOBASSERI
081-005058
CHAMPAIGN, ILLINOIS
LICENSED STRUCTURAL ENGINEER

10/6/25

MAJID MOBASSERI
ILLINOIS REGISTRATION No. 081-005058
STRUCTURAL ENGINEER
EXPIRATION DATE: 11/30/2026

I Certify That To The Best Of My Knowledge, Information And Belief, This Bridge Design Is Structurally Adequate For The Design Loading Shown On The Plans. The Design Is An Economical One For The Style Of Structure And Complies With Requirements Of The Current "AASHTO Standard Specification For Highway And Bridges".

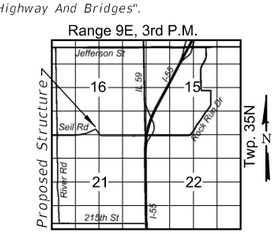

LOCATION SKETCH

GENERAL PLAN
SEIL ROAD OVER DUPAGE RIVER
F.A.U. 0403 - SECTION 21-00047-00-WR
WILL COUNTY
STATION 22+84.10
STRUCTURE NO. 099-6039

CHRISTOPHER B. BURKE ENGINEERING, LTD.
16221 W. 159th Street, Suite 201
Lockport, Illinois 60441
(815) 770-2850

USER NAME = aschaefer	DESIGNED - MM	REVISED -
	DRAWN - PDR	REVISED -
PLOT SCALE = 24'	CHECKED - MM	REVISED -
PLOT DATE = 11/2/2025	DATE - 03/24/2021	REVISED -

STATE OF ILLINOIS
DEPARTMENT OF TRANSPORTATION

SEIL ROAD WIDENING
GENERAL PLAN AND ELEVATION

SCALE: NTS | SHEET S-1 OF S-32 SHEETS | STA. 21+50.18 TO STA. 24+10.72

F.A.U. RTE.	SECTION	COUNTY	TOTAL SHEETS	SHEET NO.
0403	21-00047-00-WR	WILL	149	88

61M01

ILLINOIS FED. AID PROJECT P-91-020-19

FILE NAME: N:\Shorewood\070001\070001D\2021\D2210\3\Struct\01-070001-S2103-GPE.dgn

GENERAL NOTES

1. Reinforcement bars shall conform to the requirements of ASTM A 706 Gr 60. See Special Provisions.
2. Reinforcement bars designated (E) shall be epoxy coated.
3. Plan dimensions and details relative to existing plans are subject to nominal construction variations. The Contactor shall field verify existing dimensions and details affecting new construction and make necessary approved adjustments prior to construction or ordering of materials. Such variations shall not be cause for additional compensation for a change in scope of the work; however, the Contractor will be paid for the quantity actually furnished at the unit price bid for the work.
4. Bearing seat surfaces shall be constructed or adjusted to the designated elevations within a tolerance of 1/8 in. (0.01 ft.). Adjustment shall be made either by grinding the surface or by shimming the bearings.
5. Layout of the slope protection system may be varied to suit ground conditions in the field as directed by the Engineer.
6. The embankment configuration shown shall be the minimum that must be placed and compacted prior to construction of the abutments.
7. The Contractor shall obtain a construction permit from the Illinois Department of Natural Resources (IDNR), Office of Water Resources for any temporary construction activity placed in the water. This shall include the placement of material for run-arounds, causeways, cofferdams, etc. Any permit application by the Contractor shall refer to the IDNR 3708 Floodway Construction permit number allowing permanent construction as shown in the contract plans.
8. Two 1/8 in. adjusting shims shall be provided for each bearing in addition to all other plates or shims and placed as shown on bearing details.
9. All (embedded and separate) bearing plates, side retainers, anchor bolts, nuts, washers and pintles shall be galvanized according to AASHTO M111 or M232 as applicable.
10. H.S. bolts in bearing assembly shall be galvanized according to AASHTO M298 Class 50.
11. Seal coat design thickness is based on the Cofferdam Design Water Elevation (CDWE) shown. Final cofferdam design, details and seal coat thickness shall be submitted to the Engineer for approval. The CDWE is equal to the Estimated Water Surface Elevation (EWSE) plus 3 feet. Seal coat, if necessary, is included in the cost of Cofferdams (Special).

INDEX OF SHEET

TOTAL BILL OF MATERIAL

PAY ITEM	ITEM	UNIT	QUANTITY
50100100	Removal Of Existing Structures	Each	1
50200100	Structure Excavation	Cu. Yd.	602
50200400	Rock Excavation for Structures	Cu. Yd.	18.0
50200450	Removal and Disposal of Unsuitable Material for Structures	Cu. Yd.	35
50300225	Concrete Structures	Cu. Yd.	481.3
50300255	Concrete Superstructure	Cu. Yd.	386.8
50300260	Bridge Deck Grooving	Sq. Yd.	1200
50300300	Protective Coat	Sq. Yd.	1975
50301350	Concrete Superstructure (Approach Slab)	Cu. Yd.	134
50401305	Furnishing And Erecting Precast Prestressed Concrete Beams, IL27N	Foot	1632
50500505	Stud Shear Connectors	Each	140
50800205	Reinforcement Bars, Epoxy Coated	Pound	207710
50901750	Parapet Railing	Foot	236
51500100	Name Plates	Each	1
51603000	Drilled Shaft In Soil	Cu. Yd.	7.9
51604000	Drilled Shaft In Rock	Cu. Yd.	39.1
52100010	Elastomeric Bearing Assembly, Type I	Each	16
52100520	Anchor Bolts, 1"	Each	32
52200105	Furnishing Soldier Piles (W Section)	Foot	242
52200200	Drilling And Setting Soldier Piles (In Soil)	Cu. Ft.	511
52200205	Drilling And Setting Soldier Piles (In Rock)	Cu. Ft.	484
52200250	Untreated Timber Lagging	Sq. Ft.	932
52200800	Segmental Concrete Block Wall	Sq. Ft.	321
52200900	Concrete Structures (Retaining Wall)	Cu. Yd.	33.7
58600101	Granular Backfill For Structures	Cu. Yd.	192
59100100	Geocomposite Wall Drain	Sq. Yd.	176
60146304	Pipe Underdrains For Structures 4"	Foot	282
X3400004	Retaining Wall Removal	Foot	50
X5021510	Cofferdams (Special)	Each	2
X5091725	Bicycle Railing (Special)	Foot	311
XX005913	Temporary Access Causeway	L. Sum	1
Z0018004	Drainage Scuppers, DS-12	Each	3
Z0018010	Drainage Scuppers, DS-33	Each	1

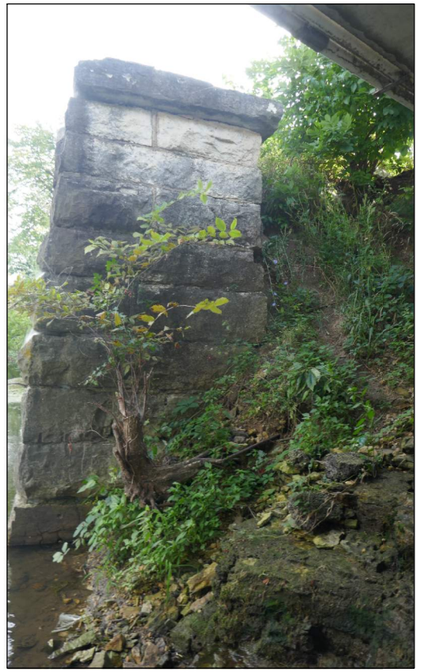

RETAINING WALL REMOVAL

Remove Existing Stone Abutment - paid for
as retaining wall removal - estimated exposed height = 12'
Thickness is unknown, estimated at 4.5' thick min.
Front and Sideview of Existing Wall Shown Above

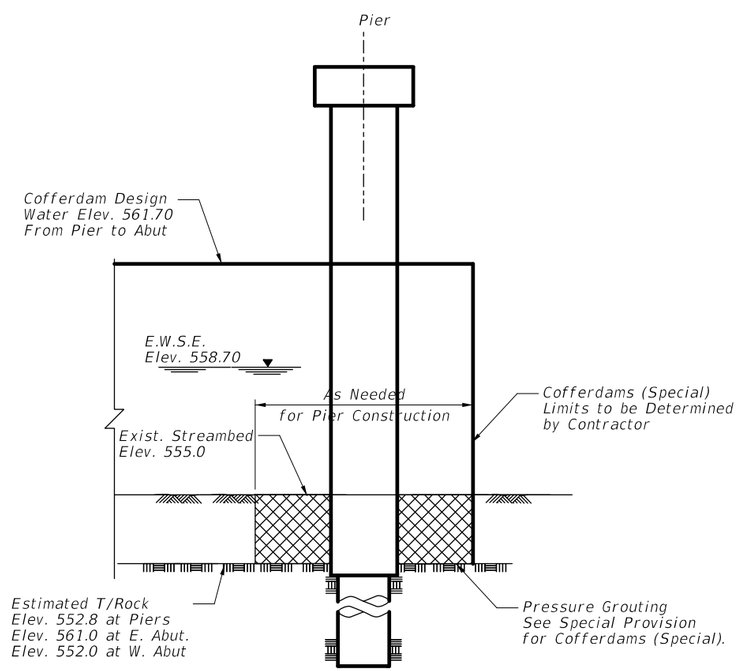

COFFERDAM (SPECIAL)

Cofferdam Excavation
- Included in Cost of
Cofferdams (Special)

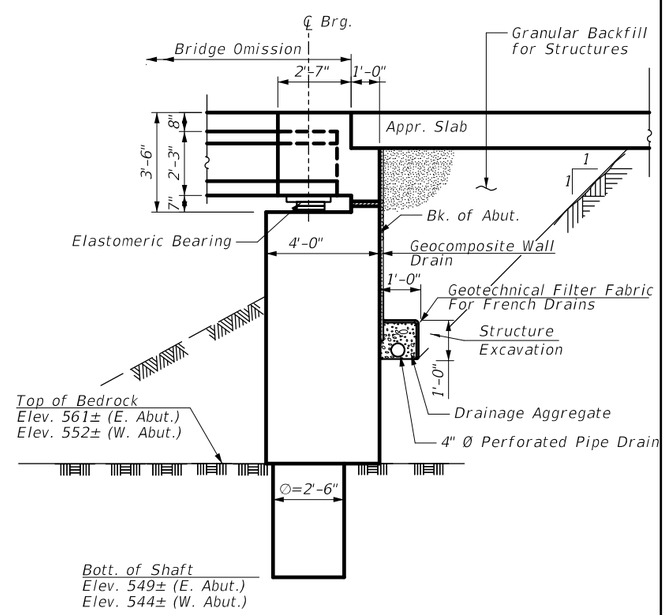

SECTION THRU ABUTMENT

CHRISTOPHER B. BURKE ENGINEERING, LTD.
16221 W. 159th Street, Suite 201
Lockport, Illinois 60441
(815) 770-2850

USER NAME = aschaefer	DESIGNED - MM	REVISED -
	DRAWN - PDR	REVISED -
PLOT SCALE = 2'	CHECKED - MM	REVISED -
PLOT DATE = 11/2/2025	DATE - 03/24/2021	REVISED -

STATE OF ILLINOIS
DEPARTMENT OF TRANSPORTATION

SEIL ROAD WIDENING
GENERAL DATA

SCALE: NTS | SHEET S-2 OF S-32 SHEETS | STA. 21+50.18 TO STA. 24+10.72

F.A.U. RTE.	SECTION	COUNTY	TOTAL SHEETS	SHEET NO.
0403	21-00047-00-WR	WILL	149	89
			61M01	
	ILLINOIS	FED. AID PROJECT	P-91-020-19	

FILE NAME: N:\Shorewood\07000\107000\D\2021\021033\Struct\02-070001-021033-GNotes.sht

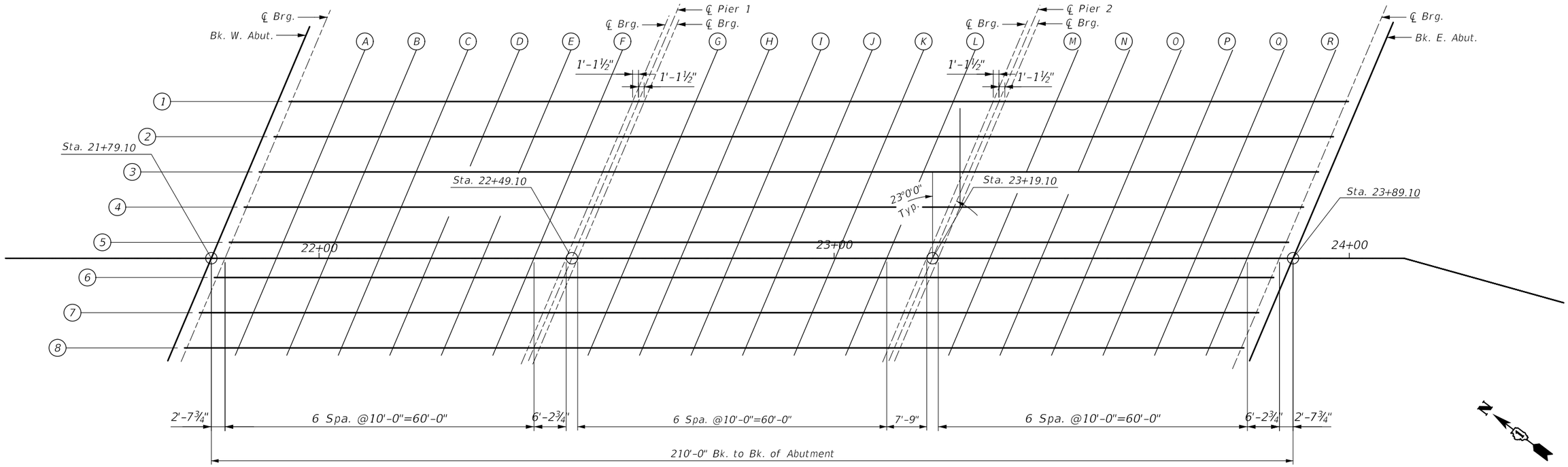

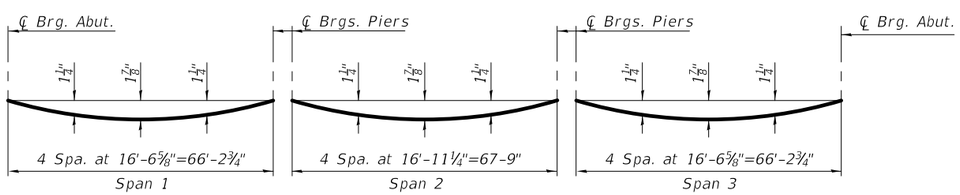

DEAD LOAD DEFLECTION DIAGRAM

(Includes weight of concrete, excluding beams).

Note:
The above deflections are not to be used in the field if the engineer is working from the grade elevations adjusted for dead load deflections as shown on Sheet S-4 & S-5.

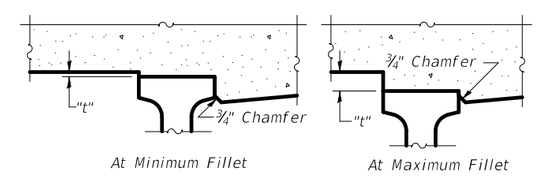

To determine "t": After all Precast Prestressed beams have erected, elevations of the top flanges of the beams shall be taken at intervals shown on S-4 & S-5. These elevations subtracted from the "Theoretical Grade Elevations Adjusted for Dead Load Deflection" showns, minus slab thickness, equals the fillet heights "t" above top flange of beams.

FILLET HEIGHTS

FILE NAME: N:\Shareware\07000\10700010\2021\02103\Struct\03-470001-02103-Top of Deck-01.sht

CHRISTOPHER B. BURKE ENGINEERING, LTD.
16221 W. 159th Street, Suite 201
Lockport, Illinois 60441
(815) 770-2850

USER NAME = aschaefer	DESIGNED - MM	REVISED -
	DRAWN - PDR	REVISED -
PLOT SCALE = 20'	CHECKED - MM	REVISED -
PLOT DATE = 11/2/2025	DATE - 03/24/2021	REVISED -

STATE OF ILLINOIS
DEPARTMENT OF TRANSPORTATION

SEIL ROAD WIDENING
TOP OF DECK ELEVATIONS

SCALE: NTS | SHEET S-3 OF S-32 SHEETS | STA. 21+50.18 TO STA. 24+10.72

F.A.U. RTE.	SECTION	COUNTY	TOTAL SHEETS	SHEET NO.
0403	21-00047-00-WR	WILL	149	90
			61M01	

ILLINOIS FED. AID PROJECT P-91-020-19

BEAM 1

Location	Station	Offset	Theoritical Grade Elevations	Theoritical Grade Elevations Adjusted for Dead Load Deflection
Bk. W. Abut.	21+92.01	-30.42	569.30	569.30
℄ Brg W. Abut.	21+94.66	-30.42	569.35	569.35
A	22+04.66	-30.42	569.52	569.59
B	22+14.66	-30.42	569.69	569.81
C	22+24.66	-30.42	569.86	570.01
D	22+34.66	-30.42	570.02	570.17
E	22+44.66	-30.42	570.19	570.30
F	22+54.66	-30.42	570.36	570.41
℄ Brg	22+60.89	-30.42	570.47	570.47
℄ Pier 1	22+62.01	-30.42	570.49	570.49
℄ Brg	22+63.14	-30.42	570.51	570.51
G	22+73.14	-30.42	570.68	570.74
H	22+83.14	-30.42	570.85	570.97
I	22+93.14	-30.42	571.02	571.16
J	23+03.14	-30.42	571.19	571.33
K	23+13.14	-30.42	571.36	571.47
L	23+23.14	-30.42	571.53	571.58
℄ Brg	23+30.89	-30.42	571.66	571.66
℄ Pier 2	23+32.01	-30.42	571.68	571.68
℄ Brg	23+33.14	-30.42	571.69	571.69
M	23+43.14	-30.42	571.86	571.93
N	23+53.14	-30.42	572.03	572.16
O	23+63.14	-30.42	572.20	572.36
P	23+73.14	-30.42	572.37	572.52
Q	23+83.14	-30.42	572.54	572.65
R	23+93.14	-30.42	572.71	572.76
℄ Brg E. Abut.	23+99.36	-30.42	572.82	572.82
Bk. E. Abut.	24+02.01	-30.42	572.86	572.86

BEAM 2

Location	Station	Offset	Theoritical Grade Elevations	Theoritical Grade Elevations Adjusted for Dead Load Deflection
Bk. W. Abut.	21+89.11	-23.58	569.12	569.12
℄ Brg W. Abut.	21+91.76	-23.58	569.16	569.16
A	22+01.76	-23.58	569.33	569.40
B	22+11.76	-23.58	569.50	569.63
C	22+21.76	-23.58	569.67	569.82
D	22+31.76	-23.58	569.84	569.99
E	22+41.76	-23.58	570.01	570.12
F	22+51.76	-23.58	570.18	570.22
℄ Brg	22+57.99	-23.58	570.28	570.28
℄ Pier 1	22+59.11	-23.58	570.30	570.30
℄ Brg	22+60.24	-23.58	570.32	570.32
G	22+70.24	-23.58	570.49	570.56
H	22+80.24	-23.58	570.66	570.78
I	22+90.24	-23.58	570.83	570.98
J	23+00.24	-23.58	571.00	571.15
K	23+10.24	-23.58	571.17	571.28
L	23+20.24	-23.58	571.34	571.39
℄ Brg	23+27.99	-23.58	571.47	571.47
℄ Pier 2	23+29.11	-23.58	571.49	571.49
℄ Brg	23+30.24	-23.58	571.51	571.51
M	23+40.24	-23.58	571.68	571.75
N	23+50.24	-23.58	571.85	571.97
O	23+60.24	-23.58	572.02	572.17
P	23+70.24	-23.58	572.19	572.34
Q	23+80.24	-23.58	572.36	572.46
R	23+90.24	-23.58	572.53	572.57
℄ Brg E. Abut.	23+96.46	-23.58	572.63	572.63
Bk. E. Abut.	23+99.11	-23.58	572.68	572.68

BEAM 3

Location	Station	Offset	Theoritical Grade Elevations	Theoritical Grade Elevations Adjusted for Dead Load Deflection
Bk. W. Abut.	21+86.21	-16.75	569.00	569.00
℄ Brg W. Abut.	21+88.86	-16.75	569.04	569.04
A	21+98.86	-16.75	569.21	569.28
B	22+08.86	-16.75	569.38	569.51
C	22+18.86	-16.75	569.55	569.71
D	22+28.86	-16.75	569.72	569.87
E	22+38.86	-16.75	569.89	570.00
F	22+48.86	-16.75	570.06	570.11
℄ Brg	22+55.08	-16.75	570.17	570.17
℄ Pier 1	22+56.21	-16.75	570.19	570.19
℄ Brg	22+57.33	-16.75	570.21	570.21
G	22+67.33	-16.75	570.38	570.44
H	22+77.33	-16.75	570.55	570.67
I	22+87.33	-16.75	570.71	570.86
J	22+97.33	-16.75	570.88	571.03
K	23+07.33	-16.75	571.05	571.16
L	23+17.33	-16.75	571.22	571.27
℄ Brg	23+25.08	-16.75	571.36	571.36
℄ Pier 2	23+26.21	-16.75	571.37	571.37
℄ Brg	23+27.33	-16.75	571.39	571.39
M	23+37.33	-16.75	571.56	571.63
N	23+47.33	-16.75	571.73	571.86
O	23+57.33	-16.75	571.90	572.05
P	23+67.33	-16.75	572.07	571.22
Q	23+77.33	-16.75	572.24	572.35
R	23+87.33	-16.75	572.41	572.45
℄ Brg E. Abut.	23+93.56	-16.75	572.52	572.52
Bk. E. Abut.	23+96.21	-16.75	572.56	572.56

BEAM 4

Location	Station	Offset	Theoritical Grade Elevations	Theoritical Grade Elevations Adjusted for Dead Load Deflection
Bk. W. Abut.	21+83.31	-9.92	569.09	569.09
℄ Brg W. Abut.	21+85.96	-9.92	569.13	569.13
A	21+95.96	-9.92	569.30	569.37
B	22+05.96	-9.92	569.47	569.60
C	22+15.96	-9.92	569.64	569.79
D	22+25.96	-9.92	569.81	569.96
E	22+35.96	-9.92	569.98	570.09
F	22+45.96	-9.92	570.15	570.19
℄ Brg	22+52.18	-9.92	570.26	570.26
℄ Pier 1	22+53.31	-9.92	570.27	570.27
℄ Brg	22+54.43	-9.92	570.29	570.29
G	22+64.43	-9.92	570.46	570.53
H	22+74.43	-9.92	570.63	570.75
I	22+84.43	-9.92	570.80	570.95
J	22+94.43	-9.92	570.97	571.12
K	23+04.43	-9.92	571.14	571.25
L	23+14.43	-9.92	571.31	571.36
℄ Brg	23+22.18	-9.92	571.44	571.44
℄ Pier 2	23+23.31	-9.92	571.46	571.46
℄ Brg	23+24.43	-9.92	571.48	571.48
M	23+34.43	-9.92	571.65	571.72
N	23+44.43	-9.92	571.82	571.95
O	23+54.43	-9.92	571.99	572.14
P	23+64.43	-9.92	572.16	572.31
Q	23+74.43	-9.92	572.33	572.44
R	23+84.43	-9.92	572.50	572.54
℄ Brg E. Abut.	23+90.66	-9.92	572.60	572.60
Bk. E. Abut.	23+93.31	-9.92	572.65	572.65

BEAM 5

Location	Station	Offset	Theoritical Grade Elevations	Theoritical Grade Elevations Adjusted for Dead Load Deflection
Bk. W. Abut.	21+80.41	-3.08	569.17	569.17
℄ Brg W. Abut.	21+83.05	-3.08	569.22	569.22
A	21+93.05	-3.08	569.39	569.46
B	22+03.05	-3.08	569.56	569.69
C	22+13.05	-3.08	569.73	569.88
D	22+23.05	-3.08	569.90	570.05
E	22+33.05	-3.08	570.07	570.17
F	22+43.05	-3.08	570.24	570.28
℄ Brg	22+49.28	-3.08	570.34	570.34
℄ Pier 1	22+50.41	-3.08	570.36	570.36
℄ Brg	22+51.53	-3.08	570.38	570.38
G	22+61.53	-3.08	570.55	570.62
H	22+71.53	-3.08	570.72	570.84
I	22+81.53	-3.08	570.89	571.04
J	22+91.53	-3.08	571.06	571.20
K	23+01.53	-3.08	571.23	571.34
L	23+11.53	-3.08	571.40	571.45
℄ Brg	23+19.28	-3.08	571.53	571.53
℄ Pier 2	23+20.41	-3.08	571.55	571.55
℄ Brg	23+21.53	-3.08	571.57	571.57
M	23+31.53	-3.08	571.74	571.81
N	23+41.53	-3.08	571.91	572.03
O	23+51.53	-3.08	572.08	572.23
P	23+61.53	-3.08	572.25	572.39
Q	23+71.53	-3.08	572.42	572.52
R	23+81.53	-3.08	572.59	572.63
℄ Brg E. Abut.	23+87.76	-3.08	572.69	572.69
Bk. E. Abut.	23+90.41	-3.08	572.74	572.74

BASELINE/P.G.L.

Location	Station	Offset	Theoritical Grade Elevations	Theoritical Grade Elevations Adjusted for Dead Load Deflection
Bk. W. Abut.	21+79.10	0.00	569.21	569.21
℄ Brg W. Abut.	21+81.75	0.00	569.26	569.26
A	21+91.75	0.00	569.43	569.50
B	22+01.75	0.00	569.60	569.73
C	22+11.75	0.00	569.77	569.92
D	22+21.75	0.00	569.94	570.09
E	22+31.75	0.00	570.11	570.21
F	22+41.75	0.00	570.28	570.32
℄ Brg	22+47.98	0.00	570.38	570.38
℄ Pier 1	22+49.10	0.00	570.40	570.40
℄ Brg	22+50.23	0.00	570.42	570.42
G	22+60.23	0.00	570.59	570.66
H	22+70.23	0.00	570.76	570.88
I	22+80.23	0.00	570.93	571.08
J	22+90.23	0.00	571.10	571.24
K	23+00.23	0.00	571.27	571.38
L	23+10.23	0.00	571.44	571.49
℄ Brg	23+17.98	0.00	571.57	571.57
℄ Pier 2	23+19.10	0.00	571.59	571.59
℄ Brg	23+20.23	0.00	571.61	571.61
M	23+30.23	0.00	571.78	571.85
N	23+40.23	0.00	571.95	572.07
O	23+50.23	0.00	572.12	572.27
P	23+60.23	0.00	572.29	572.43
Q	23+70.23	0.00	572.46	572.56
R	23+80.23	0.00	572.63	572.67
℄ Brg E. Abut.	23+86.45	0.00	572.73	572.73
Bk. E. Abut.	23+89.10	0.00	572.78	572.78

CHRISTOPHER B. BURKE ENGINEERING, LTD.
16221 W. 159th Street, Suite 201
Lockport, Illinois 60441
(815) 770-2850

USER NAME = aschaefer	DESIGNED - MM	REVISED -
	DRAWN - PDR	REVISED -
PLOT SCALE = 2'	CHECKED - MM	REVISED -
PLOT DATE = 11/2/2025	DATE - 03/24/2021	REVISED -

STATE OF ILLINOIS
DEPARTMENT OF TRANSPORTATION

SEIL ROAD WIDENING
TOP OF DECK ELEVATIONS

SCALE: NTS | SHEET S-4 OF S-32 SHEETS | STA. 21+50.18 TO STA. 24+10.72

F.A.U. RTE.	SECTION	COUNTY	TOTAL SHEETS	SHEET NO.
0403	21-00047-00-WR	WILL	149	91
			61M01	
	ILLINOIS	FED. AID PROJECT	P-91-020-19	

BEAM 6

Location	Station	Offset	Theoritical Grade Elevations	Theoritical Grade Elevations Adjusted for Dead Load Deflection
Bk. W. Abut.	21+77.51	3.75	569.11	569.11
℄ Brg W. Abut.	21+80.15	3.75	569.16	569.16
A	21+90.15	3.75	569.33	569.40
B	22+00.15	3.75	569.50	569.62
C	22+10.15	3.75	569.67	569.82
D	22+20.15	3.75	569.84	569.98
E	22+30.15	3.75	570.01	570.11
F	22+40.15	3.75	570.17	570.22
℄ Brg	22+46.38	3.75	570.28	570.28
℄. Pier 1	22+47.51	3.75	570.30	570.30
℄ Brg	22+48.63	3.75	570.32	570.32
G	22+58.63	3.75	570.49	570.55
H	22+68.63	3.75	570.66	570.78
I	22+78.63	3.75	570.83	570.97
J	22+88.63	3.75	571.00	571.14
K	22+98.63	3.75	571.17	571.28
L	23+08.63	3.75	571.34	571.39
℄ Brg	23+16.38	3.75	571.47	571.47
℄ Pier 2	23+17.51	3.75	571.49	571.49
℄ Brg	23+18.63	3.75	571.51	571.51
M	23+28.63	3.75	571.68	571.74
N	23+38.63	3.75	571.84	571.97
O	23+48.63	3.75	572.01	572.17
P	23+58.63	3.75	572.18	572.33
Q	23+68.63	3.75	572.35	572.46
R	23+78.63	3.75	572.52	572.57
℄ Brg E. Abut.	23+84.86	3.75	572.63	572.63
Bk. E. Abut.	23+87.51	3.75	572.67	572.67

BEAM 7

Location	Station	Offset	Theoritical Grade Elevations	Theoritical Grade Elevations Adjusted for Dead Load Deflection
Bk. W. Abut.	21+74.61	10.58	568.93	568.93
℄ Brg W. Abut.	21+77.25	10.58	568.97	568.97
A	21+87.25	10.58	569.14	569.21
B	21+97.25	10.58	569.31	569.44
C	22+07.25	10.58	569.48	569.63
D	22+17.25	10.58	569.65	569.80
E	22+27.25	10.58	569.82	569.93
F	22+37.25	10.58	569.99	570.03
℄ Brg	22+43.48	10.58	570.09	570.09
℄. Pier 1	22+44.61	10.58	570.11	570.11
℄ Brg	22+45.73	10.58	570.13	570.13
G	22+55.73	10.58	570.30	570.37
H	22+65.73	10.58	570.47	570.59
I	22+75.73	10.58	570.64	570.79
J	22+85.73	10.58	570.81	570.96
K	22+95.73	10.58	570.98	571.09
L	23+05.73	10.58	571.15	571.20
℄ Brg	23+13.48	10.58	571.28	571.28
℄ Pier 2	23+14.61	10.58	571.30	571.30
℄ Brg	23+15.73	10.58	571.32	571.32
M	23+25.73	10.58	571.49	571.56
N	23+35.73	10.58	571.66	571.79
O	23+45.73	10.58	571.83	571.98
P	23+55.73	10.58	572.00	572.15
Q	23+65.73	10.58	572.17	572.27
R	23+75.73	10.58	572.34	572.38
℄ Brg E. Abut.	23+81.96	10.58	572.44	572.44
Bk. E. Abut.	23+84.61	10.58	572.49	572.49

BEAM 8

Location	Station	Offset	Theoritical Grade Elevations	Theoritical Grade Elevations Adjusted for Dead Load Deflection
Bk. W. Abut.	21+71.71	17.42	568.74	568.74
℄ Brg W. Abut.	21+74.35	17.42	568.79	568.79
A	21+84.35	17.42	568.96	569.02
B	21+94.35	17.42	569.12	569.25
C	22+04.35	17.42	569.29	569.45
D	22+14.35	17.42	569.46	569.61
E	22+24.35	17.42	569.63	569.74
F	22+34.35	17.42	569.80	569.85
℄ Brg	22+40.58	17.42	569.91	569.91
℄. Pier 1	22+41.71	17.42	569.93	569.93
℄ Brg	22+42.83	17.42	569.95	569.95
G	22+52.83	17.42	570.12	570.18
H	22+62.83	17.42	570.29	570.41
I	22+72.83	17.42	570.46	570.60
J	22+82.83	17.42	570.63	570.77
K	22+92.83	17.42	570.79	570.90
L	23+02.83	17.42	570.96	571.02
℄ Brg	23+10.58	17.42	571.10	571.10
℄ Pier 2	23+11.71	17.42	571.11	571.11
℄ Brg	23+12.83	17.42	571.13	571.13
M	23+22.83	17.42	571.30	571.37
N	23+32.83	17.42	571.47	571.60
O	23+42.83	17.42	571.64	571.80
P	23+52.83	17.42	571.81	571.96
Q	23+62.83	17.42	571.98	572.09
R	23+72.83	17.42	572.15	572.20
℄ Brg E. Abut.	23+79.06	17.42	572.26	572.26
Bk. E. Abut.	23+81.71	17.42	572.30	572.30

NORTH EDGE OF SIDEWALK

Location	Station	Offset	Theoretical Grade Elevations
W. End W. Appr. Pav't	21+64.16	-32.92	568.89
A	21+74.16	-32.92	569.05
B	21+84.16	-32.92	569.22
E. End W. Appr. Pav't	21+94.16	-32.92	569.37
W. End E. Appr. Pav't	24+01.98	-32.92	572.92
C	24+10.58	-34.00	573.10
D	24+13.44	-40.25	573.69
E. End E. Appr. Pav't.	24+15.06	-40.38	573.71

NORTH FRONT FACE OF PARAPET

Location	Station	Offset	Theoretical Grade Elevations
W. End W. Appr. Pav't	21+57.83	-18.02	568.49
A	21+68.02	-18.47	568.66
B	21+78.04	-18.50	568.83
E. End W. Appr. Pav't	21+88.04	-18.50	569.00
W. End E. Appr. Pav't	23+95.86	-18.50	572.52
C	24+05.99	-18.79	572.74
D	24+11.04	-21.88	572.97
E. End E. Appr. Pav't.	24+12.82	-23.04	573.00

℄ SEIL ROAD & PGL

Location	Station	Offset	Theoretical Grade Elevations
W. End W. Appr. Pav't	21+50.18	0.00	568.72
A	21+60.18	0.00	568.89
B	21+70.18	0.00	569.06
E. End W. Appr. Pav't	21+80.18	0.00	569.21
W. End E. Appr. Pav't	23+88.01	0.00	572.77
C	23+98.01	0.00	573.18
D	24+08.01	0.00	573.43
E. End E. Appr. Pav't.	24+10.58	0.00	573.14

SOUTH FRONT FACE OF PARAPET

Location	Station	Offset	Theoretical Grade Elevations
E. End W. Appr. Pav't	21+72.33	18.50	568.73
W. End E. Appr. Pav't	23+80.16	18.50	572.25

SOUTH FRONT FACE OF CURB

Location	Station	Offset	Theoretical Grade Elevations
W. End W. Appr. Pav't	21+42.33	18.50	568.22
A	21+52.33	18.50	568.39
B	21+62.33	18.50	568.56
C	23+89.93	19.05	572.53
D	23+98.79	21.72	572.76
E. End. E. Appr. Pav't	24+02.89	23.82	572.87

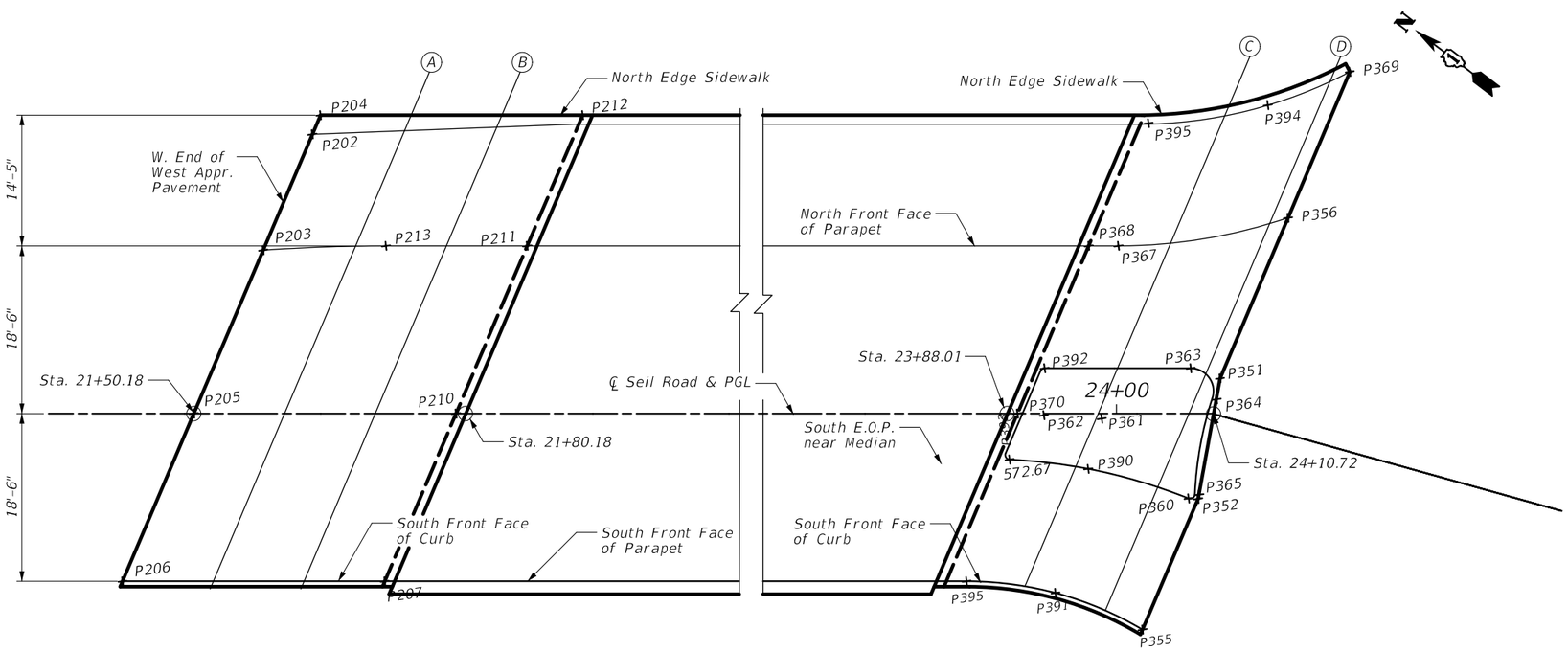

EAST ABUTMENT					
POINT NO,	NORTHING	EASTING	ELEV	STATION	OFFSET
P348	1763010.47	1018652.89	573.71	24+15.06	40.38' LT
P350	1763006.61	1018637.75	572.93	24+13.06	24.89' LT
P351	1763001.41	1018617.30	573.13	24+10.58	3.97' LT
P352	1762995.30	1018605.26	573.14	24+09.01	9.40' RT
P355	1762991.45	1018590.08	572.87	24+02.89	23.82' RT
P356	1763006.15	1018635.94	573.00	24+12.82	23.04' LT
P359	1763010.12	1018582.58	572.33	23+83.49	18.50' RT
P360	1762996.16	1018604.66	573.12	24+07.96	9.36' RT
P361	1763009.11	1018605.88	573.18	23+98.39	0.56' RT
P362	1763014.42	1018602.33	573.12	23+92.01	0.17' RT
P363	1763004.66	1018616.24	573.05	24+08.20	5.00' LT
P367	1763019.16	1018622.17	572.61	24+00.23	18.50' LT
P368	1763021.78	1018620.19	572.54	23+96.95	18.50' LT
P369	1763011.37	1018653.31	573.76	24+14.37	41.11' LT
P370	1763016.84	1018600.70	572.78	23+89.10	0.00' RT
P390	1763006.94	1018600.56	572.84	23+96.90	6.10' RT
P391	1763001.54	1018587.49	572.61	23+93.28	19.78' RT
P392	1763017.48	1018606.50	572.73	23+92.09	5.00' LT
P393	1763014.47	1018596.14	572.67	23+88.22	5.07' RT
P394	1763016.35	1018644.92	573.17	24+53.86	56.16' LT
P395	1763025.63	1018635.37	572.93	24+03.07	32.92' LT
P397	1763011.90	1018581.22	572.27	23+81.24	18.50' RT

WEST ABUTMENT					
POINT NO,	NORTHING	EASTING	ELEV	STATION	OFFSET
P203	1763211.90	1018475.16	568.49	21+57.83	18.02' LT
P204	1763215.87	1018490.85	568.89	21+64.16	32.92' LT
P205	1763207.09	1018456.18	568.72	21+50.18	0.00' RT
P206	1763202.15	1018436.70	568.22	21+42.33	18.50' RT
P207	1763179.13	1018454.19	568.71	21+71.24	18.50' RT
P210	1763184.06	1018473.67	569.21	21+79.10	0.00' RT
P211	1763189.00	1018493.15	568.98	21+86.95	18.50' LT
P212	1763192.85	1018508.34	569.37	21+93.07	32.92' LT
P213	1763201.40	1018483.73	568.71	21+71.38	18.50' LT

CHRISTOPHER B. BURKE ENGINEERING, LTD.
16221 W. 159th Street, Suite 201
Lockport, Illinois 60441
(815) 770-2850

USER NAME = aschaefer	DESIGNED - MM	REVISED -
	DRAWN - PDR	REVISED -
PLOT SCALE = 16'	CHECKED - MM	REVISED -
PLOT DATE = 11/2/2025	DATE - 03/24/2021	REVISED -

STATE OF ILLINOIS
DEPARTMENT OF TRANSPORTATION

SEIL ROAD WIDENING
TOP OF APPROACH SLAB ELEVATIONS

SCALE: NTS | SHEET S-6 OF S-32 SHEETS | STA. 21+50.18 TO STA. 24+10.72

F.A.U. RTE.	SECTION	COUNTY	TOTAL SHEETS	SHEET NO.
0403	21-00047-00-WR	WILL	149	93

61M01

ILLINOIS FED. AID PROJECT P-91-020-19

FILE NAME: N:\Shorewood\070001\070001D\2021\D21103\Struct\06-070001-02-TD-Top of Approach Slab Elev.sht

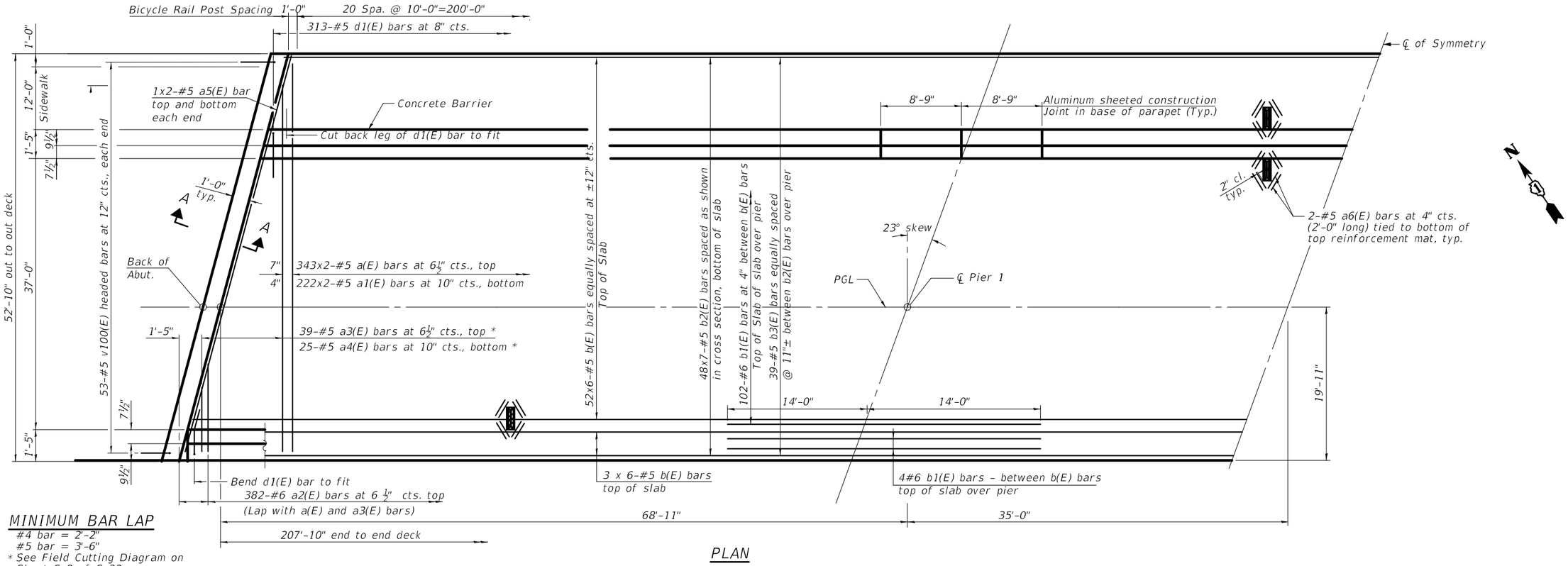

MINIMUM BAR LAP

#4 bar = 2'-2"
#5 bar = 3'-6"
* See Field Cutting Diagram on Sheet S-8 of S-32

PLAN

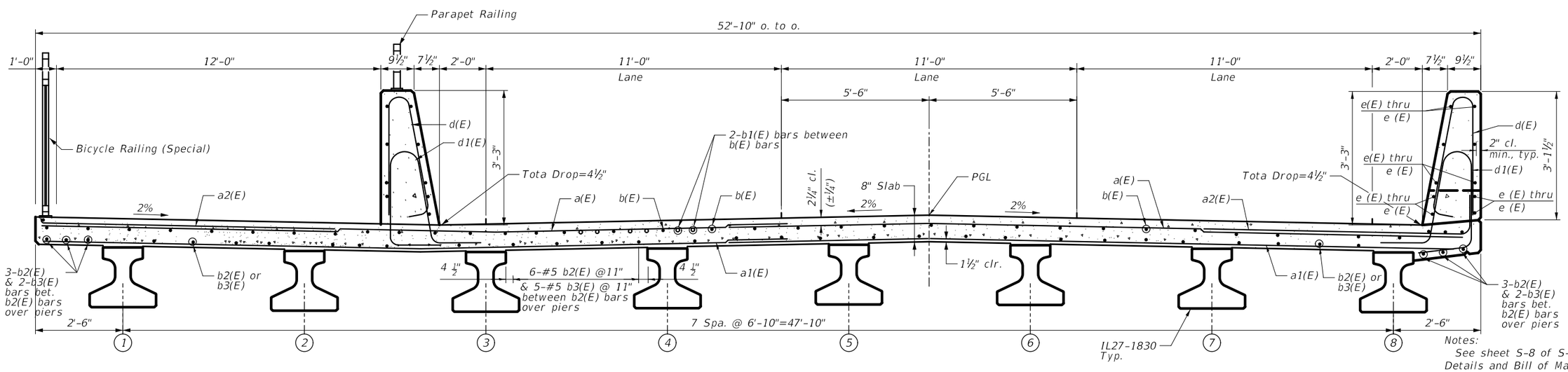

NEAR PIER

CROSS SECTION
(Looking East)

NEAR MID SPAN

Notes:
See sheet S-8 of S-32 for Superstructure Details and Bill of Material.
Bars indicated thus 20 x 2-#4 etc. indicates 20 lines of bars with 2 lengths per line.
Spacing of a(E) and a1(E) bars shall be measured along the ℄ of structure.
Concrete wearing surface shall be placed prior to casting approach slab.

FILE NAME: N:\Shorewood\070001\070001D\2021\D21103\Struct\07-070001-02-TD-Deck-Cross Section.sht

CHRISTOPHER B. BURKE ENGINEERING, LTD.
16221 W. 159th Street, Suite 201
Lockport, Illinois 60441
(815) 770-2850

USER NAME = aschaefer	DESIGNED - MM	REVISED -
	DRAWN - PDR	REVISED -
PLOT SCALE = 2'	CHECKED - MM	REVISED -
PLOT DATE = 11/2/2025	DATE - 03/24/2021	REVISED -

STATE OF ILLINOIS
DEPARTMENT OF TRANSPORTATION

SEIL ROAD WIDENING
DECK PLAN AND CROSS SECTION

SCALE: NTS | SHEET S-7 OF S-32 SHEETS | STA. 21+50.18 TO STA. 24+10.72

F.A.U. RTE.	SECTION	COUNTY	TOTAL SHEETS	SHEET NO.
0403	21-00047-00-WR	WILL	149	94
		61M01		

ILLINOIS FED. AID PROJECT P-91-020-19

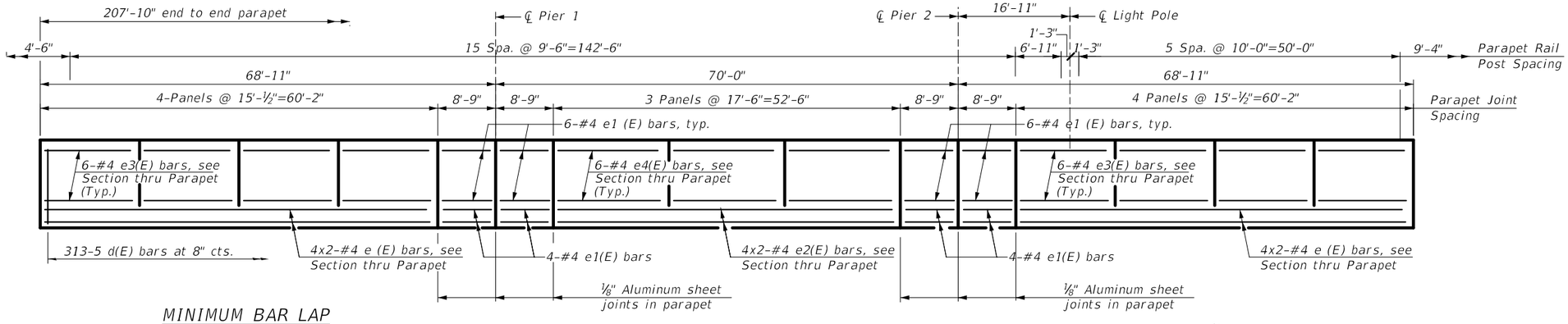

MINIMUM BAR LAP

#4 bar = 2'-5"

INSIDE ELEVATION OF PARAPET

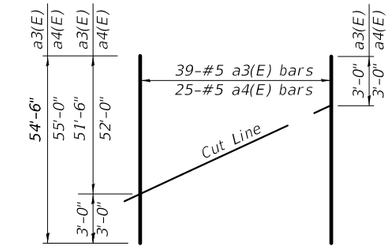

FIELD CUTTING DIAGRAM

Order a3(E) and a4(E) bars full length. Cut as shown and use remainder of bars in opposite end of deck.

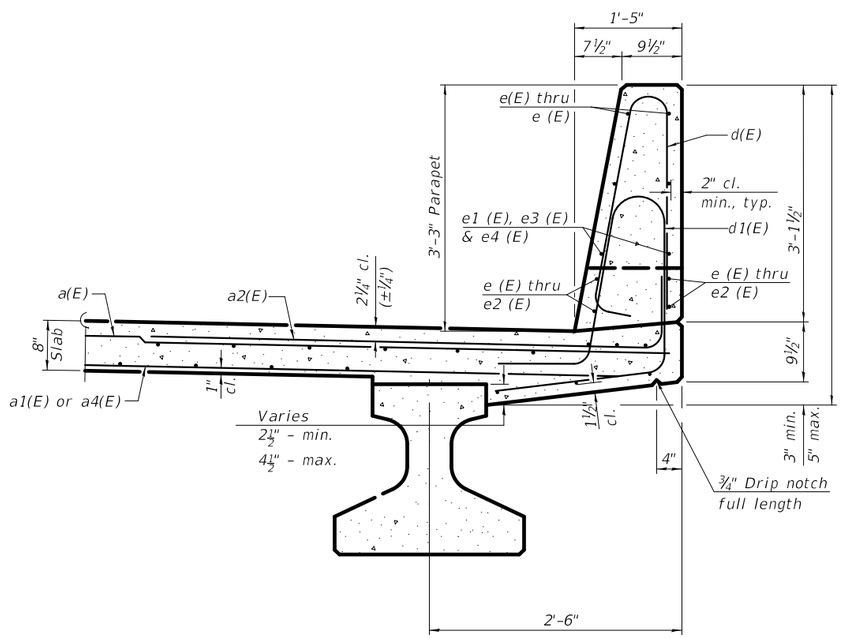

SECTION THRU PARAPET

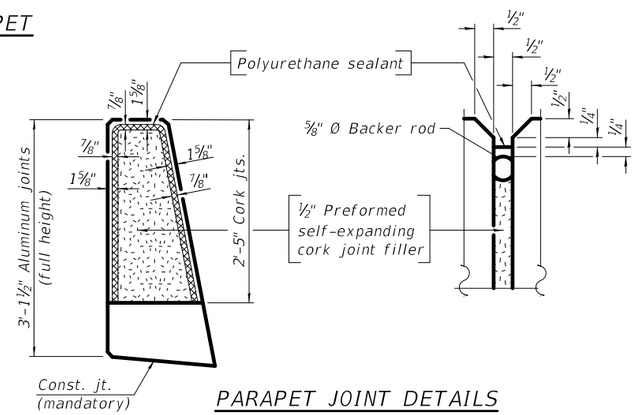

PARAPET JOINT DETAILS

Notes:

The ⅛" Aluminum sheet shall be ASTM B 209 alloy 3003-H14 and coated to minimize reaction with wet concrete. Cost included with Concrete Superstructure.

The Polyurethane Sealant shall be according to Article 1050.04 of the Std. Spec. and the color shall be gray.

Headed bars shall conform to ASTM A970 with threaded attachment; Class HA; and reinforcement bars conforming to ASTM A706. Cost included with Reinforcement Bars, Epoxy Coated.

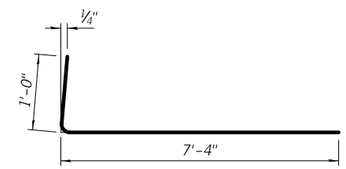

BAR a2(E)

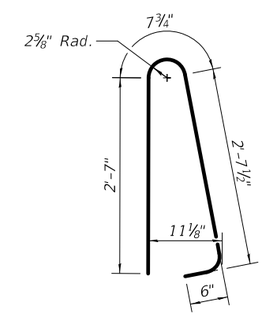

BAR d(E)

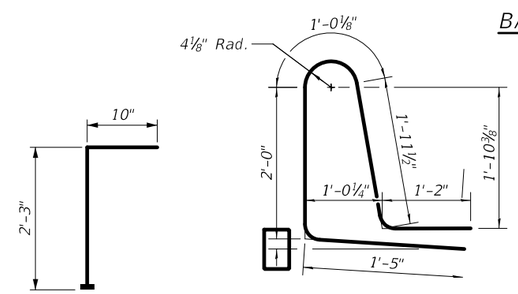

BAR d1(E)

BAR v100(E)

(Headed)

SUPERSTRUCTURE BILL OF MATERIAL

Bar	No.	Size	Length	Shape
a(E)	686	#5	27'-9"	
a1(E)	444	#5	27'-6"	
a2(E)	764	#6	8'-4"	
a3(E)	39	#5	54'-6"	
a4(E)	25	#5	55'-0"	
a5(E)	8	#5	30'-3"	
a6(E)	32	#5	2'-0"	
b(E)	330	#5	37'-8"	
b1(E)	212	#6	28'-0"	
b2(E)	336	#5	32'-9"	
b3(E)	78	#5	28'-0"	
d(E)	616	#5	6'-5"	
d1(E)	616	#5	7'-7"	
d7(E)	6	#6	18'-8"	
d8(E)	3	#6	4'-10"	
e(E)	32	#4	31'-4"	
e1(E)	80	#4	8'-5"	
e2(E)	16	#4	27'-6"	
e3(E)	96	#4	14'-9"	
e4(E)	36	#4	17'-2"	
m10(E)	10	#6	57'-0"	
m11(E)	28	#6	6'-10"	
m12(E)	28	#6	6'-3"	
m13(E)	8	#6	3'-3"	
m14(E)	8	#4	29'-6"	
m15(E)	32	#5	4'-0"	
m20(E)	28	#6	4'-5"	
m21(E)	56	#6	6'-3"	
m22(E)	28	#5	8'-0"	
s10(E)	82	#5	7'-6"	
s11(E)	68	#5	7'-11"	
s12(E)	128	#5	7'-10"	
s20(E)	70	#5	11'-2"	
s21(E)	32	#5	8'-8"	
v100(E)	106	#5	3'-1"	
u10(E)	82	#4	4'-8"	
Reinforcement Bars, Epoxy Coated			Lbs.	100,350
Concrete Superstructure			Cu. Yds.	381.3

Bars indicated thus 1 x 2-#4 etc. indicates 1 line of bars with 2 lengths per line.

CHRISTOPHER B. BURKE ENGINEERING, LTD.
16221 W. 159th Street, Suite 201
Lockport, Illinois 60441
(815) 770-2850

USER NAME = aschaefer	DESIGNED - MM	REVISED -
	DRAWN - PDR	REVISED -
PLOT SCALE = 2'	CHECKED - MM	REVISED -
PLOT DATE = 11/2/2025	DATE - 03/24/2021	REVISED -

STATE OF ILLINOIS
DEPARTMENT OF TRANSPORTATION

SEIL ROAD WIDENING
SUPERSTRUCTURE DETAILS

SCALE: NTS | SHEET S-8 OF S-32 SHEETS | STA. 21+50.18 TO STA. 24+10.72

F.A.U. RTE.	SECTION	COUNTY	TOTAL SHEETS	SHEET NO.
0403	21-00047-00-WR	WILL	149	95

61M01

ILLINOIS | FED. AID PROJECT P-91-020-19

FILE NAME: N:\Shorewood\07000\10700010\2021\02103\Struct\08-07000-42210-Superstructure-01.sht

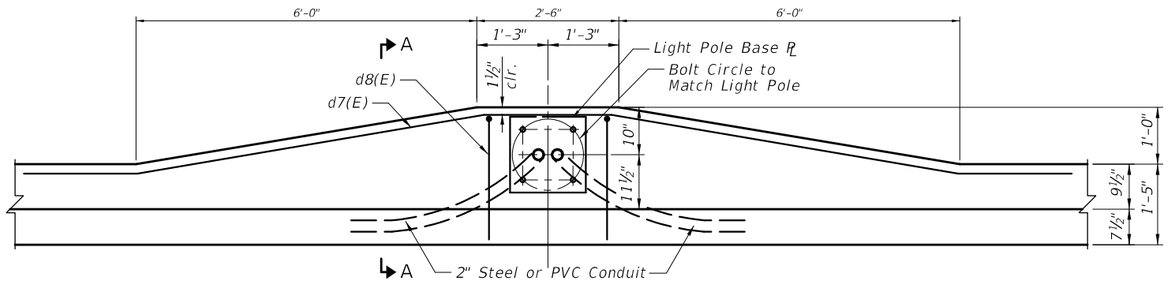

PLAN

NOTE:
Cost of Anchor Rods and Conduit is Included with Concrete Superstructure.

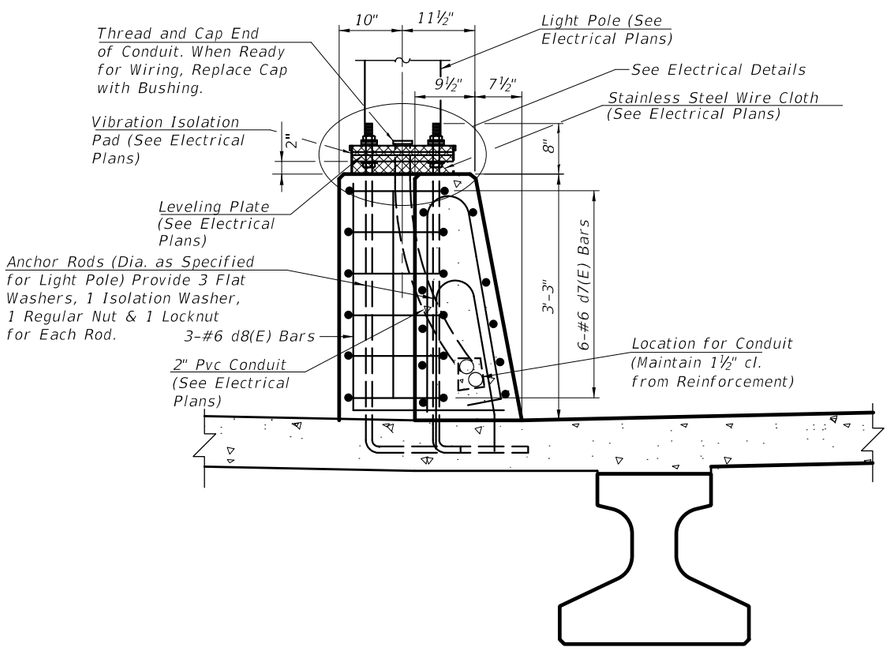

SECTION A-A

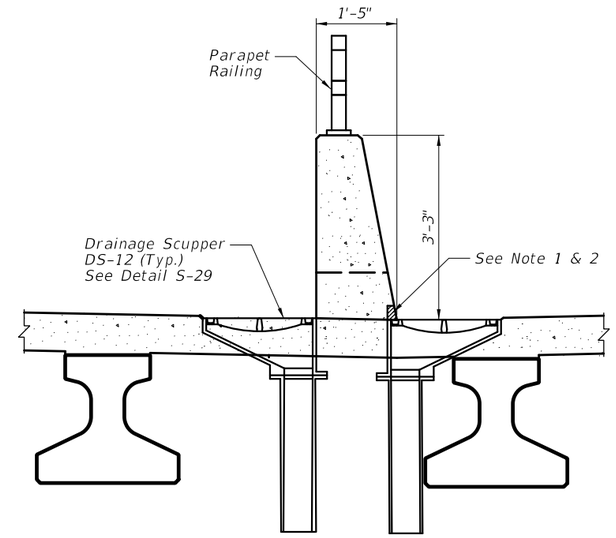

DS-12 SCUPPER DETAIL

NOTES:
1. Block the Bottom of Parapet 2" Wide x 3" High and 10" Long for DS-12.
2. Field Bend Parapet Bars to Clear Blocked Area.

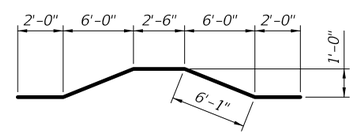

BAR d7(E)

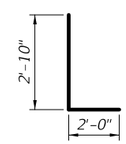

BAR d8(E)

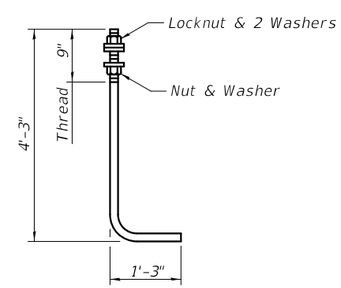

ANCHOR ROD

Diameter as specified for light poles.
(ASTM F 1554 Grade 105)

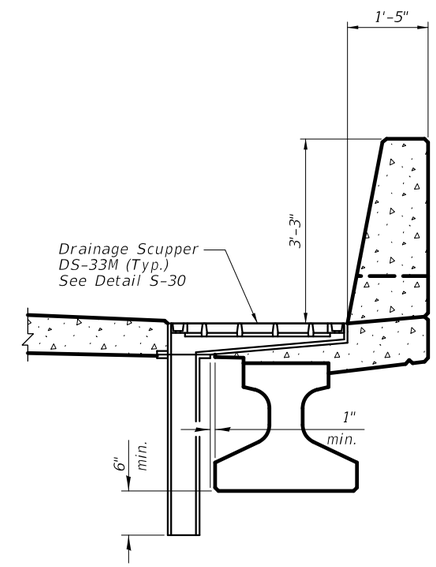

DS-33M SCUPPER DETAIL

FILE NAME: N:\Shorewood\07000\07000\202\102103\Struct\09-070001-02-2103-Superstructure-S2.sht

CHRISTOPHER B. BURKE ENGINEERING, LTD.
16221 W. 159th Street, Suite 201
Lockport, Illinois 60441
(815) 770-2850

USER NAME = aschaefer	DESIGNED - MM	REVISED -
	DRAWN - PDR	REVISED -
PLOT SCALE = 2'	CHECKED - MM	REVISED -
PLOT DATE = 11/2/2025	DATE - 03/24/2021	REVISED -

STATE OF ILLINOIS
DEPARTMENT OF TRANSPORTATION

SEIL ROAD WIDENING
SUPERSTRUCTURE DETAILS

SCALE: NTS | SHEET S-9 OF S-32 SHEETS | STA. 21+50.18 TO STA. 24+10.72

F.A.U. RTE.	SECTION	COUNTY	TOTAL SHEETS	SHEET NO.
0403	21-00047-00-WR	WILL	149	96
			61M01	

ILLINOIS | FED. AID PROJECT | P-91-020-19

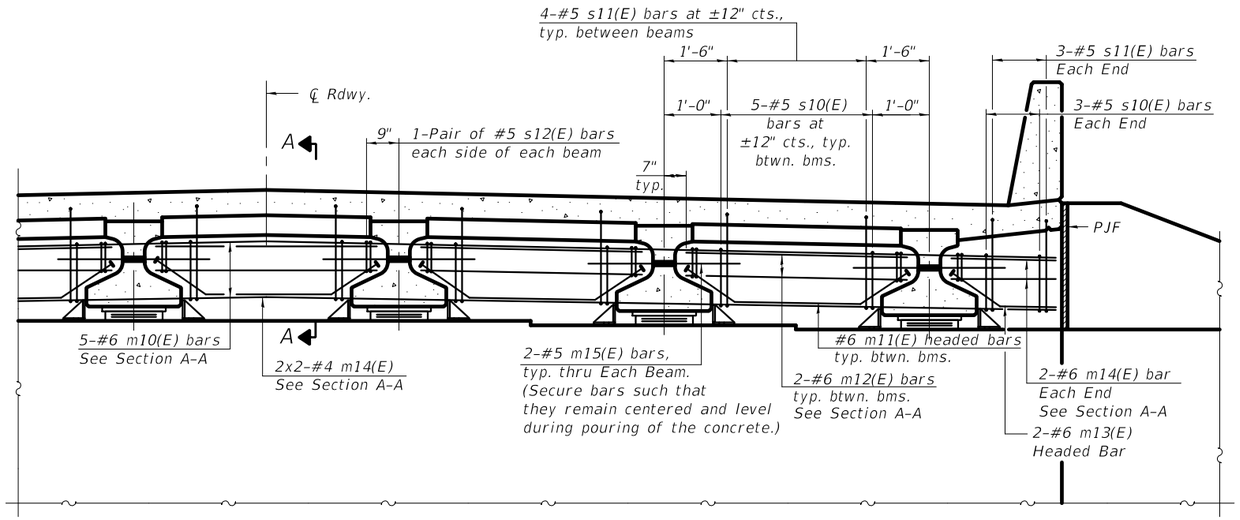

DIAPHRAGM AT ABUTMENT

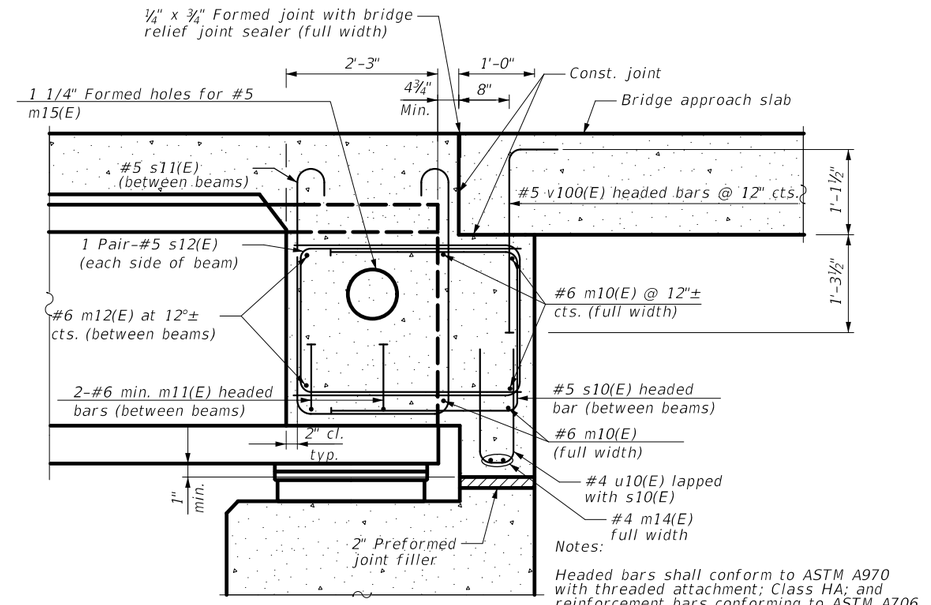

Notes:

Headed bars shall conform to ASTM A970 with threaded attachment; Class HA; and reinforcement bars conforming to ASTM A706. Cost included with Reinforcement Bars, Epoxy Coated.

The s10(E), s11(E), s12(E), u10(U), and v100(E) bars are placed parallel to beams and spaced at right angles to beams.

SECTION A-A

(at Rt. L's)

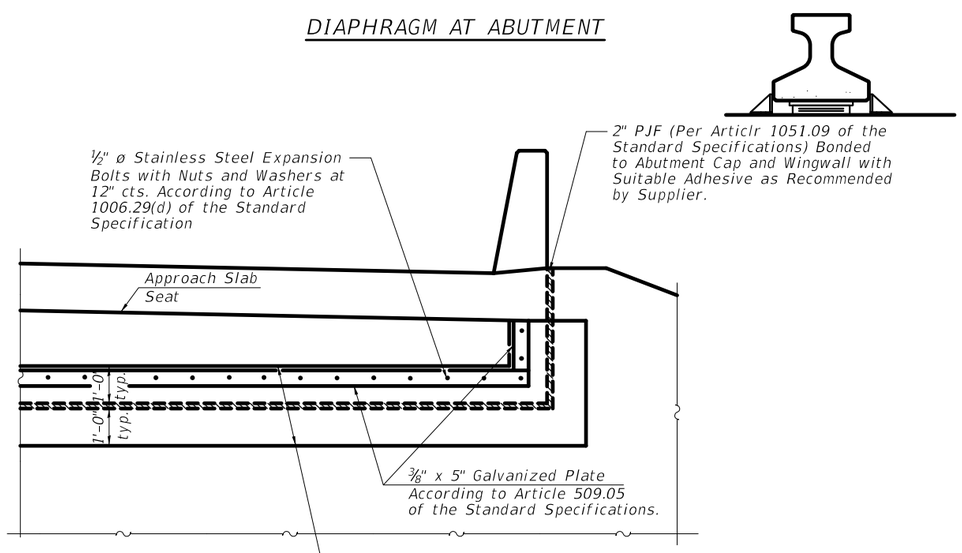

NOTE:

Cost of fabric reinforced elastomeric mat, galvanized plate, stainless steel expansion bolts with nuts and washers and installation are included in the Cost of Cconcrete Superstructure.

JOINT DETAIL

(LOOKING AT BACK OF ABUTMENT)

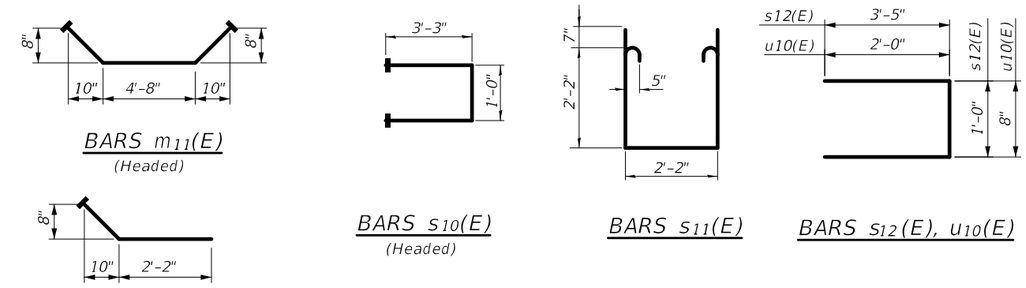

Notes:

See sheet S-8 of S-32 for superstructure details and Bill of Material.

See sheet S-11 of S-32 for PJF details.

The s10(E), s11(E), s12(E) and u10(E) bars shall be placed parallel to the beams. Spacing for these bars shall be at right angles to the beams.

The approach slab seat shall have a constant slope determined from the control points shown.

Beams shalll be braced for stability during erections and remain braced until deck is poured and cured.

FILE NAME: N:\Shorewood\07000\107000\202102210\3\Struct\10-070001-02210-Diaphragm-01.sht

CHRISTOPHER B. BURKE ENGINEERING, LTD.
16221 W. 159th Street, Suite 201
Lockport, Illinois 60441
(815) 770-2850

USER NAME = aschaefer	DESIGNED - MM	REVISED -
	DRAWN - PDR	REVISED -
PLOT SCALE = 2'	CHECKED - MM	REVISED -
PLOT DATE = 11/2/2025	DATE - 03/24/2021	REVISED -

STATE OF ILLINOIS
DEPARTMENT OF TRANSPORTATION

SEIL ROAD WIDENING
DAIAPHRAGM DETAILS AT ABUTMENT

SCALE: NTS | SHEET S-10 OF S-32 SHEETS | STA. 21+50.18 TO STA. 24+10.72

F.A.U. RTE.	SECTION	COUNTY	TOTAL SHEETS	SHEET NO.
0403	21-00047-00-WR	WILL	149	97
		61M01		

ILLINOIS | FED. AID PROJECT | P-91-020-19

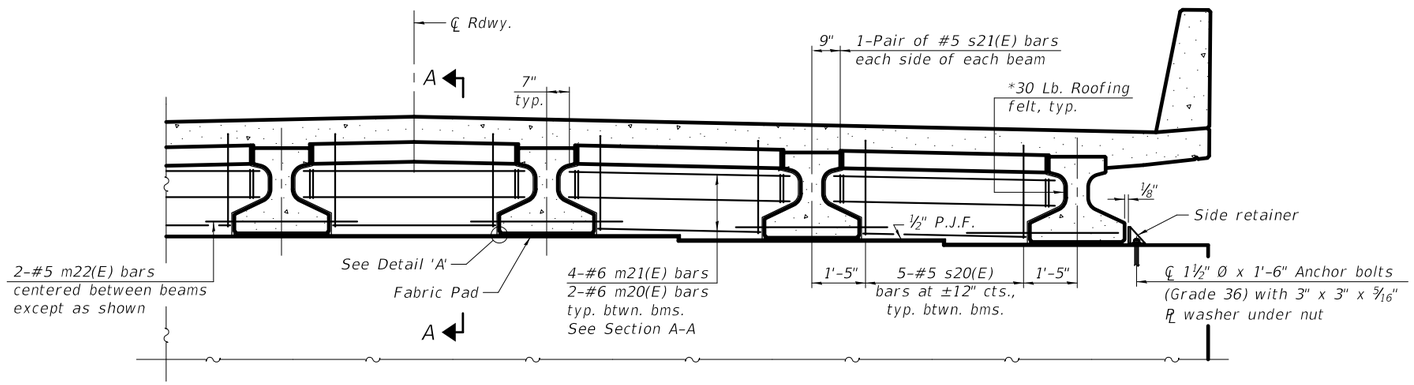

DIAPHRAGM AT PIER

*Bonded to sides of beams embedded into diaphragm.

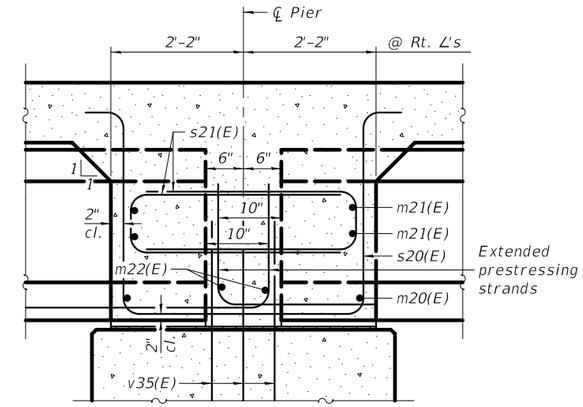

SECTION A-A

(Dimensions along ℄ of beam except as shown)

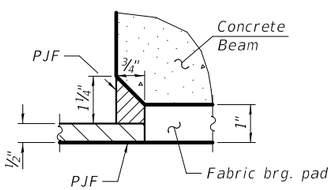

DETAIL 'A'

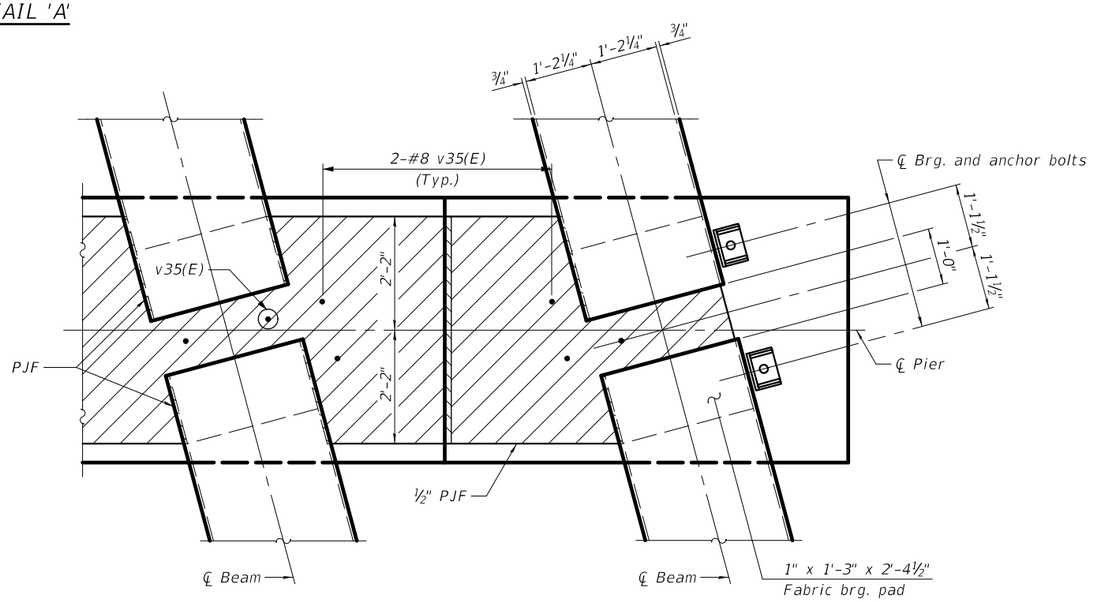

PLAN AT PIER

(Showing bearing pads and PJF details)

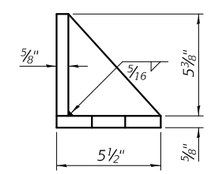

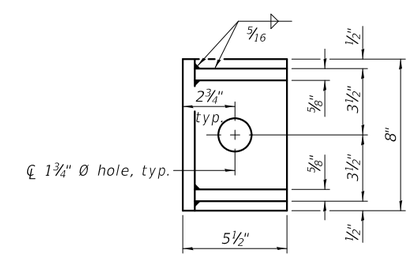

SIDE RETAINER

(2 required each side of pier).
Equivalent rolled angle with stiffeners will be allowed in lieu of welded plates.

Side Retainers and anchor bolts shall be included in the Cost of Furnishing and Erecting Precast Prestressed Concrte Beams, IL27N

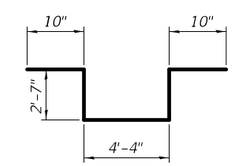

BAR s20(E)

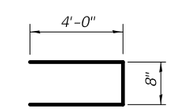

BAR s21(E)

Notes:
See sheet S-8 of S-32 for superstructure details and Bill of Material.
Cost of 30 Lb. roofing felt is included with Concrete Superstructure.
Cost of side retainer and anchor bolts shall be included with Concrete Structures.
The s20(E) and s21(E) bars shall be placed parallel to the beams. Spacing for these bars shall be at right angles to the beams.
Anchor bolts and side retainers shall be according to Article 521.06 of the Standard Specifications. Side retainers shall be hot dip galvanized.
Anchor bolts and side retainers shall be installed as each exterior beam is erected unless an equivalent temporary means of lateral restraint is used.

CHRISTOPHER B. BURKE ENGINEERING, LTD.
16221 W. 159th Street, Suite 201
Lockport, Illinois 60441
(815) 770-2850

USER NAME = aschaefer	DESIGNED - MM	REVISED -
	DRAWN - PDR	REVISED -
PLOT SCALE = 2'	CHECKED - MM	REVISED -
PLOT DATE = 11/2/2025	DATE - 03/24/2021	REVISED -

STATE OF ILLINOIS
DEPARTMENT OF TRANSPORTATION

SEIL ROAD WIDENING
DAIAPHRAGM DETAILS AT PIERS

SCALE: NTS | SHEET S-11 OF S-32 SHEETS | STA. 21+50.18 TO STA. 24+10.72

F.A.U. RTE.	SECTION	COUNTY	TOTAL SHEETS	SHEET NO.
0403	21-00047-00-WR	WILL	149	98
			61M01	

ILLINOIS FED. AID PROJECT P-91-020-19

FILE NAME: N:\Shorewood\070001\070001D\2021\021033\Struct\11-070001-021033-Diaphragm-02.sht

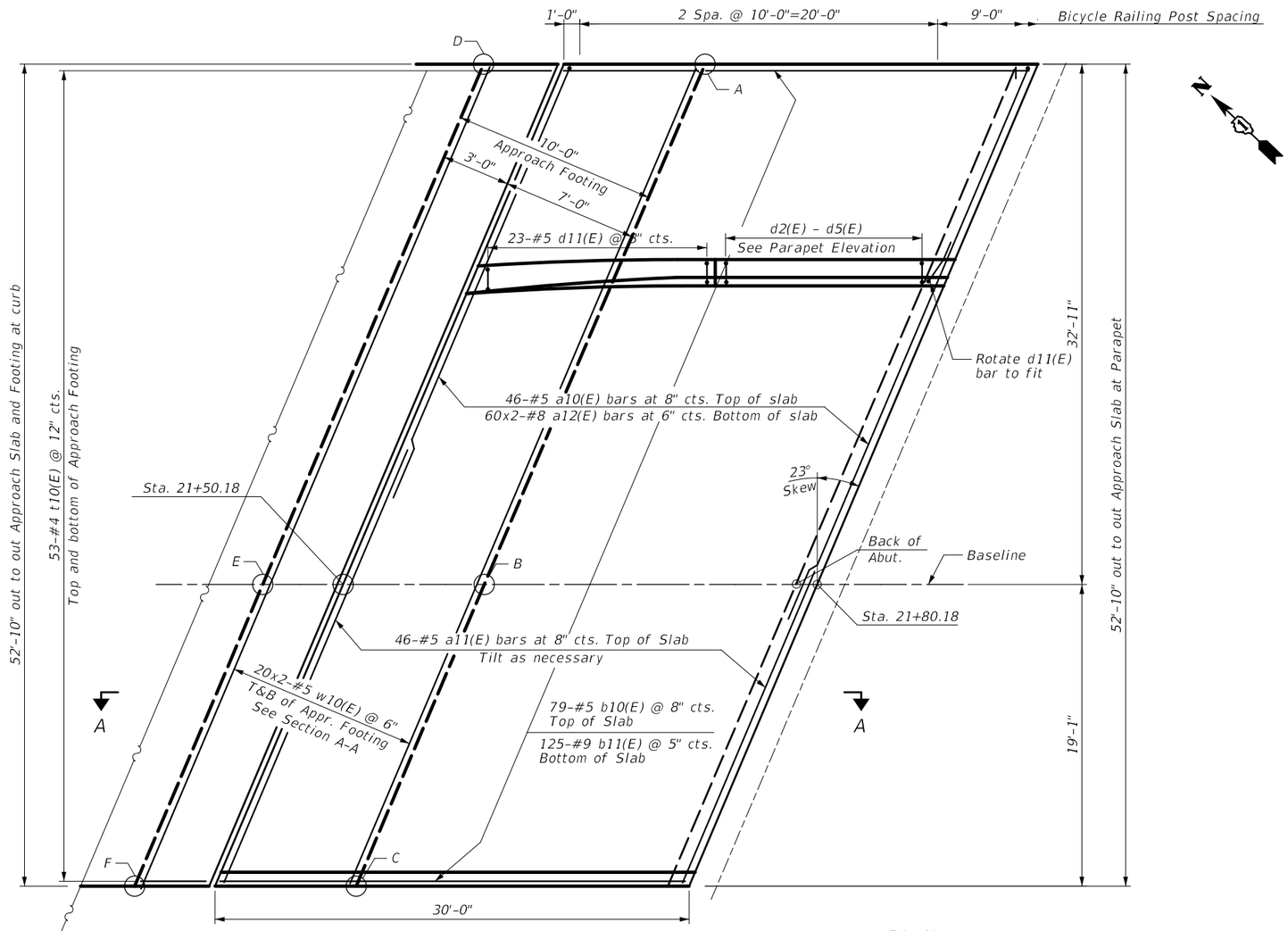

PLAN

TOP AND BOTTOM ELEVATIONS FOR APPROACH FOOTING

Approach		
Point/ Location	Top	Bottom
A -	569.01	566.92
B -	568.70	566.62
C -	568.85	566.77
D -	568.76	566.68
E -	568.67	566.59
F -	568.58	566.50

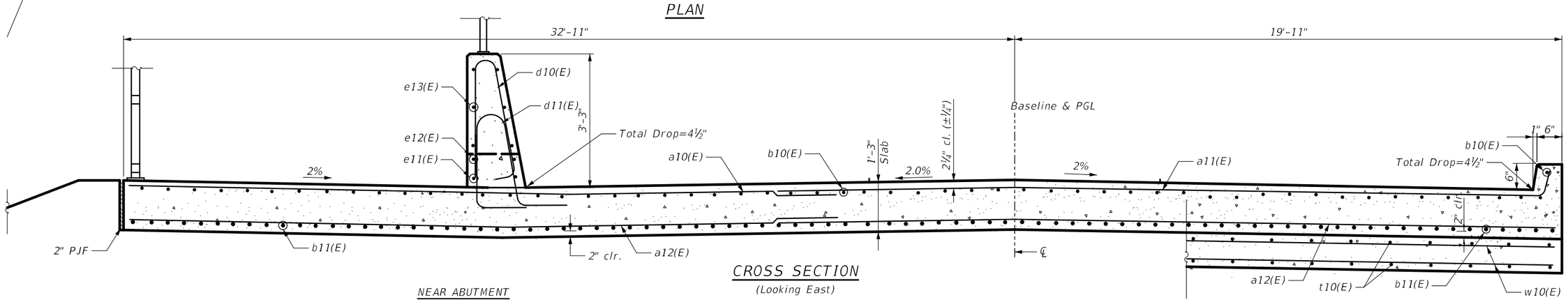

NEAR ABUTMENT

CROSS SECTION
(Looking East)

AT APPROACH FOOTING

FILE NAME: N:\Shorewood\070001\070001D-2021\D2210203\Struct\12-070001-02103-Appr-Slab-01.sht

CHRISTOPHER B. BURKE ENGINEERING, LTD.
16221 W. 159th Street, Suite 201
Lockport, Illinois 60441
(815) 770-2850

USER NAME = aschaefer	DESIGNED - MM	REVISED -
	DRAWN - PDR	REVISED -
PLOT SCALE = 2'	CHECKED - MM	REVISED -
PLOT DATE = 11/2/2025	DATE - 03/24/2021	REVISED -

STATE OF ILLINOIS
DEPARTMENT OF TRANSPORTATION

SEIL ROAD WIDENING
WEST APPROACH PLAN AND CROSS SECTION

SCALE: NTS | SHEET S-12 OF S-32 SHEETS | STA. 21+50.18 TO STA. 24+10.72

F.A.U. RTE.	SECTION	COUNTY	TOTAL SHEETS	SHEET NO.
0403	21-00047-00-WR	WILL	149	99
			61M01	
	ILLINOIS	FED. AID PROJECT	P-91-020-19	

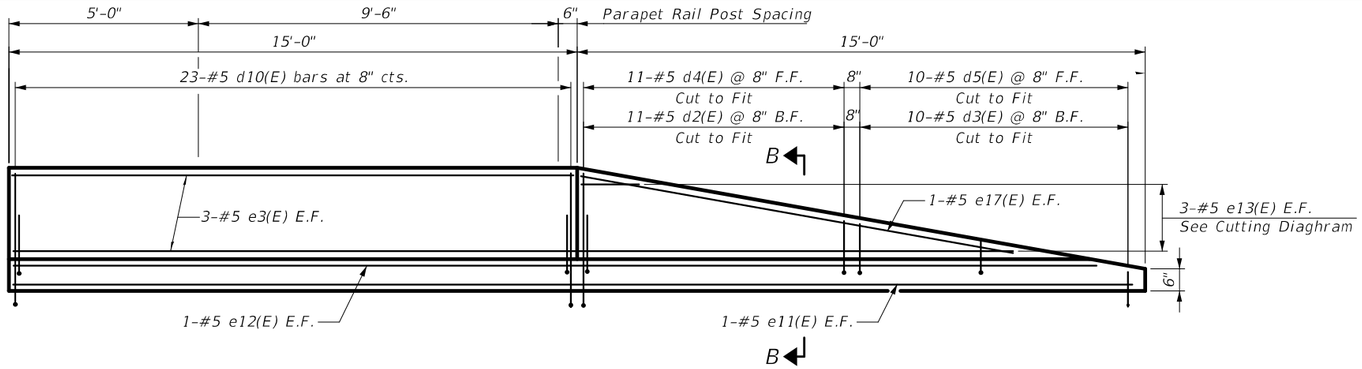

INSIDE ELEVATION OF PARAPET AND CURB

Notes:

The joint opening shall be adjusted for temperature per Article 520.04 of the Standard Specifications. However, since this detail is for jointless structures, the length of bridge used to calculate the adjustment shall be equal to half the total bridge length plus the length of the bridge approach slab.

Parapet concrete shall be paid for as Concrete Superstructure.

Approach slab shall be paid for as Concrete Superstructure (Approach Slab).

Approach footing concrete shall be paid for as Concrete Structures.

The approach footing maximum applied service bearing pressure (Qmax) = 2.0 ksf.

Cost of excavation for approach footing included with Concrete Structures.

For Granular Backfill for Structures and drainage treatment details, see sheet S-2 of S-32.

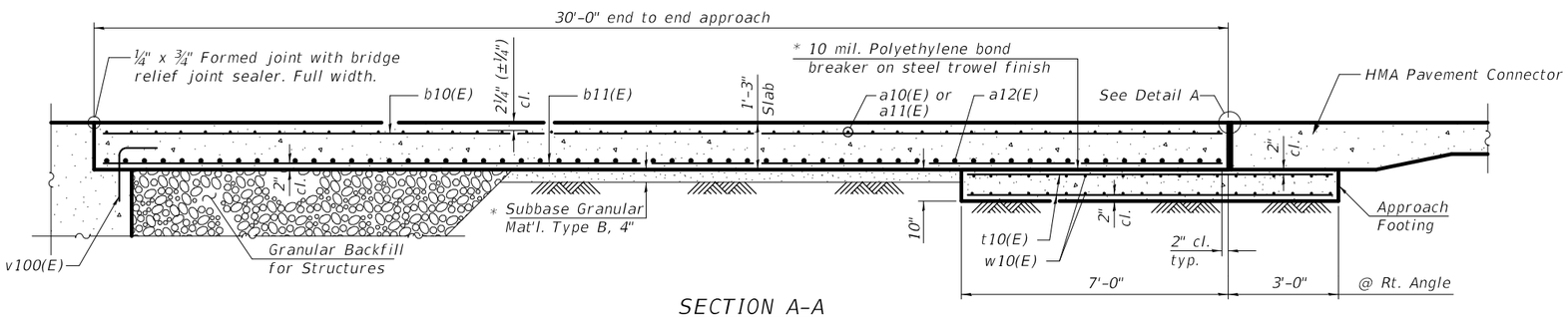

SECTION A-A

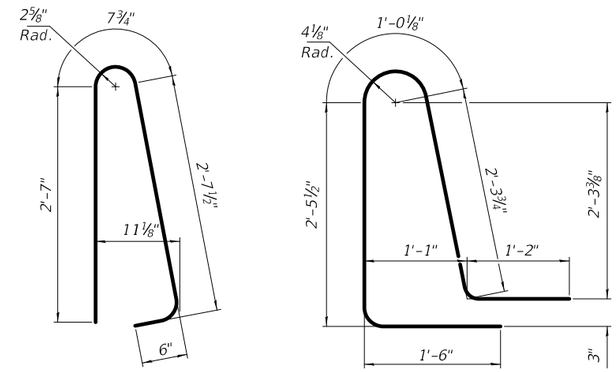

BAR d10(E)

BAR d11(E)

WEST APPROACH
BILL OF MATERIAL

Bar	No.	Size	Length	Shape
a10(E)	46	#5	29'-9"	
a11(E)	46	#5	30'-4"	
a12(E)	120	#8	30'-6"	
b10(E)	80	#5	29'-8"	
b11(E)	125	#9	29'-8"	
d2(E)	11	#5	4'-7"	
d3(E)	11	#5	3'-4"	
d4(E)	10	#5	4'-6"	
d5(E)	10	#5	3'-4"	
d10(E)	23	#5	6'-5"	
d11(E)	23	#5	8'-6"	
e3(E)	3	#5	14'-8"	
e11(E)	2	#5	29'-8"	
e12(E)	2	#5	29'-2"	
e13(E)	3	#5	13'-4"	
e17(E)	2	#5	14'-6"	
t10(E)	106	#4	10'-6"	
W10(E)	80	#5	29'-9"	
Concrete Superstructure			Cu. Yd.	3.2
Concrete Superstructure (Approach Slab)			Cu. Yd.	72.5
Concrete Structures			Cu. Yd.	17.7
Reinforcement Bars, Epoxy Coated			Pound	31,740

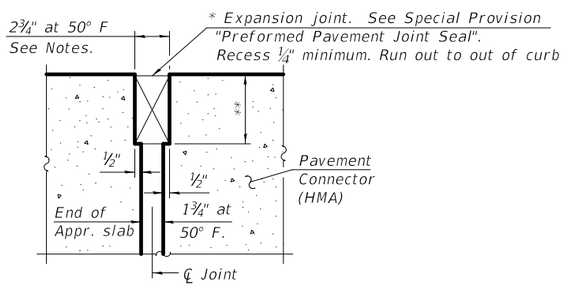

DETAIL A
(at Rt. ∠'s)

* Cost included with Concrete Superstructure (Approach Slab).

** Per manufacturer recommendations

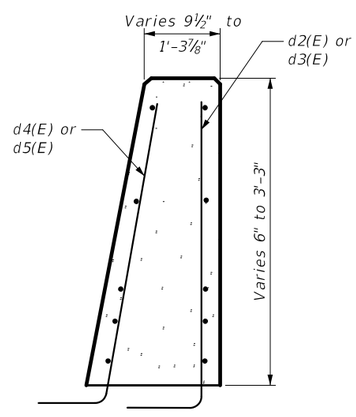

SECTION B-B

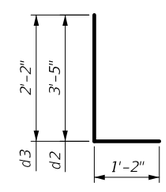

BARS d2(E) & d3(E)

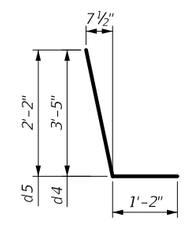

BARS d4(E) & d5(E)

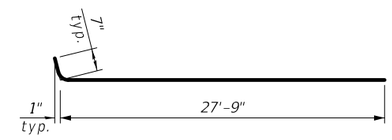

BAR a11(E)

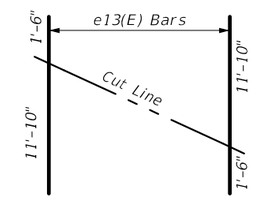

BAR e13(E)
CUTTING DIAGRAM

CHRISTOPHER B. BURKE ENGINEERING, LTD.
16221 W. 159th Street, Suite 201
Lockport, Illinois 60441
(815) 770-2850

USER NAME = aschaefer	DESIGNED - MM	REVISED -
	DRAWN - PDR	REVISED -
PLOT SCALE = 2'	CHECKED - MM	REVISED -
PLOT DATE = 11/2/2025	DATE - 03/24/2021	REVISED -

STATE OF ILLINOIS
DEPARTMENT OF TRANSPORTATION

SEIL ROAD WIDENING
WEST APPROACH SLAB DETAILS

SCALE: NTS | SHEET S-13 OF S-32 SHEETS | STA. 21+50.18 TO STA. 24+10.72

F.A.U. RTE.	SECTION	COUNTY	TOTAL SHEETS	SHEET NO.
0403	21-00047-00-WR	WILL	149	100
			61M01	
	ILLINOIS	FED. AID PROJECT	P-91-020-19	

FILE NAME: N:\Shareweld\070001\070001D\2021\021103\Struct\13-070001-02-103-Appr-Slab-02.sht

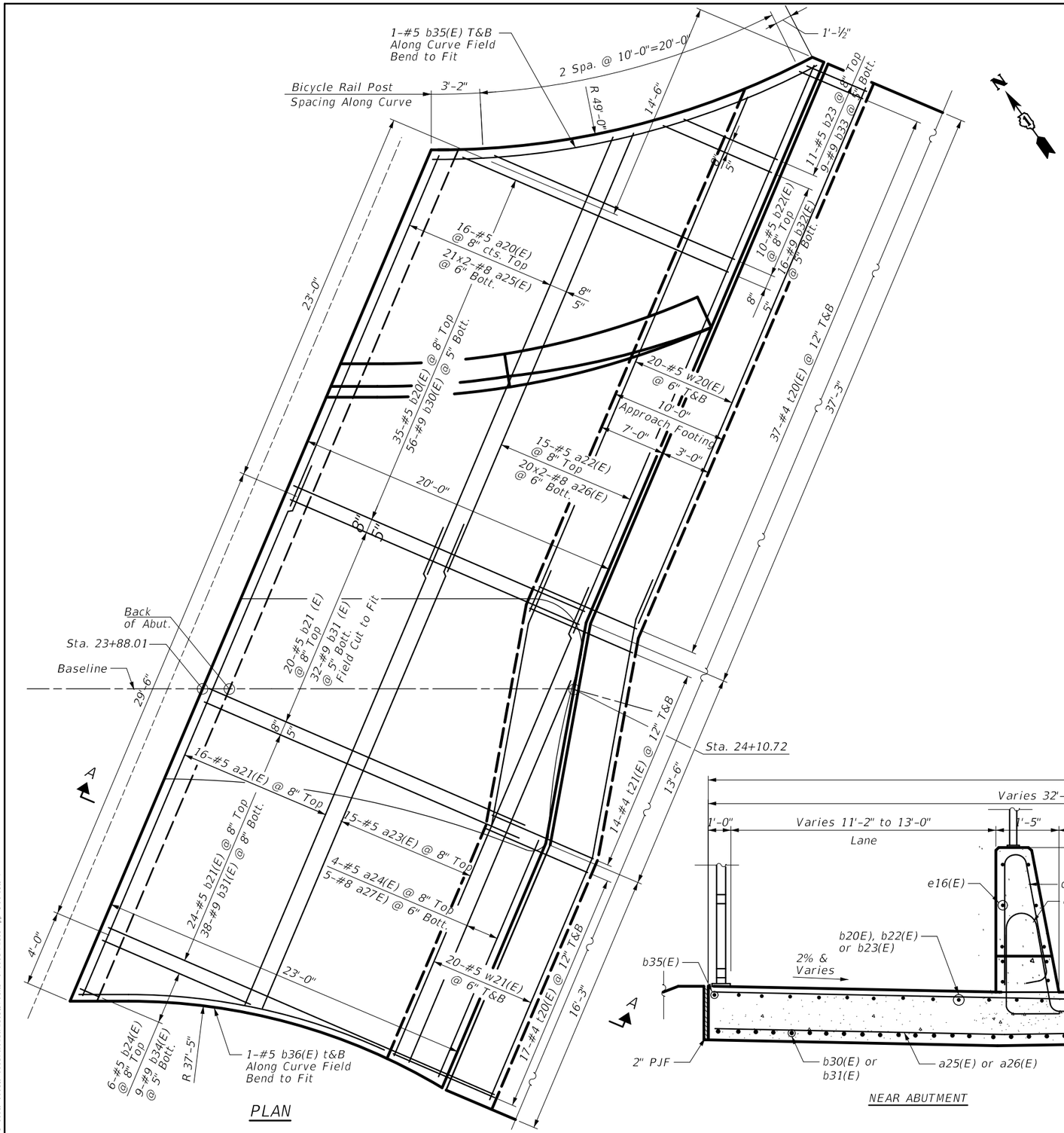

PLAN

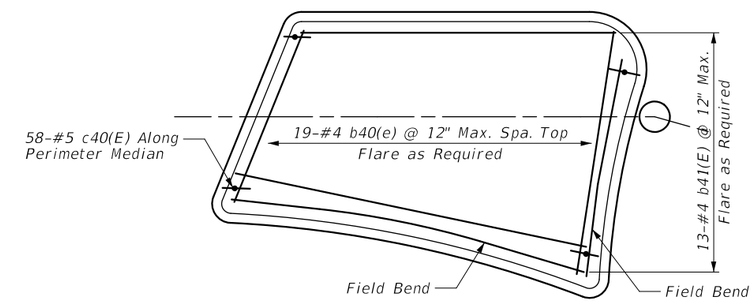

MOUNTABLE CURB DETAIL

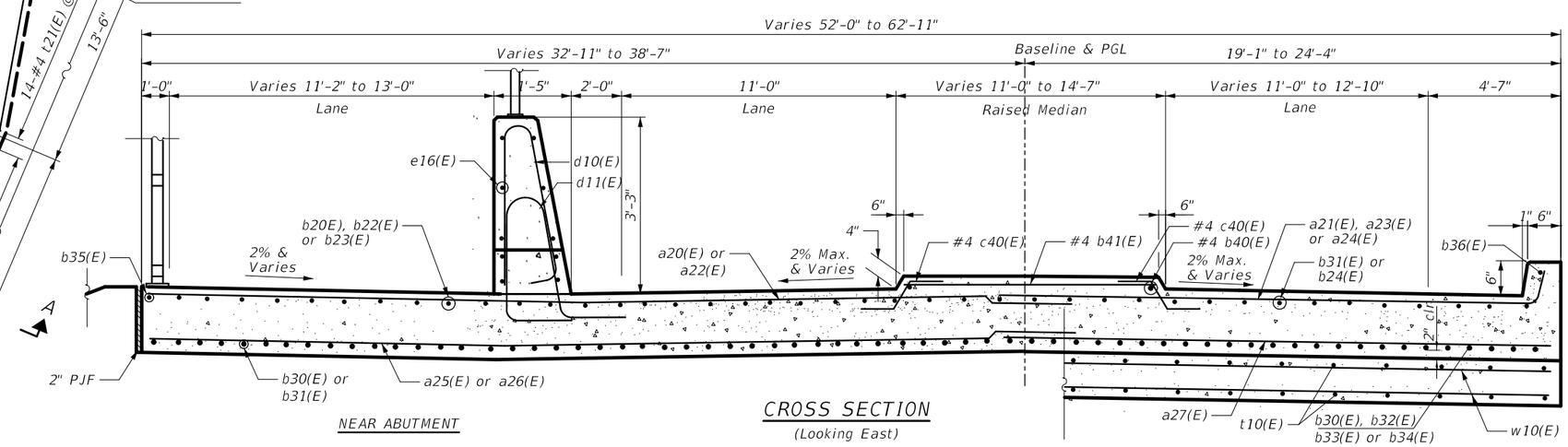

NEAR ABUTMENT

CROSS SECTION

(Looking East)

AT APPROACH FOOTING

FILE NAME: N:\Shorewood\0700010\0700010\2021\02103\Struct\14-070001-02103-Appr-Slab-03.sht

CHRISTOPHER B. BURKE ENGINEERING, LTD. 16221 W. 159th Street, Suite 201 Lockport, Illinois 60441 (815) 770-2850	USER NAME = aschaefer	DESIGNED - MM	REVISED -	STATE OF ILLINOIS DEPARTMENT OF TRANSPORTATION	SEIL ROAD WIDENING EAST APPROACH PLAN AND CROSS SECTION	F.A.U. RTE.	SECTION	COUNTY	TOTAL SHEETS / SHEET NO.
		DRAWN - PDR	REVISED -			0403	21-00047-00-WR	WILL	149 / 101
	PLOT SCALE = 2'	CHECKED - MM	REVISED -						61M01
	PLOT DATE = 11/2/2025	DATE - 03/24/2021	REVISED -		SCALE: NTS / SHEET S-14 OF S-32 SHEETS / STA. 21+50.18 TO STA. 24+10.72		ILLINOIS	FED. AID PROJECT	P-91-020-19

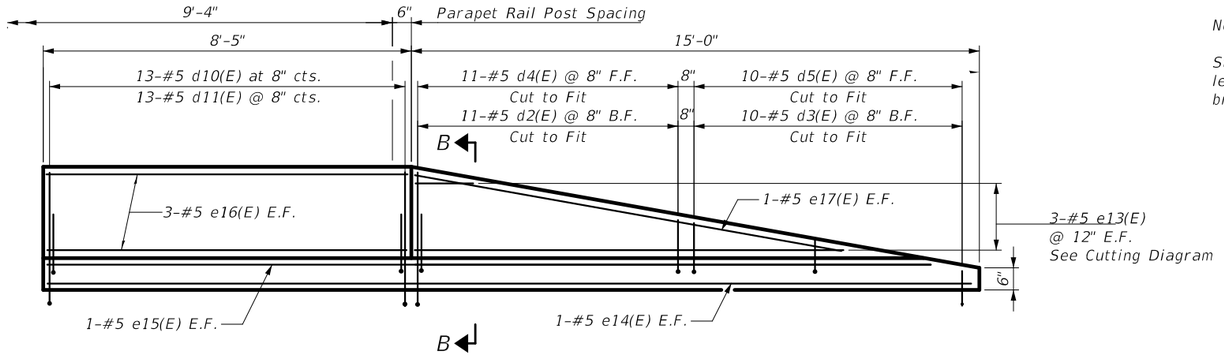

INSIDE ELEVATION OF PARAPET AND CURB

Notes:

The joint opening shall be adjusted for temperature per Article 520.04 of the Standard Specifications. However, since this detail is for jointless structures, the length of bridge used to calculate the adjustment shall be equal to half the total bridge length plus the length of the bridge approach slab.

Parapet concrete shall be paid for as Concrete Superstructure.

Approach slab shall be paid for as Concrete Superstructure (Approach Slab).

Approach footing concrete shall be paid for as Concrete Structures.

The approach footing maximum applied service bearing pressure (Qmax) = 2.0 ksf.

Cost of excavation for approach footing included with Concrete Structures.

For Granular Backfill for Structures and drainage treatment details, see sheet S-2 of S-32.

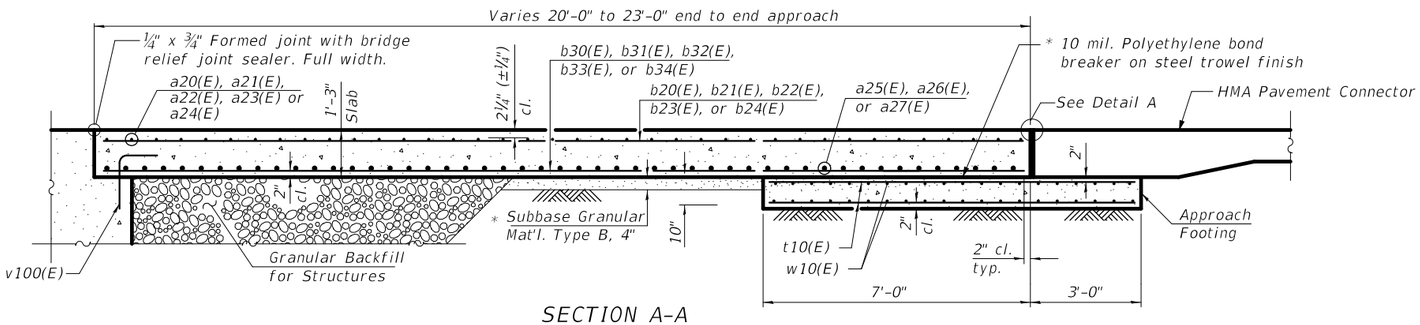

SECTION A-A

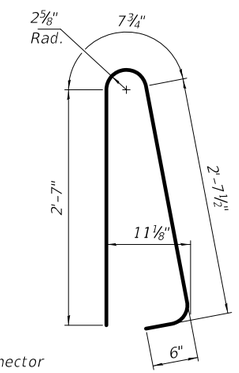

BAR d10(E)

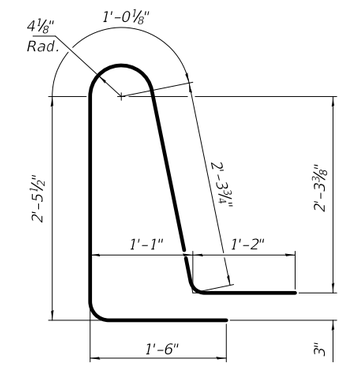

BAR d11(E)

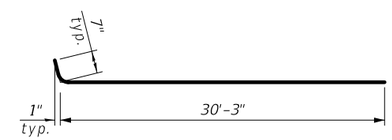

BAR a11(E)

EAST APPROACH BILL OF MATERIAL

Bar	No.	Size	Length	Shape
a20(E)	16	#5	30'-3"	
a21(E)	16	#5	30'-10"	
a22(E)	15	#5	35'-0"	
a23(E)	15	#5	35'-4"	
a24(E)	2	#5	41'-11"	
a25(E)	42	#8	31'-3"	
a26(E)	40	#8	35'-9"	
a27(E)	3	#8	45'-4"	
b20(E)	35	#5	19'-8"	
b21(E)	45	#5	22'-8"	
b22(E)	5	#5	26'-6"	
b23(E)	6	#5	7'-10"	
b24(E)	3	#5	9'-2"	
b30(E)	56	#9	19'-4"	
b31(E)	70	#9	22'-8"	
b32(E)	8	#9	26'-2"	
b33(E)	5	#9	8'-7"	
b34(E)	5	#9	10'-0"	
b35(E)	2	#5	24'-0"	
b36(E)	2	#5	23'-4"	
b40(E)	19	#4	11'-6"	
b41(E)	13	#4	16'-0"	
c40(E)	58	#4	1'-6"	
d2(E)	11	#5	4'-7"	
d3(E)	10	#5	3'-4"	
d4(E)	11	#5	4'-6"	
d5(E)	10	#5	3'-4"	
d10(E)	13	#5	6'-5"	
d11(E)	13	#5	8'-6"	
e13(E)	3	#5	13'-4"	
e14(E)	2	#5	23'-11"	
e15(E)	12	#5	23'-5"	
e16(E)	6	#5	08'-1"	
e17(E)	2	#5	14'-6"	
t20(E)	108	#4	9'-8"	
t21(E)	28	#4	9'-11"	
W20(E)	40	#5	34'-9"	
W21(E)	40	#5	34'-10"	
Concrete Superstructure		Cu. Yd.	2.3	
Concrete Superstructure (Approach Slab)		Cu. Yd.	61.5	
Concrete Structures		Cu. Yd.	20.7	
Reinforcement Bars, Epoxy Coated		Pound	27,060	

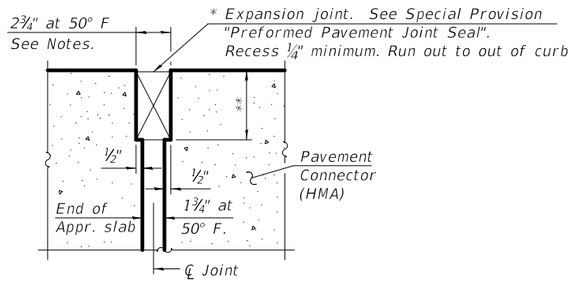

DETAIL A

(at Rt. ∠'s)

* Cost included with Concrete Superstructure (Approach Slab).

** Per manufacturer recommendations

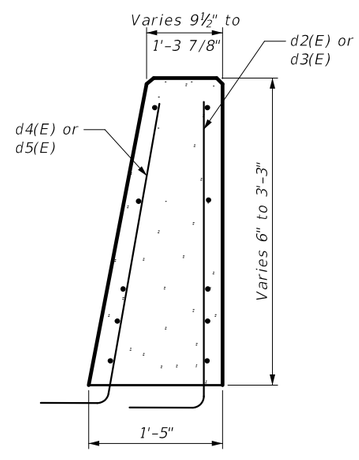

SECTION B-B

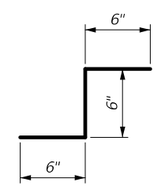

BAR c40(E)

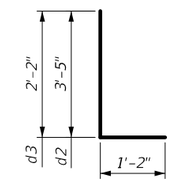

BARS d2(E) & d3(E)

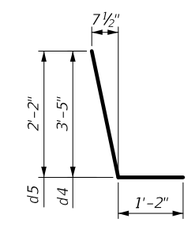

BARS d4(E) & d5(E)

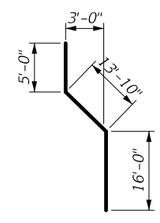

BAR w21(E)

	Bar	a	b	c	d	Total
	a24(E)	25'-4"	22'-5"	19'-6"	16'-7"	41'-11"
	a27(E)	27'-0"	24'-10"	20'-6"	18'-4"	45'-4"
	b22(E)	18'-6"	13'-11"	12'-9"	8'-2"	26'-8"
*	b23(E)	7'-4"	4'-3"	3'-7"	0'-6"	7'-10"
*	b24(E)	8'-10"	5'-6"	3'-10"	0-4"	9'-2"
	b32(E)	18'-10"	13'-6"	12'-8"	7'-4"	26'-2"
*	b33(E)	7'-7"	4'-6"	4'-1"	1'-0"	8'-7"
*	b34(E)	9'-8"	5'-6'	4'-6"	0'-4"	10'-0"
	e13(E)	11'-10"	-	-	1'-6"	13'-4"

* Discard the shortest bar.

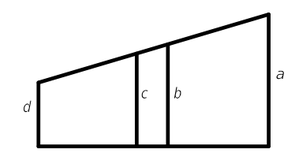

PLACING DIAGRAM

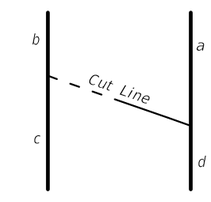

CUTTING DIAGRAM

CHRISTOPHER B. BURKE ENGINEERING, LTD.
16221 W. 159th Street, Suite 201
Lockport, Illinois 60441
(815) 770-2850

USER NAME = aschaefer	DESIGNED - MM	REVISED -
	DRAWN - PDR	REVISED -
PLOT SCALE = 2'	CHECKED - MM	REVISED -
PLOT DATE = 11/2/2025	DATE - 03/24/2021	REVISED -

STATE OF ILLINOIS
DEPARTMENT OF TRANSPORTATION

SEIL ROAD WIDENING
EAST APPROACH SLAB DETAILS

SCALE: NTS | SHEET S-15 OF S-32 SHEETS | STA. 21+50.18 TO STA. 24+10.72

F.A.U. RTE.	SECTION	COUNTY	TOTAL SHEETS	SHEET NO.
0403	21-00047-00-WR	WILL	149	102
			61M01	
	ILLINOIS	FED. AID PROJECT	P-91-020-19	

FILE NAME: N:\Shorewood\070001\070001D\2021\021103\Struct\15-070001-02103-Appr-Slab-04.sht

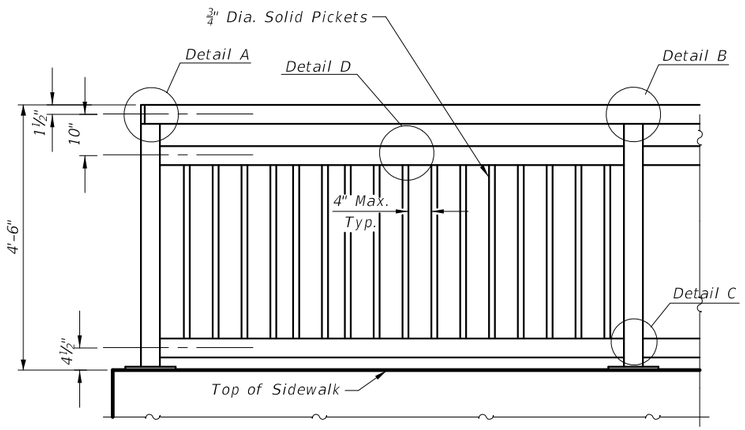

BICYCLE RAILING (SPECIAL)

Maximum Post Spacing = 10'-0"

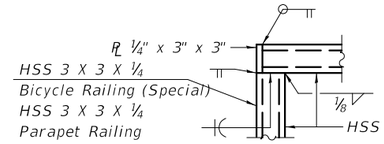

DETAIL A

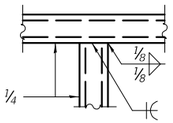

DETAIL B

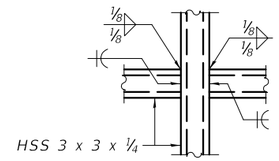

DETAIL C

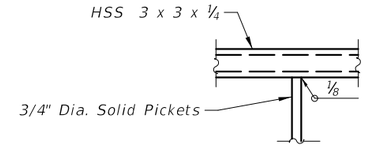

DETAIL D

Notes:

Place reinforcement bars to miss anchor rod locations.

All HSS tubing used for the Parapet Railing shall be CVN tested according to Article 1006.34(b) of the Standard Specifications.

All HSS tubing used for the Parapet Railing shall be ASTM A500 grade C.

All base plates used for the Paraper Railing shall be AASHTO M270 grade 50.

All heavy hex nuts shall be according to ASTM A 563 grade DH.

All fully threaded anchor rods shall be ASTM F1554 grade 105.

The post base plate shall be fastened to the curb snug tight and given an additional ⅛" turn.

Rail splice inserts may be built out of bent plates of the same thicknesses and outside geometry limits as the 4 plate rail splice inserts shown.

All steel railing elements shall be galvanized according to Article 509.05 and then painted. Painting shall be per Article 506.08 except application of Organic Zinc Rich Primer will not be required. Railing shall be black.

See sheets S-7, S-8, S-12 and S-14 of S-32 for railing post spacing.

SECTION A-A

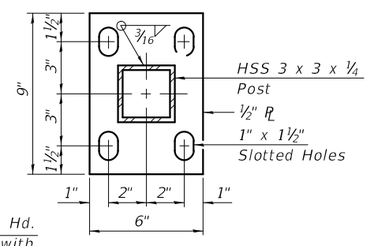

BASE PL

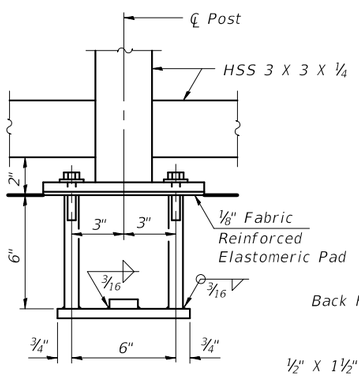

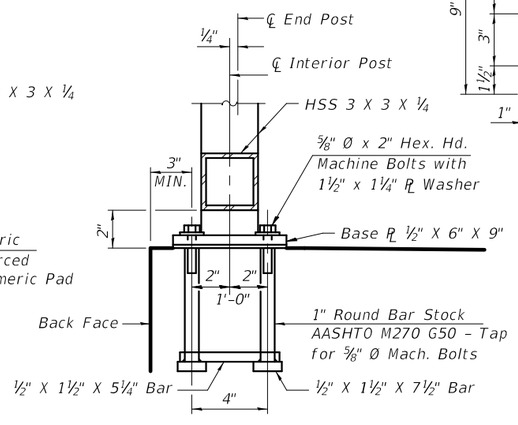

ANCHOR BOLT DETAILS

In lieu of the cast-in-place anchor device shown, the Contractor has the option of drilling and setting ⅝" Ø anchor rods According to Article 509.06 of the Standard Specifications. embedment shall be According to the Manufacturer's Specifications.

(10'-0" Maximum Post Spacing)

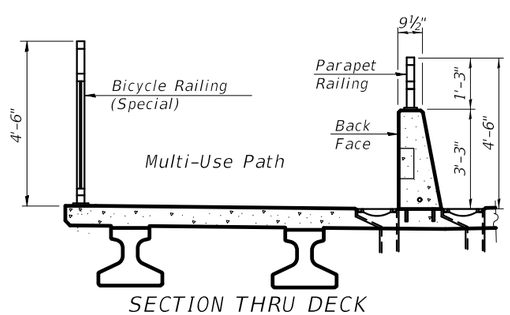

SECTION THRU DECK

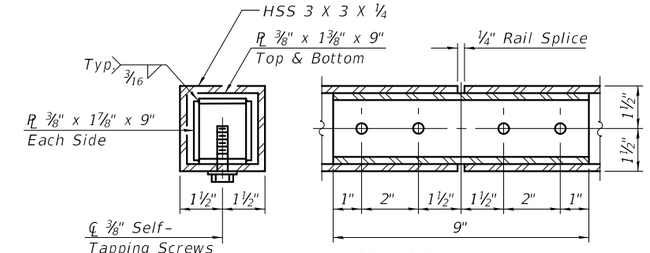

RAIL SPLICE

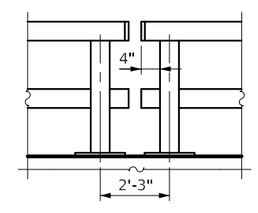

PARAPET RAILING ELEVATION

(Two Element Rail Shown)

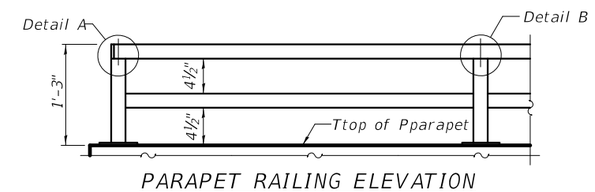

PARAPET RAILING ELEVATION

(inside face of two element rail)

BILL OF MATERIAL

ITEM	UNIT	QUANTITY
Bicycle Railing (Special)	Foot	311
Parapet Railing	Foot	236

FILE NAME: N:\Shorewood\0700031\0700031D\2021\02103\Struct\15-0700031-02103-Rail Detail.sht

CHRISTOPHER B. BURKE ENGINEERING, LTD.
16221 W. 159th Street, Suite 201
Lockport, Illinois 60441
(815) 770-2850

USER NAME = aschaefer	DESIGNED - MM	REVISED -	
	DRAWN - PDR	REVISED -	
PLOT SCALE = 2'	CHECKED - MM	REVISED -	
PLOT DATE = 11/2/2025	DATE - 03/24/2021	REVISED -	

STATE OF ILLINOIS
DEPARTMENT OF TRANSPORTATION

SEIL ROAD WIDENING
BICYCLE RAILING (SPECIAL)
AND PARAPET RAILING

SCALE: NTS | SHEET S-16 OF S-32 SHEETS | STA. 21+50.18 TO STA. 24+10.72

F.A.U. RTE.	SECTION	COUNTY	TOTAL SHEETS	SHEET NO.
0403	21-00047-00-WR	WILL	149	103
			61M01	

ILLINOIS FED. AID PROJECT P-91-020-19

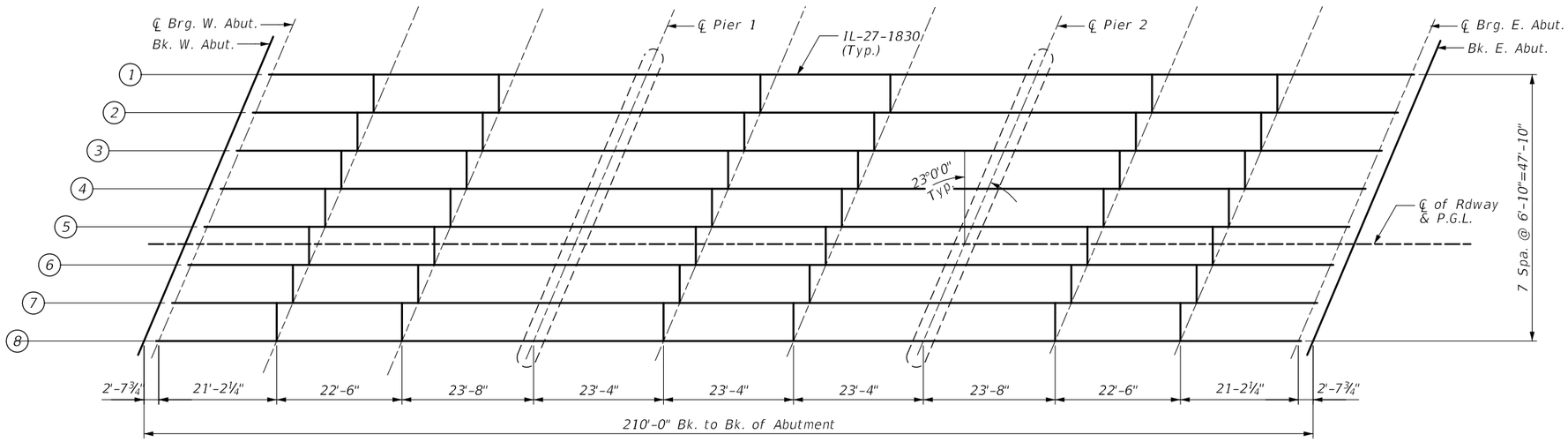

INTERIOR BEAM MOMENT TABLE				
		0.4 Sp. 1 0.6 Sp. 3	Pier 1 or 2	0.5 Sp. 2
I	(in^4)	38,879	38,879	38,879
I'	(in^4)	130,287	130,287	130,287
Sb	(in^3)	6,832	6,832	6,832
Sb'	(in^3)	6,102.4	6,102.4	6,102.4
St	(in^3)	2,126.7	2,126.7	2,126.7
St'	(in^3)	9,544.8	9,544.8	9,544.8
DC1	(k/')	1.160	1.160	1.160
MDC1	('k)	611.6	0	658.0
DC2	(k/')	0.15	0.15	0.15
MDC2	('k)	57.0	-62.2	19.4
DW	(k/')	0.231	0.231	0.231
MDW	('k)	87.9	-95.9	29.8
M^{LL+IM}	('k)	762.8	-506.3	616.4

INTERIOR BEAM REACTION TABLE				
		Abut.	Pier 1 Span 1 Pier 2 Span 3	Pier 1 Span 2 Pier 2 Span 2
	RDC1 (k)	38.2	38.2 / 38.2	38.9 / 38.9
*	RDC2 (k)	4.0	6.0 / 6.1	5.1 / 5 .1
*	RDW (k)	6.1	9.2 / 9.3	7.8 / 7.8
*	R^{LL+IM} (k)	77.7	89.8 / 90.6	87.0 / 87.0
	RTotal (k)	126.0	143.2 / 144.2	138.8 / 138.8

* At continuous piers, reactions from composite loads are assumed to be equally distributed to each bearing line.

I: Non-composite moment of inertia of beam section ($in.^4$).
I': Composite moment of inertia of beam section ($in.^4$).
Sb: Non-composite section modulus for the bottom fiber of the prestressed beam ($in.^3$).
Sb': Composite section modulus for the bottom fiber of the prestressed beam ($in.^3$).
St: Non-composite section modulus for the top fiber of the prestressed beam ($in.^3$).
St': Composite section modulus for the top fiber of the prestressed beam ($in.^3$).
DC1: Un-factored non-composite dead load (kips/ft.).
MDC1: Un-factored moment due to non-composite dead load (kip-ft.).
DC2: Un-factored long-term composite (superimposed excluding future wearing surface) dead load (kips/ft.).
MDC2: Un-factored moment due to long-term composite (superimposed excluding future wearing surface) dead load (kip-ft.).
DW: Un-factored long-term composite (superimposed future wearing surface only) dead load (kips/ft.).
MDW: Un-factored moment due to long-term composite (superimposed future wearing surface only) dead load (kip-ft).
M^{LL+IM}: Un-factored live load moment plus dynamic load allowance (impact) (kip-ft.).

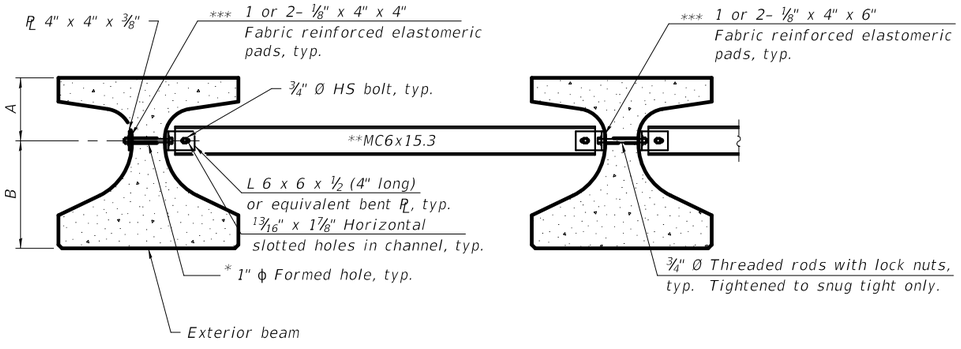

Notes:
All material for bracing shall be hot dip galvanized according to AASHTO M111 unless otherwise noted.
Two hardened washers are required for each set of oversized holes.
All holes shall be 15/16" Ø unless otherwise noted.
5/16" x 3" x 3" plate washers are required over all slotted holes.
All bolts, threaded rods, and hardware shall be galvanized according to AASHTO M232.
Threaded rods shall be ASTM F 1554 Grade 55.
Bracing shall be installed as beams are erected and tightened as soon as possible during erection.
Permanent bracing shall not be paid for separately, but shall be included in the cost of Furnishing and Erecting Precast Prestressed Concrete Beams.

Beam	A	B
IL27	11¼"	1'-3¾"

* Fabricator shall locate to miss strands within permissible tolerances.

** Alternate MC6x18 channels are permitted to facilitate material acquisition.

*** Place pads as necessary to provide a flat mounting surface between the steel and concrete.

PERMANENT BRACING DETAILS FOR IL27

CHRISTOPHER B. BURKE ENGINEERING, LTD.
16221 W. 159th Street, Suite 201
Lockport, Illinois 60441
(815) 770-2850

USER NAME = aschaefer	DESIGNED - MM	REVISED -
	DRAWN - PDR	REVISED -
PLOT SCALE = 24'	CHECKED - MM	REVISED -
PLOT DATE = 11/2/2025	DATE - 03/24/2021	REVISED -

STATE OF ILLINOIS
DEPARTMENT OF TRANSPORTATION

SEIL ROAD WIDENING
FRAMING PLAN AND DETAILS

SCALE: NTS | SHEET S-17 OF S-32 SHEETS | STA. 21+50.18 TO STA. 24+10.72

F.A.U. RTE.	SECTION	COUNTY	TOTAL SHEETS	SHEET NO.
0403	21-00047-00-WR	WILL	149	104
			61M01	
	ILLINOIS	FED. AID PROJECT	P-91-020-19	

FILE NAME: N:\Shorewood\0700010\0700010\2021\021103\Struct\17-0700010-021103-Framing Plan-01.sht

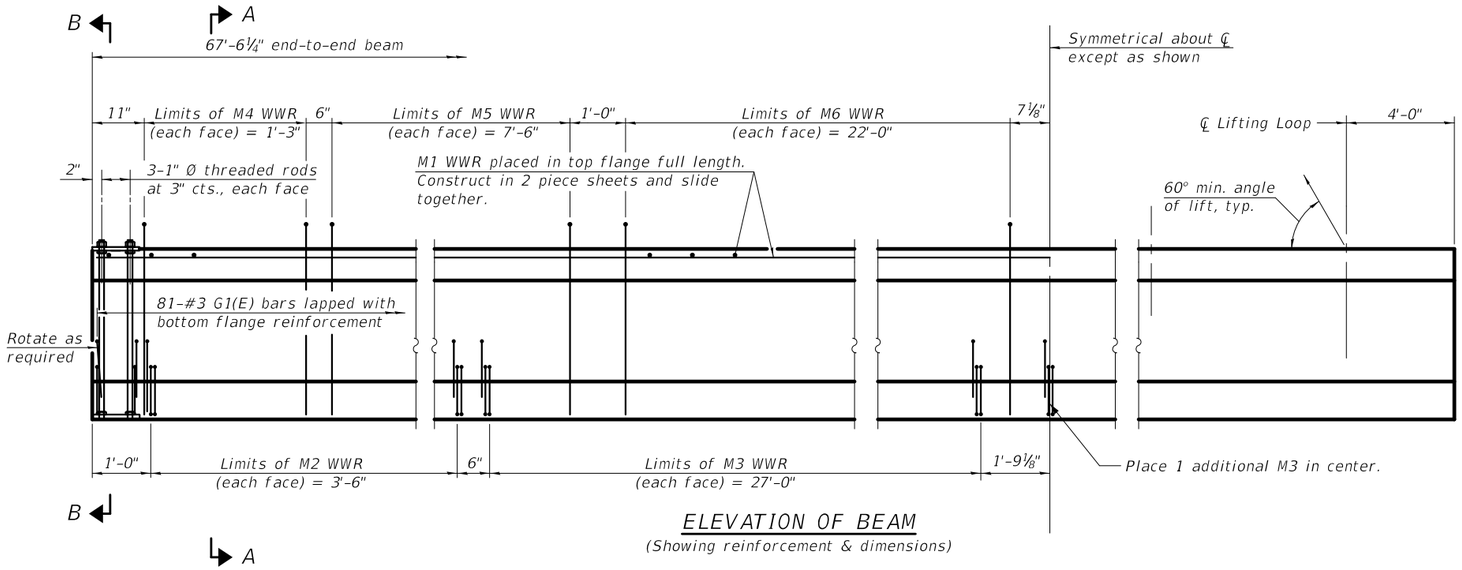

ELEVATION OF BEAM
(Showing reinforcement & dimensions)

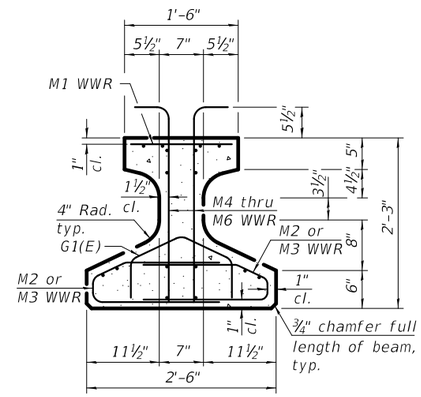

SECTION A-A

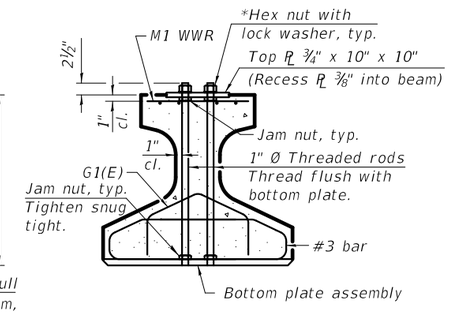

SECTION B-B
*Only tighten sufficiently to compress lock washers

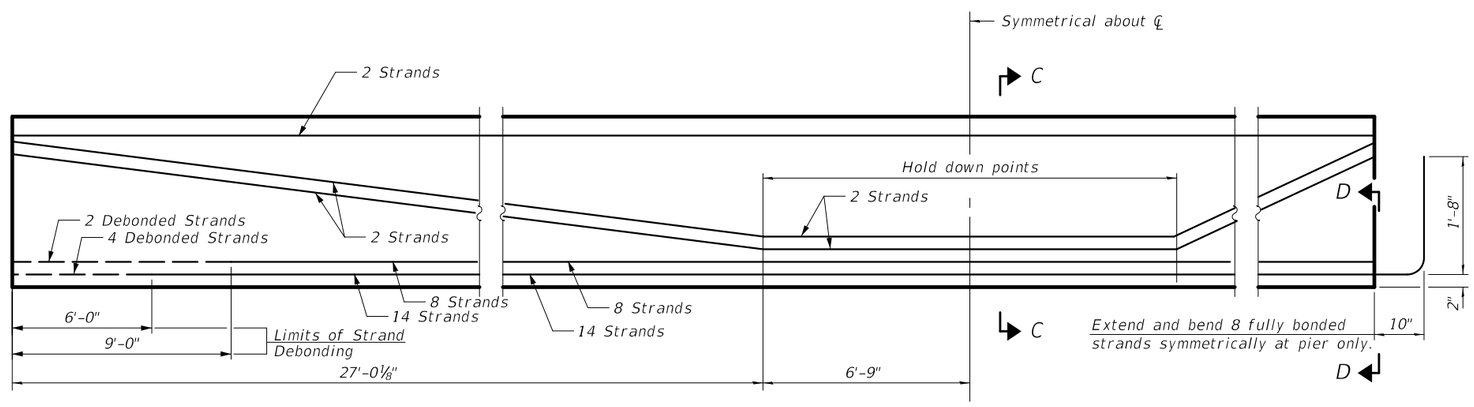

ELEVATION OF BEAM
(Showing prestressing steel)

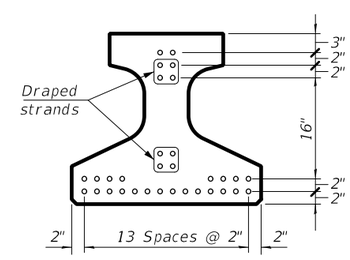

SECTION C-C
(28-0.6" Ø 270 ksi strands)

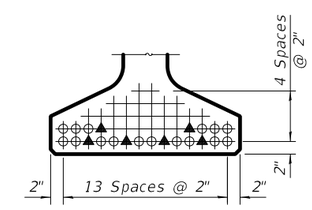

VIEW D-D

○ Fully bonded strand

▲ Partially debonded strand

Note:
See sheet S-20 of S-32 for additional details and Bill of Material.

CHRISTOPHER B. BURKE ENGINEERING, LTD.
16221 W. 159th Street, Suite 201
Lockport, Illinois 60441
(815) 770-2850

USER NAME = aschaefer	DESIGNED - MM	REVISED -	
	DRAWN - PDR	REVISED -	
PLOT SCALE = 2'	CHECKED - MM	REVISED -	
PLOT DATE = 11/2/2025	DATE - 03/24/2021	REVISED -	

STATE OF ILLINOIS
DEPARTMENT OF TRANSPORTATION

SEIL ROAD WIDENING
IL27N BEAM DETAILS - SPAN 1 AND 3

SCALE: NTS | SHEET S-18 OF S-32 SHEETS | STA. 21+50.18 TO STA. 24+10.72

F.A.U. RTE.	SECTION	COUNTY	TOTAL SHEETS	SHEET NO.
0403	21-00047-00-WR	WILL	149	105
			61M01	
	ILLINOIS	FED. AID PROJECT	P-91-020-19	

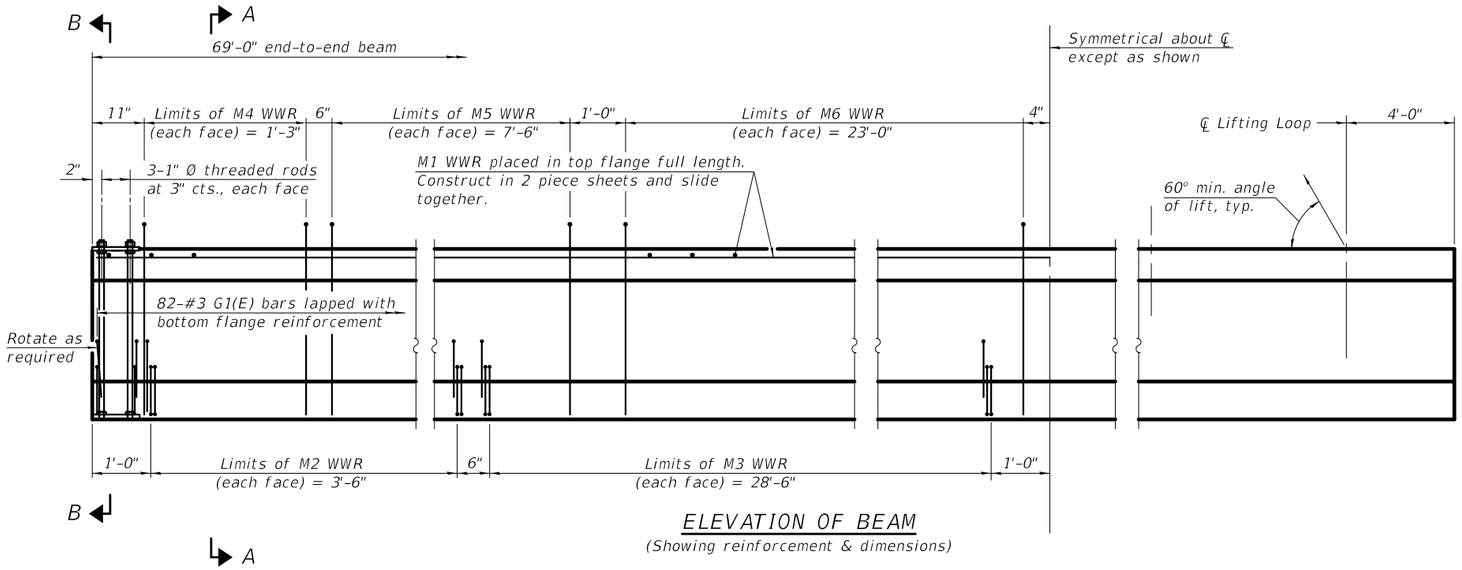

ELEVATION OF BEAM
(Showing reinforcement & dimensions)

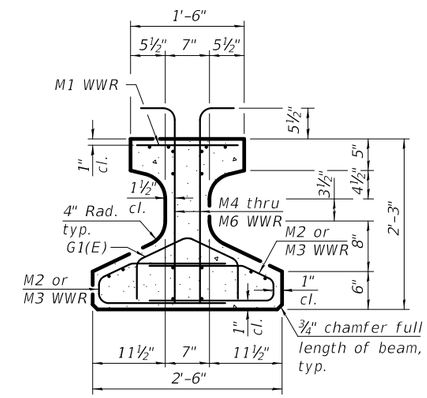

SECTION A-A

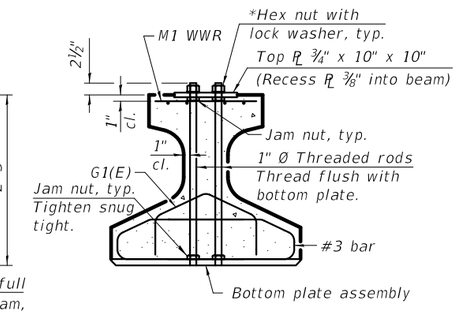

SECTION B-B
*Only tighten sufficiently to compress lock washers

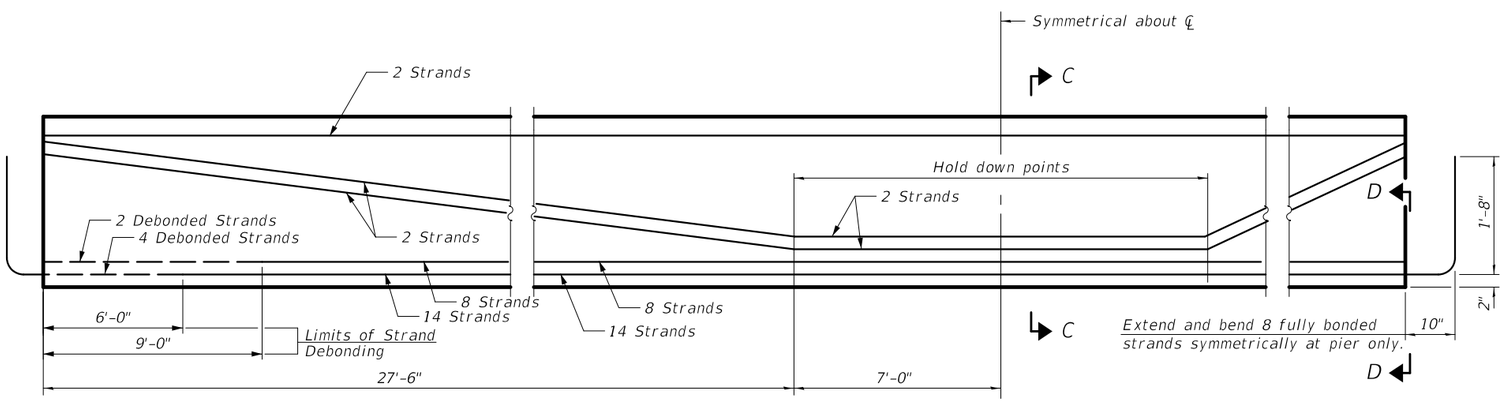

ELEVATION OF BEAM
(Showing prestressing steel)

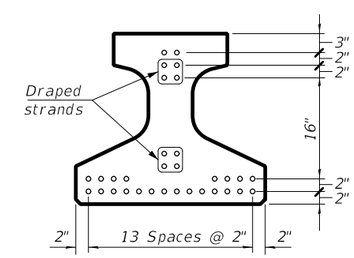

SECTION C-C
(28-0.6" Ø 270 ksi strands)

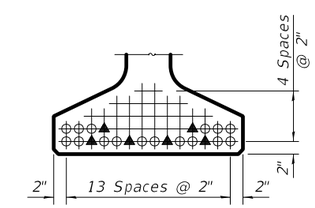

VIEW D-D

○ Fully bonded strand

▲ Partially debonded strand

Note:
See sheet S-20 of S-32 for additional details and Bill of Material.

IL27-1830 8-13-2021

CHRISTOPHER B. BURKE ENGINEERING, LTD.
16221 W. 159th Street, Suite 201
Lockport, Illinois 60441
(815) 770-2850

USER NAME = aschaefer	DESIGNED - MM	REVISED -	
	DRAWN - PDR	REVISED -	
PLOT SCALE = 2'	CHECKED - MM	REVISED -	
PLOT DATE = 11/2/2025	DATE - 03/24/2021	REVISED -	

STATE OF ILLINOIS
DEPARTMENT OF TRANSPORTATION

SEIL ROAD WIDENING
IL27N BEAM DETAILS - SPAN 2

SCALE: NTS | SHEET S-19 OF S-32 SHEETS | STA. 21+50.18 TO STA. 24+10.72

F.A.U. RTE.	SECTION	COUNTY	TOTAL SHEETS	SHEET NO.
0403	21-00047-00-WR	WILL	149	106
			61M01	
	ILLINOIS	FED. AID PROJECT	P-91-020-19	

FILE NAME: N:\Shorewood\070001\070001D\2021102103\Struct\19-070001-02-103-IL-27-1830-Span2.sht

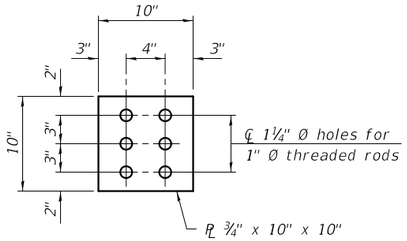

PLAN - TOP PLATE

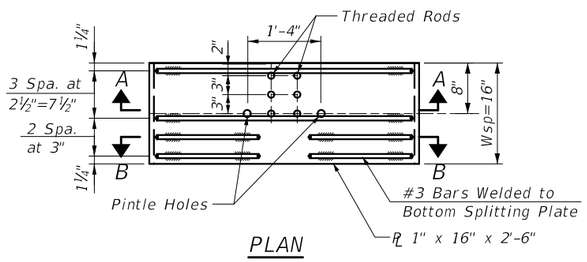

PLAN

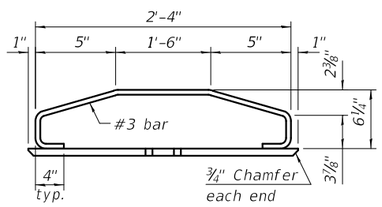

SECTION A-A
BOTTOM PLATE ASSEMBLY

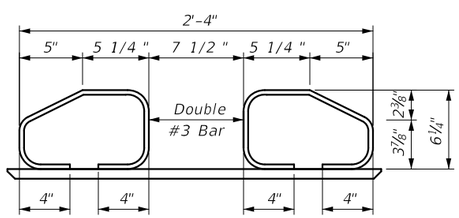

SECTION B-B

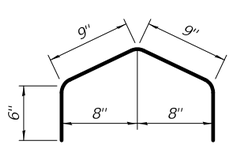

BAR G1(E)

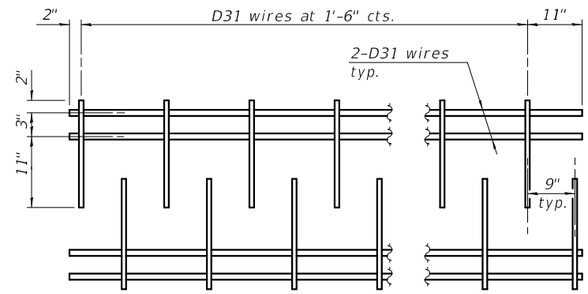

M1 WWR DETAIL

When multiple sheets of M1 WWR are required along the beam length, #5(E) bars (5'-0" long) shall be used to splice the longitudinal D31 wires together (Min. Lap 2'-2").

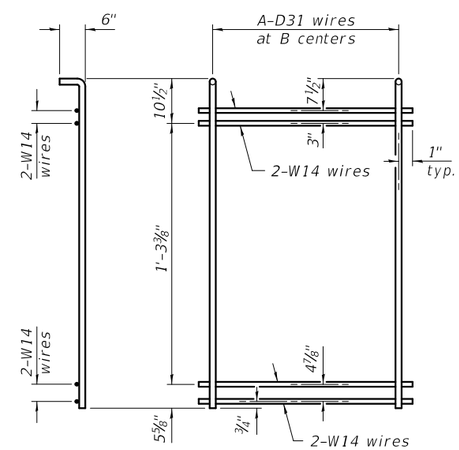

M4 THRU M6 WWR DETAIL

(See Table of Dimensions)

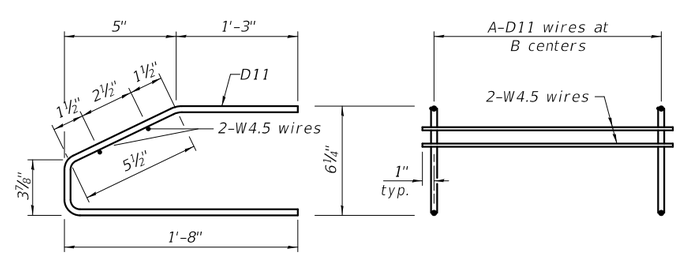

M2 AND M3 WWR DETAIL

(See Table of Dimensions)

NOTES

Inserts for ¾" Ø threaded dowel rods, when specified, are to be two strut, ferrule type for interior beams and single ferrule, flared loop type for exterior beams.

Prestressing steel shall be uncoated high strength, low relaxation 7-wire strand, Grade 270. The nominal diameter for beam strands shall be 0.6" and the nominal cross-sectional area shall be 0.217 sq. in. The nominal diameter for lifting loops shall be ½" and the nominal cross sectional area shall be 0.153 sq. in.

The beams shall have a final concrete compressive strength, f'c, of 8500 psi and a release concrete compressive strength, f'ci, of 6500 psi.

A minimum 2½" Ø lifting pin shall be used to engage the lifting loops during handling.

Bend the extended strands inward on the fascia beams to maintain 1½" clearance inside the pier diaphragm.

The top and bottom plates shall be AASHTO M270 Grade 50.

The top plates and bottom plate assemblies shall be galvanized according to AASHTO M111. The threaded rods, nuts and washers shall be galvanized according to AASHTO M232.

Threaded rods shall be ASTM F 1554 Grade 55.

Welded Wire Reinforcement (WWR) shall conform to ASTM A884 with a Class A, Type 1 epoxy coating or ASTM A1060, Table 3 galvanized coating.

TABLE OF DIMENSIONS

(WWR tables are based on Grade 60.)

SPAN 1 & 3

WWR	A	B
M2	15	3"
M3	19	1'-6"
M4	6	3"
M5	16	6"
M6	23	1'-0"

SPAN 2

WWR	A	B
M2	15	3"
M3	20	1'-6"
M4	6	3"
M5	16	6"
M6	24	1'-0"

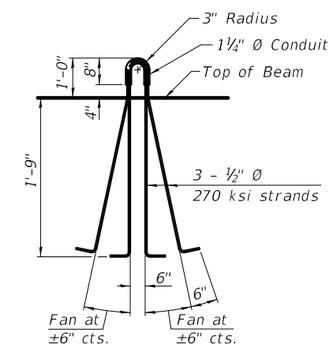

LIFTING LOOP DETAIL

BILL OF MATERIAL

Item	Unit	Total
Furnishing and Erecting Precast Prestressed Concrete Beams, IL27N	Ft.	1,632

FILE NAME: N:\Shorewood\0700010\0700010\2021\021103\Struct\20-070001-02-2103-H-27-1830-Detail-02.sht

CHRISTOPHER B. BURKE ENGINEERING, LTD.
16221 W. 159th Street, Suite 201
Lockport, Illinois 60441
(815) 770-2850

USER NAME = aschaefer	DESIGNED - MM	REVISED -
	DRAWN - PDR	REVISED -
PLOT SCALE = 2'	CHECKED - MM	REVISED -
PLOT DATE = 11/2/2025	DATE - 03/24/2021	REVISED -

STATE OF ILLINOIS
DEPARTMENT OF TRANSPORTATION

SEIL ROAD WIDENING
IL27N BEAM DETAILS

SCALE: NTS | SHEET S-20 OF S-32 SHEETS | STA. 21+50.18 TO STA. 24+10.72

F.A.U. RTE.	SECTION	COUNTY	TOTAL SHEETS	SHEET NO.
0403	21-00047-00-WR	WILL	149	107

61M01

ILLINOIS FED. AID PROJECT P-91-020-19

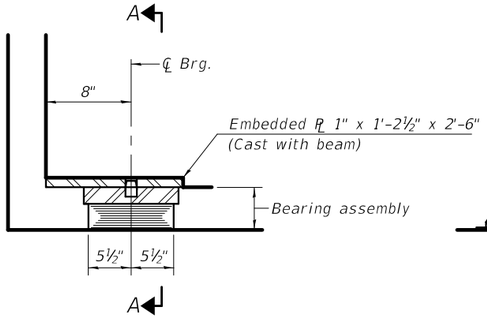

ELEVATION AT ABUT.

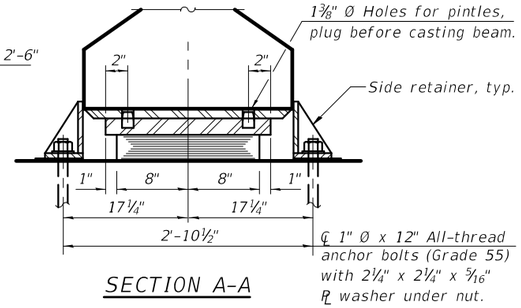

SECTION A-A

TYPE I ELASTOMERIC EXP. BRG.

(ABUTMENTS)

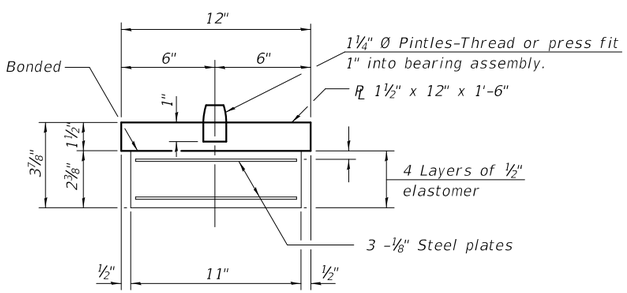

BEARING ASSEMBLY

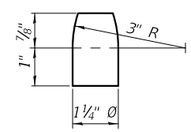

PINTLE

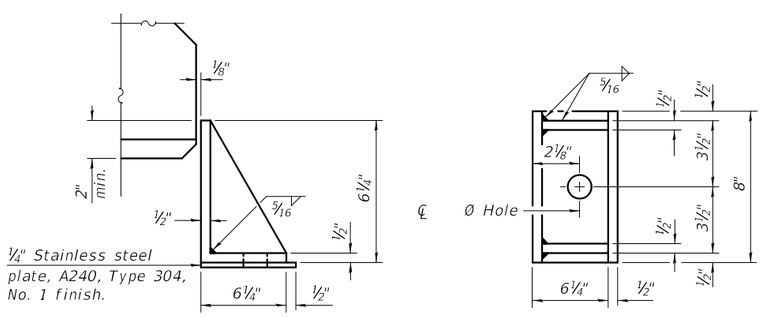

SIDE RETAINER

Equivalent rolled angle with stiffeners
will be allowed in lieu of welded plates.

Notes:

Side retainers and stainless steel plates shall be included in the cost of Elastomeric Bearing Assembly, Type I.

See sheet S-20 of S-32 for additional details of embedded plate.

Anchor bolts and side retainers at all supports shall be installed as each member is erected unless an equivalent temporary means of lateral restraint is used.

All exposed bearing plates and side retainers shall be hot dip galvanized according to AASHTO M111.

BILL OF MATERIAL

Item	Unit	Total
Elastomeric Bearing Assembly, Type I	Each	16
Anchor Bolts	Each	32

CHRISTOPHER B. BURKE ENGINEERING, LTD.
16221 W. 159th Street, Suite 201
Lockport, Illinois 60441
(815) 770-2850

USER NAME = aschaefer	DESIGNED - MM	REVISED -
	DRAWN - PDR	REVISED -
PLOT SCALE = 2'	CHECKED - MM	REVISED -
PLOT DATE = 11/2/2025	DATE - 03/24/2021	REVISED -

STATE OF ILLINOIS
DEPARTMENT OF TRANSPORTATION

SEIL ROAD WIDENING
BEARING DETAILS

SCALE: NTS | SHEET S-21 OF S-32 SHEETS | STA. 21+50.18 TO STA. 24+10.72

F.A.U. RTE.	SECTION	COUNTY	TOTAL SHEETS	SHEET NO.
0403	21-00047-00-WR	WILL	149	108
			61M01	
	ILLINOIS	FED. AID PROJECT	P-91-020-19	

FILE NAME: N:\Shorewood\070001\070001D\2021\021103\Struct\21-070001-02103-Bearing-Det.sht

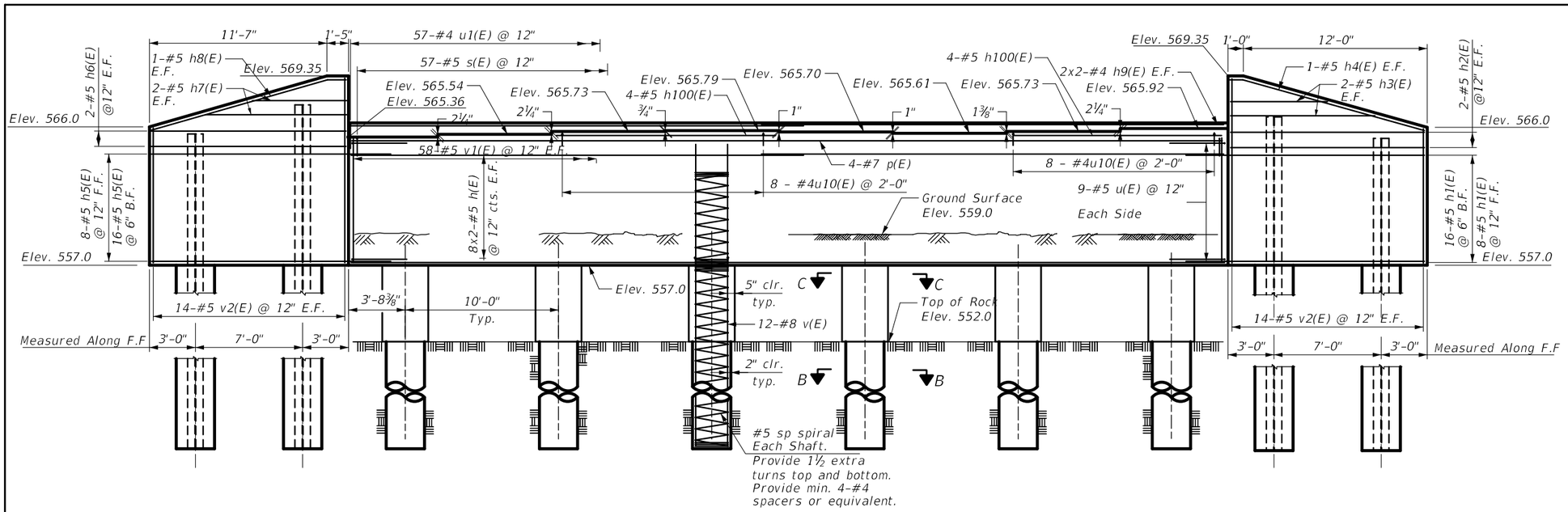

ELEVATION
Looking West

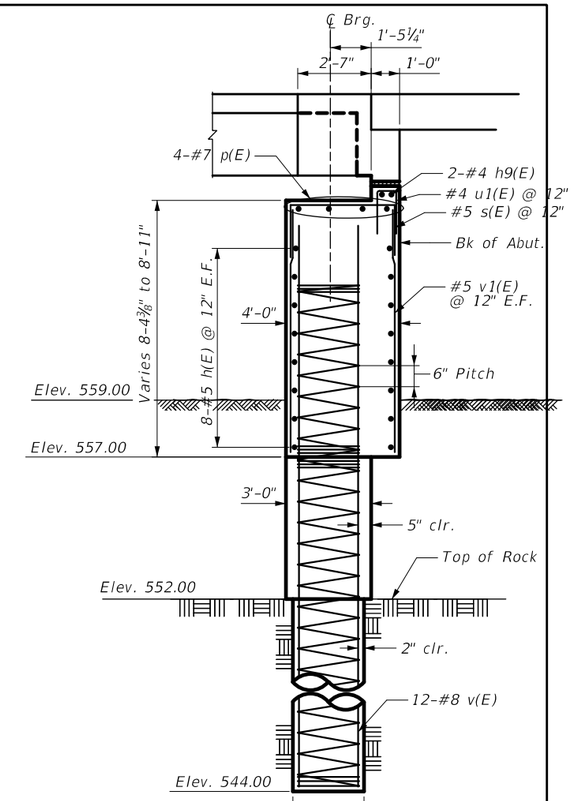

SECTION A-A
(Dimensions are at right angles to abutment)

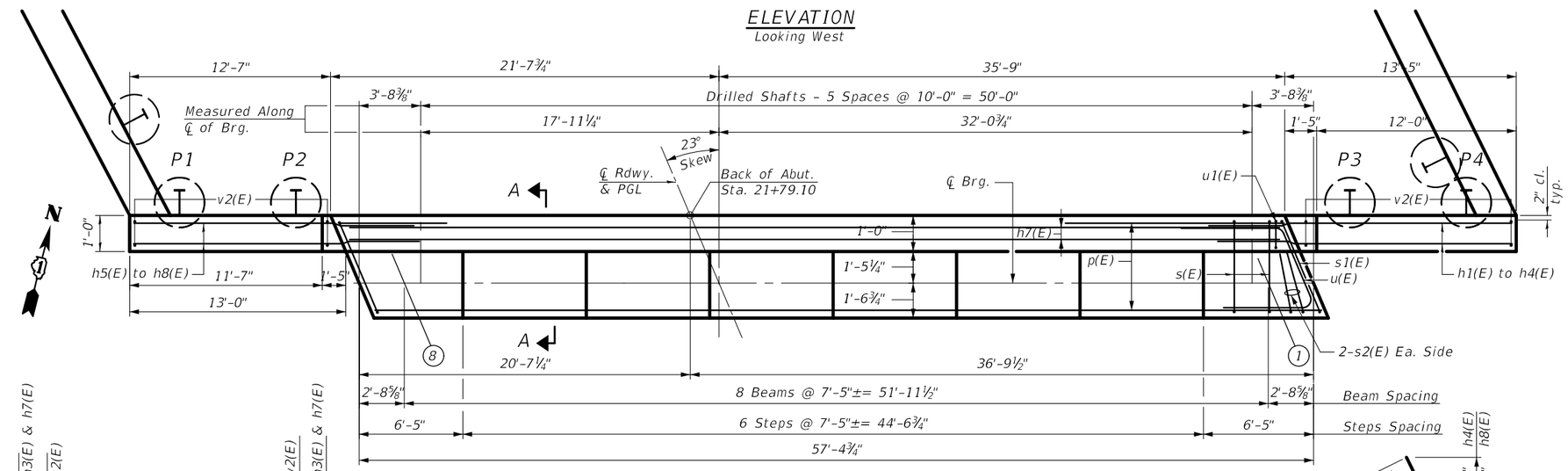

PLAN

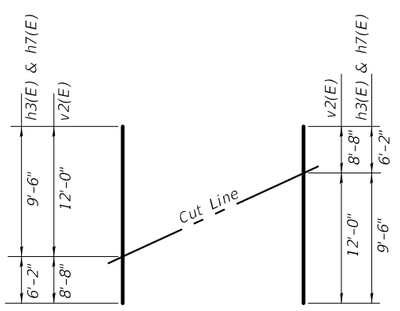

FIELD CUTTING DIAGRAM
Order v2(E) bars full length. Cut as shown and use remainder of bars in opposite wing.

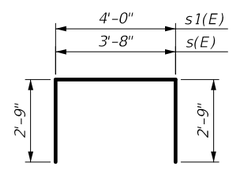

BARS s(E), s1(E)

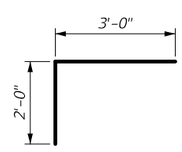

BAR s2(E)

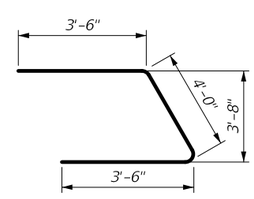

BAR u(E)

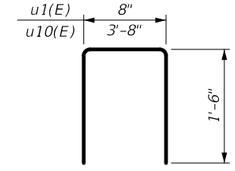

BAR u1(E) & u10(E)

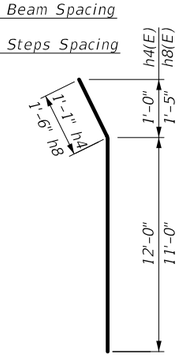

BARS h4(E) & h8(E)

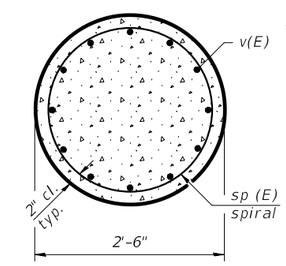

SECTION B-B

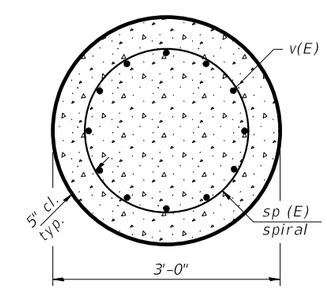

SECTION C-C

BILL OF MATERIAL

Bar	No.	Size	Length	Shape
h(E)	32	#5	29'-11"	
h1(E)	24	#5	15'-7"	
h2(E)	4	#5	12'-7"	
h3(E)	2	#5	6'-4"	
h4(E)	2	#5	13'-1"	
h5(E)	24	#5	14'-7"	
h6(E)	4	#5	12'-7"	
h7(E)	2	#5	6'-4"	
h8(E)	2	#5	13'-1"	
h9(E)	4	#4	29'-8"	
h100(E)	8	#5	14'-4"	
p(E)	4	#7	57'-0"	
s(E)	57	#5	9'-2"	
s1(E)	2	#5	9'-6"	
s2(E)	4	#5	5'-0"	
u(E)	18	#5	11'-0"	
u1(E)	57	#4	3'-8"	
u10(E)	16	#4	6'-8"	
v(E)	72	#8	20'-3"	
v1(E)	116	#5	8'-0"	
v2(E)	28	#5	20'-8"	
sp(E)	6	#5	18'-6"	
Structure Excavation			Cu. Yd.	40
Concrete Structures			Cu. Yd.	90.3
Reinforcement Bars, Epoxy Coated			Pound	10,900

CHRISTOPHER B. BURKE ENGINEERING, LTD.
16221 W. 159th Street, Suite 201
Lockport, Illinois 60441
(815) 770-2850

USER NAME = aschaefer	DESIGNED - MM	REVISED -
	DRAWN - PDR	REVISED -
PLOT SCALE = 2'	CHECKED - MM	REVISED -
PLOT DATE = 11/2/2025	DATE - 03/24/2021	REVISED -

STATE OF ILLINOIS
DEPARTMENT OF TRANSPORTATION

SEIL ROAD WIDENING
WEST ABUTMENT

SCALE: NTS | SHEET S-22 OF S-32 SHEETS | STA. 21+50.18 TO STA. 24+10.72

F.A.U. RTE.	SECTION	COUNTY	TOTAL SHEETS	SHEET NO.
0403	21-00047-00-WR	WILL	149	109
			61M01	
	ILLINOIS	FED. AID PROJECT	P-91-020-19	

FILE NAME: N:\Shared\cad\070001\070001D\2021\021103\Struct\22-070001-02-103-West-Abutment.sht

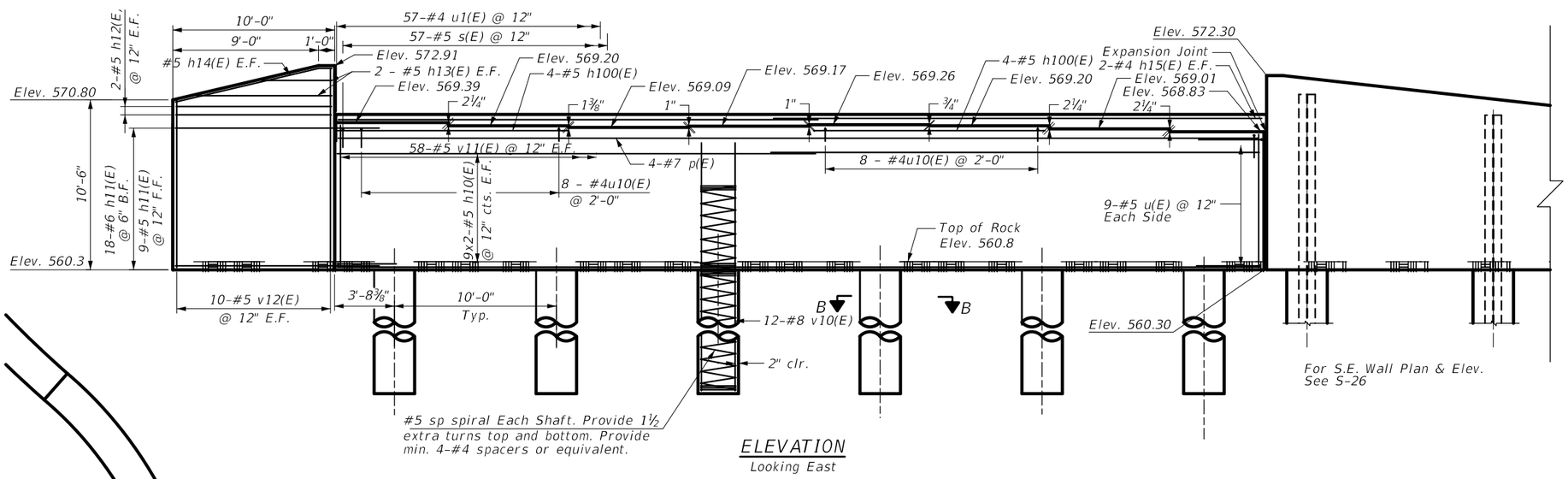

ELEVATION
Looking East

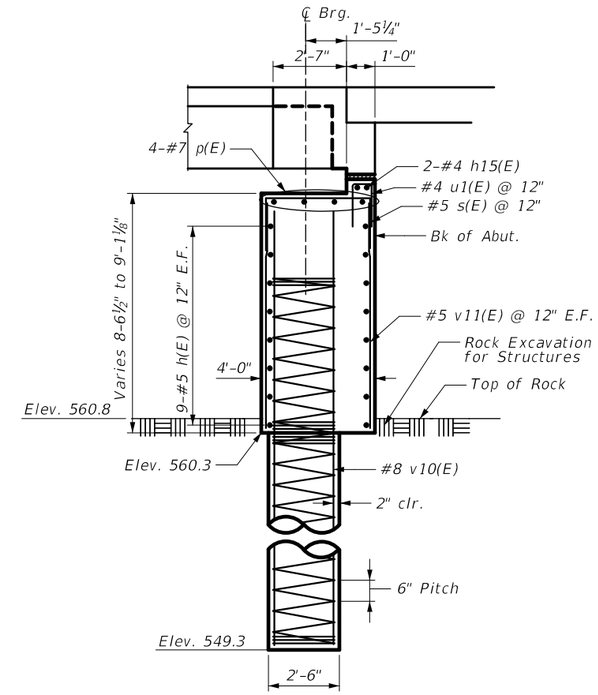

SECTION A-A
(Dimensions are at right angles to abutment)

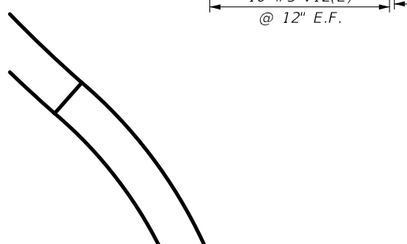

FIELD CUTTING DIAGRAM
Order v12(E) bars full length. Cut as shown and use remainder of bars in opposite face.

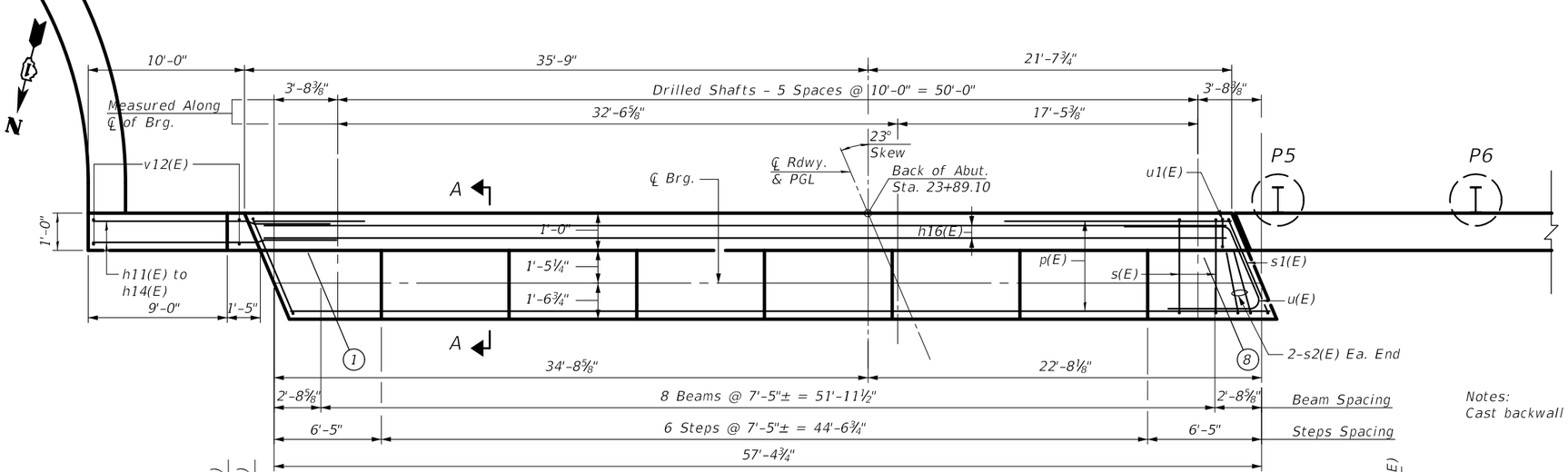

PLAN

Notes:
Cast backwall after beams have been erected.

BILL OF MATERIAL

Bar	No.	Size	Length	Shape
h10(E)	36	#5	29'-11"	
h11(E)	27	#5	12'-7"	
h12(E)	4	#5	9'-8"	
h13(E)	2	#5	10'-0"	
h14(E)	2	#5	10'-1"	
h15(E)	2	#4	29'-8"	
h100(E)	8	#5	14'-4"	
p(E)	4	#7	57'-0"	
s(E)	57	#5	9'-2"	
s1(E)	2	#5	9'-6"	
s2(E)	4	#5	5'-0"	
u(E)	18	#5	11'-0"	
u1(E)	57	#4	3'-8"	
u10(E)	16	#4	6'-8"	
v10(E)	72	#8	18'-6"	
v11(E)	116	#5	8'-3"	
v12(E)	10	#5	22'-5"	
sp_1 (E)	6	#5	17'-0"	
Concrete Structures			Cu. Yd.	86.9
Reinforcement Bars, Epoxy Coated			Pound	9,590
Rock Excavtion for Structures			Cu. Yd.	3

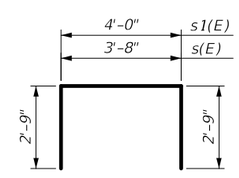

BARS s(E) & s1(E)

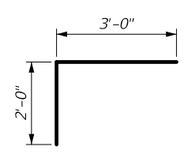

BAR s2(E)

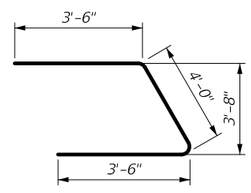

BAR u(E)

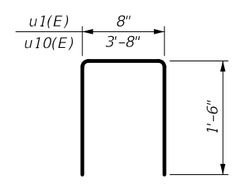

BAR u1(E) & u10(E)

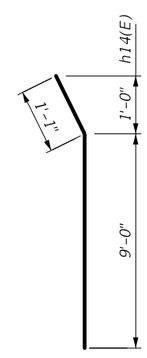

BARS h14(E)

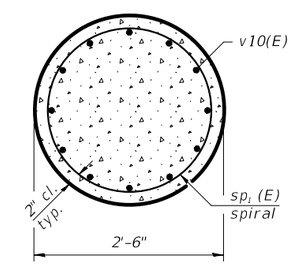

SECTION B-B

CHRISTOPHER B. BURKE ENGINEERING, LTD.
16221 W. 159th Street, Suite 201
Lockport, Illinois 60441
(815) 770-2850

USER NAME = aschaefer	DESIGNED - MM	REVISED -
	DRAWN - PDR	REVISED -
PLOT SCALE = 2'	CHECKED - MM	REVISED -
PLOT DATE = 11/2/2025	DATE - 03/24/2021	REVISED -

STATE OF ILLINOIS
DEPARTMENT OF TRANSPORTATION

SEIL ROAD WIDENING
EAST ABUTMENT

SCALE: NTS | SHEET S-23 OF S-32 SHEETS | STA. 21+50.18 TO STA. 24+10.72

F.A.U. RTE.	SECTION	COUNTY	TOTAL SHEETS	SHEET NO.
0403	21-00047-00-WR	WILL	149	110

61M01

ILLINOIS | FED. AID PROJECT | P-91-020-19

FILE NAME: N:\Shareware\070001\070001D\2021\02103\Struct\23-070001-02103-East-Abutment.sht

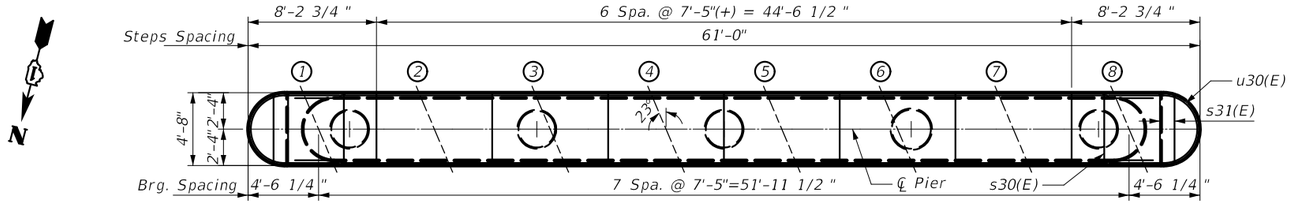

TOP PLAN

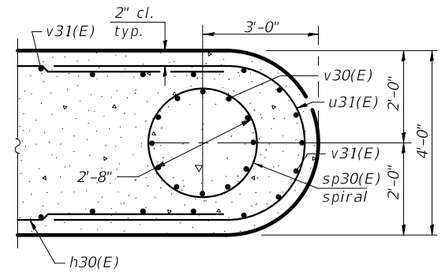

SECTION B-B

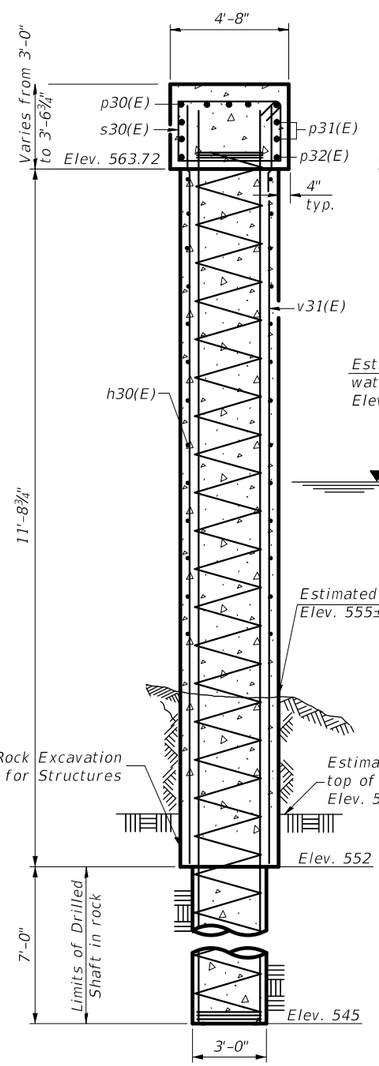

SECTION A-A

Cast steps monolithically with cap.
Space cap reinforcement to miss anchor bolts.
Minimum lap for spirals = 4'-3"
** Length is height of spiral.

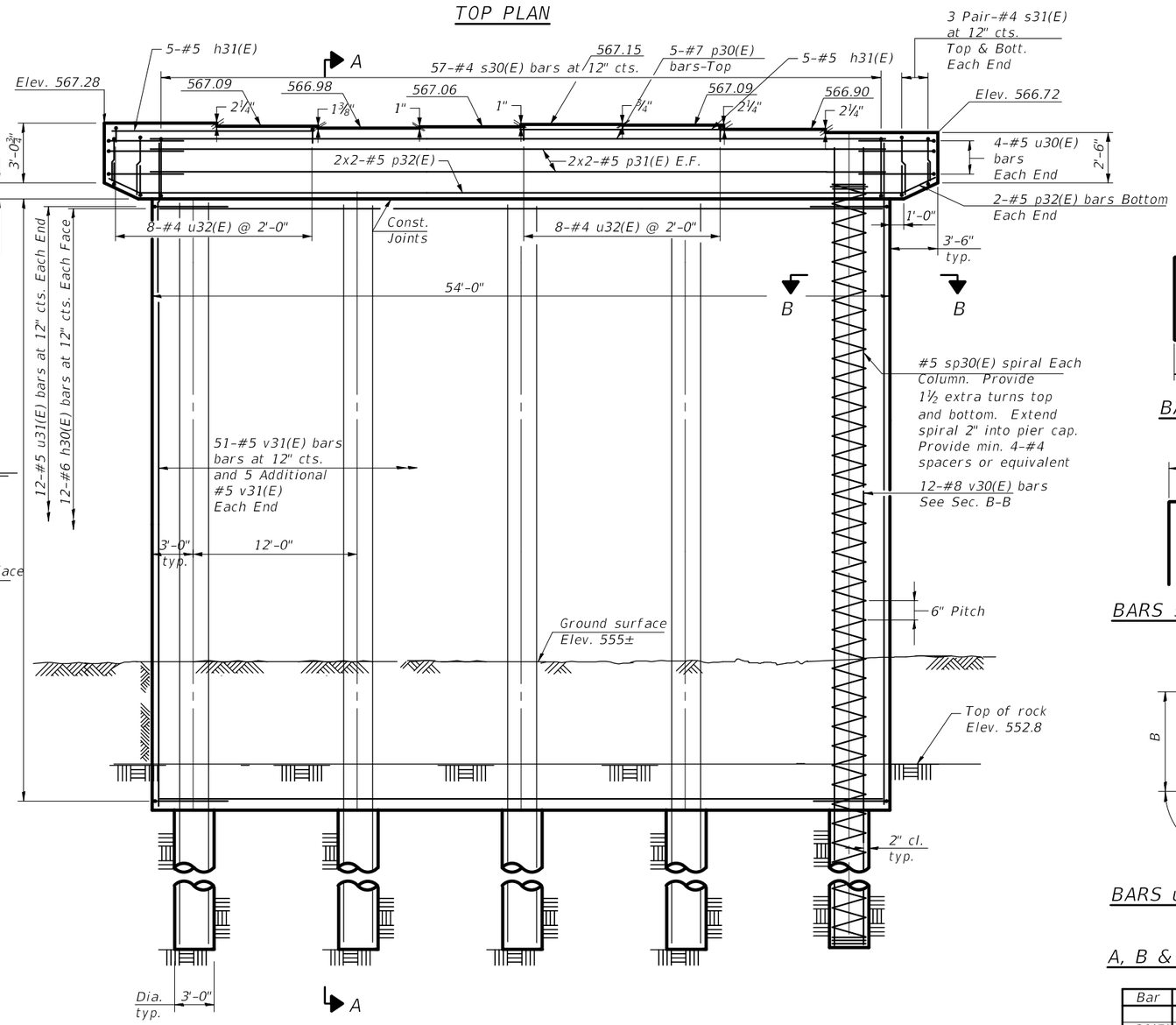

ELEVATION
(Looking East)

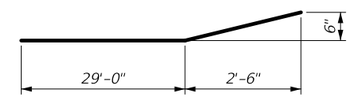

BAR p32(E)

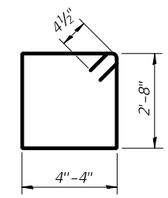

BAR s30(E)

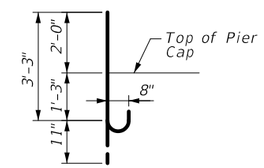

BAR v35(E)
See Sheet S-11

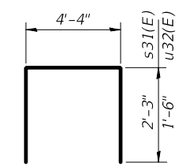

BARS s31(E) & u32(E)

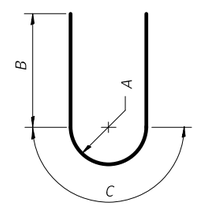

BARS u30(E) or u31(E)

BILL OF MATERIAL

Bar	No.	Size	Length	Shape
h30(E)	24	#6	49'-8"	
h31(E)	10	#5	14'-4"	
p30(E)	5	#7	57'-0"	
p31(E)	8	#5	29'-6"	
p32(E)	4	#5	31'-7"	
s30(E)	57	#4	14'-9"	
s31(E)	12	#4	8'-10"	
u30(E)	8	#5	13'-10"	
u31(E)	24	#5	12'-9"	
u32(E)	16	#4	7'-4"	
v30(E)	60	#8	21'-0"	
v31(E)	112	#5	14'-0"	
V35(E)	44	#8	04'-2"	
** sp30(E)	5	#5	19'-6"	
Concrete Structures			Cu. Yd.	128.0
Reinforcement Bars, Epoxy Coated			Pound	11,370
Drilled Shaft in Rock			Cu. Yd.	9.2
Rock Excavation for Structures			Cu. Yd.	6

A, B & C DIMENSIONS

Bar	A	B	C
u30(E)	2'-2"	3'-6"	6'-10"
u31(E)	1'-10"	3'-6"	5'-9"

CHRISTOPHER B. BURKE ENGINEERING, LTD.
16221 W. 159th Street, Suite 201
Lockport, Illinois 60441
(815) 770-2850

USER NAME = aschaefer	DESIGNED - MM	REVISED -	
	DRAWN - PDR	REVISED -	
PLOT SCALE = 2'	CHECKED - MM	REVISED -	
PLOT DATE = 11/2/2025	DATE - 03/24/2021	REVISED -	

STATE OF ILLINOIS
DEPARTMENT OF TRANSPORTATION

SEIL ROAD WIDENING
PIER 1 DETAILS

SCALE: NTS | SHEET S-24 OF S-32 SHEETS | STA. 21+50.18 TO STA. 24+10.72

F.A.U. RTE.	SECTION	COUNTY	TOTAL SHEETS	SHEET NO.
0HEB	21-00047-00-WR	WILL	149	111
			61M01	
	ILLINOIS	FED. AID PROJECT	P-91-020-19	

FILE NAME: N:\Shorewood\070001\070001D\2021\02103\Struct\24-070001-02103-Pier-Detail-01.sht

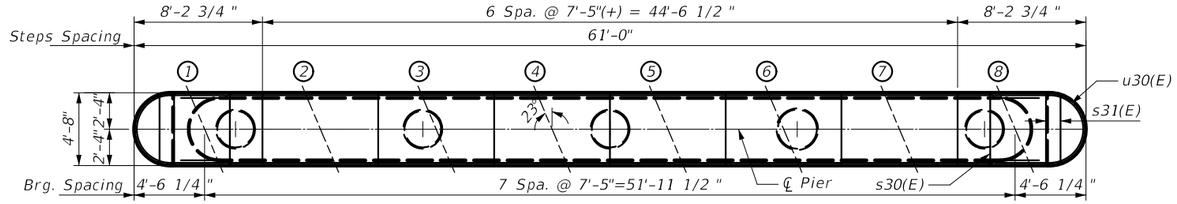

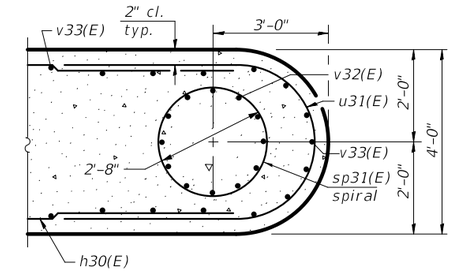

SECTION B-B

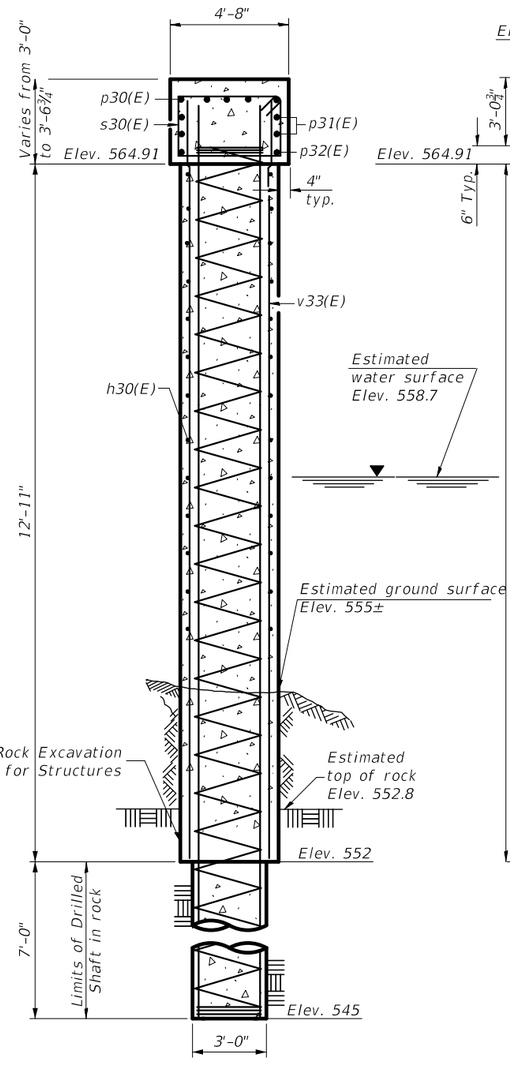

SECTION A-A

Cast steps monolithically with cap.
Space cap reinforcement to miss anchor bolts.
Minimum lap for spirals = 4'-3"
** Length is height of spiral.

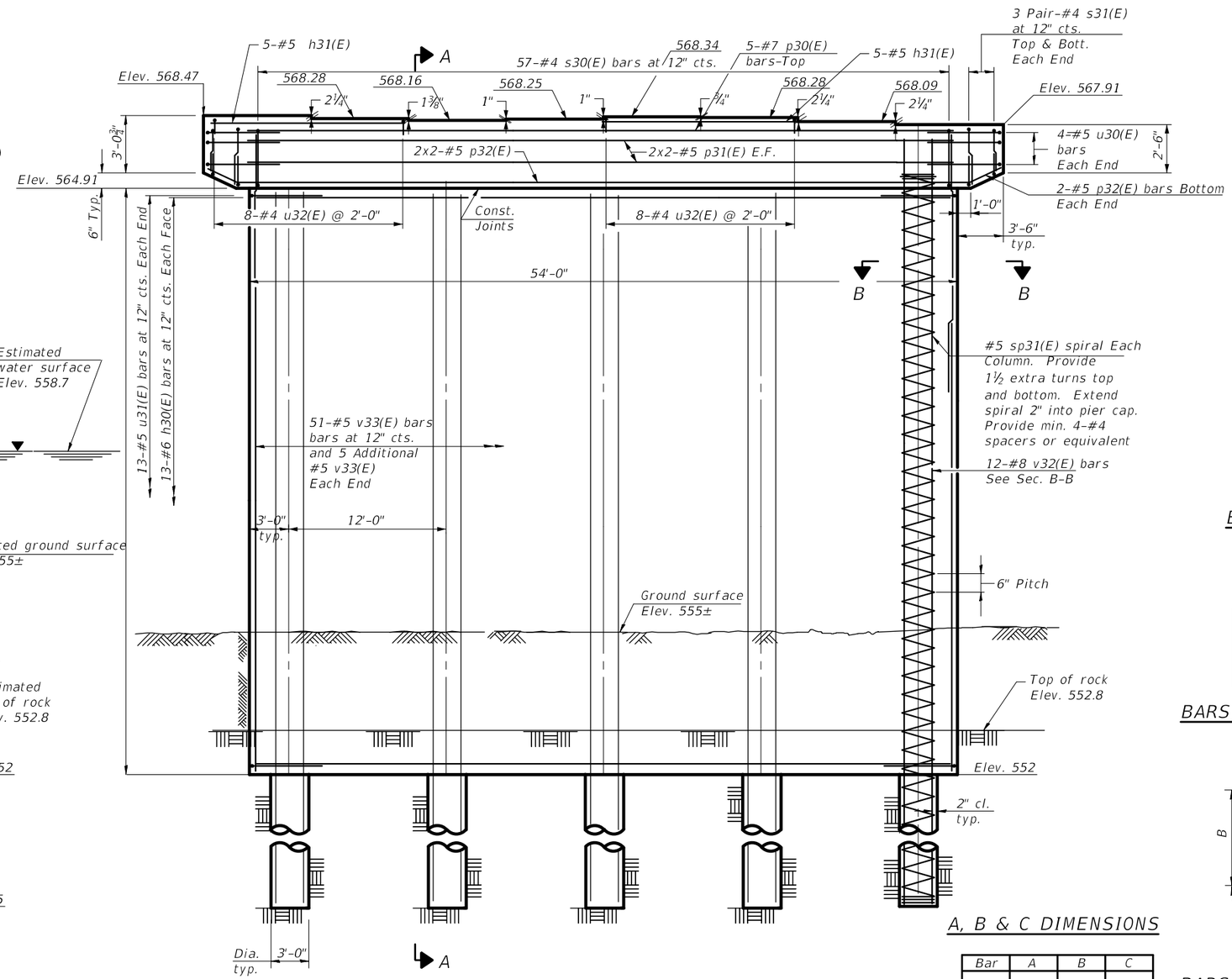

ELEVATION
(Looking East)

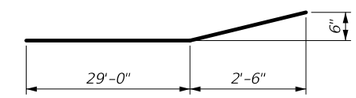

BAR p32(E)

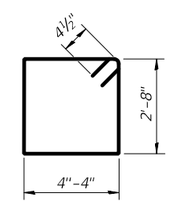

BAR s30(E)

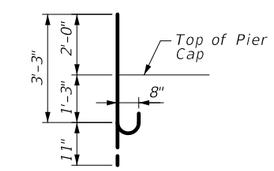

BAR v35(E)
See Sheet S-11

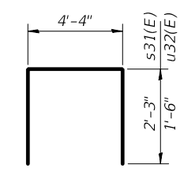

BARS s31(E) & u32(E)

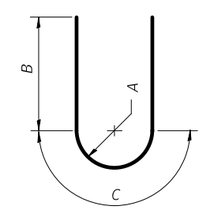

BARS u30(E) or u31(E)

A, B & C DIMENSIONS

Bar	A	B	C
u30(E)	2'-2"	3'-6"	6'-10"
u31(E)	1'-10"	3'-6"	5'-9"

BILL OF MATERIAL

	Bar	No.	Size	Length	Shape
	h30(E)	26	#6	49'-8"	
	h31(E)	10	#5	14'-4"	
	p30(E)	5	#7	57'-0"	
	p31(E)	8	#5	29'-6"	
	p32(E)	4	#5	31'-7"	
	s30(E)	57	#4	14'-9"	
	s31(E)	12	#4	8'-6"	
	u30(E)	8	#5	13'-10"	
	u31(E)	26	#5	12'-9"	
	u32(E)	16	#4	7'-4"	
	v32(E)	60	#8	22'-31"	
	v33(E)	112	#5	15'-3"	
	V35(E)	44	#8	4'-2"	
**	sp30(E)	5	#5	20'-9"	
	Concrete Structures			Cu. Yd.	137.6
	Reinforcement Bars, Epoxy Coated			Pound	12,000
	Drilled Shaft in Rock			Cu. Yd.	9.2
	Rock Excavation for Structures			Cu. Yd.	6

CHRISTOPHER B. BURKE ENGINEERING, LTD.
16221 W. 159th Street, Suite 201
Lockport, Illinois 60441
(815) 770-2850

USER NAME = aschaefer	DESIGNED - MM	REVISED -
	DRAWN - PDR	REVISED -
PLOT SCALE = 2'	CHECKED - MM	REVISED -
PLOT DATE = 11/2/2025	DATE - 03/24/2021	REVISED -

STATE OF ILLINOIS
DEPARTMENT OF TRANSPORTATION

SEIL ROAD WIDENING
PIER 2 DETAILS

SCALE: NTS | SHEET S-25 OF S-32 SHEETS | STA. 21+50.18 TO STA. 24+10.72

F.A.U. RTE.	SECTION	COUNTY	TOTAL SHEETS	SHEET NO.
0403	21-00047-00-WR	WILL	149	112
			61M01	

ILLINOIS | FED. AID PROJECT | P-91-020-19

FILE NAME: N:\Shorewood\070001\070001D\2021\D21103\Struct\25-070001-02-TD-Pier-Detail-02.sht

PILE DATA TABLE

Pile Number	Pile Designation	Station	Offset	Ex. Ground Elevation at Pile	T/Wall Facing Elevation	B/Wall Facing Elevation	T/Pile Elevation	B/Pile & B/Shaft Elevation	No. of Shear Studs
P1	W18x71	21+66.19	28.43' RT	567.88	566.75	557.00	565.25	544.0	11
P2	W18x71	21+68.93	21.99' RT	567.59	568.72	557.00	567.22	544.0	13
P3	W18x71	21+93.70	36.37' LT	562.10	568.79	557.00	567.29	544.0	13
P4	W18x71	21+96.43	42.81' LT	562.20	566.84	557.00	565.34	544.0	11
P5	W18x71	23+80.38	22.52' RT	579.70	572.02	560.30	570.63	552.3	13
P6	W18x71	23+75.94	33.13' RT	570.33	570.74	560.30	569.34	552.3	12
P7	W18x71	23+71.49	43.73' RT	570.32	569.47	560.30	568.06	552.3	10
P8	W18x71	23+67.18	54.17' RT	570.02	568.30	560.30	566.80	552.3	9
P9	W18x71	23+68.24	62.38' RT	567.00	567.25	560.30	565.75	552.3	8
P10	W18x71	21+48.64	31.16' RT	567.77	566.00	557.00	564.50	546.0	10
P11	W18x71	21+60.60	30.15' RT	567.88	566.00	557.00	564.50	546.0	10
P12	W18x71	21+81.44	42.55' LT	562.33	566.00	557.00	564.50	546.0	10
P13	W18x71	21+93.42	43.23 LT	562.26	566.00	557.00	564.50	546.0	10

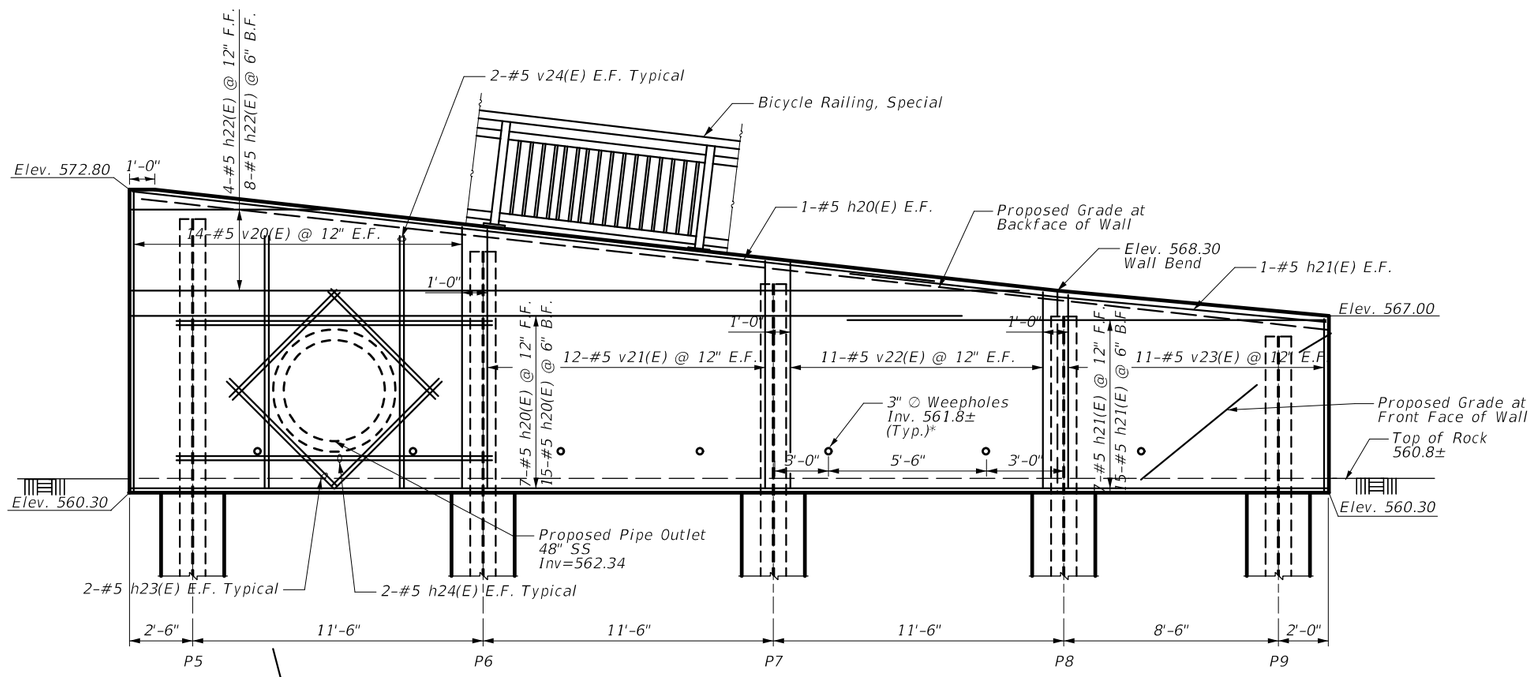

SOUTHEAST RETAINING WALL - ELEVATION

* Weepholes spacing is typical. Weepholes Shall Be Located Approximately 1'-0" Above Finished Grade at Front Face of Wall

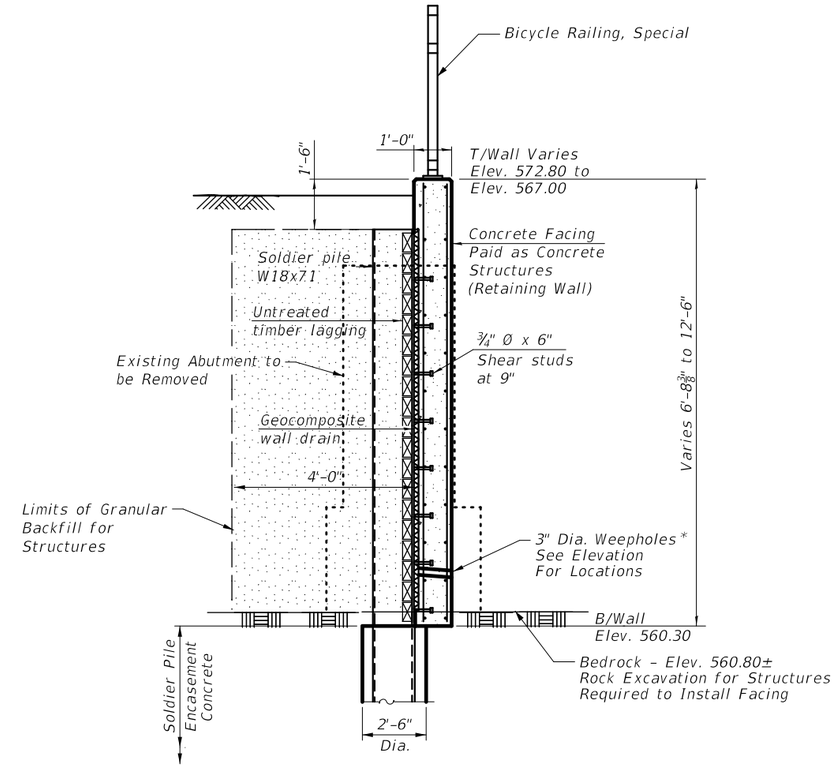

SOUTHEAST WINGWALL

* Cut Impervious Side of Geocomposite Wall Drain at Weepholes as Required to Ensure Flow

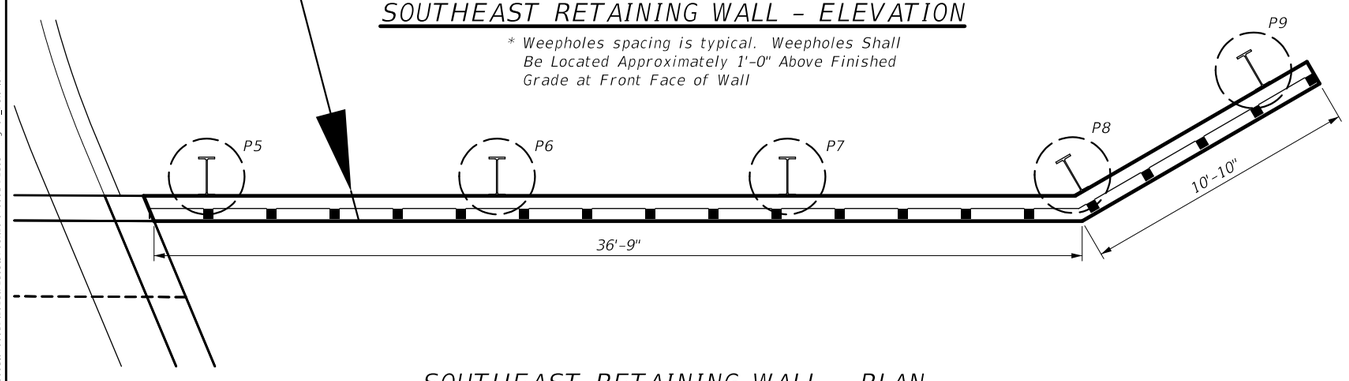

SOUTHEAST RETAINING WALL - PLAN

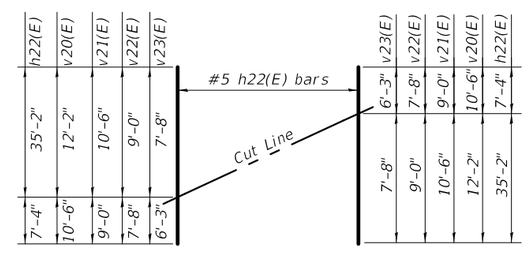

FIELD CUTTING DIAGRAM

Order bars full length. Cut as shown and use remainder of bars in opposite end.

BILL OF MATERIAL

Bar	No.	Size	Length	Shape
h20(E)	24	#5	25'-0"	
h21(E)	24	#5	24'-0"	
h22(E)	12	#5	42'-6"	
h23(E)	16	#5	6'-0"	
h24(E)	8	#5	12'-6"	
v20(E)	14	#5	22'-8"	
v21(E)	12	#5	19'-6"	
v22(E)	11	#5	16'-8"	
v23(E)	11	#5	13'-1"	
v24(E)	8	#5	10'-0"	
Concrete Structures (Retaining Wall)			Cu. Yd.	19.1
Reinforcement Bars, Epoxy Coated			Pound	2,960
Rock Excavtion for Structures			Cu. Yd.	0.9

CHRISTOPHER B. BURKE ENGINEERING, LTD.
16221 W. 159th Street, Suite 201
Lockport, Illinois 60441
(815) 770-2850

USER NAME = aschaefer	DESIGNED - MM	REVISED -	
	DRAWN - PDR	REVISED -	
PLOT SCALE = 2'	CHECKED - MM	REVISED -	
PLOT DATE = 11/2/2025	DATE - 03/24/2021	REVISED -	

STATE OF ILLINOIS
DEPARTMENT OF TRANSPORTATION

SEIL ROAD WIDENING
PILE DATA TABLE AND SOUTHEAST WALL

SCALE: NTS | SHEET S-26 OF S-32 SHEETS | STA. 21+50.18 TO STA. 24+10.72

F.A.U. RTE.	SECTION	COUNTY	TOTAL SHEETS	SHEET NO.
0403	21-00047-00-WR	WILL	149	113
		61M01		
	ILLINOIS	FED. AID PROJECT	P-91-020-19	

FILE NAME: N:\Shorewood\070001\070001D\2021\02103\Struct\26-070001-02103-Wingwall_Detail.dgn

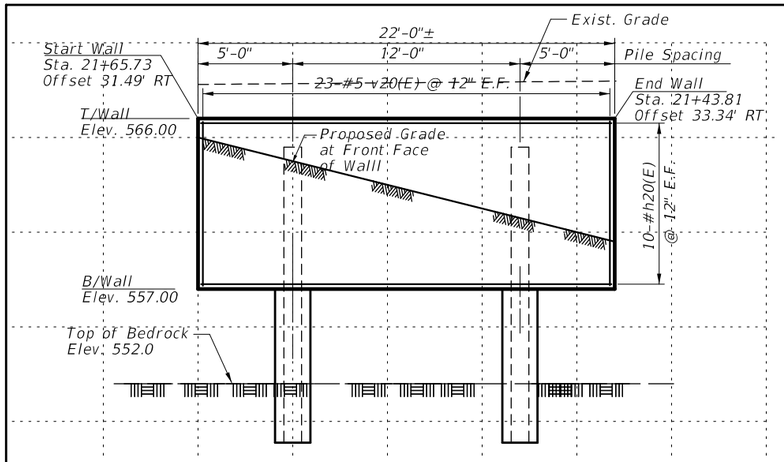

ELEVATION - SOUTHWEST RETAINING WALL

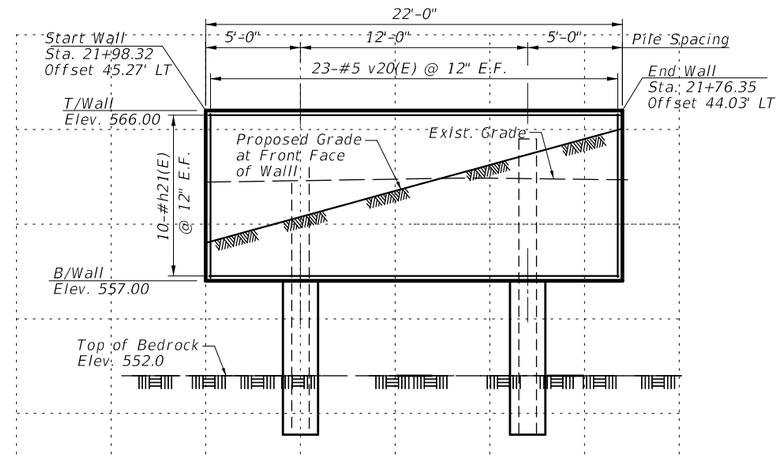

ELEVATION - NORTHWEST RETAINING WALL

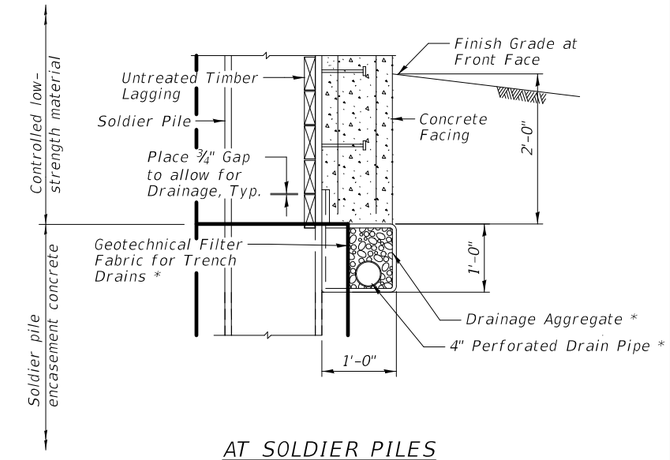

AT SOLDIER PILES

* Included in the Cost of Pipe Underdrains for Structures

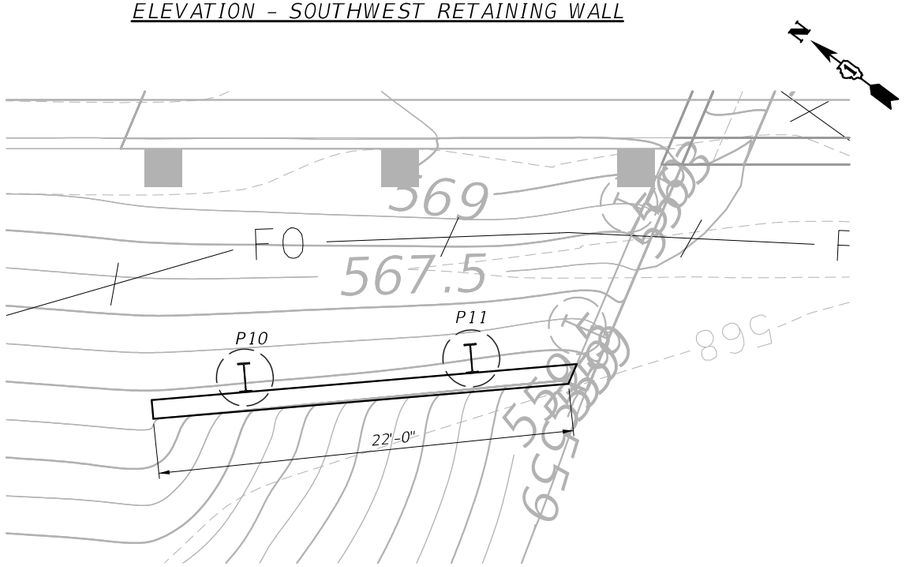

PLAN - SOUTHWEST RETAINING WALL

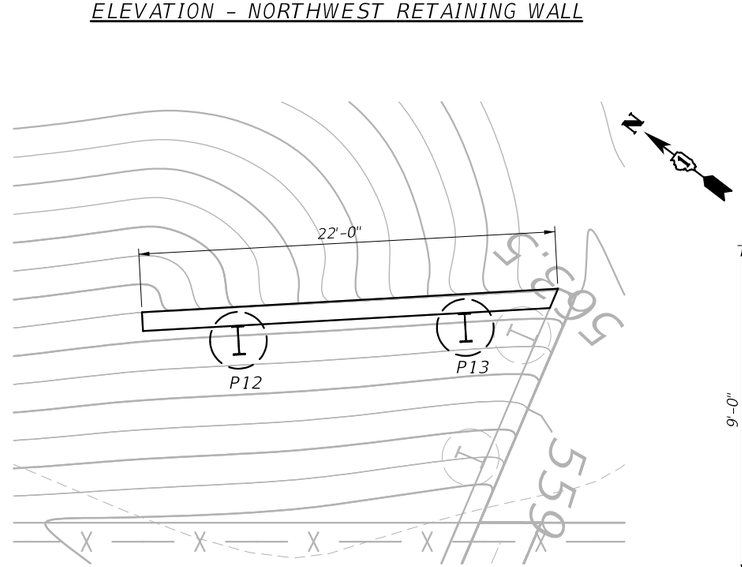

PLAN - NORTHWEST RETAINING WALL

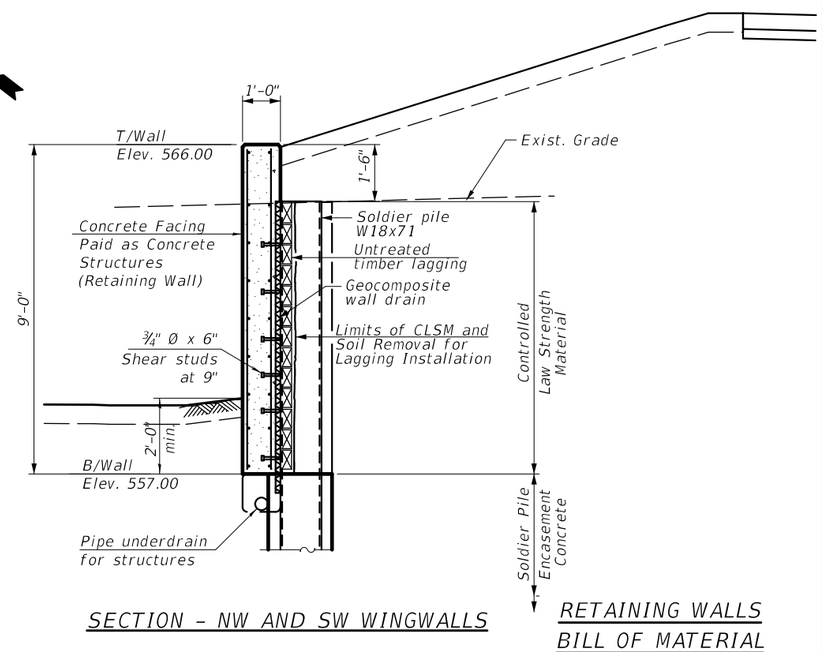

SECTION - NW AND SW WINGWALLS

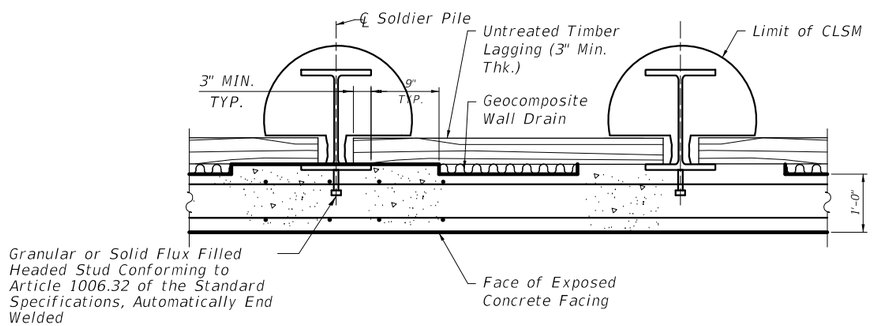

SECTION THRU DRILLED SOLDIER PILE WALL

RETAINING WALLS BILL OF MATERIAL

Bar	No.	Size	Length	Shape
h20(E)	20	#5	21'-8"	
h21(E)	20	#5	21'-8"	
v20(E)	92	#5	8'-8"	
Reinforcement Bars, Epoxy Coated			Lbs.	1,740
Concrete Structures (Retaining Wall)			Cu. Yds.	14.6

CHRISTOPHER B. BURKE ENGINEERING, LTD.
16221 W. 159th Street, Suite 201
Lockport, Illinois 60441
(815) 770-2850

USER NAME = aschaefer	DESIGNED - MM	REVISED -
	DRAWN - PDR	REVISED -
PLOT SCALE = 8'	CHECKED - MM	REVISED -
PLOT DATE = 11/2/2025	DATE - 03/24/2021	REVISED -

STATE OF ILLINOIS
DEPARTMENT OF TRANSPORTATION

SEIL ROAD WIDENING
NORTHWEST AND SOUTHWEST WALLS

SCALE: NTS | SHEET S-27 OF S-32 SHEETS | STA. 21+50.18 TO STA. 24+10.72

F.A.U. RTE.	SECTION	COUNTY	TOTAL SHEETS	SHEET NO.
0403	21-00047-00-WR	WILL	149	114

61M01

ILLINOIS | FED. AID PROJECT | P-91-020-19

FILE NAME: N:\Shareware\070001\070001D\2021\02103\Struct\2-470001-02103-Rt4_NWallsH

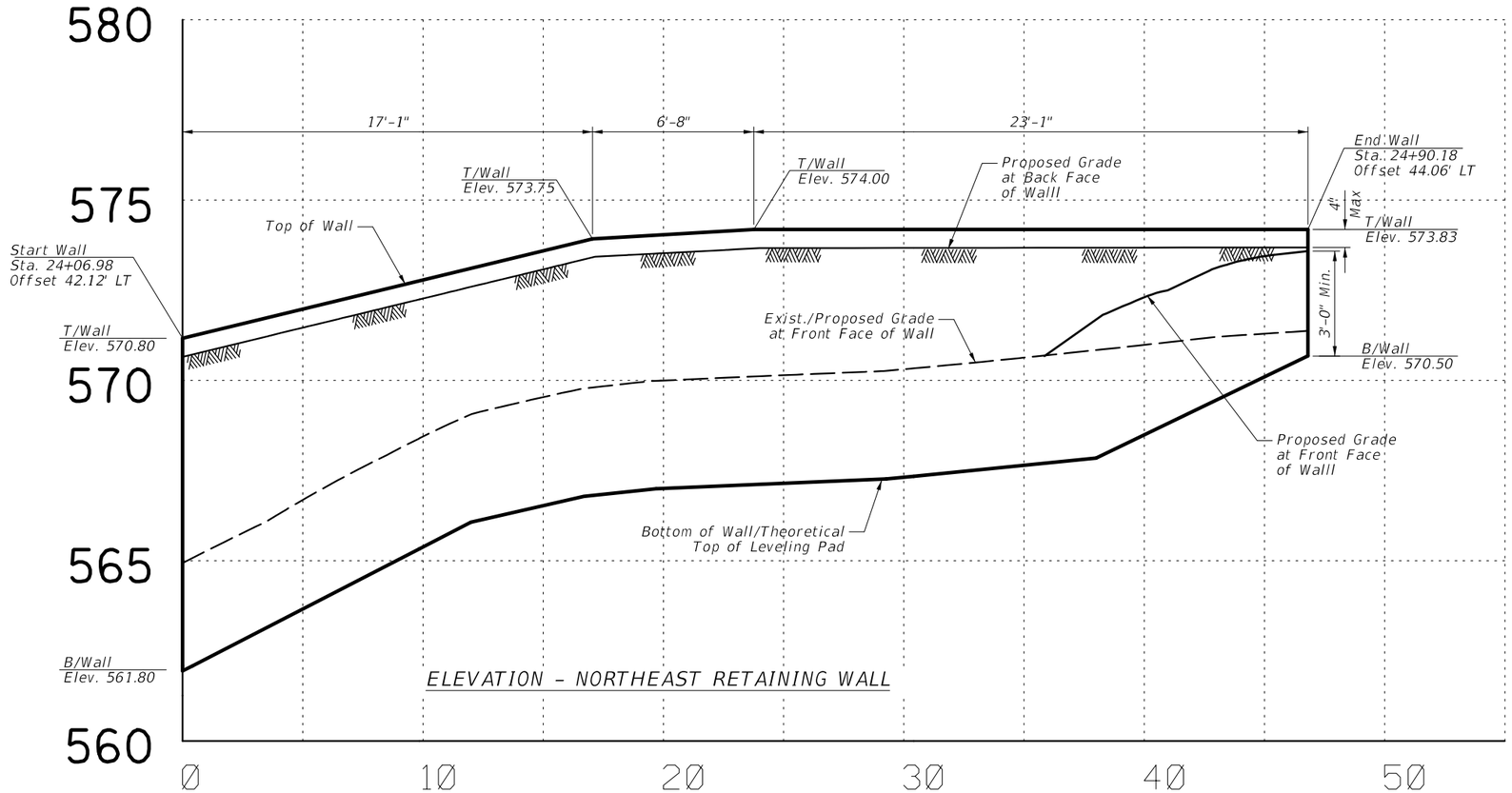

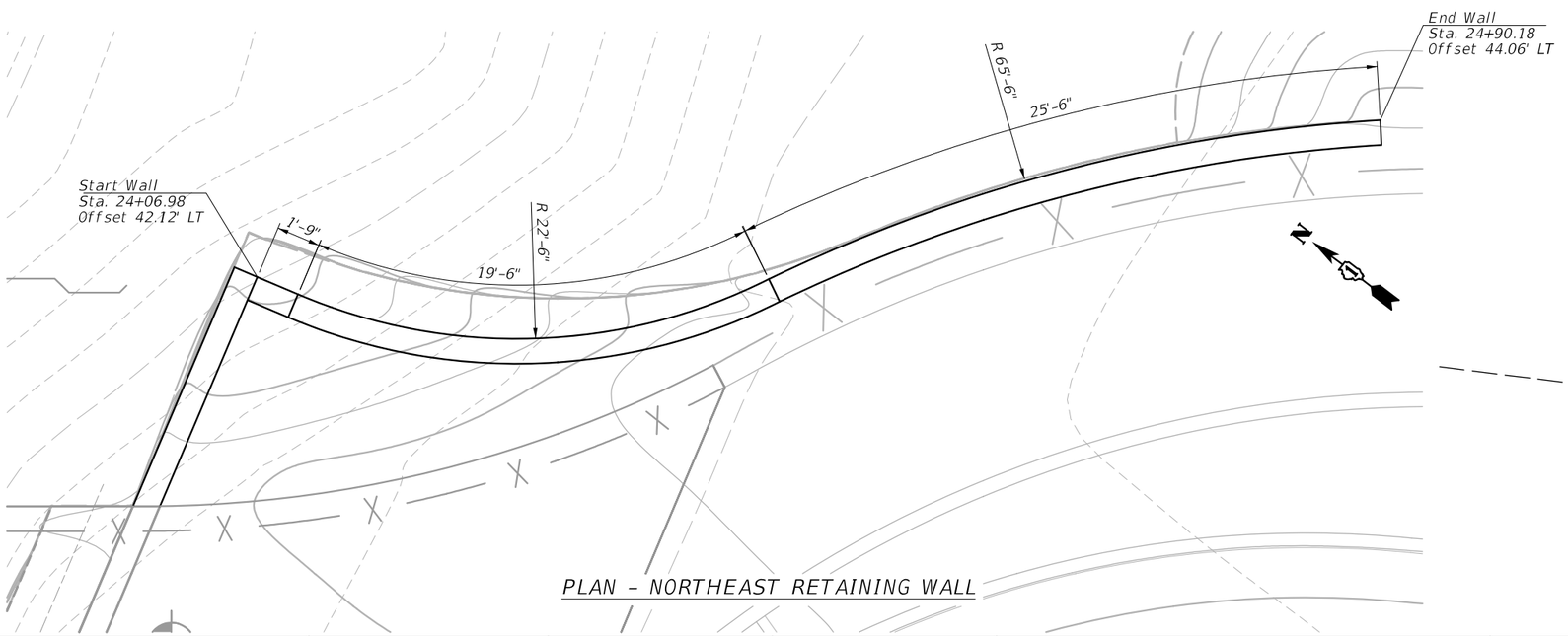

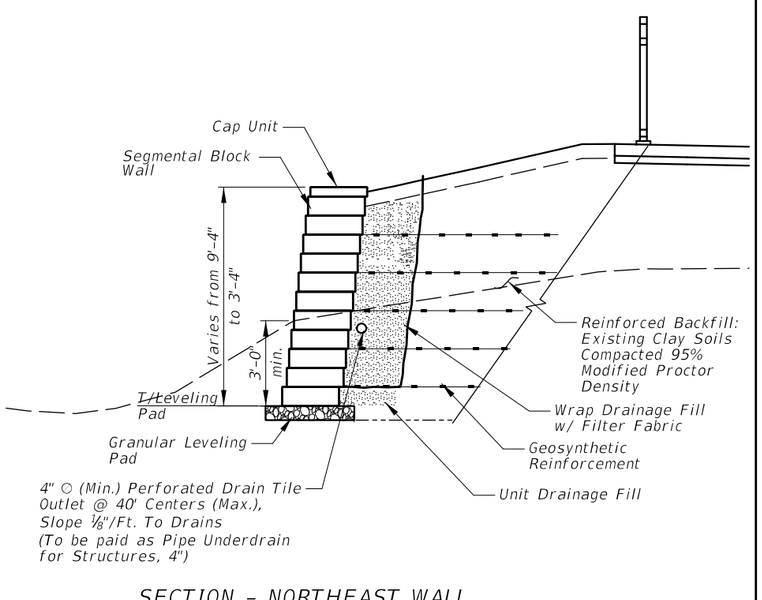

FILE NAME: N:\Shorewood\07000\107000\D\2021\D21D3\Struct\28-070001-42103-Ret_SWall.sht

CHRISTOPHER B. BURKE ENGINEERING, LTD.
16221 W. 159th Street, Suite 201
Lockport, Illinois 60441
(815) 770-2850

USER NAME = aschaefer	DESIGNED - MM	REVISED -
	DRAWN - PDR	REVISED -
PLOT SCALE = 6'	CHECKED - MM	REVISED -
PLOT DATE = 11/2/2025	DATE - 03/24/2021	REVISED -

STATE OF ILLINOIS
DEPARTMENT OF TRANSPORTATION

SEIL ROAD WIDENING
NORTHEAST WALL

SCALE: NTS | SHEET S-28 OF S-32 SHEETS | STA. 21+50.18 TO STA. 24+10.72

F.A.U. RTE.	SECTION	COUNTY	TOTAL SHEETS	SHEET NO.
0403	21-00047-00-WR	WILL	149	115
			61M01	
	ILLINOIS	FED. AID PROJECT	P-91-020-19	

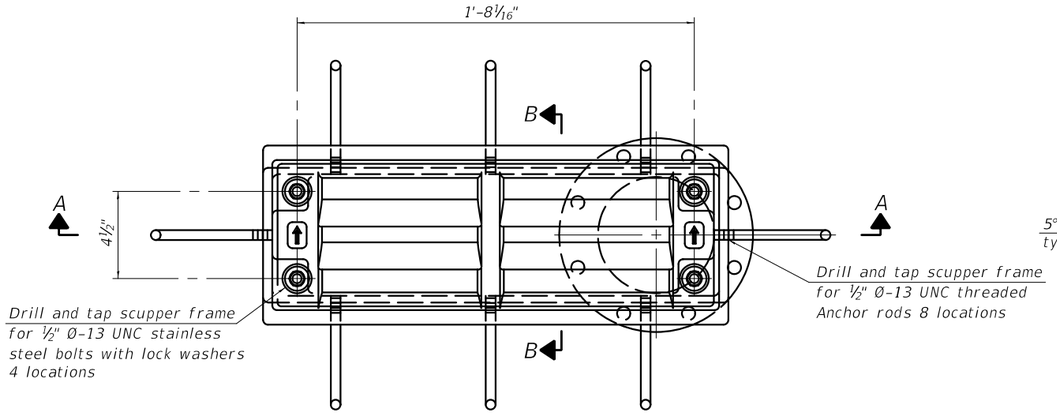

PLAN

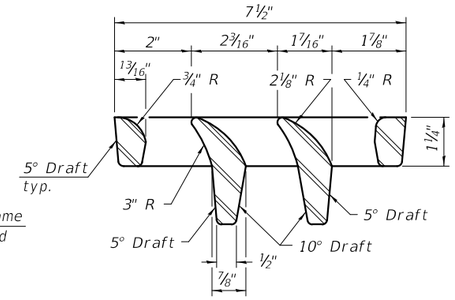

VANE GRATE DETAIL

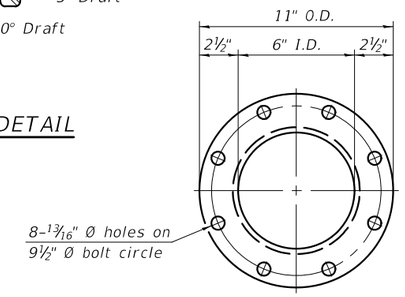

Notes:

All cast iron parts shall be gray iron conforming to the requirements of AASHTO M105, Class 35B and AASHTO M306.

Bolts, anchor rods, nuts and washers shall be according to ASTM A307 and shall be galvanized according to AASHTO M232. As an alternate stainless steel may be used.

Stainless steel hardware shall be according to Article 1006.29(d) of the Standard Specifications.

Structural steel weldments of equal sections and of the same configuration may be substituted for the cast iron scupper frames and downspouts; however, the scupper grates shall remain cast iron. Fillet or full penetration welds shall be used for the weldments. Details shall be submitted to the Engineer for approval.

Structural steel scupper frames and downspouts, when utilized, shall be galvanized according to AASHTO M111.

As an alternate, fiberglass may be used for downspouts according to ASTM D2996 with a short-time rupture strength hoop tensile stress of 30,000 psi min. in lieu of the cast iron or structural steel.

Exterior surfaces of downspouts and exterior exposed surfaces of the scupper frame below deck shall be treated as specified on sheet S-9 of S-32.

The Contractor shall take appropriate measures to assure that Protective Coat is not applied to the scupper.

Cost of the grate, frame, downspout, anchor rods, nuts and washers including complete installation of the scupper shall be paid for at the contract unit price for Drainage Scupper, DS-12.

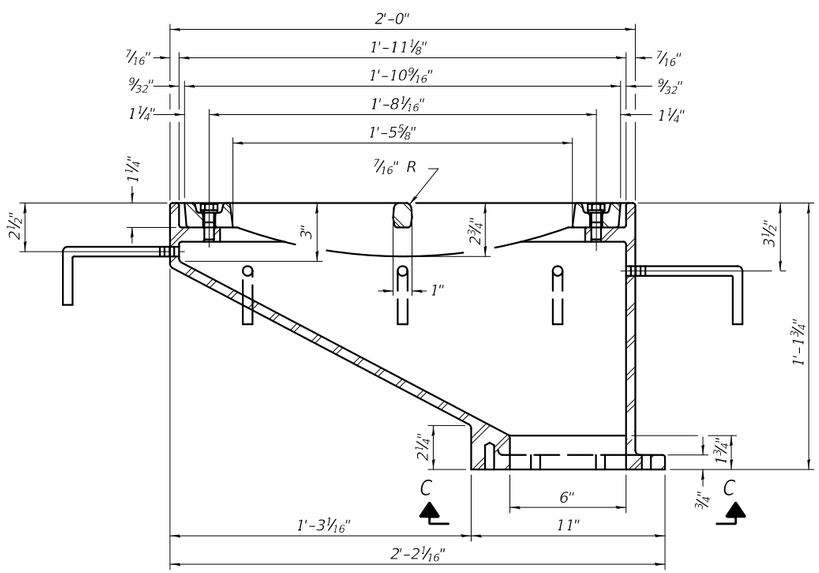

SECTION A-A

See sheet S-9 of S-32 for scupper location relative to parapet.

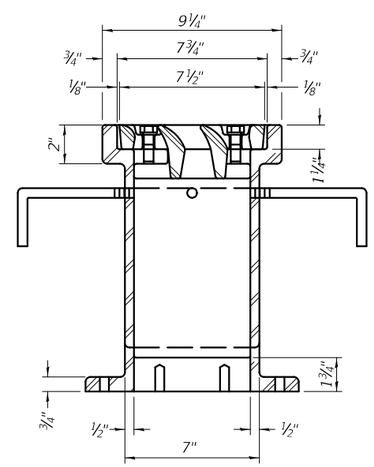

SECTION B-B

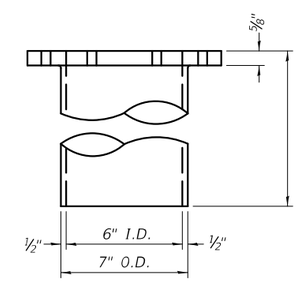

DOWNSPOUT

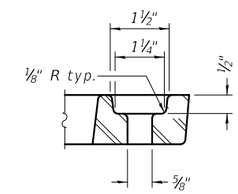

GRATE BOLT HOLE DETAIL

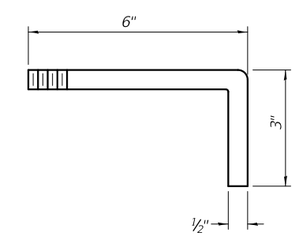

ANCHOR ROD DETAIL

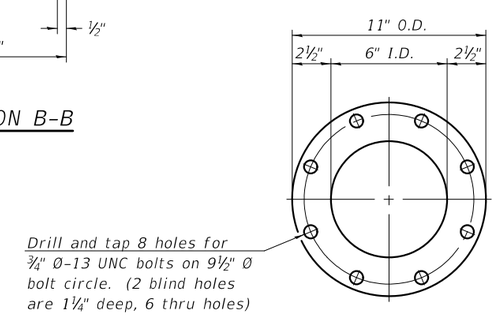

VIEW C-C

BILL OF MATERIAL

ITEM	UNIT	QUANTITY
Drainage Scupper, DS-12	Each	3

DS-12 1-1-2020

CHRISTOPHER B. BURKE ENGINEERING, LTD.
16221 W. 159th Street, Suite 201
Lockport, Illinois 60441
(815) 770-2850

USER NAME = aschaefer	DESIGNED - MM	REVISED -
	DRAWN - PDR	REVISED -
PLOT SCALE = 2'	CHECKED - MM	REVISED -
PLOT DATE = 11/2/2025	DATE - 03/24/2021	REVISED -

STATE OF ILLINOIS
DEPARTMENT OF TRANSPORTATION

SEIL ROAD WIDENING
DRAINAGE SCUPPER, DS-12

SCALE: NTS | SHEET S-29 OF S-32 SHEETS | STA. 21+50.18 TO STA. 24+10.72

F.A.U. RTE.	SECTION	COUNTY	TOTAL SHEETS	SHEET NO.
0403	21-00047-00-WR	WILL	149	116

61M01

ILLINOIS FED. AID PROJECT P-91-020-19

FILE NAME: N:\Shorewood\0700010\0700010\2021\021103\Struct\29-0700010-021103-Drainage Scupper-DS12.dgn

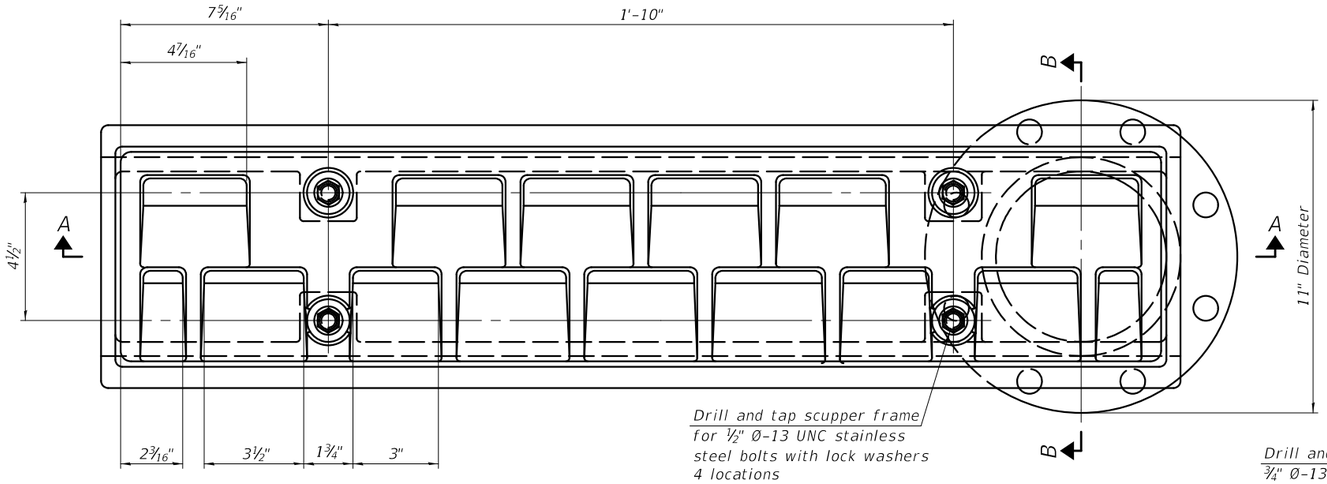

PLAN

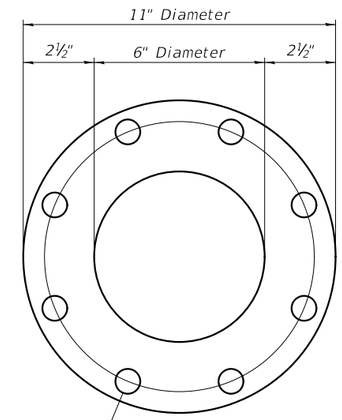

BOTTOM VIEW OF FLANGE ONLY

Notes:

All cast iron parts shall be gray iron conforming to the requirements of AASHTO M105, Class 35B and AASHTO M306.

Bolts, nuts and washers shall be according to ASTM A307 and shall be galvanized according to AASHTO M232. As an alternate stainless steel may be used.

Stainless steel hardware shall be according to Article 1006.29(d) of the Standard Specifications.

Structural steel weldments of equal sections and of the same configuration may be substituted for the cast iron scupper frames and downspouts; however, the scupper grates shall remain cast iron. Fillet or full penetration welds shall be used for the weldments. Details shall be submitted to the Engineer for approval.

Structural steel scupper frames and downspouts, when utilized, shall be galvanized according to AASHTO M111.

As an alternate, fiberglass may be used for downspouts according to ASTM D2996 with a short-time rupture strength hoop tensile stress of 30,000 psi min. in lieu of the cast iron or structural steel.

Exterior surfaces of downspouts and exterior exposed surfaces of the scupper frame below deck shall be treated as specified on sheet S-9 of S-32.

The Contractor shall take appropriate measures to assure that Protective Coat is not applied to the scupper.

Cost of the grate, frame, downspout, nuts and washers including complete installation of the scupper shall be paid for at the contract unit price for Drainage Scupper, DS-33.

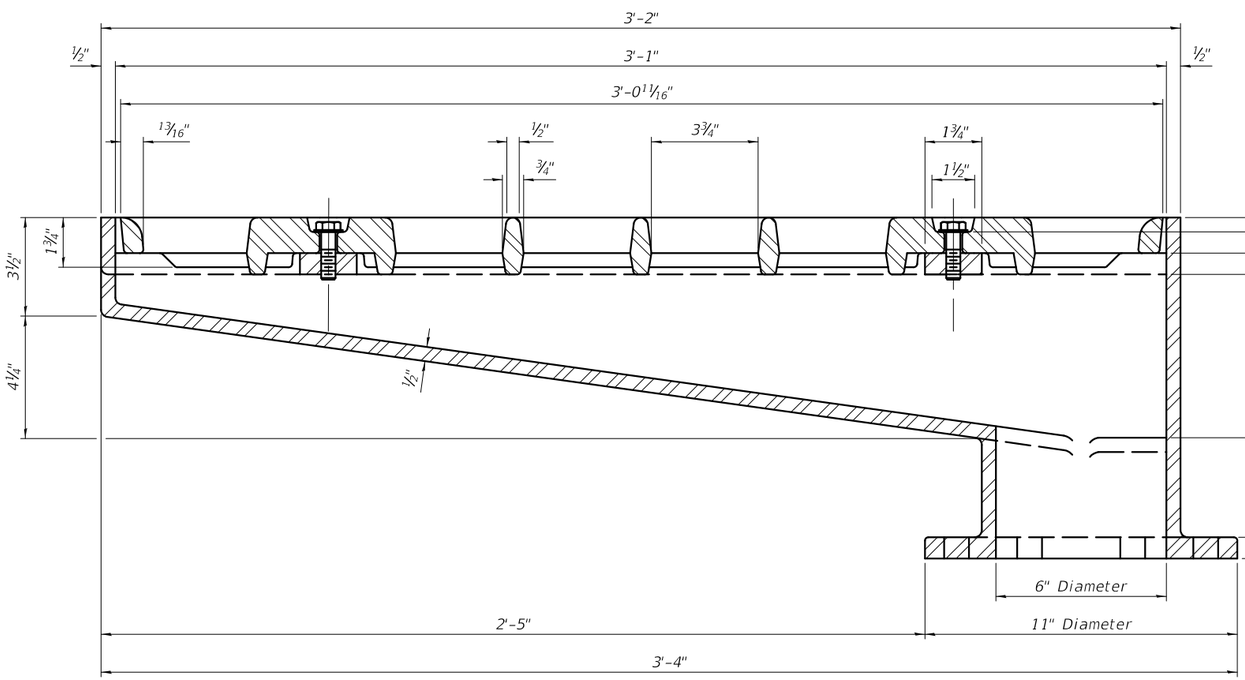

SECTION A-A

See sheet S-9 of S-32 for scupper location relative to parapet.

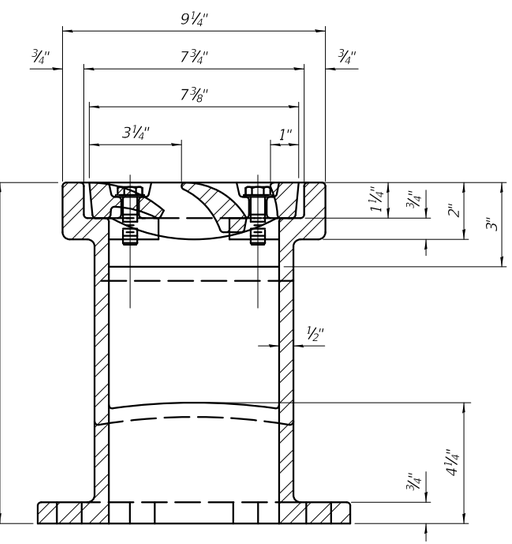

SECTION B-B

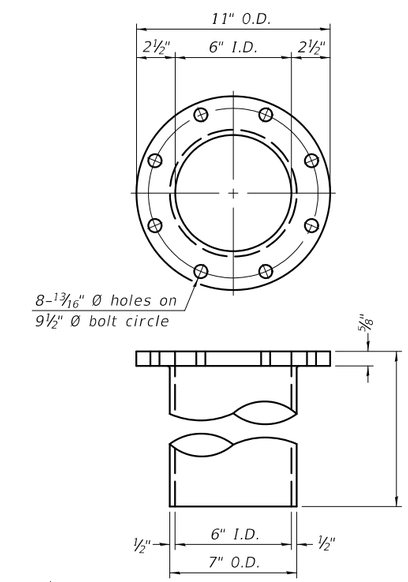

DOWNSPOUT

BILL OF MATERIAL

ITEM	UNIT	QUANTITY
Drainage Scupper, DS-33	Each	1

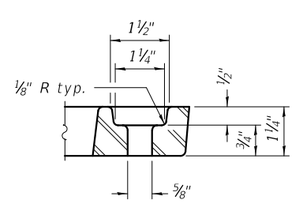

GRATE BOLT HOLE DETAIL

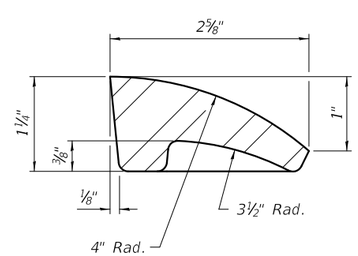

FIRST VANE DETAIL

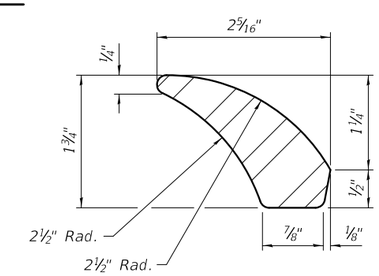

SECOND VANE DETAIL

CHRISTOPHER B. BURKE ENGINEERING, LTD.
16221 W. 159th Street, Suite 201
Lockport, Illinois 60441
(815) 770-2850

USER NAME = aschaefer	DESIGNED - MM	REVISED -	
	DRAWN - PDR	REVISED -	
PLOT SCALE = 2'	CHECKED - MM	REVISED -	
PLOT DATE = 11/2/2025	DATE - 03/24/2021	REVISED -	

STATE OF ILLINOIS
DEPARTMENT OF TRANSPORTATION

SEIL ROAD WIDENING
DRAINAGE SCUPPER, DS - 33M

SCALE: NTS | SHEET S-30 OF S-32 SHEETS | STA. 21+50.18 TO STA. 24+10.72

F.A.U. RTE.	SECTION	COUNTY	TOTAL SHEETS	SHEET NO.
0403	21-00047-00-WR	WILL	149	117
			61M01	
	ILLINOIS	FED. AID PROJECT	P-91-020-19	

FILE NAME: N:\Shorewood\0700010\0700010\2021\021\03\Struct\3b-070001-021103-Drainage Scupper-DS33.dgn

ILLINOIS DEPARTMENT OF TRANSPORTATION

SOIL BORING LOG

Page 1 Of 1

Date 6/23/21

ROUTE FAU Route 403 DESCRIPTION Proposed Seil Road Bridge over DuPage River Logged By DM

SECTION 21-00047-00-WR LOCATION Seil Road, Shorewood, Illinois SEC 16 TWP 35N RNG 9E PM 3rd

COUNTY WILL STRUCTURE NO. (Exist.) (Prop.)

Drilling Method AASHTO T 206-19 Hammer Type AUTOMATIC HAMMER

Boring No. B-1
Station 3801+92
Offset 24' LT
Ground Surface El. 561.80+/- M.S.L.

Surf. Wat. El.
Groundwater Elev.:
When Drilling 7'
at Completion 4'
After Hrs

Description	ELEV. (M.S.L.)	DEPTH (ft.)	SPT N (blows)	UCS Qu (TSF)	MOIST. (%)
FILL: 15" CLAY (TOPSOIL), Dark Brown (A-7-5)	560.6	1.0	4		
FILL: CLAY, Dark Brown, Trace Black, Trace Gravel, Contains Tan Limestone Fragments, Trace Roots, Very Stiff, Moist (A-6) (PID = 0.0 ppm)	558.3	2.0	6 8	2.25 P	16.1
ORGANIC SILT, Brown and Gray, Some Sand, Trace Gravel, Contains Shells, Loose to Very Loose, Wet (A-4) (PID = 0.0 ppm) (Atterberg Limits Test LL=33, PL=24, PI=9)	554.8	4.0	2 3 2		30.3
(PID = 0.0 ppm)	553.3	7.0	2 1		36.9
PEAT, Dark Gray, Contains Shells and Fibers, Soft, Wet (A-8) (PID = 0.0 ppm)	552.3	8.0	2	0.25 P	180.3
SANDY GRAVEL, Brown, Contains Tan Limestone Fragments, Very Dense, Saturated (A-1-b) (PID = 0.0 ppm)	550.8	9.0	14 27 50		
SHALEY LIMESTONE BEDROCK, Weathered (PID = 0.0 ppm)		11.0	50/0" refusal		

End of Boring @ 11.0 Feet

Note:
1. No Petroleum odors were observed in this boring utilizing olfactory senses and all the soil samples were screened with a MiniRae 3000 OVM photo-ionization detector (PID). All PIDS = 0.0 pm.

2. Weathered bedrock was encountered at approximately 9.5 feet b.e.g.l. and solid bedrock was encountered at approximately 11 feet b.e.g.l. where total auger and total split spoon refusal was encountered. This bedrock was then cored to a depth of 26 feet b.e.g.l. (see Rock Core Log).

3. Sample 1 was discretely chosen to be environmentally chemically tested for pH by an independent environmental laboratory.

N=Standard Penetration Test-Blows per six inches to drive 2" O.D. (QU)B=Bulge S=Shear P=Penetrometer Test
Split Spoon Sampler 18" with 140lb hammer falling 30"
3.25" Diameter Hollow Stem Augers used between Split Spoon Sample intervals unless noted otherwise.
ATV Drill Rig (Model CME-750) used.

SEECO Job No. 12735G

ILLINOIS DEPARTMENT OF TRANSPORTATION

SOIL BORING LOG

Page 1 Of 1

Date 6/23/21

ROUTE FAU Route 403 DESCRIPTION Proposed Seil Road Bridge over DuPage River Logged By DM

SECTION 21-00047-00-WR LOCATION Seil Road, Shorewood, Illinois SEC 16 TWP 35N RNG 9E PM 3rd

COUNTY WILL STRUCTURE NO. (Exist.) (Prop.)

Drilling Method AASHTO T 206-19 Hammer Type AUTOMATIC HAMMER

Boring No. B-2
Station 3802+04
Offset 16' RT
Ground Surface El. 562.80+/- M.S.L.

Surf. Wat. El.
Groundwater Elev.:
When Drilling 8'
at Completion 5'
After Hrs

Description	ELEV. (M.S.L.)	DEPTH (ft.)	SPT N (blows)	UCS Qu (TSF)	MOIST. (%)
FILL: 12" SANDY CLAY (TOPSOIL), Dark Brown, Some Gravel (A-7-5)	561.8	1.0			
FILL: SANDY CLAY, Dark Brown, Trace Gravel, Trace Shells, Trace Roots, Very Stiff, Moist (A-6) (PID = 0.0 ppm)	559.3	2.0	5 5 6	2.75 P	18.0
ORGANIC CLAY, Brown and Gray, Some Sand, Trace Gravel, Contains Shells, Medium to Stiff, Wet (A-7-6) (PID = 0.0 ppm)	555.8	4.0	2 3 2	0.50 P	37.5
(PID = 0.0 ppm)	554.3	7.0	2 2 7	1.25 P	36.0 14.6
SAND AND GRAVEL, Brown and Gray, Trace Clay, Medium Dense, Moist (A-1-b) (PID = 0.0 ppm)	553.3	9.0	9 21 50/1" refusal		
SAND AND GRAVEL, Brown, Contains Tan Limestone Fragments and Cobble Pieces, Dense, Saturated (A-1-b) (PID = 0.0 ppm)	552.8	10.0			
SHALEY LIMESTONE BEDROCK, Weathered (PID = 0.0 ppm)					

End of Boring @ 10.0 Feet

Note:
1. No Petroleum odors were observed in this boring utilizing olfactory senses and all the soil samples were screened with a MiniRae 3000 OVM photo-ionization detector (PID). All PIDS = 0.0 pm.

2. Weathered bedrock was encountered at approximately 9.5 feet b.e.g.l. and solid bedrock was encountered at approximately 10 feet b.e.g.l. where total auger and total split spoon refusal was encountered. This bedrock was then cored to a depth of 25 feet b.e.g.l. (see Rock Core Log).

3. Sample 1 was discretely chosen to be environmentally chemically tested for VOCs, SVOCs and Total 8 RCRA Metals and pH by an independent environmental laboratory.

N=Standard Penetration Test-Blows per six inches to drive 2" O.D. (QU)B=Bulge S=Shear P=Penetrometer Test
Split Spoon Sampler 18" with 140lb hammer falling 30"
3.25" Diameter Hollow Stem Augers used between Split Spoon Sample intervals unless noted otherwise.
ATV Drill Rig (Model CME-750) used.

SEECO Job No. 12735G

ILLINOIS DEPARTMENT OF TRANSPORTATION

SOIL BORING LOG

Page 1 Of 1

Date 6/24/21

ROUTE FAU Route 403 DESCRIPTION Proposed Seil Road Bridge over DuPage River Logged By DM

SECTION 21-00047-00-WR LOCATION Seil Road, Shorewood, Illinois SEC 16 TWP 35N RNG 9E PM 3rd

COUNTY WILL STRUCTURE NO. (Exist.) (Prop.)

Drilling Method AASHTO T 206-19 Hammer Type AUTOMATIC HAMMER

Boring No. B-4
Station 3804+12
Offset 27' LT
Ground Surface El. 569.80+/- M.S.L.

Surf. Wat. El.
Groundwater Elev.:
When Drilling Dry
at Completion Dry
After Hrs

Description	ELEV. (M.S.L.)	DEPTH (ft.)	SPT N (blows)	UCS Qu (TSF)	MOIST. (%)
FILL: 12" CLAY (TOPSOIL), Dark Brown (A-7-5)	568.8	1.0			
FILL: CLAY, Brown and Gray, Some Dark Brown, Trace Sand and Gravel, Contains Bricks, Very Stiff, Moist (PID = 0.0 ppm)	566.3	2.0	4 5 7	2.75 P	20.5
CLAY, Brown and Gray, Trace Sand, Little Gravel, Very Stiff, Moist (A-7-6) (Atterberg Limits Test LL=43, PL=21, PI=23) (PID = 0.0 ppm)	561.8	4.0	5 7 7	2.25 P	21.6
(PID = 0.0 ppm)	560.8	7.0	6 9 10	3.50 P	18.9
SHALEY LIMESTONE BEDROCK, Weathered (PID = 0.0 ppm)		8.0	50/1" refusal		9.1

End of Boring @ 9.0 Feet

Note:
1. No Petroleum odors were observed in this boring utilizing olfactory senses and all the soil samples were screened with a MiniRae 3000 OVM photo-ionization detector (PID). All PIDS = 0.0 pm.

2. Weathered bedrock was encountered at approximately 8 feet b.e.g.l. and solid bedrock was encountered at approximately 9 feet b.e.g.l. where total auger and total split spoon refusal was encountered. This bedrock was then cored to a depth of 24 feet b.e.g.l. (see Rock Core Log).

3. Sample 1 was discretely chosen to be environmentally chemically tested for VOCs, SVOCs and Total 8 RCRA Metals and pH by an independent environmental laboratory.

N=Standard Penetration Test-Blows per six inches to drive 2" O.D. (QU)B=Bulge S=Shear P=Penetrometer Test
Split Spoon Sampler 18" with 140lb hammer falling 30"
3.25" Diameter Hollow Stem Augers used between Split Spoon Sample intervals unless noted otherwise.
Diedrich Drill Rig (Model D-50) used.

SEECO Job No. 12735G

ILLINOIS DEPARTMENT OF TRANSPORTATION

ROCK CORE LOG

Date 6/23/21

Logged By **DM**

ROUTE FAU RTE 403 DESCRIPTION Proposed Seil Road Bridge over DuPage River

SECTION 21-00047-00-WR LOCATION Seil Road, Shorewood, IL SEC 16 TWP 35N RNG 9E PM 3rd

COUNTY Will CORING METHOD Rotary, Diamond Bit Core Barrel

STRUCT. NO. (Prop.) CORING BARREL TYPE & SIZE NX 5' split barrel 2-1/8"

Station

BORING NO. **B-1** Core Diameter 2.04" in

Station 3801+92 Top of Rock Elevation M.S.L.

Offset 24' LT Begin Core Elevation M.S.L.

Ground Surface Elev. 561.80+/- M.S.L.

	ELEV.	DEPTH (ft.)	CORE (#)	RECOVERY (%)	R.Q.D. (%)	CORE TIME (min/ft)	STRENGTH (TSF)
SHALEY LIMESTONE BEDROCK, Light Gray, With Greenish Gray Bands, Slightly Weathered, Fine to Medium Grained, Strong HCL Reaction, Thinly Bedded, Closely Spaced Horizontal Joints, Widely Spaced Vertical Joints, Good Discontinuity Condition, Vuggy, Rock Quality is Poor		12.0 13.0 14.0 15.0	RUN 1	91	37.0	3.2	
	545.8	16.0					
SHALEY LIMESTONE BEDROCK, Light Gray, With Greenish Gray Bands, Slightly Weathered, Fine to Medium Grained, Strong HCL Reaction, Thinly Bedded, Closely Spaced Horizontal Joints, Widely Spaced Vertical Joints, Good Discontinuity Condition, Vuggy, Rock Quality is Fair, Medium Strong Rock (R3) to Weak Rock (R2) (Depth: 17.5', Moisture Content: 0.85%, Dry Density = 164.6 PCF) (Depth: 18.5', Moisture Content: 0.54%, Dry Density = 164.5 PCF)		17.0 18.0 19.0 20.0	RUN 2	96	57.0	4.0	493 246
	540.8	21.0					
SHALEY LIMESTONE BEDROCK, Light Gray, With Greenish Gray Bands, Fresh to Slightly Weathered, Fine to Medium Grained, Strong HCL Reaction, Thinly Bedded, Closely to Moderately Spaced Horizontal Joints, Widely Spaced Vertical Joints, Good to Excellent Discontinuity Condition, Vuggy, Rock Quality is Excellent		22.0 23.0 24.0 25.0	RUN 3	100	94.0	4.0	
	535.8	26.0					
End of Boring @ 26 Feet.		27.0 28.0 29.0 30.0 31.0 32.0					

Note:

1) Top of bedrock is approximately 11 feet from existing ground surface.

2) Total split spoon sampler and hollow stem auger refusal was encountered at approximately 11 feet below the existing ground surface level (N=50 blows/ 1 inch). A Tri-Cone rock roller bit was used to clean out the borehole before rock coring was started. At approximately 11 feet below the existing grade level, a NX size (2-1/8" diameter) 5 foot long diamond bit core barrel attached to the drill rods was then used to core the bedrock.

3) This core boring was backfilled and plugged with bentonite chips and hydrated with water- Driller's Observation.

4) The groundwater level reading after coring the bedrock was not recorded due to injectng water into the core borehole during the coring process to cool the rock coring bit and therefore would not be accurate.

Color pictures of the cores Yes

Cores will be stored for examination until Until Construction is Completed

The "Strength" column represents the uniaxial compressive strength of the core sample (ASTM D 7012 which replaces ASTM D-2938)

SEECO Job No. 12733G

ILLINOIS DEPARTMENT OF TRANSPORTATION

ROCK CORE LOG

Date 6/23/21

Logged By **DM**

ROUTE FAU RTE 403 DESCRIPTION Proposed Seil Road Bridge over DuPage River

SECTION 21-00047-00-WR LOCATION Seil Road, Shorewood, IL SEC 16 TWP 35N RNG 9E PM 3rd

COUNTY Will CORING METHOD Rotary, Diamond Bit Core Barrel

STRUCT. NO. (Prop.) CORING BARREL TYPE & SIZE NX 5' split barrel 2-1/8"

Station

BORING NO. **B-2** Core Diameter 2.04" in

Station 3802+04 Top of Rock Elevation M.S.L.

Offset 16' RT Begin Core Elevation M.S.L.

Ground Surface Elev. 562.80+/- M.S.L.

	ELEV.	DEPTH (ft.)	CORE (#)	RECOVERY (%)	R.Q.D. (%)	CORE TIME (min/ft)	STRENGTH (TSF)
SHALEY LIMESTONE BEDROCK, Tan and Gray, With Greenish Gray Bands, Moderately Weathered, Fine to Medium Grained, Strong HCL Reaction, Thinly Bedded, Closely Spaced Horizontal Joints, Widely Spaced Vertical Joints, Fair Discontinuity Condition, Rock Quality is Very Poor	552.8	11.0	RUN 1	58	0.0	3.0	
SHALEY LIMESTONE BEDROCK, Tan and Light Gray, With Greenish Gray Bands, Slightly to Moderately Weathered, Fine to Medium Grained, Strong HCL Reaction, Thinly Bedded, Closely Spaced Horizontal Joints, Widely Spaced Vertical Joints, Fair Discontinuity Condition, Vuggy, Rock Quality is Very Poor	551.8	12.0 13.0 14.0	RUN 2	70	9.0	4.0	
	547.8	15.0					
SHALEY LIMESTONE BEDROCK, Light Gray, With Greenish Gray Bands, Slightly Weathered, Fine to Medium Grained, Strong HCL Reaction, Thinly Bedded, Closely Spaced Horizontal Joints, Widely Spaced Vertical Joints, Trace Gray Silt within Joints, Fair Discontinuity Condition, Vuggy, Rock Quality is Poor, Strong Rock (R4) to Medium Strong Rock (R3) (Depth: 15.5', Moisture Content: 0.86%, Dry Density = 162.7 PCF) (Depth: 17.25', Moisture Content: 0.92%, Dry Density = 163.6 PCF)		16.0 17.0 18.0 19.0	RUN 3	96	46.0	3.0	633 394
	542.8	20.0					
SHALEY LIMESTONE BEDROCK, Light Gray & Gray, With Greenish Gray Bands, Slightly Weathered, Fine to Medium Grained, Strong HCL Reaction, Thinly Bedded, Closely Spaced Horizontal Joints, Widely Spaced Vertical Joints, Good Discontinuity Condition, Vuggy, Rock Quality is Good, Strong Rock (R4) (Depth: 22', Moisture Content: 1.09%, Dry Density = 164.4 PCF)		21.0 22.0 23.0 24.0	RUN 4	98	75.0	4.0	512
	537.8	25.0					
End of Boring @ 25 Feet.		26.0 27.0 28.0 29.0 30.0 31.0					

Note:

1) Top of bedrock is approximately 10 feet from existing ground surface.

2) Total split spoon sampler and hollow stem auger refusal was encountered at approximately 10 feet below the existing ground surface level (N=50 blows/ 0 inch). A Tri-Cone rock roller bit was used to clean out the borehole before rock coring was started. At approximately 10 feet below the existing grade level, a NX size (2-1/8" diameter) 5 foot long diamond bit core barrel attached to the drill rods was then used to core the bedrock.

3) This core boring was backfilled and plugged with bentonite chips and hydrated with water- Driller's Observation.

4) The groundwater level reading after coring the bedrock was not recorded due to injecting water into the core borehole during the coring process to cool the rock coring bit and therefore would not be accurate.

Color pictures of the cores Yes

Cores will be stored for examination until Until Construction is Completed

The "Strength" column represents the uniaxial compressive strength of the core sample (ASTM D 7012 which replaces ASTM D-2938)

SEECO Job No. 12733G

ILLINOIS DEPARTMENT OF TRANSPORTATION

ROCK CORE LOG

Date 6/24/21

Logged By **DM**

ROUTE FAU RTE 403 DESCRIPTION Proposed Seil Road Bridge over DuPage River

SECTION 21-00047-00-WR LOCATION Seil Road, Shorewood, IL SEC 16 TWP 35N RNG 9E PM 3rd

COUNTY Will CORING METHOD Rotary, Diamond Bit Core Barrel

STRUCT. NO. (Prop.) CORING BARREL TYPE & SIZE NX 5' split barrel 2-1/8"

Station

BORING NO. **B-4** Core Diameter 2.04" in

Station 3804+12 Top of Rock Elevation M.S.L.

Offset 27' LT Begin Core Elevation M.S.L.

Ground Surface Elev. 569.80+/- M.S.L.

	ELEV.	DEPTH (ft.)	CORE (#)	RECOVERY (%)	R.Q.D. (%)	CORE TIME (min/ft)	STRENGTH (TSF)
SHALEY LIMESTONE BEDROCK, Tan and Light Bown, With Greenish Gray Bands, Moderately Weathered, Fine to Medium Grained, Strong HCL Reaction, Thinly Bedded, Closely Spaced Horizontal Joints, Widely Spaced Vertical Joints, Fair Discontinuity Condition, Vuggy, Rock Quality is Very Poor		10.0 11.0 12.0 13.0	RUN 1	65	7.0	4.0	
	555.8	14.0					
SHALEY LIMESTONE BEDROCK, Tan and Gray, With Greenish Gray Bands, Moderately Weathered, Fine to Medium Grained, Strong HCL Reaction, Thinly Bedded, Closely Spaced Horizontal Joints, Widely Spaced Vertical Joints, Fair Discontinuity Condition, Vuggy, Rock Quality is Very Poor		15.0 16.0 17.0 18.0	RUN 2	95	8.0	4.0	
	550.8	19.0					
SHALEY LIMESTONE BEDROCK, Light Gray, With Greenish Gray Bands, Moderately Weathered, Fine to Medium Grained, Strong HCL Reaction, Thinly Bedded, Closely Spaced Horizontal Joints, Widely Spaced Vertical Joints, Fair Discontinuity Condition, Vuggy, Rock Quality is Poor, Strong Rock (R4) (Depth: 19.25', Moisture Content: 1.15%, Dry Density = 160.7 PCF)		20.0 21.0 22.0 23.0	RUN 3	87	32.0	4.0	562
	545.8	24.0					
End of Boring @ 24 Feet.		25.0 26.0 27.0 28.0 29.0 30.0					

Note:

1) Top of bedrock is approximately 9.0 feet from existing ground surface.

2) Total split spoon sampler refusal (N=50 blows/ 1 inch at 8.58 feet) and total hollow stem auger refusal was encountered at approximately 9.0 feet below the existing ground surface level). A Tri-Cone rock roller bit was used to clean out the borehole before rock coring was started. At approximately 9.0 feet below the existing grade level, a NX size (2-1/8" diameter) 5 foot long diamond bit core barrel attached to the drill rods was then used to core the bedrock.

3) This core boring was backfilled and plugged with bentonite chips and hydrated with water- Driller's Observation.

4) The groundwater level reading after coring the bedrock was not recorded due to injecting water into the core borehole during the coring process to cool the rock coring bit and therefore would not be accurate.

Color pictures of the cores Yes

Cores will be stored for examination until Until Construction is Completed

The "Strength" column represents the uniaxial compressive strength of the core sample (ASTM D 7012 which replaces ASTM D-2938)

SEECO Job No. 12733G

PVT-8

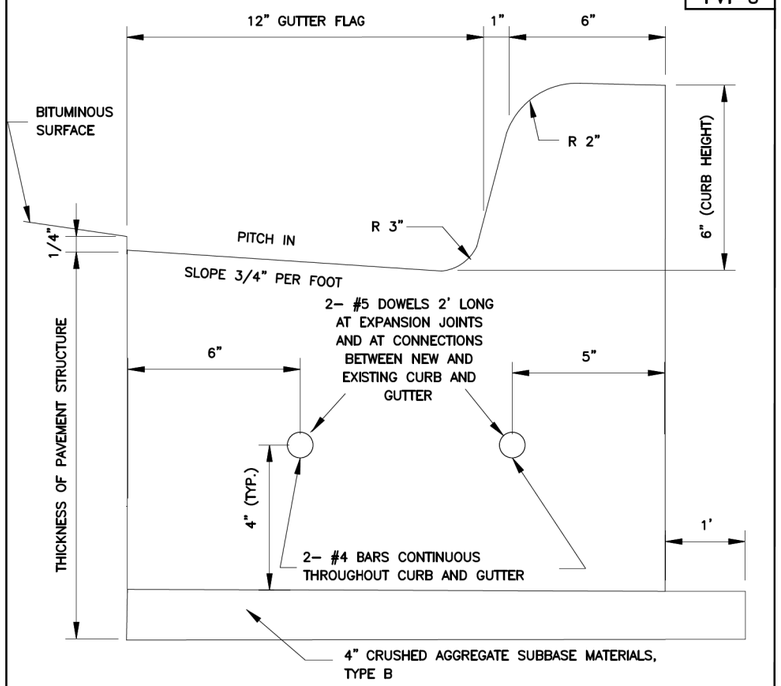

NOT TO SCALE

NOTES:
1. ALL CURB AND GUTTER SHALL BE CONSTRUCTED WITH IDOT CLASS SI CONCRETE WITH A MINIMUM COMPRESSIVE STRENGTH OF 4000 PSI AT 14 DAYS. PROVIDE AND TEST 3 CYLINDERS FOR EACH DAY'S POUR, OR 50 CUBIC YARDS, WHICHEVER IS LESS.
2. CONTRACTION JOINTS SHALL BE SAW-CUT AT 20' INTERVALS AND CAULKED.
3. PREFORMED EXPANSION JOINTS, 3/4" THICK, SHALL BE PLACED FIVE FEET EITHER SIDE OF STORM STRUCTURES IN CURB AND GUTTER, AT CURB RETURNS AND AT POINTS OF CURVATURE, AT ALL CONNECTIONS BETWEEN NEW AND EXISTING CURB AND GUTTER, AND AT 100' INTERVALS ON TANGENTS.
4. CURB AND GUTTER AT STORM STRUCTURES SHALL BE BOXED-OUT AND HAND-FORMED BETWEEN EXPANSION JOINTS. FORMS SHALL BE PLACED AND INSPECTED BY VILLAGE PRIOR TO POURING CONCRETE. STRUCTURE FRAMES SHALL BE PLACED AND ADJUSTED PRIOR TO THIS INSPECTION.
5. THE FOLLOWING SHALL BE STAMPED IN THE CURB AT THE INDICATED LOCATIONS:
   "W" FOR WATER SERVICES
   "S" FOR SANITARY SEWER SERVICES
   "ST" FOR STORM SEWER SERVICES
   "CO" FOR STORM SEWER SERVICE LINE CLEAN-OUTS
6. DOWELS AT EXPANSION JOINTS SHALL BE CENTERED ON THE JOINT (DRILLED INTO EXISTING CURB AND GUTTER), AND SHALL BE INSTALLED WITH GREASE CAPS ON ONE SIDE.

VILLAGE OF SHOREWOOD
STANDARD DETAIL
FOR
CONCRETE CURB & GUTTER
TYPE B-6.12

DATE: JUNE 2007
...\PVT\pvt-8 (b-6.12 curb).dgn

PVT-10

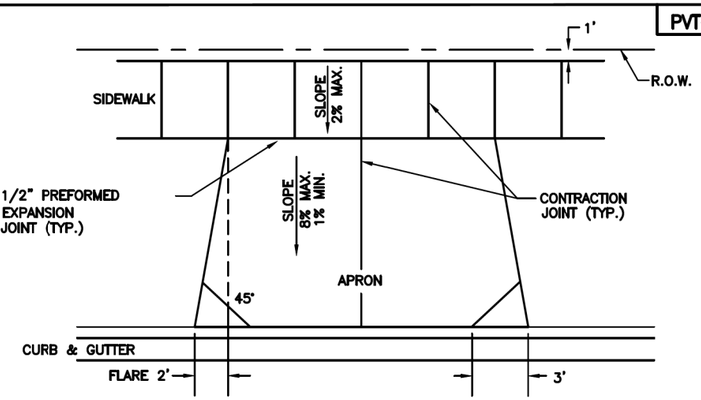

NOTES:
1. DRIVEWAYS SHALL NOT ENCROACH OVER THE PROPERTY LINE EXTENSION IN THE PARKWAY.
2. DRIVEWAYS SHALL NOT BE CONSTRUCTED IN EASEMENTS.
3. ALL AGGREGATE SUB-BASE SHALL BE MECHANICALLY COMPACTED.
4. SIDEWALKS ACCROSS DRIVEWAYS SHALL BE MIN. 6" P.C.C. ON 2" CA-6.
5. WELDED WIRE FABRIC (6"X6") OR WIRE MESH SHALL BE INSTALLED IN DRIVEWAYS AND IN SIDEWALKS THROUGH DRIVEWAYS AT 2" ABOVE BOTTOM SLAB.
6. ALL SIDEWALKS AND DRIVEWAYS SHALL BE CONCRETE.
7. SERVICE LATTERALS SHALL NOT CONFLICT WITH SIDEWALK AND DRIVEWAYS (SEE DETAIL MSC 3)

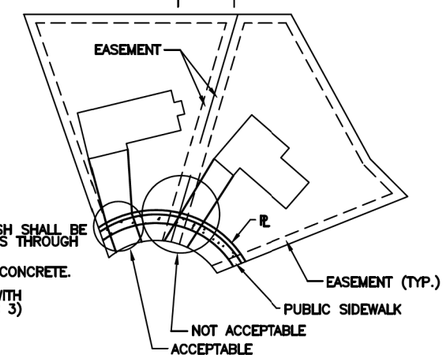

DRIVEWAYS (AND SIDEWALKS THROUGH DRIVEWAYS)

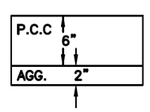

CONVENTIONAL CONCRETE

VILLAGE OF SHOREWOOD
STANDARD DETAIL
FOR
TYPICAL RESIDENTIAL DRIVEWAY

DATE: JUNE 2007
...\PVT-10 (Residential Driveway).dgn

PVT-11

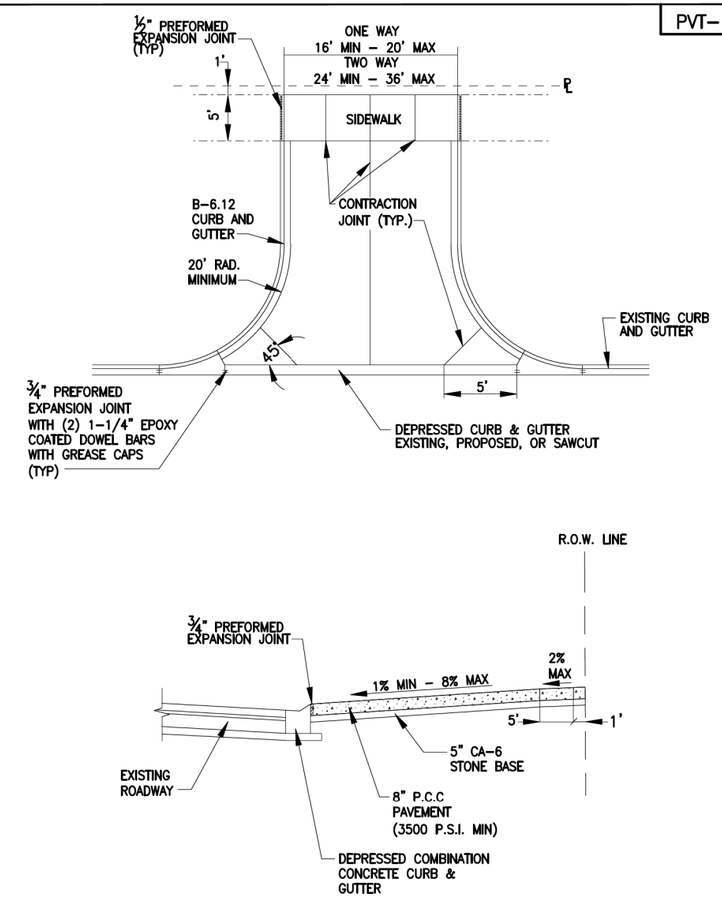

NOTES:
1. ALL CONCRETE SHALL BE IDOT CLASS "SI" CONCRETE WITH A MINIMUM COMPRESSIVE STRENGTH OF 3,500 PSI AT 14 DAYS.
2. THE SUBGRADE SHALL BE STABLE AND MECHANICALLY COMPACTED.
3. ALL AGGREGATE SUBBASE SHALL BE MECHANICALLY COMPACTED.
4. CONCRETE AND BASE THICKNESS OF SIDEWALK THRU DRIVEWAY SHALL MATCH THAT OF DRIVEWAY.
5. WELDED WIRE FABRIC (6"X6") OR WIRE MESH SHALL BE INSTALLED IN DRIVEWAYS AND IN SIDEWALKS THROUGH DRIVEWAYS AT 2" ABOVE BOTTOM SLAB.

VILLAGE OF SHOREWOOD
STANDARD DETAIL
FOR
COMMERCIAL
ENTRANCE

DATE: JUNE 2007
...\PVT-11 (Nonresidential Driveway).dgn

PVT-12

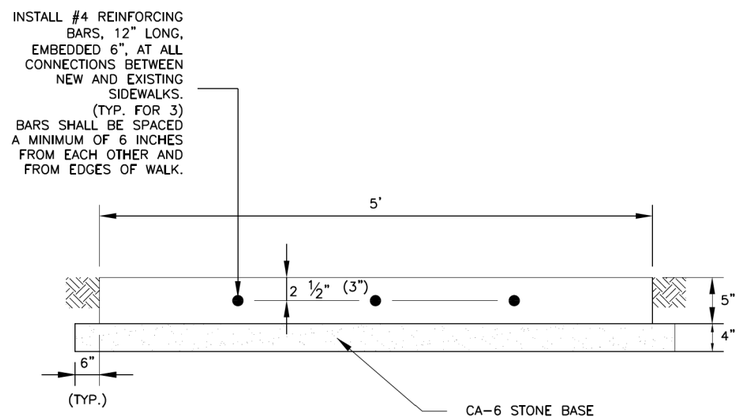

ADA/PROWAG COMPLIANCE NOTES:

1. ALL SIDEWALKS AND CURB RAMPS SHALL BE CONSTRUCTED IN STRICT COMPLIANCE WITH CURRENT IDOT STANDARD DETAILS FOR CURB RAMPS, AS WELL AS CURRENT ADA AND PROWAG REGULATIONS. APPLICABLE IDOT STANDARD CURB RAMP DETAILS SHALL BE INCLUDED IN PLANS SUBMITTED TO THE VILLAGE FOR REVIEW.
2. DEVELOPMENT PLANS SHALL INCLUDE A DETAIL FOR EACH CURB RAMP WITHIN THE PUBLIC ROW WITH SUFFICIENT INFO TO DEMONSTRATE COMPLIANCE WITH CURRENT ADA/PROWAG REQUIREMENTS, INCLUDING PLACEMENT OF DETECTABLE WARNINGS, PROPOSED SPOT ELEVATIONS, SLOPES AND GRADE BREAKS.
3. FOR DEVELOPMENT PROJECTS, ALL CURB RAMPS WITHIN THE PUBLIC ROW SHALL BE CONSTRUCTED AS PART OF THE ROADWAY CONSTRUCTION. THE DEVELOPER AND THEIR CONTRACTOR SHALL BE RESPONSIBLE FOR ENSURING THAT ALL CURB RAMPS AND SIDEWALKS ARE FULLY COMPLIANT WITH CURRENT ADA/PROWAG REGULATIONS. THE VILLAGE WILL NOT ACCEPT PUBLIC IMPROVEMENTS UNTIL ALL FACILITIES IN THE PUBLIC ROW HAVE BEEN VERIFIED BY THE VILLAGE TO BE IN COMPLIANT.

GENERAL NOTES:

1. ALL SIDEWALK SHALL BE CONSTRUCTED WITH IDOT CLASS "SI" CONCRETE WITH A MINIMUM COMPRESSIVE STRENGTH OF 3,500 PSI AT 14 DAYS
2. PREFORMED EXPANSION JOINTS (¾" THICK) SHALL BE CONSTRUCTED IN SIDEWALK EVERY 100 FEET AND AT ALL ABUTTING DRIVEWAYS AND CURB AND GUTTER.
3. TOOLED CONTRACTION JOINTS SHALL BE CONSTRUCTED IN SIDEWALK EVERY FIVE FEET.
4. SIDEWALK SHALL HAVE ¼" PER FOOT CROSS-SLOPE.
5. WELDED WIRE FABRIC (6X6/6X6) OR FIBER MESH SHALL BE INSTALLED THROUGH DRIVEWAYS AT 2" ABOVE SLAB BOTTOM.
6. FORMBOARD REQUIREMENTS: MINIMUM 2" X 6".
7. USE 2 #4 REINFORCING BARS, 10' LONG OVER ALL UTILITY TRENCHES FOR NEW SIDEWALK.
8. AT DRIVEWAYS, SIDEWALK PCC AND BASE THICKNESS SHALL MATCH THAT OF THE DRIVEWAY.

VILLAGE OF SHOREWOOD
STANDARD DETAIL
FOR
SIDEWALK

DATE: MARCH 2017
$FILEABBREV$

PVT-14

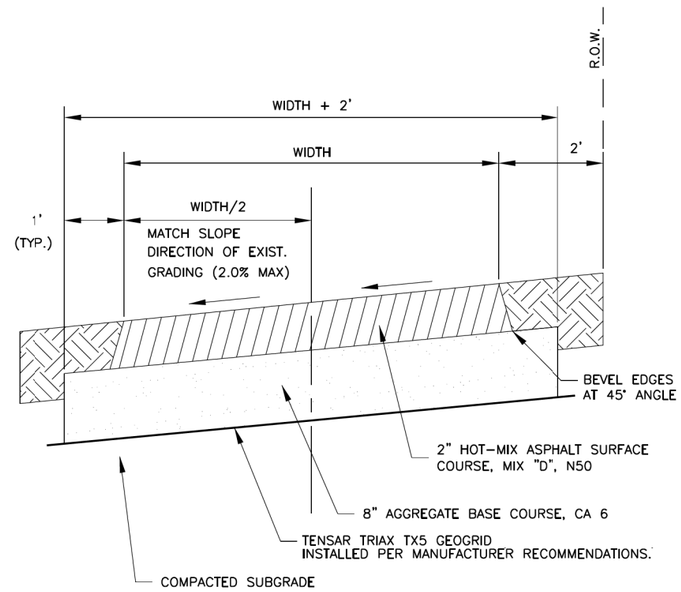

NOTE:

ALL EXISTING SUBGRADE MATERIALS TO BE RE-USED MUST BE TESTED AND COMPACTED AS REQUIRED TO MEET MINIMUM STABILITY REQUIREMENTS.

WIDTH = 8' FOR LOCAL STREETS
10' FOR COLLECTOR STREETS

VILLAGE OF SHOREWOOD
STANDARD DETAIL
FOR
BITUMINOUS BICYCLE
PATH PAVEMENT
DATE: SEPTEMBER 2014

pvt-14 (bituminous bikepath)

PVT-21

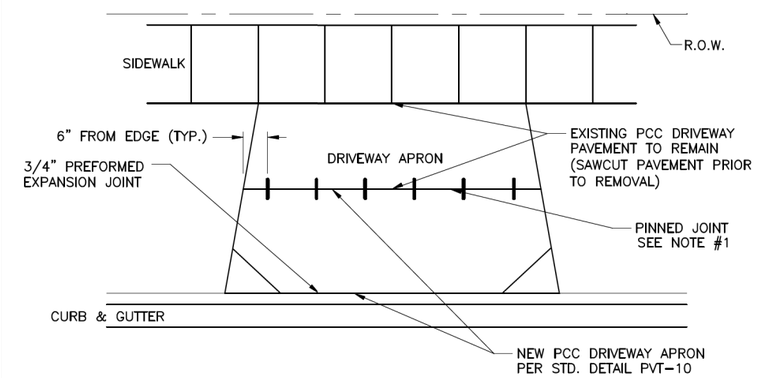

NOTES:

1. AT LOCATIONS WHERE ONLY A PORTION OF DRIVEWAY APRON IS TO BE REMOVED, NEW DRIVEWAY PAVEMENT SHALL BE CONCRETE AND SHALL BE PINNED TO THE EXISTING DRIVEWAY APRON WITH #4 REBAR A MINIMUM OF 6" INTO THE EXISTING SLAB. AFTER INSTALLATION, REBAR SHALL PROTRUDE FROM EXISTING DRIVEWAY PAVEMENT A MINIMUM OF 6". SIX (6) REBAR SHALL BE EVENLY SPACED IN EACH DRIVEWAY, STARTING 6" FROM EITHER DRIVEWAY EDGE.
2. FORMBOARD REQUIREMENTS: MINIMUM 2" X 6".
3. WELDED WIRE FABRIC (6"X6") OR WIRE MESH SHALL BE INSTALLED IN NEW DRIVEWAY PAVEMENT AT 2" ABOVE BOTTOM SLAB PER STD. DETAIL PVT-10.
4. PREFORMED EXPANSION JOINTS (3/4" THICK) SHALL BE CONSTRUCTED AT LOCATIONS WHERE NEW DRIVEWAY PAVEMENT ABUTS CURB AND GUTTER.
5. ALL AGGREGATE SUBBASE SHALL BE MECHANICALLY COMPACTED.

VILLAGE OF SHOREWOOD
STANDARD DETAIL
FOR
TYPICAL DRIVEWAY PINNING

DATE: AUGUST 2011

...\PVT-21 (Driveway Pinning).dgn

CHRISTOPHER B. BURKE ENGINEERING, LTD.
16021 W. 159th Street, Suite 201
Lockport, Illinois 60441
(815) 770-2850

USER NAME = aschaefer	DESIGNED - AJS/JRS	REVISED -	
	DRAWN - JRS/PWN	REVISED -	
PLOT SCALE = N.T.S.	CHECKED - AJS	REVISED -	
PLOT DATE = 11/2/2025	DATE -	REVISED -	

STATE OF ILLINOIS
DEPARTMENT OF TRANSPORTATION

SEIL ROAD WIDENING
CONSTRUCTION DETAILS

SCALE: N.T.S. | SHEET 2 OF 10 SHEETS | STA. TO STA.

F.A.U. RTE.	SECTION	COUNTY	TOTAL SHEETS	SHEET NO.
0403	21-00047-00-WR	WILL	149	121
		CONTRACT NO. 61M01		
		ILLINOIS FED. AID PROJECT		

STM-1

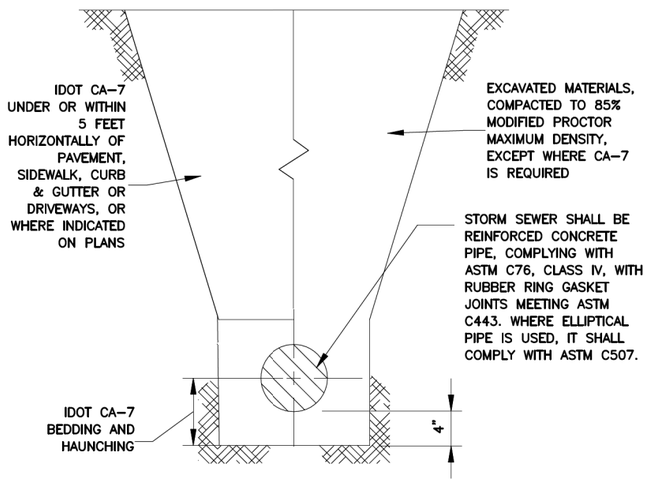

NO SCALE

NOTES:

1. ~~STORM SEWER SHALL BE TELEVISED FOLLOWING COMED AND NICOR UNDERGROUND UTILITIES AND PRIOR TO THE ISSUANCE OF THE FIRST CERTIFICATE OF FINAL OCCUPANCY.~~

VILLAGE OF SHOREWOOD
STANDARD DETAIL
FOR
STORM SEWER INSTALLATION

DATE: JUNE 2007
...\stm-1 (storm sewer installation).dgn

STM-2

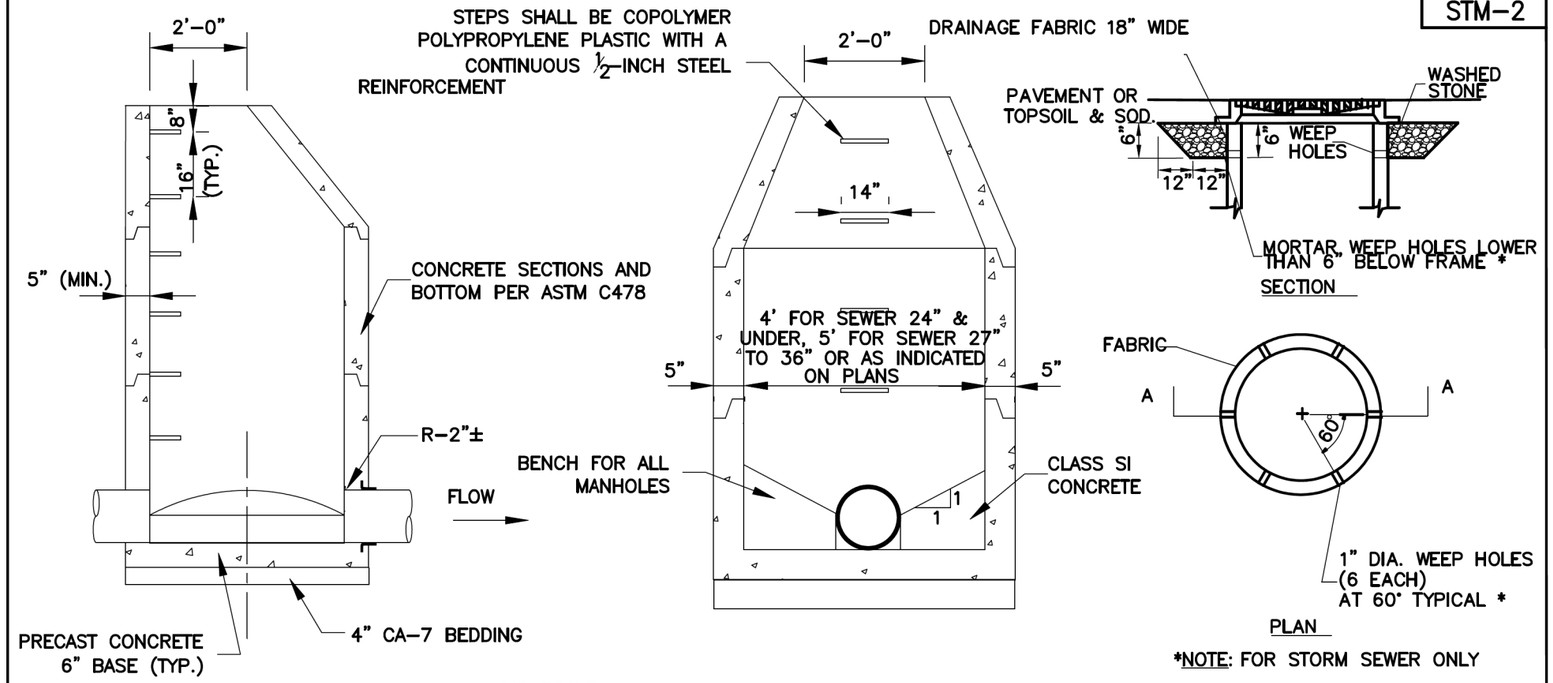

*NOTE: FOR STORM SEWER ONLY

NO SCALE

NOTE:

1. MANHOLE BARREL JOINTS SHALL BE TONGUE AND GROOVE TYPE WITH TWO ROWS OF EXTRUDIBLE PREFORMED PLASTIC GASKET MATERIAL (BUTYL ROPE).
2. INTERIOR JOINTS SHALL BE "BUTTERED" WITH NON-SHRINK GROUT.
3. STORM MANHOLES SHALL HAVE A WALL THICKNESS OF 6" FOR 5' DIAMETER STRUCTURES AND 7" FOR 6' DIAMETER STRUCTURES
4. SEE CASTING INSTALLATION AND ADJUSTING DETAIL FOR CASTING REQUIREMENTS.

VILLAGE OF SHOREWOOD
STANDARD DETAIL
FOR
STORM MANHOLE TYPE A

DATE: JUNE 2007
...\stm-2 (storm manhole type a).dgn

STM-3

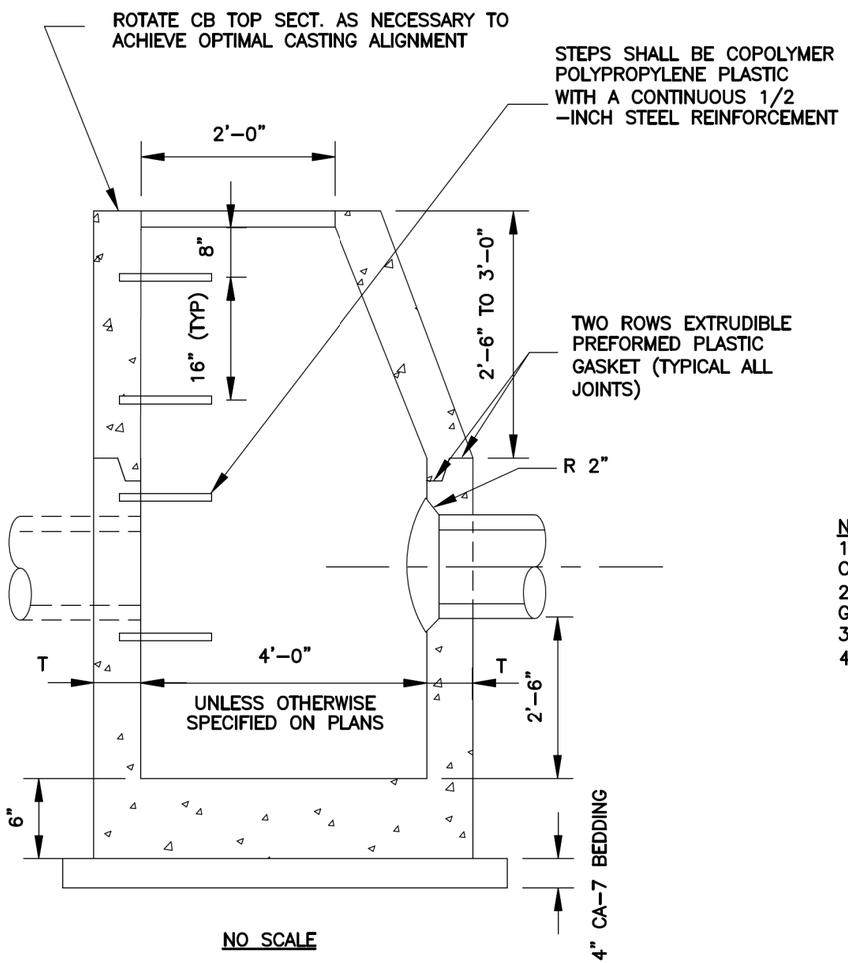

NO SCALE

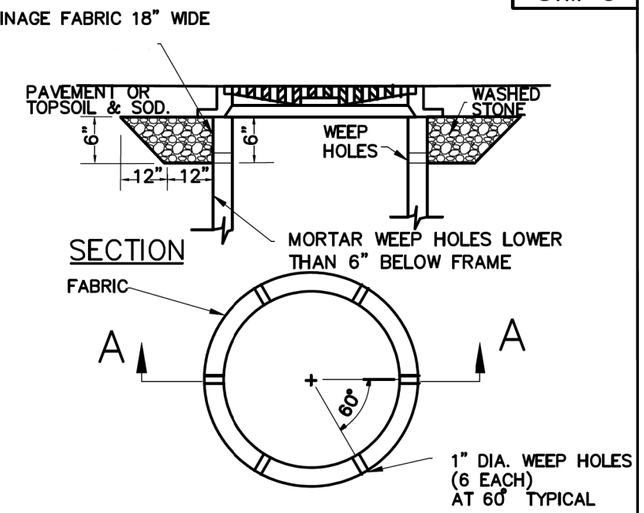

PLAN

NOTES:
1. SEE CASTING INSTALLATION AND ADJUSTMENT DETAIL FOR CASTING REQUIREMENTS.
2. INTERIOR JOINTS SHALL BE "BUTTERED" WITH NON-SHRINK GROUT.
3. STRUCTURE SHALL COMPLY WITH ASTM C478.
4. T = STRUCTURE INSIDE DIAMETER +1" (5" MINIMUM)

VILLAGE OF SHOREWOOD
STANDARD DETAIL
FOR
CATCH BASIN TYPE A

DATE: JUNE 2007
...\stm-3 (catch basin type a).dgn

STM-6

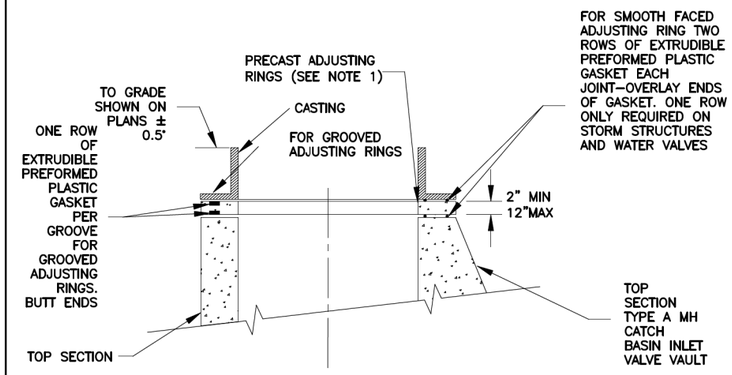

NO SCALE

NOTES:
1. THERE SHALL BE A MAXIMUM OF 2 ADJUSTING RINGS WITH A MAXIMUM TOTAL HEIGHT OF 12".
2. ALL STRUCTURES IN CURB AND GUTTER OR PAVED AREAS SHALL USE PREFORMED RUBBER ADJUSTING RINGS.
3. IF THE CASTING MUST BE INSTALLED ON A SLOPE, PREFORMED RUBBER TAPERED RINGS MAY BE USED.
4. ADJUSTING RINGS 2" OR LESS IN THICKNESS SHALL BE PREFORMED RUBBER.
5. THE FOLLOWING CASTING, SHALL BE UTILIZED AS INDICATED:

A. SANITARY MANHOLES: EAST JORDAN IRON WORKS #1050, EX HD WATERTIGHT LID WITH CONCEALED PICKHOLE, O-RING GASKETS, AND "SHOREWOOD" AND "SANITARY" CAST IN LID.
B. WATER VALVE VAULTS: EAST JORDAN IRON WORKS #1050, EX HD WATERIGHT LID WITH CONCEALED PICKHOLE, O-RING GASKETS, AND "SHOREWOOD" AND "WATER" CAST IN LID.
C. STORM MANHOLES: EAST JORDAN IRON WORKS #1050, EX HD LID WITH CONCEALED PICKHOLE, AND "SHOREWOOD" AND "STORM" CAST IN LID, FOR LIDS INDICATED AS "SOLID" ON PLANS. FOR LIDS INDICATED AS "OPEN" ON PLANS, USE THE SAME CASTING, BUT WITH A TYPE M1 RADIAL FLAT GRATE.

VILLAGE OF SHOREWOOD
STANDARD DETAIL
FOR
CASTING INSTALLATION AND ADJUSTING

DATE: JUNE 2007
...\stm-6 (casting install & adjust).dgn

STM-4

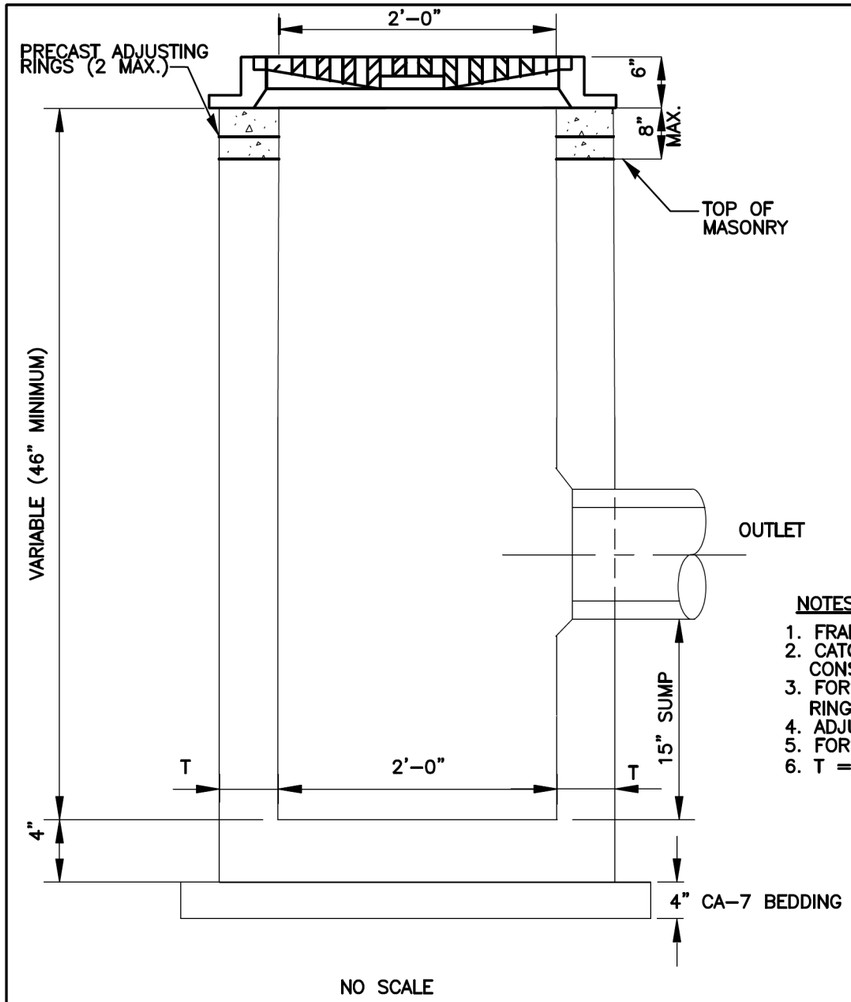

NO SCALE

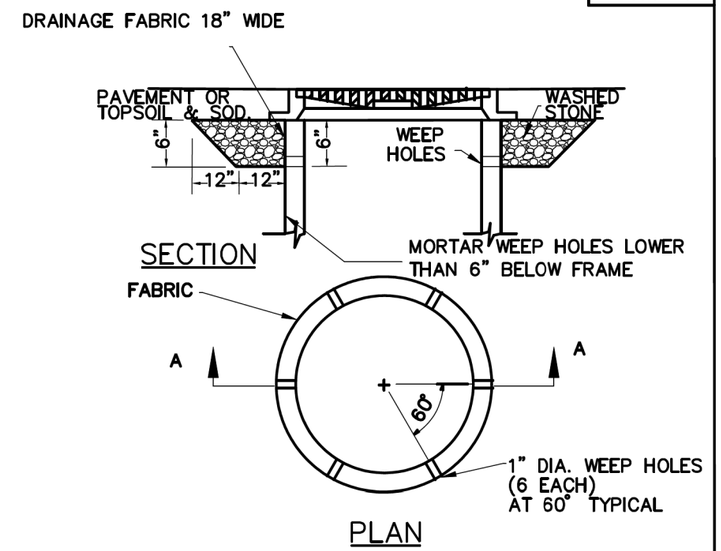

NOTES:

1. FRAMES AND LIDS TO BE AS SHOWN ON PLANS.
2. CATCH BASINS TO BE OF PRECAST REINFORCED CONCRETE CONSTRUCTION ONLY.
3. FOR ADJUSTMENTS, USE ONLY PRECAST CONCRETE ADJUSTING RINGS, MAXIMUM OF 8" TOTAL HEIGHT.
4. ADJUSTING RINGS AND FRAMES TO BE JOINED WITH MORTAR.
5. FOR RIM AND PIPE INVERT ELEVATIONS, REFER TO PLANS.
6. T = STRUCTURE INSIDE DIAMETER +1" (MINIMUM 5").

VILLAGE OF SHOREWOOD
STANDARD DETAIL
FOR
CATCH BASIN TYPE C

DATE: JUNE 2007

...\stm-4 (catch basin type c).dgn

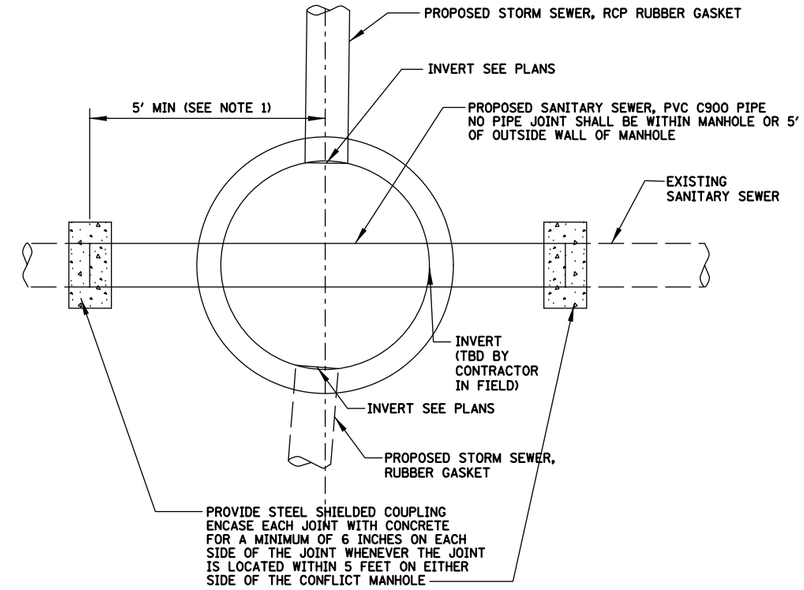

PLAN VIEW
CONFLICT MANHOLE DETAIL

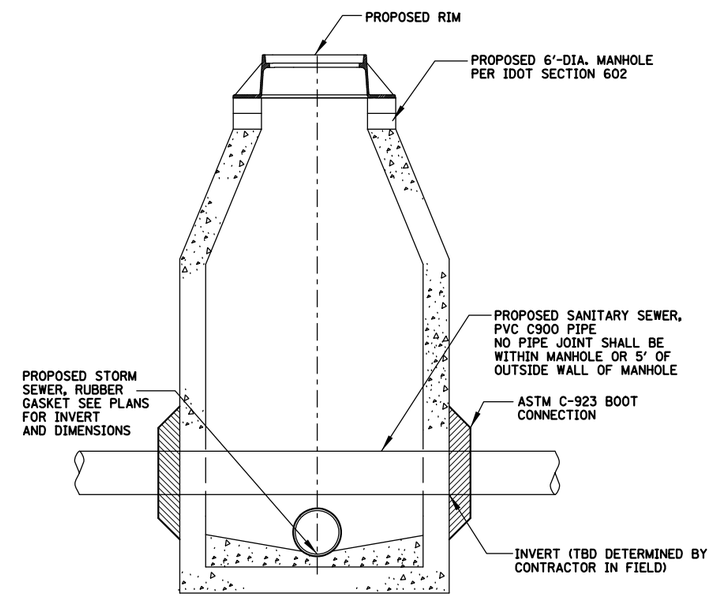

SECTION
CONFLICT MANHOLE DETAIL

NOTES:

1. ALL JOINTS IN THE SANITARY SEWER SHALL BE KEPT AS FAR FROM THE OUTSIDE EDGE OF THE CONFLICT STRUCTURE AS POSSIBLE. ENCASE EACH JOINT WITH CONCRETE FOR FOR A MINIMUM OF 6-INCHES ON EACH SIDE OF THE JOINT WHENEVER THE JOINT IS LOCATED WITHIN 10 FEET OF THE CONFLICT MANHOLE.

2. PROVIDE CONCRETE CRADLES AT LEAST 6" THICK AND EXTENDING AT LEAST 1 FOOT FROM THE CONFLICT MANHOLE.

WTR-1

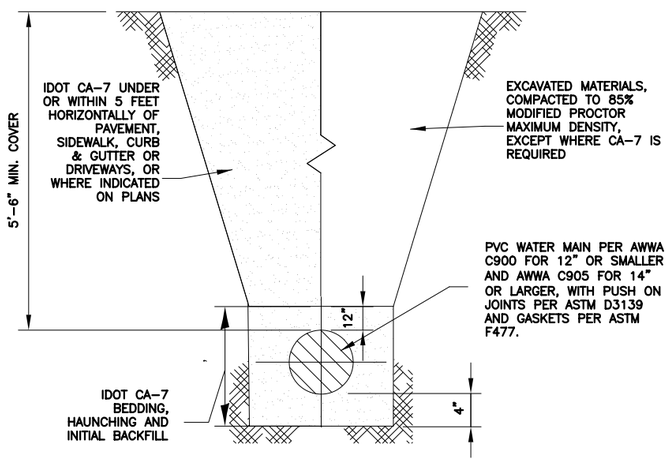

NO SCALE

NOTES:

1. PRESSURE AND LEAKAGE TESTS AND CHLORINATION SHALL BE COORDINATED WITH VILLAGE UTILITY FOREMAN.

2. MAINS SHALL BE PRESSURE TESTED AT A MINIMUM PRESSURE OF 150 PSI FOR TWO HOUR WITHOUT PRESSURE LOSS OR FURTHER PRESSURE APPLICATION. TEST SHALL BE PERFORMED IN ACCORDANCE WITH AWWA C600 AND AWWA C603. IF MAINS TO BE TESTED INCLUDE CONCRETE THRUST BLOCKING, DO NOT BEGIN TEST UNTIL AT LEAST 5 DAYS AFTER THE INSTALLATION OF THE THRUST BLOCKING.

3. AFTER COMPLETING A SATISFACTORY PRESSURE TEST, THE WATER MAIN SHALL BE LEAKAGE TESTED FOR 24 HOURS AT SYSTEM PRESSURE, IN ACCORDANCE WITH THE STANDARD SPECIFICATIONS FOR WATER & SEWER MAIN CONSTRUCTION IN ILLINOIS, LATEST EDITION.

4. STAINLESS STEEL TRACER WIRE SHALL BE INSTALLED ON ALL WATER MAIN

VILLAGE OF SHOREWOOD
STANDARD DETAIL
FOR
WATER MAIN INSTALLATION

DATE: JANUARY 2018 (DRAFT)
..\D2103\CMP\DET_06_D2103.dgn

WTR-2

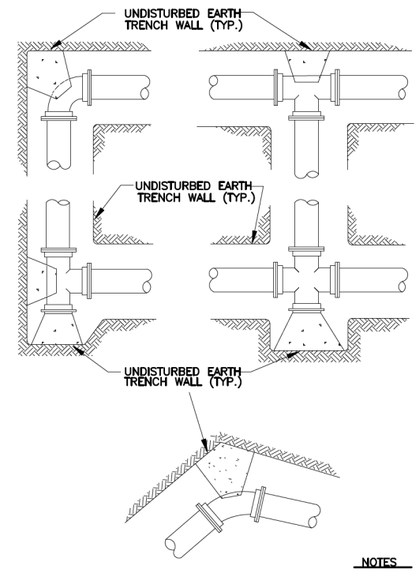

PLANS

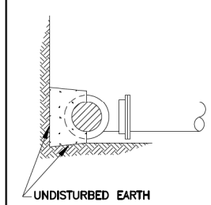

NO SCALE

SECTION

NOTES

1. PROVIDE PRECAST OR CAST-IN-PLACE IDOT CLASS SI CONCRETE THRUST BLOCKS OF ADEQUATE SIZE AND THRUST BEARING SURFACE TO PREVENT MOVEMENT OF PIPELINE UNDER PRESSURE.

2. PLACE THE BASE AND THRUST BEARING SIDES OF THRUST BLOCK DIRECTLY AGAINST UNDISTURBED EARTH.

3. PLACE THRUST BLOCKING SO THE FITTING JOINTS WILL BE ACCESSIBLE FOR REPAIR.

4. ALL FITTINGS SHALL HAVE MECHANICAL JOINTS WITH MEGA-LUG RETAINER GLANDS BY EBAA IRON.

VILLAGE OF SHOREWOOD
STANDARD DETAIL
FOR
THRUST BLOCK
INSTALLATIONS

DATE: JUNE 2007
..\WTR\wtr-2 (thrust block).dgn

WTR-3

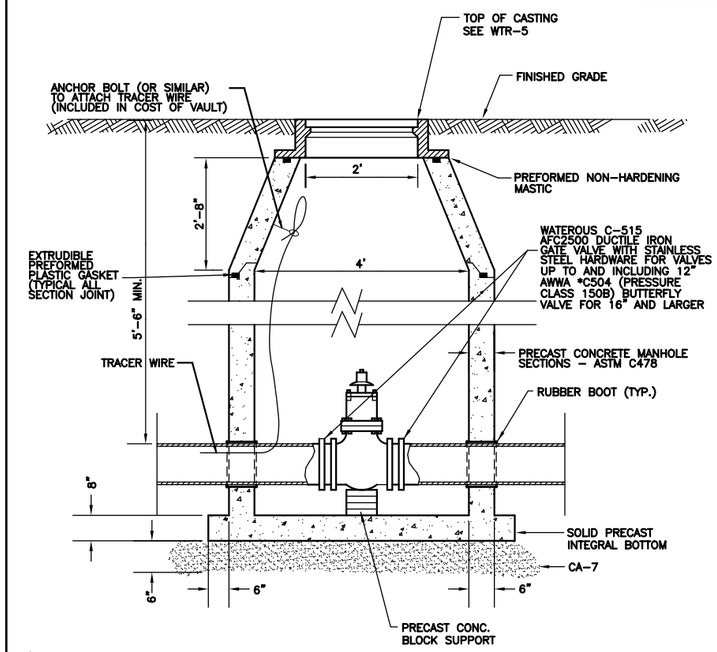

1) VALVE MUST ALIGN WITH THE CENTER OF VAULT OPENINGS.
2) CONES MUST BE CONCENTRIC WITH VALVES 12" AND SMALLER.
3) BUTTERFLY VALVES AND PRESSURE TAP VALVES REQUIRE ECCENTRIC CONES.
4) WHEN ADJUSTMENTS ARE NECESSARY, THEY SHALL BE PERFORMED WITH A MAXIMUM OF TWO (2) PRECAST CONCRETE RINGS SET IN A BED OF PREFORMED NON-HARDENING MASTIC MATERIAL(CONSEAL CS-102B, OR APPROVED EQUAL) TO A MAXIMUM HEIGHT OF 12".
5) MANHOLE STEPS SHALL BE AT 16" O.C. COPOLYMER POLYPROPYLENE PLASTIC WITH CONTINUOUS ½" STEEL REINFORCEMENT BY M.A. INDUSTRIES, INC. OR APPROVED EQUAL.
6) DURATION SAC-NUTS SHALL BE USED ON 50% OF ALL BOLTS.
7) ALL HARDWARE SHALL BE STAINLESS STEEL.
8) USE 4'-0" DIAMETER FOR WATER MAIN SIZES 8" OR LESS,
USE 5'-0" DIAMETER FOR WATER MAIN SIZES 10" THRU 20",
USE 6'-0" DIAMETER FOR WATER MAIN SIZES GREATER THAN 20".

BUTTERFLY VALVES SHALL:
9) HAVE A CAST IRON BODY, AND BE RUBBER-SEATED, TIGHT-CLOSING TYPE SUITABLE FOR BURIED SERVICE.
10) HAVE ANSI CLASS 125 STANDARD FLANGE OR VICTAULIC COUPLING ENDS.
11) HAVE VALVE SHAFT OF EITHER 18-8 OR TYPE 304 STAINLESS STEEL, EXTENDED THROUGH VALVE DISC AND BODY INTO OPERATOR.
12) HAVE A FULLY ENCLOSED, SEALED, GREASE-PACKED INTEGRAL GEARED MANUAL OPERATOR WITH A 2-INCH SQUARE OPERATING NUT.
13) STAINLESS STEEL TRACER WIRE SHALL BE ANCHORED TO THE INSIDE OF THE VALVE VAULT AT A LOCATION THAT CAN BE EASILY ACCESSED FROM THE OPENING OF THE VAULT. METHOD OF ANCHORING TRACER WIRE SHALL BE APPROVED BY THE ENGINEER.

VILLAGE OF SHOREWOOD
STANDARD DETAIL
FOR
VALVE VAULT

DATE: JUNE 2007
..\D2103\CMP\DET_06_D2103.dgn

WTR-5

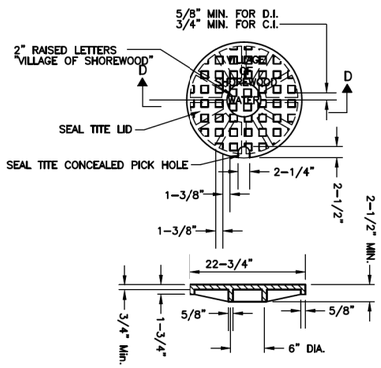

CAST CLOSED LID
(SEAL TITE CONCEALED PICK HOLE)

1) DUCTILE IRON SHALL BE GRADE 60-40-18 AND SHALL BE TESTED IN ACCORDANCE WITH FEDERAL SPECIFICATIONS.
2) ALL FRAMES AND COVERS SHALL HAVE MACHINED HORIZONTAL AND VERTICAL BEARING SURFACES. PICK HOLES SHALL NOT CREATE OPENINGS IN THE COVER.
3) THE MANHOLE COVERS SHALL HAVE RAISED LETTERS AS SHOWN.
4) DIMENSIONS FOR CASTINGS ARE COMPARABLE TO EAST JORDAN 1022-3 OR NEENAH R-1772-C.
5) LIDS AND FRAMES TO MEET AASHTO H-20 LOADING SPECIFICATIONS.
6) ALL CASTINGS SHALL BE SHOP PAINTED WITH ASPHALTIC BASE PAINT.

VILLAGE OF SHOREWOOD
STANDARD DETAIL
FOR
VALVE VAULT
FRAME & COVER

DATE: JUNE 2007

..\WTR-5 (Valve Vault Frame & Cover).dgn

WTR-6

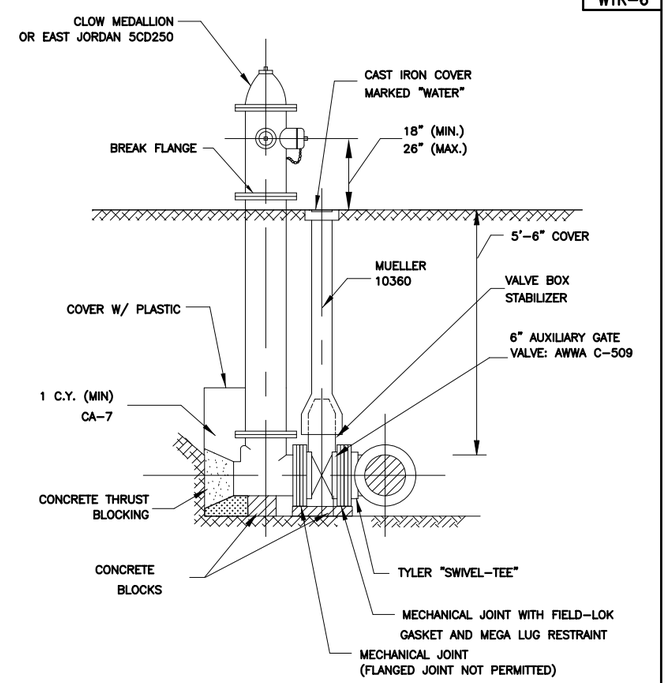

NO SCALE

NOTES:

1. ALL BOLTS & NUTS BELOW GRADE ON FIRE HYDRANT SHALL BE STAINLESS STEEL.
2. ALL BOLTS & NUTS ON AUXILIARY VALVE SEAL PLATE AND BONNET SHALL BE STAINLESS STEEL.
3. THRUST BLOCKING SHALL BE CONSTRUCTED SO HYDRANT DRAIN HOLE IS NOT OBSTRUCTED.
4. HYDRANT SHALL BE PAINTED ACE BRAND RUST STOP SAFETY RED.
5. STAINLESS STEEL TRACER WIRE SHALL BE PULLED THROUGH AUXILIARY VALVE BOX AND ANCHORED TO THE INSIDE OF THE VALVE BOX AT A LOCATION THAT CAN EASILY BE ACCESSED FROM THE BOX OPENING. METHOD OF ANCHORING TRACER WIRE SHALL BE APPROVED BY THE ENGINEER.

VILLAGE OF SHOREWOOD
STANDARD DETAIL
FOR
FIRE HYDRANT

DATE: SEPTEMBER 2014

..\D2103\DMF\DET_07_D2103.dgn

WTR-7

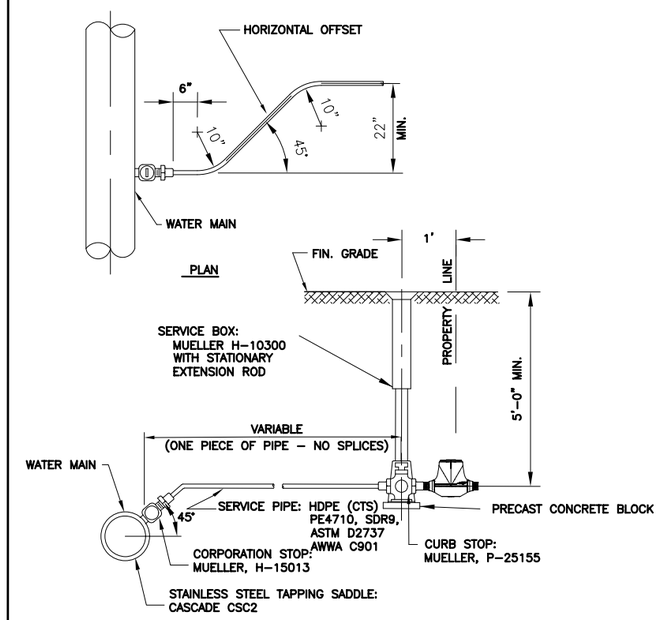

SECTION
NO SCALE

NOTES:

1. TRENCH BACKFILL SHALL BE INSTALLED PER WATER MAIN INSTALLATION DETAIL.
2. PLACE AND HAND-TAMP AT LEAST 1/4 CUBIC YARDS OF SAND AROUND CORPORATION STOP.
3. MINIMUM DISTANCE BETWEEN SERVICE TAPS SHALL BE 18 INCHES.
4. MINIMUM RESIDENTIAL SERVICE DIAMETER SHALL BE 1".
5. SERVICES SHALL NOT BE LOCATED WITHIN DRIVEWAYS.
6. ALL SERVICES TO BE ABANDONED OR RELOCATED SHALL BE CLOSED AT THE CORP STOP AND RE-TAPPED.
7. SEE DETAIL MSC-3 FOR SERVICE LATERAL LOCATIONS.
8. STAINLESS STEEL TAPPING SLEEVES SHALL BE USED WHENEVER WATER SERVICE CONNECTIONS ARE MADE TO PVC WATER MAINS.
9. 2-10 GUAGE TRACER WIRES SHALL BE FASTENED EVERY 48" WITH TAPE ALONG THE FULL LENGTH OF THE SERVICE PIPE. AT A MINIMUM, ONE OF THE TRACER WIRES SHALL BE VERIFIED TO BE OPERATING PROPERLY. THE WIRES SHALL BE INSTALLED AT 1 O'CLOCK AND 6 O'CLOCK.

VILLAGE OF SHOREWOOD
STANDARD DETAIL
FOR
RESIDENTIAL WATER SERVICE

DATE: MARCH 2017

..\D2103\DMF\DET_07_D2103.dgn

AUTOCAD2006

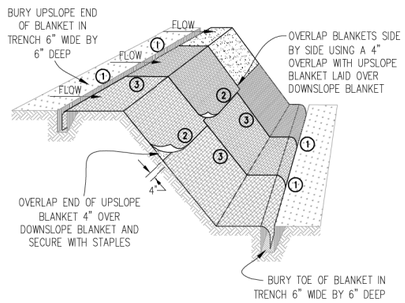

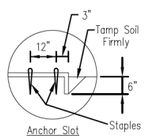

DETAIL 1

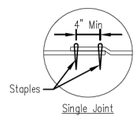

DETAIL 2

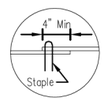

DETAIL 3

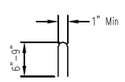

STAPLE DETAIL

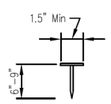

PUSH PIN DETAIL

NOTES:

1. Staples shall be placed in a diamond pattern at 2 per s.y. for stiched blankets. Non-stiched shall use 4 staples per s.y. of material. This equates to 200 staples with stiched blanket and 400 stapels with non-stiched blanket per 100 s.y. of material.
2. Staple or push pin lengths shall be selected based on soil type and conditions. (minimum staple length is 6")
3. Erosion control material shall be placed in contact with the soil over a prepared seedbed.
4. All anchor slots shall be stapled at approximately 12" intervals.

Sheet 1 of 1	Drawing No. IUM-514	EROSION CONTROL BLANKET INSTALLATION DETAILS	Designed — Date Drawn B. JOHNSON — 11/08 Checked Approved

CULVERT INLET PROTECTION - SILT FENCE

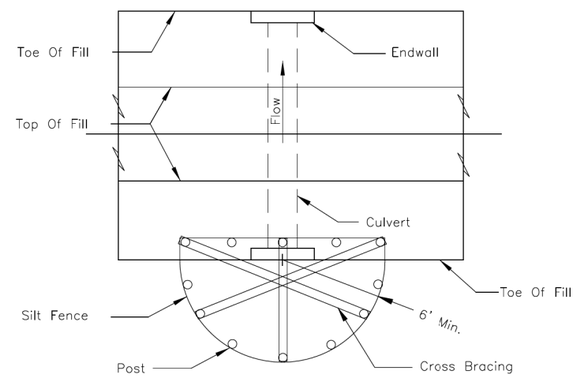

PLAN VIEW

NOTES:
1. The silt fence shall meet the requirements as shown on standard drawing IL-620 SILT FENCE except the maximum post spacing shall be 3 feet and the tops of posts shall be cross braced.
2. Sediment shall be removed when the sediment has accumulated to one-half the height of the silt fence.
3. The maximum drainage area to the culvert being protected is 1 acre.

REFERENCE Project Designed — Date Checked — Date Approved — Date	NRCS Natural Resources Conservation Service	STANDARD DWG. NO. IL-508SF SHEET 1 OF 1 DATE 1-29-99

ROLLED EROSION CONTROL PRODUCTS

Staking Pattern Guide

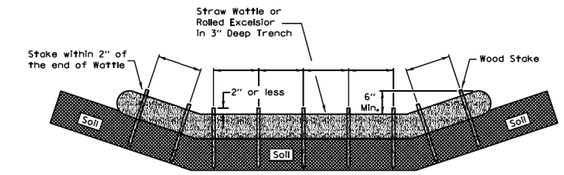

Notes:

1. Overlap minimum is the diameter of the roll.
2. 4' spacing for wattles.
3. 2' spacing for rolled excelsior.
4. Or space according to manufacturer's specifications.

Stake Detail

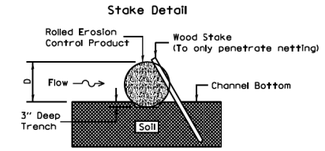

Compost Filter Sock Detail

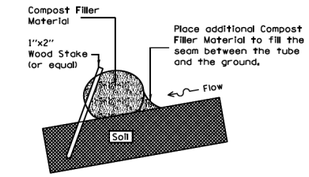

When compost filter sock ditch check is used, place a compost berm upstream of the filter sock (see IUM 805). A trench is not required.

Notes:

1. Drawings are not to scale.
2. Ends of wattles or rolled excelsior shall be turned at least 6" upslope.
3. Recommended stakes are 1 1/8" wide x 1 1/8" thick x 30" long
4. Stakes shall not extend above the straw wattle more than 2".
5. Spacing: The toe of the upstream ditch check shall create a horizontal line with the top of the downstream ditch check.
6. When compost filter sock ditch check is used, place a compost berm upstream of the filter sock (see IUM 805). A trench is not required.

REFERENCE Project Designed — Date Checked — Date Approved — Date	ILLINOIS URBAN MANUAL	STANDARD DWG. NO. IUM-514 SHEET 1 OF 1 DATE 8-19-11

CHRISTOPHER B. BURKE ENGINEERING, LTD. 18021 W. 159th Street, Suite 201 Lockport, Illinois 60441 (815) 770-2650	USER NAME = aschaefer	DESIGNED - AJS/JRS	REVISED -
		DRAWN - JRS/PWN	REVISED -
	PLOT SCALE = N.T.S.	CHECKED - AJS	REVISED -
	PLOT DATE = 11/2/2025	DATE -	REVISED -

STATE OF ILLINOIS
DEPARTMENT OF TRANSPORTATION

SEIL ROAD WIDENING
CONSTRUCTION DETAILS

SCALE: N.T.S. | SHEET 8 OF 10 SHEETS | STA. TO STA.

F.A.U. RTE.	SECTION	COUNTY	TOTAL SHEETS	SHEET NO.
0403	21-00047-00-WR	WILL	149	127
		CONTRACT NO. 61M01		
	ILLINOIS	FED. AID PROJECT		

INLET PROTECTION - PAVED AREAS
DROP-IN PROTECTION

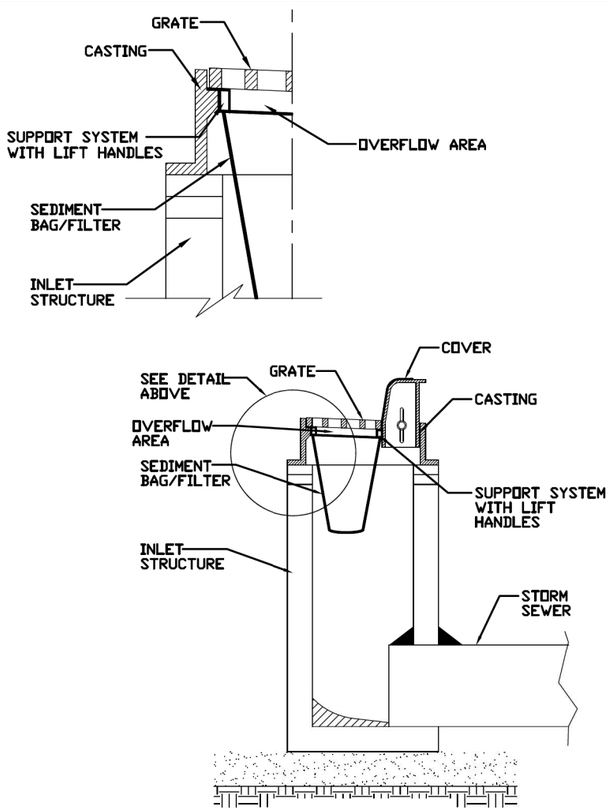

REFERENCE		STANDARD DWG. NO.
Project		IUM-561D
Designed ____ Date ____		SHEET 1 OF 1
Checked ____ Date ____		DATE 01-11-11
Approved ____ Date ____		

AUTOCAD2006

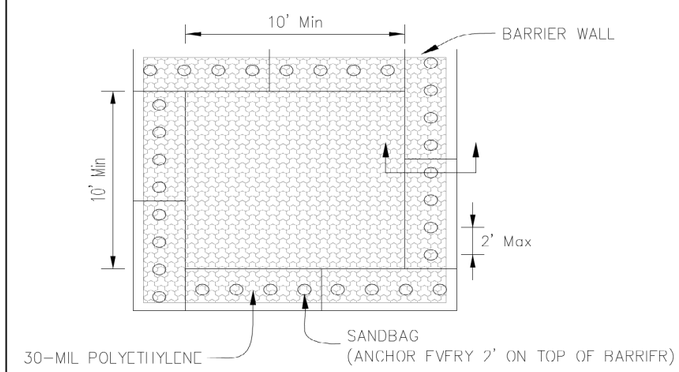

PLAN VIEW

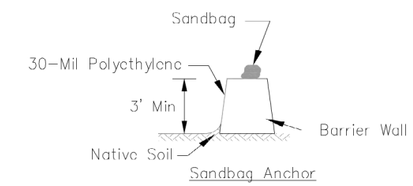

BARRIER WALL ANCHOR SECTION

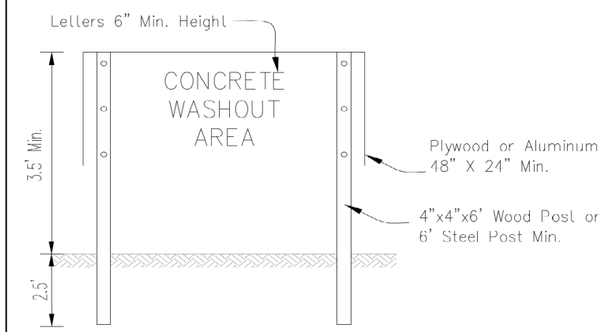

SIGN DETAIL

NOTES:

1. Maintaining temporary concrete washout facilities shall include removing and disposing of hardend concrete and/or slurry and returning the facilities to a functional condition.
2. Facility shall be cleaned or reconstructed in a new area once washout becomes two-thirds full.

Sheet 3 of 3	Drawing No.	File No. IUM-65APW	TEMPORARY CONCRETE WASHOUT FACILITY BARRIER WALL	Designed ____ Date ____ Drawn B. JOHNSON 6/08 Checked ____ Approved ____

CHRISTOPHER B. BURKE ENGINEERING, LTD.
9021 W. 159th Street, Suite 201
Lockport, Illinois 60441
(815) 770-2850

USER NAME = eschaefer	DESIGNED - AJS/JRS	REVISED -	
	DRAWN - JRS/PWN	REVISED -	
PLOT SCALE = N.T.S.	CHECKED - AJS	REVISED -	
PLOT DATE = 11/2/2025	DATE -	REVISED -	

STATE OF ILLINOIS
DEPARTMENT OF TRANSPORTATION

SEIL ROAD WIDENING
CONSTRUCTION DETAILS

SCALE: N.T.S. | SHEET 9 OF 10 SHEETS | STA. TO STA.

F.A.U. RTE.	SECTION	COUNTY	TOTAL SHEETS	SHEET NO.
0403	21-00047-00-WR	WILL	149	128
		CONTRACT NO. 61M01		
		ILLINOIS FED. AID PROJECT		

SILT FENCE PLAN

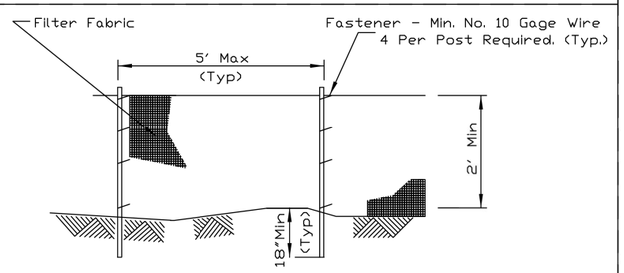

ELEVATION

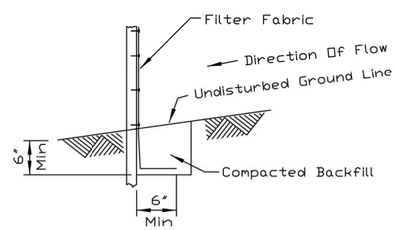

FABRIC ANCHOR DETAIL

NOTES:
1. Temporary sediment fence shall be installed prior to any grading work in the area to be protected. They shall be maintained throughout the construction period and removed in conjunction with the final grading and site stabilization.
2. Filter fabric shall meet the requirements of material specification 592 Geotextile Table 1 or 2, Class I with equivalent opening size of at least 30 for nonwoven and 50 for woven.
3. Fence posts shall be either standard steel post or wood post with a minimum cross-sectional area of 3.0 sq. in.

REFERENCE			STANDARD DWG. NO.
Project		NRCS Natural Resources Conservation Service	IL-620
Designed	Date		SHEET 1 OF 2
Checked	Date		DATE 11-20-01
Approved	Date		

SILT FENCE

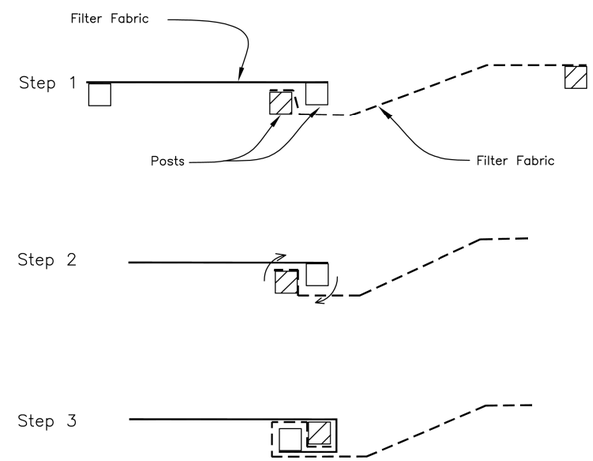

ATTACHING TWO SILT FENCES

NOTES:
1. Place the end post of the second fence inside the end post of the first fence.
2. Rotate both posts at least 180 degrees in a clockwise direction to create a tight seal with the fabric material.
3. Drive both posts a minimum of 18 inches into the ground and bury the flap.

REFERENCE			STANDARD DWG. NO.
Project		NRCS Natural Resources Conservation Service	IL-620(W)
Designed	Date		SHEET 2 OF 2
Checked	Date		DATE 1-29-99
Approved	Date		

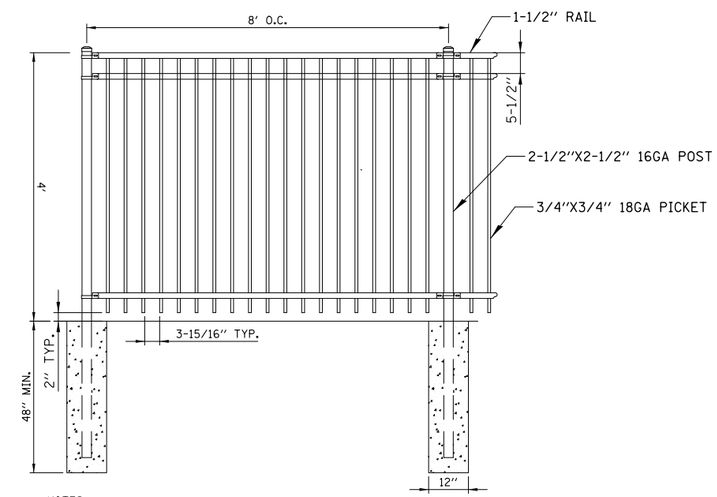

NOTES:
1. FENCE SHALL BE POWDER COATED BLACK, INCLUDING ALL HARDWARE.
2. ALL HARDWARE, MOUNTING AND CONNECTION MATERIALS SHALL BE IN ACCORDANCE WITH MANUFACTURES REQUIREMENTS.

ORNAMENTAL FENCE DETAIL

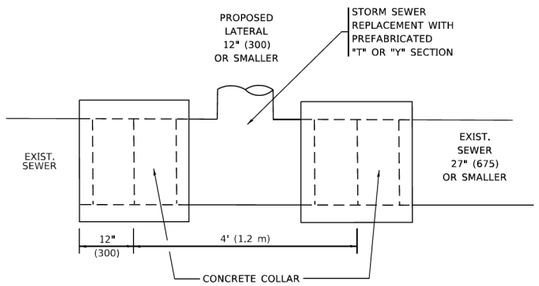

DETAIL "A"

LATERAL CONNECTION TO EXISTING SEWER
OF 27" (675) OR SMALLER

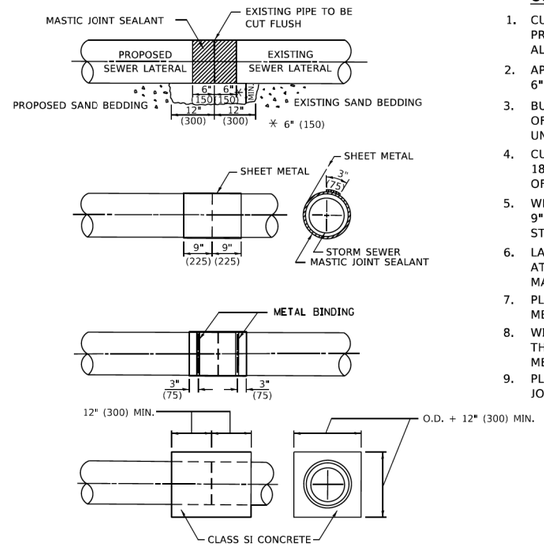

DETAIL "B"

CLASS SI CONCRETE COLLAR

CONSTRUCTION SEQUENCE

1. CUT THE EXISTING END OF THE PIPE SO AS TO PRESENT A FLUSH BUTT JOINT. BRUSH AND CLEAN ALL PIPES.
2. APPLY THE MASTIC JOINT SEALANT TO THE FIRST 6" (150) OF EACH PIPE.
3. BUTT THE PIPES TOGETHER LEAVING A MINIMUM OF 12' x 6' (300 x 150) DEEP EXCAVATION UNDER AND AROUND EACH PIPE END.
4. CUT A PIECE OF SHEET METAL GAGE NO. 19 1.1 (0.0418) 18" (450) WIDE BY THE OUTSIDE CIRCUMFERANCE OF THE PIPE PLUS 3" (75) LONG.
5. WRAP THE SHEET METAL AROUND THE PIPES, 9" (225) ON EACH SIDE OF THE JOINT, STARTING AT THE TOP OF THE PIPE.
6. LAP THE SHEET METAL AT LEAST 3" (75) AT THE TOP OF THE PIPE AND PLACE THE MASTIC JOINT SEALANT BETWEEN THE LAP.
7. PLACE TWO METAL BANDS AROUND THE SHEET METAL AND TIGHTEN.
8. WIPE OFF ANY EXCESS MASTIC JOINT SEALANT THAT OOZES OUT FROM BETWEEN THE SHEET METAL AND THE PIPES.
9. PLACE CLASS SI CONCRETE AROUND THE JOINT.

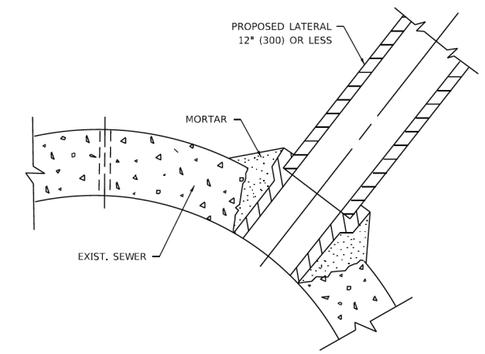

DETAIL "C"

PROPOSED LATERAL
CONNECTION TO EXISTING SEWER
OF 30" (750) OR LARGER

NOTES:

MATERIAL

MATERIAL USED FOR THE TEE OR WYE SECTION SHALL BE COMPATIBLE WITH THE EXISTING STORM SEWER OR THE PROPOSED STORM SEWER.

CONSTRUCTION METHODS

I. THIS WORK SHALL BE CONSTRUCTED IN CONFORMANCE WITH THE APPLICABLE PORTIONS OF SECTION 550 OF THE STANDARD SPECIFICATIONS.

II. CONNECTION TO AN EXISTING STORM SEWER SHALL BE BY EITHER OF THE FOLLOWING METHODS:
A) PROPOSED STORM SEWER CONNECTION TO EXISTING SEWER OF 27" (675) OR SMALLER SEE DETAIL "A" AND "B".
B) PROPOSED STORM SEWER CONNECTION TO EXISTING SEWER OF 30" (750) OR LARGER SEE DETAIL "C".

IF THE EXISTING SEWER PIPE IS CRACKED, BROKEN OR OTHERWISE DAMAGED BY THE CONTRACTOR IN MAKING THE CIRCULAR OPENING, THE CONTRACTOR SHALL REPLACE THAT SECTION OF PIPE WITH PIPE EQUAL AND SIMILAR IN ALL RESPECTS TO THE PIPE IN THE EXISTING SEWER, IN A CAREFUL WORKMANLIKE MANNER, WITHOUT EXTRA COMPENSATION.

GENERAL

1. CARE MUST BE TAKEN TO PREVENT DEBRIS FROM ENTERING THE SEWER. ALL DEBRIS WHICH ENTERS THE SEWER MUST BE REMOVED. THE SEWER MUST BE LEFT CLEAN AND UNOBSTRUCTED UPON COMPLETION OF THE CONTRACT.
2. CARE MUST BE TAKEN TO PREVENT ANY PART OF THE NEW PIPE CONNECTION FROM PROJECTING INTO THE EXISTING SEWER.

BASIS OF PAYMENT

1. TEE OR WYE CONNECTIONS SHALL BE PAID FOR AT THE CONTRACT UNIT PRICE EACH FOR STORM SEWER TEE OR WYE OF THE TYPE AND SIZE SPECIFIED IN THE PLANS, THIS PRICE SHALL INCLUDE ALL EXCAVATION OF THE TRENCH, REMOVAL OF THE EXISTING STORM SEWER, FURNISHING AND INSTALLING THE SPECIFIED TEE OR WYE SECTION, FURNISHING AND INSTALLING THE REQUIRED CONCRETE COLLAR, AND ALL OTHER MATERIAL NECESSARY TO COMPLETE THIS WORK AS SHOWN AND SPECIFIED.
2. REMOVAL AND REINSTALLATION OF EXISTING STORM SEWER ADJACENT TO THE PROPOSED TEE OR WYE SECTION, FOR THE PURPOSE OF FACILITATING THE INSTALLATION OF THE TEE OR WYE SECTION, WILL NOT BE PAID FOR SEPARATELY BUT SHALL BE INCLUDED IN THE UNIT PRICE BID FOR THE WORK.
3. TRENCH BACKFILL, EXCAVATION IN ROCK AND REMOVAL AND REPLACEMENT OF UNSUITABLE MATERIAL BELOW PLAN BEDDING GRADE WILL BE PAID FOR SEPARATELY.
4. CONCRETE COLLAR FOR CONNECTING A PROPOSED STORM SEWER TO AN EXISTING STORM SEWER WILL NOT BE PAID PAID FOR SEPARATELY BUT SHALL BE INCLUDED IN THE COST OF THE PROPOSED STORM SEWER.

* ALL DIMENSIONS ARE IN INCHES (MILLIMETERS) UNLESS OTHERWISE SHOWN.

MODEL: Default
FILE NAME: pw:\\ildot-pw.bentley.com:PWIDOT\Documents\IDOT Offices\District 1\Projects\District22x34\CADData\CADsheets\bd97.dgn

USER NAME = Lawrence.DeManche	DESIGNED - M. DE YONG	REVISED - R. SHAH 09-09-94	STATE OF ILLINOIS DEPARTMENT OF TRANSPORTATION	DETAIL OF STORM SEWER CONNECTION TO EXISTING SEWER	F.A. RTE. / SECTION / COUNTY / TOTAL SHEETS / SHEET NO.
	DRAWN -	REVISED - R. SHAH 10-25-94			
PLOT SCALE = 100.0000 ' / in.	CHECKED -	REVISED - R. SHAH 06-12-96			BD500-01 (BD-07) / CONTRACT NO.
PLOT DATE = 11/18/2022	DATE - 07-25-90	REVISED - K. SMITH 11-18-22		SCALE: NONE / SHEET 1 OF 1 SHEETS / STA. TO STA.	ILLINOIS / FED. AID PROJECT

CHRISTOPHER B. BURKE ENGINEERING, LTD.
9223 W. 159th Street, Suite 201
Lockport, Illinois 60441
(815) 770-2850

USER NAME = aschaefer	DESIGNED - AJS/JRS	REVISED -	STATE OF ILLINOIS DEPARTMENT OF TRANSPORTATION	SEIL ROAD WIDENING DISTRICT ONE DETAILS	F.A.U. RTE. / SECTION / COUNTY / TOTAL SHEETS / SHEET NO.
	DRAWN - JRS/PWN	REVISED -			0403 / 21-00047-00-WR / WILL / 149 / 130
PLOT SCALE = N.T.S.	CHECKED - AJS	REVISED -			CONTRACT NO. 61M01
PLOT DATE = 11/2/2025	DATE -	REVISED -		SCALE: N.T.S. / SHEET 1 OF 8 SHEETS / STA. TO STA.	ILLINOIS / FED. AID PROJECT

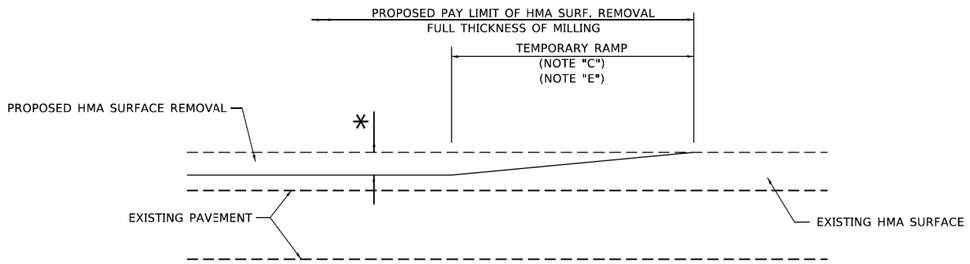

MILLED TEMPORARY RAMP

(FOR BUTT JOINT AND HMA TAPER SEE DETAIL BELOW)

OPTION 1

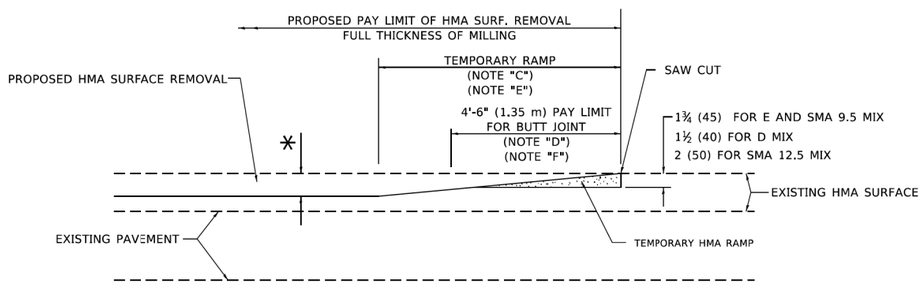

HMA CONSTRUCTED TEMPORARY RAMP

(FOR BUTT JOINT AND HMA TAPER SEE DETAIL BELOW)

OPTION 2

TYPICAL TEMPORARY RAMP

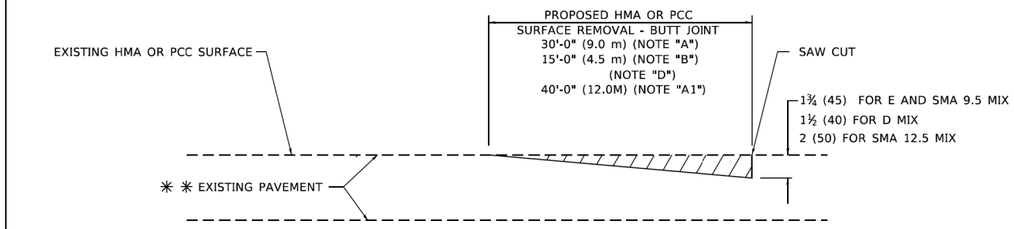

BUTT JOINT DETAIL

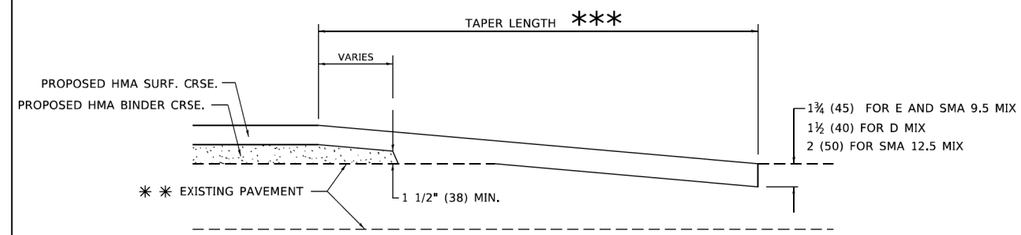

HMA TAPER DETAIL

TYPICAL BUTT JOINT AND HMA TAPER FOR RESURFACING ONLY

** PC CONCRETE, HMA OR HMA RESURFACED PAVEMENT.

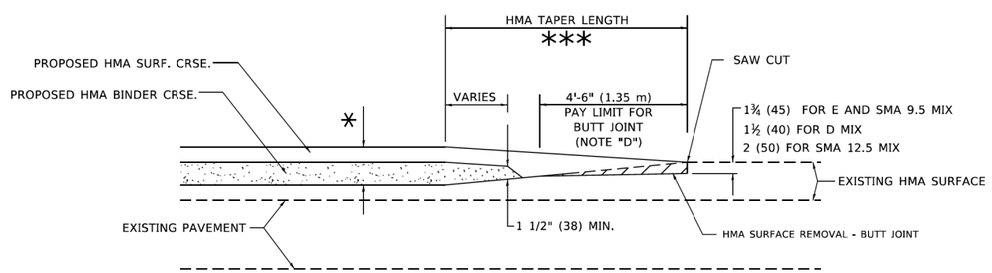

BUTT JOINT AND HMA TAPER

TYPICAL BUTT JOINT AND HMA TAPER FOR MILLING AND RESURFACING

GENERAL NOTES

A. MAINLINE ARTERIAL ROADWAYS AND MAJOR SIDE ROADS.

A1. INTERSTATES

B. MINOR SIDE ROADS.

C. THE TEMP. RAMP SHALL BE CONSTRUCTED IMMEDIATELY UPON REMOVAL OF THE EXISTING HMA SURFACE.

D. THE BUTT JOINT SHALL BE CONSTRUCTED IMMEDIATELY PRIOR TO PLACING THE PROPOSED HMA COURSES.

E. TAPER THE TEMP. RAMP AT A RATE OF 3' - 4" (1.02m) PER 1 INCH (25 mm) OF MILLING THICKNESS.

* SEE TYPICAL SECTIONS FOR MILLING THICKNESS.

F. SEE ARTICLE 406.08 AND 406.14 OF THE STANDARD SPECIFICATIONS FOR "HMA AND/OR PCC SURFACE REMOVAL, BUTT JOINT".

*** 20'-0" (6.1 m) PER 1 (25) RESURFACING (NOTE "A")
10'-0" (3.0 m) PER 1 (25) RESURFACING (NOTE "B")

BASIS OF PAYMENT

1. THE BUTT JOINT WILL BE PAID FOR AT THE CONTRACT UNIT PRICE PER SQUARE YARD (SQUARE METER) FOR "HOT-MIX ASPHALT SURFACE REMOVAL - BUTT JOINT" OR FOR "PORTLAND CEMENT CONCRETE SURFACE REMOVAL- BUTT JOINT".
2. THE TEMPORARY RAMP AND SAW CUT SHALL BE INCLUDED IN THE UNIT COST FOR HMA OR PCC SURFACE REMOVAL-BUTT JOINT.

ALL DIMENSIONS ARE IN INCHES (MILLIMETERS) UNLESS OTHERWISE SHOWN.

MODEL: Default
FILE NAME: pw:\\bdot-pw.bentley.com:PWIDOT\Documents\IDOT Offices\District 1\Projects\BhSd22x34\CADData\CADsheets\bd32.dgn

USER NAME = Lawrence.DeManche	DESIGNED - M. DE YONG	REVISED - A. ABBAS 03-21-97	STATE OF ILLINOIS DEPARTMENT OF TRANSPORTATION	BUTT JOINT AND HMA TAPER DETAILS	F.A. RTE.	SECTION	COUNTY	TOTAL SHEETS	SHEET NO.
	DRAWN -	REVISED - M. GOMEZ 04-06-01							
PLOT SCALE = 100.0000 ' / In.	CHECKED -	REVISED - R. BORO 01-01-07			BD400-05	BD-32	CONTRACT NO.		
PLOT DATE = 11/18/2022	DATE - 06-13-90	REVISED - K. SMITH 11-18-22		SCALE: NONE SHEET 1 OF 1 SHEETS STA. TO STA.			ILLINOIS	FED. AID PROJECT	

CHRISTOPHER B. BURKE ENGINEERING, LTD.
9027 W. 159th Street, Suite 201
Lockport, Illinois 60441
(815) 770-2850

USER NAME = aschaefer	DESIGNED - AJS/JRS	REVISED -	STATE OF ILLINOIS DEPARTMENT OF TRANSPORTATION	SEIL ROAD WIDENING DISTRICT ONE DETAILS	F.A.U. RTE.	SECTION	COUNTY	TOTAL SHEETS	SHEET NO.
	DRAWN - JRS/PWN	REVISED -			0403	21-00047-00-WR	WILL	149	131
PLOT SCALE = N.T.S.	CHECKED - AJS	REVISED -					CONTRACT NO. 61M01		
PLOT DATE = 11/2/2025	DATE -	REVISED -		SCALE: N.T.S. SHEET 2 OF 8 SHEETS STA. TO STA.			ILLINOIS	FED. AID PROJECT	

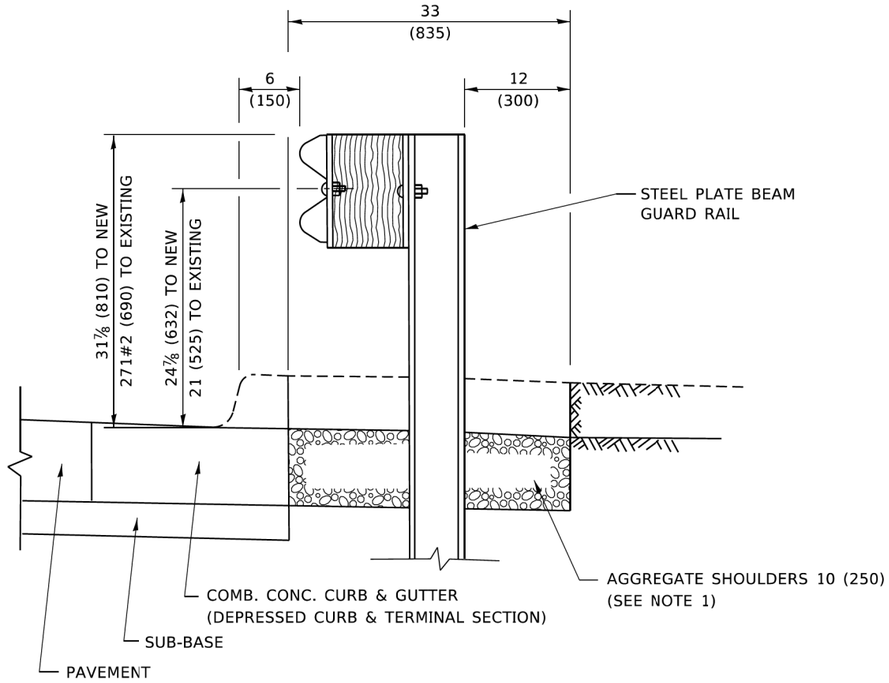

SECTION A–A

NOTES:

1. THE AGGREGATE SHOULDER, 10 (250) OR HMA SHOULDER, 6 (150) (IF REQUIRED) SHALL EXTEND UNDER THE TRAFFIC BARRIER TERMINAL.
2. "EXISTING" GUARDRAIL REFERS TO CONNECTING TERMINAL SECTION TO GUARD RAILING PRIOR TO THE MIDWEST GUARDRAIL SYSTEM.
3. THE CONTRACTOR SHALL VERIFY THE TYPE/HEIGHT OF GUARDRAIL IN-PLACE BEFORE ORDERING THE NEW TERMINAL SECTION. COST INCLUDED WITH THE COST OF THE TERMINAL. THE EXISTING GUARDRAIL HEIGHT SHALL TRANSISTION TO MATCH THE NEW TERMINAL END SECTION AND SHALL BE PAID FOR AS VERTICAL ADJUSTMENT OF EXISTING GUADRAIL.

DETAILS FOR STEEL PLATE BEAM GUARD RAIL ADJACENT TO CURB AND GUTTER [FOR ROADWAY SPEED 35 MPH (60 kmh) TO 45 MPH (70 kmh)]

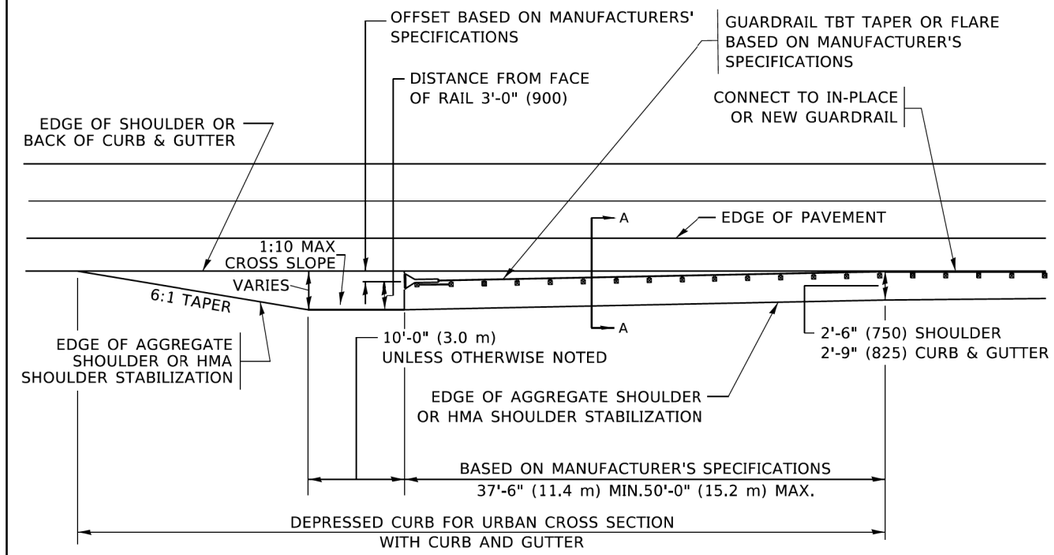

DEPRESSED CURB AND GUTTER AND SHOULDER TREATMENT AT TBT TY. 1 SPL.

AGGREGATE SHOULDER, 10 (250) WILL BE PAID ACCORDING TO SECTION 481.

HMA SHOULDERS 6 (150) (IF REQUIRED) WILL BE PAID ACCORDING TO SECTION 482.

COMB. CONC. C&G, STEEL PLATE BEAM GUARD RAIL AND TRAFFIC BARRIER TERMINAL, OF THE TYPE SPECIFIED WILL BE PAID FOR SEPARATELY.

TBT = TRAFFIC BARRIER TERMINAL

ALL DIMENSIONS ARE IN INCHES (MILLIMETERS) UNLESS OTHERWISE SHOWN.

MODEL: Default
FILE NAME: pw:\\ildot-pw.bentley.com:PWIDOT\Documents\IDOT Offices\District 1\Projects\Dist22x34\CADData\CADsheets\bd34.dgn

USER NAME = Lawrence.DeManche	DESIGNED - M. DE YONG	REVISED - R. BORO 09-14-2009	STATE OF ILLINOIS DEPARTMENT OF TRANSPORTATION
	DRAWN -	REVISED - R. BORO 08-06-2012	
PLOT SCALE = 100.0000 ' / in.	CHECKED -	REVISED - R. BORO 05-08-2015	
PLOT DATE = 11/18/2022	DATE - 09-22-90	REVISED - K. SMITH 11-18-22	

DETAILS FOR DEPRESSED CURB & GUTTER AND SHOULDER TREATMENT AT TBT TY. 1 SPL.

SCALE: NONE | SHEET 1 OF 1 SHEETS | STA. TO STA.

F.A. RTE.	SECTION	COUNTY	TOTAL SHEETS	SHEET NO.
	BD600–10 (BD–34)	CONTRACT NO.		
		ILLINOIS FED. AID PROJECT		

CHRISTOPHER B. BURKE ENGINEERING, LTD.
9023 W. 159th Street, Suite 201
Lockport, Illinois 60441
(815) 770-2650

USER NAME = aschaefer	DESIGNED - AJS/JRS	REVISED -	STATE OF ILLINOIS DEPARTMENT OF TRANSPORTATION
	DRAWN - JRS/PWN	REVISED -	
PLOT SCALE = N.T.S.	CHECKED - AJS	REVISED -	
PLOT DATE = 11/2/2025	DATE -	REVISED -	

SEIL ROAD WIDENING
DISTRICT ONE DETAILS

SCALE: N.T.S. | SHEET 3 OF 8 SHEETS | STA. TO STA.

F.A.U. RTE.	SECTION	COUNTY	TOTAL SHEETS	SHEET NO.
0403	21-00047-00-WR	WILL	149	132
		CONTRACT NO. 61M01		
		ILLINOIS FED. AID PROJECT		

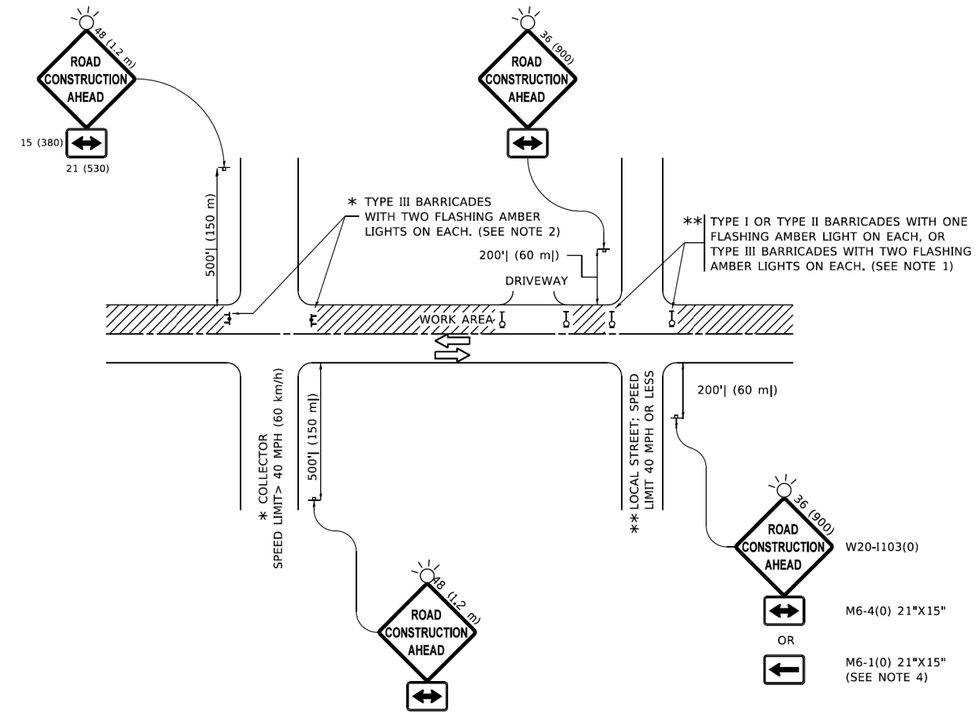

NOTES:

1. SIDE ROAD WITH A SPEED LIMIT OF 40 MPH (60 km/h) OR LESS AS SHOWN ON THE DRAWING AND AS DIRECTED BY THE ENGINEER:

   a) ONE "ROAD CONSTRUCTION AHEAD" SIGN 36 x 36 (900x900) WITH A FLASHER MOUNTED ON IT APPROXIMATELY 200' (60 m) IN ADVANCE OF THE MAIN ROUTE.

   b) THE CLOSED PORTION OF THE MAIN ROUTE SHALL BE PROTECTED BY BLOCKING WITH TYPE I, TYPE II OR TYPE III BARRICADES, 1/3 OF THE CROSS SECTION OF THE CLOSED PORTION.

2. SIDE ROAD WITH A SPEED LIMIT GREATER THAN 40 MPH (60 km/h) AS SHOWN ON THE DRAWING AND AS DIRECTED BY THE ENGINEER:

   a) ONE "ROAD CONSTRUCTION AHEAD" SIGN 48 x 48 (1.2 m x 1.2 m) WITH A FLASHER MOUNTED ON IT APPROXIMATELY 500' (150 m) IN ADVANCE OF THE MAIN ROUTE.

   b) THE CLOSED PORTION OF THE MAIN ROUTE SHALL BE PROTECTED BY BLOCKING WITH TYPE III BARRICADES, 1/2 OF THE CROSS SECTION OF THE CLOSED PORTION.

3. CONES MAY BE SUBSTITUTED FOR BARRICADES OR DRUMS AT HALF THE SPACING DURING DAY OPERATIONS. CONES SHALL BE A MINIMUM OF 28 (710) IN HEIGHT.

4. WHEN THE SIDE ROAD LIES BETWEEN THE BEGINNING OF THE MAINLINE SIGNING AND THE WORK ZONE, A SINGLE HEADED ARROW (M6-1) SHALL BE USED IN LIEU OF THE DOUBLE HEADED ARROW (M6-4).

5. WHEN WORK IS BEING PERFORMED ON A SIDE ROAD OR DRIVEWAY, FOLLOW THE APPLICABLE STANDARD(S). THE DIRECTIONAL ARROW (M6-1 OR M6-4) SHALL BE COVERED OR REMOVED WHEN NO LONGER CONSISTENT WITH THE TRAFFIC CONTROL SET-UP.

6. ADVANCE WARNING SIGNS ARE TO BE OMITTED ON DRIVEWAYS UNLESS OTHERWISE SPECIFIED IN THE PLANS OR BY THE ENGINEER.

7. THE TRAFFIC CONTROL AND PROTECTION FOR SIDE ROADS, INTERSECTIONS, AND DRIVEWAYS SHALL BE INCLUDED IN THE COST OF SPECIFIED TRAFFIC CONTROL STANDARDS OR ITEMS.

All dimensions are in inches (millimeters) unless otherwise shown.

MODEL: Default
FILE NAME: pw:\\bbo-pw.bentley.com:PWIDOT\Documents\IDOT Offices\District 1\Projects\D1R5d22x34\CADData\CADsheets\tc10.dgn

USER NAME = Lawrence.DeManche	DESIGNED - L.H.A.	REVISED - T. RAMMACHER 01-06-00	STATE OF ILLINOIS DEPARTMENT OF TRANSPORTATION
	DRAWN -	REVISED - A. SCHUETZE 07-01-13	
PLOT SCALE = 100.0000 ' / In.	CHECKED -	REVISED - A. SCHUETZE 09-15-16	
PLOT DATE = 5/3/2024	DATE - 06-89	REVISED - D. SENDERAK 05-03-24	

TRAFFIC CONTROL AND PROTECTION FOR SIDE ROADS, INTERSECTIONS, AND DRIVEWAYS

SCALE: NONE | SHEET 1 OF 1 SHEETS | STA. TO STA.

F.A. RTE.	SECTION	COUNTY	TOTAL SHEETS	SHEET NO.
	TC-10	CONTRACT NO.		
	ILLINOIS	FED. AID PROJECT		

CHRISTOPHER B. BURKE ENGINEERING, LTD.
16221 W. 159th Street, Suite 201
Lockport, Illinois 60441
(815) 770-2650

USER NAME = aschaefer	DESIGNED - AJS/JRS	REVISED -	STATE OF ILLINOIS DEPARTMENT OF TRANSPORTATION
	DRAWN - JRS/PWN	REVISED -	
PLOT SCALE = N.T.S.	CHECKED - AJS	REVISED -	
PLOT DATE = 11/2/2025	DATE -	REVISED -	

SEIL ROAD WIDENING
DISTRICT ONE DETAILS

SCALE: N.T.S. | SHEET 4 OF 8 SHEETS | STA. TO STA.

F.A.U. RTE.	SECTION	COUNTY	TOTAL SHEETS	SHEET NO.
0403	21-00047-00-WR	WILL	149	133
		CONTRACT NO. 61M01		
	ILLINOIS	FED. AID PROJECT		

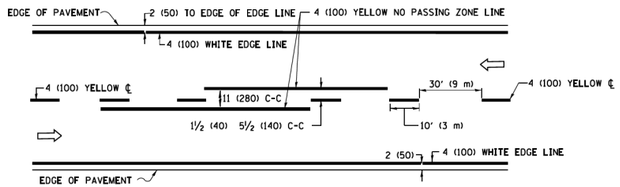

2–LANE ROADWAY

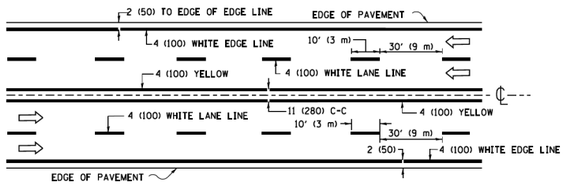

MULTI–LANE UNDIVIDED

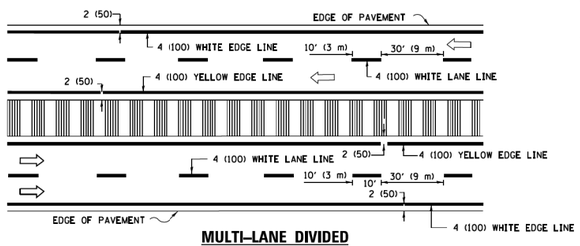

MULTI–LANE DIVIDED

WITH MEDIAN

TYPICAL LANE AND EDGE LINE MARKING

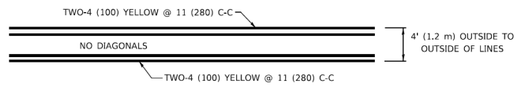

4' (1.2 m) WIDE MEDIANS ONLY

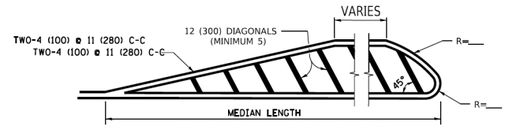

FOR MEDIAN LENGTHS WHERE DIAGONAL SPACING CANNOT BE ATTAINED, USE 5 (FIVE) EQUALLY SPACED DIAGONAL LINES.

DIAGONAL LINE SPACING: 50' (15 m) C-C (LESS THAN 30MPH (50 km/h))
75' (25 m) C-C 30MPH (50 km/h) TO 45MPH (70 km/h))
150' (45 m) C-C (MORE THAN 45MPH (70 km/h))

MEDIANS OVER 4' (1.2 m) WIDE

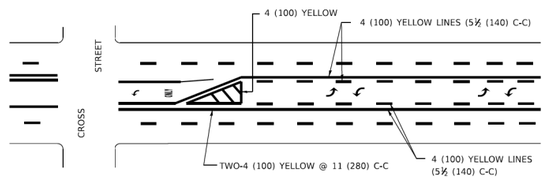

A MINIMUM OF TWO PAIRS OF TURN ARROWS SHALL BE USED, WHITE IN COLOR. ADDITIONAL PAIRS SHALL BE PLACED AT 200' (60 m) TO 300' (90 m) INTERVALS.

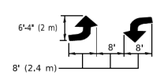

MEDIAN WITH TWO–WAY LEFT TURN LANE

TYPICAL PAINTED MEDIAN MARKING

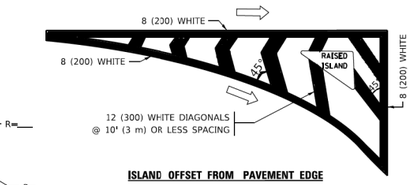

ISLAND OFFSET FROM PAVEMENT EDGE

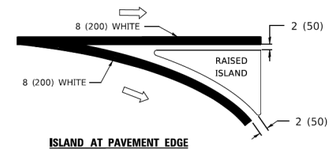

ISLAND AT PAVEMENT EDGE

TYPICAL ISLAND MARKING

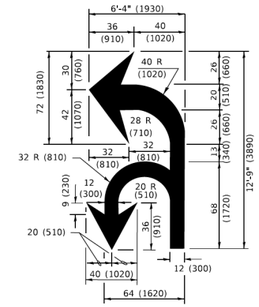

COMBINATION LEFT AND U–TURN

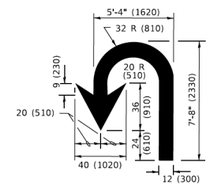

U–TURN

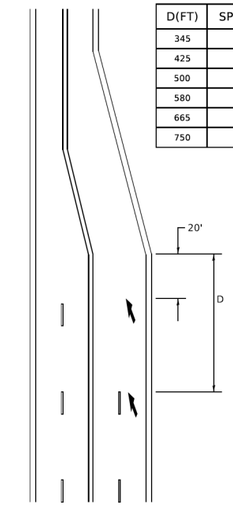

D(FT)	SPEED LIMIT
345	30
425	35
500	40
580	45
665	50
750	55

LANE REDUCTION TRANSITION

* LANE REDUCTION ARROWS REQUIRED AT SPEEDS OF 45 MPH OR GREATER OR WHEN SPECIFIED IN PLANS.

TYPE OF MARKING	WIDTH OF LINE	PATTERN	COLOR	SPACING / REMARKS
CENTERLINE ON 2 LANE PAVEMENT	4 (100)	SKIP-DASH	YELLOW	10' (3 m) LINE WITH 30' (9 m) SPACE
CENTERLINE ON MULTI-LANE UNDIVIDED PAVEMENT	2 @ 4 (100)	SOLID	YELLOW	11 (280) C-C
NO PASSING ZONE LINES: FOR ONE DIRECTION FOR BOTH DIRECTIONS	4 (100) 2 @ 4 (100)	SOLID SOLID	YELLOW YELLOW	5½ (140) C-C FROM SKIP-DASH CENTERLINE 11 (280) C-C OMIT SKIP-DASH CENTERLINE BETWEEN
LANE LINES	4 (100) 5 (125) ON FREEWAYS	SKIP-DASH SKIP-DASH	WHITE WHITE	10' (3 m) LINE WITH 30' (9 m) SPACE
DOTTED LINES (EXTENSIONS OF CENTER, LANE OR TURN LANE MARKINGS)	SAME AS LINE BEING EXTENDED	SKIP-DASH	SAME AS LINE BEING EXTENDED	2' (600) LINE WITH 6' (1.8 m) SPACE
EDGE LINES	4 (100)	SOLID	YELLOW-LEFT WHITE-RIGHT	OUTLINE MEDIANS IN YELLOW
TURN LANE MARKINGS	6 (150) LINE: FULL SIZE LETTERS & SYMBOLS (8' (2.4m))	SOLID	WHITE	SEE TYPICAL TURN LANE MARKING DETAIL
TWO WAY LEFT TURN MARKING	2 @ 4 (100) EACH DIRECTION 8' (2.4m) LEFT ARROW	SKIP-DASH AND SOLID IN PAIRS	YELLOW WHITE	10' (3 m) LINE WITH 30' (9 m) SPACE FOR SKIP-DASH; 5½ (140) C-C BETWEEN SOLID LINE AND SKIP-DASH LINE SEE TYPICAL TWO-WAY LEFT TURN MARKING DETAIL
CROSSWALK LINES (PEDESTRIAN) A. DIAGONALS (BIKE & EQUESTRIAN) B. LONGITUDINAL BARS (SCHOOL)	2 @ 6 (150) 12 (300) @ 45° 12 (300) @ 90°	SOLID SOLID SOLID	WHITE WHITE WHITE	NOT LESS THAN 6' (1.8 m) APART 2' (600) APART 2' (600) APART SEE TYPICAL CROSSWALK MARKING DETAILS.
STOP LINES	24 (600)	SOLID	WHITE	PLACE 4' (1.2 m) IN ADVANCE OF AND PARALLEL TO CROSSWALK. IF PRESENT, OTHERWISE, PLACE AT DESIRED STOPPING POINT. PARALLEL TO CROSSROAD CENTERLINE, WHERE POSSIBLE
PAINTED MEDIANS	2 @ 4 (100) WITH 12 (300) DIAGONALS @ 45° NO DIAGONALS USED FOR 4' (1.2 m) WIDE MEDIANS	SOLID	YELLOW: TWO WAY TRAFFIC WHITE: ONE WAY TRAFFIC	11 (280) C-C FOR THE DOUBLE LINE SEE TYPICAL PAINTED MEDIAN MARKING.
GORE MARKING AND CHANNELIZING LINES	8 (200) WITH 12 (300) DIAGONALS @ 45°	SOLID	WHITE	DIAGONALS: 15' (4.5 m) C-C (LESS THAN 30MPH (50 km/h)) 20' (6 m) C-C 30MPH (50 km/h) TO 45MPH (70 km/h)) 30' (9 m) C-C (OVER 45MPH (70 km/h))
RAILROAD CROSSING	24 (600) TRANSVERSE LINES; *RR* IS 6' (1.8 m) LETTERS; 16 (400) LINE FOR *X*	SOLID	WHITE	SEE STATE STANDARD 780001 AREA OF: *R*=3.6 SQ. FT. (0.33 m ²) EACH *X*=54.0 SQ. FT. (5.0 m ²)
SHOULDER DIAGONALS (REQUIRED FOR SHOULDERS ≥ 8')	12 (300) @ 45°	SOLID	WHITE - RIGHT YELLOW - LEFT	50' (15 m) C-C (LESS THAN 30MPH (50 km/h)) 75' (25 m) C-C (30 MPH (50 km/h) TO 45MPH (70 km/h)) 150' (45 m) C-C (OVER 45MPH (70 km/h))
U TURN ARROW	SEE DETAIL	SOLID	WHITE	16.3 SF
2 ARROW COMBINATION LEFT AND U TURN	SEE DETAIL	SOLID	WHITE	30.4 SF

FOR FURTHER DETAILS ON PAVEMENT MARKING REFER TO STANDARD SPECIFICATIONS FOR ROAD AND BRIDGE CONSTRUCTION AND STATE STANDARD 780001.

All dimensions are in inches (millimeters) unless otherwise shown.

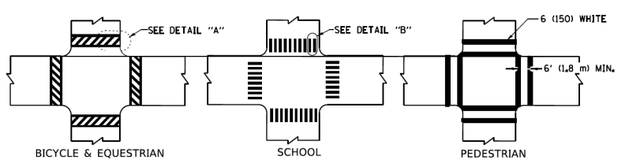

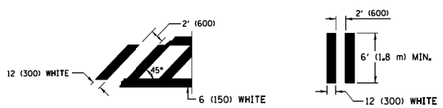

DETAIL "A" DETAIL "B"

TYPICAL CROSSWALK MARKING

* MARKINGS SHALL BE INSTALLED PARALLEL TO THE CENTERLINE OF THE ROAD WHICH IT CROSSES

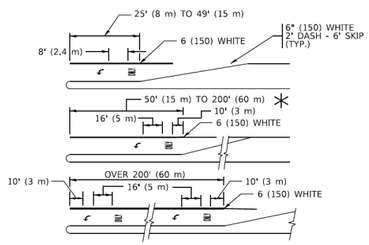

FULL SIZE LETTERS 8' (2.4 m) AND ARROWS SHALL BE USED.
AREA = 15.6 SQ. FT. (1.5 m²) ONLY AREA = 20.8 SQ. FT. (1.9 m ²)

* TURN LANES IN EXCESS OF 400' (120 m) IN LENGTH MAY HAVE AN ADDITIONAL SET OF ARROW - "ONLY" INSTALLED MIDWAY BETWEEN THE OTHER TWO SETS OF ARROW - "ONLY".

TYPICAL LEFT (OR RIGHT) TURN LANE

TYPICAL TURN LANE MARKING

MODEL: Default
FILE NAME: pw:\\IL084EBIDNTEG.illinois.gov:PWIDOT\Documents\IDOT Offices\District 1\Projects\HSI5\d72x34\CADData\CADsheets\tc13.dgn

USER NAME = footem]	DESIGNED - EVERS	REVISED - C. JUCIUS 09-09-09	STATE OF ILLINOIS DEPARTMENT OF TRANSPORTATION	DISTRICT ONE TYPICAL PAVEMENT MARKINGS	F.A. RTE. / SECTION / COUNTY / TOTAL SHEETS / SHEET NO.
	DRAWN -	REVISED - C. JUCIUS 07-01-13			
PLOT SCALE = 50.0000 ' / in.	CHECKED -	REVISED - C. JUCIUS 12-21-15			TC–13 / CONTRACT NO.
PLOT DATE = 3/4/2019	DATE - 03-19-90	REVISED - C. JUCIUS 04-12-16		SCALE: NONE / SHEET 1 OF 2 SHEETS / STA. TO STA.	ILLINOIS FED. AID PROJECT

tc13.dgn 3/4/2019 10:34:37 AM User:footem

CHRISTOPHER B. BURKE ENGINEERING, LTD. 9575 W. 159th Street, Suite 201 Lockport, Illinois 60441 (815) 770-2650	USER NAME = eschaefer	DESIGNED - AJS/JRS	REVISED -	STATE OF ILLINOIS DEPARTMENT OF TRANSPORTATION	SEIL ROAD WIDENING DISTRICT ONE DETAILS
		DRAWN - JRS/PWN	REVISED -		
	PLOT SCALE = N.T.S.	CHECKED - AJS	REVISED -		
	PLOT DATE = 11/2/2025	DATE -	REVISED -		SCALE: N.T.S. / SHEET 5 OF 8 SHEETS / STA. TO STA.

F.A.U. RTE.	SECTION	COUNTY	TOTAL SHEETS	SHEET NO.
0403	21-00047-00-WR	WILL	149	134
		CONTRACT NO. 61M01		
		ILLINOIS FED. AID PROJECT		

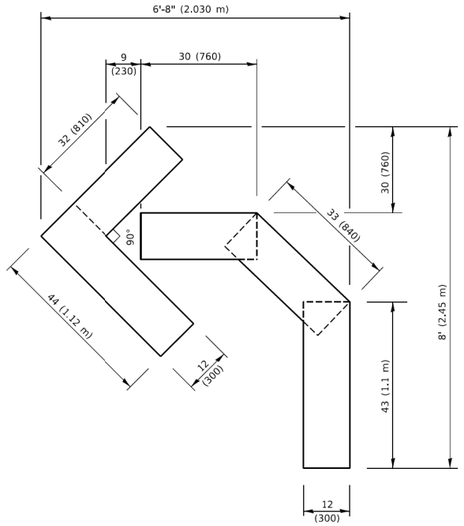

QUANTITY

4 (100) LINE = 45.5 ft. (13.9 m)
15.2 sq. ft. (1.41 sq. m)

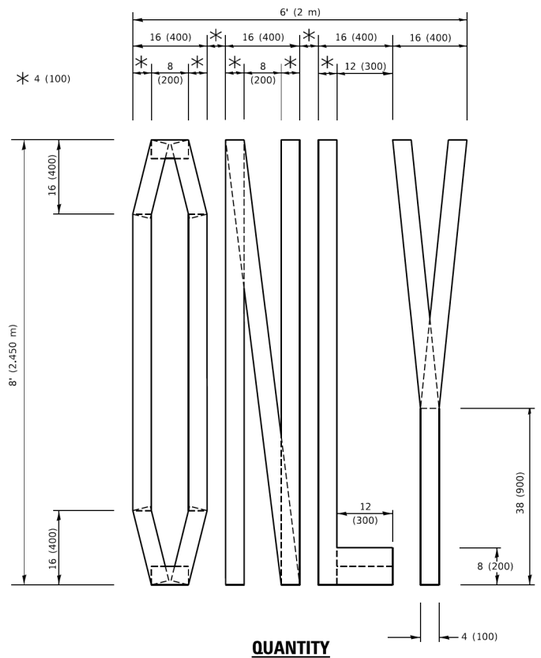

QUANTITY

4 (100) LINE = 64.1 ft. (19.5 m)
21.4 sq. ft. (1.99 sq. m)

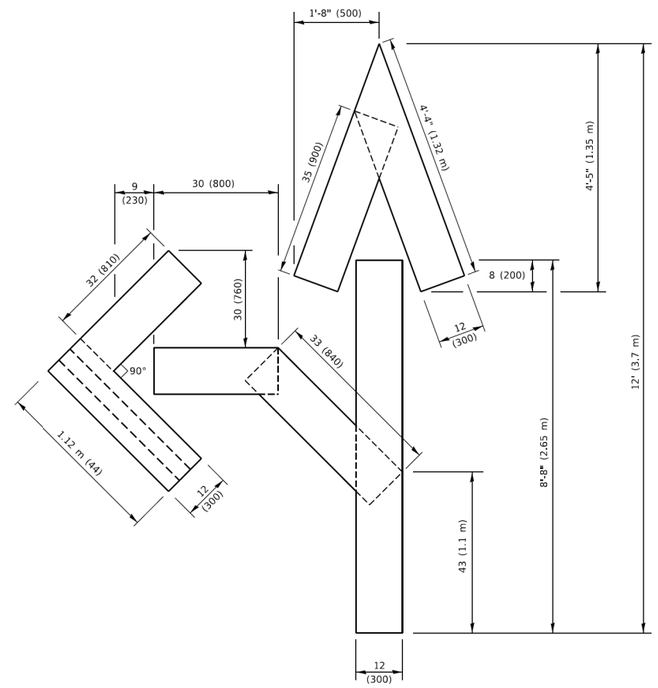

QUANTITY

4 (100) LINE = 82.5 ft. (25.1 m)
27.5 sq. ft. (2.53 sq. m)

NOTE:

ALL QUANTITIES OF PLACEMENT ARE REPRESENTED IN LINEAR FEET OF 4" LINES TO MATCH THE 4" TEMPORARY TAPE PAY ITEM AND REPRESENTS THE TOTAL QUANTITY OF 4" TAPE REQUIRED.

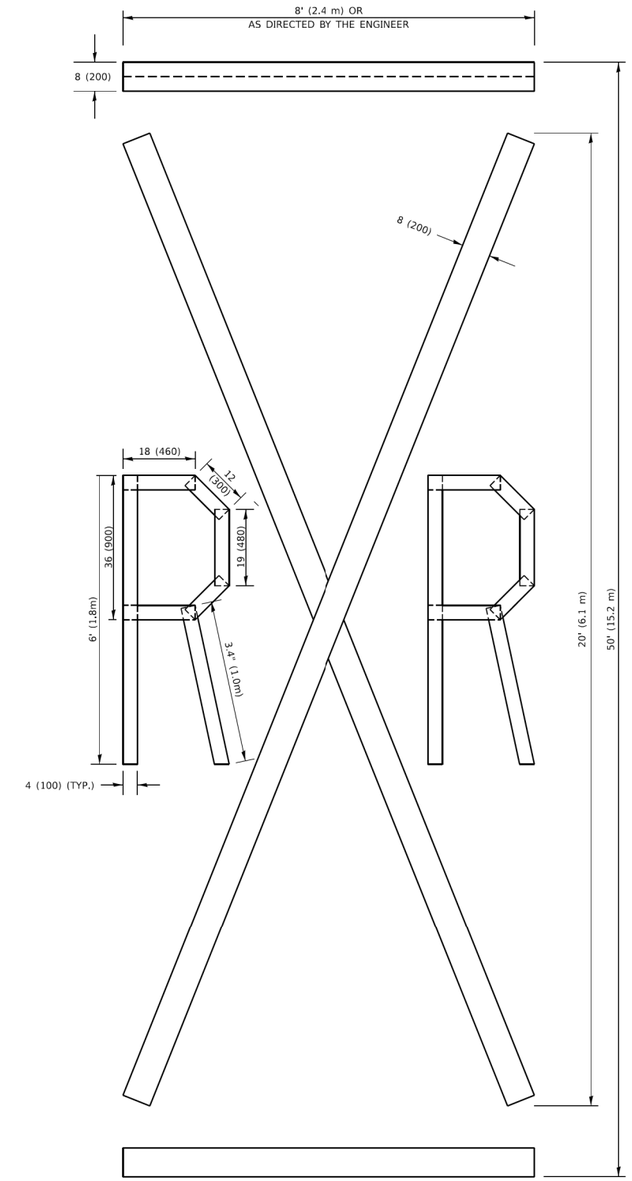

QUANTITY

4 (100) LINE = 225.9 ft. (68.9 m)
75.3 sq. ft. (6.99 sq. m)

All dimensions are in inches (millimeters) unless otherwise shown.

MODEL: Default
FILE NAME: pw:\\IL084EIDINTEG.illinois.gov:PWI\IDOT\Documents\IDOT Offices\District 1\Projects\D845022x34\CADData\CADsheets\tc16.dgn

USER NAME = footemj	DESIGNED -	REVISED - T. RAMMACHER 03-02-98	STATE OF ILLINOIS DEPARTMENT OF TRANSPORTATION
	DRAWN -	REVISED - E. GOMEZ 08-28-00	
PLOT SCALE = 50.0068 ' / in.	CHECKED -	REVISED - E. GOMEZ 08-28-00	
PLOT DATE = 3/4/2019	DATE - 09-18-94	REVISED - A. SCHUETZE 09-15-16	

SHORT TERM PAVEMENT MARKING LETTERS AND SYMBOLS

SCALE: NONE | SHEET 1 OF 1 SHEETS | STA. TO STA.

F.A. RTE.	SECTION	COUNTY	TOTAL SHEETS	SHEET NO.
	TC-16	CONTRACT NO.		
	ILLINOIS	FED. AID PROJECT		

tc16.dgn 3/4/2019 10:37:36 AM User:footemj

CHRISTOPHER B. BURKE ENGINEERING, LTD. 16021 W. 159th Street, Suite 201 Lockport, Illinois 60441 (815) 770-2650	USER NAME = aschaefer	DESIGNED - AJS/JRS	REVISED -
		DRAWN - JRS/PWN	REVISED -
	PLOT SCALE = N.T.S.	CHECKED - AJS	REVISED -
	PLOT DATE = 11/2/2025	DATE -	REVISED -

STATE OF ILLINOIS
DEPARTMENT OF TRANSPORTATION

SEIL ROAD WIDENING
DISTRICT ONE DETAILS

SCALE: N.T.S. | SHEET 6 OF 8 SHEETS | STA. TO STA.

F.A.U. RTE.	SECTION	COUNTY	TOTAL SHEETS	SHEET NO.
0403	21-00047-00-WR	WILL	149	135
		CONTRACT NO. 61M01		
	ILLINOIS	FED. AID PROJECT		

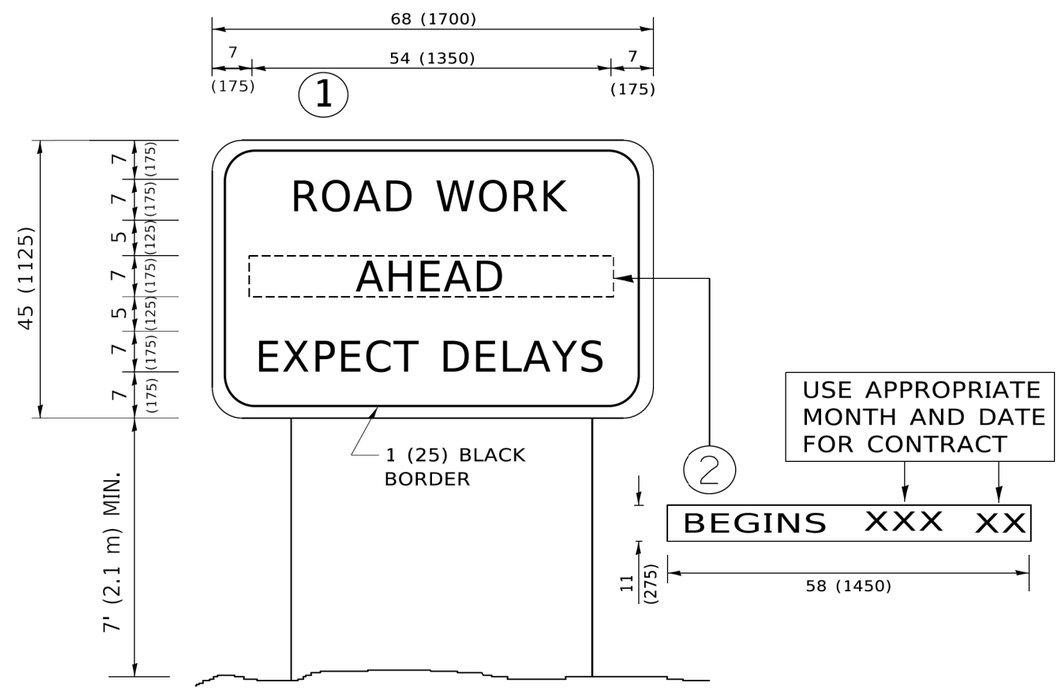

NOTES:

1. USE BLACK LETTERING ON ORANGE BACKGROUND.
2. ERECT SIGNS IN ADVANCE OF THE LOCATION FOR THE "ROAD CONSTRUCTION AHEAD" SIGN AT LOCATIONS AS DIRECTED BY THE ENGINEER.
3. ERECT SIGN 1 WITH INSTALLED PANEL 2 ONE WEEK PRIOR TO THE START OF CONSTRUCTION.
4. REMOVE PANEL 2 SOON AFTER THE START OF CONSTRUCTION.
5. SEE SPECIAL PROVISION FOR "TEMPORARY INFORMATION SIGNING" FOR ADDITIONAL INFORMATION.
6. ONE SIGN ASSEMBLY EQUALS 25.70 SQ. FT. (2.3 SQ. M.)
7. SHALL BE PAID FOR AS TEMPORARY INFORMATION SIGNING.

ALL DIMENSIONS ARE IN INCHES (MILLIMETERS) UNLESS OTHERWISE SHOWN.

MODEL: Default
FILE NAME: pw:\\IL0846IBIINTEG.illinois.gov:PWIDOT\Documents\IDOT Offices\District 1\Projects\bkt5\d22x34\CADData\CADsheets\tc22.dgn

USER NAME = footemj	DESIGNED -	REVISED - R. MIRS 09-15-97	STATE OF ILLINOIS DEPARTMENT OF TRANSPORTATION	ARTERIAL ROAD INFORMATION SIGN	F.A. RTE. / SECTION / COUNTY / TOTAL SHEETS / SHEET NO.
	DRAWN -	REVISED - R. MIRS 12-11-97			
PLOT SCALE = 50.0000 ' / in.	CHECKED -	REVISED - T. RAMNACHER 02-02-99			TC-22 / CONTRACT NO.
PLOT DATE = 3/4/2019	DATE -	REVISED - C. JUCIUS 01-31-07		SCALE: NONE / SHEET 1 OF 1 SHEETS / STA. TO STA.	ILLINOIS / FED. AID PROJECT

tc22.dgn 3/4/2019 10:48:10 AM User:footemj

CHRISTOPHER B. BURKE ENGINEERING, LTD.
16021 W. 159th Street, Suite 201
Lockport, Illinois 60441
(815) 770-2650

USER NAME = aschaefer	DESIGNED - AJS/JRS	REVISED -	STATE OF ILLINOIS DEPARTMENT OF TRANSPORTATION	SEIL ROAD WIDENING DISTRICT ONE DETAILS	F.A.U. RTE. / SECTION / COUNTY / TOTAL SHEETS / SHEET NO.
	DRAWN - JRS/PWN	REVISED -			0403 / 21-00047-00-WR / WILL / 149 / 136
PLOT SCALE = N.T.S.	CHECKED - AJS	REVISED -			CONTRACT NO. 61M01
PLOT DATE = 11/2/2025	DATE -	REVISED -		SCALE: N.T.S. / SHEET 7 OF 8 SHEETS / STA. TO STA.	ILLINOIS / FED. AID PROJECT

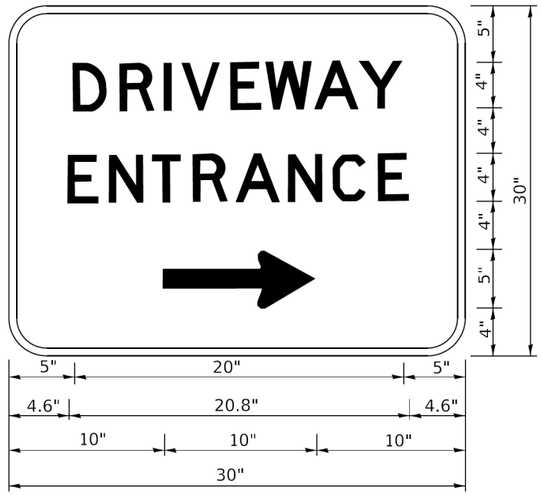

3.0" RADIUS, 0.5" BORDER, WHITE ON GREEN; REFLECTORIZED
"DRIVEWAY" D; "ENTRANCE" D; STANDARD ARROW CUSTOM 12.0" x 5.0"

NOTES:

1. HALF OF THE SIGNS WILL REQUIRE A LEFT HAND FACING ARROW.
2. TWO SIGNS SHALL BE USED AT EACH COMMERCIAL ENTRANCE PLACED BACK-TO-BACK: ONE WITH A RIGHT HAND ARROW (SHOWN) SHALL BE PLACED ON THE NEAR RIGHT SIDE THE DRIVEWAY AND ONE WITH A LEFT HAND ARROW SHALL BE PLACED ON THE FAR LEFT SIDE OF THE DRIVEWAY.
3. SIGNS TO BE PAID FOR AS ITEM "TEMPORARY INFORMATION SIGNING".

MODEL: Default
FILE NAME: pw:\\jdanroom.dot.illinois.gov:PWIDOT\Documents\IDOT Offices\District 1\Projects\ds\tc22x34\CADData\CADsheets\tc26.dgn

USER NAME = leysa	DESIGNED -	REVISED - C. JUCIUS 02-15-07	STATE OF ILLINOIS DEPARTMENT OF TRANSPORTATION	DRIVEWAY ENTRANCE SIGNING	F.A. RTE. / SECTION / COUNTY / TOTAL SHEETS / SHEET NO.
	DRAWN -	REVISED -			TC-26 / CONTRACT NO.
PLOT SCALE = 50.0000 ' / in.	CHECKED -	REVISED -			ILLINOIS / FED. AID PROJECT
PLOT DATE = 8/6/2021	DATE -	REVISED -		SCALE: NONE / SHEET 1 OF 1 SHEETS / STA. TO STA.	

tc26.dgn 8/6/2021 8:37:02 AM User=leysa

CHRISTOPHER B. BURKE ENGINEERING, LTD.
9575 W. 159th Street, Suite 201
Lockport, Illinois 60441
(815) 770-2650

USER NAME = aschaefer	DESIGNED - AJS/JRS	REVISED -	STATE OF ILLINOIS DEPARTMENT OF TRANSPORTATION	SEIL ROAD WIDENING DISTRICT ONE DETAILS	F.A.U. RTE. / SECTION / COUNTY / TOTAL SHEETS / SHEET NO.
	DRAWN - JRS/PWN	REVISED -			0403 / 21-00047-00-WR / WILL / 149 / 137
PLOT SCALE = N.T.S.	CHECKED - AJS	REVISED -			CONTRACT NO. 61M01
PLOT DATE = 11/2/2025	DATE -	REVISED -		SCALE: N.T.S. / SHEET 8 OF 8 SHEETS / STA. TO STA.	ILLINOIS / FED. AID PROJECT

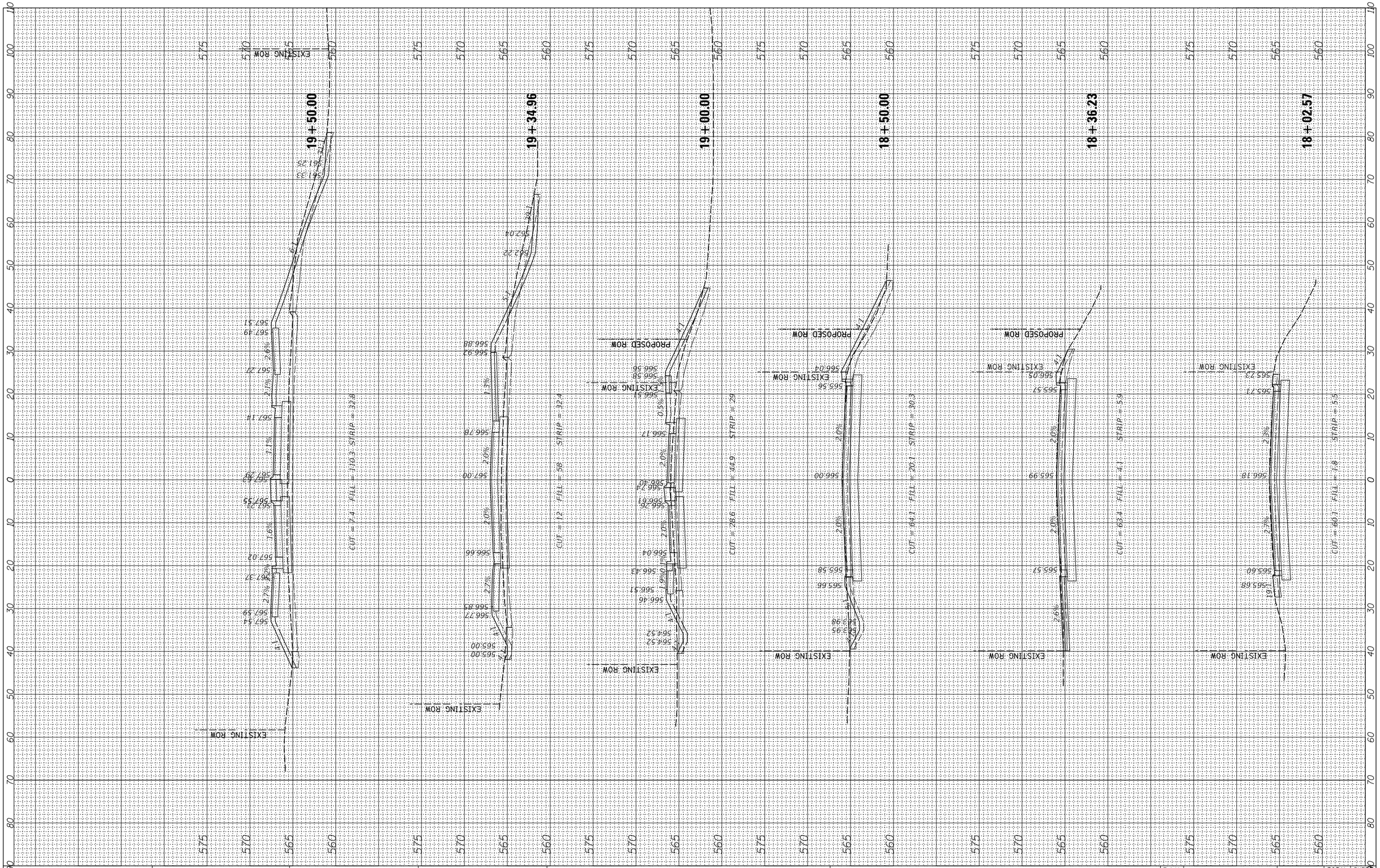

FINAL SURVEY	BY	DATE
SURVEYED		
PLOTTED		
TEMPLATE		
AREAS		
AREAS CHECKED		
NOTE BOOK		
NO.		

ORIGINAL SURVEY	BY	DATE
SURVEYED		
PLOTTED		
TEMPLATE		
AREAS		
AREAS CHECKED		
NOTE BOOK		
NO.		

FILE NAME = N:\Shorewood\070001\070001D\2021\D2103\Civil\PXS_01_SEIL_D2103.sht	USER NAME = aschaefer	DESIGNED - AJS/JRS	REVISED -
		DRAWN - PWN/JRS	REVISED -
	PLOT SCALE = 10'	CHECKED - AJS	REVISED -
Default	PLOT DATE = 12/4/2025	DATE -	REVISED -

STATE OF ILLINOIS
DEPARTMENT OF TRANSPORTATION

SEIL ROAD - CROSS SECTIONS

SCALE: 10H:5V | SHEET 1 OF 12 SHEETS | STA. 18+02.57 TO STA. 19+50.00

F.A.U. RTE.	SECTION	COUNTY	TOTAL SHEETS	SHEET NO.
0403	21-00047-00-WR	WILL	149	138
		CONTRACT NO. 61M01		
		ILLINOIS FED. AID PROJECT		

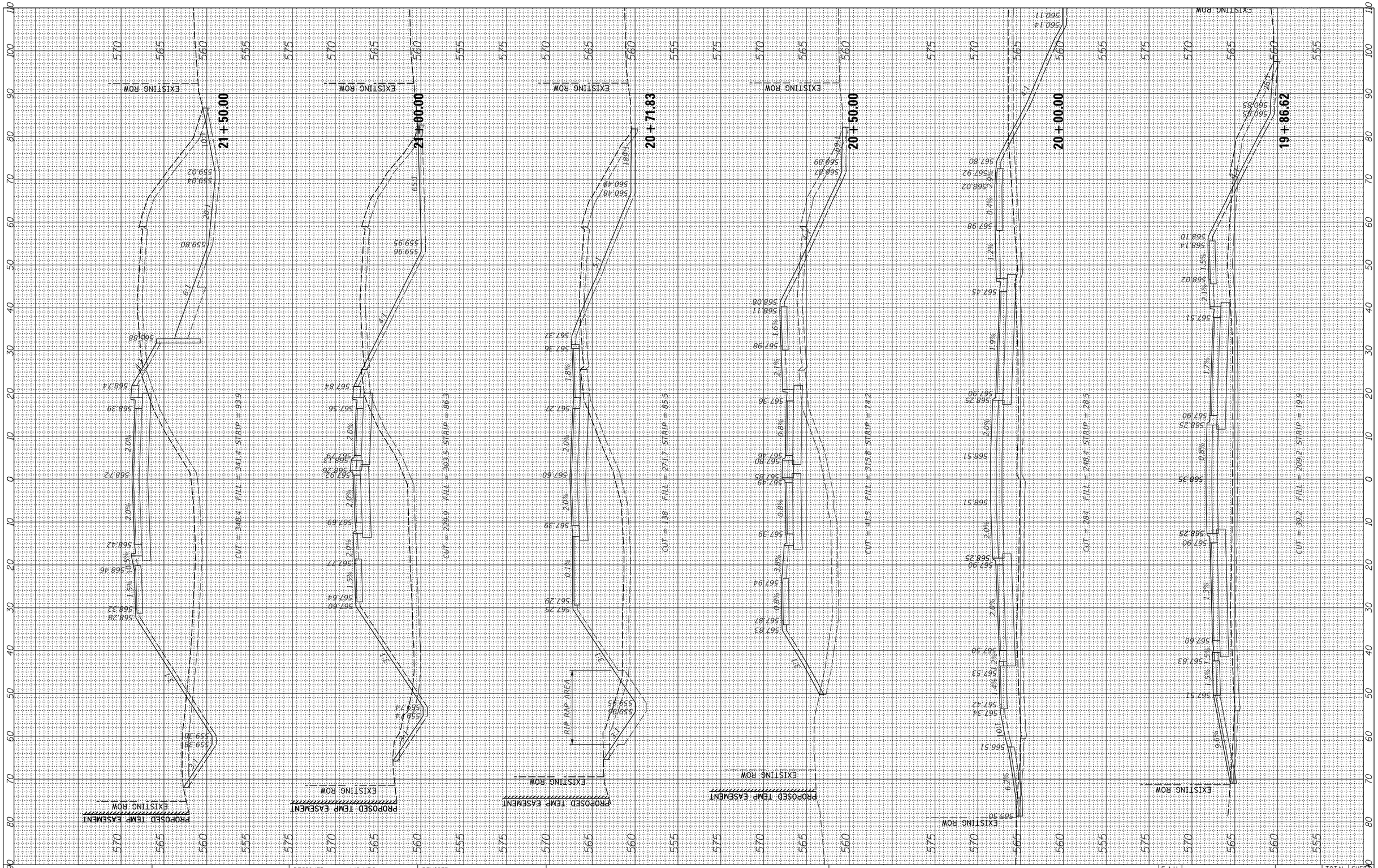

FINAL SURVEY	BY	DATE
SURVEYED		
PLOTTED		
TEMPLATE		
AREAS		
AREAS CHECKED		
NOTE BOOK NO.		

ORIGINAL SURVEY	BY	DATE
SURVEYED		
PLOTTED		
TEMPLATE		
AREAS		
AREAS CHECKED		
NOTE BOOK NO.		

FILE NAME =
N:\Shorewood\070001\070001D\2021\D2103\Civil\PXS_01_SEIL_D2103.sht
Default

USER NAME = aschaefer
PLOT SCALE = 10'
PLOT DATE = 12/4/2025

DESIGNED - AJS/JRS
DRAWN - PWN/JRS
CHECKED - AJS
DATE -

REVISED -
REVISED -
REVISED -
REVISED -

STATE OF ILLINOIS
DEPARTMENT OF TRANSPORTATION

SEIL ROAD - CROSS SECTIONS

SCALE: 10H:5V | SHEET 2 OF 12 SHEETS | STA. 19+86.62 TO STA. 21+50.00

F.A.U. RTE.	SECTION	COUNTY	TOTAL SHEETS	SHEET NO.
0403	21-00047-00-WR	WILL	149	139
		CONTRACT NO. 61M01		
		ILLINOIS FED. AID PROJECT		

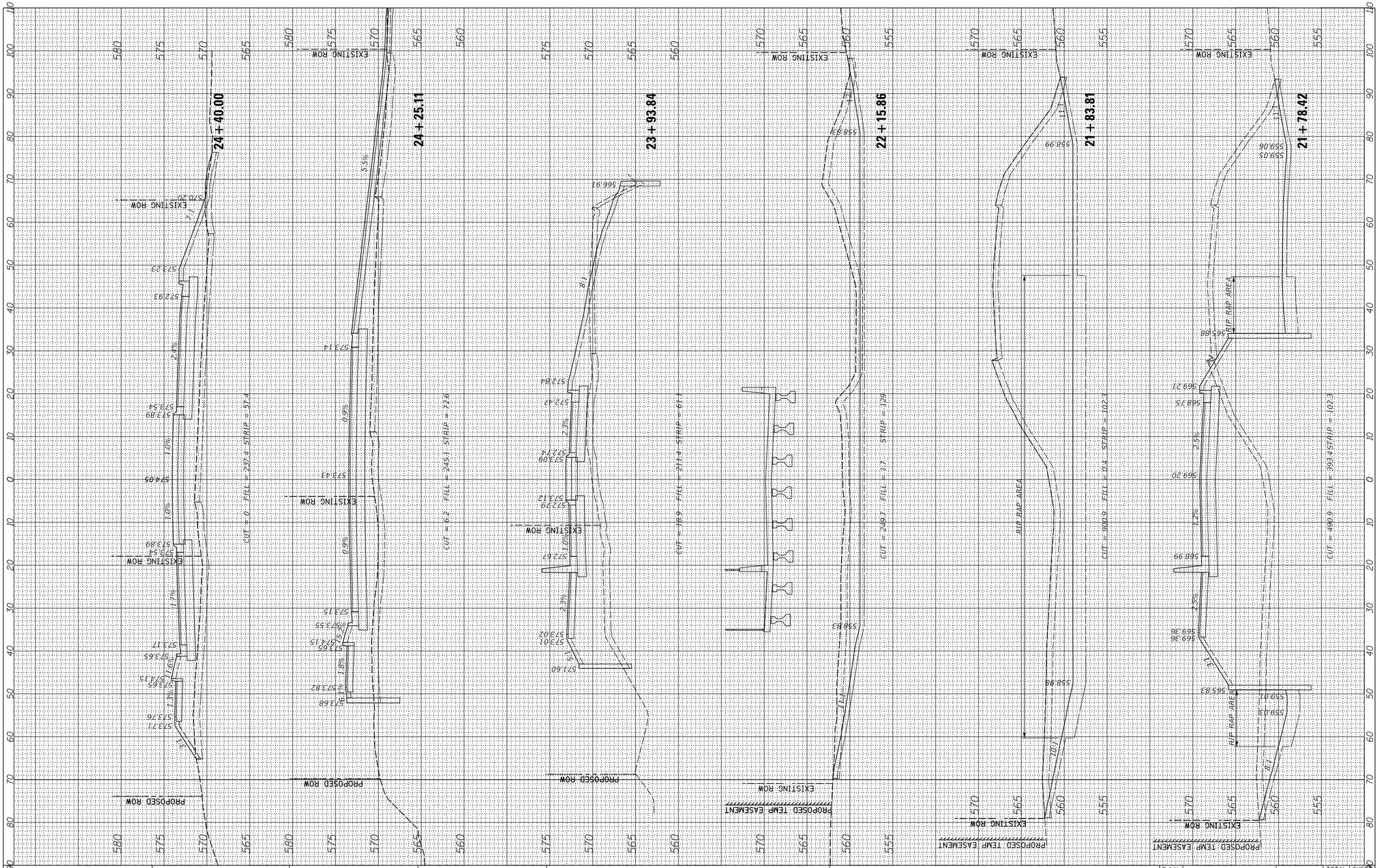

FINAL SURVEY	BY	DATE
SURVEYED		
PLOTTED		
TEMPLATE		
AREAS		
AREAS CHECKED		
NOTE BOOK NO.		

ORIGINAL SURVEY	BY	DATE
SURVEYED		
PLOTTED		
TEMPLATE		
AREAS		
AREAS CHECKED		
NOTE BOOK NO.		

FILE NAME = N:\Shorewood\070001\070001D\2021\D2103\Civil\PXS_01_SEIL_D2103.sht

Default

USER NAME = aschaefer	DESIGNED - AJS/JRS	REVISED -
	DRAWN - PWN/JRS	REVISED -
PLOT SCALE = 10'	CHECKED - AJS	REVISED -
PLOT DATE = 12/4/2025	DATE -	REVISED -

STATE OF ILLINOIS
DEPARTMENT OF TRANSPORTATION

SEIL ROAD - CROSS SECTIONS

SCALE: 10H:5V | SHEET 3 OF 12 SHEETS | STA. 21+78.42 TO STA. 24+40.00

F.A.U. RTE.	SECTION	COUNTY	TOTAL SHEETS	SHEET NO.
0403	21-00047-00-WR	WILL	149	140

CONTRACT NO. 61M01

ILLINOIS FED. AID PROJECT

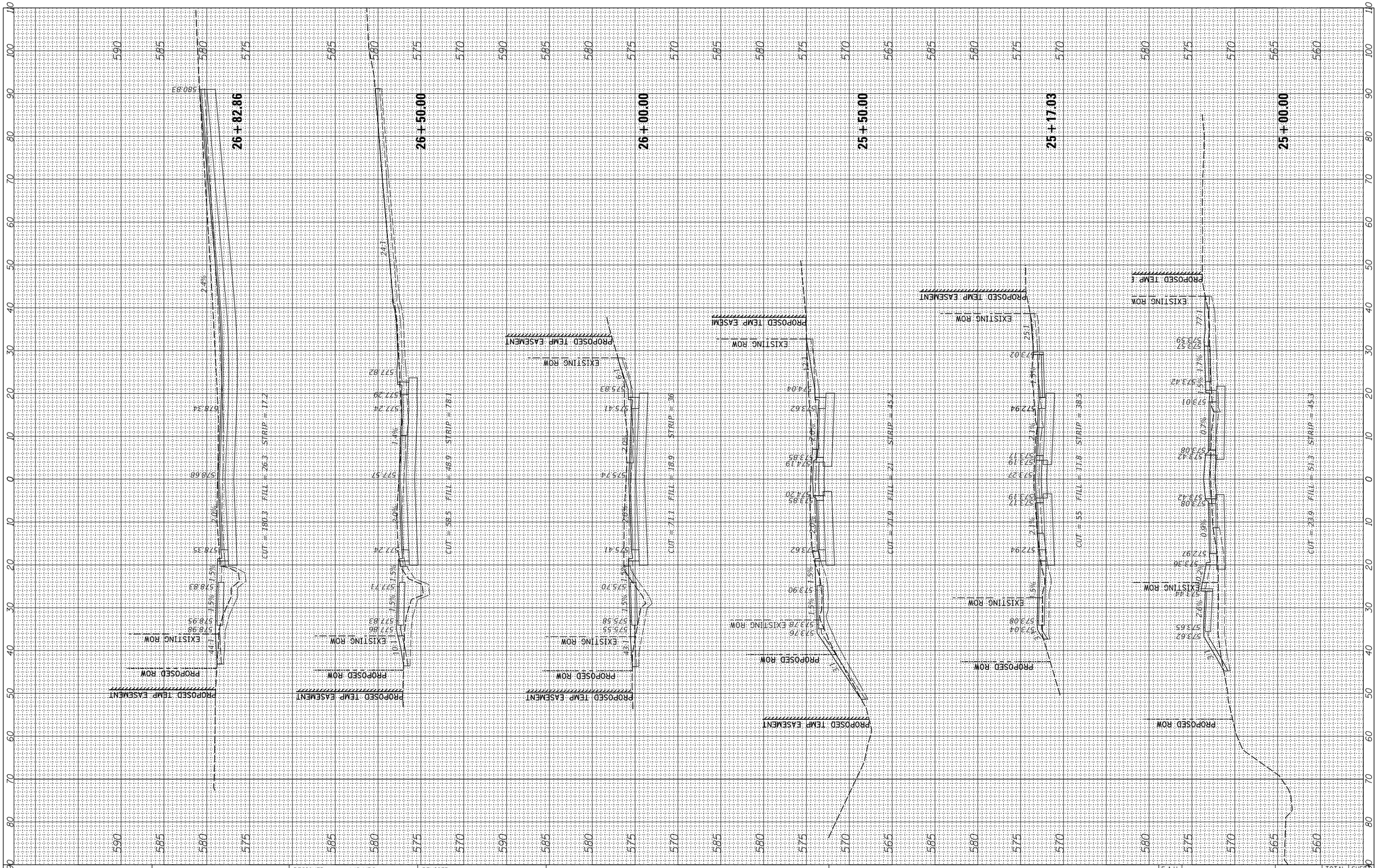

FINAL SURVEY	BY	DATE
SURVEYED		
PLOTTED		
TEMPLATE		
AREAS		
AREAS CHECKED		
NOTE BOOK		
NO.		

ORIGINAL SURVEY	BY	DATE
SURVEYED		
PLOTTED		
TEMPLATE		
AREAS		
AREAS CHECKED		
NOTE BOOK		
NO.		

FILE NAME =
N:\Shorewood\070001\070001D\2021\D2103\Civil\PXS_01_SEIL_D2103.sht
Default

USER NAME = aschaefer	DESIGNED - AJS/JRS	REVISED -
	DRAWN - PWN/JRS	REVISED -
PLOT SCALE = 10'	CHECKED - AJS	REVISED -
PLOT DATE = 12/4/2025	DATE -	REVISED -

STATE OF ILLINOIS
DEPARTMENT OF TRANSPORTATION

SEIL ROAD - CROSS SECTIONS

SCALE: 10H:5V | SHEET 4 OF 12 SHEETS | STA. 25+00.00 TO STA. 26+82.86

F.A.U. RTE.	SECTION	COUNTY	TOTAL SHEETS	SHEET NO.
0403	21-00047-00-WR	WILL	149	141

CONTRACT NO. 61M01

ILLINOIS FED. AID PROJECT

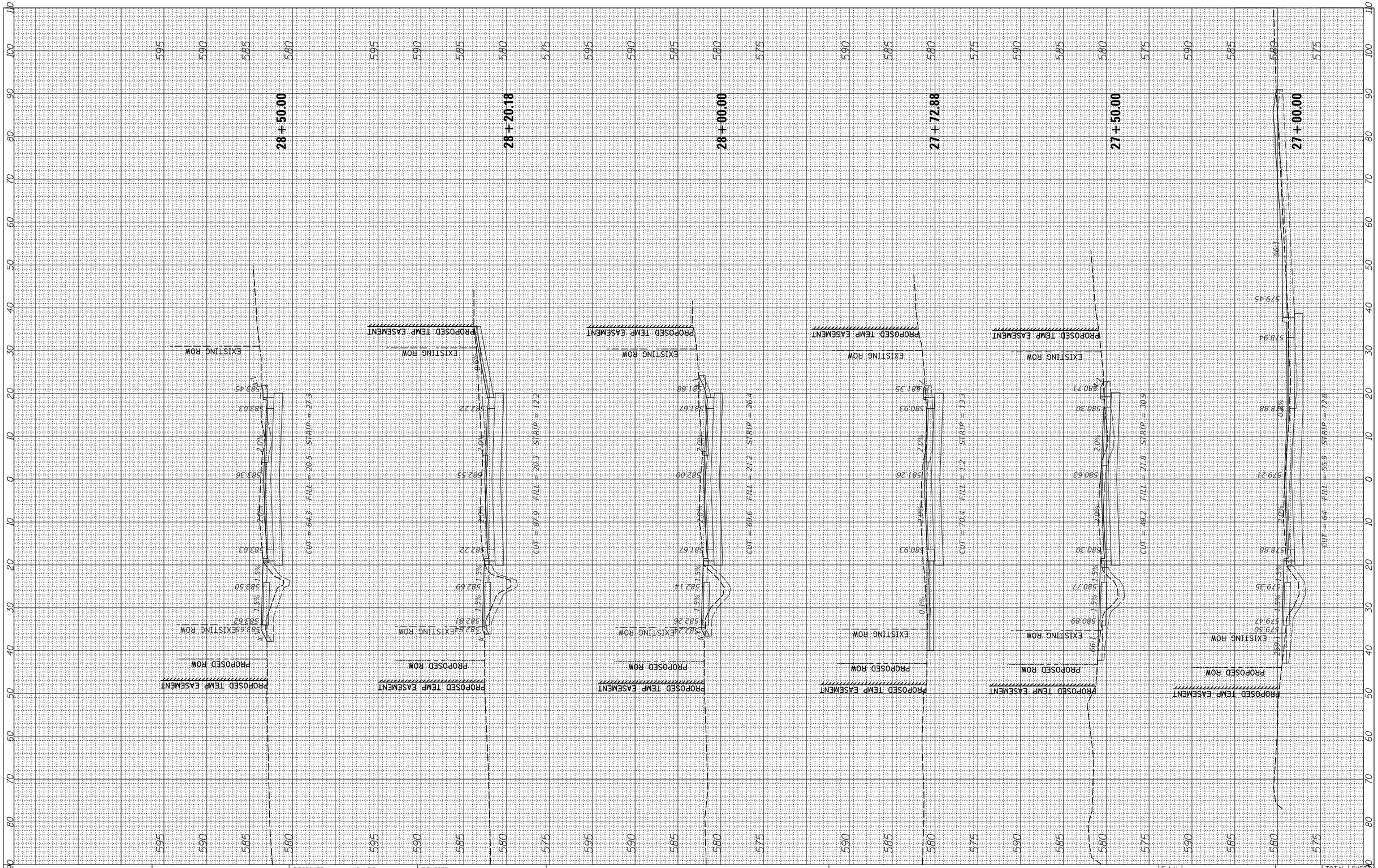

FINAL SURVEY		BY	DATE
NOTE BOOK	SURVEYED		
	PLOTTED		
	TEMPLATE		
	AREAS		
NO.	AREAS CHECKED		

ORIGINAL SURVEY		BY	DATE
NOTE BOOK	SURVEYED		
	PLOTTED		
	TEMPLATE		
	AREAS		
NO.	AREAS CHECKED		

FILE NAME = N:\Shorewood\070001\070001D\2021\D2103\Civil\PXS_01_SEIL_D2103.sht	USER NAME = aschaefer	DESIGNED - AJS/JRS	REVISED -
		DRAWN - PWN/JRS	REVISED -
	PLOT SCALE = 10'	CHECKED - AJS	REVISED -
Default	PLOT DATE = 12/4/2025	DATE -	REVISED -

STATE OF ILLINOIS
DEPARTMENT OF TRANSPORTATION

SEIL ROAD - CROSS SECTIONS

SCALE: 10H:5V | SHEET 5 OF 12 SHEETS | STA. 27+00.00 TO STA. 28+50.00

F.A.U. RTE.	SECTION	COUNTY	TOTAL SHEETS	SHEET NO.
0403	21-00047-00-WR	WILL	149	142

CONTRACT NO. 61M01

ILLINOIS FED. AID PROJECT

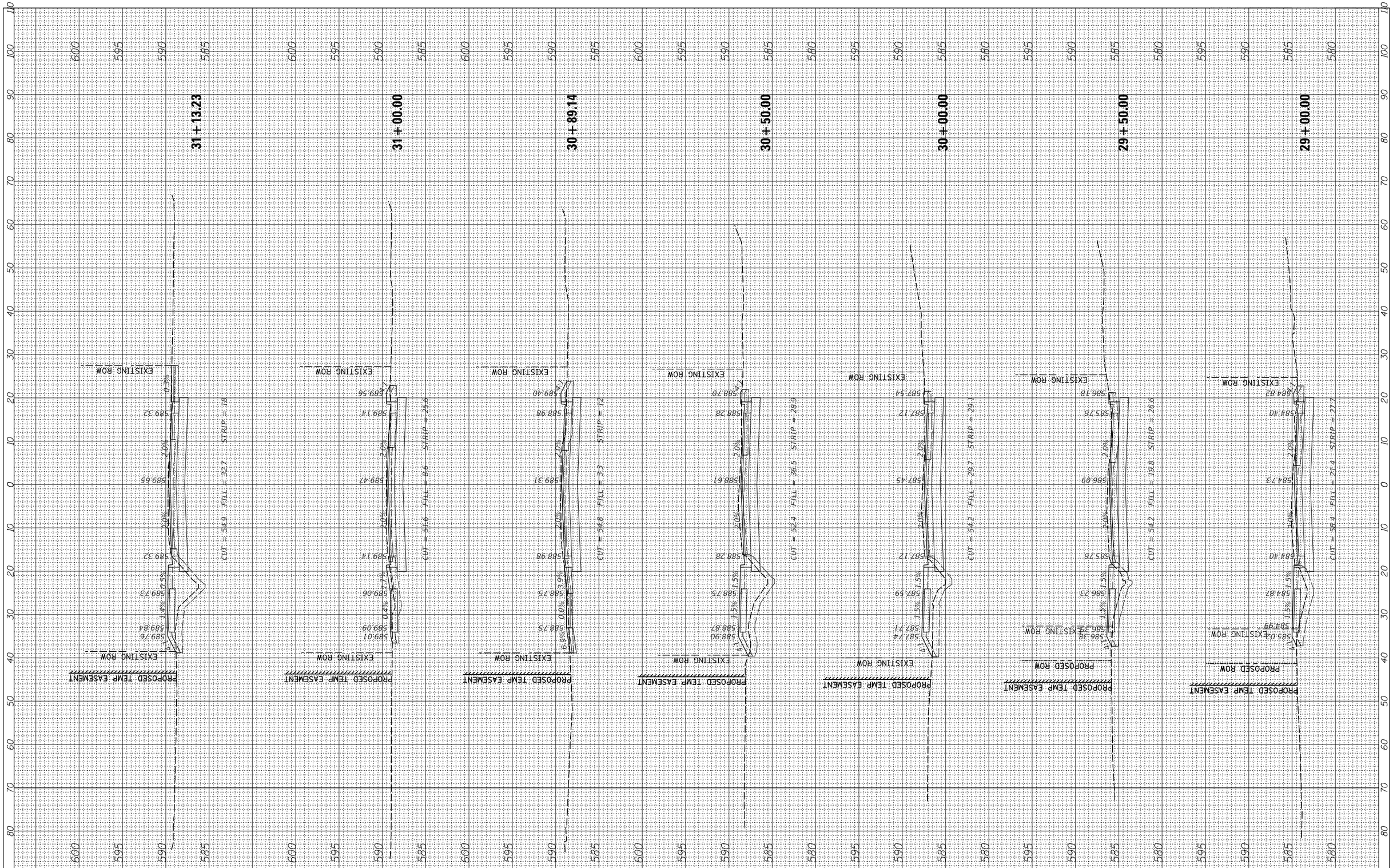

FINAL SURVEY	BY	DATE
SURVEYED		
PLOTTED		
TEMPLATE		
AREAS		
AREAS CHECKED		
NOTE BOOK		
NO.		

ORIGINAL SURVEY	BY	DATE
SURVEYED		
PLOTTED		
TEMPLATE		
AREAS		
AREAS CHECKED		
NOTE BOOK		
NO.		

FILE NAME =
N:\Shorewood\070001\070001D\2021\D2103\Civil\PXS_01_SEIL_D2103.sht
Default

USER NAME = aschaefer	DESIGNED - AJS/JRS	REVISED -
	DRAWN - PWN/JRS	REVISED -
PLOT SCALE = 10'	CHECKED - AJS	REVISED -
PLOT DATE = 12/4/2025	DATE -	REVISED -

STATE OF ILLINOIS
DEPARTMENT OF TRANSPORTATION

SEIL ROAD - CROSS SECTIONS

SCALE: 10H:5V | SHEET 6 OF 12 SHEETS | STA. 29+00.00 TO STA. 31+13.23

F.A.U. RTE.	SECTION	COUNTY	TOTAL SHEETS	SHEET NO.
0403	21-00047-00-WR	WILL	149	143
		CONTRACT NO. 61M01		
		ILLINOIS FED. AID PROJECT		

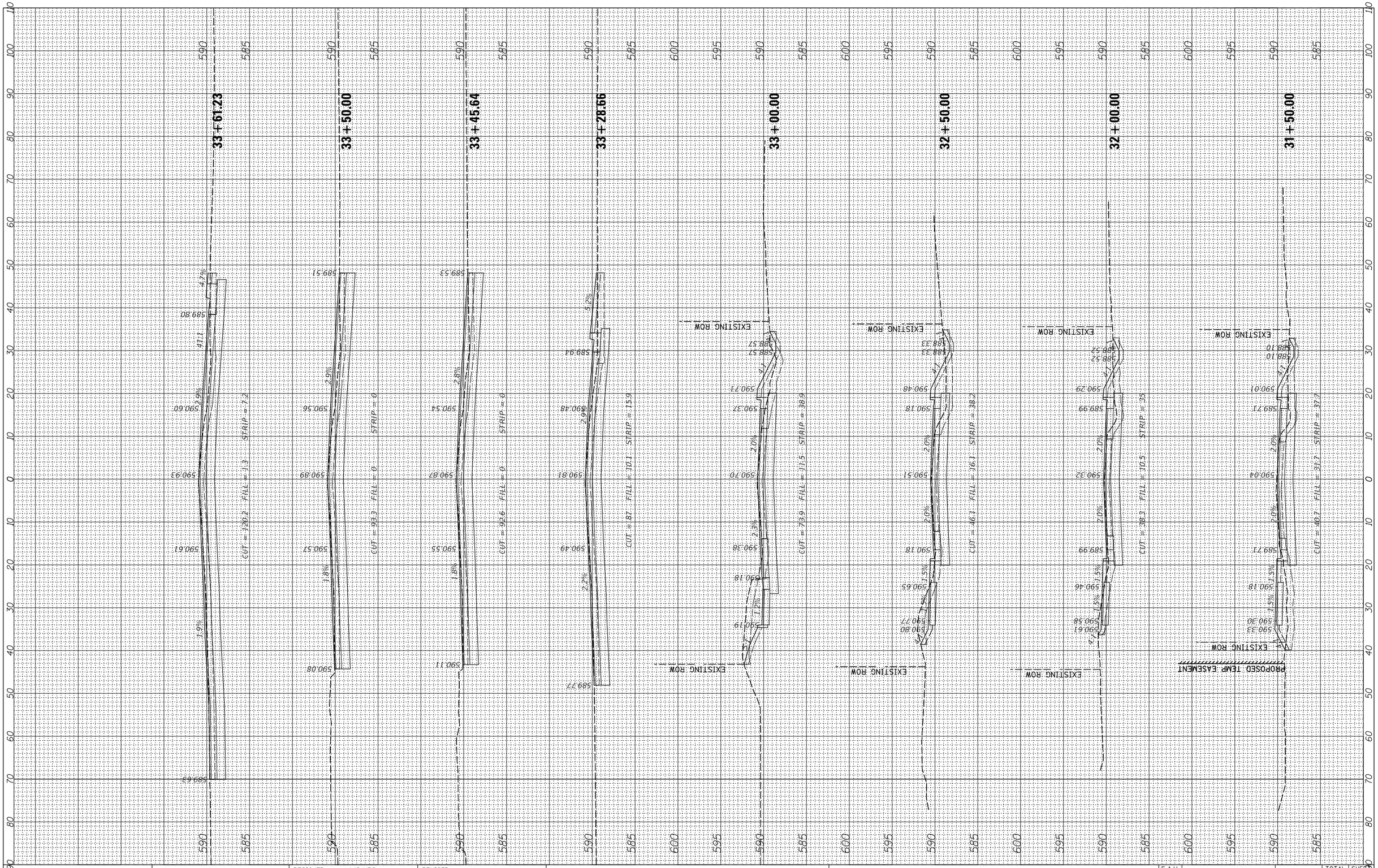

FINAL SURVEY	BY	DATE
SURVEYED		
PLOTTED		
TEMPLATE		
AREAS		
AREAS CHECKED		
NOTE BOOK NO.		

ORIGINAL SURVEY	BY	DATE
SURVEYED		
PLOTTED		
TEMPLATE		
AREAS		
AREAS CHECKED		
NOTE BOOK NO.		

FILE NAME = N:\Shorewood\070001\070001D\2021\D2103\Civil\PXS_01_SEIL_D2103.sht

Default

USER NAME = aschaefer	DESIGNED - AJS/JRS	REVISED -
	DRAWN - PWN/JRS	REVISED -
PLOT SCALE = 10'	CHECKED - AJS	REVISED -
PLOT DATE = 12/4/2025	DATE -	REVISED -

STATE OF ILLINOIS
DEPARTMENT OF TRANSPORTATION

SEIL ROAD - CROSS SECTIONS

SCALE: 10H:5V | SHEET 7 OF 12 SHEETS | STA. 31+50.00 TO STA. 33+61.23

F.A.U. RTE.	SECTION	COUNTY	TOTAL SHEETS	SHEET NO.
0403	21-00047-00-WR	WILL	149	144

CONTRACT NO. 61M01

ILLINOIS FED. AID PROJECT

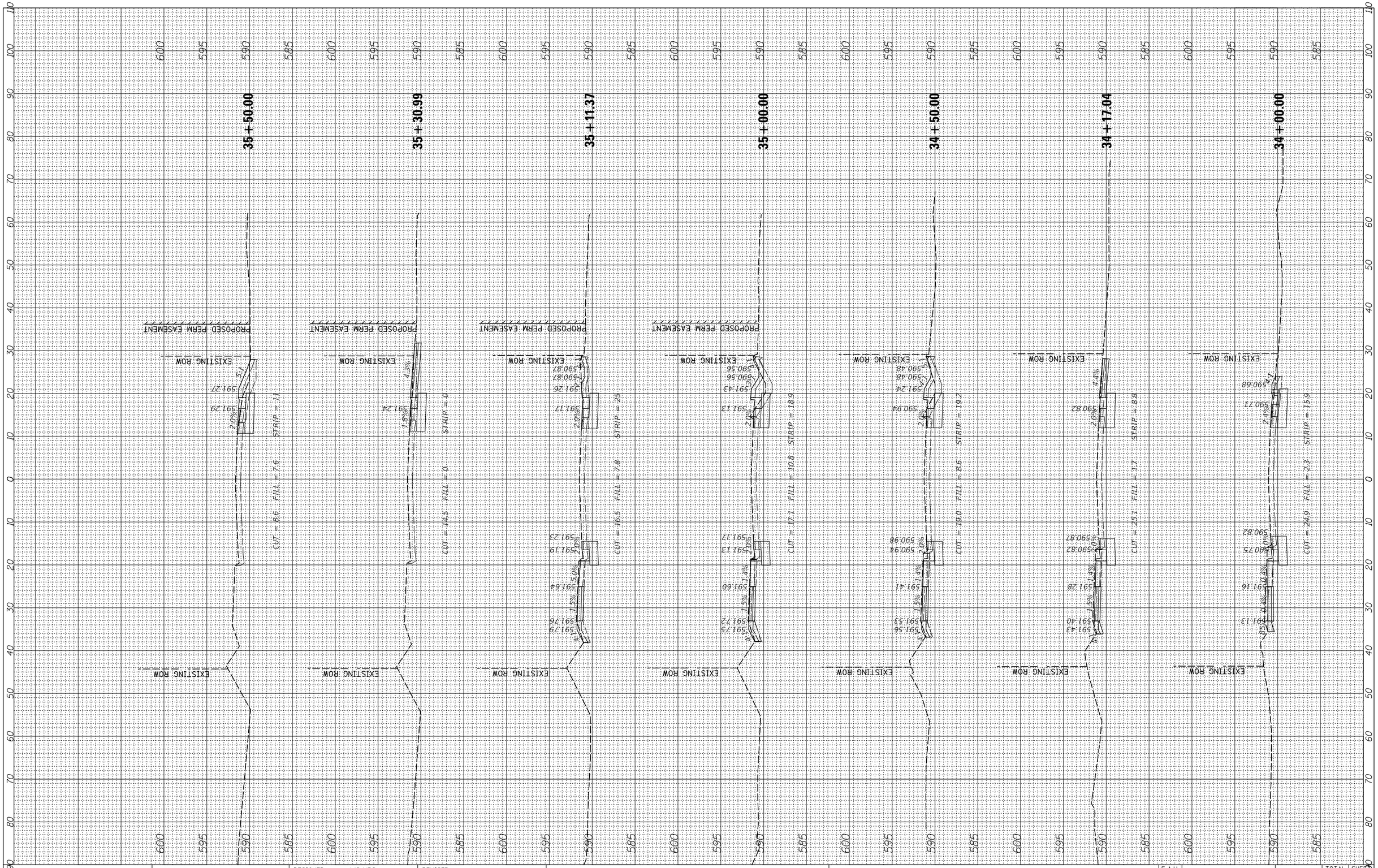

FINAL SURVEY	BY	DATE
SURVEYED		
PLOTTED		
TEMPLATE		
AREAS		
AREAS CHECKED		
NOTE BOOK		
NO.		

ORIGINAL SURVEY	BY	DATE
SURVEYED		
PLOTTED		
TEMPLATE		
AREAS		
AREAS CHECKED		
NOTE BOOK		
NO.		

FILE NAME = N:\Shorewood\070001\070001D\2021\D2103\Civil\PXS_01_SEIL_D2103.sht	USER NAME = aschaefer	DESIGNED - AJS/JRS	REVISED -
		DRAWN - PWN/JRS	REVISED -
	PLOT SCALE = 10'	CHECKED - AJS	REVISED -
Default	PLOT DATE = 12/4/2025	DATE -	REVISED -

STATE OF ILLINOIS
DEPARTMENT OF TRANSPORTATION

SEIL ROAD - CROSS SECTIONS

SCALE: 10H:5V | SHEET 8 OF 12 SHEETS | STA. 34+00.00 TO STA. 35+50.00

F.A.U. RTE.	SECTION	COUNTY	TOTAL SHEETS	SHEET NO.
0403	21-00047-00-WR	WILL	149	145

CONTRACT NO. 61M01

ILLINOIS FED. AID PROJECT

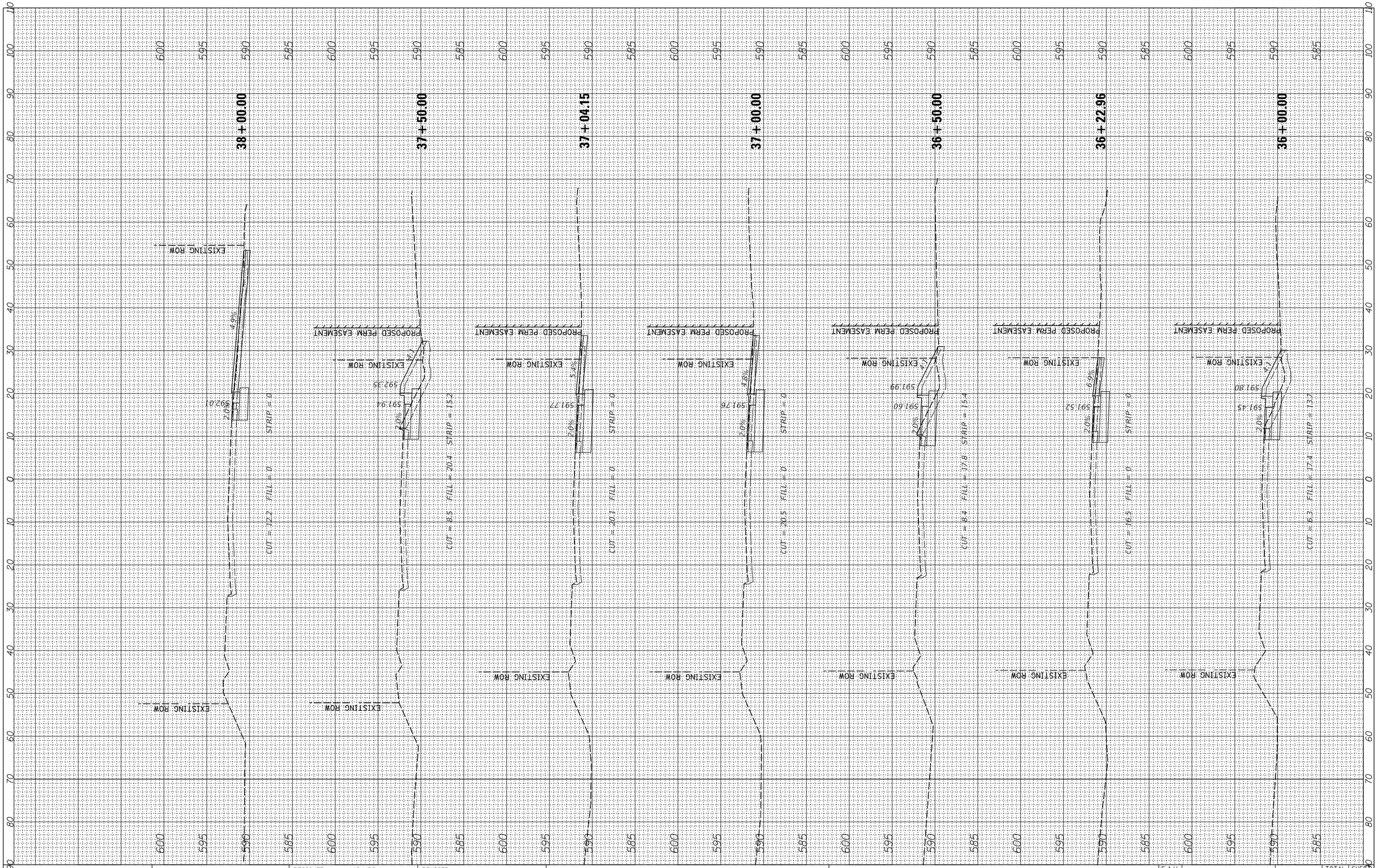

FINAL SURVEY		BY	DATE
NOTE BOOK	SURVEYED		
	PLOTTED		
	TEMPLATE		
	AREAS		
NO.	AREAS CHECKED		

ORIGINAL SURVEY		BY	DATE
NOTE BOOK	SURVEYED		
	PLOTTED		
	TEMPLATE		
	AREAS		
NO.	AREAS CHECKED		

FILE NAME = N:\Shorewood\070001\070001D\2021\D2103\Civil\PXS_01_SEIL_D2103.sht	USER NAME = aschaefer	DESIGNED - AJS/JRS	REVISED -
		DRAWN - PWN/JRS	REVISED -
	PLOT SCALE = 10'	CHECKED - AJS	REVISED -
Default	PLOT DATE = 12/4/2025	DATE -	REVISED -

STATE OF ILLINOIS
DEPARTMENT OF TRANSPORTATION

SEIL ROAD - CROSS SECTIONS

SCALE: 10H:5V | SHEET 9 OF 12 SHEETS | STA. 36+00.00 TO STA. 38+00.00

F.A.U. RTE.	SECTION	COUNTY	TOTAL SHEETS	SHEET NO.
0403	21-00047-00-WR	WILL	149	146
		CONTRACT NO. 61M01		
		ILLINOIS FED. AID PROJECT		

FINAL SURVEY		BY	DATE
NOTE BOOK	SURVEYED		
	PLOTTED		
	TEMPLATE		
	AREAS		
NO.	AREAS CHECKED		

ORIGINAL SURVEY		BY	DATE
NOTE BOOK	SURVEYED		
	PLOTTED		
	TEMPLATE		
	AREAS		
NO.	AREAS CHECKED		

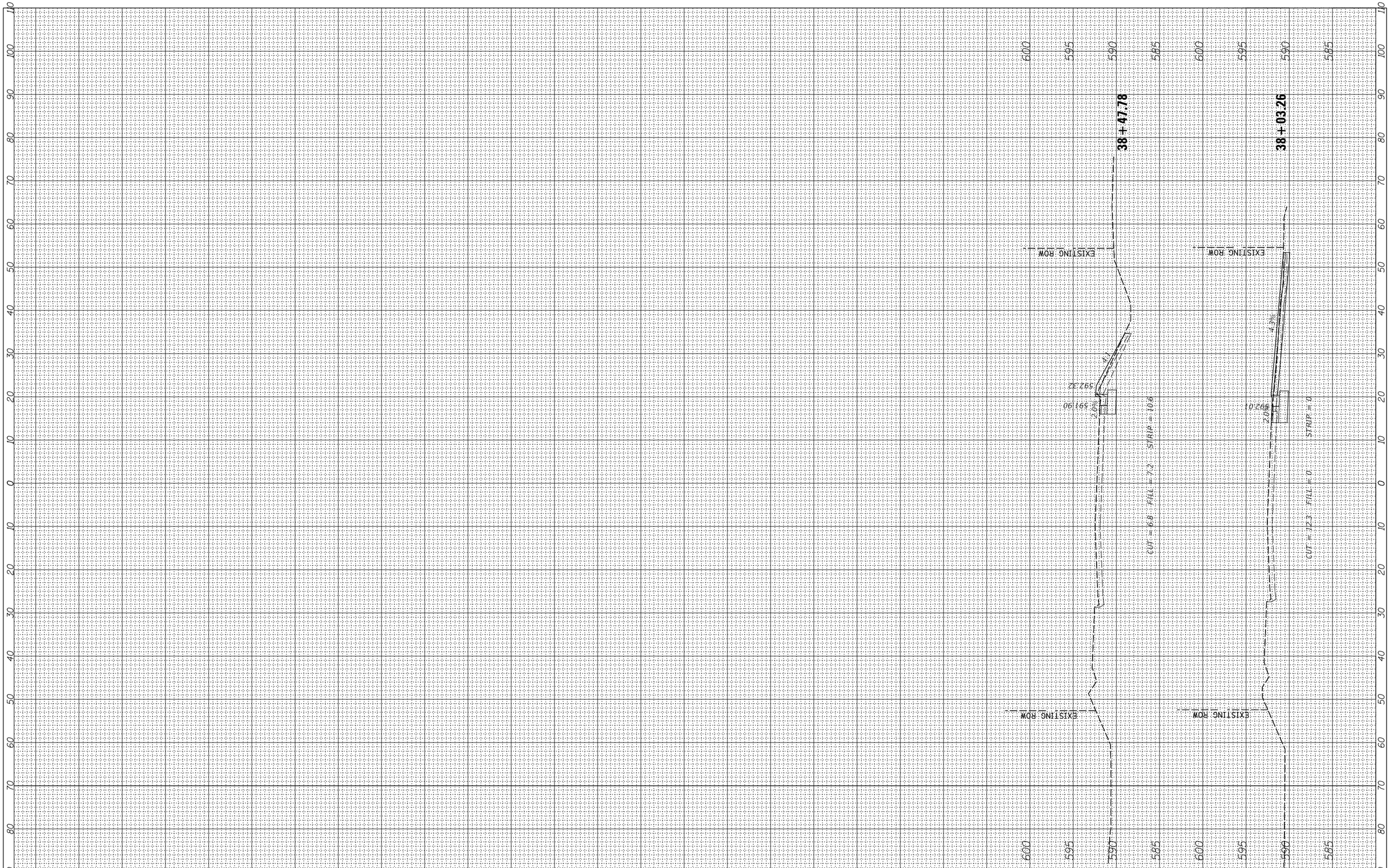

FILE NAME = N:\Shorewood\070001\070001D\2021\D2103\Civil\PXS_01_SEIL_D2103.sht	USER NAME = aschaefer	DESIGNED - AJS/JRS	REVISED -
		DRAWN - PWN/JRS	REVISED -
	PLOT SCALE = 10'	CHECKED - AJS	REVISED -
Default	PLOT DATE = 12/4/2025	DATE -	REVISED -

STATE OF ILLINOIS
DEPARTMENT OF TRANSPORTATION

SEIL ROAD - CROSS SECTIONS

SCALE: 10H:5V | SHEET 10 OF 12 SHEETS | STA. 38+03.26 TO STA. 38+47.78

F.A.U. RTE.	SECTION	COUNTY	TOTAL SHEETS	SHEET NO.
0403	21-00047-00-WR	WILL	149	147

CONTRACT NO. 61M01

ILLINOIS FED. AID PROJECT

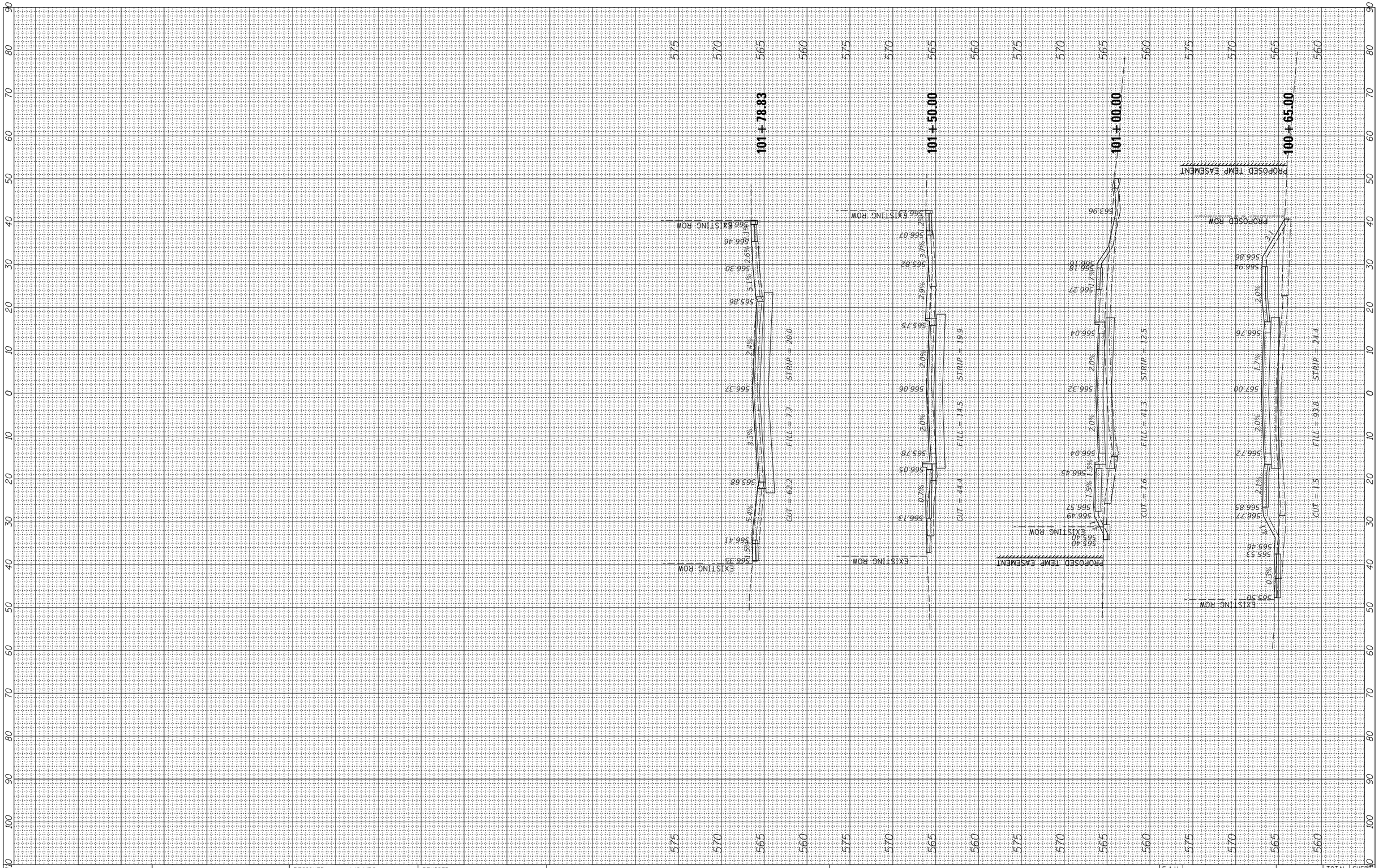

FINAL SURVEY		BY	DATE
NOTE BOOK	SURVEYED		
	PLOTTED		
	TEMPLATE		
	AREAS		
NO.	AREAS CHECKED		

ORIGINAL SURVEY		BY	DATE
NOTE BOOK	SURVEYED		
	PLOTTED		
	TEMPLATE		
	AREAS		
NO.	AREAS CHECKED		

FILE NAME = N:\Shorewood\070001\070001D\2021\D2103\Civil\PXS_01_RAVEN_D2103.sht	USER NAME = aschaefer	DESIGNED - AJS/JRS	REVISED -
		DRAWN - PWN/JRS	REVISED -
	PLOT SCALE = 10'	CHECKED - AJS	REVISED -
Default	PLOT DATE = 12/4/2025	DATE -	REVISED -

STATE OF ILLINOIS
DEPARTMENT OF TRANSPORTATION

RAVEN ROAD – CROSS SECTIONS

SCALE: 10H:5V | SHEET 11 OF 12 SHEETS | STA. 100+65.00 TO STA. 101+78.83

F.A.U. RTE.	SECTION	COUNTY	TOTAL SHEETS	SHEET NO.
0403	21-00047-00-WR	WILL	149	148
		CONTRACT NO. 61M01		
		ILLINOIS FED. AID PROJECT		

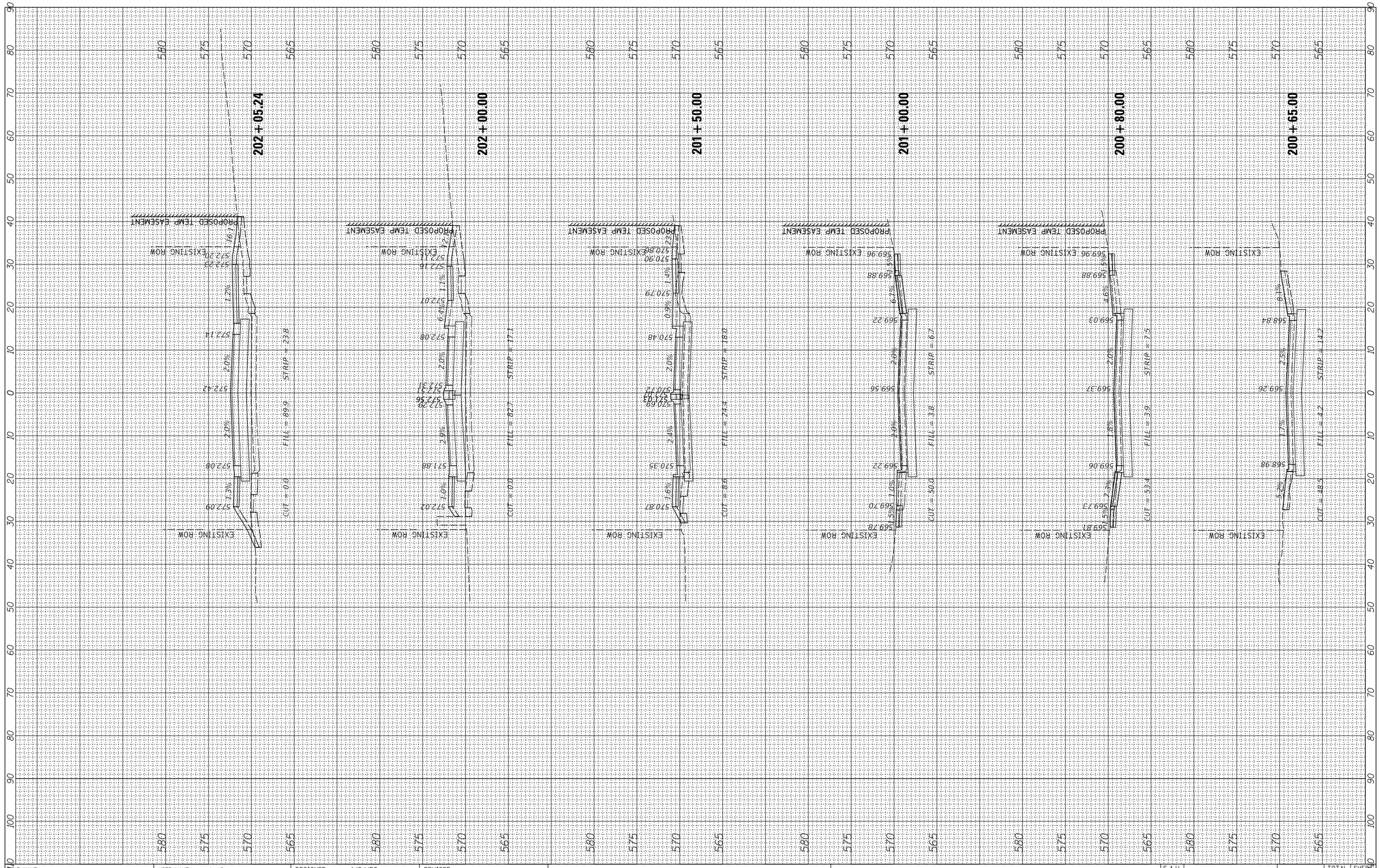

FINAL SURVEY	BY	DATE
SURVEYED		
PLOTTED		
TEMPLATE		
AREAS		
AREAS CHECKED		
NOTE BOOK		
NO.		

ORIGINAL SURVEY	BY	DATE
SURVEYED		
PLOTTED		
TEMPLATE		
AREAS		
AREAS CHECKED		
NOTE BOOK		
NO.		

FILE NAME =
N:\Shorewood\070001\070001D\2021\D2103\Civil\PXS_01_STATES_D2103.sht

Default

USER NAME = aschaefer	DESIGNED - AJS/JRS	REVISED -
	DRAWN - PWN/JRS	REVISED -
PLOT SCALE = 10'	CHECKED - AJS	REVISED -
PLOT DATE = 12/4/2025	DATE -	REVISED -

STATE OF ILLINOIS
DEPARTMENT OF TRANSPORTATION

STATES LANE - CROSS SECTIONS

SCALE: 10H:5V | SHEET 12 OF 12 SHEETS | STA. 200+65.00 TO STA. 202+05.24

F.A.U. RTE.	SECTION	COUNTY	TOTAL SHEETS	SHEET NO.
0403	21-00047-00-WR	WILL	149	149
		CONTRACT NO. 61M01		

ILLINOIS FED. AID PROJECT