01-16-2026 LETTING ITEM 205

F.A. RTE.	SECTION	COUNTY	TOTAL SHEETS	SHEET NO.
NA	SPRING LAKE 2024	TAZEWELL	88	1
	ILLINOIS	CONTRACT NO. 46939		

2 PLAN SETS COMBINED
PLAN SET 1 = 24 SHEETS TOTAL
PLAN SET 2 = 56 SHEETS TOTAL
TOTAL SHEETS = 88

STATE OF ILLINOIS
DEPARTMENT OF TRANSPORTATION
DEPARTMENT OF NATURAL RESOURCES

PROPOSED
HIGHWAY PLANS

IDOT / IDNR STATEWIDE
IDNR PARK ROADS
SPRING LAKE 2024
SIGNING, RESURFACING AND BRIDGE REPLACEMENTS
TAZEWELL COUNTY

C-30-011-24
IDNR FILE Nos.
1-24-011 (SKY RANCH ROAD)
1-25-018 (STATE PARK ROAD)

INDEX OF SHEETS
SEE SHEET No. 2

IDOT HIGHWAY STANDARDS
SEE SHEET No. 2

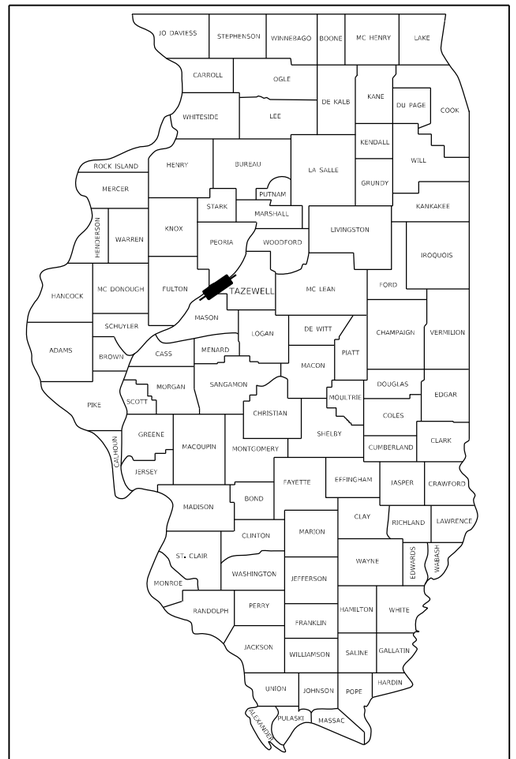

LOCATION OF SECTION INDICATED THUS:

100' 200' 300' — 1'' = 100'
0 10' 20' 30' — 1'' = 10'
0 50' 100' — 1'' = 50'
0 50' 100' — 1'' = 40'
0 50' 100' — 1'' = 30'
0 50' 100' — 1'' = 20'

FULL SIZE PLANS HAVE BEEN PREPARED USING STANDARD ENGINEERING SCALES. REDUCED SIZED PLANS WILL NOT CONFORM TO STANDARD SCALES. IN MAKING MEASUREMENTS ON REDUCED PLANS, THE ABOVE SCALES MAY BE USED.

PROJECT LOCATION
RESURFACING & SIGNING
STA 12+00.00 TO
STA 160+65.00
STATE PARK ROAD
(WEST)

PROJECT LOCATION
℄ STR. No. 090-9923
STA 20+00.00
AND SIGNING
STATE PARK ROAD
(SOUTH)

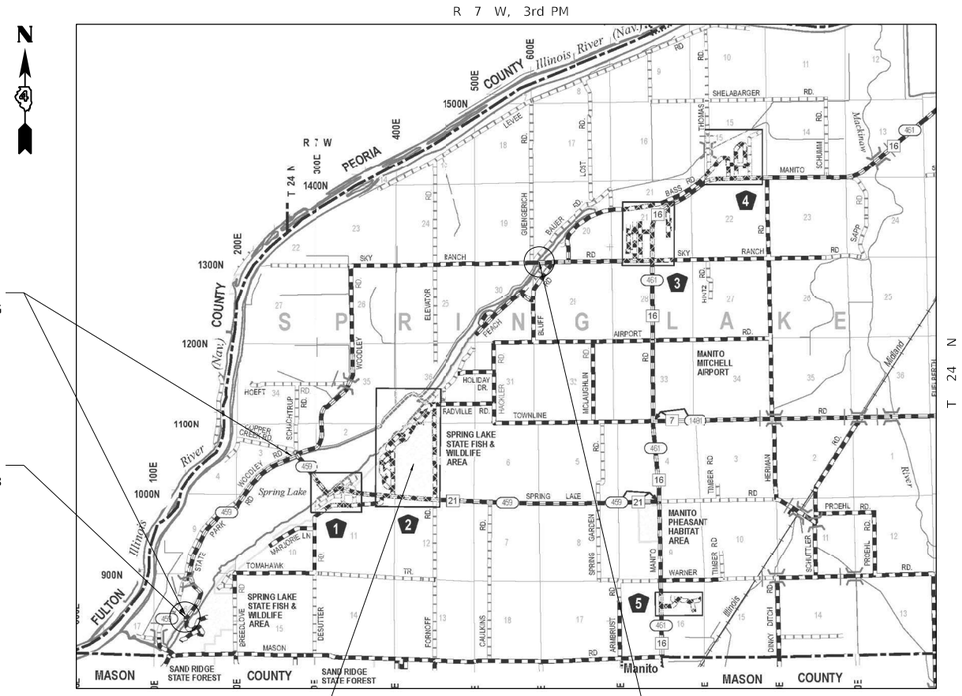

PROJECT LOCATION
SIGNING
STATE PARK DRIVE
(EAST)

PROJECT LOCATION
℄ STR. No. 090-9922
STA 10+00.00
T.R. 125 (SKY RANCH ROAD)

J.U.L.I.E.
JOINT UTILITY LOCATING INFORMATION FOR EXCAVATORS
1 (800) 892-0123
OR 811

STATION EQUATION:
PT STA 21+47.72 (BACK) = POT STA 11+99.97 (AHEAD)

LOCATION MAP
SCALE: 1 INCH = 1 MILE
GROSS NET LENGTH = 2.875 MILES

STATE OF ILLINOIS
DEPARTMENT OF TRANSPORTATION

SUBMITTED 12-5-25
REGIONAL ENGINEER

December 5, 20 25
ENGINEER OF DESIGN AND ENVIRONMENT

December 5, 20 25
DIRECTOR OF HIGHWAYS PROJECT IMPLEMENTATION

PRINTED BY THE AUTHORITY OF THE STATE OF ILLINOIS

CONTRACT No. 46939

JOB No. 7021-005 VEENSTRA & KIMM, INC. DESIGN FIRM REGISTRATION NUMBER 184-001939

INDEX OF SHEETS

IDOT HIGHWAY STANDARDS

000001-09	701001-02	B.L.R. 17-4
001001-02	701006-05	B.L.R. 21-9
001006	701301-04	B.L.R. 22-7
280001-07	701901-11	B.L.R. 23-4
442201-04	720001-01	B.L.R. 27-1
515001-04	720006-04	BLR 18-6
701011-04	780001-05	

LEGEND

- EXISTING POWER POLE
- EXISTING GUY WIRE
- EXISTING SIGN
- EXISTING WOOD POST
- EXISTING FENCE POST
- EXISTING MAILBOX
- 32" EXISTING DECIDUOUS TREE
- 12" EXISTING EVERGREEN TREE
- EXISTING BUSH
- EXISTING JUNCTION BOX
- EXISTING ELECTRIC SPLICE BOX
- EXISTING TELEPHONE SPLICE BOX
- EXISTING WATER VALVE
- EXISTING CATCH BASIN
- EXISTING MANHOLE
- EXISTING END SECTION
- EXISTING PARKING BLOCK
- EXISTING A.D.A. PARKING SYMBOL
- EXISTING RIPRAP
- X — X — X — X EXISTING FENCE LINE
- EXISTING DITCH LINE
- EXISTING GUARD RAIL
- 825 EXISTING CONTOURS
- EXISTING TREE LINE
- EXISTING BUILDING LIMITS
- EXISTING CULVERT
- SOIL BORINGS
- PROPOSED SILT FENCE

GENERAL NOTES

1) SPECIFICATIONS SHALL BE THE "STANDARD SPECIFICATIONS FOR ROAD AND BRIDGE CONSTRUCTION" ADOPTED JANUARY 1, 2022.

2) THIS CONTRACT CONTAINS TWO SEPARATE SETS OF PLANS.
A. PLAN SET 1 0F 2 - STATE PARK ROAD (WEST) FROM STA 12+00 TO STA 160+65
B. PLAN SET 2 OF 2 - STRUCTURE Nos. 090-9922 AND 090-9923

3) PLAN SET 2 OF 2 SHALL BE CONSTRUCTED FIRST.

4) THE CONTRACTOR SHALL BE AWARE THAT THE SCALES ARE DIFFERENT IN EACH SET.

PLAN SET 1 0F 2 - SCALE: 1" = 50'
PLAN SET 2 0F 2 - SCALE: 1" = 20'
EXCEPT SIGNING PLANS: 1" = 50'

5) THE CONTRACTOR SHALL CONTACT J.U.L.I.E. (JOINT UTILITY LOCATING INFORMATION FOR EXCAVATORS) TO HAVE PUBLIC AND PRIVATE UTILITIES LOCATED AT LEAST 48 HOURS PRIOR TO COMMENCING ANY CONSTRUCTION.

JOB No. 7021-005 VEENSTRA & KIMM, INC. DESIGN FIRM REGISTRATION NUMBER 184-001939

MODEL: $MODELNAME$
FILE NAME: $FILE$

VEENSTRA & KIMM INC.
Springfield, IL. Phone: (217)544-8033
IL. Design Firm No. 184-001939

USER NAME = $USER$	DESIGNED - VVR/KNF/JEB	REVISED -	
	DRAWN - JEB	REVISED -	
PLOT SCALE = $SCALE$	CHECKED - RHD/MAH	REVISED -	
PLOT DATE = $DATE$	DATE - 11/14/2025	REVISED -	

STATE OF ILLINOIS
DEPARTMENT OF TRANSPORTATION
DEPARTMENT OF NATURAL RESOURCES

INDEX OF SHEETS, GENERAL NOTES, IDOT STDS & LEGEND
SPRING LAKE STATE FISH & WILDLIFE AREA

SCALE: | SHEET OF SHEETS | STA. TO STA.

F.A. RTE.	SECTION	COUNTY	TOTAL SHEETS	SHEET NO.
	SPRING LAKE 2024	TAZEWELL	88	2
		CONTRACT NO. 46939		
	ILLINOIS	FED. AID PROJECT		

REV. 12/24/25 REV. 11/26/25

	CODE NO.	ITEM	UNIT	TOTAL QUANTITY	CONSTRUCTION CODE 100% STATE ROADWAY 0005 NONE	100% STATE BRIDGE 0010 SN 090-9922	100% STATE BRIDGE 0010 SN 090-9923
	20100210	TREE REMOVAL (OVER 15 UNITS DIAMETER)	UNIT	115	115		
	20200100	EARTH EXCAVATION	CU YD	211	5	85	121
	20300100	CHANNEL EXCAVATION	CU YD	363		144	219
	20700110	POROUS GRANULAR EMBANKMENT	TON	92		54	38
*	21101615	TOPSOIL FURNISH AND PLACE, 4"	SQ YD	410		107	303
*	25000100	SEEDING, CLASS 1	ACRE	0.12		0.04	0.08
*	25000400	NITROGEN FERTILIZER NUTRIENT	POUND	12		4	8
*	25000500	PHOSPHORUS FERTILIZER NUTRIENT	POUND	12		4	8
*	25000600	POTASSIUM FERTILIZER NUTRIENT	POUND	12		4	8
*	25100105	MULCH, METHOD 1	ACRE	0.12		0.04	0.08
*	25100645	WILDLIFE FRIENDLY EROSION CONTROL BLANKET	SQ YD	208		55	153
	28000250	TEMPORARY EROSION CONTROL SEEDING	POUND	9		4	5
*	28000400	PERIMETER EROSION BARRIER	FOOT	613		220	393
	28100807	STONE DUMPED RIPRAP, CLASS A4	TON	400		230	170

* - DENOTES SPECIAL PROVISION

MODEL: $MODELNAME$
FILE NAME: $FILEL$

VEENSTRA & KIMM INC.
Springfield, IL. Phone: (217)544-8033
IL. Design Firm No. 184-001939

USER NAME = $USER$	DESIGNED - VVR/KNF/JEB	REVISED -
	DRAWN - JEB	REVISED -
PLOT SCALE = $SCALE$	CHECKED - RHD/MAH	REVISED -
PLOT DATE = $DATE$	DATE - 11/14/2025	REVISED -

STATE OF ILLINOIS
DEPARTMENT OF TRANSPORTATION
DEPARTMENT OF NATURAL RESOURCES

COMBINED SUMMARY OF QUANTITIES
SPRING LAKE STATE FISH & WILDLIFE AREA

SCALE: | SHEET 1 OF 6 SHEETS | STA. TO STA.

F.A. RTE.	SECTION	COUNTY	TOTAL SHEETS	SHEET NO.
	SPRING LAKE 2024	TAZEWELL	88	3
		CONTRACT NO. 46939		
	ILLINOIS	FED. AID PROJECT		

REV. 11/26/25 REV. 11/24/25

CODE NO.	ITEM	UNIT	TOTAL QUANTITY	CONSTRUCTION CODE 100% STATE ROADWAY 0005 NONE	100% STATE BRIDGE 0010 SN 090-9922	100% STATE BRIDGE 0010 SN 090-9923
28200200	FILTER FABRIC	SQ YD	810		490	320
30200150	PROCESSING MODIFIED SOIL 6"	SQ YD	12637	12637		
30201700	PORTLAND CEMENT	TON	244	244		
31101900	SUBBASE GRANULAR MATERIAL, TYPE C	TON	79		53	26
35100700	AGGREGATE BASE COURSE, TYPE A 8"	SQ YD	62			62
35101100	AGGREGATE BASE COURSE, TYPE A 12"	SQ YD	176		176	
35101800	AGGREGATE BASE COURSE, TYPE B 6"	SQ YD	479	187		292
35800100	PREPARATION OF BASE	SQ YD	27454	27454		
35800200	AGGREGATE BASE REPAIR	TON	641	641		
40600275	BITUMINOUS MATERIALS (PRIME COAT)	POUND	1614	421	396	797
40600290	BITUMINOUS MATERIALS (TACK COAT)	POUND	21774	21096	279	399
40600982	HOT-MIX ASPHALT SURFACE REMOVAL - BUTT JOINT	SQ YD	13		13	
40602965	HOT-MIX ASPHALT BINDER COURSE, IL-9.5FG, N50	TON	1346	1346		
40602978	HOT-MIX ASPHALT BINDER COURSE, IL- 9.5, N50	TON	15		15	

* - DENOTES SPECIAL PROVISION

CODE NO.	ITEM	UNIT	TOTAL QUANTITY	CONSTRUCTION CODE 100% STATE ROADWAY 0005 NONE	100% STATE BRIDGE 0010 SN 090-9922	100% STATE BRIDGE 0010 SN 090-9923
40604000	HOT-MIX ASPHALT SURFACE COURSE, IL-9.5FG, MIX "C", N50	TON	54		29	25
40604050	HOT-MIX ASPHALT SURFACE COURSE, IL-9.5, MIX "C", N50	TON	2127	2127		
40701816	HOT-MIX ASPHALT PAVEMENT (FULL-DEPTH), 6 3/4"	SQ YD	11567	11302		265
44000100	PAVEMENT REMOVAL	SQ YD	9445	9445		
44000152	HOT-MIX ASPHALT SURFACE REMOVAL, 3/4"	SQ YD	5634	5634		
44000157	HOT-MIX ASPHALT SURFACE REMOVAL, 2"	SQ YD	18853	18853		
44000200	DRIVEWAY PAVEMENT REMOVAL	SQ YD	191	191		
44201713	CLASS D PATCHES, TYPE I, 6 INCH	SQ YD	3	3		
44201721	CLASS D PATCHES, TYPE III, 6 INCH	SQ YD	25	25		
44201723	CLASS D PATCHES, TYPE IV, 6 INCH	SQ YD	601	601		
48100500	AGGREGATE SHOULDERS, TYPE A 6"	SQ YD	31		31	
48102100	AGGREGATE WEDGE SHOULDER, TYPE B	TON	125	125		
50100300	REMOVAL OF EXISTING STRUCTURES NO. 1	EACH	1		1	
50100400	REMOVAL OF EXISTING STRUCTURES NO. 2	EACH	1			1

* - DENOTES SPECIAL PROVISION

CODE NO.	ITEM	UNIT	TOTAL QUANTITY	CONSTRUCTION CODE 100% STATE ROADWAY 0005 NONE	100% STATE BRIDGE 0010 SN 090-9922	100% STATE BRIDGE 0010 SN 090-9923
50200100	STRUCTURE EXCAVATION	CU YD	243		126	117
50300225	CONCRETE STRUCTURES	CU YD	45.6		22.8	22.8
50300280	CONCRETE ENCASEMENT	CU YD	5.6		2.8	2.8
50400405	PRECAST PRESTRESSED CONCRETE DECK BEAMS (21" DEPTH)	SQ FT	2192		1024	1168
50800205	REINFORCEMENT BARS, EPOXY COATED	POUND	6820		3560	3260
50900205	STEEL RAILING, TYPE S1	FOOT	188		88	100
51201400	FURNISHING STEEL PILES HP10X42	FOOT	530		287	243
51202305	DRIVING PILES	FOOT	530		287	243
51203400	TEST PILE STEEL HP10X42	EACH	3		1	2
51204650	PILE SHOES	EACH	16		8	8
51500100	NAME PLATES	EACH	2		1	1
58100200	WATERPROOFING MEMBRANE SYSTEM	SQ YD	251		117	134
* 63100075	TRAFFIC BARRIER TERMINAL, TYPE 5A	EACH	2		2	
* 63100167	TRAFFIC BARRIER TERMINAL, TYPE 1 (SPECIAL) TANGENT	EACH	2		2	

* - DENOTES SPECIAL PROVISION

MODEL: $MODELNAME$
FILE NAME: $FILEL$

VEENSTRA & KIMM INC.
Springfield, IL. Phone: (217)544-8033
IL. Design Firm No. 184-001939

USER NAME = $USER$	DESIGNED - VVR/KNF/JEB	REVISED -	
	DRAWN - JEB	REVISED -	
PLOT SCALE = $SCALE$	CHECKED - RHD/MAH	REVISED -	
PLOT DATE = $DATE$	DATE - 11/14/2025	REVISED -	

STATE OF ILLINOIS
DEPARTMENT OF TRANSPORTATION
DEPARTMENT OF NATURAL RESOURCES

COMBINED SUMMARY OF QUANTITIES
SPRING LAKE STATE FISH & WILDLIFE AREA

SCALE: | SHEET 4 OF 6 SHEETS | STA. TO STA.

F.A. RTE.	SECTION	COUNTY	TOTAL SHEETS	SHEET NO.
	SPRING LAKE 2024	TAZEWELL	88	6
		CONTRACT NO. 46939		
	ILLINOIS	FED. AID PROJECT		

REV. 11/26/25 REV. 11/24/25

	CODE NO.	ITEM	UNIT	TOTAL QUANTITY	CONSTRUCTION CODE 100% STATE ROADWAY 0005 NONE	100% STATE BRIDGE 0010 SN 090-9922	100% STATE BRIDGE 0010 SN 090-9923
	67000500	ENGINEER'S FIELD OFFICE, TYPE B	CAL MO	1	1		
	67100100	MOBILIZATION	L SUM	1	0.5	0.5	
*	72000100	SIGN PANEL - TYPE 1	SQ FT	229.50	229.50		
	72800100	TELESCOPING STEEL SIGN SUPPORT	FOOT	52	52		
	73000100	WOOD SIGN SUPPORT	FOOT	926	926		
*	78000100	THERMOPLASTIC PAVEMENT MARKING - LETTERS AND SYMBOLS	SQ FT	52	52		
*	78000200	THERMOPLASTIC PAVEMENT MARKING - LINE 4"	FOOT	5049	5049		
*	78000400	THERMOPLASTIC PAVEMENT MARKING - LINE 6"	FOOT	551	551		
*	A2006516	TREE, QUERCUS BICOLOR (SWAMP WHITE OAK), 2" CALIPER, BALLED AND BURLAPPED	EACH	5	5		
*	A2006716	TREE, QUERCUS MACROCARPA (BUR OAK), 2" CALIPER, BALLED AND BURLAPPED	EACH	5	5		
	X0300019	REMOVE AND REINSTALL PARKING BLOCKS	EACH	7	7		
	X0300249	REMOVE EXISTING GATE	EACH	2	2		
	X0301430	PRECAST CONCRETE PARKING BLOCK	EACH	3	3		
	X0323013	TUBULAR STEEL GATE	EACH	2	2		

* - DENOTES SPECIAL PROVISION

CODE NO.	ITEM	UNIT	TOTAL QUANTITY	CONSTRUCTION CODE 100% STATE ROADWAY 0005 NONE	100% STATE BRIDGE 0010 SN 090-9922	100% STATE BRIDGE 0010 SN 090-9923
X0325800	PARKING LOT SEAL COAT	SQ YD	5432	5432		
X0326806	WASHOUT BASIN	L SUM	1		0.5	0.5
X1500005	BITUMINOUS SURFACE TREATMENT, A2	SQ YD	7641	7641		
X1500006	BITUMINOUS SURFACE TREATMENT, A3	SQ YD	19813	19813		
X2600016	MINOR SIGN COMPLETE	EACH	19	19		
X2810844	REMOVE EXISTING RIPRAP	SQ YD	3		3	
X4060107	BITUMINOUS MATERIALS (FOG SEAL)	POUND	14825	14825		
X7010216	TRAFFIC CONTROL AND PROTECTION, (SPECIAL)	L SUM	1		0.5	0.5
X7240207	REMOVE EXISTING SIGN COMPLETE	EACH	77	77		
Z0004002	BOLLARDS	EACH	1	1		
Z0004542	HOT-MIX ASPHALT REMOVAL (SPECIAL)	SQ YD	2090	2090		
Z0013798	CONSTRUCTION LAYOUT	L SUM	1	0.34	0.33	0.33

* - DENOTES SPECIAL PROVISION

F.A. RTE.	SECTION	COUNTY	TOTAL SHEETS	SHEET NO.
IDNR	SPRING LAKE 2024	TAZEWELL	24	1
	ILLINOIS	CONTRACT NO. 46939		

SET 1 OF 2 SETS
SHEETS 9 THRU 32 OF 73

STATE OF ILLINOIS
DEPARTMENT OF TRANSPORTATION

FOR INDEX OF SHEETS, SEE SHEET NO. 2

PROPOSED HIGHWAY PLANS

SPRING LAKE STATE FISH AND WILDLIFE AREA
SECTION SPRING LAKE 2024

ROADWAY IMPROVEMENTS
TAZEWELL COUNTY

C–30–001–24

IDNR PROJECT 1–23–013

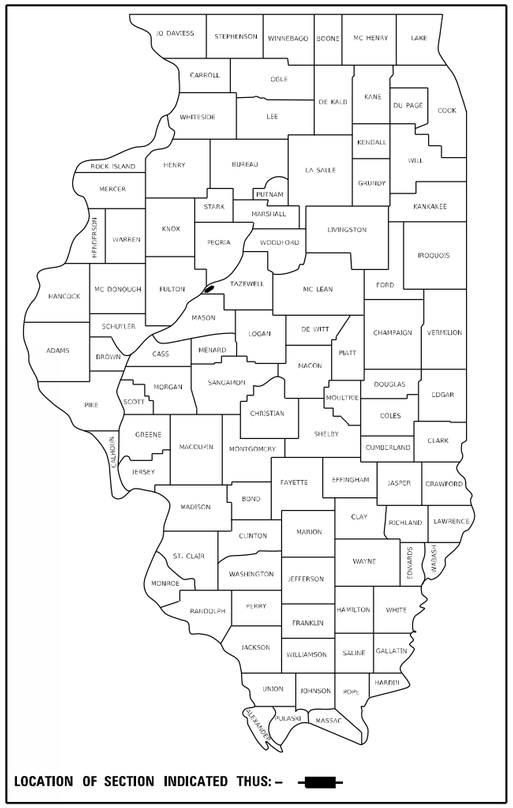

LOCATION OF SECTION INDICATED THUS: –

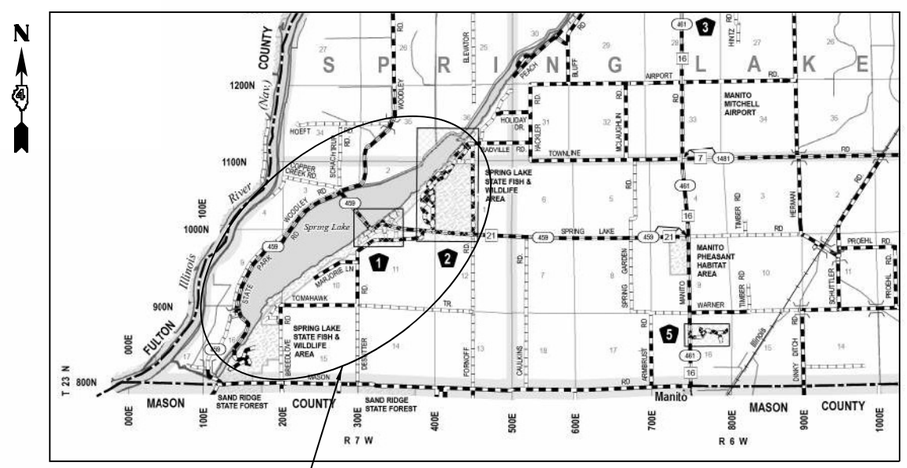

LOCATION MAP
SPRING LAKE TOWNSHIP

1" = 1 MILE

PROJECT LOCATION

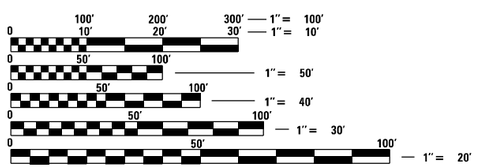

FULL SIZE PLANS HAVE BEEN PREPARED USING STANDARD ENGINEERING SCALES. REDUCED SIZED PLANS WILL NOT CONFORM TO STANDARD SCALES. IN MAKING MEASUREMENTS ON REDUCED PLANS, THE ABOVE SCALES MAY BE USED.

J.U.L.I.E.
JOINT UTILITY LOCATION INFORMATION FOR EXCAVATORS
1–800–892–0123
OR 811

GROSS LENGTH = 26,976.35 FT. = 5.109 MILE
NET LENGTH = 26,976.35 FT. = 5.109 MILE

LICENSED PROFESSIONAL ENGINEER
ELIZABETH S. WITT
062-061876
STATE OF ILLINOIS

12/6/2024
ILLINOIS PROFESSIONAL ENGINEER NO. 062-061876
EXP. 11-30-2025

VOLKERT

STATE OF ILLINOIS
DEPARTMENT OF TRANSPORTATION

SUBMITTED _____ 20 _____

_____
REGIONAL ENGINEER

_____ 20 _____

_____
ENGINEER OF DESIGN AND ENVIRONMENT

_____ 20 _____

_____
DIRECTOR OF HIGHWAYS PROJECT IMPLEMENTATION

PRINTED BY THE AUTHORITY OF THE STATE OF ILLINOIS

CONTRACT NO. 46939

GENERAL NOTES

1. ILLINOIS STATE LAW REQUIRES A 48-HOUR NOTICE BE GIVEN TO ALL UTILITIES BEFORE DIGGING. FIELD MARKING OF FACILITIES MAY ALSO BE OBTAINED BY CONTACTING J.U.L.I.E. OR FOR NON-J.U.L.I.E. MEMBERS, THE UTILITY COMPANY DIRECTLY. AGENCIES KNOWN TO HAVE FACILITIES WITHIN THE PROJECT AREA ARE AS FOLLOWS:

   * AMEREN ILLINOIS
   * BRIGHTSPEED
   * CASS CO TELEPHONE & CABLE

   MEMBERS OF J.U.L.I.E. (800) 892-0123 ARE INDICATED BY *

   NON-J.U.L.I.E. MEMBERS MUST BE NOTIFIED INDIVIDUALLY.

2. THE ALGEBRAIC DIFFERENCE BETWEEN THE PAVEMENT AND SHOULDER SLOPES SHALL NOT EXCEED 8%. THE SHOULDER ON THE OUTSIDE OF SUPERELEVATED CURVES SHALL BE FLATTENED ACCORDINGLY.

3. ANY REFERENCE TO A STANDARD IN THESE PLANS SHALL BE INTERPRETED TO MEAN THE EDITION AS INDICATED BY THE SUB NUMBER LISTED IN THE INDEX OF SHEETS OR THE COPY OF THE STANDARD INCLUDED IN THESE PLANS.

4. IN ADDITION TO FIELD SURVEYS, PLAN DIMENSIONS AND DETAILS RELATIVE TO THE EXISTING FACILITIES HAVE BEEN TAKEN FROM EXISTING PLANS AND ARE SUBJECT TO CONSTRUCTION VARIATIONS. IT SHALL BE THE CONTRACTOR'S RESPONSIBILITY TO VERIFY SUCH DIMENSIONS AND DETAILS IN THE FIELD. SUCH VARIATIONS SHALL NOT BE A CAUSE FOR ADDITIONAL COMPENSATION DUE TO A CHANGE IN THE SCOPE OF WORK; HOWEVER, THE CONTRACTOR WILL BE PAID FOR THE QUANTITY ACTUALLY FURNISHED AT THE UNIT PRICE BID FOR WORK.

5. A NOMINAL QUANTITY OF 625 TONS OF AGGREGATE FOR BASE REPAIR HAS BEEN INCLUDED FOR REPAIRS TO THE EXISTING AGGREGATE ROADWAYS AT LOCATIONS AND AS DIRECTED BY THE ENGINEER.

6. ALL ELEVATIONS SHOWN ON THE PLANS ARE ESTABLISHED FROM U.S.G. MEAN SEA LEVEL DATUM.

7. THE AGGREGATE GRADATION IN BITUMINOUS SURFACE TREATMENT, A2 AND A3 FOR SEAL COAT AGGREGATE SHALL BE CA-16 (CRUSHED STONE). THE COVER COAT AGGREGATE SHALL BE CA-14 (CRUSHED STONE).

8. DUE TO THE POTENTIAL PRESENCE OF ENDANGERED BATS, NO TREE REMOVAL WILL BE ALLOWED ON THIS PROJECT BETWEEN APRIL 1ST AND SEPTEMBER 30TH.

9. CONTINUOUS PAVING OPERATIONS ON THE MAIN ROADWAY SHALL BE MAINTAINED AT ALL TIMES DURING THE CONSTRUCTION OF THE HOT-MIX ASPHALT SURFACE. NO INTERRUPTIONS FOR SIDE ROADS, ENTRANCES, TURN LANES, ETC. SHALL BE ALLOWED.

10. SIGN LOCATIONS MAY VARY FROM THE STATIONS SHOWN ON THE PLANS IN ACCORDANCE WITH DIRECTIONS FROM THE ENGINEER AT THE TIME OF CONSTRUCTION. SIGN LOCATIONS MAY BE ADJUSTED IN THE FIELD TO AVOID ANY FOUND UTILITIES. ALL WOOD POST LOCATIONS SHALL BE VERIFIED WITH THE BUREAU OF OPERATIONS, TRAFFIC SECTION, BEFORE INSTALLATION.

11. THE CONTRACTOR WILL BE REQUIRED TO ABIDE BY ALL WEIGHT RESTRICTIONS AT SN 090-9921 (NEAR STA 10+00) DURING ALL CONSTRUCTION ACTIVITIES.

12. THE CONTRACTOR SHALL NOT UTILIZE THE EXISTING ENTRANCE AT STA 42+92 FOR ANY THROUGH TRAFFIC TIED TO THE REQUIRED CONSTRUCTION ACTIVITIES. THE CONTRACTOR WILL BE REQUIRED TO BARRICADE THE ENTRANCE IN ACCORDANCE WITH THE ROAD CLOSED TO THRU TRAFFIC AS SHOWN ON HIGHWAY STANDARD 701901.

COMMITMENTS

NONE

RATES OF APPLICATION:

FACTORS USED FOR ESTIMATING PLAN QUANTITIES ARE AS FOLLOWS AND SHALL NOT BE USED FOR THE BASIS OF FINAL QUANTITIES:

AGGREGATE	2.1 TONS/CU YD
BITUMINOUS MATERIAL	
TACK COAT	0.025 LB/SQ FT
PRIME COAT	0.25 LB/SQ FT
FOG SEAL	0.06 LB/SQ FT
HOT-MIX ASPHALT	112 LB/SQ YD/INCH
EARTH	110 LB/SQ YD/INCH
CEMENT	5% BY UNIT WEIGHT

HMA MIXTURE REQUIREMENTS TABLE

LOCATIONS	STATE PARK ROAD (WEST)		
MIXTURE USE(S)	HMA SURFACE COURSE	HMA BINDER COURSE	CLASS D PATCHES
AC/PG	PG 64-22	PG 64-22	PG 64-22
DESIGN AIR VOIDS	4.0% @ NDES=50	4.0% @ NDES=50	4.0% @ NDES=50
MIXTURE COMPOSITION (GRADATION)	IL 9.5	IL 9.5 FG	IL 9.5 FG
FRICTION AGGREGATE	MIX "C"	N.A.	N.A.
MIXTURE WEIGHT	112	112	112
QUALITY MANAGEMENT PROGRAM	QC/QA	QC/QA	QC/QA
MATERIAL TRANSFER DEVICE	NO	NO	NO

1. INDIVIDUAL LIFT THICKNESS OF EACH MIX WILL BE NO LESS THAN THREE (3) TIMES NOMINAL MAXIMUM AGGREGATE SIZE AND NO MORE THAN FIVE (5) TIMES NOMINAL AGGREGATE MAXIMUM SIZE, UNLESS OTHERWISE APPROVED BY THE ENGINEER.

2. FOR DESIGN PURPOSES, MIXTURE WEIGHT FOR ALL MIXES IS DETERMINED TO BE 112.0 LB/SQ YD/IN, UNLESS OTHERWISE NOTED.

3. SUBLOT SIZES FOR PFP AND QCP MIXES WILL BE 1,000 TONS UNLESS OTHERWISE AGREED TO BY THE ENGINEER AND THE PAVING CONTRACTOR.

INDEX OF SHEETS

HIGHWAY STANDARDS

000001-08	STANDARD SYMBOLS, ABBREVIATIONS AND PATTERNS
001006	DECIMAL OF AN INCH AND OF A FOOT
442201-03	CLASS C AND D PATCHES
701001-02	OFF-ROAD OPERATIONS, 2L, 2W, MORE THAN 15' (4.5 M) AWAY
701006-05	OFF-ROAD OPERATIONS, 2L, 2W, 15' (4.5 M) TO 24" (600 MM) FROM PAVEMENT EDGE
701011-04	OFF-ROAD MOVING OPERATIONS, 2L, 2W, DAY ONLY
701301-04	LANE CLOSURE, 2L, 2W, SHORT TIME OPERATIONS
701901-10	TRAFFIC CONTROL DEVICES
720001-01	SIGN PANEL MOUNTING DETAILS
720006-04	SIGN PANEL ERECTION DETAILS
780001-05	TYPICAL PAVEMENT MARKINGS
BLR 22-7	TYP. APPL. OF T.C.D. FOR RURAL LOC. HWYS. (2-LANE 2 WAY RURAL TRAFF.) (RD. CLOSED TO THRU TRAFF.)

CODE NO.	ITEM	UNIT	TOTAL QUANTITY
20100210	TREE REMOVAL (OVER 15 UNITS DIAMETER)	UNIT	115
30200150	PROCESSING MODIFIED SOIL 6"	SQ YD	12637
30201700	PORTLAND CEMENT	TON	244
35101800	AGGREGATE BASE COURSE, TYPE B 6"	SQ YD	187
35800100	PREPARATION OF BASE	SQ YD	27454
35800200	AGGREGATE BASE REPAIR	TON	641
40600275	BITUMINOUS MATERIALS (PRIME COAT)	POUND	421
40600290	BITUMINOUS MATERIALS (TACK COAT)	POUND	21096
40602965	HOT-MIX ASPHALT BINDER COURSE, IL-9.5FG, N50	TON	1346
40604050	HOT-MIX ASPHALT SURFACE COURSE, IL-9.5, MIX "C", N50	TON	2127
40701816	HOT-MIX ASPHALT PAVEMENT (FULL DEPTH), 6 3/4"	SQ YD	11302
44000100	PAVEMENT REMOVAL	SQ YD	9445
44000152	HOT-MIX ASPHALT SURFACE REMOVAL, 3/4"	SQ YD	5634
44000157	HOT-MIX ASPHALT SURFACE REMOVAL, 2"	SQ YD	18853
44000200	DRIVEWAY PAVEMENT REMOVAL	SQ YD	191
44201713	CLASS D PATCHES, TYPE I, 6 INCH	SQ YD	3

CODE NO.	ITEM	UNIT	TOTAL QUANTITY
44201721	CLASS D PATCHES, TYPE III, 6 INCH	SQ YD	25
44201723	CLASS D PATCHES, TYPE IV, 6 INCH	SQ YD	601
48102100	AGGREGATE WEDGE SHOULDER, TYPE B	TON	125
67100100	MOBILIZATION	L SUM	0.5
72000100	SIGN PANEL - TYPE 1	SQ FT	34
72400310	REMOVE SIGN PANEL - TYPE 1	SQ FT	2
73000100	WOOD SIGN SUPPORT	FOOT	82
78000100	THERMOPLASTIC PAVEMENT MARKING - LETTERS AND SYMBOLS	SQ FT	52
78000200	THERMOPLASTIC PAVEMENT MARKING - LINE 4"	FOOT	5049
78000400	THERMOPLASTIC PAVEMENT MARKING - LINE 6"	FOOT	551
A2006516	TREE, QUERCUS BICOLOR (SWAMP WHITE OAK), 2" CALIPER, BALLED AND BURLAPPED	EACH	5
A2006716	TREE, QUERCUS MACROCARPA (BUR OAK), 2" CALIPER, BALLED AND BURLAPPED	EACH	5
X0300019	REMOVE AND REINSTALL PARKING BLOCKS	EACH	7
X0301430	PRECAST CONCRETE PARKING BLOCK	EACH	3
X0325800	PARKING LOT SEAL COAT	SQ YD	5432
X1500005	BITUMINOUS SURFACE TREATMENT, A2	SQ YD	7641

VOLKERT

USER NAME = default	DESIGNED -	REVISED -
	DRAWN -	REVISED -
PLOT SCALE = 0.1667 ' / in.	CHECKED -	REVISED -
PLOT DATE = 12/5/2024	DATE - 01/03/2025	REVISED -

STATE OF ILLINOIS
DEPARTMENT OF TRANSPORTATION

SUMMARY OF QUANTITIES
SPRING LAKE STATE FISH AND WILDLIFE AREA

SCALE: SHEET 1 OF 2 SHEETS

F.A. RTE.	SECTION	COUNTY	TOTAL SHEETS	SHEET NO.
IDNR	SPRING LAKE 2024	TAZEWELL	24	3
		CONTRACT NO. 46939		
		ILLINOIS FED. AID PROJECT		

CODE NO.	ITEM	UNIT	TOTAL QUANTITY
X1500006	BITUMINOUS SURFACE TREATMENT, A3	SQ YD	19813
X4060107	BITUMINOUS MATERIALS (FOG SEAL)	POUND	14825
~~X7011801~~	~~TRAFFIC CONTROL AND PROTECTION, STANDARD BLR 22~~	~~L SUM~~	~~1~~
Z0004002	BOLLARDS	EACH	2
Z0004542	HOT-MIX ASPHALT REMOVAL (SPECIAL)	SQ YD	2090
Z0013798	CONSTRUCTION LAYOUT	L SUM	0.5
X7010216	TRAFFIC CONTROL AND PROTECTION (SPECIAL)	L SUM	0.5

MODEL: $MODELNAME$
FILE NAME: pw:\\projectwise.volkert.com:volkert-us-pw\Documents\Projects\1150913 - PTB 200 - Item 43 - V/O 13 - Spring Lake\CADD\CAD Sheets\Sht-SOQ.dgn

VOLKERT

USER NAME = default	DESIGNED -	REVISED -
	DRAWN -	REVISED -
PLOT SCALE = 0.1667 ' / in.	CHECKED -	REVISED -
PLOT DATE = 12/5/2024	DATE - 01/03/2025	REVISED -

STATE OF ILLINOIS
DEPARTMENT OF TRANSPORTATION

SUMMARY OF QUANTITIES
SPRING LAKE STATE FISH AND WILDLIFE AREA

SCALE: | SHEET 2 OF 2 SHEETS

F.A. RTE.	SECTION	COUNTY	TOTAL SHEETS	SHEET NO.
IDNR	SPRING LAKE 2024	TAZEWELL	24	4
		CONTRACT NO. 46939		
	ILLINOIS	FED. AID PROJECT		

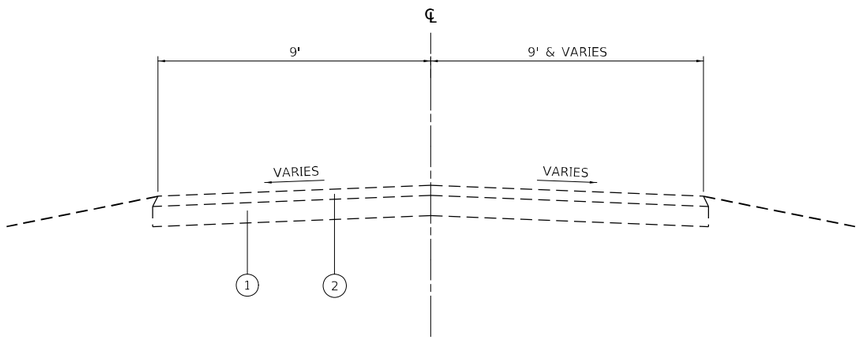

STATE PARK ROAD (WEST)
HOT-MIX ASPHALT

STA 12+00 TO STA 126+37
STA 130+94 TO STA 135+38
STA 140+65 TO STA 160+65

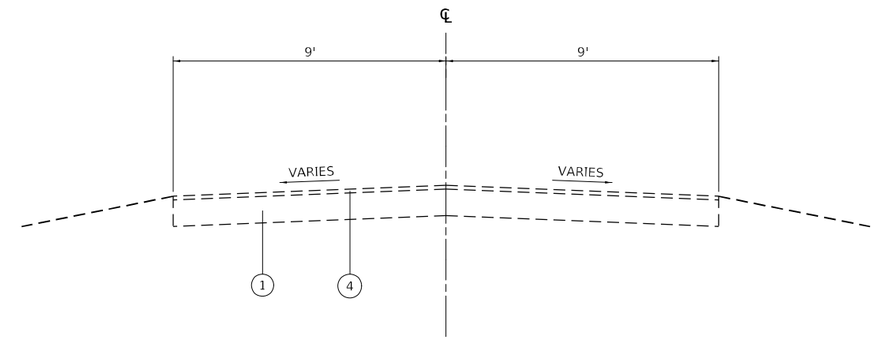

STATE PARK ROAD (WEST)
OIL & CHIP

STA 126+37 TO STA 130+94
STA 135+38 TO STA 140+65

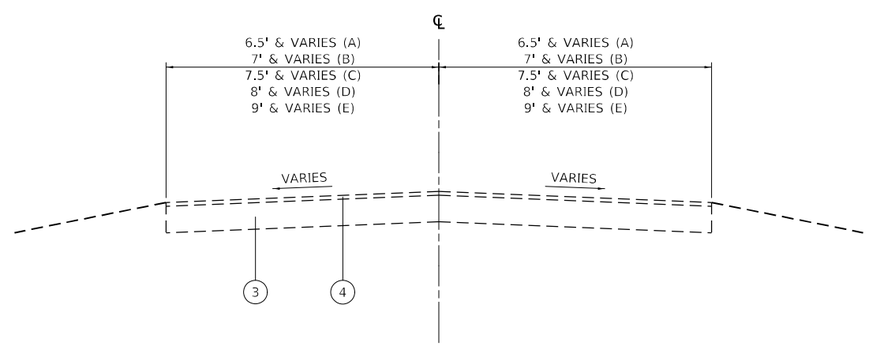

CAMPGROUND ROADS

(E) STA 200+42 TO STA 243+42 (STATE PARK DRIVE (EAST))
(D) STA 300+09 TO STA 301+40 (OAK LOOP ROAD)
(A) STA 301+40 TO STA 318+25 (OAK LOOP ROAD)
(C) STA 400+09 TO STA 401+90 (PINE LOOP ROAD)
(B) STA 401+90 TO STA 414+71 (PINE LOOP ROAD)
(A) STA 500+00 TO STA 543+87 (FISHING LOOP ROAD)

LEGEND

1. EXISTING SOIL-CEMENT BASE COURSE, 5", WITH EMULSIFIED ASPHALT COVER
2. EXISTING HOT-MIX ASPHALT SURFACE, 6" & VARIES
3. EXISTING AGGREGATE BASE
4. EXISTING OIL & CHIP SURFACE
5. PROPOSED HOT-MIX ASPHALT SURFACE COURSE, IL-9.5, MIX "C", N50, 1 1/2"
6. PROPOSED HOT-MIX ASPHALT BINDER COURSE, IL-9.5FG, N50, 1 1/4"
7. PROPOSED HOT-MIX ASPHALT PAVEMENT (FULL DEPTH), 6 3/4"
8. PROPOSED PROCESSING MODIFIED SOIL 6" WITH PORTLAND CEMENT
9. PROPOSED AGGREGATE WEDGE SHOULDERS, TYPE B
10. PROPOSED BITUMINOUS SURFACE TREATMENT, A2
11. PROPOSED BITUMINOUS SURFACE TREATMENT, A3
12. PROPOSED PARKING LOT SEAL COAT
13. PROPOSED PREPARATION OF BASE
14. PROPOSED AGGREGATE BASE REPAIR

VOLKERT

USER NAME = default	DESIGNED -	REVISED -	
	DRAWN -	REVISED -	
PLOT SCALE = 10.0000 ' / in.	CHECKED -	REVISED -	
PLOT DATE = 12/5/2024	DATE - 01/03/2025	REVISED -	

STATE OF ILLINOIS
DEPARTMENT OF TRANSPORTATION

EXISTING TYPICAL SECTIONS
SPRING LAKE STATE FISH AND WILDLIFE AREA

SCALE: 1"=5' | SHEET 1 OF 2 SHEETS

F.A. RTE.	SECTION	COUNTY	TOTAL SHEETS	SHEET NO.
IDNR	SPRING LAKE 2024	TAZEWELL	24	5
		CONTRACT NO. 46939		
	ILLINOIS	FED. AID PROJECT		

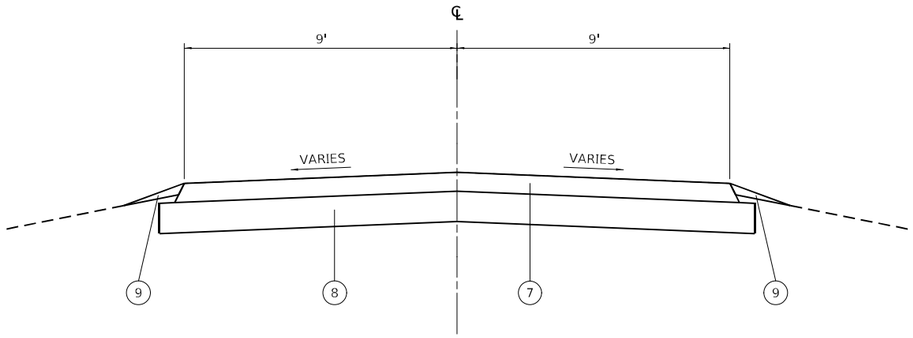

STATE PARK ROAD (WEST)
HOT-MIX ASPHALT PAVEMENT

STA 12+00 TO STA 13+46
STA 54+85 TO STA 58+65
STA 100+08 TO STA 102+73
STA 107+24 TO STA 155+84

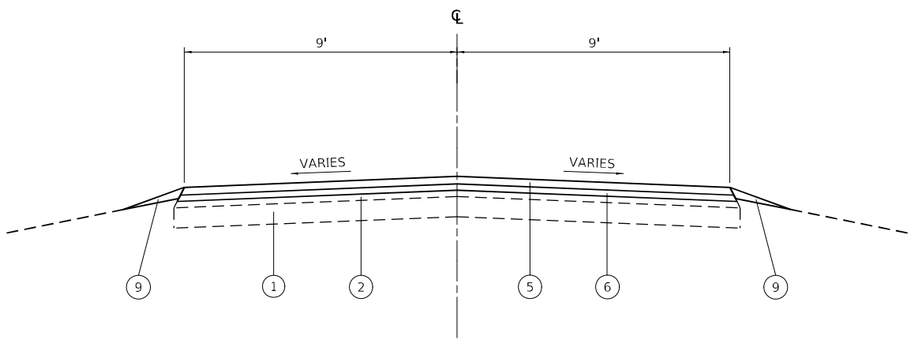

STATE PARK ROAD (WEST)
HOT-MIX ASPHALT RESURFACING

STA 13+46 TO STA 54+85
STA 58+65 TO STA 100+08
STA 102+73 TO STA 107+24
STA 155+84 TO STA 160+65

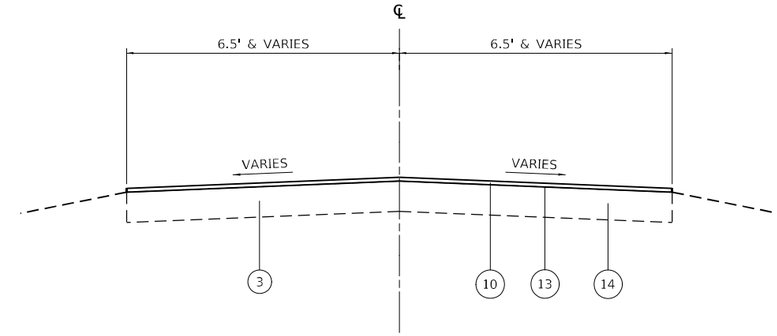

CAMPGROUND ROADS
OIL & CHIP (A2)

*STA 500+00 TO STA 543+87 (FISHING LOOP ROAD)

*INCLUDES 13' CUT-THROUGH ROAD

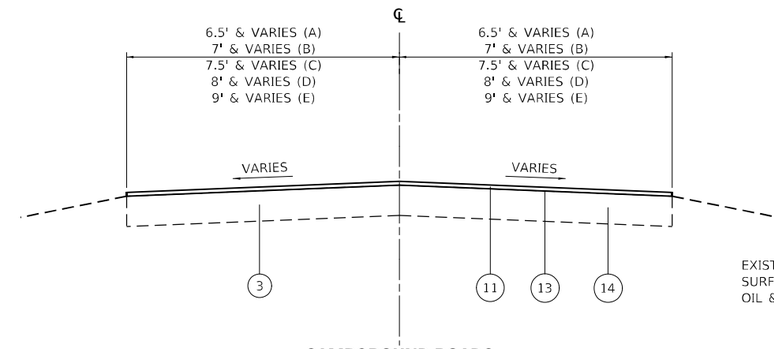

CAMPGROUND ROADS
OIL & CHIP (A3)

(E) STA 200+42 TO STA 243+42 (STATE PARK DRIVE (EAST))
(D) STA 300+09 TO STA 301+40 (OAK LOOP ROAD)
(A) STA 301+40 TO STA 318+25 (OAK LOOP ROAD)
(C) STA 400+09 TO STA 401+90 (PINE LOOP ROAD)
(B) STA 401+90 TO STA 414+71 (PINE LOOP ROAD)

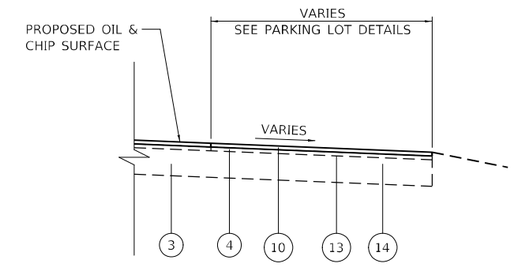

OIL & CHIP (A2) PARKING LOTS

PARKING LOT NO. 3

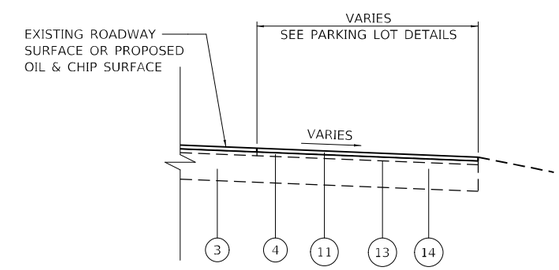

OIL & CHIP (A3) PARKING LOTS

PARKING LOT NO. 2
WASTE STATION

LEGEND

1. EXISTING SOIL-CEMENT BASE COURSE, 5", WITH EMULSIFIED ASPHALT COVER
2. EXISTING HOT-MIX ASPHALT SURFACE, 6" & VARIES
3. EXISTING AGGREGATE BASE
4. EXISTING OIL & CHIP SURFACE
5. PROPOSED HOT-MIX ASPHALT SURFACE COURSE, IL-9.5, MIX "C", N50, 1 1/2"
6. PROPOSED HOT-MIX ASPHALT BINDER COURSE, IL-9.5FG, N50, 1 1/4"
7. PROPOSED HOT-MIX ASPHALT PAVEMENT (FULL DEPTH), 6 3/4"
8. PROPOSED PROCESSING MODIFIED SOIL 6" WITH PORTLAND CEMENT
9. PROPOSED AGGREGATE WEDGE SHOULDERS, TYPE B
10. PROPOSED BITUMINOUS SURFACE TREATMENT, A2
11. PROPOSED BITUMINOUS SURFACE TREATMENT, A3
12. PROPOSED PARKING LOT SEAL COAT
13. PROPOSED PREPARATION OF BASE
14. PROPOSED AGGREGATE BASE REPAIR

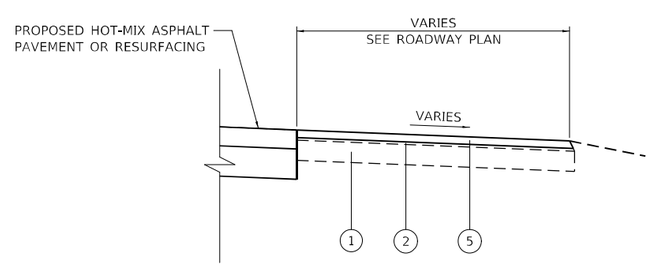

HOT-MIX ASPHALT PULL-OFF RESURFACING

PULL-OFF A, B, C, D, E

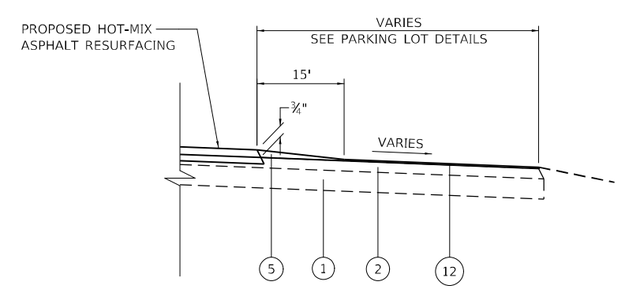

HOT-MIX ASPHALT PARKING LOT SEAL COAT

PARKING LOT NO. 1

MODEL: $MODELNAMES
FILE NAME: pw:\\projectwise.volkert.com:volkert-sigpw\Documents\Projects\115093-3 - PTB 200 - Item 43 - WO 13 - Spring Lake\CADD\CAD Sheets\Sht-Typical.dgn

VOLKERT

USER NAME = default	DESIGNED -	REVISED -	
	DRAWN -	REVISED -	
PLOT SCALE = 10.0000 ' / in.	CHECKED -	REVISED -	
PLOT DATE = 12/5/2024	DATE - 01/03/2025	REVISED -	

STATE OF ILLINOIS
DEPARTMENT OF TRANSPORTATION

PROPOSED TYPICAL SECTIONS
SPRING LAKE STATE FISH AND WILDLIFE AREA

SCALE: 1"=5' | SHEET 2 OF 2 SHEETS

F.A. RTE.	SECTION	COUNTY	TOTAL SHEETS	SHEET NO.
IDNR	SPRING LAKE 2024	TAZEWELL	24	6
		CONTRACT NO. 46939		
		ILLINOIS FED. AID PROJECT		

PAVING SCHEDULE

LOCATION STATION	TO	STATION	ROADWAY	PROCESSING MODIFIED SOIL 6" (SQ YD)	PORTLAND CEMENT (TON)	AGGREGATE BASE COURSE, TYPE B 6" (SQ YD)	PREPARATION OF BASE (SQ YD)	AGGREGATE BASE REPAIR (TON)	BITUMINOUS MATERIALS (PRIME COAT) (POUND)	BITUMINOUS MATERIALS (TACK COAT) (POUND)	HOT-MIX ASPHALT BINDER COURSE, IL-9.5FG, N50 (TON)	HOT-MIX ASPHALT SURFACE COURSE, IL-9.5 MIX "C", N50 (TON)	HOT-MIX ASPHALT PAVEMENT (FULL DEPTH), 6 3/4" (SQ YD)	CLASS D PATCHES, TYPE I, 6 INCH (SQ YD)	CLASS D PATCHES, TYPE III, 6 INCH (SQ YD)	CLASS D PATCHES, TYPE IV, 6 INCH (SQ YD)	AGGREGATE WEDGE SHOULDER, TYPE B (TON)	BITUMINOUS SURFACE TREATMENT, A2 (SQ YD)	BITUMINOUS SURFACE TREATMENT, A3 (SQ YD)	BITUMINOUS MATERIALS (FOG SEAL) (POUND)	REMOVE AND REINSTALL PARKING BLOCKS (EACH)	PRECAST CONCRETE PARKING BLOCKS (EACH)	PARKING LOT SEAL COAT (SQ YD)
12+00	TO	13+46	STATE PARK ROAD (WEST)	326.47	6.29					133.96			292.00				1.43						
13+46	TO	43+32	STATE PARK ROAD (WEST)			186.79			420.28	4118.19	426.27	525.88				129.78	28.64						
43+32	TO	54+85	STATE PARK ROAD (WEST)							2182.60	186.58	256.86				305.95	9.92				7	3	5431.93
54+85	TO	100+08	STATE PARK ROAD (WEST)	849.72	16.37					6443.01	591.43	772.48	760.00	2.22	24.65	65.15	32.83						
100+08	TO	126+37	STATE PARK ROAD (WEST)	4870.25	93.80					4328.77	64.38	396.65	4356.00				19.44						
126+37	TO	155+84	STATE PARK ROAD (WEST)	6589.81	126.92					3150.36		83.74	5894.00				27.01						
155+84	TO	160+65	STATE PARK ROAD (WEST)							738.49	76.45	90.69					4.79						
			SPRING LAKE ROAD				5200.31									100.00			5200.31	2808.17			
200+42	TO	243+42	STATE PARK DR (EAST)				9507.23												9507.23	5133.90			
400+09	TO	414+32	PINE LOOP ROAD				2372.06												2372.06	1280.91			
300+09	TO	317+82	OAK LOOP ROAD				2732.97												2732.97	1475.80			
500+00	TO	533+15	FISHING LOOP ROAD				7640.86											7640.86		4126.06			
NOMINAL QUANTITY*								641															
			SUBTOTAL	12636.25	243.38	186.79	27453.43	641	420.28	21095.38	1345.11	2126.30	11302.00	2.22	24.65	600.88	124.06	7640.86	19812.57	14824.84	7	3	5431.93
			PAY TOTAL	12637	244	187	27454	641	421	21096	1346	2127	11302	3	25	601	125	7641	19813	14825	7	3	5432

*FOR EXISTING OIL & CHIP ROADS AND PARKING LOTS

PAVEMENT MARKING AND SIGN SCHEDULE

LOCATION STATION	TO	STATION	ROADWAY	PARKING LOT	MUTCD SIGN NO.	SIGN DESCRIPTION	SIGN DIMENSIONS (IN. X IN.)	SIGN PANEL TYPE 1 (SQ FT)	REMOVE SIGN PANEL TYPE 1 (SQ FT)	WOOD SIGN SUPPORT (FOOT)	BOLLARDS (EACH)	THERMOPLASTIC PAVEMENT MARKING LETTERS AND SYMBOLS (SQ FT)	THERMOPLASTIC PAVEMENT MARKING - 4" LINE SOLID WHITE (FOOT)	THERMOPLASTIC PAVEMENT MARKING - 4" LINE SKIP DASH YELLOW (FOOT)	THERMOPLASTIC PAVEMENT MARKING - 6" LINE SOLID YELLOW (FOOT)
12+00	TO	160+65	STATE PARK ROAD (WEST)											3716.25	
45+53	TO	51+41	STATE PARK ROAD (WEST)	NO. 1									1260.00	72.50	550.85
10+75			STATE PARK ROAD (WEST)		W1-1a(R)	TURN AHEAD	30 X 30	6.25		14					
12+50			STATE PARK ROAD (WEST)		W1-1a(L)	TURN AHEAD	30 X 30	6.25		14					
43+00			STATE PARK ROAD (WEST)		W1-3L	REVERSE TURN	30 X 30	6.25		15					
43+00			STATE PARK ROAD (WEST)		W13-1P	15 MPH	18 X 18	2.25							
44+10			STATE PARK ROAD (WEST)	NO. 1	R7-8	HANDICAP PARKING	12 X 18	1.50	1.50	12					
44+10			STATE PARK ROAD (WEST)	NO. 1	R7-I101P	S250 FINE	12 X 6	0.50							
44+17			STATE PARK ROAD (WEST)	NO. 1								6.50			
44+20			STATE PARK ROAD (WEST)	NO. 1								6.50			
47+89			STATE PARK ROAD (WEST)	NO. 1								6.50			
47+94			STATE PARK ROAD (WEST)	NO. 1								6.50			
48+54			STATE PARK ROAD (WEST)	NO. 1								6.50			
48+56			STATE PARK ROAD (WEST)	NO. 1								6.50			
49+22			STATE PARK ROAD (WEST)	NO. 1								6.50			
49+25			STATE PARK ROAD (WEST)	NO. 1								6.50			
47+80			STATE PARK ROAD (WEST)	NO. 1	R7-8	HANDICAP PARKING	12 X 18	1.50		12	2				
47+80			STATE PARK ROAD (WEST)	NO. 1	R7-I101P	S250 FINE	12 X 6	0.50							
48+00			STATE PARK ROAD (WEST)		W1-3L	REVERSE TURN	30 X 30	6.25		15					
48+00			STATE PARK ROAD (WEST)		W13-1P	15 MPH	18 X 18	2.25							
							SUBTOTAL	33.50	1.50	82	2	52.00	1260.00	3788.75	550.85
							PAY TOTAL	34	2	82	2	52	5049		551

REMOVAL SCHEDULE

LOCATION STATION	TO	STATION	ROADWAY	PAVEMENT REMOVAL (SQ YD)	DRIVEWAY PAVEMENT REMOVAL (SQ YD)	HOT-MIX ASPHALT SURFACE REMOVAL, 3/4" (SQ YD)	HOT-MIX ASPHALT SURFACE REMOVAL, 2" (SQ YD)	HOT-MIX ASPHALT REMOVAL (SPECIAL) (SQ YD)
12+00	TO	13+46	STATE PARK ROAD (WEST)	297.81				
13+46	TO	43+32	STATE PARK ROAD (WEST)		190.93		5972.00	
43+32	TO	54+85	STATE PARK ROAD (WEST)				2619.78	
54+85	TO	100+08	STATE PARK ROAD (WEST)	752.00		845.38	8286.00	
100+08	TO	126+37	STATE PARK ROAD (WEST)	4445.49		3796.00	902.00	
126+37	TO	155+84	STATE PARK ROAD (WEST)	3949.34		992.07		2089.07
155+84	TO	160+65	STATE PARK ROAD (WEST)				1072.81	
			SUBTOTAL	9444.64	190.93	5633.45	18852.59	2089.07
			PAY TOTAL	9445	191	5634	18853	2090

TREE SCHEDULE

LOCATION STATION	OFFSET	ROADWAY	SIDE	PARKING LOT	TREE REMOVAL (OVER 15 UNITS DIAMETER) (UNIT)	TREE, QUERCUS BICOLOR (SWAMP WHITE OAK) 2" CALIPER, BALLED AND BURLAPPED (EACH)	TREE, QUERCUS MACROCARPA (BUR OAK), 2" CALIPER, BALLED AND BURLAPPED (EACH)
35+05	17.5	STATE PARK RD (WEST)	RT		26		
35+51	17.5	STATE PARK RD (WEST)	RT		21		
35+61	17.5	STATE PARK RD (WEST)	RT		16		
48+58	101.9	STATE PARK RD (WEST)	RT		52		
		STATE PARK RD (WEST)	RT	NO. 1		5	5
				SUBTOTAL	115	5	5
				PAY TOTAL	115	5	5

VOLKERT

USER NAME = default	DESIGNED -	REVISED -
	DRAWN -	REVISED -
PLOT SCALE = 0.1667 ' / in.	CHECKED -	REVISED -
PLOT DATE = 12/5/2024	DATE - 01/03/2025	REVISED -

STATE OF ILLINOIS
DEPARTMENT OF TRANSPORTATION

SCHEDULE OF QUANTITIES
SPRING LAKE STATE FISH AND WILDLIFE AREA

SCALE: SHEET 1 OF 1 SHEETS

F.A. RTE.	SECTION	COUNTY	TOTAL SHEETS	SHEET NO.
IDNR	SPRING LAKE 2024	TAZEWELL	24	7
		CONTRACT NO. 46939		
		ILLINOIS FED. AID PROJECT		

MODEL: $MODELNAME$
FILE NAME: pw:\\projectwise.volkert.com:volkert-sp\Documents\Projects\1115093 - PTB 200 - Item 43 - WO 13 - Spring Lake\CADD\CAD Sheets\Sht-Schedules.dgn

ALIGNMENT COORDINATES - STATE PARK ROAD (WEST)				
POINT TYPE	STATION	NORTHING	EASTING	RADIUS
POB	10+00.00	1,374,984.88	2,371,662.26	NA
PC	10+04.55	1,374,989.20	2,371,660.83	250
PI	10+34.26	1,375,017.39	2,371,651.47	
PT	10+63.69	1,375,042.61	2,371,635.77	
PC	11+21.46	1,375,091.65	2,371,605.23	60
PI	11+66.95	1,375,130.27	2,371,581.18	
PT	11+99.31	1,375,163.85	2,371,611.87	
PC	13+31.88	1,375,261.71	2,371,701.30	1,500
PI	14+16.98	1,375,324.53	2,371,758.71	
PT	15+01.89	1,375,393.43	2,371,808.64	
PI	19+09.45	1,375,723.45	2,372,047.79	NA
PC	24+58.24	1,376,171.10	2,372,365.24	750
PI	25+70.71	1,376,262.85	2,372,430.30	
PT	26+81.52	1,376,369.64	2,372,465.59	
PC	31+02.77	1,376,769.63	2,372,597.75	240
PI	32+60.01	1,376,918.93	2,372,647.08	
PT	33+81.17	1,377,023.78	2,372,529.91	
PC	37+76.04	1,377,287.08	2,372,235.65	1,000
PI	38+20.58	1,377,316.78	2,372,202.46	
PT	38+65.06	1,377,349.32	2,372,172.04	
PC	39+31.28	1,377,397.69	2,372,126.81	375
PI	40+38.93	1,377,476.32	2,372,053.28	
PT	41+40.95	1,377,581.98	2,372,032.66	
PC	43+43.77	1,377,781.05	2,371,993.81	60
PI	43+92.06	1,377,828.45	2,371,984.56	
PT	44+25.09	1,377,829.54	2,371,936.29	
PC	45+10.58	1,377,831.48	2,371,850.82	55
PI	45+61.19	1,377,832.63	2,371,800.23	
PT	45+92.40	1,377,883.15	2,371,797.17	
PC	46+18.83	1,377,909.52	2,371,795.57	150
PI	46+45.98	1,377,936.63	2,371,793.93	
PT	46+72.55	1,377,962.58	2,371,801.90	
PC	48+32.68	1,378,115.67	2,371,848.86	250
PI	48+57.34	1,378,139.24	2,371,856.09	
PT	48+81.84	1,378,163.78	2,371,858.58	
PC	51+25.94	1,378,406.64	2,371,883.20	500
PI	51+75.37	1,378,455.82	2,371,888.18	
PT	52+24.48	1,378,503.07	2,371,902.70	
PC	53+57.81	1,378,630.51	2,371,941.86	500
PI	53+71.02	1,378,643.14	2,371,945.74	
PT	53+84.23	1,378,655.96	2,371,948.95	
PC	57+37.40	1,378,998.57	2,372,034.71	500
PI	57+55.99	1,379,016.60	2,372,039.22	
PT	57+74.56	1,379,034.91	2,372,042.38	
PC	60+37.04	1,379,293.56	2,372,087.03	600
PI	61+26.36	1,379,381.58	2,372,102.23	
PT	62+14.38	1,379,461.36	2,372,142.40	
PI	65+32.62	1,379,745.59	2,372,285.54	NA
PI	76+47.58	1,380,738.18	2,372,793.39	NA
PC	78+89.23	1,380,952.33	2,372,905.33	600
PI	79+61.08	1,381,016.01	2,372,938.62	
PT	80+32.24	1,381,070.02	2,372,985.99	
PI	83+91.18	1,381,339.87	2,373,222.68	NA
PI	86+38.47	1,381,522.45	2,373,389.46	NA
PI	88+85.76	1,381,705.03	2,373,556.24	NA
PI	90+47.41	1,381,825.54	2,373,663.99	NA
PC	92+80.59	1,381,999.74	2,373,818.99	350
PI	93+48.95	1,382,050.81	2,373,864.43	
PT	94+15.60	1,382,081.03	2,373,925.74	
PI	101+03.62	1,382,385.19	2,374,542.87	NA
PC	104+68.56	1,382,535.13	2,374,875.59	275
PI	105+66.98	1,382,575.57	2,374,965.32	
PT	106+57.59	1,382,663.76	2,375,009.02	

ALIGNMENT COORDINATES - STATE PARK ROAD (WEST)				
POINT TYPE	STATION	NORTHING	EASTING	RADIUS
PC	106+87.41	1,382,690.48	2,375,022.25	1,000
PI	107+60.61	1,382,756.07	2,375,054.75	
PT	108+33.54	1,382,816.23	2,375,096.45	
PI	111+68.54	1,383,091.54	2,375,287.29	NA
PI	119+74.81	1,383,753.82	2,375,747.15	NA
PC	121+95.75	1,383,930.32	2,375,880.04	5,000
PI	122+85.07	1,384,001.68	2,375,933.77	
PT	123+74.37	1,384,071.07	2,375,990.01	
PI	126+09.01	1,384,253.36	2,376,137.74	NA
PC	129+24.93	1,384,502.91	2,376,331.48	1,000
PI	130+51.09	1,384,602.56	2,376,408.84	
PT	131+75.92	1,384,679.87	2,376,508.54	
PC	138+64.36	1,385,101.77	2,377,052.55	1,500
PI	140+09.59	1,385,190.77	2,377,167.31	
PT	141+53.93	1,385,256.10	2,377,297.03	
PC	145+54.96	1,385,436.50	2,377,655.19	2,000
PI	146+04.20	1,385,458.66	2,377,699.17	
PT	146+53.43	1,385,478.62	2,377,744.19	
PI	150+45.92	1,385,637.72	2,378,102.99	NA
PC	155+59.60	1,385,846.73	2,378,572.23	2,000
PI	156+01.29	1,385,863.69	2,378,610.31	
PT	156+42.96	1,385,879.04	2,378,649.05	
PC	160+38.76	1,386,024.89	2,379,017.01	75
PI	160+49.57	1,386,028.87	2,379,027.05	
PT	160+60.22	1,386,035.52	2,379,035.57	
POE	160+82.14	1,386,049.02	2,379,052.83	NA

ALIGNMENT COORDINATES - STATE PARK DRIVE (EAST)				
POINT TYPE	STATION	NORTHING	EASTING	RADIUS
POB	200+00.00	1,383,223.79	2,386,780.52	NA
PC	202+90.93	1,383,513.73	2,386,804.49	1,500
PI	204+28.46	1,383,650.79	2,386,815.82	
PT	205+65.22	1,383,783.51	2,386,851.89	
PC	209+78.66	1,384,182.47	2,386,960.32	750
PI	211+01.08	1,384,300.61	2,386,992.42	
PT	212+21.36	1,384,422.82	2,386,985.30	
PC	217+88.74	1,384,989.24	2,386,952.27	1,500
PI	219+03.71	1,385,104.02	2,386,945.58	
PT	220+18.23	1,385,216.43	2,386,921.47	
PC	223+16.55	1,385,508.12	2,386,858.93	750
PI	224+25.92	1,385,615.06	2,386,835.99	
PT	225+33.76	1,385,724.10	2,386,844.56	
PC	226+84.60	1,385,874.47	2,386,856.37	
PI	228+94.52	1,386,083.75	2,386,872.81	
PT	230+85.67	1,386,250.76	2,386,745.62	
PC	232+73.12	1,386,399.88	2,386,632.06	
PI	234+80.97	1,386,565.24	2,386,506.13	
PT	236+73.29	1,386,617.27	2,386,304.90	
PC	240+41.54	1,386,709.44	2,385,948.38	
PI	240+49.73	1,386,711.50	2,385,940.44	
PT	240+57.93	1,386,713.02	2,385,932.39	
PC	242+66.09	1,386,751.81	2,385,727.87	
PI	242+99.50	1,386,758.04	2,385,695.04	
PT	243+30.58	1,386,782.74	2,385,672.55	
POE	243+48.25	1,386,795.81	2,385,660.66	

ALIGNMENT COORDINATES - FISHING LOOP ROAD				
POINT TYPE	STATION	NORTHING	EASTING	RADIUS
POB	500+00.00	1,386,796.18	2,385,660.32	NA
PC	501+24.68	1,386,880.12	2,385,752.52	633.5
PI	502+65.01	1,386,974.59	2,385,856.29	
PT	504+00.89	1,387,016.40	2,385,990.25	
PC	506+36.57	1,387,086.62	2,386,215.23	296.5
PI	507+46.24	1,387,119.29	2,386,319.92	
PT	508+46.66	1,387,212.22	2,386,378.15	
PC	514+02.32	1,387,683.09	2,386,673.18	36.5
PI	514+63.03	1,387,734.54	2,386,705.41	
PT	514+77.47	1,387,738.88	2,386,644.86	
PC	515+21.14	1,387,742.00	2,386,601.30	123.5
PI	515+87.15	1,387,746.72	2,386,535.46	
PT	516+42.39	1,387,694.60	2,386,494.95	
PC	518+72.15	1,387,513.17	2,386,353.97	340.6
PI	520+43.01	1,387,378.26	2,386,249.13	
PT	521+88.87	1,387,381.64	2,386,078.31	
PC	523+09.63	1,387,384.03	2,385,957.58	193.5
PI	523+92.49	1,387,385.67	2,385,874.73	
PT	524+66.21	1,387,326.84	2,385,816.37	
PC	533+31.03	1,386,712.85	2,385,207.33	131.8
PI	533+56.63	1,386,694.67	2,385,189.30	
PT	533+81.60	1,386,671.07	2,385,179.39	
PC	535+55.05	1,386,511.15	2,385,112.23	141.5
PI	535+89.86	1,386,479.05	2,385,098.74	
PCC	536+23.32	1,386,444.36	2,385,101.70	NA
PI	538+06.07	1,386,261.62	2,385,101.58	76.7
PT	538+03.40	1,386,389.49	2,385,232.14	
PI	539+34.65	1,386,481.52	2,385,325.73	NA
PC	542+54.22	1,386,713.99	2,385,544.99	106.5
PI	542+70.41	1,386,725.77	2,385,556.10	
PT	542+86.35	1,386,733.71	2,385,570.21	
PC	543+11.75	1,386,746.18	2,385,592.34	346.5
PI	543+49.70	1,386,764.79	2,385,625.41	
PT	543+87.34	1,386,790.13	2,385,653.66	

ALIGNMENT COORDINATES - PINE LOOP ROAD				
POINT TYPE	STATION	NORTHING	EASTING	RADIUS
POB	400+00.00	1,384,455.44	2,386,983.40	NA
PC	400+01.24	1,384,455.36	2,386,982.16	70
PI	400+11.52	1,384,454.77	2,386,971.90	
PCC	400+21.66	1,384,451.24	2,386,962.24	NA
PI	400+59.26	1,384,438.35	2,386,926.91	192.5
PCC	400+95.93	1,384,413.12	2,386,899.03	NA
PI	401+18.34	1,384,398.08	2,386,882.42	507.5
PRC	401+40.72	1,384,381.63	2,386,867.20	NA
PI	401+65.78	1,384,363.24	2,386,850.17	40
PT	401+85.50	1,384,370.54	2,386,826.19	
PC	403+53.64	1,384,419.54	2,386,665.35	143
PI	403+79.80	1,384,427.16	2,386,640.32	
PT	404+05.39	1,384,443.15	2,386,619.62	
PC	405+75.48	1,384,547.12	2,386,485.00	181.4
PI	406+38.02	1,384,584.77	2,386,435.06	
PCC	406+95.93	1,384,583.64	2,386,372.53	NA
PI	408+46.55	1,384,582.65	2,386,221.91	57
PT	408+33.76	1,384,483.67	2,386,335.45	
PC	411+08.93	1,384,302.86	2,386,542.87	198
PI	412+17.17	1,384,231.73	2,386,624.47	
PT	413+07.05	1,384,262.03	2,386,728.39	
PC	413+26.10	1,384,267.36	2,386,746.68	130
PI	413+73.26	1,384,280.56	2,386,791.96	
PRC	414+16.58	1,384,319.71	2,386,818.24	NA
PI	414+43.78	1,384,342.30	2,386,833.40	507.5
PT	414+70.93	1,384,363.13	2,386,850.89	

ALIGNMENT COORDINATES - OAK LOOP ROAD				
POINT TYPE	STATION	NORTHING	EASTING	RADIUS
POB	300+00.00	1,384,455.44	2,386,983.40	NA
PC	300+84.70	1,384,460.37	2,387,067.95	56
PI	301+11.50	1,384,461.93	2,387,094.71	
PT	301+34.69	1,384,442.06	2,387,112.71	
PC	301+92.41	1,384,399.30	2,387,151.46	606.5
PI	302+78.40	1,384,335.57	2,387,209.21	
PT	303+63.26	1,384,290.42	2,387,282.39	
PC	304+39.36	1,384,250.46	2,387,347.15	296.5
PI	305+14.07	1,384,211.22	2,387,410.73	
PT	305+85.73	1,384,206.80	2,387,485.31	
PC	306+76.12	1,384,201.46	2,387,575.54	241.5
PI	307+51.88	1,384,196.98	2,387,651.17	
PCC	308+22.95	1,384,236.50	2,387,715.81	NA
PI	308+83.86	1,384,268.27	2,387,767.78	126.5
PT	309+36.49	1,384,328.72	2,387,775.34	
PC	310+36.96	1,384,428.42	2,387,787.81	111.5
PI	311+56.25	1,384,546.78	2,387,802.62	
PT	312+19.63	1,384,553.58	2,387,683.53	
PC	315+11.23	1,384,570.20	2,387,392.40	243.5
PI	315+77.19	1,384,573.95	2,387,326.55	
PT	316+40.06	1,384,543.96	2,387,267.81	
POE	318+24.91	1,384,459.91	2,387,103.16	NA

MODEL: $MODELNAMES
FILE NAME: pw:\\projectwise.volkert.com:volkert-sp-pw\Documents\Project\1150933 - PTB 200 - Item 43 - WO 13 - Spring Lake\CADD\CAD Sheets\SH-ATB.dgn

VOLKERT

USER NAME = default	DESIGNED -	REVISED -	
	DRAWN -	REVISED -	
PLOT SCALE = 40.0000 ' / in.	CHECKED -	REVISED -	
PLOT DATE = 12/5/2024	DATE - 01/03/2025	REVISED -	

STATE OF ILLINOIS
DEPARTMENT OF TRANSPORTATION

ALIGNMENTS, TIE POINTS AND BENCHMARKS
SPRING LAKE STATE FISH AND WILDLIFE AREA

SCALE: 1"=20' | SHEET 1 OF 2 SHEETS

F.A. RTE.	SECTION	COUNTY	TOTAL SHEETS	SHEET NO.
IDNR	SPRING LAKE 2024	TAZEWELL	24	8
		CONTRACT NO. 46939		
	ILLINOIS	FED. AID PROJECT		

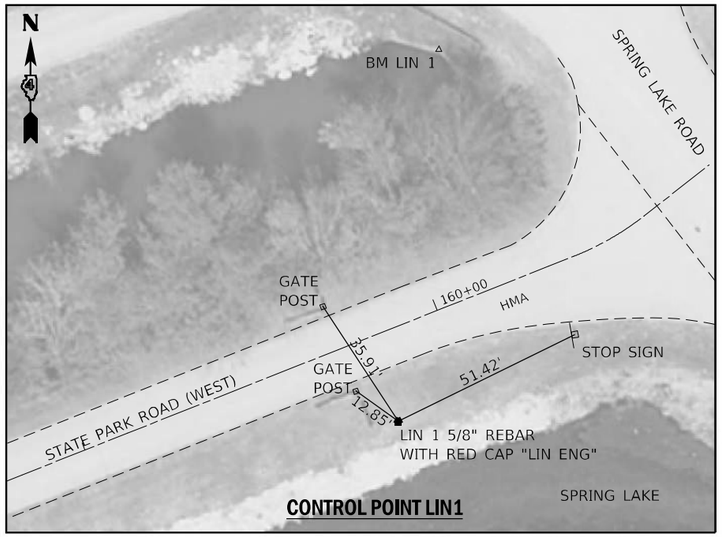

CONTROL POINT LIN1

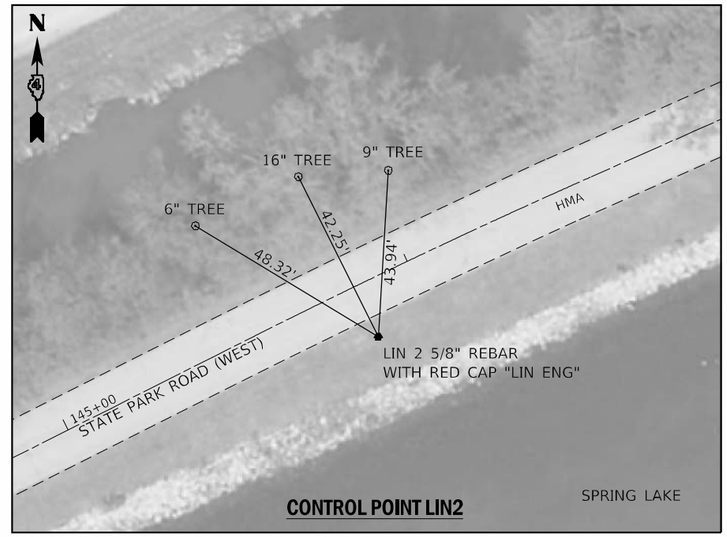

CONTROL POINT LIN2

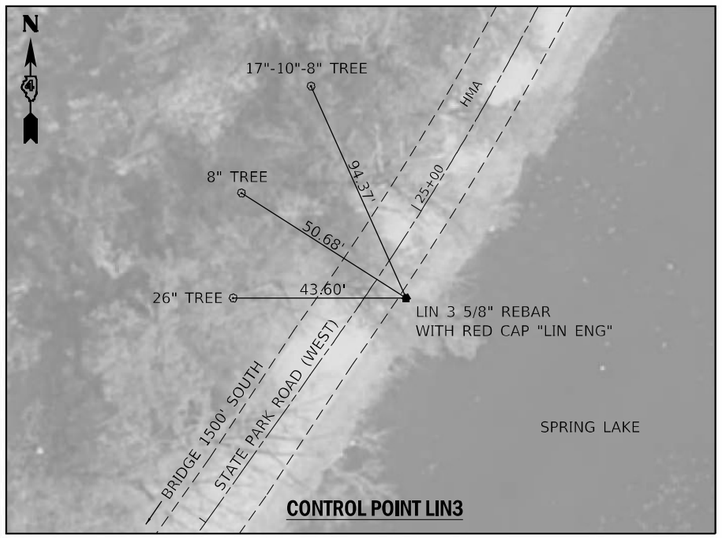

CONTROL POINT LIN3

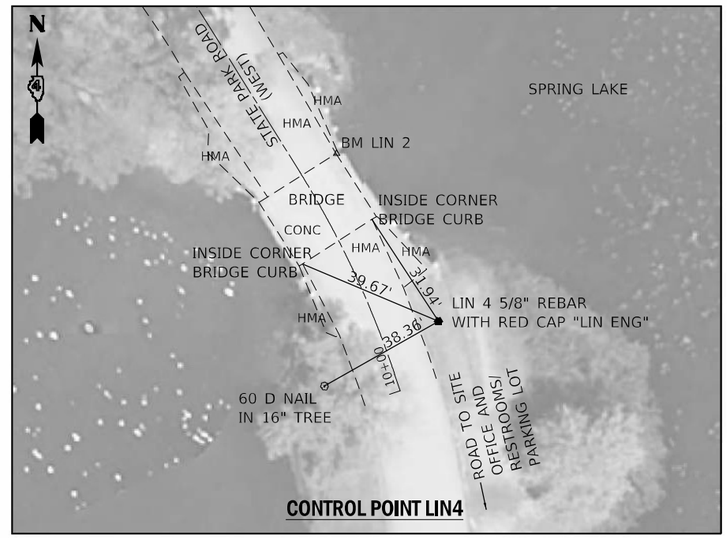

CONTROL POINT LIN4

CONTROL POINTS				
CONTROL POINT #	NORTHING	EASTING	ELEVATION	DESCRIPTION
LIN 1	1,385,981.36	2,378,970.71	437.01	5/8" REBAR WITH RED CAP "LIN ENG"
LIN 2	1,385,436.37	2,377,687.99	437.81	5/8" REBAR WITH RED CAP "LIN ENG"
LIN 3	1,376,182.84	2,372,384.50	437.66	5/8" REBAR WITH RED CAP "LIN ENG"
LIN 4	1,375,003.23	2,371,672.38	439.94	5/8" REBAR WITH RED CAP "LIN ENG"

BENCHMARKS				
BM #	NORTHING	EASTING	ELEVATION	DESCRIPTION
BM LIN1	1,386,079.43	2,378,981.41	433.25	CHISELED "□" ON SOUTHEAST HEADWALL ON SOUTH BOX CULVERT
BM LIN2	1,375,047.50	2,371,645.50	441.80	CHISELED "□" ON NORTHEAST BRIDGE CURB

MODEL: $MODELNAME$
FILE NAME: pw:\\tarp\projectwise.volkert.com:volkert-tarp\Documents\Projects\1150913 - PTB 200 - Item 43 - WO 13 - Spring Lake\CADD\CAD Sheets\SN-ATB.dgn

VOLKERT

USER NAME = default	DESIGNED -	REVISED -
	DRAWN -	REVISED -
PLOT SCALE = 40.0000 ' / in.	CHECKED -	REVISED -
PLOT DATE = 12/5/2024	DATE - 01/03/2025	REVISED -

STATE OF ILLINOIS
DEPARTMENT OF TRANSPORTATION

ALIGNMENTS, TIE POINTS AND BENCHMARKS
SPRING LAKE STATE FISH AND WILDLIFE AREA

SCALE: 1"=20' | SHEET 2 OF 2 SHEETS

F.A. RTE.	SECTION	COUNTY	TOTAL SHEETS	SHEET NO.
IDNR	SPRING LAKE 2024	TAZEWELL	24	9
		CONTRACT NO. 46939		
	ILLINOIS	FED. AID PROJECT		

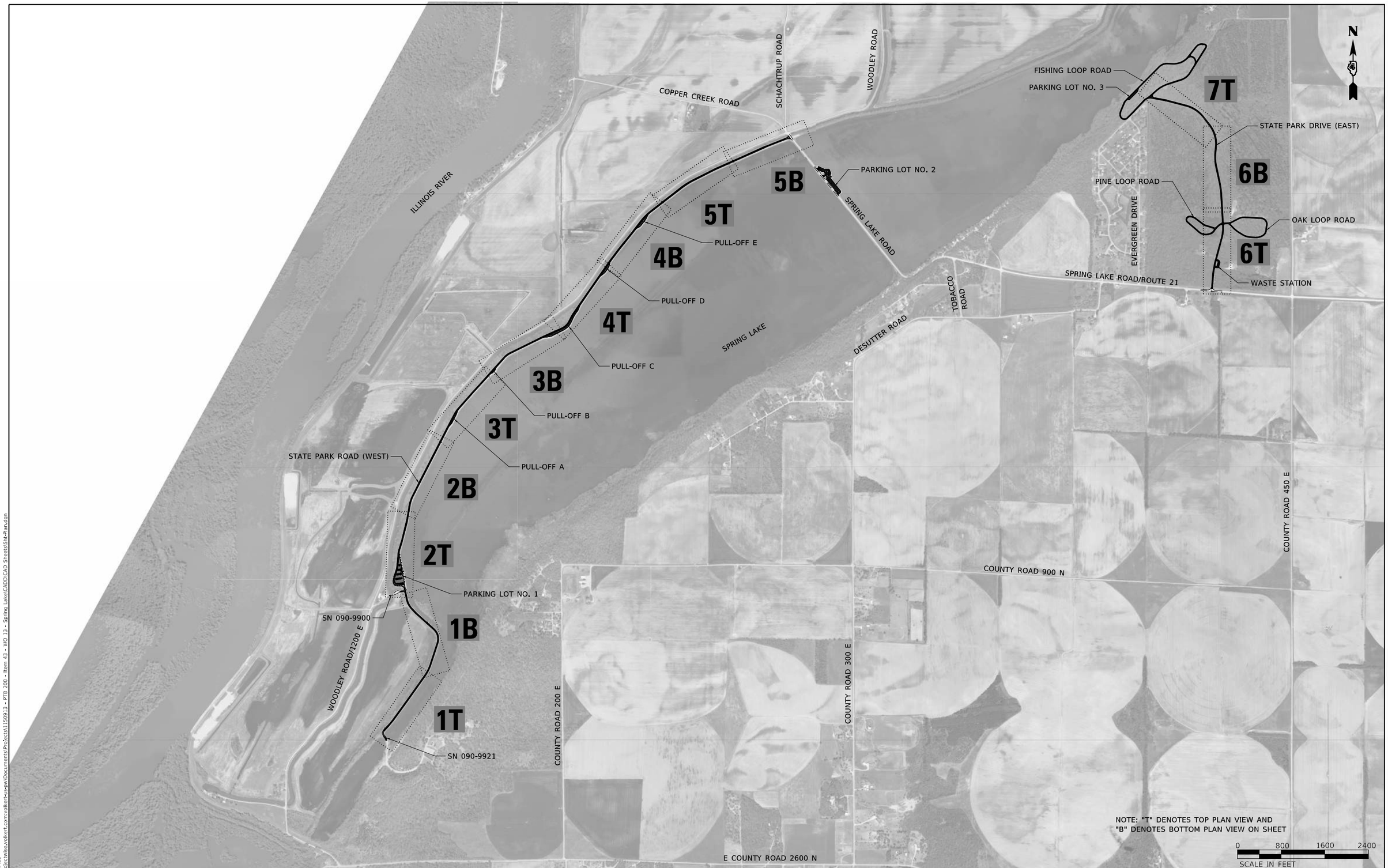

MODEL: $MODELNAMES
FILE NAME: pw:\\projectwise.volkert.com:volkert-ds-pw\Documents\Projects\1150913 - PTB 200 - Item 43 - WO 13 - Spring Lake\CADD\CAD Sheets\Sht-Plan.dgn

VOLKERT

USER NAME = default	DESIGNED -	REVISED -
	DRAWN -	REVISED -
PLOT SCALE = 1600.0000 ' / in.	CHECKED -	REVISED -
PLOT DATE = 12/5/2024	DATE - 01/03/2025	REVISED -

STATE OF ILLINOIS
DEPARTMENT OF TRANSPORTATION

OVERVIEW PLAN
SPRING LAKE STATE FISH AND WILDLIFE AREA

SCALE: 1" = 800' | SHEET 1 OF 1 SHEETS

F.A. RTE.	SECTION	COUNTY	TOTAL SHEETS	SHEET NO.
IDNR	SPRING LAKE 2024	TAZEWELL	24	10
		CONTRACT NO. 46939		
	ILLINOIS	FED. AID PROJECT		

LEGEND

- CLASS D PATCHES, 6 INCH
- PAVEMENT REMOVAL
  HOT-MIX ASPHALT PAVEMENT (FULL DEPTH), 6 3/4"
- HOT-MIX ASPHALT REMOVAL (SPECIAL)
  HOT-MIX ASPHALT PAVEMENT (FULL DEPTH), 6 3/4"
- HOT-MIX ASPHALT SURFACE REMOVAL, 3/4"
  HOT-MIX ASPHALT SURFACE COURSE, IL-9.5, MIX "C", N50, 1 1/2"
- HOT-MIX ASPHALT SURFACE REMOVAL, 2"
  HOT-MIX ASPHALT SURFACE COURSE, IL-9.5, MIX "C", N50, 1 1/2"
  HOT-MIX ASPHALT BINDER COURSE, IL-9.5FG, N50, 1 1/4"
- PARKING LOT SEAL COAT

MODEL: $MODELNAME$
FILE NAME: pw:\\projectwise.volkert.com:volkert-pw\Documents\Projects\1150913 - PTB 200 - Item 43 - WO 13 - Spring Lake\CADD\CAD Sheets\Sht-Plan.dgn

VOLKERT

USER NAME = default	DESIGNED -	REVISED -	
	DRAWN -	REVISED -	
PLOT SCALE = 100.0000 ' / in.	CHECKED -	REVISED -	
PLOT DATE = 12/5/2024	DATE - 01/03/2025	REVISED -	

STATE OF ILLINOIS
DEPARTMENT OF TRANSPORTATION

ROADWAY PLANS
SPRING LAKE STATE FISH AND WILDLIFE AREA

SCALE: 1"=50' | SHEET 1 OF 7 SHEETS | STA. 10+00.00 TO STA. 42+00.00

F.A. RTE.	SECTION	COUNTY	TOTAL SHEETS	SHEET NO.
IDNR	SPRING LAKE 2024	TAZEWELL	24	11
		CONTRACT NO. 46939		
	ILLINOIS	FED. AID PROJECT		

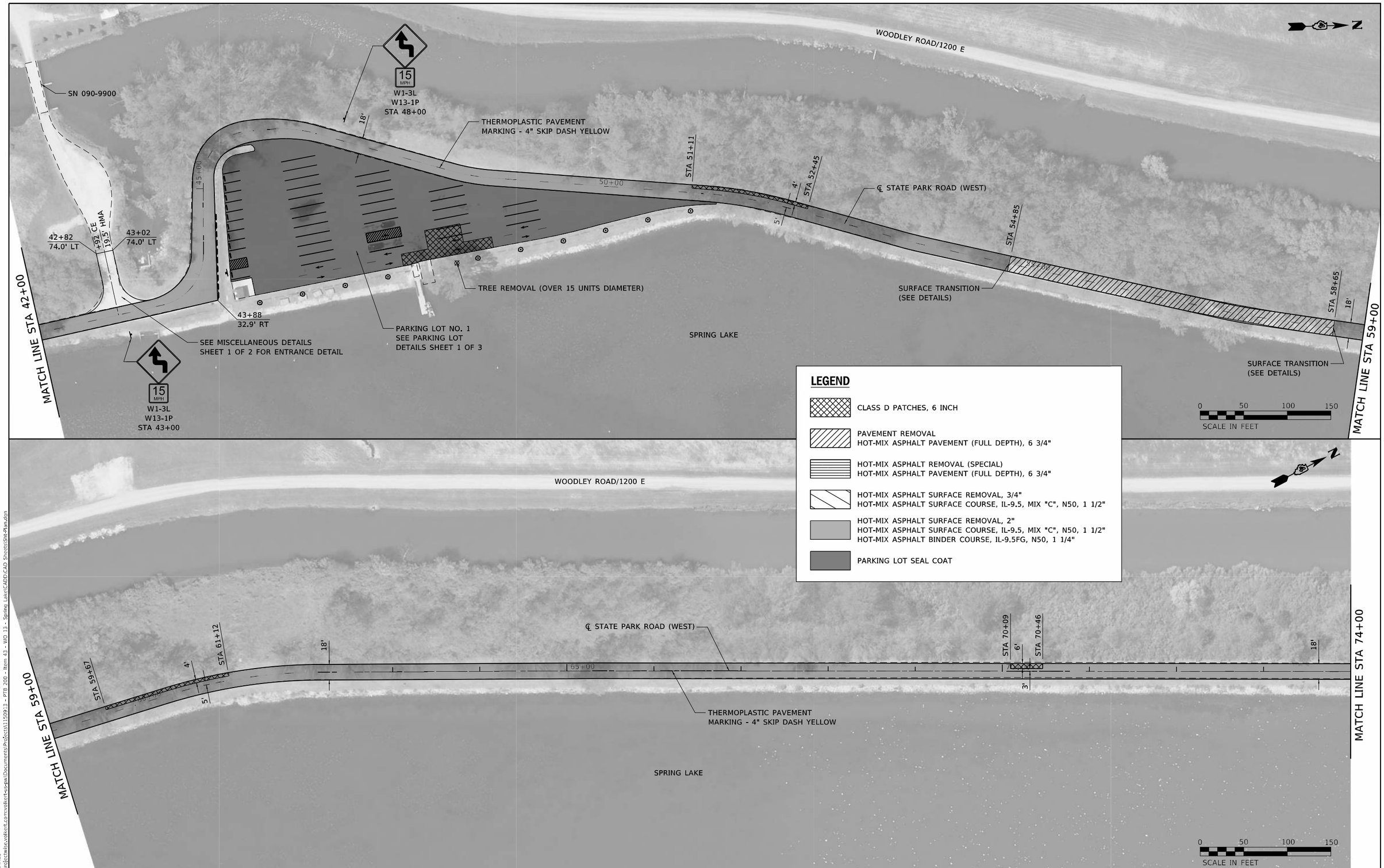

MODEL: $MODEL$NAMES
FILE NAME: pw:\\projectwise.volkert.com:volkert-sis-pw\Documents\Projects\115093-3 - PTB 200 - Item 43 - V/O 13 - Spring Lake\CADD\CAD Sheets\Sht-Plan.dgn

VOLKERT

USER NAME = default	DESIGNED -	REVISED -	
	DRAWN -	REVISED -	
PLOT SCALE = 100.0000 ' / in.	CHECKED -	REVISED -	
PLOT DATE = 12/5/2024	DATE - 01/03/2025	REVISED -	

STATE OF ILLINOIS
DEPARTMENT OF TRANSPORTATION

ROADWAY PLANS
SPRING LAKE STATE FISH AND WILDLIFE AREA

SCALE: 1"=50' | SHEET 2 OF 7 SHEETS | STA. 42+00.00 TO STA. 74+00.00

F.A. RTE.	SECTION	COUNTY	TOTAL SHEETS	SHEET NO.
IDNR	SPRING LAKE 2024	TAZEWELL	24	12
		CONTRACT NO. 46939		
	ILLINOIS	FED. AID PROJECT		

MODEL: $MODELNAME$
FILE NAME: pw:\\projectwise.volkert.com:volkert-us-pw\Documents\Projects\115093 - PTB 200 - Item 43 - WO 13 - Spring Lake\CADD\CAD Sheets\SH-Plan.dgn

VOLKERT

USER NAME = default	DESIGNED -	REVISED -
	DRAWN -	REVISED -
PLOT SCALE = 100.0000 ' / in.	CHECKED -	REVISED -
PLOT DATE = 12/5/2024	DATE - 01/03/2025	REVISED -

STATE OF ILLINOIS
DEPARTMENT OF TRANSPORTATION

ROADWAY PLANS
SPRING LAKE STATE FISH AND WILDLIFE AREA

SCALE: 1"=50' | SHEET 3 OF 7 SHEETS | STA. 74+00.00 TO STA. 104+00.00

F.A. RTE.	SECTION	COUNTY	TOTAL SHEETS	SHEET NO.
IDNR	SPRING LAKE 2024	TAZEWELL	24	13
		CONTRACT NO. 46939		
	ILLINOIS	FED. AID PROJECT		

MODEL: $MODELNAME$
FILE NAME: pw:\\projectwise.volkert.com:volkert-us-pw\Documents\Projects\1150913 - PTB 200 - Item 43 - WO 13 - Spring Lake\CADD\CAD Sheets\Sht-Plan.dgn

VOLKERT

USER NAME = default	DESIGNED -	REVISED -
	DRAWN -	REVISED -
PLOT SCALE = 100.0000 ' / in.	CHECKED -	REVISED -
PLOT DATE = 12/5/2024	DATE - 01/03/2025	REVISED -

STATE OF ILLINOIS
DEPARTMENT OF TRANSPORTATION

ROADWAY PLANS
SPRING LAKE STATE FISH AND WILDLIFE AREA

SCALE: 1"=50' | SHEET 4 OF 7 SHEETS | STA. 104+00.00 TO STA. 134+00.00

F.A. RTE.	SECTION	COUNTY	TOTAL SHEETS	SHEET NO.
IDNR	SPRING LAKE 2024	TAZEWELL	24	14
		CONTRACT NO. 46939		
		ILLINOIS FED. AID PROJECT		

MODEL: $MODELNAMES
FILE NAME: pw:\\projectwise.volkert.com:volkert-pw-pw\Documents\Projects\1150913 - PTB 200 - Item 43 - WO 13 - Spring Lake\CADD\CAD Sheets\Sht-Plan.dgn

VOLKERT

USER NAME = default	DESIGNED -	REVISED -	
	DRAWN -	REVISED -	
PLOT SCALE = 100.0000 ' / in.	CHECKED -	REVISED -	
PLOT DATE = 12/5/2024	DATE - 01/03/2025	REVISED -	

STATE OF ILLINOIS
DEPARTMENT OF TRANSPORTATION

ROADWAY PLANS
SPRING LAKE STATE FISH AND WILDLIFE AREA

SCALE: 1"=50' | SHEET 5 OF 7 SHEETS | STA. 134+00.00 TO STA. 160+00.00

F.A. RTE.	SECTION	COUNTY	TOTAL SHEETS	SHEET NO.
IDNR	SPRING LAKE 2024	TAZEWELL	24	15
		CONTRACT NO. 46939		
	ILLINOIS	FED. AID PROJECT		

MODEL: $MODELNAME$
FILE NAME: pw:\\prjcetwisc.volkert.com:volkert-sp-pw\Documents\Projects\1150933 - PTB 200 - Item 43 - WO 13 - Spring Lake\CADD\CAD Sheets\SH-Plan.dgn

VOLKERT

USER NAME = default	DESIGNED -	REVISED -
	DRAWN -	REVISED -
PLOT SCALE = 100.0000 ' / in.	CHECKED -	REVISED -
PLOT DATE = 12/5/2024	DATE - 01/03/2025	REVISED -

STATE OF ILLINOIS
DEPARTMENT OF TRANSPORTATION

ROADWAY PLANS
SPRING LAKE STATE FISH AND WILDLIFE AREA

SCALE: 1"=50' | SHEET 6 OF 7 SHEETS | STA. 20+00.00 TO STA. 50+00.00

F.A. RTE.	SECTION	COUNTY	TOTAL SHEETS	SHEET NO.
IDNR	SPRING LAKE 2024	TAZEWELL	24	16
		CONTRACT NO. 46939		
	ILLINOIS	FED. AID PROJECT		

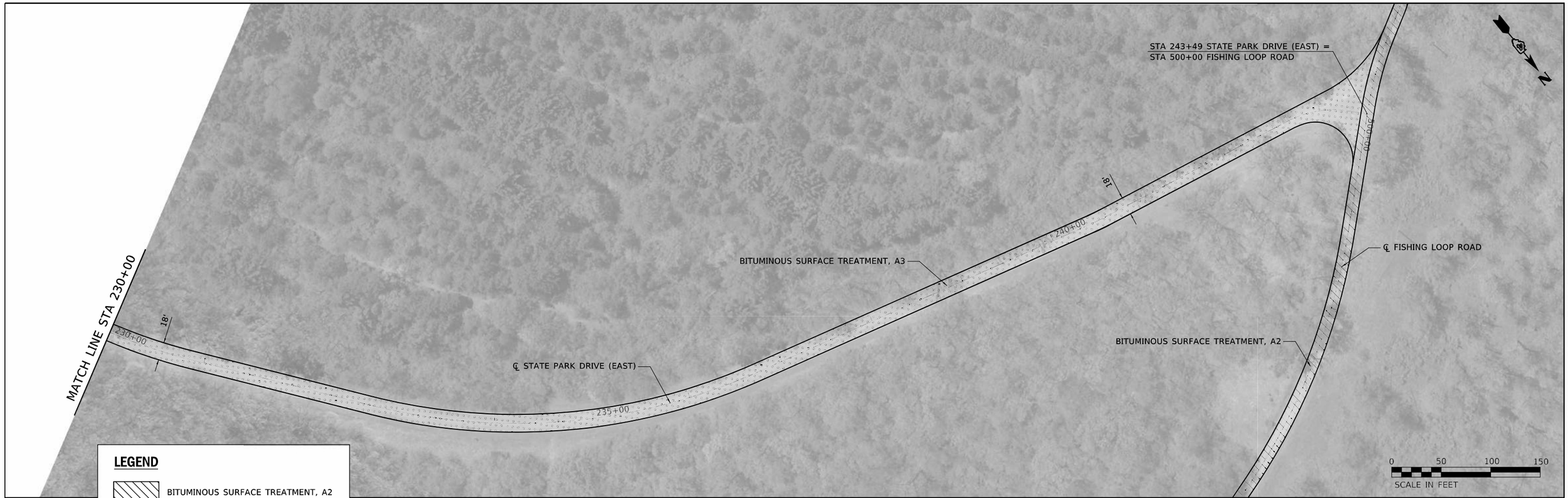

LEGEND

- BITUMINOUS SURFACE TREATMENT, A2
- BITUMINOUS SURFACE TREATMENT, A3

MODEL: $MODEL\NAMES
FILE NAME: pw:\\projectwise.volkert.com:volkert-tc-pw\Documents\Projects\1115093 - PTB 200 - Item 43 - VIO 13 - Spring Lake\CADD\CAD Sheets\Sht-Plan.dgn

VOLKERT

USER NAME = default	DESIGNED -	REVISED -	
	DRAWN -	REVISED -	
PLOT SCALE = 100.0000 ' / in.	CHECKED -	REVISED -	
PLOT DATE = 12/5/2024	DATE - 01/03/2025	REVISED -	

STATE OF ILLINOIS
DEPARTMENT OF TRANSPORTATION

ROADWAY PLANS
SPRING LAKE STATE FISH AND WILDLIFE AREA

SCALE: 1"=50' | SHEET 7 OF 7 SHEETS | STA. 50+00.00 TO STA. 63+48.25

F.A. RTE.	SECTION	COUNTY	TOTAL SHEETS	SHEET NO.
IDNR	SPRING LAKE 2024	TAZEWELL	24	17
		CONTRACT NO. 46939		
	ILLINOIS	FED. AID PROJECT		

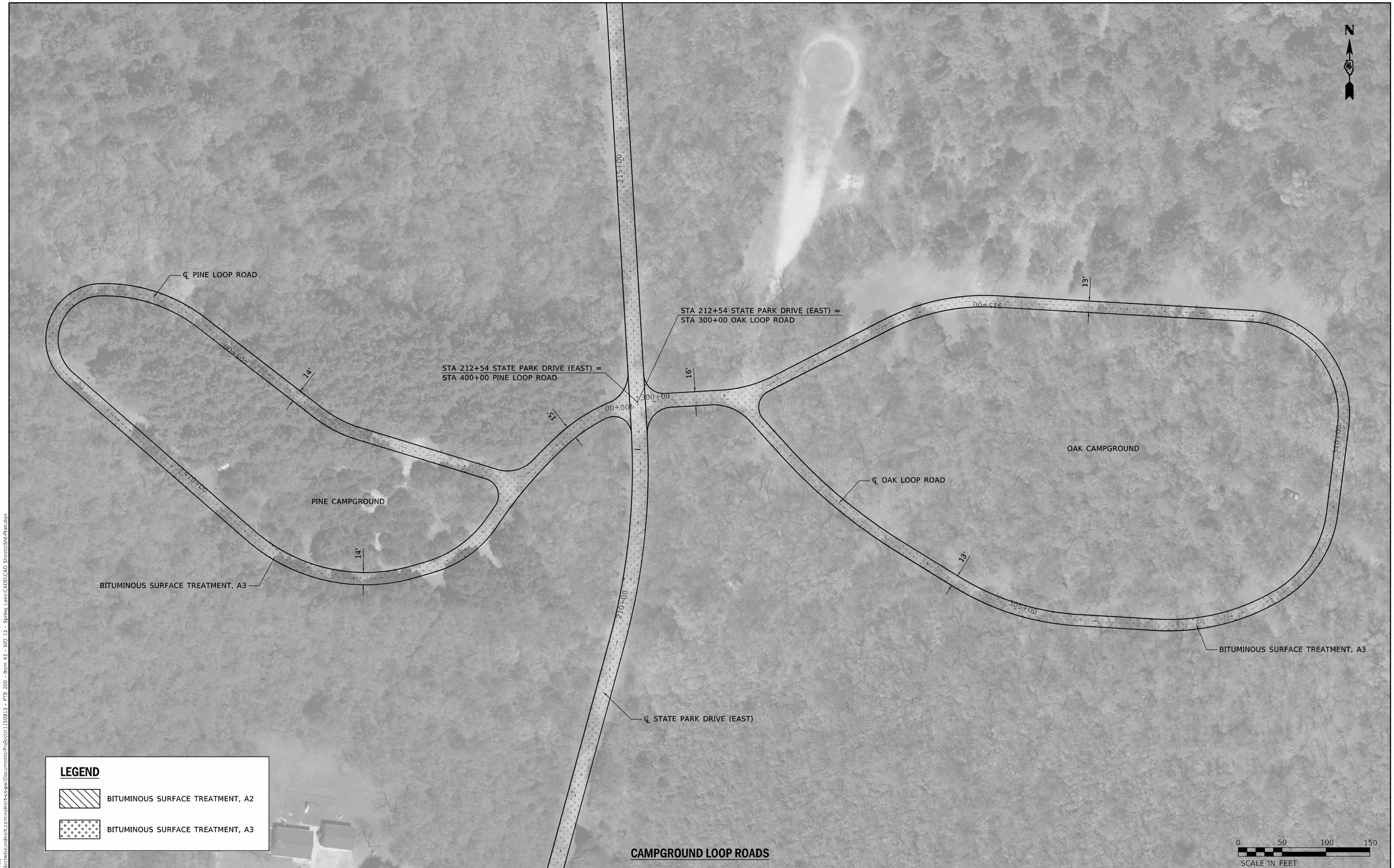

MODEL: $MODELNAME$
FILE NAME: pw:\\projectwise.volkert.com:volkert-dsp-pw\Documents\Projects\1150913 - PTB 200 - Item 43 - WO 13 - Spring Lake\CADD\CAD Sheets\SH-Plan.dgn

VOLKERT

USER NAME = default	DESIGNED -	REVISED -
	DRAWN -	REVISED -
PLOT SCALE = 100.0000 ' / in.	CHECKED -	REVISED -
PLOT DATE = 12/5/2024	DATE - 01/03/2025	REVISED -

STATE OF ILLINOIS
DEPARTMENT OF TRANSPORTATION

CAMPGROUND ROADWAY PLAN
SPRING LAKE STATE FISH AND WILDLIFE AREA

SCALE: 1"=50' | SHEET 1 OF 1 SHEETS

F.A. RTE.	SECTION	COUNTY	TOTAL SHEETS	SHEET NO.
IDNR	SPRING LAKE 2024	TAZEWELL	24	18
		CONTRACT NO. 46939		
	ILLINOIS	FED. AID PROJECT		

MODEL: $MODELNAME
FILE NAME: pw:\\projectwise.volkert.com:volkert-sp\Documents\Projects\1150913 - PTB 200 - Item 43 - WO 13 - Spring Lake\CADD\CAD Sheets\Sht-Plan.dgn

VOLKERT

USER NAME = default	DESIGNED -	REVISED -	
	DRAWN -	REVISED -	
PLOT SCALE = 200.0000 ' / in.	CHECKED -	REVISED -	
PLOT DATE = 12/5/2024	DATE - 01/03/2025	REVISED -	

STATE OF ILLINOIS
DEPARTMENT OF TRANSPORTATION

FISHING LOOP ROADWAY PLAN
SPRING LAKE STATE FISH AND WILDLIFE AREA

SCALE: 1"=100' | SHEET 1 OF 1 SHEETS

F.A. RTE.	SECTION	COUNTY	TOTAL SHEETS	SHEET NO.
IDNR	SPRING LAKE 2024	TAZEWELL	24	19
		CONTRACT NO. 46939		
		ILLINOIS	FED. AID PROJECT	

PARKING LOT NO. 1

MODEL: $MODELNAMES
FILE NAME: pw:\\projectwise.volkert.com:volkert-us-pw\Documents\Projects\115091-3 - PTB 200 - Item 43 - WO 13 - Spring Lake\CADD\CAD Sheets\Sht-Parking-Details.dgn

VOLKERT

USER NAME = default	DESIGNED -	REVISED -	
	DRAWN -	REVISED -	
PLOT SCALE = 40.0000 ' / in.	CHECKED -	REVISED -	
PLOT DATE = 12/5/2024	DATE - 01/03/2025	REVISED -	

STATE OF ILLINOIS
DEPARTMENT OF TRANSPORTATION

PARKING LOT DETAILS
SPRING LAKE STATE FISH AND WILDLIFE AREA

SCALE: 1"=20' | SHEET 1 OF 3 SHEETS

F.A. RTE.	SECTION	COUNTY	TOTAL SHEETS	SHEET NO.
IDNR	SPRING LAKE 2024	TAZEWELL	24	20
		CONTRACT NO. 46939		
	ILLINOIS	FED. AID PROJECT		

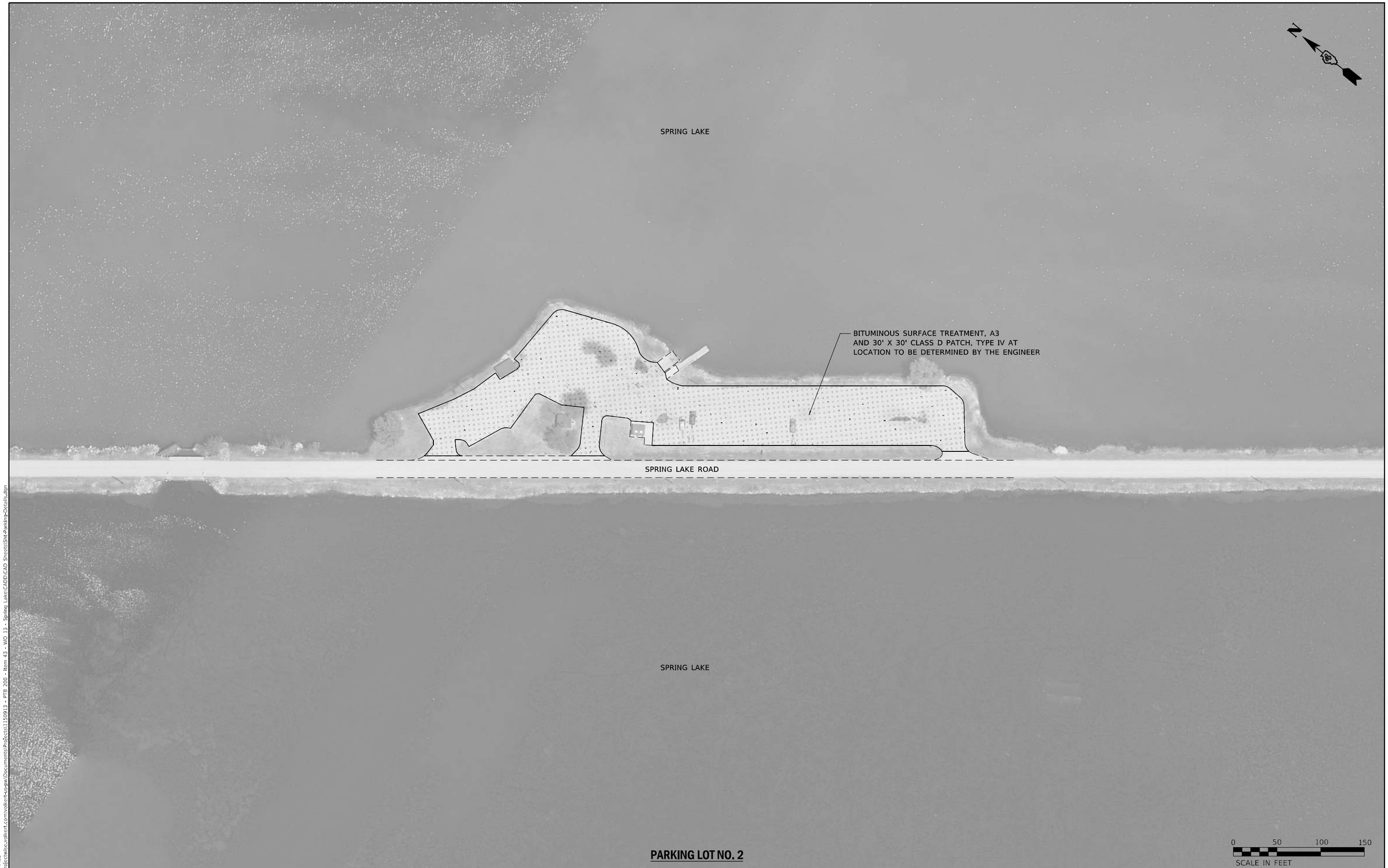

MODEL: $MODELNAME$
FILE NAME: pw:\\projectwise.volkert.com:volkert-uc-pw\Documents\Projects\1150913 - PTB 200 - Item 43 - VO 13 - Spring Lake\CADD\CAD Sheets\Int-Parking-Details.dgn

VOLKERT

USER NAME = default	DESIGNED -	REVISED -	
	DRAWN -	REVISED -	
PLOT SCALE = 100.0000 ' / in.	CHECKED -	REVISED -	
PLOT DATE = 12/5/2024	DATE - 01/03/2025	REVISED -	

STATE OF ILLINOIS
DEPARTMENT OF TRANSPORTATION

PARKING LOT DETAILS
SPRING LAKE STATE FISH AND WILDLIFE AREA

SCALE: 1"=50' | SHEET 2 OF 3 SHEETS

F.A. RTE.	SECTION	COUNTY	TOTAL SHEETS	SHEET NO.
IDNR	SPRING LAKE 2024	TAZEWELL	24	21
		CONTRACT NO. 46939		
	ILLINOIS	FED. AID PROJECT		

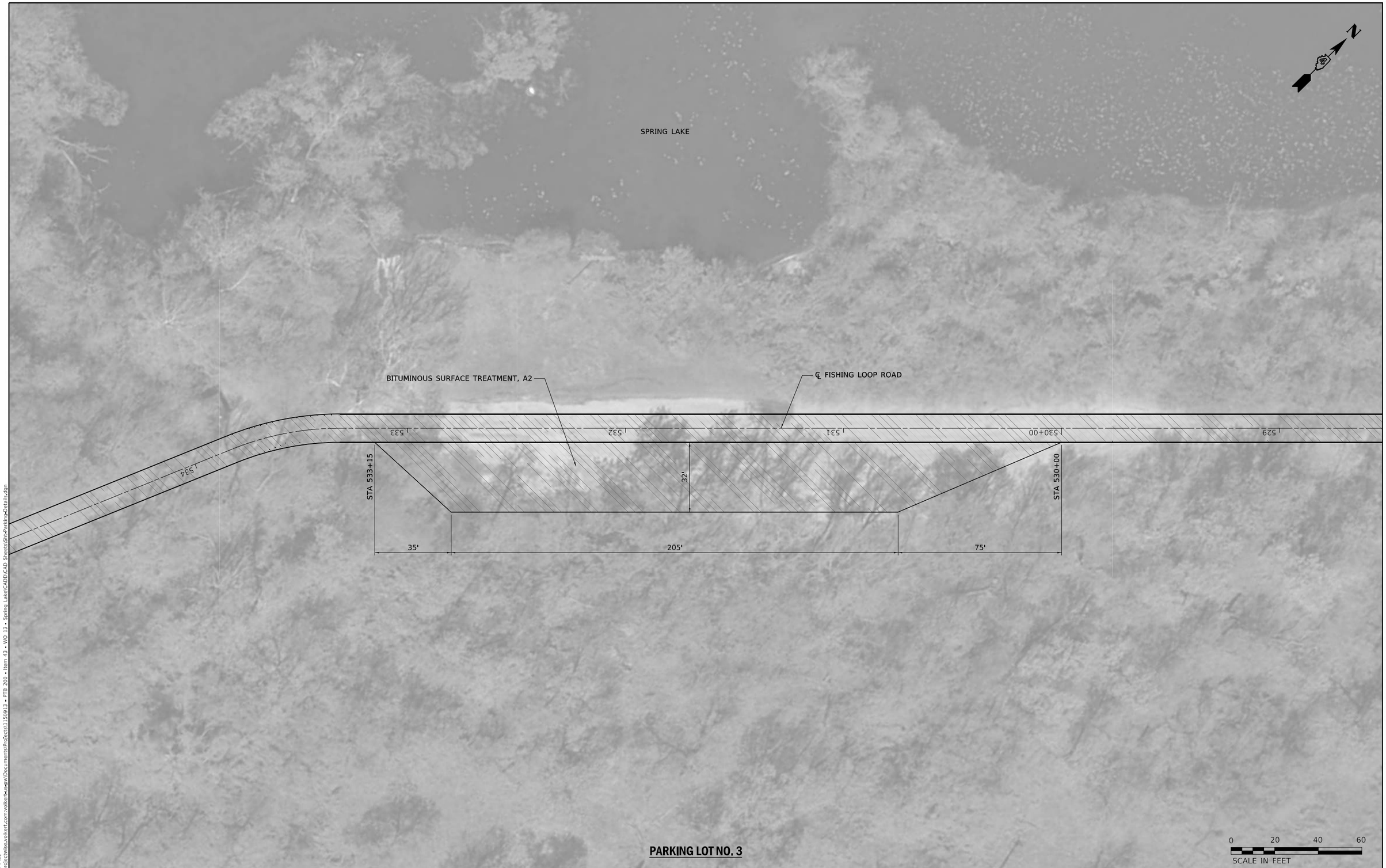

PARKING LOT NO. 3

MODEL: $MODELNAMES
FILE NAME: pw:\\projectwise.volkert.com:volkert-dms\Documents\Projects\1150913 - PTB 200 - Item 43 - WO 13 - Spring Lake\CADD\CAD Sheets\Sht-Parkin-Details.dgn

VOLKERT

USER NAME = default	DESIGNED -	REVISED -
	DRAWN -	REVISED -
PLOT SCALE = 40.0000 ' / in.	CHECKED -	REVISED -
PLOT DATE = 12/5/2024	DATE - 01/03/2025	REVISED -

STATE OF ILLINOIS
DEPARTMENT OF TRANSPORTATION

PARKING LOT DETAILS
SPRING LAKE STATE FISH AND WILDLIFE AREA

SCALE: 1"=20' | SHEET 3 OF 3 SHEETS

F.A. RTE.	SECTION	COUNTY	TOTAL SHEETS	SHEET NO.
IDNR	SPRING LAKE 2024	TAZEWELL	24	22
		CONTRACT NO. 46939		
	ILLINOIS	FED. AID PROJECT		

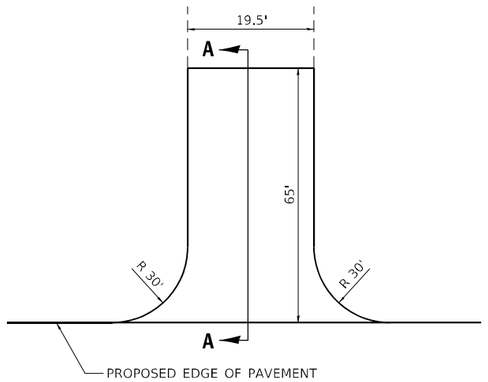

ENTRANCE RECONSTRUCTION

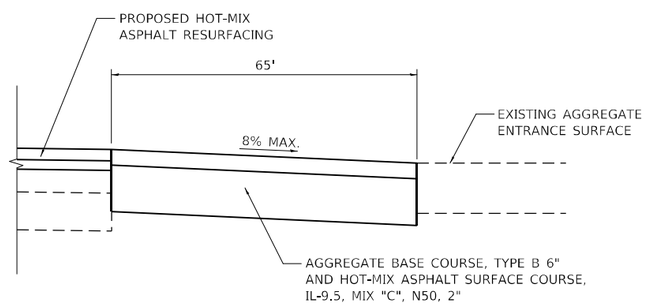

SECTION A-A

HOT-MIX ASPHALT ENTRANCE

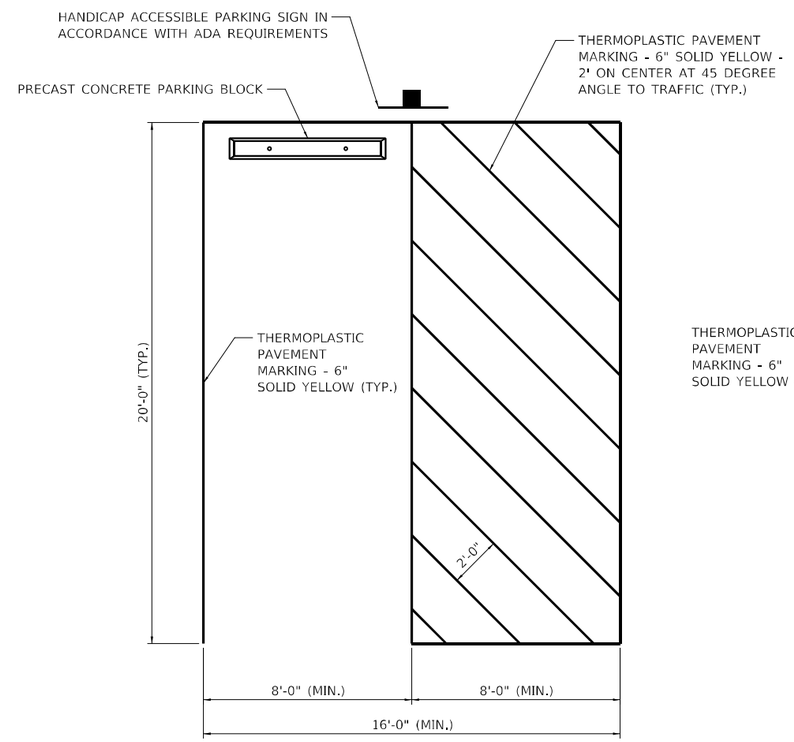

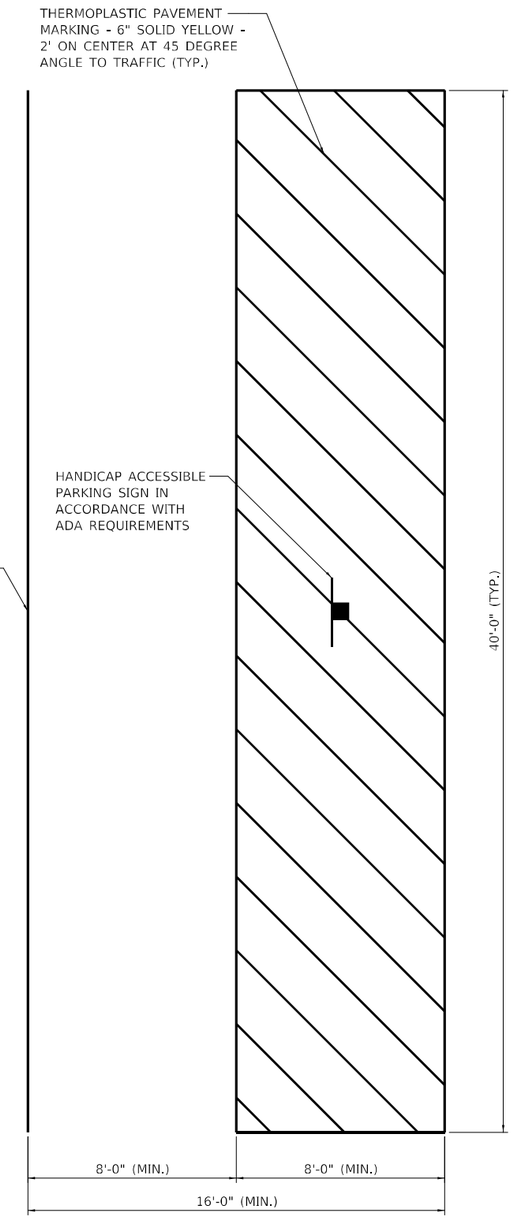

HANDICAP PARKING SPACE DETAILS

MODEL: $MODELNAMES
FILE NAME: pw:\\projectwise.volkert.com:volkert-hsgpw\Documents\Projects\1150913 - PTB 200 - Item 43 - WO 13 - Spring Lake\CADD\CAD Sheets\SN-Details.dgn

VOLKERT

USER NAME = default	DESIGNED -	REVISED -	
	DRAWN -	REVISED -	
PLOT SCALE = 40.0000 ' / in.	CHECKED -	REVISED -	
PLOT DATE = 12/5/2024	DATE - 01/03/2025	REVISED -	

STATE OF ILLINOIS
DEPARTMENT OF TRANSPORTATION

MISCELLANEOUS DETAILS
SPRING LAKE STATE FISH AND WILDLIFE AREA

SCALE: 1"=20' | SHEET 1 OF 2 SHEETS

F.A. RTE.	SECTION	COUNTY	TOTAL SHEETS	SHEET NO.
IDNR	SPRING LAKE 2024	TAZEWELL	24	23
		CONTRACT NO. 46939		
	ILLINOIS	FED. AID PROJECT		

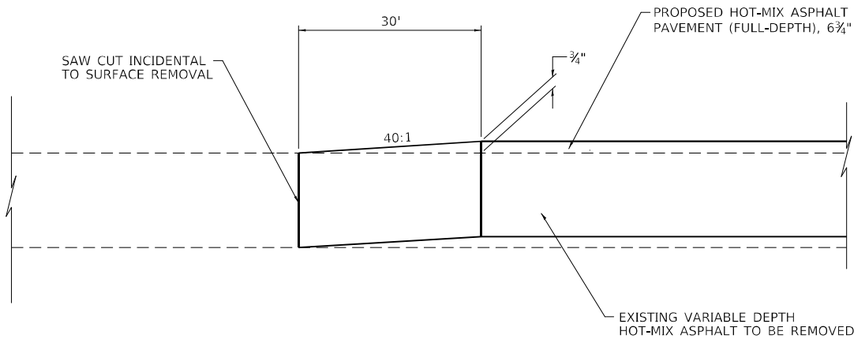

BEGINNING DETAIL

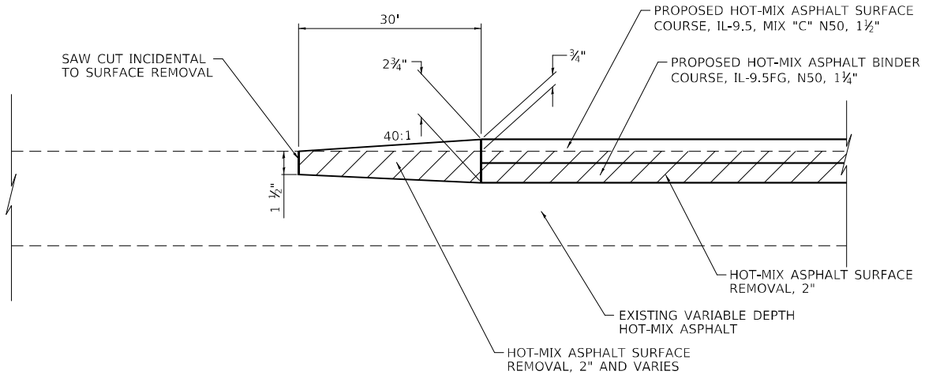

ENDING DETAIL

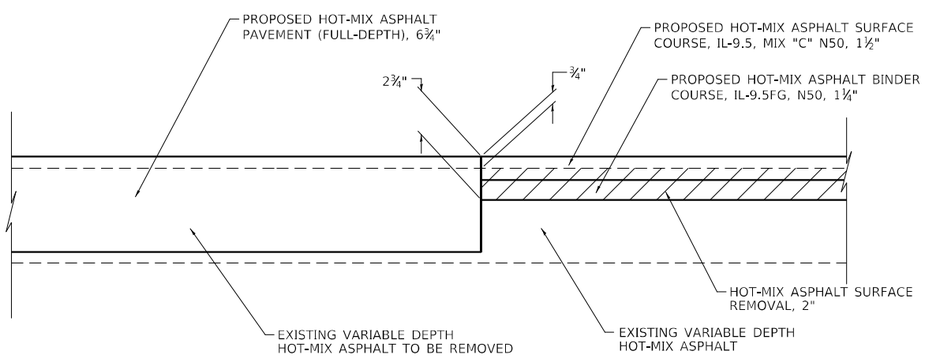

RECONSTRUCTION TO RESURFACING TRANSITION

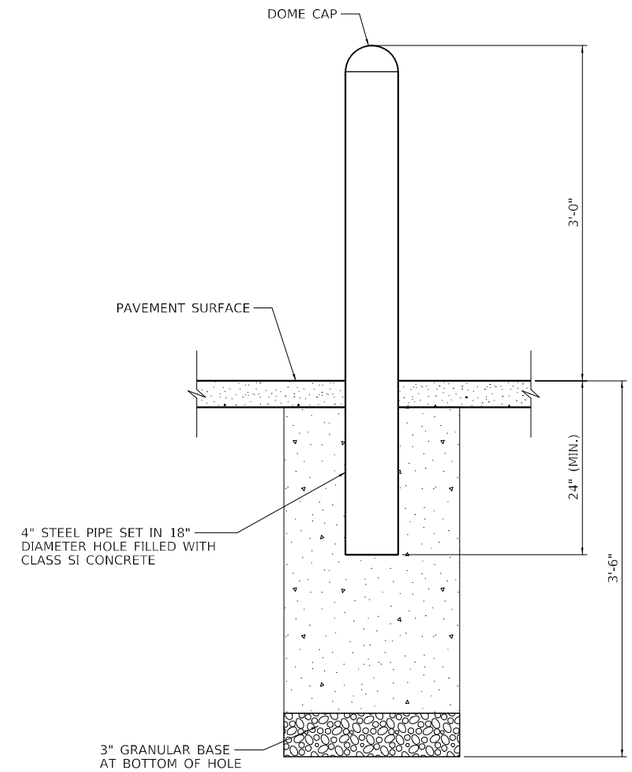

BOLLARD DETAIL

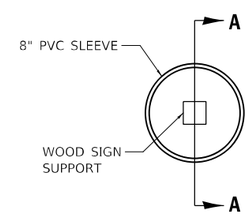

SIGN POST SLEEVE DETAIL

STA 47+80 (STATE PARK ROAD (WEST))
COST INCLUDED IN WOOD SIGN SUPPORT

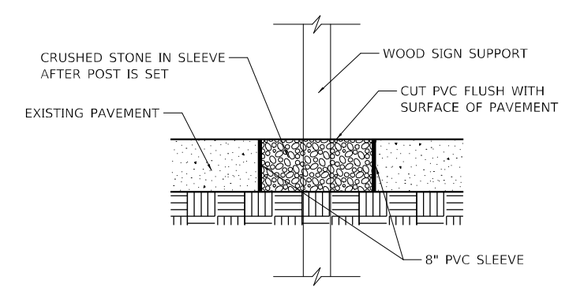

SECTION A-A

MODEL: Details 02
FILE NAME: pw:\\projectwise.volkert.com:volkertsspw\Documents\Projects\115093 - PTB 200 - Item 43 - WO 13 - Spring Lake\CADD\CAD Sheets\Sht-Details.dgn

VOLKERT	USER NAME = betsy.wilt	DESIGNED -	REVISED -	STATE OF ILLINOIS DEPARTMENT OF TRANSPORTATION	MISCELLANEOUS DETAILS SPRING LAKE STATE FISH AND WILDLIFE AREA	F.A. RTE.	SECTION	COUNTY	TOTAL SHEETS / SHEET NO.
		DRAWN -	REVISED -			IDNR	SPRING LAKE 2024	TAZEWELL	24 / 24
	PLOT SCALE = 40.0000 ' / in.	CHECKED -	REVISED -					CONTRACT NO. 46939	
	PLOT DATE = 12/5/2024	DATE - 01/03/2025	REVISED -		SCALE: 1"=20' SHEET 2 OF 2 SHEETS		ILLINOIS	FED. AID PROJECT	

F.A. RTE.	SECTION	COUNTY	TOTAL SHEETS	SHEET NO.
NA	SPRING LAKE 2024	TAZEWELL	56	1
	ILLINOIS	CONTRACT NO. 46939		

SET 2 OF 2 SETS
SHEETS 33 THRU 88 OF 88

STATE OF ILLINOIS
DEPARTMENT OF TRANSPORTATION
DEPARTMENT OF NATURAL RESOURCES

PROPOSED
HIGHWAY PLANS

IDOT / IDNR STATEWIDE
IDNR PARK ROADS
SPRING LAKE 2024
SIGNING, RESURFACING AND BRIDGE REPLACEMENTS
TAZEWELL COUNTY

C-30-011-24
IDNR FILE Nos.
1-24-011 (SKY RANCH ROAD)
1-25-018 (STATE PARK ROAD)

INDEX OF SHEETS
SEE SHEET No. 2

IDOT HIGHWAY STANDARDS
SEE SHEET No. 2

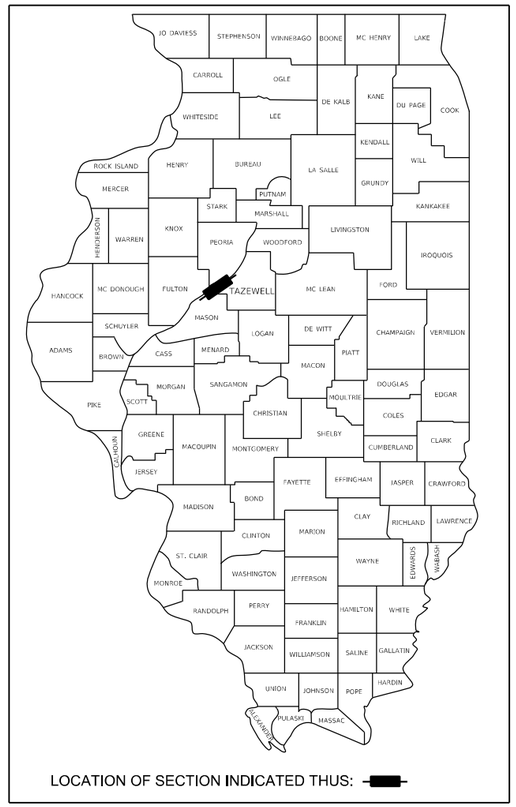

LOCATION OF SECTION INDICATED THUS:

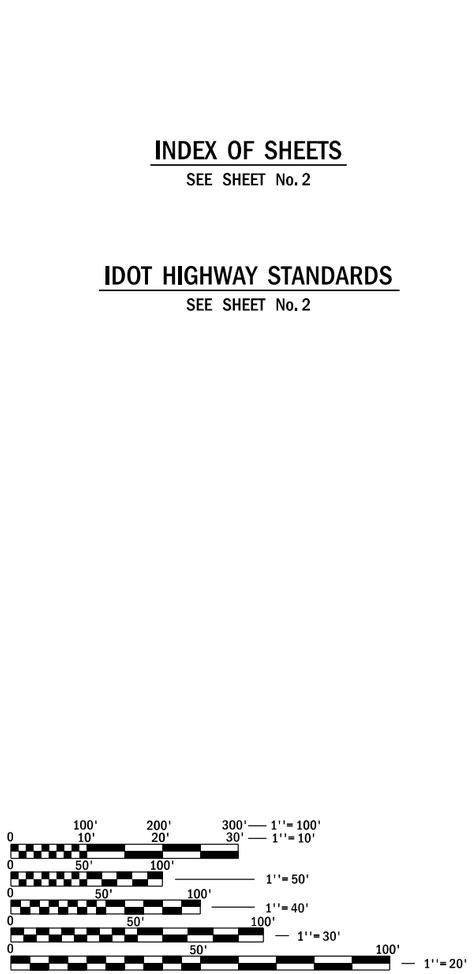

FULL SIZE PLANS HAVE BEEN PREPARED USING STANDARD ENGINEERING SCALES. REDUCED SIZED PLANS WILL NOT CONFORM TO STANDARD SCALES. IN MAKING MEASUREMENTS ON REDUCED PLANS, THE ABOVE SCALES MAY BE USED.

PROJECT LOCATION
RESURFACING & SIGNING
STA 12+00.00 TO
STA 160+65.00
STATE PARK ROAD
(WEST)

PROJECT LOCATION
℄ STR. No. 090-9923
STA 20+00.00
AND SIGNING
STATE PARK ROAD
(SOUTH)

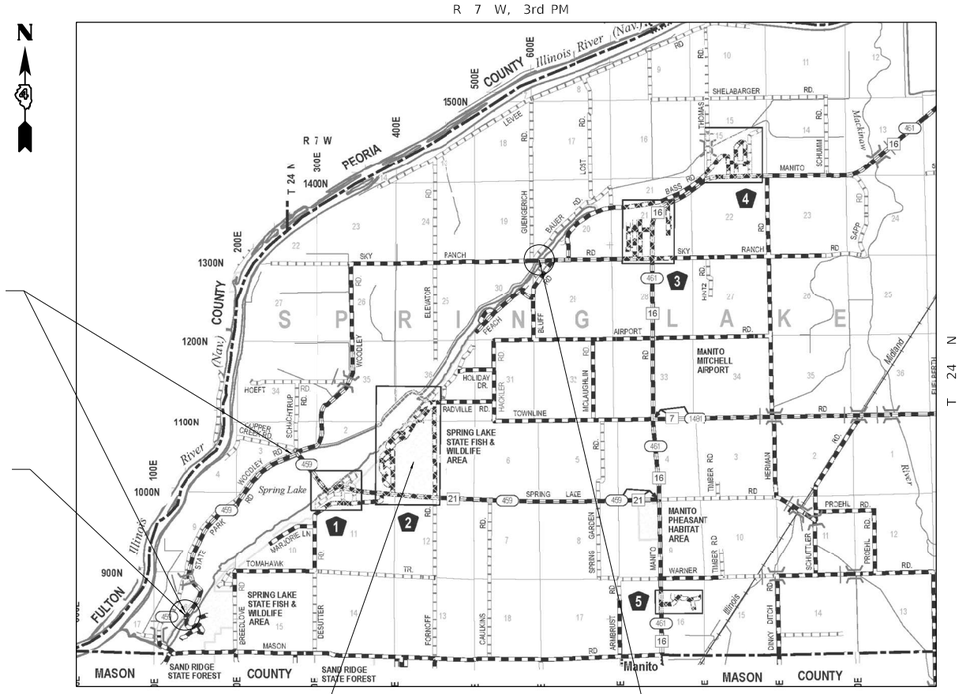

PROJECT LOCATION
SIGNING
STATE PARK DRIVE
(EAST)

PROJECT LOCATION
℄ STR. No. 090-9922
STA 10+00.00
T.R. 125 (SKY RANCH ROAD)

LOCATION MAP

J.U.L.I.E.
JOINT UTILITY LOCATING INFORMATION FOR EXCAVATORS
1 (800) 892-0123
OR 811

STATION EQUATION:
PT STA 21+47.72 (BACK) = POT STA 11+99.97 (AHEAD)

DATE: 11/14/2025

ROBERT H. DALTON

ILLINOIS PROFESSIONAL ENGINEER
NO. 062-033925
EXPIRATION DATE 11/30/2025

STATE OF ILLINOIS
DEPARTMENT OF TRANSPORTATION

SUBMITTED _____ 20 _____

REGIONAL ENGINEER

_____ 20 _____

ENGINEER OF DESIGN AND ENVIRONMENT

_____ 20 _____

DIRECTOR OF PROGRAM DEVELOPMENT

PRINTED BY THE AUTHORITY OF THE STATE OF ILLINOIS

VEENSTRA & KIMM INC

CONTRACT No. 46939

JOB No. 7021-005 VEENSTRA & KIMM, INC. DESIGN FIRM REGISTRATION NUMBER 184-001939

INDEX OF SHEETS

IDOT HIGHWAY STANDARDS

000001-08	STANDARD SYMBOLS, ABBREVIATIONS AND PATTERNS
001001-02	AREAS OF REINFORCEMENT BARS
001006	DECIMAL OF AN INCH & FOOT
280001-07	TEMPORARY EROSION CONTROL SYSTEMS
515001-04	NAME PLATE FOR BRIDGES
701901-10	TRAFFIC CONTROL DEVICES
B.L.R. 17-4	TRAFFIC CONTROL DEVICES - DAY LABOR CONSTRUCTION
B.L.R. 21-9	TYPICAL APPLICATION OF TRAFFIC CONTROL DEVICES FOR CONSTRUCTION ON RURAL LOCAL HIGHWAYS
B.L.R. 22-7	TYPICAL APPLICATION OF TRAFFIC CONTROL DEVICES FOR CONSTRUCTION ON RURAL HIGHWAYS
B.L.R. 23-4	TRAFFIC BARRIER TERMINAL, TYPE 1
B.L.R. 27-1	TRAFFIC BARRIER TERMINAL, TYPE 5A

LEGEND

- EXISTING POWER POLE
- EXISTING GUY WIRE
- EXISTING SIGN
- EXISTING WOOD POST
- EXISTING FENCE POST
- EXISTING MAILBOX
- 32" - EXISTING DECIDUOUS TREE
- 12" - EXISTING EVERGREEN TREE
- EXISTING BUSH
- EXISTING JUNCTION BOX
- EXISTING ELECTRIC SPLICE BOX
- EXISTING TELEPHONE SPLICE BOX
- EXISTING WATER VALVE
- EXISTING CATCH BASIN
- EXISTING MANHOLE
- EXISTING END SECTION
- EXISTING PARKING BLOCK
- EXISTING A.D.A. PARKING SYMBOL
- EXISTING RIPRAP
- X — X — X — X - EXISTING FENCE LINE
- EXISTING DITCH LINE
- EXISTING GUARD RAIL
- 825 - EXISTING CONTOURS
- EXISTING TREE LINE
- EXISTING BUILDING LIMITS
- EXISTING CULVERT
- SOIL BORINGS
- PROPOSED SILT FENCE

GENERAL NOTES

1) SPECIFICATIONS SHALL BE THE "STANDARD SPECIFICATIONS FOR ROAD AND BRIDGE CONSTRUCTION" ADOPTED JANUARY 1, 2022.

2) ALL ELEVATIONS ARE REFERENCED TO ELEVATIONS ESTABLISHED BY OTHERS.

3) WHERE SECTION OR SUBSECTION MONUMENTS ARE ENCOUNTERED, THE ENGINEER SHALL BE NOTIFIED BEFORE SUCH MONUMENTS ARE REMOVED. THE CONTRACTOR SHALL PROTECT AND CAREFULLY PRESERVE ALL PROPERTY MARKERS AND MONUMENTS UNTIL THE OWNER AND AUTHORIZED SURVEYOR OR AGENT HAS WITNESSED OR OTHERWISE REFERENCED THEIR LOCATION. IF THE ENGINEER DECIDES TO HAVE THE CONTRACTOR RESET THE MONUMENT, THIS WORK WILL BE PAID FOR IN ACCORDANCE WITH ARTICLE 109.04 OF THE STANDARD SPECIFICATIONS FOR HIGHWAY AND BRIDGE CONSTRUCTION.

4) THE CONTRACTOR SHALL CONTACT J.U.L.I.E. (JOINT UTILITY LOCATING INFORMATION FOR EXCAVATORS) TO HAVE PUBLIC AND PRIVATE UTILITIES LOCATED AT LEAST 48 HOURS PRIOR TO COMMENCING ANY CONSTRUCTION.

5) THE CONTRACTOR SHALL BE RESPONSIBLE FOR PROTECTING UTILITY PROPERTY FROM CONSTRUCTION OPERATIONS AS OUTLINED IN ARTICLE 107.26 OF THE STANDARD SPECIFICATIONS. THE J.U.L.I.E. NUMBER IS (800) 892-0123. A MINIMUM OF 48 HOURS ADVANCE NOTICE IS REQUIRED.

6) ANY REFERENCE TO THE STANDARDS THROUGHOUT THE PLANS SHALL BE INTERPRETED TO BE THE LATEST STANDARDS OF THE ILLINOIS DEPARTMENT OF TRANSPORTATION AS INCLUDED IN THESE PLANS.

7) ALL DETAILS IN THE PLANS SHALL GOVERN CONSTRUCTION OF THIS PROJECT, AND IN CASE OF CONFLICT WITH ANY STANDARD DRAWINGS INCLUDED, THE SAID DETAILS SHALL TAKE PRECEDENCE AND GOVERN.

8) THE CONTRACTOR SHALL ASSUME COMPLETE RESPONSIBILITY FOR JOB SITE CONDITIONS DURING THE COURSE OF CONSTRUCTION, INCLUDING SAFETY OF ALL PERSONS AND PROPERTY, THAT THIS REQUIREMENT SHALL APPLY CONTINOUSLY AND NOT BE LIMITED TO NORMAL WORKING HOURS, AND THAT THE CONTRACTOR SHALL DEFEND, IDEMNIFY, AND HOLD THE OWNER AND THE ENGINEER HARMLESS FROM ANY AND ALL LIABILITY, REAL OR ALLEGED, IN CONNECTION WITH THE PERFORMANCE OF WORK ON THIS PROJECT, EXCEPTING FOR THE LIABILITY ARISING FROM THE SOLE NEGLIGENCE OF THE OWNER OR THE ENGINEER.

9) ALL CONSTRUCTION LAYOUT SHALL BE THE RESPONSIBILITY OF THE CONTRACTOR.

10) ALL BORROW/WASTE/USE SITES MUST BE APPROVED BY THE DEPARTMENT PRIOR TO REMOVING ANY MATERIAL FROM THE PROJECT OR INITIATING ANY EARTHMOVING ACTIVITIES, INCLUDING TEMPORARY STOCKPILING OUTSIDE THE LIMITS OF CONSTRUCTION.

11) THE CONTRACTOR SHALL SEED ALL DISTURBED AREAS WITHIN THE PROJECT LIMITS. SEEDING MIX SHALL BE "SEEDING, CLASS 1". FERTILIZER AND CLASS 7 SEEDING SHALL BE APPLIED TO ALL DISTURBED AREAS AND INCORPORATED INTO THE SEEDBED PRIOR TO SEEDING OR PLACEMENT OF SOD AT THE RATE SPECIFIED IN SECTIONS 250 AND 252 OF THE STANDARD SPECIFICATIONS.

12) THE BASELINES SHOWN THROUGHOUT THE PLANS ARE A "BEST FIT" ALIGNMENT OF THE CENTER OF THE EXISTING ROADWAYS FOR THE PURPOSE OF STATIONING AND DETERMINATION OF OFFSETS. IN MOST CASES, IT DOES NOT REPRESENT THE PHYSICAL CENTER OF THE EXISTING ROADWAY SURFACE.

CODE NO.	ITEM	UNIT	TOTAL QUANTITY	CONSTRUCTION CODE BRIDGE 0001 SN 090-9922	CONSTRUCTION CODE BRIDGE 0001 SN 090-9923
20200100	EARTH EXCAVATION	CU YD	206	85	121
20300100	CHANNEL EXCAVATION	CU YD	363	144	219
20700110	POROUS GRANULAR EMBANKMENT	TON	92	54	38
21101615	TOPSOIL FURNISH AND PLACE, 4"	SQ YD	410	107	303
25000100	SEEDING, CLASS 1	ACRE	0.12	0.04	0.08
25000400	NITROGEN FERTILIZER NUTRIENT	POUND	12	4	8
25000500	PHOSPHORUS FERTILIZER NUTRIENT	POUND	12	4	8
25000600	POTASSIUM FERTILIZER NUTRIENT	POUND	12	4	8
25100105	MULCH, METHOD 1	ACRE	0.12	0.04	0.08
25100635	HEAVY DUTY EROSION CONTROL BLANKET	SQ YD	208	55	153
28000250	TEMPORARY EROSION CONTROL SEEDING	POUND	9	4	5
28000400	PERIMETER EROSION BARRIER	FOOT	613	220	393
28100807	STONE DUMPED RIPRAP, CLASS A4	TON	400	230	170
28200200	FILTER FABRIC	SQ YD	810	490	320
31101900	SUBBASE GRANULAR MATERIAL, TYPE C	TON	79	53	26

* - DENOTES SPECIAL PROVISION

NOTE:
SEE "COMBINED SUMMARY OF QUANTITIES" FOR SIGNING AND GATE QUANTITIES.

MODEL: $MODELNAME$
FILE NAME: $FILEL$

VEENSTRA & KIMM INC.
Springfield, IL. Phone: (217)544-8033
IL. Design Firm No. 184-001939

USER NAME = $USER$	DESIGNED - VVR/KNF/JEB	REVISED -	
	DRAWN - JEB	REVISED -	
PLOT SCALE = $SCALE$	CHECKED - RHD/MAH	REVISED -	
PLOT DATE = $DATE$	DATE - 11/14/2025	REVISED -	

STATE OF ILLINOIS
DEPARTMENT OF TRANSPORTATION
DEPARTMENT OF NATURAL RESOURCES

SUMMARY OF QUANTITIES
SPRING LAKE STATE FISH & WILDLIFE AREA

SCALE: | SHEET 1 OF 3 SHEETS | STA. | TO STA.

F.A. RTE.	SECTION	COUNTY	TOTAL SHEETS	SHEET NO.
	SPRING LAKE 2024	TAZEWELL	56	3
		CONTRACT NO. 46939		
	ILLINOIS	FED. AID PROJECT		

CODE NO.	ITEM	UNIT	TOTAL QUANTITY	CONSTRUCTION CODE BRIDGE 0001 SN 090-9922	CONSTRUCTION CODE BRIDGE 0001 SN 090-9923
35100700	AGGREGATE BASE COURSE, TYPE A 8"	SQ YD	62		62
35101100	AGGREGATE BASE COURSE, TYPE A 12"	SQ YD	176	176	
35101800	AGGREGATE BASE COURSE, TYPE B 6"	SQ YD	292		292
40600275	BITUMINOUS MATERIALS (PRIME COAT)	POUND	1193	396	797
40600290	BITUMINOUS MATERIALS (TACK COAT)	POUND	678	279	399
40600982	HOT-MIX ASPHALT SURFACE REMOVAL - BUTT JOINT	SQ YD	13	13	
40602978	HOT-MIX ASPHALT BINDER COURSE, IL- 9.5, N50	TON	15	15	
40604000	HOT-MIX ASPHALT SURFACE COURSE, IL-9.5FG, MIX "C", N50	TON	53	28	25
40701316	HOT-MIX ASPHALT PAVEMENT (FULL-DEPTH), 6 3/4"	SQ YD	265		265
48100500	AGGREGATE SHOULDERS, TYPE A 6"	SQ YD	31	31	
50100300	REMOVAL OF EXISTING STRUCTURES NO. 1	EACH	1	1	
50100400	REMOVAL OF EXISTING STRUCTURES NO. 2	EACH	1		1
50200100	STRUCTURE EXCAVATION	CU YD	244	126	118
50300225	CONCRETE STRUCTURES	CU YD	45.6	22.8	22.8
50300280	CONCRETE ENCASEMENT	CU YD	5.6	2.8	2.8

* - DENOTES SPECIAL PROVISION

NOTE:
SEE "COMBINED SUMMARY OF QUANTITIES" FOR SIGNING AND GATE QUANTITIES.

MODEL: $MODELNAME$
FILE NAME: $FILEL$

VEENSTRA & KIMM INC.
Springfield, IL. Phone: (217)544-8033
IL. Design Firm No. 184-001939

USER NAME = $USER$	DESIGNED - VVR/KNF/JEB	REVISED -	
	DRAWN - JEB	REVISED -	
PLOT SCALE = $SCALE$	CHECKED - RHD/MAH	REVISED -	
PLOT DATE = $DATE$	DATE - 11/14/2025	REVISED -	

STATE OF ILLINOIS
DEPARTMENT OF TRANSPORTATION
DEPARTMENT OF NATURAL RESOURCES

SUMMARY OF QUANTITIES
SPRING LAKE STATE FISH & WILDLIFE AREA

SCALE: | SHEET 2 OF 3 SHEETS | STA. TO STA.

F.A. RTE.	SECTION	COUNTY	TOTAL SHEETS	SHEET NO.
	SPRING LAKE 2024	TAZEWELL	56	4
		CONTRACT NO. 46939		
	ILLINOIS	FED. AID PROJECT		

	CODE NO.	ITEM	UNIT	TOTAL QUANTITY	CONSTRUCTION CODE BRIDGE 0001 SN 090-9922	CONSTRUCTION CODE BRIDGE 0001 SN 090-9923
	50400405	PRECAST PRESTRESSED CONCRETE DECK BEAMS (21" DEPTH)	SQ FT	2192	1024	1168
	50800205	REINFORCEMENT BARS, EPOXY COATED	POUND	6920	3560	3360
	50900205	STEEL RAILING, TYPE S1	FOOT	188	88	100
	51201400	FURNISHING STEEL PILES HP10X42	FOOT	530	287	243
	51202305	DRIVING PILES	FOOT	530	287	243
	51203400	TEST PILE STEEL HP10X42	EACH	3	1	2
	51204650	PILE SHOES	EACH	16	8	8
	51500100	NAME PLATES	EACH	2	1	1
	58100200	WATERPROOFING MEMBRANE SYSTEM	SQ YD	251	117	134
	63100075	TRAFFIC BARRIER TERMINAL, TYPE 5A	EACH	2	2	
*	63100167	TRAFFIC BARRIER TERMINAL, TYPE 1 (SPECIAL) TANGENT	EACH	2	2	
	67100100	MOBILIZATION	L SUM	0.5	0.25	0.25
*	X0323265	REMOVE EXISTING RIPRAP	SQ YD	3	3	
*	X0326806	WASHOUT BASIN	L SUM	1	0.5	0.5
*	X7010216	TRAFFIC CONTROL AND PROTECTION, (SPECIAL)	L SUM	0.5	0.25	0.25
*	Z0013798	CONSTRUCTION LAYOUT	L SUM	0.5	0.25	0.25

* - DENOTES SPECIAL PROVISION

NOTE:
SEE "COMBINED SUMMARY OF QUANTITIES" FOR SIGNING AND GATE QUANTITIES.

MODEL: $MODELNAME$
FILE NAME: $FILEL$

VEENSTRA & KIMM INC.
Springfield, IL. Phone: (217)544-8033
IL. Design Firm No. 184-001939

USER NAME = $USER$	DESIGNED - VVR/KNF/JEB	REVISED -	
	DRAWN - JEB	REVISED -	
PLOT SCALE = $SCALE$	CHECKED - RHD/MAH	REVISED -	
PLOT DATE = $DATE$	DATE - 11/14/2025	REVISED -	

STATE OF ILLINOIS
DEPARTMENT OF TRANSPORTATION
DEPARTMENT OF NATURAL RESOURCES

SUMMARY OF QUANTITIES
SPRING LAKE STATE FISH & WILDLIFE AREA

SCALE: | SHEET 3 OF 3 SHEETS | STA. | TO STA.

F.A. RTE.	SECTION	COUNTY	TOTAL SHEETS	SHEET NO.
	SPRING LAKE 2024	TAZEWELL	56	5
		CONTRACT NO. 46939		
	ILLINOIS	FED. AID PROJECT		

PAVING & GUARD RAIL SCHEDULE

STATION	TO	STATION	AGG BASE CSE TA 8" (SQ YD) 35100700	AGG BASE CSE TA 12" (SQ YD) 35101100	AGG BASE CSE TB 6" (SQ YD) 35101800	BIT MATLS (PR CT) (POUND) 40600275	BIT MATLS (TACK CT) (POUND) 40600290	HMA SURF REM BUTT JOINT (SQ YD) 40600982	HMA BC IL-9.5 N50 (TON) 40602978	HMA SC IL-9.5FG C N50 (TON) 40604000	HMA PAVT (FD) 6 3/4" (SQ YD) 40701816	AGG SHLDS TYPE A 6" (SQ YD) 48100500	STEEL RAILING TYPE S1 (FOOT) 50900205	WATERPROOF MEMBRANE SYS (SQ YD) 58100200	TR BAR TERM TYPE 5A (EACH) 63100075	TR BAR TERM T1 SPL TAN (EACH) 63100167
SKY RANCH ROAD - STR # 090-9922																
9+28.00	TO	9+78.00		128		288	117		11	10		23			1	1
9+78.00	TO	10+22.00					118			14			88	117		
10+22.00	TO	10+40.00		48		108	44	13	4	4		8			1	1
SUB-TOTALS			**0**	**176**	**0**	**396**	**279**	**13**	**15**	**28**		**31**	**88**	**117**	**2**	**2**
STATE PARK ROAD - STR # 090-9923																
19+50.00	TO	19+75.00	62			140				7						
19+75.00	TO	20+25.00					134			18			100	134		
20+25.00	TO	21+47.75			292	657	265				265					
SUB-TOTALS			**62**	**0**	**292**	**797**	**399**	**0**	**0**	**25**	**265**	**0**	**100**	**134**	**0**	**0**
TOTAL			**62**	**176**	**292**	**1,193**	**678**	**13**	**15**	**53**	**265**	**31**	**188**	**251**	**2**	**2**

SEEDING AND EROSION CONTROL SCHEDULE

STATION	LT/RT	STATION	LT/RT	TOPSOIL F & P, 4" (SQ YD) 21101615	SEEDING CLASS 1 (ACRE) 25000100	NITROGEN FERT NUTRIENT (POUND) 25000400	PHOSPHORUS FERT NUTRIENT (POUND) 25000500	POTASSIUM FERT NUTRIENT (POUND) 25000600	MULCH METHOD 1 (ACRE) 25100105	H D EROSION CNTRL BLNKT (SQ YD) 25100635	TEMP EROSION CONT SEEDING (POUND) 28000250	PER EROSION BARRIER (FOOT) 28000400	WASHOUT BASIN (L SUM) X0326806
SKY RANCH ROAD - STR # 090-9922													
9+28.00	LT	9+78.00	LT	39	0.01	1	1	1	0.01	20	1	67	
9+28.00	RT	9+78.00	RT	35	0.01	1	1	1	0.01	18	1	69	
10+22.00	LT	10+40.00	LT	16	0.01	1	1	1	0.01	8	1	48	
10+22.00	RT	10+40.00	RT	17	0.01	1	1	1	0.01	9	1	36	
SUB-TOTALS				107	0.04	4	4	4	0.04	55	4	220	
AS DIRECTED													0.5
STATE PARK ROAD - STR # 090-9923													
19+50.00	LT	19+75.00	LT	41	0.01	1	1	1	0.01	21	1	56	
19+50.00	RT	19+75.00	RT	55	0.02	2	2	2	0.02	28	1	77	
20+25.00	LT	21+50.00	LT	117	0.03	3	3	3	0.03	59	2	152	
20+25.00	RT	21+50.00	RT	90	0.02	2	2	2	0.02	45	1	108	
SUB-TOTALS				303	0.08	8	8	8	0.08	153	5	393	
AS DIRECTED													0.5
TOTAL				**410**	**0.12**	**12**	**12**	**12**	**0.12**	**208**	**9**	**613**	**1**

EARTHWORK SCHEDULE

1 Location	2 Earth Excavation 20200100	3 Earth Excavation 25% Adjustment For Shrinkage	4 Embankment	5 Earthwork Balance Waste (+) or Shortage (-)
	Cubic Yard	Cubic Yard	Cubic Yard	Cubic Yard
Sky Ranch Road				
Sta 9+28.00 to 9+78.00	61	46	18	28
Bridge Omission				
Sta 10+22.00 to 10+40.00	24	18	9	9
Sub-Totals	85	64	27	37
State Park Road				
Sta 19+50.00 to 19+75.00	22	17	7	10
Bridge Omission				
Sta 20+25.00 to 21+47.75	99	74	15	59
Sub-Totals	121	91	22	69
TOTAL	206	155	49	106

Columns 1, 2, & 4 — Location and Quantities from Cross Sections: Earth Exc = Cut, Embankment = Fill
Column 3 — Quantity of Earth Excavation (Cut) With 25% Adjustment for Shrinkage
Column 5 — Earthwork Req'd: (-) = Quantity of Fill or Embankment needed.
(+) = Quantity to be Wasted

RIP RAP SCHEDULE

STATION	TO	STATION	LT/RT	STONE DUMPED RIPRAP CL A4 (TON) 28100807	FILTER FABRIC (SQ YD) 28200200	SUBBASE GRAN MAT'L TYPE C (TON) 31101900	REMOVE EX RIPRAP (SQ YD) X0323265
SKY RANCH ROAD - STR # 090-9922							
9+68.00	TO	9+90.00	LT/RT	115	167		
9+70.00	TO	9+85.00	LT/RT		87	31	
10+02.00	TO	10+32.00	LT/RT	115	167		
10+15.00	TO	10+30.00	LT/RT		69	22	
10+27.00	TO	10+32.00	RT				3
SUB-TOTALS				230	490	53	3
STATE PARK ROAD - STR # 090-9923							
19+70.00	TO	19+93.00	LT/RT	88	128		
20+07.00	TO	20+30.00	LT/RT	82	118		
20+20.00	TO	20+30.00	LT/RT		74	26	
SUB-TOTALS				170	320	26	0
TOTAL				400	810	79	3

PARK GATE SCHEDULE

LOCATION	REMOVE EXISTING GATE (EACH) X0300249	TUBULAR STEEL GATE (EACH) X0323013
STATE PARK ROAD		
159+70	1	1
STATE PARK DRIVE		
207+00	1	1
TOTAL	2	2

SIGNING SCHEDULE

STATION	LT/RT	SIGN TEXT AND SIZE (IN INCHES)	MUTCD DESIGNATION	SIGN PANEL TYPE 1 (SQ FT) 72000100	TELESCOP STEEL SIGN SUPPORT (FOOT) 72800100	WOOD SIGN SUPPORT (FOOT) 73000100	MINOR SIGN COMPLETE (EACH) X2600016	REM EXISTING SIGN COMPLETE (EACH) X7240207
STATE PARK ROAD (WEST)								
10+75	RT	15 (RIGHT TURN ARROW) (24x24)	W1-1aR	4.00		14		
11+50	LT	NO PARKING (12x18)	R8-3a	1.50		13		1
12+50	LT	15 (LEFT TURN ARROW)(24x24)	W1-1aL	4.00		14		1
17+00	RT/LT	SPEED LIMIT 20 (12x18)	R2-1	3.00		28		1
17+00	RT/LT	NO PARKING ALONG ROAD SIDES (12x18)	R8-3a MOD	3.00				
26+00	RT/LT	SPEED LIMIT 20 (12x18)	R2-1	3.00		28		2
26+00	RT/LT	NO PARKING ALONG ROAD SIDES (12x18)	R8-3a MOD	3.00				
34+00	RT/LT	SPEED LIMIT 20 (12x18)	R2-1	3.00		28		1
34+00	RT/LT	NO PARKING ALONG ROAD SIDES (12x18)	R8-3a MOD	3.00				
40+00	RT/LT	SPEED LIMIT 20 (12x18)	R2-1	3.00		28		2
40+00	RT/LT	NO PARKING ALONG ROAD SIDES (12x18)	R8-3a MOD	3.00				
42+25	LT	SPEED LIMIT 20 (12x18)	R2-1	1.50		14		1
42+25	LT	NO PARKING ALONG ROAD SIDES (12x18)	R8-3a MOD	1.50				
42+55	LT	EXISTING WEIGHT LIMIT SIGN						1
42+70	LT	STOP (30x30)	R1-1	5.25		14		1
42+75	RT	D3					1	1
42+85	RT	D2					1	1
43+00	RT	"S" CURVE ARROW (24x24)	W1-3L	4.00		14		
43+00	RT	15 MPH (12x12)	W13-1P	1.00				
44+10	RT	RESERVED PARKING (12x18)	R7-8a	1.50	13			1
44+10	RT	$250 FINE (12x6)	R2-6bP	0.50				
47+00	LT	"S" CURVE ARROW (24x24)	W1-3L	4.00		14		1
47+00	LT	15 MPH (12x12)	W13-1P	1.00				
47+79	RT	RESERVED PARKING (12x18)	R7-8a	1.50	13			
47+79	RT	$250 FINE (12x6) (IN BOLLARD)	R2-6bP	0.50				
52+00	RT/LT	SPEED LIMIT 20 (12x18)	R2-1	3.00		28		
52+00	RT/LT	NO PARKING ALONG ROAD SIDES (12x18)	R8-3a MOD	3.00				
61+40	LT	NO PARKING (12x18)	R8-3a	1.50		13		1
64+00	RT	SPEED LIMIT 20 (12x18) (2-SIDED)	R2-1	3.00		14		1
64+00	RT	NO PARKING ALONG ROAD SIDES (12x18)	R8-3a MOD	3.00				
74+00	RT	SPEED LIMIT 20 (12x18) (2-SIDED)	R2-1	3.00		14		1
74+00	RT	NO PARKING ALONG ROAD SIDES (12x18)	R8-3a MOD	3.00				
84+00	RT	SPEED LIMIT 20 (12x18) (2-SIDED)	R2-1	3.00		14		1
84+00	RT	NO PARKING ALONG ROAD SIDES (12x18)	R8-3a MOD	3.00				
95+00	RT	SPEED LIMIT 20 (12x18) (2-SIDED)	R2-1	3.00		14		1
95+00	RT	NO PARKING ALONG ROAD SIDES (12x18)	R8-3a MOD	3.00				
113+00	RT	SPEED LIMIT 20 (12x18) (2-SIDED)	R2-1	3.00		14		1
113+00	RT	NO PARKING ALONG ROAD SIDES (12x18)	R8-3a MOD	3.00				
125+00	RT	SPEED LIMIT 20 (12x18) (2-SIDED)	R2-1	3.00		14		1
125+00	RT	NO PARKING ALONG ROAD SIDES (12x18)	R8-3a MOD	3.00				
140+00	RT	SPEED LIMIT 20 (12x18) (2-SIDED)	R2-1	3.00		14		1
140+00	RT	NO PARKING ALONG ROAD SIDES (12x18)	R8-3a MOD	3.00				
159+72	LT	SPEED LIMIT 20 (12x18)	R2-1	1.50		14		
159+72	LT	NO COMMERCIAL VEHICLES (12x18)	R5-4	1.50				
159+72	RT	SPEED LIMIT 20 (12x18)	R2-1	1.50		14		
159+72	RT	NO PARKING ALONG ROAD SIDES (12x18)	R8-3a MOD	1.50				
159+75	RT	D4					1	1
160+25	LT	S3					1	1
160+40	RT	STOP (30x30)	R1-1	5.25		14		1
160+70	RT	D6					1	1
161+00	RT	D7					1	1
SUB-TOTALS				**116.50**	**26**	**390**	**6**	**28**
STATE PARK ROAD (SOUTH)								
601+18	LT	SPEED LIMIT 20 (12x18)	R2-1	1.50		13		1
602+40	RT	D5					1	1
602+87	LT	YIELD (24x24x24)	R1-2	1.75		13		1
603+60	RT	D4					1	1
604+00	RT	RESERVED PARKING (12x18)	R7-8	1.50	13			
604+00	RT	$250 FINE (12x6)	R2-6bP	0.50				
604+06	RT	RESERVED PARKING (12x18)	R7-8a	1.50	13			
604+06	RT	$250 FINE (12x6)	R2-6bP	0.50				
604+35	RT	YIELD (24x24x24)	R1-2	1.75		13		1
604+50	RT	S2					1	1
612+62	RT	DO NOT PARK/DRIVE ON GRASS (12x18)		1.50		13		1
613+04	RT	YIELD (24x24x24)	R1-2	1.75		13		
615+20	RT	YIELD (24x24x24)	R1-2	1.75		13		

SIGNING SCHEDULE (CONTINUED)

STATION	LT/RT	SIGN TEXT AND SIZE (IN INCHES)	MUTCD DESIGNATION	SIGN PANEL TYPE 1 (SQ FT) 72000100	TELESCOP STEEL SIGN SUPPORT (FOOT) 72800100	WOOD SIGN SUPPORT (FOOT) 73000100	MINOR SIGN COMPLETE (EACH) X2600016	REM EXISTING SIGN COMPLETE (EACH) X7240207
620+80	RT	S1					1	1
622+00	LT	D1					1	1
622+50	LT	STOP (30x30)	R1-1	5.25		14		1
SUB-TOTALS		**STATE PARK ROAD (SOUTH)**		**19.25**	**26**	**92**	**5**	**10**
STATE PARK DRIVE (EAST)								
200+25	LT	S3					1	1
200+25	RT	S6					1	1
200+30	RT	S4					1	1
200+40	LT	STOP (30x30)	R1-1	5.25		14		1
203+03	RT	D8					1	1
204+67	RT	YIELD (24x24x24)	R1-2	1.75		13		
206+90	RT	D9					1	1
207+04	LT	STOP (30x30)	R1-1	5.25		14		1
208+00	RT	SPEED LIMIT 20 (12x18)	R2-1	1.50		14		1
208+00	RT	NO PARKING ALONG ROAD SIDES (12x18)	R8-3a MOD	1.50				
211+50	RT	PED CROSSING (NO TEXT) (24x24)	W11-2	4.00		14		1
211+50	RT	PED XING (18x12)	W11-15P	1.50				
212+00	RT	S5					1	1
211+50	RT	PED CROSSING (NO TEXT) (24x24)	W11-2	4.00		14		
211+50	RT	PED XING (18x12)	W11-15P	1.50				
216+00	RT/LT	SPEED LIMIT 20 (12x18)	R2-1	3.00		28		2
216+00	RT/LT	NO PARKING ALONG ROAD SIDES (12x18)	R8-3a MOD	3.00				
226+00	RT/LT	SPEED LIMIT 20 (12x18)	R2-1	3.00		28		2
226+00	RT/LT	NO PARKING ALONG ROAD SIDES (12x18)	R8-3a MOD	3.00				
233+00	RT	PED CROSSING (NO TEXT) (24x24)	W11-2	4.00		14		1
233+00	RT	TRAIL X-ING (18x12)	W11-15P	1.50				
236+00	LT	PED CROSSING (NO TEXT) (24x24)	W11-2	4.00		14		1
236+00	LT	TRAIL X-ING (18x12)	W11-15P	1.50				
240+00	RT/LT	SPEED LIMIT 20 (12x18)	R2-1	3.00		28		2
240+00	RT/LT	NO PARKING ALONG ROAD SIDES (12x18)	R8-3a MOD	3.00				
243+00	RT	STOP (30x30)	R1-1	5.25		14		1
243+00	RT	ONE WAY (12x18)	R6-2R	1.50				
SUB-TOTALS				**62.00**	**0**	**209**	**6**	**19**
OAK LOOP ROAD								
300+20	LT	YIELD (24x24x24)	R1-2	1.75		13		1
300+60	RT	SPEED LIMIT 10 (12x18)	R2-1	1.50		13		1
301+35	LT	ONE WAY (12x18)	R6-2R	1.50		13		1
305+00	RT	SPEED LIMIT 10 (12x18)	R2-1	1.50		13		1
310+00	RT	SPEED LIMIT 10 (12x18)	R2-1	1.50		13		1
315+00	RT	SPEED LIMIT 10 (12x18)	R2-1	1.50		13		1
SUB-TOTALS				**9.25**	**0**	**78**	**0**	**6**
PINE LOOP ROAD								
400+25	LT	YIELD (24x24x24)	R1-2	1.75		13		1
400+60	RT	SPEED LIMIT 10 (12x18)	R2-1	1.50		13		1
401+87	LT	ONE WAY (12x18)	R6-2R	1.50		13		1
405+00	RT	SPEED LIMIT 10 (12x18)	R2-1	1.50		13		1
410+00	RT	SPEED LIMIT 10 (12x18)	R2-1	1.50		13		1
SUB-TOTALS				**7.75**	**0**	**65**	**0**	**5**
FISHING LOOP ROAD								
500+00	LT	ONE WAY (12x18)	R6-2R	1.50		13		1
501+25	RT	SPEED LIMIT 10 (12x18)	R2-1	1.50		13		1
509+00	RT	SPEED LIMIT 10 (12x18)	R2-1	1.50		13		1
520+00	RT	SPEED LIMIT 10 (12x18)	R2-1	1.50		13		1
529+00	RT	SPEED LIMIT 10 (12x18)	R2-1	1.50		13		1
532+20	RT	D2					1	1
538+00	RT	SPEED LIMIT 10 (12x18)	R2-1	1.50		13		1
543+35	RT	YIELD (24x24x24)	R1-2	1.75		14		1
543+35	RT	DO NOT ENTER (24x24)	R5-1	4.00				
543+70	LT	D10					1	1
SUB-TOTALS				**14.75**	**0**	**92**	**2**	**9**
TOTAL				**229.50**	**52**	**926**	**19**	**77**

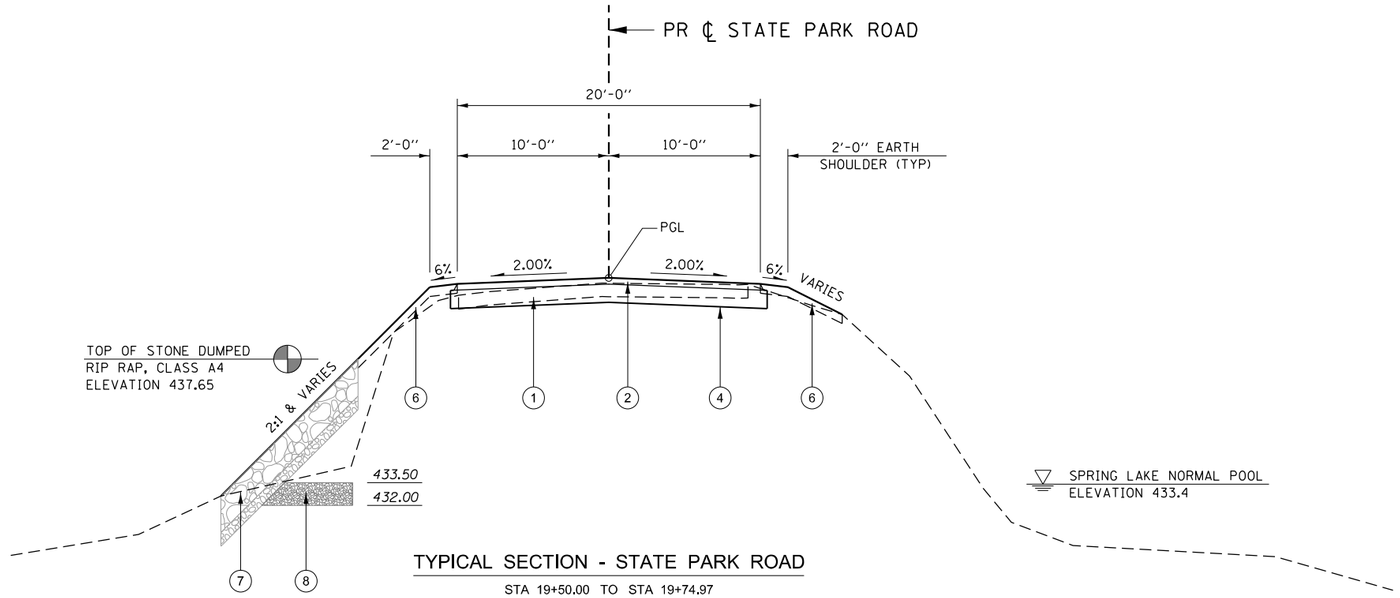

TYPICAL SECTION - STATE PARK ROAD

STA 19+50.00 TO STA 19+74.97

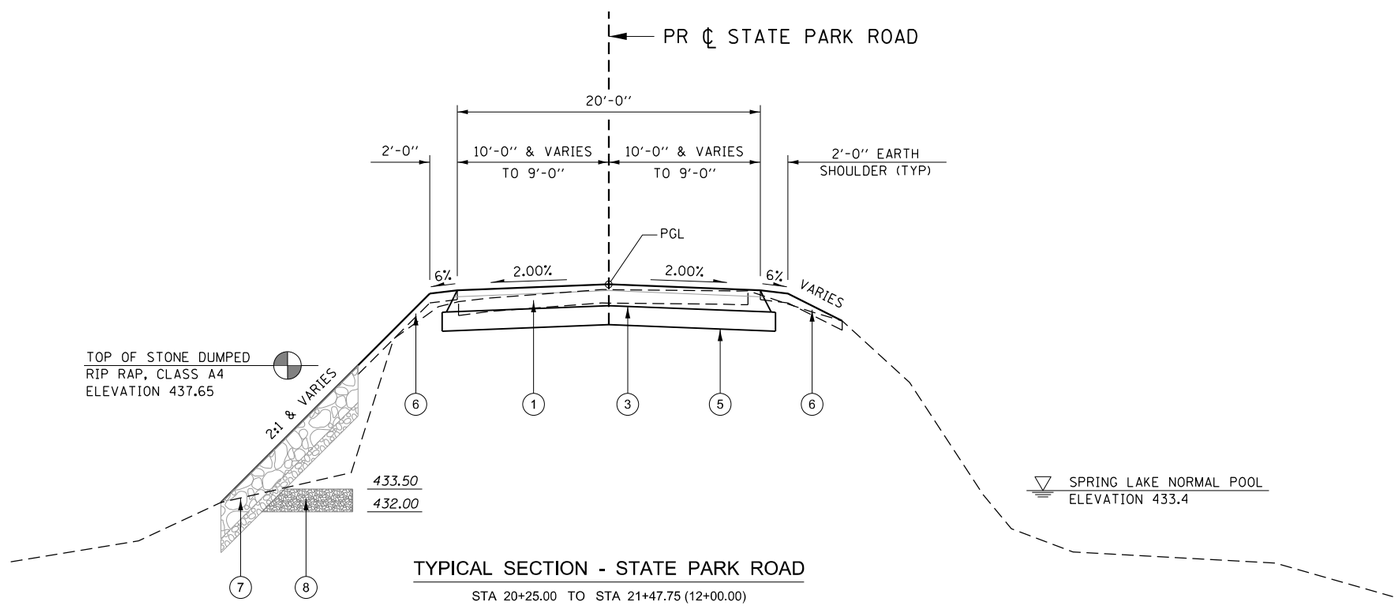

TYPICAL SECTION - STATE PARK ROAD

STA 20+25.00 TO STA 21+47.75 (12+00.00)

1. EXISTING PAVEMENT
2. HMA SURFACE COURSE, IL-9.5FG, MIX "C" N50 2"
3. HOT-MIX ASPHALT (FULL DEPTH), $6\frac{3}{4}$"
4. AGGREGATE BASE COURSE, TYPE A 8"
5. AGGREGATE BASE COURSE, TYPE B 6"
6. TOPSOIL FURNISH & PLACE 4"
7. STONE DUMPED RIP RAP, CLASS A4
8. SUBBASE GRANULAR MATERIAL, TYPE C

MODEL: $MODELNAME$
FILE NAME: $FILE$

VEENSTRA & KIMM INC.
Springfield, IL. Phone: (217)544-8033
IL. Design Firm No. 184-001939

USER NAME = $USER$	DESIGNED - JEB	REVISED -
	DRAWN - JEB	REVISED -
PLOT SCALE = $SCALE$	CHECKED - RHD	REVISED -
PLOT DATE = $DATE$	DATE - 11/14/2025	REVISED -

STATE OF ILLINOIS
DEPARTMENT OF TRANSPORTATION
DEPARTMENT OF NATURAL RESOURCES

TYPICAL SECTIONS - STATE PARK ROAD
SPRING LAKE STATE FISH & WILDLIFE AREA

SCALE: | SHEET OF SHEETS | STA. TO STA.

F.A. RTE.	SECTION	COUNTY	TOTAL SHEETS	SHEET NO.
	SPRING LAKE 2024	TAZEWELL	56	8
		CONTRACT NO. 46939		
	ILLINOIS	FED. AID PROJECT		

JOB No. 7021-005 VEENSTRA & KIMM, INC. DESIGN FIRM REGISTRATION NUMBER 184-001939

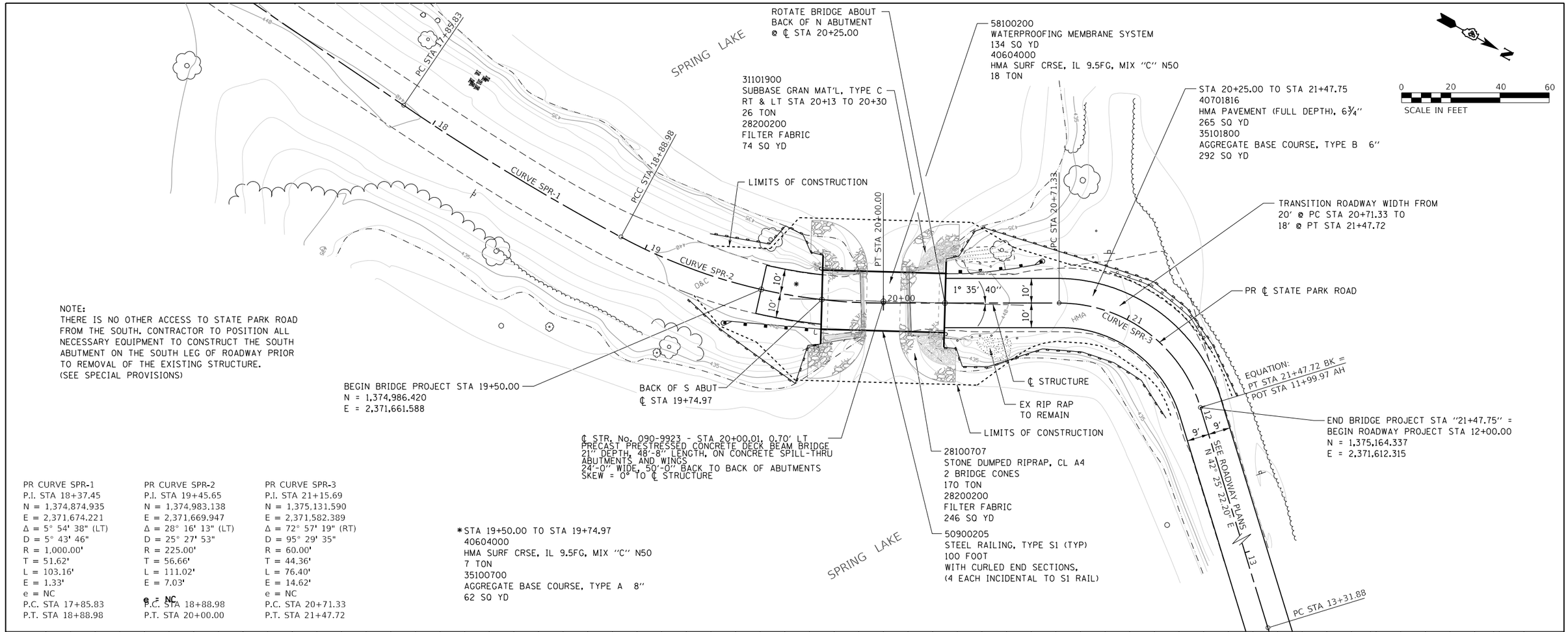

NOTE:
THERE IS NO OTHER ACCESS TO STATE PARK ROAD FROM THE SOUTH. CONTRACTOR TO POSITION ALL NECESSARY EQUIPMENT TO CONSTRUCT THE SOUTH ABUTMENT ON THE SOUTH LEG OF ROADWAY PRIOR TO REMOVAL OF THE EXISTING STRUCTURE. (SEE SPECIAL PROVISIONS)

PR CURVE SPR-1	PR CURVE SPR-2	PR CURVE SPR-3
P.I. STA 18+37.45	P.I. STA 19+45.65	P.I. STA 21+15.69
N = 1,374,874.935	N = 1,374,983.138	N = 1,375,131.590
E = 2,371,674.221	E = 2,371,669.947	E = 2,371,582.389
Δ = 5° 54' 38" (LT)	Δ = 28° 16' 13" (LT)	Δ = 72° 57' 19" (RT)
D = 5° 43' 46"	D = 25° 27' 53"	D = 95° 29' 35"
R = 1,000.00'	R = 225.00'	R = 60.00'
T = 51.62'	T = 56.66'	T = 44.36'
L = 103.16'	L = 111.02'	L = 76.40'
E = 1.33'	E = 7.03'	E = 14.62'
e = NC	e = NC	e = NC
P.C. STA 17+85.83	P.C. STA 18+88.98	P.C. STA 20+71.33
P.T. STA 18+88.98	P.T. STA 20+00.00	P.T. STA 21+47.72

*STA 19+50.00 TO STA 19+74.97
40604000
HMA SURF CRSE, IL 9.5FG, MIX "C" N50
7 TON
35100700
AGGREGATE BASE COURSE, TYPE A 8"
62 SQ YD

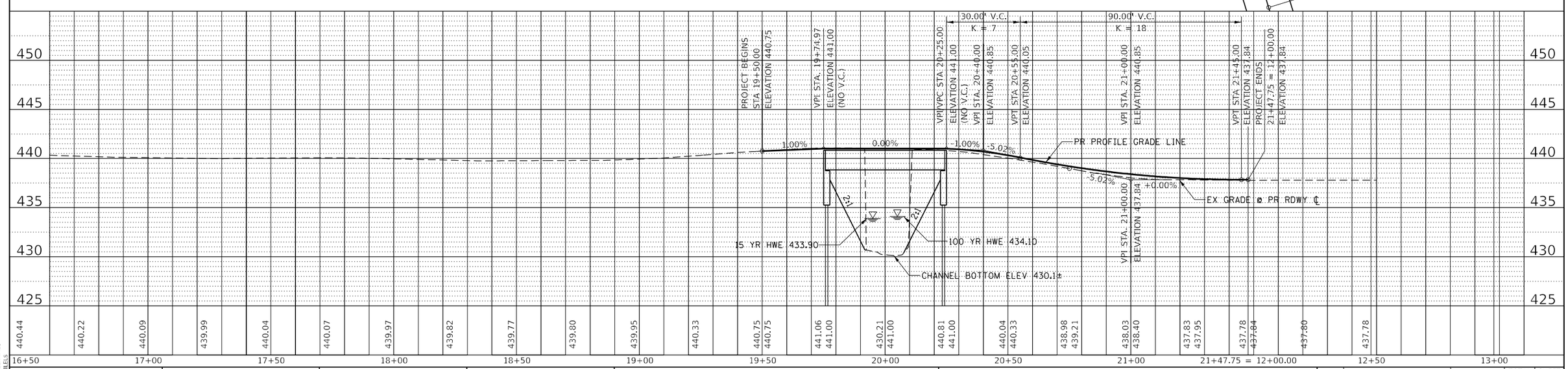

PLAN		BY	DATE
SURVEYED			
PLOTTED			
ALIGNMENT CHECKED			
R/L OF WAY CHECKED			
CADD FILE NAME			
NOTE BOOK			
NO.			

PROFILE		BY	DATE
SURVEYED			
PLOTTED			
GRADES CHECKED			
S.R. NOTED			
STRUCTURE NOTAT'NS CK'KD			
NOTE BOOK			
NO.			

MODEL: $MODELNAME$
FILE NAME: $FILEL$

VEENSTRA & KIMM INC.
Springfield, IL. Phone: (217)544-8033
IL. Design Firm No. 184-001939

USER NAME = $USER$	DESIGNED - JEB	REVISED -
	DRAWN - JEB	REVISED -
PLOT SCALE = $SCALE$	CHECKED - RHD	REVISED -
PLOT DATE = $DATE$	DATE - 11/14/2025	REVISED -

STATE OF ILLINOIS
DEPARTMENT OF TRANSPORTATION
DEPARTMENT OF NATURAL RESOURCES

PLAN & PROFILE - STATE PARK ROAD OVER SPRING LAKE
SPRING LAKE STATE FISH & WILDLIFE AREA

SCALE: 1" = 20" | SHEET 1 OF 1 SHEETS | STA. 19+50.00 TO STA. 21+47.72

F.A. RTE.	SECTION	COUNTY	TOTAL SHEETS	SHEET NO.
	SPRING LAKE 2024	TAZEWELL	56	9
	STATE PARK ROAD	CONTRACT NO. 46939		
	ILLINOIS	FED. AID PROJECT		

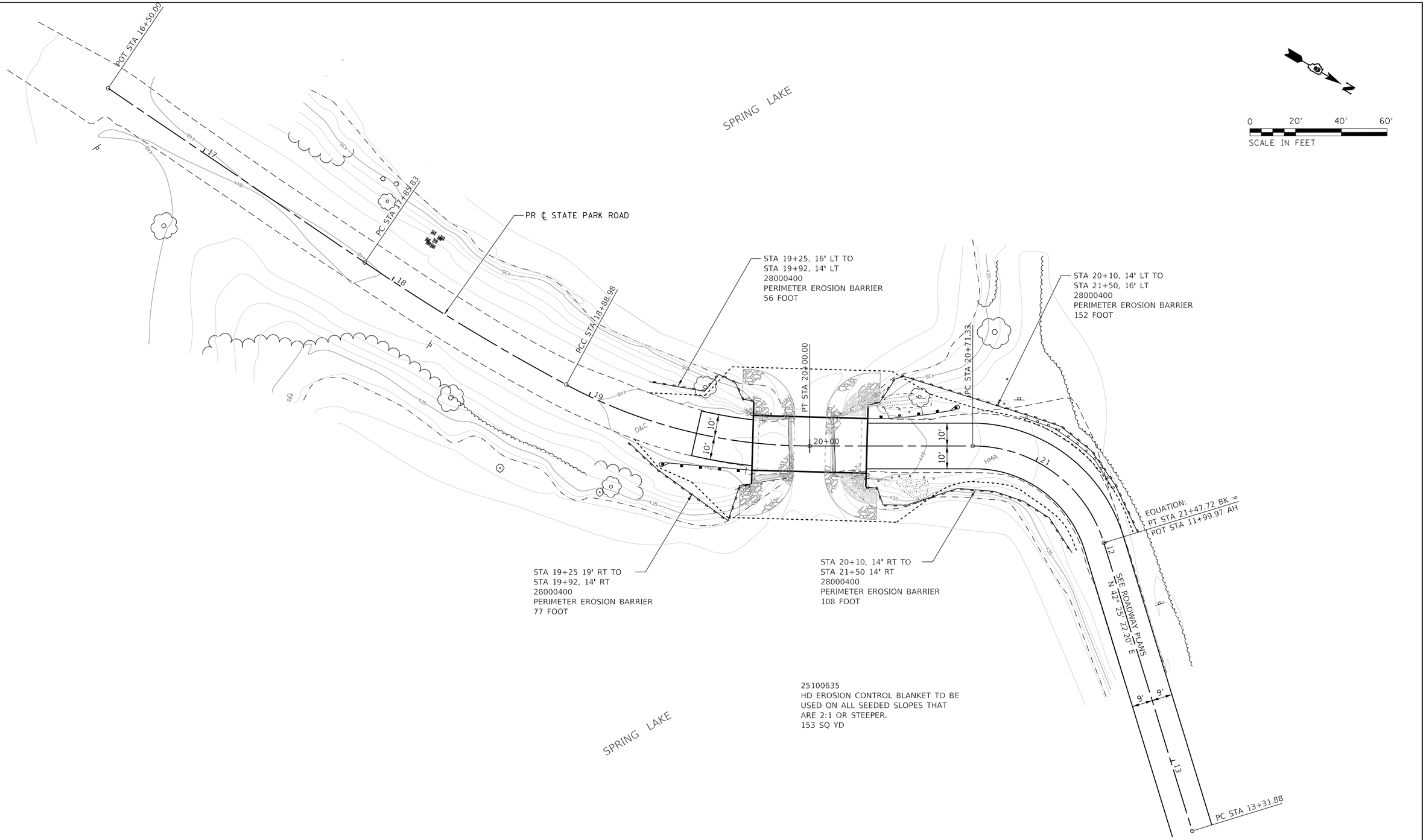

MODEL: $MODELNAME$
FILE NAME: $FILEL$

VEENSTRA & KIMM INC.
Springfield, IL. Phone: (217)544-8033
IL. Design Firm No. 184-001939

USER NAME = $USER$	DESIGNED - JEB	REVISED -	
	DRAWN - JEB	REVISED -	
PLOT SCALE = $SCALE$	CHECKED - RHD	REVISED -	
PLOT DATE = $DATE$	DATE - 11/14/2025	REVISED -	

STATE OF ILLINOIS
DEPARTMENT OF TRANSPORTATION
DEPARTMENT OF NATURAL RESOURCES

EROSION CONTROL PLAN
SPRING LAKE STATE FISH & WILDLIFE AEA

SCALE: SHEET OF SHEETS STA TO STA

F.A. RTE.	SECTION	COUNTY	TOTAL SHEETS	SHEET NO.
	SPRING LAKE 2024	TAZEWELL	56	10
	STATE PARK ROAD	CONTRACT NO. 46939		
	ILLINOIS	FED. AID PROJECT		

Benchmark: Chiseled '□' on top of curb at northeast corner of north abutment. 11.67' Rt., Sta. 20+11.19 Elev. 441.59

Existing Structure: Structure number 090-9921, built in 1958 at Station 19+75.00
The existing structure is a single span bridge having a back-to-back abutment length of 20'-3" of 7-18" deep face-to-face of curb width of 24'-0" and an out-to-out deck width of 26'-0". The superstructure consists precast concrete channel beams. The substructure consists of closed abutments with timber piling, timber backwalls, & timber pile caps and timber wing walls. The bridge is not skewed.

No salvage.

INDEX OF SHEETS

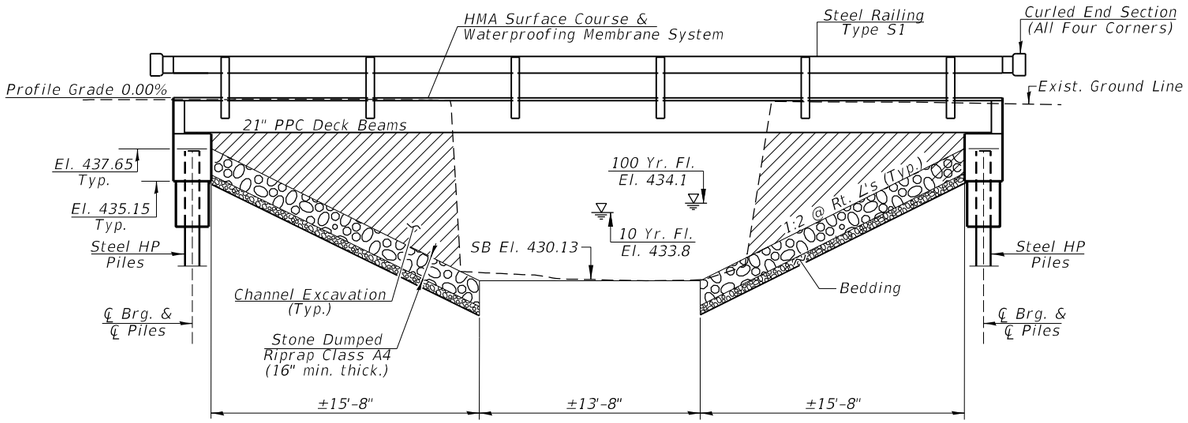

ELEVATION

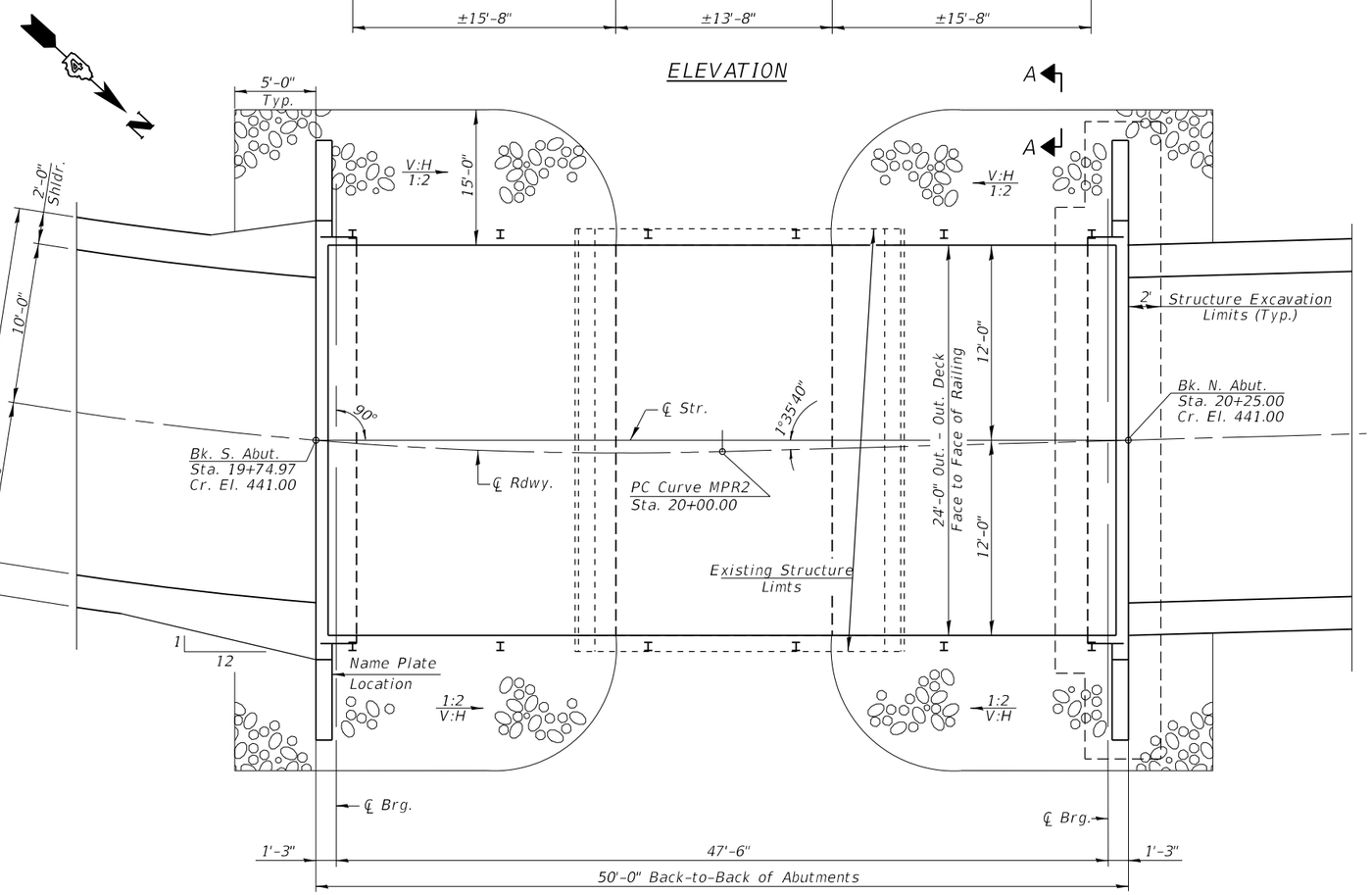

PLAN

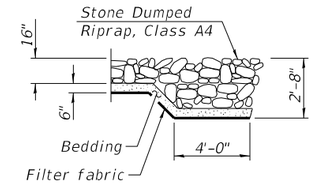

SECTION A-A

I certify that to the best of my knowledge, information and belief, this bridge design is structurally adequate for the design loading shown on the plans. The design is an economical one for the style of structure and complies with requirements of the current "A.A.S.H.T.O. LRFD Bridge Design Specifications".

MARK A. HENDERSON 5313 LICENSED STRUCTURAL ENGINEER STATE OF ILLINOIS

Expiration Date 11/30/2026

F.A.S. 459 OVER SPRING LAKE
BUILT 20 BY IDNR
SPRING LAKE STATE PARK
TAZEWELL COUNTY, IL
SEC. SPRING LAKE 2024
STATION 19+75
STR. NO. 090-9923 LOADING HL-93

NAME PLATE
See Std. 515001

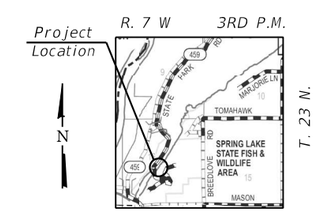

LOCATION SKETCH

GENERAL PLAN & ELEVATION
F.A.S. 459 OVER
SPRING LAKE
SECTION SPRING LAKE 2024
TAZEWELL COUNTY
STA. 19+75.00
STRUCTURE NO. 090-9923

MODEL: $MODELNAME$
FILE NAME: $FILEL$

VEENSTRA & KIMM INC.
Springfield, IL. Phone: (217)544-8033
IL. Design Firm No. 184-001939

USER NAME =	DESIGNED - KNF	REVISED -	
	CHECKED - MAH	REVISED -	
PLOT SCALE =	DRAWN - KNF	REVISED -	
PLOT DATE = 11/14/2025	CHECKED - MAH	REVISED -	

STATE OF ILLINOIS
DEPARTMENT OF TRANSPORTATION
DEPARTMENT OF NATURAL RESOURCES

GENERAL PLAN & ELEVATION
STRUCTURE NO. 090-9923

SHEET 1 OF 11 SHEETS

F.A.S. RTE.	SECTION	COUNTY	TOTAL SHEETS	SHEET NO.
459	SPRING LAKE 2024	TAZEWELL	56	11
		CONTRACT NO. 46939		
	ILLINOIS	FED. AID PROJECT		

$DATE$ $TIME$

GENERAL NOTES

Layout of the slope protection system may be varied to suit ground conditions in the field as directed by the Engineer.

The Contractor shall drive test piles to 110% of the nominal required bearing specified in production locations at the North/South Abutment or approved by the Engineer before ordering the remainder of piles.

Reinforcement bars designated (E) shall be epoxy coated.

Contractor is responsible for the removal and disposal of any excess channel excavation not incorporated back into the project. The disposal of any excess material shall be in accordance with Article 202.03. Cost to dispose of excess excavation will be included in the unit cost of Channel Excavation.

The removal of the existing retaining walls parallel to the roadway at each corner of the existing bridge is included with Removal of Existing Structures.

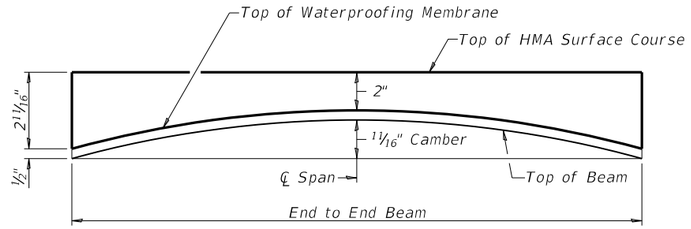

HMA SURFACE COURSE PROFILE & ANTICIPATED CAMBER DIAGRAM

TOTAL BILL OF MATERIAL

ITEM	UNIT	SUPER	SUB	TOTAL
Channel Excavation	Cu Yd		219	219
Porous Granular Embankment	Cu Yd		38	38
Stone Dumped Riprap, Class A4	Ton		170	170
Filter Fabric	Sq Yd		246	246
Hot-Mix Asphalt Surface Course, IL-9.5FG, Mix "C", N50	Ton	18		18
Removal Of Existing Structures No. 2	Each	1		1
Structure Excavation	Cu Yd		118	118
Concrete Structures	Cu Yd		22.8	22.8
Concrete Encasement	Cu Yd		2.8	2.8
Precast Prestressed Concrete Deck Beams (21" Depth)	Sq Ft	1168		1168
Reinforcement Bars, Epoxy Coated	Pound		3360	3360
Steel Railing, Type S1	Foot	100		100
Furnishing Steel Piles HP 10X42	Foot		243	243
Driving Piles	Foot		243	243
Test Pile Steel HP 10X42	Each		2	2
Pile Shoes	Each		8	8
Name Plates	Each	1		1
Waterproofing Membrane System	Sq Yd	134		134

DESIGN SCOUR ELEVATION TABLE

Event / Limit State	Design Scour Elevations (ft.)		Item 113
	W. Abut.	E. Abut.	
Q100	435.15	435.15	8
Q200	435.15	435.15	
Design	435.15	435.15	
Check	435.15	435.15	

WATERWAY INFORMATION

Drainage Area = 1.71 Sq. Mi. Low Grade Elev. 437.8 @ Sta. 21+50

Flood	Freq. Yr.	Q C.F.S.	Opening Ft²		Nat. H.W.E.	Head - Ft.		Headwater El.	
			Exist.	Prop.		Exist.	Prop.	Exist.	Prop.
	10	0	210	279	433.8	0	0	433.8	433.8
Design	15	0	210	279	433.9	0	0	433.8	433.8
Base	100	0	210	279	434.1	0	0	434.1	434.1
	200	0	210	279	434.2	0	0	434.2	434.2
Max. Calc.	500	0	210	279	434.3	0	0	434.3	434.4

LOADING HL-93

Allow 50#/Sq. Ft. for future wearing surface.

DESIGN SPECIFICATIONS

2020 AASHTO LRFD Bridge Design Specifications, 9th Edition.

DESIGN STRESSES

FIELD UNITS

f'c = 3,500 psi (Substructure)
fy = 60,000 psi (Reinforcement)

PRECAST PRESTRESSED UNITS

f'c = 6,000 psi
f'ci = 5,000 psi
fpu = 270,000 psi (½"Ø low lax strands)
fpbt = 201,960 psi (½"Ø low lax strands)

SEISMIC DATA

2023 AASHTO Seismic Hazard
Site Class D
Latitude 40.44212, Longitude -89.89698
Performance Level Operational

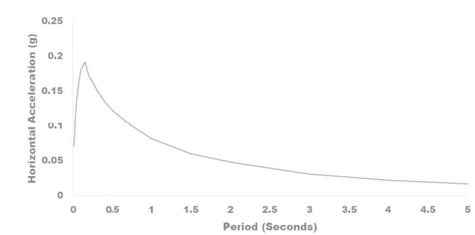

Vertical Acceleration = ⅔ * Horizontal Acceleration
SD1 = 0.134 g
SDS = 0.098 g
SDC = A

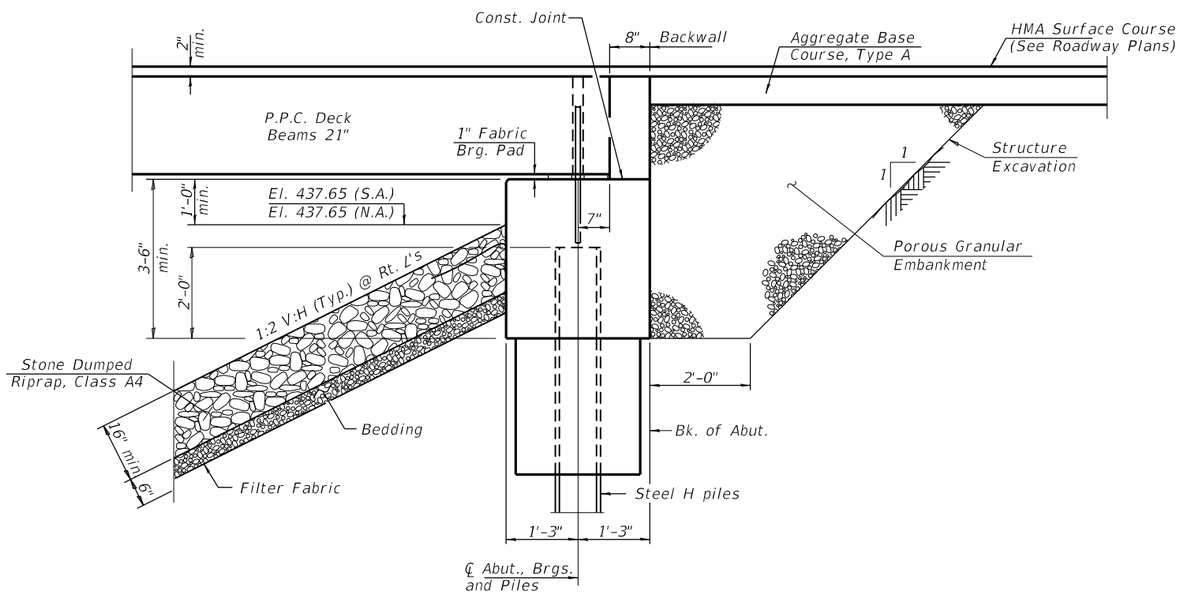

SECTION THRU ABUTMENT

(Horiz. dimensions at Rt. angles)

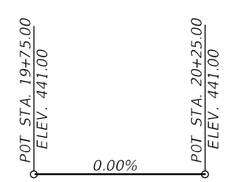

PROFILE GRADE

MODEL: $MODELNAME$
FILE NAME: $FILEL$

VEENSTRA & KIMM INC.
Springfield, IL. Phone: (217)544-8033
IL. Design Firm No. 184-001939

USER NAME = ___	DESIGNED - KNF	REVISED - ___	
	CHECKED - MAH	REVISED - ___	
PLOT SCALE = ___	DRAWN - KNF	REVISED - ___	
PLOT DATE = 11/14/2025	CHECKED - MAH	REVISED - ___	

STATE OF ILLINOIS
DEPARTMENT OF TRANSPORTATION
DEPARTMENT OF NATURAL RESOURCES

GENERAL DATA
STRUCTURE NO. 090-9923

SHEET 2 OF 11 SHEETS

F.A.S. RTE.	SECTION	COUNTY	TOTAL SHEETS	SHEET NO.
459	SPRING LAKE 2024	TAZEWELL	56	11

CONTRACT NO. 46939

ILLINOIS | FED. AID PROJECT

$DATE$ $TIME$

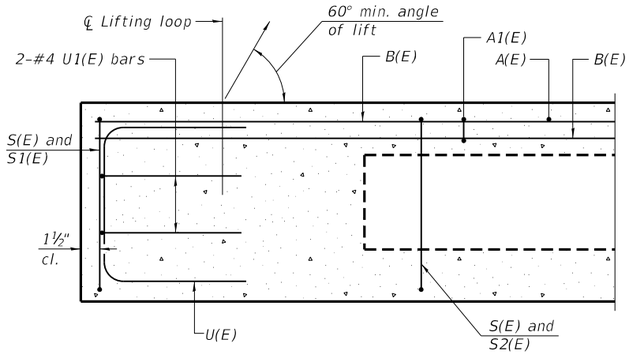

SECTION A-A

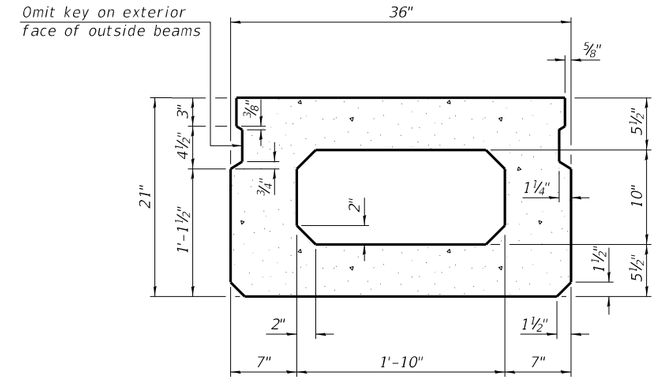

SECTION B-B
(Showing dimensions)

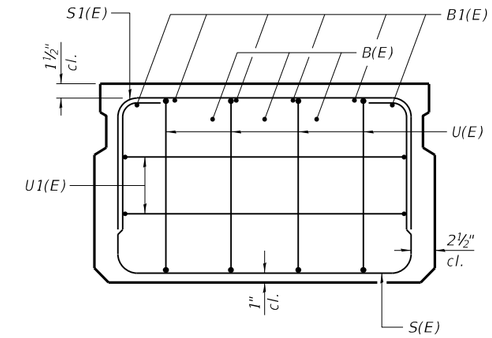

VIEW C-C

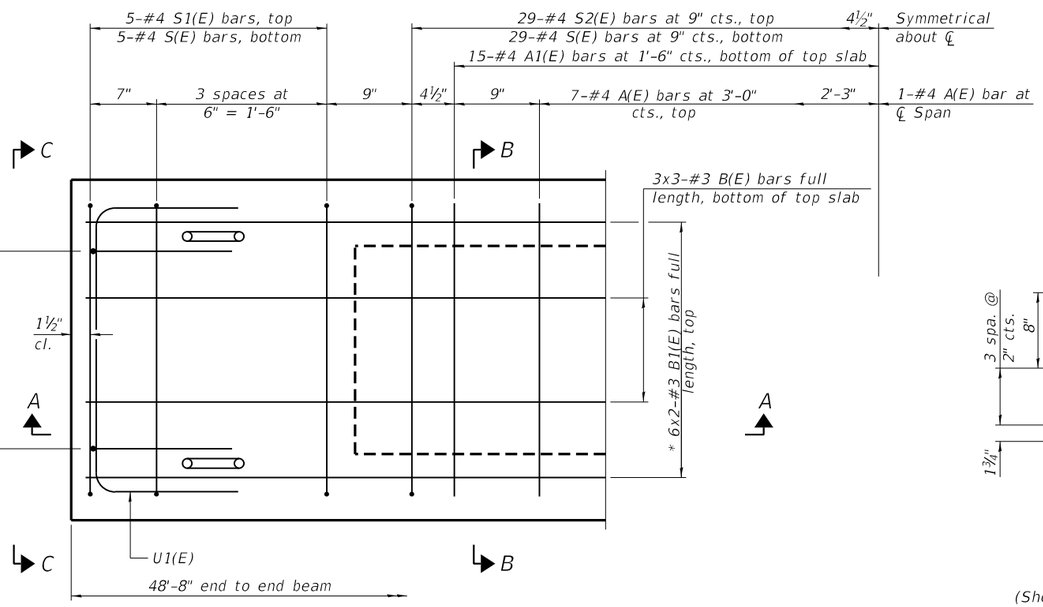

PLAN VIEW

Note:
Spacing of S(E) and S2(E) bars may be adjusted up to 4" in the immediate area of the transverse tie diaphragms to miss the block outs for the transverse ties.

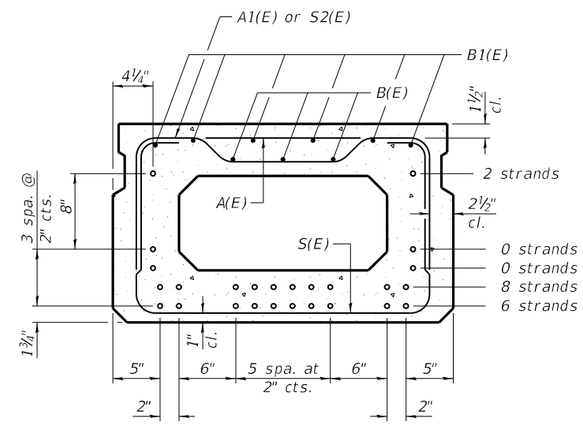

SECTION B-B
(Showing reinforcement and permissible strand locations)

Note:
Place the number of strands specified in each row symmetrically about the centerline of beam in the permissible strand locations shown.

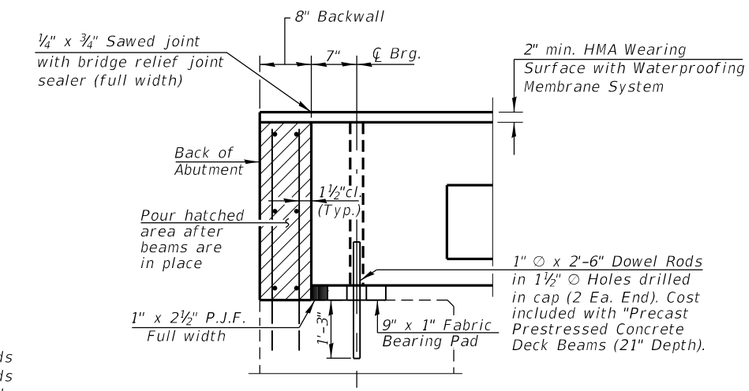

SECTION THRU ABUTMENT

BAR LIST
ONE BEAM ONLY
(For information only)

Bar	No.	Size	Length	Shape
A(E)	15	#4	2'-7"	
A1(E)	29	#4	2'-10"	
B(E)	9	#3	17'-3"	
B1(E)	12	#3	25'-0"	
S(E)	68	#4	6'-5"	
S1(E)	10	#4	4'-11"	
S2(E)	58	#4	5'-2"	
U(E)	8	#5	4'-0"	
U1(E)	4	#4	5'-0"	

Note:
See sheet 4 of 11 for additional details and Bill of Material.

MINIMUM BAR LAP
#3 bar = 1'-6"

PD-2136-0 5-15-2023

MODEL: $MODELNAME$
FILE NAME: $FILEL$

VEENSTRA & KIMM INC.
Springfield, IL. Phone: (217)544-8033
IL. Design Firm No. 184-001939

USER NAME = ___	DESIGNED - KNF	REVISED - ___	
	CHECKED - MAH	REVISED - ___	
PLOT SCALE = ___	DRAWN - KNF	REVISED - ___	
PLOT DATE = 11/14/2025	CHECKED - MAH	REVISED - ___	

STATE OF ILLINOIS
DEPARTMENT OF TRANSPORTATION
DEPARTMENT OF NATURAL RESOURCES

21" x 36" PPC DECK BEAM
STRUCTURE NO. 090-9923

SHEET 3 OF 11 SHEETS

F.A.S. RTE.	SECTION	COUNTY	TOTAL SHEETS	SHEET NO.
459	SPRING LAKE 2024	TAZEWELL	56	13

CONTRACT NO. 46939
ILLINOIS FED. AID PROJECT

$DATE$ $TIME$

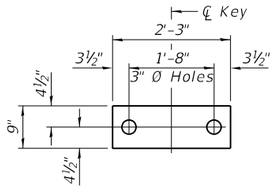

FABRIC BEARING PAD
(Interior)

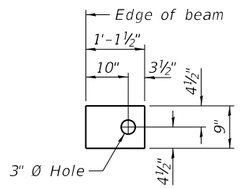

FABRIC BEARING PAD
(Exterior)

FIXED

Notes:
All bearing pads shall be 1" thick.
Omit holes when using expansion bearings.
Expansion bearing pads shall be bonded to the substructure.

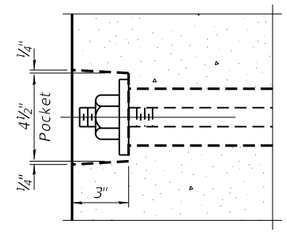

SECTION A-A

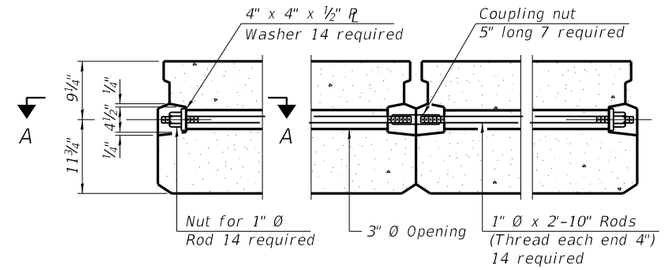

TYPICAL TRANSVERSE TIE ASSEMBLY

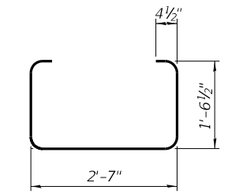

BAR S(E)

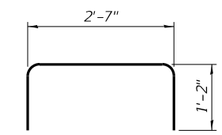

BAR S1(E)

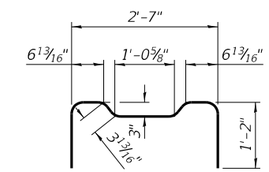

BAR S2(E)

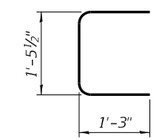

BAR U(E)

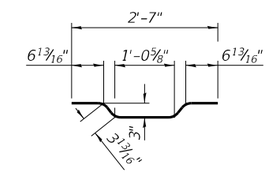

BAR A1(E)

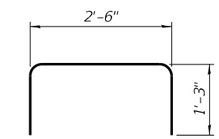

BAR U1(E)

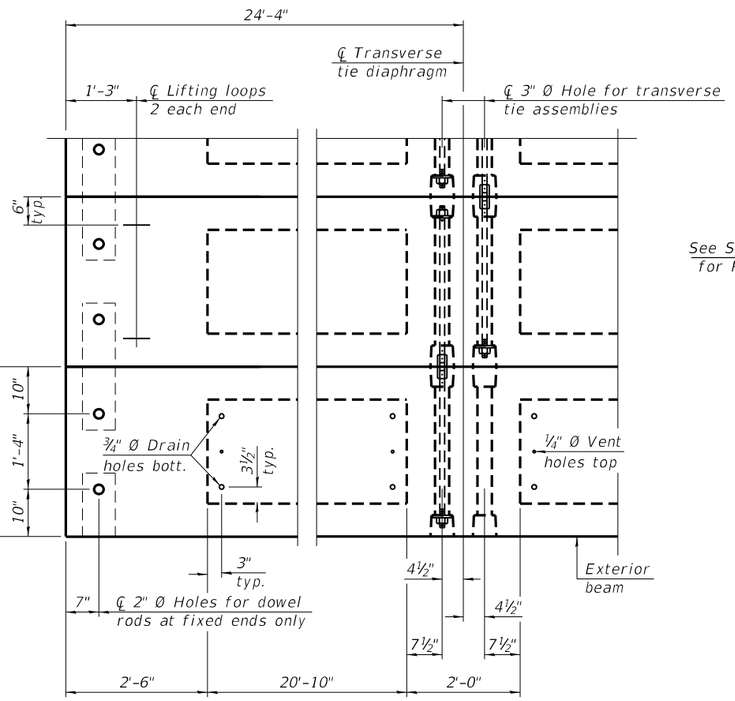

PLAN VIEW

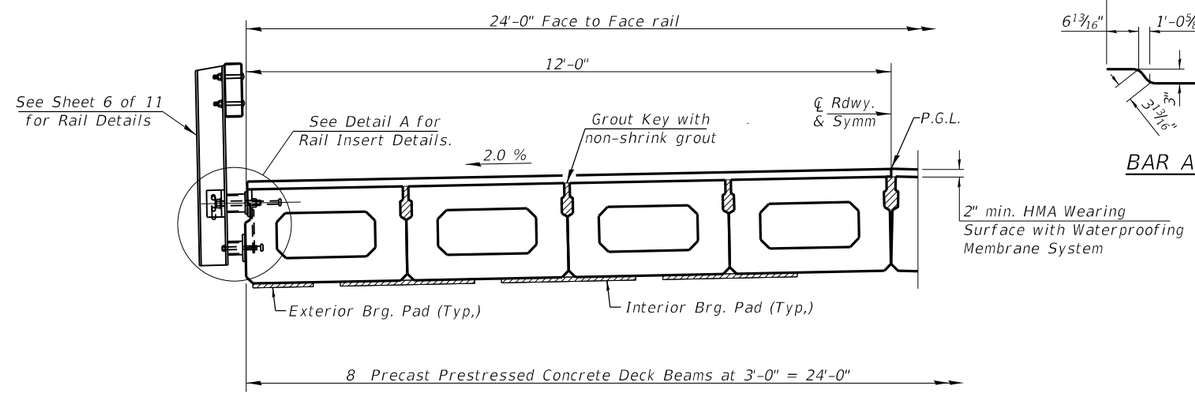

CROSS SECTION

Note: See Sheet 3 & 4 of 11 for Superstructure Details

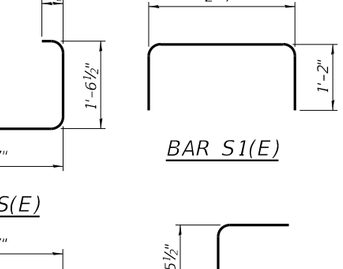

LIFTING LOOP DETAIL

Note:
Connect beams in pairs with the transverse tie configuration shown.

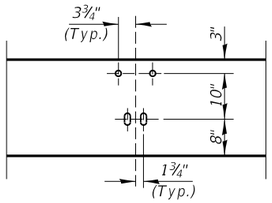

DETAIL A

NOTES

Prestressing steel shall be uncoated high strength, low relaxation 7-wire strand, Grade 270. The nominal diameter shall be ½" and the nominal cross-sectional area shall be 0.153 sq. in.

The 1" Ø rods in the transverse tie assembly shall be tightened to a snug fit and the threads set. Pockets on exterior faces of bridge shall be filled with grout after transverse tie assembly is in place.

Two ⅛" fabric adjusting shims of the dimensions of the exterior bearing pad shall be provided for each bearing pad location.

A minimum 2½" Ø lifting pin shall be used to engage the lifting loops during handling.

Corrosion Inhibitor, per Article 1020.05(b)(10) and 1021.07 of the Standard Specifications, shall be used in the concrete for precast prestressed concrete deck beams.

Compressive strength of prestressed concrete, f'c, shall be 6000 psi.

Compressive strength of prestressed concrete at release, f'ci, shall be 5000 psi.

BILL OF MATERIAL

Precast Prestressed Conc. Deck Bms. (21" depth)	Sq. Ft.	1168

PDD-2136-0 5-15-2023

MODEL: $MODELNAME$
FILE NAME: $FILE$

VEENSTRA & KIMM INC.
Springfield, IL. Phone: (217)544-8033
IL. Design Firm No. 184-001939

USER NAME = ___	DESIGNED - KNF	REVISED - ___	
	CHECKED - MAH	REVISED - ___	
PLOT SCALE = ___	DRAWN - KNF	REVISED - ___	
PLOT DATE = 11/14/2025	CHECKED - MAH	REVISED - ___	

STATE OF ILLINOIS
DEPARTMENT OF TRANSPORTATION
DEPARTMENT OF NATURAL RESOURCES

21" x 36" PPC DECK BEAM DETAILS
STRUCTURE NO. 090-9923

SHEET 4 OF 11 SHEETS

F.A.S. RTE.	SECTION	COUNTY	TOTAL SHEETS	SHEET NO.
459	SPRING LAKE 2024	TAZEWELL	56	14
		CONTRACT NO. 46939		
		ILLINOIS FED. AID PROJECT		

$DATE$ $TIME$

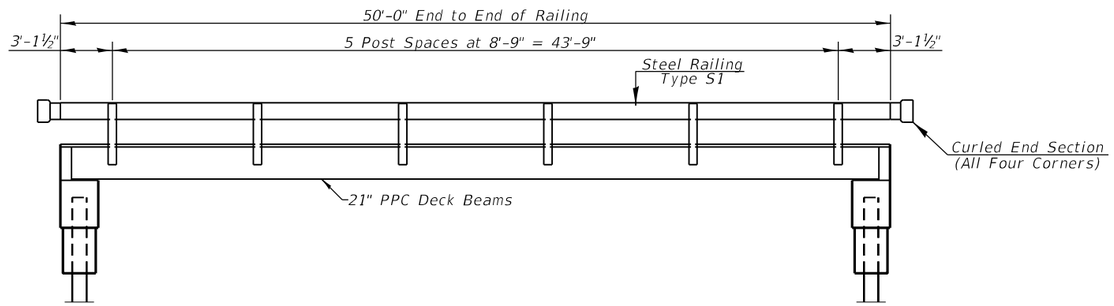

ELEVATION

(Showing Rail Post Spaces)

Note: See Sheet 6 of 11 for railing details

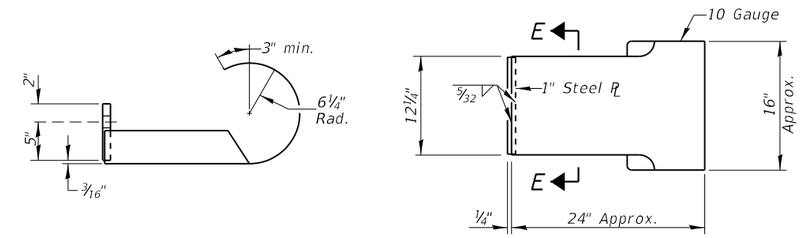

CURLED END SECTION DETAILS

(4 Required)

Note: Cost of Curled End Sections to be included in the cost of Steel Railing, Type S-1.

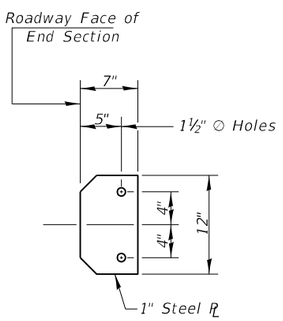

SECTION E-E

MODEL: $MODELNAME$
FILE NAME: $FILE$

VEENSTRA & KIMM INC. Springfield, IL. Phone: (217)544-8033 IL. Design Firm No. 184-001939	USER NAME = ___	DESIGNED - KNF	REVISED - ___	STATE OF ILLINOIS DEPARTMENT OF TRANSPORTATION DEPARTMENT OF NATURAL RESOURCES	SUPERSTRUCTURE DETAILS STRUCTURE NO. 090-9923	F.A.S. RTE.	SECTION	COUNTY	TOTAL SHEETS	SHEET NO.
		CHECKED - MAH	REVISED - ___			459	SPRING LAKE 2024	TAZEWELL	56	15
	PLOT SCALE = ___	DRAWN - KNF	REVISED - ___			CONTRACT NO. 46939				
	PLOT DATE = 11/14/2025	CHECKED - MAH	REVISED - ___		SHEET 5 OF 11 SHEETS	ILLINOIS FED. AID PROJECT				

$DATE$ $TIME$

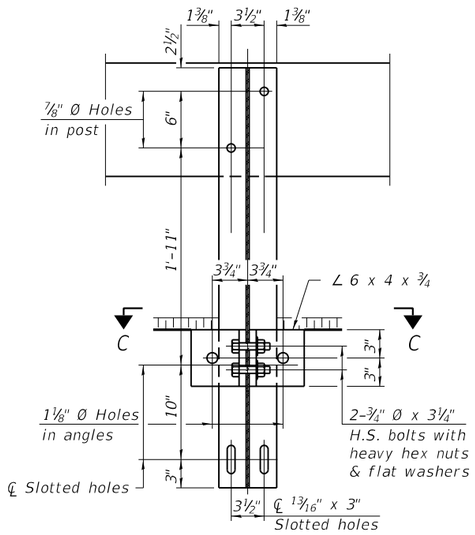

SECTION B-B

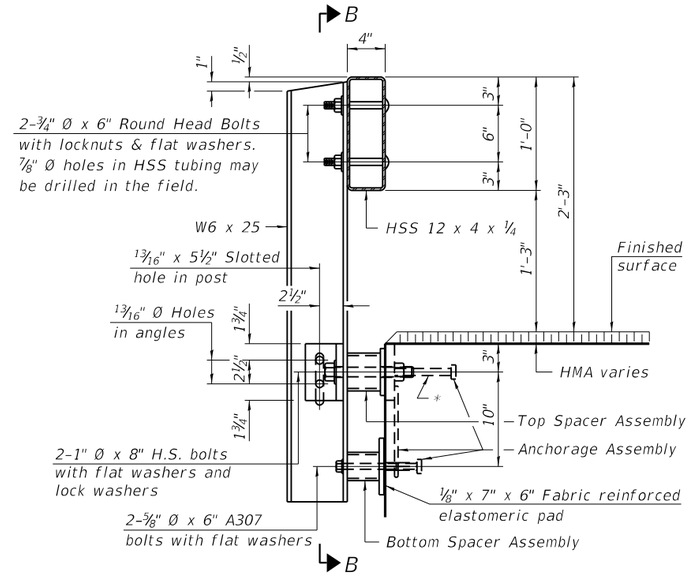

SECTION AT RAILING POST

* The outermost longitudinal reinforcement bar shall be placed directly above the studs of the rail post anchorage assembly. The anchorage studs may be bent down ½" to accommodate the top reinforcement bar placement.

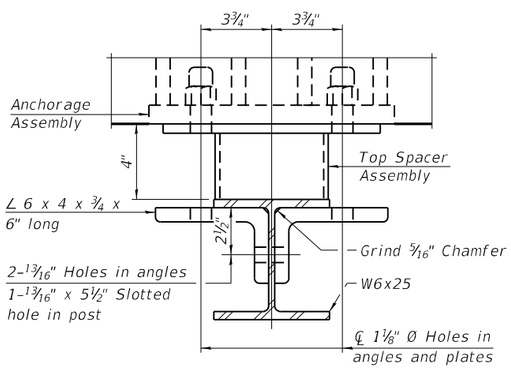

SECTION C-C

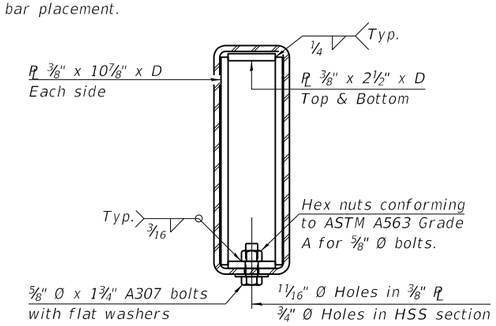

SECTION AT RAIL SPLICE

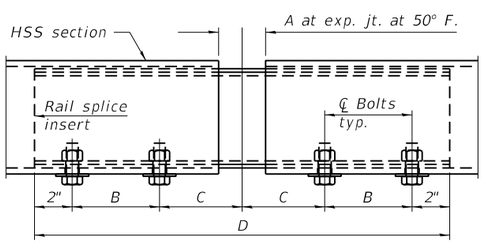

RAIL SPLICE ELEVATION

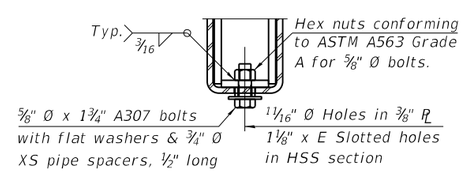

RAIL SPLICE CONNECTION AT EXPANSION JT.

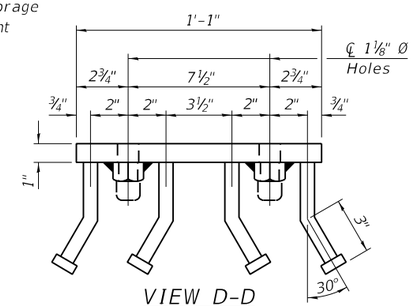

VIEW D-D

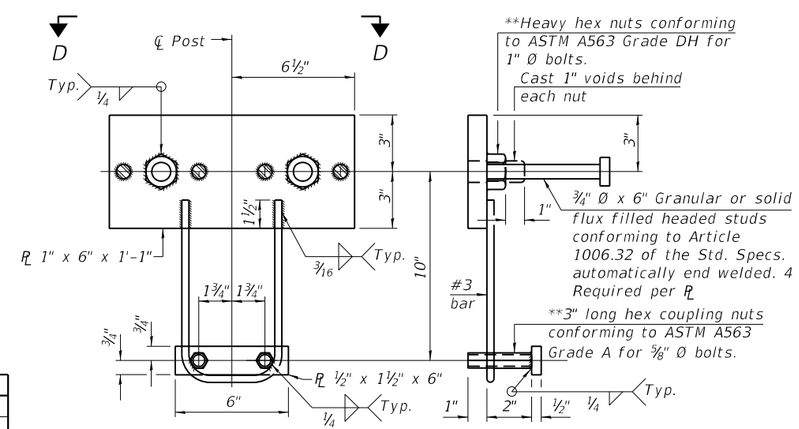

ANCHORAGE ASSEMBLY

** Threaded areas shall be plugged or blocked off during casting of concrete.

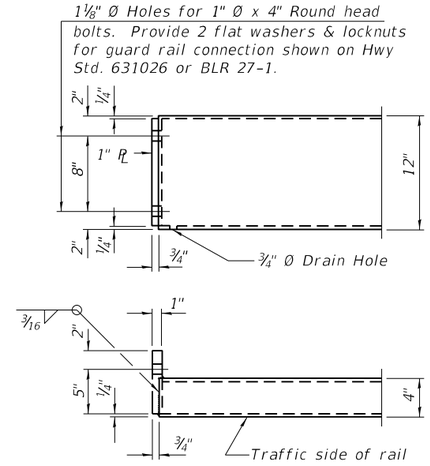

END OF RAIL DETAILS

Notes:

A sufficient number of shims of various thicknesses, sized to fit behind the top spacer assembly, 5" x 11½", and bottom spacer assembly, 6" x 7", shall be provided to adjust posts for proper alignment. If the summation of shims is greater than ¼" (top) or ½" (bottom), longer bolts are required. Cost included with Steel Railing, Type S-1.

All steel rail elements including shims shall be galvanized according to Article 509.05 of the Standard Specifications.

All HSS tubing serving as railing shall be CVN tested according to Article 1006.34(b) of the Standard Specifications.

Rail splice inserts may be built out of 2 -⅜" bent plates in lieu of the 4 plate rail splice inserts shown, provided the outside dimensions are matched.

All round head bolts shall be ASTM A307 with locknuts according to ASTM A563 grade A.

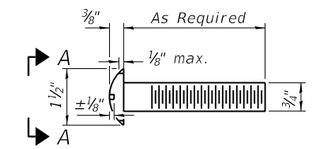

ROUND HEAD BOLT DETAIL

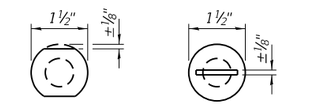

Without Slot or Recess

With Slot (shown) or Approved Recess

VIEW A-A

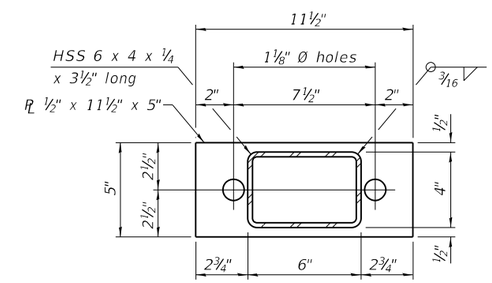

TOP SPACER ASSEMBLY

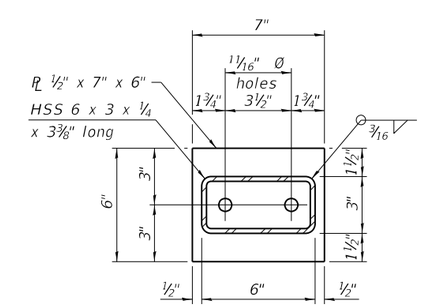

BOTTOM SPACER ASSEMBLY

RAILING CRITERIA

NCHRP 350 Test Level	2
Railing Weight (plf)	50
Max Post Spacing	10'-9"
HMA thickness range (in)	1¼ - 3⅛

SPLICE DIMENSIONS

Location	T	A	B	C	D	E
All locs. not over exp. jts.	0	¼"	4"	4"	1'-8"	-
Over Strip Seal Jt.	≤4"	2½"	4⅝"	4⅜"	1'-10"	3 1/16"
Over Finger or Modular Jt.	≤9½"	5½"	7⅜"	7¼"	2'-9¼"	5 13/16"
Over Finger or Modular Jt.	≤15"	8¼"	10⅛"	10"	3'-8¼"	8 9/16"

T = ; total movement along centerline of roadway at expansion joint.

BILL OF MATERIAL

Item	Unit	Quantity
Steel Railing, Type S-1	Foot	100

R-23A 10-12-2021

MODEL: $MODELNAME$
FILE NAME: $FILEL$

VEENSTRA & KIMM INC.
Springfield, IL. Phone: (217)544-8033
IL. Design Firm No. 184-001939

USER NAME = ___	DESIGNED - KNF	REVISED - ___
	CHECKED - MAH	REVISED - ___
PLOT SCALE = ___	DRAWN - KNF	REVISED - ___
PLOT DATE = 11/14/2025	CHECKED - MAH	REVISED - ___

$DATE$ $TIME$

STATE OF ILLINOIS
DEPARTMENT OF TRANSPORTATION
DEPARTMENT OF NATURAL RESOURCES

STEEL RAILING, TYPE S-1
STRUCTURE NO. 090-9923

SHEET 6 OF 11 SHEETS

F.A.S. RTE.	SECTION	COUNTY	TOTAL SHEETS	SHEET NO.
459	SPRING LAKE 2024	TAZEWELL	56	16

CONTRACT NO. 46939

ILLINOIS | FED. AID PROJECT

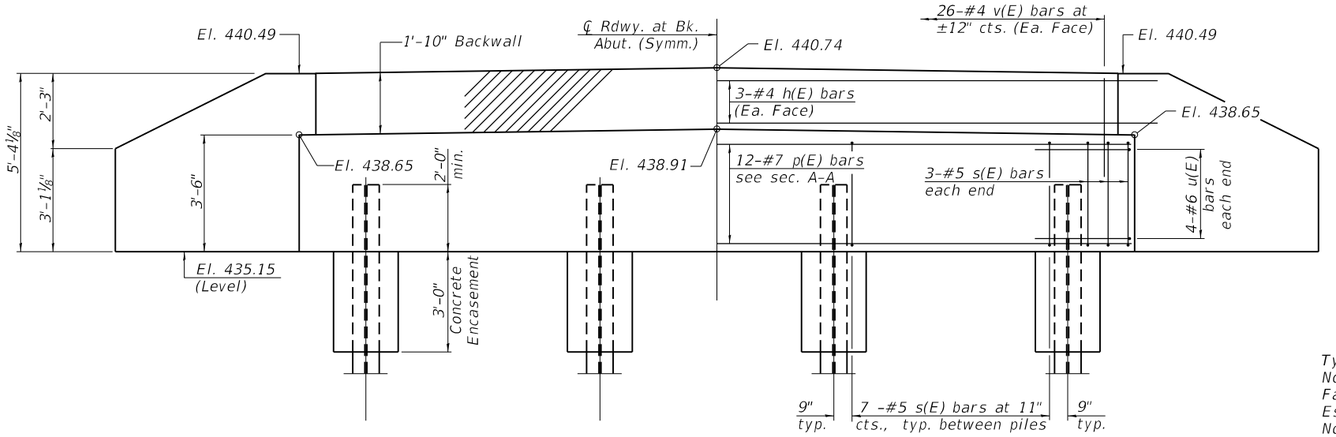

ELEVATION
(Looking North)

PILE DATA

Type:	HP 10x42 w/ Pile Shoes
Nominal Required Bearing:	275 kips
Factored Resistance Available:	151 kips
Est. Length:	41'
No. Production Piles:	3
No. Test Piles:	1

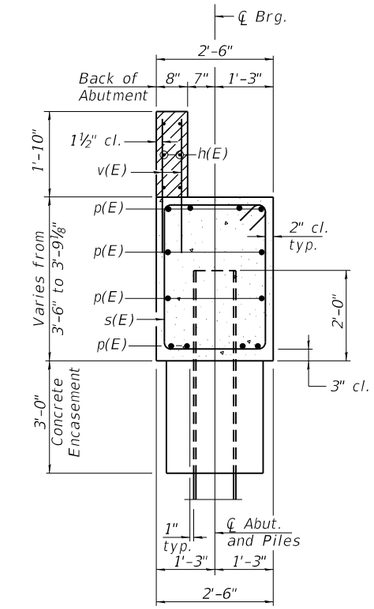

SECTION A-A

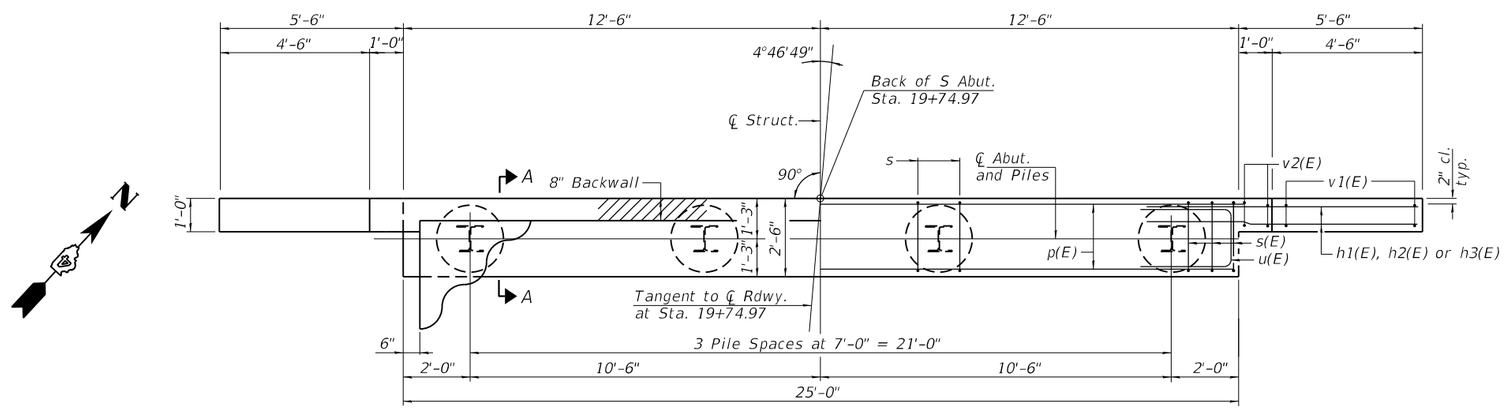

PLAN

BILL OF MATERIAL

Bar	No.	Size	Length	Shape
h(E)	6	#4	26'-8"	
h1(E)	16	#5	8'-4"	
h2(E)	8	#5	6'-4"	
h3(E)	4	#5	6'-1"	
p(E)	12	#7	24'-8"	
s(E)	27	#5	11'-5"	
u(E)	8	#6	10'-1"	
v(E)	52	#4	3'-8"	
v1(E)	10	#5	7'-8"	
v2(E)	8	#5	4'-11"	
Structure Excavation			Cu. Yd.	59
Concrete Structures			Cu. Yd.	11.4
Reinforcement Bars, Epoxy Coated			Pound	1680
Furnishing Steel Piles HP10X42			Foot	123
Driving Piles			Foot	123
Test Pile Steel HP10X42			Each	1
Concrete Encasement			Cu. Yd.	1.4
Pile Shoes			Each	4

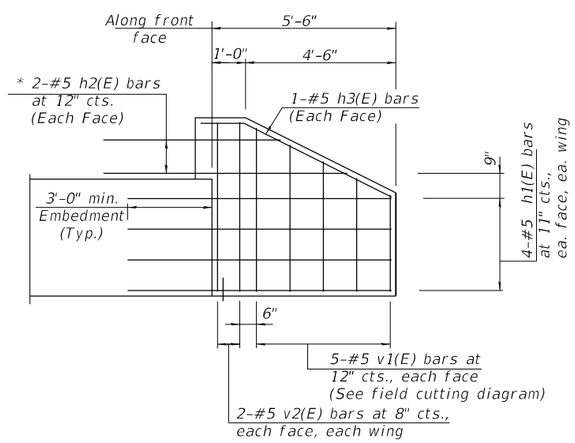

WINGWALL ELEVATION

* Field cut as required

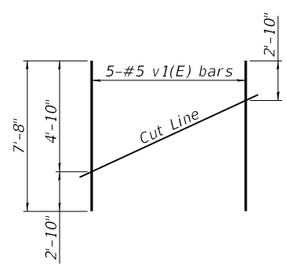

FIELD CUTTING DIAGRAM

Order v1(E) bars full length. Lay out in field according to diagram. Cut bars along cut line. Use remainder of bars in opposite face.

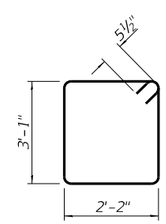

BAR s(E)

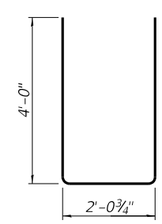

BAR u(E)

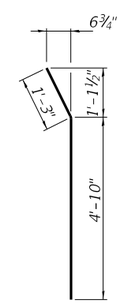

BAR h3(E)

NOTES

All exposed edges shall have standard ¾" chamfer.

Wingwalls and backwalls may, at the contractor's option, be cast monolithically.

Hatched area and wingwalls shall be poured after deck beams are anchored in place.

The contractor shall drive one test pile at south abutment in a production location as specified or approved by the Engineer.

For details of piles see Sheet 9 of 11.

MODEL: $MODELNAME$
FILE NAME: $FILEL$

VEENSTRA & KIMM INC.
Springfield, IL. Phone: (217)544-8033
IL. Design Firm No. 184-001939

USER NAME =	DESIGNED - KNF	REVISED -	
	CHECKED - MAH	REVISED -	
PLOT SCALE =	DRAWN - KNF	REVISED -	
PLOT DATE = 11/14/2025	CHECKED - MAH	REVISED -	

STATE OF ILLINOIS
DEPARTMENT OF TRANSPORTATION
DEPARTMENT OF NATURAL RESOURCES

SOUTH ABUTMENT
STRUCTURE No. 090-9923

SHEET 7 OF 11 SHEETS

F.A.S. RTE.	SECTION	COUNTY	TOTAL SHEETS	SHEET NO.
459	SPRING LAKE 2024	TAZEWELL	56	17

CONTRACT NO. 46939

ILLINOIS | FED. AID PROJECT

$DATE$ $TIME$

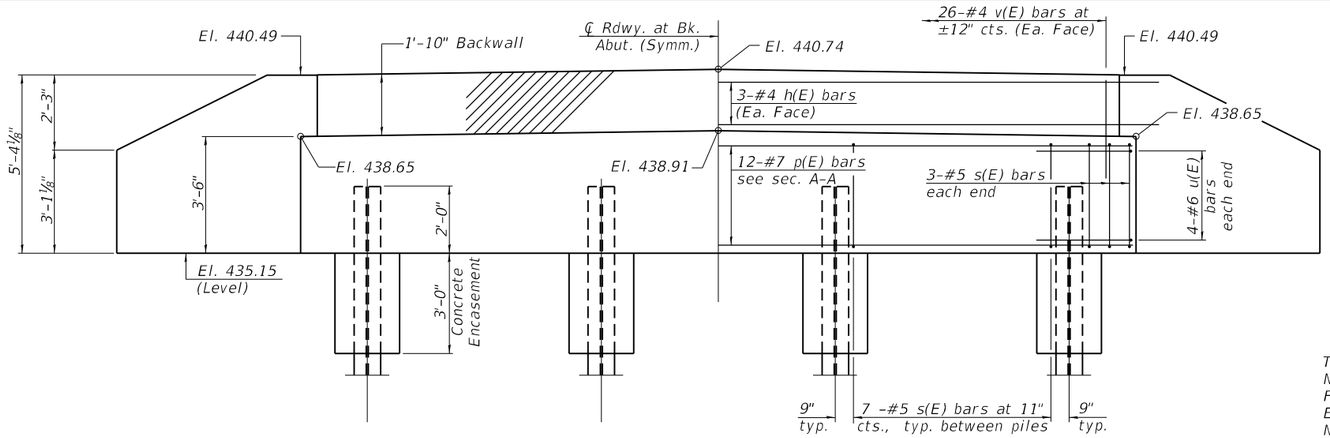

ELEVATION
(Looking North)

PILE DATA

Type:	HP 10x42 w/ Pile Shoes
Nominal Required Bearing:	275 kips
Factored Resistance Available:	151 kips
Est. Length:	40'
No. Production Piles:	3
No. Test Piles:	1

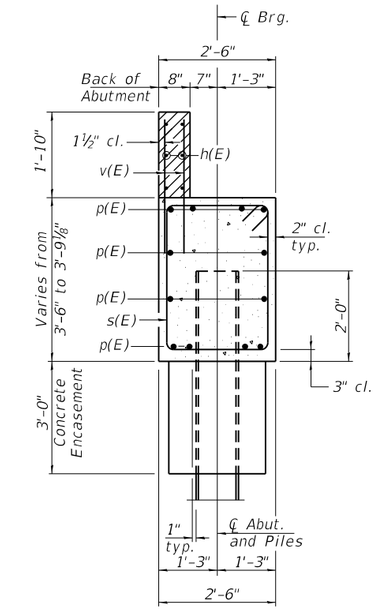

SECTION A-A

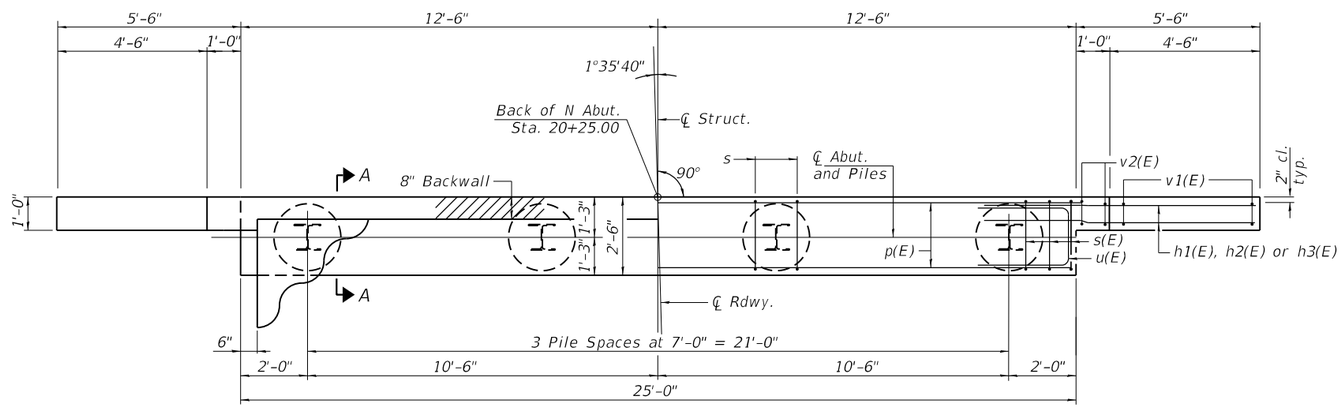

PLAN

BILL OF MATERIAL

Bar	No.	Size	Length	Shape
h(E)	6	#4	26'-8"	
h1(E)	16	#5	8'-4"	
h2(E)	8	#5	6'-4"	
h3(E)	4	#5	6'-1"	
p(E)	12	#7	24'-8"	
s(E)	27	#5	11'-5"	
u(E)	8	#6	10'-1"	
v(E)	52	#4	3'-8"	
v1(E)	10	#5	7'-8"	
v2(E)	8	#5	4'-11"	

Structure Excavation	Cu. Yd.	59
Concrete Structures	Cu. Yd.	11.4
Reinforcement Bars, Epoxy Coated	Pound	1680
Furnishing Steel Piles HP10X42	Foot	120
Driving Piles	Foot	120
Test Pile Steel HP10X42	Each	1
Concrete Encasement	Cu. Yd.	1.4
Pile Shoes	Each	4

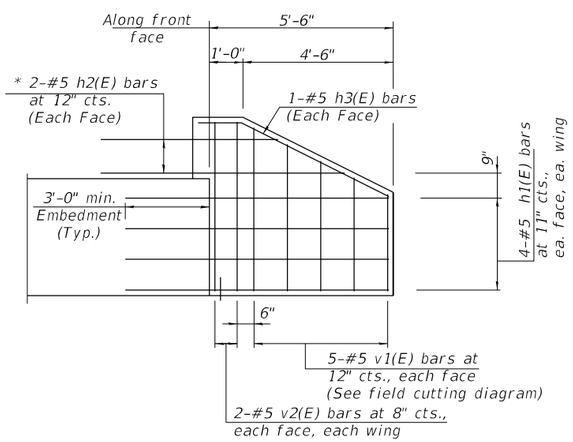

WINGWALL ELEVATION

* Field cut as required

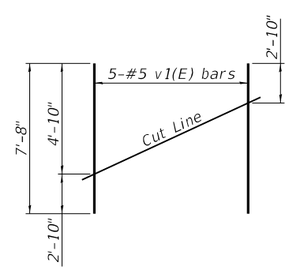

FIELD CUTTING DIAGRAM

Order v1(E) bars full length. Lay out in field according to diagram. Cut bars along cut line. Use remainder of bars in opposite face.

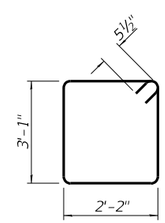

BAR s(E)

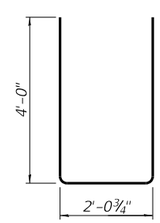

BAR u(E)

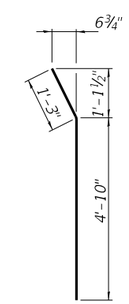

BAR h3(E)

NOTES

All exposed edges shall have standard ¾" chamfer.

Wingwalls and backwalls may, at the contractor's option, be cast monolithically.

Hatched area and wingwalls shall be poured after deck beams are anchored in place.

The contractor shall drive one test pile at north abutment in a production location as specified or approved by the Engineer.

For details of piles see Sheet 9 of 11.

MODEL: $MODELNAME$
FILE NAME: $FILE$

VEENSTRA & KIMM INC.
Springfield, IL. Phone: (217)544-8033
IL. Design Firm No. 184-001939

USER NAME = ___	DESIGNED - KNF	REVISED - ___
	CHECKED - MAH	REVISED - ___
PLOT SCALE = ___	DRAWN - KNF	REVISED - ___
PLOT DATE = 11/14/2025	CHECKED - MAH	REVISED - ___

STATE OF ILLINOIS
DEPARTMENT OF TRANSPORTATION
DEPARTMENT OF NATURAL RESOURCES

NORTH ABUTMENT
STRUCTURE NO. 090-9923

SHEET 8 OF 11 SHEETS

F.A.S. RTE.	SECTION	COUNTY	TOTAL SHEETS	SHEET NO.
459	SPRING LAKE 2024	TAZEWELL	56	18

CONTRACT NO. 46939

ILLINOIS | FED. AID PROJECT

$DATE$ $TIME$

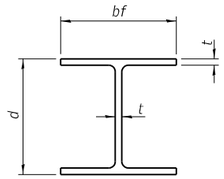

STEEL PILE TABLE

Designation	Depth d	Flange width bf	Web and Flange thickness t	Encasement diameter A
HP 14x117	14¼"	14⅞"	13/16"	30"
x102	14"	14¾"	11/16"	30"
x89	13⅞"	14¾"	⅝"	30"
x73	13⅝"	14⅝"	½"	30"
HP 12x84	12¼"	12¼"	11/16"	24"
x74	12⅛"	12¼"	⅝"	24"
x63	12"	12⅛"	½"	24"
x53	11¾"	12"	7/16"	24"
HP 10x57	10"	10¼"	9/16"	24"
x42	9¾"	10⅛"	7/16"	24"
HP 8x36	8"	8⅛"	7/16"	18"

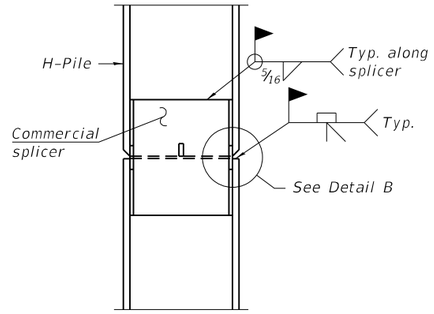

ELEVATION

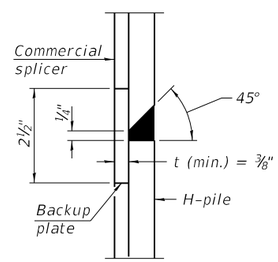

DETAIL "B"

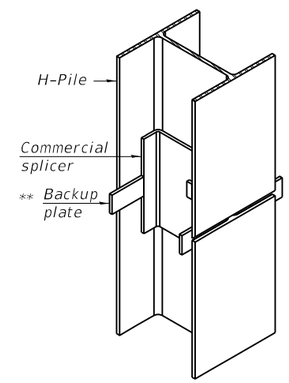

ISOMETRIC VIEW

WELDED COMMERCIAL SPLICE

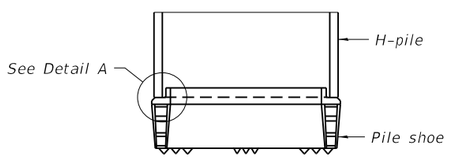

ELEVATION

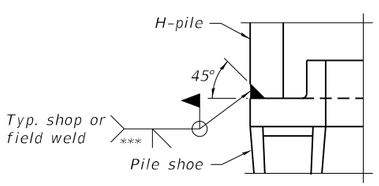

DETAIL A

SHOE ATTACHMENT

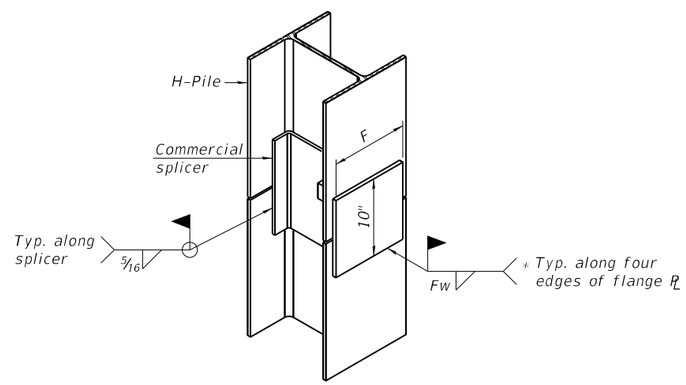

ISOMETRIC VIEW

WELDED COMMERCIAL SPLICE ALTERNATE

Note:
The steel H-piles shall be according to AASHTO M270 Grade 50.

* Interrupt welds ¼" from end of web and/or each flange.

** Remove portions of backup plates that extend outside the flanges.

*** Weld size per pile shoe manufacturer (5/16" min.).

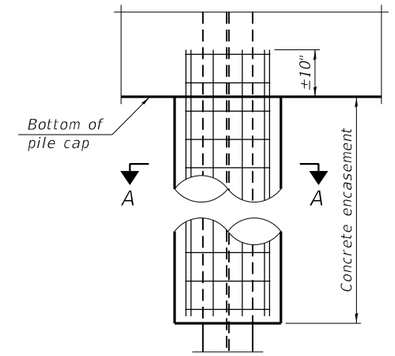

ELEVATION

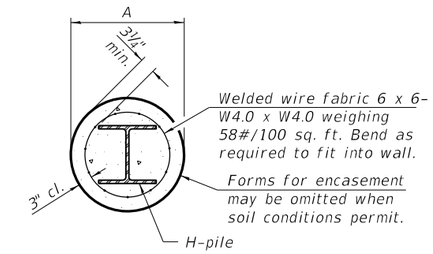

SECTION A-A

INDIVIDUAL PILE CONCRETE ENCASEMENT

(when specified)

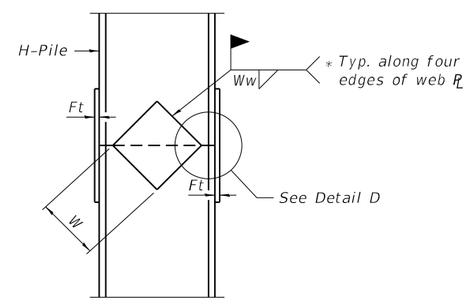

ELEVATION

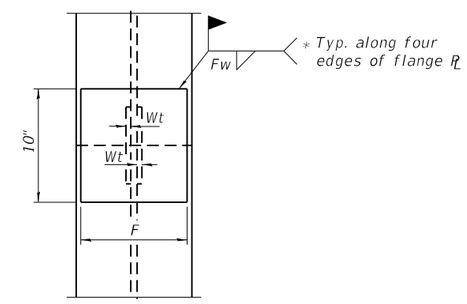

END VIEW

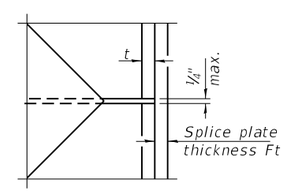

DETAIL D

Designation	F	Ft	Fw	W	Wt	Ww
HP 14x117	12½"	1"	⅞"	7¾"	⅝"	½"
x102	12½"	⅞"	¾"	7¾"	⅝"	½"
x89	12½"	¾"	11/16"	7¾"	⅝"	½"
x73	12½"	⅝"	9/16"	7¾"	⅝"	½"
HP 12x84	10"	⅞"	11/16"	6½"	⅝"	½"
x74	10"	⅞"	11/16"	6½"	⅝"	½"
x63	10"	⅝"	½"	6½"	½"	⅜"
x53	10"	⅝"	½"	6½"	½"	⅜"
HP 10x57	8"	¾"	9/16"	5¼"	½"	⅜"
x42	8"	⅝"	9/16"	5¼"	½"	⅜"
HP 8x36	7"	⅝"	7/16"	4¼"	½"	⅜"

WELDED PLATE FIELD SPLICE

F-HP 2-1-2023

MODEL: $MODELNAME$
FILE NAME: $FILEL$

VEENSTRA & KIMM INC.
Springfield, IL. Phone: (217)544-8033
IL. Design Firm No. 184-001939

USER NAME = __	DESIGNED - KNF	REVISED - __	
	CHECKED - MAH	REVISED - __	
PLOT SCALE = __	DRAWN - KNF	REVISED - __	
PLOT DATE = 11/14/2025	CHECKED - MAH	REVISED - __	

STATE OF ILLINOIS
DEPARTMENT OF TRANSPORTATION
DEPARTMENT OF NATURAL RESOURCES

HP PILE DETAILS
STRUCTURE NO. 090-9923

SHEET 9 OF 11 SHEETS

F.A.S. RTE.	SECTION	COUNTY	TOTAL SHEETS	SHEET NO.
459	SPRING LAKE 2024	TAZEWELL	56	19
		CONTRACT NO. 46939		
		ILLINOIS	FED. AID PROJECT	

$DATE$ $TIME$

Illinois Department of Transportation
Division of Highways

SOIL BORING LOG

Page 1 of 2

Date 8/13/24

ROUTE F.A.S. 459 DESCRIPTION F.A.S. 459 over Spring Lake LOGGED BY KEG

SECTION LOCATION North Abutment - Latitude 40.442172°, Longitude -89.897018°

COUNTY Tazewell DRILLING METHOD HSA HAMMER TYPE AUTO

STRUCT. NO. 090-9921
Station 19+75.00

BORING NO. SB-1
Station 19+76.00
Offset 2.0 ft LT
Ground Surface Elev. 441.00 ft

Surface Water Elev. ft
Stream Bed Elev. ft

Groundwater Elev.:
First Encounter 434.0 ft ▼
Upon Completion ft
After Hrs. ft

Description	Elev.	DEPTH (ft)	BLOWS (/6")	UCS Qu (tsf)	MOIST (%)
ASPHALT - 4"	440.7				
SAND - Brown, Loose, Fine			2		
			3	-	5
			3		
w/ some gravel			3		
			1	-	5
		-5	2		
			2		
			2	-	20
becomes wet		▼	0		
becomes gray			0		
			0	-	25
		-10	1		
becomes brown and medium coarse			5		
			2	-	15
			2		
			0		
			1	-	18
		-15	1		
becomes gray			5		
			2	-	18
			1		
	422.5				
SILTY SAND - Gray, Loose, w/ Shells	421.5		1		
			3	-	25
		-20	5		

Description	Elev.	DEPTH (ft)	BLOWS (/6")	UCS Qu (tsf)	MOIST (%)
SAND - Brown, Medium Coarse, Loose *(continued)*			1		
	419.0		1	0.0	29
SILTY CLAY LOAM - Gray, Very Soft			1	P	
			2		
	416.8		3	0.0	21
SAND - Brown, Medium Coarse, Loose		-25	3	P	
			3		
w/ shells %Sand=88.4, %Silt=7.8, %Clay=3.8			2	-	22
			2		
			6		
w/ shells, medium coarse to coarse, medium dense, w/ some gravel			6	-	16
		-30	7		
			7		
			11	-	14
		-35	5		
	402.5				
SHALE - Gray, Moderately Hard			16		
			47	-	17
		-40	48		

Borehole continued with rock coring

The Unconfined Compressive Strength (UCS) Failure Mode is indicated by (B-Bulge, S-Shear, P-Penetrometer)
The SPT (N value) is the sum of the last two blow values in each sampling zone (AASHTO T206)

BBS, form 137 (Rev. 8-99)

Illinois Department of Transportation
Division of Highways

ROCK CORE LOG

Page 2 of 2

Date 8/13/24

ROUTE F.A.S. 459 DESCRIPTION F.A.S. 459 over Spring Lake LOGGED BY KEG

SECTION LOCATION North Abutment - Latitude 40.442172°, Longitude -89.897018°

COUNTY Tazewell CORING METHOD Conventional Coring

STRUCT. NO. 090-9921
Station 19+75.00

BORING NO. SB-1
Station 19+76.00
Offset 2.0 ft LT
Ground Surface Elev. 441.00 ft

CORING BARREL TYPE & SIZE 2" Core Bit
Core Diameter 2 in
Top of Rock Elev. 402.50 ft
Begin Core Elev. 400.00 ft

Description	Elev.	DEPTH (ft)	CORE (#)	RECOVERY (%)	R.Q.D. (%)	CORE TIME (min/ft)	STRENGTH (tsf)
SHALE - Gray, Soft, Highly Weathered, w/ Some Gravel	400.00		1	57	15	5	
		-45					
becomes moderately weathered, moderately hard	395.17						2.5
LIMESTONE - Gray, Fragmented	395.00		2	94			
SHALE - Black, Slightly Weathered, Moderately Hard	394.00						
LIMESTONE - Dark Gray, Slightly Weathered, Moderately Hard	392.80						
SHALE - Black, Hard, Moderately Weathered							7.9
		-50					
3" of LIMESTONE							40.3
w/ encrusted limestone		-55					
	385.00						
End of Boring		-60					

Color pictures of the cores Yes
Cores will be stored for examination until Yes
The "Strength" column represents the uniaxial compressive strength of the core sample (ASTM D-2938)

BBS, form 138 (Rev. 8-99)

MODEL: $MODELNAME$
FILE NAME: $FILEL$

VEENSTRA & KIMM INC.
Springfield, IL. Phone: (217)544-8033
IL. Design Firm No. 184-001939

USER NAME = __	DESIGNED - KNF	REVISED - __	
	CHECKED - MAH	REVISED - __	
PLOT SCALE = __	DRAWN - KNF	REVISED - __	
PLOT DATE = 11/14/2025	CHECKED - MAH	REVISED - __	

STATE OF ILLINOIS
DEPARTMENT OF TRANSPORTATION
DEPARTMENT OF NATURAL RESOURCES

BORING LOG - 1
STRUCTURE NO. 090 - 9923

SHEET 10 OF 11 SHEETS

F.A.S. RTE.	SECTION	COUNTY	TOTAL SHEETS	SHEET NO.
459	SPRING LAKE 2024	TAZEWELL	56	20

CONTRACT NO. 46939
ILLINOIS FED. AID PROJECT

$DATE$ $TIME$

Illinois Department of Transportation
Division of Highways

SOIL BORING LOG

Date 8/12/24

ROUTE F.A.S. 459 DESCRIPTION F.A.S. 459 over Spring Lake LOGGED BY KEG

SECTION LOCATION South Abutment - Latitude 40.442064°, Longitude -89.896992°

COUNTY Tazewell DRILLING METHOD HSA HAMMER TYPE AUTO

STRUCT. NO. 090-9921
Station 19+75.00

BORING NO. SB-2
Station 20+29.00
Offset 7.0 ft RT
Ground Surface Elev. 441.00 ft

Surface Water Elev. ft
Stream Bed Elev. ft

Groundwater Elev.:
First Encounter 432.5 ft ▼
Upon Completion ft
After Hrs. ft

Description	Elev.	DEPTH (ft)	BLOWS (/6")	UCS Qu (tsf)	MOIST (%)
ASPHALT - 4"	440.7				
SAND - Brown, Loose, Fine, w/ some gravel			4		
			3 4	-	4
			2		
		-5	1 2	-	6
w/ organics %Gravel=2.3, %Sand=91.2, %Silt=4.4, %Clay=2.2			2		
			1 2	-	14
becomes wet		▼	WH		
			1 1	-	24
w/ fuel smell, becomes gray		-10	WH		
			1 1	-	19
			1		
		-15	0 0	-	25
			2		
			1 1	-	20
			1		
	421.8	-20	0 0	-	30
SILTY CLAY LOAM - Gray, Very Soft, w/ Organics *(continued)*					
	419.5		WH		
SAND - Brown and Gray, Fine, Loose			2 3	-	27
w/ silt seams			WH		
		-25	1 3	-	28
w/ some gravel, becomes medium coarse			2		
			2 4	-	19
w/ shells			3		
		-30	2 4	-	15
	407.5				
GRAVELLY SAND - Brown, Dense			10		
		-35	20 37	-	17
	402.5				
SHALE - Gray, Soft			100/15.25"		
		-40		4.5	17

The Unconfined Compressive Strength (UCS) Failure Mode is indicated by (B-Bulge, S-Shear, P-Penetrometer)
The SPT (N value) is the sum of the last two blow values in each sampling zone (AASHTO T206)

BBS, form 137 (Rev. 8-99)

Illinois Department of Transportation
Division of Highways

SOIL BORING LOG

Date 8/12/24

ROUTE F.A.S. 459 DESCRIPTION F.A.S. 459 over Spring Lake LOGGED BY KEG

SECTION LOCATION South Abutment - Latitude 40.442064°, Longitude -89.896992°

COUNTY Tazewell DRILLING METHOD HSA HAMMER TYPE AUTO

STRUCT. NO. 090-9921
Station 19+75.00

BORING NO. SB-2
Station 20+29.00
Offset 7.0 ft RT
Ground Surface Elev. 441.00 ft

Surface Water Elev. ft
Stream Bed Elev. ft

Groundwater Elev.:
First Encounter 432.5 ft ▼
Upon Completion ft
After Hrs. ft

Description	Elev.	DEPTH (ft)	BLOWS (/6")	UCS Qu (tsf)	MOIST (%)
SHALE - Gray, Soft *(continued)*					
becomes moderately gray			100/10.75"		
				5.8	16
		-45			
			100/3"		
				19.2	11
		-50			
			100/4.5"		
				19.2	13
	386.0	-55			
End of Boring					

The Unconfined Compressive Strength (UCS) Failure Mode is indicated by (B-Bulge, S-Shear, P-Penetrometer)
The SPT (N value) is the sum of the last two blow values in each sampling zone (AASHTO T206)

BBS, form 137 (Rev. 8-99)

MODEL: $MODELNAME$
FILE NAME: $FILEL$

VEENSTRA & KIMM INC.
Springfield, IL. Phone: (217)544-8033
IL. Design Firm No. 184-001939

USER NAME = ___	DESIGNED - KNF	REVISED - ___	
	CHECKED - MAH	REVISED - ___	
PLOT SCALE = ___	DRAWN - KNF	REVISED - ___	
PLOT DATE = 11/14/2025	CHECKED - MAH	REVISED - ___	

STATE OF ILLINOIS
DEPARTMENT OF TRANSPORTATION
DEPARTMENT OF NATURAL RESOURCES

BORING LOG - 2
STRUCTURE NO. 090 - 9923
SHEET 11 OF 11 SHEETS

F.A.S. RTE.	SECTION	COUNTY	TOTAL SHEETS	SHEET NO.
459	SPRING LAKE 2024	TAZEWELL	56	21
		CONTRACT NO. 46939		
		ILLINOIS FED. AID PROJECT		

$DATE$ $TIME$

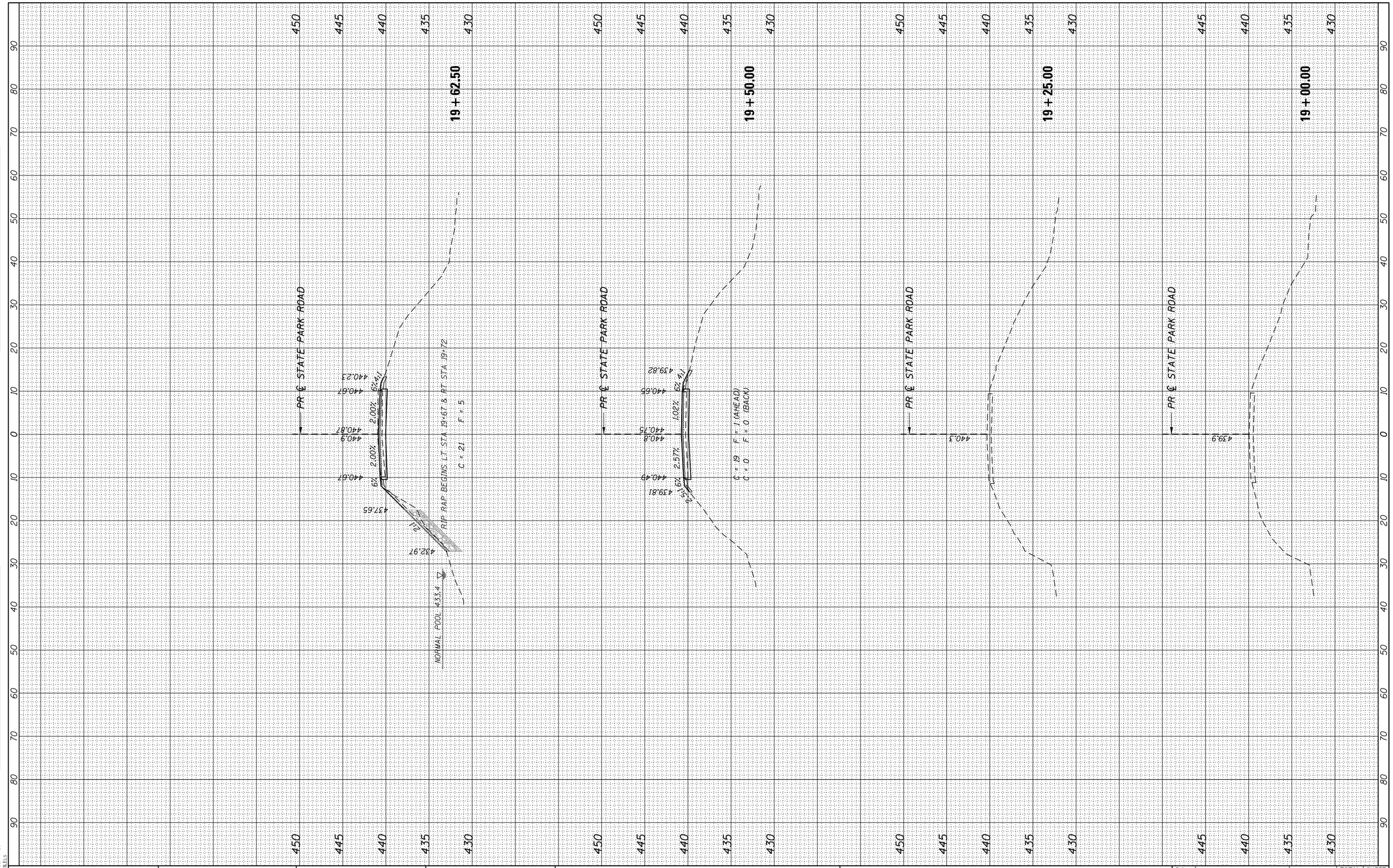

FINAL SURVEY	BY	DATE
SURVEYED		
PLOTTED		
TEMPLATE		
AREAS		
AREAS CHECKED		

NOTE BOOK NO.

ORIGINAL SURVEY	BY	DATE
SURVEYED		
PLOTTED		
TEMPLATE		
AREAS		
AREAS CHECKED		

NOTE BOOK NO.

MODEL: $MODELNAME$
FILE NAME: $FILEL$

VEENSTRA & KIMM INC.
Springfield, IL. Phone: (217)544-8033
IL. Design Firm No. 184-001939

USER NAME = $USER$	DESIGNED - JEB	REVISED -	
	DRAWN - JEB	REVISED -	
PLOT SCALE = $SCALE$	CHECKED - RHD	REVISED -	
PLOT DATE = $DATE$	DATE - 11/14/2025	REVISED -	

STATE OF ILLINOIS
DEPARTMENT OF TRANSPORTATION
DEPARTMENT OF NATURAL RESOURCES

CROSS SECTIONS – STATE PARK ROAD

SCALE: | SHEET 1 OF 4 SHEETS | STA. 19+00.00 TO STA. 19+62.5000

F.A. RTE.	SECTION	COUNTY	TOTAL SHEETS	SHEET NO.
	SPRING LAKE 2024	TAZEWELL	56	22
		CONTRACT NO.		
	ILLINOIS	FED. AID PROJECT		

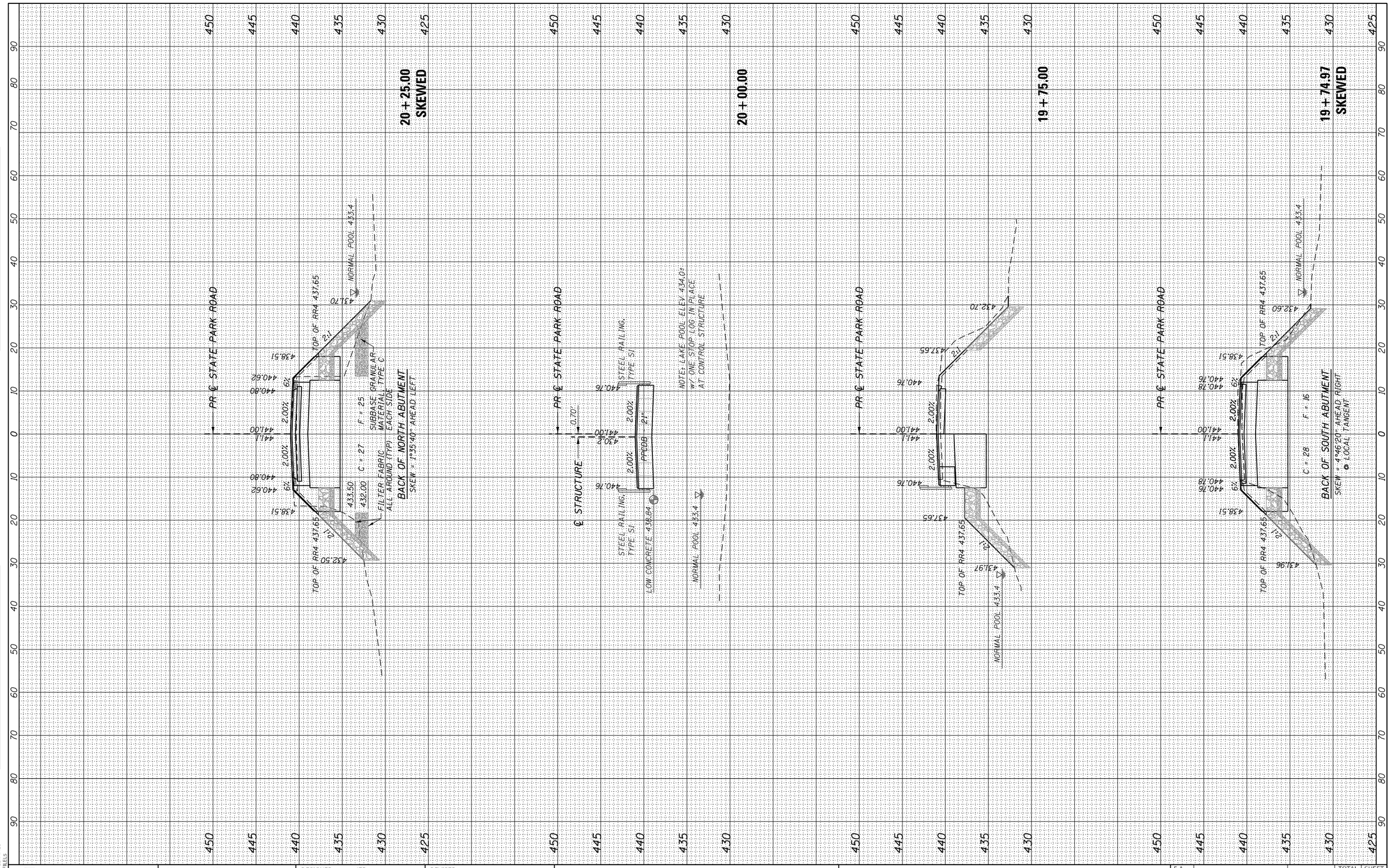

FINAL SURVEY		BY	DATE
NOTE BOOK	SURVEYED		
	PLOTTED		
	TEMPLATE		
	AREAS		
NO.	AREAS CHECKED		

ORIGINAL SURVEY		BY	DATE
NOTE BOOK	SURVEYED		
	PLOTTED		
	TEMPLATE		
	AREAS		
NO.	AREAS CHECKED		

MODEL: $MODELNAME$
FILE NAME: $FILEL$

VEENSTRA & KIMM INC.
Springfield, IL. Phone: (217)544-8033
IL. Design Firm No. 184-001939

USER NAME = $USER$	DESIGNED - JEB	REVISED -
	DRAWN - JEB	REVISED -
PLOT SCALE = $SCALE$	CHECKED - RHD	REVISED -
PLOT DATE = $DATE$	DATE - 11/14/2025	REVISED -

STATE OF ILLINOIS
DEPARTMENT OF TRANSPORTATION
DEPARTMENT OF NATURAL RESOURCES

CROSS SECTIONS – STATE PARK ROAD

SCALE: | SHEET 2 OF 4 SHEETS | STA. 19+74.9677 | TO STA. 20+24.6665

F.A. RTE.	SECTION	COUNTY	TOTAL SHEETS	SHEET NO.
	SPRING LAKE 2024	TAZEWELL	56	23
		CONTRACT NO.		
		ILLINOIS	FED. AID PROJECT	

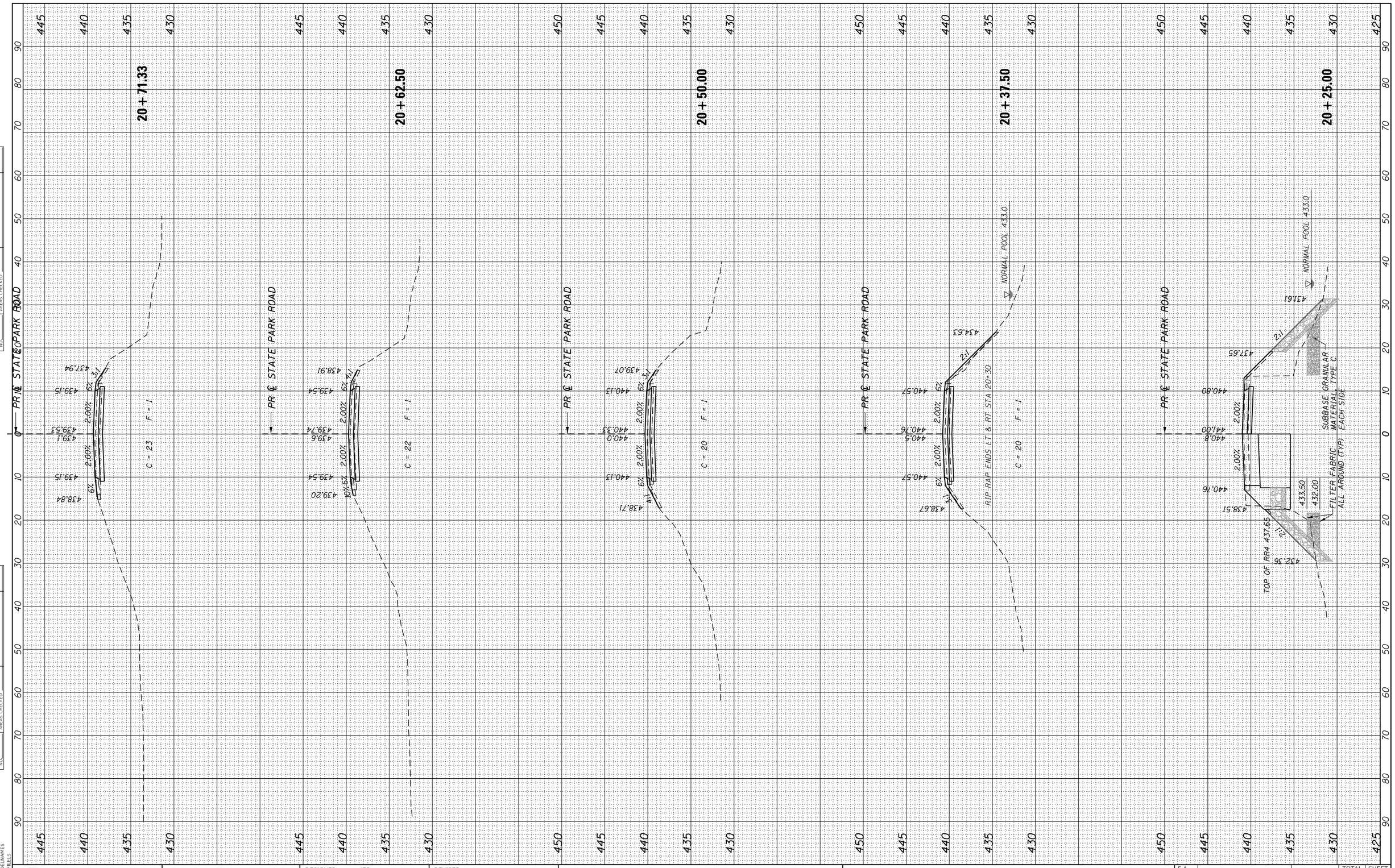

FINAL SURVEY		BY	DATE
	SURVEYED		
	PLOTTED		
NOTE BOOK	TEMPLATE		
	AREAS		
NO.	AREAS CHECKED		

ORIGINAL SURVEY		BY	DATE
	SURVEYED		
	PLOTTED		
NOTE BOOK	TEMPLATE		
	AREAS		
NO.	AREAS CHECKED		

MODEL: $MODELNAME$
FILE NAME: $FILEL$

VEENSTRA & KIMM INC.
Springfield, IL. Phone: (217)544-8033
IL. Design Firm No. 184-001939

USER NAME = $USER$	DESIGNED - JEB	REVISED -
	DRAWN - JEB	REVISED -
PLOT SCALE = $SCALE$	CHECKED - RHD	REVISED -
PLOT DATE = $DATE$	DATE - 11/14/2025	REVISED -

STATE OF ILLINOIS
DEPARTMENT OF TRANSPORTATION
DEPARTMENT OF NATURAL RESOURCES

CROSS SECTIONS – STATE PARK ROAD

SCALE: | SHEET 3 OF 4 SHEETS | STA. 20+25.00 TO STA. 20+71.3300

F.A. RTE.	SECTION	COUNTY	TOTAL SHEETS	SHEET NO.
	SPRING LAKE 2024	TAZEWELL	56	24
		CONTRACT NO.		
	ILLINOIS	FED. AID PROJECT		

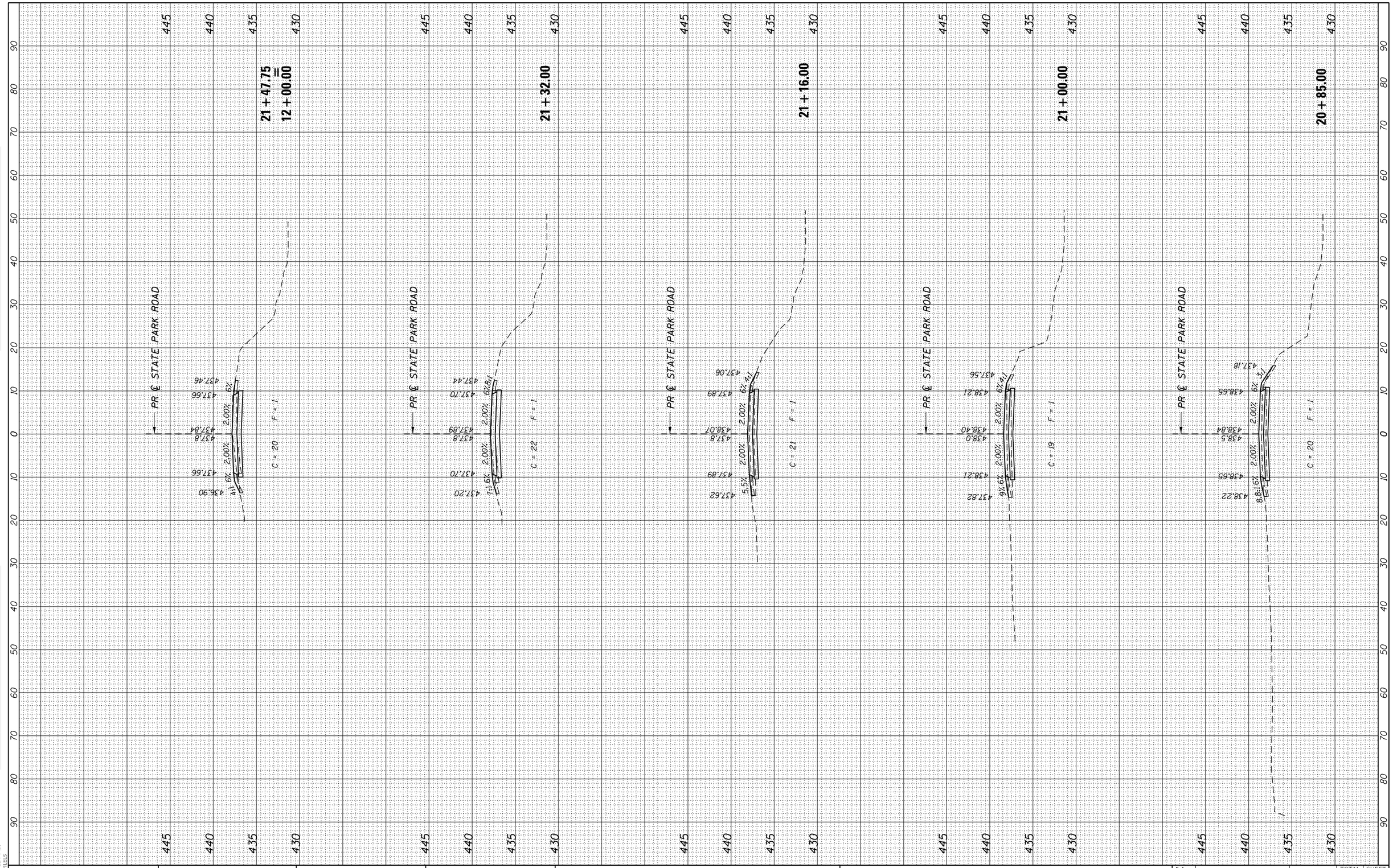

FINAL SURVEY		BY	DATE
NOTE BOOK NO.	SURVEYED		
	PLOTTED		
	TEMPLATE		
	AREAS		
	AREAS CHECKED		

ORIGINAL SURVEY		BY	DATE
NOTE BOOK NO.	SURVEYED		
	PLOTTED		
	TEMPLATE		
	AREAS		
	AREAS CHECKED		

MODEL: SMODELNAMES
FILE NAME: SFILELS

VEENSTRA & KIMM INC.
Springfield, IL. Phone: (217)544-8033
IL. Design Firm No. 184-001939

USER NAME = $USER$	DESIGNED - JEB	REVISED -
	DRAWN - JEB	REVISED -
PLOT SCALE = $SCALE$	CHECKED - RHD	REVISED -
PLOT DATE = $DATE$	DATE - 11/14/2025	REVISED -

STATE OF ILLINOIS
DEPARTMENT OF TRANSPORTATION
DEPARTMENT OF NATURAL RESOURCES

CROSS SECTIONS – STATE PARK ROAD

SCALE: | SHEET 4 OF 4 SHEETS | STA. 20+85.00 TO STA. 12+00.00

F.A. RTE.	SECTION	COUNTY	TOTAL SHEETS	SHEET NO.
	SPRING LAKE 2024	TAZEWELL	56	25
		CONTRACT NO.		
	ILLINOIS	FED. AID PROJECT		

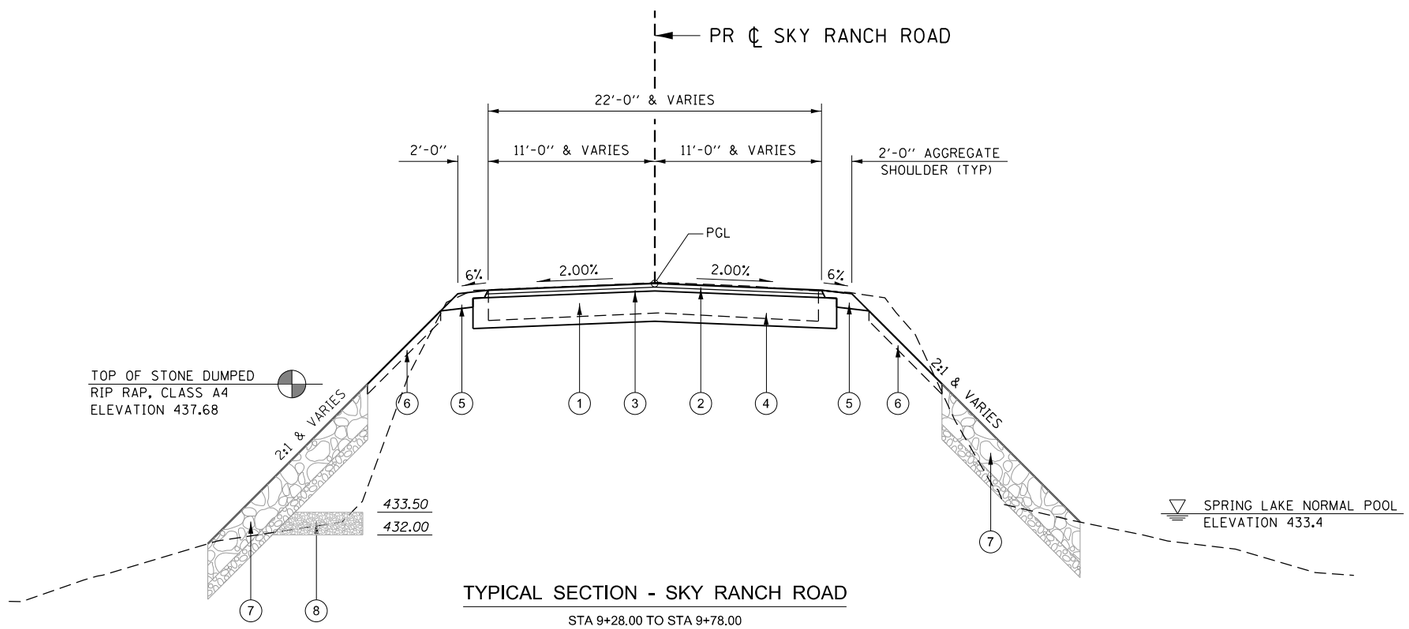

TYPICAL SECTION - SKY RANCH ROAD

STA 9+28.00 TO STA 9+78.00
STA 10+22.00 TO STA 10+40.00

1. EXISTING PAVEMENT
2. HMA SURFACE COURSE, IL-9.5FG, MIX "C" N50 $1\frac{1}{2}$"
3. HMA BINDER COURSE, IL-9.5 MIX "C" N50 $1\frac{1}{2}$"
4. AGGREGATE BASE COURSE, TYPE A 12"
5. AGGREGATE SHOULDERS, TYPE A 6"
6. TOPSOIL FURNISH & PLACE 4"
7. STONE DUMPED RIP RAP, CLASS A4
8. SUBBASE GRANULAR MATERIAL, TYPE C

MODEL: $MODELNAME$
FILE NAME: $FILE$

VEENSTRA & KIMM INC.
Springfield, IL. Phone: (217)544-8033
IL. Design Firm No. 184-001939

USER NAME = $USER$	DESIGNED - JEB	REVISED -	
	DRAWN - JEB	REVISED -	
PLOT SCALE = $SCALE$	CHECKED - RHD	REVISED -	
PLOT DATE = $DATE$	DATE - 11/14/2025	REVISED -	

STATE OF ILLINOIS
DEPARTMENT OF TRANSPORTATION
DEPARTMENT OF NATURAL RESOURCES

TYPICAL SECTION - SKY RANCH ROAD
SPRING LAKE STATE FISH & WILDLIFE AREA

SCALE: SHEET OF SHEETS STA. TO STA.

F.A. RTE.	SECTION	COUNTY	TOTAL SHEETS	SHEET NO.
	SPRING LAKE 2024	TAZEWELL	56	26
		CONTRACT NO. 46939		
	ILLINOIS	FED. AID PROJECT		

JOB No. 7021-005 VEENSTRA & KIMM, INC. DESIGN FIRM REGISTRATION NUMBER 184-001939

BUTT JOINT DETAIL
STA 10+40 TO STA 10+45

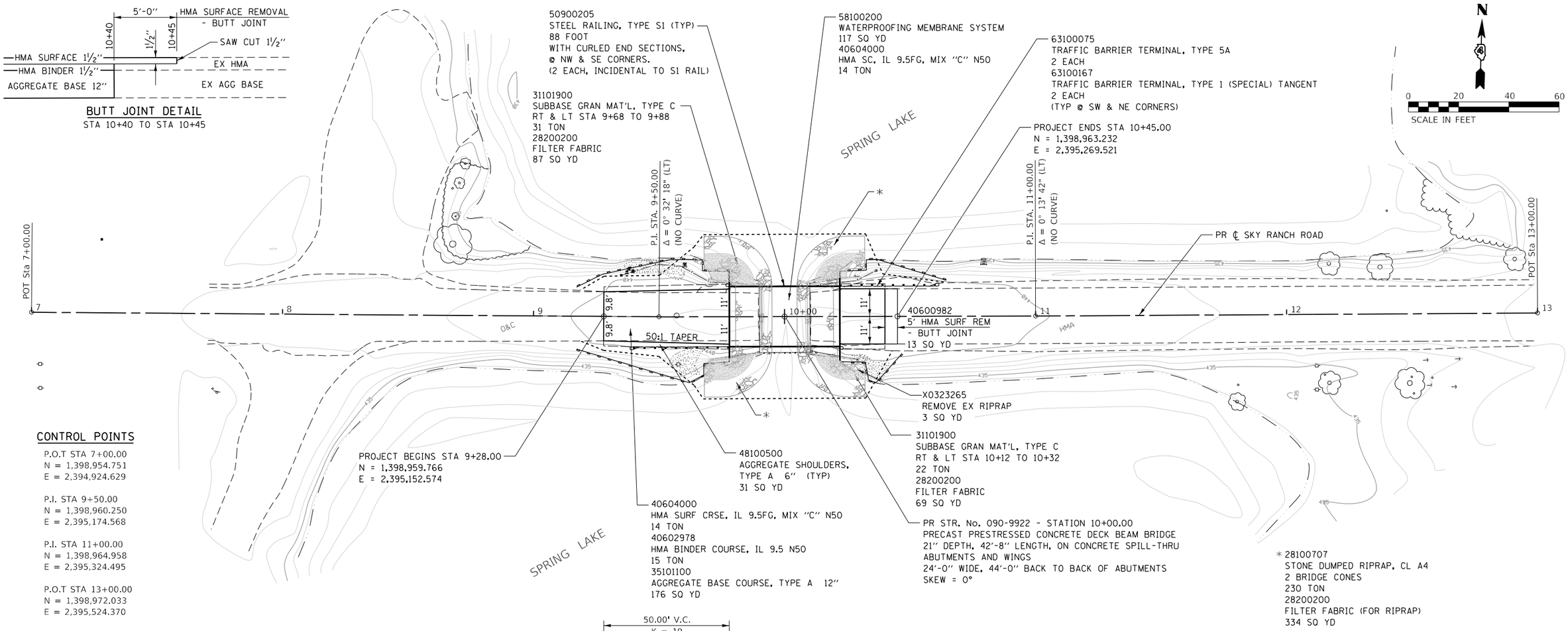

CONTROL POINTS

P.O.T STA 7+00.00
N = 1,398,954.751
E = 2,394,924.629

P.I. STA 9+50.00
N = 1,398,960.250
E = 2,395,174.568

P.I. STA 11+00.00
N = 1,398,964.958
E = 2,395,324.495

P.O.T STA 13+00.00
N = 1,398,972.033
E = 2,395,524.370

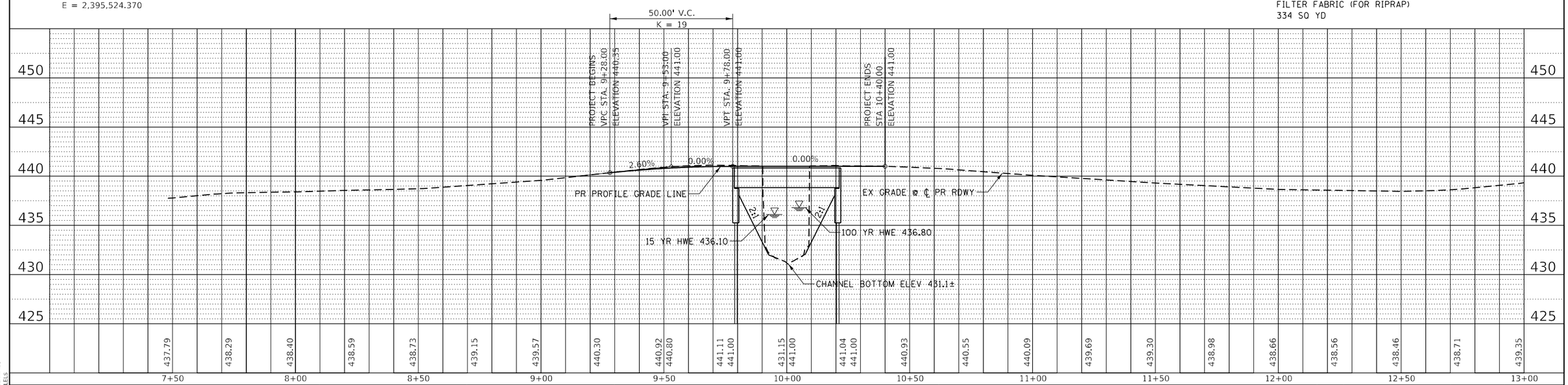

PLAN
SURVEYED
PLOTTED
ALIGNMENT CHECKED
RT. OF WAY CHECKED
CADD FILE NAME
NOTE BOOK NO.
BY
DATE

PROFILE
SURVEYED
PLOTTED
GRADES CHECKED
B.M. NOTED
STRUCTURE NOTAT'NS CH'KD
NOTE BOOK NO.
BY
DATE

MODEL: $MODELNAME$
FILE NAME: $FILEL$

VEENSTRA & KIMM INC.
Springfield, IL. Phone: (217)544-8033
IL. Design Firm No. 184-001939

USER NAME = $USER$	DESIGNED - JEB	REVISED -
	DRAWN - JEB	REVISED -
PLOT SCALE = $SCALE$	CHECKED - RHD	REVISED -
PLOT DATE = $DATE$	DATE - 11/14/2025	REVISED -

STATE OF ILLINOIS
DEPARTMENT OF TRANSPORTATION
DEPARTMENT OF NATURAL RESOURCES

PLAN & PROFILE - SKY RANCH ROAD OVER SPRING LAKE
SPRING LAKE STATE FISH & WILDLIFE AREA

SCALE: SHEET OF SHEETS STA. TO STA.

F.A. RTE.	SECTION	COUNTY	TOTAL SHEETS	SHEET NO.
	SPRING LAKE 2024	TAZEWELL	56	27
		CONTRACT NO. 46939		
	ILLINOIS	FED. AID PROJECT		

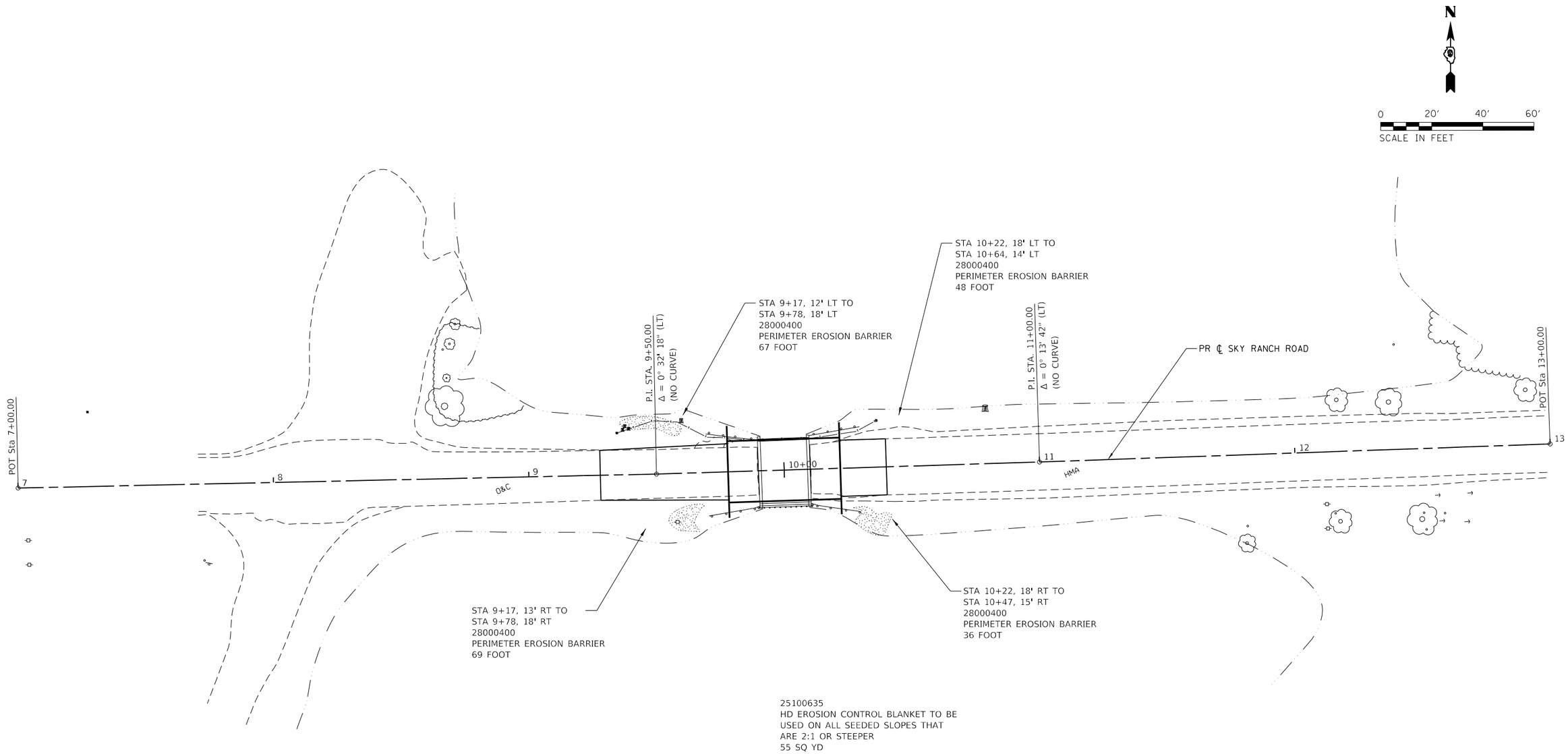

MODEL: $MODELNAME$
FILE NAME: $FILE$

VEENSTRA & KIMM INC. Springfield, IL. Phone: (217)544-8033 IL. Design Firm No. 184-001939	USER NAME = $USER$	DESIGNED - JEB	REVISED -	STATE OF ILLINOIS DEPARTMENT OF TRANSPORTATION DEPARTMENT OF NATURAL RESOURCES	EROSION CONTROL PLAN SPRING LAKE STATE FISH & WILDLIFE AREA	F.A. RTE.	SECTION	COUNTY	TOTAL SHEETS / SHEET NO.
		DRAWN - JEB	REVISED -				SPRING LAKE 2024	TAZEWELL	56 / 28
	PLOT SCALE = $SCALE$	CHECKED - RHD	REVISED -				SKY RANCH ROAD	CONTRACT NO. 46939	
	PLOT DATE = $DATE$	DATE - 11/14/2025	REVISED -		SCALE: SHEET OF SHEETS STA TO STA		ILLINOIS	FED. AID PROJECT	

BM #1 – RR spike in Power Pole 18.57' Rt. Sta. 9+57.56 El. 440.28

BM #2 – Chiseled "□" on the South end of the West Abutment of SN 090-9920 over Spring Lake, T.R. 125 ℄ Station 9+90.25, 15' Lt. Elev. = 441.68.

Existing Structure: The existing structure is a single span bridge constructed in 1958 as SN 090-9920 having a back to back abutment length of 20'-3", a face to face of curb width of 24'-0", and an out to out bridge deck width of 26'-0". The superstructure consists of 7-18" deep concrete channel beams. The substructure consists of closed abutments with timber piles, timber backwalls, timber pile caps and timber wing walls. The bridge is not skewed.

TR 125 will be closed during Bridge Construction.

No salvage.

INDEX OF SHEETS

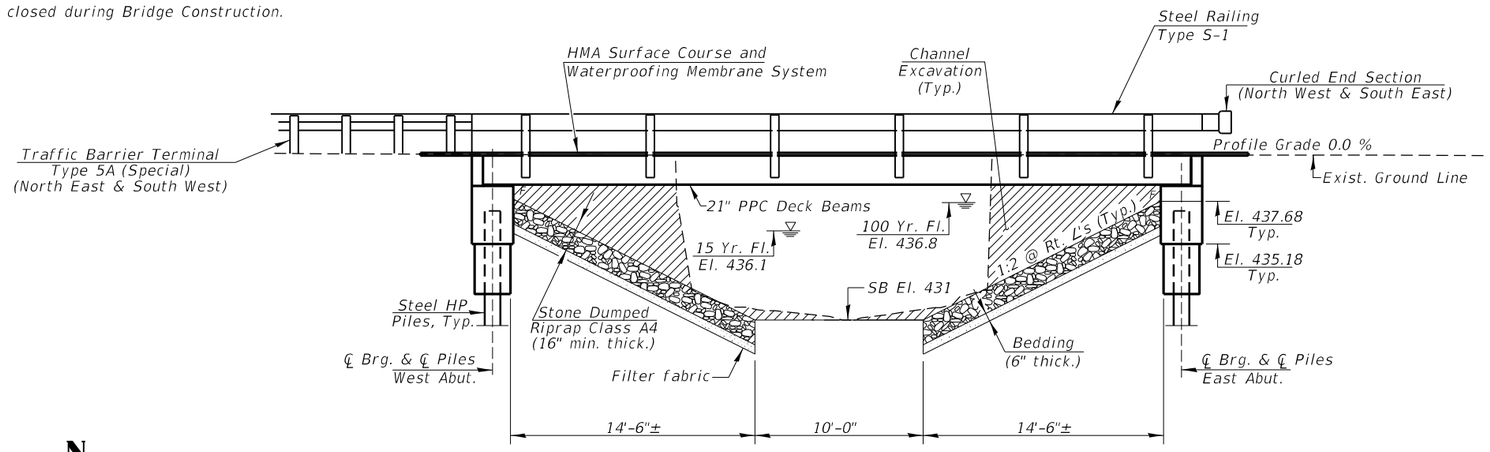

ELEVATION
(Looking North)

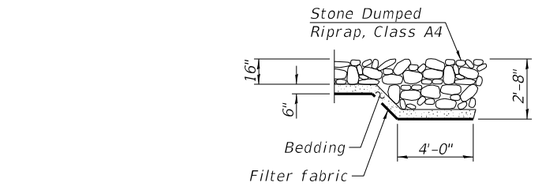

SECTION A-A

I certify that to the best of my knowledge, information and belief, this bridge design is structurally adequate for the design loading shown on the plans. The design is an economical one for the style of structure and complies with requirements of the current "A.A.S.H.T.O. LRFD Bridge Design Specifications".

STATE OF ILLINOIS
DERRY L. COULTAS
81-4539
SPRINGFIELD
LICENSED STRUCTURAL ENGINEER

Expiration Date 11/30/2026

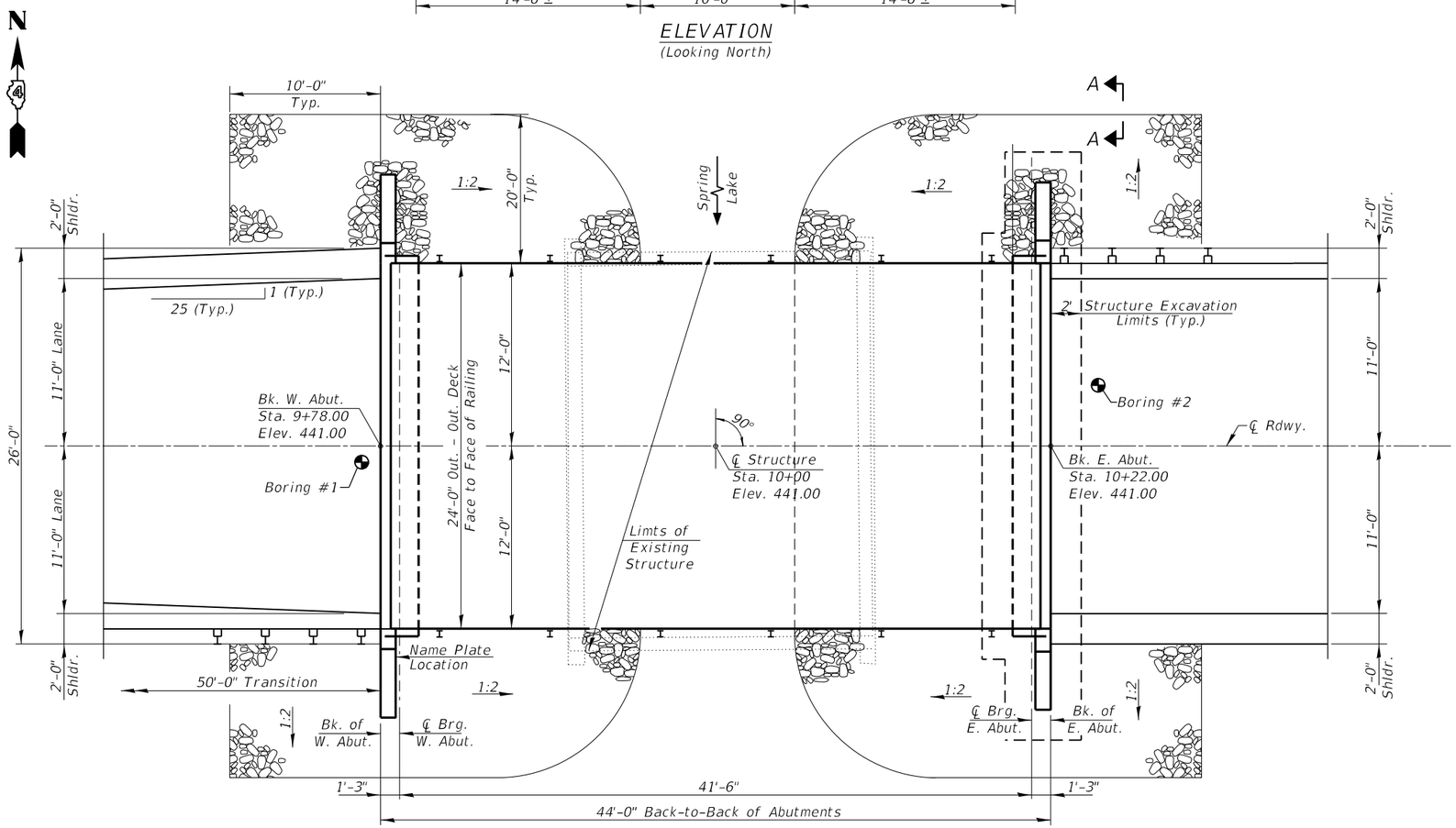

PLAN

T.R. 125 OVER SPRING LAKE
BUILT 20 BY IDNR
SPRING LAKE STATE PARK
TAZEWELL COUNTY
SEC. SPRING LAKE 2024
STATION 10+00
STR. NO. 090-9922 LOADING HL-93

NAME PLATE
See Std. 515001

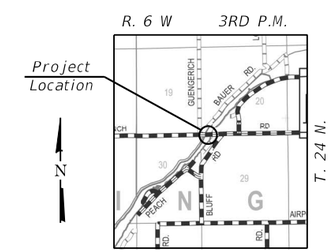

LOCATION SKETCH

GENERAL PLAN & ELEVATION
T.R. 125 OVER SPRING LAKE
SECTION SPRING LAKE 2024
TAZEWELL COUNTY
STA. 10+00
STRUCTURE NO. 090-9922

MODEL: $MODELNAME$
FILE NAME: $FILEL$

VEENSTRA & KIMM INC.
Springfield, IL. Phone: (217)544-8033
IL. Design Firm No. 184-001939

USER NAME = ___	DESIGNED - VVR	REVISED - ___	
	CHECKED - DHC	REVISED - ___	
PLOT SCALE = ___	DRAWN - VVR	REVISED - ___	
PLOT DATE = 11/14/2025	CHECKED - DHC	REVISED - ___	

STATE OF ILLINOIS
DEPARTMENT OF TRANSPORTATION
DEPARTMENT OF NATURAL RESOURCES

GENERAL PLAN AND ELEVATION
STRUCTURE NO. 090 - 9922

SHEETS$SHTS OF 11 SHEETS

T.R. RTE.	SECTION	COUNTY	TOTAL SHEETS	SHEET NO.
125	SPRING LAKE 2024	TAZEWELL	56	29
		CONTRACT NO. 46939		
		ILLINOIS	FED. AID PROJECT	

$DATE$ $TIME$

GENERAL NOTES

Layout of the slope protection system may be varied to suit ground conditions in the field as directed by the Engineer.

The Contractor shall drive test piles to 110% of the nominal required bearing specified in production locations at the West Abutment or approved by the Engineer before ordering the remainder of piles.

Reinforcement bars designated (E) shall be epoxy coated.

Contractor is responsible for the removal and disposal of any excess channel excavation not incorporated back into the project. The disposal of any excess material shall be in accordance with Article 202.03. Cost to dispose of excess excavation will be included in the unit cost of Channel Excavation.

The removal of the existing retaining walls parallel to the roadway at each corner of the existing bridge is included with Removal of Existing Structures.

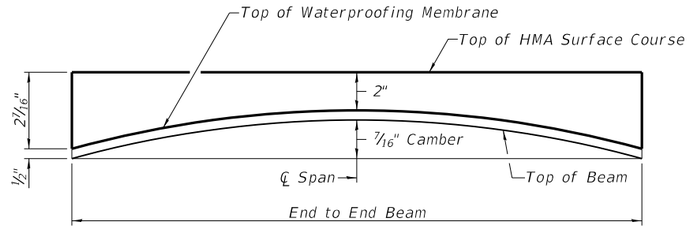

HMA SURFACE COURSE PROFILE & ANTICIPATED CAMBER DIAGRAM

TOTAL BILL OF MATERIAL

ITEM	UNIT	SUPER	SUB	TOTAL
Channel Excavation	Cu Yd		144	144
Porous Granular Embankment	Cu Yd		54	54
Stone Dumped Riprap, Class A4	Ton		230	230
Filter Fabric	Sq Yd		334	334
Hot-Mix Asphalt Surface Course, IL-9.5FG, Mix "C", N50	Ton	14		14
Removal Of Existing Structures No. 1	Each	1		1
Structure Excavation	Cu Yd		126	126
Concrete Structures	Cu Yd		22.8	22.8
Concrete Encasement	Cu Yd		2.8	2.8
Precast Prestressed Concrete Deck Beams (21" Depth)	Sq Ft	1024		1024
Reinforcement Bars, Epoxy Coated	Pound		3560	3560
Steel Railing, Type S1	Foot	88		88
Furnishing Steel Piles HP 10X42	Foot		287	287
Driving Piles	Foot		287	287
Test Pile Steel HP 10X42	Each		1	1
Pile Shoes	Each		8	8
Name Plates	Each	1		1
Waterproofing Membrane System	Sq Yd	117		117

DESIGN SCOUR ELEVATION TABLE

Event / Limit State	Design Scour Elevations (ft.)		Item 113
	W. Abut.	E. Abut.	
Q100	435.18	435.18	8
Q200	435.18	435.18	
Design	435.18	435.18	
Check	435.18	435.18	

WATERWAY INFORMATION

Drainage Area = 15.13 Sq. Mi. Low Grade Elev. 437.8 @ Sta. 7+50

Flood	Freq. Yr.	Q C.F.S.	Opening Ft² Exist.	Opening Ft² Prop.	Nat. H.W.E.	Head - Ft. Exist.	Head - Ft. Prop.	Headwater El. Exist.	Headwater El. Prop.
	10	52	86	92	435.8	0.0	0.0	435.8	435.8
Design	15	64	91	100	436.1	0.0	0.0	436.1	436.1
Base	100	80	103	122	436.8	0.0	0.0	436.8	436.8
	200	80	105	124	436.8	0.0	0.0	436.8	436.8
Max. Calc.	500	81	109	131	437.0	0.0	0.0	437.0	437.0

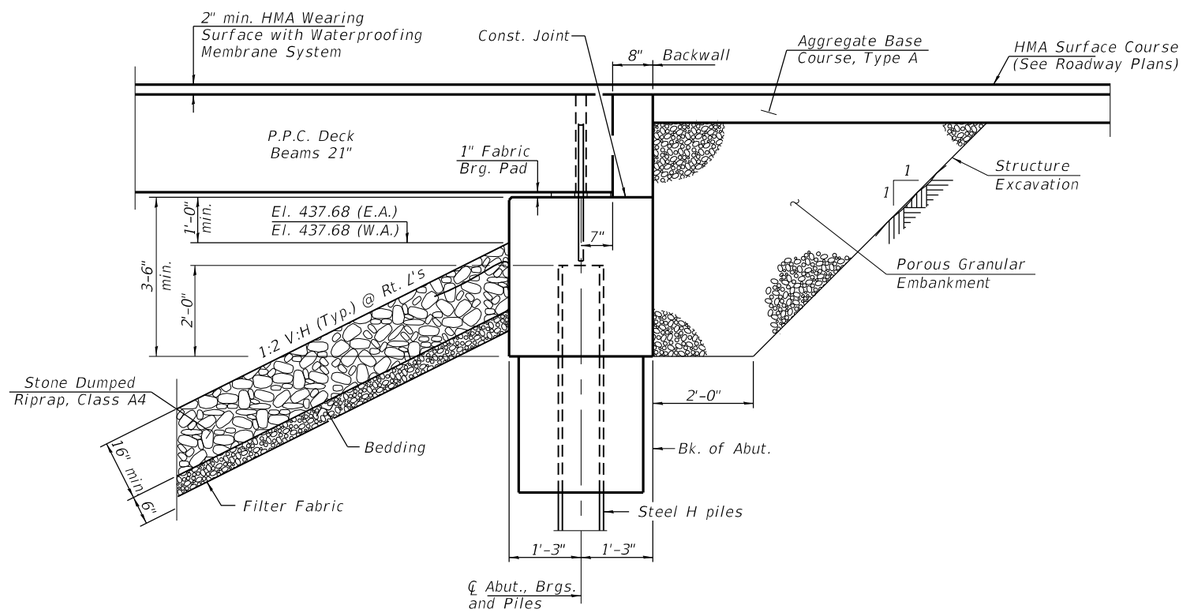

SECTION THRU ABUTMENT

(Horiz. dimensions at Rt. angles)

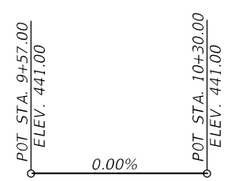

PROFILE GRADE

LOADING HL 93

Allow 50#/sq. ft. for future wearing surface.

DESIGN SPECIFICATIONS

2020 AASHTO LRFD Bridge Design Specifications, 9th Edition.

DESIGN STRESSES

FIELD UNITS

f'c = 3,500 psi
fy = 60,000 psi (Reinforcement)

PRECAST PRESTRESSED UNITS

f'c = 6,000 psi
f'ci = 5,000 psi
fpu = 270,000 psi (½" ○ low lax strands)
fpbt = 201,960 psi (½" ∅ low lax strands)
fy = 60,000 psi

SEISMIC DATA

2023 AASHTO Seismic Hazard
Site Class D
Latitude 40.507563, Longitude -89.911922
Performance Level Operational

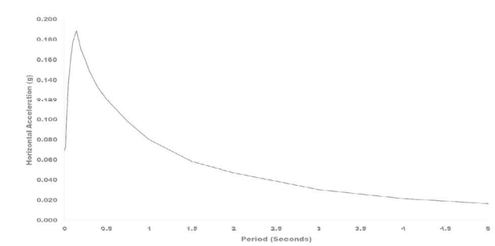

Vertical Acceleration = ⅔ * Horizontal Acceleration
SD1 = 0.085 g
SDS = 0.095 g
SDC = A

MODEL: $MODELNAME$
FILE NAME: $FILEL$

VEENSTRA & KIMM INC.
Springfield, IL. Phone: (217)544-8033
IL. Design Firm No. 184-001939

USER NAME = __	DESIGNED - VVR	REVISED - __	
	CHECKED - DHC	REVISED - __	
PLOT SCALE = __	DRAWN - VVR	REVISED - __	
PLOT DATE = 11/14/2025	CHECKED - DHC	REVISED - __	

STATE OF ILLINOIS
DEPARTMENT OF TRANSPORTATION
DEPARTMENT OF NATURAL RESOURCES

GENERAL DATA
STRUCTURE NO. 090 - 9922

SHEET 2 OF 11 SHEETS

T.R. RTE.	SECTION	COUNTY	TOTAL SHEETS	SHEET NO.
125	SPRING LAKE 2024	TAZEWELL	56	30
		CONTRACT NO. 46939		
		ILLINOIS	FED. AID PROJECT	

$DATE$ $TIME$

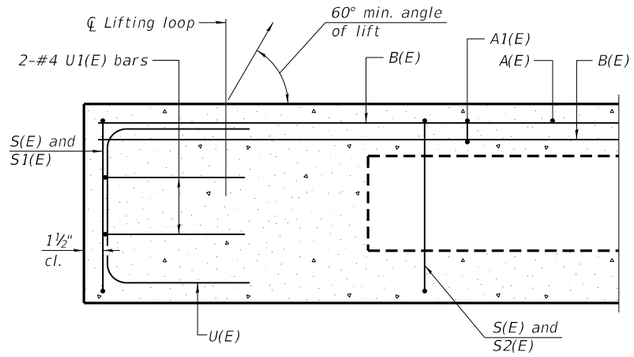

SECTION A-A

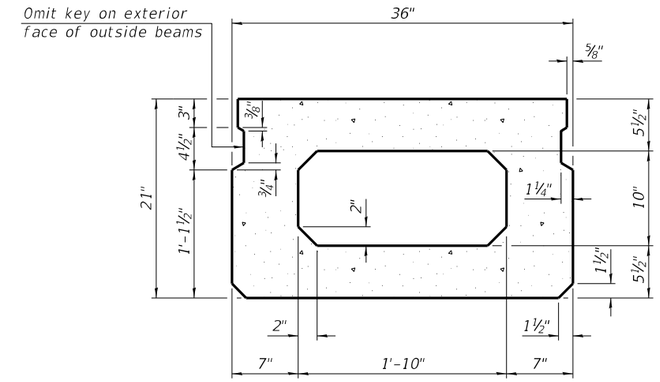

SECTION B-B
(Showing dimensions)

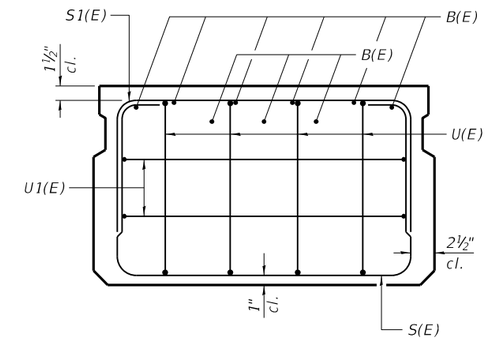

VIEW C-C

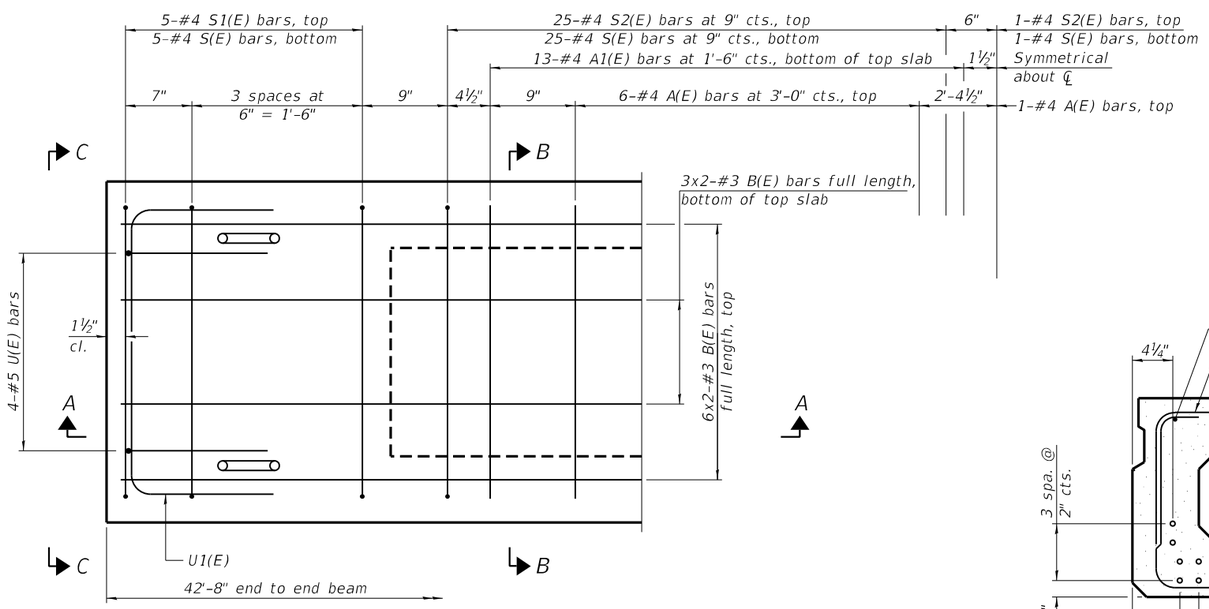

PLAN VIEW

Note:
Spacing of S(E) and S2(E) bars may be adjusted up to 4" in the immediate area of the transverse tie diaphragms to miss the block outs for the transverse ties.
Bars indicated thus 6x2-#3 etc. indicates 6 lines of bars with 2 lengths per line.

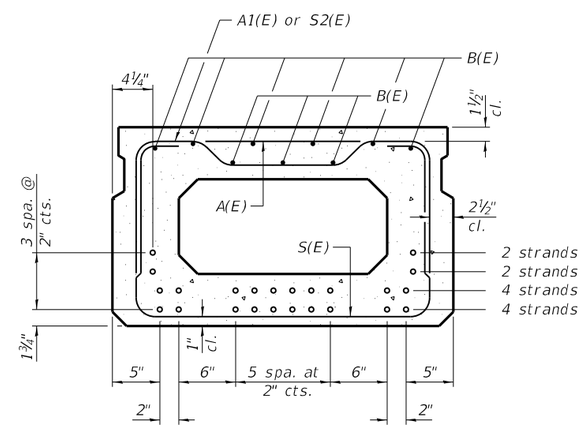

SECTION B-B
(Showing reinforcement and permissible strand locations)

Note:
Place the number of strands specified in each row symmetrically about the centerline of beam in the permissible strand locations shown.

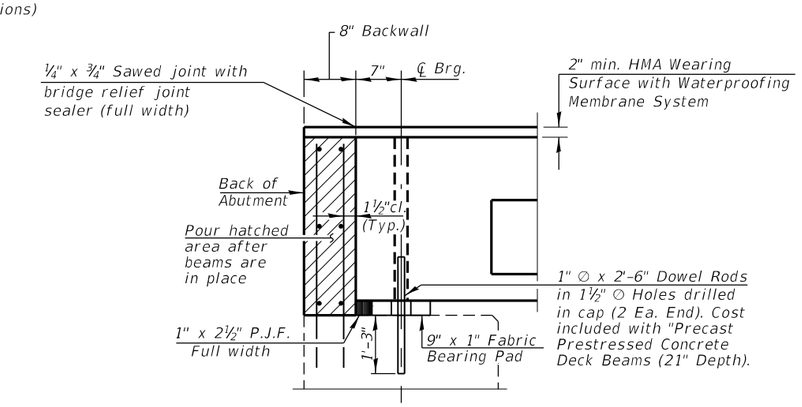

SECTION THRU ABUTMENT

MINIMUM BAR LAP
#3 bar = 1'-6"

BAR LIST
ONE BEAM ONLY
(For information only)

Bar	No.	Size	Length	Shape
A(E)	13	#4	2'-7"	
A1(E)	26	#4	2'-10"	
B(E)	18	#3	22'-0"	
S(E)	61	#4	6'-5"	
S1(E)	10	#4	4'-11"	
S2(E)	51	#4	5'-2"	
U(E)	8	#5	4'-0"	
U1(E)	4	#4	5'-0"	

Note:
See sheet 4 of 11 for additional details and Bill of Material.

PD-2136-0 5-15-2023

MODEL: $MODELNAME$
FILE NAME: $FILEL$

VEENSTRA & KIMM INC.
Springfield, IL. Phone: (217)544-8033
IL. Design Firm No. 184-001939

USER NAME =	DESIGNED - VVR	REVISED -
	CHECKED - DHC	REVISED -
PLOT SCALE =	DRAWN - VVR	REVISED -
PLOT DATE = 11/14/2025	CHECKED - DHC	REVISED -

STATE OF ILLINOIS
DEPARTMENT OF TRANSPORTATION
DEPARTMENT OF NATURAL RESOURCES

21" x 36" PPC DECK BEAM
STRUCTURE NO. 090 - 9922

SHEET 3 OF 11 SHEETS

T.R. RTE.	SECTION	COUNTY	TOTAL SHEETS	SHEET NO.
125	SPRING LAKE 2024	TAZEWELL	56	31
		CONTRACT NO. 46939		
		ILLINOIS	FED. AID PROJECT	

$DATE$ $TIME$

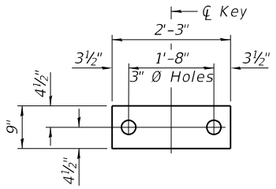

FABRIC BEARING PAD
(Interior)

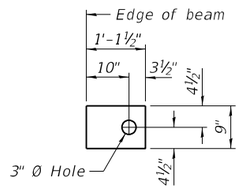

FABRIC BEARING PAD
(Exterior)

FIXED

Notes:
All bearing pads shall be 1" thick.
Omit holes when using expansion bearings.
Expansion bearing pads shall be bonded to the substructure.

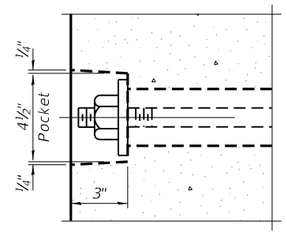

SECTION A-A

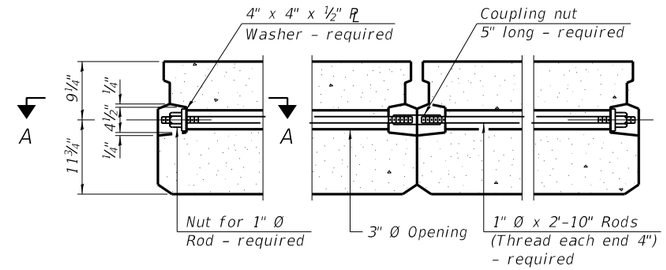

TYPICAL TRANSVERSE TIE ASSEMBLY

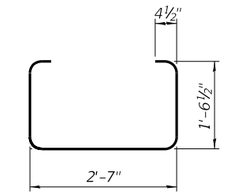

BAR S(E)

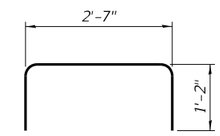

BAR S1(E)

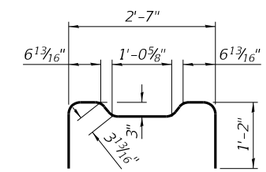

BAR S2(E)

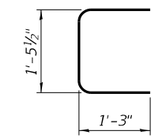

BAR U(E)

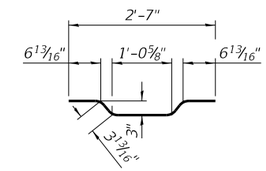

BAR A1(E)

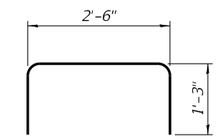

BAR U1(E)

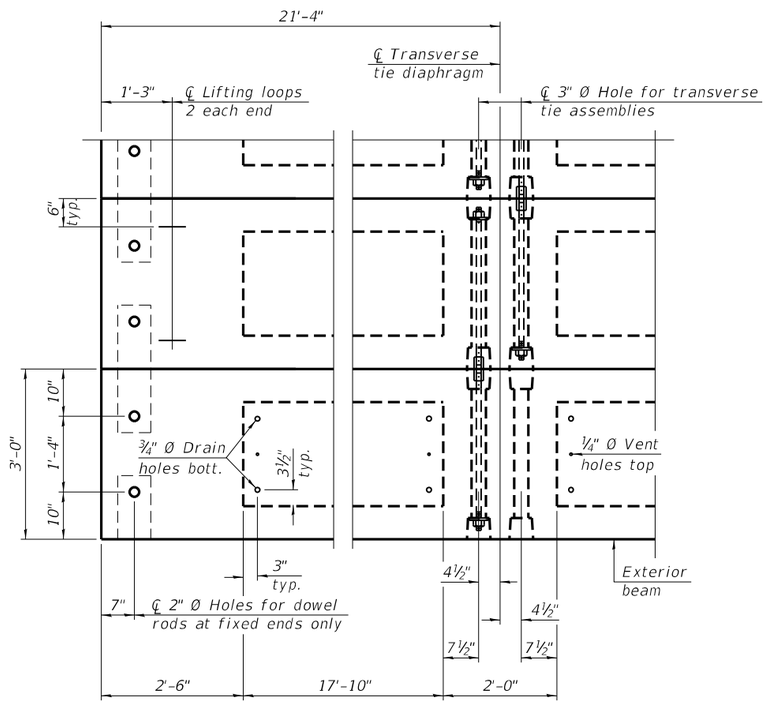

PLAN VIEW

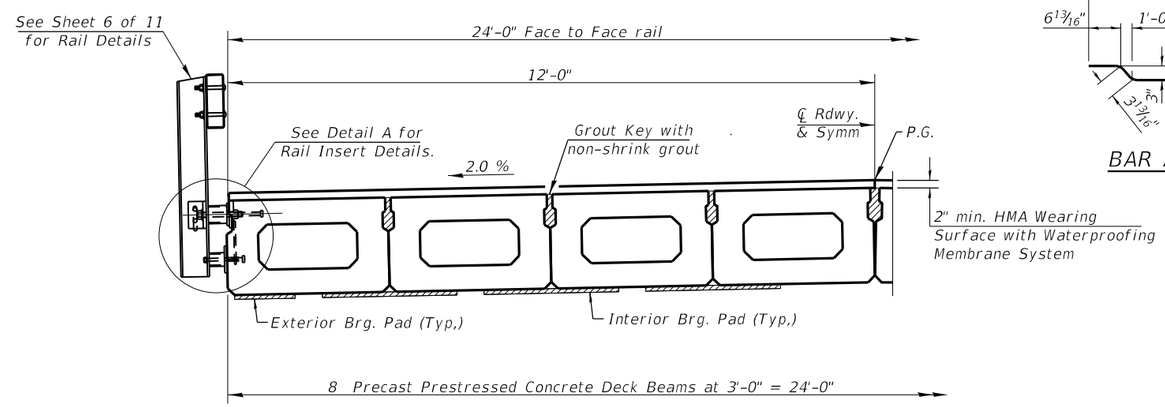

CROSS SECTION

Note: See Sheet 3 & 4 of 11 for Superstructure Details

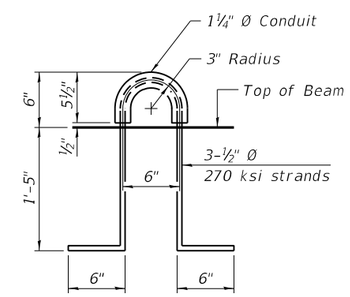

LIFTING LOOP DETAIL

Note:
Connect beams in pairs with the transverse tie configuration shown.

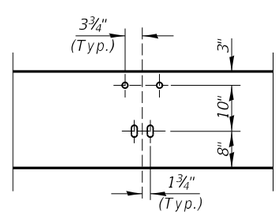

DETAIL A

NOTES

Prestressing steel shall be uncoated high strength, low relaxation 7-wire strand, Grade 270. The nominal diameter shall be ½" and the nominal cross-sectional area shall be 0.153 sq. in.

The 1" Ø rods in the transverse tie assembly shall be tightened to a snug fit and the threads set. Pockets on exterior faces of bridge shall be filled with grout after transverse tie assembly is in place.

Two ⅛" fabric adjusting shims of the dimensions of the exterior bearing pad shall be provided for each bearing pad location.

A minimum 2½" Ø lifting pin shall be used to engage the lifting loops during handling.

Corrosion Inhibitor, per Article 1020.05(b)(10) and 1021.07 of the Standard Specifications, shall be used in the concrete for precast prestressed concrete deck beams.

Compressive strength of prestressed concrete, f'c, shall be 6000 psi.

Compressive strength of prestressed concrete at release, f'ci, shall be 5000 psi.

BILL OF MATERIAL

Precast Prestressed Conc. Deck Bms. (21" depth)	Sq. Ft.	1024

PDD-2136-0 5-15-2023

MODEL: $MODELNAME$
FILE NAME: $FILEL$

VEENSTRA & KIMM INC.
Springfield, IL. Phone: (217)544-8033
IL. Design Firm No. 184-001939

USER NAME = ___	DESIGNED - VVR	REVISED - ___	
	CHECKED - DHC	REVISED - ___	
PLOT SCALE = ___	DRAWN - VVR	REVISED - ___	
PLOT DATE = 11/14/2025	CHECKED - DHC	REVISED - ___	

STATE OF ILLINOIS
DEPARTMENT OF TRANSPORTATION
DEPARTMENT OF NATURAL RESOURCES

21" x 36" PPC DECK BEAM DETAILS
STRUCTURE NO. 090 - 9922

SHEET 4 OF 11 SHEETS

T.R. RTE.	SECTION	COUNTY	TOTAL SHEETS	SHEET NO.
125	SPRING LAKE 2024	TAZEWELL	56	32
		CONTRACT NO. 46939		
		ILLINOIS	FED. AID PROJECT	

$DATE$ $TIME$

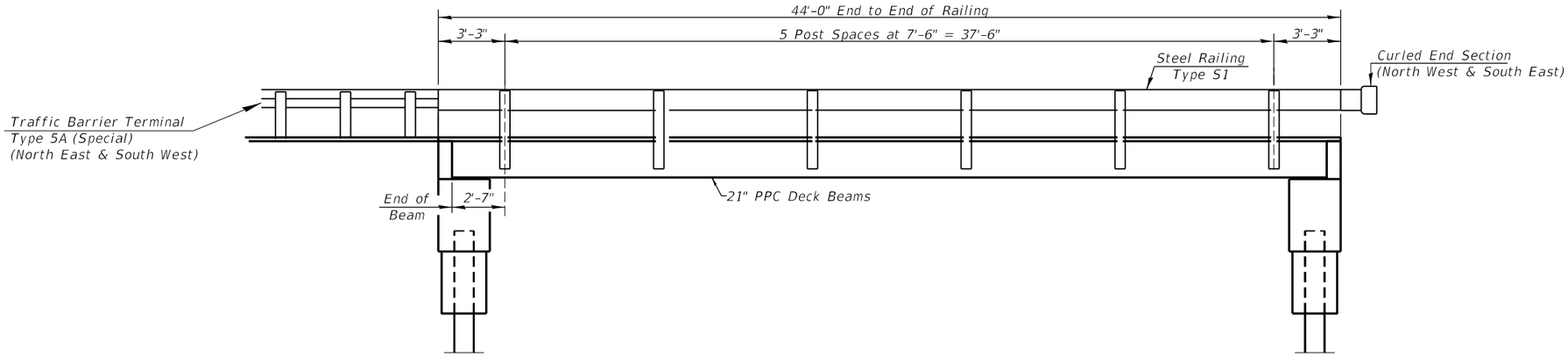

ELEVATION

(Showing Rail Post Spaces)

Note: See Sheet 6 of 11 for railing details

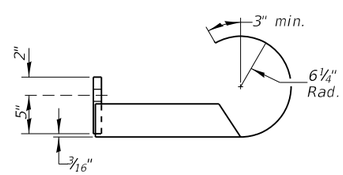

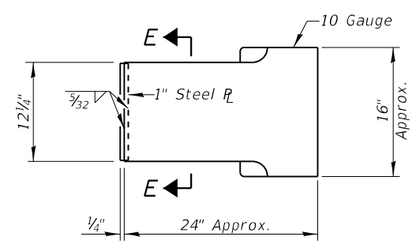

CURLED END SECTION DETAILS

(4 Required)

Note: Cost of Curled End Sections to be included in the cost of Steel Railing, Type S-1.

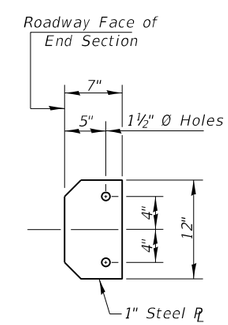

SECTION E-E

MODEL: $MODELNAME$
FILE NAME: $FILEL$

VEENSTRA & KIMM INC. Springfield, IL. Phone: (217)544-8033 IL. Design Firm No. 184-001939	USER NAME = ___	DESIGNED - VVR	REVISED - ___	STATE OF ILLINOIS DEPARTMENT OF TRANSPORTATION DEPARTMENT OF NATURAL RESOURCES	SUPERSTRUCTURE DETAILS STRUCTURE NO. 090-9922	T.R. RTE.	SECTION	COUNTY	TOTAL SHEETS / SHEET NO.
		CHECKED - DHC	REVISED - ___			125	SPRING LAKE 2024	TAZEWELL	56 / 33
	PLOT SCALE = ___	DRAWN - VVR	REVISED - ___					CONTRACT NO. 46939	
	PLOT DATE = 11/14/2025	CHECKED - DHC	REVISED - ___		SHEET 5 OF 11 SHEETS		ILLINOIS	FED. AID PROJECT	

$DATE$ $TIME$

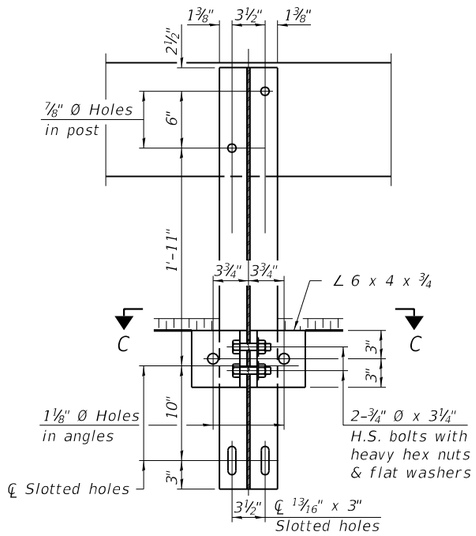

SECTION B-B

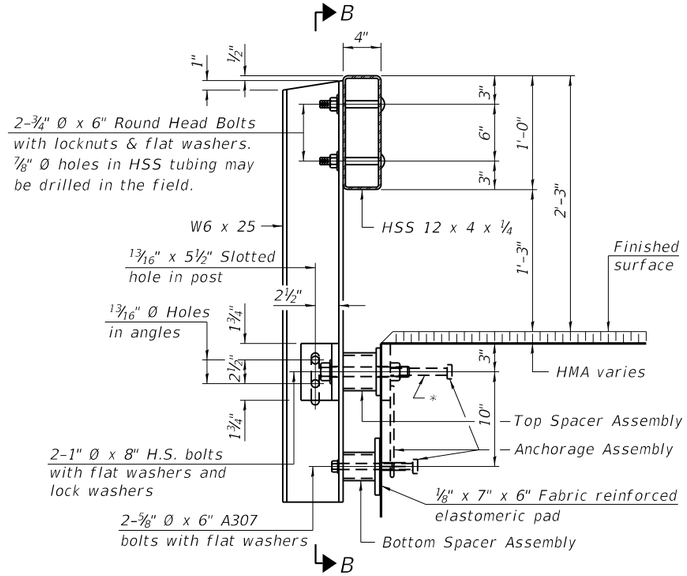

SECTION AT RAILING POST

* The outermost longitudinal reinforcement bar shall be placed directly above the studs of the rail post anchorage assembly. The anchorage studs may be bent down ½" to accommodate the top reinforcement bar placement.

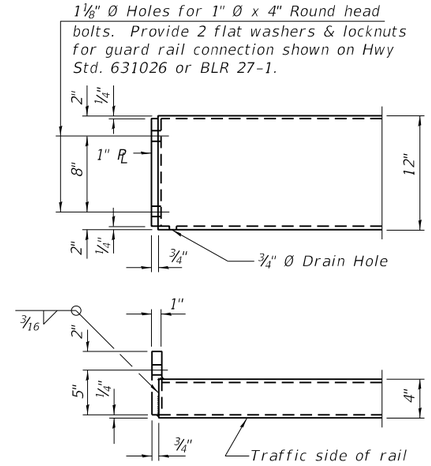

END OF RAIL DETAILS

Notes:

A sufficient number of shims of various thicknesses, sized to fit behind the top spacer assembly, 5" x 11½", and bottom spacer assembly, 6" x 7", shall be provided to adjust posts for proper alignment. If the summation of shims is greater than ¼" (top) or ½" (bottom), longer bolts are required. Cost included with Steel Railing, Type S-1.

All steel rail elements including shims shall be galvanized according to Article 509.05 of the Standard Specifications.

All HSS tubing serving as railing shall be CVN tested according to Article 1006.34(b) of the Standard Specifications.

Rail splice inserts may be built out of 2 -⅜" bent plates in lieu of the 4 plate rail splice inserts shown, provided the outside dimensions are matched.

All round head bolts shall be ASTM A307 with locknuts according to ASTM A563 grade A.

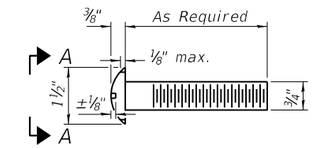

ROUND HEAD BOLT DETAIL

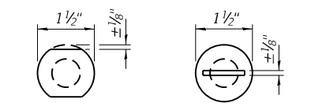

VIEW A-A

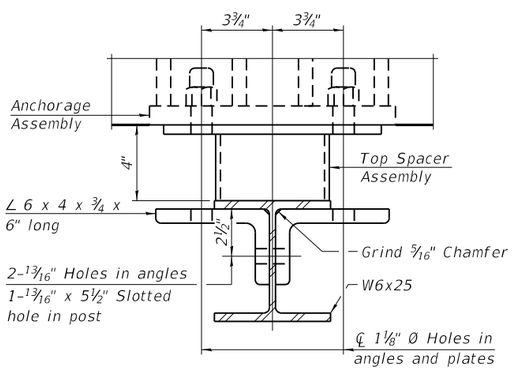

SECTION C-C

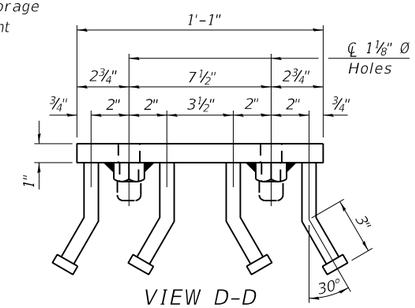

VIEW D-D

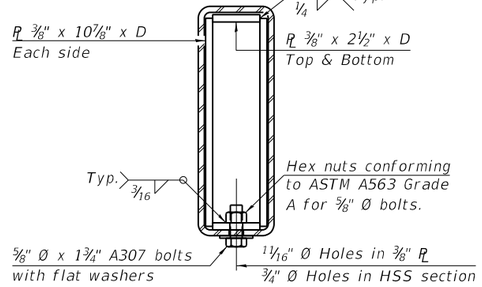

SECTION AT RAIL SPLICE

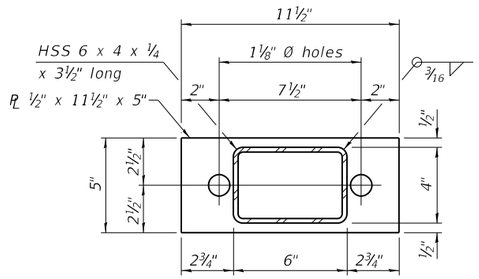

TOP SPACER ASSEMBLY

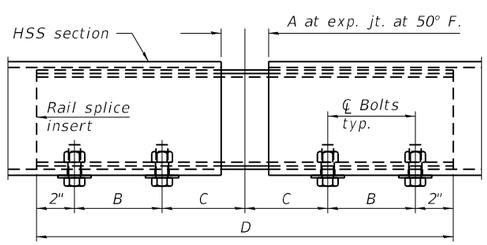

RAIL SPLICE ELEVATION

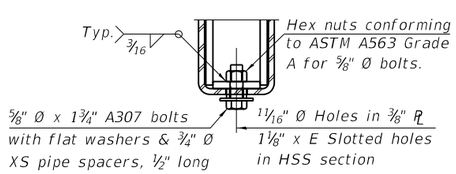

RAIL SPLICE CONNECTION AT EXPANSION JT.

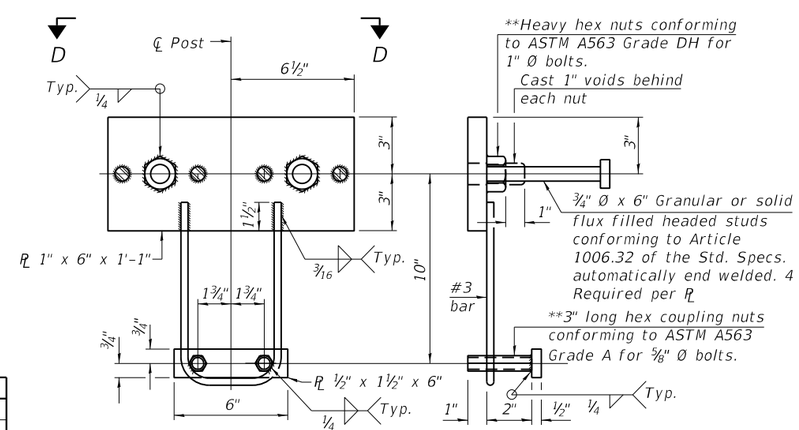

ANCHORAGE ASSEMBLY

** Threaded areas shall be plugged or blocked off during casting of concrete.

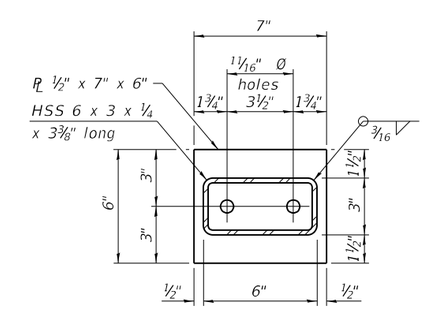

BOTTOM SPACER ASSEMBLY

RAILING CRITERIA

NCHRP 350 Test Level	2
Railing Weight (plf)	50
Max Post Spacing	10'-9"
HMA thickness range (in)	1¼ - 3⅛

SPLICE DIMENSIONS

Location	T	A	B	C	D	E
All locs. not over exp. jts.	0	¼"	4"	4"	1'-8"	-
Over Strip Seal Jt.	≤4"	2½"	4⅝"	4⅜"	1'-10"	3 1/16"
Over Finger or Modular Jt.	≤9½"	5½"	7⅜"	7¼"	2'-9¼"	5 13/16"
Over Finger or Modular Jt.	≤15"	8¼"	10⅛"	10"	3'-8¼"	8 9/16"

T = ; total movement along centerline of roadway at expansion joint.

BILL OF MATERIAL

Item	Unit	Quantity
Steel Railing, Type S-1	Foot	88

R-23A 10-12-2021

MODEL: $MODELNAME$
FILE NAME: $FILE$

VEENSTRA & KIMM INC.
Springfield, IL. Phone: (217)544-8033
IL. Design Firm No. 184-001939

USER NAME =	DESIGNED - VVR	REVISED -	
	CHECKED - DHC	REVISED -	
PLOT SCALE =	DRAWN - VVR	REVISED -	
PLOT DATE = 11/14/2025	CHECKED - DHC	REVISED -	

STATE OF ILLINOIS
DEPARTMENT OF TRANSPORTATION
DEPARTMENT OF NATURAL RESOURCES

STEEL RAILING, TYPE S-1
STRUCTURE NO. 090 - 9922

SHEET 6 OF 11 SHEETS

T.R. RTE.	SECTION	COUNTY	TOTAL SHEETS	SHEET NO.
125	SPRING LAKE 2024	TAZEWELL	56	34

CONTRACT NO. 46939

ILLINOIS | FED. AID PROJECT

$DATE$ $TIME$

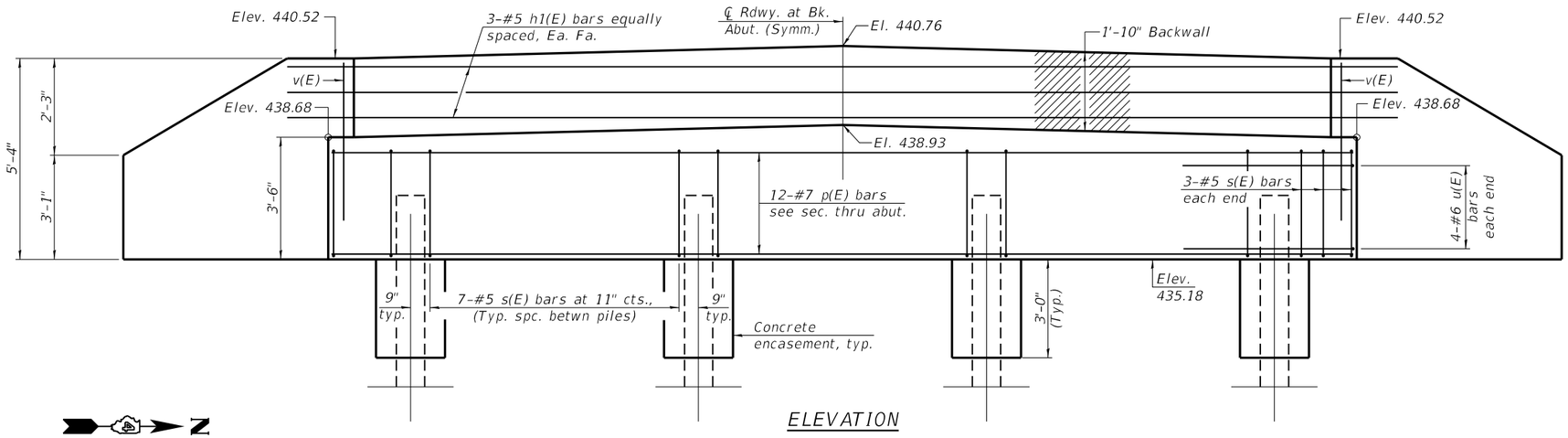

ELEVATION

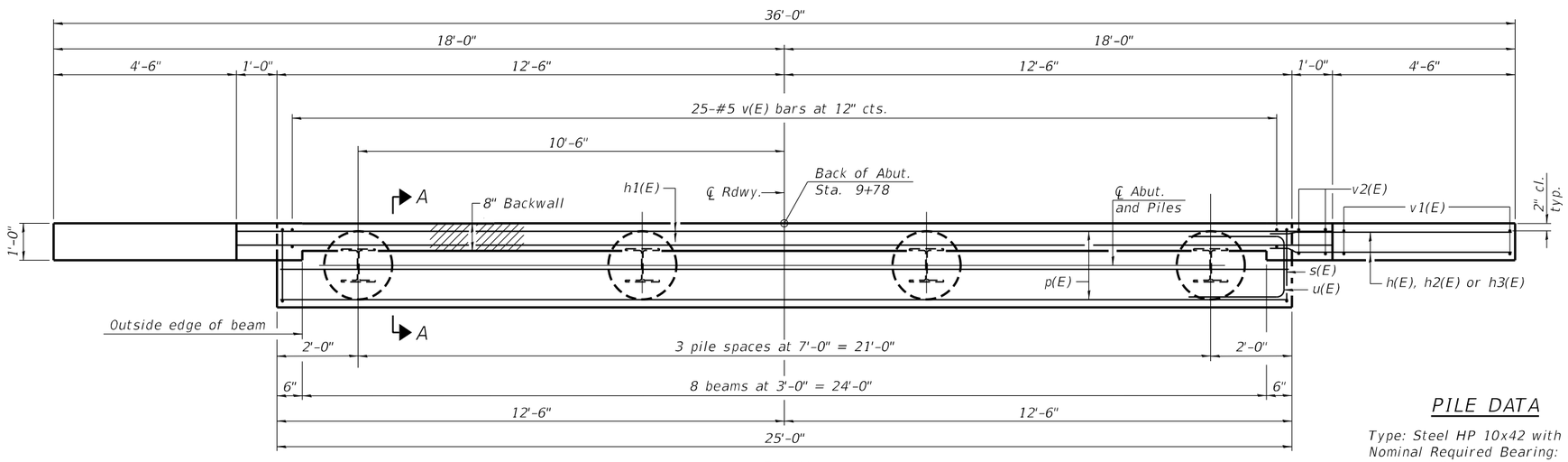

PLAN

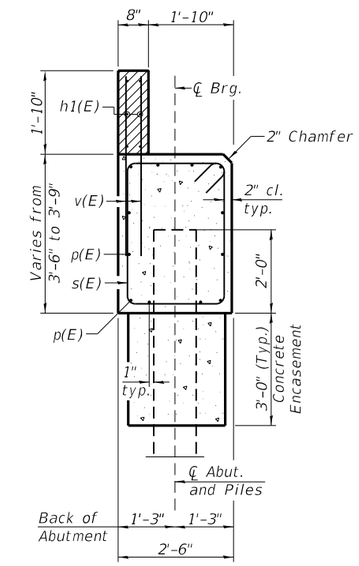

SECTION A-A

BILL OF MATERIAL

Bar	No.	Size	Length	Shape
h(E)	16	#5	8'-1"	
h1(E)	6	#5	26'-8"	
h2(E)	4	#5	11'-4"	
h3(E)	4	#5	6'-0"	
p(E)	12	#7	24'-8"	
s(E)	27	#5	11'-7"	
u(E)	8	#6	10'-10"	
v(E)	50	#5	4'-2"	
v1(E)	10	#5	7'-8"	
v2(E)	8	#5	5'-0"	
Structure Excavation		Cu. Yd.	63	
Concrete Structures		Cu. Yd.	11.4	
Reinforcement Bars, Epoxy Coated		Pound	1780	
Furnishing Steel Piles, HP 10x42		Foot	123	
Driving Piles		Foot	123	
Test Pile Steel, HP 10x42		Each	1	
Pile Shoes		Each	4	
Concrete Encasement		Cu. Yd.	1.4	

PILE DATA

Type: Steel HP 10x42 with Pile Shoes
Nominal Required Bearing: 335
Factored Resistance Available: 184
Est. Length: 41
No. Production Piles: 3
No. Test Piles: 1

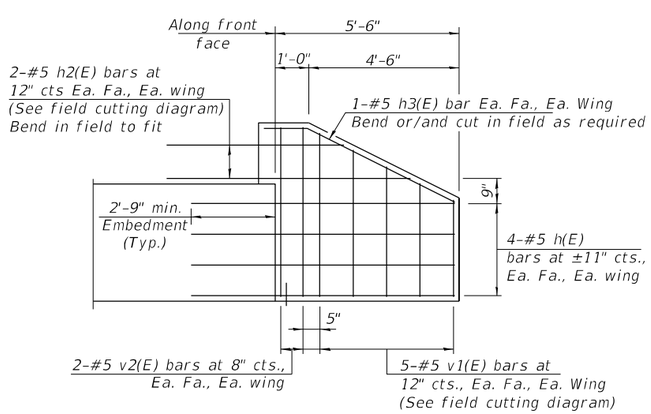

WINGWALL ELEVATION

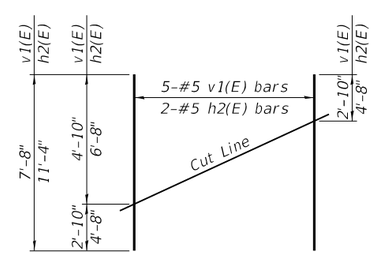

FIELD CUTTING DIAGRAM

Order v1(E) and h2(E) bars full length. Cut as shown and use remainder of bars in opposite face.

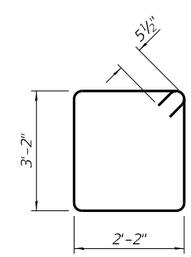

BAR s(E)

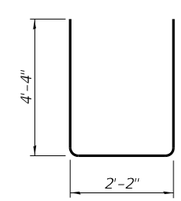

BARS u(E)

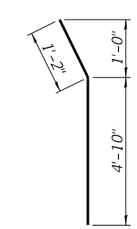

BAR h3(E)

Notes:

All exposed edges shall have standard ¾" chamfer unless noted otherwise.

Space reinforcement in the cap to miss beam anchor dowel bars.

Wingwalls and Backwalls may be cast monolithically, at the contractor's option.

Hatched area and wingwalls shall be poured after beams are anchored in place.

For details of piles and Concrete Encasement, see sheet 9 of 11.

AD-NB-0 03-08-2024

MODEL: $MODELNAME$
FILE NAME: $FILEL$

VEENSTRA & KIMM INC.
Springfield, IL. Phone: (217)544-8033
IL. Design Firm No. 184-001939

USER NAME =	DESIGNED - VVR	REVISED -	
	CHECKED - DHC	REVISED -	
PLOT SCALE =	DRAWN - VVR	REVISED -	
PLOT DATE = 11/14/2025	CHECKED - DHC	REVISED -	

STATE OF ILLINOIS
DEPARTMENT OF TRANSPORTATION
DEPARTMENT OF NATURAL RESOURCES

WEST ABUTMENT
STRUCTURE NO. 090 - 9922
SHEET 7 OF 11 SHEETS

T.R. RTE.	SECTION	COUNTY	TOTAL SHEETS	SHEET NO.
125	SPRING LAKE 2024	TAZEWELL	56	35
		CONTRACT NO. 46939		
		ILLINOIS	FED. AID PROJECT	

$DATE$ $TIME$

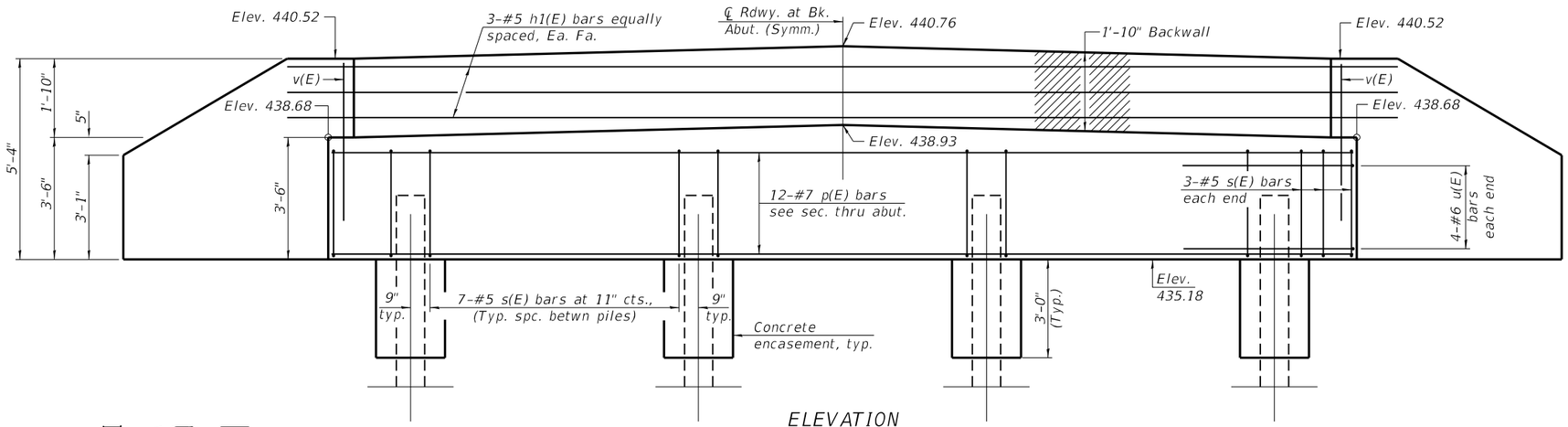

ELEVATION

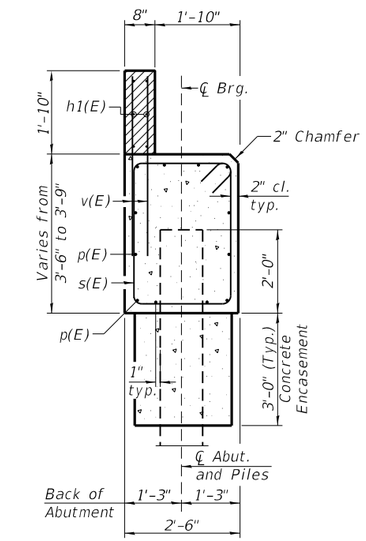

SECTION A-A

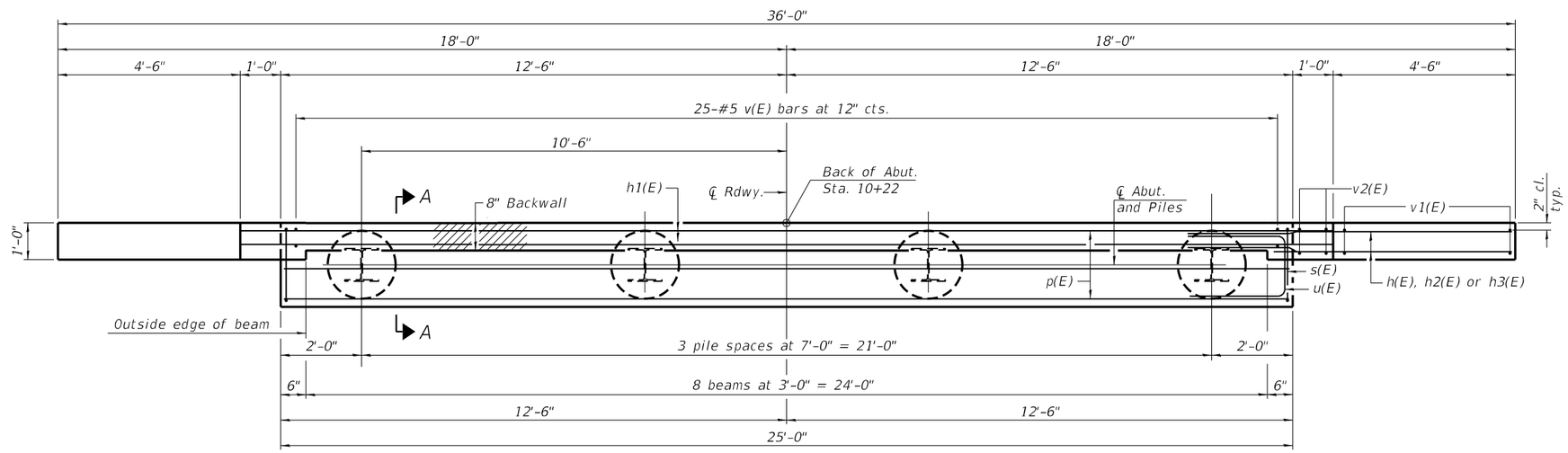

PLAN

BILL OF MATERIAL

Bar	No.	Size	Length	Shape
h(E)	16	#5	8'-4"	
h1(E)	6	#5	26'-8"	
h2(E)	4	#5	11'-4"	
h3(E)	4	#5	6'-0"	
p(E)	12	#7	24'-8"	
s(E)	27	#5	11'-7"	
u(E)	8	#6	10'-10"	
v(E)	50	#5	4'-2"	
v1(E)	10	#5	7'-8"	
v2(E)	8	#5	5'-0"	
Structure Excavation			Cu. Yd.	63
Concrete Structures			Cu. Yd.	11.4
Reinforcement Bars, Epoxy Coated			Pound	1780
Furnishing Steel Piles, HP 10x42			Foot	164
Driving Piles			Foot	164
Pile Shoes			Each	4
Concrete Encasement			Cu. Yd.	1.4

PILE DATA

Type: Steel HP 10x42 with Pile Shoes
Nominal Required Bearing: 335
Factored Resistance Available: 184
Est. Length: 41
No. Production Piles: 4

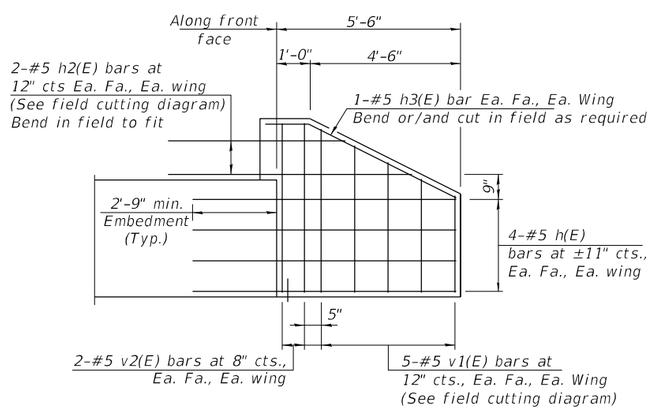

WINGWALL ELEVATION

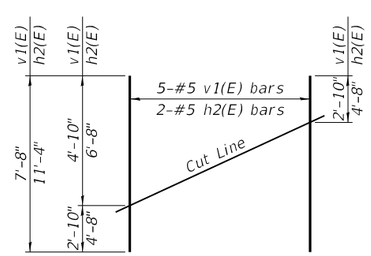

FIELD CUTTING DIAGRAM

Order v1(E) & h2(E) bars full length. Cut as shown and use remainder of bars in opposite face.

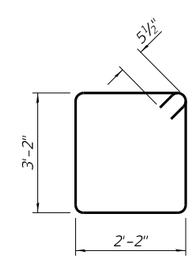

BAR s(E)

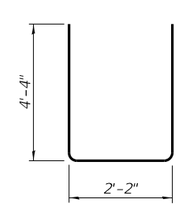

BARS u(E)

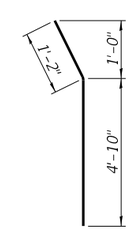

BAR h3(E)

Notes:

All exposed edges shall have standard ¾" chamfer unless noted otherwise.

Space reinforcement in the cap to miss beam anchor dowel bars.

Wingwalls and Backwalls may be cast monolithically, at the contractor's option.

Hatched area and wingwalls shall be poured after beams are anchored in place.

For details of piles and Concrete Encasement, see sheet 9 of 11.

AD-NB-0 03-08-2024

MODEL: $MODELNAME$
FILE NAME: $FILEL$

VEENSTRA & KIMM INC.
Springfield, IL. Phone: (217)544-8033
IL. Design Firm No. 184-001939

USER NAME = __	DESIGNED - VVR	REVISED - __	
	CHECKED - DHC	REVISED - __	
PLOT SCALE = __	DRAWN - VVR	REVISED - __	
PLOT DATE = 11/14/2025	CHECKED - DHC	REVISED - __	

STATE OF ILLINOIS
DEPARTMENT OF TRANSPORTATION
DEPARTMENT OF NATURAL RESOURCES

EAST ABUTMENT
STRUCTURE NO. 090 - 9922

SHEET 8 OF 11 SHEETS

T.R. RTE.	SECTION	COUNTY	TOTAL SHEETS	SHEET NO.
125	SPRING LAKE 2024	TAZEWELL	56	36

CONTRACT NO. 46939

ILLINOIS | FED. AID PROJECT

$DATE$ $TIME$

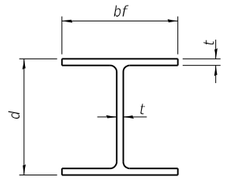

STEEL PILE TABLE

Designation	Depth d	Flange width bf	Web and Flange thickness t	Encasement diameter A
HP 14x117	14¼"	14⅞"	13/16"	30"
x102	14"	14¾"	11/16"	30"
x89	13⅞"	14¾"	⅝"	30"
x73	13⅝"	14⅝"	½"	30"
HP 12x84	12¼"	12¼"	11/16"	24"
x74	12⅛"	12¼"	⅝"	24"
x63	12"	12⅛"	½"	24"
x53	11¾"	12"	7/16"	24"
HP 10x57	10"	10¼"	9/16"	24"
x42	9¾"	10⅛"	7/16"	24"
HP 8x36	8"	8⅛"	7/16"	18"

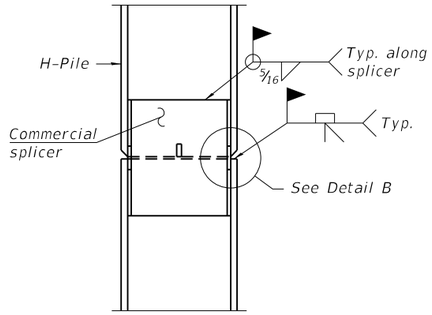

ELEVATION

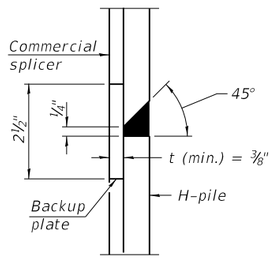

DETAIL "B"

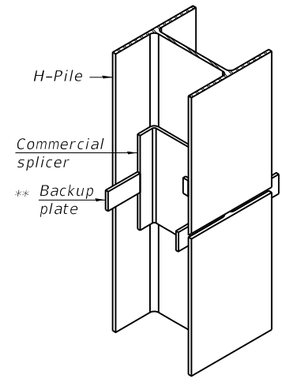

ISOMETRIC VIEW

WELDED COMMERCIAL SPLICE

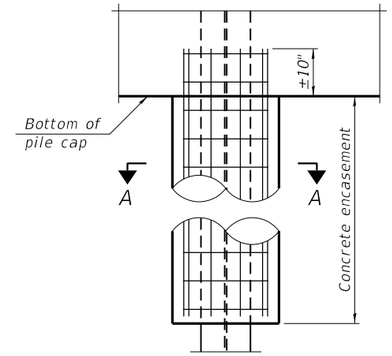

ELEVATION

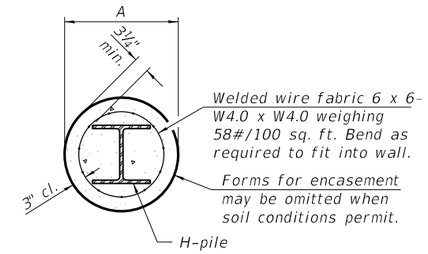

SECTION A-A

INDIVIDUAL PILE CONCRETE ENCASEMENT
(when specified)

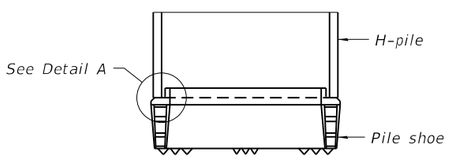

ELEVATION

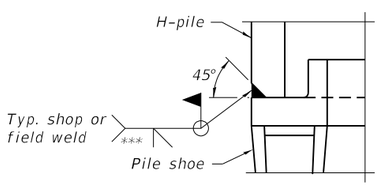

DETAIL A

SHOE ATTACHMENT

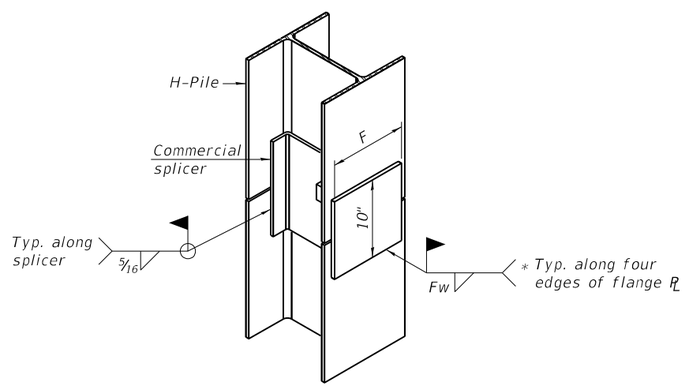

ISOMETRIC VIEW

WELDED COMMERCIAL SPLICE ALTERNATE

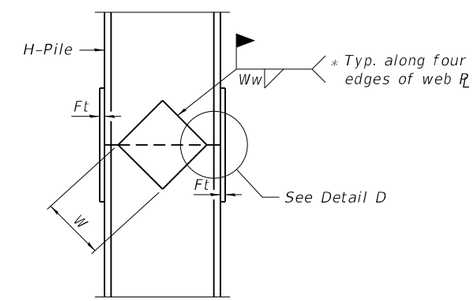

ELEVATION

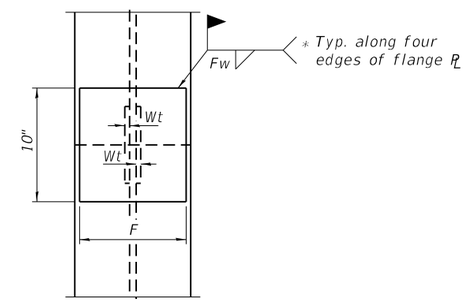

END VIEW

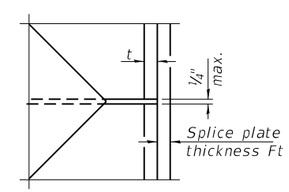

DETAIL D

Designation	F	Ft	Fw	W	Wt	Ww
HP 14x117	12½"	1"	⅞"	7¾"	⅝"	½"
x102	12½"	⅞"	¾"	7¾"	⅝"	½"
x89	12½"	¾"	11/16"	7¾"	⅝"	½"
x73	12½"	⅝"	9/16"	7¾"	⅝"	½"
HP 12x84	10"	⅞"	11/16"	6½"	⅝"	½"
x74	10"	⅞"	11/16"	6½"	⅝"	½"
x63	10"	⅝"	½"	6½"	½"	⅜"
x53	10"	⅝"	½"	6½"	½"	⅜"
HP 10x57	8"	¾"	9/16"	5¼"	½"	⅜"
x42	8"	⅝"	9/16"	5¼"	½"	⅜"
HP 8x36	7"	⅝"	7/16"	4¼"	½"	⅜"

WELDED PLATE FIELD SPLICE

Note:
The steel H-piles shall be according to AASHTO M270 Grade 50.

* Interrupt welds ¼" from end of web and/or each flange.

** Remove portions of backup plates that extend outside the flanges.

*** Weld size per pile shoe manufacturer (5/16" min.).

F-HP 2-1-2023

MODEL: $MODELNAME$
FILE NAME: $FILEL$

VEENSTRA & KIMM INC.
Springfield, IL. Phone: (217)544-8033
IL. Design Firm No. 184-001939

USER NAME = ___	DESIGNED - VVR	REVISED - ___	
	CHECKED - DHC	REVISED - ___	
PLOT SCALE = ___	DRAWN - VVR	REVISED - ___	
PLOT DATE = 11/14/2025	CHECKED - DHC	REVISED - ___	

STATE OF ILLINOIS
DEPARTMENT OF TRANSPORTATION
DEPARTMENT OF NATURAL RESOURCES

HP PILE DETAILS
STRUCTURE NO. 090 - 9922
SHEET 9 OF 11 SHEETS

T.R. RTE.	SECTION	COUNTY	TOTAL SHEETS	SHEET NO.
125	SPRING LAKE 2024	TAZEWELL	56	37

CONTRACT NO. 46939
ILLINOIS FED. AID PROJECT

$DATE$ $TIME$

Illinois Department of Transportation
Division of Highways

SOIL BORING LOG

Date 8/14/24

ROUTE T.R. ROAD 125 DESCRIPTION T.R. Road 125 over Spring Lake LOGGED BY KEG

SECTION - LOCATION West Abutment - Latitude 40.507549°, Longitude -89.811992°

COUNTY Tazewell DRILLING METHOD HSA + Rotary Wash at 38.5' HAMMER TYPE AUTO

STRUCT. NO. 090-9920
Station 19+75.00

BORING NO. SB-1
Station 9+77.00
Offset 1.0 ft RT
Ground Surface Elev. 440.00 ft

Surface Water Elev. ft
Stream Bed Elev. ft

Groundwater Elev.:
First Encounter 433.0 ft ▼
Upon Completion ft
After ___ Hrs. ft

Description	Elev.	DEPTH (ft)	BLOWS (/6")	UCS Qu (tsf)	MOIST (%)
ASPHALT - 3"	439.8				
SANDY LOAM - BRown, Medium Dense, w/ Some Gravel			11		
			9		5
			7		
	436.5				
SAND - Brown, Coarse, Loose, Wet, w/ Some Gravel %Gravel=2.4, %Sand=89.4, %Silt=4.4, %Clay=3.9			3		
			4		5
		-5	3		
			1		
		▼	1		17
			1		
			1		
			1		17
		-10	2		
			4		
			1		13
becomes gray			1		
becomes medium coarse to coarse			1		
			2		16
		-15	1		
	424.0				
SILTY CLAY - Dark Brown, Soft, w/ Shells and Organics			1		
			1	0.2	108
			1	B	
	421.5				
SAND - Gray, Loose, w/ Shells			2		
	420.5		0	0.4	28
SILTY CLAY - Gray, Soft, w/ Shells		-20	1	B	

Description	Elev.	DEPTH (ft)	BLOWS (/6")	UCS Qu (tsf)	MOIST (%)
SILTY CLAY - Gray, Soft, w/ Shells *(continued)*	419.0				
SAND - Gray and Black, Coarse, w/ Some Gravel			3		
			9		18
			14		
	416.5				
GRAVELLY SAND - Gray, Medium Dense, Coarse			16		
			10		11
		-25	13		
becomes brown			14		
			11		13
			10		
			11		
			17		10
		-30	14		
	408.0				
Gravel - Black, Dense Poor Recovery			50/4.5"		
	405.0	-35			10
COAL					
	401.5				
SHALE - Gray, Soft			100/13.25"		
				24.0	18
		-40			

The Unconfined Compressive Strength (UCS) Failure Mode is indicated by (B-Bulge, S-Shear, P-Penetrometer)
The SPT (N value) is the sum of the last two blow values in each sampling zone (AASHTO T206)

BBS, form 137 (Rev. 8-99)

Illinois Department of Transportation
Division of Highways

SOIL BORING LOG

Date 8/14/24

ROUTE T.R. ROAD 125 DESCRIPTION T.R. Road 125 over Spring Lake LOGGED BY KEG

SECTION - LOCATION West Abutment - Latitude 40.507549°, Longitude -89.811992°

COUNTY Tazewell DRILLING METHOD HSA + Rotary Wash at 38.5' HAMMER TYPE AUTO

STRUCT. NO. 090-9920
Station 19+75.00

BORING NO. SB-1
Station 9+77.00
Offset 1.0 ft RT
Ground Surface Elev. 440.00 ft

Surface Water Elev. ft
Stream Bed Elev. ft

Groundwater Elev.:
First Encounter 433.0 ft ▼
Upon Completion ft
After ___ Hrs. ft

Description	Elev.	DEPTH (ft)	BLOWS (/6")	UCS Qu (tsf)	MOIST (%)
SHALE - Gray, Soft *(continued)*					
			100/6.75"		
				12.1	13
		-45			
becomes moderately hard			100/3"		
				19.2	24
		-50			
			100/1"		
					8
	385.0	-55			
End of Boring					
		-60			

The Unconfined Compressive Strength (UCS) Failure Mode is indicated by (B-Bulge, S-Shear, P-Penetrometer)
The SPT (N value) is the sum of the last two blow values in each sampling zone (AASHTO T206)

BBS, form 137 (Rev. 8-99)

Illinois Department of Transportation
Division of Highways

SOIL BORING LOG

Page 1 of 1

Date 8/15/24

ROUTE T.R. ROAD 125 DESCRIPTION T.R. Road 125 over Spring Lake LOGGED BY KEG

SECTION - LOCATION East Abutment - Latitude 40.507573°, Longitude -89.811838°

COUNTY Tazewell DRILLING METHOD HSA HAMMER TYPE AUTO

STRUCT. NO. 090-9920
Station 19+75.00

BORING NO. SB-2
Station 10+25.00
Offset 4.0 ft LT
Ground Surface Elev. 440.26 ft

Surface Water Elev. ft
Stream Bed Elev. ft

Groundwater Elev.:
First Encounter 434.3 ft ▼
Upon Completion ft
After Hrs. ft

Description	Elev.	DEPTH (ft)	BLOWS (/6")	UCS Qu (tsf)	MOIST (%)
ASPHALT - 3"	440.0				
SANDY LOAM - Brown, Medium Dense, w/ Some Gravel			8		
			9		5
			6		
			4		
			4		6
		-5	3		
	434.3 ▼				
SAND - Brown, Loose, Medium Coarse, w/ Some Gravel			3		
			2		14
			1		
			1		
			0		16
		-10	1		
			4		
			1		17
			1		
			3		
	425.6		1	<0.25	21
		-15	0	P	
SILTY CLAY - Black, Soft, w/ Shells and Organics					
			WH		
becomes gray			WH	0.3	32
			1	B	
w/ sand and shells layers			1		
			0	0.5	30
		-20	1	P	

Description	Elev.	DEPTH (ft)	BLOWS (/6")	UCS Qu (tsf)	MOIST (%)
SILTY CLAY - Black, Soft, w/ Shells and Organics *(continued)*	419.3				
SAND - Gray, Medium Dense, Coarse, w/ Some Gravel			5		
			10		13
			15		
	416.8				
GRAVELLY SAND - Brown, Coarse, Medium Dense %Gravel=0.3, %Sand=81.7, %Silt=12.7, %Clay=5.3			6		
			11		10
		-25	9		
			18		
			8		10
			9		
			13		
			9		14
		-30	13		
No Recovery			50/0.5"		
					-
		-35			
	401.8				
SHALE - Gray, Moderately Hard			15		
			50/5.5"		14
	400.3	-40			

Borehole continued with rock coring

The Unconfined Compressive Strength (UCS) Failure Mode is indicated by (B-Bulge, S-Shear, P-Penetrometer)
The SPT (N value) is the sum of the last two blow values in each sampling zone (AASHTO T206)

BBS, form 137 (Rev. 8-99)

Illinois Department of Transportation
Division of Highways

ROCK CORE LOG

Page 2 of 1

Date 8/15/24

ROUTE T.R. ROAD 125 DESCRIPTION T.R. Road 125 over Spring Lake LOGGED BY KEG

SECTION - LOCATION East Abutment - Latitude 40.507573°, Longitude -89.811838°

COUNTY Tazewell CORING METHOD Conventional Coring

STRUCT. NO. 090-9920
Station 19+75.00

BORING NO. SB-2
Station 10+25.00
Offset 4.0 ft LT
Ground Surface Elev. 440.26 ft

CORING BARREL TYPE & SIZE 2" Core Bit
Core Diameter 2 in
Top of Rock Elev. 401.76 ft
Begin Core Elev. 400.26 ft

Description	Elev.	DEPTH (ft)	CORE (#)	RECOVERY (%)	R.Q.D. (%)	CORE TIME (min/ft)	STRENGTH (tsf)
SHALE - Gray, Soft, Weathered, w/ 1" Limestone at Bottom	400.26		1	64	18	4	
	395.85						
COAL		-45					
	393.93						
SHALE - Gray, Soft, Weathered							14.3
becomes Moderately Hard and Slightly Weathered							40.0
	390.60						
SILTSTONE - Gray, Moderately Hard	390.26	-50					
SHALE - Gray, Soft, Weathered, w/ Encrusted Limestone			2	95	47	6.6	
	387.16						
SILTSTONE - Gray, Slightly Weathered, Moderately Hard							181.9
	385.26	-55					
End of Boring							
		-60					

Color pictures of the cores Yes
Cores will be stored for examination until Yes
The "Strength" column represents the uniaxial compressive strength of the core sample (ASTM D-2938)

BBS, form 138 (Rev. 8-99)

MODEL: $MODELNAME$
FILE NAME: $FILEL$

VEENSTRA & KIMM INC.
Springfield, IL. Phone: (217)544-8033
IL. Design Firm No. 184-001939

USER NAME =	DESIGNED - VVR	REVISED -	
	CHECKED - DHC	REVISED -	
PLOT SCALE =	DRAWN - VVR	REVISED -	
PLOT DATE = 11/14/2025	CHECKED - DHC	REVISED -	

STATE OF ILLINOIS
DEPARTMENT OF TRANSPORTATION
DEPARTMENT OF NATURAL RESOURCES

SOIL BORING LOG - 2
STRUCTURE NO. 090 - 9922
SHEET 11 OF 11 SHEETS

T.R. RTE.	SECTION	COUNTY	TOTAL SHEETS	SHEET NO.
125	SPRING LAKE 2024	TAZEWELL	56	39
		CONTRACT NO. 46939		
		ILLINOIS FED. AID PROJECT		

$DATE$ $TIME$

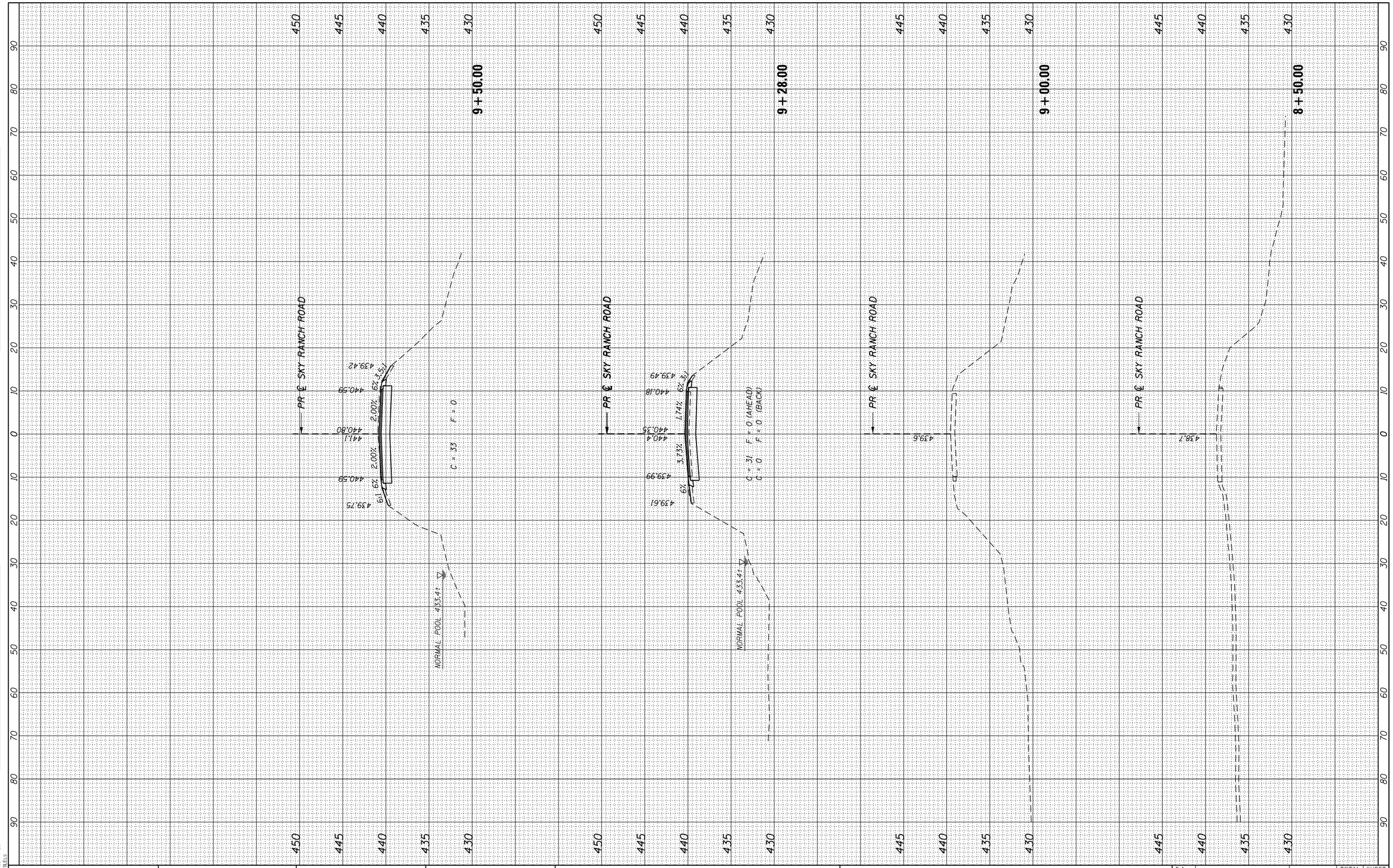

FINAL SURVEY		BY	DATE
NOTE BOOK	SURVEYED		
	PLOTTED		
	TEMPLATE		
	AREAS		
NO.	AREAS CHECKED		

ORIGINAL SURVEY		BY	DATE
NOTE BOOK	SURVEYED		
	PLOTTED		
	TEMPLATE		
	AREAS		
NO.	AREAS CHECKED		

MODEL: SMODELNAME$
FILE NAME: $FILEL$

VEENSTRA & KIMM INC.
Springfield, IL. Phone: (217)544-8033
IL. Design Firm No. 184-001939

USER NAME = $USER$	DESIGNED - JEB	REVISED -
	DRAWN - JEB	REVISED -
PLOT SCALE = $SCALE$	CHECKED - RHD	REVISED -
PLOT DATE = $DATE$	DATE - 11/14/2025	REVISED -

STATE OF ILLINOIS
DEPARTMENT OF TRANSPORTATION
DEPARTMENT OF NATURAL RESOURCES

CROSS SECTIONS – SKY RANCH ROAD

SCALE: | SHEET 1 OF 3 SHEETS | STA. 8+50.00 TO STA. 9+50.00

F.A. RTE.	SECTION	COUNTY	TOTAL SHEETS	SHEET NO.
	SPRING LAKE 2024	TAZEWELL	56	40
		CONTRACT NO. 46939		
		ILLINOIS FED. AID PROJECT		

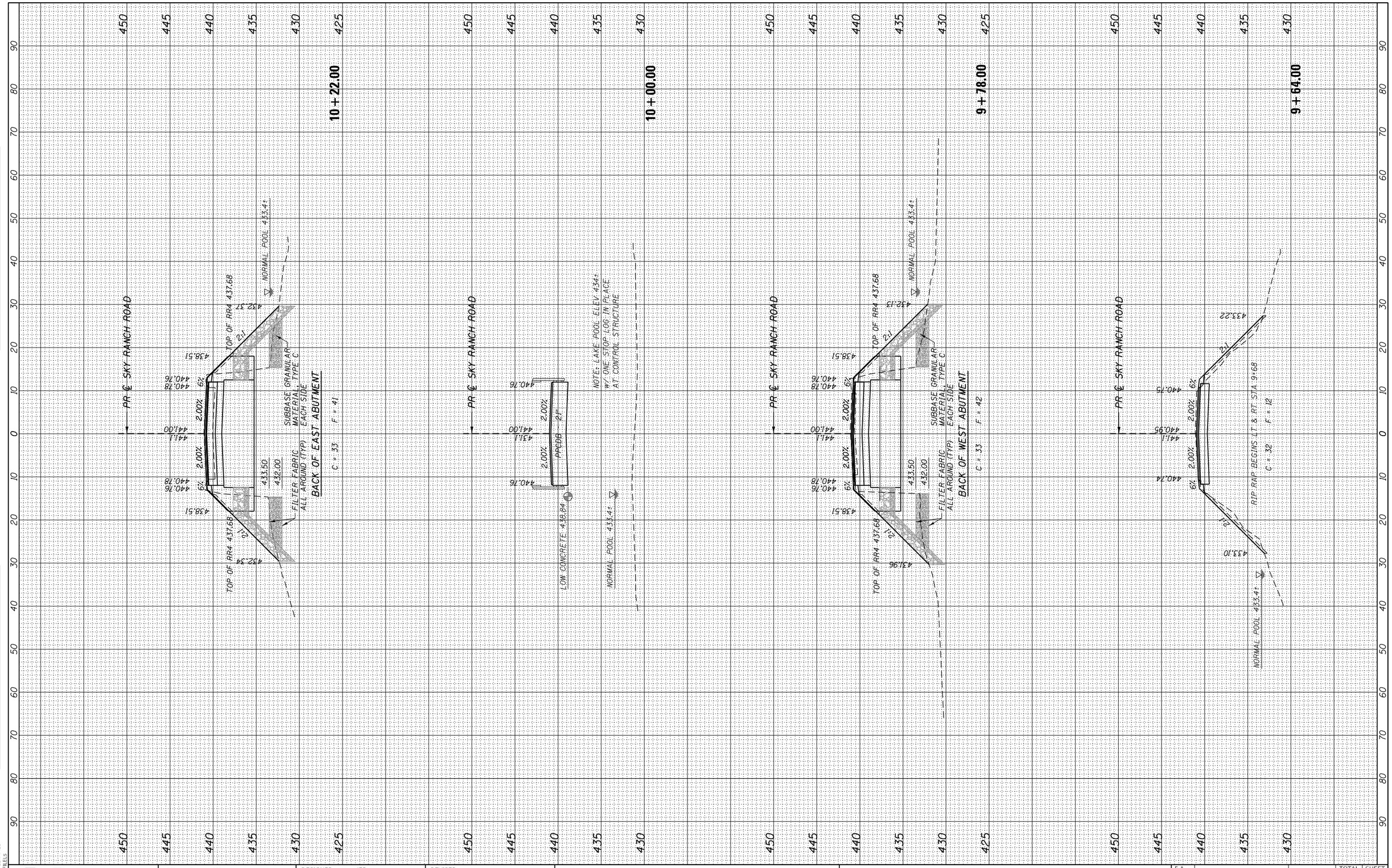

FINAL SURVEY		BY	DATE
NOTE BOOK	SURVEYED		
	PLOTTED		
	TEMPLATE		
	AREAS		
	AREAS CHECKED		
NO.			

ORIGINAL SURVEY		BY	DATE
NOTE BOOK	SURVEYED		
	PLOTTED		
	TEMPLATE		
	AREAS		
	AREAS CHECKED		
NO.			

MODEL: $MODELNAME$
FILE NAME: $FILEL$

VEENSTRA & KIMM INC.
Springfield, IL. Phone: (217)544-8033
IL. Design Firm No. 184-001939

USER NAME = $USER$	DESIGNED - JEB	REVISED -
	DRAWN - JEB	REVISED -
PLOT SCALE = $SCALE$	CHECKED - RHD	REVISED -
PLOT DATE = $DATE$	DATE - 11/14/2025	REVISED -

STATE OF ILLINOIS
DEPARTMENT OF TRANSPORTATION
DEPARTMENT OF NATURAL RESOURCES

CROSS SECTIONS – SKY RANCH ROAD

SCALE: | SHEET 2 OF 3 SHEETS | STA. 9+64.00 TO STA. 10+22.00

F.A. RTE.	SECTION	COUNTY	TOTAL SHEETS	SHEET NO.
	SPRING LAKE 2024	TAZEWELL	56	41
		CONTRACT NO. 46939		
		ILLINOIS	FED. AID PROJECT	

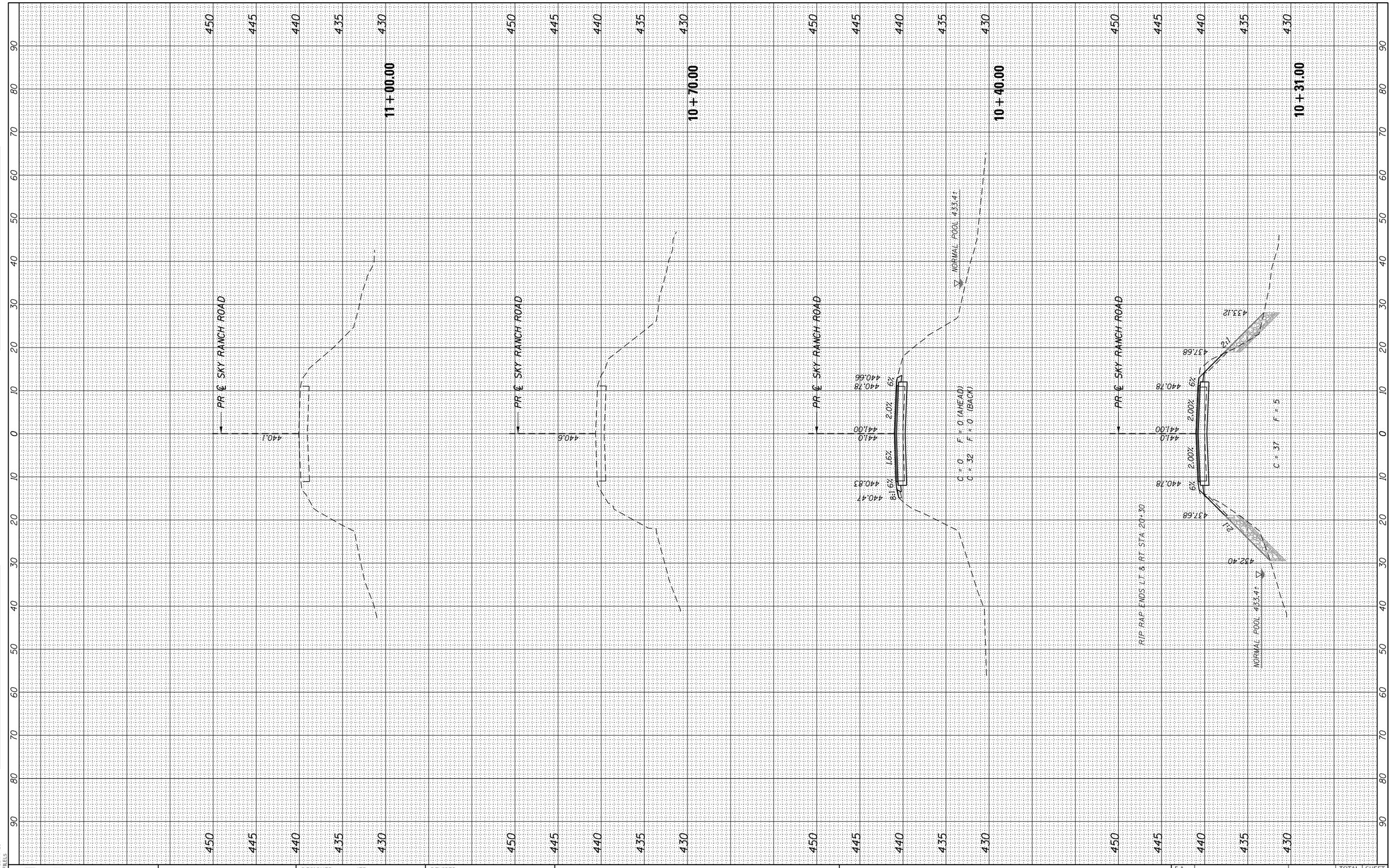

FINAL SURVEY		BY	DATE
NOTE BOOK	SURVEYED		
	PLOTTED		
	TEMPLATE		
	AREAS		
NO.	AREAS CHECKED		

ORIGINAL SURVEY		BY	DATE
NOTE BOOK	SURVEYED		
	PLOTTED		
	TEMPLATE		
	AREAS		
NO.	AREAS CHECKED		

MODEL: $MODELNAME$
FILE NAME: $FILE1$

VEENSTRA & KIMM INC.
Springfield, IL. Phone: (217)544-8033
IL. Design Firm No. 184-001939

USER NAME = $USER$	DESIGNED - JEB	REVISED -
	DRAWN - JEB	REVISED -
PLOT SCALE = $SCALE$	CHECKED - RHD	REVISED -
PLOT DATE = $DATE$	DATE - 11/14/2025	REVISED -

STATE OF ILLINOIS
DEPARTMENT OF TRANSPORTATION
DEPARTMENT OF NATURAL RESOURCES

CROSS SECTIONS – SKY RANCH ROAD

SCALE: | SHEET 3 OF 3 SHEETS | STA. 10+31.00 TO STA. 11+00.00

F.A. RTE.	SECTION	COUNTY	TOTAL SHEETS	SHEET NO.
	SPRING LAKE 2024	TAZEWELL	56	42
		CONTRACT NO. 46939		
		ILLINOIS	FED. AID PROJECT	

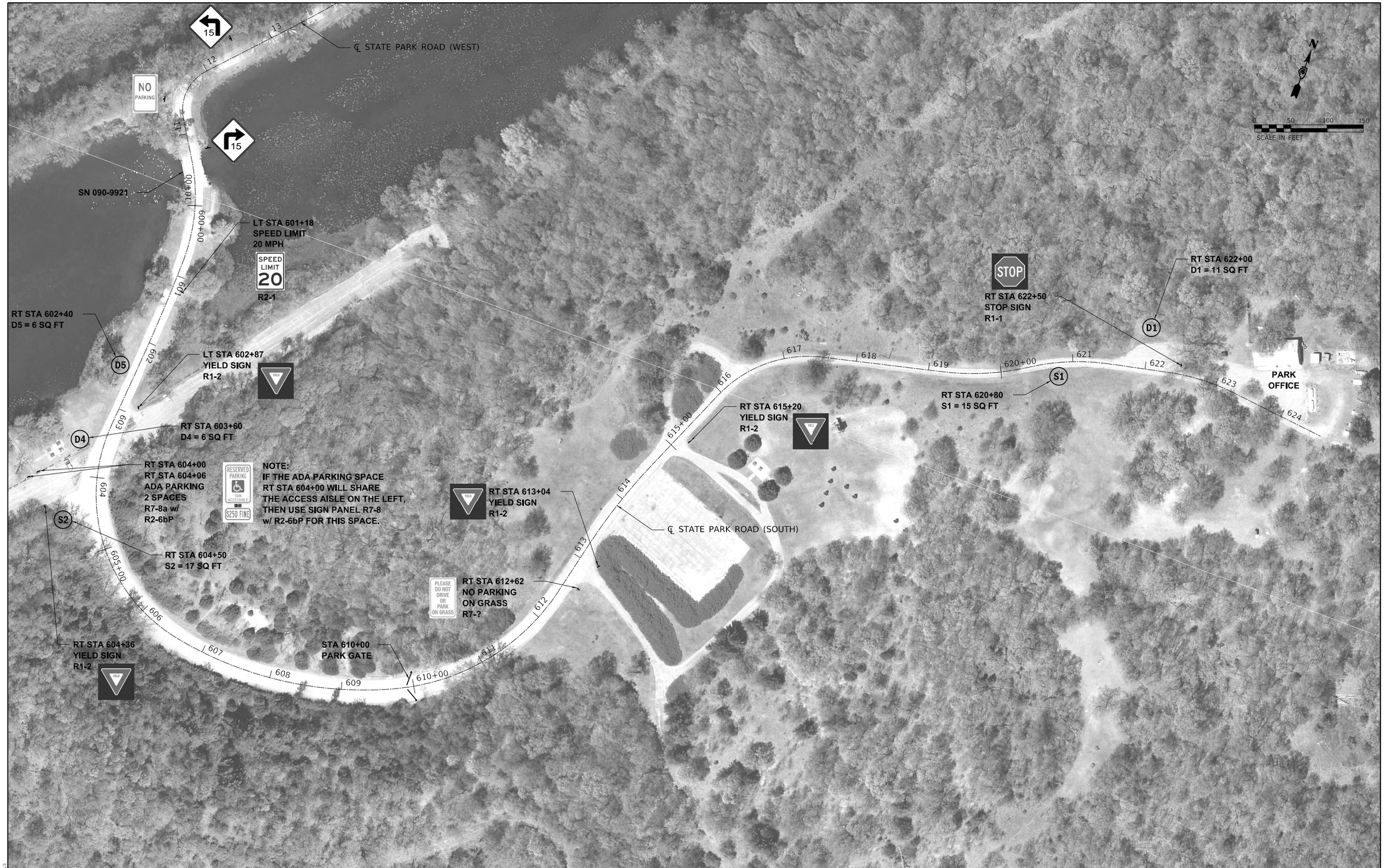

MODEL: $MODELNAME$
FILE NAME: $FILEL$

VEENSTRA & KIMM INC.
A Kleinfelder Company

USER NAME = $USER$	DESIGNED - JEB	REVISED -
	DRAWN - JEB	REVISED -
PLOT SCALE = $SCALE$	CHECKED - RHD	REVISED -
PLOT DATE = $DATE$	DATE - 11/14/2025	REVISED -

STATE OF ILLINOIS
DEPARTMENT OF TRANSPORTATION
DEPARTMENT OF NATURAL RESOURCES

STATE PARK ROAD (SOUTH) SIGNING PLANS
SPRING LAKE STATE FISH & WILDLIFE AREA

SCALE: 1" = 50' | SHEET 1 OF 10 SHEETS | STA 600+00.00 TO STA 624+61.07

F.A. RTE.	SECTION	COUNTY	TOTAL SHEETS	SHEET NO.
	SPRING LAKE 2025	TAZEWELL	56	43
		CONTRACT NO. 46939		
	ILLINOIS	FED. AID PROJECT		

MODEL: $MODELNAME$
FILE NAME: $FILEL$

VEENSTRA & KIMM INC.
A Kleinfelder Company

USER NAME = $USER$	DESIGNED - JEB	REVISED -	
	DRAWN - JEB	REVISED -	
PLOT SCALE = $SCALE$	CHECKED - RHD	REVISED -	
PLOT DATE = $DATE$	DATE - 11/14/2025	REVISED -	

STATE OF ILLINOIS
DEPARTMENT OF TRANSPORTATION
DEPARTMENT OF NATURAL RESOURCES

STATE PARK ROAD SIGNING PLANS
SPRING LAKE STATE FISH & WILDLIFE AREA

SCALE: 1" = 50' | SHEET 2 OF 10 SHEETS | STA 10+00.00 TO STA 42+00.00

F.A. RTE.	SECTION	COUNTY	TOTAL SHEETS	SHEET NO.
IDNR	SPRING LAKE 2024	TAZEWELL	56	44
		CONTRACT NO. 46939		
		ILLINOIS	FED. AID PROJECT	

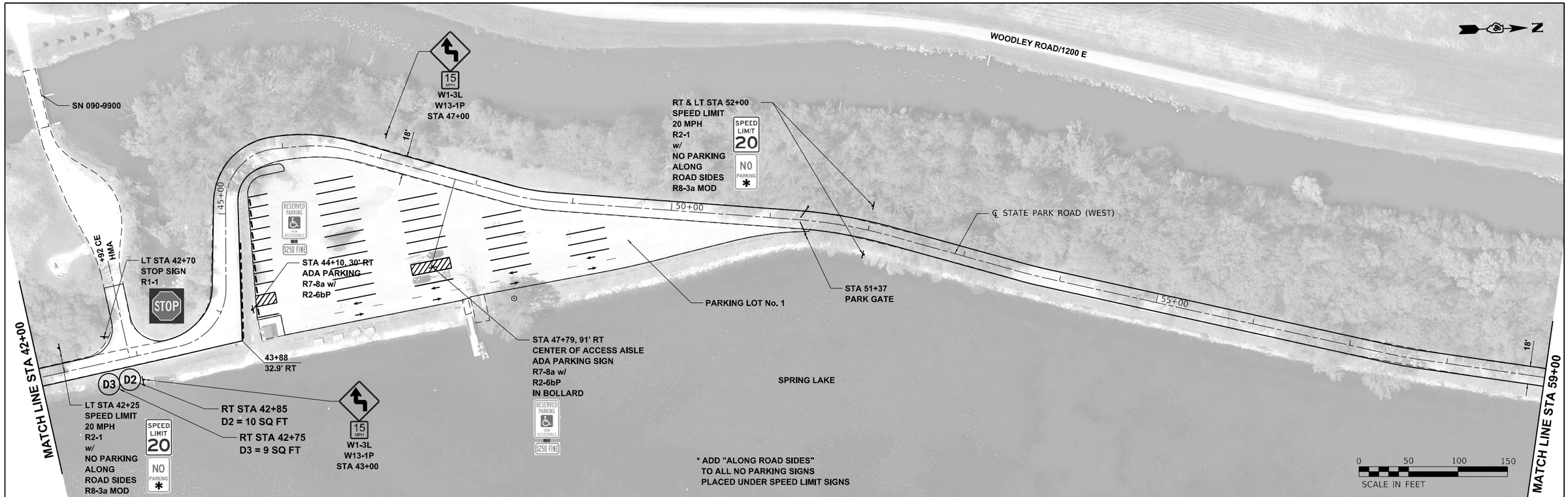

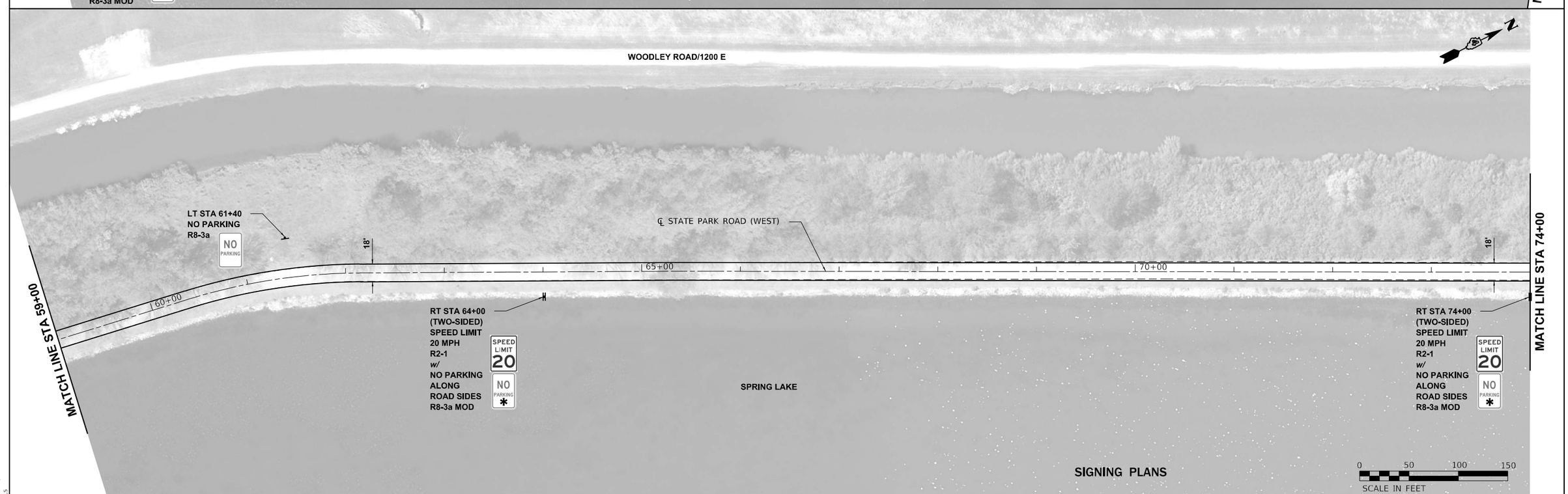

MODEL: $MODELNAME$
FILE NAME: $FILE$

VEENSTRA & KIMM INC.
A Kleinfelder Company

USER NAME = $USER$	DESIGNED - JEB	REVISED -
	DRAWN - JEB	REVISED -
PLOT SCALE = $SCALE$	CHECKED - RHD	REVISED -
PLOT DATE = $DATE$	DATE - 11/14/2025	REVISED -

STATE OF ILLINOIS
DEPARTMENT OF TRANSPORTATION
DEPARTMENT OF NATURAL RESOURCES

STATE PARK ROAD SIGNING PLANS
SPRING LAKE STATE FISH & WILDLIFE AREA

SCALE: 1" = 50' | SHEET 3 OF 10 SHEETS | STA 42+00.00 TO STA 74+00.00

F.A. RTE.	SECTION	COUNTY	TOTAL SHEETS	SHEET NO.
IDNR	SPRING LAKE 2024	TAZEWELL	56	45
		CONTRACT NO. 46939		
	ILLINOIS	FED. AID PROJECT		

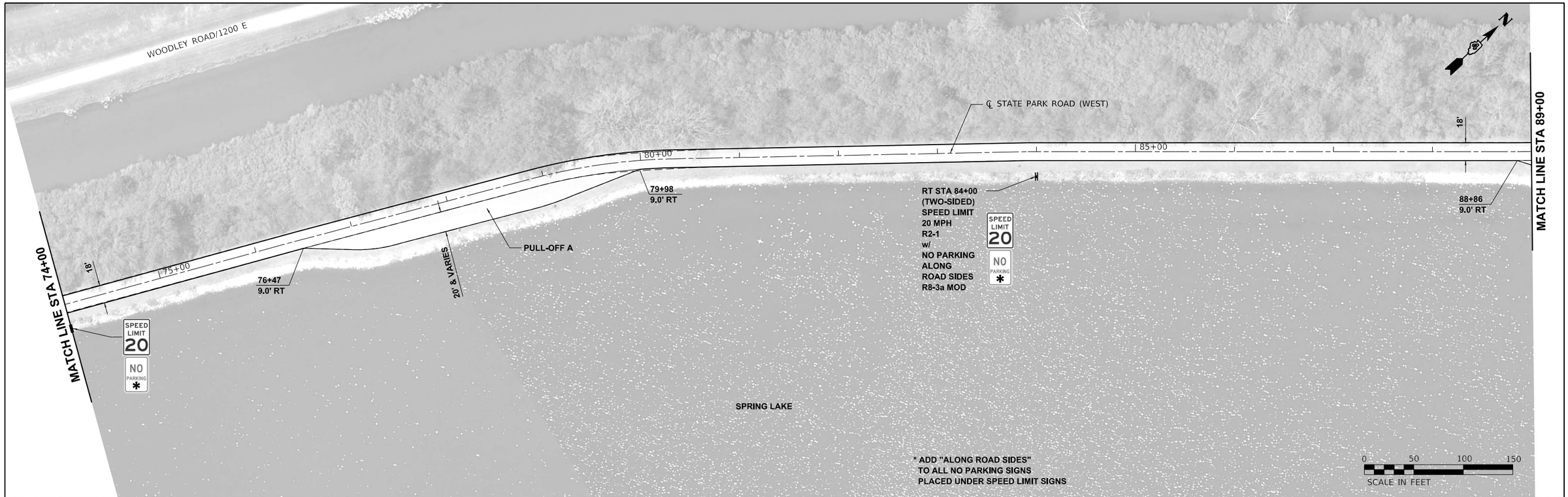

MODEL: $MODELNAME$
FILE NAME: $FILEL$

VEENSTRA & KIMM INC.
A Kleinfelder Company

USER NAME = $USER$	DESIGNED - JEB	REVISED -	
	DRAWN - JEB	REVISED -	
PLOT SCALE = $SCALE$	CHECKED - RHD	REVISED -	
PLOT DATE = $DATE$	DATE - 11/14/2025	REVISED -	

STATE OF ILLINOIS
DEPARTMENT OF TRANSPORTATION
DEPARTMENT OF NATURAL RESOURCES

STATE PARK ROAD SIGNING PLANS
SPRING LAKE STATE FISH & WILDLIFE AREA

SCALE: 1" = 50' | SHEET 4 OF 10 SHEETS | STA 74+00.00 TO STA 104+00.00

F.A. RTE.	SECTION	COUNTY	TOTAL SHEETS	SHEET NO.
IDNR	SPRING LAKE 2024	TAZEWELL	56	46
		CONTRACT NO. 46939		
	ILLINOIS	FED. AID PROJECT		

MODEL: $MODELNAME$
FILE NAME: $FILEL$

VEENSTRA & KIMM INC.
A Kleinfelder Company

USER NAME = $USER$	DESIGNED - JEB	REVISED -	
	DRAWN - JEB	REVISED -	
PLOT SCALE = $SCALE$	CHECKED - RHD	REVISED -	
PLOT DATE = $DATE$	DATE - 11/14/2025	REVISED -	

STATE OF ILLINOIS
DEPARTMENT OF TRANSPORTATION
DEPARTMENT OF NATURAL RESOURCES

STATE PARK ROAD SIGNING PLANS
SPRING LAKE STATE FISH & WILDLIFE AREA

SCALE: 1" = 50' | SHEET 5 OF 10 SHEETS | STA 104+00.00 TO STA 134+00.00

F.A. RTE.	SECTION	COUNTY	TOTAL SHEETS	SHEET NO.
IDNR	SPRING LAKE 2024	TAZEWELL	56	47

CONTRACT NO. 46939

ILLINOIS | FED. AID PROJECT

MODEL: $MODELNAME$
FILE NAME: $FILE$

VEENSTRA & KIMM INC.
A Kleinfelder Company

USER NAME = $USER$	DESIGNED - JEB	REVISED -	
	DRAWN - JEB	REVISED -	
PLOT SCALE = $SCALE$	CHECKED - RHD	REVISED -	
PLOT DATE = $DATE$	DATE - 11/14/2025	REVISED -	

STATE OF ILLINOIS
DEPARTMENT OF TRANSPORTATION
DEPARTMENT OF NATURAL RESOURCES

STATE PARK ROAD SIGNING PLANS
SPRING LAKE STATE FISH & WILDLIFE AREA

SCALE: 1" = 50' | SHEET 6 OF 10 SHEETS | STA 134+00.00 TO STA 160+65.00

F.A. RTE.	SECTION	COUNTY	TOTAL SHEETS	SHEET NO.
IDNR	SPRING LAKE 2024	TAZEWELL	56	48
		CONTRACT NO. 46939		
		ILLINOIS FED. AID PROJECT		

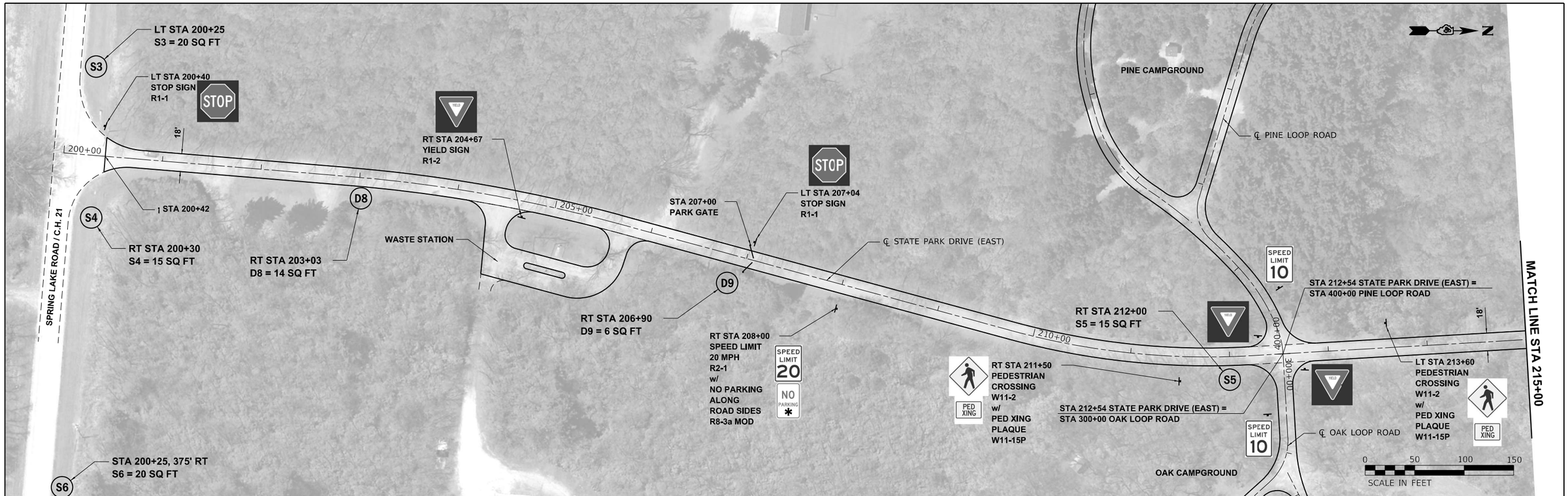

* ADD "ALONG ROAD SIDES" TO
ALL NO PARKING SIGNS PLACED
UNDER SPEED LIMIT SIGNS

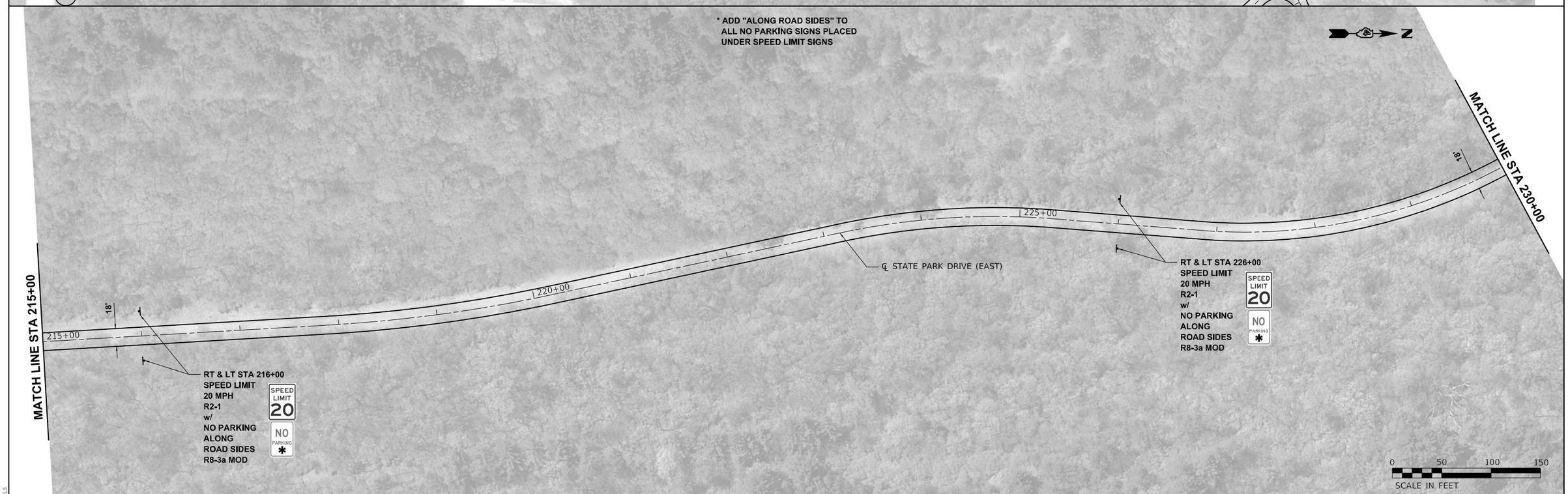

MODEL: $MODELNAME$
FILE NAME: $FILEL$

VEENSTRA & KIMM INC.
A Kleinfelder Company

USER NAME = $USER$	DESIGNED - JEB	REVISED -	
	DRAWN - JEB	REVISED -	
PLOT SCALE = $SCALE$	CHECKED - RHD	REVISED -	
PLOT DATE = $DATE$	DATE - 11/14/2025	REVISED -	

STATE OF ILLINOIS
DEPARTMENT OF TRANSPORTATION
DEPARTMENT OF NATURAL RESOURCES

STATE PARK DRIVE SIGNING PLANS
SPRING LAKE STATE FISH & WILDLIFE AREA

SCALE: 1" = 50' | SHEET 7 OF 10 SHEETS | STA 200+00.00 TO STA 230+00.00

F.A. RTE.	SECTION	COUNTY	TOTAL SHEETS	SHEET NO.
IDNR	SPRING LAKE 2024	TAZEWELL	56	49
		CONTRACT NO. 46939		
	ILLINOIS	FED. AID PROJECT		

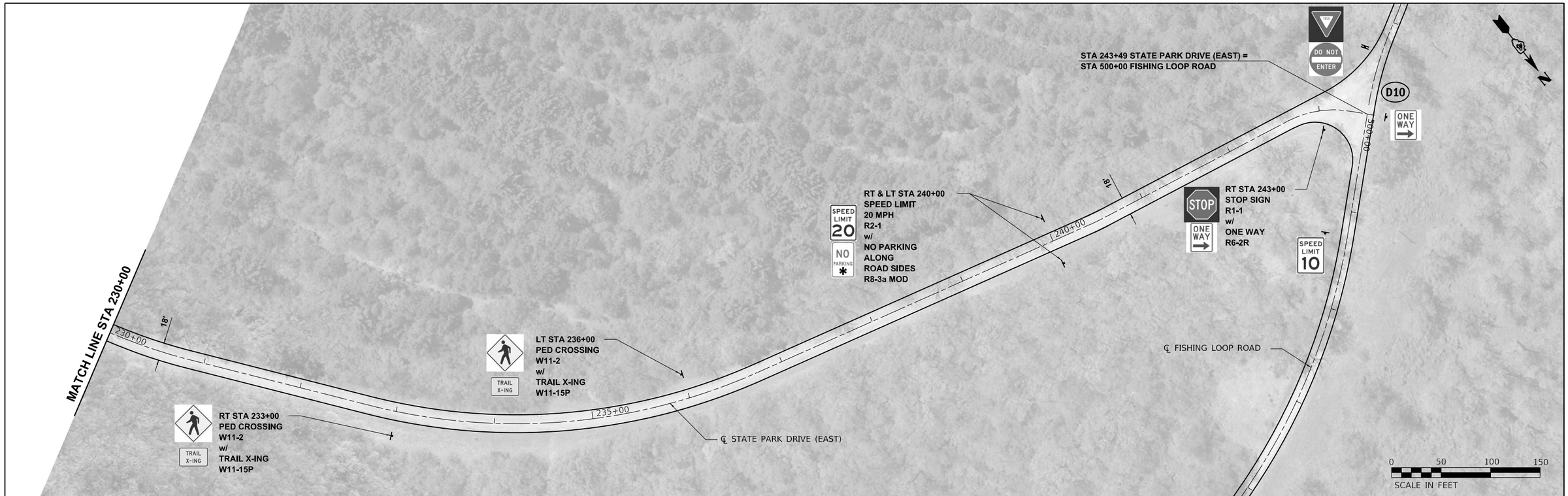

* ADD "ALONG ROAD SIDES" TO
ALL NO PARKING SIGNS PLACED
UNDER SPEED LIMIT SIGNS

MODEL: $MODELNAME$
FILE NAME: $FILEL$

VEENSTRA & KIMM INC.
A Kleinfelder Company

USER NAME = $USER$	DESIGNED - JEB	REVISED -	
	DRAWN - JEB	REVISED -	
PLOT SCALE = $SCALE$	CHECKED - RHD	REVISED -	
PLOT DATE = $DATE$	DATE - 11/14/2025	REVISED -	

STATE OF ILLINOIS
DEPARTMENT OF TRANSPORTATION
DEPARTMENT OF NATURAL RESOURCES

STATE PARK DRIVE SIGNING PLANS
SPRING LAKE STATE FISH & WILDLIFE AREA

SCALE: 1" = 50' | SHEET 8 OF 10 SHEETS | STA 230+00.00 TO STA 243+49.00

F.A. RTE.	SECTION	COUNTY	TOTAL SHEETS	SHEET NO.
IDNR	SPRING LAKE 2024	TAZEWELL	56	50
		CONTRACT NO. 46939		
	ILLINOIS	FED. AID PROJECT		

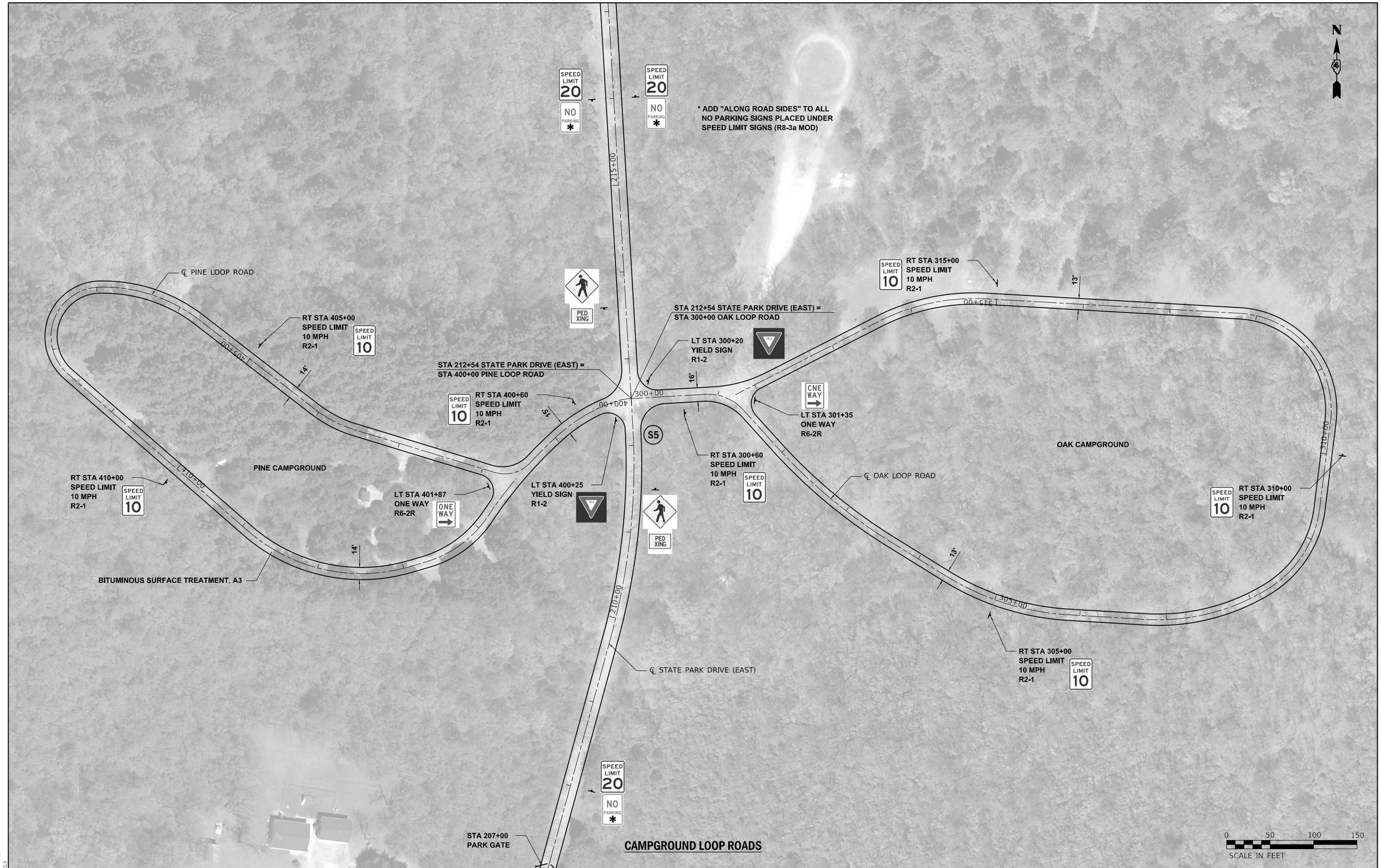

MODEL: $MODELNAME$
FILE NAME: $FILEL$

VEENSTRA & KIMM INC.
A Kleinfelder Company

USER NAME = $USER$	DESIGNED - JEB	REVISED -
	DRAWN - JEB	REVISED -
PLOT SCALE = $SCALE$	CHECKED - RHD	REVISED -
PLOT DATE = $DATE$	DATE - 11/14/2025	REVISED -

STATE OF ILLINOIS
DEPARTMENT OF TRANSPORTATION
DEPARTMENT OF NATURAL RESOURCES

CAMPGROUND SIGNING PLAN
SPRING LAKE STATE FISH & WILDLIFE AREA

SCALE: 1" = 100' | SHEET 9 OF 10 SHEETS | STA 300+00.00 TO STA 414+70.93

F.A. RTE.	SECTION	COUNTY	TOTAL SHEETS	SHEET NO.
IDNR	SPRING LAKE 2024	TAZEWELL	56	51
		CONTRACT NO. 46939		
		ILLINOIS	FED. AID PROJECT	

SPRING LAKE

PARKING LOT No. 3

RT STA 532+20
D2 = 10 SQ FT

D2

SPEED LIMIT 10

RT STA 529+00
SPEED LIMIT
10 MPH
R2-1

13'

℄ FISHING LOOP ROAD

530+00

525+00

535+00

ONE WAY

LT STA 500+00
ONE WAY
R6-2R

LT STA 602+40
D10 = 6 SQ FT

D10

RT STA 501+25
SPEED LIMIT
10 MPH
R2-1

SPEED LIMIT 10

13'

540+00

500+00

SPEED LIMIT 10

RT STA 520+00
SPEED LIMIT
10 MPH
R2-1

520+00

515+00

FISHING LOOP ROAD

13'

RT STA 538+00
SPEED LIMIT
10 MPH
R2-1

SPEED LIMIT 10

RT STA 543+35
YIELD SIGN
R1-2 (WEST SIDE)
DO NOT ENTER
R5-1 (EAST SIDE)

DO NOT ENTER

STOP

ONE WAY

505+00

510+00

STA 243+49 STATE PARK DRIVE (EAST) =
STA 500+00 FISHING LOOP ROAD

SPEED LIMIT 20

NO PARKING *

SPEED LIMIT 20

NO PARKING *

RT STA 509+00
SPEED LIMIT
10 MPH
R2-1

SPEED LIMIT 10

* ADD "ALONG ROAD SIDES" TO ALL
NO PARKING SIGNS PLACED UNDER
SPEED LIMIT SIGNS (R8-3a MOD)

℄ STATE PARK DRIVE (EAST)

TRAIL X-ING

TRAIL X-ING

0 100 200 300
SCALE IN FEET

MODEL: $MODELNAME$
FILE NAME: $FILE$

VEENSTRA & KIMM INC.
A Kleinfelder Company

USER NAME = $USER$	DESIGNED - JEB	REVISED -	
	DRAWN - JEB	REVISED -	
PLOT SCALE = $SCALE$	CHECKED - RHD	REVISED -	
PLOT DATE = $DATE$	DATE - 11/14/2025	REVISED -	

STATE OF ILLINOIS
DEPARTMENT OF TRANSPORTATION
DEPARTMENT OF NATURAL RESOURCES

FISHING LOOP ROAD SIGNING PLAN
SPRING LAKE STATE FISH & WILDLIFE AREA

SCALE: 1" = 100' | SHEET 10 OF 10 SHEETS | STA 500+00.00 TO STA 543+87.34

F.A. RTE.	SECTION	COUNTY	TOTAL SHEETS	SHEET NO.
IDNR	SPRING LAKE 2024	TAZEWELL	56	52

CONTRACT NO. 46939

ILLINOIS | FED. AID PROJECT

GENERAL NOTES

1. ALL LUMBER IS FIBERGLASS REINFORCED RECYCLED PLASTIC, EXTERIOR BROWN IN COLOR, WITH A WHITE CORE. SUBMIT SAMPLES TO IDNR LANDSCAPE ARCHITECT FOR COLOR SELECTION PRIOR TO FABRICATION

2. ALL LETTERING IS TO BE HELVETICA MEDIUM WITH UPPER CASE LETTERS. LETTERS ARE TO BE ENGRAVED WITH A COMPUTER OR TEMPLATE DRIVEN ROUTER SYSTEM.

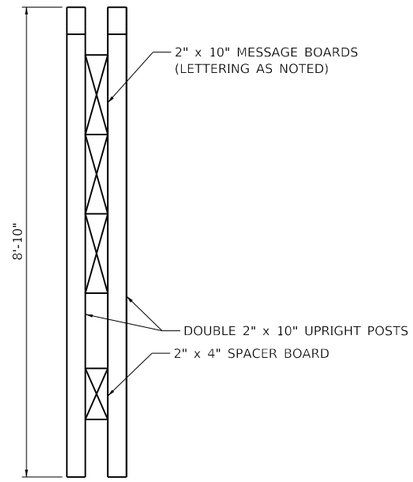

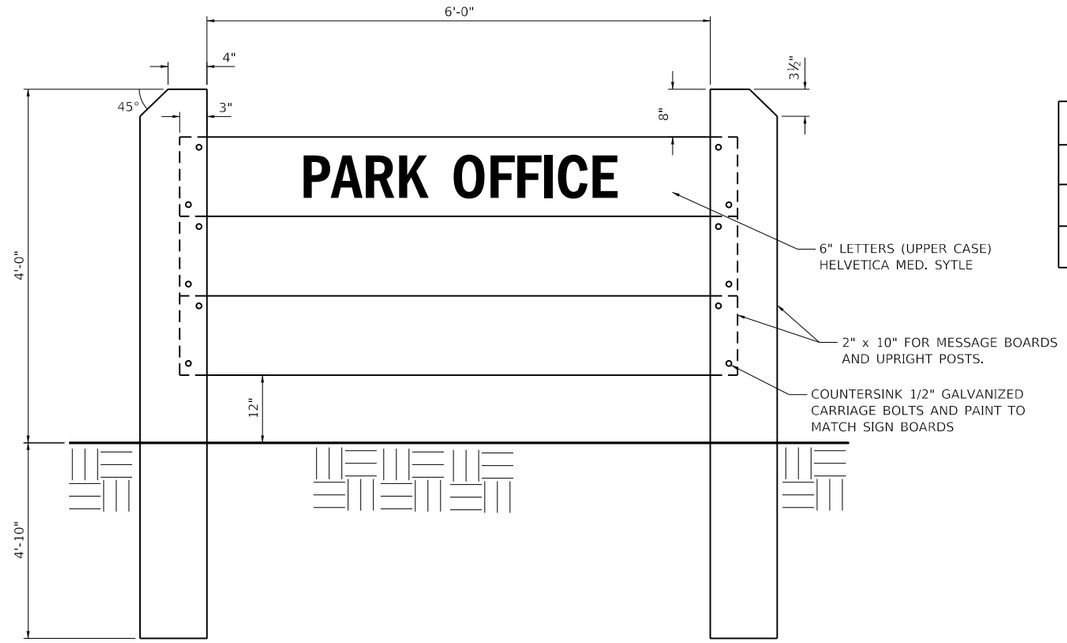

ALIGNMENT DIMENSIONS DETAIL

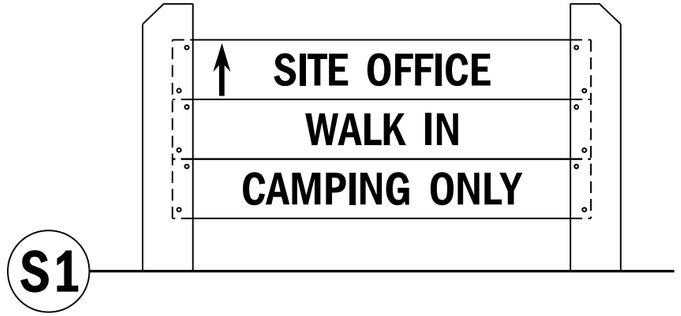

S1

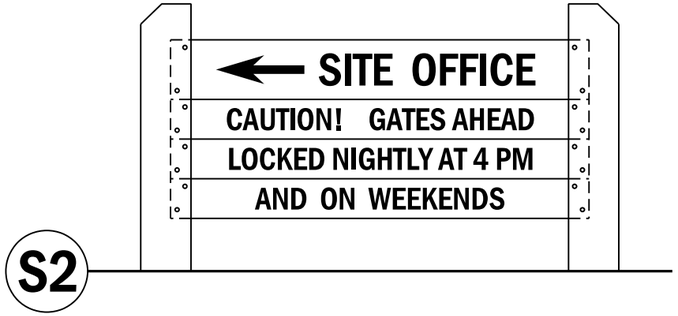

S2

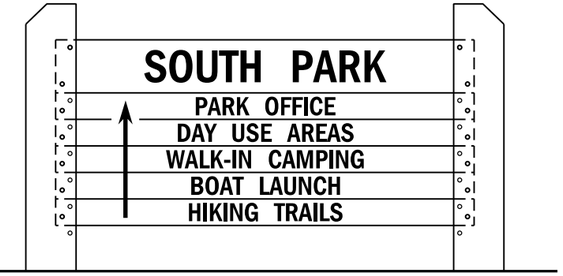

S3

@ NORTHWEST CORNER
OF STATE PARK DRIVE
AND SPRING LAKE ROAD

S4

2 SIDED
@ NORTHEAST CORNER
OF STATE PARK DRIVE
AND SPRING LAKE ROAD

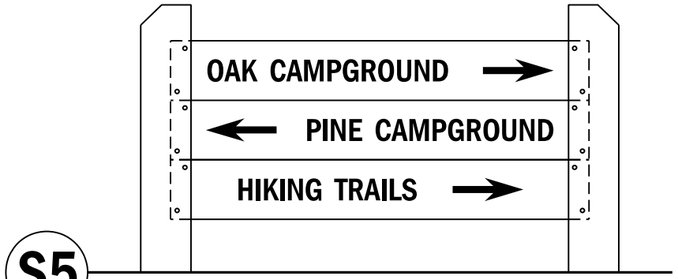

S5

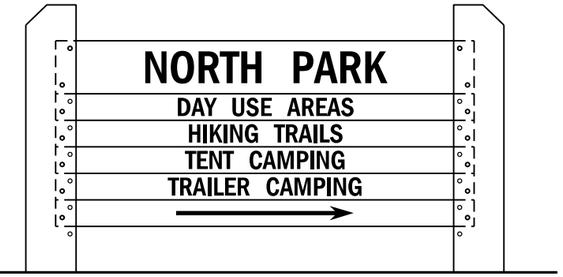

S6

375' EAST OF STATE PARK DRIVE
NORTH SIDE OF SPRING LAKE ROAD

MODEL: $MODELNAME$
FILE NAME: $FILEL$

VEENSTRA & KIMM INC.
A Kleinfelder Company

USER NAME = $USER$	DESIGNED - JEB	REVISED -
	DRAWN - JEB	REVISED -
PLOT SCALE = $SCALE$	CHECKED - RHD	REVISED -
PLOT DATE = $DATE$	DATE - 11/14/2025	REVISED -

STATE OF ILLINOIS
DEPARTMENT OF TRANSPORTATION
DEPARTMENT OF NATURAL RESOURCES

SIGN DETAILS
SPRING LAKE STATE FISH & WILDLIFE AREA

SCALE: NTS | SHEET 1 OF 2 SHEETS | STA. TO STA.

F.A. RTE.	SECTION	COUNTY	TOTAL SHEETS	SHEET NO.
	SPRING LAKE 2025	TAZEWELL	56	53
		CONTRACT NO. 46939		
	ILLINOIS	FED. AID PROJECT		

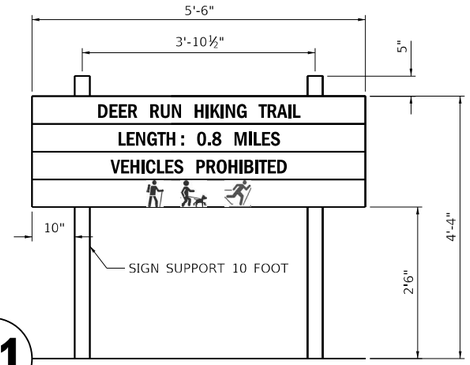

D1

NEAR SITE OFFICE

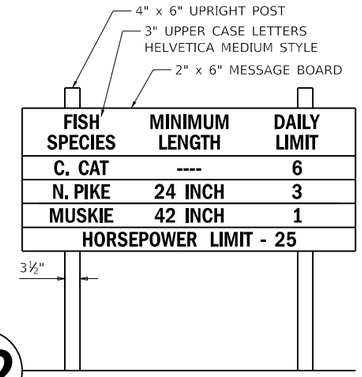

D2

3 REQUIRED
1 NEAR CONNECTION TO WOODLEY ROAD,
1 @ BOAT RAMP ON SPRING LAKE ROAD,
1 @ BOAT RAMP ON FISHING LOOP ROAD

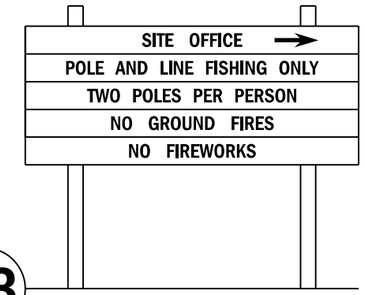

D3

NEAR CONNECTION TO
WOODLEY ROAD

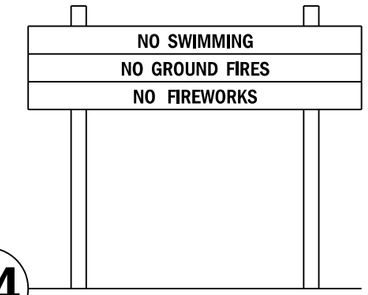

D4

2 REQUIRED
AT PARKING LOT SOUTH OF SITE OFFICE
AND NEXT TO GATE AT NORTH END
OF STATE PARK ROAD

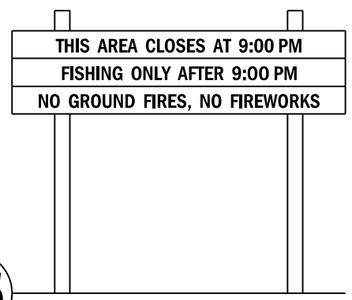

D5

300' SOUTH OF BRIDGE
AT SOUTH END OF STATE PARK ROAD

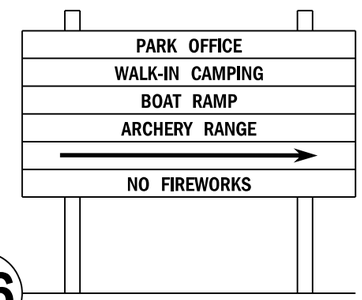

D6

@ SOUTHEAST CORNER
OF STATE PARK ROAD
AND SPRING LAKE ROAD

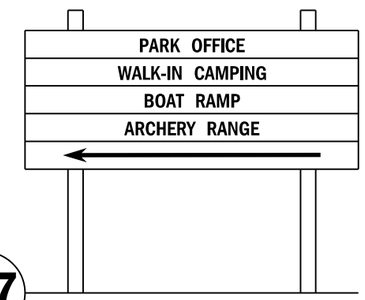

D7

@ NORTHEAST CORNER
OF STATE PARK ROAD
AND SPRING LAKE ROAD

GENERAL NOTES:

1. ALL LUMBER IS FIBERGLASS REINFORCED RECYCLED PLASTIC, BROWN IN COLOR WITH A WHITE CORE. SUBMIT SAMPLES TO IDNR LANDSCAPE ARCHITECT FOR COLOR SELECTION PRIOR TO FABRICATION
2. ALL LETTERING IS TO BE HELVETICA MEDIUM WITH UPPER CASE LETTERS. LETTERS ARE TO BE ENGRAVED WITH A COMPUTER OR TEMPLATE DRIVER ROUTER SYSTEM.
3. SIGNS SHOULD FACE THE ONCOMING TRAFFIC IN THE LANE CLOSEST TO THE SIGN.

D8

NEAR SOUTH END OF
STATE PARK DRIVE
NORTH OF SPRING LAKE ROAD
AND WEST SIDE OF GATE

D9

NEXT TO GATE AT CAMPGROUND
ENTRANCE ON
STATE PARK DRIVE

D10

AT BEGIN/END OF FISHING
LOOP ROAD AT END OF
STATE PARK DRIVE

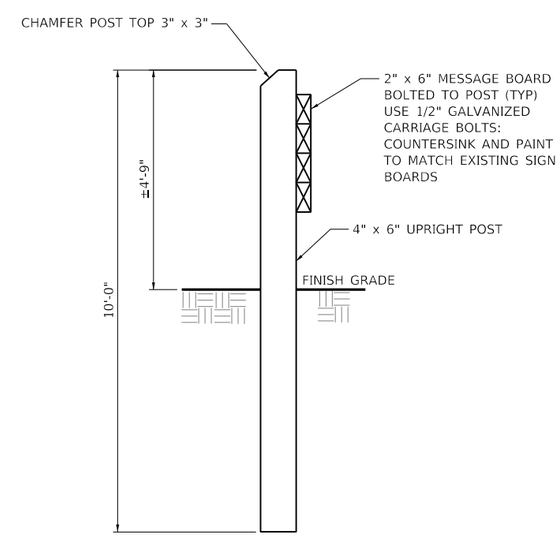

SIDE VIEW

MODEL: $MODELNAME$
FILE NAME: $FILEL$

VEENSTRA & KIMM INC.
A Kleinfelder Company

USER NAME = $USER$	DESIGNED - JEB	REVISED -	
	DRAWN - JEB	REVISED -	
PLOT SCALE = $SCALE$	CHECKED - RHD	REVISED -	
PLOT DATE = $DATE$	DATE - 11/14/2025	REVISED -	

STATE OF ILLINOIS
DEPARTMENT OF TRANSPORTATION
DEPARTMENT OF NATURAL RESOURCES

SIGN DETAILS
SPRING LAKE STATE FISH & WILDLIFE AREA

SCALE: NTS | SHEET 2 OF 2 SHEETS | STA. TO STA.

F.A. RTE.	SECTION	COUNTY	TOTAL SHEETS	SHEET NO.
	SPRING LAKE 2025	TAZEWELL	56	54
		CONTRACT NO. 46939		
	ILLINOIS	FED. AID PROJECT		

NOTE:
R7-8a SHOWN, AT SPACES THAT ARE NOT VAN ACCESSIBLE, USE APPROPRIATE SIGN (R7-8).

NOTES:

1. SIGNS SHALL COMPLY WITH US DEPARTMENT OF TRANSPORTATION STANDARDS R7-8 AND R7-I101
2. ALL LETTERS ARE 1" SERIES "C" PER MUTCD
3. TOP PORTION OF SIGN SHALL HAVE A REFLECTORIZED (ENGINEERING GRADE) BLUE BACKGROUND WITH WHITE REFLECTORIZED LEGEND AND BORDER.
4. BOTTOM PORTION OF SIGN SHALL HAVE A REFLECTORIZED (ENGINEERING GRADE) WHITE BACKGROUND WITH BLACK OPAQUE LEGEND AND BORDER.
5. FINE NOTIFICATION SIGN SHALL HAVE A REFLECTORIZED (ENGINEERING GRADE) WHITE BACKGROUND WITH BLACK OPAQUE LEGEND AND BORDER. CONTRACTOR SHALL VERIFY FINE AMOUNT & ORDINANCE NUMBER.
6. ONE (1) "RESERVED" SIGN AND ONE (1) "$250 FINE" PLAQUE REQUIRED FOR EACH PARKING SPACE.

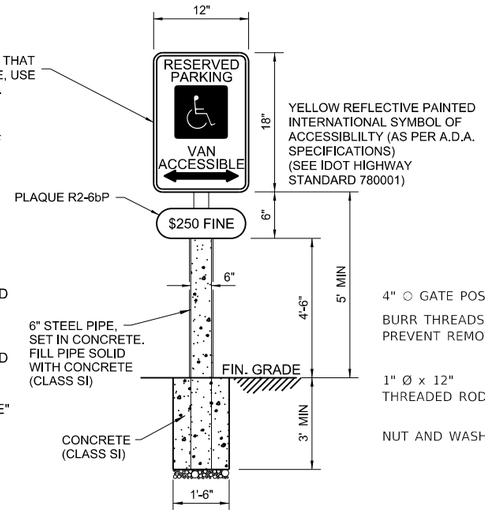

ACCESSIBLE PARKING SIGN IN BOLLARD
NOT TO SCALE

*ANCHOR BOLTS FOR BASE PLATES SHALL BE EPOXY GROUTED INTO ⅝" Ø DRILLED HOLES, 3⅜" MIN DEPTH INTO CONCRETE. IN ACCORDANCE WITH SECTION 584 OF THE I.D.O.T. STANDARD SPECIFICATIONS.

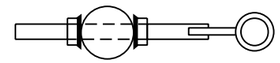

PLAN VIEW

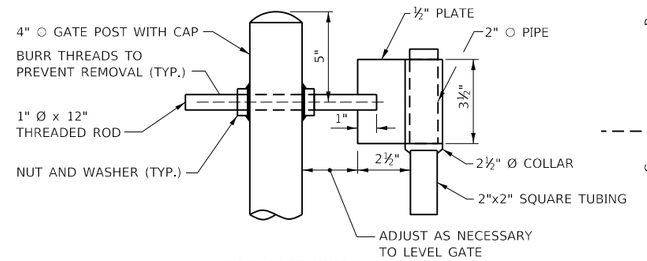

TOP GATE HINGE

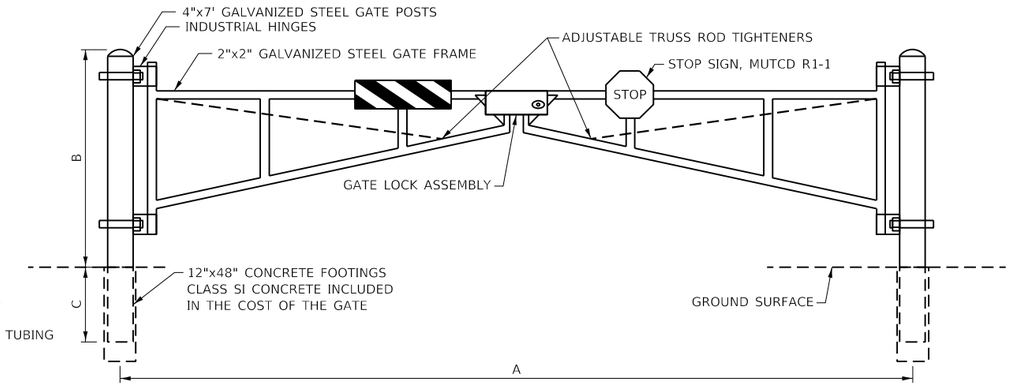

PARK GATE

LOCATION	A	B	C
STATE PARK ROAD	28'	4'	3'
STATE PARK DRIVE	28'	4'	3'

NOTE:
CONTRACTOR SHALL VERIFY DIMENSION "A" WITH ENGINEER PRIOR TO MANUFACTURING GATE.

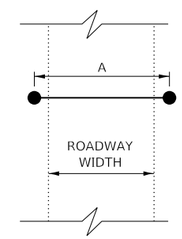

PLAN VIEW

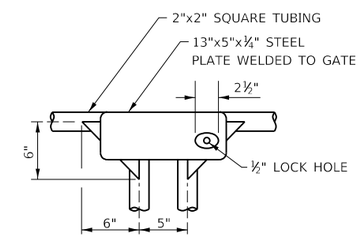

GATE LOCK ASSEMBLY

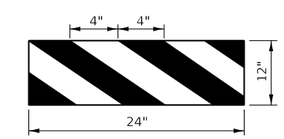

HORIZONTAL PANEL DETAIL

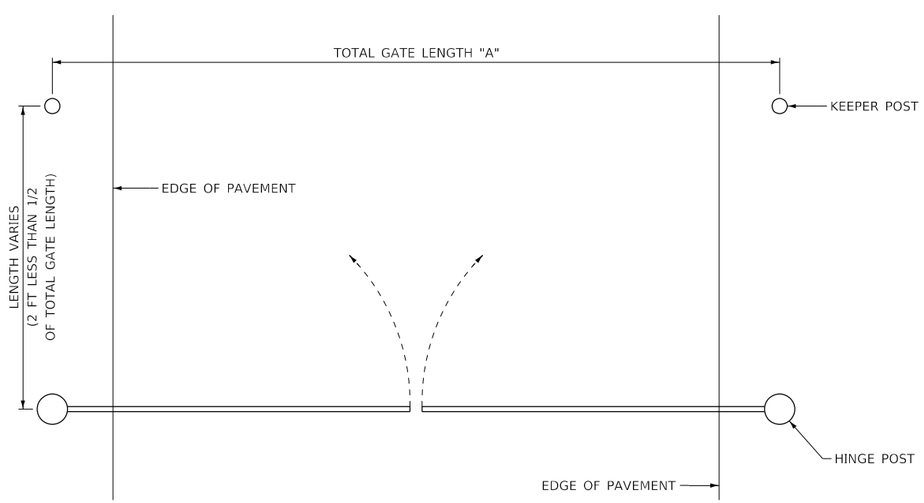

STEEL GATE - PLAN VIEW
NOT TO SCALE

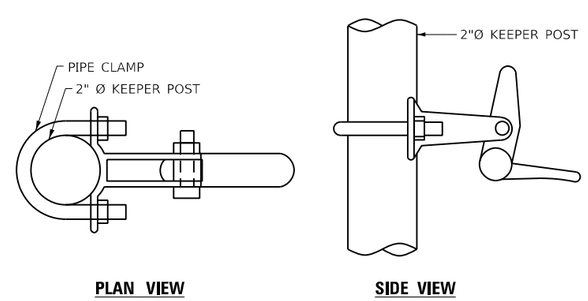

PLAN VIEW SIDE VIEW

AUTOMATIC GATE KEEPER

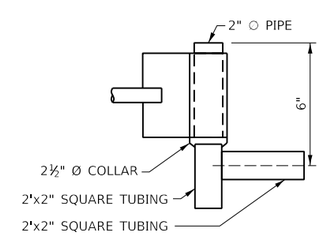

DETAIL AT TOP HINGE

(YELLOW AND BLACK)

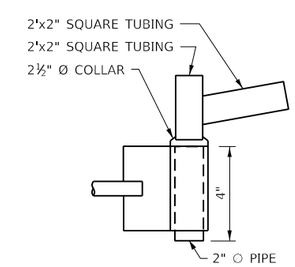

DETAIL AT BOTTOM HINGE

GATE DETAILS
STA 0+00.00

VEENSTRA & KIMM INC. A Kleinfelder Company	USER NAME = $USER$	DESIGNED - IDNR	REVISED -
		DRAWN - JEB	REVISED -
	PLOT SCALE = $SCALE$	CHECKED - RHD	REVISED -
	PLOT DATE = $DATE$	DATE - 11/14/2025	REVISED -

STATE OF ILLINOIS
DEPARTMENT OF TRANSPORTATION
DEPARTMENT OF NATURAL RESOURCES

PARK GATE DETAILS
SPRING LAKE STATE FISH & WILDLIFE AREA

SCALE: SHEET OF SHEETS STA. TO STA.

F.A. RTE.	SECTION	COUNTY	TOTAL SHEETS	SHEET No.
	SPRING LAKE 2025	TAZEWELL	56	55
		CONTRACT No. 46939		
	ILLINOIS FED. AID PROJECT			

NOTES:
PLACE "RESTRICTED AREA" SIGNS R11-3b ON TYPE III BARRICADES.

SEE IDOT STANDARD 701901 FOR TRAFFIC CONTROL DEVICES.

30"

RESTRICTED AREA
AUTHORIZED PERSONNEL ONLY
$195 MINIMUM FINE

18"

RESTRICTED ACCESS SIGN DETAIL
SIGN, R11-3b
OR APPROVED ALTERNATE

60"

BRIDGE OUT
2 MILES AHEAD
LOCAL TRAFFIC ONLY

30"

SIGN, R11-3b

60"

BRIDGE OUT
SKY RANCH ROAD
OVER SPRING LAKE

30"

SIGN, R11-3b

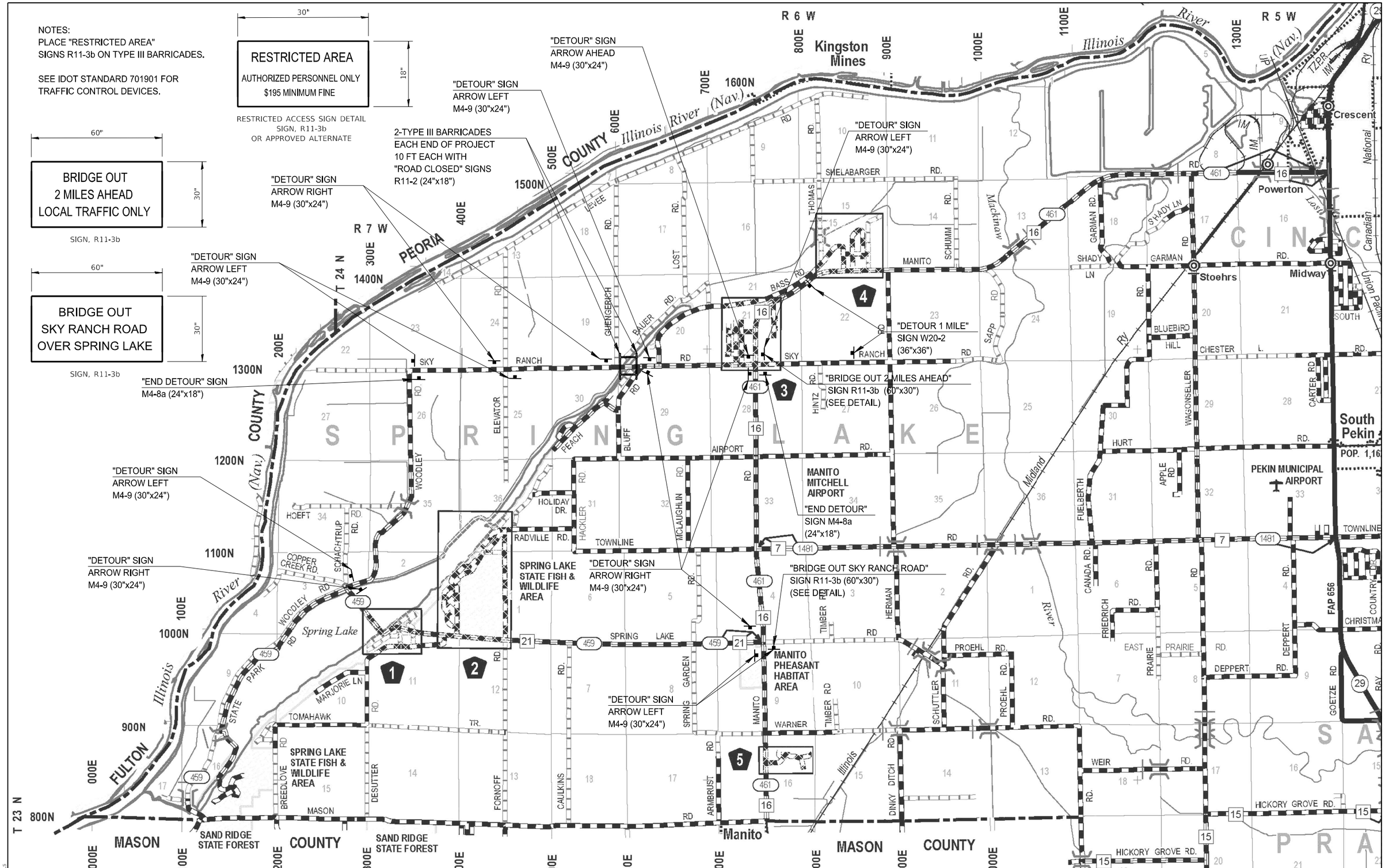

VEENSTRA & KIMM INC. Springfield, IL. Phone: (217)544-8033 IL. Design Firm No. 184-001939	USER NAME = $USER$	DESIGNED - RHD	REVISED -
		DRAWN - JEB	REVISED -
	PLOT SCALE = $SCALE$	CHECKED - RHD	REVISED -
	PLOT DATE = $DATE$	DATE - 11/14/2025	REVISED -

STATE OF ILLINOIS
DEPARTMENT OF TRANSPORTATION
DEPARTMENT OF NATURAL RESOURCES

SKY RANCH ROAD DETOUR PLAN
SPRING LAKE STATE FISH & WILDLIFE AREA

SCALE: N/A | SHEET 1 OF 1 SHEETS | STA. | TO STA.

F.A. RTE.	SECTION	COUNTY	TOTAL SHEETS	SHEET NO.
	SPRING LAKE 2024	TAZEWELL	56	56
	CONTRACT NO. 46939			
	ILLINOIS	FED. AID PROJECT		

MODEL: $MODELNAME$
FILE NAME: $FILE$

JOB No. 7021-005 VEENSTRA & KIMM, INC. DESIGN FIRM REGISTRATION NUMBER 184-001939