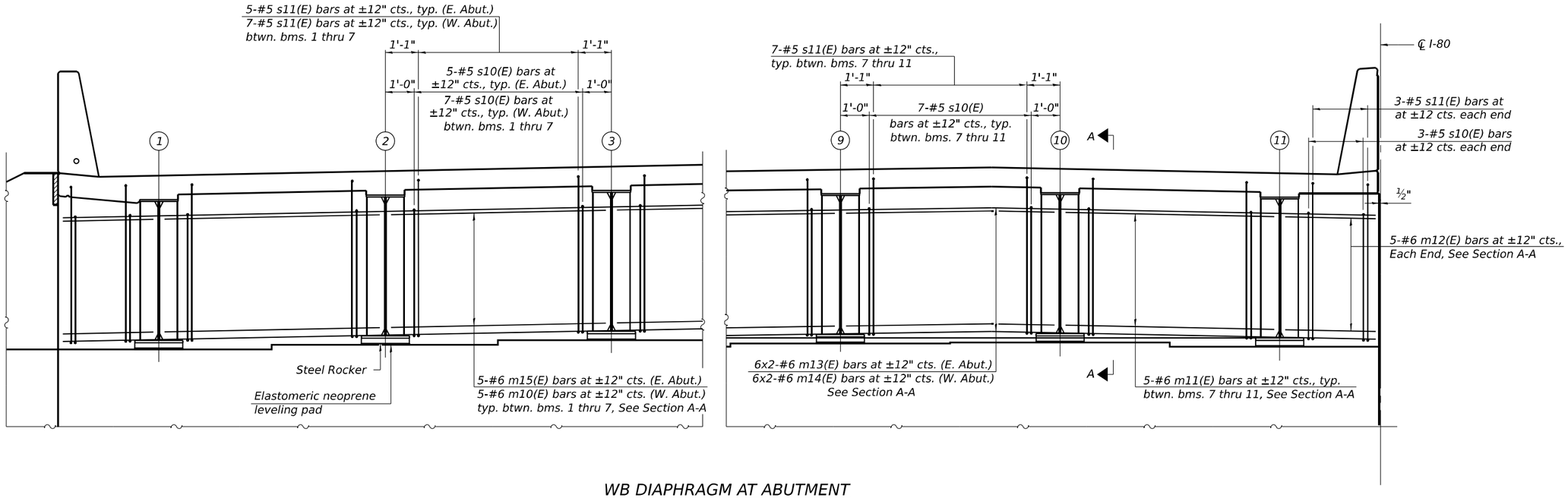

WB DIAPHRAGM AT ABUTMENT

(E. Abut. Shown, W. Abut. mirrored
and similar unless noted otherwise)

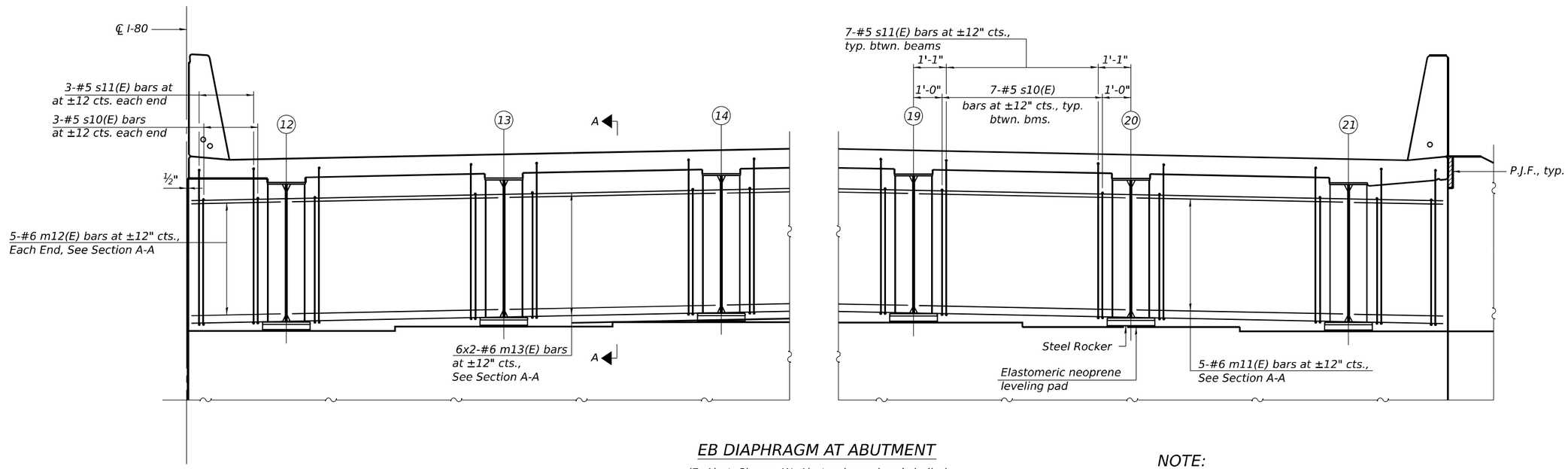

EB DIAPHRAGM AT ABUTMENT

(E. Abut. Shown, W. Abut. mirrored and similar)

NOTE:

1. See sheet SB-26 of SB-53 for Section A-A and additional notes.

MODEL: Default
FILE NAME: 0998310-62F94-025-DIA.dgn

10/27/2025 4:59:22 PM

BURNS McDONNELL

USER NAME =	DESIGNED - ECK	REVISED -	
	CHECKED - GEK	REVISED -	
PLOT SCALE =	DRAWN - ECK	REVISED -	
PLOT DATE =	CHECKED - SLM	REVISED -	

STATE OF ILLINOIS
DEPARTMENT OF TRANSPORTATION

DIAPHRAGM DETAILS I
STRUCTURE NO. 099-8310

SHEET SB-25 OF SB-53 SHEETS

F.A.I. RTE.	SECTION	COUNTY	TOTAL SHEETS	SHEET NO.
80	2017-057F	WILL	1342	801
		CONTRACT NO. 62F94		
	ILLINOIS	FED. AID PROJECT		

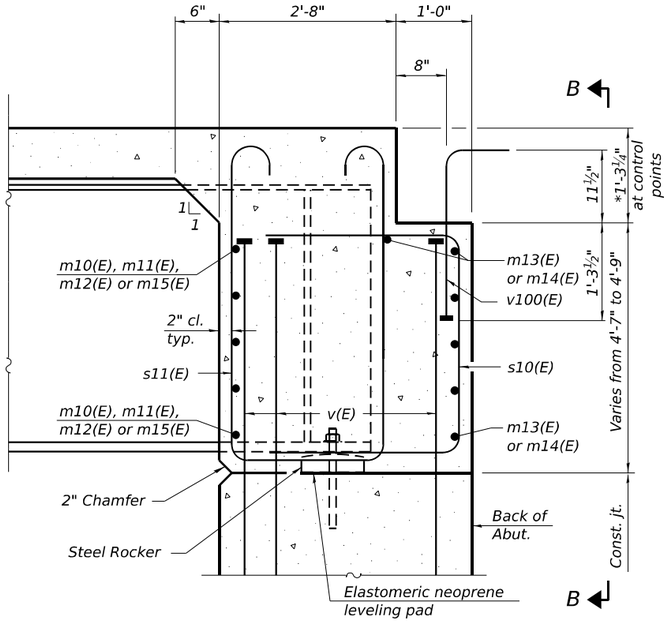

SECTION A-A
(at Rt. ∠'s)

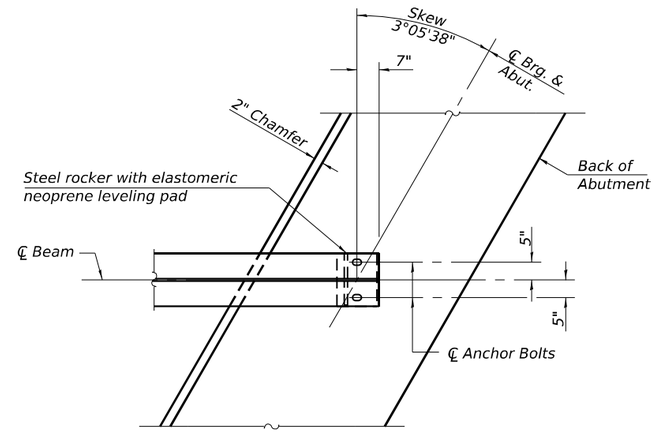

PLAN AT ABUTMENT
(Showing bottom flange of beam)

NOTES:

1. See sheet SB-23 of SB-53 for superstructure details and Bill of Material.
2. See sheet SB-29 of SB-53 for P.J.F. details.
3. The s10(E) and s11(E) bars shall be placed parallel to the beams. Spacing for these bars shall be at right angles to the beams.
4. The approach slab seat shall have a constant slope determined from the control points shown.
5. Beams shall be braced for stability during erection and remain braced until deck is poured and cured.

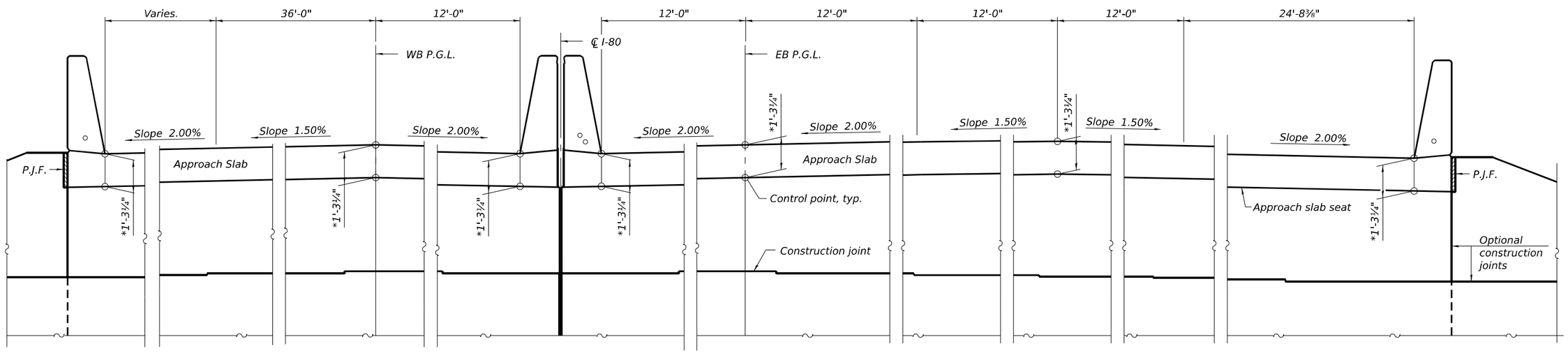

VIEW B-B

* Prior to Grinding

MODEL: Default
FILE NAME: 0998310-62F94-026-DIA2.dgn

BURNS McDONNELL	USER NAME =	DESIGNED - ECK	REVISED -	STATE OF ILLINOIS DEPARTMENT OF TRANSPORTATION	DIAPHRAGM DETAILS II STRUCTURE NO. 099-8310	F.A.I. RTE. 80 / SECTION 2017-057F / COUNTY WILL / TOTAL SHEETS 1342 / SHEET NO. 802
		CHECKED - GEK	REVISED -			CONTRACT NO. 62F94
	PLOT SCALE =	DRAWN - ECK	REVISED -			
	PLOT DATE =	CHECKED - SLM	REVISED -		SHEET SB-26 OF SB-53 SHEETS	ILLINOIS FED. AID PROJECT

10/27/2025 4:59:25 PM

NOTES:

1. See Sheet SB-29 of SB-53 for Section A-A.
2. See Sheet SB-30 of SB-53 for Bill of Material and Additional Notes.

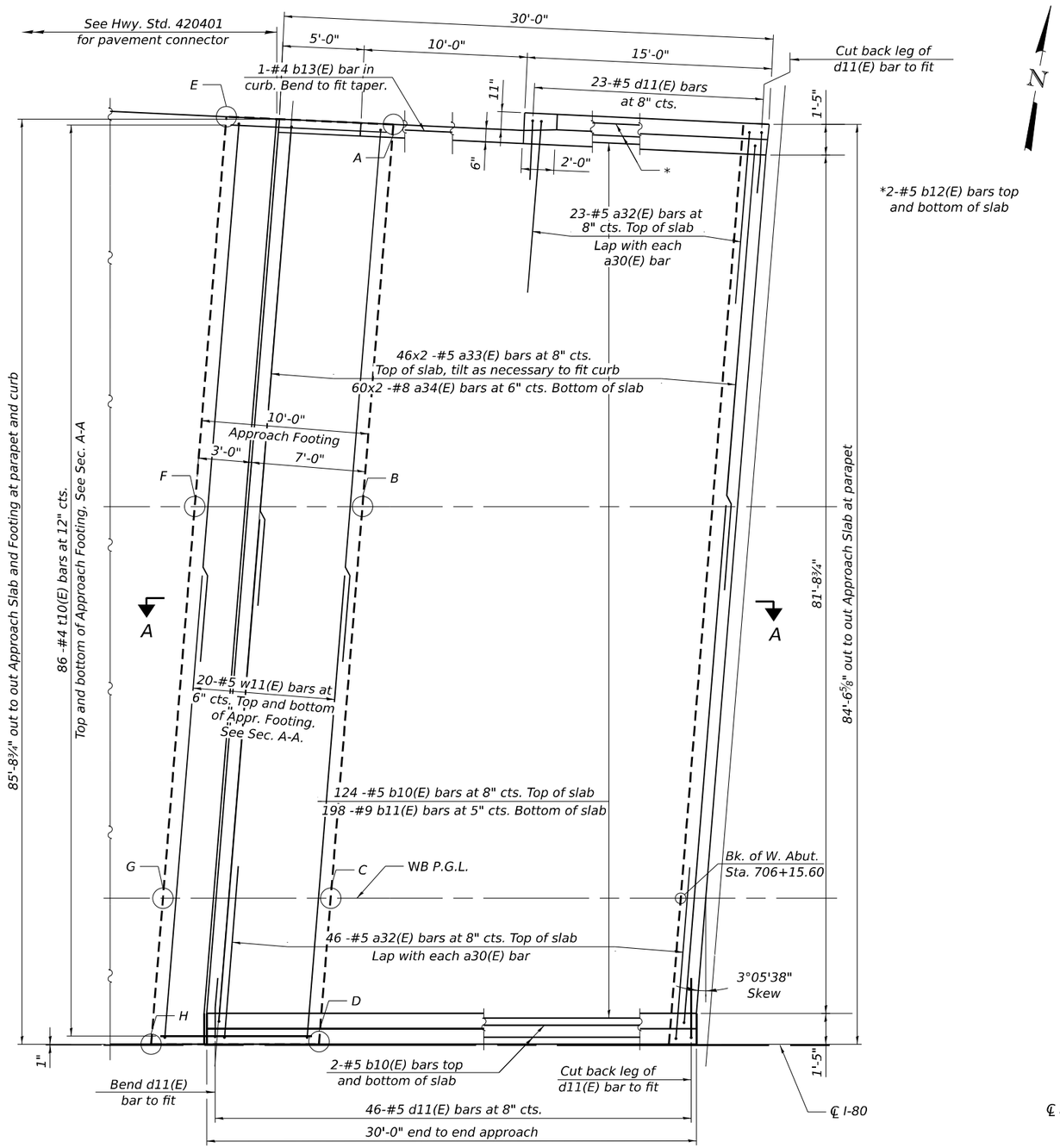

WEST APPROACH SLAB PLAN

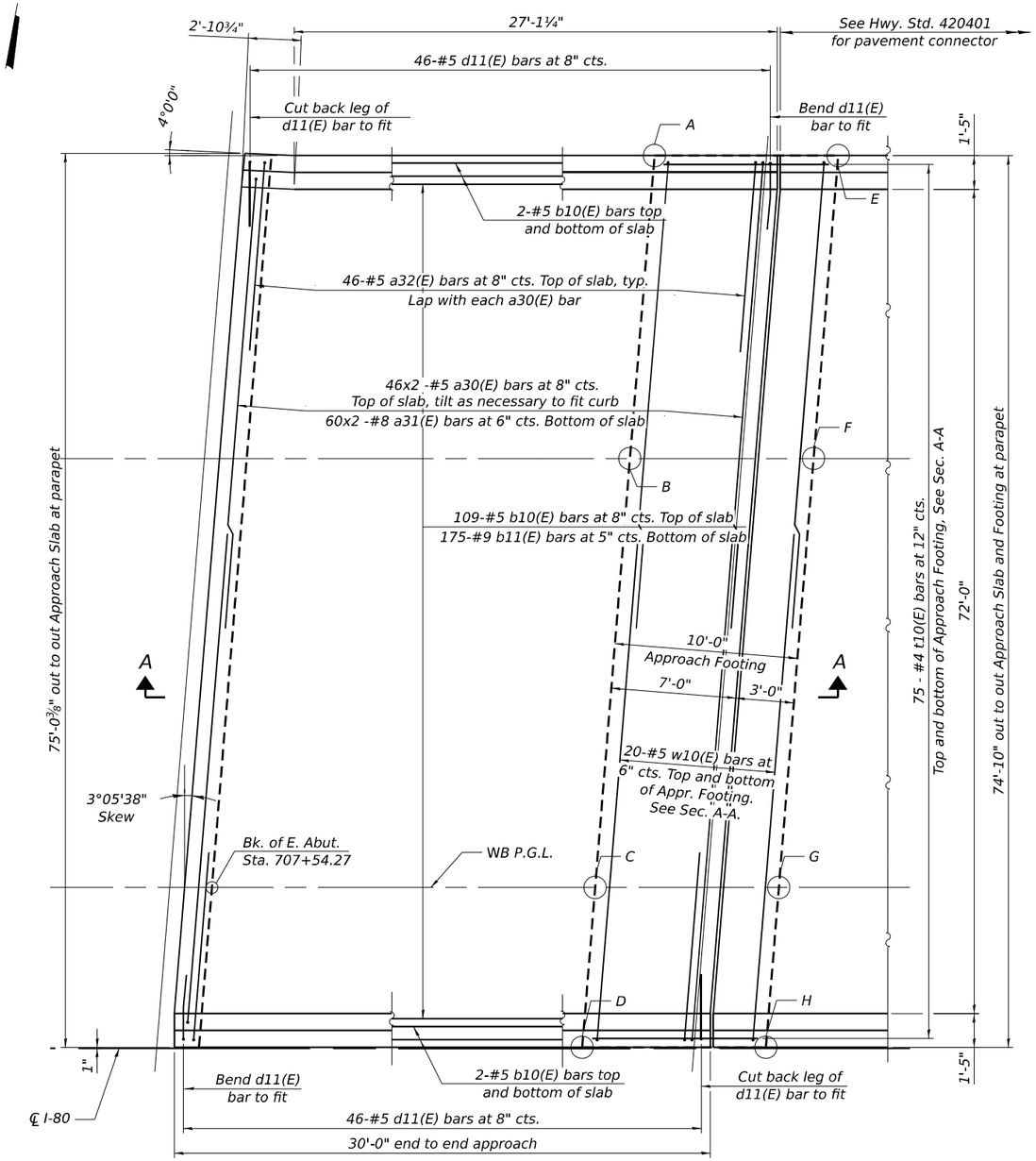

EAST APPROACH SLAB PLAN

MINIMUM BAR LAP

#5 Bar = 3'-4"
#8 Bar = 4'-9"

MODEL: Default
FILE NAME: 0998310-62F94-027-WBAPS.dgn
10/27/2025 4:59:27 PM

BURNS McDONNELL

USER NAME =	DESIGNED - ECK	REVISED -	
	CHECKED - GEK	REVISED -	
PLOT SCALE =	DRAWN - ECK	REVISED -	
PLOT DATE =	CHECKED - KMD	REVISED -	

STATE OF ILLINOIS
DEPARTMENT OF TRANSPORTATION

BRIDGE APPROACH SLABS - WB
STRUCTURE NO. 099-8310

SHEET SB-27 OF SB-53 SHEETS

F.A.I. RTE.	SECTION	COUNTY	TOTAL SHEETS	SHEET NO.
80	2017-057F	WILL	1342	803
		CONTRACT NO. 62F94		
		ILLINOIS	FED. AID PROJECT	

NOTES:

1. See Sheet SB-29 of SB-53 for Section A-A.
2. See Sheet SB-30 of SB-53 for Bill of Material and Additional Notes.

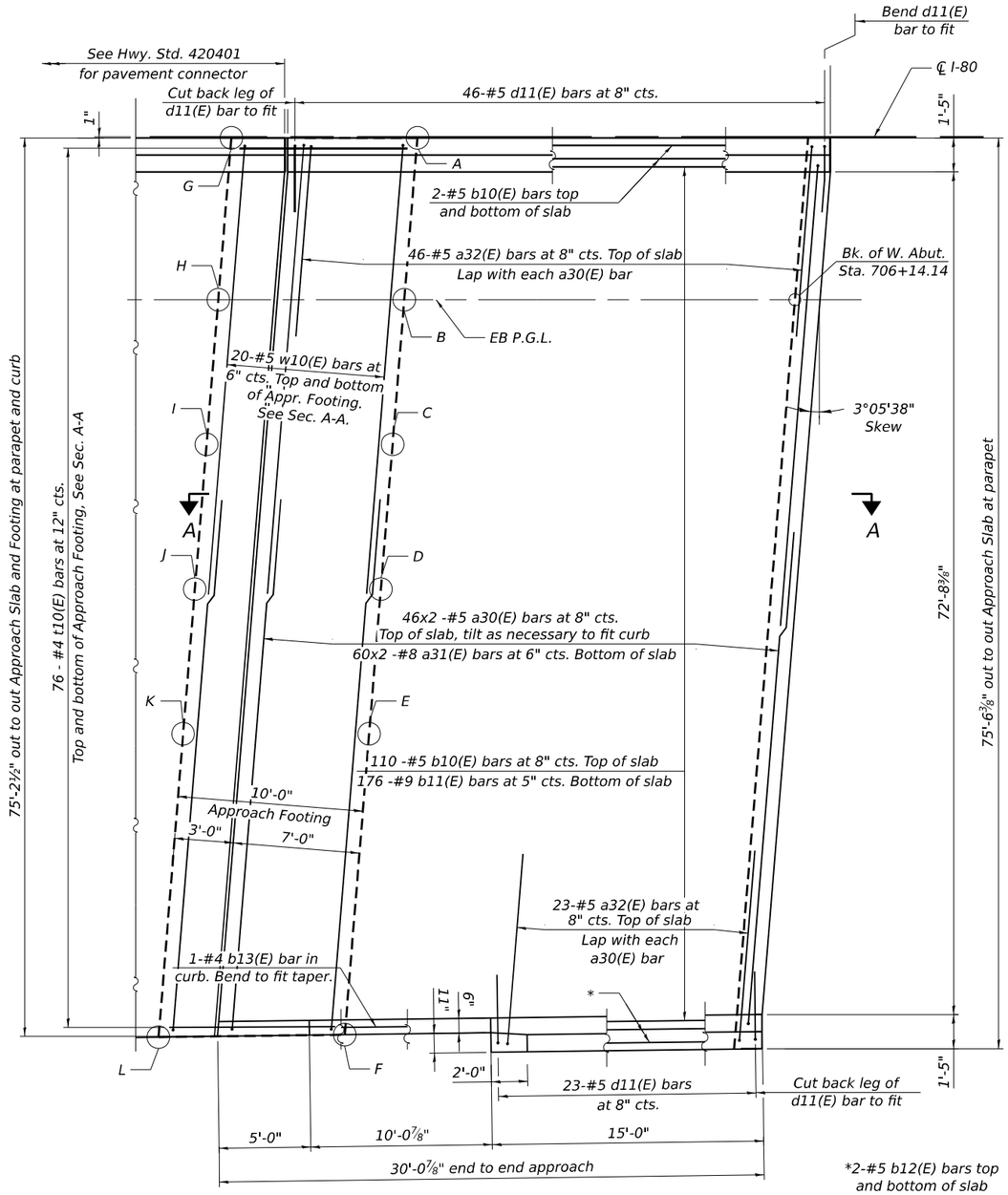

WEST APPROACH SLAB PLAN

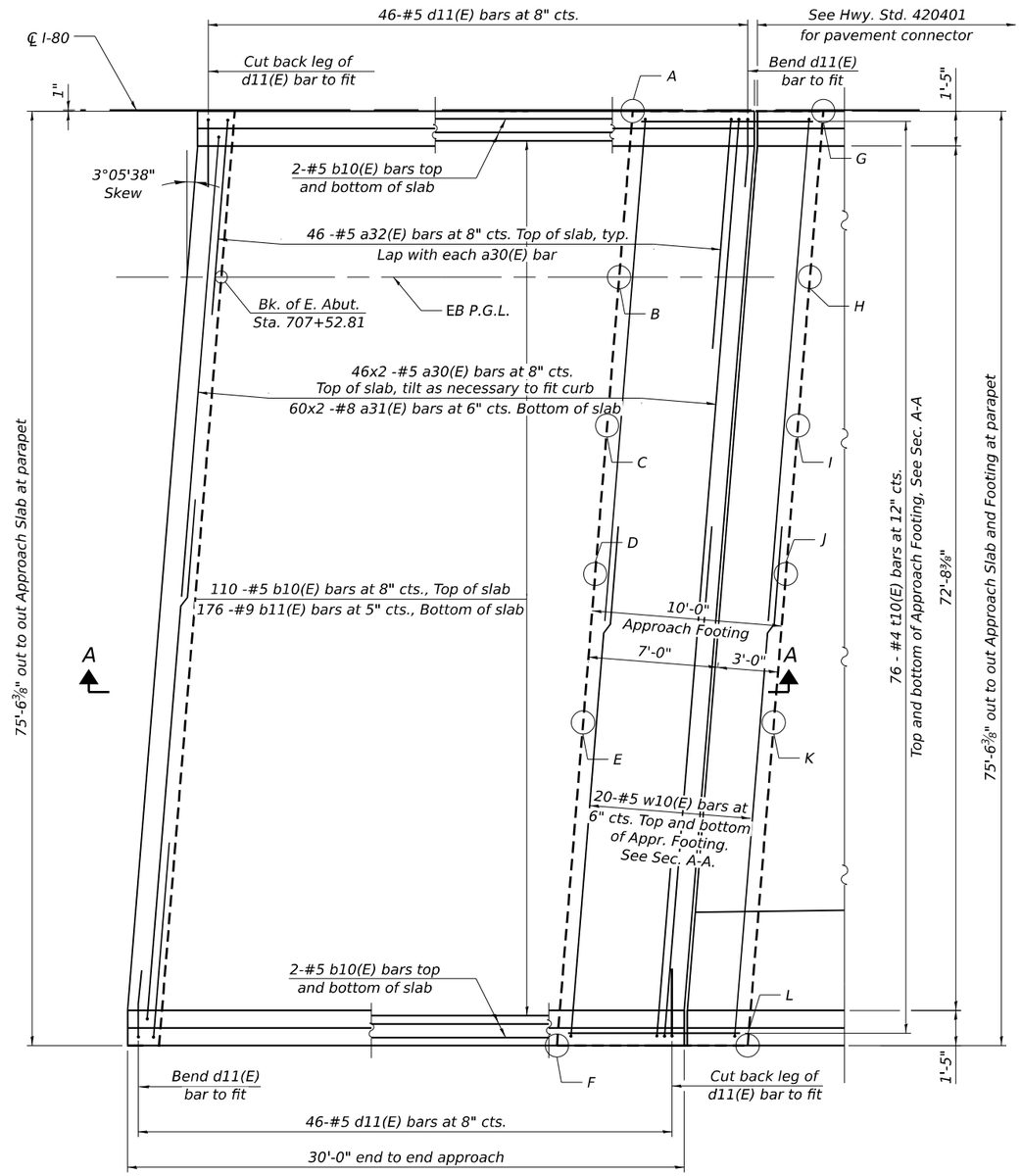

EAST APPROACH SLAB PLAN

MINIMUM BAR LAP

#5 Bar = 3'-4"
#8 Bar = 4'-9"

MODEL: Default
FILE NAME: 0998310-62F94-028-EBAPS.dgn
10/27/2025 4:59:30 PM

BURNS McDONNELL

USER NAME =	DESIGNED - ECK	REVISED -	
	CHECKED - GEK	REVISED -	
PLOT SCALE =	DRAWN - ECK	REVISED -	
PLOT DATE =	CHECKED - KMD	REVISED -	

STATE OF ILLINOIS
DEPARTMENT OF TRANSPORTATION

BRIDGE APPROACH SLABS - EB
STRUCTURE NO. 099-8310

SHEET SB-28 OF SB-53 SHEETS

F.A.I. RTE.	SECTION	COUNTY	TOTAL SHEETS	SHEET NO.
80	2017-057F	WILL	1342	804
		CONTRACT NO. 62F94		
		ILLINOIS	FED. AID PROJECT	

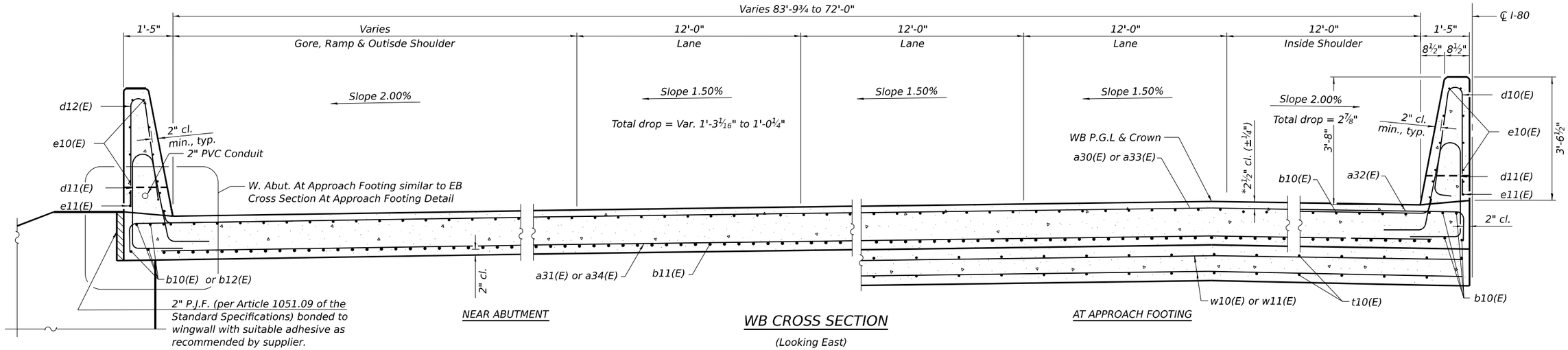

WB CROSS SECTION

(Looking East)

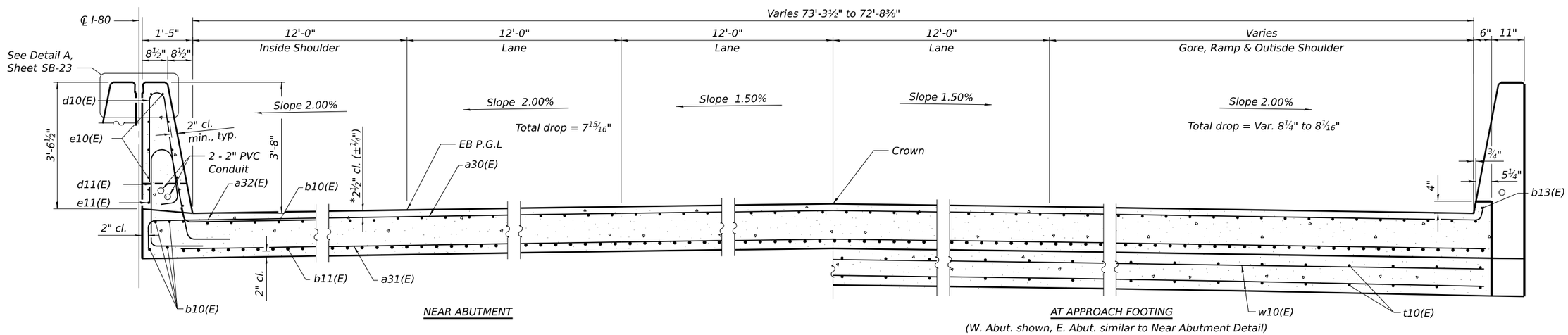

(W. Abut. shown, E. Abut. similar to Near Abutment Detail)

EB CROSS SECTION

(Looking East)

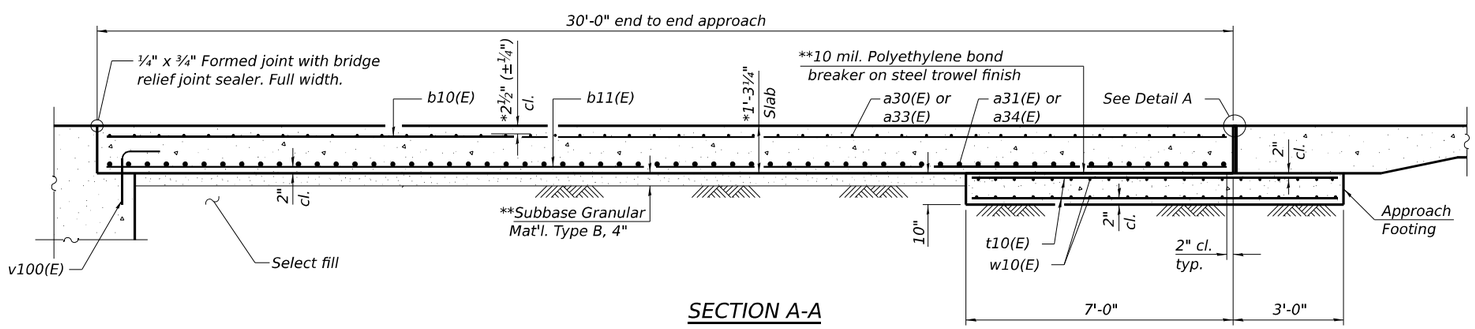

SECTION A-A

*Prior to Grinding

TOP AND BOTTOM ELEVATIONS FOR APPROACH FOOTING

West Approach - WB			East Approach - WB		
Point - Location	Top	Bottom	Point - Location	Top	Bottom
A - N. Edge of Appr.	567.41	566.58	A - N. Edge of Appr.	572.29	571.46
B - Breakline 1	568.08	567.24	B - Breakline 1	572.77	571.94
C - WB P.G.L. & Breakline 2	568.57	567.73	C - WB P.G.L. & Breakline 2	573.27	572.43
D - S. Edge of Appr.	568.28	567.45	D - S. Edge of Appr.	572.98	572.15
E - N. Edge of Appr.	567.14	566.30	E - N. Edge of Appr.	572.52	571.69
F - Breakline 1	567.81	566.98	F - Breakline 1	573.00	572.16
G - WB P.G.L. & Breakline 2	568.30	567.47	G - WB P.G.L. & Breakline 2	573.49	572.66
H - S. Edge of Appr.	568.02	567.18	H - S. Edge of Appr.	573.21	572.38
West Approach - EB			East Approach - EB		
Point - Location	Top	Bottom	Point - Location	Top	Bottom
A - N. Edge of Appr.	568.28	567.45	A - N. Edge of Appr.	572.98	572.15
B - EB P.G.L. & Breakline 3	568.53	567.70	B - EB P.G.L. & Breakline 3	573.23	572.40
C - Breakline 4	568.75	567.92	C - Breakline 4	573.46	572.63
D - Breakline 5	568.91	568.08	D - Breakline 5	573.62	572.79
E - Breakline 6	568.82	567.99	E - Breakline 6	573.43	572.60
F - S. Edge of Appr.	568.28	567.45	F - S. Edge of Appr.	572.87	572.04
G - N. Edge of Appr.	568.01	567.18	G - N. Edge of Appr.	573.21	572.38
H - EB P.G.L. & Breakline 3	568.26	567.43	H - EB P.G.L. & Breakline 3	573.46	572.63
I - Breakline 4	568.49	567.65	I - Breakline 4	573.69	572.85
J - Breakline 5	568.65	567.82	J - Breakline 5	573.85	573.02
K - Breakline 6	568.60	567.77	K - Breakline 6	573.66	572.82
L - S. Edge of Appr.	568.06	567.22	L - S. Edge of Appr.	573.10	572.27

MODEL: Default
FILE NAME: 0998310-62F94-029-ASD1.dgn

BURNS McDONNELL

USER NAME =	DESIGNED - ECK	REVISED -	
	CHECKED - GEK	REVISED -	
PLOT SCALE =	DRAWN - ECK	REVISED -	
PLOT DATE =	CHECKED - KMD	REVISED -	

STATE OF ILLINOIS
DEPARTMENT OF TRANSPORTATION

BRIDGE APPROACH SLAB DETAILS I
STRUCTURE NO. 099-8310

SHEET SB-29 OF SB-53 SHEETS

F.A.I. RTE.	SECTION	COUNTY	TOTAL SHEETS	SHEET NO.
80	2017-057F	WILL	1342	805

CONTRACT NO. 62F94

ILLINOIS | FED. AID PROJECT

10/27/2025 4:59:34 PM

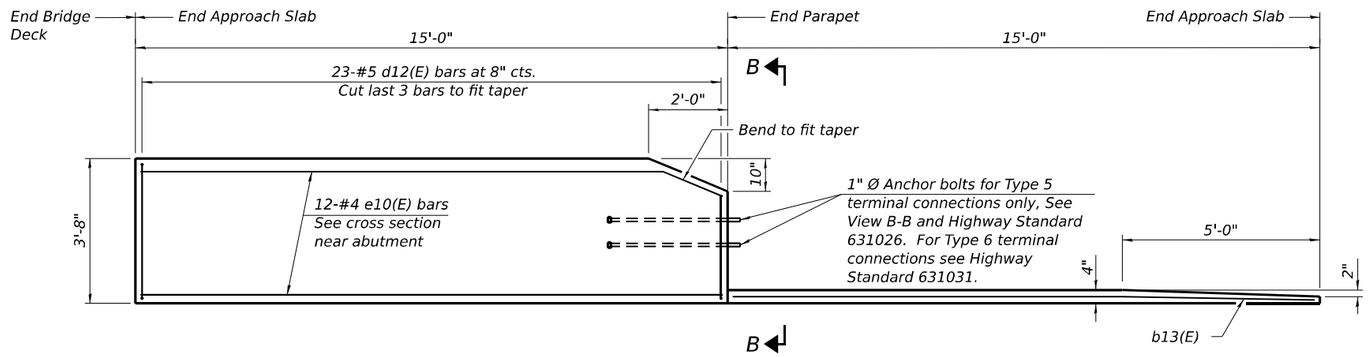

INSIDE ELEVATION OF PARAPET AND CURB

(West Approach Exterior Parapets Only)

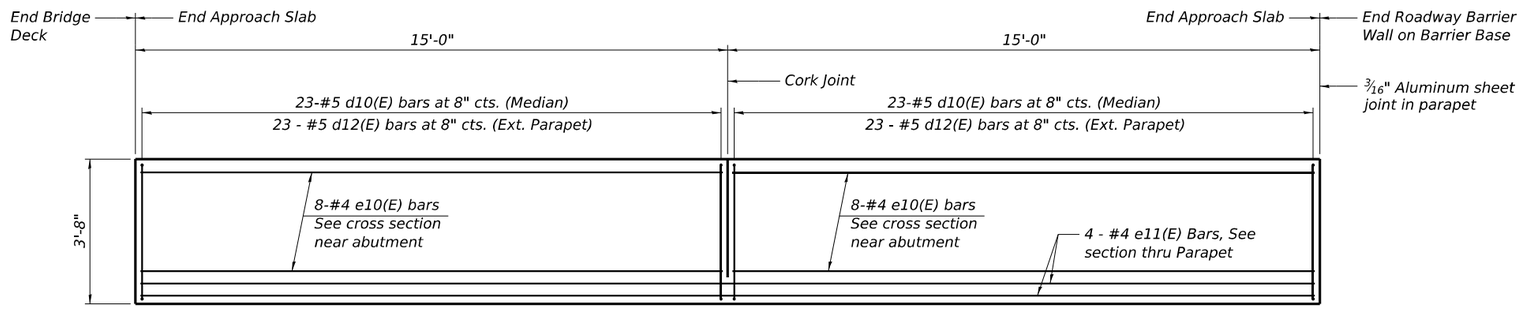

INSIDE ELEVATION OF PARAPET

(Parapets, typ. unless noted otherwise)

NOTES:

1. The joint opening shall be adjusted for temperature per Article 520.04 of the Standard Specifications. However, since this detail is for jointless structures, the length of bridge used to calculate the adjustment shall be equal to half the total bridge length plus the length of the bridge approach slab.
2. Parapet concrete shall be paid for as Concrete Superstructure.
3. Approach slab shall be paid for as Concrete Superstructure (Approach Slab).
4. Approach footing concrete shall be paid for as Concrete Structures.
5. The approach footing maximum applied service bearing pressure (Qmax) = 2.0 ksf.
6. Cost of excavation for approach footing included with Concrete Structures.
7. See Sheet SB-23 of SB-53 for Parapet Joint Details and Median Joint Detail.

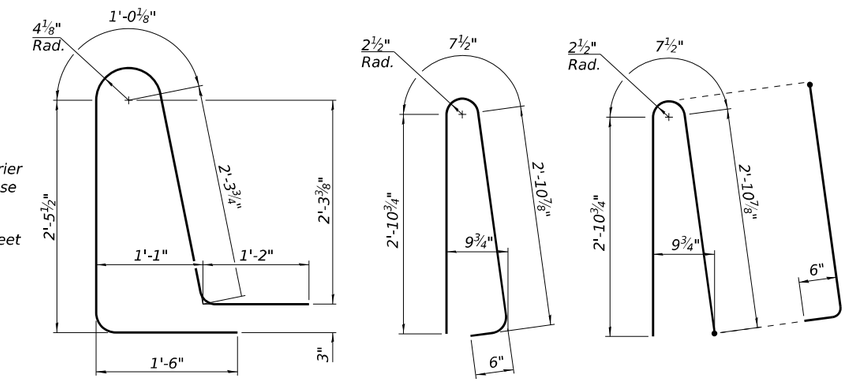

BAR d11(E) BAR d10(E) BAR d12(E)

WB APPROACHES BILL OF MATERIAL

Bar	No.	Size	Length	Shape
a30(E)	92	#5	38'-7"	
a31(E)	120	#8	38'-10"	
a32(E)	161	#5	7'-4"	
a33(E)	92	#5	46'-7"	
a34(E)	120	#8	46'-10"	
b10(E)	245	#5	29'-8"	
b11(E)	373	#9	29'-8"	
b12(E)	4	#5	14'-8"	
b13(E)	1	#4	14'-8"	
d10(E)	92	#5	7'-0"	
d11(E)	161	#5	8'-6"	
d12(E)	69	#5	7'-0"	
e10(E)	60	#4	14'-8"	
e11(E)	12	#4	29'-8"	
t10(E)	322	#4	9'-8"	
w10(E)	40	#5	39'-0"	
w11(E)	40	#5	44'-9"	
Concrete Superstructure			Cu. Yd.	14.9
Concrete Superstructure (Approach Slab)			Cu. Yd.	226.5
Concrete Structures			Cu. Yd.	49.6
Reinforcement Bars, Epoxy Coated			Pound	91,140
Protective Coat			Sq. Yd.	570
Bridge Deck Grooving (Longitudinal)			Sq. Yd.	347
Diamond Grinding (Bridge Section)			Sq. Yd.	490

EB APPROACHES BILL OF MATERIAL

Bar	No.	Size	Length	Shape
a30(E)	184	#5	38'-7"	
a31(E)	240	#8	38'-10"	
a32(E)	161	#5	7'-4"	
b10(E)	232	#5	29'-8"	
b11(E)	352	#9	29'-8"	
b12(E)	4	#5	14'-8"	
b13(E)	1	#4	14'-8"	
d10(E)	92	#5	7'-0"	
d11(E)	161	#5	8'-6"	
d12(E)	69	#5	7'-0"	
e10(E)	60	#4	14'-8"	
e11(E)	12	#4	29'-8"	
t10(E)	304	#4	9'-8"	
w10(E)	80	#5	39'-0"	
Concrete Superstructure			Cu. Yd.	14.9
Concrete Superstructure (Approach Slab)			Cu. Yd.	213.6
Concrete Structures			Cu. Yd.	46.6
Reinforcement Bars, Epoxy Coated			Pound	84,930
Protective Coat			Sq. Yd.	539
Bridge Deck Grooving (Longitudinal)			Sq. Yd.	346
Diamond Grinding (Bridge Section)			Sq. Yd.	459
Preformed Joint Seal, 3½"			Foot	60

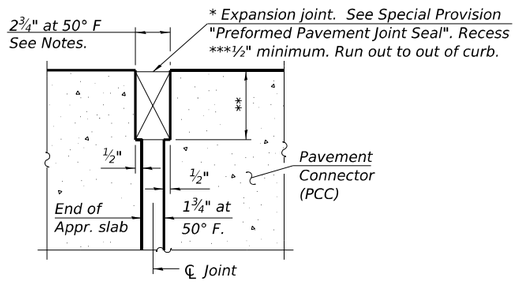

DETAIL A

* Cost included with Concrete Superstructure (Approach Slab).
** Per manufacturer recommendations
*** Prior to grinding.

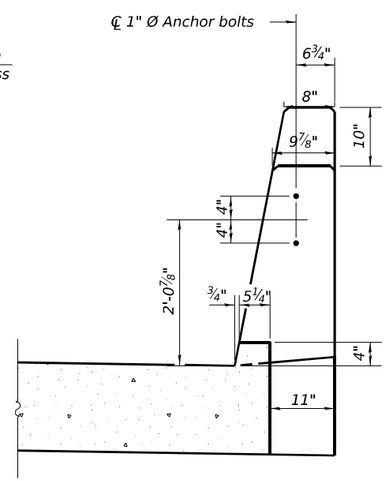

VIEW B-B

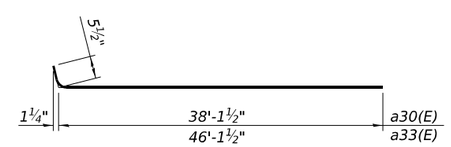

BARS a30(E) & a33(E)

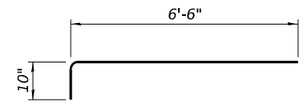

BAR a32(E)

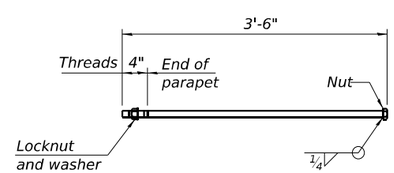

* 1" Ø ANCHOR BOLT

(Anchor bolt assemblies shall be galvanized according to Article 1006.09 of the Standard Specifications)

MODEL: Default
FILE NAME: 0998310-62F94-030-AS02.dgn

BURNS McDONNELL

USER NAME =	DESIGNED - ECK	REVISED -	
	CHECKED - GEK	REVISED -	
PLOT SCALE =	DRAWN - ECK	REVISED -	
PLOT DATE =	CHECKED - KMD	REVISED -	

STATE OF ILLINOIS
DEPARTMENT OF TRANSPORTATION

BRIDGE APPROACH SLAB DETAILS II
STRUCTURE NO. 099-8310

SHEET SB-30 OF SB-53 SHEETS

F.A.I. RTE.	SECTION	COUNTY	TOTAL SHEETS	SHEET NO.
80	2017-057F	WILL	1342	806
		CONTRACT NO. 62F94		
	ILLINOIS	FED. AID PROJECT		

10/27/2025 4:59:36 PM

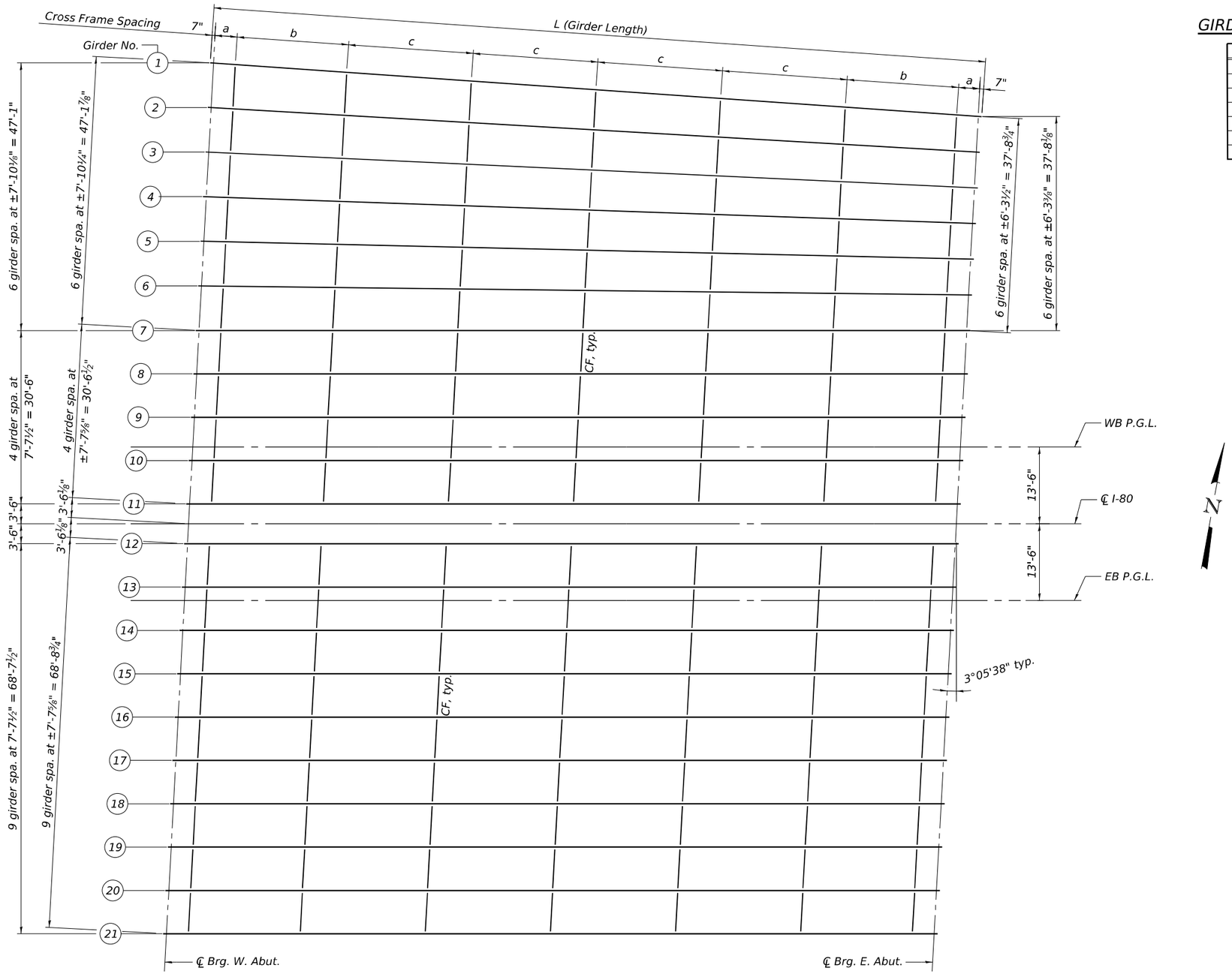

FRAMING PLAN

GIRDER AND CROSS FRAME SPACING DIMENSIONS

Girder No.	L	a	b	c
1	135'-11 13/16"	3'-10"	19'-7 5/8"	21'-11 5/8"
2	135'-11 5/8"	3'-9 15/16"	19'-7 5/8"	21'-11 5/8"
3	135'-11 11/16"	3'-9 15/16"	19'-7 5/8"	21'-11 5/8"
4	135'-11 15/16"	3'-10"	19'-7 11/16"	21'-11 11/16"
5	136'-0 3/8"	3'-10"	19'-7 3/4"	21'-11 3/4"
6	136'-1 1/16"	3'-10"	19'-7 13/16"	21'-11 7/8"
7 - 21	136'-2"	3'-10 1/16"	19'-7 15/16"	22'-0"

NOTE:

1. Dimensions measured along ℄ of girder and to ℄ of bearing.

MODEL: Default
FILE NAME: 0998310-62F94-031-FRM.dgn
10/27/2025 4:59:39 PM

BURNS McDONNELL

USER NAME =	DESIGNED - ECK	REVISED -	
	CHECKED - GEK	REVISED -	
PLOT SCALE =	DRAWN - ECK	REVISED -	
PLOT DATE =	CHECKED - SLM	REVISED -	

STATE OF ILLINOIS
DEPARTMENT OF TRANSPORTATION

FRAMING PLAN
STRUCTURE NO. 099-8310

SHEET SB-31 OF SB-53 SHEETS

F.A.I. RTE.	SECTION	COUNTY	TOTAL SHEETS	SHEET NO.
80	2017-057F	WILL	1342	807
		CONTRACT NO. 62F94		
	ILLINOIS	FED. AID PROJECT		

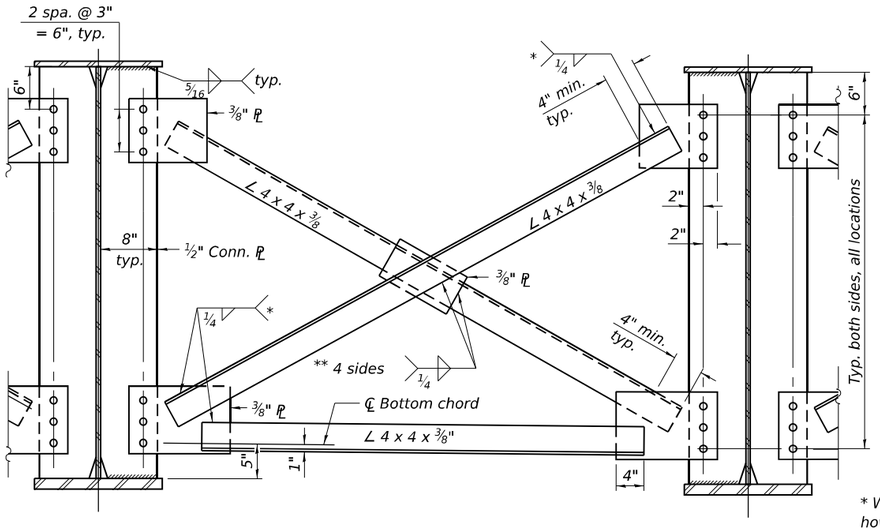

CROSS-FRAME (CF)

(133 Required)

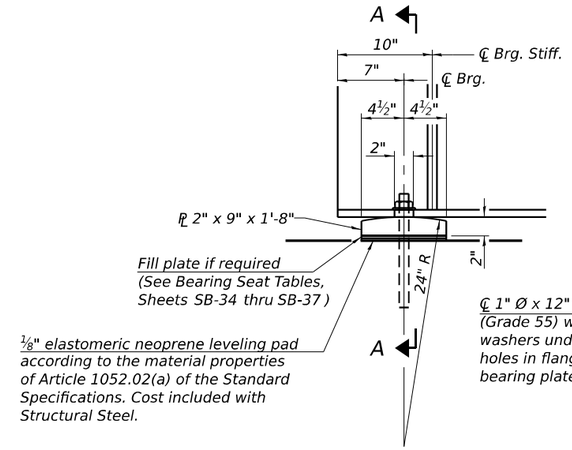

ELEVATION AT ABUTMENT

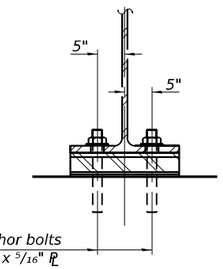

SECTION A-A

FIXED BEARING

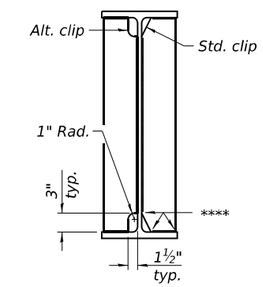

WELD LIMITS AND CLIP DETAILS

* Weld angles along 3 sides on one face of gusset plate; however, if cross-frames are galvanized, weld all-around.

** If cross-frames are galvanized, weld all-around.

NOTES:

1. All plate girders and bearing stiffeners, shall be AASHTO M270 Grade 50.
2. Detail 15/16" Ø holes for all ¾" Ø bolts.
3. Two hardened washers required for each set of oversized holes.
4. Load carrying components designated "CVN" shall conform to the Charpy-V-Notch Impact Energy Requirement Zone 2.
5. All cross frames shall be installed as steel is erected and secured with erection pins and bolts except as otherwise noted. Individual cross frames at supports may be temporarily disconnected to install bearing anchor rods.
6. Cross frame connection plates not shown on girder elevation.For locations see Framing Plan.
7. Anchor bolts shall be according to Article 521.06 of the Standard Specifications.
8. Beams shall be braced for stability during erection and remain braced until deck is poured and cured.
9. Anchor bolts at all supports shall be installed as each member is erected unless an equivalent temporary means of lateral restraint is used.
10. All (embedded and separate) bearing plates, anchor bolts, nuts and washers shall be galvanized according to AASHTO M111 or M232 as applicable.

GIRDER DIMENSIONS

Girder No.	L	A	B	C
1	135'-11 13/16"	41'-0"	53'-0"	40'-9 13/16"
2	135'-11 5/8"	41'-0"	53'-0"	40'-9 5/8"
3	135'-11 11/16"	41'-0"	53'-0"	40'-9 11/16"
4	135'-11 15/16"	41'-0"	53'-0"	40'-9 15/16"
5	136'-0 3/8"	41'-0"	53'-0"	40'-10 3/8"
6	136'-1 1/16"	41'-0"	53'-0"	40'-11 1/16"
7-21	136'-2"	41'-0"	53'-0"	41'-0"

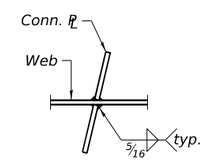

WEB WELD DETAIL

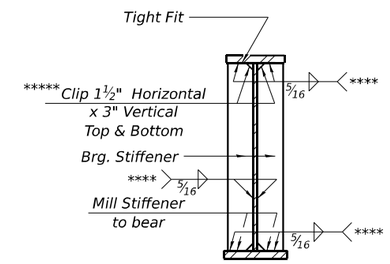

SECTION AT ABUTMENT

**** Terminate ¼" (±⅛") from the end of plate intersects.
***** Clip may be rounded for ease of shop painting.

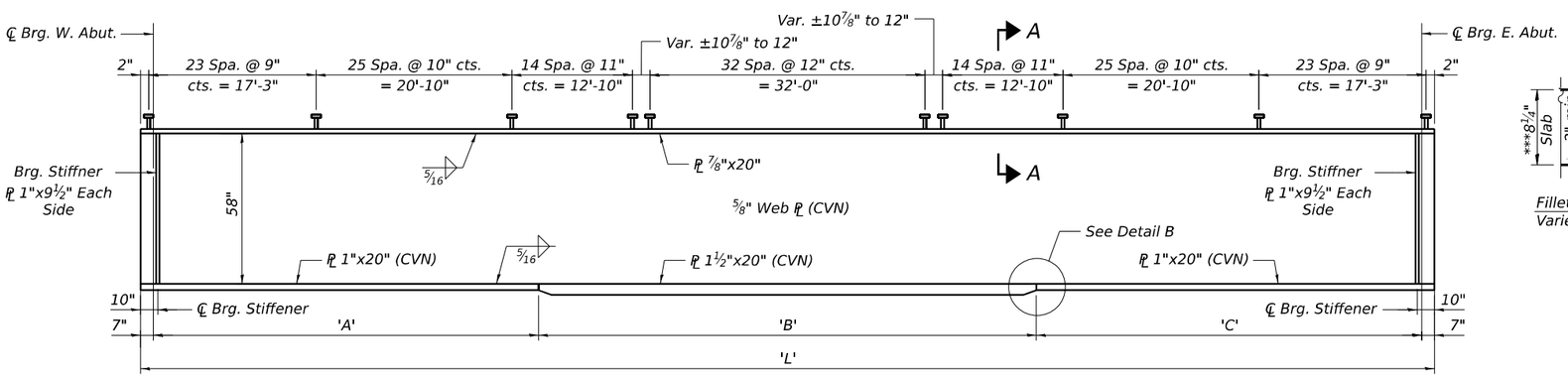

GIRDER ELEVATION

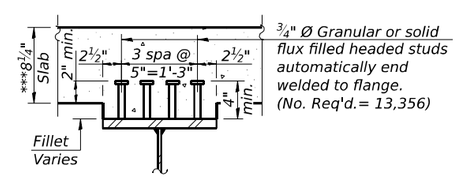

SECTION A-A

*** Prior to Grinding.

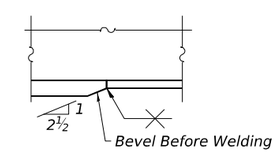

DETAIL B

BILL OF MATERIAL

Item	Unit	Quantity
Anchor Bolts, 1"	Each	84

MODEL: Default
FILE NAME: 0998310-62F94-032-SDET1.dgn

10/27/2025 4:59:42 PM

BURNS McDONNELL

USER NAME =	DESIGNED - ECK	REVISED -	
	CHECKED - GEK	REVISED -	
PLOT SCALE =	DRAWN - ECK	REVISED -	
PLOT DATE =	CHECKED - SLM	REVISED -	

STATE OF ILLINOIS
DEPARTMENT OF TRANSPORTATION

STRUCTURAL STEEL DETAILS
STRUCTURE NO. 099-8310

SHEET SB-32 OF SB-53 SHEETS

F.A.I. RTE.	SECTION	COUNTY	TOTAL SHEETS	SHEET NO.
80	2017-057F	WILL	1342	808
		CONTRACT NO. 62F94		
		ILLINOIS	FED. AID PROJECT	

INTERIOR GIRDER MOMENT TABLE		
		0.5 Sp. 1
I_s	(in^4)	50,185
I_c (n)	(in^4)	120,331
I_c (3n)	(in^4)	86,476
I_c (cr)	(in^4)	-
S_s	(in^3)	1,931
S_c (n)	(in^3)	2,554
S_c (3n)	(in^3)	2,340
S_c (cr)	(in^3)	-
S_x	(in^3)	2,299
DC1	(k/')	1.120
M_{DC1}	('k)	2,514
DC2	(k/')	0.190
M_{DC2}	('k)	433
DW	(k/')	0.381
M_{DW}	('k)	868
LLDF		0.589
M_{LL+IM}	('k)	2,562
f_ℓ (Strength I)	(ksi)	0
$M_u + \frac{1}{3} f_\ell S_x$	('k)	9,469
$\Phi_f M_n$	('k)	12,593
f_s DC1	(ksi)	15.63
f_s DC2	(ksi)	2.22
f_s DW	(ksi)	4.45
f_s (LL+IM)	(ksi)	12.04
f_ℓ (Service II)	(ksi)	0
$f_s + f_\ell/2$ (Service II)	(ksi)	37.94
Service II Resistance	(ksi)	47.50
$f_s + f_\ell/3$ (Strength I)	(ksi)	-
$\Phi_f F_n$	(ksi)	-
V_f	(k)	79.2

EXTERIOR GIRDER MOMENT TABLE		
		0.5 Sp. 1
I_s	(in^4)	50,185
I_c (n)	(in^4)	118,956
I_c (3n)	(in^4)	85,388
I_c (cr)	(in^4)	-
S_s	(in^3)	1,931
S_c (n)	(in^3)	2,547
S_c (3n)	(in^3)	2,332
S_c (cr)	(in^3)	-
S_x	(in^3)	2,289
DC1	(k/')	1.143
M_{DC1}	('k)	2,565
DC2	(k/')	0.190
M_{DC2}	('k)	433
DW	(k/')	0.366
M_{DW}	('k)	834
LLDF		0.741
M_{LL+IM}	('k)	3,199
f_ℓ (Strength I)	(ksi)	0
$M_u + \frac{1}{3} f_\ell S_x$	('k)	10,597
$\Phi_f M_n$	('k)	12,434
f_s DC1	(ksi)	15.94
f_s DC2	(ksi)	2.23
f_s DW	(ksi)	4.29
f_s (LL+IM)	(ksi)	15.07
f_ℓ (Service II)	(ksi)	0
$f_s + f_\ell/2$ (Service II)	(ksi)	42.06
Service II Resistance	(ksi)	47.50
$f_s + f_\ell/3$ (Strength I)	(ksi)	-
$\Phi_f F_n$	(ksi)	-
V_f	(k)	88.3

INTERIOR GIRDER REACTION TABLE		
		Abut.
LLDF		0.788
OCF		1.011
R_{DC1}	(k)	75.0
R_{DC2}	(k)	12.8
R_{DW}	(k)	25.7
R_{LL}	(k)	87.7
R_{IM}	(k)	17.6
R_{Total} (Strength I)(Impact)	(k)	332.7
R_{Total} (Strength I)(No Impact)	(k)	301.9

EXTERIOR GIRDER REACTION TABLE		
		Abut.
LLDF		0.741
OCF		1.011
R_{DC1}	(k)	76.5
R_{DC2}	(k)	12.8
R_{DW}	(k)	24.7
R_{LL}	(k)	82.5
R_{IM}	(k)	16.6
R_{Total} (Strength I)(Impact)	(k)	322.1
R_{Total} (Strength I)(No Impact)	(k)	293.1

I_s , S_s : Non-composite moment of inertia and section modulus of the steel section used for computing f_s (Total-Strength I, and Service II) due to non-composite dead loads (in.⁴ and in.³).

I_c (n), S_c (n): Composite moment of inertia and section modulus of the steel and deck based upon the modular ratio, "n", used for computing f_s (Total-Strength I, and Service II) in uncracked sections due to short-term composite live loads (in.⁴ and in.³).

I_c (3n), S_c (3n): Composite moment of inertia and section modulus of the steel and deck based upon 3 times the modular ratio, "3n", used for computing f_s (Total-Strength I, and Service II) in uncracked sections, due to long-term composite (superimposed) dead loads (in.⁴ and in.³).

I_c (cr), S_c (cr): Composite moment of inertia and section modulus of the steel and longitudinal deck reinforcement, used for computing f_s (Total-Strength I and Service II) in cracked sections, due to both short-term composite live loads and long-term composite (superimposed) dead loads (in.⁴ and in.³).

S_x : Section modulus about the major axis of a section to the controlling flange, tension or compression, taken as yield moment with respect to the controlling flange over the yield strength of the controlling flange (in.³).

DC1: Un-factored non-composite dead load (kips/ft.).

M_{DC1}: Un-factored moment due to non-composite dead load (kip-ft.).

DC2: Un-factored long-term composite (superimposed excluding future wearing surface) dead load (kips/ft.).

M_{DC2}: Un-factored moment due to long-term composite (superimposed excluding future wearing surface) dead load (kip-ft.).

DW: Un-factored long-term composite (superimposed future wearing surface only) dead load (kips/ft.).

M_{DW} : Un-factored moment due to long-term composite (superimposed future wearing surface only) dead load (kip-ft.).

LLDF: Live Load Distribution Factor for moment and shear computed according to Article 4.6.2.2 and further IDOT provisions.

M_{LL+IM}: Un-factored live load moment plus dynamic load allowance (impact) (kip-ft.).

M_u : Strength I load combination of factored design moments (kip-ft.).
$1.25 (M_{DC1} + M_{DC2}) + 1.5 M_{DW} + 1.75 M_{LL+IM}$

f_ℓ : Factored calculated flange lateral bending stress as calculated using Article 6.10.1.6 and as further simplified by IDOT provisions (ksi).

$\Phi_f M_n$: Factored nominal flexural resistance of the section determined as specified in Article 6.10.7.1 or A6 as applicable (kip-ft.).

f_s DC1: Un-factored stress at edge of flange for controlling steel flange due to vertical non-composite dead loads as calculated below (ksi).
M_{DC1} / S_s

f_s DC2: Un-factored stress at edge of flange for controlling steel flange due to vertical composite dead loads as calculated below (ksi).
M_{DC2} / S_c (3n) or M_{DC2} / S_c (cr) as applicable.

f_s DW: Un-factored stress at edge of flange for controlling steel flange due to vertical composite future wearing surface loads as calculated below (ksi).
M_{DW} / S_c (3n) or M_{DW} / S_c (cr) as applicable.

f_s (LL+ IM): Un-factored stress at edge of flange for controlling steel flange due to vertical composite live load plus impact loads as calculated below (ksi).
M_{LL+IM} / S_c (n) or M_{LL+IM} / S_c (cr) as applicable.

$f_s + f_\ell / 2$ (Service II): Sum of stresses as computed below (ksi).
f_s DC1 + f_s DC2 + f_s DW + 1.3 f_s (LL+ IM) + $f_\ell/2$

Service II Resistance: Composite ($0.95R_hF_{yf}$) or noncomposite ($0.80R_hF_{yf}$) stress capacity according to Article 6.10.4.2 (ksi).

$f_s + f_\ell / 3$ (Strength I): Sum of stresses as computed below on non-compact sections (ksi).
1.25 (f_s DC1 + f_s DC2) + 1.5 f_s DW + 1.75 f_s (LL+ IM) + $f_\ell/3$

$\Phi_f F_n$: Factored nominal flexural resistance of the section as specified in Article 6.10.7.2 or 6.10.8 as applicable (ksi).

V_f: Maximum factored shear range in span computed according to Article 6.10.10.

OCF: Obtuse Correction Factor according to Article 4.6.2.2.3c or as further simplified by IDOT provisions.

R_{DC1}: Un-factored reaction due to non-composite dead load (kip).

R_{DC2}: Un-factored reaction due to long-term composite (superimposed excluding future wearing surface) dead load (kip).

R_{DW} : Un-factored reaction due to long-term composite (superimposed future wearing surface only) dead load (kip).

R_{LL} : Un-factored live load reaction (kip).

R_{IM} : Un-factored dynamic load allowance (impact) (kip).

R_{Total} (Strength I)(Impact): Strength I load combination of factored design reactions (kip).
$1.25 (R_{DC1} + R_{DC2}) + 1.5R_{DW} + 1.75 (R_{LL} + R_{IM})$

R_{Total} (Strength I)(No Impact): Strength I load combination of factored design reactions, not including dynamic load allowance (Impact) (kip).
$1.25 (R_{DC1} + R_{DC2}) + 1.5R_{DW} + 1.75 (R_{LL})$

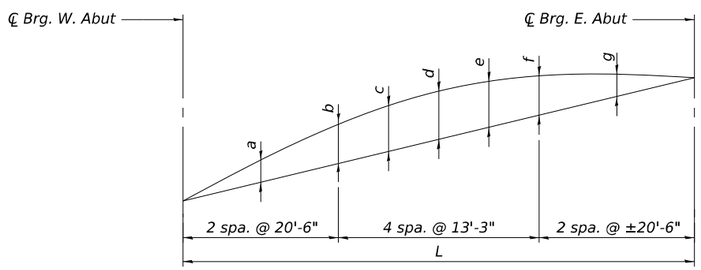

CAMBER DIAGRAM

CAMBER DIMENSIONS

Girder No.	a	b	c	d	e	f	g	L
1	2¾"	5"	5¾"	6¼"	6"	5¼"	3"	134'-9 13/16"
2	2¾"	4¾"	5½"	6"	5¾"	5"	3"	134'-9⅝"
3								134'-9 11/16"
4								134'-9 15/16"
5								134'-10⅜"
6								134'-11 1/16"
7								135'-0"
8 - 21	2¾"	5"	5¾"	6¼"	6"	5¼"	3"	135'-0"

TOP OF WEB ELEVATIONS

(For fabrication use only)

Girder No.	℄ Brg. W. Abut.	℄ Brg. E. Abut.
1	568.55	572.23
2	568.69	572.35
3	568.84	572.46
4	568.99	572.58
5	569.13	572.68
6	569.24	572.77
7	569.35	572.85
8	569.45	572.96
9	569.55	573.06
10	569.57	573.09
11	569.41	572.92
12	569.40	572.91
13	569.54	573.06
14	569.68	573.20
15	569.82	573.34
16	569.92	573.44
17	569.90	573.42
18	569.78	573.30
19	569.62	573.14
20	569.45	572.97
21	569.29	572.81

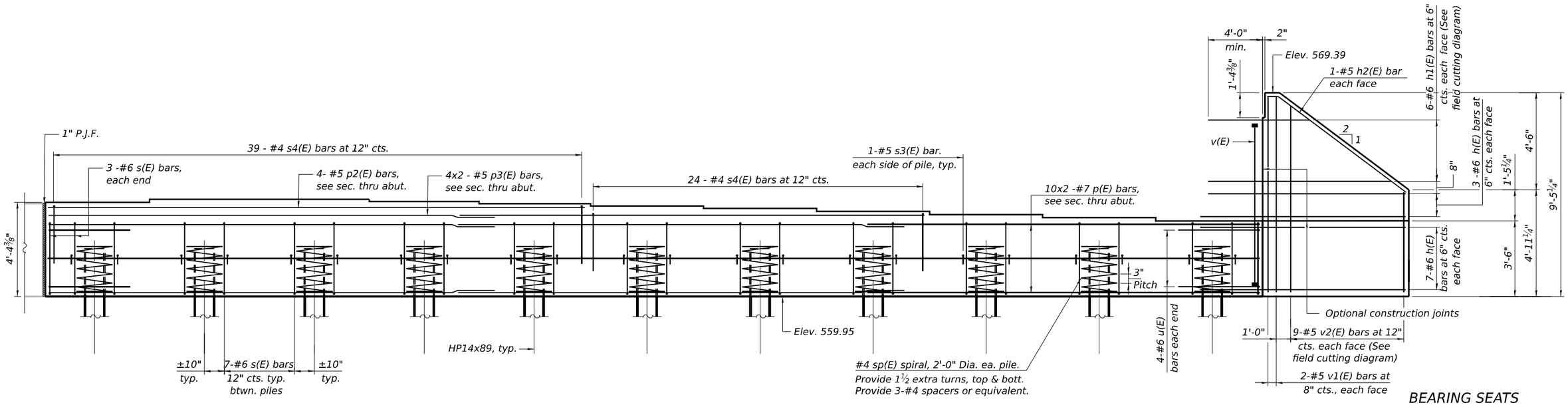

ELEVATION
(Looking West)

BEARING SEATS

Girder No.	Elev.	Step Height
1	563.45	
2	563.60	1¾"
3	563.75	1¾"
4	563.89	1¾"
5	564.04	1¾"
6	564.15	1¼"
7	564.25	1¼"
8	564.36	1¼"
9	564.46	1¼"
10	*564.46	0"
11	564.32	1¾"

* ¼" fill plate shall be provided to achieve final elevation of 564.48.

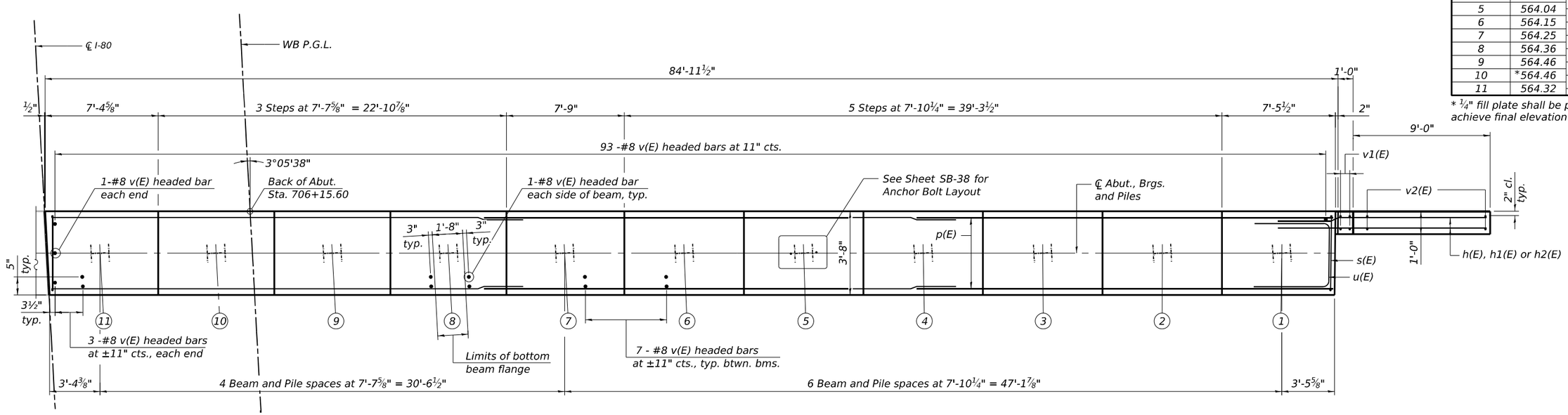

PILE DATA

Type: HP14x89 with pile shoes
Nominal Required Bearing: 705 kips
Factored Resistance Available: 388 kips
Est. Length: 57 ft
No. Production Piles: 10
No. Test Piles: 1

PLAN

N

MINIMUM BAR LAP

#5 Bar = 3'-7"
#6 Bar = 4'-0"
#7 Bar = 5'-0"

NOTE:

1. See Sheet SB-38 of SB-53 for bar cutting diagrams, typical section, bar diagrams, bill of material and additional notes.

MODEL: Default
FILE NAME: 0998310-62F94-034-WWABT.dgn
10/27/2025 4:59:50 PM

BURNS McDONNELL

USER NAME =	DESIGNED - ECK	REVISED -
	CHECKED - GEK	REVISED -
PLOT SCALE =	DRAWN - ECK	REVISED -
PLOT DATE =	CHECKED - KMD	REVISED -

STATE OF ILLINOIS
DEPARTMENT OF TRANSPORTATION

WEST ABUTMENT - WB
STRUCTURE NO. 099-8310

SHEET SB-34 OF SB-53 SHEETS

F.A.I. RTE.	SECTION	COUNTY	TOTAL SHEETS	SHEET NO.
80	2017-057F	WILL	1342	810
		CONTRACT NO. 62F94		
		ILLINOIS	FED. AID PROJECT	

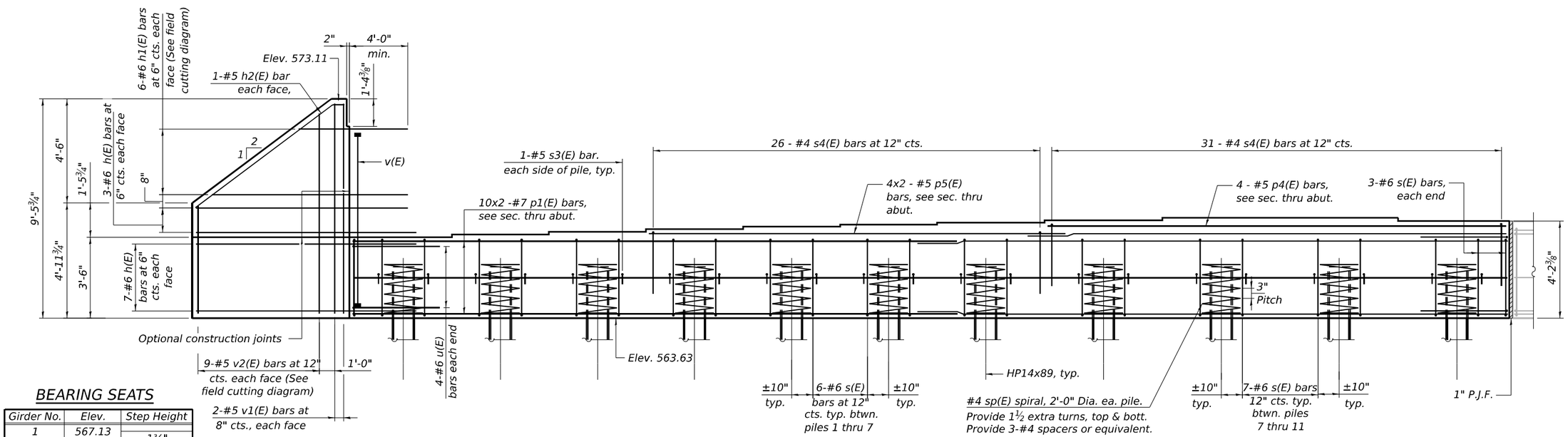

ELEVATION
(Looking East)

BEARING SEATS

Girder No.	Elev.	Step Height
1	567.13	
		1⅜"
2	567.25	
		1⅜"
3	567.37	
		1⅜"
4	567.49	
		1¼"
5	567.59	
		1"
6	567.68	
		1"
7	567.76	
		1¼"
8	567.87	
		1¼"
9	567.97	
		0"
10	* 567.97	
		1¾"
11	567.83	

* ¼" fill plate shall be provided to achieve final elevation of 567.99.

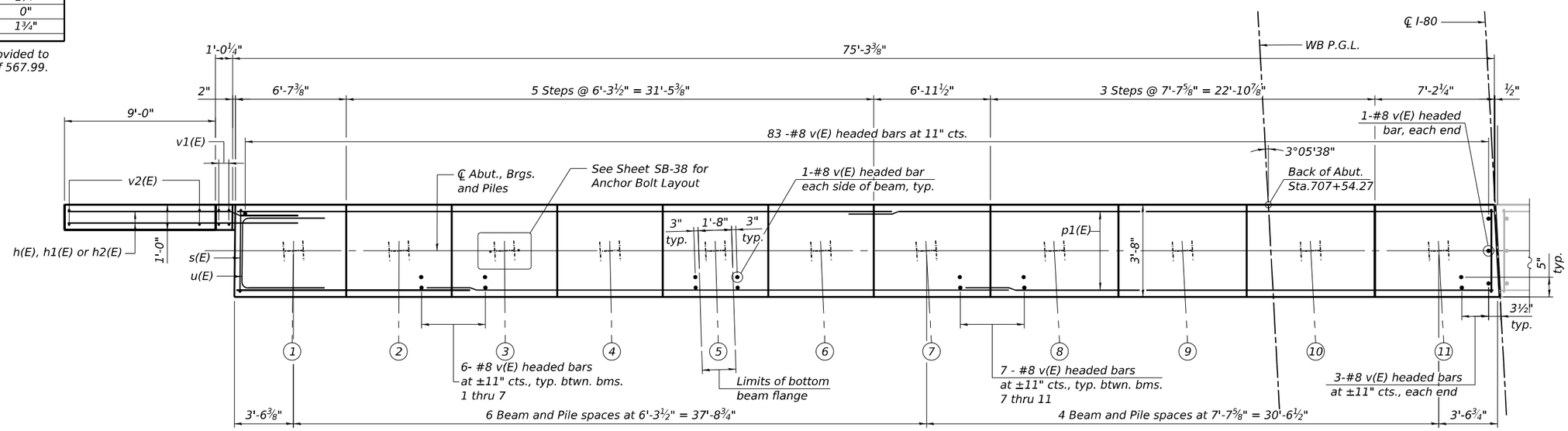

PLAN

PILE DATA

Type: HP14x89 with pile shoes
Nominal Required Bearing: 705 kips
Factored Resistance Available: 388 kips
Est. Length: 54 ft
No. Production Piles: 10
No. Test Piles: 1

MINIMUM BAR LAP

#5 Bar = 3'-7"
#6 Bar = 4'-0"
#7 Bar = 5'-0"

NOTE:

1. See Sheet SB-38 of SB-53 for bar cutting diagrams, typical section, bar diagrams, bill of material and additional notes.

MODEL: Default
FILE NAME: 0998310-62F94-035-WEABT.dgn
10/27/2025 4:59:53 PM

BURNS McDONNELL

USER NAME =	DESIGNED - ECK	REVISED -	
	CHECKED - GEK	REVISED -	
PLOT SCALE =	DRAWN - ECK	REVISED -	
PLOT DATE =	CHECKED - KMD	REVISED -	

STATE OF ILLINOIS
DEPARTMENT OF TRANSPORTATION

EAST ABUTMENT - WB
STRUCTURE NO. 099-8310

SHEET SB-35 OF SB-53 SHEETS

F.A.I. RTE.	SECTION	COUNTY	TOTAL SHEETS	SHEET NO.
80	2017-057F	WILL	1342	811
		CONTRACT NO. 62F94		
	ILLINOIS	FED. AID PROJECT		

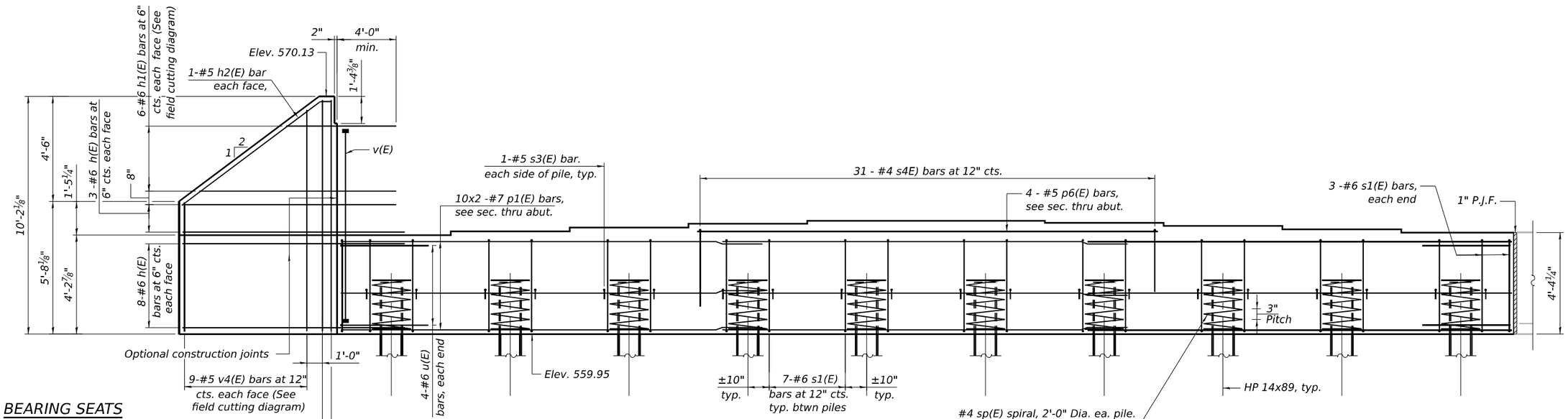

ELEVATION

(Looking West)

BEARING SEATS

Girder No.	Elev.	Step Height
12	564.31	
13	564.45	1¾"
14	564.59	1¾"
15	564.73	1⅝"
16	* 564.81	1"
17	564.81	0"
18	564.68	1½"
19	564.52	2"
20	564.36	2"
21	564.20	2"

* ¼" fill plate shall be provided to achieve final elevation of 564.83.

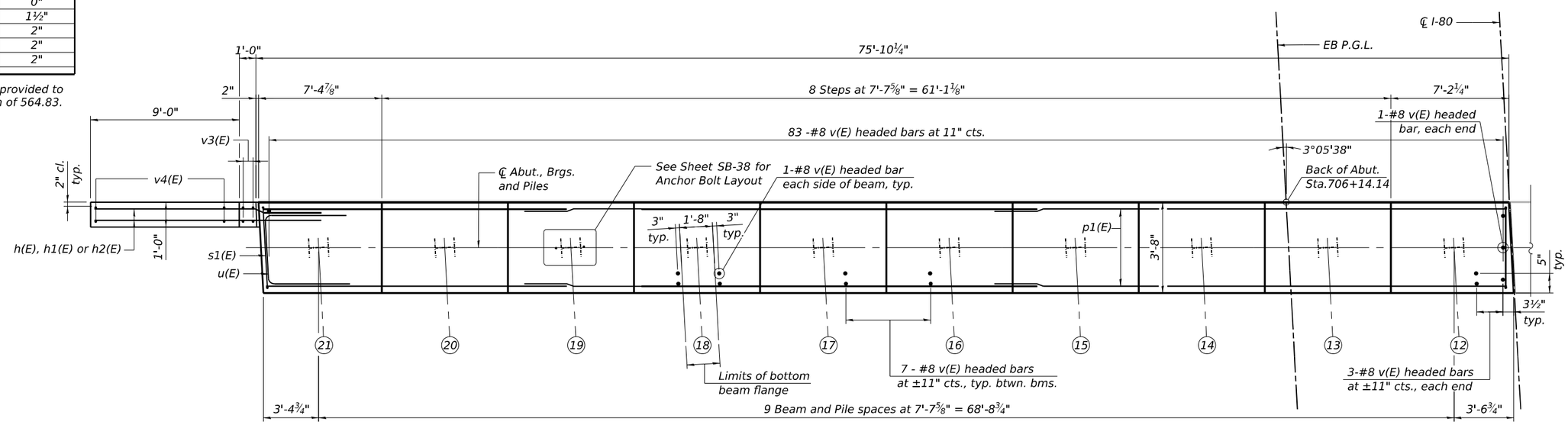

PLAN

PILE DATA

Type: HP14x89 with pile shoes
Nominal Required Bearing: 705 kips
Factored Resistance Available: 388 kips
Est. Length: 57 ft
No. Production Piles: 10
No. Test Piles: 0

MINIMUM BAR LAP

#5 Bar = 3'-7"
#6 Bar = 4'-0"
#7 Bar = 5'-0"

NOTE:

1. See Sheet SB-38 of SB-53 for bar cutting diagrams, typical section, bar diagrams, bill of material and additional notes.

MODEL: Default
FILE NAME: 0998310-62F94-036-EWABT.dgn

BURNS McDONNELL

USER NAME =	DESIGNED - ECK	REVISED -	
	CHECKED - GEK	REVISED -	
PLOT SCALE =	DRAWN - ECK	REVISED -	
PLOT DATE =	CHECKED - KMD	REVISED -	

STATE OF ILLINOIS
DEPARTMENT OF TRANSPORTATION

WEST ABUTMENT - EB
STRUCTURE NO. 099-8310

SHEET SB-36 OF SB-53 SHEETS

F.A.I. RTE.	SECTION	COUNTY	TOTAL SHEETS	SHEET NO.
80	2017-057F	WILL	1342	812
		CONTRACT NO. 62F94		
		ILLINOIS	FED. AID PROJECT	

10/27/2025 4:59:57 PM

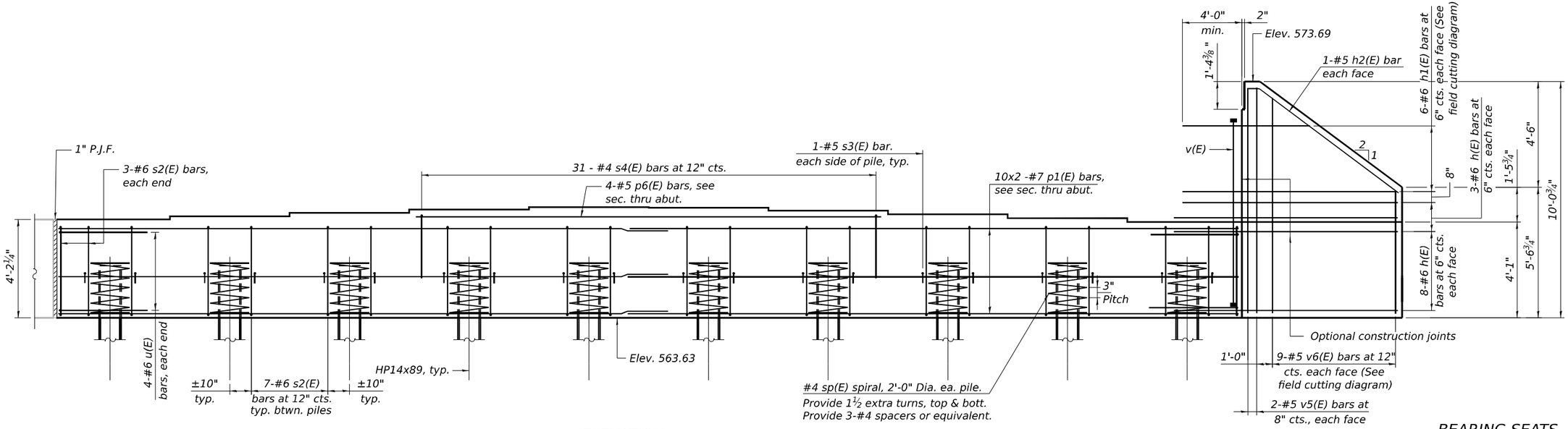

ELEVATION

(Looking East)

BEARING SEATS

Girder No.	Elev.	Step Height
12	567.82	
13	567.96	1¾"
14	568.10	1¾"
15	568.24	1⅝"
16	*568.33	1"
17	568.33	0"
18	568.20	1½"
19	568.04	1⅞"
20	567.88	2"
21	567.72	2"

* ¼" fill plate shall be provided to achieve final elevation of 568.35.

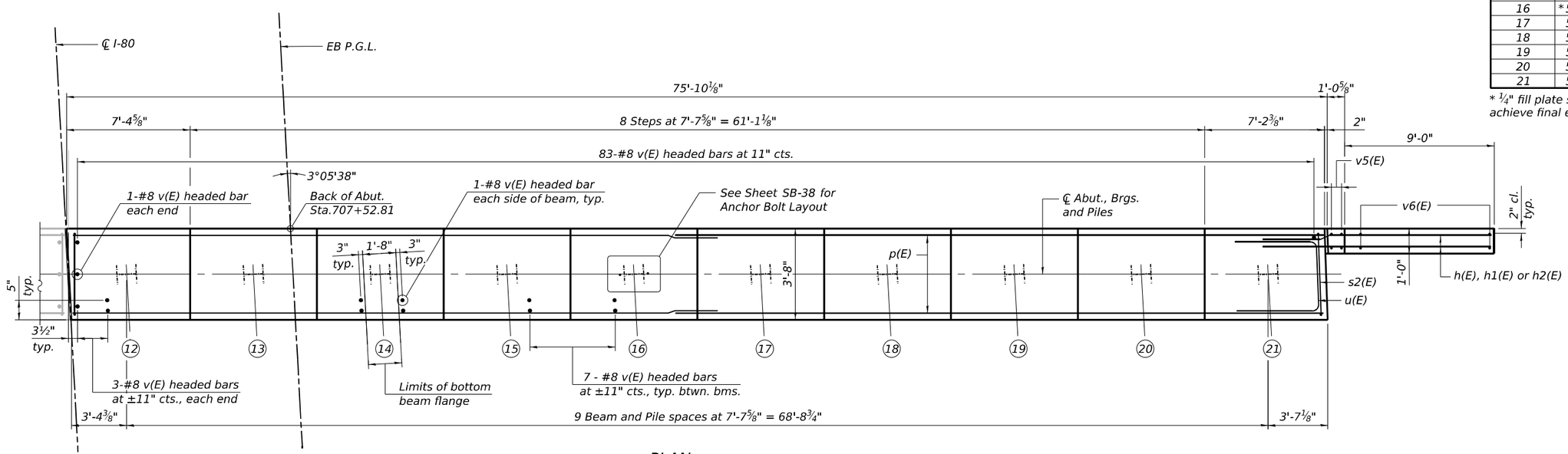

PLAN

N

PILE DATA

Type: HP14x89 with pile shoes
Nominal Required Bearing: 705 kips
Factored Resistance Available: 388 kips
Est. Length: 54 ft
No. Production Piles: 10
No. Test Piles: 0

MINIMUM BAR LAP

#5 Bar = 3'-7"
#6 Bar = 4'-0"
#7 Bar = 5'-0"

NOTE:

1. See Sheet SB-38 of SB-53 for bar cutting diagrams, typical section, bar diagrams, bill of material and additional notes.

MODEL: Default
FILE NAME: 0998310-62F94-037-EEABT.dgn
10/27/2025 5:00:00 PM

BURNS McDONNELL

USER NAME =	DESIGNED - ECK	REVISED -	
	CHECKED - GEK	REVISED -	
PLOT SCALE =	DRAWN - ECK	REVISED -	
PLOT DATE =	CHECKED - KMD	REVISED -	

STATE OF ILLINOIS
DEPARTMENT OF TRANSPORTATION

EAST ABUTMENT - EB
STRUCTURE NO. 099-8310

SHEET SB-37 OF SB-53 SHEETS

F.A.I. RTE.	SECTION	COUNTY	TOTAL SHEETS	SHEET NO.
80	2017-057F	WILL	1342	813
		CONTRACT NO. 62F94		
		ILLINOIS	FED. AID PROJECT	

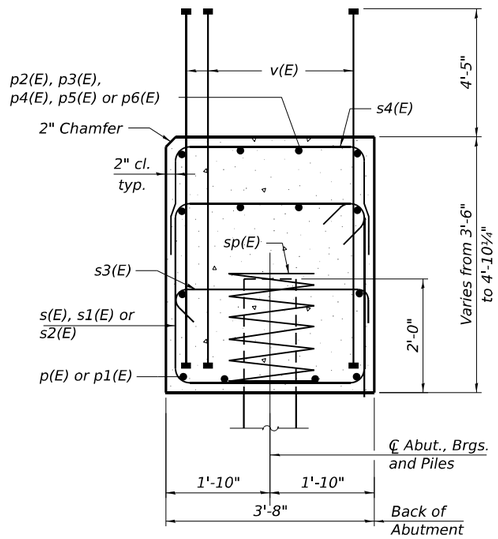

SEC. THRU ABUT.

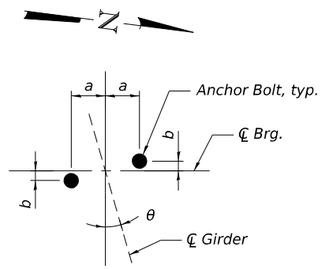

ANCHOR BOLT LAYOUT

Girder	Skew θ	a	b
1	-0°54'22.2"	5"	-1/16"
2	-0°14'20.6"	5"	0"
3	0°25'41.2"	5"	1/16"
4	1°05'42.6"	5"	1/8"
5	1°45'42.9"	5"	1/8"
6	2°25'41.5"	5"	3/16"
7-21	3°05'37.8"	5"	1/4"

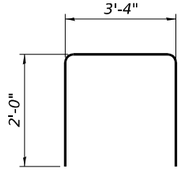

BAR s4(E)

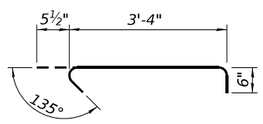

BAR s3(E)

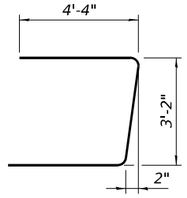

BAR u(E)

NOTES:

1. Pour steps monolithically with cap.
2. Bar terminators paid for separately. See Total Bill of Material.
3. For details of piles see sheet SB-42 of SB-53.
4. Abutment H-piles shall be oriented with flanges parallel to ℄ I-80.

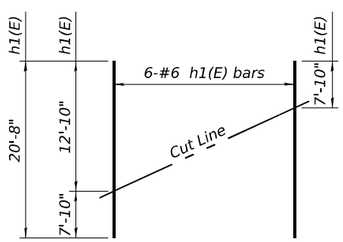

FIELD CUTTING DIAGRAM

Order h1(E) full length. Cut as shown and use remainder of bars in opposite wing.

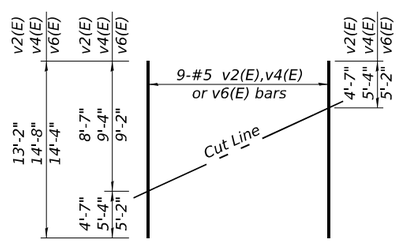

FIELD CUTTING DIAGRAM

Order v2(E),v4(E) and v6(E) full length. Cut as shown and use remainder of bars in opposite wing.

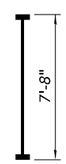

BAR v(E)

(Headed 1436-#8 Bar Terminators)

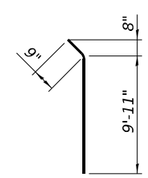

BAR h2(E)

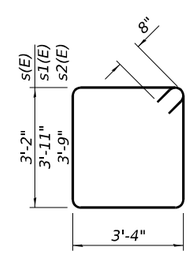

BARS s(E), s1(E) & s2(E)

WB ABUTMENT BILL OF MATERIAL

Bar	No.	Size	Length	Shape
h(E)	40	#6	14'-0"	
h1(E)	24	#6	20'-8"	
h2(E)	4	#5	10'-8"	
p(E)	20	#7	44'-10"	
p1(E)	20	#7	40'-1"	
p2(E)	4	#5	37'-8"	
p3(E)	8	#5	32'-5"	
p4(E)	4	#5	36'-11"	
p5(E)	8	#5	29'-8"	
s(E)	146	#6	14'-4"	
s3(E)	44	#5	4'-4"	
s4(E)	120	#4	7'-4"	
* sp(E)	22	#4	2'-0"	
u(E)	16	#6	11'-10"	
v(E)	370	#8	7'-8"	
v1(E)	8	#5	9'-1"	
v2(E)	36	#5	13'-2"	
Concrete Structures			Cu. Yd.	99.3
Reinforcement Bars, Epoxy Coated			Pound	19,310
Furnishing Steel Piles HP14x89			Foot	1,110
Driving Piles			Foot	1,110
Test Pile Steel HP14x89			Each	2
Pile Shoes			Each	22

* Length is height of spiral.

EB ABUTMENT BILL OF MATERIAL

Bar	No.	Size	Length	Shape
h(E)	44	#6	14'-0"	
h1(E)	24	#6	20'-8"	
h2(E)	4	#5	10'-8"	
p1(E)	40	#7	44'-10"	
p6(E)	8	#5	30'-3"	
s1(E)	69	#6	15'-6"	
s2(E)	69	#6	15'-10"	
s3(E)	40	#5	4'-4"	
s4(E)	62	#4	7'-4"	
* sp(E)	20	#4	2'-0"	
u(E)	16	#6	11'-10"	
v(E)	348	#8	7'-8"	
v3(E)	4	#5	9'-10"	
v4(E)	18	#5	14'-8"	
v5(E)	4	#5	9'-8"	
v6(E)	18	#5	14'-4"	
Concrete Structures			Cu. Yd.	94.0
Reinforcement Bars, Epoxy Coated			Pound	18,330
Furnishing Steel Piles HP14x89			Foot	1,110
Driving Piles			Foot	1,110
Pile Shoes			Each	20

MODEL: Default
FILE NAME: 0998310-62F94-038-ADET.dgn

BURNS McDONNELL

USER NAME =	DESIGNED - ECK	REVISED -
	CHECKED - GEK	REVISED -
PLOT SCALE =	DRAWN - ECK	REVISED -
PLOT DATE =	CHECKED - KMD	REVISED -

STATE OF ILLINOIS
DEPARTMENT OF TRANSPORTATION

ABUTMENT DETAILS
STRUCTURE NO. 099-8310

SHEET SB-38 OF SB-53 SHEETS

F.A.I. RTE.	SECTION	COUNTY	TOTAL SHEETS	SHEET NO.
80	2017-057F	WILL	1342	814

CONTRACT NO. 62F94

ILLINOIS FED. AID PROJECT

10/27/2025 5:00:02 PM

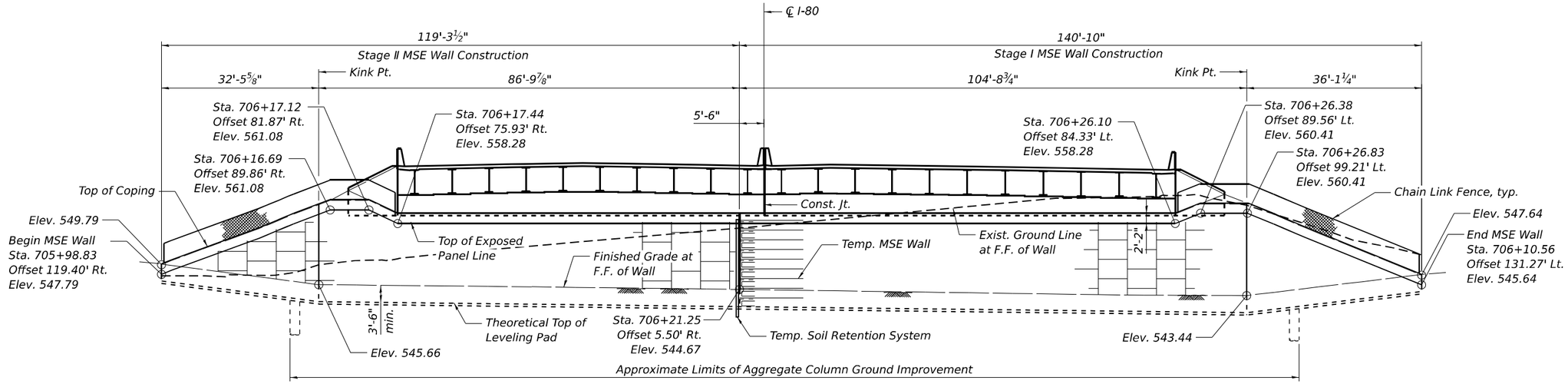

WEST MSE WALL ELEVATION

(Unfolded, Looking West)

NOTES:

1. Stations and offsets are measured from ℄ I-80 to the front face of wall.
2. Dimensions are measured along the front face of wall.
3. See Sheet SB-7 of SB-53 for Temp MSE Wall limits and details.

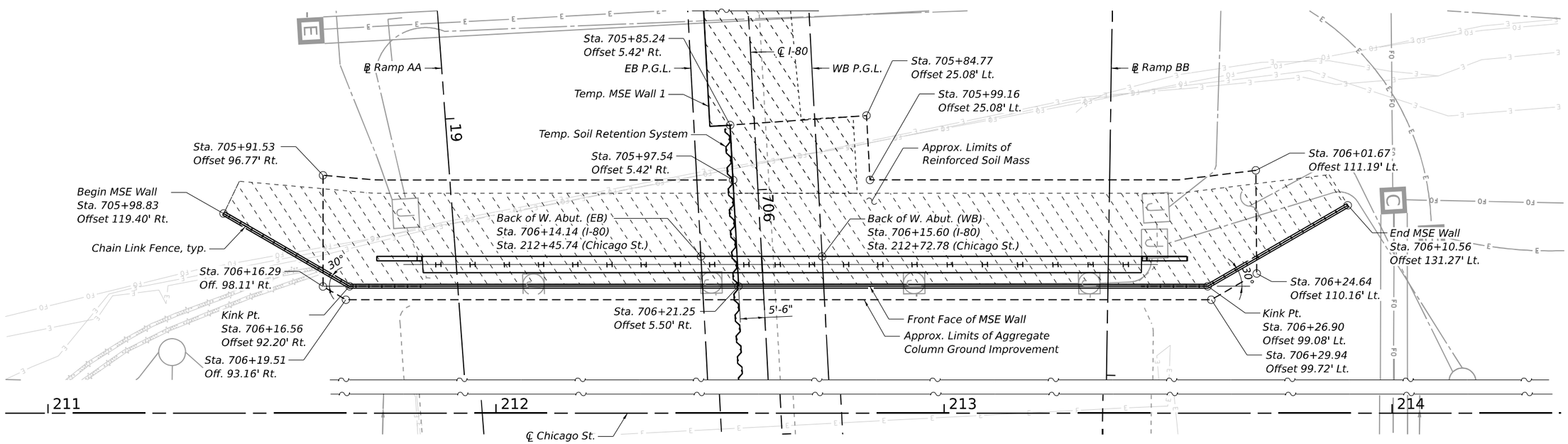

WEST MSE WALL PLAN

BURNS McDONNELL	USER NAME =	DESIGNED - ECK	REVISED -	STATE OF ILLINOIS DEPARTMENT OF TRANSPORTATION	WEST MSE WALL PLAN & ELEVATION STRUCTURE NO. 099-8310
		CHECKED - GEK	REVISED -		
	PLOT SCALE =	DRAWN - ECK	REVISED -		
	PLOT DATE =	CHECKED - KMD	REVISED -		SHEET SB-39 OF SB-53 SHEETS

F.A.I. RTE.	SECTION	COUNTY	TOTAL SHEETS	SHEET NO.
80	2017-057F	WILL	1342	815
		CONTRACT NO. 62F94		
	ILLINOIS	FED. AID PROJECT		

MODEL: Default
FILE NAME: 0998310-62F94-039-WMSE.dgn
10/27/2025 5:00:14 PM

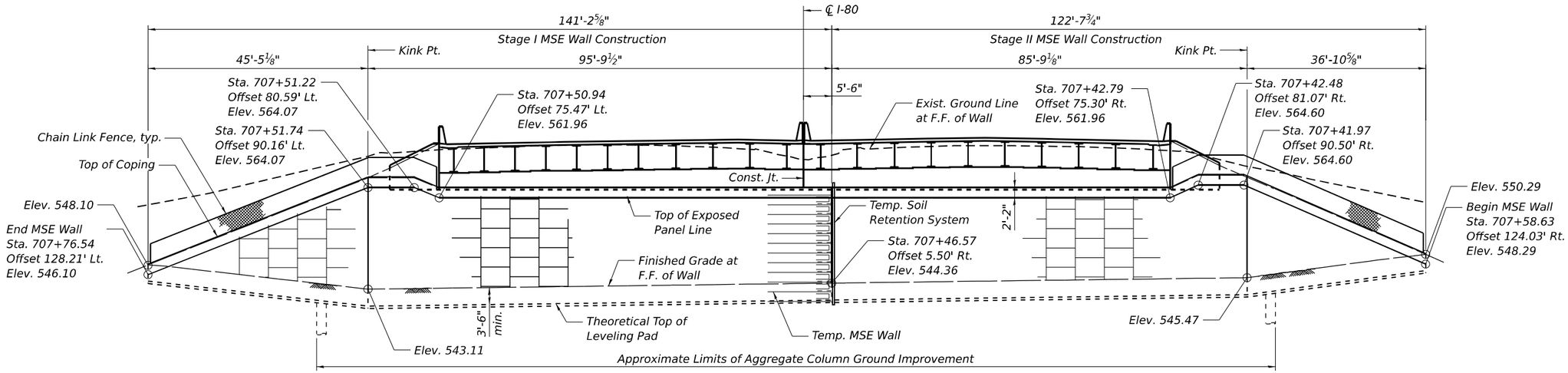

EAST MSE WALL ELEVATION

(Unfolded, Looking East)

NOTES:

1. Stations and offsets are measured from ℄ I-80 to the front face of wall.
2. Dimensions are measured along the front face of wall.
3. See Sheet SB-7 of SB-53 for temporary MSE wall limits and details.

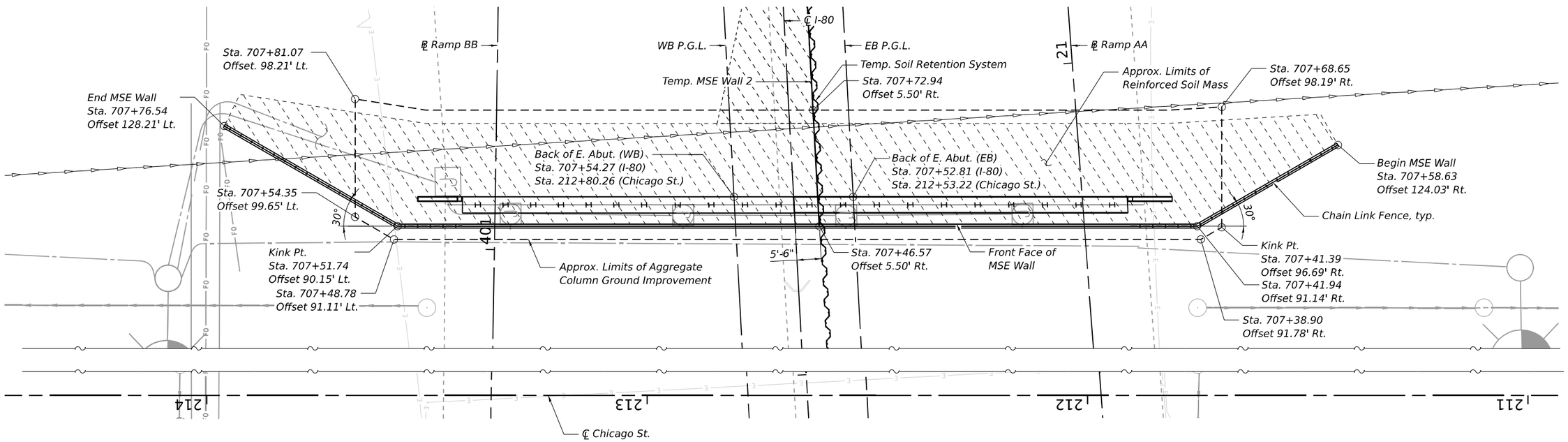

EAST MSE WALL PLAN

N

BURNS McDONNELL	USER NAME =	DESIGNED - ECK	REVISED -	STATE OF ILLINOIS DEPARTMENT OF TRANSPORTATION	EAST MSE WALL PLAN & ELEVATION STRUCTURE NO. 099-8310	F.A.I. RTE. 80	SECTION 2017-057F
		CHECKED - GEK	REVISED -			COUNTY WILL	TOTAL SHEETS 1342
	PLOT SCALE =	DRAWN - ECK	REVISED -			SHEET NO. 816	CONTRACT NO. 62F94
	PLOT DATE =	CHECKED - KMD	REVISED -		SHEET SB-40 OF SB-53 SHEETS	ILLINOIS	FED. AID PROJECT

MODEL: Default
FILE NAME: 0998310-62F94-040-EMSE.dgn
10/27/2025 5:00:18 PM

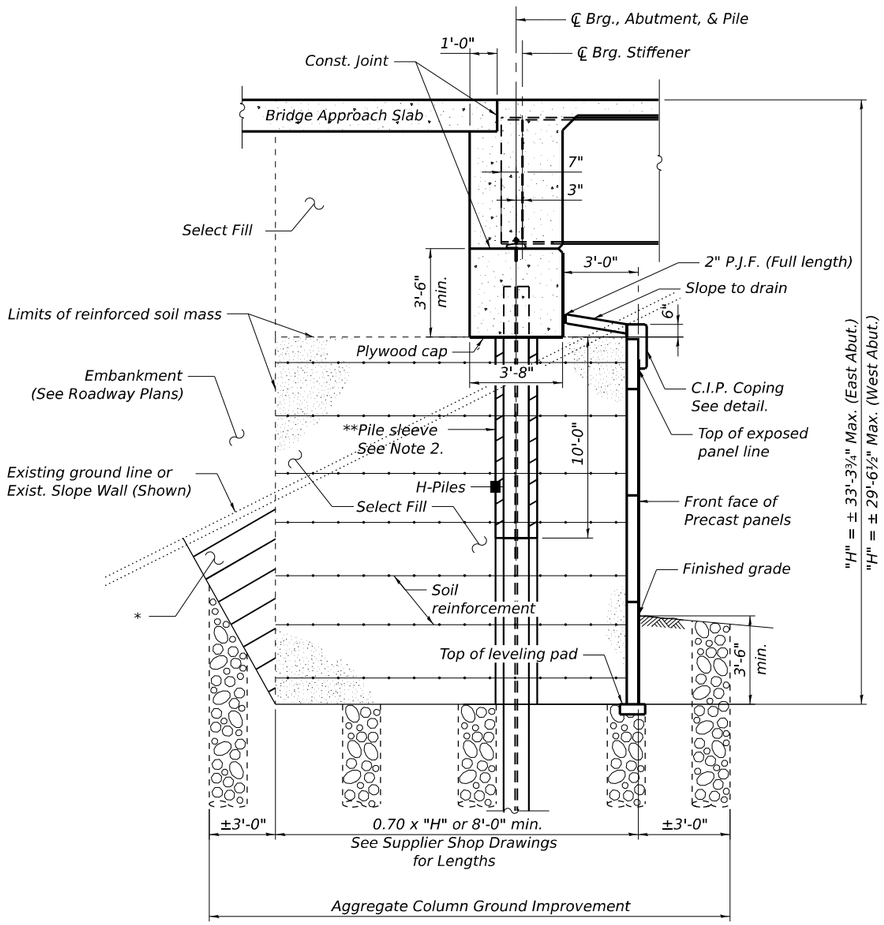

SECTION THRU ABUTMENT

(Horiz. dim. @ ∠'s)

* Overexcavation beyond structure excavation. This area not measured for payment. Backfill overexcavation with same material used for select fill used in MSE wall.

** Pile sleeve to be filled with bentonite and remain empty in hatched region.

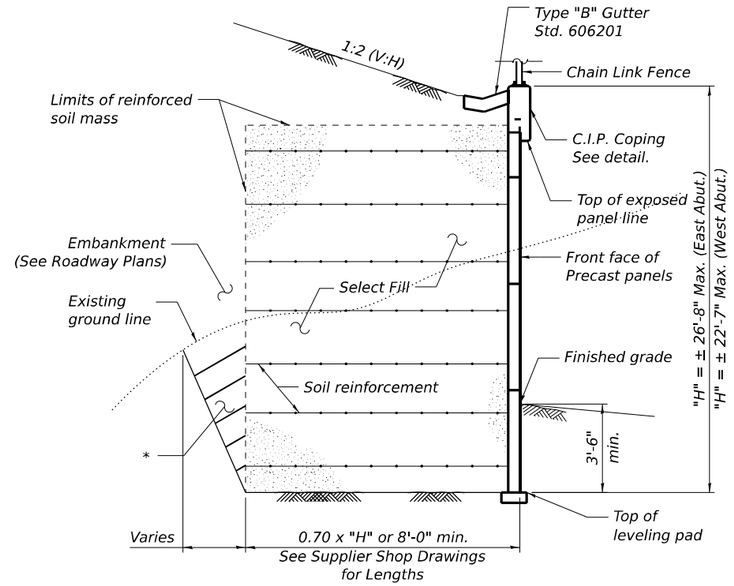

SECTION THRU MSE WALL

(Horiz. dim. @ ∠'s)

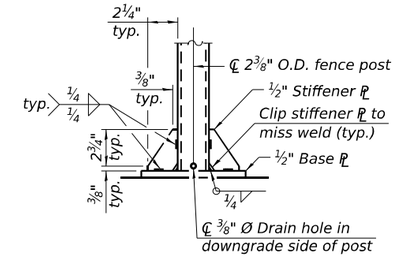

SECTION A-A

(Fence post base plate connection)

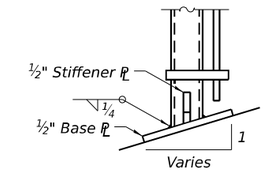

DETAIL A

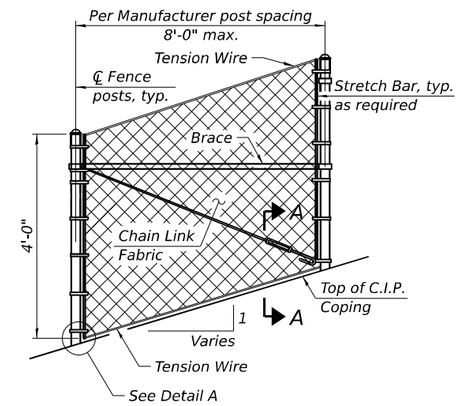

CHAIN LINK FENCE ELEVATION

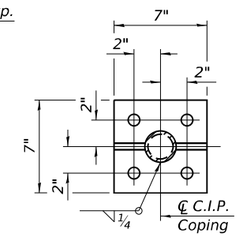

BASE PLATE PLAN

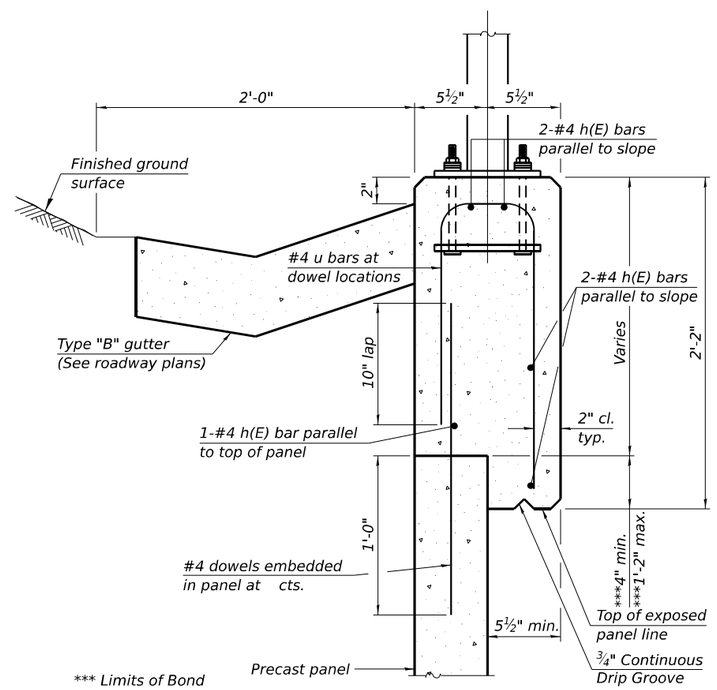

*** Limits of Bond breaker membrane between front of panel and overhang.

CAST IN PLACE COPING FOR MSE WALL PANELS

NOTES:

1. Bottom of abutment cap shall be poured against the top of plywood cap. Cut opening to match pile cap perimeter within ⅛". Support with bars tack welded to webs rated for 500 lbs. Seal gaps to keep concrete out.
2. Piles to be sleeved to Top of Leveling Pad.
3. Reinforcing for Cast in Place Coping shown for information only, cost included with Mechanically Stabilized Earth Retaining Wall.
4. See Sheets SB-39 & SB-40 of SB-53 for approximate limits of Aggregate Column Ground Improvement.
5. The depth of the Aggregate Column Ground Improvement varies and shall be determined by the Contractor.
6. The top of the Aggregate Column Ground Improvement is equal to the lowest excavation limit or existing ground line, whichever is lowest.
7. Aggregate Columns shall not be within 3 feet of new pile foundations and shall be spaced to avoid existing utilities.
8. Aggregate Column Ground Improvement shall be designed to limit total settlement to 0.4 inches after completion of the MSE wall construction.
9. The Contractor shall utilize the bearing capacity requirements per the approved MSE wall plans for the design of the Aggregate Column Ground Improvement.
10. When Precast Coping substitution is used, the connectin of the coping to the panel shall be desigend for the increased loading.

WB BILL OF MATERIAL

Item	Unit	Quantity
Structure Excavation	Cu. Yd.	5,550
Mechanically Stabalized Earth Retaining Wall	Sq. Ft.	4,986
Chain Link Fence, 4' Attached to Structure	Foot	111
Aggregate Column Ground Improvement	L. Sum.	0.3

EB BILL OF MATERIAL

Item	Unit	Quantity
Structure Excavation	Cu. Yd.	3,632
Mechanically Stabalized Earth Retaining Wall	Sq. Ft.	4,020
Chain Link Fence, 4' Attached to Structure	Foot	101
Aggregate Column Ground Improvement	L. Sum.	0.3

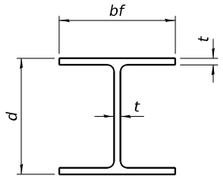

STEEL PILE TABLE

Designation	Depth d	Flange width bf	Web and Flange thickness t	Encasement diameter A
HP 18x181	18	18	1	36"
x157	17¾"	17⅞"	⅞"	36"
x135	17½"	17¾"	¾"	36"
HP 16x183	16½"	16½"	1⅛"	36"
x162	16¼"	16⅛"	1"	36"
x141	16	16	⅞"	36"
x121	15¾"	15⅞"	¾"	36"
HP 14x117	14¼"	14⅞"	13/16"	30"
x102	14"	14¾"	11/16"	30"
x89	13⅞"	14¾"	⅝"	30"
x73	13⅝"	14⅝"	½"	30"
HP 12x84	12¼"	12¼"	11/16"	24"
x74	12⅛"	12¼"	⅝"	24"
x63	12"	12⅛"	½"	24"
x53	11¾"	12"	7/16"	24"
HP 10x57	10"	10¼"	9/16"	24"
x42	9¾"	10⅛"	7/16"	24"
HP 8x36	8"	8⅛"	7/16"	18"

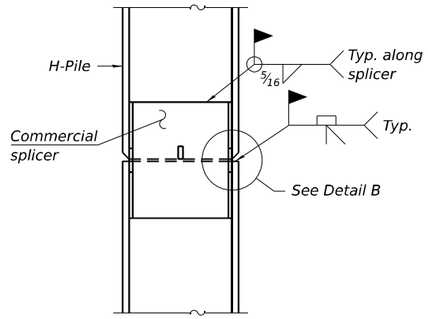

ELEVATION

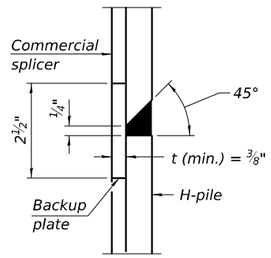

DETAIL B

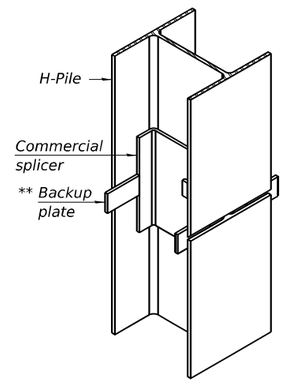

ISOMETRIC VIEW

WELDED COMMERCIAL SPLICE

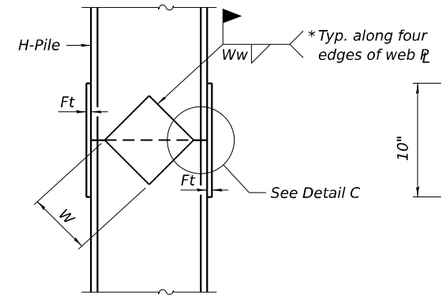

ELEVATION

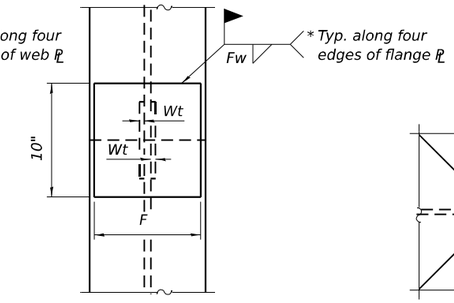

END VIEW

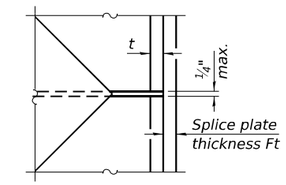

DETAIL C

Designation	F	Ft	Fw	W	Wt	Ww
HP 18x181	15½"	1½"	1"	9½"	⅞"	¾"
x157	15¼"	1¼"	1"	9½"	⅞"	¾"
x135	15¼"	1¼"	1"	9½"	⅞"	¾"
HP 16x183	13¾"	1½"	1"	8¼"	⅞"	¾"
x162	13½"	1½"	1"	8¼"	¾"	⅝"
x141	13½"	1¼"	⅞"	8¼"	¾"	⅝"
x121	13½"	1¼"	⅞"	8¼"	¾"	⅝"
HP 14x117	12½"	1¼"	⅞"	7¾"	⅝"	½"
x102	12½"	1"	¾"	7¾"	⅝"	½"
x89	12½"	⅞"	11/16"	7¾"	⅝"	½"
x73	12½"	¾"	9/16"	7¾"	⅝"	½"
HP 12x84	10"	1"	11/16"	6½"	⅝"	½"
x74	10"	⅞"	11/16"	6½"	⅝"	½"
x63	10"	¾"	½"	6½"	½"	⅜"
x53	10"	¾"	½"	6½"	½"	⅜"
HP 10x57	8"	⅞"	9/16"	5¼"	½"	⅜"
x42	8"	¾"	9/16"	5¼"	½"	⅜"
HP 8x36	6¾"	⅝"	7/16"	4"	½"	⅜"

WELDED PLATE FIELD SPLICE

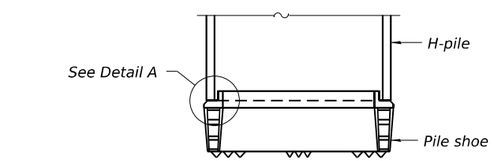

ELEVATION

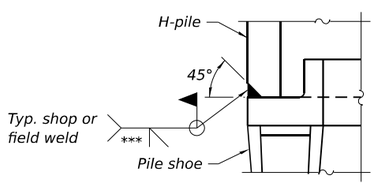

DETAIL A

SHOE ATTACHMENT

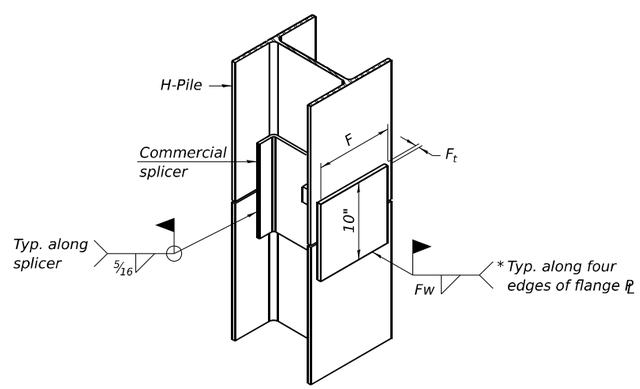

ISOMETRIC VIEW

WELDED COMMERCIAL SPLICE ALTERNATE

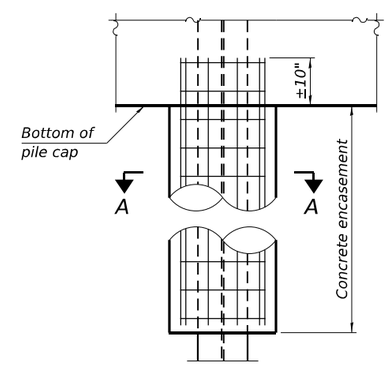

ELEVATION

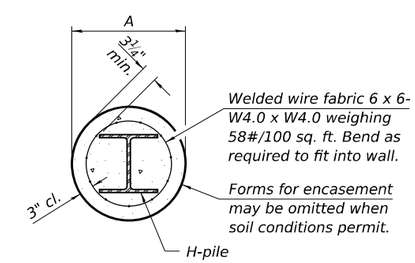

SECTION A-A

INDIVIDUAL PILE CONCRETE ENCASEMENT
(when specified)

Note:
The steel H-piles shall be according to AASHTO M270 Grade 50.

* Interrupt welds ¼" from end of web and/or each flange.

** Remove portions of backup plates that extend outside the flanges.

*** Weld size per pile shoe manufacturer (5/16" min.).

F-HP 10-27-2023

MODEL: Default
FILE NAME: 0998310-62F94-042-PILE.dgn

BURNS McDONNELL

USER NAME =	DESIGNED - ECK	REVISED -	
	CHECKED - GEK	REVISED -	
PLOT SCALE =	DRAWN - ECK	REVISED -	
PLOT DATE =	CHECKED - IS	REVISED -	

STATE OF ILLINOIS
DEPARTMENT OF TRANSPORTATION

HP PILE DETAILS
STRUCTURE NO. 099-8310

SHEET SB-42 OF SB-53 SHEETS

F.A.I. RTE.	SECTION	COUNTY	TOTAL SHEETS	SHEET NO.
80	2017-057F	WILL	1342	818
		CONTRACT NO. 62F94		
	ILLINOIS	FED. AID PROJECT		

10/27/2025 5:00:24 PM

Illinois Department of Transportation
Division of Highways
GSG Consultants, Inc.

SOIL BORING LOG

Page 1 of 2

Date 4/12/22

ROUTE I-80 DESCRIPTION I-80 WB over IL 53/US 52 (Chicago Street) LOGGED BY DD

SECTION I-80 over Des Plaines River LOCATION , SEC. 16, TWP. 35 N, RNG. 10 E,

COUNTY Will DRILLING RIG Latitude Longitude B-57 Mobile

DRILLING METHOD HSA HAMMER TYPE Auto

HAMMER EFF (%) 89

STRUCT. NO. 099-8310
Station

BORING NO. BSB-53
Station 705+82.9618
Offset 91.16ft LT
Ground Surface Elev. 547.27 ft

Surface Water Elev. N/A ft
Stream Bed Elev. N/A ft

Groundwater Elev.:
First Encounter 546.3 ft ▼
Upon Completion N/A ft
After ___ Hrs. N/A ft

Description	Elev.	DEPTH (ft)	BLOWS (/6")	UCS Qu (tsf)	MOIST (%)
3 inches of Asphalt	547.02				
11.5 inches of Concrete	546.31 ▼				
Gray, Moist FILL: SILTY CLAY, some sand and gravel			2		
			2	0.8	20
			3	P	
			7		
			15	1.3	16
		-5	12	P	
Very Stiff Gray, Moist SILTY CLAY LOAM, trace sand and gravel (ML/CL)	541.77		2		
			5	3.1	18
			3	S	
Medium Stiff Gray and Black, Moist SILTY CLAY, trace sand and gravel, trace organics (CL/ML)	538.77		2		
			3	0.5	25
	537.27	-10	4	P	
Very Stiff Gray, Moist SILTY CLAY LOAM, trace sand and gravel (ML/CL)			3		
			20	2.3	15
			8	P	
Medium Dense to Dense Light Brown, Dry to Moist SAND, fine to medium grained, with silt, some limestone fragments (SP)	534.27		8		
			9		8
		-15	16		
			9		
			9		7
			10		
			16		
			12		5
		-20	12		

Description	Elev.	DEPTH (ft)	BLOWS (/6")	UCS Qu (tsf)	MOIST (%)
Medium Dense to Dense Light Brown, Dry to Moist SAND, fine to medium grained, with silt, some limestone fragments (SP) *(continued)*			18		
			14		4
			8		
			4		
			9		5
		-25	15		
			18		
			27		4
			21		
			14		
			13		6
		-30	8		
Auger refusal at 32 feet	515.27				
Light Gray LIMESTONE, slightly weathered, moderately fractured, some vugs Run 1: 32' - 42' Recovery: 100.0% RQD: 84.2% (Good)					
		-35			
	507.27	-40			

The Unconfined Compressive Strength (UCS) Failure Mode is indicated by (B-Bulge, S-Shear, P-Penetrometer)
The SPT (N value) is the sum of the last two blow values in each sampling zone (AASHTO T206)

BBS, form 137 (Rev. 8-99)

Illinois Department of Transportation
Division of Highways
GSG Consultants, Inc.

SOIL BORING LOG

Page 2 of 2

Date 4/12/22

ROUTE I-80 DESCRIPTION I-80 WB over IL 53/US 52 (Chicago Street) LOGGED BY DD

SECTION I-80 over Des Plaines River LOCATION , SEC. 16, TWP. 35 N, RNG. 10 E,

COUNTY Will DRILLING RIG Latitude Longitude B-57 Mobile

DRILLING METHOD HSA HAMMER TYPE Auto

HAMMER EFF (%) 89

STRUCT. NO. 099-8310
Station

BORING NO. BSB-53
Station 705+82.9618
Offset 91.16ft LT
Ground Surface Elev. 547.27 ft

Surface Water Elev. N/A ft
Stream Bed Elev. N/A ft

Groundwater Elev.:
First Encounter 546.3 ft ▼
Upon Completion N/A ft
After ___ Hrs. N/A ft

Description	Elev.	DEPTH (ft)	BLOWS (/6")	UCS Qu (tsf)	MOIST (%)
Light Gray LIMESTONE, slightly weathered, highly fractured, some vugs					
	505.27				
Light Gray LIMESTONE, slightly weathered, moderately fractured Run 2: 42' - 47' Recovery: 95.0% RQD: 76.7% (Good)					
		-45			
	500.27				
End of Boring					
		-50			
		-55			
		-60			

The Unconfined Compressive Strength (UCS) Failure Mode is indicated by (B-Bulge, S-Shear, P-Penetrometer)
The SPT (N value) is the sum of the last two blow values in each sampling zone (AASHTO T206)

BBS, form 137 (Rev. 8-99)

Chicago Street Bridge
Boring Number: BSB-53
Will County, IL

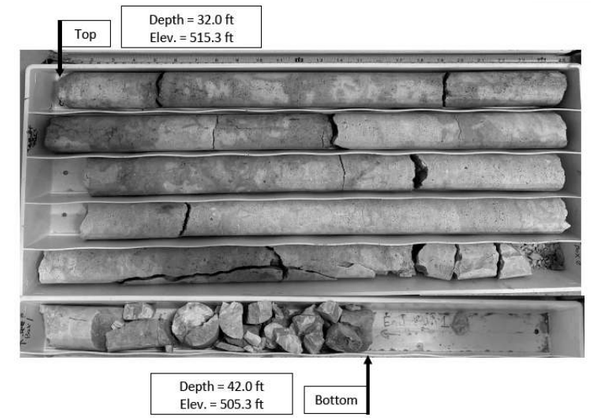

Boring No.	Run	Depth (ft)	Recovery (%)	RQD (%)	RQD Classification	Compressive Strength (psi)	Description
BSB-53	1	32.0' – 42.0'	100.0	84.2	Good	16,071	Light Gray Limestone Slightly Weathered, Moderately Fractured, Some Vugs, Highly Fractured from 40 to 42 feet

MODEL: Default
FILE NAME: 099831O-62F94-043-BOR1.dgn

BURNS McDONNELL

USER NAME =	DESIGNED - ECK	REVISED -	
	CHECKED - GEK	REVISED -	
PLOT SCALE =	DRAWN - ECK	REVISED -	
PLOT DATE =	CHECKED - IS	REVISED -	

STATE OF ILLINOIS
DEPARTMENT OF TRANSPORTATION

SOIL BORING LOGS I
STRUCTURE NO. 099-8310

SHEET SB-43 OF SB-53 SHEETS

F.A.I. RTE.	SECTION	COUNTY	TOTAL SHEETS	SHEET NO.
80	2017-057F	WILL	1342	819
		CONTRACT NO. 62F94		
	ILLINOIS	FED. AID PROJECT		

10/27/2025 5:00:27 PM

Chicago Street Bridge
Boring Number: BSB-53
Will County, IL

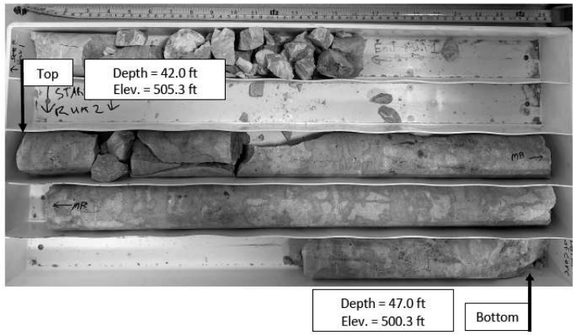

Boring No.	Run	Depth (ft)	Recovery (%)	RQD (%)	RQD Classification	Description
BSB-53	2	42.0' – 47.0'	95.0	76.7	Good	Light Gray Limestone Slightly Weathered, Moderately Fractured, Some Vugs

Illinois Department of Transportation
Division of Highways
GSG Consultants, Inc.

SOIL BORING LOG

Page 1 of 2
Date 4/7/22

ROUTE I-80 DESCRIPTION I-80 WB over IL 53/US 52 (Chicago Street) LOGGED BY DD
SECTION I-80 over Des Plaines River LOCATION , SEC. 16, TWP. 35 N, RNG. 10 E,
COUNTY Will DRILLING RIG Diedrich D-50 Latitude Longitude HAMMER TYPE Auto
DRILLING METHOD HSA HAMMER EFF (%) 98

STRUCT. NO. 099-8310
Station
BORING NO. BSD-54
Station 706+61.3187
Offset 82.00ft LT
Ground Surface Elev. 570.21 ft

Surface Water Elev. N/A ft
Stream Bed Elev. N/A ft
Groundwater Elev.:
First Encounter 516.7 ft ▼
Upon Completion N/A ft
After ___ Hrs. N/A ft

Description	Elev.	DEPTH (ft)	BLOWS (/6")	UCS Qu (tsf)	MOIST (%)
16 inches of Asphalt	568.88				
Brown and Gray, Moist FILL: SILTY CLAY, trace sand, trace gravel			11		
			5 7	3.1 B	11
			3		
		-5	5 7	3.1 B	16
			3		
			4 4	2.3 B	21
			2		
		-10	2 6	3.1 B	22
			2		
			2 4	1.7 B	25
			2		
		-15	5 5	2.5 B	17
			4		
			6 10	4.8 B	19
			2		
		-20	4 6	2.3 B	18
Brown and Gray, Moist FILL: SILTY CLAY, trace sand, trace gravel *(continued)* Trace organics at 21 feet			3		
			5 5	1.7 B	21
			3		
		-25	6 9	1.7 B	21
	544.21				
Very Stiff Brown and Gray, Moist SILTY CLAY, trace sand and gravel (CL/ML) Sand seam at 26 feet			5		
			5 8	2.1 B	17
			3		
		-30	7 9	3.3 B	21
	538.21				
Stiff Gray, Moist SILTY CLAY, trace sand and gravel (CL/ML)			4		
		-35	6 10	1.7 B	13
	533.21				
Medium Dense to Dense Light Brown, Dry to Moist SAND, fine to medium grained, with limestone fragments, some silt (SP)			21		
		-40	24 14		4

The Unconfined Compressive Strength (UCS) Failure Mode is indicated by (B-Bulge, S-Shear, P-Penetrometer)
The SPT (N value) is the sum of the last two blow values in each sampling zone (AASHTO T206)

BBS, form 137 (Rev. 8-99)

Illinois Department of Transportation
Division of Highways
GSG Consultants, Inc.

SOIL BORING LOG

Page 2 of 2
Date 4/7/22

ROUTE I-80 DESCRIPTION I-80 WB over IL 53/US 52 (Chicago Street) LOGGED BY DD
SECTION I-80 over Des Plaines River LOCATION , SEC. 16, TWP. 35 N, RNG. 10 E,
COUNTY Will DRILLING RIG Diedrich D-50 Latitude Longitude HAMMER TYPE Auto
DRILLING METHOD HSA HAMMER EFF (%) 98

STRUCT. NO. 099-8310
Station
BORING NO. BSB-54
Station 706+61.3187
Offset 82.00ft LT
Ground Surface Elev. 570.21 ft

Surface Water Elev. N/A ft
Stream Bed Elev. N/A ft
Groundwater Elev.:
First Encounter 516.7 ft ▼
Upon Completion N/A ft
After ___ Hrs. N/A ft

Description	Elev.	DEPTH (ft)	BLOWS (/6")	UCS Qu (tsf)	MOIST (%)
Medium Dense to Dense Light Brown, Dry to Moist SAND, fine to medium grained, with limestone fragments, some silt (SP) *(continued)*					
			21		
			17 13		5
		-45			
			14		
			15 16		7
		-50			
		▼	12		
			12 9		9
		-55			
	514.21				
Auger refusal at 56 feet End of Boring					
		-60			

The Unconfined Compressive Strength (UCS) Failure Mode is indicated by (B-Bulge, S-Shear, P-Penetrometer)
The SPT (N value) is the sum of the last two blow values in each sampling zone (AASHTO T206)

BBS, form 137 (Rev. 8-99)

MODEL: Default
FILE NAME: 0998310-62F94-044-BOR2.dgn

BURNS McDONNELL	USER NAME =	DESIGNED - ECK	REVISED -	STATE OF ILLINOIS DEPARTMENT OF TRANSPORTATION	SOIL BORING LOGS II STRUCTURE NO. 099-8310	F.A.I. RTE.	SECTION	COUNTY	TOTAL SHEETS	SHEET NO.
		CHECKED - GEK	REVISED -			80	2017-057F	WILL	1342	820
	PLOT SCALE =	DRAWN - ECK	REVISED -					CONTRACT NO. 62F94		
	PLOT DATE =	CHECKED - IS	REVISED -		SHEET SB-44 OF SB-53 SHEETS		ILLINOIS	FED. AID PROJECT		

10/27/2025 5:00:30 PM

Illinois Department of Transportation
Division of Highways
GSG Consultants, Inc.

SOIL BORING LOG

Page 1 of 2

Date 4/5/22

ROUTE I-80 DESCRIPTION I-80 WB over IL 53/US 52 (Chicago Street) LOGGED BY DD

SECTION I-80 over Des Plaines River LOCATION , SEC. 16, TWP. 35 N, RNG. 10 E,
Latitude Longitude

COUNTY Will DRILLING RIG Diedrich D-50 HAMMER TYPE Auto
DRILLING METHOD MUD ROTARY HAMMER EFF (%) 98

STRUCT. NO. 099-8310
Station

BORING NO. BSB-55
Station 707+9.3039
Offset 85.45ft LT
Ground Surface Elev. 570.68 ft

Surface Water Elev. N/A ft
Stream Bed Elev. N/A ft

Groundwater Elev.:
First Encounter Dry ft
Upon Completion N/A ft
After ___ Hrs. N/A ft

Description	Elev.	DEPTH (ft)	BLOWS (/6")	UCS Qu (tsf)	MOIST (%)
13 inches of Asphalt	569.59				
Brown, Moist to Very Moist FILL: SILTY CLAY, trace sand and gravel			5		
			6 6	3.0 P	16
			4		
			4 5	1.5 S	18
		-5			
			3		
			4 6	2.7 B	22
			5		
Cobbles at 9 feet			7 5	3.0 P	17
		-10			
			4		
			6 10	2.7 B	30
			5		
			5 9	4.2 B	27
		-15			
			5		
			4 9	3.1 B	17
			7		
			8 7	3.0 P	23
		-20			
Brown, Moist to Very Moist FILL: SILTY CLAY, trace sand and gravel *(continued)*			3		
			5 8	3.3 B	22
	547.68				
Stiff to Hard Brown, Moist SILTY CLAY, trace sand and gravel (CL/ML)			6		
			8 8	3.3 B	21
		-25			
			3		
			7 8	4.6 B	20
			5		
			6 6	1.3 P	22
		-30			
	538.68				
Very Stiff Gray, Moist SILTY CLAY, trace sand and gravel (CL/ML)			4		
			8 11	3.1 B	15
		-35			
	532.18				
Very Dense Brown and Gray, Moist SAND, with gravel (SP)			22		
		-40	50/4"		10

The Unconfined Compressive Strength (UCS) Failure Mode is indicated by (B-Bulge, S-Shear, P-Penetrometer)
The SPT (N value) is the sum of the last two blow values in each sampling zone (AASHTO T206)

BBS, form 137 (Rev. 8-99)

Illinois Department of Transportation
Division of Highways
GSG Consultants, Inc.

SOIL BORING LOG

Page 2 of 2

Date 4/5/22

ROUTE I-80 DESCRIPTION I-80 WB over IL 53/US 52 (Chicago Street) LOGGED BY DD

SECTION I-80 over Des Plaines River LOCATION , SEC. 16, TWP. 35 N, RNG. 10 E,
Latitude Longitude

COUNTY Will DRILLING RIG Diedrich D-50 HAMMER TYPE Auto
DRILLING METHOD MUD ROTARY HAMMER EFF (%) 98

STRUCT. NO. 099-8310
Station

BORING NO. BSB-55
Station 707+9.3039
Offset 85.45ft LT
Ground Surface Elev. 570.68 ft

Surface Water Elev. N/A ft
Stream Bed Elev. N/A ft

Groundwater Elev.:
First Encounter Dry ft
Upon Completion N/A ft
After ___ Hrs. N/A ft

Description	Elev.	DEPTH (ft)	BLOWS (/6")	UCS Qu (tsf)	MOIST (%)
Very Dense Brown and Gray, Moist SAND, with gravel (SP) *(continued)*					
	528.68				
Medium Dense to Dense Brown, Moist SAND, with limestone fragments (SP)			11		
			9 13		11
		-45			
			15		
			17 15		6
		-50			
	518.68				
Loose Gray, Dry GRAVEL, with sand (GP)			4		
			4 6		4
		-55			
Auger refusal at 56 feet	514.68				
Light Gray and Brown LIMESTONE, moderately weathered, highly fractured Run 1: 56' - 66' Recovery: 76.7% RQD: 59.2% (Fair)					
Light Gray and Brown LIMESTONE, moderately weathered, highly fractured Run 1: 56' - 66' Recovery: 76.7% RQD: 59.2% (Fair) *(continued)*					
		-65			
	504.68				
End of Boring					
		-70			
		-75			
		-80			

The Unconfined Compressive Strength (UCS) Failure Mode is indicated by (B-Bulge, S-Shear, P-Penetrometer)
The SPT (N value) is the sum of the last two blow values in each sampling zone (AASHTO T206)

BBS, form 137 (Rev. 8-99)

Chicago Street Bridge
Boring Number: BSB-55
Will County, IL

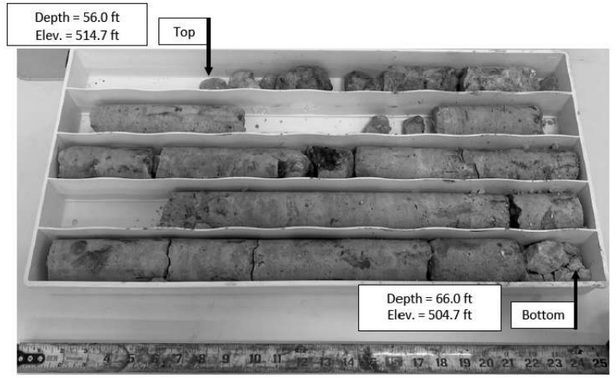

Boring No.	Run	Depth (ft)	Recovery (%)	RQD (%)	RQD Classification	Compressive Strength (psi)	Description
BSB-55	1	56.0′ – 66.0′	76.7	59.2	Fair	10,017	Light Gray and Brown Limestone Moderately Weathered, Highly Fractured, Some Vugs

MODEL: Default
FILE NAME: 0998310-62F94-045-BOR3.dgn

BURNS McDONNELL

USER NAME =	DESIGNED - ECK	REVISED -	
	CHECKED - GEK	REVISED -	
PLOT SCALE =	DRAWN - ECK	REVISED -	
PLOT DATE =	CHECKED - IS	REVISED -	

STATE OF ILLINOIS
DEPARTMENT OF TRANSPORTATION

SOIL BORING LOGS III
STRUCTURE NO. 099-8310

SHEET SB-45 OF SB-53 SHEETS

F.A.I. RTE.	SECTION	COUNTY	TOTAL SHEETS	SHEET NO.
80	2017-057F	WILL	1342	821
		CONTRACT NO. 62F94		
		ILLINOIS	FED. AID PROJECT	

10/27/2025 5:00:34 PM

Illinois Department of Transportation
Division of Highways
GSG Consultants, Inc.

SOIL BORING LOG

Page 1 of 2
Date 4/6/22

ROUTE I-80 DESCRIPTION I-80 WB over IL 53/US 52 (Chicago Street) LOGGED BY DD

SECTION I-80 over Des Plaines River LOCATION , SEC. 16, TWP. 35 N, RNG. 10 E,

COUNTY Will DRILLING RIG Diedrich D-50 Latitude Longitude
DRILLING METHOD HSA HAMMER TYPE Auto
HAMMER EFF (%) 98

STRUCT. NO. 099-8310
Station
BORING NO. BSB-56
Station 707+58.1383
Offset 88.33ft LT
Ground Surface Elev. 571.35 ft

Surface Water Elev. N/A ft
Stream Bed Elev. N/A ft
Groundwater Elev.:
First Encounter Dry ft
Upon Completion N/A ft
After ___ Hrs. N/A ft

Description	Elev.	DEPTH (ft)	BLOWS (/6")	UCS Qu (tsf)	MOIST (%)
13 inches of Asphalt	570.26				
Brown, Moist FILL: SILTY CLAY, trace sand and gravel			3 5 6	5.0 B	17
			2 5 6	5.2 B	18
		-5			
			3 8 6	4.0 B	20
Cobbles at 8.5 feet			26		
		-10	9 6	1.5 P	12
Cobbles at 11 feet			4 5 11		NR
Cobbles at 13.5 feet			15 10 9		7
		-15			
Gray, Moist FILL: SILTY CLAY, with gravel	555.35		5 6 7	0.8 B	16
Gray, Moist FILL: SILTY CLAY, trace sand and gravel	553.35		2 4 5	1.7 B	20
		-20			
Gray, Moist FILL: SILTY CLAY, trace sand and gravel *(continued)* Cobbles at 21 feet			4 5 6		19
			3 5 6	2.0 P	15
		-25			
Stiff to Hard Brown, Moist SILTY CLAY LOAM, trace sand and gravel (ML/CL)	546.85		6 6 8	4.0 S	14
			5 6 7	2.0 P	18
		-30			
Cobbles at 33.5 feet			12 9 11		15
		-35			
Limestone fragments from 38 to 42 feet			6 5 23		13
		-40			

The Unconfined Compressive Strength (UCS) Failure Mode is indicated by (B-Bulge, S-Shear, P-Penetrometer)
The SPT (N value) is the sum of the last two blow values in each sampling zone (AASHTO T206)

BBS, form 137 (Rev. 8-99)

Illinois Department of Transportation
Division of Highways
GSG Consultants, Inc.

SOIL BORING LOG

Page 2 of 2
Date 4/6/22

ROUTE I-80 DESCRIPTION I-80 WB over IL 53/US 52 (Chicago Street) LOGGED BY DD

SECTION I-80 over Des Plaines River LOCATION , SEC. 16, TWP. 35 N, RNG. 10 E,

COUNTY Will DRILLING RIG Diedrich D-50 Latitude Longitude
DRILLING METHOD HSA HAMMER TYPE Auto
HAMMER EFF (%) 98

STRUCT. NO. 099-8310
Station
BORING NO. BSB-56
Station 707+58.1383
Offset 88.33ft LT
Ground Surface Elev. 571.35 ft

Surface Water Elev. N/A ft
Stream Bed Elev. N/A ft
Groundwater Elev.:
First Encounter Dry ft
Upon Completion N/A ft
After ___ Hrs. N/A ft

Description	Elev.	DEPTH (ft)	BLOWS (/6")	UCS Qu (tsf)	MOIST (%)
Stiff to Hard Brown, Moist SILTY CLAY LOAM, trace sand and gravel (ML/CL) *(continued)*	529.35				
Medium Dense Brown, Moist SAND, with limestone fragments (SP)			14 13 11		5
		-45			
			11 11 7		7
		-50			
			9 7 6		10
		-55			
Auger refusal at 58 feet End of Boring	513.35	-60			

The Unconfined Compressive Strength (UCS) Failure Mode is indicated by (B-Bulge, S-Shear, P-Penetrometer)
The SPT (N value) is the sum of the last two blow values in each sampling zone (AASHTO T206)

BBS, form 137 (Rev. 8-99)

Illinois Department of Transportation
Division of Highways
GSG Consultants, Inc.

SOIL BORING LOG

Page 1 of 1
Date 4/6/22

ROUTE I-80 DESCRIPTION I-80 WB over IL 53/US 52 (Chicago Street) LOGGED BY EH

SECTION I-80 over Des Plaines River LOCATION , SEC. 16, TWP. 35 N, RNG. 10 E,

COUNTY Will DRILLING RIG Diedrich D-50 Latitude Longitude
DRILLING METHOD HSA HAMMER TYPE Auto
HAMMER EFF (%) 98

STRUCT. NO. 099-8310
Station
BORING NO. BSB-57
Station 705+91.5770
Offset 3.12ft LT
Ground Surface Elev. 547.56 ft

Surface Water Elev. N/A ft
Stream Bed Elev. N/A ft
Groundwater Elev.:
First Encounter Dry ft
Upon Completion N/A ft
After ___ Hrs. N/A ft

Description	Elev.	DEPTH (ft)	BLOWS (/6")	UCS Qu (tsf)	MOIST (%)
10 inches of Concrete	546.73				
Brown, Black and Gray, Moist FILL: SILTY CLAY, with gravel			3 6 9	3.5 P	17
			5 6 8	2.0 P	17
		-5			
Brown, Black and Gray, Moist to Very Moist FILL: SILTY CLAY, trace gravel, trace sand, trace organics	541.56		4 5 7	2.5 P	17
			3 4 6	3.5 P	22
		-10			
Brown, Moist FILL: SILTY CLAY, little gravel Cobbles at 12 feet	536.56		3 15 38	2.0 P	22
Brown, Moist FILL: SAND, fine to medium grained, with gravel	534.06		8 8 10		6
		-15			
Red and Brown, Moist to Wet FILL: GRAVEL, some brick fragments, with sand, some silt	531.56		10 9 12		16
			10 10 8		12
		-20			
Brown, Moist FILL: SILTY CLAY, with gravel, some sand, little brick fragments	527.06		9 7 9		7
Medium Dense to Very Dense Brown, Moist SAND, fine to medium grained, with gravel, some silt (SP) Some Clay at 23.5 feet	524.56		6 15 10		8
		-25			
			10 19 16		6
			10 22 20		7
		-30			
			50/3"		9
		-35			
Auger refusal at 38.5 feet End of Boring	509.06	-40			

The Unconfined Compressive Strength (UCS) Failure Mode is indicated by (B-Bulge, S-Shear, P-Penetrometer)
The SPT (N value) is the sum of the last two blow values in each sampling zone (AASHTO T206)

BBS, form 137 (Rev. 8-99)

MODEL: Default
FILE NAME: 0998310-62F94-046-BOR4.dgn

BURNS McDONNELL

USER NAME =	DESIGNED - ECK	REVISED -
	CHECKED - GEK	REVISED -
PLOT SCALE =	DRAWN - ECK	REVISED -
PLOT DATE =	CHECKED - IS	REVISED -

STATE OF ILLINOIS
DEPARTMENT OF TRANSPORTATION

SOIL BORING LOGS IV
STRUCTURE NO. 099-8310

SHEET SB-46 OF SB-53 SHEETS

F.A.I. RTE.	SECTION	COUNTY	TOTAL SHEETS	SHEET NO.
80	2017-057F	WILL	1342	822
		CONTRACT NO. 62F94		
	ILLINOIS	FED. AID PROJECT		

10/27/2025 5:00:37 PM

Illinois Department of Transportation
Division of Highways
GSG Consultants, Inc.

SOIL BORING LOG

Page 1 of 2

Date 4/25/22

ROUTE I-80 DESCRIPTION I-80 WB over IL 53/US 52 (Chicago Street) LOGGED BY DM

SECTION I-80 over Des Plaines River LOCATION , SEC. 16, TWP. 35 N, RNG. 10 E,

COUNTY Will DRILLING RIG CME-75 Latitude Longitude
DRILLING METHOD HSA HAMMER TYPE Auto
HAMMER EFF (%) 91

STRUCT. NO. 099-8310
Station
BORING NO. BSB-58
Station 706+66.4994
Offset 12.51ft LT
Ground Surface Elev. 570.85 ft

Surface Water Elev. N/A ft
Stream Bed Elev. N/A ft
Groundwater Elev.:
First Encounter Dry ft
Upon Completion N/A ft
After ___ Hrs. N/A ft

Description	Elev.	DEPTH (ft)	BLOWS (/6")	UCS Qu (tsf)	MOIST (%)
6 inches of Concrete	570.35				
4 inches of Asphalt	570.02				
Brown and Gray, Moist FILL: SILTY CLAY, trace sand and gravel			6		
			5 8	4.5 P	18
			3		
		-5	3 6	6.3 B	20
			3		
			4 11	2.1 B	21
			11		
		-10	5 6	2.0 P	23
			6		
			2 3	2.1 B	20
			3		
		-15	5 6	2.7 B	22
			4		
			4 7	1.7 B	16
			4		
		-20	5 6	3.5 P	18
Brown and Gray, Moist FILL: SILTY CLAY, trace sand and gravel *(continued)*			5		
			6 10	2.3 P	18
Brown, Moist FILL: SILTY CLAY LOAM, trace sand and gravel	547.85		4		
		-25	5 7	4.0 P	18
			3		
Brown and Dark Brown, Moist FILL: SILTY CLAY, trace sand and gravel	543.85		3 5	4.5 P	19
			3		
		-30	6 9	1.5 B	21
Gray, Moist FILL: SILTY CLAY LOAM, trace sand and gravel	538.85		4		
		-35	9 9	4.5 S	17
Medium Dense to Dense Brown, Dry to Moist GRAVEL, with sand (GP)	534.85		7		
		-40	7 6		5

The Unconfined Compressive Strength (UCS) Failure Mode is indicated by (B-Bulge, S-Shear, P-Penetrometer)
The SPT (N value) is the sum of the last two blow values in each sampling zone (AASHTO T206)

BBS, form 137 (Rev. 8-99)

Illinois Department of Transportation
Division of Highways
GSG Consultants, Inc.

SOIL BORING LOG

Page 2 of 2

Date 4/25/22

ROUTE I-80 DESCRIPTION I-80 WB over IL 53/US 52 (Chicago Street) LOGGED BY DM

SECTION I-80 over Des Plaines River LOCATION , SEC. 16, TWP. 35 N, RNG. 10 E,

COUNTY Will DRILLING RIG CME-75 Latitude Longitude
DRILLING METHOD HSA HAMMER TYPE Auto
HAMMER EFF (%) 91

STRUCT. NO. 099-8310
Station
BORING NO. BSB-58
Station 706+66.4994
Offset 12.51ft LT
Ground Surface Elev. 570.85 ft

Surface Water Elev. N/A ft
Stream Bed Elev. N/A ft
Groundwater Elev.:
First Encounter Dry ft
Upon Completion N/A ft
After ___ Hrs. N/A ft

Description	Elev.	DEPTH (ft)	BLOWS (/6")	UCS Qu (tsf)	MOIST (%)
Medium Dense to Dense Brown, Dry to Moist GRAVEL, with sand (GP) *(continued)* Limestone fragments from 41 to 56.5 feet					
		-45	13 22 16		3
		-50	6 18		4
		-55	23 17 16		6
Auger refusal at 56.5 feet End of Boring	514.35	-60			

The Unconfined Compressive Strength (UCS) Failure Mode is indicated by (B-Bulge, S-Shear, P-Penetrometer)
The SPT (N value) is the sum of the last two blow values in each sampling zone (AASHTO T206)

BBS, form 137 (Rev. 8-99)

Illinois Department of Transportation
Division of Highways
GSG Consultants, Inc.

SOIL BORING LOG

Page 1 of 2

Date 4/19/22

ROUTE I-80 DESCRIPTION I-80 EB over IL 53/US 52 (Chicago Street) LOGGED BY MH

SECTION I-80 over Des Plaines River LOCATION , SEC. 16, TWP. 35 N, RNG. 10 E,

COUNTY Will DRILLING RIG Diedrich D-50 Latitude Longitude
DRILLING METHOD HSA HAMMER TYPE Auto
HAMMER EFF (%) 98

STRUCT. NO. 099-8310
Station
BORING NO. BSB-59
Station 707+18.8792
Offset 6.17ft LT
Ground Surface Elev. 571.15 ft

Surface Water Elev. N/A ft
Stream Bed Elev. N/A ft
Groundwater Elev.:
First Encounter 562.7 ft ▼
Upon Completion N/A ft
After ___ Hrs. N/A ft

Description	Elev.	DEPTH (ft)	BLOWS (/6")	UCS Qu (tsf)	MOIST (%)
15 inches of Asphalt	571.15				
3 inches of Aggregate Base Course	569.90		3		
	569.65				
Brown and Gray, Moist FILL: SILTY CLAY, trace sand and gravel			3 5	2.5 P	20
			2		
		-5	2 6	3.0 P	19
Cobbles at 6 feet			12 21 18		13
		▼	3		
		-10	5 7	0.6 B	19
			3		
			4 7	1.0 P	19
			3		
Cobbles at 14 feet		-15	26 6	1.5 P	16
	555.15				
Brown and Gray, Moist FILL: SILTY CLAY, with gravel			19		
			11 14	2.5 P	21
			24		
		-20	13 20		17
Brown and Gray, Moist FILL: SILTY CLAY, with gravel *(continued)*	550.15		5		
Gray, Moist FILL: SILTY CLAY LOAM, trace sand			6 6		17
			4		
		-25	8 10		16
	545.15				
Brown and Gray, Moist FILL: SILTY CLAY LOAM, trace sand and gravel			4		
			6 7	2.0 P	16
			4		
		-30	5 11	3.5 B	20
			32		
		-35	10 10	2.0 P	17
	532.65				
Brown and Gray, Moist FILL: SAND, with gravel			16		
		-40	34 50/3"		9

The Unconfined Compressive Strength (UCS) Failure Mode is indicated by (B-Bulge, S-Shear, P-Penetrometer)
The SPT (N value) is the sum of the last two blow values in each sampling zone (AASHTO T206)

BBS, form 137 (Rev. 8-99)

MODEL: Default
FILE NAME: 0998310-62F94-047-BOR5.dgn

BURNS McDONNELL

USER NAME =	DESIGNED - ECK	REVISED -
	CHECKED - GEK	REVISED -
PLOT SCALE =	DRAWN - ECK	REVISED -
PLOT DATE =	CHECKED - IS	REVISED -

STATE OF ILLINOIS
DEPARTMENT OF TRANSPORTATION

SOIL BORING LOGS V
STRUCTURE NO. 099-8310

SHEET SB-47 OF SB-53 SHEETS

F.A.I. RTE.	SECTION	COUNTY	TOTAL SHEETS	SHEET NO.
80	2017-057F	WILL	1342	823
		CONTRACT NO. 62F94		
	ILLINOIS	FED. AID PROJECT		

10/27/2025 5:00:40 PM

Illinois Department of Transportation
Division of Highways
GSG Consultants, Inc.

SOIL BORING LOG

Date 4/19/22

ROUTE I-80 DESCRIPTION I-80 EB over IL 53/US 52 (Chicago Street) LOGGED BY MH

SECTION I-80 over Des Plaines River LOCATION , SEC. 16, TWP. 35 N, RNG. 10 E,
Latitude Longitude

COUNTY Will DRILLING RIG Diedrich D-50
DRILLING METHOD HSA HAMMER TYPE Auto
HAMMER EFF (%) 98

STRUCT. NO. 099-8310
Station

BORING NO. BSB-59
Station 707+18.8792
Offset 6.17ft LT
Ground Surface Elev. 571.15 ft

Surface Water Elev. N/A ft
Stream Bed Elev. N/A ft

Groundwater Elev.:
First Encounter 562.7 ft ▼
Upon Completion N/A ft
After ___ Hrs. N/A ft

Description	Elev.	DEPTH (ft)	BLOWS (/6")	UCS Qu (tsf)	MOIST (%)
Auger refusal at 40.5 feet End of Boring	530.65	-45 -50 -55 -60			

The Unconfined Compressive Strength (UCS) Failure Mode is indicated by (B-Bulge, S-Shear, P-Penetrometer)
The SPT (N value) is the sum of the last two blow values in each sampling zone (AASHTO T206)

BBS, form 137 (Rev. 8-99)

Illinois Department of Transportation
Division of Highways
GSG Consultants, Inc.

SOIL BORING LOG

Date 4/18/22

ROUTE I-80 DESCRIPTION I-80 EB over IL 53/US 52 (Chicago Street) LOGGED BY DD

SECTION I-80 over Des Plaines River LOCATION , SEC. 16, TWP. 35 N, RNG. 10 E,
Latitude Longitude

COUNTY Will DRILLING RIG CME-75
DRILLING METHOD HSA HAMMER TYPE Auto
HAMMER EFF (%) 91

STRUCT. NO. 099-8310
Station

BORING NO. BSB-60
Station 707+64.3590
Offset 8.70ft LT
Ground Surface Elev. 572.50 ft

Surface Water Elev. N/A ft
Stream Bed Elev. N/A ft

Groundwater Elev.:
First Encounter 518.5 ft ▼
Upon Completion N/A ft
After ___ Hrs. N/A ft

Description	Elev.	DEPTH (ft)	BLOWS (/6")	UCS Qu (tsf)	MOIST (%)
16 inches of Asphalt	571.17		4		
Brown, Moist FILL: SILTY CLAY, trace sand and gravel			4 4	1.7 B	19
			4		
		-5	3 8	4.2 B	12
			5		
Light Brown and Gray, Moist FILL: SAND AND GRAVEL	565.50	-10	13 17	2.5 B	13
			7		
			11 9		5
			10		
			50/4"		7
			14		
		-15	22 19		5
Brown, Moist FILL. SILTY CLAY, trace sand and gravel	556.50		5		
			3 4	1.7 B	22
			4		
	552.50	-20	5 6	3.1 B	19
Brown, Moist FILL: SILTY CLAY LOAM, trace sand and gravel			5		
			7 9	2.1 B	16
			3		
		-25	3 7	2.1 B	15
			5		
			4 4	3.1 B	12
			3		
		-30	4 6	2.5 B	16
			7		
		-35	10 11	5.2 B	14
Gray, Moist FILL: SILTY CLAY, trace sand and gravel	535.50		3		
Black, Very Moist	533.00 532.50	-40	33 50/2"	2.1 B	25

The Unconfined Compressive Strength (UCS) Failure Mode is indicated by (B-Bulge, S-Shear, P-Penetrometer)
The SPT (N value) is the sum of the last two blow values in each sampling zone (AASHTO T206)

BBS, form 137 (Rev. 8-99)

Illinois Department of Transportation
Division of Highways
GSG Consultants, Inc.

SOIL BORING LOG

Date 4/18/22

ROUTE I-80 DESCRIPTION I-80 EB over IL 53/US 52 (Chicago Street) LOGGED BY DD

SECTION I-80 over Des Plaines River LOCATION , SEC. 16, TWP. 35 N, RNG. 10 E,
Latitude Longitude

COUNTY Will DRILLING RIG CME-75
DRILLING METHOD HSA HAMMER TYPE Auto
HAMMER EFF (%) 91

STRUCT. NO. 099-8310
Station

BORING NO. BSB-60
Station 707+64.3590
Offset 8.70ft LT
Ground Surface Elev. 572.50 ft

Surface Water Elev. N/A ft
Stream Bed Elev. N/A ft

Groundwater Elev.:
First Encounter 518.5 ft ▼
Upon Completion N/A ft
After ___ Hrs. N/A ft

Description	Elev.	DEPTH (ft)	BLOWS (/6")	UCS Qu (tsf)	MOIST (%)
FILL: SANDY LOAM, with gravel 6 inches of Concrete	532.00				
Medium Dense Light Brown, Moist SAND, fine to medium grained, some silt, with limestone fragments (SP)					
No recovery at 43.5-45 feet		-45			
		-50	17 12 15		7
		-55	13 10 11		8
Auger refusal at 58 feet	514.50	-60			
Light Gray and Brown LIMESTONE, slightly weathered and fractured, some vugs, trace chert 66 to 68 feet Run 1: 58' - 68' Recovery: 100.0% RQD: 94.2% (Excellent) *(continued)*		-65			
Light Gray LIMESTONE, slightly weathered and fractured Run 2: 68' - 73' Recovery: 91.7% RQD: 81.7% (Good)	504.50	-70			
End of Boring	499.50	-75 -80			

The Unconfined Compressive Strength (UCS) Failure Mode is indicated by (B-Bulge, S-Shear, P-Penetrometer)
The SPT (N value) is the sum of the last two blow values in each sampling zone (AASHTO T206)

BBS, form 137 (Rev. 8-99)

MODEL: Default
FILE NAME: 0998310-62F94-048-BOR6.dgn

BURNS McDONNELL

USER NAME =	DESIGNED - ECK	REVISED -	
	CHECKED - GEK	REVISED -	
PLOT SCALE =	DRAWN - ECK	REVISED -	
PLOT DATE =	CHECKED - IS	REVISED -	

STATE OF ILLINOIS
DEPARTMENT OF TRANSPORTATION

SOIL BORING LOGS VI
STRUCTURE NO. 099-8310

SHEET SB-48 OF SB-53 SHEETS

F.A.I. RTE.	SECTION	COUNTY	TOTAL SHEETS	SHEET NO.
80	2017-057F	WILL	1342	824
		CONTRACT NO. 62F94		
		ILLINOIS	FED. AID PROJECT	

10/27/2025 5:00:43 PM

Chicago Street Bridge
Boring Number: BSB-60
Chicago, IL

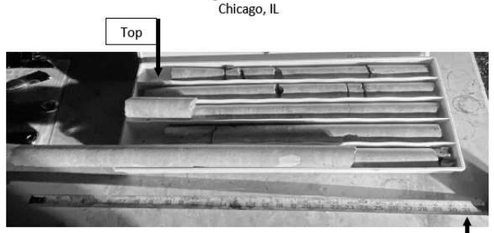

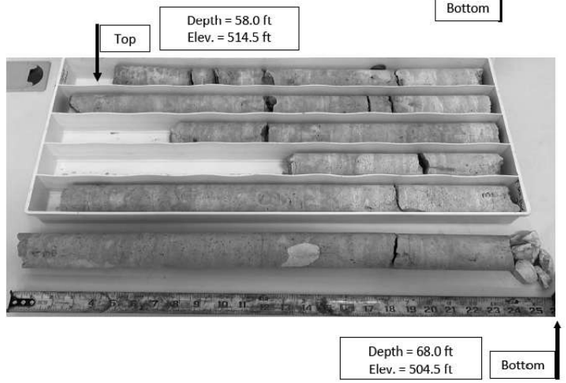

Boring No.	Run	Depth (ft)	Recovery (%)	RQD (%)	RQD Classification	Description
BSB-60	1	58.0' - 68.0'	100.0	94.2	Excellent	Light Gray and Brown Limestone Slightly Weathered and Fractured, Some Vugs, Trace Chert 66 to 68 feet

Chicago Street Bridge
Boring Number: BSB-60
Will County, IL

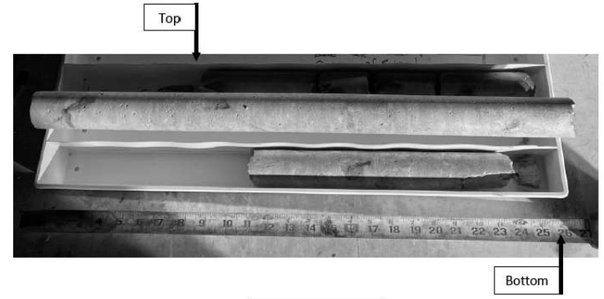

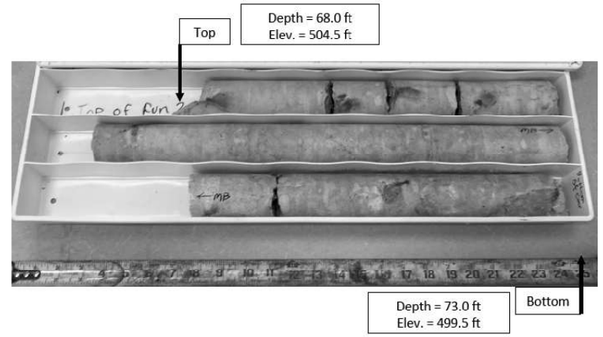

Boring No.	Run	Depth (ft)	Recovery (%)	RQD (%)	RQD Classification	Description
BSB-60	2	68.0' – 73.0'	91.7	81.7	Good	Light Gray Limestone Slightly Weathered and Fractured

Illinois Department of Transportation
Division of Highways
GSG Consultants, Inc.

SOIL BORING LOG

Page 1 of 2

Date 4/5/22

ROUTE I-80 DESCRIPTION I-80 EB over IL 53/US 52 (Chicago Street) LOGGED BY EH

SECTION I-80 over Des Plaines River LOCATION SEC. 16, TWP. 35 N, RNG. 10 E,
Latitude Longitude

COUNTY Will DRILLING RIG Diedrich D-50 HAMMER TYPE Auto
DRILLING METHOD HSA HAMMER EFF (%) 98

STRUCT. NO. 099-0310
Station

BORING NO. BSB-61
Station 706+5.9104
Offset 87.71ft RT
Ground Surface Elev. 547.86 ft

Surface Water Elev. N/A ft
Stream Bed Elev. N/A ft

Groundwater Elev.:
First Encounter Dry ft
Upon Completion N/A ft
After ___ Hrs. N/A ft

Description	Elev.	DEPTH (ft)	BLOWS (/6")	UCS Qu (tsf)	MOIST (%)
3 inches of Asphalt	547.61				
4.5 inches of CA-6 Type Aggregate	547.23				
3 inches of Concrete	546.78		3		
Gray, Moist FILL: SILTY CLAY, trace sand and gravel			3 6	2.3 B	22
	543.86		4		
Stiff to Hard Gray, Moist SILTY CLAY LOAM, little sand, trace organics (ML/CL)		-5	6 6	4.8 B	14
			4		
			6 7	3.1 B	15
			6		
		-10	5 6	1.5 P	12
			7		
			3 10	2.0 P	15
			5		
		-15	9 13	2.3 P	18
Medium Dense to Dense Light Brown, Dry to Moist SAND, fine grained, with gravel, some silt (SP)			13		
			23 24		4
			11		
		-20	17 15		4
Medium Dense to Dense Light Brown, Dry to Moist SAND, fine grained, with gravel, some silt (SP) *(continued)*			13		
			16 15		5
			12		
		-25	12 8		4
	521.86				
Dense to Very Dense Light Brown, Dry SAND, fine grained, with gravel, some silt (SP) Cobbles at 26 feet			32 50/6"		4
			12		
		-30	16 15		4
	514.36				
Medium Dense to Very Dense Brown, Moist GRAVEL, with sand, with silt (GP)			10		
		-35	11 20		12
			50/6"		
		-40			NR

The Unconfined Compressive Strength (UCS) Failure Mode is indicated by (B-Bulge, S-Shear, P-Penetrometer)
The SPT (N value) is the sum of the last two blow values in each sampling zone (AASHTO T206)

BBS, form 137 (Rev. 8-99)

MODEL: Default
FILE NAME: 0998310-62F94-049-BOR7.dgn

BURNS McDONNELL

USER NAME =	DESIGNED - ECK	REVISED -	
	CHECKED - GEK	REVISED -	
PLOT SCALE =	DRAWN - ECK	REVISED -	
PLOT DATE =	CHECKED - IS	REVISED -	

STATE OF ILLINOIS
DEPARTMENT OF TRANSPORTATION

SOIL BORING LOGS VII
STRUCTURE NO. 099-8310

SHEET SB-49 OF SB-53 SHEETS

F.A.I. RTE.	SECTION	COUNTY	TOTAL SHEETS	SHEET NO.
80	2017-057F	WILL	1342	825
		CONTRACT NO. 62F94		
		ILLINOIS FED. AID PROJECT		

10/27/2025 5:00:46 PM

Illinois Department of Transportation
Division of Highways
GSG Consultants, Inc.

SOIL BORING LOG

Date 4/5/22

ROUTE I-80 DESCRIPTION I-80 EB over IL 53/US 52 (Chicago Street) LOGGED BY EH

SECTION I-80 over Des Plaines River LOCATION , SEC. 16, TWP. 35 N, RNG. 10 E,
Latitude , Longitude

COUNTY Will DRILLING RIG Diedrich D-50 HAMMER TYPE Auto
DRILLING METHOD HSA HAMMER EFF (%) 98

STRUCT. NO. 099-8310
Station

BORING NO. BSB-61
Station 706+5.9104
Offset 87.71ft RT
Ground Surface Elev. 547.86 ft

Surface Water Elev. N/A ft
Stream Bed Elev. N/A ft

Groundwater Elev.:
First Encounter Dry ft
Upon Completion N/A ft
After ___ Hrs. N/A ft

Description	Elev.	DEPTH (ft)	BLOWS (/6")	UCS Qu (tsf)	MOIST (%)
Auger refusal at 40.5 feet	507.36				
Light Gray LIMESTONE, slightly weathered, moderately fractured, some chert Run 1: 40.5' - 48.75' Recovery: 100.0% RQD: 79.0% (Good)		-45			
	499.11				
Light Gray LIMESTONE, slightly weathered, highly to moderately fractured, some sand 48.75 to 50.25 feet, some chert Run 2: 48.75' - 56.75' Recovery: 100.0% RQD: 71.3% (Fair)		-50 -55			
	491.11				
End of Boring		-60			

The Unconfined Compressive Strength (UCS) Failure Mode is indicated by (B-Bulge, S-Shear, P-Penetrometer)
The SPT (N value) is the sum of the last two blow values in each sampling zone (AASHTO T206)

BBS, form 137 (Rev. 8-99)

Chicago Street Bridge
Boring Number: BSB-61
Will County, IL

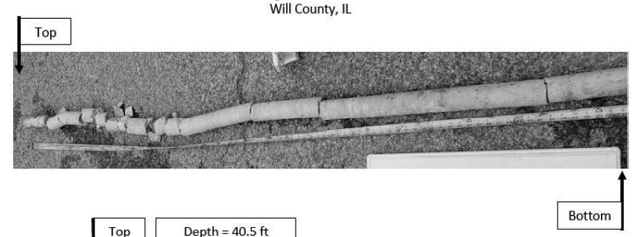

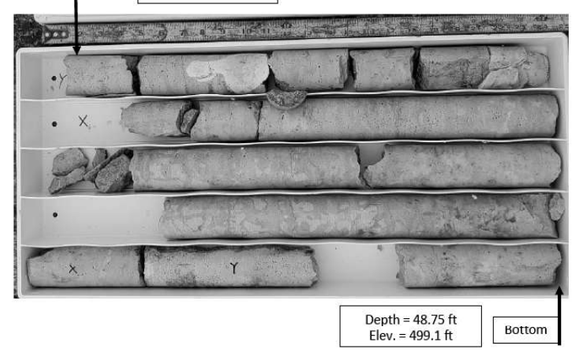

Boring No.	Run	Depth (ft)	Recovery (%)	RQD (%)	RQD Classification	Description
BSB-61	1	40.5' – 48.75'	100.0	79.0	Good	Light Gray Limestone, Slightly Weathered, Moderately Fractured, Some Chert

Chicago Street Bridge
Boring Number: BSB-61
Will County, IL

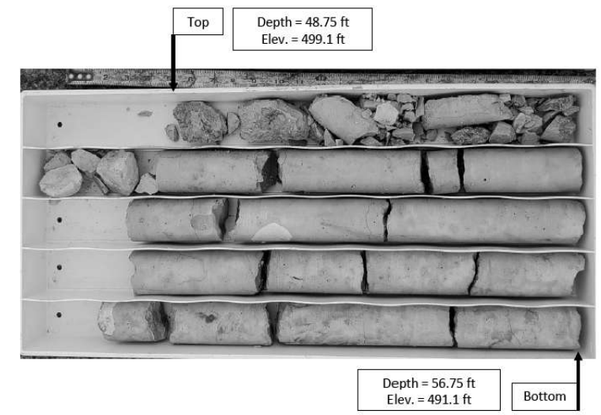

Boring No.	Run	Depth (ft)	Recovery (%)	RQD (%)	RQD Classification	Description
BSB-61	2	48.75' – 56.75'	100.0	71.3	Fair	Light Gray Limestone Slightly Weathered, Highly to Moderately Fractured, Some Sand 48.75 to 50.25 feet, Some Chert

MODEL: Default
FILE NAME: 0998310-62F94-050-BOR8.dgn

BURNS McDONNELL

USER NAME =	DESIGNED - ECK	REVISED -	
	CHECKED - GEK	REVISED -	
PLOT SCALE =	DRAWN - ECK	REVISED -	
PLOT DATE =	CHECKED - IS	REVISED -	

STATE OF ILLINOIS
DEPARTMENT OF TRANSPORTATION

SOIL BORING LOGS VIII
STRUCTURE NO. 099-8310

SHEET SB-50 OF SB-53 SHEETS

F.A.I. RTE.	SECTION	COUNTY	TOTAL SHEETS	SHEET NO.
80	2017-057F	WILL	1342	826
		CONTRACT NO. 62F94		
		ILLINOIS FED. AID PROJECT		

10/27/2025 5:00:50 PM

Illinois Department of Transportation
Division of Highways
GSG Consultants, Inc.

SOIL BORING LOG

Page 1 of 2

Date 4/16/22

ROUTE I-80 DESCRIPTION I-80 EB over IL 53/US 52 (Chicago Street) LOGGED BY MH

SECTION I-80 over Des Plaines River LOCATION , SEC. 16, TWP. 35 N, RNG. 10 E,

COUNTY Will DRILLING RIG Latitude Longitude Dicdrich D-50
DRILLING METHOD HSA HAMMER TYPE Auto
HAMMER EFF (%) 98

STRUCT. NO. 099-8310
Station
BORING NO. BSB-62
Station 706+79.3245
Offset 78.20ft RT
Ground Surface Elev. 570.68 ft

Surface Water Elev. N/A ft
Stream Bed Elev. N/A ft
Groundwater Elev.:
First Encounter Dry ft
Upon Completion N/A ft
After ___ Hrs. N/A ft

Description	Elev.	DEPTH (ft)	BLOWS (/6")	UCS Qu (tsf)	MOIST (%)
12 inches of Asphalt 2 inches of Aggregate Base Course	569.68 569.51				
Brown, Gray and Black, Moist FILL: SILTY CLAY, with sand and gravel	567.68		4 2 3	8	
Brown and Gray, Moist to Very Moist FILL: SILTY CLAY, trace sand and gravel		-5	2 2 2	1.3 P	25
			5 14 26	4.5 P	17
		-10	2 3 4	2.3 P	20
		-15	2 3 5	2.0 P	15
			3 4 7	1.3 P	21
		-20	3 4 5	2.1 B	15
			4 5 11	4.5 P	13
Brown and Gray, Moist to Very Moist FILL: SILTY CLAY, trace sand and gravel *(continued)*			6 3 5	2.7 B	16
		-25	4 5 6	2.0 P	17
	545.18				
Loose to Dense Brown, Moist SILTY CLAY LOAM, trace sand and gravel (ML/CL)			4 5 5		19
			3 7 19		18
Limestone fragments at 29.5 feet		-30			
Cobbles at 33.5 feet			11 15 21		20
		-35			
	531.68		8		
		-40	6 6		13

The Unconfined Compressive Strength (UCS) Failure Mode is indicated by (B-Bulge, S-Shear, P-Penetrometer)
The SPT (N value) is the sum of the last two blow values in each sampling zone (AASHTO T206)

BBS, form 137 (Rev. 8-99)

Illinois Department of Transportation
Division of Highways
GSG Consultants, Inc.

SOIL BORING LOG

Page 2 of 2

Date 4/16/22

ROUTE I-80 DESCRIPTION I-80 EB over IL 53/US 52 (Chicago Street) LOGGED BY MH

SECTION I-80 over Des Plaines River LOCATION , SEC. 16, TWP. 35 N, RNG. 10 E,

COUNTY Will DRILLING RIG Latitude Longitude Dicdrich D-50
DRILLING METHOD HSA HAMMER TYPE Auto
HAMMER EFF (%) 98

STRUCT. NO. 099-8310
Station
BORING NO. BSB-62
Station 706+79.3245
Offset 78.20ft RT
Ground Surface Elev. 570.68 ft

Surface Water Elev. N/A ft
Stream Bed Elev. N/A ft
Groundwater Elev.:
First Encounter Dry ft
Upon Completion N/A ft
After ___ Hrs. N/A ft

Description	Elev.	DEPTH (ft)	BLOWS (/6")	UCS Qu (tsf)	MOIST (%)
Medium Dense Gray, Moist SILTY CLAY LOAM, trace sand and gravel (ML/CL) *(continued)*	527.18				
Medium Dense to Dense Light Brown, Moist to Wet SAND, with limestone fragments (SP)			4 16 17		6
		-45	13		
			9 12		5
		-50	12		
			10 14		16
		-55	13		
	512.18				
Split spoon refusal at 58.5 feet End of Boring		-60	50/0.5"		

The Unconfined Compressive Strength (UCS) Failure Mode is indicated by (B-Bulge, S-Shear, P-Penetrometer)
The SPT (N value) is the sum of the last two blow values in each sampling zone (AASHTO T206)

BBS, form 137 (Rev. 8-99)

Illinois Department of Transportation
Division of Highways
GSG Consultants, Inc.

SOIL BORING LOG

Page 1 of 2

Date 4/19/22

ROUTE I-80 DESCRIPTION I-80 EB over IL 53/US 52 (Chicago Street) LOGGED BY DD

SECTION I-80 over Des Plaines River LOCATION , SEC. 16, TWP. 35 N, RNG. 10 E,

COUNTY Will DRILLING RIG Latitude Longitude CME-75
DRILLING METHOD HSA HAMMER TYPE Auto
HAMMER EFF (%) 91

STRUCT. NO. 099-8310
Station
BORING NO. BSB-63
Station 707+32.8082
Offset 77.91ft RT
Ground Surface Elev. 571.66 ft

Surface Water Elev. N/A ft
Stream Bed Elev. N/A ft
Groundwater Elev.:
First Encounter Dry ft
Upon Completion N/A ft
After ___ Hrs. N/A ft

Description	Elev.	DEPTH (ft)	BLOWS (/6")	UCS Qu (tsf)	MOIST (%)
16 inches of Asphalt	570.33		4		
Brown, Moist FILL: SILTY CLAY, trace sand and gravel			3 4	2.1 B	15
	547.66		3		
Gray, Black and Brown, Moist FILL: SILTY CLAY, trace sand and gravel *(continued)*			2		
			3 4	1.7 B	22
		-5	3 5	4.0 B	16
Very Stiff to Hard Gray, Brown and Black, Moist SILTY CLAY LOAM, trace sand and gravel (ML/CL)			5 7	5.2 B	18
		-25			
			11 4		
Gravel seam at 6.5 feet			7 3	2.3 P	14
	563.16				
Light Brown and Gray, Moist FILL: SAND, trace gravel			11 9		14
		-10	10		
	560.66				
Brown, Moist FILL: SILTY CLAY LOAM, trace sand and gravel			3 3 4	1.9 B	19
	557.66				
Gray, Black and Brown, Moist FILL: SILTY CLAY, trace sand and gravel			3 3	1.0 B	18
		-15			
			3 4 5	1.0 B	18
			3		
		-20	4 5	2.7 B	22
	543.16				
Very Stiff Brown, Moist SILTY CLAY, trace sand and gravel (CL/ML)			4 6 6	3.1 B	21
		-30			
	539.66				
Very Stiff Dark Gray and Brown, Moist SILTY CLAY LOAM, trace sand and gravel (ML/CL)			5		
		-35	8 12	3.1 B	17
			4		
		-40	8 11	2.0 P	17

The Unconfined Compressive Strength (UCS) Failure Mode is indicated by (B-Bulge, S-Shear, P-Penetrometer)
The SPT (N value) is the sum of the last two blow values in each sampling zone (AASHTO T206)

BBS, form 137 (Rev. 8-99)

MODEL: Default
FILE NAME: 0998310-62F94-051-BOR9.dgn

BURNS McDONNELL

USER NAME =	DESIGNED - ECK	REVISED -	
	CHECKED - GEK	REVISED -	
PLOT SCALE =	DRAWN - ECK	REVISED -	
PLOT DATE =	CHECKED - IS	REVISED -	

STATE OF ILLINOIS
DEPARTMENT OF TRANSPORTATION

SOIL BORING LOGS IX
STRUCTURE NO. 099-8310

SHEET SB-51 OF SB-53 SHEETS

F.A.I. RTE.	SECTION	COUNTY	TOTAL SHEETS	SHEET NO.
80	2017-057F	WILL	1342	827
		CONTRACT NO. 62F94		
		ILLINOIS FED. AID PROJECT		

10/27/2025 5:00:54 PM

Illinois Department of Transportation
Division of Highways
GSG Consultants, Inc.

SOIL BORING LOG

Page 2 of 2

Date 4/19/22

ROUTE I-80 DESCRIPTION I-80 EB over IL 53/US 52 (Chicago Street) LOGGED BY DD

SECTION I-80 over Des Plaines River LOCATION , SEC. 16, TWP. 35 N, RNG. 10 E,
Latitude , Longitude

COUNTY Will DRILLING RIG CME-75 HAMMER TYPE Auto
DRILLING METHOD HSA HAMMER EFF (%) 91

STRUCT. NO. 099-8310
Station
BORING NO. BSB-63
Station 707+32.8082
Offset 77.91ft RT
Ground Surface Elev. 571.66 ft

Surface Water Elev. N/A ft
Stream Bed Elev. N/A ft
Groundwater Elev.:
First Encounter Dry ft
Upon Completion N/A ft
After ___ Hrs. N/A ft

Description	DEPTH (ft)	BLOWS (/6")	UCS Qu (tsf)	MOIST (%)
530.66				
Medium Dense Light Brown, Dry to Moist SAND, fine grained, with limestone fragments, some silt (SP)		13 12 6		5
	-45			
513.66				
Auger refusal at 58 feet	-60			

Description	DEPTH (ft)	BLOWS (/6")	UCS Qu (tsf)	MOIST (%)
Light Gray LIMESTONE, moderately fractured, slightly weathered, vertical clay seam at 63.5 feet, some vugs, trace chert at 66.5 feet Run 1: 58' - 68' Recovery: 100.0% RQD: 78.3% (Good) *(continued)*				
	-65			
503.66				
Light Gray LIMESTONE, slightly weathered, moderately fractured, vertical fractures and trace sand at 68 to 70 feet, some vugs Run 2: 68' - 73' Recovery: 100.0% RQD: 79.2% (Good)		14 16 13		4
	-70			
498.66				
End of Boring		5 10 17		7
	-75			
	-80			

The Unconfined Compressive Strength (UCS) Failure Mode is indicated by (B-Bulge, S-Shear, P-Penetrometer)
The SPT (N value) is the sum of the last two blow values in each sampling zone (AASHTO T206)

BBS, form 137 (Rev. 8-99)

Chicago Street Bridge
Boring Number: BSB-63
Will County, IL

Boring No.	Run	Depth (ft)	Recovery (%)	RQD (%)	RQD Classification	Description
BSB-63	1	58.0' – 68.0'	100.0	78.3	Good	Light Gray Limestone, Moderately Fractured, Slightly Weathered, Vertical Clay seam at 63.5 feet, Some Vugs, Trace Chert at 66.5 feet

Chicago Street Bridge
Boring Number: BSB-63
Will County, IL

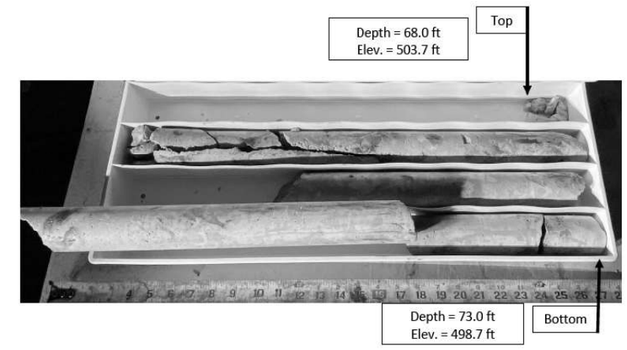

Boring No.	Run	Depth (ft)	Recovery (%)	RQD (%)	RQD Classification	Description
BSB-63	2	68.0' – 73.0'	100.0	79.2	Good	Light Gray Limestone Slightly Weathered, Moderately Fractured, Vertical Fractures and Trace Sand at 68 to 70 feet, Some Vugs

MODEL: Default
FILE NAME: 0998310-62F94-052-BOR10.dgn

BURNS McDONNELL

USER NAME =	DESIGNED - ECK	REVISED -
	CHECKED - GEK	REVISED -
PLOT SCALE =	DRAWN - ECK	REVISED -
PLOT DATE =	CHECKED - IS	REVISED -

STATE OF ILLINOIS
DEPARTMENT OF TRANSPORTATION

SOIL BORING LOGS X
STRUCTURE NO. 099-8310

SHEET SB-52 OF SB-53 SHEETS

F.A.I. RTE.	SECTION	COUNTY	TOTAL SHEETS	SHEET NO.
80	2017-057F	WILL	1342	828

CONTRACT NO. 62F94

ILLINOIS FED. AID PROJECT

10/27/2025 5:00:56 PM

Illinois Department of Transportation
Division of Highways
GSG Consultants, Inc.

SOIL BORING LOG

Date 4/20/22

ROUTE I-80 DESCRIPTION I-80 EB over IL 53/US 52 (Chicago Street) LOGGED BY MH

SECTION I-80 over Des Plaines River LOCATION , SEC. 16, TWP. 35 N, RNG. 10 E,
Latitude Longitude

COUNTY Will DRILLING RIG Diedrich D-50 HAMMER TYPE Auto
DRILLING METHOD HSA HAMMER EFF (%) 98

STRUCT. NO. 099-8310
Station

BORING NO. BSB-64
Station 707+75.0249
Offset 80.22ft RT
Ground Surface Elev. 572.10 ft

Surface Water Elev. N/A ft
Stream Bed Elev. N/A ft

Groundwater Elev.:
First Encounter 558.6 ft ▼
Upon Completion N/A ft
After ___ Hrs. N/A ft

Description	Elev.	DEPTH (ft)	BLOWS (/6")	UCS Qu (tsf)	MOIST (%)
12 inches of Asphalt 2 inches of Aggregate Base Course	571.10 ~~570.93~~				
Brown and Gray, Dry to Moist FILL: SAND AND GRAVEL, with clay			7 4 5		3
			4		
		-5	3 4		10
			3		
			8 15		7
Cobbles at 8.5 feet			4		
		-10	7 7		
	561.10				
Brown and Gray, Moist FILL: SILTY CLAY, with sand, trace gravel			9 10 7	3.0 P	17
			44		
		-15	8 8	3.8 P	22
	556.10				
Dark Gray, Moist to Very Moist FILL: SILTY CLAY, with gravel, trace sand and cobbles			24 29 8	2.0 P	26
			6		
		-20	6 8		24
Dark Gray, Moist to Very Moist FILL: SILTY CLAY, with gravel, trace sand and cobbles *(continued)*			19		
Gravel seam at 21 feet			13 7		7
			5		
	547.60		4	2.0	20
Very Stiff Brown and Gray, Moist SILTY CLAY, trace sand and gravel (CL/ML)		-25	5	P	
	546.10		7		
Stiff Gray, Dry to Moist SILTY CLAY, trace sand and gravel (CL/ML)			9 8		23
No sample at 28.5 to 30 feet - boring re-drilled starting at 33.5 feet		-30			
Cobbles at 33.5 feet			7		
		-35	3 3		9
			9		
		-40	4 50/3"	1.7 B	23

The Unconfined Compressive Strength (UCS) Failure Mode is indicated by (B-Bulge, S-Shear, P-Penetrometer)
The SPT (N value) is the sum of the last two blow values in each sampling zone (AASHTO T206)

BBS, form 137 (Rev. 8-99)

Illinois Department of Transportation
Division of Highways
GSG Consultants, Inc.

SOIL BORING LOG

Date 4/20/22

ROUTE I-80 DESCRIPTION I-80 EB over IL 53/US 52 (Chicago Street) LOGGED BY MH

SECTION I-80 over Des Plaines River LOCATION , SEC. 16, TWP. 35 N, RNG. 10 E,
Latitude Longitude

COUNTY Will DRILLING RIG Diedrich D-50 HAMMER TYPE Auto
DRILLING METHOD HSA HAMMER EFF (%) 98

STRUCT. NO. 099-8310
Station

BORING NO. BSB-64
Station 707+75.0249
Offset 80.22ft RT
Ground Surface Elev. 572.10 ft

Surface Water Elev. N/A ft
Stream Bed Elev. N/A ft

Groundwater Elev.:
First Encounter 558.6 ft ▼
Upon Completion N/A ft
After ___ Hrs. N/A ft

Description	Elev.	DEPTH (ft)	BLOWS (/6")	UCS Qu (tsf)	MOIST (%)
Stiff Gray, Dry to Moist SILTY CLAY, trace sand and gravel (CL/ML) *(continued)*					
Limestone cobbles at 43.5 feet			19		
		-45	18 19		2
	523.60		14		
Medium Dense to Dense Light Brown, Moist SAND, with gravel and limestone fragments (SP)		-50	14 17		8
			14		
		-55	15 7		9
	513.60				
Auger refusal at 58.5 feet End of Boring		-60			

The Unconfined Compressive Strength (UCS) Failure Mode is indicated by (B-Bulge, S-Shear, P-Penetrometer)
The SPT (N value) is the sum of the last two blow values in each sampling zone (AASHTO T206)

BBS, form 137 (Rev. 8-99)

MODEL: Default
FILE NAME: 0998310-62F94-053-BOR11.dgn

BURNS McDONNELL

USER NAME =	DESIGNED - ECK	REVISED -	
	CHECKED - GEK	REVISED -	
PLOT SCALE =	DRAWN - ECK	REVISED -	
PLOT DATE =	CHECKED - IS	REVISED -	

STATE OF ILLINOIS
DEPARTMENT OF TRANSPORTATION

SOIL BORING LOGS XI
STRUCTURE NO. 099-8310

SHEET SB-53 OF SB-53 SHEETS

F.A.I. RTE.	SECTION	COUNTY	TOTAL SHEETS	SHEET NO.
80	2017-057F	WILL	1342	829
		CONTRACT NO. 62F94		
		ILLINOIS	FED. AID PROJECT	

10/27/2025 5:01:00 PM

Benchmark: Chiseled 'X' on top of SE Bolt of Fire Hydrant at East ROW of Joliet Street and South Street. Elev. 526.795.

Existing Structure: The Chicago St bridge over Hickory Creek was originally constructed in 1962 and rehabilitated in 1992 and 2018. The structure is a multi-beam steel bridge and consists of three simple spans, composite with the deck. The span lengths are approximately ±54'-8" (Span 1), ±54'-10" (Span 2), and 53'-11" (Span 3). The total length of the bridge is approximately 167'-1" from back to back of abutments measured at the PGL, parallel to the tangent line at the intersection of PGL and centerline of Hickory Creek. The out-to-out deck width varies and ranges from approximately ±62'-6" at the south end of the bridge to ±71'-4" at the north end of the bridge, each measured along centerline of abutment. The bridge substructure units are skewed with respect to the centerline of Hickory Creek at 5°30'00" angle. The substructure consists of concrete stub abutments with wingwalls and two solid stem pier walls. Each abutment is supported on steel H-pile footings and the pier walls are supported on rectangular spread footing foundations.

Traffic Control: Traffic will be maintained utilizing staged construction.

No salvage.

DESIGN SPECIFICATIONS

2020 AASHTO LRFD Bridge Design Specifications, 9th Edition

LOADING HL-93

Allow 50#/sq. ft. for future wearing surface.

DESIGN STRESSES

FIELD UNITS

f'c = 3,500 psi
f'c = 4,000 psi (Superstructure Concrete)
fy = 60,000 psi (Reinforcement))

PRECAST PRESTRESSED UNITS

f'c = 6,000 psi
fci = 5,500 psi
fpu = 270,000 psi (½" Ø low lax strands)
fpbt = 201,960 psi (½" Ø low lax strands)

SEISMIC DATA

Seismic Performance Zone (SPZ) = 1
Design Spectral Acceleration at 1.0 sec. (SD1) = 0.095
Design Spectral Acceleration at 0.2 sec. (SDS) = 0.167
Soil Site Class = D

DESIGN SCOUR ELEVATION TABLE

Event / Limit State	Design Scour Elevations (ft.)				
	S. Abut.	Pier 1	Pier 2	N. Abut.	Item 113
Q100	526.41	512.30	511.00	530.35	8
Q200	526.41	512.30	511.00	530.35	
Design	526.41	512.30	511.00	530.35	
Check	526.41	512.30	511.00	530.35	

WATERWAY INFORMATION

Drainage Area = 109.1 Sq. Mi. Low Grade Elev. 534.25 @ Sta. 203+74.68

Flood	Freq. Yr.	Q C.F.S.	Opening Ft² Exist.	Opening Ft² Prop.	Nat. H.W.E.	Head - Ft. Exist.	Head - Ft. Prop.	Headwater El. Exist.	Headwater El. Prop.
	10	6230	656	732	518.95	1.11	0.14	520.06	519.09
Design	50	10660	867	1121	521.91	0.98	0.31	522.89	522.22
Base	100	13750	1072	1385	523.77	1.03	0.41	524.80	524.18
Scour Check	200	17120	1290	1653	525.55	1.04	0.55	526.59	526.10
Overtopping									
Max. Calc.	500	23203	1703	2163	528.71	0.77	0.81	529.48	529.52

10-Yr. velocity through existing structure = 9.5 fps
10-Yr. velocity through proposed structure = 8.2 fps
2-Yr. Flow Rate = 3710 C.F.S.

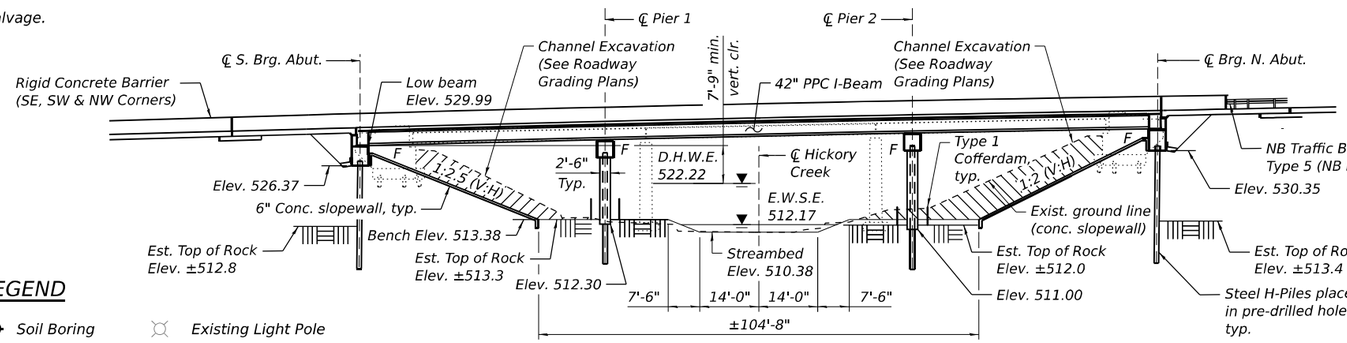

ELEVATION

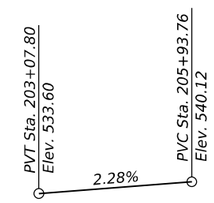

PROFILE GRADE

(Along ℄ Chicago St.)

LEGEND

- Soil Boring
- Existing Light Pole
- Electrical (Lighting)
- Telephone (AT&T)
- Fiber Optic (ITS)
- Existing Tree

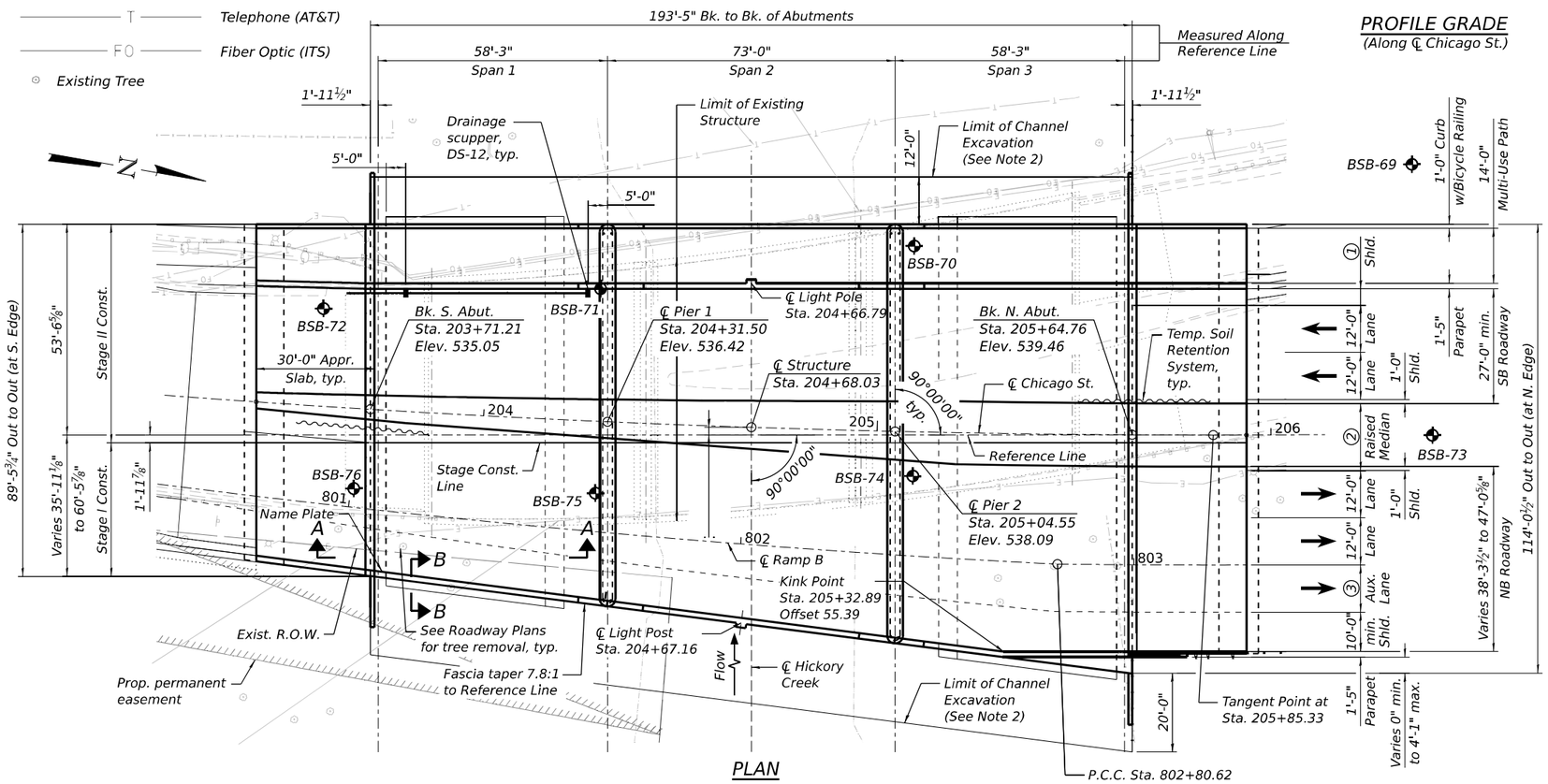

PLAN

STATE OF ILLINOIS
PATRICK J. LAUX
081-007655
CHICAGO, ILLINOIS
LICENSED STRUCTURAL ENGINEER

APPROVED
For Structural Adequacy Only
Engineer of Bridges & Structures

10/31/2025

Patrick J. Laux, P.E., S.E.
State of Illinois Lic. No. 081-007655
License Expires 11-30-2026
This stamp applies to sheets SC-1 thru SC-60

NOTES:

1. Reference Line is a Local Tangent at ℄ Chicago St. Sta. 205+85.33.
2. Scope of work for channel excavation includes the extension of the stream profile and slopewall grade line 20-ft upstream and 12-ft downstream of the bridge and then extending these contours to where they meet the existing grades. See Roadway Grading Plans.
3. See sheet SC-2 for General Notes, Index of Sheets & Total Bill of Material.
4. See sheet SC-54 for Section A-A & B-B and slopewall details.

① Varies 2'-0" to 4'-1½"

② Varies 6'-3½" to 16'-0"

③ Varies 3'-1" min. to 12'-0" max. starting at Sta. 205+45.45

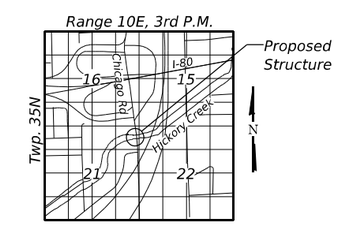

LOCATION SKETCH

GENERAL PLAN AND ELEVATION
CHICAGO STREET (IL-53, US 52)
OVER HICKORY CREEK
F.A.P. RTE. 0846 - SEC. 2017-057F
WILL COUNTY
STA. 204+68.03
STRUCTURE NO. 099-8306

MODEL: Default
FILE NAME: 0998306-62F94-S001-GPE.dgn

WSP USA Inc.
30 N. LASALLE STREET
SUITE 4200
CHICAGO, IL 60602
TEL: (312) 782-8150
FAX: (312) 782-1684

USER NAME = lauxpj	DESIGNED - FIM/MI	REVISED -	
	CHECKED - PJL	REVISED -	
PLOT SCALE = 36:0 ':" / in.	DRAWN - NBR	REVISED -	
PLOT DATE = 12/2/2025	CHECKED - PJL	REVISED -	

STATE OF ILLINOIS
DEPARTMENT OF TRANSPORTATION

GENERAL PLAN AND ELEVATION
STRUCTURE NUMBER 099-8306

SHEET SC-1 OF SC-60 SHEETS

F.A.P. RTE.	SECTION	COUNTY	TOTAL SHEETS	SHEET NO.
0846	2017-057F	WILL	1342	830
		CONTRACT NO. 62F94		
	ILLINOIS	FED. AID PROJECT		

GENERAL NOTES

1. Reinforcement bars designated (E) shall be epoxy coated.
2. Slipforming of the parapets is not allowed.
3. Layout of the slope protection system may be varied to suit ground conditions in the field as directed by the Engineer.
4. The embankment configuration shown shall be the minimum that must be placed and compacted prior to construction of the abutments.
5. The existing structural steel coating contains lead. The Contractor shall take appropriate precautions to deal with the presence of lead on this project.
6. Bridge plans Stage I and Stage II correspond to MOT Stage 3 and MOT Stage 5, respectively.

INDEX OF SHEETS

TOTAL BILL OF MATERIAL

ITEM	UNIT	SUPER	SUB	TOTAL
Removal of Existing Structures No. 5	Each	1	-	1
Slope Wall Removal	Sq Yd	-	894	894
Structure Excavation	Cu Yd	-	482	482
Cofferdam Excavation	Cu Yd	-	142	142
Rock Excavation for Structures	Cu Yd	-	19	19
Cofferdam (Type 1) (Location 1)	Each	-	1	1
Cofferdam (Type 1) (Location 2)	Each	-	1	1
Concrete Structures	Cu Yd	60.2	593.2	653.4
Concrete Superstructure	Cu Yd	839.2	-	839.2
Bridge Deck Grooving	Sq Yd	2,198	-	2,198
Protective Coat	Sq Yd	3,148	-	3,148
Concrete Superstructure (Approach Slab)	Cu Yd	261.3	-	261.3
Furnishing and Erecting Precast Prestressed Concrete I-Beams, 42 In.	Foot	2,648	-	2,648
Reinforcement Bars, Epoxy Coated	Pound	297,980	56,560	354,540
Bar Splicers	Each	1,020	150	1,170
Bicycle Railing	Foot	252	-	252
Parapet Railing	Foot	252	-	252
Slope Wall 6 Inch	Sq Yd	-	1,064	1,064
Furnishing Steel Piles HP12X63	Foot	-	630	630
Furnishing Steel Piles HP14X89	Foot	-	714	714
Drilling and Setting Piles (In Soil)	Cu Ft	-	1,343	1,343
Drilling and Setting Piles (In Rock)	Cu Ft	-	968	968
Name Plates	Each	1	-	1
Temporary Soil Retention System	Sq Ft	-	538	538
Drainage System for Structures	L Sum	1	-	1
Granular Backfill for Structures	Cu Yd	-	349	349
Geocomposite Wall Drain	Sq Yd	-	341	341
Pipe Underdrains For Structures 4"	Foot	-	256	256
Bar Terminators	Each	205	1,014	1,219
Drainage Scuppers, DS-12	Each	2	-	2

STA. 204+68.03
BUILT 20XX BY
STATE OF ILLINOIS
FAP RTE. 0846 - SEC. 2017-057F
LOADING HL-93
STR. NO. 099-8306

NAME PLATE

See Std. 515001

WSP USA Inc.
30 N. LASALLE STREET
SUITE 4200
CHICAGO, IL 60602
TEL: (312) 782-8150
FAX: (312) 782-1684

USER NAME = lauxpj	DESIGNED - KB	REVISED -	STATE OF ILLINOIS DEPARTMENT OF TRANSPORTATION
	CHECKED - PJL	REVISED -	
PLOT SCALE = 0:1.9999 ':" / in.	DRAWN - GM	REVISED -	
PLOT DATE = 12/2/2025	CHECKED - PJL	REVISED -	

GENERAL NOTES, INDEX OF SHEETS & TOTAL BILL OF MATERIAL
STRUCTURE NUMBER 099-8306

SHEET SC-2 OF SC-60 SHEETS

F.A.P. RTE.	SECTION	COUNTY	TOTAL SHEETS	SHEET NO.
0846	2017-057F	WILL	1342	831
		CONTRACT NO. 62F94		
		ILLINOIS	FED. AID PROJECT	

MODEL: Default
FILE NAME: 099830E-62F94-S002-GN01.dgn

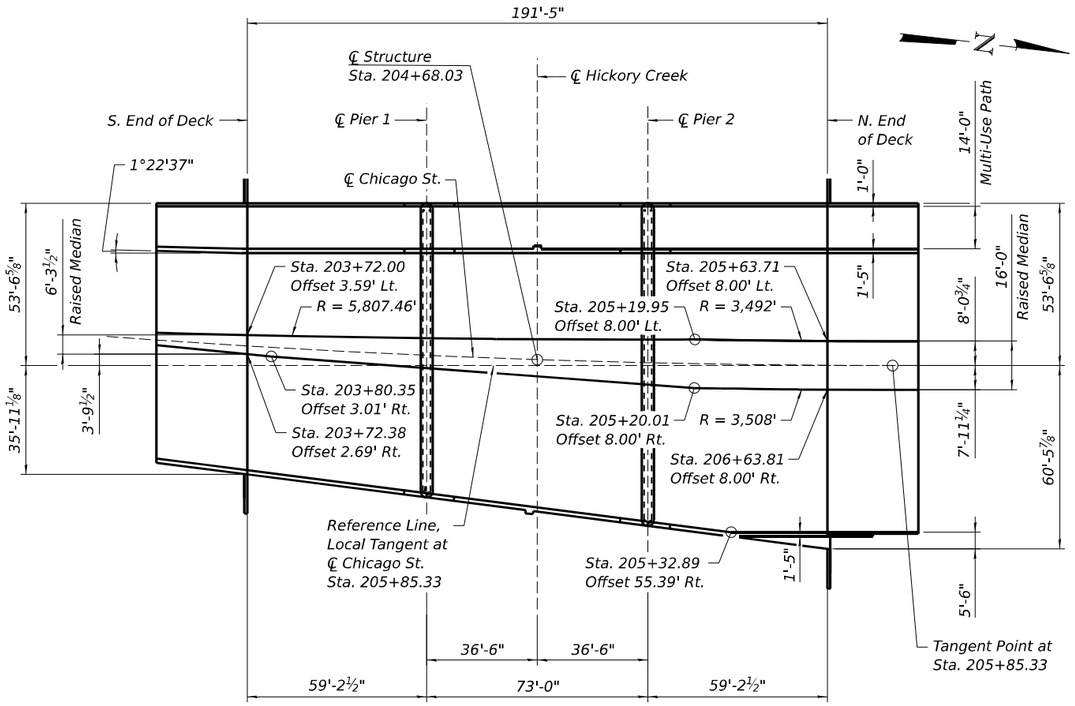

DECK & MEDIAN LAYOUT

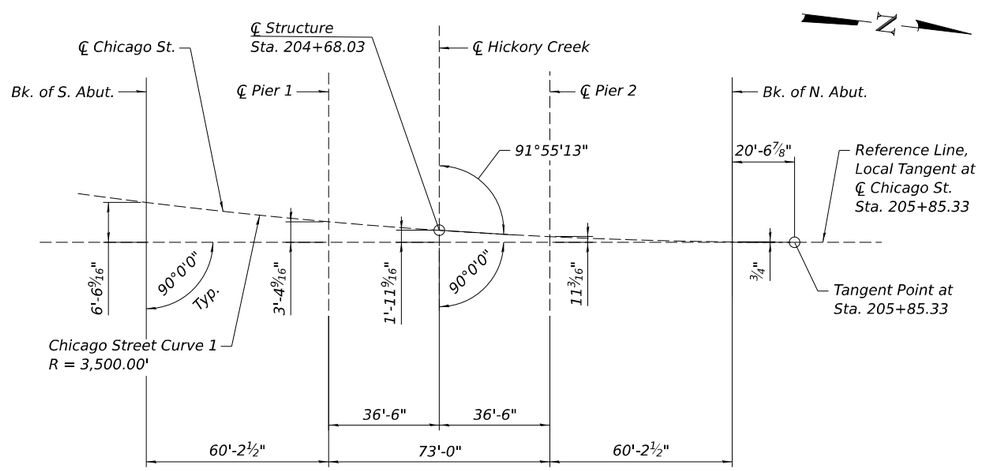

OFFSET SKETCH

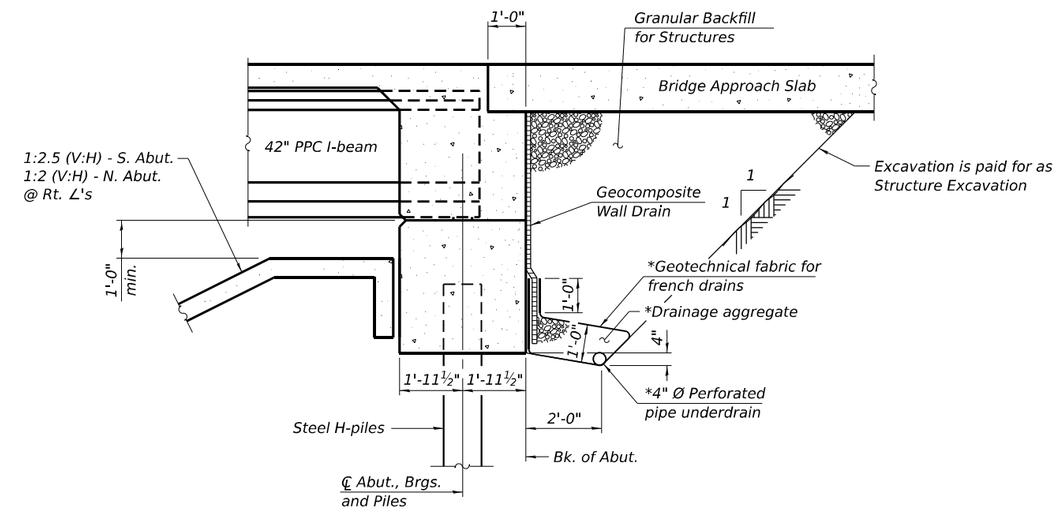

SECTION THRU INTEGRAL ABUTMENT

(Horiz. dim. at Rt. ∠'s)

* Included in the cost of Pipe Underdrains for Structures.

Note:
All drainage system components shall extend to 2'-0" from the end of each wingwall except an outlet pipe shall extend until intersecting with the side slopes.
- The South Abutment is to outlet to the west.
- The North Abutment is to outlet to the east.

The pipes shall drain into concrete headwalls. (See Article 601.05 of the Standard Specifications and Highway Standard 601101).

CURVE DATA
CHICAGO STREET CURVE 1

P.I. Sta. = 204+44.22
Δ = 05°45'56" (LT)
D = 01°38'13"
R = 3,500.00'
T = 176.25'
L = 352.20'
E = 4.43'
e = N.C.
T.R. = N/A
S.E. Run = N/A
P.C. Sta. = 202+67.98
P.T. Sta. = 206+20.17

CURVE DATA	CURVE DATA
RAMP B CURVE 1	RAMP B CURVE 2
P.I. Sta. = 801+40.41	P.I. Sta. = 803+17.98
Δ = 05°21'47" (LT)	Δ = 01°12'42" (LT)
D = 01°54'40"	D = 01°37'18"
R = 2,988.00'	R = 3,533.00'
T = 140.41'	T = 37.36'
L = 280.62'	L = 74.72'
E = 3.29'	E = 0.20'
e = 2.0%	e = 2.0%
T.R. = N/A	T.R. = N/A
S.E. Run = N/A	S.E. Run = N/A
P.C. Sta. = 800+00.00	P.C. Sta. = 802+80.62
P.T. Sta. = 802+80.62	P.T. Sta. = 803+55.34

For information only, all roadway elements are defined by the Chicago St. alignment on the bridge

MODEL: Default
FILE NAME: 0998306-62F94-S003-GN02.dgn

WSP USA Inc.
30 N. LASALLE STREET
SUITE 4200
CHICAGO, IL 60602
TEL: (312) 782-8150
FAX: (312) 782-1684

USER NAME = lauxpj	DESIGNED - FIM/MI	REVISED -	
	CHECKED - PJL	REVISED -	
PLOT SCALE = 0:1.9999 ':" / in.	DRAWN - NBR	REVISED -	
PLOT DATE = 12/2/2025	CHECKED - PJL	REVISED -	

STATE OF ILLINOIS
DEPARTMENT OF TRANSPORTATION

GENERAL DATA
STRUCTURE NUMBER 099-8306

SHEET SC-3 OF SC-60 SHEETS

F.A.P. RTE.	SECTION	COUNTY	TOTAL SHEETS	SHEET NO.
0846	2017-057F	WILL	1342	832
		CONTRACT NO. 62F94		
		ILLINOIS	FED. AID PROJECT	

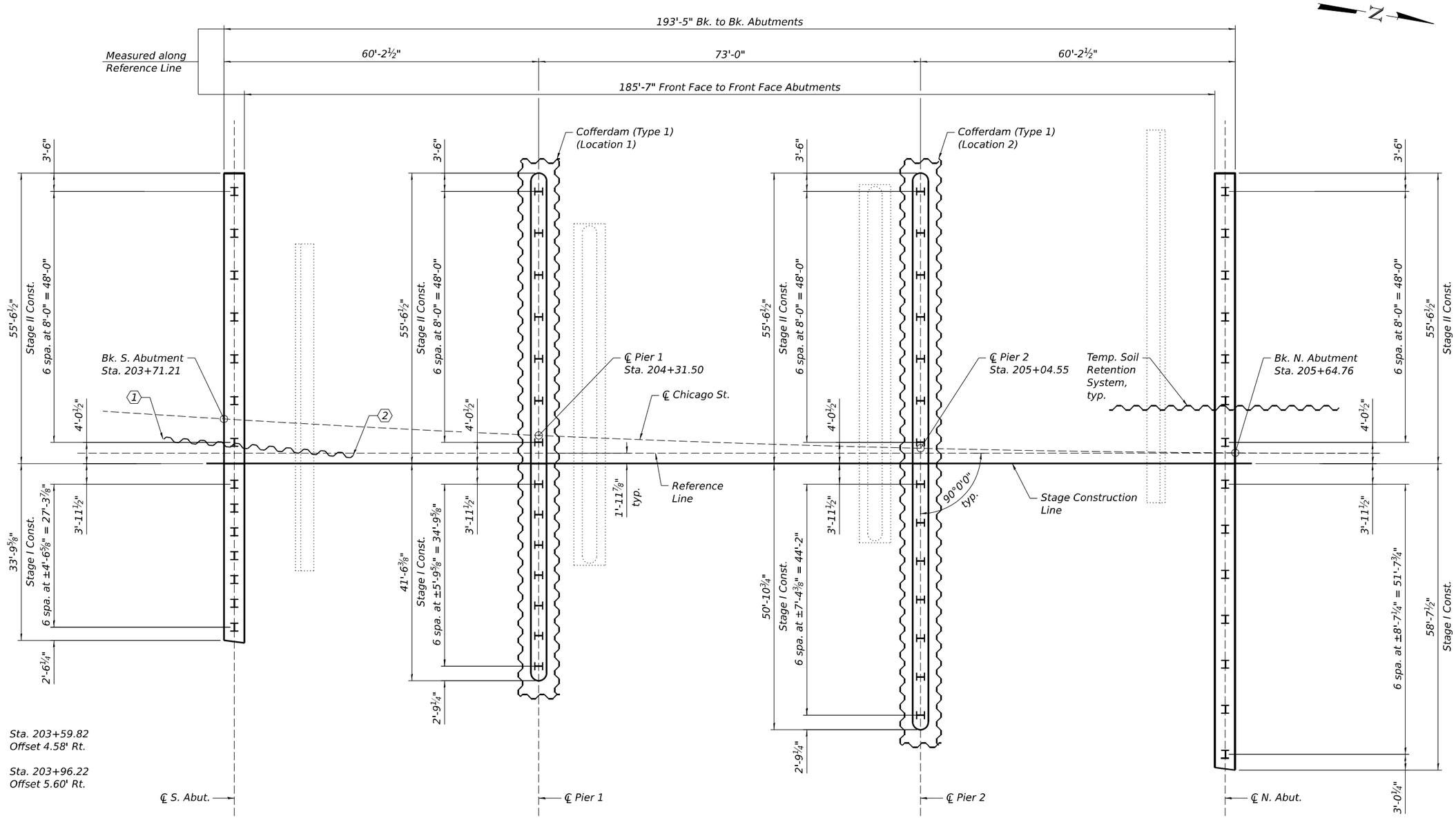

1 Sta. 203+59.82
Offset 4.58' Rt.

2 Sta. 203+96.22
Offset 5.60' Rt.

PLAN

NOTES:

1. Reference Line is a Local Tangent at ℄ Chicago St. Sta. 205+85.33.
2. See sheet SC-7 for Temporary Soil Retention System.

MODEL: Default
FILE NAME: 0998306-62F94-S004-FTG.dgn

WSP USA Inc.
30 N. LASALLE STREET
SUITE 4200
CHICAGO, IL 60602
TEL: (312) 782-8150
FAX: (312) 782-1684

USER NAME = lauxpj	DESIGNED - PJL	REVISED -	
	CHECKED - LAS	REVISED -	
PLOT SCALE = 19:11.9904 ':" / in.	DRAWN - PJL	REVISED -	
PLOT DATE = 12/2/2025	CHECKED - LAS	REVISED -	

STATE OF ILLINOIS
DEPARTMENT OF TRANSPORTATION

FOOTING LAYOUT
STRUCTURE NUMBER 099-8306

SHEET SC-4 OF SC-60 SHEETS

F.A.P. RTE.	SECTION	COUNTY	TOTAL SHEETS	SHEET NO.
0846	2017-057F	WILL	1342	833
		CONTRACT NO. 62F94		
		ILLINOIS	FED. AID PROJECT	

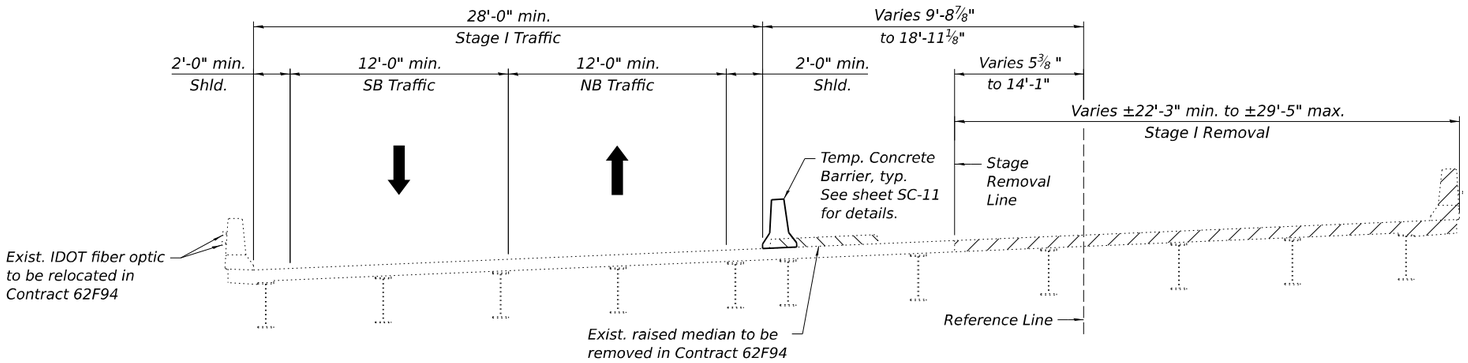

CROSS SECTION - STAGE I REMOVAL

(Looking North)

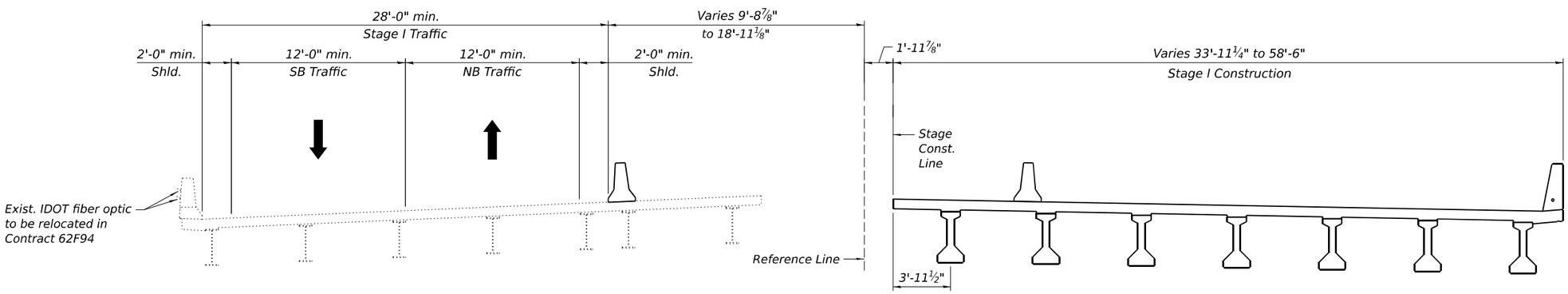

CROSS SECTION - STAGE I CONSTRUCTION

(Looking North)

LEGEND:

Removal of Existing Structures No. 5

NOTES:

1. All horizontal dimension are measured perpendicular to the Reference Line (Local Tangent Line at ℄ Chicago St. Sta. 205+85.33), unless noted otherwise.
2. Varying deck dimensions are measured at the north and south ends of deck.
3. For quantity of Temporary Concrete Barrier, see Roadway Plans.

MODEL: Default
FILE NAME: 0998306-62F94-S005-STG01.dgn

WSP USA Inc.
30 N. LASALLE STREET
SUITE 4200
CHICAGO, IL 60602
TEL: (312) 782-8150
FAX: (312) 782-1684

USER NAME = lauxpj	DESIGNED - FIM/MI	REVISED -	
	CHECKED - FIM/PJL	REVISED -	
PLOT SCALE = 0:1.9999 ':" / in.	DRAWN - NBR	REVISED -	
PLOT DATE = 12/2/2025	CHECKED - PJL	REVISED -	

STATE OF ILLINOIS
DEPARTMENT OF TRANSPORTATION

STAGE CONSTRUCTION DETAILS 1
STRUCTURE NUMBER 099-8306

SHEET SC-5 OF SC-60 SHEETS

F.A.P. RTE.	SECTION	COUNTY	TOTAL SHEETS	SHEET NO.
0846	2017-057F	WILL	1342	834
		CONTRACT NO. 62F94		
		ILLINOIS	FED. AID PROJECT	

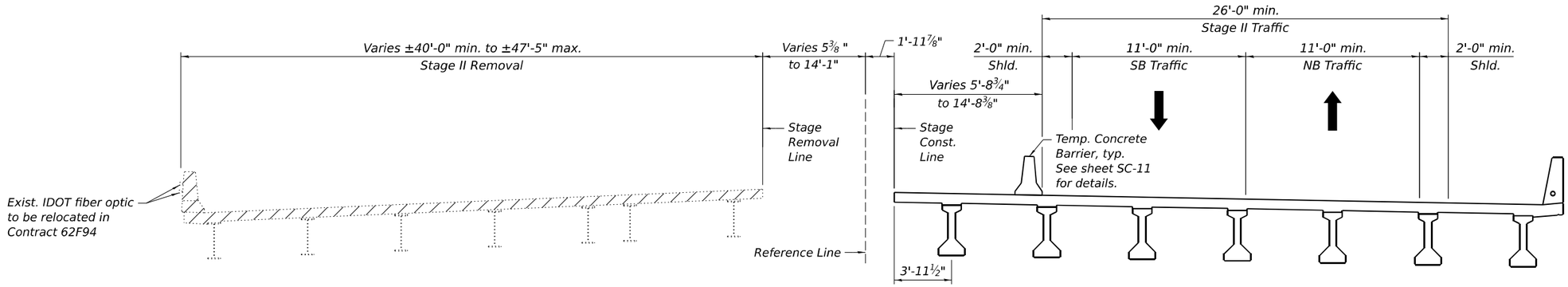

CROSS SECTION - STAGE II REMOVAL

(Looking North)

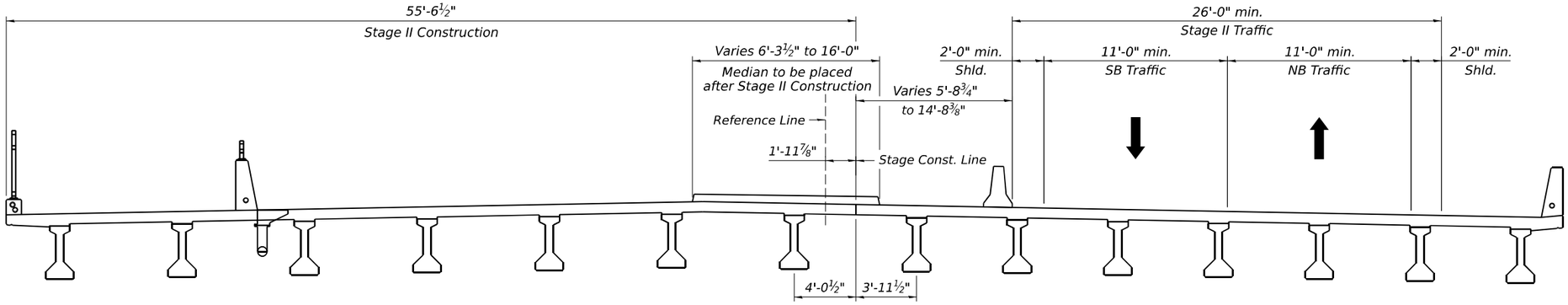

CROSS SECTION - STAGE II CONSTRUCTION

(Looking North)

LEGEND:

Removal of Existing Structures No. 5

NOTES:

1. All horizontal dimension are measured perpendicular to the Reference Line (Local Tangent Line at ℄ Chicago St. Sta. 205+85.33), unless noted otherwise.
2. Varying deck dimensions are measured at the north and south ends of deck.

MODEL: Default
FILE NAME: 0998306-62F94-S006-STG02.dgn

WSP USA Inc.
30 N. LASALLE STREET
SUITE 4200
CHICAGO, IL 60602
TEL: (312) 782-8150
FAX: (312) 782-1684

USER NAME = lauxpj	DESIGNED - FIM/MI	REVISED -	
	CHECKED - FIM/PJL	REVISED -	
PLOT SCALE = 0:1.9999 ':" / in.	DRAWN - NBR	REVISED -	
PLOT DATE = 12/2/2025	CHECKED - PJL	REVISED -	

STATE OF ILLINOIS
DEPARTMENT OF TRANSPORTATION

STAGE CONSTRUCTION DETAILS 2
STRUCTURE NUMBER 099-8306

SHEET SC-6 OF SC-60 SHEETS

F.A.P. RTE.	SECTION	COUNTY	TOTAL SHEETS	SHEET NO.
0846	2017-057F	WILL	1342	835
		CONTRACT NO. 62F94		
		ILLINOIS	FED. AID PROJECT	

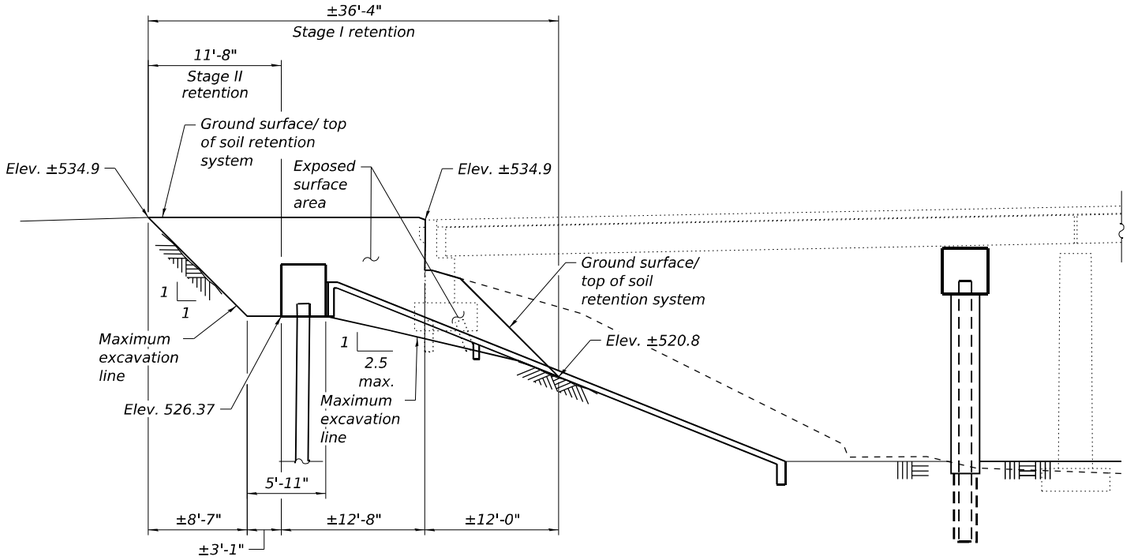

TEMPORARY SOIL RETENTION SYSTEM

(Shown projected to the Reference Line, Looking west, see sheet SC-4 for Stations and Offsets)

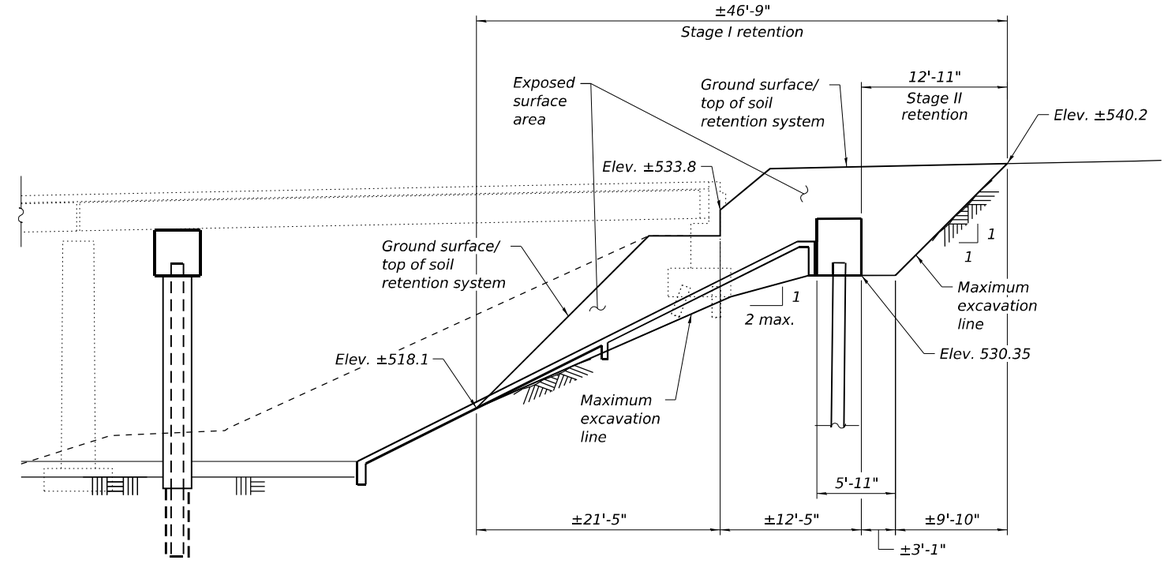

TEMPORARY SOIL RETENTION SYSTEM

(Measured along Reference Line, Offset 8.70' Lt., Looking west)

NOTE:

1. A cantilevered sheet piling design does not appear feasible and additional members or other retention systems may be necessary. The Contractor shall submit a temporary soil retention system design including plan details and calculations for review and acceptance by the Engineer.

BILL OF MATERIAL

ITEM	UNIT	TOTAL
Temporary Soil Retention System	Sq. Ft.	538

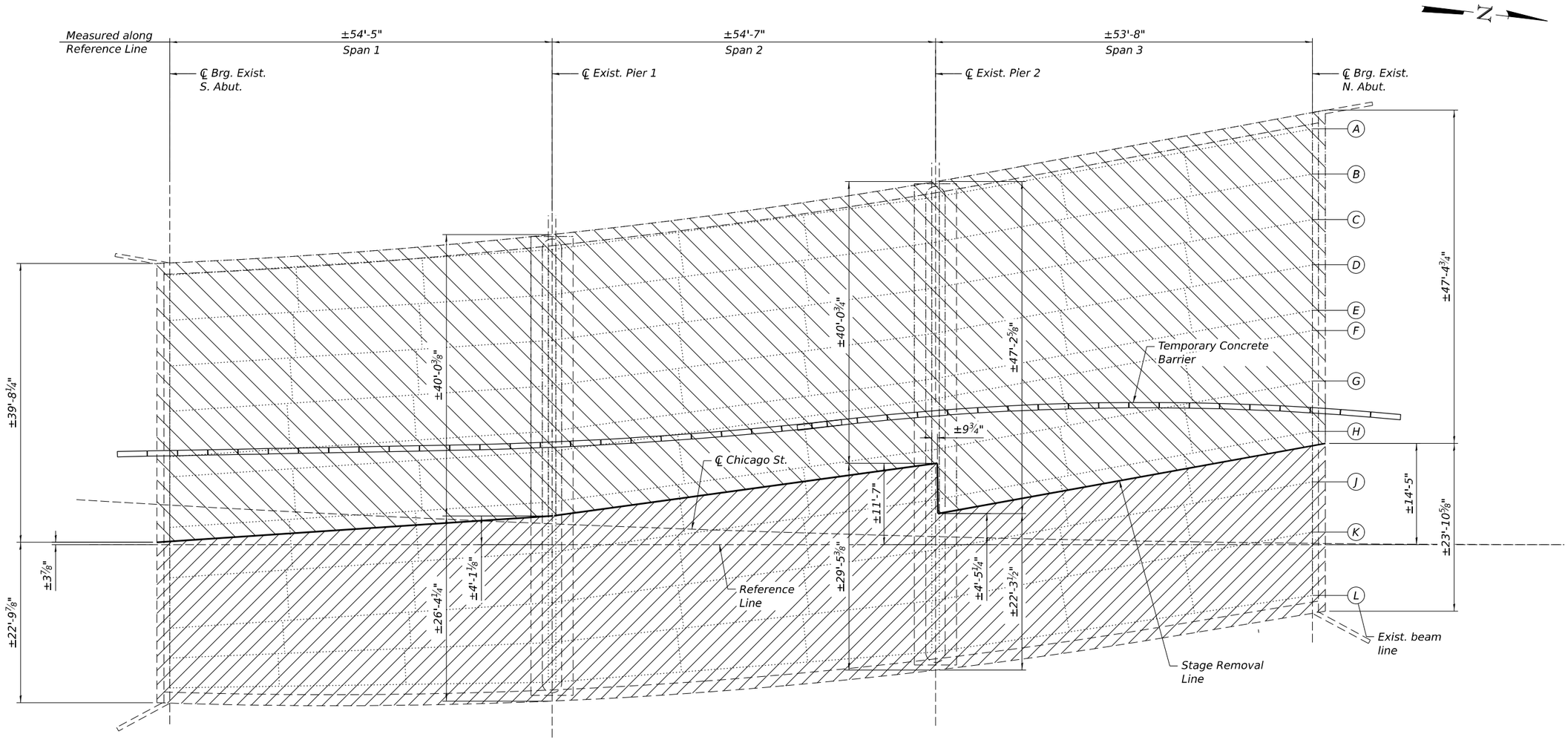

PLAN

LEGEND:

Stage I - Removal of Existing Structures No. 5

Stage II - Removal of Existing Structures No. 5

NOTES:

1. All horizontal dimension are measured perpendicular to the Reference Line (Local Tangent Line at ℄ Chicago St. Sta. 205+85.33), unless noted otherwise.
2. Removal widths are measured from the Stage Removal Line to the edge of deck.
3. Removal lines are different for the superstructure and the substructure, see sheets SC-9 & SC-10 for substructure removal.
4. The removal of all cables, conduits and embedded junction boxes will not be paid for separately but shall be included in the cost of the Removal of Existing Structures No. 5.
5. For quantity of Temporary Concrete Barrier, see Roadway Plans.

MODEL: Default
FILE NAME: 099B306-62F94-S008-REM01.dgn

WSP USA Inc.
30 N. LASALLE STREET
SUITE 4200
CHICAGO, IL 60602
TEL: (312) 782-8150
FAX: (312) 782-1684

USER NAME = lauxpj	DESIGNED - BK	REVISED -	
	CHECKED - LAS	REVISED -	
PLOT SCALE = 15.9994 ' / in.	DRAWN - BK	REVISED -	
PLOT DATE = 12/2/2025	CHECKED - PJL	REVISED -	

STATE OF ILLINOIS
DEPARTMENT OF TRANSPORTATION

EXISTING STRUCTURE REMOVAL DETAILS 1
STRUCTURE NUMBER 099-8306

SHEET SC-8 OF SC-60 SHEETS

F.A.P. RTE.	SECTION	COUNTY	TOTAL SHEETS	SHEET NO.
0846	2017-057F	WILL	1342	837
		CONTRACT NO. 62F94		
		ILLINOIS	FED. AID PROJECT	

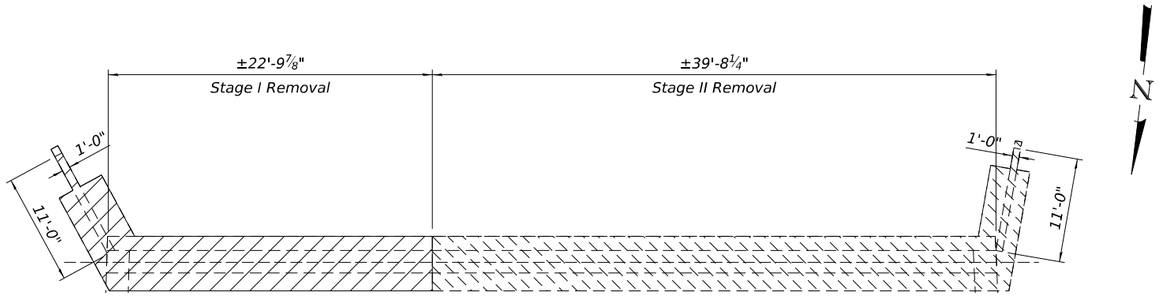

PLAN - SOUTH ABUTMENT

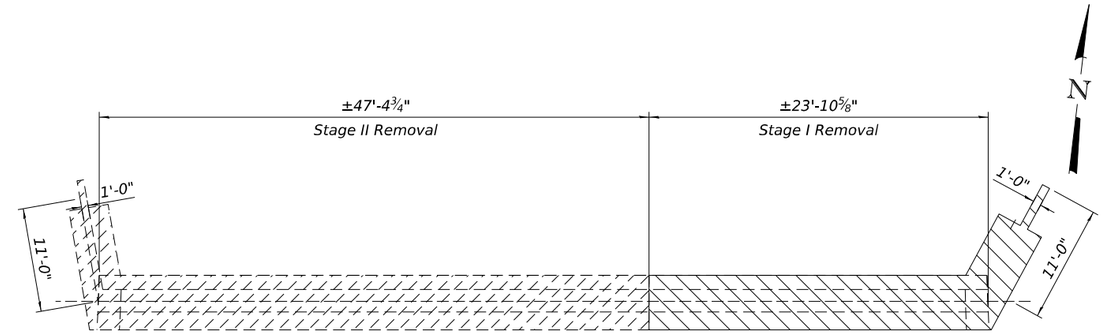

PLAN - NORTH ABUTMENT

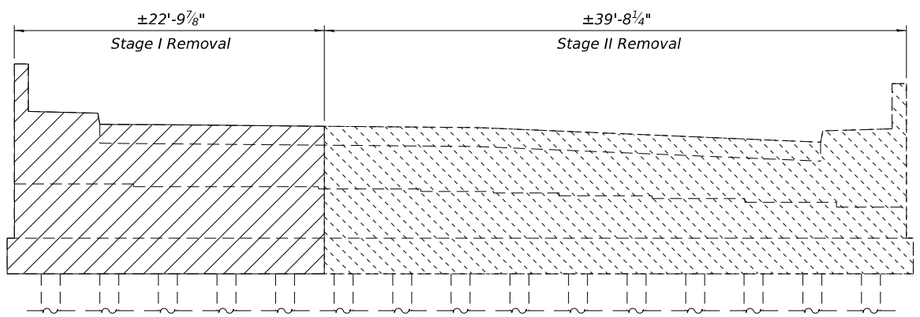

ELEVATION - SOUTH ABUTMENT
(Looking South)

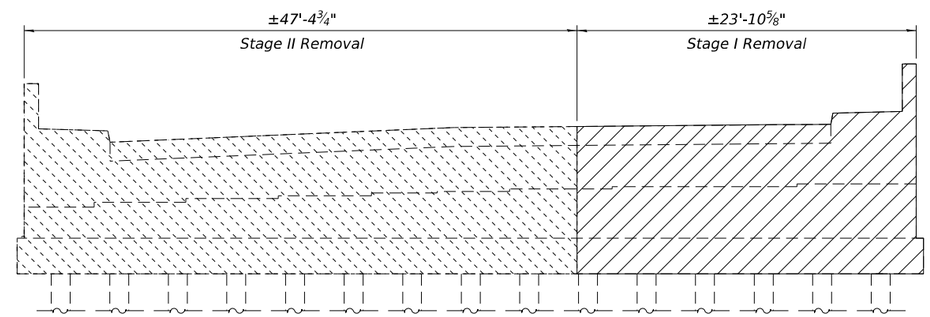

ELEVATION - NORTH ABUTMENT
(Looking North)

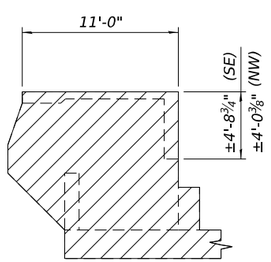

ELEVATION - SE WINGWALL
(NW Wingwall similar)

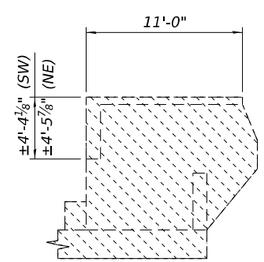

ELEVATION - SW WINGWALL
(NE Wingwall similar)

LEGEND:

Stage I - Removal of Existing Structures No. 5

Stage II - Removal of Existing Structures No. 5

MODEL: Default
FILE NAME: 0998306-62F94-S009-REM02.dgn

WSP USA Inc.
30 N. LASALLE STREET
SUITE 4200
CHICAGO, IL 60602
TEL: (312) 782-8150
FAX: (312) 782-1684

USER NAME = lauxpj	DESIGNED - BK	REVISED -	STATE OF ILLINOIS DEPARTMENT OF TRANSPORTATION
	CHECKED - PJL	REVISED -	
PLOT SCALE = 10.6662 ' / in.	DRAWN - BK	REVISED -	
PLOT DATE = 12/2/2025	CHECKED - PJL	REVISED -	

EXISTING STRUCTURE REMOVAL DETAILS 2
STRUCTURE NUMBER 099-8306

SHEET SC-9 OF SC-60 SHEETS

F.A.P. RTE.	SECTION	COUNTY	TOTAL SHEETS	SHEET NO.
0846	2017-057F	WILL	1342	838
		CONTRACT NO. 62F94		
		ILLINOIS	FED. AID PROJECT	

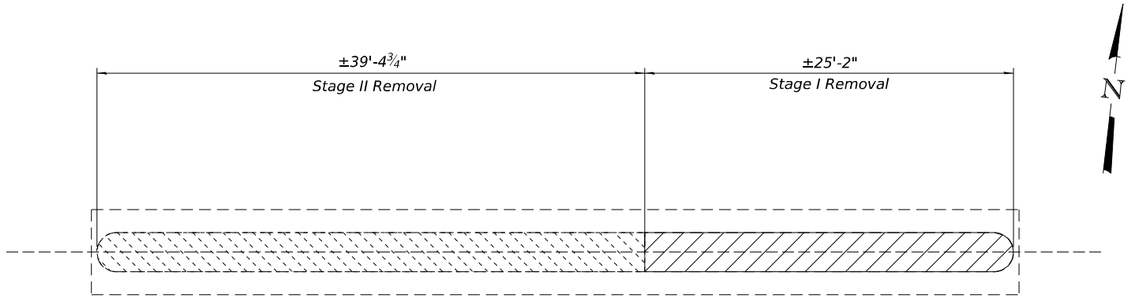

PLAN - PIER 1

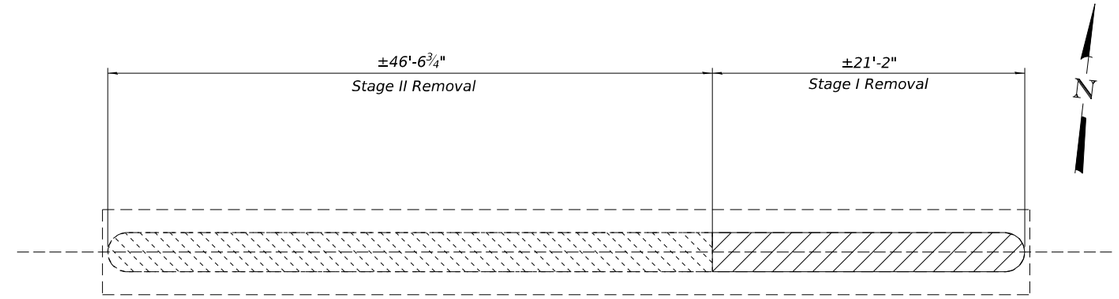

PLAN - PIER 2

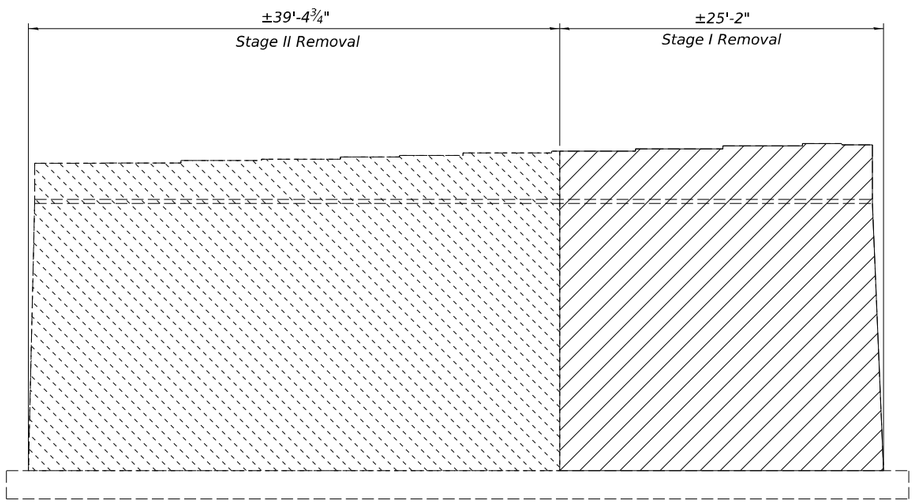

ELEVATION - PIER 1
(Looking North)

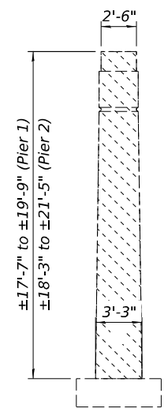

TYPICAL PIER SECTION

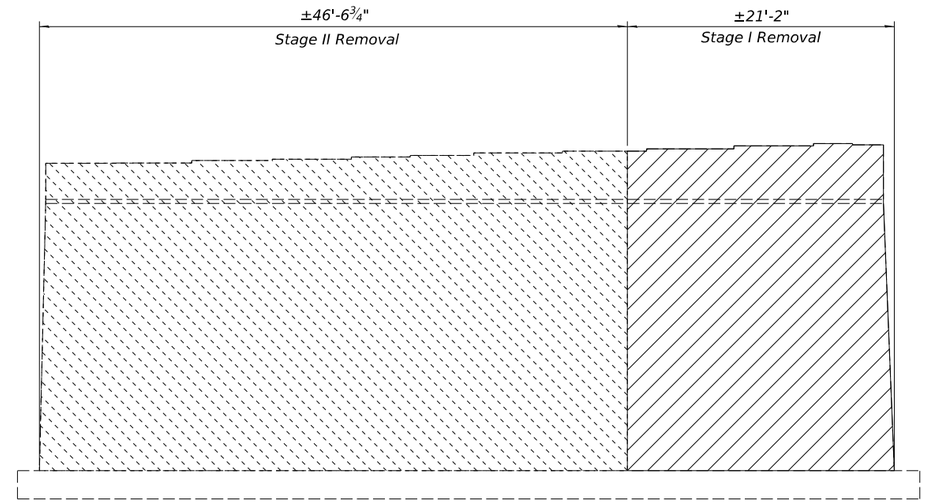

ELEVATION - PIER 2
(Looking North)

LEGEND:

Stage I - Removal of Existing Structures No. 5

Stage II - Removal of Existing Structures No. 5

MODEL: Default
FILE NAME: 0998306-62F94-S010-REM03.dgn

WSP USA Inc.
30 N. LASALLE STREET
SUITE 4200
CHICAGO, IL 60602
TEL: (312) 782-8150
FAX: (312) 782-1684

USER NAME = lauxpj	DESIGNED - BK	REVISED -	
	CHECKED - PJL	REVISED -	
PLOT SCALE = 10.6662 ' / in.	DRAWN - BK	REVISED -	
PLOT DATE = 12/2/2025	CHECKED - PJL	REVISED -	

STATE OF ILLINOIS
DEPARTMENT OF TRANSPORTATION

EXISTING STRUCTURE REMOVAL DETAILS 3
STRUCTURE NUMBER 099-8306

SHEET SC-10 OF SC-60 SHEETS

F.A.P. RTE.	SECTION	COUNTY	TOTAL SHEETS	SHEET NO.
0846	2017-057F	WILL	1342	839
		CONTRACT NO. 62F94		
	ILLINOIS	FED. AID PROJECT		

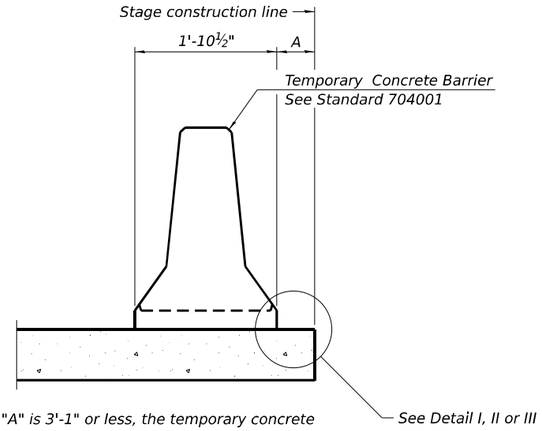

When "A" is 3'-1" or less, the temporary concrete barrier shall be restrained to the new slab according to Detail I, II or III. No restraint is required when "A" is greater than 3'-1".

NEW SLAB OR NEW DECK BEAM

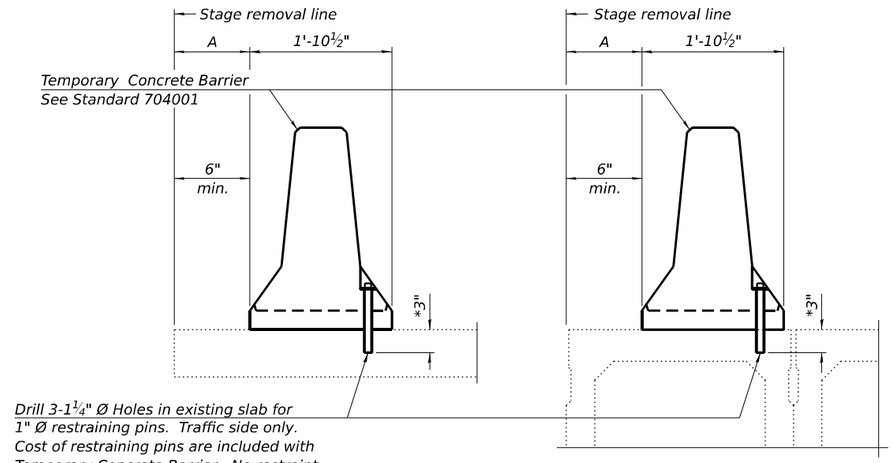

EXISTING SLAB

* When hot-mix asphalt wearing surface is present, embedment shall be 3" plus the wearing surface depth.

EXISTING DECK BEAM

SECTIONS THRU SLAB OR DECK BEAM

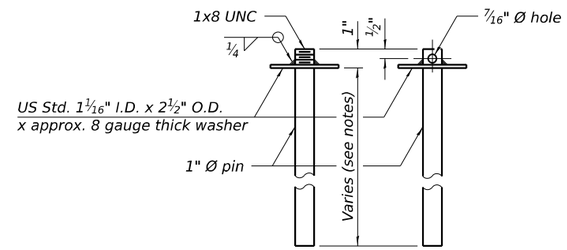

RESTRAINING PIN

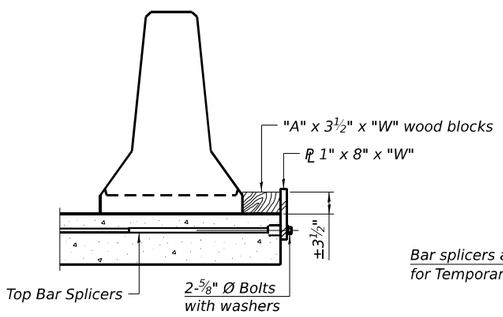

DETAIL I

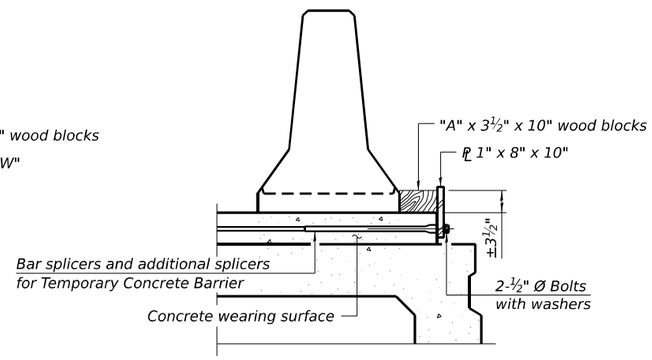

DETAIL II

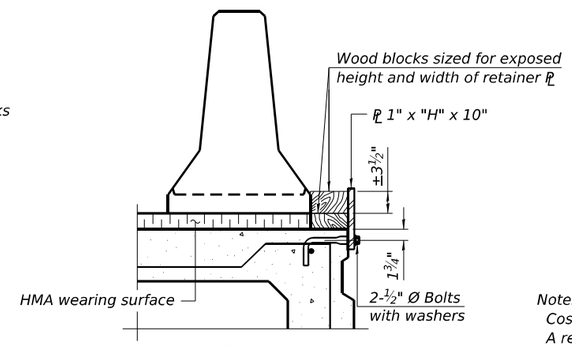

DETAIL III

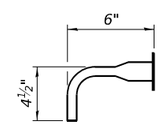

BAR SPLICER FOR #4 BAR - DETAIL III

Notes:

Cost of retainer assembly is included with Temporary Concrete Barrier.

A retainer assembly shall be located at the approximate ℄ of each temporary concrete barrier.

The retainer plate shall not be removed until the concrete on the adjacent stage is ready to be poured. For Detail III applications the retainer plate shall not be removed until just prior to placing the adjacent beam.

When the 'A' dimension is less than 1½", the wood block shall be omitted and the barrier shall be placed in direct contact with the steel retainer plate. For deck beam applications the minimum required 'A' distance is 6" to accommodate the shear key clamping device.

Detail I - Installation for a new bridge deck or bridge slab.

Detail II - Installation for a new deck beam with an initial concrete wearing surface. Additional bar splicers shall be provided at 6'-0" centers and paired with the bar splicers of the concrete wearing surface reinforcement to accommodate the installation of the retainer assemblies. The cost of the additional bar splicers is included with the concrete wearing surface.

Detail III - Installation for a new deck beam with no initial wearing surface or with an initial hot-mix asphalt (HMA) wearing surface present. The deck beam directly beneath the temporary concrete barrier shall be fabricated with bar splicer inserts in the side of the beam, as detailed, to accommodate the installation of the retainer assemblies. A pair of bar splicers, 6" apart, shall be placed at 6'-0" centers along the length of the beam. The cost of the bar splicers is included with the deck beam.

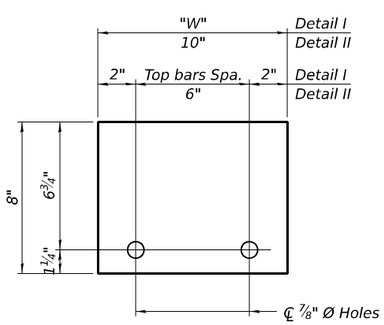

STEEL RETAINER PL 1" x 8" x "W"

(Detail I and II)

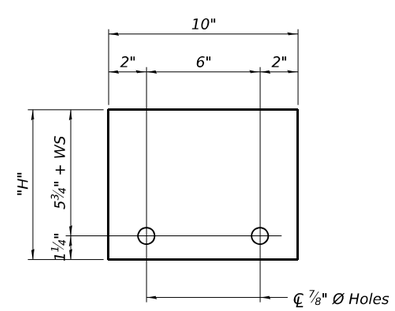

STEEL RETAINER PL 1" x "H" x 10"

(Detail III)

RAILING CRITERIA

NCHRP 350 Test Level	3
Railing Weight (plf)	440

R-27

5-15-2023

MODEL: Default
FILE NAME: 0998306-62F94-S011-TCB.dgn

WSP USA Inc.
30 N. LASALLE STREET
SUITE 4200
CHICAGO, IL 60602
TEL: (312) 782-8150
FAX: (312) 782-1684

USER NAME = lauxpj	DESIGNED - BK	REVISED -	
	CHECKED - LAS	REVISED -	
PLOT SCALE = 0:1.9999 ':" / in.	DRAWN - BK	REVISED -	
PLOT DATE = 12/2/2025	CHECKED - PJL	REVISED -	

STATE OF ILLINOIS
DEPARTMENT OF TRANSPORTATION

TEMPORARY CONCRETE BARRIER
STRUCTURE NUMBER 099-8306

SHEET SC-11 OF SC-60 SHEETS

F.A.P. RTE.	SECTION	COUNTY	TOTAL SHEETS	SHEET NO.
0846	2017-057F	WILL	1342	840
		CONTRACT NO. 62F94		
		ILLINOIS	FED. AID PROJECT	

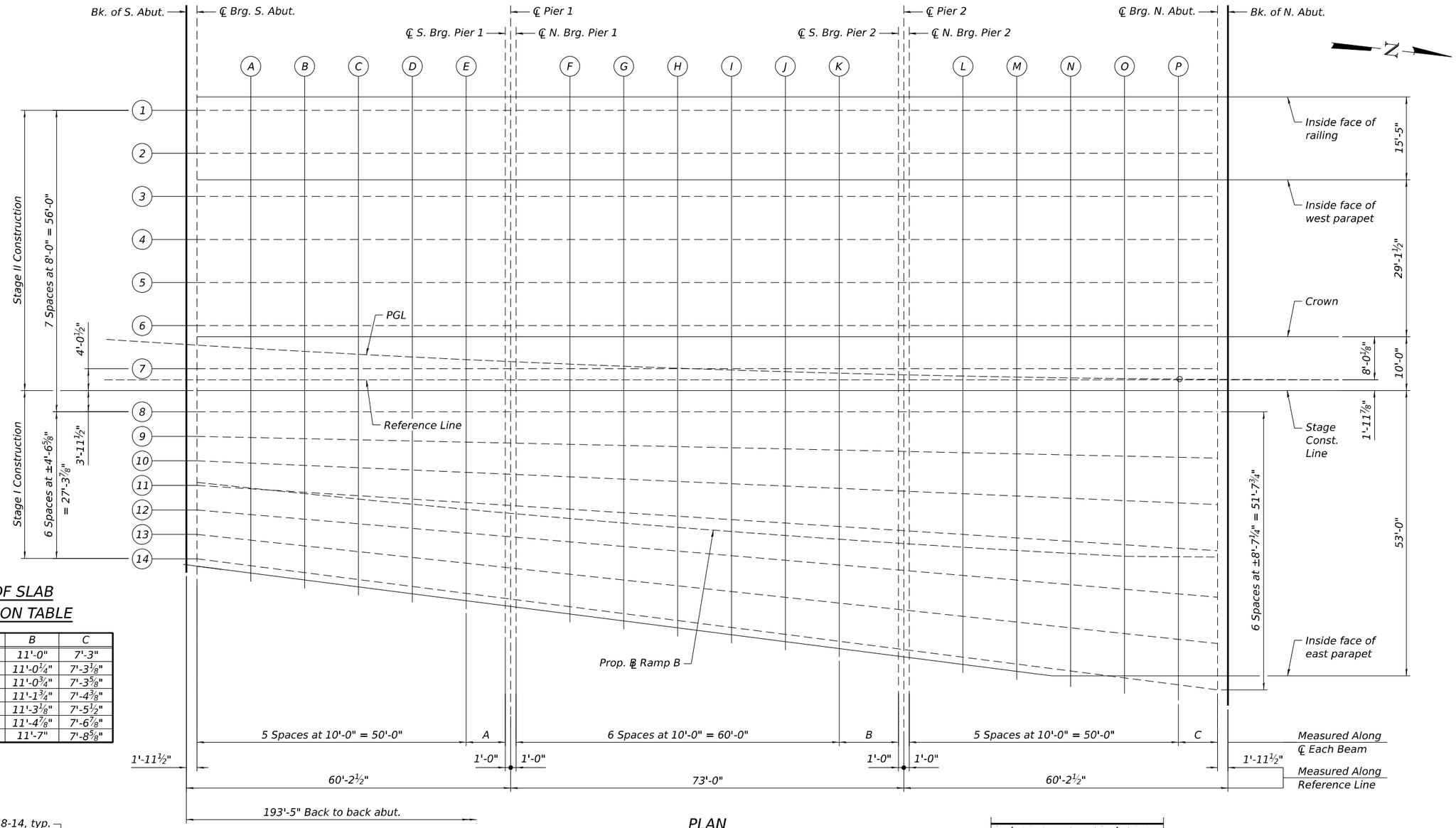

TOP OF SLAB DIMENSION TABLE

Beam	A	B	C
1 thru 8	7'-3"	11'-0"	7'-3"
9	7'-3⅛"	11'-0¼"	7'-3⅛"
10	7'-3⅝"	11'-0¾"	7'-3⅝"
11	7'-4⅜"	11'-1¾"	7'-4⅜"
12	7'-5½"	11'-3⅛"	7'-5½"
13	7'-6⅞"	11'-4⅞"	7'-6⅞"
14	7'-8⅝"	11'-7"	7'-8⅝"

PLAN

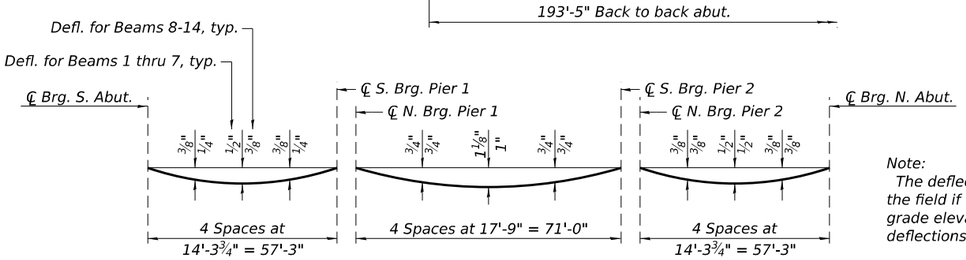

DEAD LOAD DEFLECTION DIAGRAM

(Includes weight of concrete, excluding beams.)

Note:
The deflections to the left are not to be used in the field if the engineer is working from the grade elevations adjusted for dead load deflections as shown on sheets SC-13 thru SC-17.

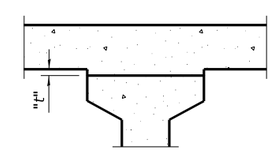

To determine "t": After all precast prestressed beams have been erected, elevations of the top flanges of the beams shall be taken at intervals shown on sheets SC-13 thru SC-17. These elevations subtracted from the "Theoretical Grade Elevations Adjusted for Dead Load Deflections" shown above, minus slab thickness, equals the fillet heights "t" above top flanges of beams.

FILLET HEIGHTS

MODEL: Default
FILE NAME: 0998306-62F94-S012-TSE01.dgn

WSP USA Inc.
30 N. LASALLE STREET
SUITE 4200
CHICAGO, IL 60602
TEL: (312) 782-8150
FAX: (312) 782-1684

USER NAME = lauxpj	DESIGNED - NBR	REVISED -	
	CHECKED - MAI	REVISED -	
PLOT SCALE = 19:11.9904 ':" / in.	DRAWN - NBR	REVISED -	
PLOT DATE = 12/2/2025	CHECKED - MAI	REVISED -	

STATE OF ILLINOIS
DEPARTMENT OF TRANSPORTATION

TOP OF SLAB ELEVATIONS PLAN
STRUCTURE NUMBER 099-8306

SHEET SC-12 OF SC-60 SHEETS

F.A.P. RTE.	SECTION	COUNTY	TOTAL SHEETS	SHEET NO.
0846	2017-057F	WILL	1342	841

CONTRACT NO. 62F94

ILLINOIS | FED. AID PROJECT

INSIDE FACE OF WEST RAILING

Location	Station	Offset	Theoretical Grade Elevations	Theoretical Grade Elevations Adjusted for Dead Load Deflection
Bk. of South Abut.	203+68.36	-45.92	534.18	534.18
℄ Brg. South Abut.	203+70.34	-46.04	534.23	534.23
A	203+80.46	-46.64	534.47	534.49
B	203+90.58	-47.21	534.71	534.74
C	204+00.70	-47.75	534.95	534.99
D	204+10.83	-48.26	535.19	535.22
E	204+20.96	-48.74	535.43	535.45
℄ S. Brg Pier 1	204+28.30	-49.08	535.60	535.60
℄ Pier 1	204+29.31	-49.12	535.62	535.62
℄ N. Brg. Pier 1	204+30.33	-49.17	535.65	535.65
F	204+40.46	-49.59	535.88	535.91
G	204+50.60	-49.99	536.12	536.18
H	204+60.74	-50.36	536.35	536.44
I	204+70.88	-50.71	536.59	536.68
J	204+81.02	-51.02	536.82	536.89
K	204+91.16	-51.30	537.06	537.10
℄ S. Brg. Pier 2	205+02.32	-51.58	537.31	537.31
℄ Pier 2	205+03.34	-51.60	537.34	537.34
℄ N. Brg. Pier 2	205+04.35	-51.63	537.36	537.36
L	205+14.50	-51.84	537.59	537.61
M	205+24.65	-52.03	537.82	537.86
N	205+34.80	-52.19	538.06	538.10
O	205+44.95	-52.32	538.29	538.32
P	205+55.10	-52.42	538.52	538.53
℄ Brg. North Abut.	205+62.46	-52.48	538.68	538.68
Bk. of North Abut.	205+64.45	-52.49	538.73	538.73

BEAM 1

Location	Station	Offset	Theoretical Grade Elevations	Theoretical Grade Elevations Adjusted for Dead Load Deflection
Bk. of South Abut.	203+68.52	-43.42	534.23	534.23
℄ Brg. South Abut.	203+70.50	-43.54	534.28	534.28
A	203+80.61	-44.14	534.52	534.54
B	203+90.72	-44.71	534.76	534.79
C	204+00.83	-45.25	535.00	535.04
D	204+10.95	-45.76	535.24	535.27
E	204+21.07	-46.25	535.48	535.50
℄ S. Brg Pier 1	204+28.41	-46.58	535.65	535.65
℄ Pier 1	204+29.43	-46.62	535.67	535.67
℄ N. Brg. Pier 1	204+30.44	-46.67	535.70	535.70
F	204+40.57	-47.10	535.93	535.96
G	204+50.69	-47.50	536.17	536.23
H	204+60.83	-47.87	536.40	536.49
I	204+70.96	-48.21	536.64	536.73
J	204+81.09	-48.52	536.87	536.94
K	204+91.23	-48.80	537.11	537.15
℄ S. Brg. Pier 2	205+02.38	-49.08	537.36	537.36
℄ Pier 2	205+03.40	-49.10	537.39	537.39
℄ N. Brg. Pier 2	205+04.41	-49.13	537.41	537.41
L	205+14.55	-49.34	537.64	537.66
M	205+24.69	-49.53	537.87	537.91
N	205+34.84	-49.69	538.11	538.15
O	205+44.98	-49.82	538.34	538.37
P	205+55.12	-49.92	538.57	538.58
℄ Brg. North Abut.	205+62.48	-49.98	538.73	538.73
Bk. of North Abut.	205+64.46	-49.99	538.78	538.78

BEAM 2

Location	Station	Offset	Theoretical Grade Elevations	Theoretical Grade Elevations Adjusted for Dead Load Deflection
Bk. of South Abut.	203+69.02	-35.44	534.39	534.39
℄ Brg. South Abut.	203+70.99	-35.56	534.44	534.44
A	203+81.08	-36.15	534.68	534.70
B	203+91.17	-36.72	534.92	534.96
C	204+01.26	-37.26	535.16	535.20
D	204+11.36	-37.77	535.40	535.43
E	204+21.45	-38.26	535.64	535.66
℄ S. Brg Pier 1	204+28.78	-38.59	535.81	535.81
℄ Pier 1	204+29.79	-38.63	535.83	535.83
℄ N. Brg. Pier 1	204+30.80	-38.68	535.86	535.86
F	204+40.90	-39.10	536.09	536.12
G	204+51.01	-39.50	536.33	536.39
H	204+61.11	-39.87	536.56	536.65
I	204+71.22	-40.21	536.80	536.89
J	204+81.34	-40.52	537.03	537.10
K	204+91.45	-40.81	537.27	537.31
℄ S. Brg. Pier 2	205+02.58	-41.08	537.52	537.52
℄ Pier 2	205+03.59	-41.11	537.55	537.55
℄ N. Brg. Pier 2	205+04.60	-41.13	537.57	537.57
L	205+14.72	-41.35	537.80	537.82
M	205+24.83	-41.53	538.03	538.07
N	205+34.95	-41.69	538.27	538.31
O	205+45.07	-41.82	538.50	538.53
P	205+55.19	-41.92	538.73	538.74
℄ Brg. N. Abut.	205+62.53	-41.98	538.89	538.89
Bk. of North Abut.	205+64.51	-41.99	538.94	538.94

INSIDE FACE OF WEST PARAPET

Location	Station	Offset	Theoretical Grade Elevations	Theoretical Grade Elevations Adjusted for Dead Load Deflection
Bk. of South Abut.	203+69.33	-30.53	534.49	534.49
℄ Brg. South Abut.	203+71.30	-30.65	534.54	534.54
A	203+81.37	-31.25	534.78	534.80
B	203+91.44	-31.81	535.02	535.05
C	204+01.52	-32.35	535.26	535.30
D	204+11.60	-32.86	535.50	535.53
E	204+21.69	-33.35	535.73	535.75
℄ S. Brg Pier 1	204+29.00	-33.68	535.91	535.91
℄ Pier 1	204+30.01	-33.72	535.93	535.93
℄ N. Brg. Pier 1	204+31.02	-33.77	535.95	535.95
F	204+41.10	-34.19	536.19	536.22
G	204+51.20	-34.59	536.43	536.49
H	204+61.29	-34.96	536.66	536.74
I	204+71.39	-35.30	536.90	536.99
J	204+81.48	-35.61	537.13	537.20
K	204+91.58	-35.89	537.37	537.41
℄ S. Brg. Pier 2	205+02.69	-36.17	537.62	537.62
℄ Pier 2	205+03.70	-36.19	537.65	537.65
℄ N. Brg. Pier 2	205+04.71	-36.21	537.67	537.67
L	205+14.82	-36.43	537.90	537.92
M	205+24.92	-36.62	538.13	538.17
N	205+35.02	-36.78	538.36	538.40
O	205+45.13	-36.91	538.59	538.63
P	205+55.24	-37.01	538.82	538.84
℄ Brg. North Abut.	205+62.56	-37.06	538.99	538.99
Bk. of North Abut.	205+64.54	-37.07	539.04	539.04

BEAM 3

Location	Station	Offset	Theoretical Grade Elevations	Theoretical Grade Elevations Adjusted for Dead Load Deflection
Bk. of South Abut.	203+69.52	-27.45	534.55	534.55
℄ Brg. South Abut.	203+71.49	-27.57	534.60	534.60
A	203+81.55	-28.17	534.84	534.86
B	203+91.62	-28.73	535.08	535.12
C	204+01.68	-29.27	535.32	535.36
D	204+11.76	-29.78	535.56	535.59
E	204+21.83	-30.27	535.80	535.82
℄ S. Brg Pier 1	204+29.14	-30.60	535.97	535.97
℄ Pier 1	204+30.15	-30.64	535.99	535.99
℄ N. Brg. Pier 1	204+31.15	-30.68	536.02	536.02
F	204+41.23	-31.11	536.25	536.28
G	204+51.32	-31.51	536.49	536.55
H	204+61.40	-31.88	536.72	536.81
I	204+71.49	-32.22	536.96	537.05
J	204+81.57	-32.53	537.19	537.26
K	204+91.67	-32.81	537.43	537.47
℄ S. Brg. Pier 2	205+02.77	-33.09	537.68	537.68
℄ Pier 2	205+03.78	-33.11	537.71	537.71
℄ N. Brg. Pier 2	205+04.78	-33.13	537.73	537.73
L	205+14.88	-33.35	537.96	537.98
M	205+24.97	-33.53	538.19	538.23
N	205+35.07	-33.69	538.43	538.47
O	205+45.17	-33.82	538.66	538.69
P	205+55.26	-33.92	538.89	538.90
℄ Brg. North Abut.	205+62.58	-33.98	539.05	539.05
Bk. of North Abut.	205+64.56	-33.99	539.10	539.10

NOTES:

1. All Elevations and Offsets are in feet.
2. Offsets are measured with respect to the PGL. Negative offsets are left and positive are right of the PGL.

BEAM 4

Location	Station	Offset	Theoretical Grade Elevations	Theoretical Grade Elevations Adjusted for Dead Load Deflection
Bk. of South Abut.	203+70.01	-19.47	534.71	534.71
℄ Brg. South Abut.	203+71.98	-19.59	534.76	534.76
A	203+82.02	-20.18	535.00	535.02
B	203+92.06	-20.75	535.24	535.28
C	204+02.11	-21.28	535.48	535.52
D	204+12.16	-21.79	535.72	535.75
E	204+22.21	-22.27	535.96	535.97
℄ S. Brg Pier 1	204+29.50	-22.60	536.13	536.13
℄ Pier 1	204+30.50	-22.65	536.15	536.15
℄ N. Brg. Pier 1	204+31.51	-22.69	536.18	536.18
F	204+41.56	-23.12	536.41	536.44
G	204+51.62	-23.51	536.65	536.71
H	204+61.69	-23.88	536.88	536.97
I	204+71.75	-24.22	537.12	537.21
J	204+81.81	-24.53	537.35	537.42
K	204+91.88	-24.81	537.59	537.63
℄ S. Brg. Pier 2	205+02.96	-25.09	537.84	537.84
℄ Pier 2	205+03.96	-25.11	537.87	537.87
℄ N. Brg. Pier 2	205+04.97	-25.13	537.89	537.89
L	205+15.04	-25.35	538.12	538.14
M	205+25.11	-25.54	538.35	538.39
N	205+35.18	-25.69	538.59	538.63
O	205+45.26	-25.82	538.82	538.85
P	205+55.33	-25.92	539.05	539.06
℄ Brg. North Abut.	205+62.64	-25.98	539.21	539.21
Bk. of North Abut.	205+64.61	-25.99	539.26	539.26

BEAM 5

Location	Station	Offset	Theoretical Grade Elevations	Theoretical Grade Elevations Adjusted for Dead Load Deflection
Bk. of South Abut.	203+70.51	-11.48	534.87	534.87
℄ Brg. South Abut.	203+72.47	-11.60	534.92	534.92
A	203+82.48	-12.19	535.16	535.18
B	203+92.50	-12.76	535.40	535.44
C	204+02.53	-13.30	535.64	535.68
D	204+12.55	-13.80	535.88	535.91
E	204+22.58	-14.28	536.12	536.13
℄ S. Brg Pier 1	204+29.85	-14.61	536.29	536.29
℄ Pier 1	204+30.86	-14.66	536.31	536.31
℄ N. Brg. Pier 1	204+31.86	-14.70	536.34	536.34
F	204+41.89	-15.12	536.57	536.61
G	204+51.93	-15.52	536.81	536.87
H	204+61.97	-15.89	537.04	537.13
I	204+72.01	-16.22	537.28	537.37
J	204+82.05	-16.53	537.51	537.58
K	204+92.10	-16.81	537.75	537.79
℄ S. Brg. Pier 2	205+03.15	-17.09	538.00	538.00
℄ Pier 2	205+04.15	-17.11	538.03	538.03
℄ N. Brg. Pier 2	205+05.15	-17.14	538.05	538.05
L	205+15.20	-17.35	538.28	538.30
M	205+25.25	-17.54	538.51	538.55
N	205+35.30	-17.69	538.75	538.79
O	205+45.35	-17.82	538.98	539.01
P	205+55.40	-17.92	539.21	539.22
℄ Brg. North Abut.	205+62.69	-17.98	539.37	539.37
Bk. of North Abut.	205+64.66	-17.99	539.42	539.42

BEAM 6

Location	Station	Offset	Theoretical Grade Elevations	Theoretical Grade Elevations Adjusted for Dead Load Deflection
Bk. of South Abut.	203+71.00	-3.50	535.03	535.03
℄ Brg. South Abut.	203+72.95	-3.62	535.08	535.08
A	203+82.95	-4.21	535.32	535.34
B	203+92.95	-4.77	535.56	535.60
C	204+02.95	-5.31	535.80	535.84
D	204+12.95	-5.81	536.04	536.07
E	204+22.95	-6.29	536.28	536.29
℄ S. Brg Pier 1	204+30.21	-6.62	536.45	536.45
℄ Pier 1	204+31.21	-6.66	536.47	536.47
℄ N. Brg. Pier 1	204+32.21	-6.71	536.50	536.50
F	204+42.22	-7.13	536.73	536.77
G	204+52.24	-7.53	536.97	537.03
H	204+62.25	-7.89	537.20	537.29
I	204+72.27	-8.23	537.44	537.53
J	204+82.29	-8.54	537.67	537.74
K	204+92.31	-8.82	537.91	537.95
℄ S. Brg. Pier 2	205+03.33	-9.09	538.16	538.16
℄ Pier 2	205+04.34	-9.12	538.19	538.19
℄ N. Brg. Pier 2	205+05.34	-9.14	538.21	538.21
L	205+15.36	-9.35	538.44	538.46
M	205+25.39	-9.54	538.67	538.71
N	205+35.41	-9.70	538.91	538.95
O	205+45.44	-9.82	539.14	539.17
P	205+55.47	-9.92	539.37	539.38
℄ Brg. North Abut.	205+62.74	-9.98	539.53	539.53
Bk. of North Abut.	205+64.70	-9.99	539.58	539.58

CROWN

Location	Station	Offset	Theoretical Grade Elevations	Theoretical Grade Elevations Adjusted for Dead Load Deflection
Bk. of South Abut.	203+71.12	-1.46	535.08	535.08
℄ Brg. South Abut.	203+73.08	-1.58	535.12	535.12
A	203+83.07	-2.17	535.36	535.38
B	203+93.06	-2.73	535.60	535.64
C	204+03.05	-3.27	535.84	535.88
D	204+13.05	-3.78	536.08	536.11
E	204+23.05	-4.25	536.32	536.33
℄ S. Brg Pier 1	204+30.30	-4.58	536.49	536.49
℄ Pier 1	204+31.30	-4.63	536.51	536.51
℄ N. Brg. Pier 1	204+32.30	-4.67	536.54	536.54
F	204+42.31	-5.09	536.77	536.81
G	204+52.31	-5.49	537.01	537.08
H	204+62.32	-5.85	537.25	537.33
I	204+72.33	-6.19	537.48	537.57
J	204+82.35	-6.50	537.71	537.78
K	204+92.36	-6.78	537.95	537.99
℄ S. Brg. Pier 2	205+03.38	-7.05	538.20	538.20
℄ Pier 2	205+04.38	-7.08	538.23	538.23
℄ N. Brg. Pier 2	205+05.39	-7.10	538.25	538.25
L	205+15.40	-7.31	538.48	538.50
M	205+25.42	-7.50	538.71	538.75
N	205+35.44	-7.66	538.95	538.99
O	205+45.46	-7.78	539.18	539.21
P	205+55.49	-7.88	539.41	539.42
℄ Brg. North Abut.	205+62.75	-7.94	539.57	539.57
Bk. of North Abut.	205+64.72	-7.95	539.62	539.62

PGL

Location	Station	Offset	Theoretical Grade Elevations	Theoretical Grade Elevations Adjusted for Dead Load Deflection
Bk. of South Abut.	203+71.21	0.00	535.05	535.05
℄ Brg. South Abut.	203+73.17	0.00	535.09	535.09
A	203+83.19	0.00	535.32	535.34
B	203+93.21	0.00	535.55	535.58
C	204+03.22	0.00	535.78	535.82
D	204+13.23	0.00	536.00	536.04
E	204+23.25	0.00	536.23	536.25
℄ S. Brg Pier 1	204+30.50	0.00	536.40	536.40
℄ Pier 1	204+31.50	0.00	536.42	536.42
℄ N. Brg. Pier 1	204+32.51	0.00	536.44	536.44
F	204+42.51	0.00	536.67	536.71
G	204+52.52	0.00	536.90	536.97
H	204+62.53	0.00	537.13	537.21
I	204+72.53	0.00	537.36	537.44
J	204+82.54	0.00	537.58	537.65
K	204+92.54	0.00	537.81	537.85
℄ S. Brg. Pier 2	205+03.55	0.00	538.06	538.06
℄ Pier 2	205+04.55	0.00	538.09	538.09
℄ N. Brg. Pier 2	205+05.55	0.00	538.11	538.11
L	205+15.55	0.00	538.34	538.36
M	205+25.55	0.00	538.56	538.60
N	205+35.55	0.00	538.79	538.83
O	205+45.55	0.00	539.02	539.05
P	205+55.55	0.00	539.25	539.26
℄ Brg. North Abut.	205+62.80	0.00	539.41	539.41
Bk. of North Abut.	205+64.76	0.00	539.46	539.46

NOTES:

1. All Elevations and Offsets are in feet.
2. Offsets are measured with respect to the PGL. Negative offsets are left and positive are right of the PGL.

BEAM 7

Location	Station	Offset	Theoretical Grade Elevations	Theoretical Grade Elevations Adjusted for Dead Load Deflection
Bk. of South Abut.	203+71.49	4.49	534.96	534.96
℄ Brg. South Abut.	203+73.44	4.37	535.00	535.00
A	203+83.41	3.78	535.24	535.27
B	203+93.38	3.22	535.48	535.52
C	204+03.36	2.68	535.72	535.76
D	204+13.34	2.18	535.96	535.99
E	204+23.33	1.70	536.20	536.21
℄ S. Brg Pier 1	204+30.56	1.37	536.37	536.37
℄ Pier 1	204+31.56	1.33	536.39	536.39
℄ N. Brg. Pier 1	204+32.56	1.28	536.42	536.42
F	204+42.55	0.86	536.65	536.69
G	204+52.54	0.47	536.89	536.96
H	204+62.53	0.10	537.13	537.21
I	204+72.53	-0.23	537.36	537.45
J	204+82.52	-0.54	537.59	537.66
K	204+92.52	-0.82	537.83	537.87
℄ S. Brg. Pier 2	205+03.52	-1.09	538.09	538.09
℄ Pier 2	205+04.52	-1.12	538.11	538.11
℄ N. Brg. Pier 2	205+05.52	-1.14	538.13	538.13
L	205+15.52	-1.35	538.36	538.39
M	205+25.53	-1.54	538.60	538.63
N	205+35.53	-1.70	538.83	538.87
O	205+45.53	-1.82	539.06	539.09
P	205+55.54	-1.92	539.29	539.30
℄ Brg. North Abut.	205+62.79	-1.98	539.45	539.45
Bk. of North Abut.	205+64.75	-1.99	539.50	539.50

REFERENCE LINE

Location	Station	Offset	Theoretical Grade Elevations	Theoretical Grade Elevations Adjusted for Dead Load Deflection
Bk. of South Abut.	203+71.61	6.54	534.91	534.91
℄ Brg. South Abut.	203+73.56	6.42	534.96	534.96
A	203+83.53	5.83	535.20	535.22
B	203+93.50	5.26	535.44	535.48
C	204+03.47	4.73	535.68	535.72
D	204+13.44	4.23	535.92	535.95
E	204+23.42	3.75	536.16	536.17
℄ S. Brg Pier 1	204+30.66	3.42	536.33	536.33
℄ Pier 1	204+31.65	3.38	536.35	536.35
℄ N. Brg. Pier 1	204+32.65	3.33	536.38	536.38
F	204+42.63	2.91	536.61	536.65
G	204+52.62	2.52	536.85	536.92
H	204+62.60	2.15	537.08	537.17
I	204+72.59	1.82	537.32	537.41
J	204+82.58	1.51	537.55	537.62
K	204+92.58	1.23	537.79	537.83
℄ S. Brg. Pier 2	205+03.57	0.96	538.04	538.04
℄ Pier 2	205+04.57	0.93	538.07	538.07
℄ N. Brg. Pier 2	205+05.57	0.91	538.09	538.09
L	205+15.56	0.70	538.32	538.34
M	205+25.56	0.51	538.55	538.59
N	205+35.56	0.35	538.79	538.83
O	205+45.56	0.23	539.02	539.05
P	205+55.56	0.13	539.25	539.26
℄ Brg. North Abut.	205+62.80	0.07	539.41	539.41
Bk. of North Abut.	205+64.76	0.06	539.46	539.46

STAGE CONSTRUCTION LINE

Location	Station	Offset	Theoretical Grade Elevations	Theoretical Grade Elevations Adjusted for Dead Load Deflection
Bk. of South Abut.	203+71.73	8.52	534.88	534.88
℄ Brg. South Abut.	203+73.68	8.40	534.92	534.92
A	203+83.64	7.81	535.16	535.19
B	203+93.61	7.25	535.40	535.44
C	204+03.57	6.72	535.64	535.68
D	204+13.54	6.21	535.88	535.91
E	204+23.51	5.74	536.12	536.13
℄ S. Brg Pier 1	204+30.74	5.41	536.29	536.29
℄ Pier 1	204+31.74	5.37	536.31	536.31
℄ N. Brg. Pier 1	204+32.74	5.32	536.34	536.34
F	204+42.71	4.90	536.57	536.61
G	204+52.69	4.51	536.81	536.88
H	204+62.67	4.14	537.04	537.13
I	204+72.66	3.81	537.28	537.37
J	204+82.64	3.50	537.51	537.58
K	204+92.63	3.22	537.75	537.79
℄ S. Brg. Pier 2	205+03.62	2.95	538.00	538.00
℄ Pier 2	205+04.61	2.92	538.03	538.03
℄ N. Brg. Pier 2	205+05.61	2.90	538.05	538.05
L	205+15.60	2.69	538.28	538.31
M	205+25.59	2.50	538.51	538.55
N	205+35.59	2.35	538.75	538.79
O	205+45.58	2.22	538.98	539.01
P	205+55.57	2.12	539.21	539.22
℄ Brg. North Abut.	205+62.82	2.06	539.37	539.37
Bk. of North Abut.	205+64.77	2.05	539.42	539.42

BEAM 8

Location	Station	Offset	Theoretical Grade Elevations	Theoretical Grade Elevations Adjusted for Dead Load Deflection
Bk. of South Abut.	203+71.97	12.47	534.80	534.80
℄ Brg. South Abut.	203+73.92	12.36	534.84	534.84
A	203+83.87	11.77	535.08	535.10
B	203+93.82	11.20	535.32	535.35
C	204+03.78	10.67	535.56	535.59
D	204+13.73	10.17	535.80	535.82
E	204+23.69	9.69	536.04	536.05
℄ S. Brg Pier 1	204+30.92	9.36	536.21	536.21
℄ Pier 1	204+31.91	9.32	536.23	536.23
℄ N. Brg. Pier 1	204+32.91	9.28	536.26	536.26
F	204+42.88	8.86	536.49	536.53
G	204+52.84	8.46	536.73	536.80
H	204+62.81	8.10	536.97	537.04
I	204+72.78	7.76	537.20	537.28
J	204+82.76	7.46	537.43	537.50
K	204+92.73	7.18	537.67	537.71
℄ S. Brg. Pier 2	205+03.71	6.90	537.93	537.93
℄ Pier 2	205+04.71	6.88	537.95	537.95
℄ N. Brg. Pier 2	205+05.70	6.86	537.97	537.97
L	205+15.68	6.64	538.20	538.23
M	205+25.66	6.46	538.44	538.47
N	205+35.64	6.30	538.67	538.71
O	205+45.62	6.18	538.90	538.93
P	205+55.61	6.08	539.13	539.14
℄ Brg. North Abut.	205+62.84	6.02	539.29	539.29
Bk. of North Abut.	205+64.80	6.01	539.34	539.34

BEAM 9

Location	Station	Offset	Theoretical Grade Elevations	Theoretical Grade Elevations Adjusted for Dead Load Deflection
Bk. of South Abut.	203+72.25	16.98	534.71	534.71
℄ Brg. South Abut.	203+74.20	16.90	534.75	534.75
A	203+84.14	16.53	534.98	535.00
B	203+94.09	16.18	535.22	535.25
C	204+04.04	15.86	535.45	535.48
D	204+13.99	15.57	535.69	535.71
E	204+23.94	15.31	535.92	535.93
℄ S. Brg Pier 1	204+31.17	15.14	536.09	536.09
℄ Pier 1	204+32.17	15.11	536.12	536.12
℄ N. Brg. Pier 1	204+33.16	15.09	536.14	536.14
F	204+43.12	14.89	536.37	536.41
G	204+53.07	14.71	536.60	536.67
H	204+63.03	14.56	536.83	536.91
I	204+72.99	14.44	537.06	537.14
J	204+82.95	14.34	537.29	537.36
K	204+92.91	14.28	537.52	537.56
℄ S. Brg. Pier 2	205+03.88	14.24	537.78	537.78
℄ Pier 2	205+04.87	14.24	537.80	537.80
℄ N. Brg. Pier 2	205+05.87	14.24	537.82	537.82
L	205+15.83	14.24	538.05	538.07
M	205+25.79	14.27	538.28	538.31
N	205+35.75	14.33	538.50	538.54
O	205+45.71	14.41	538.73	538.76
P	205+55.67	14.53	538.96	538.97
℄ Brg. North Abut.	205+62.90	14.63	539.12	539.12
Bk. of North Abut.	205+64.85	14.66	539.17	539.17

NOTES:

1. All Elevations and Offsets are in feet.
2. Offsets are measured with respect to the PGL. Negative offsets are left and positive are right of the PGL.

BEAM 10

Location	Station	Offset	Theoretical Grade Elevations	Theoretical Grade Elevations Adjusted for Dead Load Deflection
Bk. of South Abut.	203+72.52	21.48	534.62	534.62
℄ Brg. South Abut.	203+74.47	21.45	534.66	534.66
A	203+84.41	21.29	534.89	534.91
B	203+94.35	21.15	535.12	535.15
C	204+04.28	21.05	535.35	535.38
D	204+14.22	20.97	535.58	535.60
E	204+24.16	20.93	535.81	535.82
℄ S. Brg Pier 1	204+31.42	20.91	535.98	535.98
℄ Pier 1	204+32.42	20.91	536.00	536.00
℄ N. Brg. Pier 1	204+33.41	20.91	536.02	536.02
F	204+43.35	20.92	536.25	536.29
G	204+53.29	20.95	536.48	536.54
H	204+63.24	21.02	536.70	536.78
I	204+73.17	21.11	536.93	537.01
J	204+83.11	21.23	537.15	537.22
K	204+93.05	21.38	537.38	537.42
℄ S. Brg. Pier 2	205+04.05	21.58	537.63	537.63
℄ Pier 2	205+05.04	21.60	537.65	537.65
℄ N. Brg. Pier 2	205+06.04	21.62	537.68	537.68
L	205+15.97	21.83	537.90	537.92
M	205+25.91	22.08	538.12	538.16
N	205+35.84	22.35	538.34	538.38
O	205+45.77	22.65	538.57	538.60
P	205+55.70	22.98	538.79	538.80
℄ Brg. North Abut.	205+62.95	23.24	538.95	538.95
Bk. of North Abut.	205+64.90	23.31	538.99	538.99

PROP. ℄ RAMP B

Location	Station	Offset	Theoretical Grade Elevations	Theoretical Grade Elevations Adjusted for Dead Load Deflection
Bk. of South Abut.	203+72.75	25.36	534.54	534.54
℄ Brg. South Abut.	203+74.71	25.45	534.58	534.58
A	203+84.62	25.93	534.80	534.81
B	203+94.54	26.40	535.01	535.04
C	204+04.45	26.87	535.23	535.26
D	204+14.37	27.33	535.45	535.47
E	204+24.28	27.79	535.67	535.67
℄ S. Brg Pier 1	204+31.74	28.13	535.83	535.83
℄ Pier 1	204+32.73	28.17	535.86	535.86
℄ N. Brg. Pier 1	204+33.73	28.22	535.88	535.88
F	204+43.64	28.67	536.09	536.13
G	204+53.55	29.11	536.31	536.38
H	204+63.45	29.55	536.53	536.61
I	204+73.36	29.98	536.75	536.83
J	204+83.27	30.41	536.97	537.03
K	204+93.17	30.83	537.19	537.22
℄ S. Brg. Pier 2	205+04.27	31.29	537.44	537.44
℄ Pier 2	205+05.26	31.34	537.46	537.46
℄ N. Brg. Pier 2	205+06.26	31.38	537.48	537.48
L	205+16.16	31.79	537.70	537.72
M	205+26.06	32.19	537.92	537.95
N	205+35.96	32.59	538.14	538.18
O	205+45.86	32.99	538.36	538.39
P	205+55.55	33.00	538.58	538.60
℄ Brg. North Abut.	205+63.01	33.00	538.75	538.75
Bk. of North Abut.	205+64.95	33.00	538.80	538.80

BEAM 11

Location	Station	Offset	Theoretical Grade Elevations	Theoretical Grade Elevations Adjusted for Dead Load Deflection
Bk. of South Abut.	203+72.79	25.99	534.53	534.53
℄ Brg. South Abut.	203+74.74	25.99	534.57	534.57
A	203+84.67	26.05	534.79	534.81
B	203+94.59	26.13	535.02	535.05
C	204+04.52	26.24	535.24	535.27
D	204+14.44	26.38	535.47	535.49
E	204+24.37	26.54	535.69	535.70
℄ S. Brg Pier 1	204+31.68	26.68	535.86	535.86
℄ Pier 1	204+32.67	26.70	535.89	535.89
℄ N. Brg. Pier 1	204+33.66	26.72	535.91	535.91
F	204+43.59	26.95	536.13	536.17
G	204+53.51	27.20	536.35	536.42
H	204+63.42	27.47	536.57	536.65
I	204+73.34	27.78	536.79	536.87
J	204+83.26	28.12	537.01	537.08
K	204+93.17	28.48	537.24	537.27
℄ S. Brg. Pier 2	205+04.22	28.92	537.48	537.48
℄ Pier 2	205+05.21	28.96	537.51	537.51
℄ N. Brg. Pier 2	205+06.20	29.00	537.53	537.53
L	205+16.11	29.43	537.74	537.77
M	205+26.02	29.89	537.96	538.00
N	205+35.92	30.37	538.18	538.22
O	205+45.82	30.88	538.40	538.43
P	205+55.72	31.43	538.62	538.63
℄ Brg. North Abut.	205+63.01	31.84	538.78	538.78
Bk. of North Abut.	205+64.95	31.96	538.82	538.82

BEAM 12

Location	Station	Offset	Theoretical Grade Elevations	Theoretical Grade Elevations Adjusted for Dead Load Deflection
Bk. of South Abut.	203+73.06	30.49	534.43	534.43
℄ Brg. South Abut.	203+75.01	30.54	534.48	534.48
A	203+84.92	30.81	534.70	534.72
B	203+94.83	31.10	534.92	534.95
C	204+04.74	31.42	535.14	535.17
D	204+14.64	31.78	535.36	535.38
E	204+24.54	32.15	535.58	535.59
℄ S. Brg Pier 1	204+31.93	32.46	535.75	535.75
℄ Pier 1	204+32.92	32.50	535.77	535.77
℄ N. Brg. Pier 1	204+33.91	32.54	535.79	535.79
F	204+43.81	32.98	536.01	536.05
G	204+53.71	33.44	536.22	536.29
H	204+63.60	33.93	536.44	536.52
I	204+73.49	34.45	536.66	536.74
J	204+83.38	35.00	536.88	536.94
K	204+93.26	35.57	537.09	537.13
℄ S. Brg. Pier 2	205+04.39	36.25	537.34	537.34
℄ Pier 2	205+05.38	36.32	537.36	537.36
℄ N. Brg. Pier 2	205+06.37	36.38	537.38	537.38
L	205+16.24	37.02	537.59	537.62
M	205+26.12	37.69	537.81	537.84
N	205+35.98	38.39	538.02	538.06
O	205+45.85	39.12	538.23	538.27
P	205+55.71	39.87	538.45	538.46
℄ Brg. North Abut.	205+63.06	40.45	538.61	538.61
Bk. of North Abut.	205+65.00	40.61	538.65	538.65

BEAM 13

Location	Station	Offset	Theoretical Grade Elevations	Theoretical Grade Elevations Adjusted for Dead Load Deflection
Bk. of South Abut.	203+73.33	34.99	534.34	534.34
℄ Brg. South Abut.	203+75.28	35.08	534.39	534.39
A	203+85.17	35.56	534.60	534.62
B	203+95.06	36.07	534.82	534.85
C	204+04.94	36.61	535.03	535.06
D	204+14.82	37.17	535.25	535.27
E	204+24.70	37.76	535.47	535.47
℄ S. Brg Pier 1	204+32.18	38.23	535.63	535.63
℄ Pier 1	204+33.17	38.29	535.65	535.65
℄ N. Brg. Pier 1	204+34.16	38.36	535.68	535.68
F	204+44.03	39.00	535.88	535.93
G	204+53.90	39.68	536.10	536.17
H	204+63.76	40.38	536.31	536.39
I	204+73.62	41.11	536.52	536.60
J	204+83.47	41.87	536.74	536.80
K	204+93.32	42.66	536.95	536.98
℄ S. Brg. Pier 2	205+04.55	43.59	537.19	537.19
℄ Pier 2	205+05.54	43.68	537.21	537.21
℄ N. Brg. Pier 2	205+06.53	43.76	537.23	537.23
L	205+16.37	44.61	537.44	537.46
M	205+26.21	45.50	537.65	537.69
N	205+36.04	46.40	537.86	537.90
O	205+45.86	47.34	538.07	538.10
P	205+55.68	48.31	538.27	538.29
℄ Brg. North Abut.	205+63.12	49.06	538.43	538.43
Bk. of North Abut.	205+65.05	49.25	538.47	538.47

NOTES:

1. All Elevations and Offsets are in feet.
2. Offsets are measured with respect to the PGL. Negative offsets are left and positive are right of the PGL.

BEAM 14

Location	Station	Offset	Theoretical Grade Elevations	Theoretical Grade Elevations Adjusted for Dead Load Deflection
Bk. of South Abut.	203+73.60	39.50	534.25	534.25
℄ Brg. South Abut.	203+75.55	39.63	534.30	534.30
A	203+85.42	40.32	534.51	534.52
B	203+95.28	41.04	534.72	534.74
C	204+05.13	41.79	534.93	534.96
D	204+14.98	42.56	535.14	535.16
E	204+24.83	43.36	535.35	535.36
℄ S. Brg Pier 1	204+32.43	44.00	535.52	535.52
℄ Pier 1	204+33.42	44.09	535.54	535.54
℄ N. Brg. Pier 1	204+34.41	44.17	535.56	535.56
F	204+44.25	45.03	535.76	535.81
G	204+54.08	45.92	535.97	536.04
H	204+63.91	46.83	536.18	536.26
I	204+73.73	47.77	536.39	536.46
J	204+83.55	48.74	536.60	536.66
K	204+93.36	49.74	536.80	536.84
℄ S. Brg. Pier 2	205+04.72	50.93	537.04	537.04
℄ Pier 2	205+05.71	51.04	537.06	537.06
℄ N. Brg. Pier 2	205+06.70	51.14	537.09	537.09
L	205+16.50	52.21	537.29	537.31
M	205+26.29	53.30	537.49	537.53
N	205+36.07	54.42	537.70	537.74
O	205+45.85	55.56	537.90	537.93
P	205+55.63	56.74	538.10	538.12
℄ Brg. North Abut.	205+63.17	57.66	538.26	538.26
Bk. of North Abut.	205+65.10	57.90	538.30	538.30

INSIDE FACE OF EAST PARAPET

Location	Station	Offset	Theoretical Grade Elevations	Theoretical Grade Elevations Adjusted for Dead Load Deflection
Bk. of South Abut.	203+73.69	40.84	534.23	534.23
℄ Brg. South Abut.	203+75.63	40.97	534.27	534.27
A	203+85.49	41.66	534.48	534.50
B	203+95.35	42.38	534.69	534.72
C	204+05.20	43.13	534.90	534.93
D	204+15.05	43.90	535.11	535.13
E	204+24.89	44.71	535.32	535.33
℄ S. Brg Pier 1	204+32.49	45.35	535.49	535.49
℄ Pier 1	204+33.48	45.43	535.51	535.51
℄ N. Brg. Pier 1	204+34.47	45.52	535.53	535.53
F	204+44.38	46.38	535.74	535.78
G	204+54.29	47.27	535.95	536.01
H	204+64.20	48.20	536.15	536.23
I	204+74.10	49.15	536.36	536.44
J	204+83.99	50.13	536.57	536.63
K	204+93.88	51.13	536.77	536.81
℄ S. Brg. Pier 2	205+04.75	52.27	537.02	537.02
℄ Pier 2	205+05.74	52.38	537.04	537.04
℄ N. Brg. Pier 2	205+06.73	52.49	537.06	537.06
L	205+16.60	53.56	537.26	537.28
M	205+26.47	54.66	537.47	537.50
N	205+36.33	55.34	537.68	537.72
O	205+46.17	55.21	537.91	537.94
P	205+56.02	55.12	538.14	538.15
℄ Brg. North Abut.	205+63.15	55.06	538.31	538.31
Bk. of North Abut.	205+65.08	55.05	538.36	538.36

NOTES:

1. All Elevations and Offsets are in feet.
2. Offsets are measured with respect to the PGL. Negative offsets are left and positive are right of the PGL.

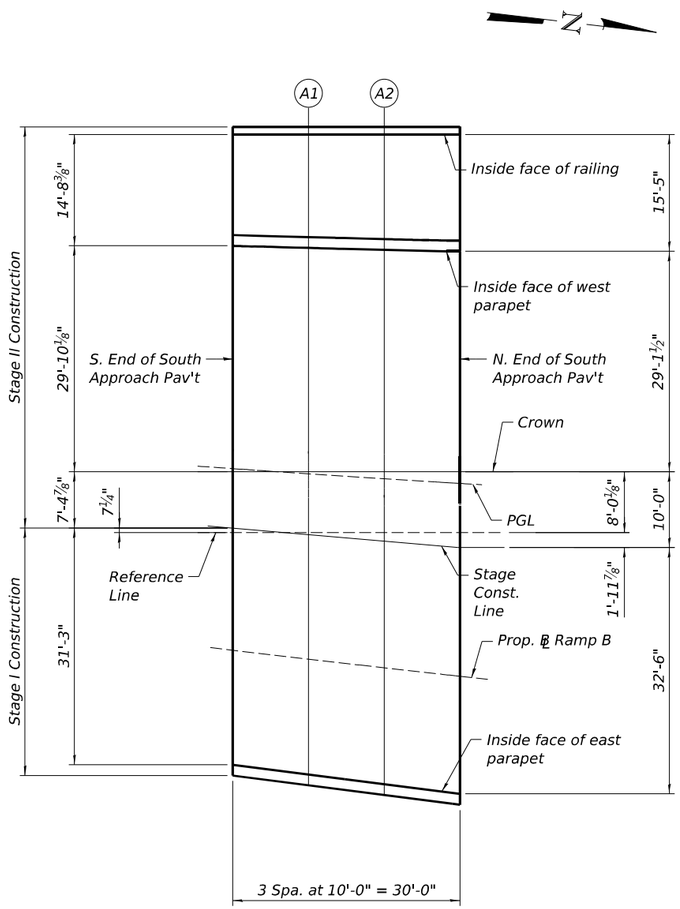

PLAN
(South Approach)

INSIDE FACE OF RAILING

Location	Station	Offset	Theoretical Grade Elevations
S. End South Appr. Pav't.	203+39.05	-44.00	533.50
A1	203+49.15	-44.69	533.73
A2	203+59.26	-45.35	533.97
N. End South Appr. Pav't.	203+69.37	-45.98	534.21

CROWN

Location	Station	Offset	Theoretical Grade Elevations
S. End South Appr. Pav't.	203+42.18	0.44	534.39
A1	203+52.16	-0.24	534.62
A2	203+62.14	-0.90	534.86
N. End South Appr. Pav't.	203+72.12	-1.52	535.10

REFERENCE LINE

Location	Station	Offset	Theoretical Grade Elevations
S. End South Appr. Pav't.	203+42.74	8.42	534.23
A1	203+52.69	7.75	534.46
A2	203+62.65	7.10	534.70
N. End South Appr. Pav't.	203+72.61	6.47	534.94

PROP. ℄ RAMP B

Location	Station	Offset	Theoretical Grade Elevations
S. End South Appr. Pav't.	203+43.80	23.93	533.92
A1	203+53.79	24.43	534.12
A2	203+63.77	24.92	534.34
N. End South Appr. Pav't.	203+73.75	25.40	534.56

INSIDE FACE OF WEST PARAPET

Location	Station	Offset	Theoretical Grade Elevations
S. End South Appr. Pav't.	203+40.09	-29.34	533.80
A1	203+50.17	-29.75	534.03
A2	203+60.25	-30.16	534.27
N. End South Appr. Pav't.	203+70.33	-30.59	534.52

PGL

Location	Station	Offset	Theoretical Grade Elevations
S. End South Appr. Pav't.	203+42.15	0.00	534.38
A1	203+52.17	0.00	534.61
A2	203+62.19	0.00	534.84
N. End South Appr. Pav't.	203+72.21	0.00	535.07

STAGE CONSTRUCTION LINE

Location	Station	Offset	Theoretical Grade Elevations
S. End South Appr. Pav't.	203+42.69	7.82	534.24
A1	203+52.71	8.01	534.45
A2	203+62.72	8.24	534.68
N. End South Appr. Pav't.	203+72.73	8.46	534.90

INSIDE FACE OF EAST PARAPET

Location	Station	Offset	Theoretical Grade Elevations
S. End South Appr. Pav't.	203+44.83	39.00	533.62
A1	203+54.79	39.61	533.82
A2	203+64.73	40.24	534.03
N. End South Appr. Pav't.	203+74.68	40.91	534.25

NOTES:
1. All Elevations and Offsets are in feet.
2. Offsets are measured with respect to the PGL. Negative offsets are left and positive are right of the PGL.

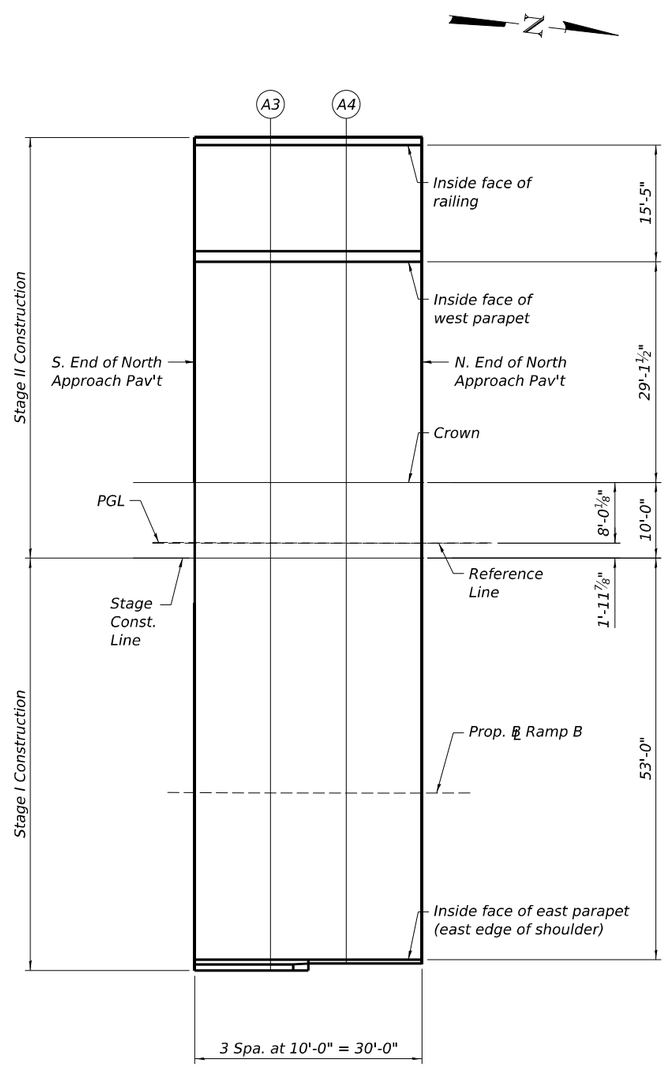

PLAN
(North Approach)

INSIDE FACE OF RAILING

Location	Station	Offset	Theoretical Grade Elevations
S. End North Appr. Pav't.	205+63.43	-52.48	538.70
A3	205+73.59	-52.53	538.93
A4	205+83.74	-52.55	539.16
N. End North Appr. Pav't.	205+93.89	-52.54	539.39

CROWN

Location	Station	Offset	Theoretical Grade Elevations
S. End North Appr. Pav't.	205+63.71	-7.94	539.59
A3	205+73.74	-7.99	539.82
A4	205+83.76	-8.01	540.05
N. End North Appr. Pav't.	205+93.78	-8.00	540.28

REFERENCE LINE

Location	Station	Offset	Theoretical Grade Elevations
S. End North Appr. Pav't.	205+63.76	0.07	539.43
A3	205+73.76	0.02	539.66
A4	205+83.76	0.00	539.89
N. End North Appr. Pav't.	205+93.76	0.01	540.12

PROP. ℄ RAMP B

Location	Station	Offset	Theoretical Grade Elevations
S. End North Appr. Pav't.	205+63.96	33.00	538.78
A3	205+73.87	33.00	539.00
A4	205+83.78	33.00	539.23
N. End North Appr. Pav't.	205+93.68	33.00	539.46

INSIDE FACE OF WEST PARAPET

Location	Station	Offset	Theoretical Grade Elevations
S. End North Appr. Pav't.	205+63.53	-37.07	539.01
A3	205+73.64	-37.11	539.24
A4	205+83.75	-37.13	539.47
N. End North Appr. Pav't.	205+93.85	-37.12	539.70

PGL

Location	Station	Offset	Theoretical Grade Elevations
S. End North Appr. Pav't.	205+63.76	0.00	539.44
A3	205+73.76	0.00	539.66
A4	205+83.76	0.00	539.89
N. End North Appr. Pav't.	205+93.76	0.00	540.12

STAGE CONSTRUCTION LINE

Location	Station	Offset	Theoretical Grade Elevations
S. End North Appr. Pav't.	205+63.78	2.06	539.39
A3	205+73.77	2.01	539.62
A4	205+83.76	1.99	539.85
N. End North Appr. Pav't.	205+93.76	2.00	540.08

INSIDE FACE OF EAST PARAPET

Location	Station	Offset	Theoretical Grade Elevations
S. End North Appr. Pav't.	205+64.10	55.06	538.33
A3	205+73.94	55.01	538.56
A4	205+83.79	54.99	538.79
N. End North Appr. Pav't.	205+93.63	55.00	539.02

NOTES:
1. All Elevations and Offsets are in feet.
2. Offsets are measured with respect to the PGL. Negative offsets are left and positive are right of the PGL.

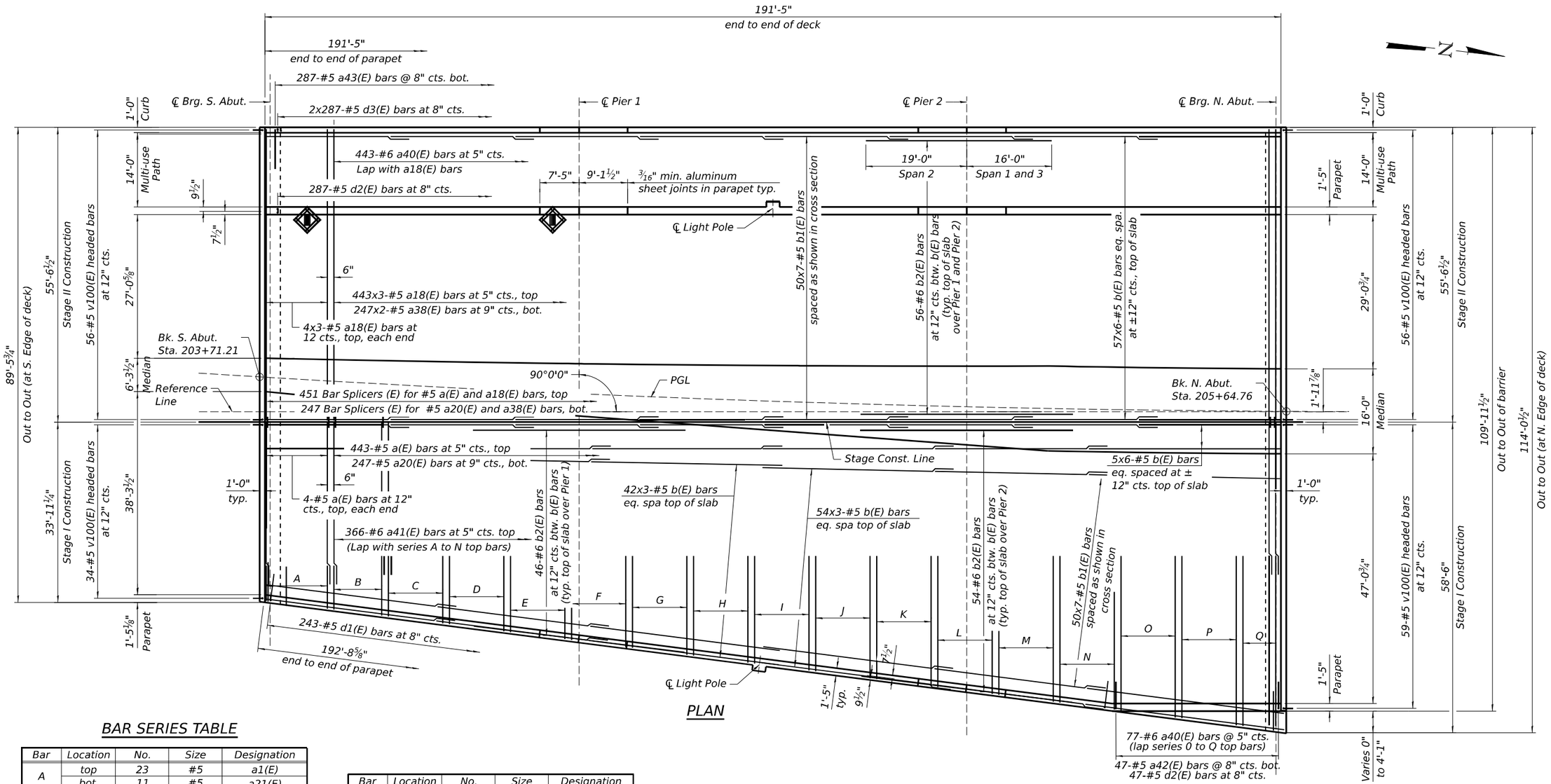

PLAN

BAR SERIES TABLE

Bar	Location	No.	Size	Designation
A	top	23	#5	a1(E)
	bot.	11	#5	a21(E)
B	top	27	#5	a2(E)
	bot.	15	#5	a22(E)
C	top	27	#5	a3(E)
	bot.	15	#5	a23(E)
D	top	27	#5	a4(E)
	bot.	15	#5	a24(E)
E	top	27	#5	a5(E)
	bot.	15	#5	a25(E)
F	top	27	#5	a6(E)
	bot.	15	#5	a26(E)
G	top	27	#5	a7(E)
	bot.	15	#5	a27(E)
H	top	27	#5	a8(E)
	bot.	15	#5	a28(E)
I	top	27	#5	a9(E)
	bot.	15	#5	a29(E)

Bar	Location	No.	Size	Designation
J	top	27	#5	a10(E)
	bot.	15	#5	a30(E)
K	top	27	#5	a11(E)
	bot.	15	#5	a31(E)
L	top	27	#5	a12(E)
	bot.	15	#5	a32(E)
M	top	27	#5	a13(E)
	bot.	15	#5	a33(E)
N	top	27	#5	a14(E)
	bot.	15	#5	a34(E)
O	top	27	#5	a15(E)
	bot.	15	#5	a35(E)
P	top	27	#5	a16(E)
	bot.	15	#5	a36(E)
Q	top	23	#5	a17(E)
	bot.	11	#5	a37(E)

MINIMUM BAR LAP

#5 bar = 3'-6"

NOTES:

1. See sheet SC-23 & SC-24 for superstructure details and Bill of Material.
2. Bars indicated thus 20x3-#5 etc. indicates 20 lines of bars with 3 lengths per line.
3. Space series A to Q as shown in plans. Lap top bars with a(E) bars, and bottom bars with a20(E) bars.

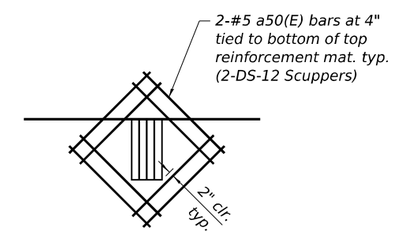

TYPICAL PLAN AT SCUPPERS

Cut longitudinal reinforcement to clear drainage scuppers

MODEL: Default
FILE NAME: 0998306-62F94-S020-DEK01.dgn

WSP USA Inc.
30 N. LASALLE STREET
SUITE 4200
CHICAGO, IL 60602
TEL: (312) 782-8150
FAX: (312) 782-1684

USER NAME = lauxpj	DESIGNED - SJJ / KA	REVISED -	
	CHECKED - LAS	REVISED -	
PLOT SCALE = 0:1.9999 ':" / in.	DRAWN - KA	REVISED -	
PLOT DATE = 12/2/2025	CHECKED - LAS	REVISED -	

STATE OF ILLINOIS
DEPARTMENT OF TRANSPORTATION

DECK PLAN
STRUCTURE NUMBER 099-8306

SHEET SC-20 OF SC-60 SHEETS

F.A.P. RTE.	SECTION	COUNTY	TOTAL SHEETS	SHEET NO.
0846	2017-057F	WILL	1342	849
		CONTRACT NO. 62F94		
		ILLINOIS	FED. AID PROJECT	

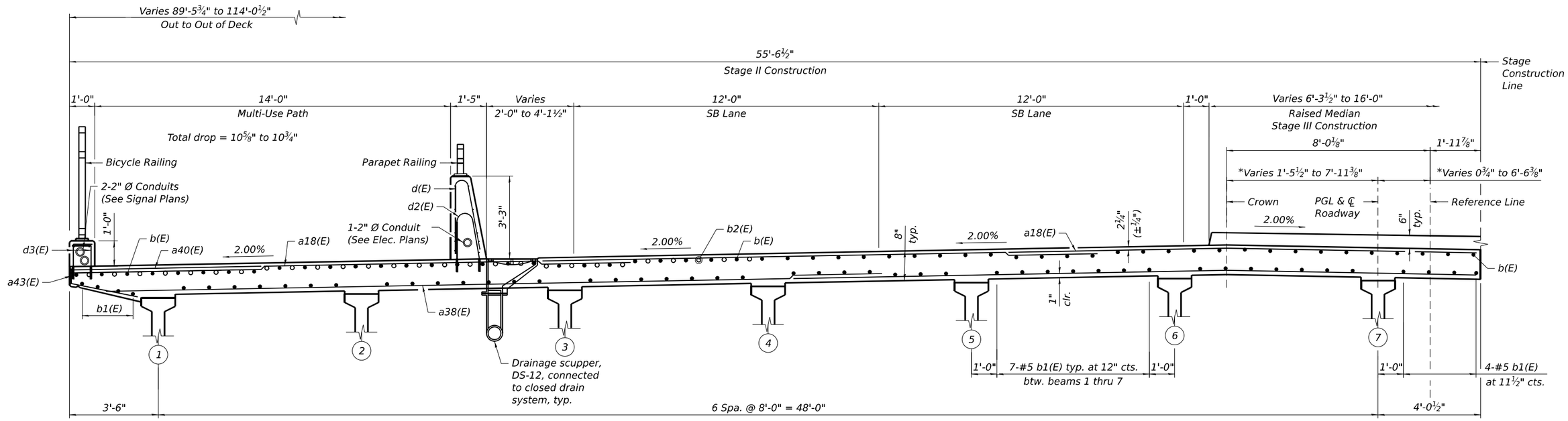

CROSS SECTION
(Looking North)

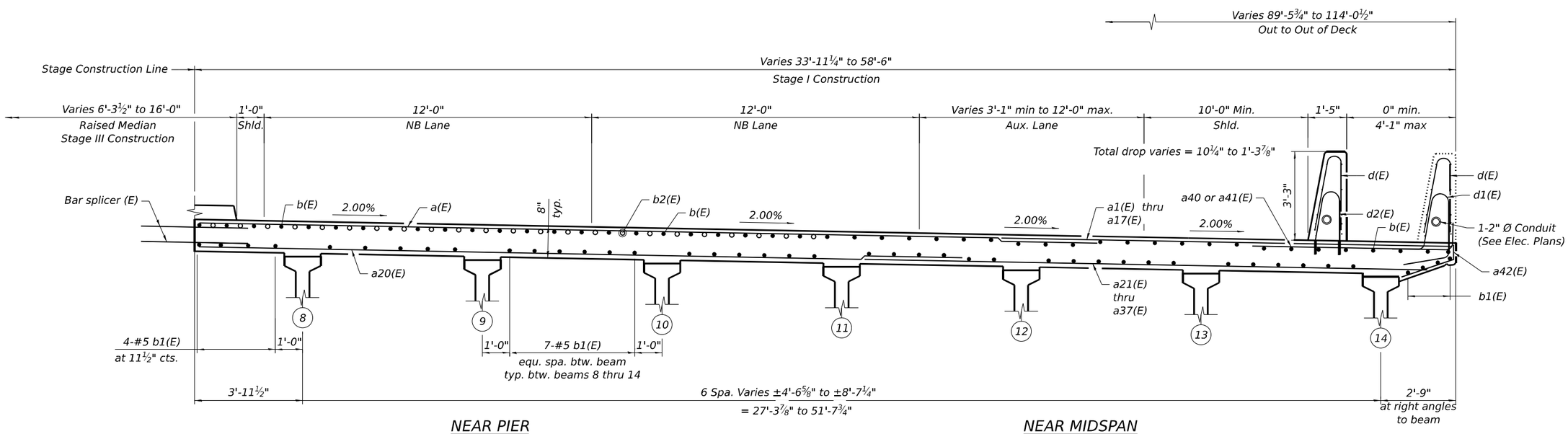

CROSS SECTION
(Looking North)

NOTES:

1. See sheet SC-22 for median rebar and railing details.
2. Dimensions measured perpendicular to Reference Line.

MODEL: Default
FILE NAME: 0998306-62F94-S021-DE002.dgn

WSP USA Inc.
30 N. LASALLE STREET
SUITE 4200
CHICAGO, IL 60602
TEL: (312) 782-8150
FAX: (312) 782-1684

USER NAME = lauxpj	DESIGNED - KA	REVISED -	
	CHECKED - LAS	REVISED -	
PLOT SCALE = 3:11.9981 ':" / in.	DRAWN - KA	REVISED -	
PLOT DATE = 12/2/2025	CHECKED - LAS	REVISED -	

STATE OF ILLINOIS
DEPARTMENT OF TRANSPORTATION

DECK CROSS SECTION
STRUCTURE NUMBER 099-8306

SHEET SC-21 OF SC-60 SHEETS

F.A.P. RTE.	SECTION	COUNTY	TOTAL SHEETS	SHEET NO.
0846	2017-057F	WILL	1342	850

CONTRACT NO. 62F94

ILLINOIS | FED. AID PROJECT

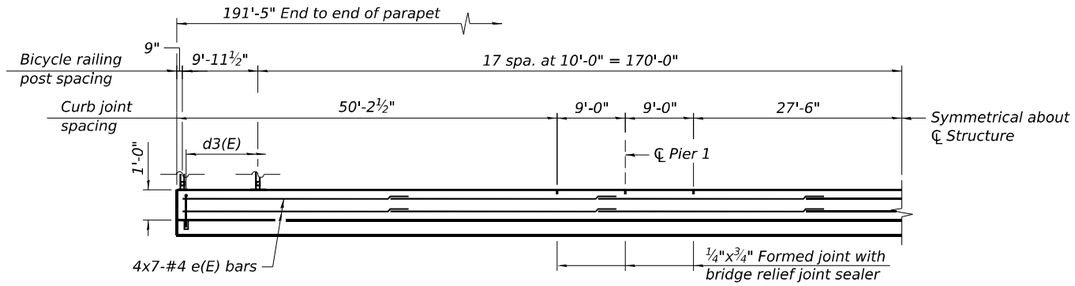

INSIDE ELEVATION OF WEST CURB

(Looking west)

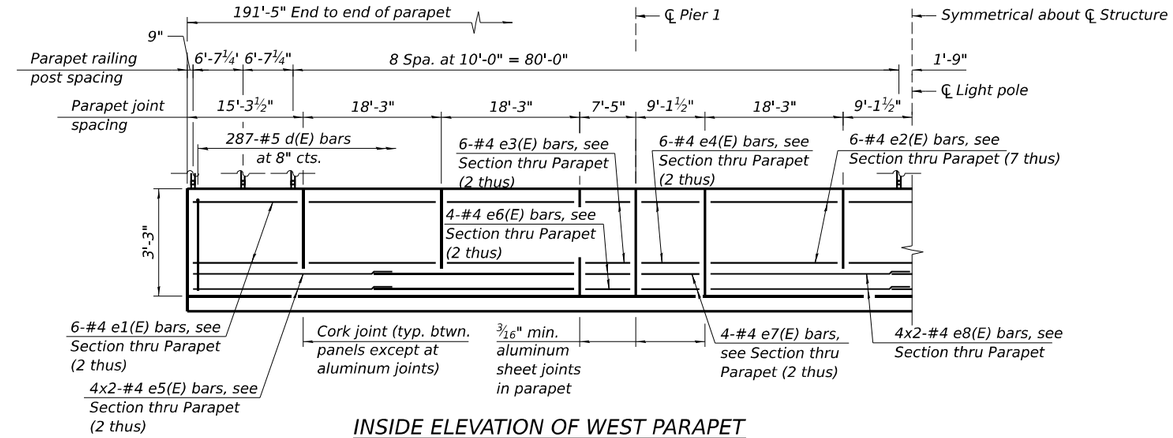

INSIDE ELEVATION OF WEST PARAPET

(Looking west)

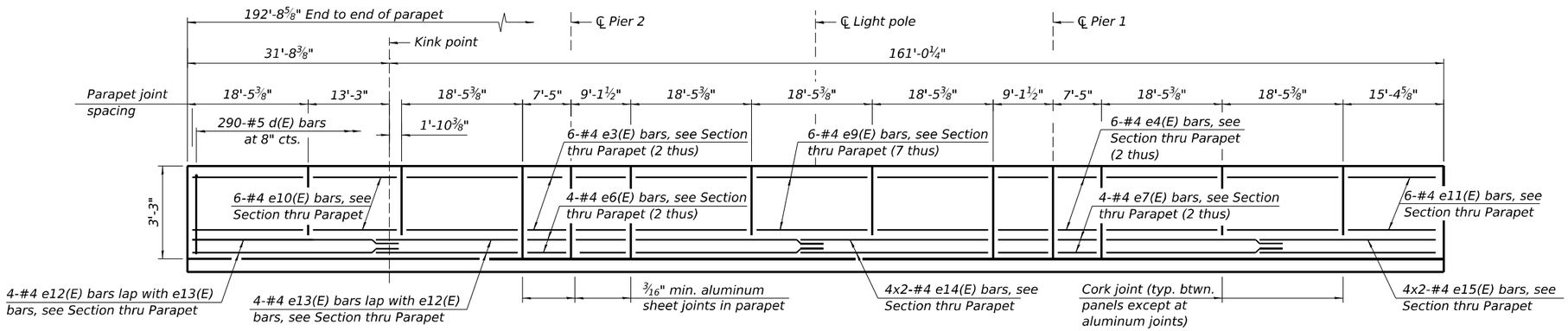

INSIDE ELEVATION OF EAST PARAPET

(Looking east)

MINIMUM BAR LAP

#4 bar = 2'-5"
#5 bar = 3'-6"

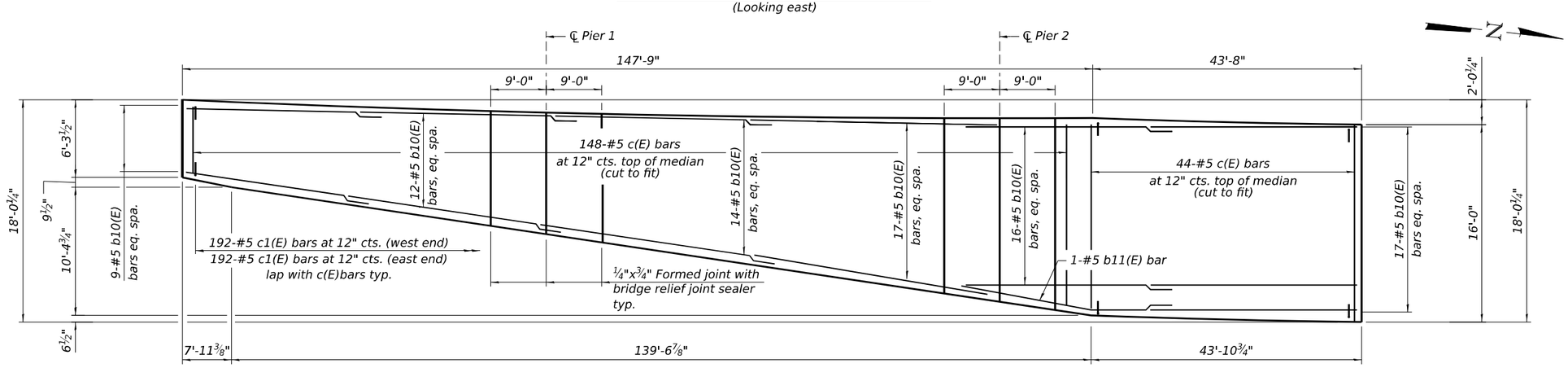

MEDIAN PLAN

NOTES:

1. For median geometry, see sheet SC-3 and SC-20.
2. b10(E) bars at curb to be furnished straight and sprung into place to fit in span 3.
3. Bars indicated thus 1 x 2-#4 etc.indicates 1 line bars with 2 lengths per line.

MODEL: Default
FILE NAME: 0998306-62F94-S022-DE003.dgn

WSP USA Inc.
30 N. LASALLE STREET
SUITE 4200
CHICAGO, IL 60602
TEL: (312) 782-8150
FAX: (312) 782-1684

USER NAME = lauxpj	DESIGNED - KA	REVISED -	
	CHECKED - LAS	REVISED -	
PLOT SCALE = 0:1.9999 ':" / in.	DRAWN - KA	REVISED -	
PLOT DATE = 12/2/2025	CHECKED - LAS	REVISED -	

STATE OF ILLINOIS
DEPARTMENT OF TRANSPORTATION

PARAPET AND MEDIAN DETAILS
STRUCTURE NUMBER 099-8306

SHEET SC-22 OF SC-60 SHEETS

F.A.P. RTE.	SECTION	COUNTY	TOTAL SHEETS	SHEET NO.
0846	2017-057F	WILL	1342	851
		CONTRACT NO. 62F94		
	ILLINOIS	FED. AID PROJECT		

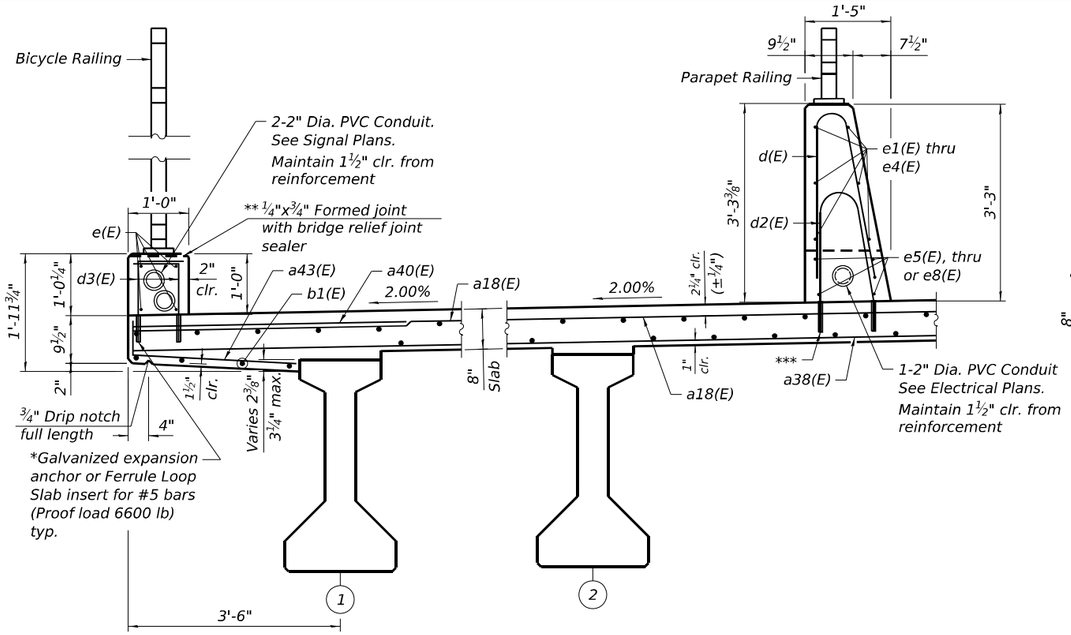

SECTION THRU WEST PARAPET

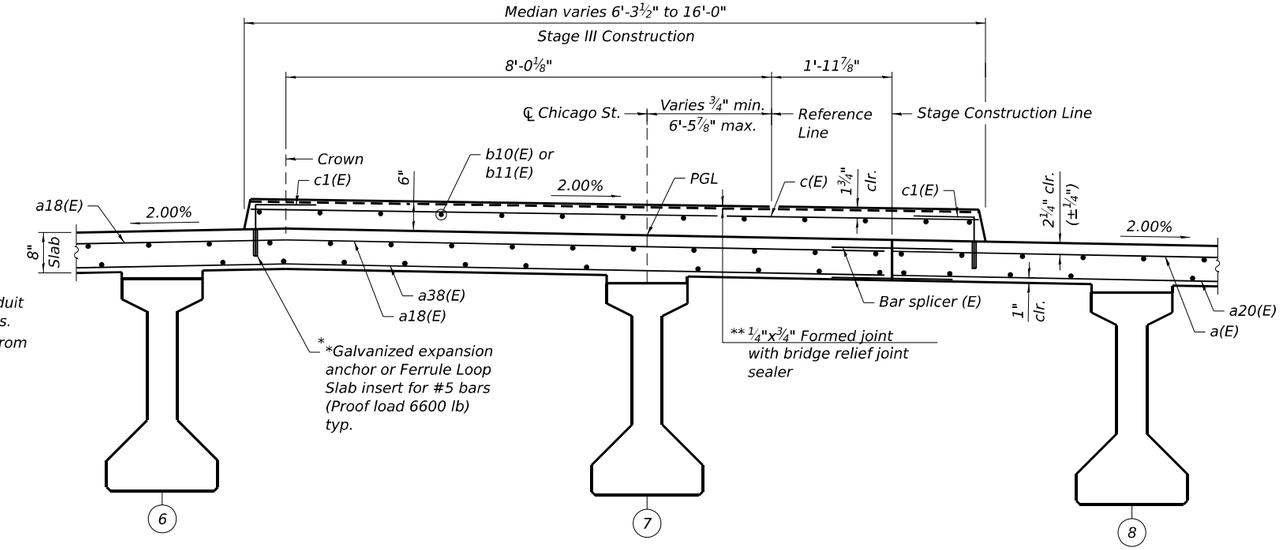

SECTION THRU MEDIAN

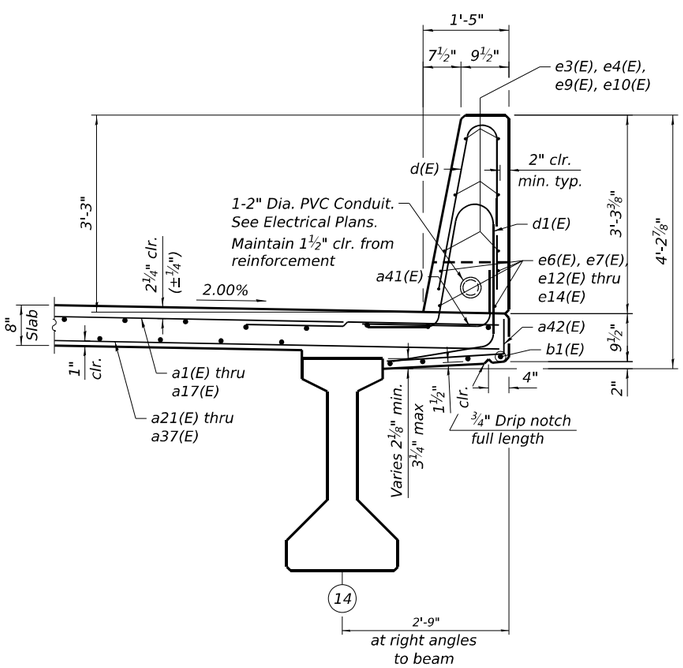

SECTION THRU EAST PARAPET

(Typical btwn. Sta. 203+71.21 to 205+32.89)

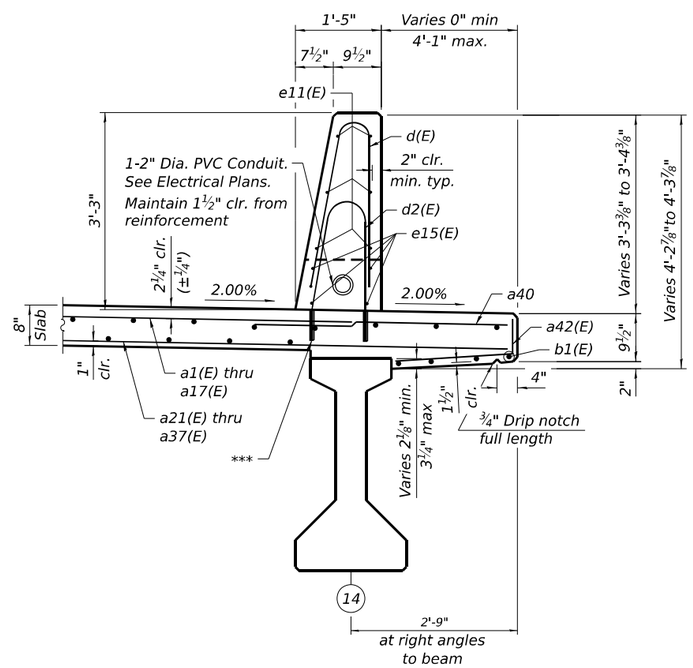

SECTION THRU EAST PARAPET

(Typical btwn. Sta. 205+32.89 to 205+64.76)

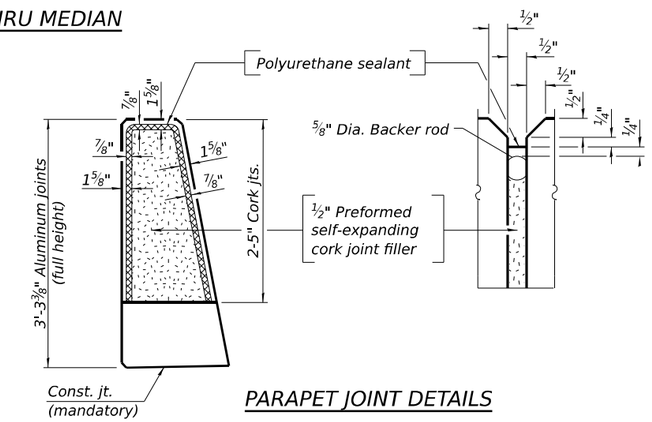

PARAPET JOINT DETAILS

NOTES:

The 3/16" min. aluminum sheet shall be ASTM B 209 alloy 3003-H14 and coated with 5 mils of either bitumen paint or epoxy paint to minimize reaction with wet concrete. Cost included with Concrete Superstructure.

The polyurethane sealant shall be according to Article 1050.04 of the Std. Spec. and the color shall be gray.

* The cost of expansion anchors / inserts is included in the cost of Reinforcement Bars, Epoxy Coated.

** Full width along joint - backer rod not required

*** Drill and set #5 d1(E), #5 d3(E), and c1(E) bars according to Article 509.06 of the Standard Specifications. Drilled holes shall be roughened or scored per manufacturer's recommendations. Maximum depth of hole shall not exceed 6". Contractor shall take all necessary precautions to prevent drilled hole interference with deck reinforcement bars. Locate longitudinal bars to miss drilled locations. Locate drilled holes to miss transverse bars in deck.

WSP USA Inc.
30 N. LASALLE STREET
SUITE 4200
CHICAGO, IL 60602
TEL: (312) 782-8150
FAX: (312) 782-1684

USER NAME = lauxpj	DESIGNED - KA	REVISED -	
	CHECKED - LAS	REVISED -	
PLOT SCALE = 0:1.9999 ':" / in.	DRAWN - KA	REVISED -	
PLOT DATE = 12/2/2025	CHECKED - LAS	REVISED -	

STATE OF ILLINOIS
DEPARTMENT OF TRANSPORTATION

SUPERSTRUCTURE DETAILS 1
STRUCTURE NUMBER 099-8306

SHEET SC-23 OF SC-60 SHEETS

F.A.P. RTE.	SECTION	COUNTY	TOTAL SHEETS	SHEET NO.
0846	2017-057F	WILL	1342	852
		CONTRACT NO. 62F94		
	ILLINOIS	FED. AID PROJECT		

MODEL: Default
FILE NAME: 0998306-62F94-S023-DE604.dgn

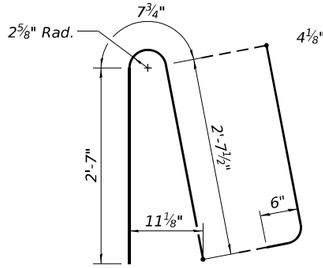

BAR d(E)

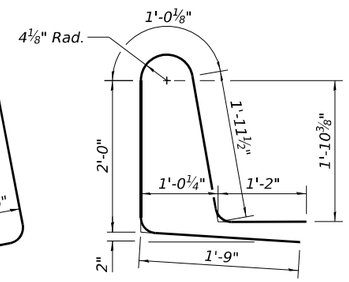

BAR d1(E)

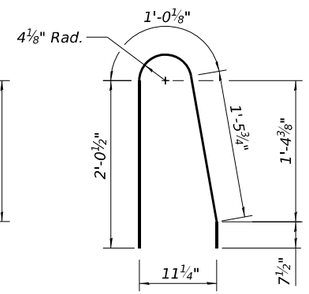

BAR d2(E)

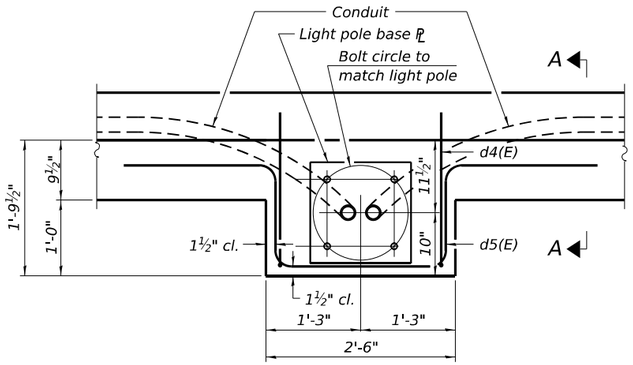

PLAN

Note:
Cost of anchor rods is included with Concrete Superstructure.

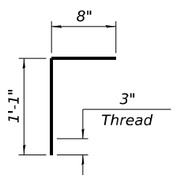

BAR d3(E)

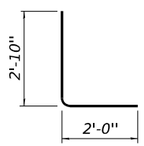

BAR d4(E)

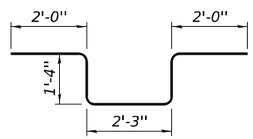

BAR d5(E)

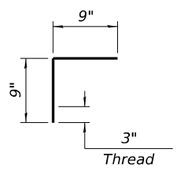

BAR c1(E)

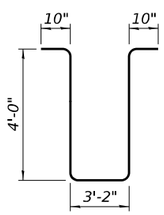

BAR s20(E)

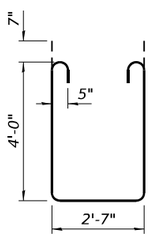

BAR s11(E)

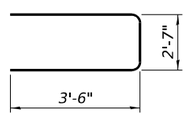

BARS s10(E)

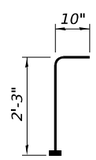

BAR v100(E)
(Headed. 205-#5 Bar terminators)

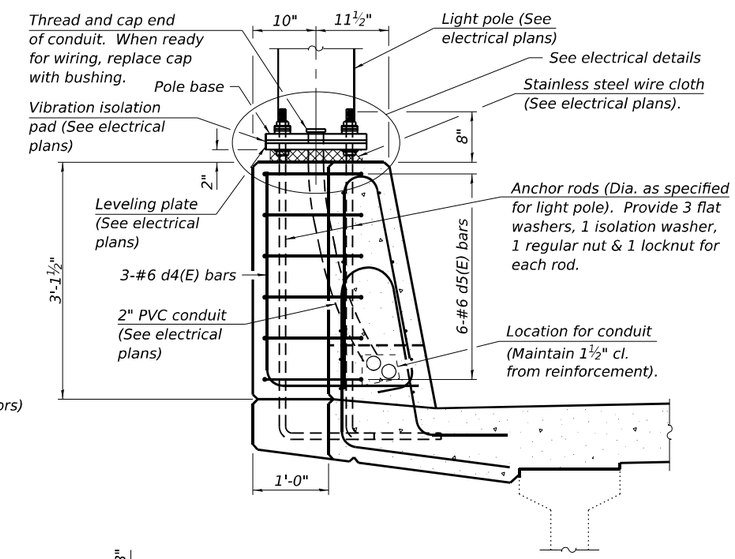

SECTION A-A

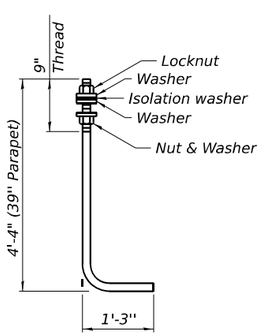

ANCHOR RODS

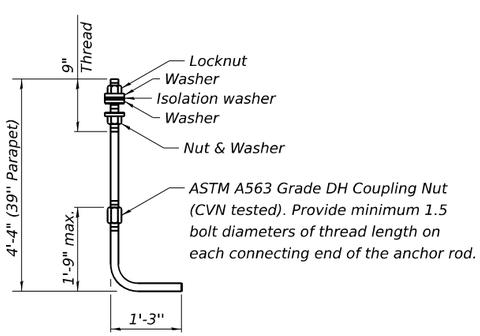

ALTERNATE ANCHOR ROD

Diameter as specified for light poles. (ASTM F 1554 Grade 105) Full length hot dipped galvanized.

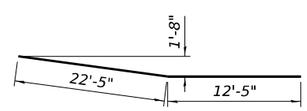

b11(E)

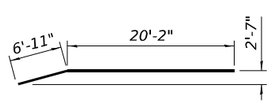

BAR e13(E)

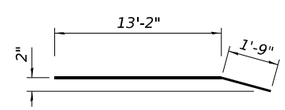

BAR e10(E)

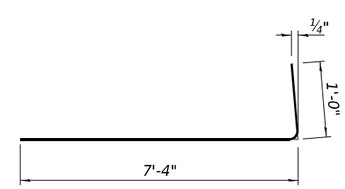

BAR a41(E)

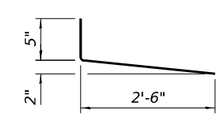

BAR a43(E)

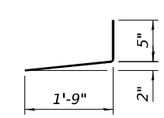

BAR a42(E)

SUPERSTRUCTURE BILL OF MATERIAL

Bar	No.	Size	Length	Shape
a(E)	451	#5	30'-0"	
a1(E)	23	#5	8'-7"	
a2(E)	27	#5	10'-0"	
a3(E)	27	#5	11'-6"	
a4(E)	27	#5	12'-11"	
a5(E)	27	#5	14'-5"	
a6(E)	27	#5	15'-10"	
a7(E)	27	#5	17'-4"	
a8(E)	27	#5	18'-9"	
a9(E)	27	#5	20'-2"	
a10(E)	27	#5	21'-8"	
a11(E)	27	#5	23'-1"	
a12(E)	27	#5	24'-7"	
a13(E)	27	#5	26'-0"	
a14(E)	27	#5	27'-6"	
a15(E)	27	#5	28'-11"	
a16(E)	27	#5	30'-4"	
a17(E)	23	#5	31'-10"	
a18(E)	1353	#5	20'-9"	
a20(E)	247	#5	20'-0"	
a21(E)	11	#5	18'-7"	
a22(E)	15	#5	20'-0"	
a23(E)	15	#5	21'-6"	
a24(E)	15	#5	22'-11"	
a25(E)	15	#5	24'-5"	
a26(E)	15	#5	25'-10"	
a27(E)	15	#5	27'-4"	
a28(E)	15	#5	28'-9"	
a29(E)	15	#5	30'-2"	
a30(E)	15	#5	31'-8"	
a31(E)	15	#5	33'-1"	
a32(E)	15	#5	34'-7"	
a33(E)	15	#5	36'-0"	
a34(E)	15	#5	37'-6"	
a35(E)	15	#5	38'-11"	
a36(E)	15	#5	40'-4"	
a37(E)	11	#5	41'-10"	
a38(E)	494	#5	29'-5"	
a40(E)	520	#6	7'-4"	
a41(E)	366	#6	8'-4"	
a42(E)	47	#5	2'-2"	
a43(E)	287	#5	2'-11"	
a50(E)	16	#5	1'-6"	
b(E)	660	#5	35'-1"	
b1(E)	700	#5	30'-6"	
b2(E)	212	#6	35'-0"	
b10(E)	85	#5	34'-10"	
b11(E)	1	#5	34'-10"	
c(E)	192	#5	15'-8"	
c1(E)	384	#5	1'-6"	

SUPERSTRUCTURE BILL OF MATERIAL

Bar	No.	Size	Length	Shape
d(E)	577	#5	6'-5"	
d1(E)	243	#5	7'-11"	
d2(E)	334	#5	5'-2"	
d3(E)	574	#5	1'-9"	
d4(E)	6	#6	4'-10"	
d5(E)	12	#6	8'-11"	
e(E)	28	#4	29'-4"	
e1(E)	12	#4	14'-11"	
e2(E)	42	#4	17'-11"	
e3(E)	24	#4	7'-1"	
e4(E)	24	#4	8'-9"	
e5(E)	8	#4	26'-11"	
e6(E)	16	#4	7'-1"	
e7(E)	16	#4	8'-9"	
e8(E)	4	#4	28'-5"	
e9(E)	42	#4	18'-1"	
e10(E)	6	#4	14'-11"	
e11(E)	6	#4	15'-0"	
e12(E)	4	#4	27'-1"	
e13(E)	4	#4	27'-1"	
e14(E)	8	#4	28'-8"	
e15(E)	8	#4	27'-2"	
m(E)	56	#6	4'-0"	
m10(E)	4	#6	33'-7"	
m11(E)	16	#6	30'-0"	
m12(E)	8	#6	31'-6"	
m13(E)	4	#6	2'-2"	
m14(E)	12	#6	3'-8"	
m15(E)	8	#6	3'-4"	
m16(E)	24	#6	7'-2"	
m17(E)	4	#6	2'-11"	
m18(E)	2	#6	1'-6"	
m19(E)	6	#6	2'-4"	
m20(E)	4	#6	2'-8"	
m21(E)	12	#6	5'-10"	
m22(E)	2	#6	2'-3"	
m23(E)	12	#6	7'-9"	
m24(E)	6	#6	6'-5"	
m30(E)	24	#6	4'-11"	
m31(E)	16	#6	3'-5"	
m32(E)	48	#6	7'-2"	
m33(E)	24	#6	6'-6"	
m34(E)	12	#6	3'-7"	
m35(E)	8	#6	2'-9"	
m36(E)	24	#6	5'-10"	
m37(E)	12	#6	5'-2"	
m38(E)	56	#6	4'-0"	
s10(E)	158	#5	9'-7"	
s11(E)	158	#5	11'-9"	
s20(E)	166	#5	12'-10"	
v100(E)	205	#5	3'-1"	
Reinforcement Bars, Epoxy Coated		Lbs.	179,050	
Concrete Superstructure		Cu. Yds.	811.6	
Bridge Deck Grooving		Sq. Yd.	1,675	
Protective Coat		Sq. Yd.	2,441	

NOTES:

1. Bar terminators, paid for separately. See Total Bill of Material.

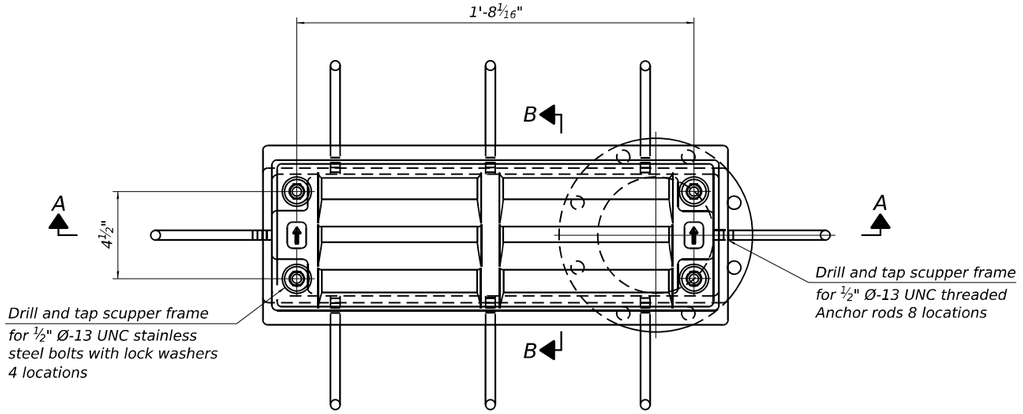

PLAN

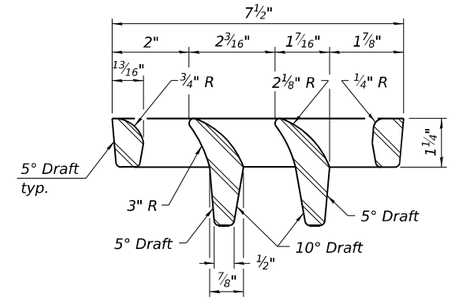

VANE GRATE DETAIL

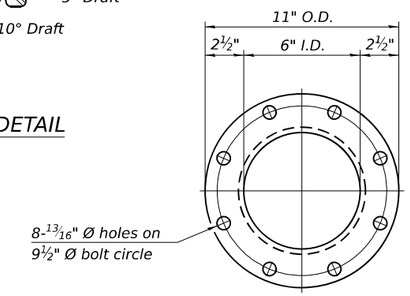

Notes:

All cast iron parts shall be gray iron conforming to the requirements of AASHTO M105, Class 35B and AASHTO M306.

Bolts, anchor rods, nuts and washers shall be according to ASTM A307 and shall be galvanized according to AASHTO M232. As an alternate stainless steel may be used.

Stainless steel hardware shall be according to Article 1006.29(d) of the Standard Specifications.

Structural steel weldments of equal sections and of the same configuration may be substituted for the cast iron scupper frames and downspouts; however, the scupper grates shall remain cast iron. Fillet or full penetration welds shall be used for the weldments. Details shall be submitted to the Engineer for approval.

Structural steel scupper frames and downspouts, when utilized, shall be galvanized according to AASHTO M111.

As an alternate, fiberglass may be used for downspouts according to ASTM D2996 with a short-time rupture strength hoop tensile stress of 30,000 psi min. in lieu of the cast iron or structural steel.

Exterior surfaces of downspouts and exterior exposed surfaces of the scupper frame below deck shall be pigmented or painted to match the color of the adjacent beam.

The Contractor shall take appropriate measures to assure that Protective Coat is not applied to the scupper.

Cost of the grate, frame, downspout, anchor rods, nuts and washers including complete installation of the scupper shall be paid for at the contract unit price for Drainage Scuppers, DS-12.

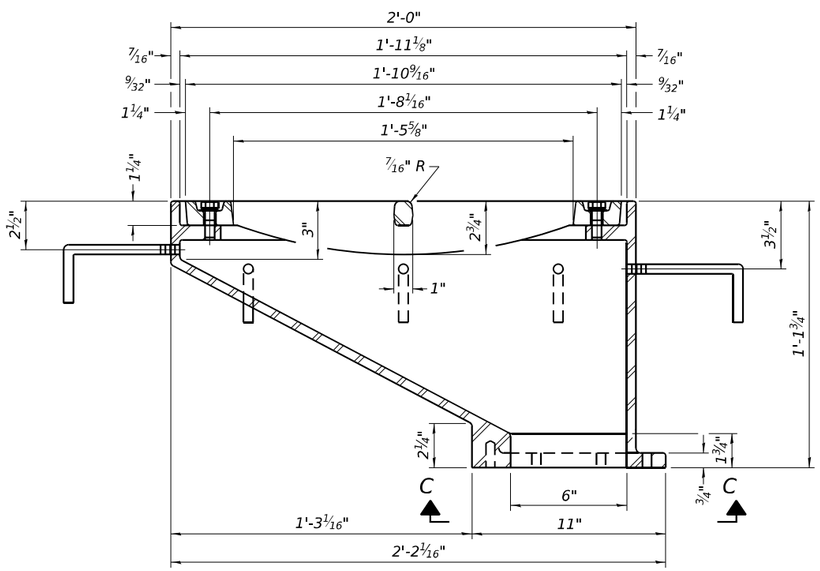

SECTION A-A

See sheet SC-21 for scupper location relative to parapet.

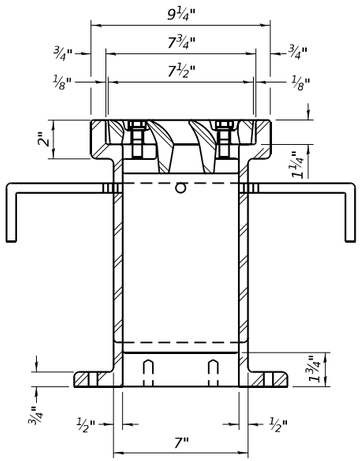

SECTION B-B

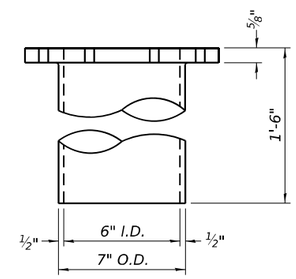

DOWNSPOUT

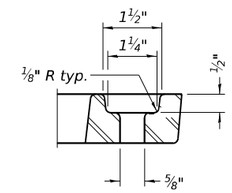

GRATE BOLT HOLE DETAIL

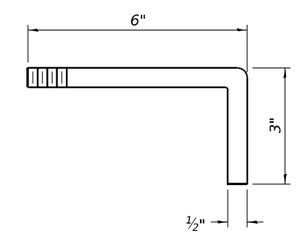

ANCHOR ROD DETAIL

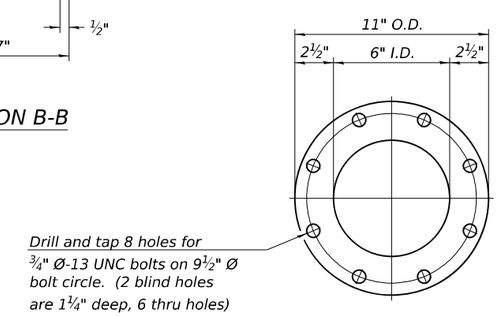

VIEW C-C

BILL OF MATERIAL

ITEM	UNIT	QUANTITY
Drainage Scuppers, DS-12	Each	2

DS-12 5-15-2023

MODEL: Default
FILE NAME: 0998306-62F94-S025-DS12.dgn

WSP USA Inc.
30 N. LASALLE STREET
SUITE 4200
CHICAGO, IL 60602
TEL: (312) 782-8150
FAX: (312) 782-1684

USER NAME = lauxpj	DESIGNED - BK	REVISED -	
	CHECKED - LAS	REVISED -	
PLOT SCALE = 0:1.9999 ':" / in.	DRAWN - BK	REVISED -	
PLOT DATE = 12/2/2025	CHECKED - LAS	REVISED -	

STATE OF ILLINOIS
DEPARTMENT OF TRANSPORTATION

DRAINAGE SCUPPER, DS-12
STRUCTURE NUMBER 099-8306

SHEET SC-25 OF SC-60 SHEETS

F.A.P. RTE.	SECTION	COUNTY	TOTAL SHEETS	SHEET NO.
0846	2017-057F	WILL	1342	854

CONTRACT NO. 62F94

ILLINOIS FED. AID PROJECT

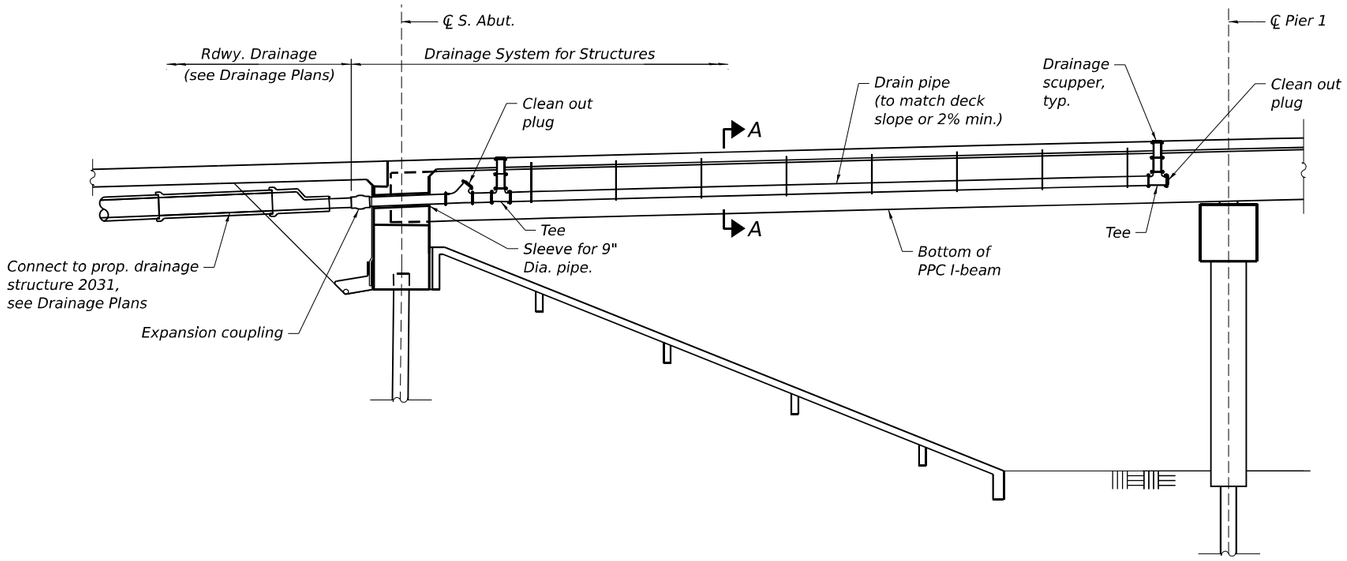

ELEVATION

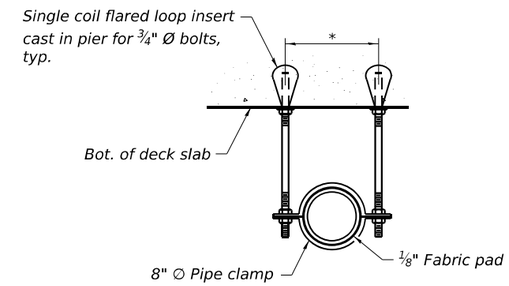

SECTION A-A

*Dimension as required
by pipe clamp

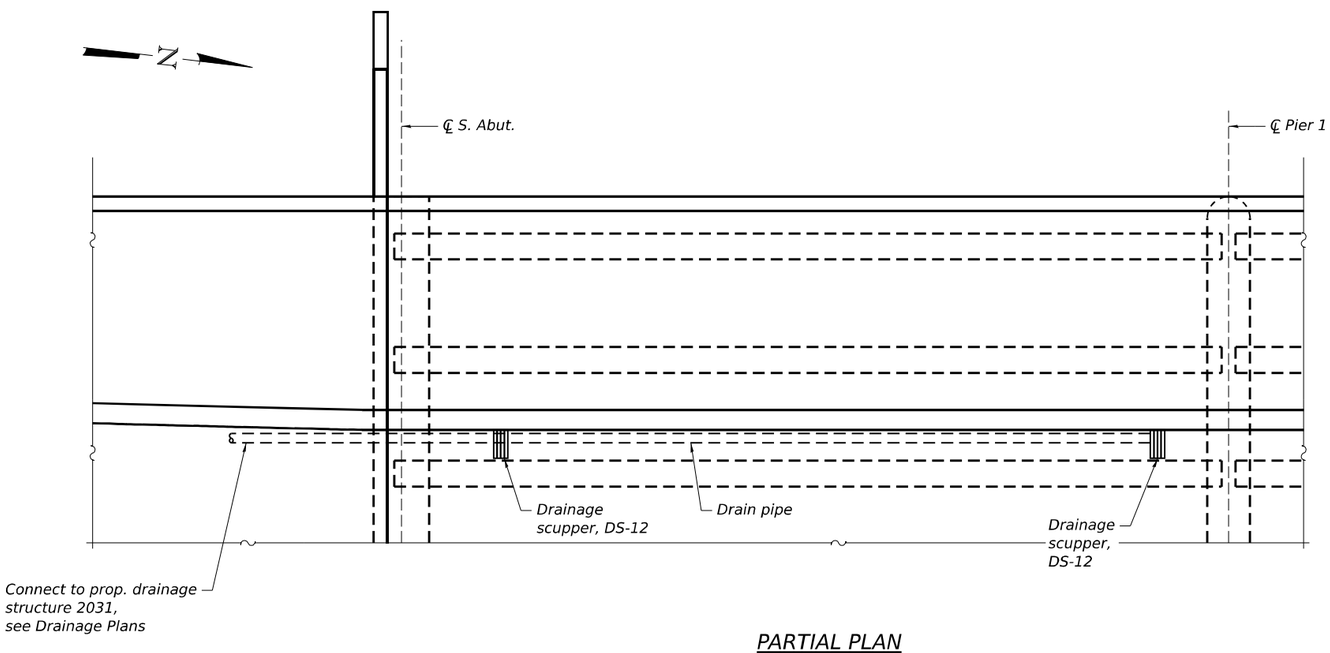

PARTIAL PLAN

NOTE:

1. Provide structural support from proposed deck slab for drain pipe per manufacturer's recommendation, not to exceed 6' cts. Cost included with "Drainage System for Structures".
2. All pipes, pipe fittings and brackets needed shall be included with the cost of "Drainage System for Structures".
3. Drain pipes and fittings shall be 8" ∅.
4. Bolt pattern and size in drain pipe flange to match scupper flange.
5. Drainage system shall connect to drainage structure. See Drainage Schedule for stationing and offset of drainage structure.

BILL OF MATERIAL

ITEM	UNIT	TOTAL
Drainage System for Structures	L. Sum	1

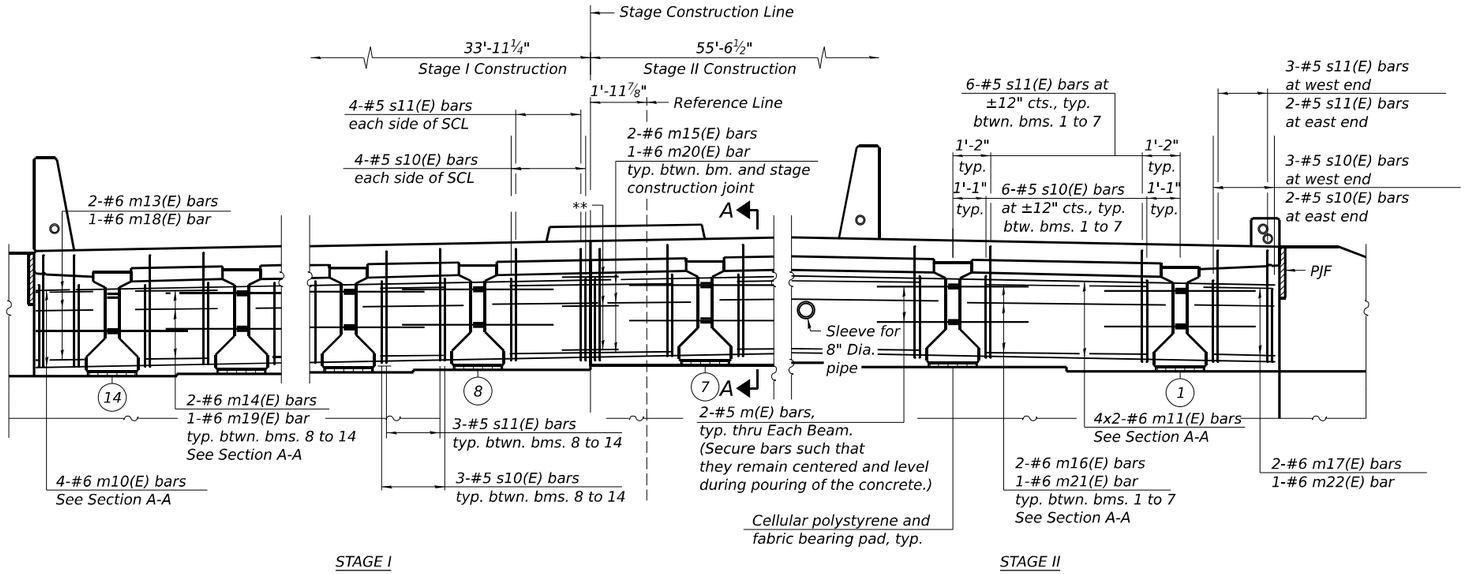

DIAPHRAGM AT SOUTH ABUTMENT

(Looking South)

** 2 Bar Splicers (E) for #6 m15(E) bars
1 Bar Splicers (E) for #6 m20(E) bars
4 Bar Splicers (E) for #6 m10(E) and m11(E) bars

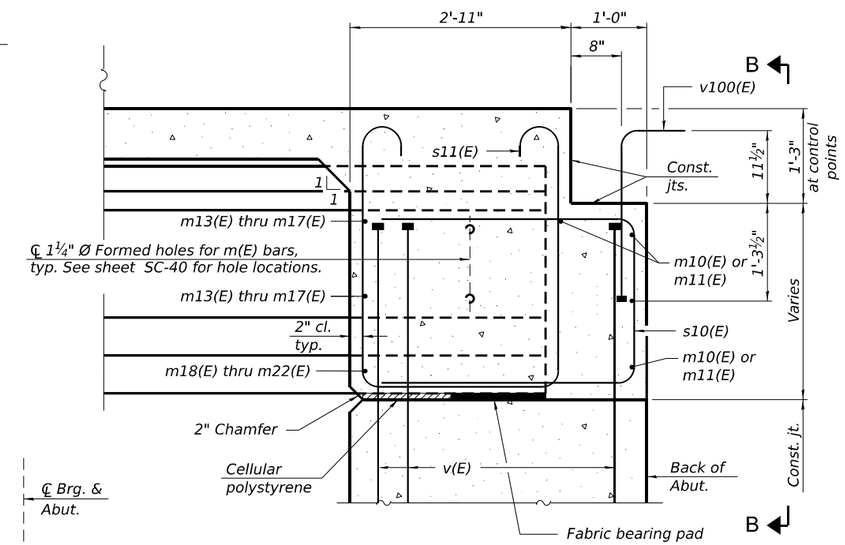

SECTION A-A

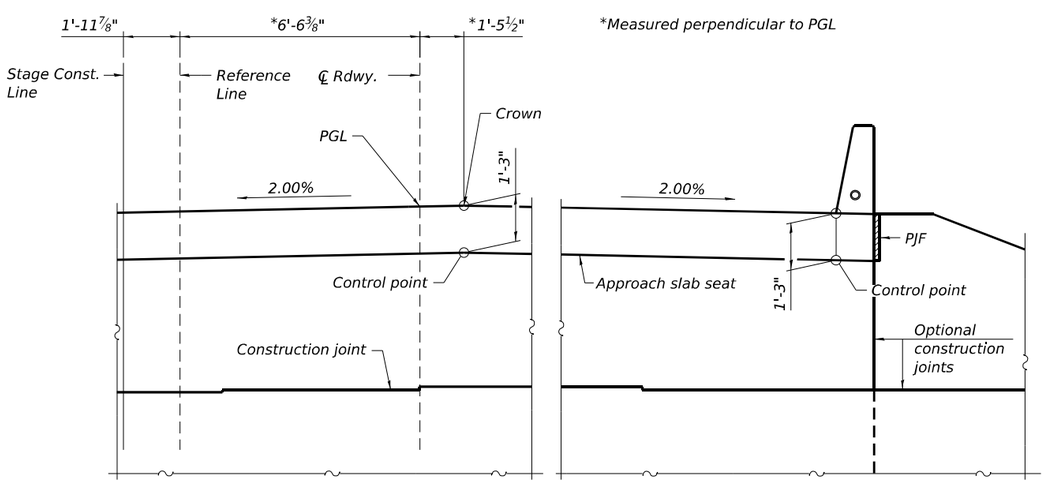

VIEW B-B

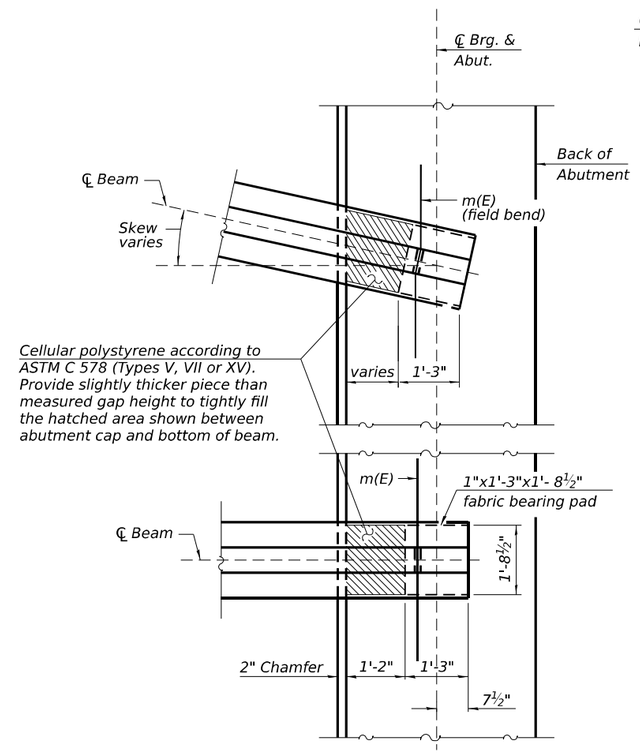

PLAN AT SOUTH ABUTMENT

(Showing bottom flange of beam)

MINIMUM BAR LAP

#6 bar = 4'-9"

NOTES:

1. See sheet SC-23 for PJF details.
2. See sheet SC-24 for Superstructure details and Bill of Material.
3. The approach slab seat shall have a constant slope determined from the control points shown.
4. Cost of cellular polystyrene is included with Concrete Superstructure.

MODEL: Default
FILE NAME: 0998306-62F94-S027-DBA01.dgn

WSP USA Inc.
30 N. LASALLE STREET
SUITE 4200
CHICAGO, IL 60602
TEL: (312) 782-8150
FAX: (312) 782-1684

USER NAME = lauxpj	DESIGNED - KA	REVISED -	STATE OF ILLINOIS DEPARTMENT OF TRANSPORTATION
	CHECKED - LAS	REVISED -	
PLOT SCALE = 5:3.9974 ':" / in.	DRAWN - KA	REVISED -	
PLOT DATE = 12/2/2025	CHECKED - LAS	REVISED -	

DIAPHRAGM - SOUTH ABUTMENT
STRUCTURE NUMBER 099-8306
SHEET SC-27 OF SC-60 SHEETS

F.A.P. RTE.	SECTION	COUNTY	TOTAL SHEETS	SHEET NO.
0846	2017-057F	WILL	1342	856
		CONTRACT NO. 62F94		
		ILLINOIS	FED. AID PROJECT	

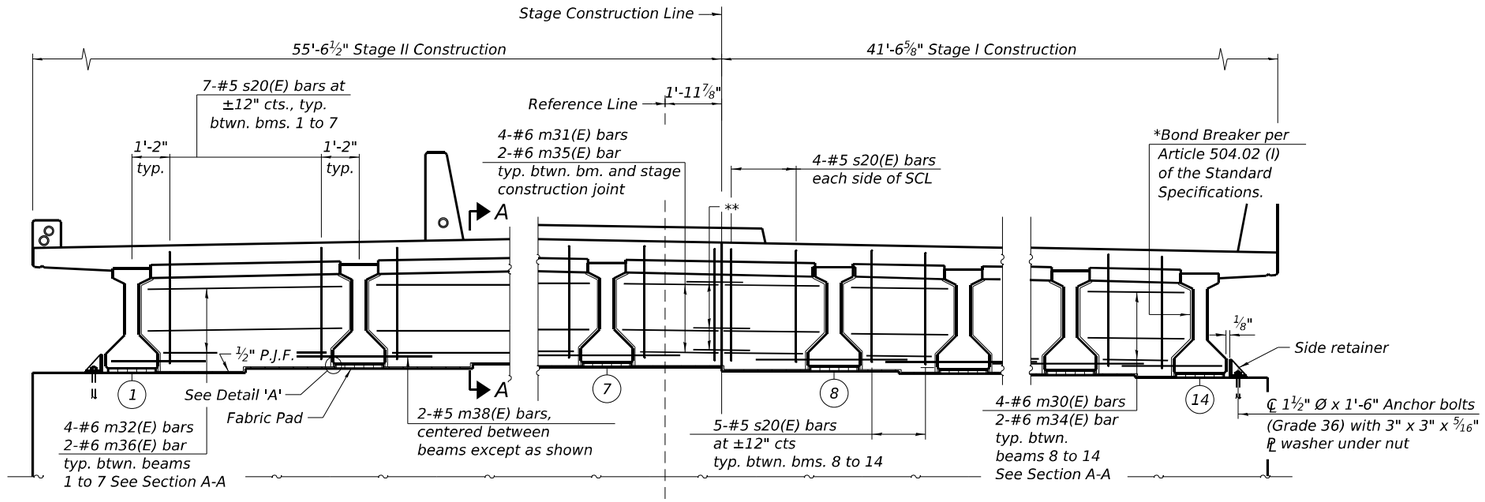

STAGE II

STAGE I

DIAPHRAGM AT PIER 1

*Bonded to sides of beams embedded into diaphragm.
(Looking North)

** 4 Bar Splicers (E) for #6 m31(E) bars
2 Bar Splicers (E) for #6 m35(E) bars

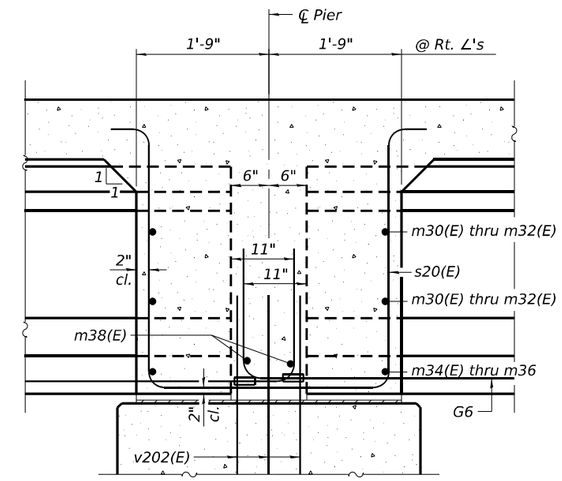

SECTION A-A

(Dimensions along ℄ of beam except as shown)

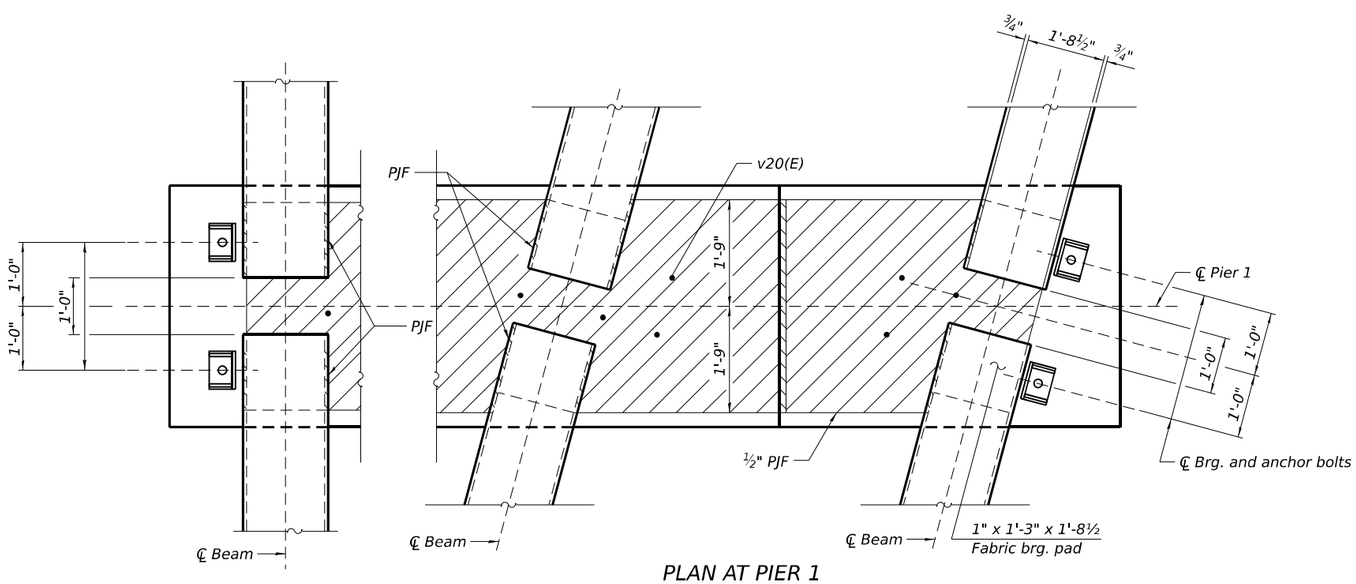

PLAN AT PIER 1

(Showing bearing pads and PJF details)

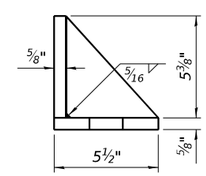

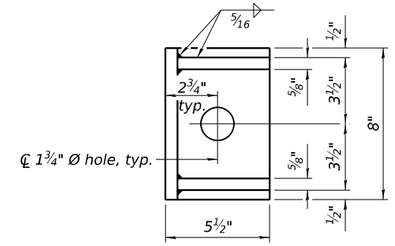

SIDE RETAINER

(2 required each side of pier).
Equivalent rolled angle with stiffeners will be allowed in lieu of welded plates.

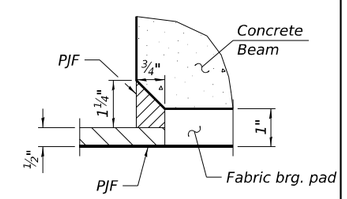

DETAIL 'A'

Notes:
See sheet SC-24 for Bill of Material.
Cost of side retainer and anchor bolts shall be included with Concrete Structures.
The s20(E) bars shall be placed parallel to the beams. Spacing for these bars shall be at right angles to the beams.
Anchor bolts and side retainers shall be according to Article 521.06 of the Standard Specifications. Side retainers shall be hot dip galvanized.
Anchor bolts and side retainers shall be installed as each exterior beam is erected unless an equivalent temporary means of lateral restraint is used.

MODEL: Default
FILE NAME: 0998306-62F94-S028-DM02.dgn

WSP USA Inc.
30 N. LASALLE STREET
SUITE 4200
CHICAGO, IL 60602
TEL: (312) 782-8150
FAX: (312) 782-1684

USER NAME = lauxpj	DESIGNED - KA	REVISED -	
	CHECKED - LAS	REVISED -	
PLOT SCALE = 7:11.9962 ':" / in.	DRAWN - KA	REVISED -	
PLOT DATE = 12/2/2025	CHECKED - LAS	REVISED -	

STATE OF ILLINOIS
DEPARTMENT OF TRANSPORTATION

DIAPHRAGM - PIER 1
STRUCTURE NUMBER 099-8306

SHEET SC-28 OF SC-60 SHEETS

F.A.P. RTE.	SECTION	COUNTY	TOTAL SHEETS	SHEET NO.
0846	2017-057F	WILL	1342	857
		CONTRACT NO. 62F94		
		ILLINOIS	FED. AID PROJECT	

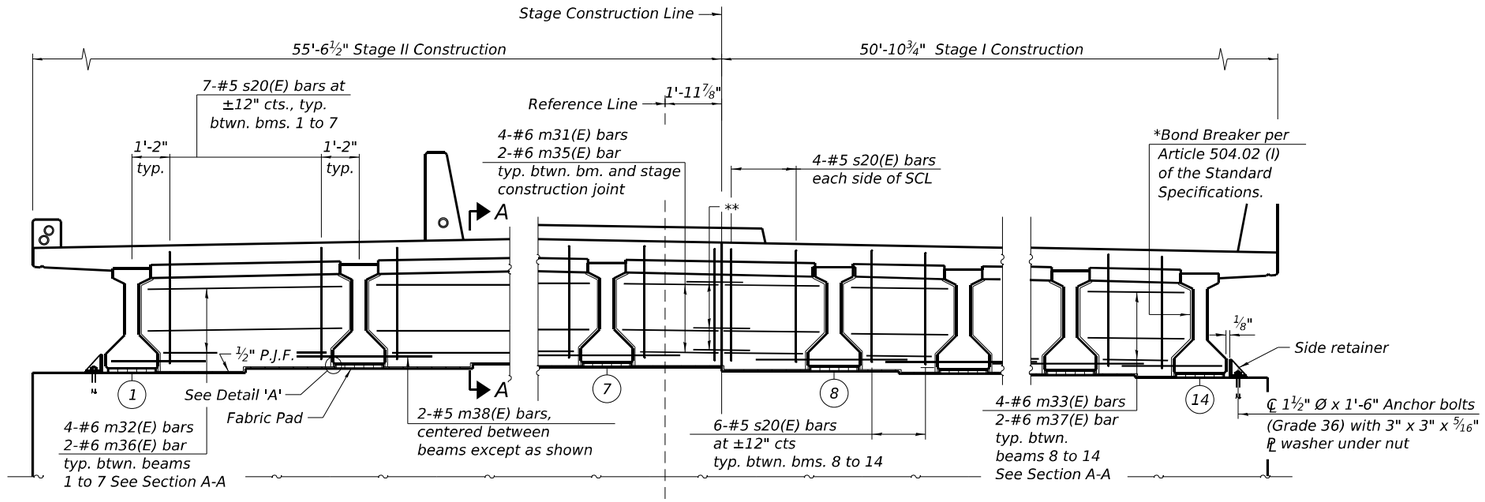

DIAPHRAGM AT PIER 2

*Bonded to sides of beams embedded into diaphragm.
(Looking North)

** 4 Bar Splicers (E) for #6 m31(E) bars
2 Bar Splicers (E) for #6 m35(E) bars

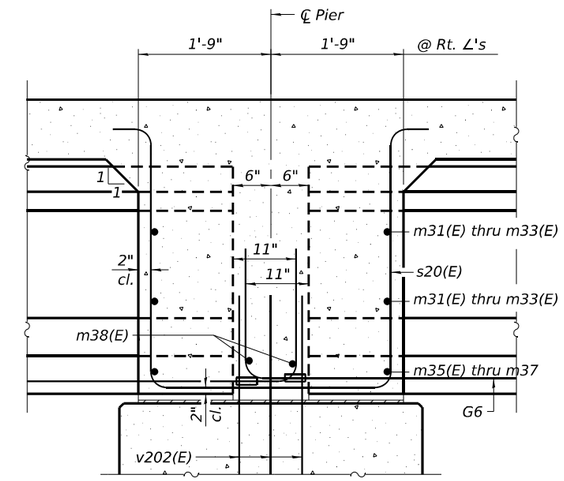

SECTION A-A

(Dimensions along ℄ of beam except as shown)

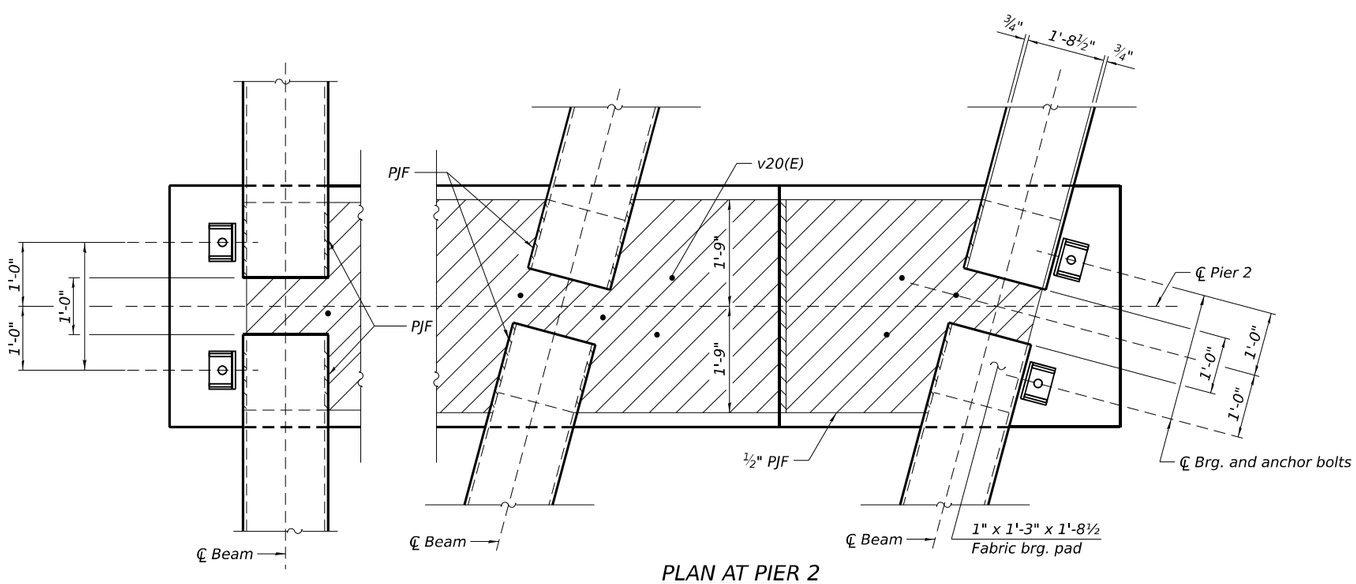

PLAN AT PIER 2

(Showing bearing pads and PJF details)

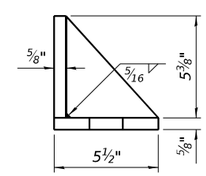

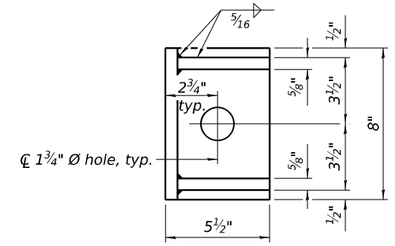

SIDE RETAINER

(2 required each side of pier).
Equivalent rolled angle with stiffeners will be allowed in lieu of welded plates.

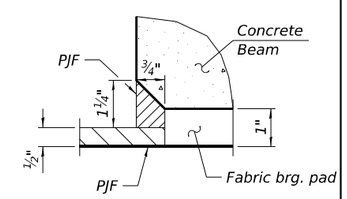

DETAIL 'A'

Notes:

See sheet SC-24 for Bill of Material.

Cost of side retainer and anchor bolts shall be included with Concrete Structures.

The s20(E) bars shall be placed parallel to the beams. Spacing for these bars shall be at right angles to the beams.

Anchor bolts and side retainers shall be according to Article 521.06 of the Standard Specifications. Side retainers shall be hot dip galvanized.

Anchor bolts and side retainers shall be installed as each exterior beam is erected unless an equivalent temporary means of lateral restraint is used.

MODEL: Default
FILE NAME: 0998306-62F94-S023-DM03.dgn

WSP USA Inc.
30 N. LASALLE STREET
SUITE 4200
CHICAGO, IL 60602
TEL: (312) 782-8150
FAX: (312) 782-1684

USER NAME = lauxpj	DESIGNED - KA	REVISED -	
	CHECKED - LAS	REVISED -	
PLOT SCALE = 7:11.9962 ':' / in.	DRAWN - KA	REVISED -	
PLOT DATE = 12/2/2025	CHECKED - LAS	REVISED -	

STATE OF ILLINOIS
DEPARTMENT OF TRANSPORTATION

DIAPHRAGM - PIER 2
STRUCTURE NUMBER 099-8306

SHEET SC-29 OF SC-60 SHEETS

F.A.P. RTE.	SECTION	COUNTY	TOTAL SHEETS	SHEET NO.
0846	2017-057F	WILL	1342	858
		CONTRACT NO. 62F94		
		ILLINOIS	FED. AID PROJECT	

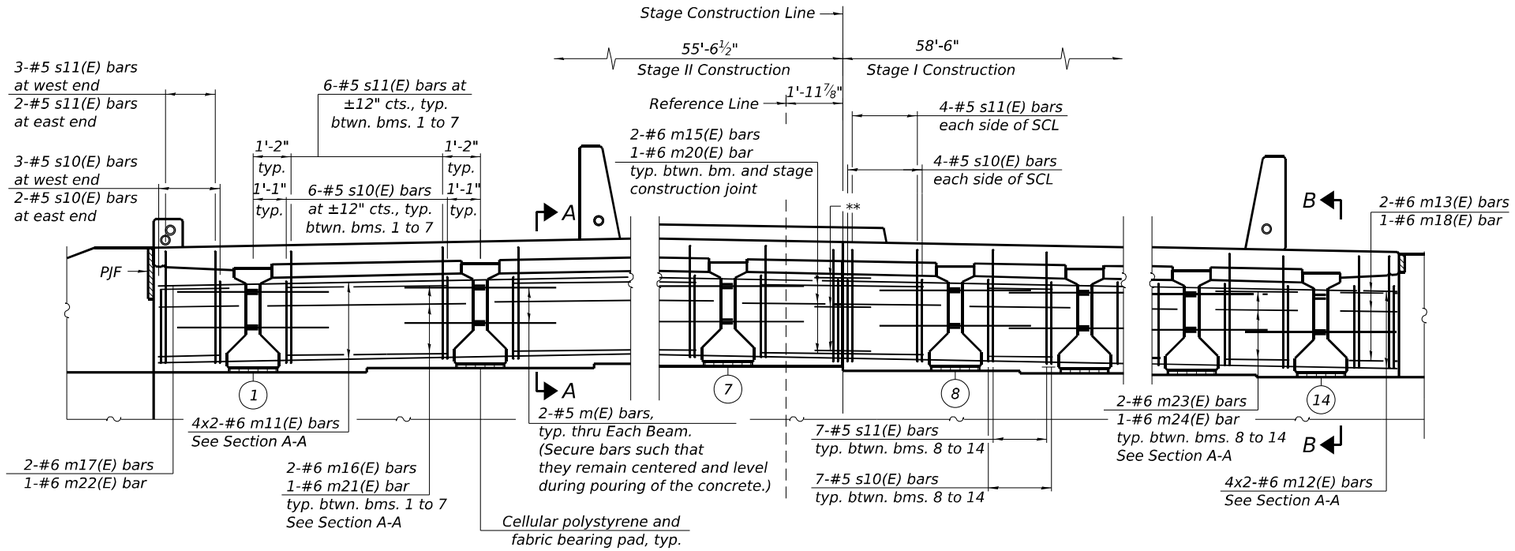

DIAPHRAGM AT NORTH ABUTMENT

(Looking North)

** 2 Bar Splicer (E) for #6 m15(E) bars
1 Bar Splicer (E) for #6 m20(E) bars
4 Bar Splicers (E) for #6 m11(E) and m12(E) bars

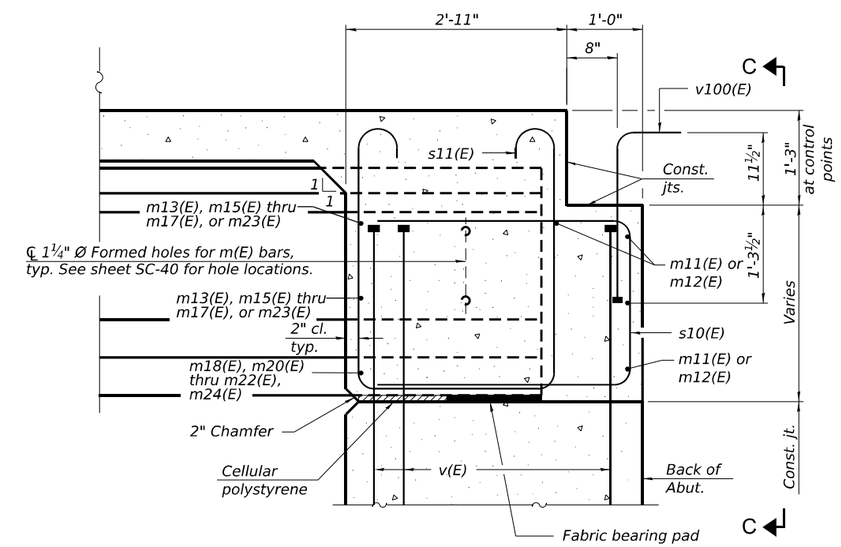

SECTION A-A

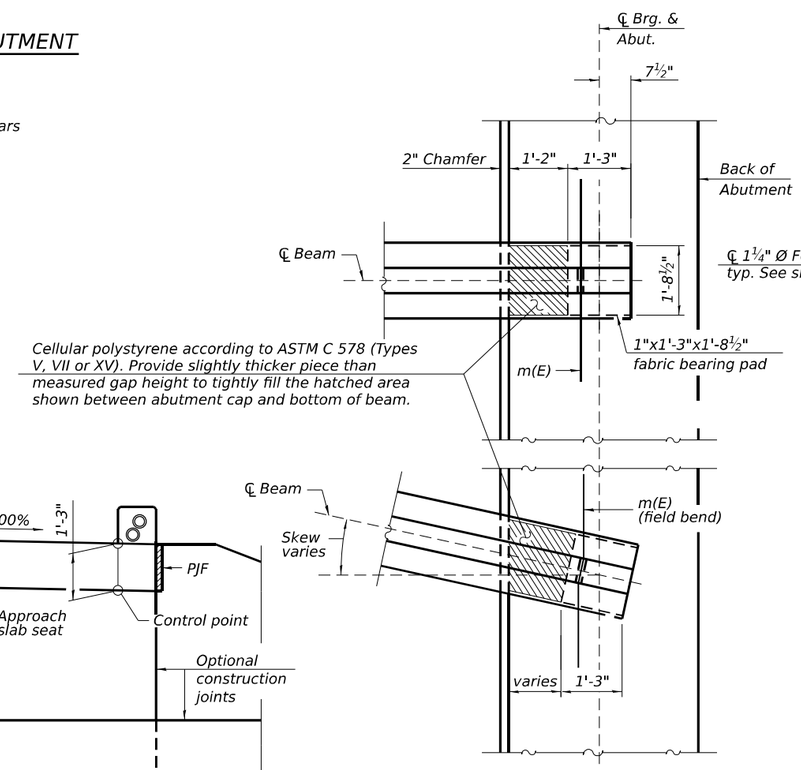

PLAN AT NORTH ABUTMENT

(Showing bottom flange of beam)

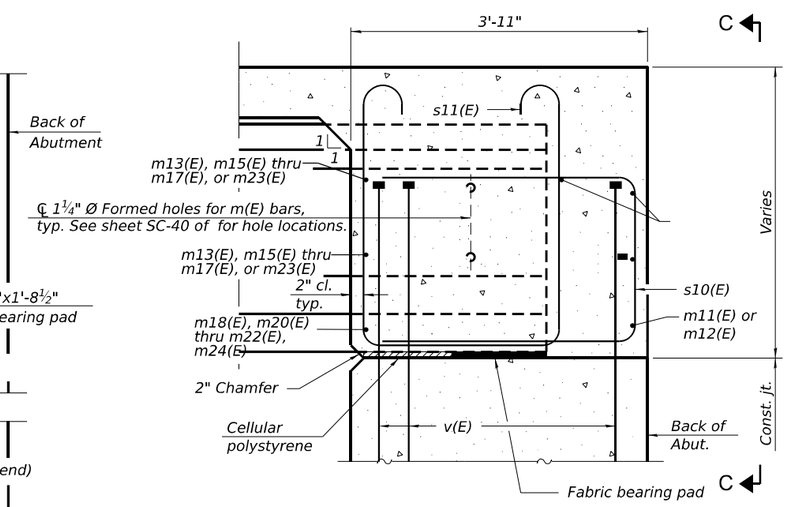

SECTION B-B

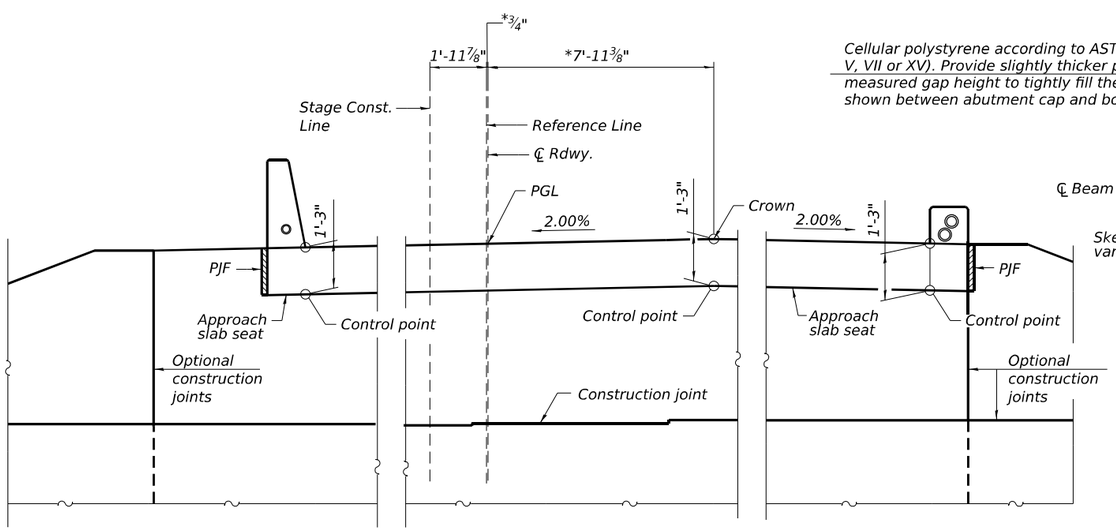

VIEW C-C

*Measured perpendicular to PGL

MINIMUM BAR LAP

#6 bar = 4'-9"

NOTES:

1. See sheet SC-23 for PJF details.
2. See sheet SC-24 for superstructure details, and Bill of Material.
3. The approach slab seat shall have a constant slope determined from the control points shown.
4. Cost of cellular polystyrene is included with Concrete Superstructure.

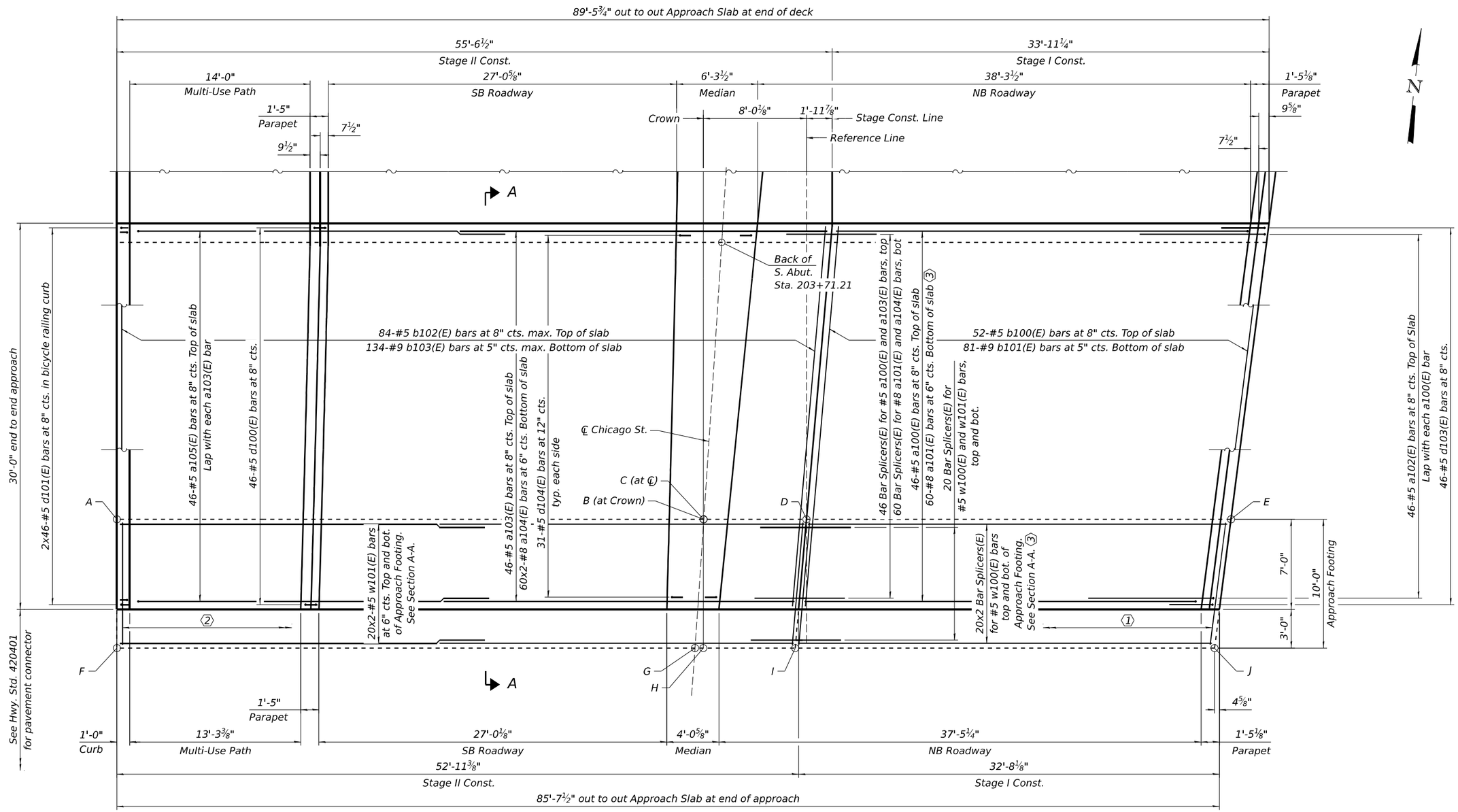

PLAN

(South Approach Slab)

① 35-#4 t100(E) bars at 12" cts. Top and bottom of Approach Footing. See Section A-A.

② 55-#4 t100(E) bars at 12" cts. Top and bottom of Approach Footing. See Section A-A.

③ Cut to fit in field as necessary.

MINIMUM BAR LAP

#5 bar = 3'-6"
#8 bar = 4'-9"

NOTES:

1. Bars indicated thus 20x2-#5 etc. indicates 20 lines of bars with 2 lengths per line.
2. See sheet SC-32 for Cross Section and elevation table for approach footing.
3. See sheet SC-35 for parapet elevations and median plan.
4. See sheet SC-36 for Section A-A, details, and Bill of Material.

MODEL: Default
FILE NAME: 0998306-62F94-S031-0AS01.dgn

WSP USA Inc.
30 N. LASALLE STREET
SUITE 4200
CHICAGO, IL 60602
TEL: (312) 782-8150
FAX: (312) 782-1684

USER NAME = lauxpj	DESIGNED - PJL	REVISED -	
	CHECKED - LAS	REVISED -	
PLOT SCALE = 0:1.9999 ':" / in.	DRAWN - GM	REVISED -	
PLOT DATE = 12/2/2025	CHECKED - LAS	REVISED -	

STATE OF ILLINOIS
DEPARTMENT OF TRANSPORTATION

SOUTH APPROACH SLAB PLAN
STRUCTURE NUMBER 099-8306

SHEET SC-31 OF SC-60 SHEETS

F.A.P. RTE.	SECTION	COUNTY	TOTAL SHEETS	SHEET NO.
0846	2017-057F	WILL	1342	860
		CONTRACT NO. 62F94		
	ILLINOIS	FED. AID PROJECT		

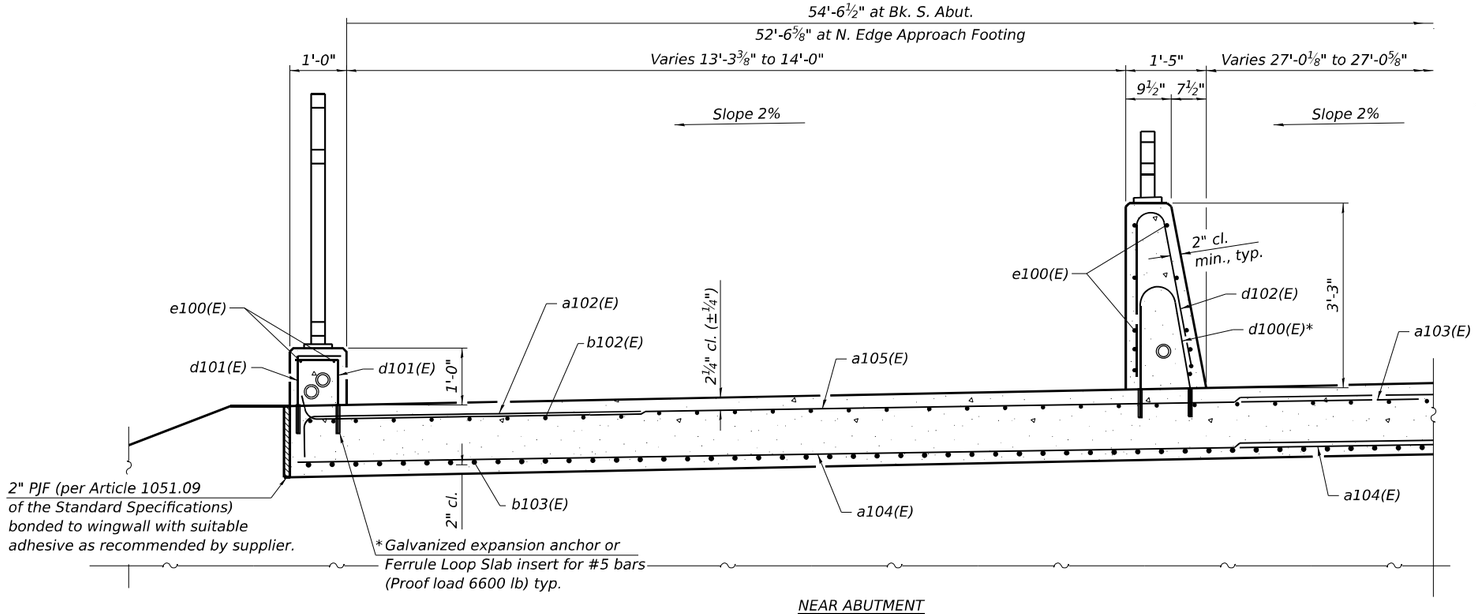

NEAR ABUTMENT

PARTIAL CROSS SECTION

(Looking North)

* Drill and set #5 d100(E) bar according to Article 509.06 of the Standard Specifications. Drilled holes shall be roughened or scored per manufacturer's recommendations. Maximum depth of hole shall not exceed 6". Contractor shall take all necessary precautions to prevent drilled hole interference with deck reinforcement bars. Locate longitudinal bars to miss drilled locations. Located drilled holes to miss transverse bars in deck.

TOP AND BOTTOM ELEVATIONS FOR APPROACH FOOTING

South Approach		
Point/ Location	Top	Bottom
A	532.17	531.34
B	533.06	532.23
C	533.08	532.25
D	532.93	532.10
E	532.28	531.45
F	532.38	531.55
G	533.29	532.46
H	533.29	532.46
I	533.13	532.30
J	532.47	531.64

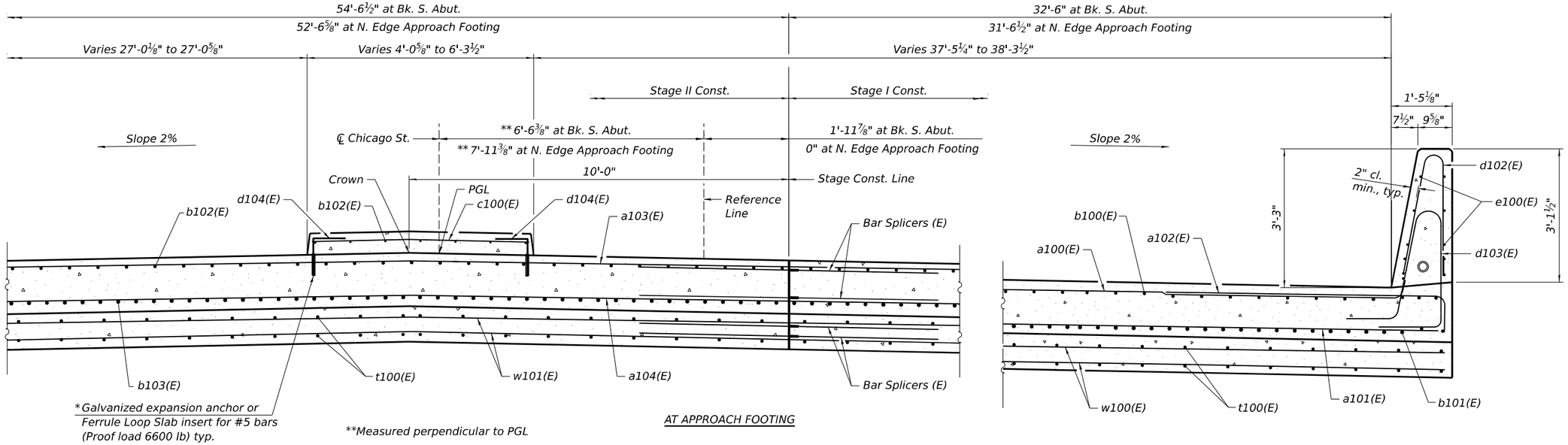

AT APPROACH FOOTING

PARTIAL CROSS SECTION

(Looking North)

NOTES:

1. See sheet SC-35 for parapet elevations.
2. See sheet SC-36 for details and Bill of Material.
3. See sheet SC-56 for bar splicer details.

MODEL: Default
FILE NAME: 0998306-62F94-S032-8A502.dgn

WSP USA Inc.
30 N. LASALLE STREET
Suite 4200
CHICAGO, IL 60602
TEL: (312) 782-8150
FAX: (312) 782-1684

USER NAME = lauxpj	DESIGNED - FIM/MI	REVISED -	
	CHECKED - PJL	REVISED -	
PLOT SCALE = 0:1.9999 ':" / in.	DRAWN - NBR	REVISED -	
PLOT DATE = 12/2/2025	CHECKED - PJL	REVISED -	

STATE OF ILLINOIS
DEPARTMENT OF TRANSPORTATION

SOUTH APPROACH SLAB CROSS SECTION
STRUCTURE NUMBER 099-8306

SHEET SC-32 OF SC-60 SHEETS

F.A.P. RTE.	SECTION	COUNTY	TOTAL SHEETS	SHEET NO.
0846	2017-057F	WILL	1342	861
		CONTRACT NO. 62F94		
		ILLINOIS	FED. AID PROJECT	

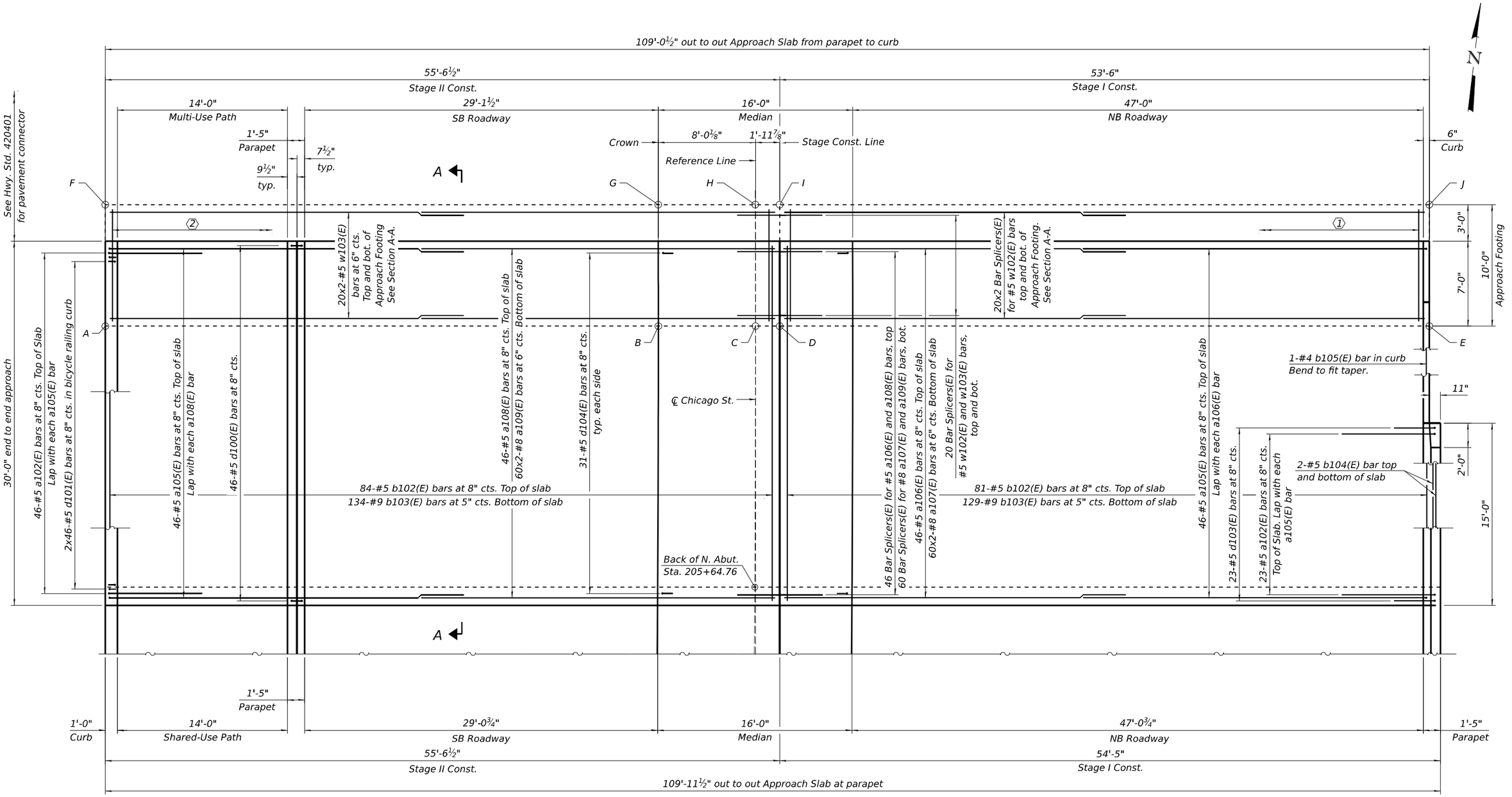

PLAN

(North Approach Slab)

⟨1⟩ 55-#4 t100(E) bars at 12" cts. Top and bottom of Approach Footing. See Section A-A.

⟨2⟩ 57-#4 t100(E) bars at 12" cts. Top and bottom of Approach Footing. See Section A-A.

MINIMUM BAR LAP

#5 bar = 3'-6"
#8 bar = 4'-9"

NOTES:

1. Bars indicated thus 20x2-#5 etc. indicates 20 lines of bars with 2 lengths per line.
2. See sheet SC-34 for Cross Section and elevation table for approach footing.
3. See sheet SC-35 for parapet elevations and median plan.
4. See sheet SC-36 for Section A-A, details, and Bill of Material.

MODEL: Default
FILE NAME: 0998306-62F94-S033-BA503.dgn

WSP USA Inc.
30 N. LASALLE STREET
SUITE 4200
CHICAGO, IL 60602
TEL: (312) 782-8150
FAX: (312) 782-1684

USER NAME = lauxpj	DESIGNED - FIM/MI	REVISED -	
	CHECKED - PJL	REVISED -	
PLOT SCALE = 0:1.9999 ':" / in.	DRAWN - NBR	REVISED -	
PLOT DATE = 12/2/2025	CHECKED - PJL	REVISED -	

STATE OF ILLINOIS
DEPARTMENT OF TRANSPORTATION

NORTH APPROACH SLAB PLAN
STRUCTURE NUMBER 099-8306

SHEET SC-33 OF SC-60 SHEETS

F.A.P. RTE.	SECTION	COUNTY	TOTAL SHEETS	SHEET NO.
0846	2017-057F	WILL	1342	862
		CONTRACT NO. 62F94		
		ILLINOIS	FED. AID PROJECT	

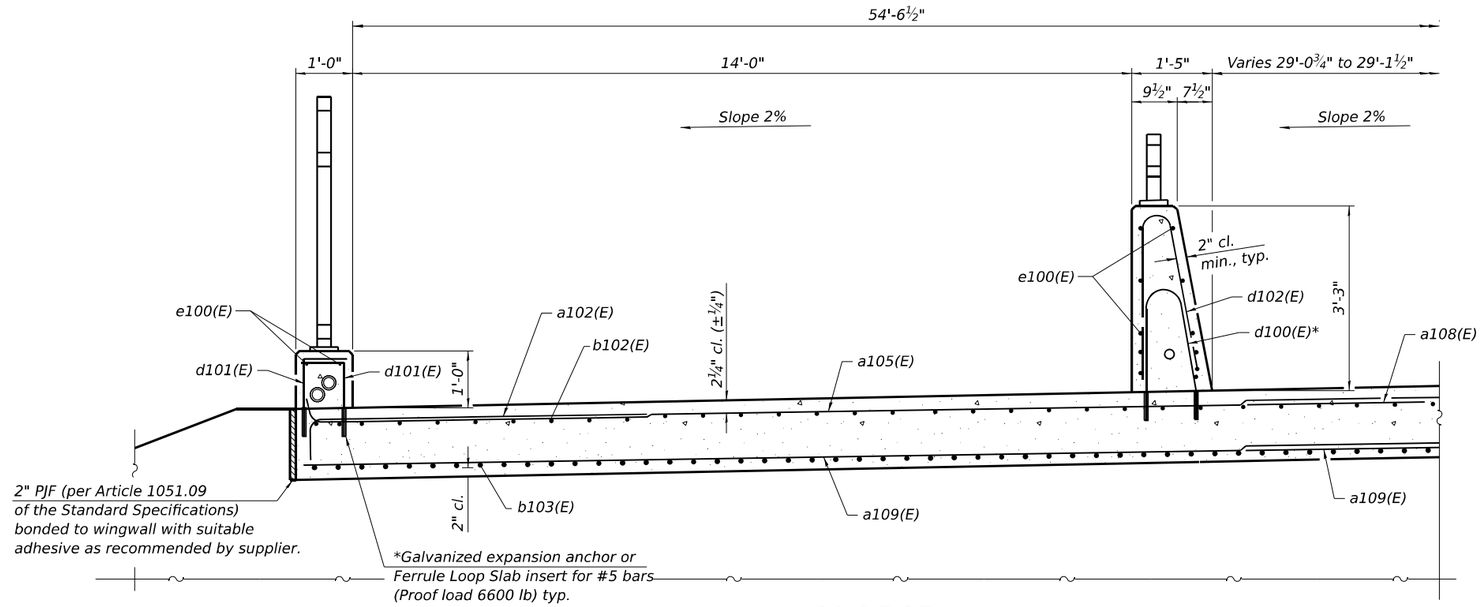

NEAR ABUTMENT

PARTIAL CROSS SECTION

(Looking North)

TOP AND BOTTOM ELEVATIONS FOR APPROACH FOOTING

North Approach		
Point/ Location	Top	Bottom
A	537.96	537.13
B	538.87	538.04
C	538.71	537.88
D	538.67	537.84
E	537.60	536.77
F	538.19	537.36
G	539.10	538.27
H	538.94	538.11
I	538.90	538.07
J	537.83	537.00

* Drill and set #5 d100(E) bar according to Article 509.06 of the Standard Specifications. Drilled holes shall be roughened or scored per manufacturer's recommendations. Maximum depth of hole shall not exceed 6". Contractor shall take all necessary precautions to prevent drilled hole interference with deck reinforcement bars. Locate longitudinal bars to miss drilled locations. Located drilled holes to miss transverse bars in deck.

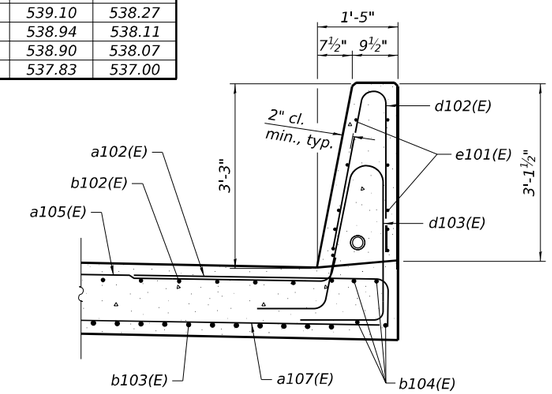

SECTION THRU EAST PARAPET

(Looking North)

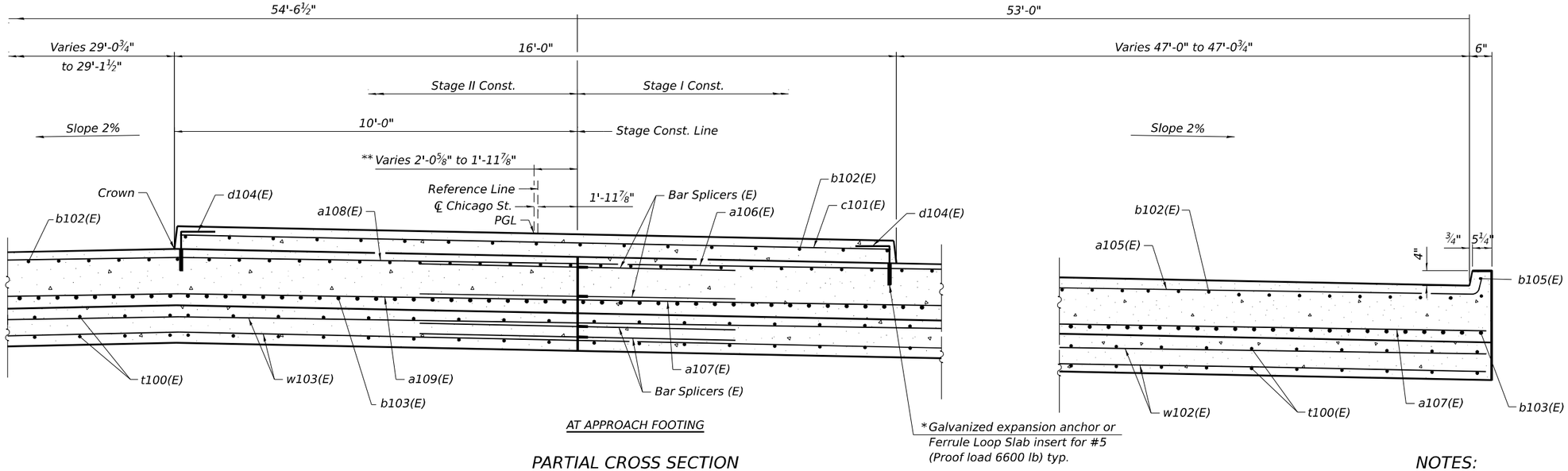

AT APPROACH FOOTING

PARTIAL CROSS SECTION

(Looking North)

**Measured perpendicular to PGL

NOTES:

1. See sheet SC-35 for parapet elevations.
2. See sheet SC-36 for details and Bill of Material.
3. See sheet SC-56 for bar splicer details.

MODEL: Default
FILE NAME: 0998306-62F94-S034-BA504.dgn

WSP USA Inc.
30 N. LASALLE STREET
SUITE 4200
CHICAGO, IL 60602
TEL: (312) 782-8150
FAX: (312) 782-1684

USER NAME = lauxpj	DESIGNED - PJL	REVISED -	
	CHECKED - LAS	REVISED -	
PLOT SCALE = 0:1.9999 ':' / in.	DRAWN - GM	REVISED -	
PLOT DATE = 12/2/2025	CHECKED - LAS	REVISED -	

STATE OF ILLINOIS
DEPARTMENT OF TRANSPORTATION

NORTH APPROACH SLAB CROSS SECTION
STRUCTURE NUMBER 099-8306

SHEET SC-34 OF SC-60 SHEETS

F.A.P. RTE.	SECTION	COUNTY	TOTAL SHEETS	SHEET NO.
0846	2017-057F	WILL	1342	863
		CONTRACT NO. 62F94		
	ILLINOIS	FED. AID PROJECT		

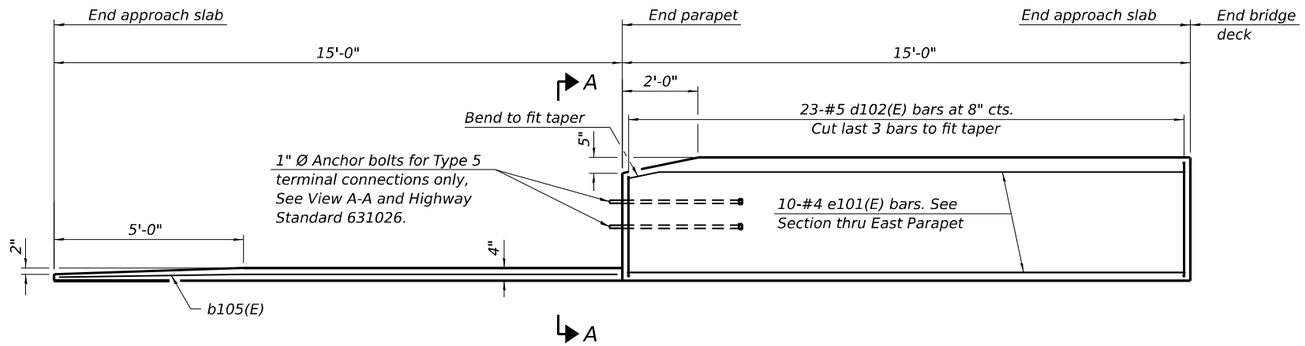

INSIDE ELEVATION OF NORTHEAST PARAPET AND CURB

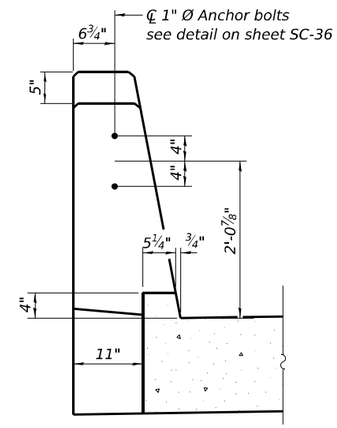

VIEW A-A

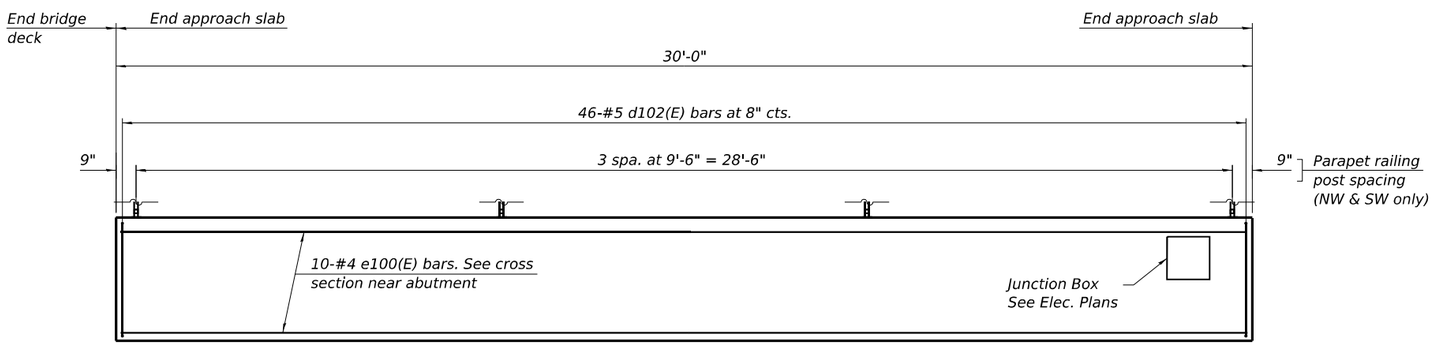

INSIDE ELEVATION OF NORTHWEST AND SOUTHEAST PARAPET

(Southwest Parapet similar but opposite hand)

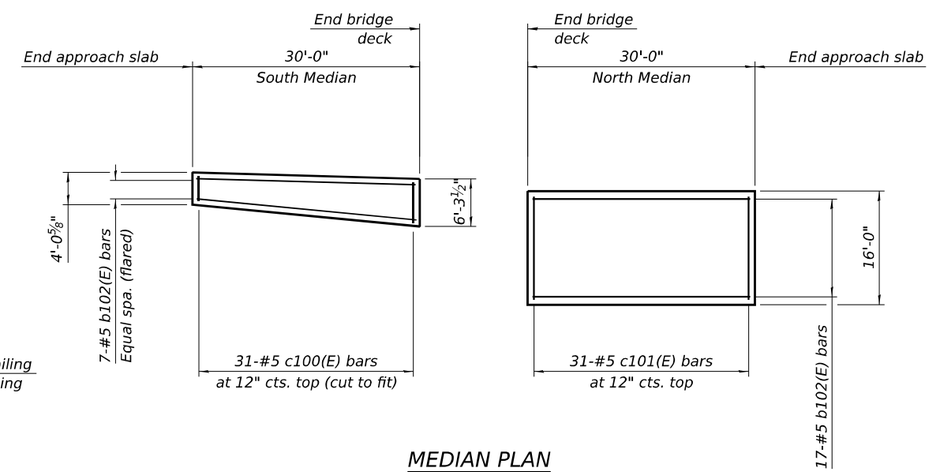

MEDIAN PLAN

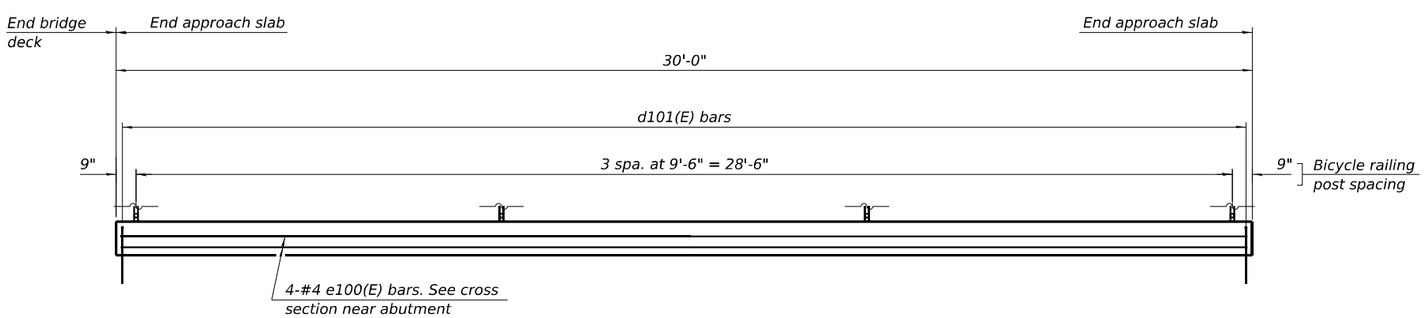

INSIDE ELEVATION OF NORTH BICYCLE RAILING CURB

(South Bicycle Railing Curb similar but opposite hand)

MODEL: Default
FILE NAME: 0998306-62F94-S035-BA505.dgn

WSP USA Inc.
30 N. LASALLE STREET
SUITE 4200
CHICAGO, IL 60602
TEL: (312) 782-8150
FAX: (312) 782-1684

USER NAME = lauxpj	DESIGNED - FIM/MI	REVISED -	
	CHECKED - PJL	REVISED -	
PLOT SCALE = 0:1.9999 ':" / in.	DRAWN - NBR	REVISED -	
PLOT DATE = 12/2/2025	CHECKED - PJL	REVISED -	

STATE OF ILLINOIS
DEPARTMENT OF TRANSPORTATION

APPROACH SLAB DETAILS 1
STRUCTURE NUMBER 099-8306

SHEET SC-35 OF SC-60 SHEETS

F.A.P. RTE.	SECTION	COUNTY	TOTAL SHEETS	SHEET NO.
0846	2017-057F	WILL	1342	864
		CONTRACT NO. 62F94		
		ILLINOIS	FED. AID PROJECT	

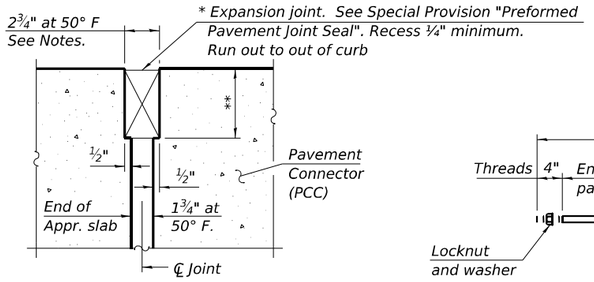

DETAIL A

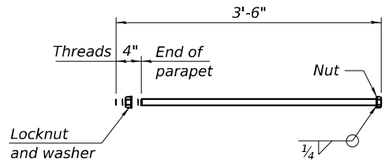

*1" Ø ANCHOR BOLT

(Anchor bolt assemblies shall be galvanized according to Article 1006.09 of the Standard Specifications)

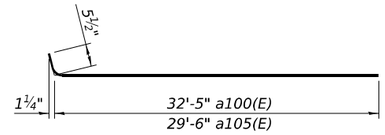

BAR a100(E) & a105(E)

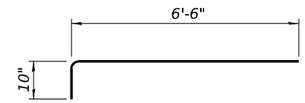

BAR a102(E)

Notes:

The joint opening shall be adjusted for temperature per Article 520.04 of the Standard Specifications. However, since this detail is for jointless structures, the length of bridge used to calculate the adjustment shall be equal to half the total bridge length plus the length of the bridge approach slab.

Parapet, median and curb concrete shall be paid for as Concrete Superstructure.

Approach slab shall be paid for as Concrete Superstructure (Approach Slab).

Approach footing concrete shall be paid for as Concrete Structures.

The approach footing maximum applied service bearing pressure (Qmax) = 2.0 ksf.

Cost of excavation for approach footing included with Concrete Structures.

For Granular Backfill for Structures and drainage treatment details, see sheet SC-3.

* Cost included with Concrete Superstructure (Approach Slab).

** Per manufacturer recommendations

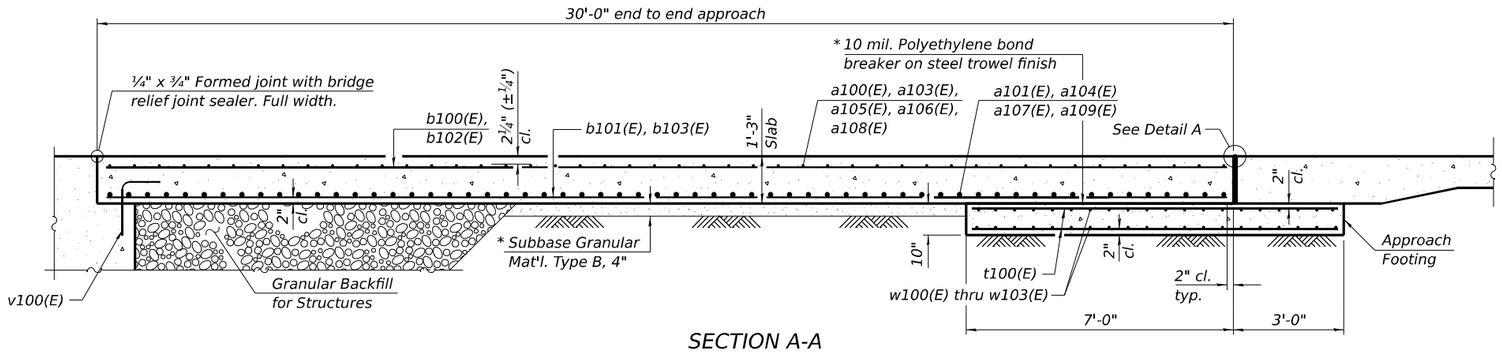

SECTION A-A

SOUTH APPROACH BILL OF MATERIAL

Bar	No.	Size	Length	Shape
a100(E)	46	#5	32'-11"	
a101(E)	60	#8	33'-7"	
a102(E)	92	#5	7'-4"	
a103(E)	46	#5	28'-6"	
a104(E)	120	#8	30'-0"	
a105(E)	46	#5	30'-0"	
b100(E)	52	#5	29'-10"	
b101(E)	81	#9	29'-10"	
b102(E)	91	#5	29'-8"	
b103(E)	134	#9	29'-8"	
c100(E)	31	#5	5'-11"	
d100(E)	46	#5	5'-2"	
d101(E)	92	#5	1'-9"	
d102(E)	92	#5	6'-5"	
d103(E)	46	#5	8'-6"	
d104(E)	62	#5	1'-6"	
e100(E)	24	#4	29'-8"	
t100(E)	180	#4	9'-8"	
w100(E)	40	#5	32'-7"	
w101(E)	80	#5	28'-5"	
Concrete Superstructure			Cu. Yd.	11.8
Concrete Superstructure (Approach Slab)			Cu. Yd.	121.7
Concrete Structures			Cu. Yd.	26.5
Reinforcement Bars, Epoxy Coated			Pound	53,350
Bridge Deck Grooving			Sq. Yd.	242
Protective Coat			Sq. Yd.	332

NORTH APPROACH BILL OF MATERIAL

Bar	No.	Size	Length	Shape
a102(E)	69	#5	7'-4"	
a105(E)	92	#5	30'-0"	
a106(E)	46	#5	27'-0"	
a107(E)	120	#8	29'-0"	
a108(E)	46	#5	29'-3"	
a109(E)	120	#8	30'-0"	
b102(E)	182	#5	29'-8"	
b103(E)	263	#9	29'-8"	
b104(E)	4	#5	14'-8"	
b105(E)	1	#4	14'-8"	
c101(E)	31	#5	15'-8"	
d100(E)	46	#5	5'-2"	
d101(E)	92	#5	1'-9"	
d102(E)	69	#5	6'-5"	
d103(E)	23	#5	8'-6"	
d104(E)	62	#5	1'-6"	
e100(E)	14	#4	29'-8"	
e101(E)	10	#4	14'-8"	
t100(E)	224	#4	9'-8"	
w102(E)	80	#5	28'-5"	
w103(E)	80	#5	29'-5"	
Concrete Superstructure			Cu. Yd.	15.8
Concrete Superstructure (Approach Slab)			Cu. Yd.	139.6
Concrete Structures			Cu. Yd.	33.7
Reinforcement Bars, Epoxy Coated			Pound	65,580
Bridge Deck Grooving			Sq. Yd.	281
Protective Coat			Sq. Yd.	375

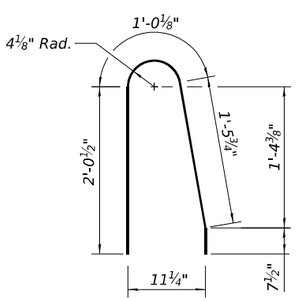

BAR d100(E)

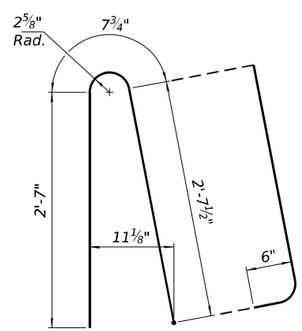

BAR d102(E)

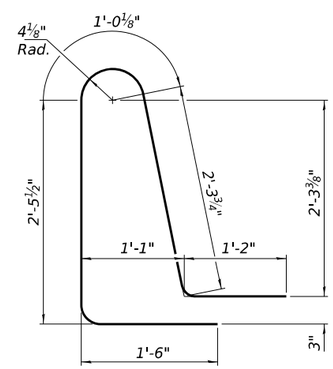

BAR d103(E)

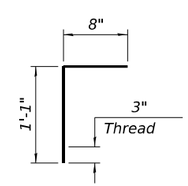

BAR d101(E)

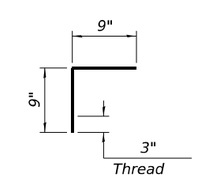

BAR d104(E)

MODEL: Default
FILE NAME: 099B306-62F94-S036-BAS06.dgn

WSP USA Inc.
30 N. LASALLE STREET
SUITE 4200
CHICAGO, IL 60602
TEL: (312) 782-8150
FAX: (312) 782-1684

USER NAME = lauxpj	DESIGNED - FIM/MI	REVISED -	
	CHECKED - PJL	REVISED -	
PLOT SCALE = 0:1.9999 ':" / in.	DRAWN - NBR	REVISED -	
PLOT DATE = 12/2/2025	CHECKED - PJL	REVISED -	

STATE OF ILLINOIS
DEPARTMENT OF TRANSPORTATION

APPROACH SLAB DETAILS 2
STRUCTURE NUMBER 099-8306

SHEET SC-36 OF SC-60 SHEETS

F.A.P. RTE.	SECTION	COUNTY	TOTAL SHEETS	SHEET NO.
0846	2017-057F	WILL	1342	865
		CONTRACT NO. 62F94		
		ILLINOIS	FED. AID PROJECT	

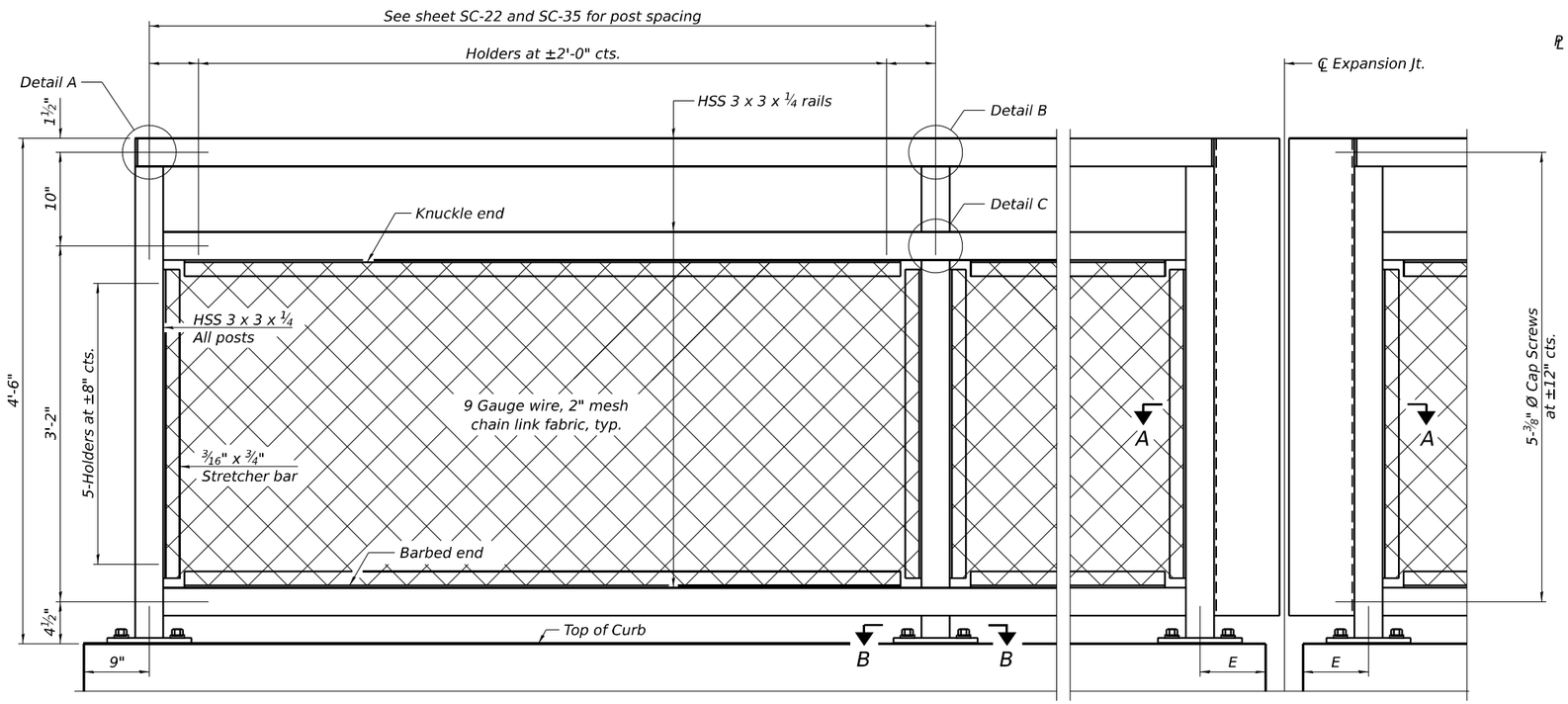

ELEVATION BICYCLE RAILING

(Inside face)

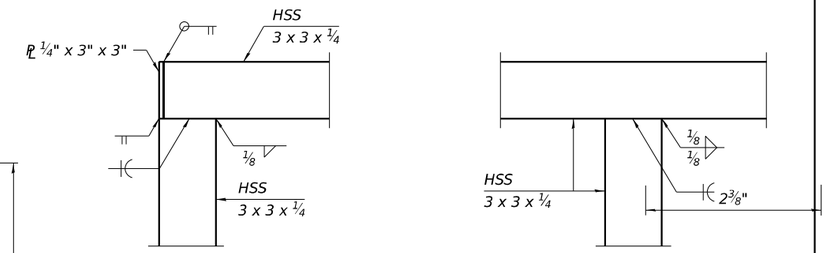

DETAIL A

DETAIL B

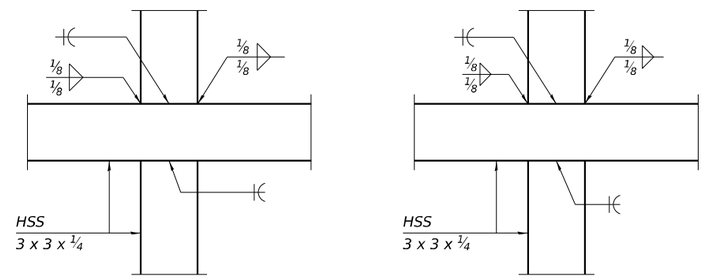

DETAIL C

DETAIL D

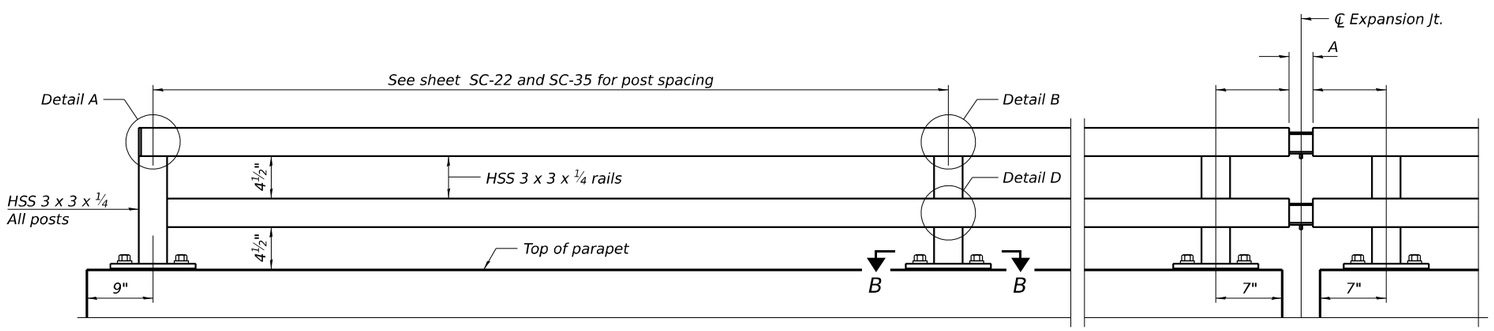

ELEVATION PARAPET RAILING

(Inside face)

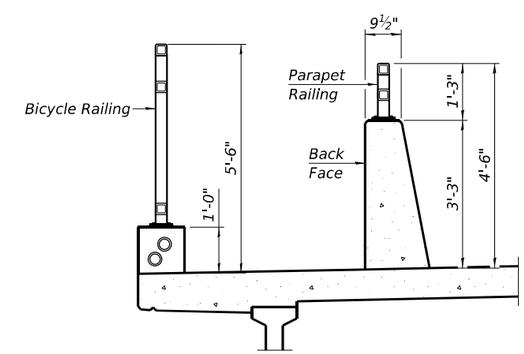

SECTION THRU DECK

RAILING CRITERIA

MASH 2016 Test Level	4
Parapet Railing Weight (plf)	25
Bicycle Railing Weight (plf)	50
Max Post Spacing	10'-0"

R-29

10-27-2023

(Sheet 1 of 2)

MODEL: Default
FILE NAME: 0998306-62F94-S037-R2901.dgn

WSP USA Inc.
30 N. LASALLE STREET
SUITE 4200
CHICAGO, IL 60602
TEL: (312) 782-8150
FAX: (312) 782-1684

USER NAME = lauxpj	DESIGNED - BK	REVISED -	
	CHECKED - LAS	REVISED -	
PLOT SCALE = 0:1.9999 ':" / in.	DRAWN - BK	REVISED -	
PLOT DATE = 12/2/2025	CHECKED - LAS	REVISED -	

STATE OF ILLINOIS
DEPARTMENT OF TRANSPORTATION

BICYCLE RAILING AND PARAPET RAILING 1
STRUCTURE NUMBER 099-8306

SHEET SC-37 OF SC-60 SHEETS

F.A.P. RTE.	SECTION	COUNTY	TOTAL SHEETS	SHEET NO.
0846	2017-057F	WILL	1342	866
		CONTRACT NO. 62F94		
	ILLINOIS	FED. AID PROJECT		

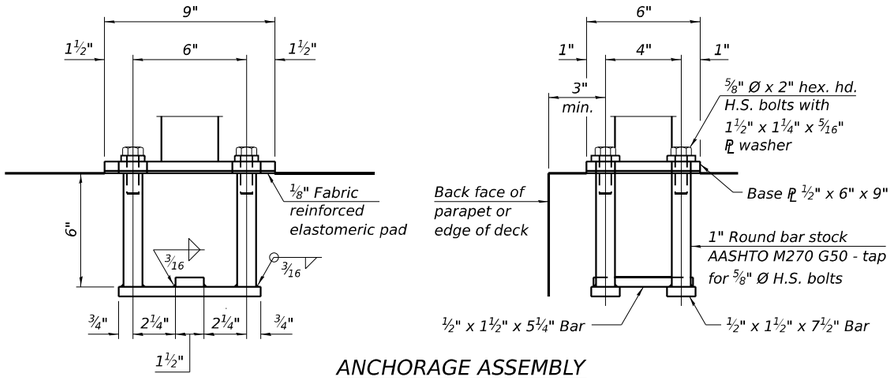

ANCHORAGE ASSEMBLY

The Bicycle Railing fasteners for end posts near expansion joints may need to be installed prior to installing the bent plates.

In lieu of the cast-in-place anchor device shown, the Contractor has the option of drilling and setting ⅝" Ø fully threaded anchor rods with the same plate washers as specified above and heavy hex lock nuts according to Article 509.06 of the Standard Specifications. Embedment shall be according to the manufacturer's specifications.

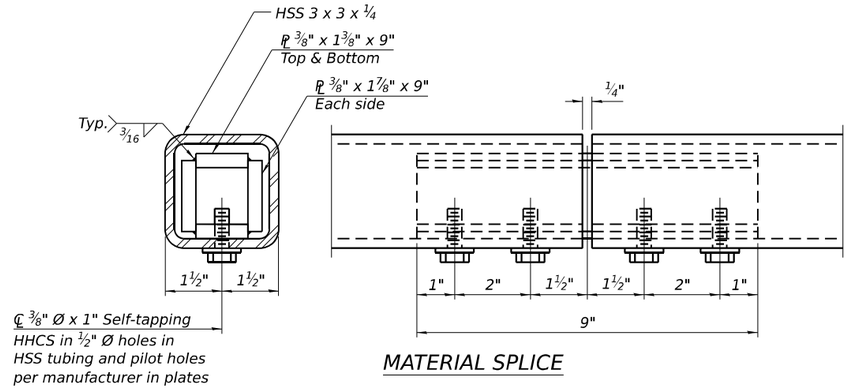

MATERIAL SPLICE

Notes:

Place reinforcement bars to miss anchor rod locations.

CVN testing is not required for the HSS tubing used in the Bicycle Railing.

All HSS tubing used for the Parapet Railing shall be CVN tested according to Article 1006.34(b) of the Standard Specifications.

All HSS tubing used for the Parapet Railing shall be ASTM A500 grade C.

All base plates used for the Parapet Railing shall be AASHTO M270 grade 50.

All heavy hex nuts shall be according to ASTM A 563 grade DH.

All fully threaded anchor rods shall be ASTM F1554 grade 105.

The post base plate shall be fastened to the curb snug tight and given an additional ⅛" turn.

Rail splice inserts may be built out of bent plates of the same thicknesses and outside geometry limits as the 4 plate rail splice inserts shown.

All steel rail elements shall be galvanized according to Article 509.05 of the Standard Specifications.

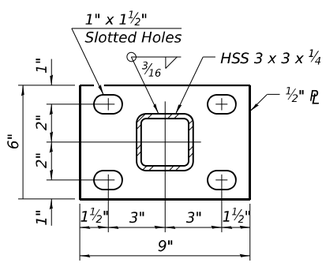

SECTION B-B

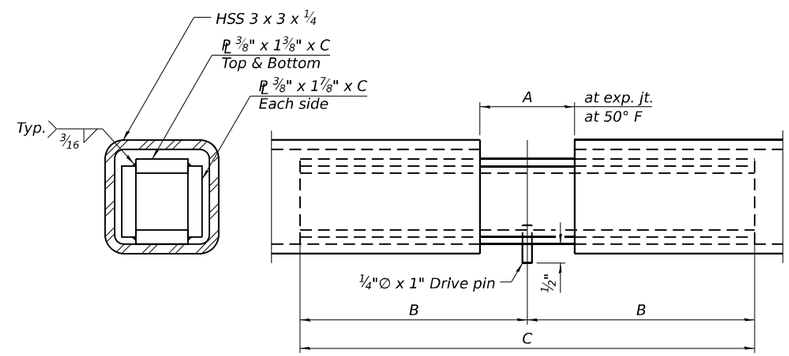

EXPANSION SPLICE

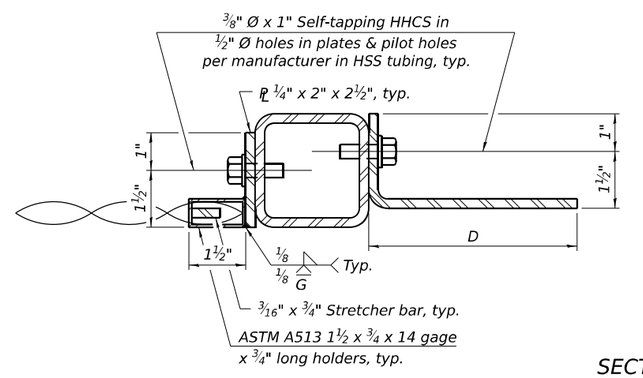

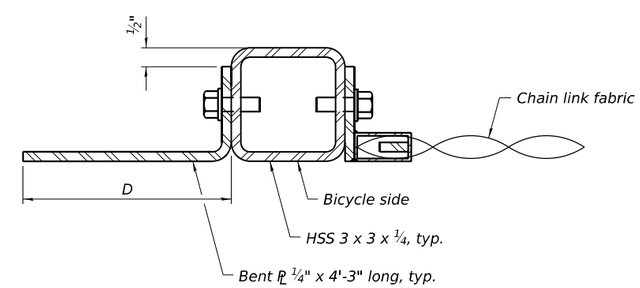

SECTION A-A

TABLE OF DIMENSIONS

Location	T	A	B	C	D	E
Over Strip Seal Jt.	≤4"	2½"	1'-2"	2'-4"	7¼"	7"
Over Finger or Modular Jt.	≤9½"	5½"	1'-7¾"	3'-3½"		
Over Finger or Modular Jt.	≤15"	8¼"	2'-1¼"	4'-2½"		

T= ; total movement based on total temperature range from -20°F to 120°F along centerline of roadway at expansion joint.

BILL OF MATERIAL

Item	Unit	Quantity
Bicycle Railing	Foot	252
Parapet Railing	Foot	252

R-29

10-27-2023

(Sheet 2 of 2)

MODEL: Default
FILE NAME: 0998306-62F94-S038-A2902.dgn

WSP USA Inc.
30 N. LASALLE STREET
SUITE 4200
CHICAGO, IL 60602
TEL: (312) 782-8150
FAX: (312) 782-1684

USER NAME = lauxpj	DESIGNED - BK	REVISED -	
	CHECKED - LAS	REVISED -	
PLOT SCALE = 0:1.9999 ':" / in.	DRAWN - BK	REVISED -	
PLOT DATE = 12/2/2025	CHECKED - LAS	REVISED -	

STATE OF ILLINOIS
DEPARTMENT OF TRANSPORTATION

BICYCLE RAILING AND PARAPET RAILING 2
STRUCTURE NUMBER 099-8306

SHEET SC-38 OF SC-60 SHEETS

F.A.P. RTE.	SECTION	COUNTY	TOTAL SHEETS	SHEET NO.
0846	2017-057F	WILL	1342	867
		CONTRACT NO. 62F94		
	ILLINOIS	FED. AID PROJECT		

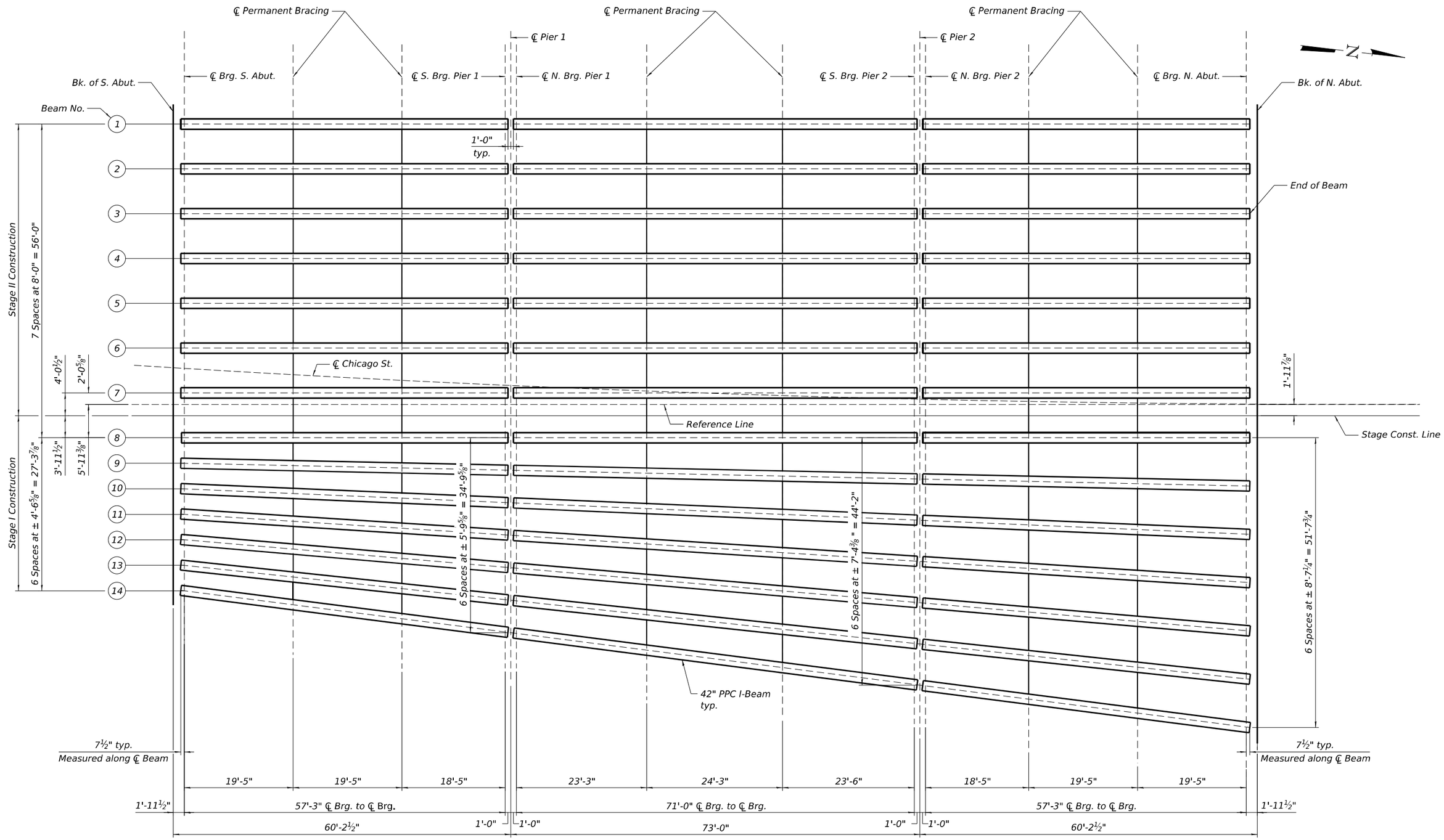

MODEL: Default
FILE NAME: 0998306-62F94-S039-FRM.dgn

WSP USA Inc.
30 N. LASALLE STREET
SUITE 4200
CHICAGO, IL 60602
TEL: (312) 782-8150
FAX: (312) 782-1684

USER NAME = lauxpj	DESIGNED - SJJ	REVISED -	
	CHECKED - KB	REVISED -	
PLOT SCALE = 16:7.9920 ':" / in.	DRAWN - SJJ	REVISED -	
PLOT DATE = 12/2/2025	CHECKED - PJL	REVISED -	

STATE OF ILLINOIS
DEPARTMENT OF TRANSPORTATION

FRAMING PLAN
STRUCTURE NUMBER 099-8306

SHEET SC-39 OF SC-60 SHEETS

F.A.P. RTE.	SECTION	COUNTY	TOTAL SHEETS	SHEET NO.
0846	2017-057F	WILL	1342	868
		CONTRACT NO. 62F94		
	ILLINOIS	FED. AID PROJECT		

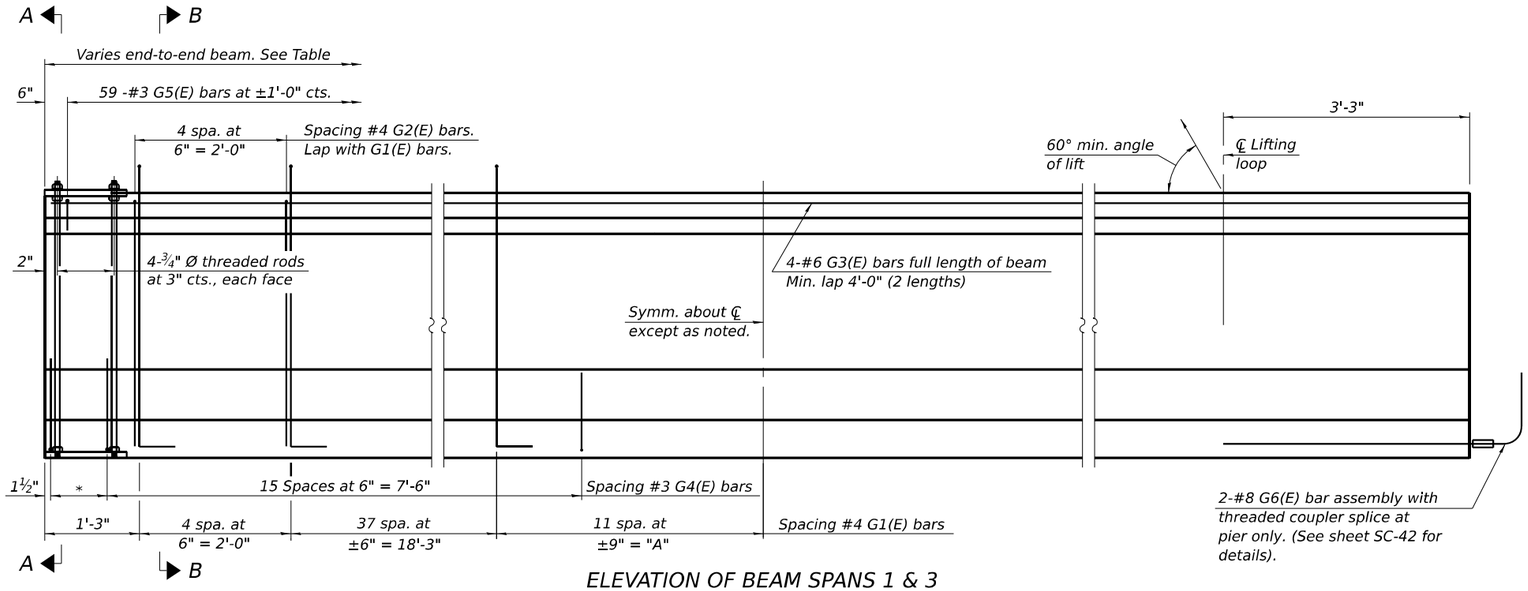

*3 spaces at 3" = 9"

ELEVATION OF BEAM SPANS 1 & 3

(Showing reinforcement & dimensions)

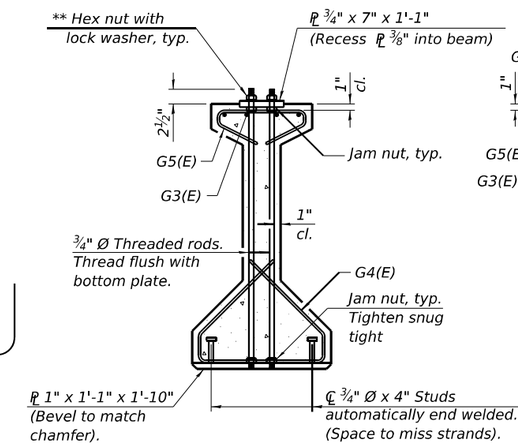

SECTION A-A

** Only tighten sufficiently to compress lock washers

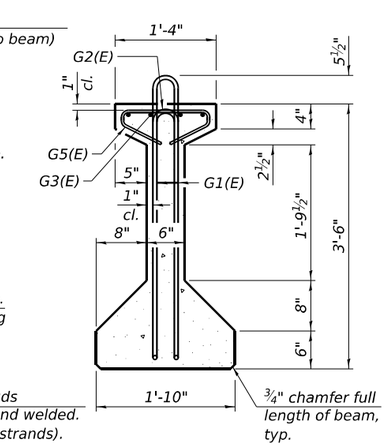

SECTION B-B

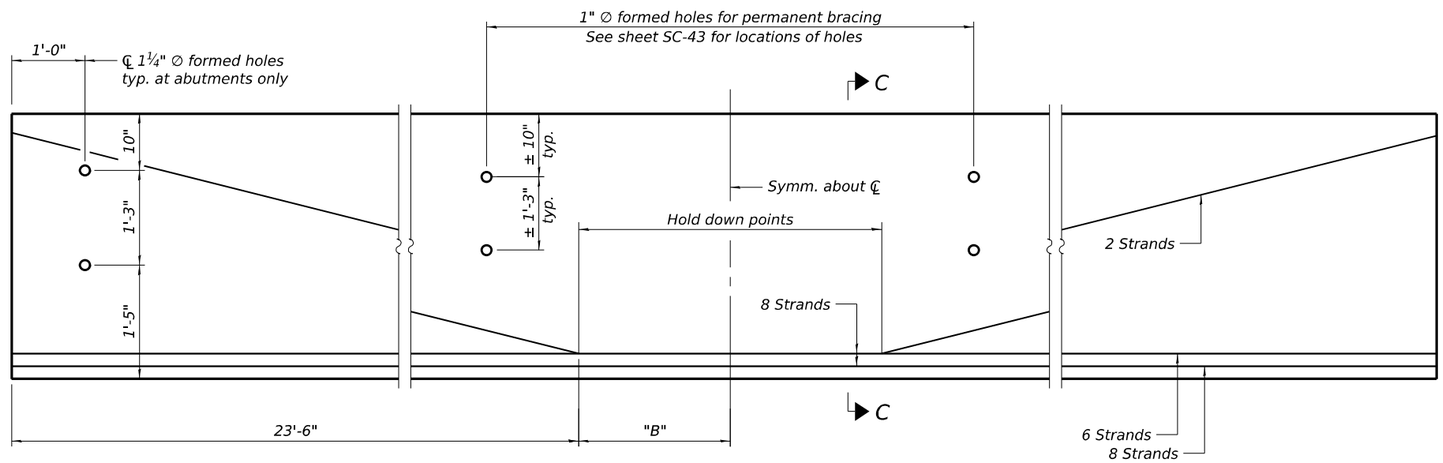

ELEVATION OF BEAM SPANS 1 & 3

(Showing prestressing steel)

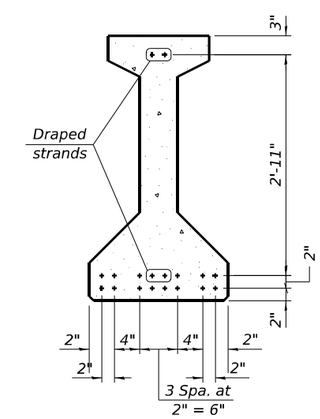

SECTION C-C

(16 -½" Ø 270 ksi strands)

BAR LIST
ONE BEAM ONLY

(For information only)

Bar	No.	Size	Length	Shape
G1(E)	106	#4	8'-7"	
G2(E)	10	#4	6'-8"	
G3(E)	8	#6	31'-3"	
G4(E)	38	#3	4'-11"	
G5(E)	59	#3	2'-6"	
G6(E)	2	#8	6'-6"	

NOTES:

1. See sheet SC-42 for additional details and Bill of Materials

SPANS 1 & 3 BEAM INFORMATION TABLE

Beam	1	2	3	4	5	6	7	8	9	10	11	12	13	14
Length	58'-4½"	58'-4½"	58'-4½"	58'-4½"	58'-4½"	58'-4½"	58'-4½"	58'-4½"	58'-4⅝"	58'-4¾"	58'-6"	58'-7"	58'-8½"	58'-10¼"
A	7'-8¼"	7'-8¼"	7'-8¼"	7'-8¼"	7'-8¼"	7'-8¼"	7'-8¼"	7'-8¼"	7'-8⅜"	7'-8⅜"	7'-9"	7'-9½"	7'-10¼"	7'-11⅛"
B	5'-8¼"	5'-8¼"	5'-8¼"	5'-8¼"	5'-8¼"	5'-8¼"	5'-8¼"	5'-8¼"	5'-8⅜"	5'-8⅜"	5'-9"	5'-9½"	5'-10¼"	5'-11⅛"

WSP USA Inc.
30 N. LASALLE STREET
SUITE 4200
CHICAGO, IL 60602
TEL: (312) 782-8150
FAX: (312) 782-1684

USER NAME = lauxpj	DESIGNED - SJJ	REVISED -	STATE OF ILLINOIS DEPARTMENT OF TRANSPORTATION
	CHECKED - KB	REVISED -	
PLOT SCALE = 0:1.9999 ':" / in.	DRAWN - SJJ	REVISED -	
PLOT DATE = 12/2/2025	CHECKED - KB	REVISED -	

42" PPC I-BEAM SPANS 1 & 3
STRUCTURE NUMBER 099-8306

SHEET SC-40 OF SC-60 SHEETS

F.A.P. RTE.	SECTION	COUNTY	TOTAL SHEETS	SHEET NO.
0846	2017-057F	WILL	1342	869
		CONTRACT NO. 62F94		
		ILLINOIS	FED. AID PROJECT	

MODEL: Spans 1 and 3
FILE NAME: 099B306-62F94-S040-HD1.dgn

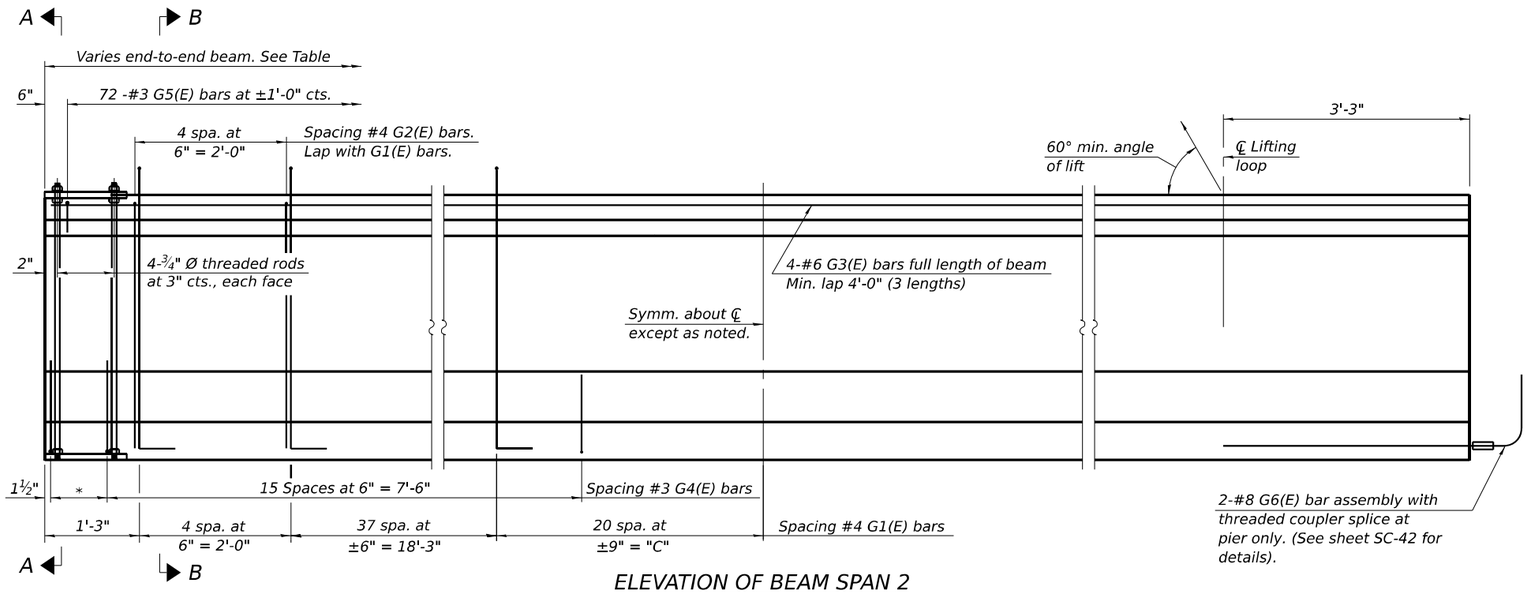

*3 spaces at 3" = 9"

ELEVATION OF BEAM SPAN 2

(Showing reinforcement & dimensions)

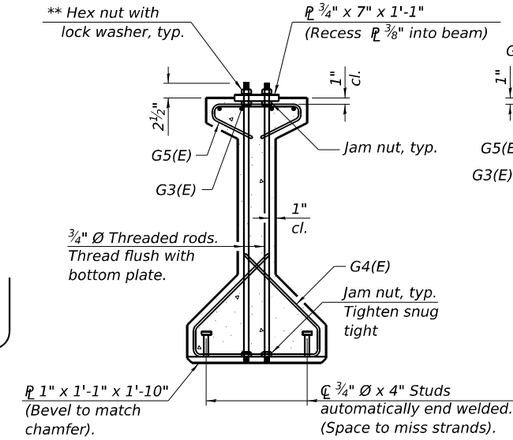

SECTION A-A

** Only tighten sufficiently to compress lock washers

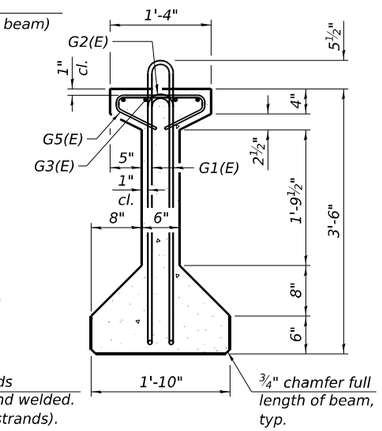

SECTION B-B

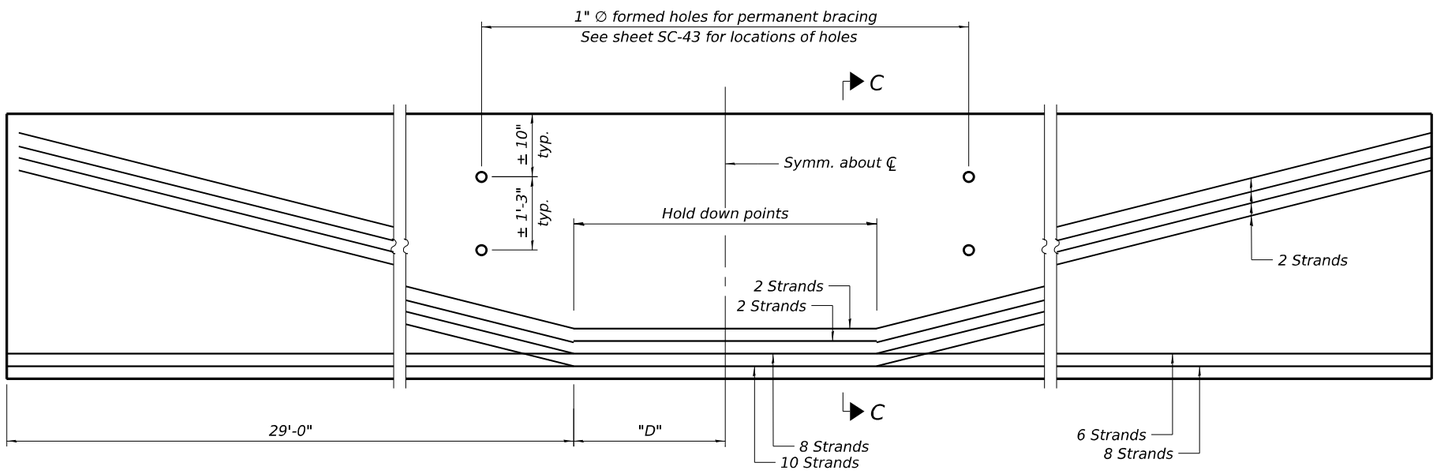

ELEVATION OF BEAM SPAN 2

(Showing prestressing steel)

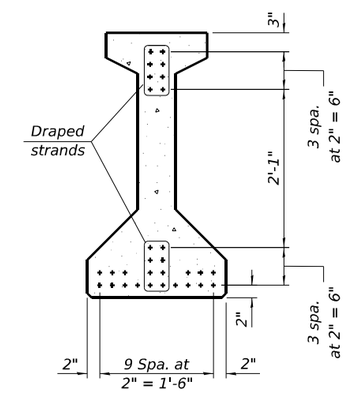

SECTION C-C

(22 -½" Ø 270 ksi strands)

BAR LIST

ONE BEAM ONLY

(For information only)

Bar	No.	Size	Length	Shape
G1(E)	124	#4	8'-7"	
G2(E)	10	#4	6'-8"	
G3(E)	12	#6	26'-2"	
G4(E)	38	#3	4'-11"	
G5(E)	72	#3	2'-6"	
G6(E)	4	#8	6'-6"	

NOTES:

1. See sheet SC-42 for additional details and Bill of Materials

SPAN 2 BEAM INFORMATION TABLE

Beam	1	2	3	4	5	6	7	8	9	10	11	12	13	14
Length	72'-0"	72'-0"	72'-0"	72'-0"	72'-0"	72'-0"	72'-0"	72'-0"	72'-0¼"	72'-0¾"	72'-1¾"	72'-3¼"	72'-5"	72'-7⅛"
C	14'-6"	14'-6"	14'-6"	14'-6"	14'-6"	14'-6"	14'-6"	14'-6"	14'-6⅛"	14'-6⅜"	14'-6⅞"	14'-7⅜"	14'-8½"	14'-9⅝"
D	7'-0"	7'-0"	7'-0"	7'-0"	7'-0"	7'-0"	7'-0"	7'-0"	7'-0⅛"	7'-0⅜"	7'-0⅞"	7'-1⅝"	7'-2½"	7'-3⅝"

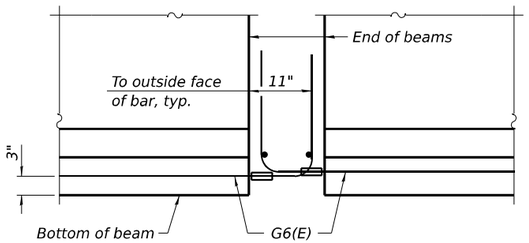

ELEVATION OF BEAM AT PIER

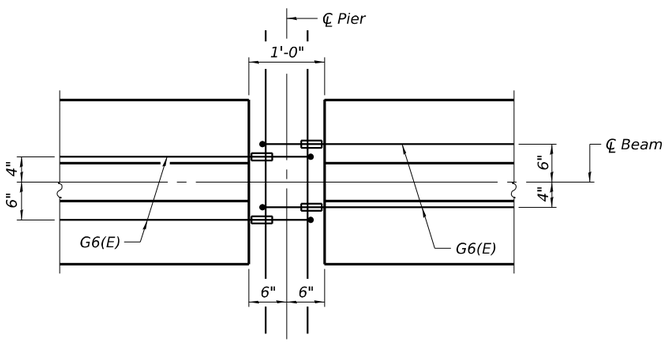

PLAN OF BEAM AT PIER

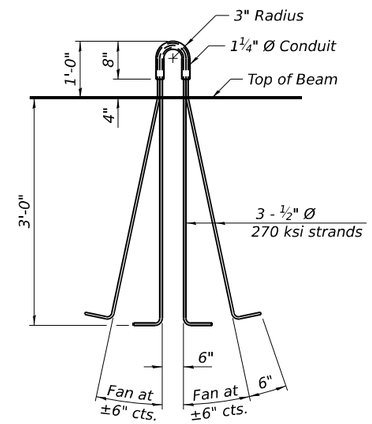

LIFTING LOOP DETAIL

NOTES

Inserts for ¾" Ø threaded dowel rods, when specified, are to be two strut, ferrule type for interior beams and single ferrule, flared loop type for exterior beams.

Prestressing steel shall be uncoated high strength, low relaxation 7-wire strand, Grade 270. The nominal diameter shall be ½" and the nominal cross-sectional area shall be 0.153 sq. in.

The beams shall have a final concrete compressive strength, f'c, of 6,000 psi and a release concrete compressive strength, f'ci, of 5,000 psi.

A minimum 2½" Ø lifting pin shall be used to engage the lifting loops during handling.

Tilt G6(E) bars when necessary to maintain 1½" clearance.

The top and bottom plates shall be AASHTO M270 Grade 50.

The top and bottom plates shall be galvanized according to AASHTO M111. The threaded rods, nuts and washers shall be galvanized according to AASHTO M232.

Threaded rods shall be ASTM F 1554 Grade 55.

The G6(E) bar assembly shall develop, in tension, at least 125 percent of the yield strength of a grade 60 reinforcement bar times the nominal cross-sectional area of a #8 bar. The assembly shall allow completion of the splice without turning of the hook bar. The hook bar shall be threaded such that the entire coupler can be threaded onto the hook bar.

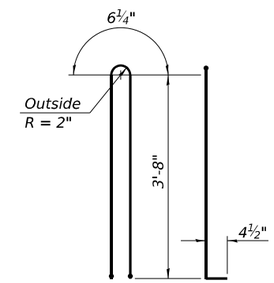

BAR G1(E)

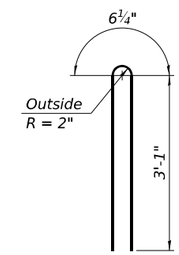

BAR G2(E)

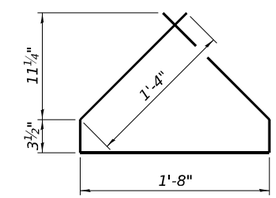

BAR G4(E)

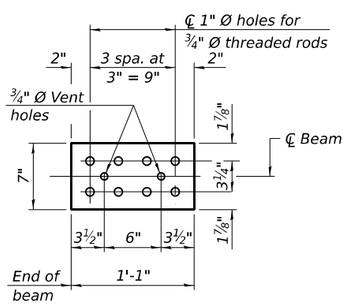

TOP PLATE

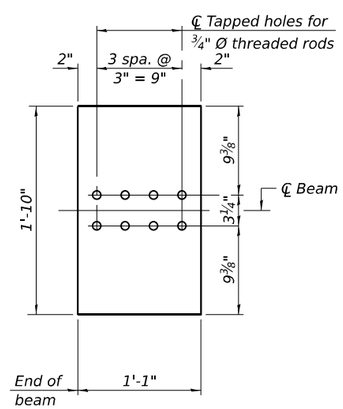

BOTTOM PLATE
(Showing threaded rods)

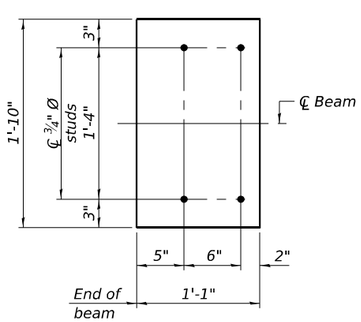

BOTTOM PLATE
(Showing studs)

See bearing details for pintle hole locations when required.

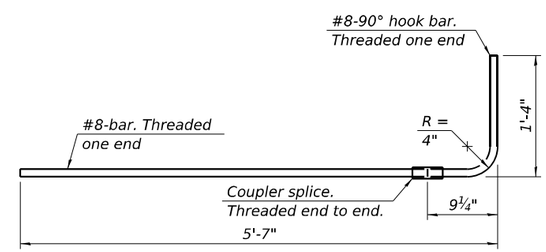

G6(E) BAR ASSEMBLY

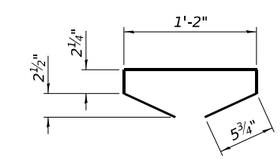

BAR G5(E)

BILL OF MATERIAL

Item	Unit	Total
Furnishing and Erecting Precast Prestressed Concrete I-Beams, 42"	Ft.	2,648

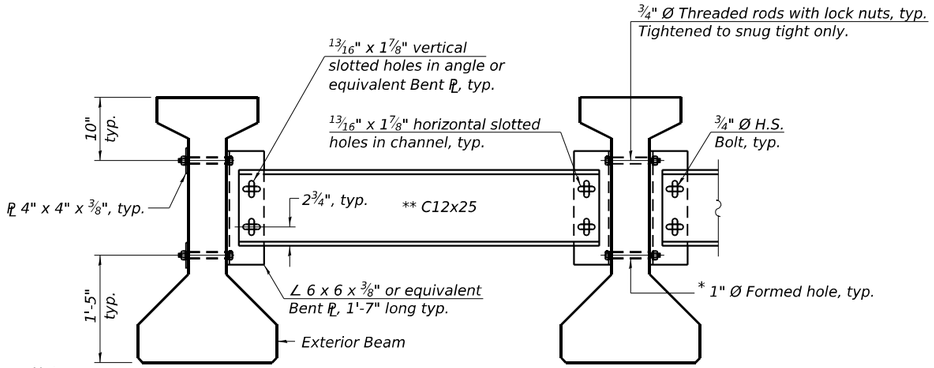

Notes:

All material for bracing shall be hot dip galvanized according to AASHTO M111 unless otherwise noted.

Two hardened washers are required for each set of oversized holes.

All holes shall be 15/16" Ø unless otherwise noted.

5/16" x 3" x 3" plate washers are required over all slotted holes.

All bolts, threaded rods, and hardware shall be galvanized according to AASHTO M232.

Threaded rods shall be ASTM F 1554 Grade 55.

Bracing shall be installed as beams are erected and tightened as soon as possible during erection.

Permanent bracing shall not be paid for separately, but shall be included in the cost of Furnishing and Erecting Precast Prestressed Concrete I-Beams.

* Fabricator shall locate to miss strands within permissible tolerances.

** Alternate C12x30 channels are permitted to facilitate material acquisition.

PERMANENT BRACING DETAILS

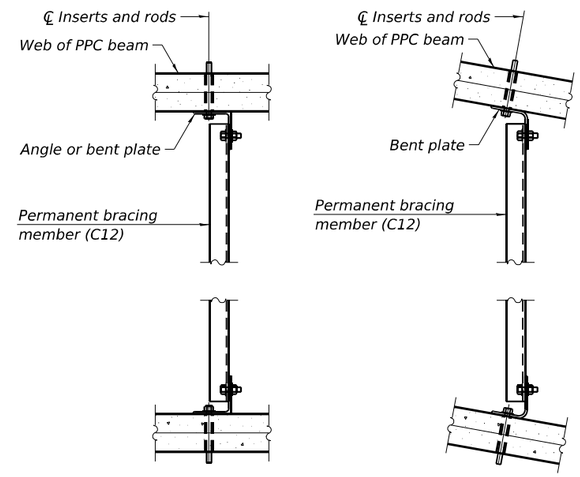

STRAIGHT BEAMS

FLARED BEAMS

PLAN

I: Non-composite moment of inertia of beam section (in.⁴).
I': Composite moment of inertia of beam section (in.⁴).
S_b: Non-composite section modulus for the bottom fiber of the prestressed beam (in.³).
S_b': Composite section modulus for the bottom fiber of the prestressed beam (in.³).
S_t: Non-composite section modulus for the top fiber of the prestressed beam (in.³).
S_t': Composite section modulus for the top fiber of the prestressed beam (in.³).
DC1: Un-factored non-composite dead load (kips/ft.).
M_{DC1}: Un-factored moment due to non-composite dead load (kip-ft.).
DC2: Un-factored long-term composite (superimposed excluding future wearing surface) dead load (kips/ft.).
M_{DC2}: Un-factored moment due to long-term composite (superimposed excluding future wearing surface) dead load (kip-ft.).
DW: Un-factored long-term composite (superimposed future wearing surface only) dead load (kips/ft.).
M_{DW}: Un-factored moment due to long-term composite (superimposed future wearing surface only) dead load (kip-ft.).
LLDF: Live Load Distribution Factor for moment and shear computed according to Article 4.6.2.2 and further IDOT provisions.
M_{LL+IM}: Un-factored live load moment plus dynamic load allowance (impact) (kip-ft.).
OCF: Obtuse Correction Factor computed according to Article 4.6.2.2.3c or as further simplified by IDOT provisions.
R_{DC1}: Un-factored reaction due to non-composite dead load (kip).
R_{DC2}: Un-factored reaction due to long-term composite (superimposed excluding future wearing surface) dead load (kip).
R_{DW}: Un-factored reaction due to long-term composite (superimposed future wearing surface only) dead load (kip).
R_{LL}: Un-factored live load reaction (kip).
R_{IM}: Un-factored dynamic load allowance (impact) (kip).
R_{Total}(Strength I)(Impact): Total factored reaction including dynamic load allowance (impact) kip).
R_{Total}(Strength I)(No Impact): Total factored reaction not including dynamic load allowance (impact) (kip).

EXTERIOR BEAM

(Beam 1)

MOMENT TABLE

		0.4 Sp. 1	Pier 1	0.5 Sp. 2	Pier 2	0.6 Sp. 3
I	(in⁴)	90,956	-	90,956	-	90,956
I'	(in⁴)	331,077	331,077	331,077	331,077	331,077
S_b	(in³)	5,153	-	5,153	-	5,153
S_b'	(in³)	9,585	9,585	9,585	9,585	9,585
S_t	(in³)	3,736	-	3,736	-	3,736
S_t'	(in³)	44,380	44,380	44,380	44,380	44,380
DC1	(k/ft)	1.331	-	1.331	-	1.331
M_{DC1}	(ft-k)	531	-	852	-	531
DC2	(k/ft)	0.113	0.119	0.124	0.128	0.132
M_{DC2}	(ft-k)	25	-47	29	-52	31
DW	(k/ft)	0.296	0.304	0.311	0.317	0.323
M_{DW}	(ft-k)	68	-121	71	-128	76
LLDF	(ft-k)	0.750	0.730	0.710	0.730	0.750
M_{LL+IM}	(ft-k)	776	-785	775	-785	776

REACTION TABLE

			S. Abut.	Pier 1 Span 1	Pier 1 Span 2	Pier 2 Span 2	Pier 2 Span 3	N. Abut.
	LLDF	(k)	0.690	0.690	0.690	0.690	0.690	0.690
	OCF	(k)	-	-	-	-	-	-
	R_{DC1}	(k)	38.7	38.7	48.0	48.0	38.7	38.7
***	R_{DC2}	(k)	2.4	4.3	4.3	4.7	4.7	2.9
***	R_{DW}	(k)	6.4	11.1	11.1	11.6	11.6	7.0
***	R_{L+IM}	(k)	65.0	49.0	49.0	49.0	49.0	63.4
	R_{Total}(Strength I)(Impact)	(k)	174.6	156.2	167.8	169.1	157.5	173.4
	R_{Total}(Strength I)(No Impact)	(k)	151.5	142.3	154.0	155.3	143.6	151.0

INTERIOR BEAM

MOMENT TABLE

		0.4 Sp. 1	Pier 1	0.5 Sp. 2	Pier 2	0.6 Sp. 3
I	(in⁴)	90,956	-	90,956	-	90,956
I'	(in⁴)	337,890	337,890	337,890	337,890	337,890
S_b	(in³)	5,153	-	5,153	-	5,153
S_b'	(in³)	9,651	9,651	9,651	9,651	9,651
S_t	(in³)	3,736	-	3,736	-	3,736
S_t'	(in³)	48,339	48,339	48,339	48,339	48,339
DC1	(k/ft)	1.300	-	1.300	-	1.300
M_{DC1}	(ft-k)	521	-	835	-	521
DC2	(k/ft)	0.113	0.119	0.124	0.128	0.132
M_{DC2}	(ft-k)	25	-47	29	-52	31
DW	(k/ft)	0.296	0.304	0.311	0.317	0.323
M_{DW}	(ft-k)	68	-121	71	-128	76
LLDF	(ft-k)	0.719	0.696	0.679	0.696	0.719
M_{LL+IM}	(ft-k)	744	-748	742	-748	744

REACTION TABLE

			S. Abut.	Pier 1 Span 1	Pier 1 Span 2	Pier 2 Span 2	Pier 2 Span 3	N. Abut.
	LLDF	(k)	0.825	0.825	0.825	0.825	0.825	0.825
	OCF	(k)	-	-	-	-	-	-
	R_{DC1}	(k)	38.0	38.0	47.0	47.0	38.0	38.0
***	R_{DC2}	(k)	2.4	4.3	4.3	4.7	4.7	2.9
***	R_{DW}	(k)	6.4	11.1	11.1	11.6	11.6	7.0
***	R_{L+IM}	(k)	77.7	58.6	58.6	58.6	58.6	75.8
	R_{Total}(Strength I)(Impact)	(k)	195.9	172.1	183.3	184.6	173.4	194.3
	R_{Total}(Strength I)(No Impact)	(k)	168.3	155.5	166.8	168.1	156.8	167.4

*** At continuous piers, reactions from composite loads are assumed to be equally distributed to each bearing line

WSP USA Inc.
30 N. LASALLE STREET
SUITE 4200
CHICAGO, IL 60602
TEL: (312) 782-8150
FAX: (312) 782-1684

USER NAME = lauxpj	DESIGNED - SJJ	REVISED -	
	CHECKED - KB	REVISED -	
PLOT SCALE = 0:1.9999 ':" / in.	DRAWN - SJJ	REVISED -	
PLOT DATE = 12/2/2025	CHECKED - KB	REVISED -	

STATE OF ILLINOIS
DEPARTMENT OF TRANSPORTATION

42" PPC I-BEAM DETAILS 2
STRUCTURE NUMBER 099-8306

SHEET SC-43 OF SC-60 SHEETS

F.A.P. RTE.	SECTION	COUNTY	TOTAL SHEETS	SHEET NO.
0846	2017-057F	WILL	1342	872
		CONTRACT NO. 62F94		
		ILLINOIS	FED. AID PROJECT	

MODEL: Default
FILE NAME: 099B306-62F94-S043-PR04.dgn

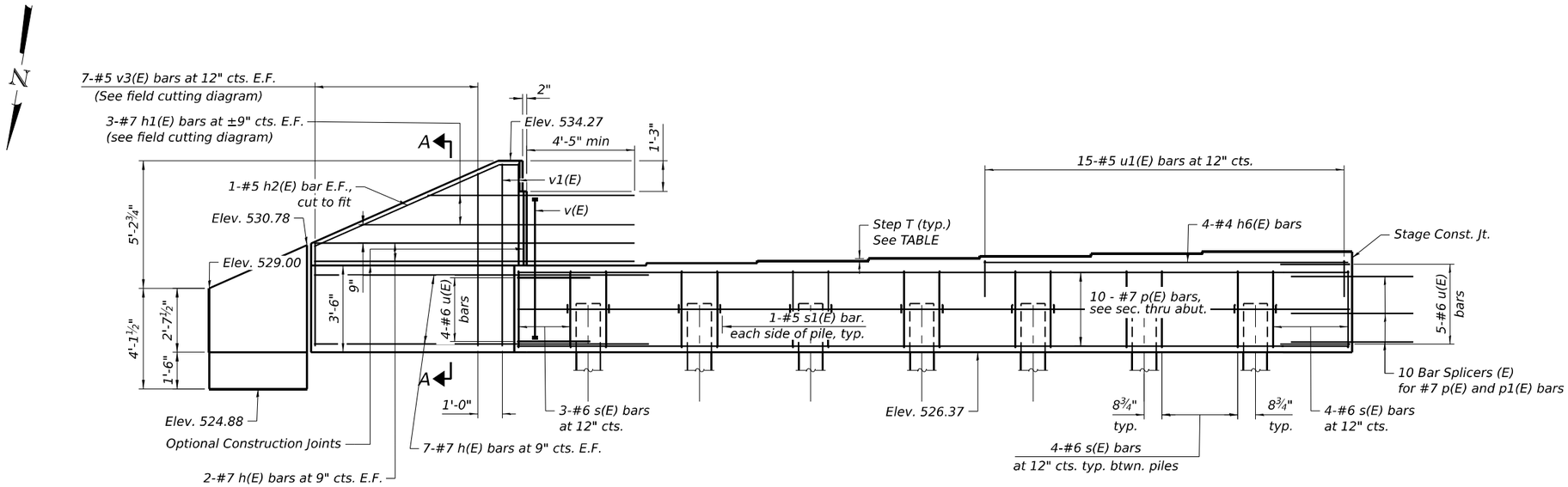

ELEVATION

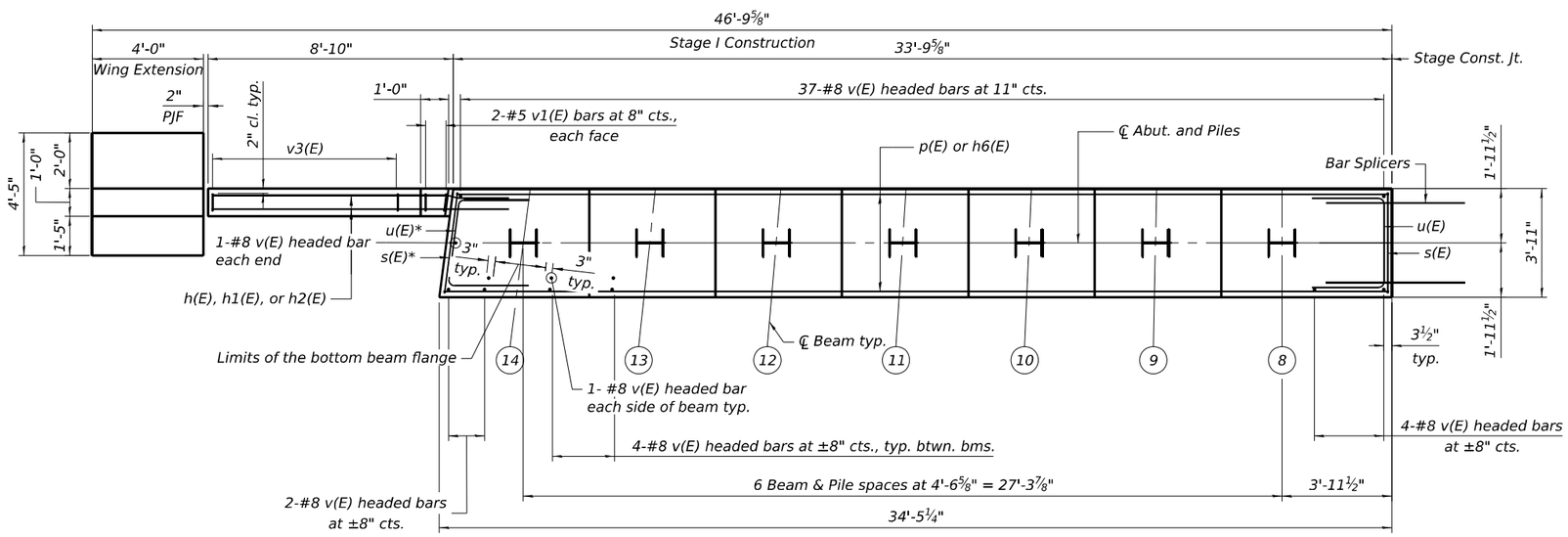

PLAN

*Field Bend to Fit

PILE DATA

Type: HP12x63
Nominal Required Bearing: Set in Rock
Factored Resistance Available: 348 kips
Estimated Pile Length: 21'
No. Production Piles: 14
No. Test Piles: 0

BEARING SEAT ELEVATIONS

BEAM	BRG. SEAT ELEVATION	STEP - T (Inch)
8	530.43	
9	530.34	1"
10	530.25	1"
11	530.16	1"
12	530.07	1"
13	529.97	1¼"
14	529.88	1"

NOTES:

1. Pour steps monolithically with cap.
2. See sheet SC-48 for Wing Extension Details, Abutment Details and Bill of Material.
3. For Section A-A, see sheet SC-48.
4. For details of piles, see sheet SC-55.

MODEL: Default
FILE NAME: 0998306-62F94-S044-ABT01.dgn

WSP USA Inc.
30 N. LASALLE STREET
SUITE 4200
CHICAGO, IL 60602
TEL: (312) 782-8150
FAX: (312) 782-1684

USER NAME = lauxpj	DESIGNED - KB	REVISED -	STATE OF ILLINOIS DEPARTMENT OF TRANSPORTATION
	CHECKED - KA	REVISED -	
PLOT SCALE = 0:1.9999 ':" / in.	DRAWN - KB	REVISED -	
PLOT DATE = 12/2/2025	CHECKED - KA	REVISED -	

SOUTH ABUTMENT 1
STRUCTURE NUMBER 099-8306

SHEET SC-44 OF SC-60 SHEETS

F.A.P. RTE.	SECTION	COUNTY	TOTAL SHEETS	SHEET NO.
0846	2017-057F	WILL	1342	873
		CONTRACT NO. 62F94		
		ILLINOIS	FED. AID PROJECT	

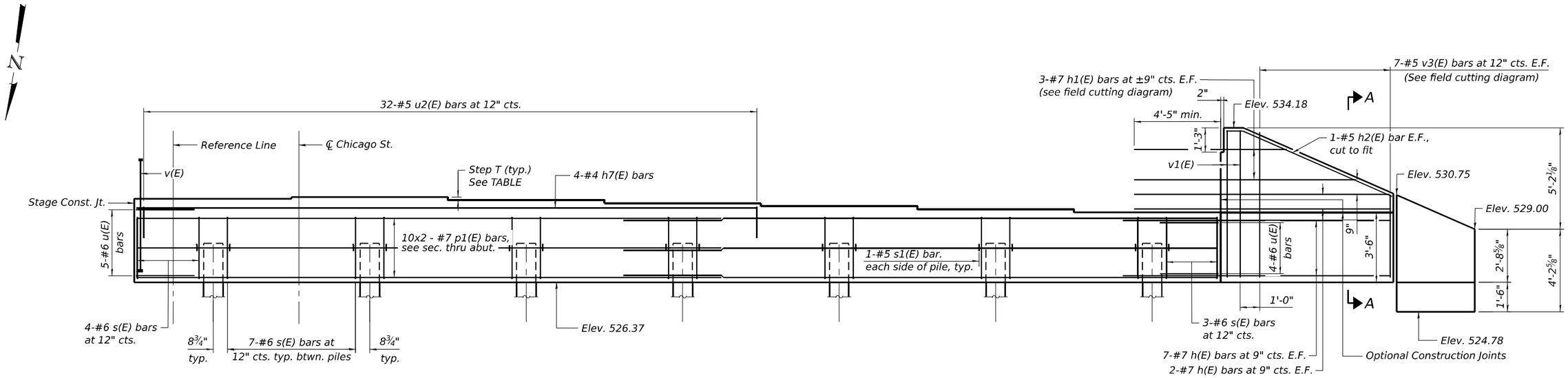

ELEVATION

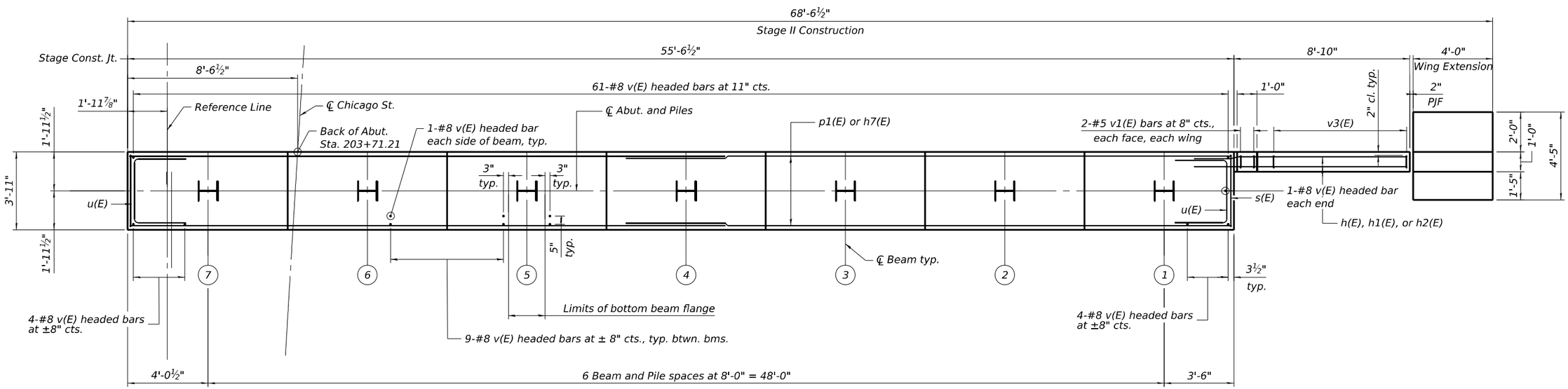

PLAN

BEARING SEAT ELEVATIONS

BEAM	BRG. SEAT ELEVATION	STEP - T (Inch)
1	529.87	
		1⅞"
2	530.03	
		1⅞"
3	530.19	
		1⅞"
4	530.35	
		1⅞"
5	530.51	
		1⅞"
6	530.67	
		1"
7	530.59	

MINIMUM BAR LAP

#7 bar = 5'-0"

NOTES:

1. Pour steps monolithically with cap.
2. See sheet SC-48 for Wing Extension Details, Abutment Details and Bill of Material.
3. Bars indicated with 10x2-#7, etc. indicates 10 lines of bars with 2 length per line.
4. For Section A-A, see sheet SC-48.
5. For details of piles, see sheet SC-55.

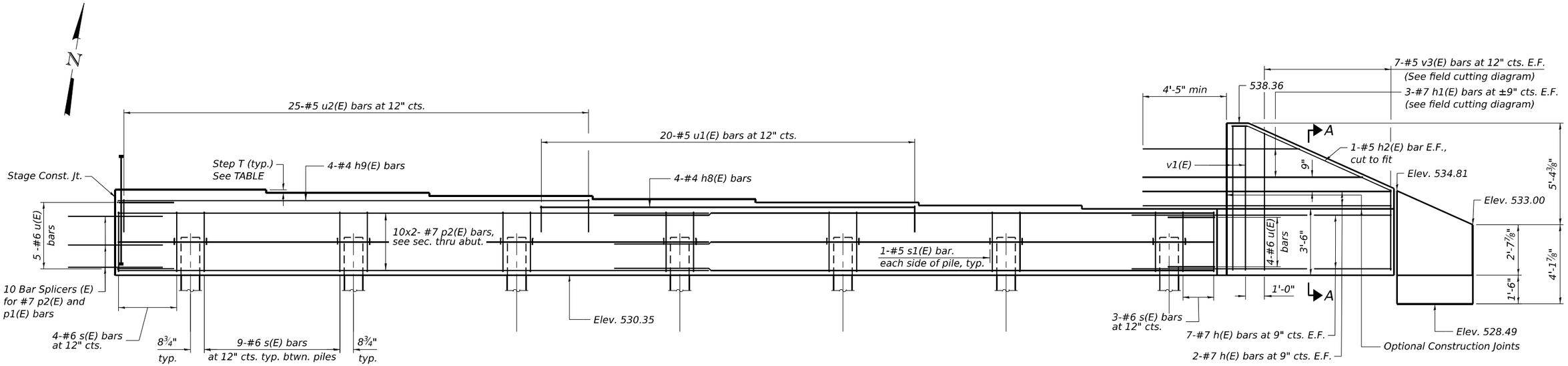

ELEVATION

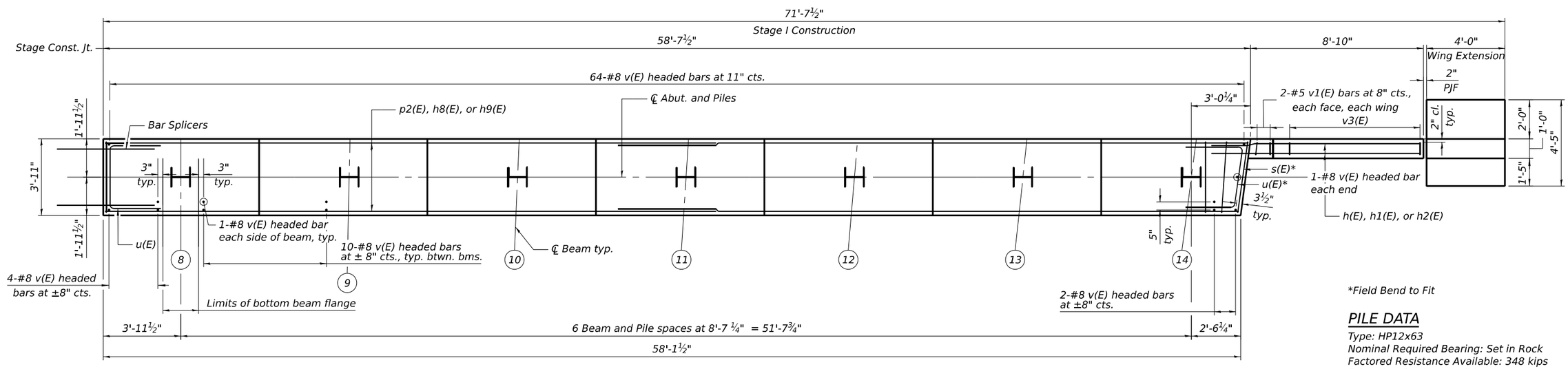

PLAN

*Field Bend to Fit

PILE DATA

Type: HP12x63
Nominal Required Bearing: Set in Rock
Factored Resistance Available: 348 kips
Estimated Pile Length: 24'
No. Production Piles: 14
No. Test Piles: 0

BEARING SEAT ELEVATIONS

BEAM	BRG. SEAT ELEVATION	STEP
8	534.88	
9	534.71	2"
10	534.54	2"
11	534.36	2⅛"
12	534.19	2
13	534.02	2
14	533.85	2

MINIMUM BAR LAP

#7 bar = 5'-0"

NOTES:

1. Pour steps monolithically with cap.
2. See sheet SC-48 for Wing Extension Details, Abutment Details and Bill of Material
3. Bars indicated with 10x2-#7, etc. indicates 10 lines of bars with 2 length per line.
4. For Section A-A, see sheet SC-48.
5. For details of piles, see sheet SC-55.

MODEL: Default
FILE NAME: 0998306-62F94-S046-ABT03.dgn

WSP USA Inc.
30 N. LASALLE STREET
SUITE 4200
CHICAGO, IL 60602
TEL: (312) 782-8150
FAX: (312) 782-1684

USER NAME = lauxpj	DESIGNED - KB	REVISED -	
	CHECKED - KA	REVISED -	
PLOT SCALE = 0:1.9999 ':" / in.	DRAWN - KB	REVISED -	
PLOT DATE = 12/2/2025	CHECKED - KA	REVISED -	

STATE OF ILLINOIS
DEPARTMENT OF TRANSPORTATION

NORTH ABUTMENT 1
STRUCTURE NUMBER 099-8306

SHEET SC-46 OF SC-60 SHEETS

F.A.P. RTE.	SECTION	COUNTY	TOTAL SHEETS	SHEET NO.
0846	2017-057F	WILL	1342	875
		CONTRACT NO. 62F94		
		ILLINOIS	FED. AID PROJECT	

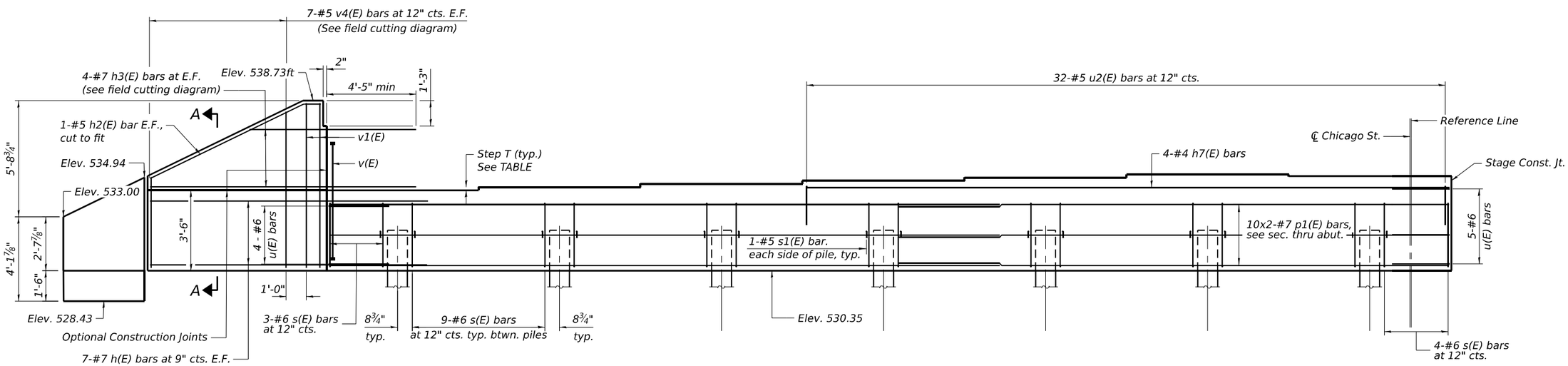

ELEVATION

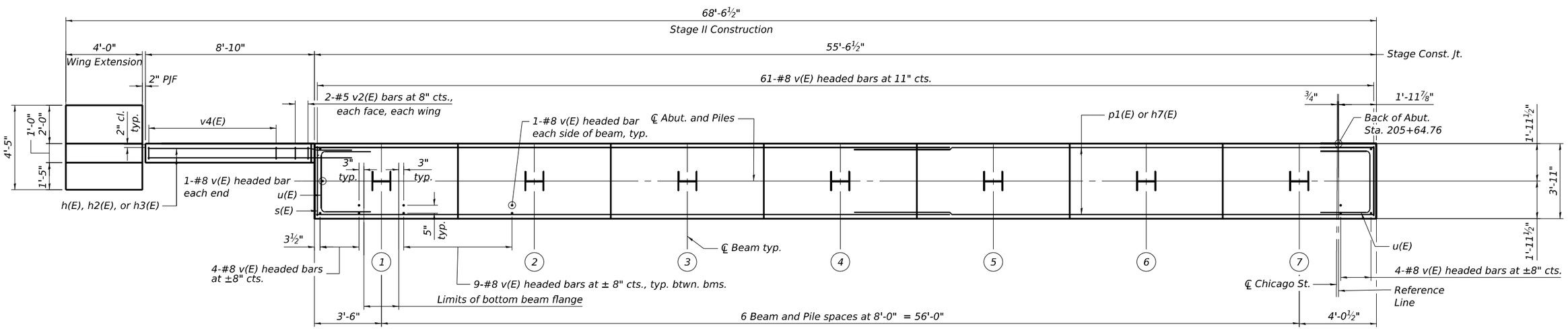

PLAN

BEARING SEAT ELEVATIONS

BEAM	BRG. SEAT ELEVATION	STEP
1	534.32	
		1⅞"
2	534.48	
		1⅞"
3	534.64	
		1⅞"
4	534.80	
		1⅞"
5	534.96	
		1⅞"
6	535.12	
		1"
7	535.04	

MINIMUM BAR LAP

#7 bar = 5'-0"

NOTES:

1. Pour steps monolithically with cap.
2. See sheet SC-48 for Wing Extension Details, Abutment Details and Bill of Material.
3. Bars indicated with 10x2-#7, etc. indicates 10 lines of bars with 2 length per line.
4. For Section A-A, see sheet SC-48.
5. For details of piles, see sheet SC-55.

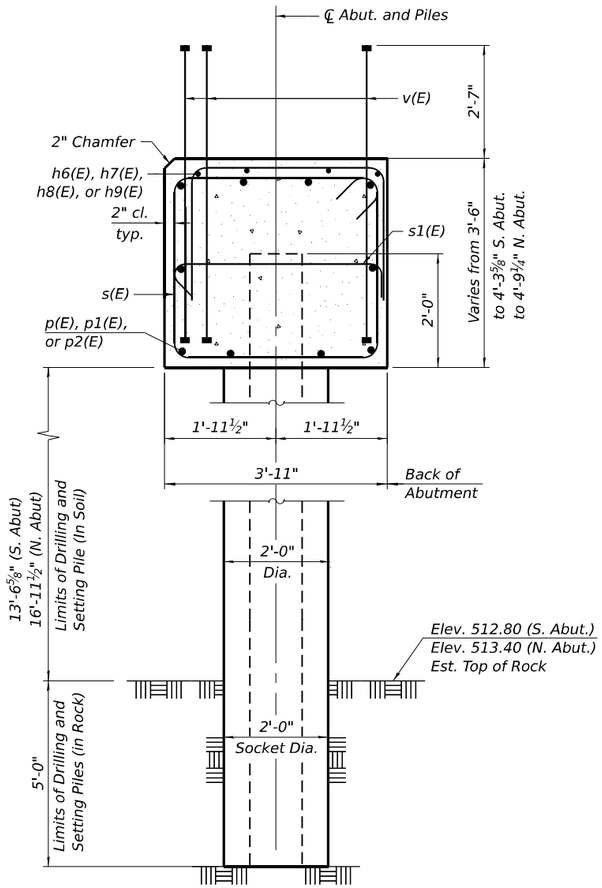

SECT. THRU ABUT.

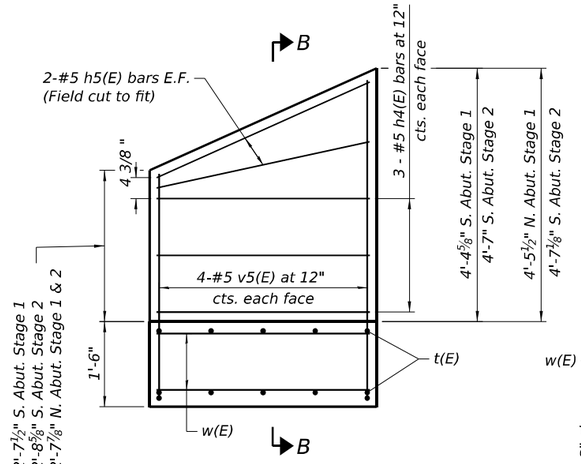

WING EXTENSION - ELEVATION

(The maximum applied service bearing pressure, Qmax = 1.26ksf)

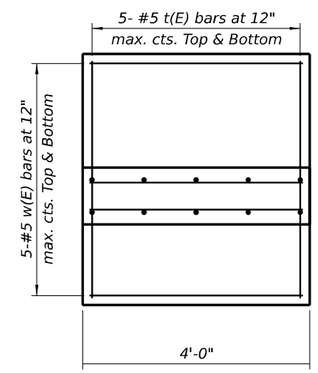

WING EXTENSION - FOOTING PLAN

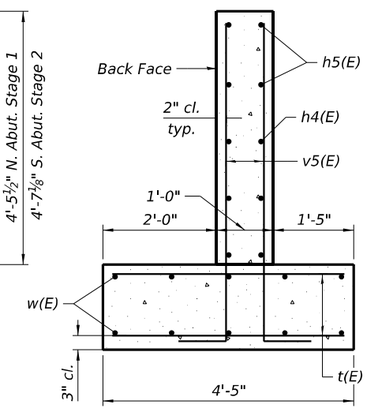

SECTION B-B

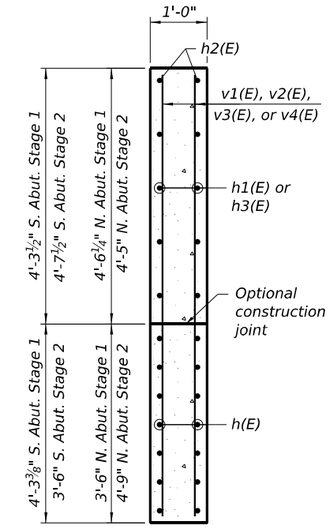

SECTION A-A

TWO ABUTMENTS BILL OF MATERIAL

Bar	No.	Size	Length	Shape
h(E)	68	#7	13'-1"	
h1(E)	6	#7	18'-5"	
h2(E)	8	#5	10'-3"	
h3(E)	4	#7	20'-10"	
h4(E)	24	#5	3'-8"	
h5(E)	16	#5	4'-1"	
h6(E)	4	#4	14'-11"	
h7(E)	8	#4	31'-9"	
h8(E)	4	#4	19'-10"	
h9(E)	4	#4	24'-10"	
p(E)	10	#7	33'-6"	
p1(E)	40	#7	30'-1"	
p2(E)	20	#7	31'-5"	
s(E)	202	#6	14'-10"	
s1(E)	56	#5	4'-7"	
t(E)	20	#5	3'-8"	
u(E)	36	#5	12'-1"	
u1(E)	35	#5	6'-1"	
u2(E)	89	#5	6'-9"	
v(E)	507	#8	5'-11"	
v1(E)	12	#5	7'-11"	
v2(E)	4	#5	8'-6"	
v3(E)	21	#5	12'-11"	
v4(E)	7	#5	13'-9"	
v5E)	16	#5	10'-1"	
w(E)	20	#5	3'-8"	
Structure Excavation			Cu. Yd.	482
Concrete Structures			Cu. Yd.	133.1
Reinforcement Bars Epoxy Coated			Pound	22,137
Furnishing Steel Piles, HP 12x63			Foot	630
Granular Backfill for Structures			Cu. Yd.	349
Geocomposite Wall Drain			Sq. Yd.	341
Pipe Underdrains for Structures 4"			Foot	256
Drilling and Setting Pile (In Soil)			Cu. Ft.	1,343
Drilling and Setting Pile (In Rock)			Cu. Ft.	440

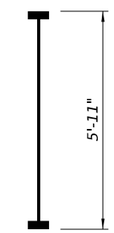

BAR v(E)

(Headed 507-#8 Bar Terminators)

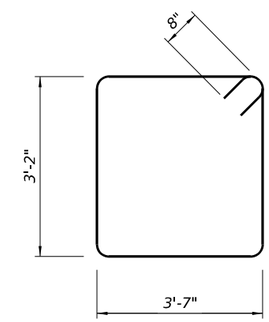

BAR s(E)

NOTES:

1. Bar Terminators paid for separately. See Total Bill of Material.

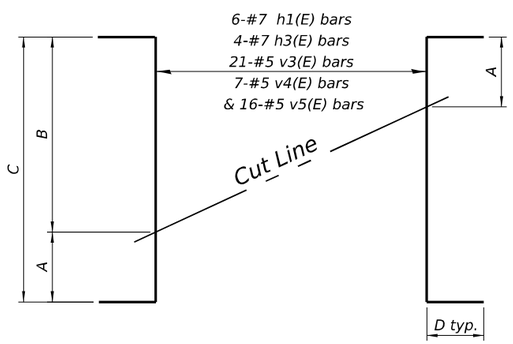

* FIELD CUTTING DIAGRAM

* Order h1(E), h3(E), v3(E), v4(E), and v5(E) full length. Cut as shown and use remainder of bars in opposite face.

A, B, C & D Dimensions

Bar	A	B	C	D
h1(E)	7'-4"	11'-1"	18'-5"	-
h3(E)	7'-9"	13'-1"	20'-10"	-
v3(E)	5'-5"	7'-6"	12'-11"	-
v4(E)	5'-9"	8'-0"	13'-9"	-
v5(E)	3'-9"	5'-6"	9'-3"	10"

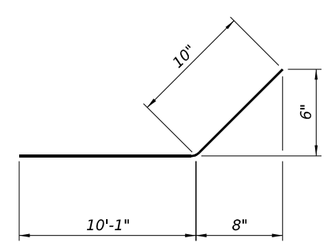

BAR h2(E)

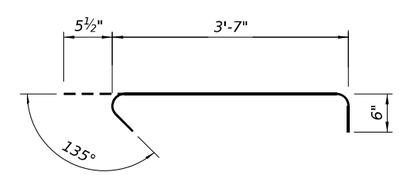

BAR s1(E)

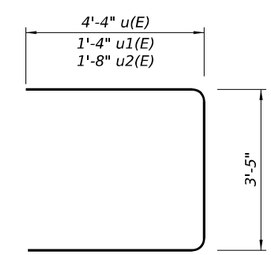

BAR u(E), u1(E), & u2(E)

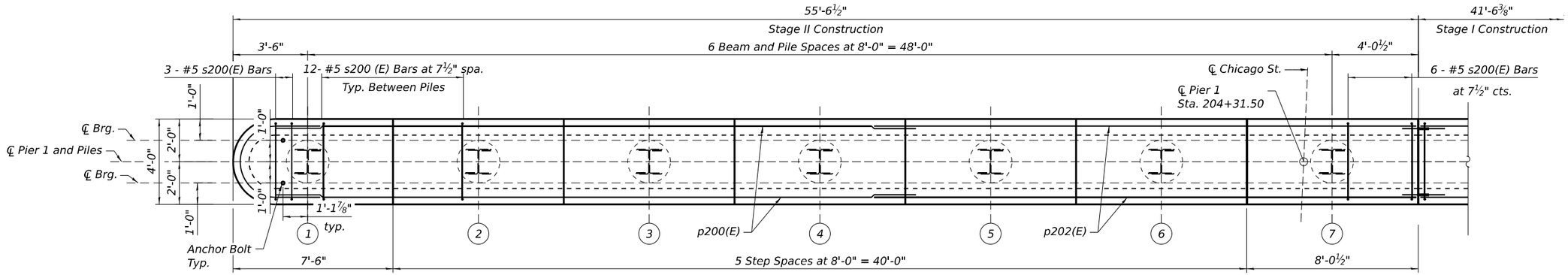

PLAN

MINIMUM BAR LAP

#5 bar = 3'-6"
#7 bar = 5'-0"

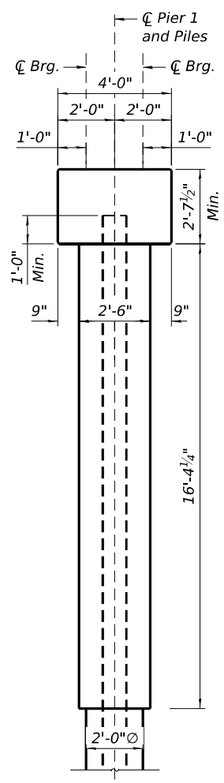

END VIEW

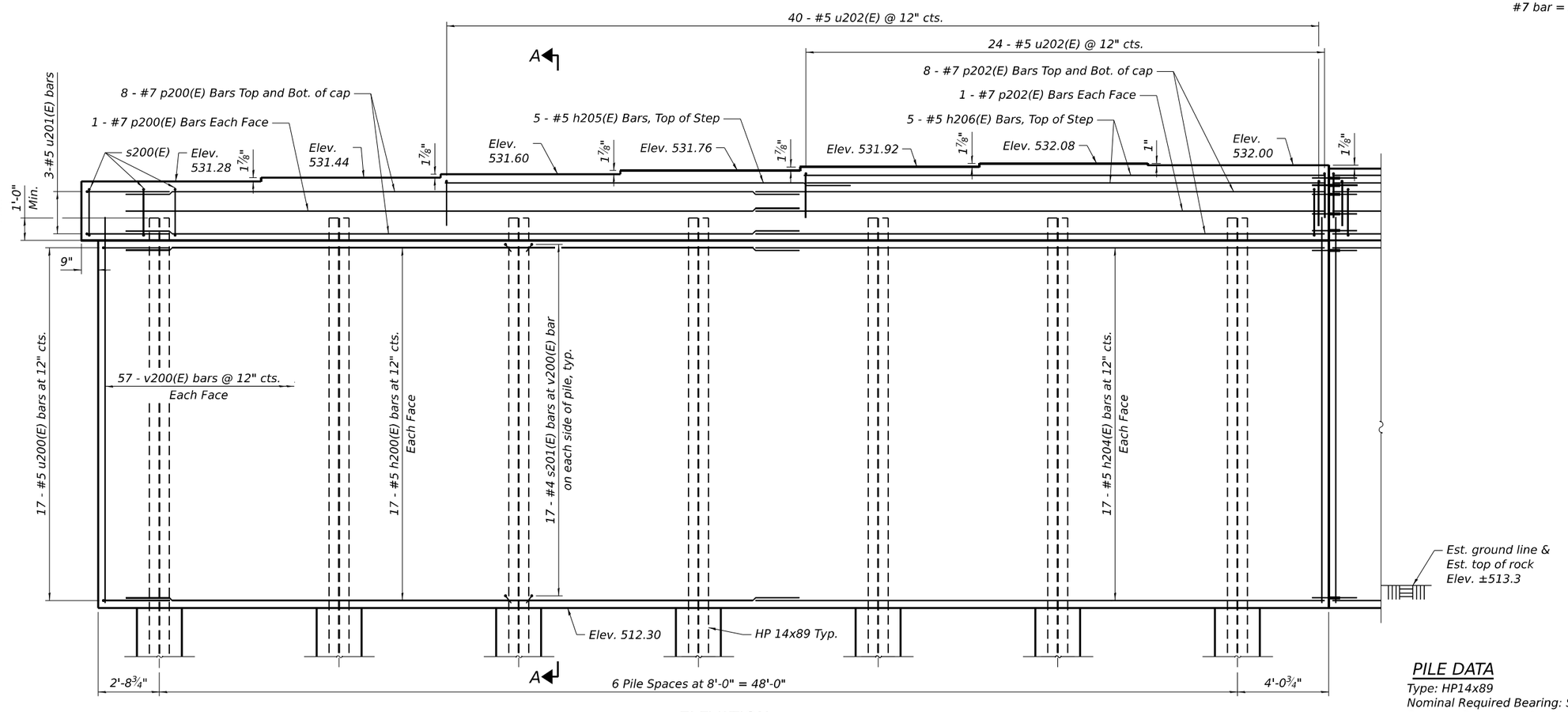

ELEVATION

PILE DATA

Type: HP14x89
Nominal Required Bearing: Set in Rock
Factored Resistance Available: 493 kips
Estimated Pile Length: 24'
No. Production Piles: 14
No. Test Piles: 0

MODEL: Spans 1 and 3
FILE NAME: 0998306-62F94-S049-PR01.dgn

WSP USA Inc.
30 N. LASALLE STREET
SUITE 4200
CHICAGO, IL 60602
TEL: (312) 782-8150
FAX: (312) 782-1684

USER NAME = lauxpj	DESIGNED - KB	REVISED -	
	CHECKED - PJL	REVISED -	
PLOT SCALE = 5:3.9974 ':" / in.	DRAWN - PP	REVISED -	
PLOT DATE = 12/2/2025	CHECKED - PJL	REVISED -	

STATE OF ILLINOIS
DEPARTMENT OF TRANSPORTATION

PIER 1 SB
STRUCTURE NUMBER 099-8306

SHEET SC-49 OF SC-60 SHEETS

F.A.P. RTE.	SECTION	COUNTY	TOTAL SHEETS	SHEET NO.
0846	2017-057F	WILL	1342	878
		CONTRACT NO. 62F94		
	ILLINOIS	FED. AID PROJECT		

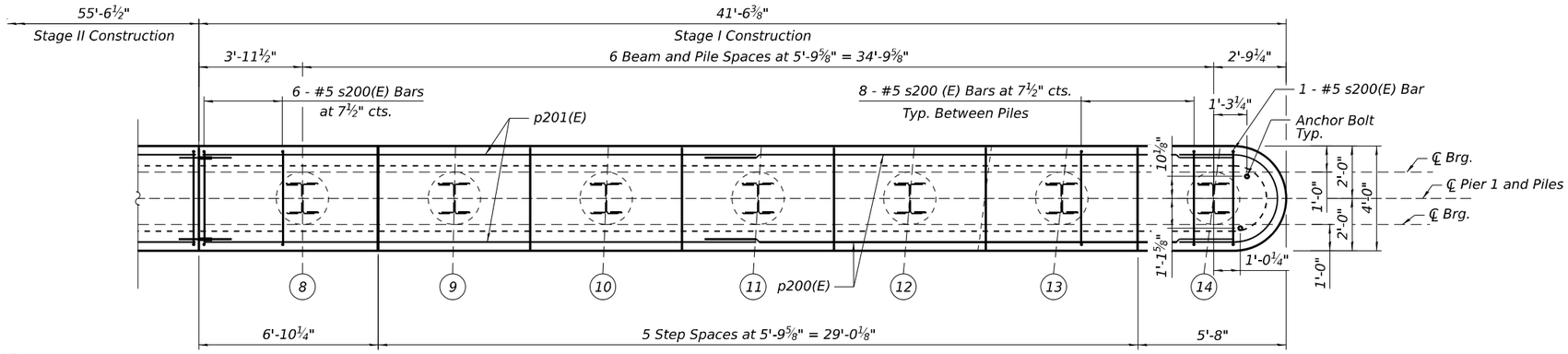

PLAN

MINIMUM BAR LAP
#5 bar = 3'-6"
#7 bar = 5'-0"

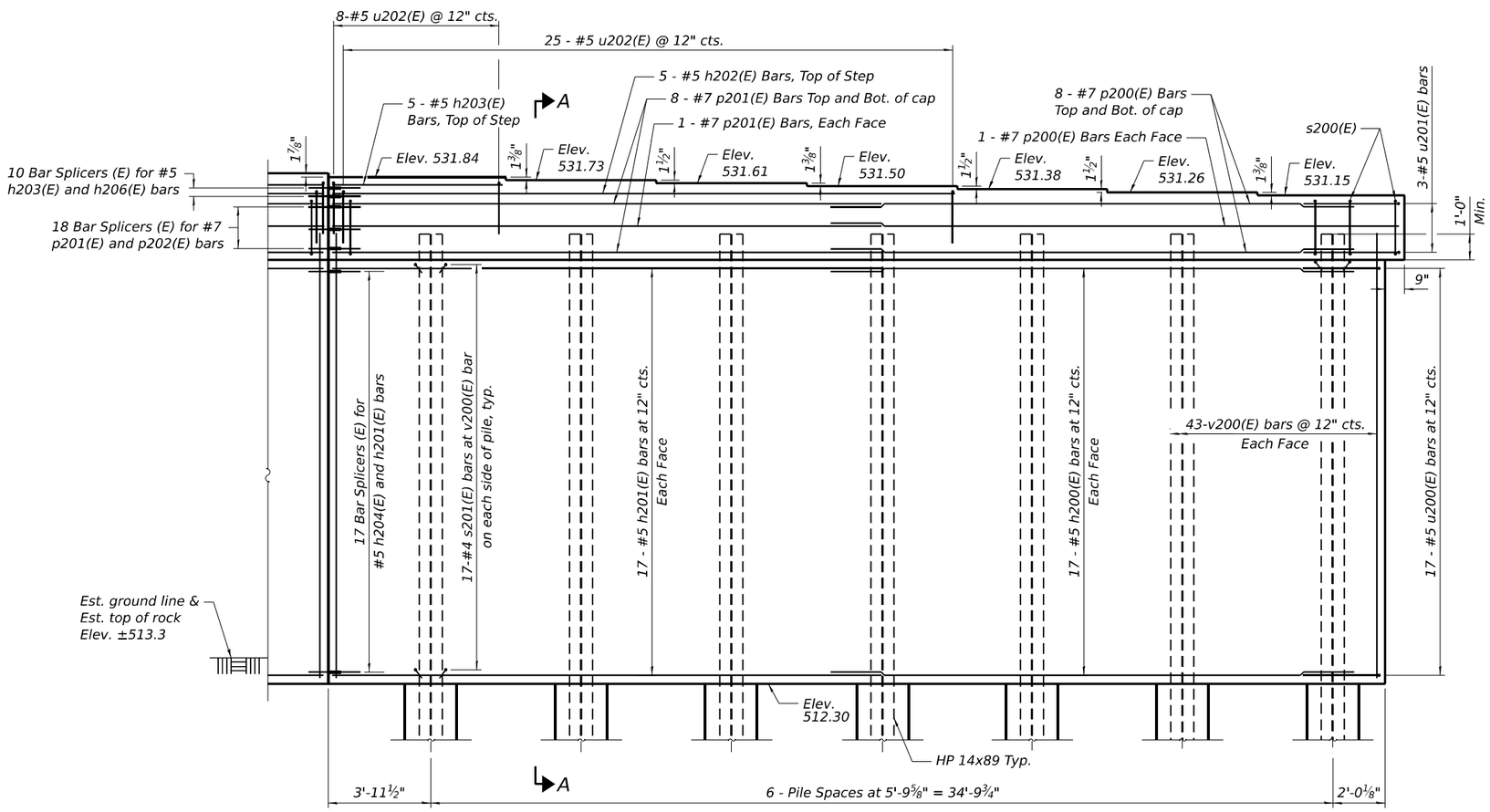

ELEVATION

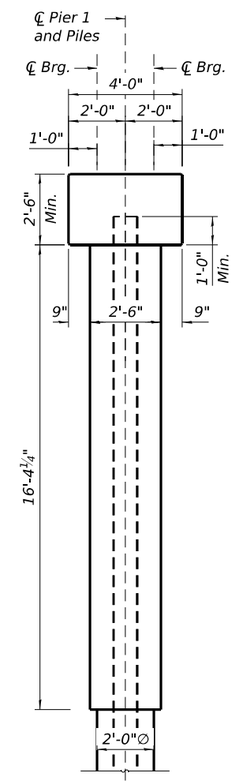

END VIEW

MODEL: Spans 1 and 3
FILE NAME: 0998306-62F94-S050-PR02.dgn

WSP USA Inc.
30 N. LASALLE STREET
SUITE 4200
CHICAGO, IL 60602
TEL: (312) 782-8150
FAX: (312) 782-1684

USER NAME = lauxpj	DESIGNED - KB	REVISED -	
	CHECKED - PJL	REVISED -	
PLOT SCALE = 5:3.9974 ':" / in.	DRAWN - PP	REVISED -	
PLOT DATE = 12/2/2025	CHECKED - PJL	REVISED -	

STATE OF ILLINOIS
DEPARTMENT OF TRANSPORTATION

PIER 1 NB
STRUCTURE NUMBER 099-8306

SHEET SC-50 OF SC-60 SHEETS

F.A.P. RTE.	SECTION	COUNTY	TOTAL SHEETS	SHEET NO.
0846	2017-057F	WILL	1342	879
		CONTRACT NO. 62F94		
	ILLINOIS	FED. AID PROJECT		

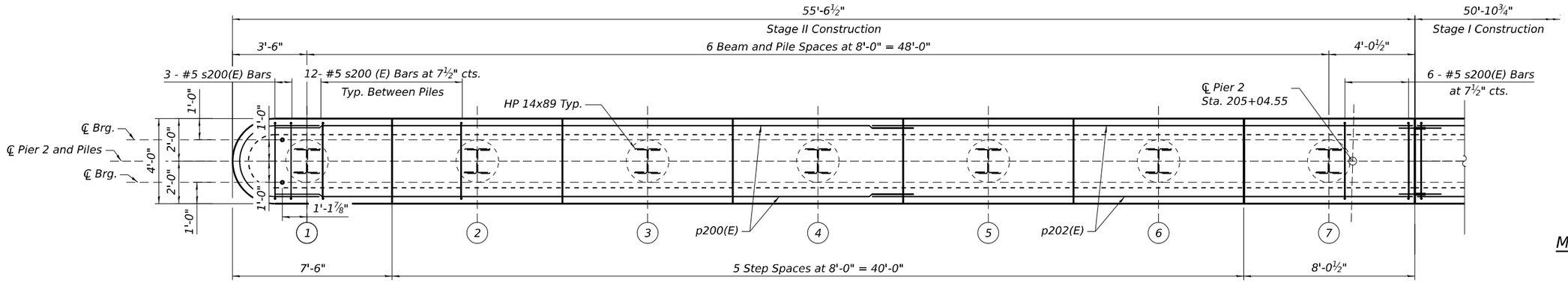

PLAN

MINIMUM BAR LAP

#5 bar = 3'-6"
#7 bar = 5'-0"

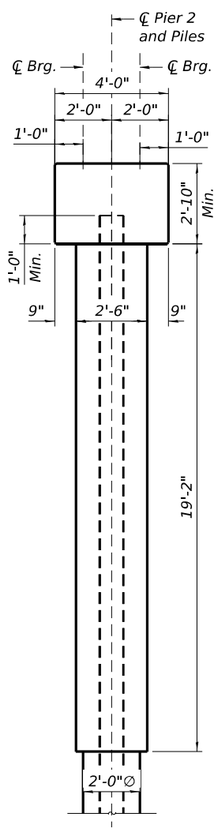

END VIEW

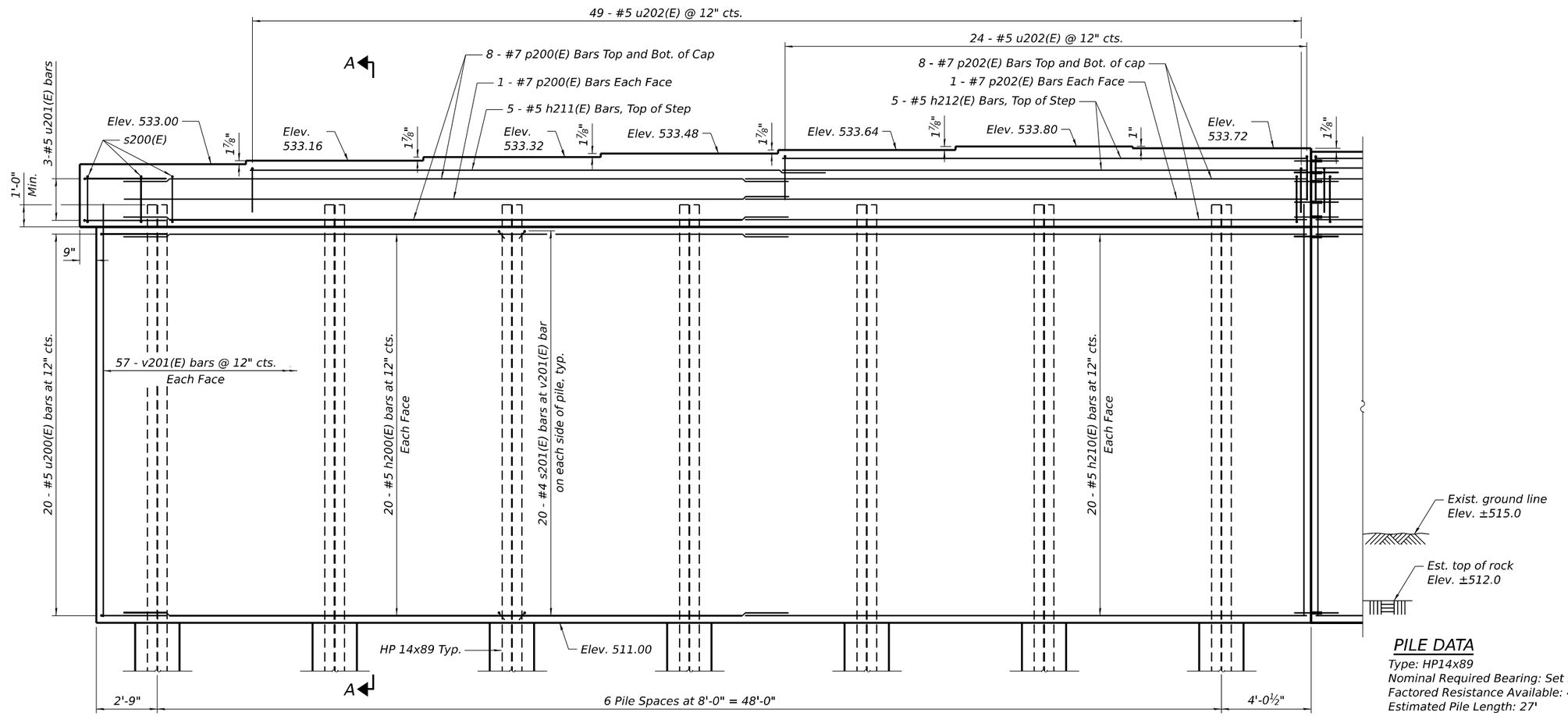

ELEVATION

PILE DATA

Type: HP14x89
Nominal Required Bearing: Set in Rock
Factored Resistance Available: 493 kips
Estimated Pile Length: 27'
No. Production Piles: 14
No. Test Piles: 0

MODEL: Spans 1 and 3
FILE NAME: 0998306-62F94-S051-PR03.dgn

WSP USA Inc.
30 N. LASALLE STREET
SUITE 4200
CHICAGO, IL 60602
TEL: (312) 782-8150
FAX: (312) 782-1684

USER NAME = lauxpj	DESIGNED - KB	REVISED -	
	CHECKED - PJL	REVISED -	
PLOT SCALE = 5:3.9974 ':" / in.	DRAWN - PP	REVISED -	
PLOT DATE = 12/2/2025	CHECKED - PJL	REVISED -	

STATE OF ILLINOIS
DEPARTMENT OF TRANSPORTATION

PIER 2 SB
STRUCTURE NUMBER 099-8306

SHEET SC-51 OF SC-60 SHEETS

F.A.P. RTE.	SECTION	COUNTY	TOTAL SHEETS	SHEET NO.
0846	2017-057F	WILL	1342	880
		CONTRACT NO. 62F94		
	ILLINOIS	FED. AID PROJECT		

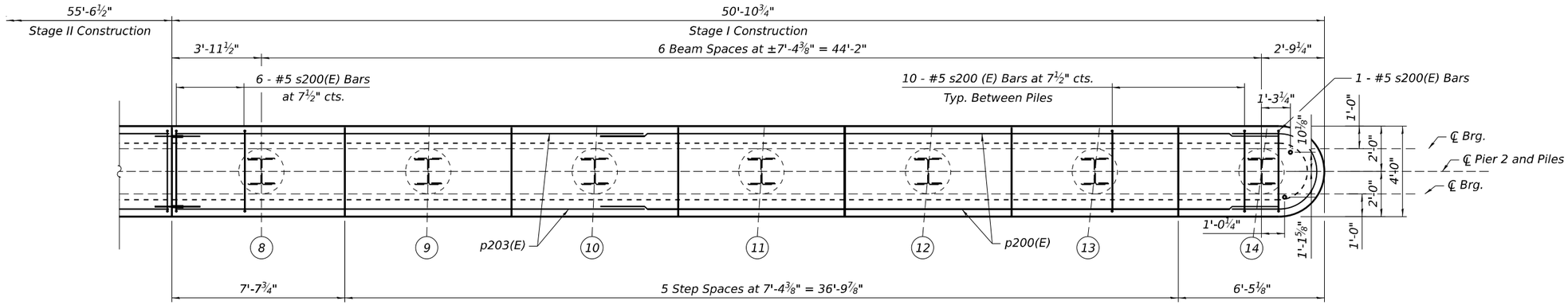

PLAN

MINIMUM BAR LAP

#5 bar = 3'-6"
#7 bar = 5'-0"

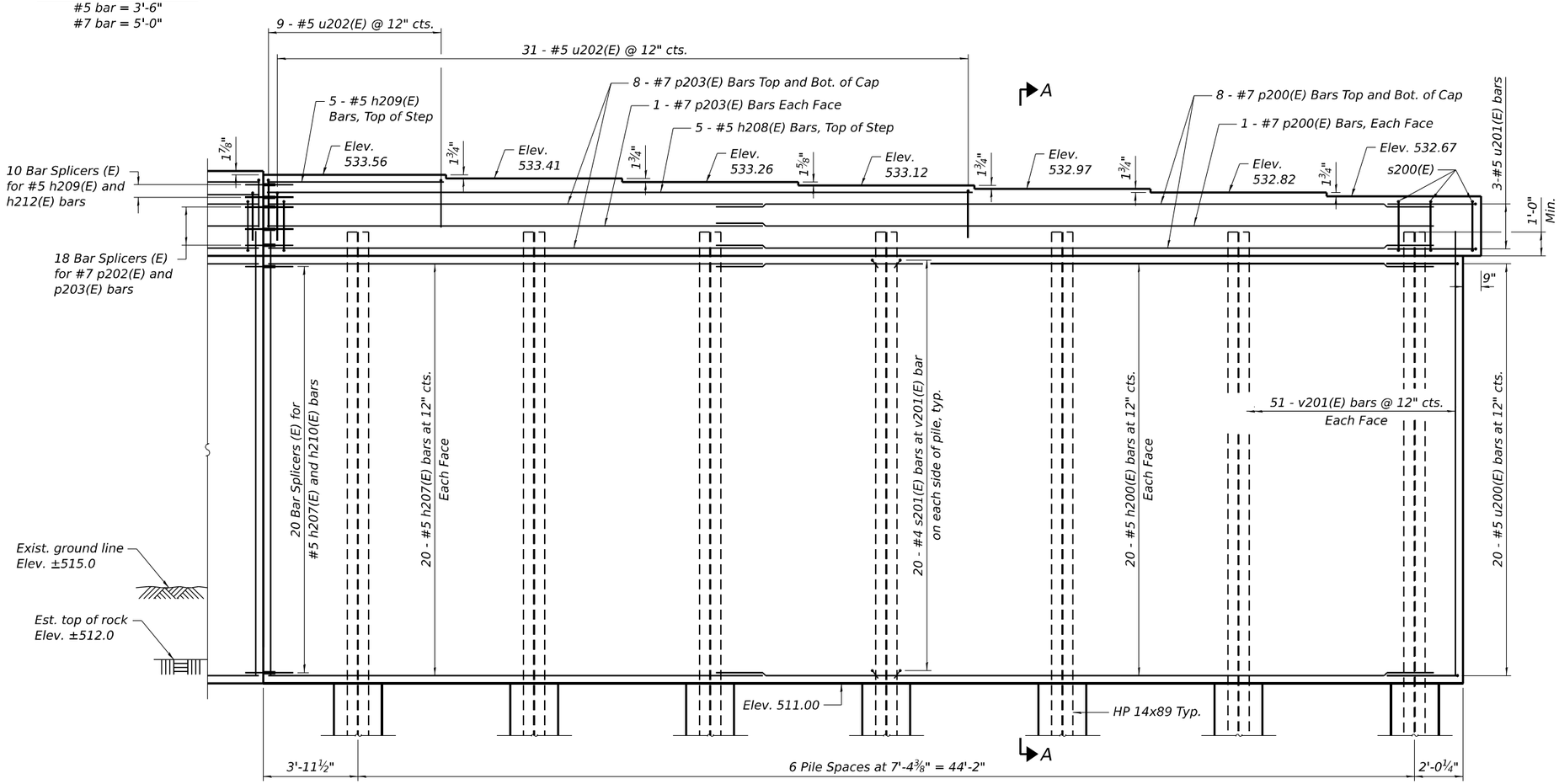

ELEVATION

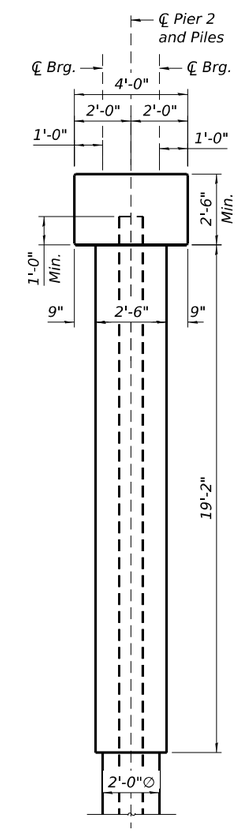

END VIEW

MODEL: Spans 1 and 3
FILE NAME: 0998306-62F94-S052-PR04.dgn

WSP USA Inc.
30 N. LASALLE STREET
SUITE 4200
CHICAGO, IL 60602
TEL: (312) 782-8150
FAX: (312) 782-1684

USER NAME = lauxpj	DESIGNED - KB	REVISED -	
	CHECKED - PJL	REVISED -	
PLOT SCALE = 5:3.9974 ':" / in.	DRAWN - PP	REVISED -	
PLOT DATE = 12/2/2025	CHECKED - PJL	REVISED -	

STATE OF ILLINOIS
DEPARTMENT OF TRANSPORTATION

PIER 2 NB
STRUCTURE NUMBER 099-8306

SHEET SC-52 OF SC-60 SHEETS

F.A.P. RTE.	SECTION	COUNTY	TOTAL SHEETS	SHEET NO.
0846	2017-057F	WILL	1342	881
		CONTRACT NO. 62F94		
	ILLINOIS	FED. AID PROJECT		

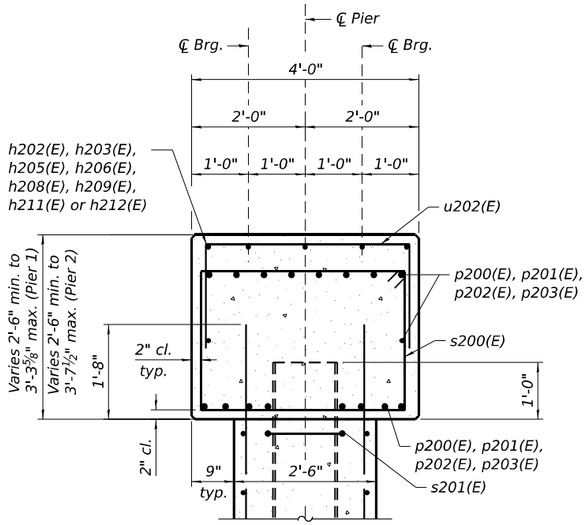

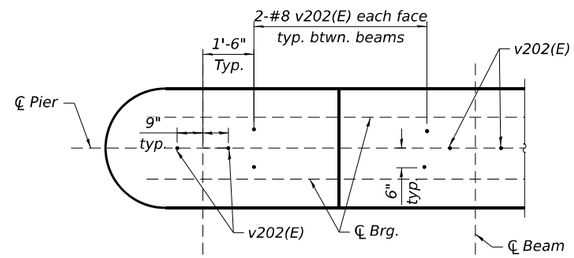

STRAIGHT BEAMS

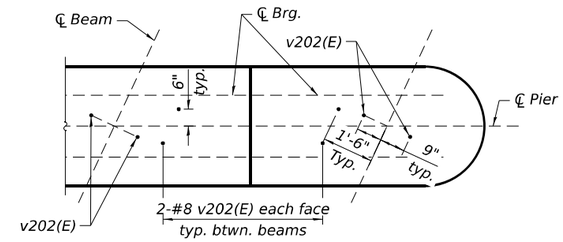

FLARED BEAMS

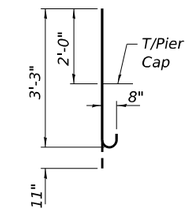

BAR v202(E)

PLAN SHOWING DOWEL LOCATION FOR DIAPHRAGM

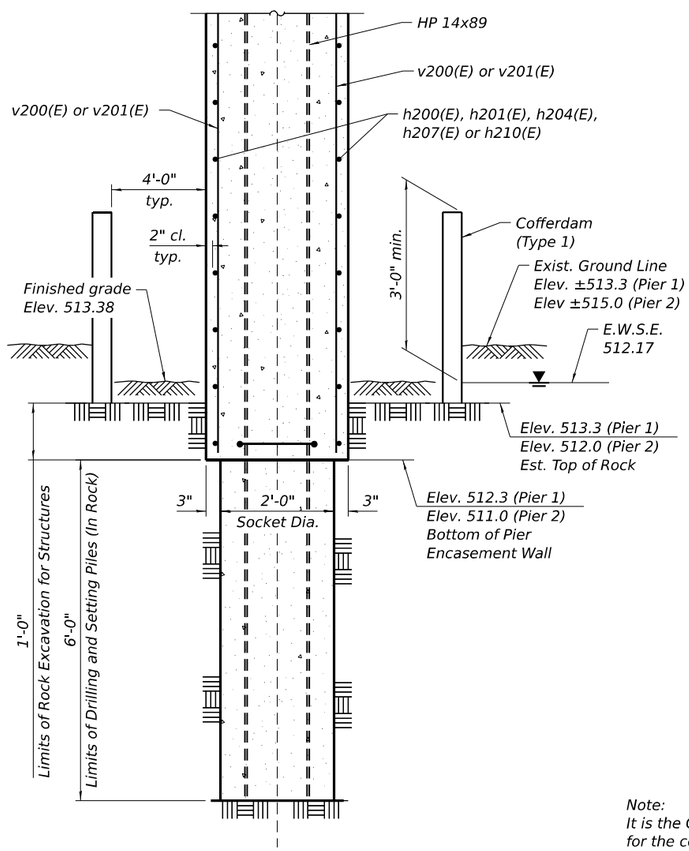

SECTION A-A

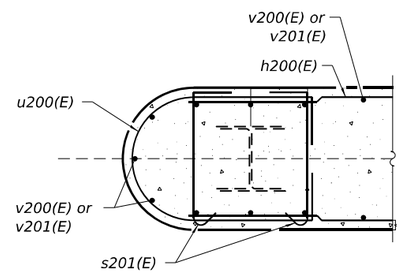

SECTION THRU ENDS OF PIER BELOW PIER CAP

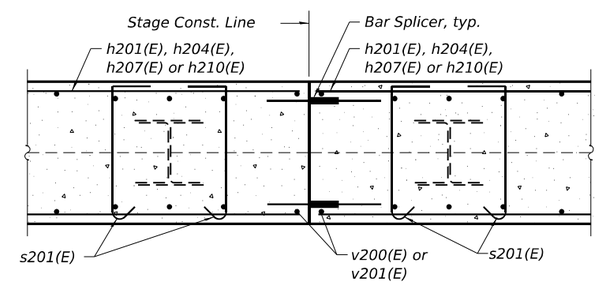

SECTION BELOW PIER CAP AT STAGE CONSTRUCTION LINE

TWO PIERS
BILL OF MATERIAL

Bar	No.	Size	Length	Shape
h200(E)	148	#5	30'-0"	
h201(E)	34	#5	12'-11"	
h202(E)	5	#5	23'-11"	
h203(E)	5	#5	6'-6"	
h204(E)	34	#5	26'-11"	
h205(E)	5	#5	19'-4"	
h206(E)	10	#5	23'-3"	
h207(E)	40	#5	22'-3"	
h208(E)	5	#5	29'-5"	
h209(E)	5	#5	7'-4"	
h210(E)	40	#5	26'-11"	
h211(E)	5	#5	27'-4"	
h212(E)	10	#5	23'-8"	
p200(E)	72	#7	30'-0"	
p201(E)	18	#7	14'-5"	
p202(E)	36	#7	28'-5"	
p203(E)	18	#7	23'-9"	
s200(E)	284	#5	12'-7"	
s201(E)	1036	#4	3'-2"	
u200(E)	74	#5	12'-1"	
u201(E)	12	#5	12'-9"	
u202(E)	210	#5	5'-8"	
v200(E)	200	#5	17'-10"	
v201(E)	216	#5	20'-8"	
v202(E)	160	#5	4'-2"	
Cofferdam Excavation			Cu. Yd.	142
Rock Excavation for Structures			Cu. Yd.	19
Cofferdam (Type 1) (Location - 1)			Each	1
Cofferdam (Type 1) (Location - 2)			Each	1
Concrete Structures			Cu. Yd.	460.1
Reinforcement Bars, Epoxy Coated			Pound	34,420
Furnishing Steel Piles HP14x89			Foot	714
Drilling and Setting Piles in Rock			Cu. Ft.	528

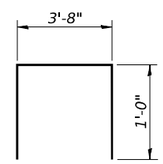

BAR u202(E)

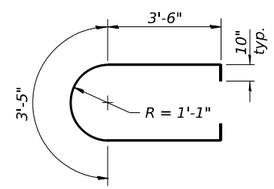

BAR u200(E)

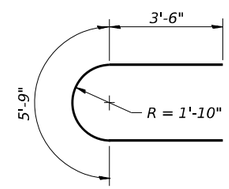

BAR u201(E)

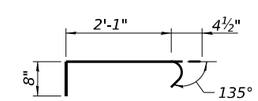

BARS s201(E)

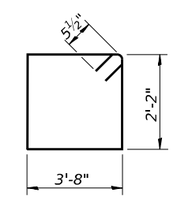

BAR s200(E)

Note:
It is the Contractor's responsibility to provide design for the cofferdam and the required appurtenances, subject to approval of the Engineer.

NOTES:

1. For details of piles, see sheet SC-55.
2. For details of Bar Splicers, see sheet SC-56.
3. For location of Section A-A see sheets SC-49 thru SC-52.
4. Cast steps monolithically with cap.

MODEL: Default
FILE NAME: 0998306-62F94-S053-PR05.dgn

WSP USA Inc.
30 N. LASALLE STREET
SUITE 4200
CHICAGO, IL 60602
TEL: (312) 782-8150
FAX: (312) 782-1684

USER NAME = lauxpj	DESIGNED - KB	REVISED -	
	CHECKED - PJL	REVISED -	
PLOT SCALE = 2:7.9987 ':" / in.	DRAWN - PP	REVISED -	
PLOT DATE = 12/2/2025	CHECKED - PJL	REVISED -	

STATE OF ILLINOIS
DEPARTMENT OF TRANSPORTATION

PIER DETAILS
STRUCTURE NUMBER 099-8306

SHEET SC-53 OF SC-60 SHEETS

F.A.P. RTE.	SECTION	COUNTY	TOTAL SHEETS	SHEET NO.
0846	2017-057F	WILL	1342	882
		CONTRACT NO. 62F94		
		ILLINOIS	FED. AID PROJECT	

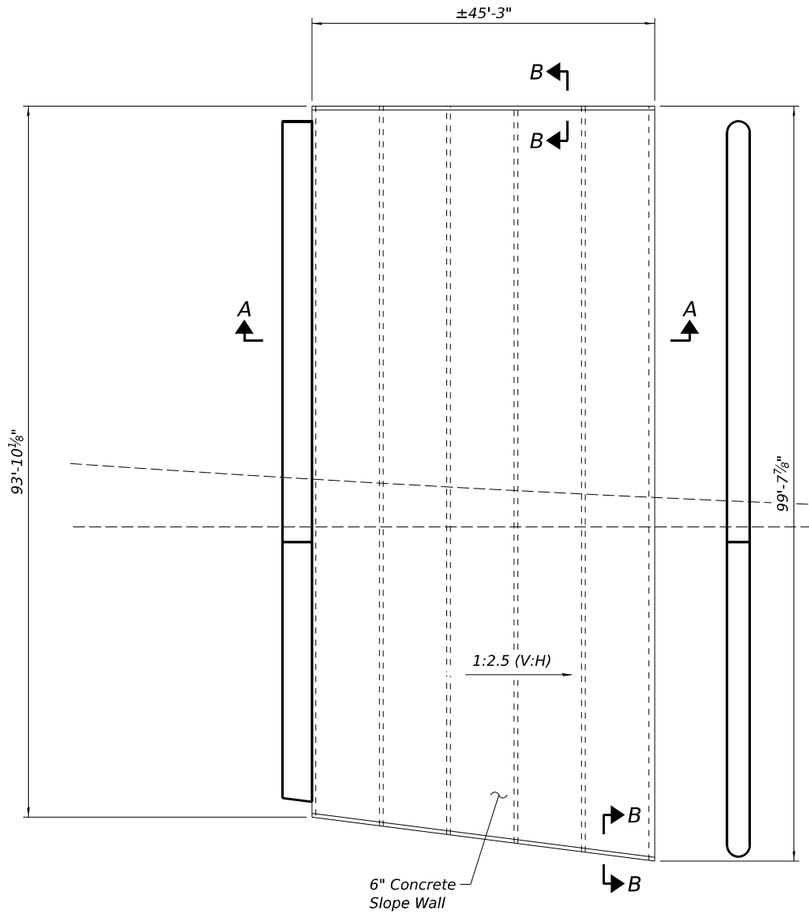

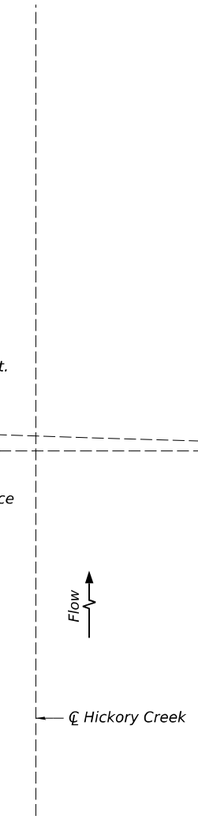

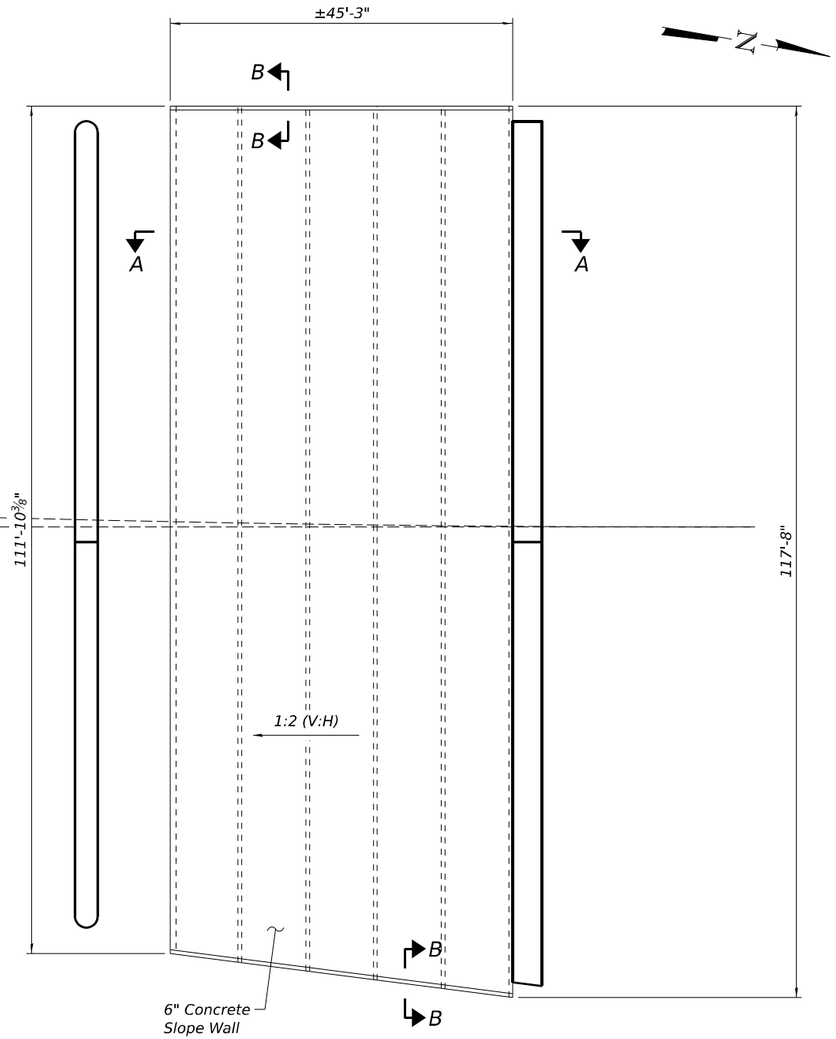

SLOPE WALL PLAN

(Dimensions shown are measured horizontal)

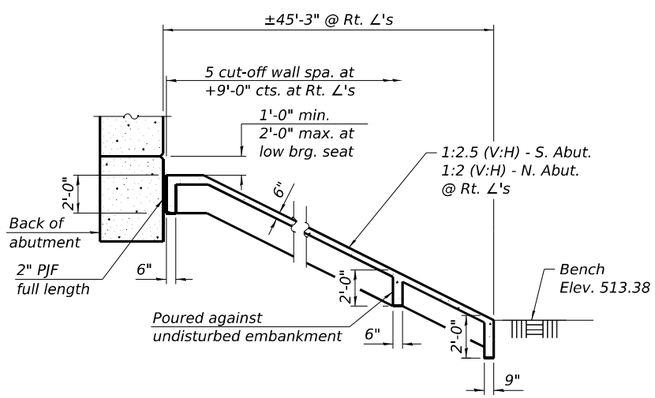

SECTION A-A

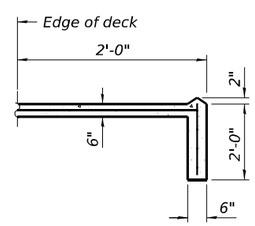

SECTION B-B

NOTES:

1. Slope wall shall be reinforced with welded wire fabric, 6 in. x 6 in. - W4.0 x W4.0, weighing 58 lbs. per 100 sq. ft.
2. Reference Line is a Local Tangent at ℄ Chicago St. Sta. 205+85.33.
3. See Roadway Plans for additional grading details.

BILL OF MATERIAL

ITEM	UNIT	TOTAL
Slope Wall 6 Inch	Sq. Yd.	1,064

MODEL: Default
FILE NAME: 099B306-62F94-S054-SLP.dgn

WSP USA Inc.
30 N. LASALLE STREET
SUITE 4200
CHICAGO, IL 60602
TEL: (312) 782-8150
FAX: (312) 782-1684

USER NAME = lauxpj	DESIGNED - PJL	REVISED -	
	CHECKED - LAS	REVISED -	
PLOT SCALE = 19:11.9904 ':" / in.	DRAWN - PJL	REVISED -	
PLOT DATE = 12/2/2025	CHECKED - LAS	REVISED -	

STATE OF ILLINOIS
DEPARTMENT OF TRANSPORTATION

SLOPE WALL
STRUCTURE NUMBER 099-8306

SHEET SC-54 OF SC-60 SHEETS

F.A.P. RTE.	SECTION	COUNTY	TOTAL SHEETS	SHEET NO.
0846	2017-057F	WILL	1342	883
		CONTRACT NO. 62F94		
	ILLINOIS	FED. AID PROJECT		

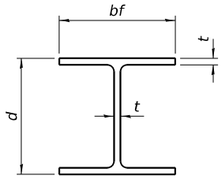

STEEL PILE TABLE

Designation	Depth d	Flange width bf	Web and Flange thickness t	Encasement diameter A
HP 18x181	18	18	1	36"
x157	17¾"	17⅞"	⅞"	36"
x135	17½"	17¾"	¾"	36"
HP 16x183	16½"	16½"	1⅛"	36"
x162	16¼"	16⅛"	1"	36"
x141	16	16	⅞"	36"
x121	15¾"	15⅞"	¾"	36"
HP 14x117	14¼"	14⅞"	13/16"	30"
x102	14"	14¾"	11/16"	30"
x89	13⅞"	14¾"	⅝"	30"
x73	13⅝"	14⅝"	½"	30"
HP 12x84	12¼"	12¼"	11/16"	24"
x74	12⅛"	12¼"	⅝"	24"
x63	12"	12⅛"	½"	24"
x53	11¾"	12"	7/16"	24"
HP 10x57	10"	10¼"	9/16"	24"
x42	9¾"	10⅛"	7/16"	24"
HP 8x36	8"	8⅛"	7/16"	18"

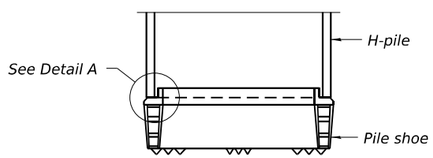

ELEVATION

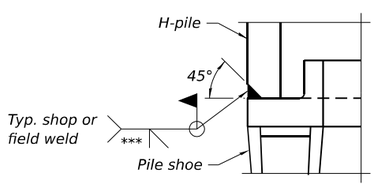

DETAIL A

SHOE ATTACHMENT

Note:
The steel H-piles shall be according to AASHTO M270 Grade 50.

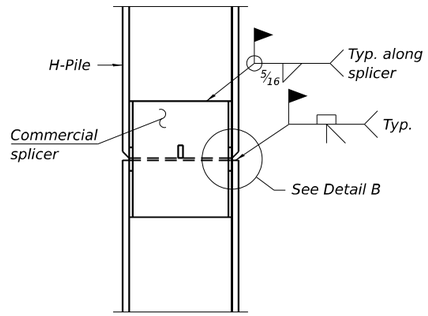

ELEVATION

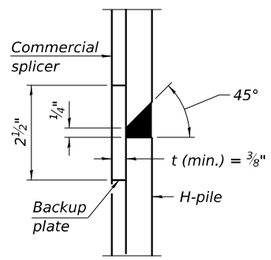

DETAIL B

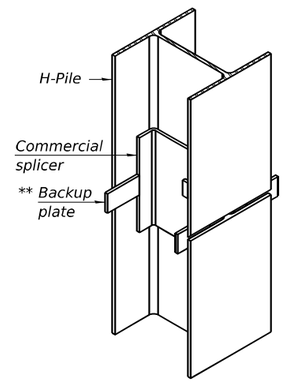

ISOMETRIC VIEW

WELDED COMMERCIAL SPLICE

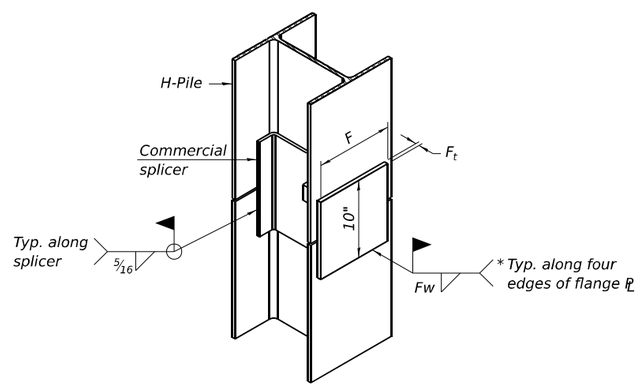

ISOMETRIC VIEW

WELDED COMMERCIAL SPLICE ALTERNATE

* Interrupt welds ¼" from end of web and/or each flange.

** Remove portions of backup plates that extend outside the flanges.

*** Weld size per pile shoe manufacturer (5/16" min.).

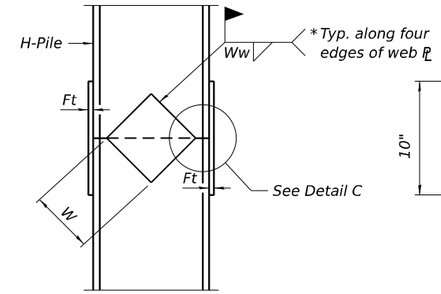

ELEVATION

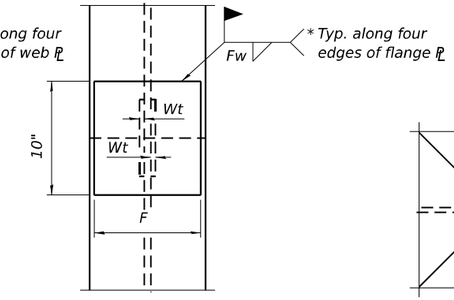

END VIEW

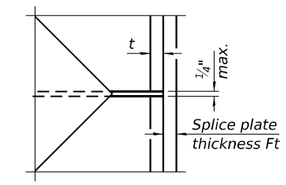

DETAIL C

Designation	F	Ft	Fw	W	Wt	Ww
HP 18x181	15½"	1½"	1"	9½"	⅞"	¾"
x157	15¼"	1¼"	1"	9½"	⅞"	¾"
x135	15¼"	1¼"	1"	9½"	⅞"	¾"
HP 16x183	13¾"	1½"	1"	8¼"	⅞"	¾"
x162	13½"	1½"	1"	8¼"	¾"	⅝"
x141	13½"	1¼"	⅞"	8¼"	¾"	⅝"
x121	13½"	1¼"	⅞"	8¼"	¾"	⅝"
HP 14x117	12½"	1¼"	⅞"	7¾"	⅝"	½"
x102	12½"	1"	¾"	7¾"	⅝"	½"
x89	12½"	⅞"	11/16"	7¾"	⅝"	½"
x73	12½"	¾"	9/16"	7¾"	⅝"	½"
HP 12x84	10"	1"	11/16"	6½"	⅝"	½"
x74	10"	⅞"	11/16"	6½"	⅝"	½"
x63	10"	¾"	½"	6½"	½"	⅜"
x53	10"	¾"	½"	6½"	½"	⅜"
HP 10x57	8"	⅞"	9/16"	5¼"	½"	⅜"
x42	8"	¾"	9/16"	5¼"	½"	⅜"
HP 8x36	6¾"	⅝"	7/16"	4"	½"	⅜"

WELDED PLATE FIELD SPLICE

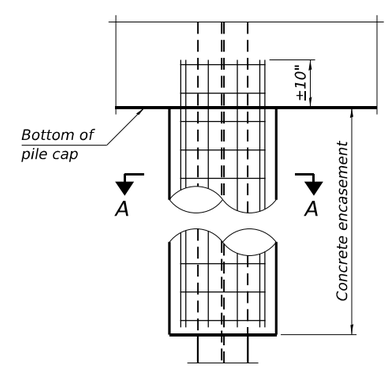

ELEVATION

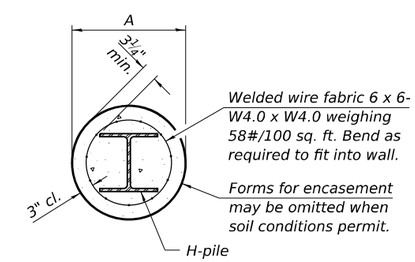

SECTION A-A

INDIVIDUAL PILE CONCRETE ENCASEMENT
(when specified)

F-HP 10-27-2023

MODEL: Default
FILE NAME: 0998306-62F94-S055-PHP.dgn

WSP USA Inc.
30 N. LASALLE STREET
SUITE 4200
CHICAGO, IL 60602
TEL: (312) 782-8150
FAX: (312) 782-1684

USER NAME = lauxpj	DESIGNED - BK	REVISED -	
	CHECKED - LAS	REVISED -	
PLOT SCALE = 0:1.9999 ':' / in.	DRAWN - BK	REVISED -	
PLOT DATE = 12/2/2025	CHECKED - LAS	REVISED -	

STATE OF ILLINOIS
DEPARTMENT OF TRANSPORTATION

HP PILE DETAILS
STRUCTURE NUMBER 099-8306

SHEET SC-55 OF SC-60 SHEETS

F.A.P. RTE.	SECTION	COUNTY	TOTAL SHEETS	SHEET NO.
0846	2017-057F	WILL	1342	884
		CONTRACT NO. 62F94		
	ILLINOIS	FED. AID PROJECT		

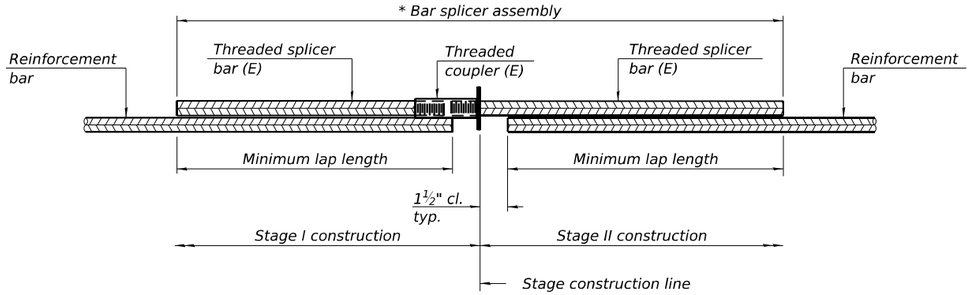

STANDARD BAR SPLICER ASSEMBLY PLAN

Only bar splicer assemblies as presented on the approved QPL list may be used.

Threaded splicer bar length = min. lap length + 1½" + thread length

* Epoxy not required on Bar Splicer Assembly components used in conjunction with black bars.

Location	Bar size	No. assemblies required	Minimum lap length
Deck (Top Slab)	#5	451	3'-6"
Deck (Bottom Slab)	#5	247	3'-6"
S. Abut. Diaphragm	#6	7	4'-9"
Pier 1 Diaphragm	#6	8	4'-9"
Pier 2 Diaphragm	#6	8	4'-9"
N. Abut. Diaphragm	#6	7	4'-9"
S. Approach Slab (Top)	#5	46	3'-6"
S. Approach Slab (Bottom)	#8	60	4'-9"
S. Approach Footing	#5	40	3'-6"
N. Approach Slab (Top)	#5	46	3'-6"
N. Approach Slab (Bottom)	#8	60	4'-9"
N. Approach Footing	#5	40	3'-6"
S. Abutment	#7	10	5'-0"
N. Abutment	#7	10	5'-0"
Pier 1 Cap	#5	10	3'-6"
Pier 1 Cap	#7	18	5'-0"
Pier 1 Encasement Wall	#5	34	3'-6"
Pier 2 Cap	#5	10	3'-6"
Pier 2 Cap	#7	18	5'-0"
Pier 2 Encasement Wall	#5	40	3'-6"

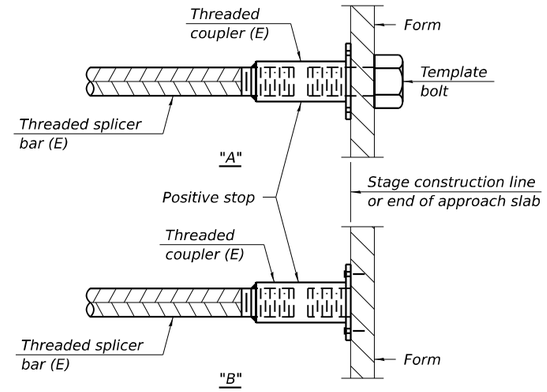

INSTALLATION AND SETTING METHODS

"A" : Set bar splicer assembly by means of a template bolt.
"B" : Set bar splicer assembly by nailing to wood forms or cementing to steel forms.
(E) : Indicates epoxy coating.

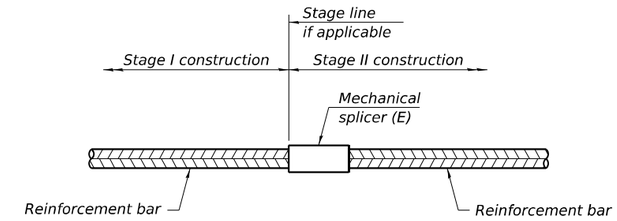

STANDARD MECHANICAL SPLICER

Location	Bar size	No. assemblies required

Notes:
Splicer bars shall be deformed with threaded ends and have a minimum 60 ksi yield strength.
All reinforcement shall be lapped and tied to the splicer bars.
Bar splicer assemblies shall be epoxy coated according to the requirements for reinforcement bars. See Section 508 of the Standard Specifications.
See approved list of bar splicer assemblies and mechanical splicers for alternatives.

BSD-1 5-15-2023

SHEET INTENTIONALLY LEFT BLANK

Illinois Department of Transportation
Division of Highways
GSG Consultants, Inc.

SOIL BORING LOG

Page 1 of 1
Date 4/15/22

ROUTE I-80 DESCRIPTION IL 53/US 52 (Chicago Street) over Hickory Creek LOGGED BY DD

SECTION C-91-109-22 LOCATION SEC. 16, TWP. 35 N, RNG. 10 E.
Latitude 41.5101026, Longitude -88.08144792

COUNTY Will DRILLING RIG CME-75 HAMMER TYPE Auto
DRILLING METHOD HSA HAMMER EFF (%) 91

STRUCT. NO. 099-8306
Station
BORING NO. BSB-69
Station 206+36.2914
Offset 68.43ft LT
Ground Surface Elev. 535.39 ft

Surface Water Elev. N/A ft
Stream Bed Elev. N/A ft
Groundwater Elev.:
First Encounter Dry ft
Upon Completion N/A ft
After ___ Hrs. N/A ft

Description	Elev.	DEPTH (ft)	BLOWS (/6")	UCS Qu (tsf)	MOIST (%)
4 inches of Asphalt	535.06				
10 inches of Concrete	534.56				
Brown, Moist FILL: SILTY CLAY, trace sand and gravel			7		
			6	1.5	8
			8	P	
	532.39				
Loose Gray, Moist SAND, trace gravel (SP)			5		
			6		8
		-5	4		
			9		
			4		6
			5		
			6		
			3		8
		-10	6		
	524.39				
Medium Dense Brown, Dry to Moist GRAVEL, with sand (GPS) Cobbles at 11 feet			25		
			11		2
			11		
			3		
			19		6
		-15	2		
	519.39				
Very Loose Dark Brown, Very Moist SANDY LOAM (SM)			2		
			1		26
			2		
	518.89				
			1		
			2	0.2	63
		-20	4	B	

Description	Elev.	DEPTH (ft)	BLOWS (/6")	UCS Qu (tsf)	MOIST (%)
Very Soft Black, Very Moist SILTY CLAY LOAM, with wood fragments (ML/CL) *(continued)*	514.39		11		
Very Dense Brown, Moist SAND, with limestone fragments (SP)	513.39		16		8
			50/2"		
Auger refusal at 22 feet					
Light Gray LIMESTONE, moderately weathered, heavily to moderately fractured, some vugs, trace sand		-25			
Run 1: 22' - 32' Recovery: 70.8% RQD: 57.5% (Fair)					
		-30			
	503.39				
Light Gray LIMESTONE, slightly weathered, slightly fractured, heavily fractured at 33.5 feet, some vugs, trace chert					
Run 2: 32' - 37' Recovery: 100.0% RQD: 91.6% (Excellent)		-35			
	498.39				
End of Boring					
		-40			

The Unconfined Compressive Strength (UCS) Failure Mode is indicated by (B-Bulge, S-Shear, P-Penetrometer)
The SPT (N value) is the sum of the last two blow values in each sampling zone (AASHTO T206)

BBS, form 137 (Rev. 8-99)

Illinois Department of Transportation
Division of Highways
GSG Consultants, Inc.

SOIL BORING LOG

Page 1 of 1
Date 5/26/22

ROUTE I-80 DESCRIPTION IL 53/US 52 (Chicago Street) over Hickory Creek LOGGED BY KA

SECTION C-91-109-22 LOCATION SEC. 15, TWP. 35 N, RNG. 10 E.
Latitude 41.50976506, Longitude -88.08131999

COUNTY Will DRILLING RIG CME-75 HAMMER TYPE Auto
DRILLING METHOD HSA HAMMER EFF (%) 91

STRUCT. NO. 099-8306
Station
BORING NO. BSB-70
Station 205+8.3729
Offset 47.18ft LT
Ground Surface Elev. 533.80 ft

Surface Water Elev. N/A ft
Stream Bed Elev. N/A ft
Groundwater Elev.:
First Encounter Dry ft
Upon Completion N/A ft
After ___ Hrs. N/A ft

Description	Elev.	DEPTH (ft)	BLOWS (/6")	UCS Qu (tsf)	MOIST (%)
10 inches of Concrete Bridge Deck	532.96				
19 feet 11 inches of Air Void / Casing					
		-5			
		-10			
		-15			
		-20			

Description	Elev.	DEPTH (ft)	BLOWS (/6")	UCS Qu (tsf)	MOIST (%)
	513.05				
3 inches of Gravel	512.80				
Light Gray LIMESTONE, slightly weathered, heavily fractured, some vugs, some sand from 21 to 22 feet					
Run 1: 21' - 26.2' Recovery: 100.0% RQD: 23.8% (Poor)		-25			
	507.55				
Light Gray LIMESTONE, slightly weathered, heavily fractured, some vugs, vertical fractures at 27, 29.5, 33 and 34.5 feet, trace silt 32 feet					
Run 2: 26.2' - 36.2' Recovery: 100.0% RQD: 30.8% (Poor)		-30			
	497.55				
End of Boring					
		-40			

The Unconfined Compressive Strength (UCS) Failure Mode is indicated by (B-Bulge, S-Shear, P-Penetrometer)
The SPT (N value) is the sum of the last two blow values in each sampling zone (AASHTO T206)

BBS, form 137 (Rev. 8-99)

Illinois Department of Transportation
Division of Highways
GSG Consultants, Inc.

SOIL BORING LOG

Page 1 of 1
Date 6/6/22

ROUTE I-80 DESCRIPTION IL 53/US 52 (Chicago Street) over Hickory Creek LOGGED BY DD

SECTION C-91-109-22 LOCATION SEC. 15, TWP. 35 N, RNG. 10 E.
Latitude 41.5095463, Longitude -88.08124221

COUNTY Will DRILLING RIG CME-75 HAMMER TYPE Auto
DRILLING METHOD HSA HAMMER EFF (%) 91

STRUCT. NO. 099-8306
Station
BORING NO. BSB-71
Station 204+28.2390
Offset 33.66ft LT
Ground Surface Elev. 534.86 ft

Surface Water Elev. N/A ft
Stream Bed Elev. N/A ft
Groundwater Elev.:
First Encounter Dry ft
Upon Completion N/A ft
After ___ Hrs. N/A ft

Description	Elev.	DEPTH (ft)	BLOWS (/6")	UCS Qu (tsf)	MOIST (%)
9.5 inches of Concrete Bridge Deck	534.07				
20 feet 4 inches of Air Void / Casing					
		-5			
		-10			
		-15			
		-20			

Description	Elev.	DEPTH (ft)	BLOWS (/6")	UCS Qu (tsf)	MOIST (%)
20 feet 4 inches of Air Void / Casing *(continued)*	513.74				
Light Gray LIMESTONE, moderately weathered, heavily to moderately fractured, some vugs, trace sand					
Run 1: 21.1' - 31.1' Recovery: 100.0% RQD: 70.4% (Fair)		-25			
		-30			
	503.74				
Light Gray LIMESTONE, slightly weathered, moderately fractured, some vugs, trace silt					
Run 2: 31.1' - 36.1' Recovery: 100.0% RQD: 75% (Good)		-35			
	498.74				
End of Boring					
		-40			

The Unconfined Compressive Strength (UCS) Failure Mode is indicated by (B-Bulge, S-Shear, P-Penetrometer)
The SPT (N value) is the sum of the last two blow values in each sampling zone (AASHTO T206)

BBS, form 137 (Rev. 8-99)

MODEL: Default
FILE NAME: 0998306-62P94-S058-SB01.dgn

WSP USA Inc.
30 N. LASALLE STREET
SUITE 4200
CHICAGO, IL 60602
TEL: (312) 782-8150
FAX: (312) 782-1684

USER NAME = lauxpj	DESIGNED - BK	REVISED -	
	CHECKED - LAS	REVISED -	
PLOT SCALE = 1.9999 ' / in.	DRAWN - BK	REVISED -	
PLOT DATE = 12/2/2025	CHECKED - LAS	REVISED -	

STATE OF ILLINOIS
DEPARTMENT OF TRANSPORTATION

BORING LOGS 1
STRUCTURE NUMBER 099-8306

SHEET SC-58 OF SC-60 SHEETS

F.A.P. RTE.	SECTION	COUNTY	TOTAL SHEETS	SHEET NO.
0846	2017-057F	WILL	1342	887
		CONTRACT NO. 62F94		
	ILLINOIS	FED. AID PROJECT		

Illinois Department of Transportation
Division of Highways
GSG Consultants, Inc.

SOIL BORING LOG

Page 1 of 1
Date 4/14/22

ROUTE I-80 DESCRIPTION IL 53/US 52 (Chicago Street) over Hickory Creek LOGGED BY EH

SECTION C-91-109-22 LOCATION SEC. 22 TWP. 35 N. RNG. 10 E.
Latitude 41.50936113, Longitude -88.08119976

COUNTY Will DRILLING RIG Diedrich D-50 HAMMER TYPE Auto
DRILLING METHOD HSA HAMMER EFF (%) 98

STRUCT. NO. 099-8306
Station
BORING NO. BSB-72
Station 203+57.6629
Offset 24.78ft LT
Ground Surface Elev. 531.26 ft

Surface Water Elev. N/A ft
Stream Bed Elev. N/A ft
Groundwater Elev.:
First Encounter 515.3 ft ▼
Upon Completion N/A ft
After ___ Hrs. N/A ft

Description	Elev.	DEPTH (ft)	BLOWS (/6")	UCS Qu (tsf)	MOIST (%)
3 inches of Asphalt	531.01				
9 inches of Concrete	530.26				
Brown, Black and Gray, Moist FILL: SILTY CLAY, with sand and gravel, trace organics			6 9 7	3.0 P	13
	527.76				
Medium Dense Brown, Moist SAND, trace gravel (SP)		-5	5 10 8		7
Cobbles at 6 feet			50/3"		NR
	522.76				
Stiff Brown, Moist SILTY CLAY, trace sand and gravel (CL/ML)		-10	6 5 8		13
			5 3 2	1.0 P	22
		-15	5 15 50/0"	1.0 P	14
		-20	50/5"		NR
	512.76				
Auger refusal at 18.5 feet End of Boring					

The Unconfined Compressive Strength (UCS) Failure Mode is indicated by (B-Bulge, S-Shear, P-Penetrometer)
The SPT (N value) is the sum of the last two blow values in each sampling zone (AASHTO T206)

BBS, form 137 (Rev. 8-99)

Illinois Department of Transportation
Division of Highways
GSG Consultants, Inc.

SOIL BORING LOG

Page 1 of 1
Date 4/14/22

ROUTE I-80 DESCRIPTION IL 53/US 52 (Chicago Street) over Hickory Creek LOGGED BY EH

SECTION C-91-109-22 LOCATION SEC. 15 TWP. 35 N. RNG. 10 E.
Latitude 41.51016001, Longitude -88.08125951

COUNTY Will DRILLING RIG Diedrich D-50 HAMMER TYPE Auto
DRILLING METHOD HSA HAMMER EFF (%) 98

STRUCT. NO. 099-8306
Station
BORING NO. BSB-73
Station 206+50.6377
Offset 14.63ft LT
Ground Surface Elev. 539.37 ft

Surface Water Elev. N/A ft
Stream Bed Elev. N/A ft
Groundwater Elev.:
First Encounter Dry ft
Upon Completion N/A ft
After ___ Hrs. N/A ft

Description	Elev.	DEPTH (ft)	BLOWS (/6")	UCS Qu (tsf)	MOIST (%)
3 inches of Asphalt	539.12				
11 inches of Concrete	538.20				
Brown and Gray, Moist FILL: SAND AND GRAVEL			13 6		NR
	535.87				
Very Loose to Medium Dense Brown, Dry to Moist SAND, with gravel, trace clay (SPG)		-5	8 7 5		9
			3 3 7		10
		-10	6 4 10		4
Possible Cobbles at 11 feet			2 1 2		NR
		-15	3 4 3		7
		-20	11 6 6		NR
			4 5 5		4
Very Loose to Medium Dense Brown, Dry to Moist SAND, with gravel, trace clay (SPG) *(continued)*			8		
	516.37				
Very Dense Brown, Moist SAND, with gravel (SPG)		-25	8 13 50/3"		10
	514.37				
Auger refusal at 25 feet End of Boring					

The Unconfined Compressive Strength (UCS) Failure Mode is indicated by (B-Bulge, S-Shear, P-Penetrometer)
The SPT (N value) is the sum of the last two blow values in each sampling zone (AASHTO T206)

BBS, form 137 (Rev. 8-99)

Illinois Department of Transportation
Division of Highways
GSG Consultants, Inc.

SOIL BORING LOG

Page 1 of 1
Date 6/7/22

ROUTE I-80 DESCRIPTION IL 53/US 52 (Chicago Street) over Hickory Creek LOGGED BY KA

SECTION C-91-109-22 LOCATION SEC. 15 TWP. 35 N. RNG. 10 E.
Latitude 41.5097893, Longitude -88.08111255

COUNTY Will DRILLING RIG CME-75 HAMMER TYPE Auto
DRILLING METHOD HSA HAMMER EFF (%) 91

STRUCT. NO. 099-8306
Station
BORING NO. BSB-74
Station 205+9.3110'
Offset 11.23ft RT
Ground Surface Elev. 535.50 ft

Surface Water Elev. N/A ft
Stream Bed Elev. N/A ft
Groundwater Elev.:
First Encounter Dry ft
Upon Completion N/A ft
After ___ Hrs. N/A ft

Description	Elev.	DEPTH (ft)	BLOWS (/6")	UCS Qu (tsf)	MOIST (%)
10 inches of Concrete Bridge Deck	534.67				
22 feet 6 inches of Air Void / Casing					
22 feet 6 inches of Air Void / Casing *(continued)*					
	512.17				
Light Gray LIMESTONE, moderately weathered, heavily fractured, some vugs, some clay seams at 23.8 feet, 26.3 feet Run 1: 23.3' - 28.6' Recovery: 100.0% RQD: 13.8% (Very Poor)		-5 -25			
	506.92				
Light Gray LIMESTONE, slightly weathered, heavily fractured, some vugs, vertical fractures at 36 feet and 37.5 feet Run 2: 28.6' - 38.6' Recovery: 100.0% RQD: 11.3% (Very Poor)		-10 -30			
	496.92				
End of Boring		-15 -20 -35 -40			

The Unconfined Compressive Strength (UCS) Failure Mode is indicated by (B-Bulge, S-Shear, P-Penetrometer)
The SPT (N value) is the sum of the last two blow values in each sampling zone (AASHTO T206)

BBS, form 137 (Rev. 8-99)

Illinois Department of Transportation
Division of Highways
GSG Consultants, Inc.

SOIL BORING LOG

Page 1 of 1

Date 5/31/22

ROUTE I-80 DESCRIPTION IL 53/US 52 (Chicago Street) over Hickory Creek LOGGED BY KA

SECTION C-91-109-22 LOCATION SEC. 15, TWP. 35 N, RNG. 10 E.
Latitude 41.5095739, Longitude -88.08106028

COUNTY Will DRILLING RIG CME-75 HAMMER TYPE Auto
DRILLING METHOD HSA HAMMER EFF (%) 91

STRUCT. NO. 099-8306
Station

BORING NO. BSB-75
Station 204+29.2083
Offset 18.26ft RT
Ground Surface Elev. 536.20 ft

Surface Water Elev. N/A ft
Stream Bed Elev. N/A ft

Groundwater Elev.:
First Encounter Dry ft
Upon Completion N/A ft
After ___ Hrs. N/A ft

Description	Elev.	DEPTH (ft)	BLOWS (/6")	UCS Qu (tsf)	MOIST (%)
10 inches of Concrete Bridge Deck	535.36				
21 feet 6 inches of Air Void / Casing					
21 feet 6 inches of Air Void / Casing *(continued)*					
	513.86				
Light Gray LIMESTONE, slightly weathered, heavily to moderately fractured, some vugs, trace sand, trace chert					
Run 1: 22.3 - 32.3' Recovery: 100.0% RQD: 37.1% (Poor)		25			
	503.86				
Light Gray LIMESTONE, slightly weathered, moderately fractured, some vugs, trace sand					
Run 2: 32.3' - 37.3' Recovery: 100.0% RQD: 63.3% (Fair)		35			
	498.86				
End of Boring					

The Unconfined Compressive Strength (UCS) Failure Mode is indicated by (B-Bulge, S-Shear, P-Penetrometer)
The SPT (N value) is the sum of the last two blow values in each sampling zone (AASHTO T206)

BBS, form 137 (Rev. 8-99)

Illinois Department of Transportation
Division of Highways
GSG Consultants, Inc.

SOIL BORING LOG

Page 1 of 1

Date 4/15/22

ROUTE I-80 DESCRIPTION IL 53/US 52 (Chicago Street) over Hickory Creek LOGGED BY EH

SECTION C-91-109-22 LOCATION SEC. 22, TWP. 35 N, RNG. 10 E.
Latitude 41.50939575, Longitude -88.08103339

COUNTY Will DRILLING RIG Diedrich D-50 HAMMER TYPE Auto
DRILLING METHOD HSA HAMMER EFF (%) 98

STRUCT. NO. 099-8306
Station

BORING NO. BSB-76
Station 203+67.9444
Offset 21.37ft RT
Ground Surface Elev. 533.77 ft

Surface Water Elev. N/A ft
Stream Bed Elev. N/A ft

Groundwater Elev.:
First Encounter Dry ft
Upon Completion N/A ft
After ___ Hrs. N/A ft

Description	Elev.	DEPTH (ft)	BLOWS (/6")	UCS Qu (tsf)	MOIST (%)
3 inches of Asphalt	533.52				
10 inches of Concrete	532.68				
Brown and Gray, Moist FILL: SILTY CLAY, with gravel			5		
			4	1.0	13
			5	P	
	530.27				
Medium Dense Brown, Dry to Moist SAND, with gravel (SPG)			4		
			7		6
		5	6		
			4		
			12		4
			8		
			3		
			10		6
		10	8		
	522.77				
Medium Stiff Brown, Moist SILTY CLAY, trace sand and gravel (CL-ML)			2		
			3	0.5	11
			4	P	
			3		
			3	0.5	17
		15	2	P	
	517.77				
Very Dense Brown, Moist SANDY LOAM, with gravel (SM)			4		
			50/3"		13
	515.27				
Light Gray LIMESTONE, slightly weathered, moderately to heavily fractured, some vugs, vertical fractures at 23.5 feet					
Run 1: 18.5' - 28.5' Recovery: 90.0% RQD: 69.0% (Fair) *(continued)*		25			
	505.27				
Light Gray LIMESTONE, slightly weathered, heavily to moderately fractured, some vugs, vertical fractures at 32 feet, trace sand					
Run 2: 28.5' - 33.5' Recovery: 100.0% RQD: 60.0% (Fair)		35			
	500.27				
End of Boring					

The Unconfined Compressive Strength (UCS) Failure Mode is indicated by (B-Bulge, S-Shear, P-Penetrometer)
The SPT (N value) is the sum of the last two blow values in each sampling zone (AASHTO T206)

BBS, form 137 (Rev. 8-99)

MODEL: Default
FILE NAME: 099B306-62F94-S060-SB03.dgn

WSP USA Inc.
30 N. LASALLE STREET
SUITE 4200
CHICAGO, IL 60602
TEL: (312) 782-8150
FAX: (312) 782-1684

USER NAME = lauxpj	DESIGNED - BK	REVISED -	
	CHECKED - LAS	REVISED -	
PLOT SCALE = 1.9999 ' / in.	DRAWN - BK	REVISED -	
PLOT DATE = 12/2/2025	CHECKED - LAS	REVISED -	

STATE OF ILLINOIS
DEPARTMENT OF TRANSPORTATION

BORING LOGS 3
STRUCTURE NUMBER 099-8306

SHEET SC-60 OF SC-60 SHEETS

F.A.P. RTE.	SECTION	COUNTY	TOTAL SHEETS	SHEET NO.
0846	2017-057F	WILL	1342	889
		CONTRACT NO. 62F94		
		ILLINOIS	FED. AID PROJECT	

Benchmark: Iron rod with yellow cap at Sta. 722+92.37, 4.19' Rt. ℄ I-80, Elev. 556.54.
Existing Structure: The eastern portion of SN 099-W035 from Sta. 714+20.00 to Sta. 720+43.33 was constructed in 2024 as Project NHPP-6FXA (534), Section 2013-009B. The existing structure is a mechanically stabilized earth retaining wall with precast panels. The wall supports a CIP anchorage slab with a 72" tall barrier. Noise abatement wall SN 099-N1002 will be attached to the existing and proposed barrier as part of this contract. Existing wall is to remain. Stage Construction will be utilized to maintain traffic. No Salvage.

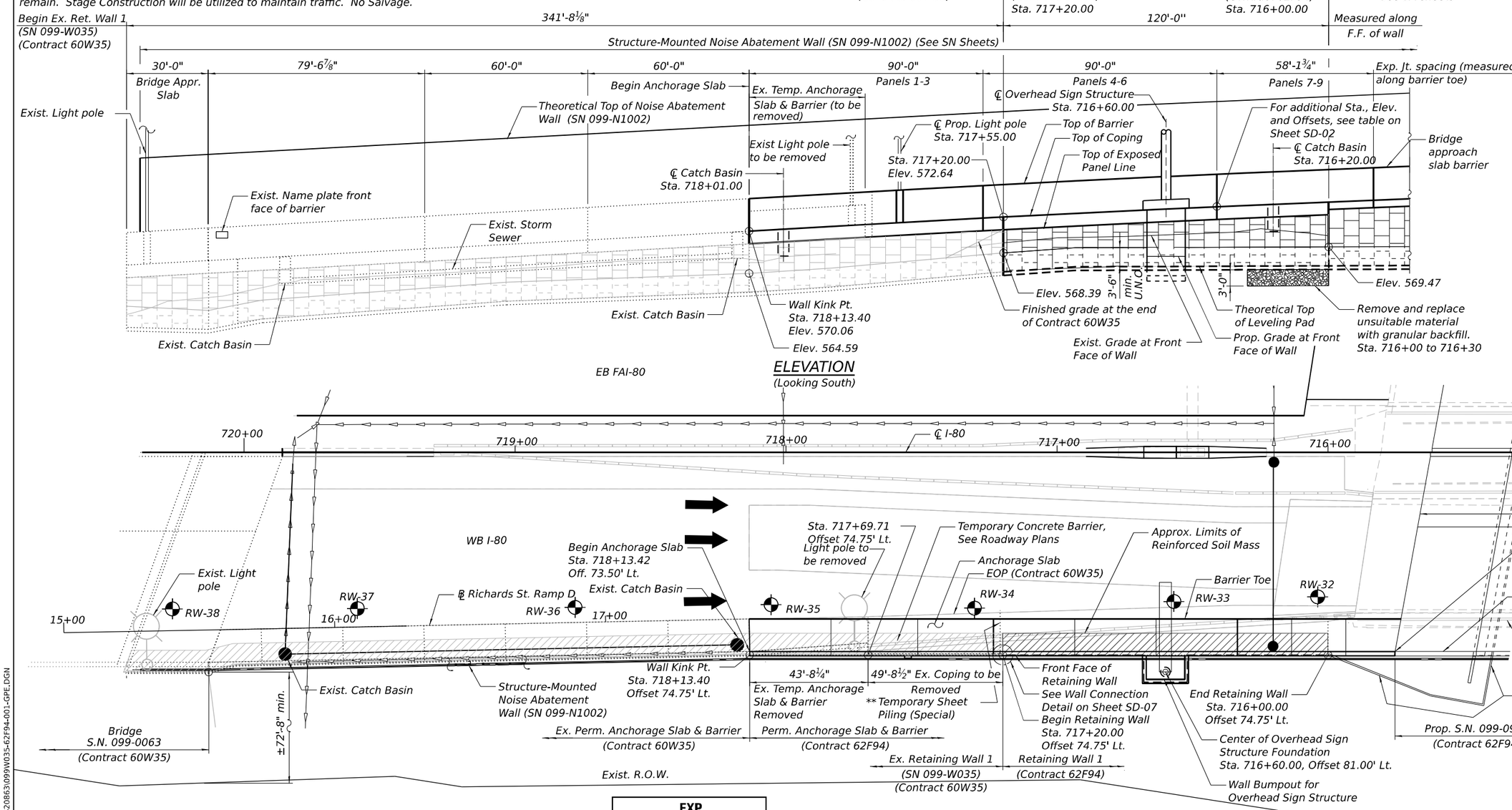

ELEVATION
(Looking South)

DESIGN SPECIFICATIONS
2020 AASHTO LRFD Bridge Design Specifications, 9th Edition

DESIGN STRESSES

FIELD UNITS
f 'c = 4,000 psi
fy = 60,000 psi (Reinforcement)

PRECAST UNITS
f 'c = 4,500 psi (Precast Panels)

DESIGN LOADS

NOISE ABATEMENT WALL LOADING
Unfactored Dead Load = 65 psf
Factored Strength III or V Wind: 35 psf
Factored Service I WInd: 15 psf
Max. Wall Ht. Above T/Parapet = 12'-0"

RETAINING WALL
The MSE Wall supplier shall consider internal and external stability design accounting for the Anchorage Slab's bearing pressure surcahrge of 1.0 ksf and horizontal sliding force of 2.4 kips/ft. of wall.

PLAN

** Temporary Sheet Piling (Special) will be partially removed if required to facilitate work.

LEGEND

- Approximate Limits of Prop. Reinforced Soil Mass
- Prop. Storm Sewer
- Prop. Catch Basin
- Exist. Storm Sewer
- Soil Boring

APPROVED
For Structural Adequacy Only
Engineer of Bridges & Structures

Notes:
1. Stations and offsets are measured relative to ℄ I-80 at the front face of retaining wall.
2. See Bridge Plans for details and payment.

EXP
STATE OF ILLINOIS
MAEN A. FARHAT
081.008545
LICENSED STRUCTURAL ENGINEER
DATE SIGNED: 10/31/2025
MAEN A. FARHAT, PHD, P.E., S.E.
NO. 081-008545
EXP. DATE: 11/30/2026
SEAL AND SIGNATURE APPLY TO: SHEETS 1 - 11

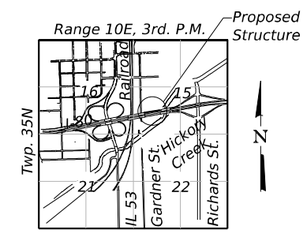

LOCATION SKETCH

GENERAL PLAN & ELEVATION
RETAINING WALL 1, WB I-80
F.A.I. RTE. 80 - SEC. 2017-057F
WILL COUNTY
STATION 716+00.00 TO STA. 717+20.00
STRUCTURE NO. 099-W035

USER NAME =	DESIGNED - BAR	REVISED -	
	CHECKED - VCP	REVISED -	
PLOT SCALE =	DRAWN - MTR	REVISED -	
PLOT DATE =	CHECKED - BAR	REVISED -	

STATE OF ILLINOIS
DEPARTMENT OF TRANSPORTATION

GENERAL PLAN AND ELEVATION
STRUCTURE NO. 099-W035 (WB)
SHEET SD-01 OF SD-11 SHEETS

F.A.I. RTE.	SECTION	COUNTY	TOTAL SHEETS	SHEET NO.
80	2017-057F	WILL	1342	890
		CONTRACT NO. 62F94		
	ILLINOIS	FED. AID PROJECT		

MODEL: DEFAULT
FILE NAME: C:\TRANSYSTEMS\PW_LOCAL\TRANSYSTEMS-PW-01\DMS20863\099W035-62F94-001-GPE.DGN
10-27-2025, 16:53:08

INDEX OF SHEETS

GENERAL NOTES

1. Reinforcement bars designated (E) shall be epoxy coated.
2. Cast frame into Anchorage Slab and form opening to structure.
3. Slipforming of the barrier is not allowed.
4. The proposed wall panels shall match the existing panel height, width, spacing, color and finish.

SUGGESTED SEQUENCE OF CONSTRUCTION

1. Remove existing temporary anchorage slab, temporary barrier and lighting.
2. Excavate for proposed MSE wall construction. Utilize existing temporary sheeting at west end of existing MSE wall. Remove portion of sheeting 1' below proposed anchorage slab.
3. Construct MSE wall during Stage II WB with the wrap-around MSE wall of adjacent bridge SN 099-0903 prior to constructing the East approach slab of the bridge.
4. Construct anchorage slab and barrier.

SHOULDER CROSS SLOPES

I-80 Sta.	Width	Slope
715+75.29	12'-0"	-2.00%
716+36.00	12'-0"	-4.00%
719+48.00	12'-0"	-4.00%
720+08.00	12'-0"	-2.00%
720+43.33	11'-4⅜"	-2.00%

WALL CONTROL POINTS

FAI-80 Sta.	T/Coping Elev.	T/Exposed Panel Line Elev.	Finished Grade Elev. at F.F. of Wall	T/Leveling Pad Elev.	Offset
716+00.00	575.53	572.66	569.47	565.97	74.75' Lt.
716+13.42	575.21	572.33	569.45	565.95	74.75' Lt.
716+33.42	574.71	571.83	569.41	565.91	74.75' Lt.
716+52.00	574.29	571.41	569.37	565.87	74.75' Lt.
716+52.00	573.94	571.06	568.97	565.47	84.75' Lt.
716+63.42	574.03	571.15	569.35	565.85	74.75' Lt.
716+68.00	573.57	570.70	568.94	565.44	84.75' Lt.
716+68.00	573.92	571.05	569.34	565.84	74.75' Lt.
716+93.42	573.31	570.44	569.30	565.80	74.75' Lt.
717+23.42	572.55	569.67	568.24	564.74	74.75' Lt.
717+51.42	571.79	568.92	566.99	563.49	74.75' Lt.
717+83.42	570.90	568.02	565.56	562.06	74.75' Lt.
718+13.40	570.06	567.18	564.59	561.09	74.75' Lt.

TOTAL BILL OF MATERIAL

ITEM	UNIT	TOTAL
Removal Of Existing Structures No. 6	Each	1
Structure Excavation	Cu Yd	271
Removal and Disposal of Unsuitable Material for Structures	Cu Yd	40
Concrete Superstructure	Cu Yd	279.3
Protective Coat	Sq Yd	501
Reinforcement Bars, Epoxy Coated	Pound	54,350
Pipe Handrail	Foot	35
Mechanically Stabilized Earth Retaining Wall	Sq Ft	720
Noise Abatement Wall Anchor Rod Assembly	Each	24

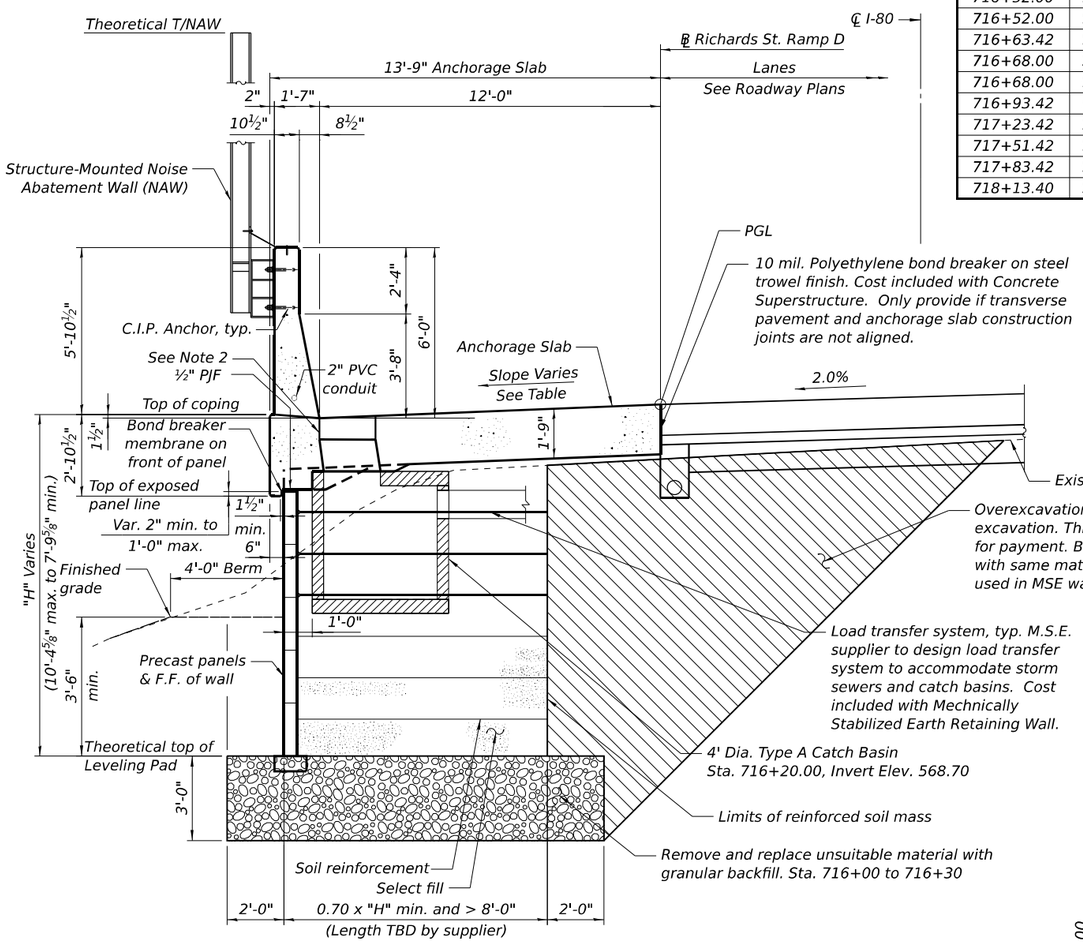

SECTION THRU MSE WALL

Sta. 716+00.00 to Sta. 717+20.00 (MSE Wall)
Sta. 715+75.29 to 718+13.42 (Anchorage Slab)

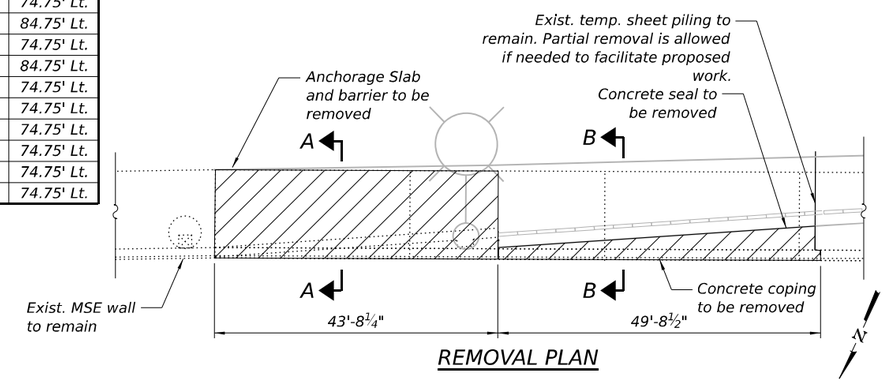

REMOVAL PLAN

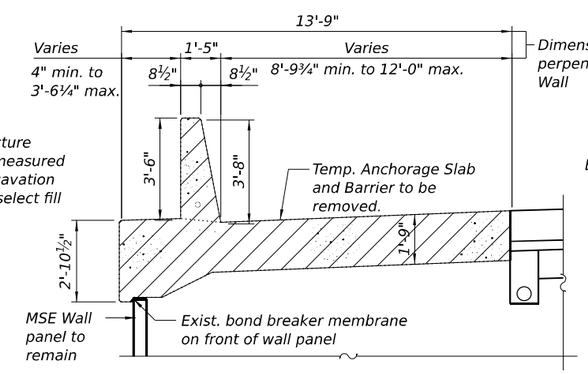

SECTION A-A

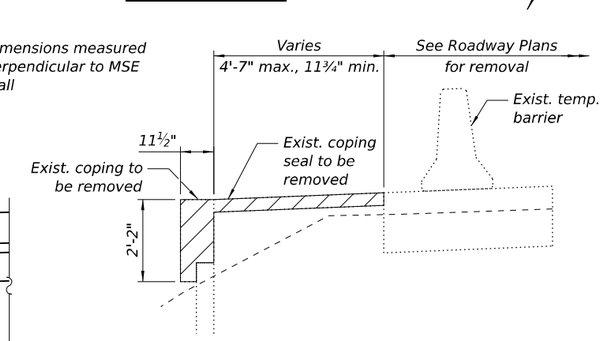

SECTION B-B

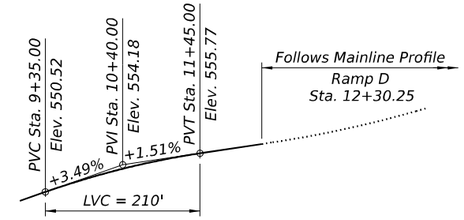

PROFILE GRADE

(Along ℄ Richards St. Ramp D)

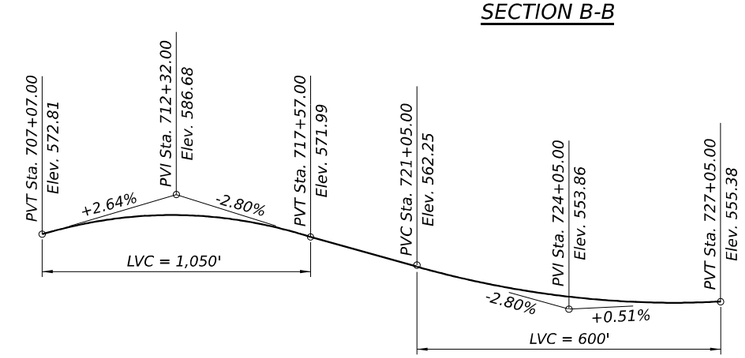

PROFILE GRADE

(Along PGL of I-80 EB & WB)

MODEL: SHEET
FILE NAME: C:\TRANSYSTEMS\PW_LOCAL\TRANSYSTEMS-PW-01\DMS20863\099W035-62F94-002-GD.DGN

10-27-2025, 16:53:17

exp.

USER NAME =	DESIGNED - BAR	REVISED -	
	CHECKED - VCP	REVISED -	
PLOT SCALE =	DRAWN - MTR	REVISED -	
PLOT DATE =	CHECKED - BAR	REVISED -	

STATE OF ILLINOIS
DEPARTMENT OF TRANSPORTATION

GENERAL DATA
STRUCTURE NO. 099-W035 (WB)

SHEET SD-02 OF SD-11 SHEETS

F.A.I. RTE.	SECTION	COUNTY	TOTAL SHEETS	SHEET NO.
80	2017-057F	WILL	1342	891
		CONTRACT NO. 62F94		
		ILLINOIS	FED. AID PROJECT	

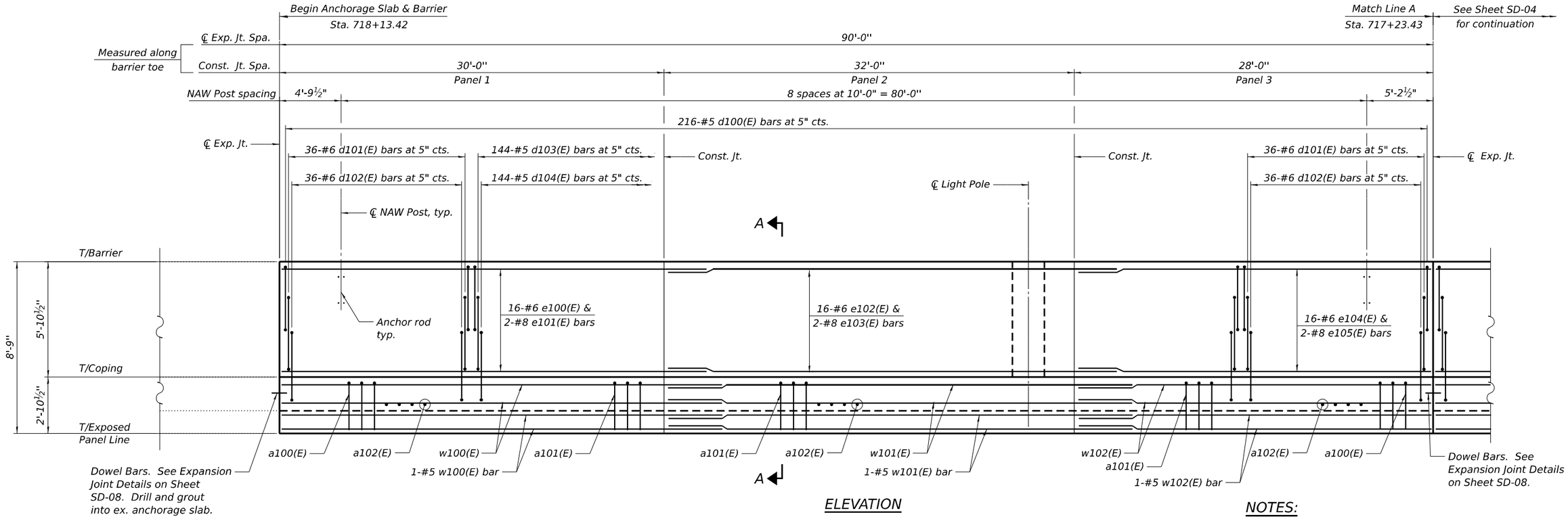

ELEVATION

MIN. BAR LAPS

#5 bars = 3'-4"
#6 bars = 4'-0"
#8 bars= 6'-8"

NOTES:

1. For anchor rods and bar spacing at NAW post, light pole bumpout and catch basin opening details, see Sheet SD-07.
2. For Sections, see Sheet SD-06 and for details and Bill of Material, see Sheet SD-08.
3. Bars indicated thus 16x2 etc. indicates 16 lines of bars with 2 lengths per line.
4. F.F. denotes front face
   B.F. denotes back face
   NAW denotes Noise Abatement Wall

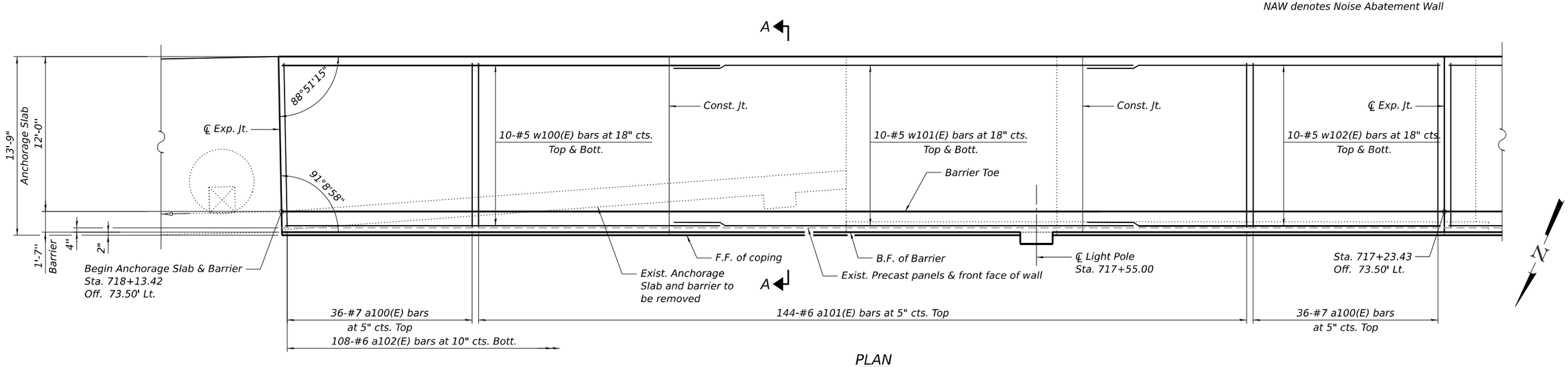

PLAN

USER NAME =	DESIGNED - BAR	REVISED -	STATE OF ILLINOIS DEPARTMENT OF TRANSPORTATION
	CHECKED - VCP	REVISED -	
PLOT SCALE =	DRAWN - MTR	REVISED -	
PLOT DATE =	CHECKED - BAR	REVISED -	

DETAILED PLAN AND ELEVATION 1
STRUCTURE NO. 099-W035 (WB)

SHEET SD-03 OF SD-11 SHEETS

F.A.I. RTE.	SECTION	COUNTY	TOTAL SHEETS	SHEET NO.
80	2017-057F	WILL	1342	892

CONTRACT NO. 62F94

ILLINOIS FED. AID PROJECT

MODEL: SHEET
FILE NAME: C:\TRANSYSTEMS\PW_LOCAL\TRANSYSTEMS-PW-01\DMS20863\099W035-62F94-003-DET1.DGN

10-27-2025, 16:53:23

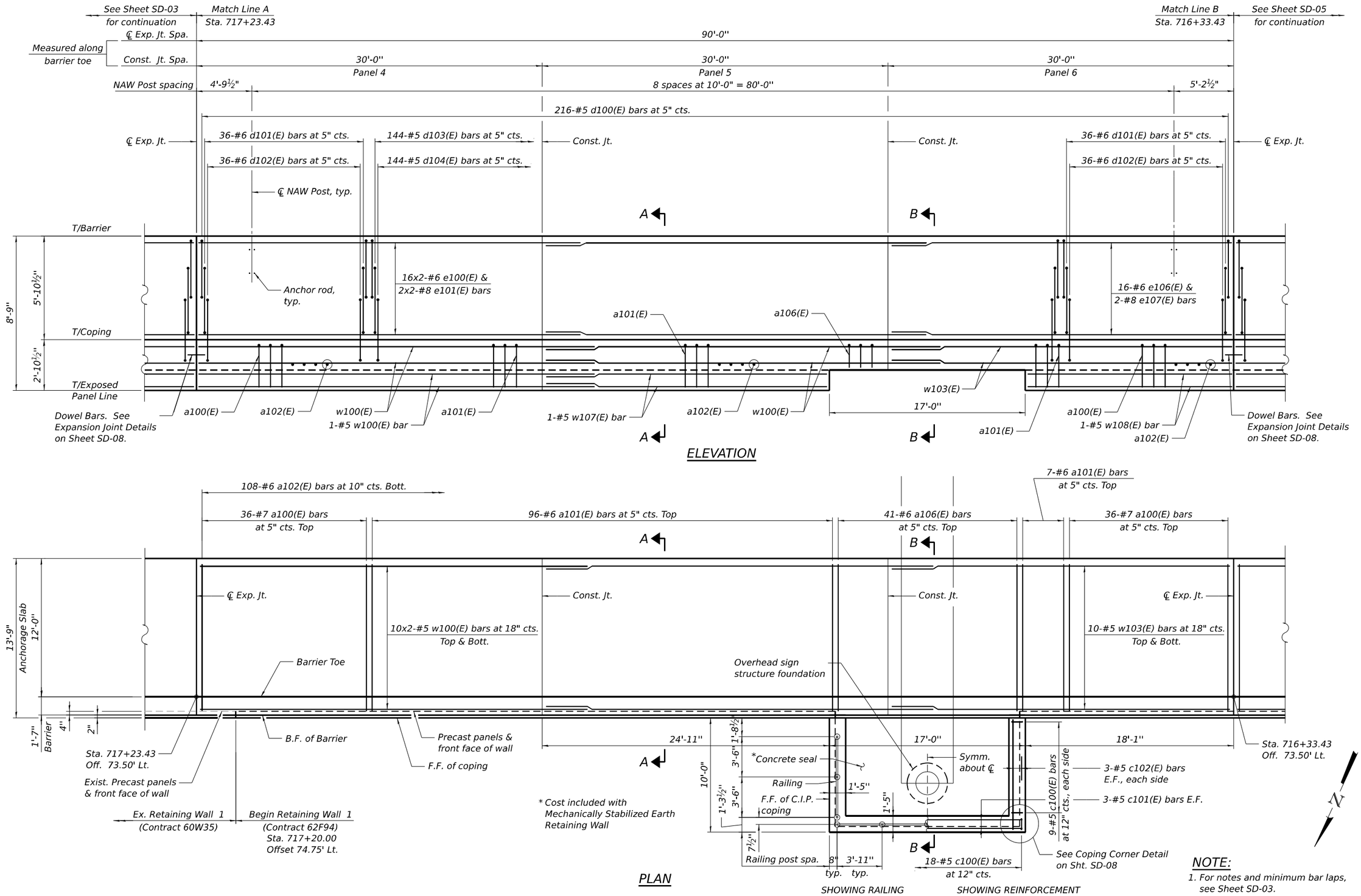

NOTE:

1. For notes and minimum bar laps, see Sheet SD-03.

MODEL: SHEET
FILE NAME: C:\TRANSYSTEMS\PW_LOCAL\TRANSYSTEMS-PW-01\DMS20863\099W035-62F94-004-DET2.DGN

10-27-2025, 16:53:27

exp.

USER NAME =	DESIGNED - BAR	REVISED -	
	CHECKED - VCP	REVISED -	
PLOT SCALE =	DRAWN - MTR	REVISED -	
PLOT DATE =	CHECKED - BAR	REVISED -	

STATE OF ILLINOIS
DEPARTMENT OF TRANSPORTATION

DETAILED PLAN AND ELEVATION 2
STRUCTURE NO. 099-W035 (WB)

SHEET SD-04 OF SD-11 SHEETS

F.A.I. RTE.	SECTION	COUNTY	TOTAL SHEETS	SHEET NO.
80	2017-057F	WILL	1342	893
		CONTRACT NO. 62F94		
	ILLINOIS	FED. AID PROJECT		

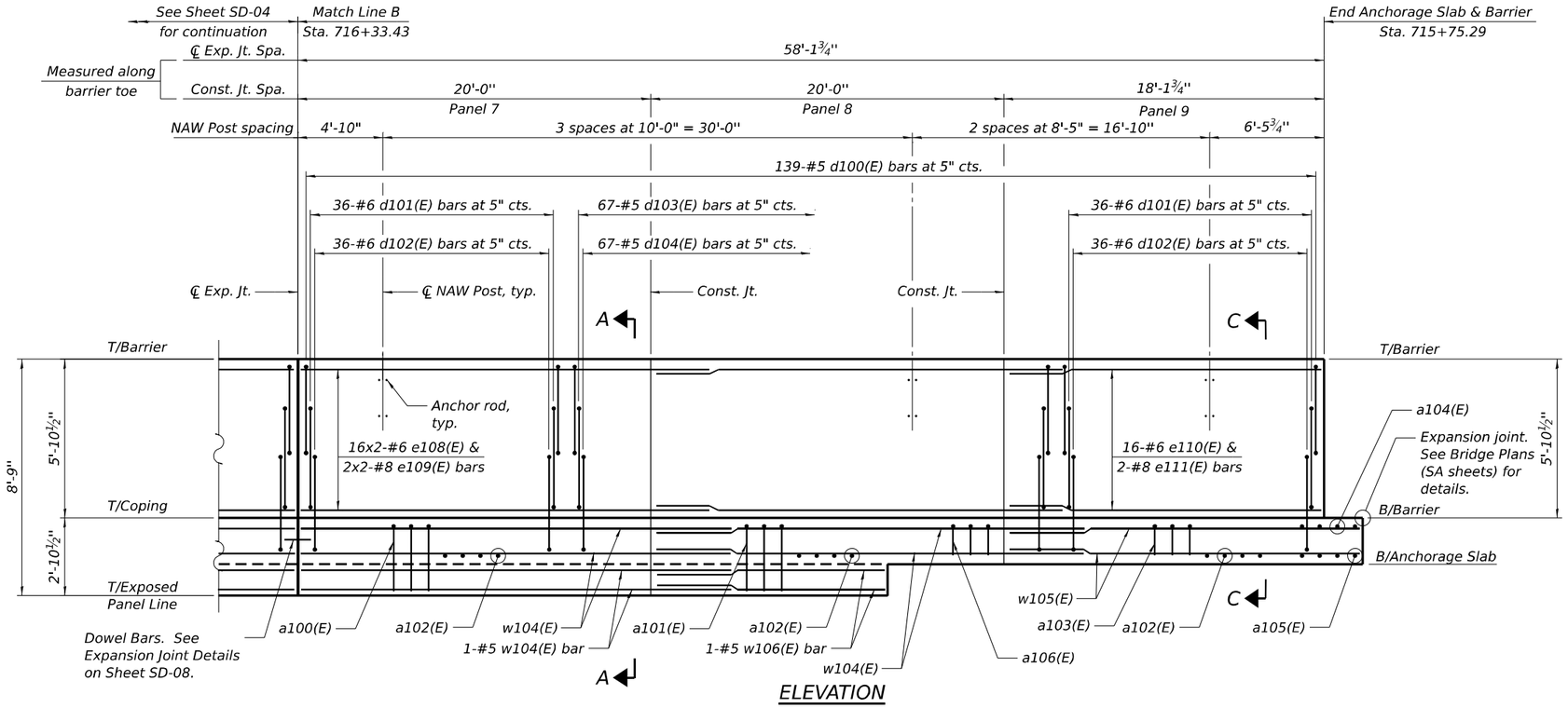

ELEVATION

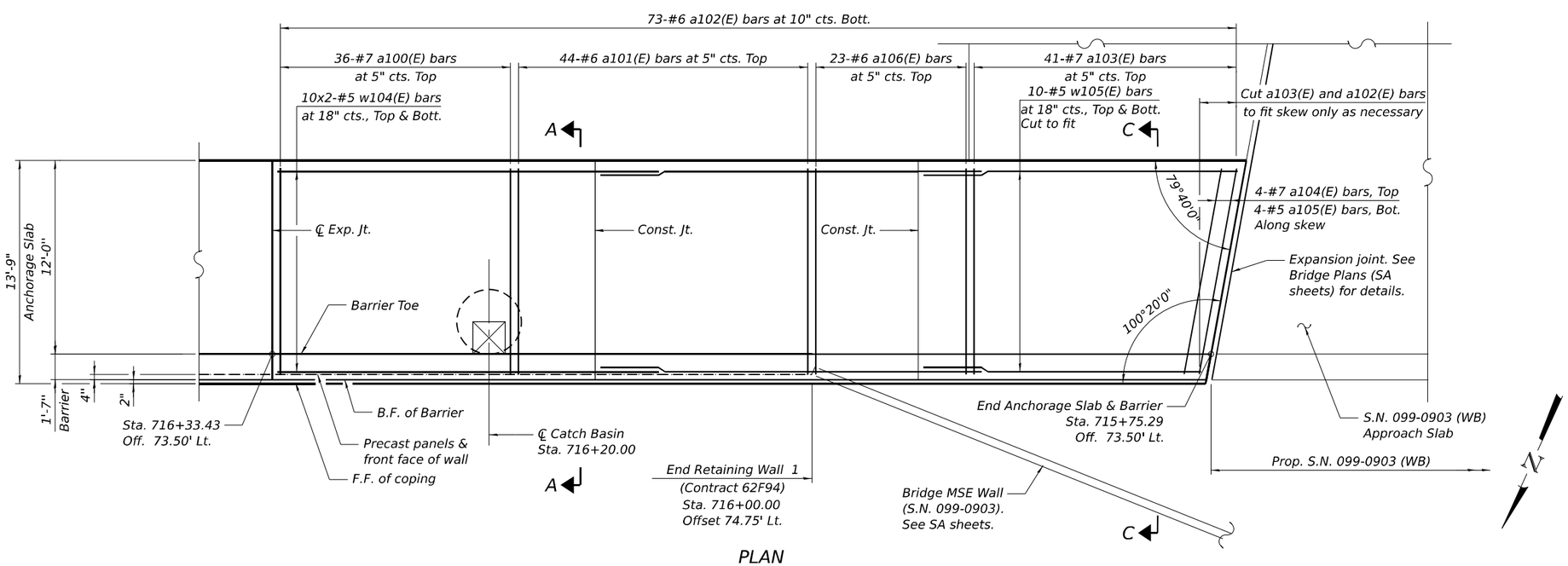

PLAN

NOTE:

1. For notes and minimum bar laps, see Sheet SD-03.

MODEL: SHEET
FILE NAME: C:\TRANSYSTEMS\PW_LOCAL\TRANSYSTEMS-PW-01\DMS20863\099W035-62F94-005-DET3.DGN

10-27-2025, 16:53:42

USER NAME =	DESIGNED - BAR	REVISED -	
	CHECKED - VCP	REVISED -	
PLOT SCALE =	DRAWN - MTR	REVISED -	
PLOT DATE =	CHECKED - BAR	REVISED -	

STATE OF ILLINOIS
DEPARTMENT OF TRANSPORTATION

DETAILED PLAN AND ELEVATION 3
STRUCTURE NO. 099-W035 (WB)

SHEET SD-05 OF SD-11 SHEETS

F.A.I. RTE.	SECTION	COUNTY	TOTAL SHEETS	SHEET NO.
80	2017-057F	WILL	1342	894

CONTRACT NO. 62F94

ILLINOIS FED. AID PROJECT

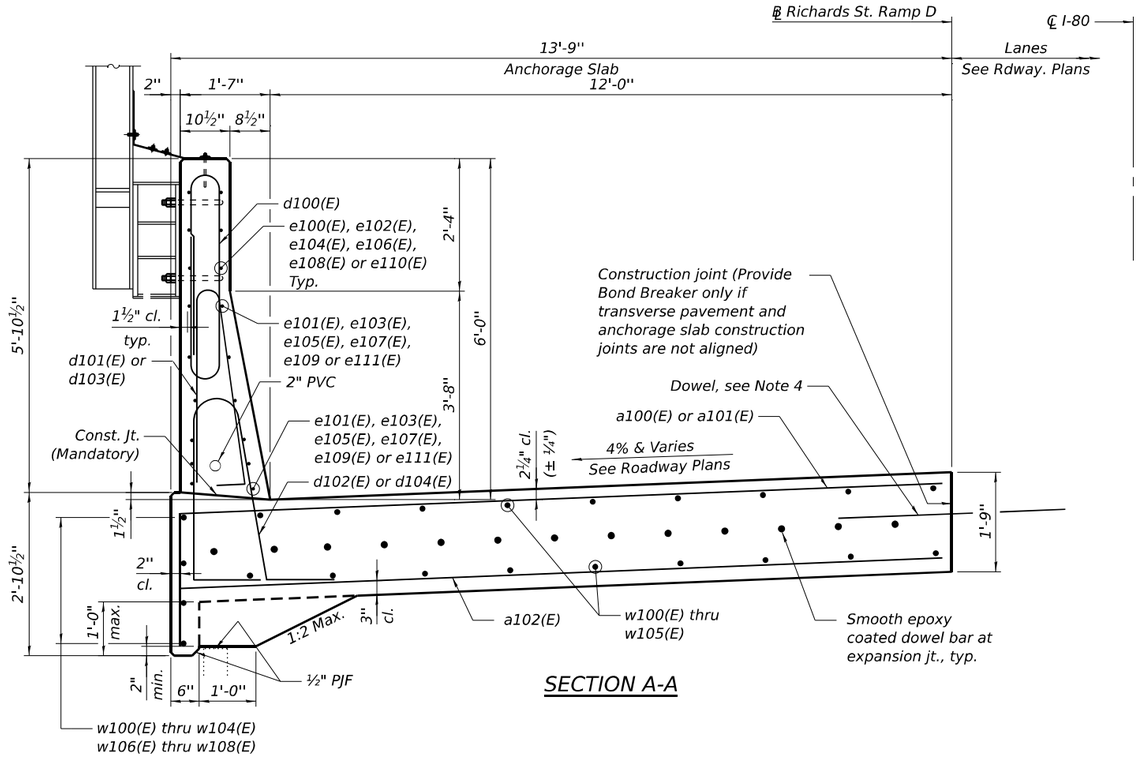

SECTION A-A

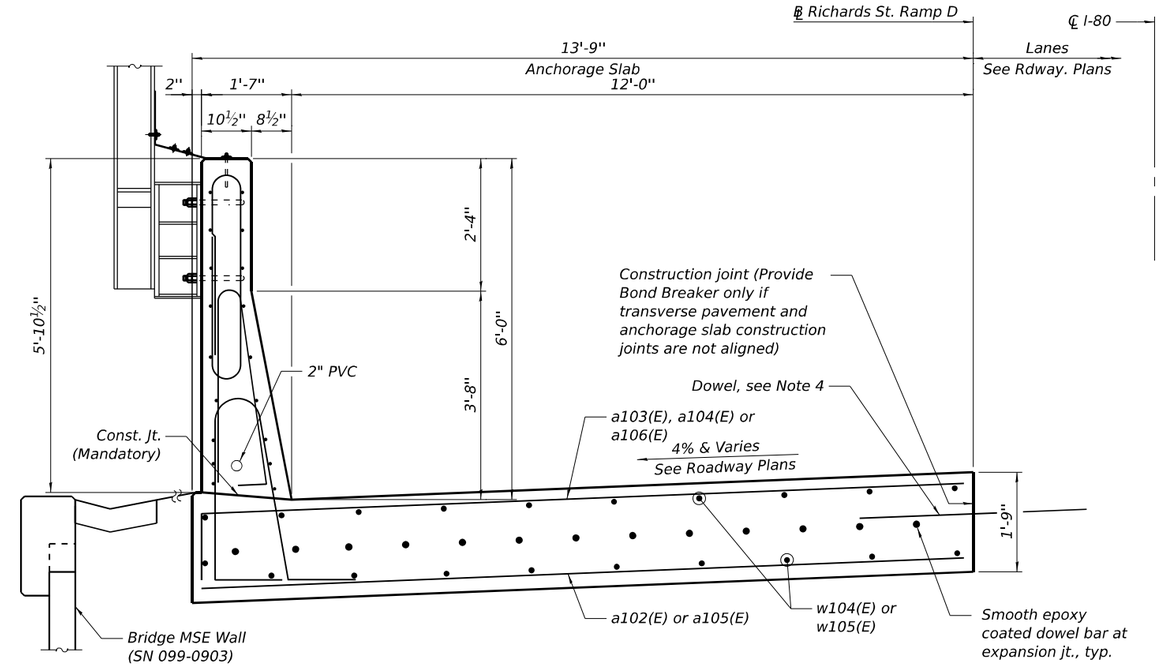

SECTION C-C

(For additional reinforcement information, see Section A-A)

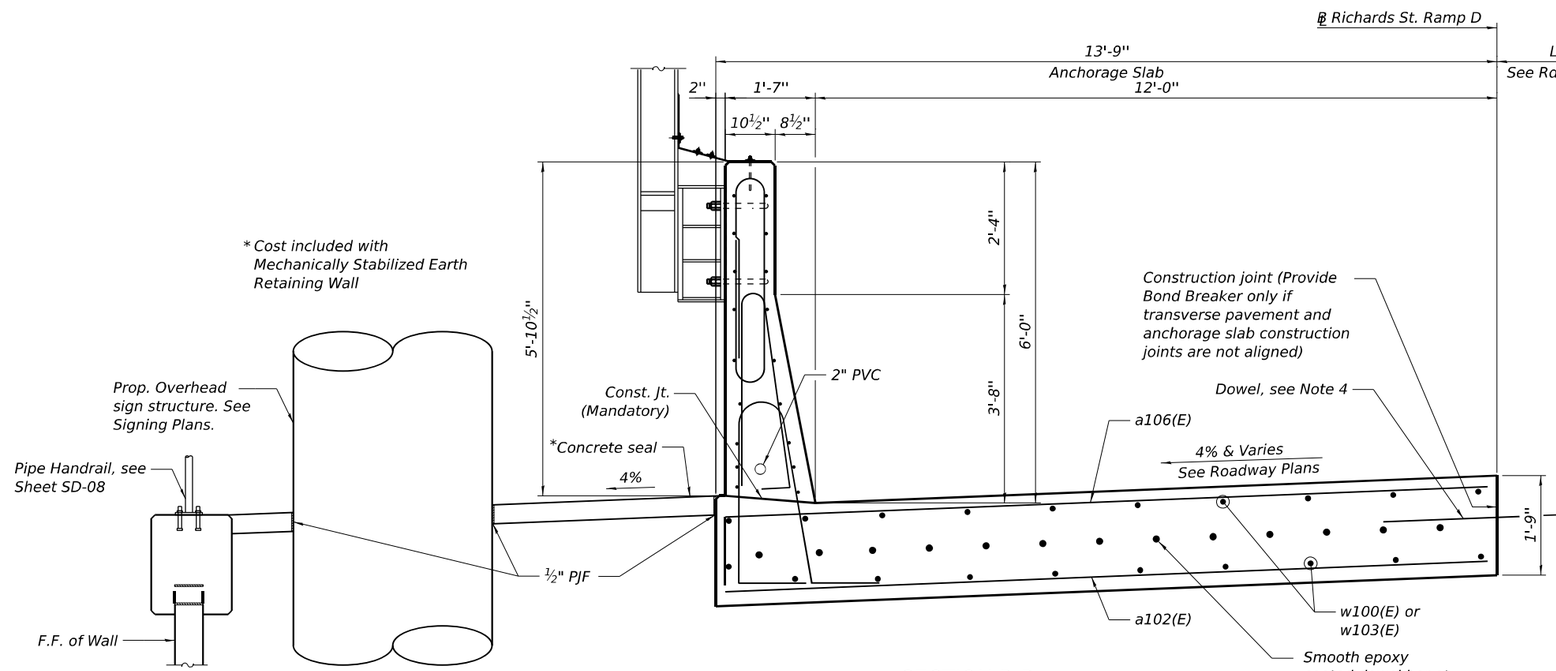

SECTION B-B

(For additional reinforcement information, see Section A-A)

NOTES:

1. Dowel bars shall be placed at mid-depth of Anchorage Slab at a maximum of 3' plan spacing. If dowel bar aligns within 1'-6" of a pavement joint, the dowel bar shall be repositioned such that it is placed at a minimum of 1'-6" from either side of the pavement joint. Cost for dowel bars shall be included with Reinforcement Bars, Epoxy Coated.

2. Post and post connection bracket details shown for information only. See Noise Abatement Wall plans for details.

3. The MSE wall supplier's design shall account for the following horizontal reactions at the overhead sign structure base plate: 15.1 kips (perpendicular to sign panel) and 2.9 kips (parallel to sign panel).

4. #6 (E) 4'-0" long dowel bars shall be placed at mid-depth of anchorage slab at a maximum 3'-0" spacing. If dowel bar aligns within 1'-6" of a pavement joint, the dowel bar shall be repositioned such that it is placed a minimum of 1'-6" from either side of the pavement joint. Cost for dowel bars shall be included with Reinforcement Bars, Epoxy Coated.

MODEL: SHEET
FILE NAME: C:\TRANSYSTEMS\PW_LOCAL\TRANSYSTEMS-PW-01\DMS20863\099W035-62F94-006-DET4.DGN

10-27-2025, 16:53:45

exp.

USER NAME =	DESIGNED - BAR	REVISED -	
	CHECKED - VCP	REVISED -	
PLOT SCALE =	DRAWN - MTR	REVISED -	
PLOT DATE =	CHECKED - BAR	REVISED -	

STATE OF ILLINOIS
DEPARTMENT OF TRANSPORTATION

WALL DETAILS 1
STRUCTURE NO. 099-W035 (WB)

SHEET SD-06 OF SD-11 SHEETS

F.A.I. RTE.	SECTION	COUNTY	TOTAL SHEETS	SHEET NO.
80	2017-057F	WILL	1342	895
		CONTRACT NO. 62F94		
		ILLINOIS	FED. AID PROJECT	

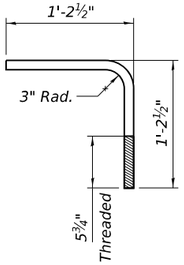

NOISE ABATEMENT WALL ANCHOR ROD

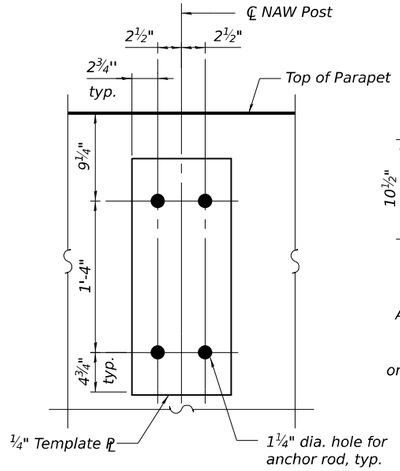

ANCHOR ROD LAYOUT

(Back of Parapet Elevation)

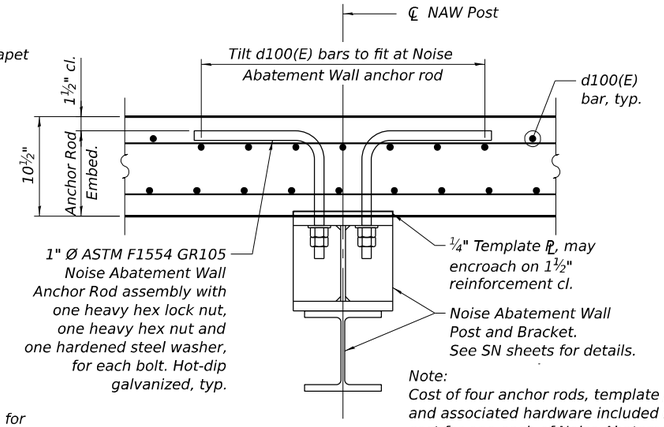

Note:
Cost of four anchor rods, template plate, and associated hardware included in the cost for one each of Noise Abatement Wall Anchor Rod Assembly

PLAN AT NAW POST

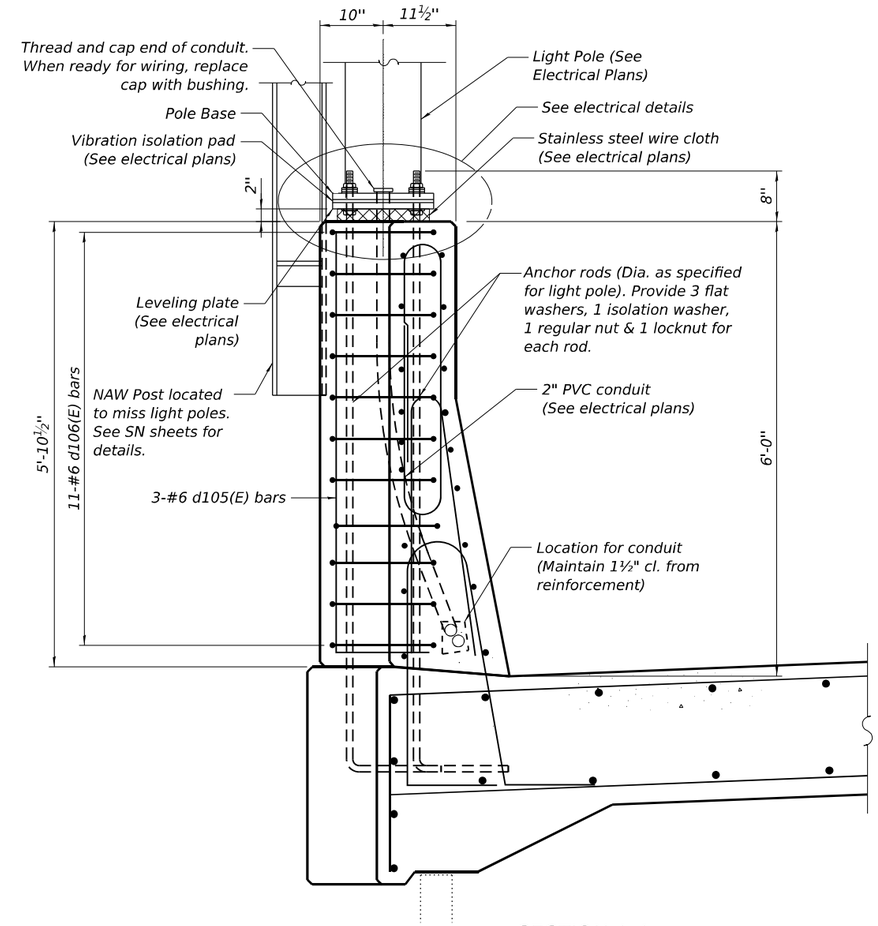

SECTION A-A

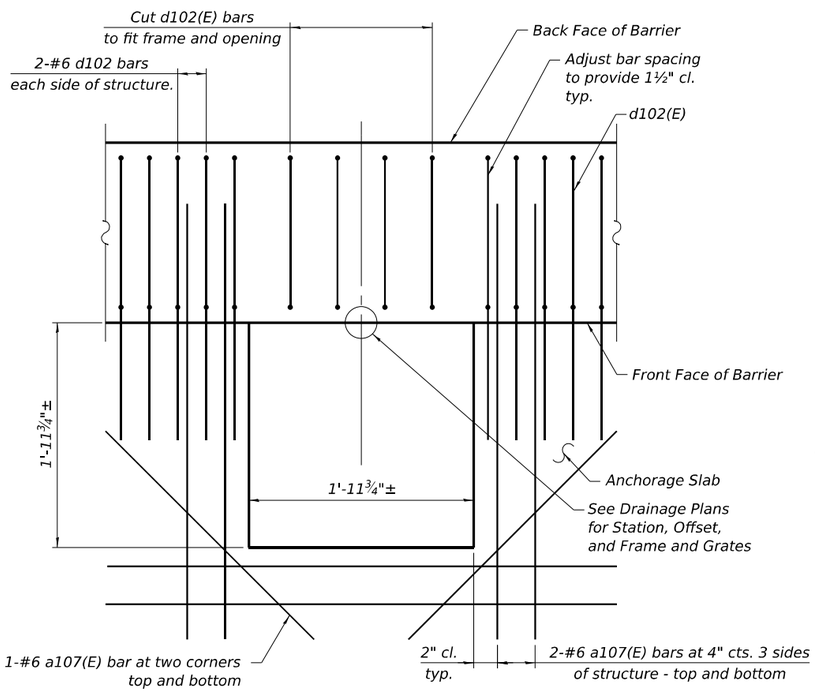

REINFORCEMENT AROUND DRAINAGE OPENING - PLAN

(For clarity some reinforcement not shown)

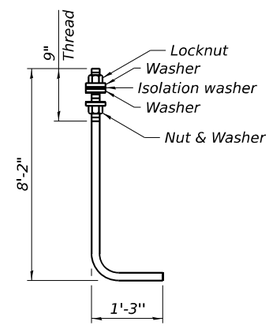

LIGHT POLE ANCHOR ROD

Diameter as specified for light poles. (ASTM F 1554 Grade 105) Full length hot dipped galvanized.

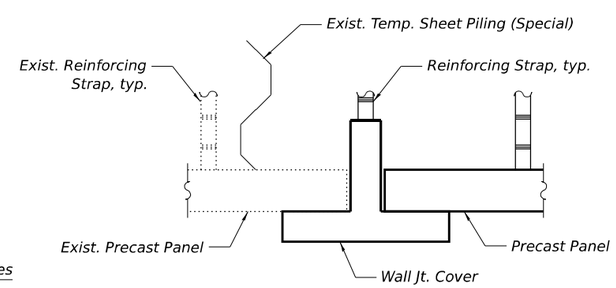

WALL CONNECTION DETAIL

(Cost included with Mechanically Stabilized Earth Retaining Wall))

Note:
Cost of Anchor Rods included with Concrete Superstructure.

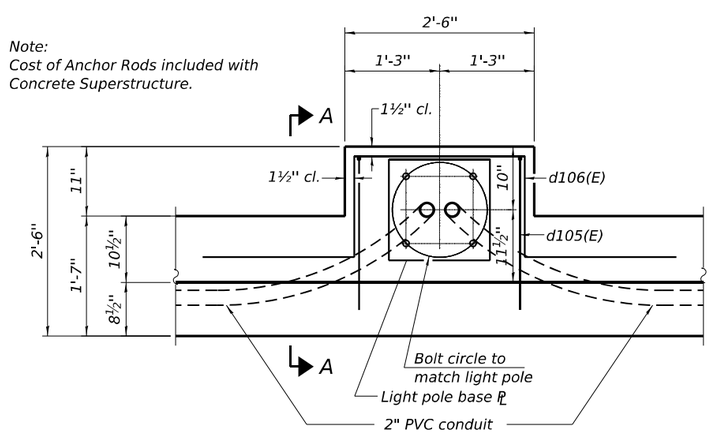

PLAN

MODEL: SHEET
FILE NAME: C:\TRANSYSTEMS\PW_LOCAL\TRANSYSTEMS-PW-01\DMS20863\099W035-62F94-007-DET5.DGN

10-27-2025, 16:53:49

exp.

USER NAME =	DESIGNED - BAR	REVISED -	
	CHECKED - VCP	REVISED -	
PLOT SCALE =	DRAWN - MTR	REVISED -	
PLOT DATE =	CHECKED - BAR	REVISED -	

STATE OF ILLINOIS
DEPARTMENT OF TRANSPORTATION

WALL DETAILS 2
STRUCTURE NO. 099-W035 (WB)

SHEET SD-07 OF SD-11 SHEETS

F.A.I. RTE.	SECTION	COUNTY	TOTAL SHEETS	SHEET NO.
80	2017-057F	WILL	1342	896
		CONTRACT NO. 62F94		
	ILLINOIS	FED. AID PROJECT		

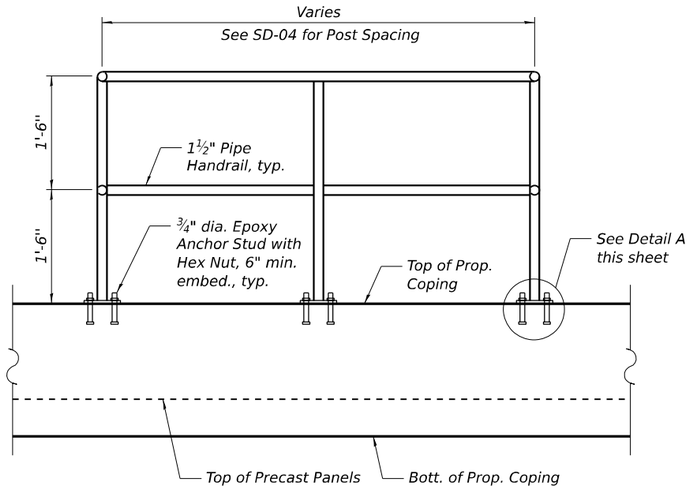

PIPE HAND RAIL ELEVATION

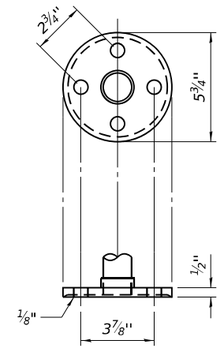

DETAIL A

(Cast iron or Structural Steel fitting)

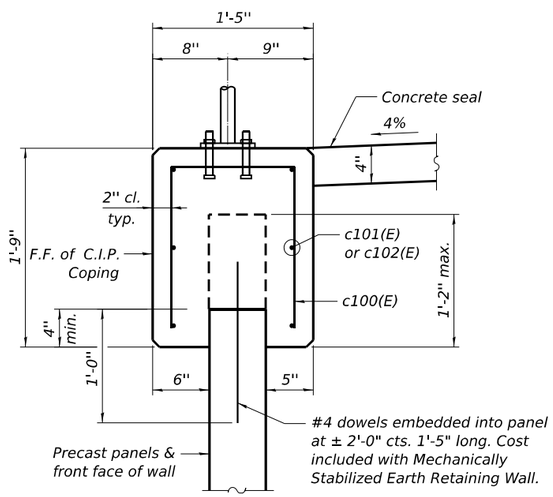

COPING DETAIL

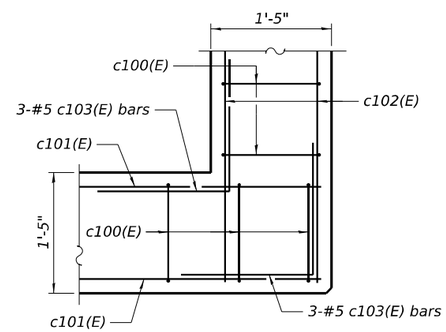

COPING CORNER DETAIL

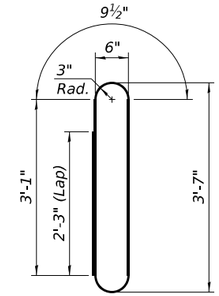

BAR d100(E)

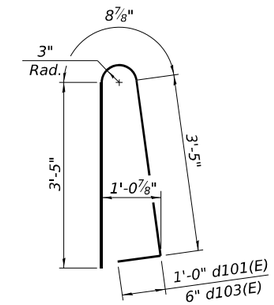

BARS d101(E) & d103(E)

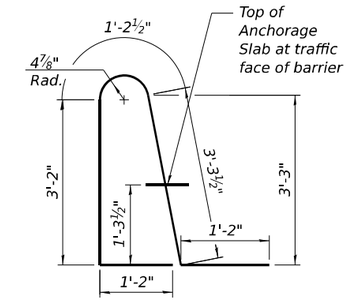

BARS d102(E) & d104(E)

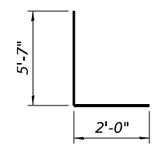

BAR d105(E)

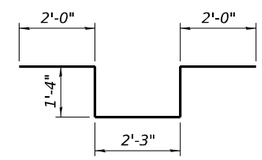

BAR d106(E)

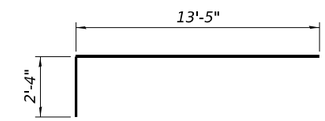

BARS a100(E) & a101(E)

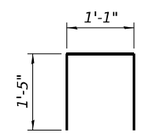

BAR c100(E)

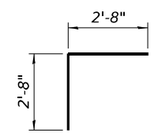

BAR c103(E)

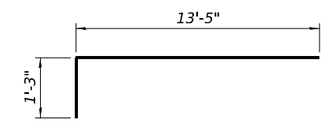

BARS a103(E) & a106(E)

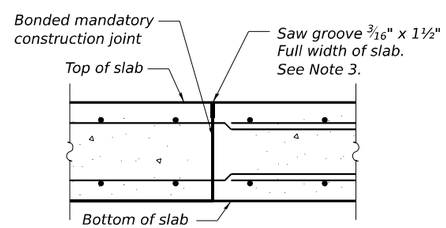

TRANSVERSE CONSTRUCTION JT. IN SLAB - SECTION

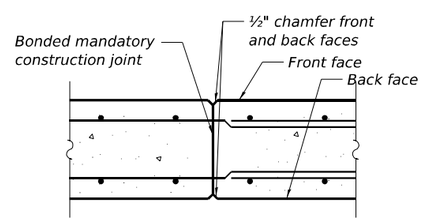

TRANSVERSE CONSTRUCTION JT. IN BARRIER - PLAN

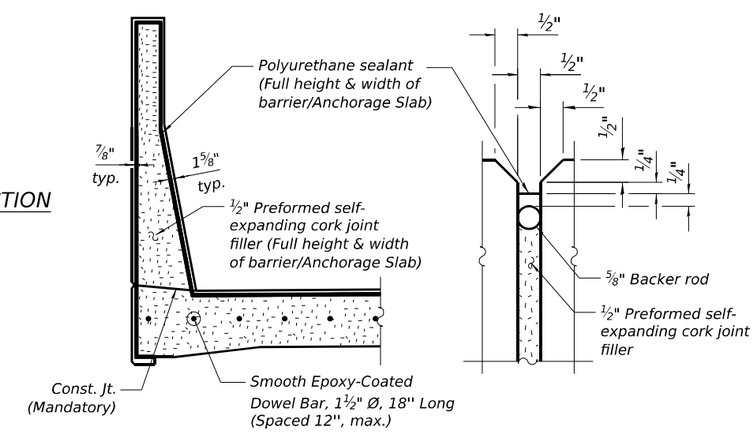

EXPANSION JOINT DETAILS

See Note 2

BILL OF MATERIAL

Bar	No.	Size	Length	Shape
a100(E)	180	#7	15'-9"	
a101(E)	291	#6	15'-9"	
a102(E)	289	#6	13'-5"	
a103(E)	41	#7	14'-8"	
a104(E)	4	#7	13'-9"	
a105(E)	4	#5	13'-9"	
a106(E)	64	#6	14'-8"	
a107(E)	16	#6	6'-0"	
c100(E)	36	#5	3'-11"	
c101(E)	6	#5	16'-8"	
c102(E)	12	#5	9'-7"	
c103(E)	12	#5	5'-4"	
d100(E)	571	#5	10'-0"	
d101(E)	216	#6	8'-7"	
d102(E)	220	#6	10'-0"	
d103(E)	355	#5	8'-1"	
d104(E)	355	#5	10'-0"	
d105(E)	3	#6	7'-7"	
d106(E)	11	#6	8'-11"	
e100(E)	48	#6	34'-0"	
e101(E)	6	#8	36'-8"	
e102(E)	16	#6	36'-0"	
e103(E)	2	#8	38'-8"	
e104(E)	16	#6	27'-8"	
e105(E)	2	#8	27'-8"	
e106(E)	16	#6	29'-8"	
e107(E)	2	#8	29'-8"	
e108(E)	32	#6	24'-0"	
e109(E)	4	#8	26'-8"	
e110(E)	16	#6	17'-10"	
e111(E)	2	#8	17'-10"	
w100(E)	62	#5	33'-4"	
w101(E)	22	#5	35'-4"	
w102(E)	22	#5	27'-8"	
w103(E)	20	#5	29'-8"	
w104(E)	42	#5	23'-4"	
w105(E)	20	#5	20'-0"	
w106(E)	2	#5	13'-1"	
w107(E)	2	#5	24'-7"	
w108(E)	2	#5	17'-9"	

Item	Unit	Quantity
Concrete	Cu Yd	279.3
Reinforcement Bars, Epoxy Coated	Pound	54,350

Pipe Handrail General Notes:

1. Article 509.04 of the Standard Specifications shall apply.
2. Connection of Railing to posts shall be made by continuous welding or with using standard pipe fitting.
3. The pipe handrail shall be galvanized by the hot dip process.

Notes:

1. The Polyurethane Sealant shall be according to Article 1050.04 of the Standard Specifications and the color shall be gray.
2. Cost of expansion joints shall be included with Concrete Superstructure.
3. The saw groove shall use a hot poured joint sealer per Article 1050.02 of the Standard Specifications.

MODEL: SHEET
FILE NAME: C:\TRANSYSTEMS\PW_LOCAL\TRANSYSTEMS-PW-01\DMS20863\099W035-62F94-008-DET6.DGN

10-27-2025, 16:53:52

exp.

USER NAME =	DESIGNED - BAR	REVISED -	
	CHECKED - VCP	REVISED -	
PLOT SCALE =	DRAWN - MTR	REVISED -	
PLOT DATE =	CHECKED - BAR	REVISED -	

STATE OF ILLINOIS
DEPARTMENT OF TRANSPORTATION

WALL DETAILS 3
STRUCTURE NO. 099-W035 (WB)

SHEET SD-08 OF SD-11 SHEETS

F.A.I. RTE.	SECTION	COUNTY	TOTAL SHEETS	SHEET NO.
80	2017-057F	WILL	1342	897

CONTRACT NO. 62F94

ILLINOIS FED. AID PROJECT

Geo Services, Inc.
Geotechnical, Environmental & Civil Engineering
805 Aimhurst Court; Suite 204
Naperville, Illinois 60565
(630) 355-2888

SOIL BORING LOG

GSI Job No. 20012
Page 1 of 1
Date 5/12/21

ROUTE FAI 80 DESCRIPTION I-80 Phase II LOGGED BY ZP
SECTION LOCATION SW 1/4, SEC. 15, TWP. T35N, RNG. R30E, 3rd PM
COUNTY Will DRILLING METHOD Hollow Stem Auger/Rotary HAMMER TYPE CME Automatic

STRUCT. NO.
Station
BORING NO. RW-32
Station 716+04
Offset 53.30ft Left
Ground Surface Elev. 574.62 ft

Surface Water Elev. n/a ft
Stream Bed Elev. n/a ft
Groundwater Elev.:
First Encounter Dry to -10.0' ft
Upon Completion n/a ft
After ___ Hrs. ___ ft

Description	Elev.	DEPTH (ft)	BLOWS (/6")	UCS Qu (tsf)	MOIST (%)
4.5" ASPHALT, 13.0" CONCRETE					
	573.16		2		
CRUSHED STONE-loose			2		11
			1		
	571.62				
CLAY LOAM-brown & gray-stiff (Fill)			4		
			3	1.20	20
		-5	3	B	
	569.12				
SILTY CLAY LOAM-brown & gray-loose (Fill)			3		
			4		16
			3		
	566.62				
CLAY LOAM-brown & gray-stiff to hard (Fill)			3		
			3	1.20	18
		-10	4	B	
			2		
			5	1.00	20
			4	P	
			3		
			6	1.30	23
		-15	8	B	
			3		
			3	3.00	21
			11	P	
			3		
			6	1.90	16
		-20	8	B	

Description	Elev.	DEPTH (ft)	BLOWS (/6")	UCS Qu (tsf)	MOIST (%)
CLAY LOAM-brown & gray-stiff to hard (Fill) *(continued)*					
			4		
			6	3.00	15
			8	P	
			5		
			9	3.50	15
		-25	13	B	
			6		
			6	3.10	15
			11	B	
			7		
			10	2.80	12
		-30	8	B	
			6		
			5	4.00	15
		-35	7	P	
			6		
End Of Boring @ -40.0'. Boring backfilled with cuttings.	534.62	-40	10	4.20	16
			14	B	

The Unconfined Compressive Strength (UCS) Failure Mode is indicated by (B-Bulge, S-Shear, P-Penetrometer)
The SPT (N value) is the sum of the last two blow values in each sampling zone (AASHTO T206), GP-Geoprobe Hand Auger
BBS, from 137 (Rev. 8-99)

Z:\PROJECTS\20\20\2012 EXP - I-80 FROM CHICAGO ST. TO RT 30, PTB 194-9\2012 BORING LOGS\20012_LOG.GPJ 6/1/21

Geo Services, Inc.
Geotechnical, Environmental & Civil Engineering
805 Aimhurst Court; Suite 204
Naperville, Illinois 60565
(630) 355-2888

SOIL BORING LOG

GSI Job No. 20012
Page 1 of 1
Date 5/12/21

ROUTE FAI 80 DESCRIPTION I-80 Phase II LOGGED BY ZP
SECTION LOCATION SW 1/4, SEC. 15, TWP. T35N, RNG. R30E, 3rd PM
COUNTY Will DRILLING METHOD Hollow Stem Auger/Rotary HAMMER TYPE CME Automatic

STRUCT. NO.
Station
BORING NO. RW-33
Station 716+57
Offset 55.00ft Left
Ground Surface Elev. 573.73 ft

Surface Water Elev. n/a ft
Stream Bed Elev. n/a ft
Groundwater Elev.:
First Encounter Dry to -10.0' ft
Upon Completion n/a ft
After ___ Hrs. ___ ft

Description	Elev.	DEPTH (ft)	BLOWS (/6")	UCS Qu (tsf)	MOIST (%)
4.0" ASPHALT, 9.0" CONCRETE					
	572.64				
CLAY LOAM-brown & gray-very stiff to hard (Fill)			3		
			5	3.00	15
			5	P	
			3		
			5	2.20	19
		-5	4	B	
			4		
			8	3.50	17
			8	B	
			3		
			7	3.10	18
		-10	7	B	
			5		
			5	3.00	18
			5	P	
			7		
			5	2.00	20
		-15	7	P	
			3		
			4	2.40	19
			4	B	
			5		
			6	2.90	15
		-20	7	B	

Description	Elev.	DEPTH (ft)	BLOWS (/6")	UCS Qu (tsf)	MOIST (%)
CLAY LOAM-brown & gray-very stiff to hard (Fill) *(continued)*					
			7		
			7	2.40	14
			8	B	
			7		
			10	2.10	12
		-25	9	B	
			13		
			15		NR
			19		
			10		
			12	4.50	13
		-30	14	P	
	541.73				
SILTY CLAY LOAM-gray-hard (Apparent Fill)					
			5		
			8		11
		-35	11		
			11		
End Of Boring @ -40.0'. Boring backfilled with cuttings.	533.73	-40	12	4.50	16
			16	P	

The Unconfined Compressive Strength (UCS) Failure Mode is indicated by (B-Bulge, S-Shear, P-Penetrometer)
The SPT (N value) is the sum of the last two blow values in each sampling zone (AASHTO T206), GP-Geoprobe Hand Auger
BBS, from 137 (Rev. 8-99)

Z:\PROJECTS\20\20\2012 EXP - I-80 FROM CHICAGO ST. TO RT 30, PTB 194-9\2012 BORING LOGS\20012_LOG.GPJ 6/1/21

Geo Services, Inc.
Geotechnical, Environmental & Civil Engineering
805 Aimhurst Court; Suite 204
Naperville, Illinois 60565
(630) 355-2888

SOIL BORING LOG

GSI Job No. 20012
Page 1 of 1
Date 5/12/21

ROUTE FAI 80 DESCRIPTION I-80 Phase II LOGGED BY ZP
SECTION LOCATION SW 1/4, SEC. 15, TWP. T35N, RNG. R30E, 3rd PM
COUNTY Will DRILLING METHOD Hollow Stem Auger/Rotary HAMMER TYPE CME Automatic

STRUCT. NO.
Station
BORING NO. RW-34
Station 717+30
Offset 57.50ft Left
Ground Surface Elev. 572.32 ft

Surface Water Elev. n/a ft
Stream Bed Elev. n/a ft
Groundwater Elev.:
First Encounter Dry to -10.0' ft
Upon Completion n/a ft
After ___ Hrs. ___ ft

Description	Elev.	DEPTH (ft)	BLOWS (/6")	UCS Qu (tsf)	MOIST (%)
13.0" ASPHALT					
	571.24				
CLAY LOAM-brown & gray-stiff to hard (Fill)			15		
			5	3.00	15
			3	P	
			2		
			3	3.00	20
		-5	3	P	
			3		
			5	1.80	21
			6	B	
			3		
			8	4.00	15
		-10	9	B	
			3		
			5	1.20	21
			7	B	
			4		
			7	2.70	19
		-15	9	B	
			6		
			8	2.90	16
			8	B	
			3		
			5	1.80	17
		-20	6	B	

Description	Elev.	DEPTH (ft)	BLOWS (/6")	UCS Qu (tsf)	MOIST (%)
CLAY LOAM-brown & gray-stiff to hard (Fill) *(continued)*					
			5		
			4	3.50	17
			6	P	
			10		
			50/8"	3.50	13
		-25		B	
			7		
			12	2.50	11
			11	B	
			7		
			10	2.50	15
		-30	12	B	
			9		
			10	2.00	16
		-35	11	P	
			7		
End Of Boring @ -40.0'. Boring backfilled with cuttings.	532.32	-40	8	4.50	15
			12	P	

The Unconfined Compressive Strength (UCS) Failure Mode is indicated by (B-Bulge, S-Shear, P-Penetrometer)
The SPT (N value) is the sum of the last two blow values in each sampling zone (AASHTO T206), GP-Geoprobe Hand Auger
BBS, from 137 (Rev. 8-99)

Z:\PROJECTS\20\20\2012 EXP - I-80 FROM CHICAGO ST. TO RT 30, PTB 194-9\2012 BORING LOGS\20012_LOG.GPJ 6/1/21

MODEL: SHEET
FILE NAME: C:\TRANSYSTEMS\PW_LOCAL\TRANSYSTEMS-PW-01\DMS20863\099W035-62F94-009-BORING01.DGN

exp.

USER NAME =	DESIGNED - BAR	REVISED -
	CHECKED - VCP	REVISED -
PLOT SCALE =	DRAWN - MTR	REVISED -
PLOT DATE =	CHECKED - BAR	REVISED -

STATE OF ILLINOIS
DEPARTMENT OF TRANSPORTATION

SOIL BORING LOGS 1
STRUCTURE NO. 099-W035 (WB)
SHEET SD-09 OF SD-11 SHEETS

F.A.I. RTE.	SECTION	COUNTY	TOTAL SHEETS	SHEET NO.
80	2017-057F	WILL	1342	898
		CONTRACT NO. 62F94		
		ILLINOIS	FED. AID PROJECT	

10-27-2025, 16:53:56

Geo Services, Inc.
Geotechnical, Environmental & Civil Engineering
805 Aimhurst Court, Suite 204
Naperville, Illinois 60565
(630) 355-2888

SOIL BORING LOG

GSI Job No. 20012
Page 1 of 2
Date 5/14/21

ROUTE FAI 80 DESCRIPTION I-80 Phase II LOGGED BY MM
SECTION LOCATION SW 1/4, SEC. 15, TWP. T35N, RNG. R30E, 3rd PM
COUNTY Will DRILLING METHOD Hollow Stem Auger/Rotary HAMMER TYPE CME Automatic

STRUCT. NO.
Station
BORING NO. RW-35
Station 718+06
Offset 56.20ft Left
Ground Surface Elev. 570.70 ft

Surface Water Elev. n/a ft
Stream Bed Elev. n/a ft
Groundwater Elev.:
First Encounter Dry to -10.0' ft
Upon Completion n/a ft
After ___ Hrs. ___ ft

Description	Elev.	DEPTH (ft)	BLOWS (/6")	UCS Qu (tsf)	MOIST (%)
5.0" ASPHALT, 0.0" CONCRETE	569.78				
CLAY LOAM-brown & gray-stiff to hard (Fill)			4		
			3	3.50	17
			3	P	
			2		
			1	1.75	20
		-5	3	P	
			6		
			8	3.50	16
			5	P	
			4		
			7	4.00	17
		-10	10	P	
			6		
			8	2.70	18
			9	B	
			4		
			5	1.20	23
		-15	7	B	
			6		
			5	2.70	18
			7	B	
			6		
			6	1.30	16
		-20	7	B	
CLAY LOAM-brown & gray-stiff to hard (Fill) *(continued)*			8		
			8	1.70	15
			7	B	
			4		
			5	1.30	16
		-25	6	B	
	545.20				
SILTY CLAY LOAM-gray-hard (Fill)			17		
			19		NR
			19		
			11		
			13	3.50	13
		-30	15	P	
	538.70				
CLAY LOAM-brown & gray-very stiff to hard (Fill)			11		
			13	4.50	15
		-35	18	P	
			13		
			13	2.50	19
		-40	14	P	

The Unconfined Compressive Strength (UCS) Failure Mode is indicated by (B-Bulge, S-Shear, P-Penetrometer)
The SPT (N value) is the sum of the last two blow values in each sampling zone (AASHTO T206), GP-Geoprobe Hand Auger
BBS, from 137 (Rev. 8-99)

Z:\PROJECTS\20\20\20012 EXP - I-80 FROM CHICAGO ST. TO RT 30, PTB 194-9\20012 BORING LOGS\20012_LOG.GPJ 6/1/21

Geo Services, Inc.
Geotechnical, Environmental & Civil Engineering
805 Aimhurst Court, Suite 204
Naperville, Illinois 60565
(630) 355-2888

SOIL BORING LOG

GSI Job No. 20012
Page 2 of 2
Date 5/14/21

ROUTE FAI 80 DESCRIPTION I-80 Phase II LOGGED BY MM
SECTION LOCATION SW 1/4, SEC. 15, TWP. T35N, RNG. R30E, 3rd PM
COUNTY Will DRILLING METHOD Hollow Stem Auger/Rotary HAMMER TYPE CME Automatic

STRUCT. NO.
Station
BORING NO. RW-35
Station 718+06
Offset 56.20ft Left
Ground Surface Elev. 570.70 ft

Surface Water Elev. n/a ft
Stream Bed Elev. n/a ft
Groundwater Elev.:
First Encounter Dry to -10.0' ft
Upon Completion n/a ft
After ___ Hrs. ___ ft

Description	Elev.	DEPTH (ft)	BLOWS (/6")	UCS Qu (tsf)	MOIST (%)
CLAY LOAM-brown & gray-very stiff to hard (Fill) *(continued)*					
	526.20				
Drillers Observation: Possible Bedrock		-45			
	524.20				
End Of Boring @ -46.5'. Boring backfilled with cuttings.		-50			
		-55			
		-60			

The Unconfined Compressive Strength (UCS) Failure Mode is indicated by (B-Bulge, S-Shear, P-Penetrometer)
The SPT (N value) is the sum of the last two blow values in each sampling zone (AASHTO T206), GP-Geoprobe Hand Auger
BBS, from 137 (Rev. 8-99)

Z:\PROJECTS\20\20\20012 EXP - I-80 FROM CHICAGO ST. TO RT 30, PTB 194-9\20012 BORING LOGS\20012_LOG.GPJ 6/1/21

Geo Services, Inc.
Geotechnical, Environmental & Civil Engineering
805 Aimhurst Court, Suite 204
Naperville, Illinois 60565
(630) 355-2888

SOIL BORING LOG

GSI Job No. 20012
Page 1 of 2
Date 5/14/21

ROUTE FAI 80 DESCRIPTION I-80 Phase II LOGGED BY MM
SECTION LOCATION SW 1/4, SEC. 15, TWP. T35N, RNG. R30E, 3rd PM
COUNTY Will DRILLING METHOD Hollow Stem Auger/Rotary HAMMER TYPE CME Automatic

STRUCT. NO.
Station
BORING NO. RW-36
Station 718+78
Offset 57.20ft Left
Ground Surface Elev. 568.79 ft

Surface Water Elev. n/a ft
Stream Bed Elev. n/a ft
Groundwater Elev.:
First Encounter Dry to -10.0' ft
Upon Completion n/a ft
After ___ Hrs. ___ ft

Description	Elev.	DEPTH (ft)	BLOWS (/6")	UCS Qu (tsf)	MOIST (%)
5.0" ASPHALT, 6.0" CONCRETE	567.87				
CLAY LOAM-brown & gray-very stiff to hard (Fill)			5		
			3	2.50	17
			5	P	
			1		
			6	2.75	19
		-5	5	P	
			6		
			9	4.50	14
			6	P	
			4		
			6	2.10	15
		-10	10	B	
			5		
			6	3.75	15
			6	P	
			5		
			7	2.50	18
		-15	7	B	
			5		
			5	3.00	15
			7	P	
			3		
			5	3.50	17
		-20	7	P	
CLAY LOAM-brown & gray-very stiff to hard (Fill) *(continued)*			4		
			4	3.00	17
			4	P	
			5		
			7	4.50	15
		-25	8	P	
			8		
			9	2.00	14
			50/2"	P	
			7		
			7	2.50	18
		-30	12	P	
			5		
			7	3.00	18
		-35	9	P	
			5		
			8	2.50	17
		-40	6	P	

The Unconfined Compressive Strength (UCS) Failure Mode is indicated by (B-Bulge, S-Shear, P-Penetrometer)
The SPT (N value) is the sum of the last two blow values in each sampling zone (AASHTO T206), GP-Geoprobe Hand Auger
BBS, from 137 (Rev. 8-99)

Z:\PROJECTS\20\20\20012 EXP - I-80 FROM CHICAGO ST. TO RT 30, PTB 194-9\20012 BORING LOGS\20012_LOG.GPJ 6/1/21

MODEL: SHEET
FILE NAME: C:\TRANSYSTEMS\PW_LOCAL\TRANSYSTEMS-PW-01\DMS20863\099W035-62F94-010-BORING02.DGN

exp.

USER NAME =	DESIGNED - BAR	REVISED -	
	CHECKED - VCP	REVISED -	
PLOT SCALE =	DRAWN - MTR	REVISED -	
PLOT DATE =	CHECKED - BAR	REVISED -	

STATE OF ILLINOIS
DEPARTMENT OF TRANSPORTATION

SOIL BORING LOGS 2
STRUCTURE NO. 099-W035 (WB)
SHEET SD-10 OF SD-11 SHEETS

F.A.I. RTE.	SECTION	COUNTY	TOTAL SHEETS	SHEET NO.
80	2017-057F	WILL	1342	899
		CONTRACT NO. 62F94		
		ILLINOIS	FED. AID PROJECT	

10-27-2025, 16:54:01

Geo Services, Inc.
Geotechnical, Environmental & Civil Engineering
805 Amherst Court, Suite 204
Naperville, Illinois 60563
(630) 355-2888

SOIL BORING LOG

GSI Job No. 20012
Page 2 of 2
Date 5/14/21

ROUTE FAI 80 DESCRIPTION I-80 Phase II LOGGED BY MM
SECTION LOCATION SW 1/4, SEC. 15, TWP. T35N, RNG. R30E, 3rd PM
COUNTY Will DRILLING METHOD Hollow Stem Auger/Rotary HAMMER TYPE CME Automatic

STRUCT. NO.
Station

BORING NO. RW-36
Station 718+78
Offset 57.20ft Left
Ground Surface Elev. 568.79 ft

Surface Water Elev. n/a ft
Stream Bed Elev. n/a ft

Groundwater Elev.:
First Encounter Dry to -10.0' ft
Upon Completion n/a ft
After ___ Hrs. ___ ft

Description	Elev.	DEPTH (ft)	BLOWS (/6")	UCS Qu (tsf)	MOIST (%)
CLAY LOAM-brown & gray-very stiff to hard (Fill) *(continued)*					
Auger Refusal @ -43.0'. Possible Bedrock. End Of Boring. Boring backfilled with cuttings.	525.79	-45			
		-50			
		-55			
		-60			

The Unconfined Compressive Strength (UCS) Failure Mode is indicated by (B-Bulge, S-Shear, P-Penetrometer)
The SPT (N value) is the sum of the last two blow values in each sampling zone (AASHTO T206), GP-Geoprobe Hand Auger
BBS, from 137 (Rev. 8-99)

Z:\PROJECTS\2020\20012 EXP 1-80 FROM CHICAGO ST. TO RT 30, PTB 194-020\012 BORING LOGS\20012_LOG.GPJ 6/1/21

Geo Services, Inc.
Geotechnical, Environmental & Civil Engineering
805 Amherst Court, Suite 204
Naperville, Illinois 60563
(630) 355-2888

SOIL BORING LOG

GSI Job No. 20012
Page 1 of 1
Date 4/21/21

ROUTE FAI 80 DESCRIPTION I-80 Phase II LOGGED BY MM
SECTION LOCATION SW 1/4, SEC. 15, TWP. T35N, RNG. R30E, 3rd PM
COUNTY Will DRILLING METHOD Hollow Stem Auger/Rotary HAMMER TYPE CME Automatic

STRUCT. NO.
Station

BORING NO. RW-37
Station 719+58
Offset 57.60ft Left
Ground Surface Elev. 566.63 ft

Surface Water Elev. n/a ft
Stream Bed Elev. n/a ft

Groundwater Elev.:
First Encounter Dry to -10.0' ft
Upon Completion n/a ft
After ___ Hrs. ___ ft

Description	Elev.	DEPTH (ft)	BLOWS (/6")	UCS Qu (tsf)	MOIST (%)
5.0" ASPHALT, 7.0" CONCRETE	565.63				
CLAY LOAM-brown & gray-stiff to very stiff (Fill)			4		
			4	3.00	15
			4	P	
			1		
			2	1.30	18
		-5	5	B	
			6		
			10	4.40	16
			11	B	
			5		
			6	2.20	18
		-10	7	B	
			4		
			6	2.00	18
			7	P	
			5		
			7	3.00	15
		-15	7	P	
			5		
			3	3.00	14
			8	P	
			4		
		-20	7	1.20	16
			6	B	
CLAY LOAM-brown & gray-stiff to very stiff (Fill) *(continued)*					
			4		
			3	2.50	16
			6	P	
			4		
			4	1.50	18
		-25	4	P	
			3		
			3	1.00	19
			3	P	
			5		
			5	2.00	17
		-30	14	P	
			5		
			7	2.20	20
		-35	5	B	
SANDY CLAY LOAM with Gravel-dark brown, gray & black-medium dense (Fill)	529.63				
			12		
End Of Boring @ -40.0'. Boring backfilled with cuttings.	526.63	-40	6 14		16

The Unconfined Compressive Strength (UCS) Failure Mode is indicated by (B-Bulge, S-Shear, P-Penetrometer)
The SPT (N value) is the sum of the last two blow values in each sampling zone (AASHTO T206), GP-Geoprobe Hand Auger
BBS, from 137 (Rev. 8-99)

Z:\PROJECTS\2020\20012 EXP 1-80 FROM CHICAGO ST. TO RT 30, PTB 194-020\012 BORING LOGS\20012_LOG.GPJ 6/1/21

Geo Services, Inc.
Geotechnical, Environmental & Civil Engineering
805 Amherst Court, Suite 204
Naperville, Illinois 60563
(630) 355-2888

SOIL BORING LOG

GSI Job No. 20012
Page 1 of 1
Date 5/14/21

ROUTE FAI 80 DESCRIPTION I-80 Phase II LOGGED BY MM
SECTION LOCATION SW 1/4, SEC. 15, TWP. T35N, RNG. R30E, 3rd PM
COUNTY Will DRILLING METHOD Hollow Stem Auger/Rotary HAMMER TYPE CME Automatic

STRUCT. NO.
Station

BORING NO. RW-38
Station 720+26
Offset 57.80ft Left
Ground Surface Elev. 564.56 ft

Surface Water Elev. n/a ft
Stream Bed Elev. n/a ft

Groundwater Elev.:
First Encounter Dry to -10.0' ft
Upon Completion n/a ft
After ___ Hrs. ___ ft

Description	Elev.	DEPTH (ft)	BLOWS (/6")	UCS Qu (tsf)	MOIST (%)
8.0" ASPHALT	563.90				
CLAY LOAM & STONE-black-loose (Fill)			1		
			3	1.50	17
			3	P	
SILTY CLAY LOAM-brown & gray-stiff to very stiff (Fill)	561.56		2		
			3	2.50	15
		-5	7	P	
SILTY LOAM-gray-medium dense (Fill)	559.06		7		
			7	2.50	16
			9	P	
CLAY LOAM-brown & gray-very stiff to hard (Fill)	556.56		5		
			4	3.00	15
		-10	5	P	
			7		
			6	2.70	15
			8	B	
			4		
			7	3.00	15
		-15	8	P	
			6		
			6	4.00	16
			5	P	
			5		
		-20	9 14	4.00 P	15
CLAY LOAM-brown & gray-very stiff to hard (Fill) *(continued)*					
			6		
			9	3.25	15
			9	P	
			6		
			7	2.75	13
		-25	14	P	
			7		
			8	2.50	17
			17	P	
SILTY CLAY LOAM-brown & gray-very stiff to hard (Fill)	536.56		6		
			9	3.75	11
		-30	12	P	
			8		
			8	4.50	15
		-35	8	P	
Drillers Observation: Possible Bedrock	527.06				
End Of Boring @ -39.5'. Boring backfilled with cuttings.	525.06	-40			

The Unconfined Compressive Strength (UCS) Failure Mode is indicated by (B-Bulge, S-Shear, P-Penetrometer)
The SPT (N value) is the sum of the last two blow values in each sampling zone (AASHTO T206), GP-Geoprobe Hand Auger
BBS, from 137 (Rev. 8-99)

Z:\PROJECTS\2020\20012 EXP 1-80 FROM CHICAGO ST. TO RT 30, PTB 194-020\012 BORING LOGS\20012_LOG.GPJ 6/1/21

MODEL: SHEET
FILE NAME: C:\TRANSYSTEMS\PW_LOCAL\TRANSYSTEMS-PW-01\DMS20863\099W035-62F94-011-BORING03.DGN

exp.

USER NAME =	DESIGNED - BAR	REVISED -	
	CHECKED - VCP	REVISED -	
PLOT SCALE =	DRAWN - MTR	REVISED -	
PLOT DATE =	CHECKED - BAR	REVISED -	

STATE OF ILLINOIS
DEPARTMENT OF TRANSPORTATION

SOIL BORING LOGS 3
STRUCTURE NO. 099-W035 (WB)
SHEET SD-11 OF SD-11 SHEETS

F.A.I. RTE.	SECTION	COUNTY	TOTAL SHEETS	SHEET NO.
80	2017-057F	WILL	1342	900
		CONTRACT NO. 62F94		
	ILLINOIS	FED. AID PROJECT		

10-27-2025, 16:54:06