NOTES:

1. SEE SHEET LT-01 FOR LEGEND, ABBREVIATIONS, AND GENERAL NOTES.
2. EXISTING LIGHTING UNIT SHALL REMAIN OPERATIONAL DURING STAGE 2A.

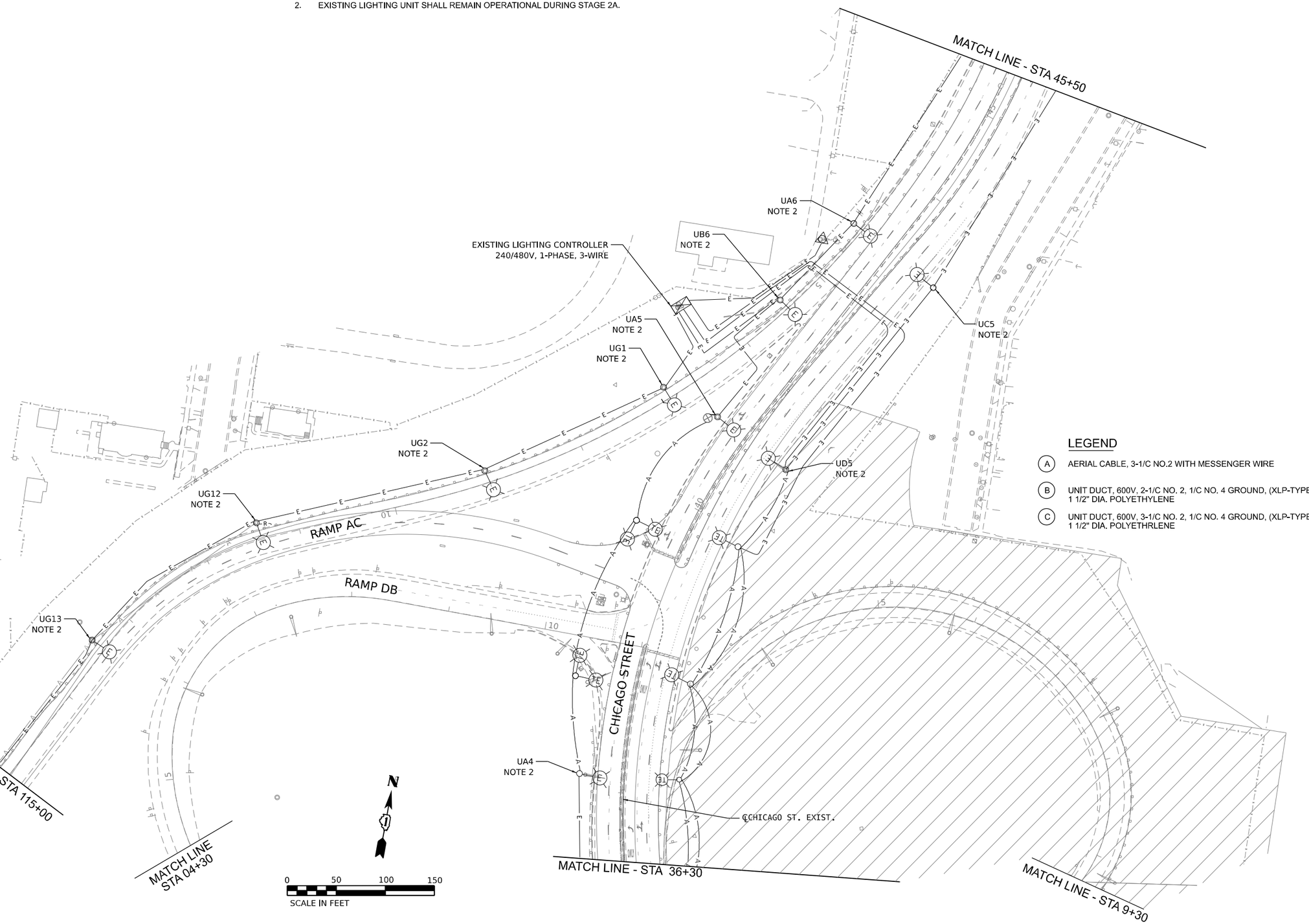

LEGEND

(A) AERIAL CABLE, 3-1/C NO.2 WITH MESSENGER WIRE

(B) UNIT DUCT, 600V, 2-1/C NO. 2, 1/C NO. 4 GROUND, (XLP-TYPE USE), 1 1/2" DIA. POLYETHYLENE

(C) UNIT DUCT, 600V, 3-1/C NO. 2, 1/C NO. 4 GROUND, (XLP-TYPE USE), 1 1/2" DIA. POLYETHRLENE

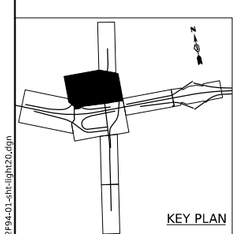

LT–20

MODEL: Default
FILE NAME: D162F94-01-sht-light20.dgn

SINGH
SINGH + ASSOCIATES, INC.
CONSULTING ENGINEERS

USER NAME = mgarvida	DESIGNED - VG	REVISED -	
	DRAWN - VN/MAG	REVISED -	
PLOT SCALE = 100.000 ' / in.	CHECKED - MG	REVISED -	
PLOT DATE = 10/28/2025	DATE - 10/31/2025	REVISED -	

STATE OF ILLINOIS
DEPARTMENT OF TRANSPORTATION

TEMPORARY AND REMOVAL LIGHTING PLAN I–80 – STAGE 2A

SCALE: 1"=50' | SHEET 3 OF 5 SHEETS | STA. TO STA.

F.A.I. RTE.	SECTION	COUNTY	TOTAL SHEETS	SHEET NO.
80	2017-057F	WILL	1342	601
		CONTRACT NO. 62F94		
		ILLINOIS	FED. AID PROJECT	

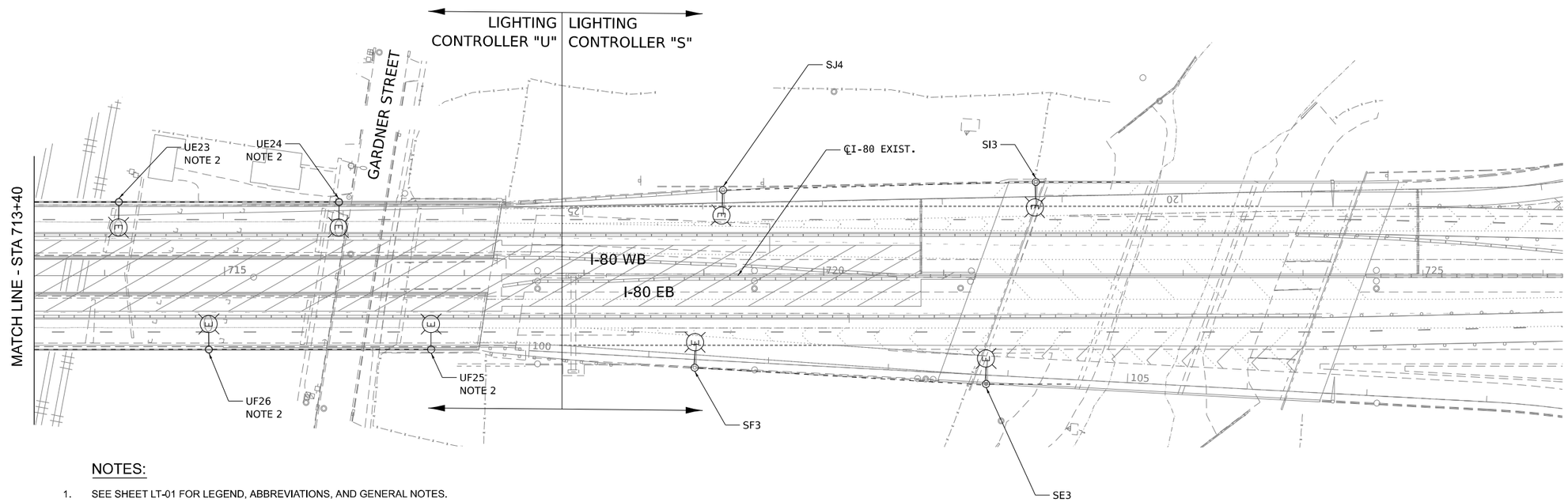

NOTES:

1. SEE SHEET LT-01 FOR LEGEND, ABBREVIATIONS, AND GENERAL NOTES.
2. EXISTING LIGHTING UNIT SHALL REMAIN OPERATIONAL DURING STAGE 2A.

LEGEND

(A) AERIAL CABLE, 2-1/C NO.2 WITH MESSENGER WIRE

(B) UNIT DUCT, 600V, 2-1/C NO. 2, 1/C NO. 4 GROUND, (XLP-TYPE USE). 1 1/2" DIA. POLYETHYLENE

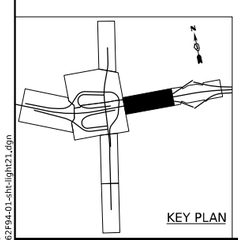

0 50 100 150
SCALE IN FEET

LT–21

MODEL: Default
FILE NAME: D162F94-01-sht-light21.dgn

SINGH
SINGH + ASSOCIATES, INC.
CONSULTING ENGINEERS

USER NAME = mgarvida	DESIGNED - VG	REVISED -	
	DRAWN - VN/MAG	REVISED -	
PLOT SCALE = 100.000 ' / in.	CHECKED - MG	REVISED -	
PLOT DATE = 10/28/2025	DATE - 10/31/2025	REVISED -	

STATE OF ILLINOIS
DEPARTMENT OF TRANSPORTATION

TEMPORARY AND REMOVAL LIGHTING PLAN I–80 – STAGE 2A

SCALE: 1"=50' | SHEET 4 OF 5 SHEETS | STA. TO STA.

F.A.I. RTE.	SECTION	COUNTY	TOTAL SHEETS	SHEET NO.
80	2017-057F	WILL	1342	602
		CONTRACT NO. 62F94		
	ILLINOIS	FED. AID PROJECT		

NOTES:

1. SEE SHEET LT-01 FOR LEGEND, ABBREVIATIONS, AND GENERAL NOTES.
2. EXISTING LIGHTING UNIT SHALL REMAIN OPERATIONAL DURING STAGE 2A.

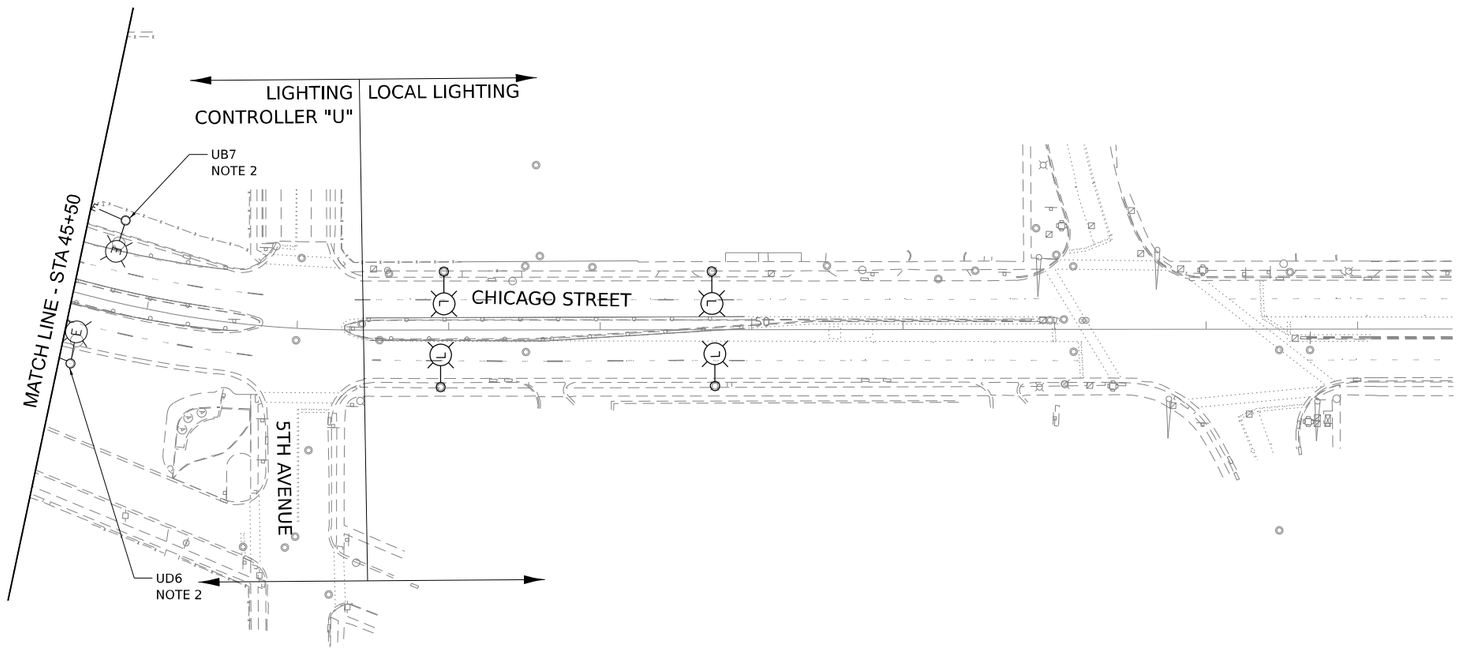

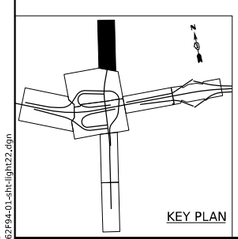

0 50 100 150
SCALE IN FEET

LT–22

MODEL: Default
FILE NAME: D162F94-01-sht-light22.dgn

SINGH
SINGH + ASSOCIATES, INC.
CONSULTING ENGINEERS

USER NAME = mgarvida	DESIGNED - VG	REVISED -	
	DRAWN - VN/MAG	REVISED -	
PLOT SCALE = 100.000 ' / in.	CHECKED - MG	REVISED -	
PLOT DATE = 10/28/2025	DATE - 10/31/2025	REVISED -	

STATE OF ILLINOIS
DEPARTMENT OF TRANSPORTATION

TEMPORARY AND REMOVAL LIGHTING PLAN CHICAGO ST. – STAGE 2A

SCALE: 1"=50' | SHEET 5 OF 5 SHEETS | STA. TO STA.

F.A.I. RTE.	SECTION	COUNTY	TOTAL SHEETS	SHEET NO.
80	2017-057F	WILL	1342	603

CONTRACT NO. 62F94

ILLINOIS | FED. AID PROJECT

LEGEND

(A) AERIAL CABLE, 3-1/C NO.2 WITH MESSENGER WIRE

(B) UNIT DUCT, 600V, 2-1/C NO. 2, 1/C NO. 4 GROUND, (XLP-TYPE USE). 1 1/2" DIA. POLYETHYLENE

NOTES:

1. SEE SHEET LT-01 FOR LEGEND, ABBREVIATIONS, AND GENERAL NOTES.
2. EXISTING LIGHTING UNIT SHALL REMAIN OPERATIONAL DURING STAGE 2B.
3. TEMPORARY LIGHTING UNITS AND TEMPORARY BRANCH CIRCUITS SHALL BE INSTALLED AND OPERATIONAL PRIOR TO START OF STAGE 2B.
4. EXISTING LIGHTING UNITS SHALL BE REMOVED AND DISCONNECTED ON STAGE 2B.
5. WIRE AND CONDUIT SHOWN TO BE REMOVED SHALL BE ABANDONED IN PLACE UNLESS OTHERWISE SPECIFIED. CONTRACTOR MAY CHOOSE TO REMOVE WIRES FROM ABANDONED CONDUIT AT OWN EXPENSE.

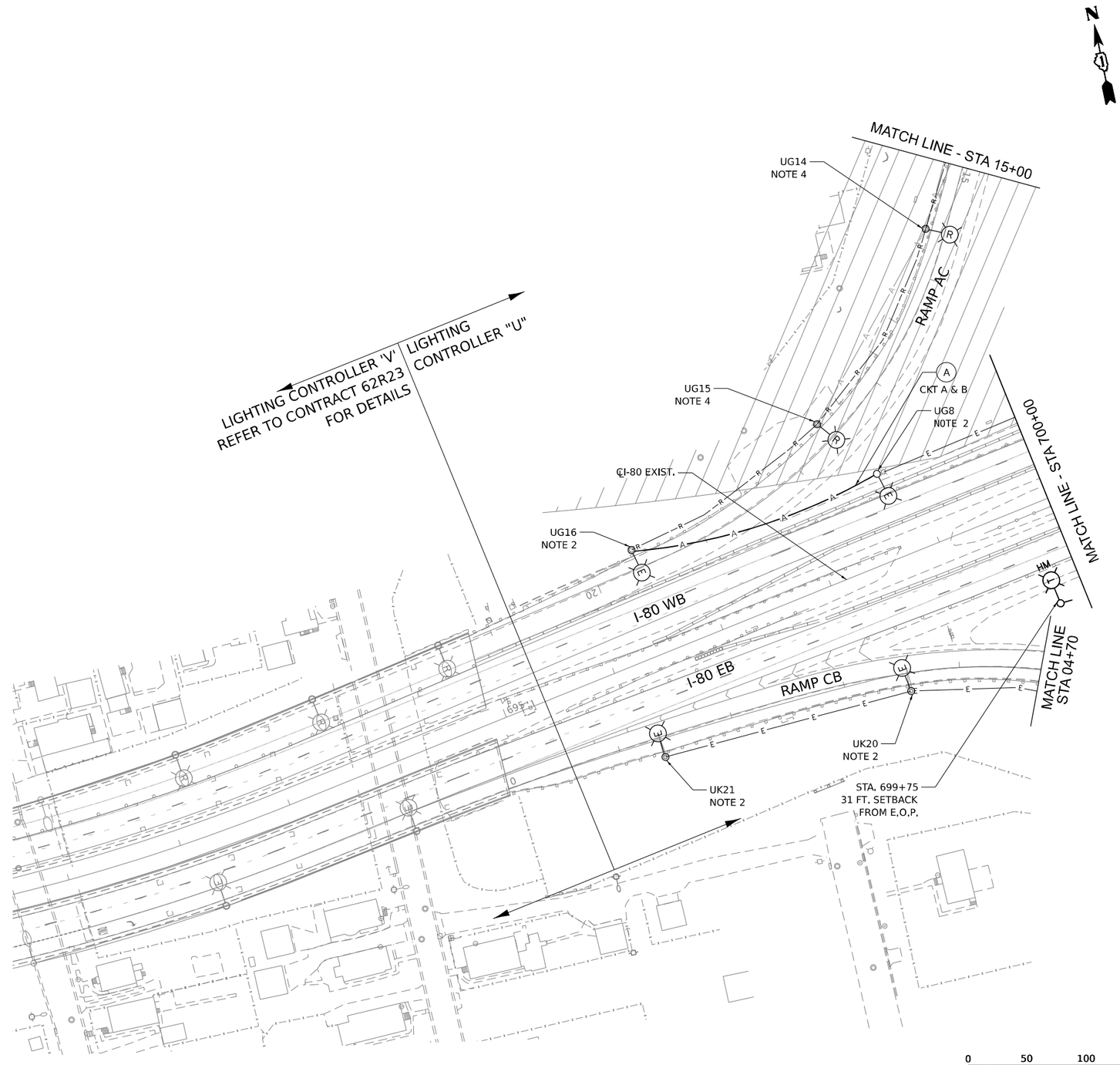

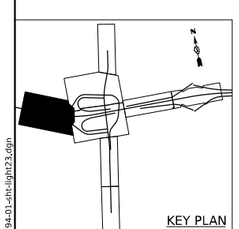

KEY PLAN

LT–23

MODEL: Default
FILE NAME: D162F94-01-sht-light23.dgn

SINGH
SINGH + ASSOCIATES, INC.
CONSULTING ENGINEERS

USER NAME = mgarvida	DESIGNED - VG	REVISED -	
	DRAWN - VN/MAG	REVISED -	
PLOT SCALE = 100.000 ' / in.	CHECKED - MG	REVISED -	
PLOT DATE = 10/28/2025	DATE - 10/31/2025	REVISED -	

STATE OF ILLINOIS
DEPARTMENT OF TRANSPORTATION

TEMPORARY AND REMOVAL LIGHTING PLAN I–80 – STAGE 2B

SCALE: 1"=50' | SHEET 1 OF 5 SHEETS | STA. TO STA.

F.A.I. RTE.	SECTION	COUNTY	TOTAL SHEETS	SHEET NO.
80	2017-057F	WILL	1342	604
		CONTRACT NO. 62F94		
		ILLINOIS	FED. AID PROJECT	

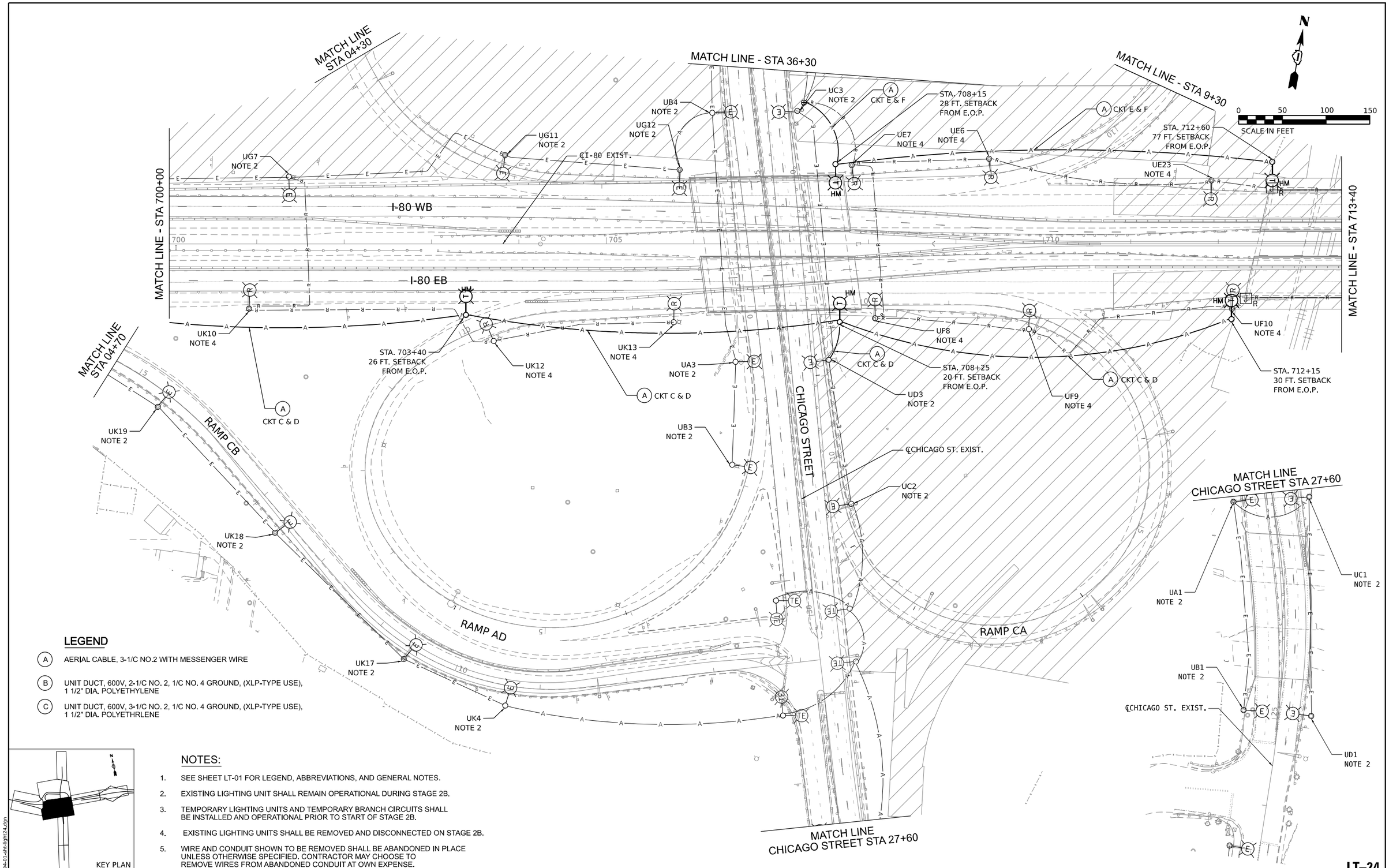

LEGEND

(A) AERIAL CABLE, 3-1/C NO.2 WITH MESSENGER WIRE

(B) UNIT DUCT, 600V, 2-1/C NO. 2, 1/C NO. 4 GROUND, (XLP-TYPE USE), 1 1/2" DIA. POLYETHYLENE

(C) UNIT DUCT, 600V, 3-1/C NO. 2, 1/C NO. 4 GROUND, (XLP-TYPE USE), 1 1/2" DIA. POLYETHRLENE

KEY PLAN

NOTES:

1. SEE SHEET LT-01 FOR LEGEND, ABBREVIATIONS, AND GENERAL NOTES.
2. EXISTING LIGHTING UNIT SHALL REMAIN OPERATIONAL DURING STAGE 2B.
3. TEMPORARY LIGHTING UNITS AND TEMPORARY BRANCH CIRCUITS SHALL BE INSTALLED AND OPERATIONAL PRIOR TO START OF STAGE 2B.
4. EXISTING LIGHTING UNITS SHALL BE REMOVED AND DISCONNECTED ON STAGE 2B.
5. WIRE AND CONDUIT SHOWN TO BE REMOVED SHALL BE ABANDONED IN PLACE UNLESS OTHERWISE SPECIFIED. CONTRACTOR MAY CHOOSE TO REMOVE WIRES FROM ABANDONED CONDUIT AT OWN EXPENSE.

LT–24

MODEL: Default
FILE NAME: D162F94-01-sht-light24.dgn

SINGH
SINGH + ASSOCIATES, INC.
CONSULTING ENGINEERS

USER NAME = mgarvida	DESIGNED - VG	REVISED -	
	DRAWN - VN/MAG	REVISED -	
PLOT SCALE = 100.000 ' / in.	CHECKED - MG	REVISED -	
PLOT DATE = 10/28/2025	DATE - 10/31/2025	REVISED -	

STATE OF ILLINOIS
DEPARTMENT OF TRANSPORTATION

TEMPORARY AND REMOVAL LIGHTING PLAN I–80 – STAGE 2B

SCALE: 1"=50' | SHEET 2 OF 5 SHEETS | STA. TO STA.

F.A.I. RTE.	SECTION	COUNTY	TOTAL SHEETS	SHEET NO.
80	2017-057F	WILL	1342	605
		CONTRACT NO. 62F94		
	ILLINOIS	FED. AID PROJECT		

NOTES:

1. SEE SHEET LT-01 FOR LEGEND, ABBREVIATIONS, AND GENERAL NOTES.
2. EXISTING LIGHTING UNIT SHALL REMAIN OPERATIONAL DURING STAGE 2B.
3. TEMPORARY LIGHTING UNITS AND TEMPORARY BRANCH CIRCUITS SHALL BE INSTALLED AND OPERATIONAL PRIOR TO START OF STAGE 2B.
4. EXISTING LIGHTING UNITS SHALL BE REMOVED AND DISCONNECTED ON STAGE 2B.
5. WIRE AND CONDUIT SHOWN TO BE REMOVED SHALL BE ABANDONED IN PLACE UNLESS OTHERWISE SPECIFIED. CONTRACTOR MAY CHOOSE TO REMOVE WIRES FROM ABANDONED CONDUIT AT OWN EXPENSE.

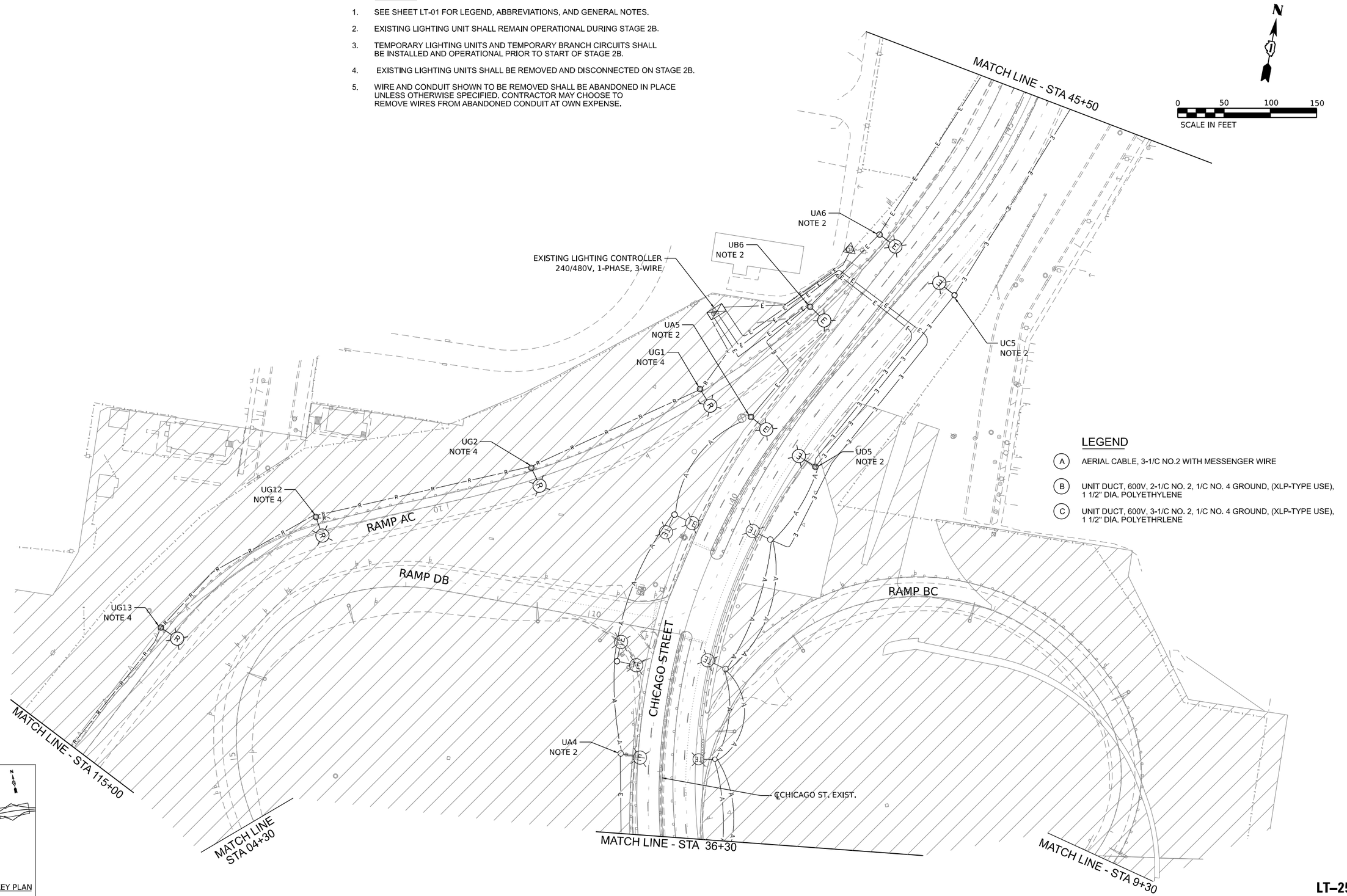

LEGEND

- (A) AERIAL CABLE, 3-1/C NO.2 WITH MESSENGER WIRE
- (B) UNIT DUCT, 600V, 2-1/C NO. 2, 1/C NO. 4 GROUND, (XLP-TYPE USE), 1 1/2" DIA. POLYETHYLENE
- (C) UNIT DUCT, 600V, 3-1/C NO. 2, 1/C NO. 4 GROUND, (XLP-TYPE USE), 1 1/2" DIA. POLYETHRLENE

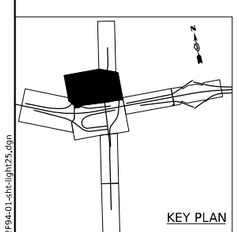

LT–25

MODEL: Default
FILE NAME: D162F94-01-sht-light25.dgn

SINGH
SINGH + ASSOCIATES, INC.
CONSULTING ENGINEERS

USER NAME = mgarvida	DESIGNED - VG	REVISED -	
	DRAWN - VN/MAG	REVISED -	
PLOT SCALE = 100.000 ' / in.	CHECKED - MG	REVISED -	
PLOT DATE = 10/28/2025	DATE - 10/31/2025	REVISED -	

STATE OF ILLINOIS
DEPARTMENT OF TRANSPORTATION

TEMPORARY AND REMOVAL LIGHTING PLAN I–80 – STAGE 2B

SCALE: 1"=50' | SHEET 3 OF 5 SHEETS | STA. TO STA.

F.A.I. RTE.	SECTION	COUNTY	TOTAL SHEETS	SHEET NO.
80	2017-057F	WILL	1342	606
		CONTRACT NO. 62F94		
		ILLINOIS	FED. AID PROJECT	

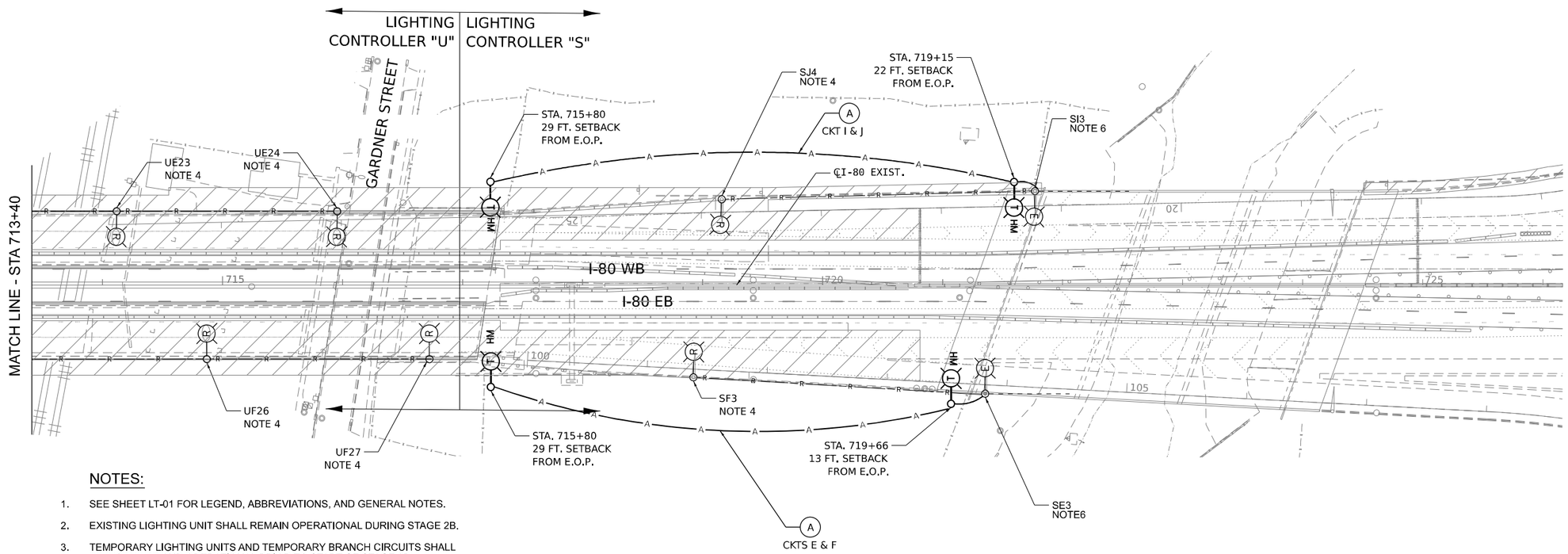

NOTES:

1. SEE SHEET LT-01 FOR LEGEND, ABBREVIATIONS, AND GENERAL NOTES.
2. EXISTING LIGHTING UNIT SHALL REMAIN OPERATIONAL DURING STAGE 2B.
3. TEMPORARY LIGHTING UNITS AND TEMPORARY BRANCH CIRCUITS SHALL BE INSTALLED AND OPERATIONAL PRIOR TO START OF STAGE 2B.
4. EXISTING LIGHTING UNITS SHALL BE REMOVED AND DISCONNECTED ON STAGE 2A.
5. WIRE AND CONDUIT SHOWN TO BE REMOVED SHALL BE ABANDONED IN PLACE UNLESS OTHERWISE SPECIFIED. CONTRACTOR MAY CHOOSE TO REMOVE WIRES FROM ABANDONED CONDUIT AT OWN EXPENSE.
6. EXISTING LUMINAIRE SHALL BE DEACTIVATED DURING STAGE 2B.

LEGEND

(A) AERIAL CABLE, 3-1/C NO.2 WITH MESSENGER WIRE

(B) UNIT DUCT, 600V, 2-1/C NO. 2, 1/C NO. 4 GROUND, (XLP-TYPE USE). 1 1/2" DIA. POLYETHYLENE

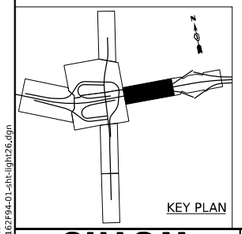

0 50 100 150
SCALE IN FEET

LT–26

MODEL: Default
FILE NAME: D162F94-01-sht-light26.dgn

SINGH
SINGH + ASSOCIATES, INC.
CONSULTING ENGINEERS

USER NAME = mgarvida	DESIGNED - VG	REVISED -	
	DRAWN - VN/MAG	REVISED -	
PLOT SCALE = 100.000 ' / in.	CHECKED - MG	REVISED -	
PLOT DATE = 10/28/2025	DATE - 10/31/2025	REVISED -	

STATE OF ILLINOIS
DEPARTMENT OF TRANSPORTATION

TEMPORARY AND REMOVAL LIGHTING PLAN I–80 – STAGE 2B

SCALE: 1"=50' | SHEET 4 OF 5 SHEETS | STA. TO STA.

F.A.I. RTE.	SECTION	COUNTY	TOTAL SHEETS	SHEET NO.
80	2017-057F	WILL	1342	607
		CONTRACT NO. 62F94		
		ILLINOIS	FED. AID PROJECT	

NOTES:

1. SEE SHEET LT-01 FOR LEGEND, ABBREVIATIONS, AND GENERAL NOTES.
2. EXISTING LIGHTING UNIT SHALL REMAIN OPERATIONAL DURING STAGE 2B.

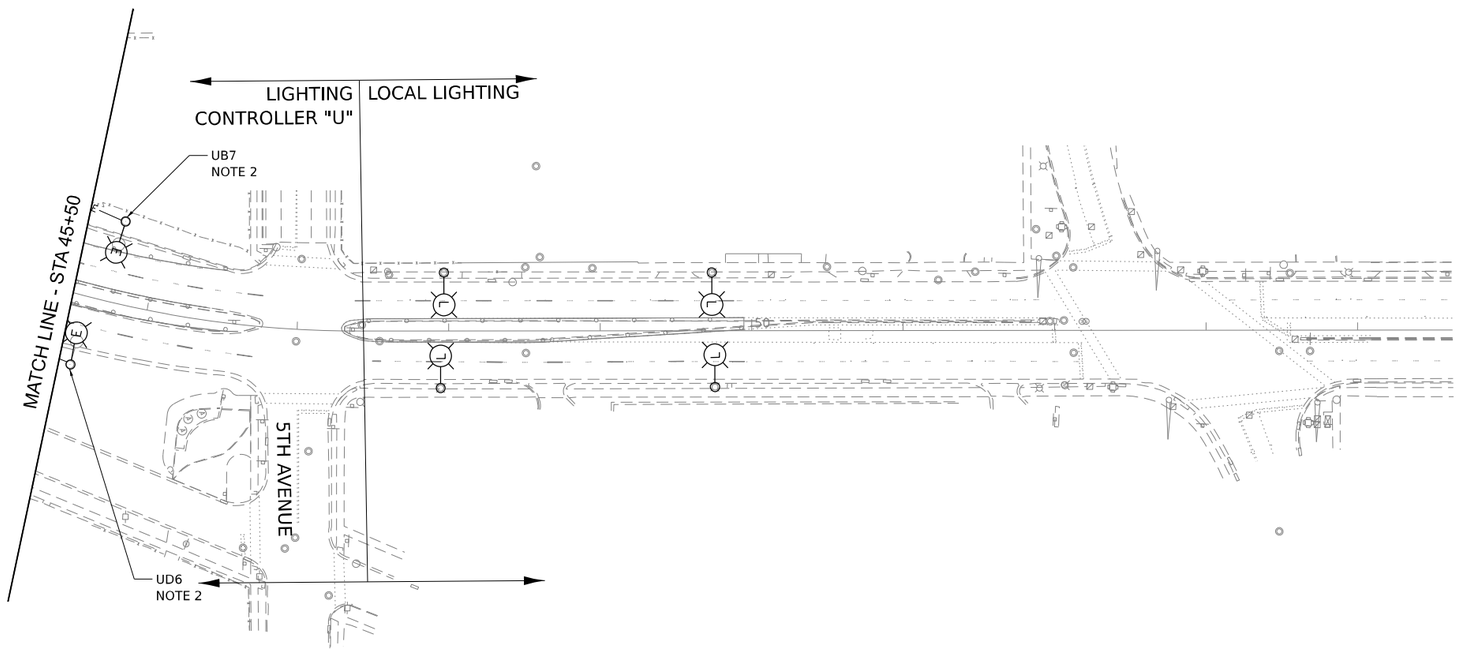

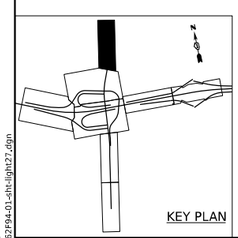

0 50 100 150
SCALE IN FEET

LT–27

MODEL: Default
FILE NAME: D162F94-01-sht-light27.dgn

SINGH
SINGH + ASSOCIATES, INC.
CONSULTING ENGINEERS

USER NAME = mgarvida	DESIGNED - VG	REVISED -	
	DRAWN - VN/MAG	REVISED -	
PLOT SCALE = 100.000 ' / in.	CHECKED - MG	REVISED -	
PLOT DATE = 10/28/2025	DATE - 10/31/2025	REVISED -	

STATE OF ILLINOIS
DEPARTMENT OF TRANSPORTATION

TEMPORARY AND REMOVAL LIGHTING PLAN CHICAGO ST. – STAGE 2B

SCALE: 1"=50' | SHEET 5 OF 5 SHEETS | STA. TO STA.

F.A.I. RTE.	SECTION	COUNTY	TOTAL SHEETS	SHEET NO.
80	2017-057F	WILL	1342	608
		CONTRACT NO. 62F94		
	ILLINOIS	FED. AID PROJECT		

LEGEND

(A) AERIAL CABLE, 3-1/C NO.2 WITH MESSENGER WIRE

(B) UNIT DUCT, 600V, 2-1/C NO. 2, 1/C NO. 4 GROUND, (XLP-TYPE USE). 1 1/2" DIA. POLYETHYLENE

NOTES:

1. SEE SHEET LT-01 FOR LEGEND, ABBREVIATIONS, AND GENERAL NOTES.
2. EXISTING LIGHTING UNIT SHALL REMAIN OPERATIONAL DURING STAGE 3.

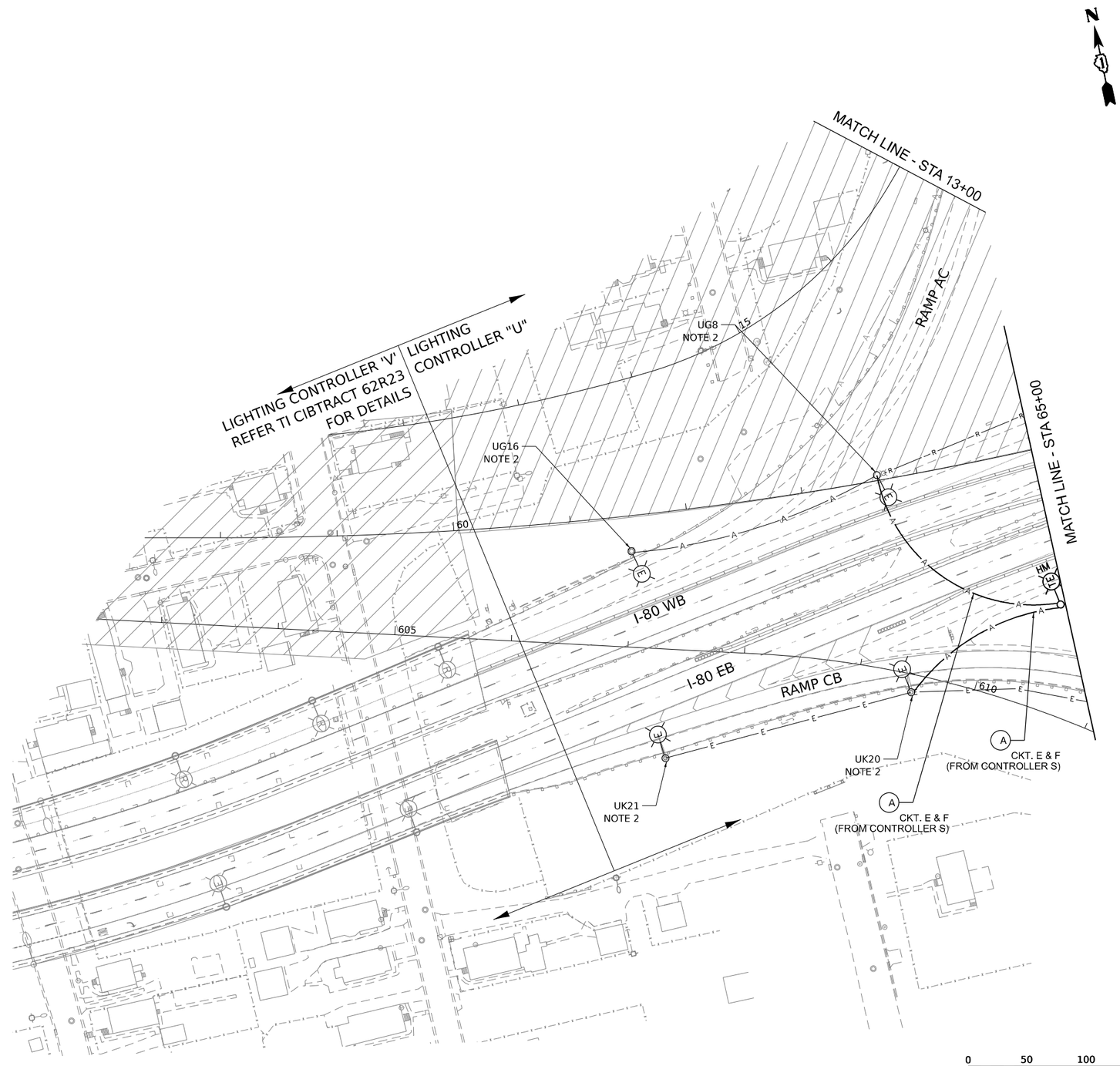

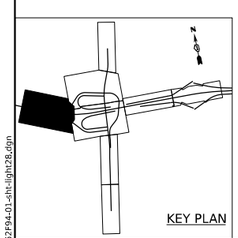

LT–28

MODEL: Default
FILE NAME: D162F94-01-lht-light28.dgn

SINGH
SINGH + ASSOCIATES, INC.
CONSULTING ENGINEERS

USER NAME = mgarvida	DESIGNED - VG	REVISED -	
	DRAWN - VN/MAG	REVISED -	
PLOT SCALE = 100.000 ' / in.	CHECKED - MG	REVISED -	
PLOT DATE = 10/28/2025	DATE - 10/31/2025	REVISED -	

STATE OF ILLINOIS
DEPARTMENT OF TRANSPORTATION

TEMPORARY AND REMOVAL LIGHTING PLAN I–80 – STAGE 3

SCALE: 1"=50' | SHEET 1 OF 5 SHEETS | STA. TO STA.

F.A.I. RTE.	SECTION	COUNTY	TOTAL SHEETS	SHEET NO.
80	2017-057F	WILL	1342	609
		CONTRACT NO. 62F94		
	ILLINOIS	FED. AID PROJECT		

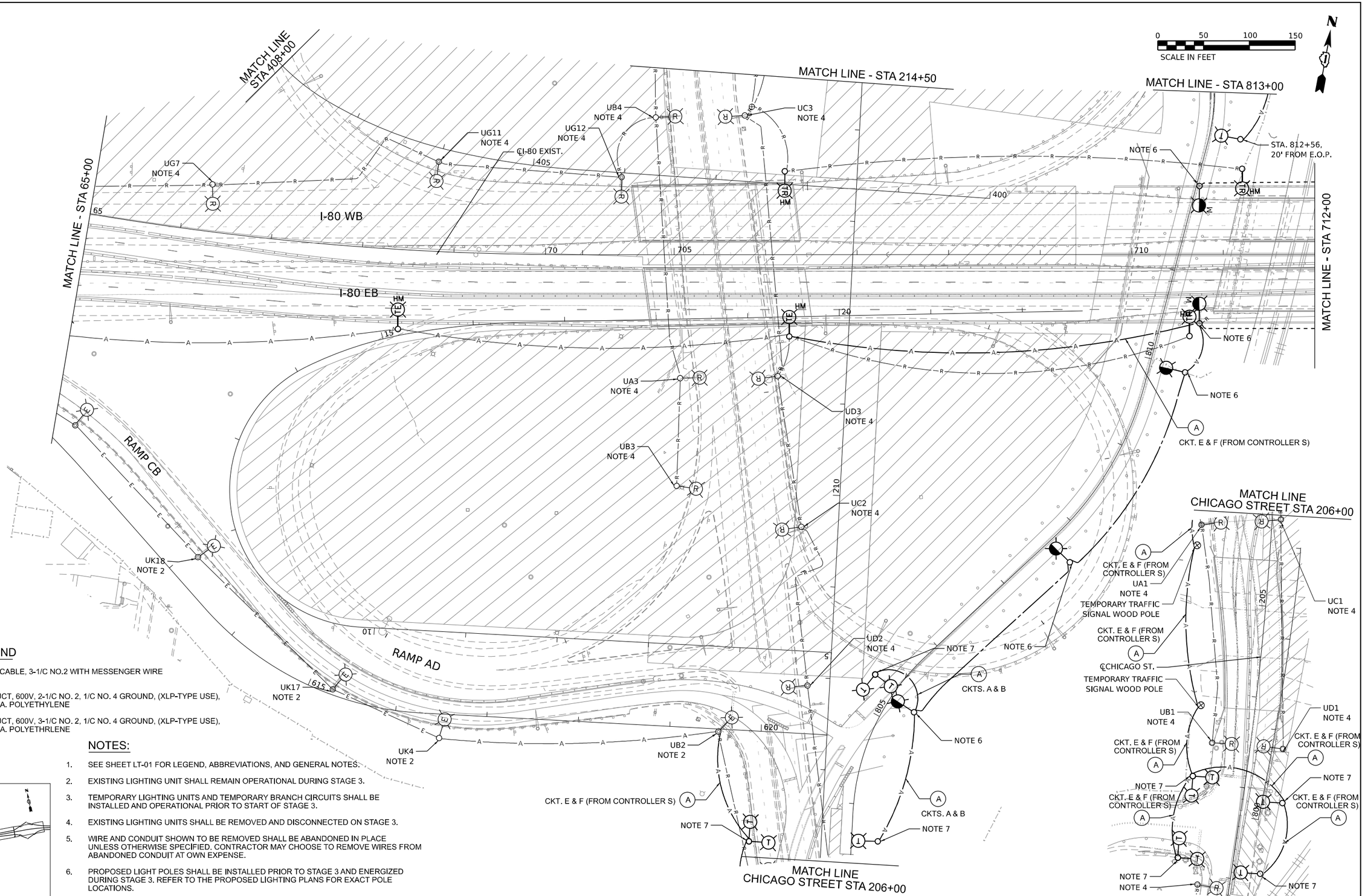

LEGEND

(A) AERIAL CABLE, 3-1/C NO.2 WITH MESSENGER WIRE

(B) UNIT DUCT, 600V, 2-1/C NO. 2, 1/C NO. 4 GROUND, (XLP-TYPE USE), 1 1/2" DIA. POLYETHYLENE

(C) UNIT DUCT, 600V, 3-1/C NO. 2, 1/C NO. 4 GROUND, (XLP-TYPE USE), 1 1/2" DIA. POLYETHRLENE

NOTES:

1. SEE SHEET LT-01 FOR LEGEND, ABBREVIATIONS, AND GENERAL NOTES.
2. EXISTING LIGHTING UNIT SHALL REMAIN OPERATIONAL DURING STAGE 3.
3. TEMPORARY LIGHTING UNITS AND TEMPORARY BRANCH CIRCUITS SHALL BE INSTALLED AND OPERATIONAL PRIOR TO START OF STAGE 3.
4. EXISTING LIGHTING UNITS SHALL BE REMOVED AND DISCONNECTED ON STAGE 3.
5. WIRE AND CONDUIT SHOWN TO BE REMOVED SHALL BE ABANDONED IN PLACE UNLESS OTHERWISE SPECIFIED. CONTRACTOR MAY CHOOSE TO REMOVE WIRES FROM ABANDONED CONDUIT AT OWN EXPENSE.
6. PROPOSED LIGHT POLES SHALL BE INSTALLED PRIOR TO STAGE 3 AND ENERGIZED DURING STAGE 3. REFER TO THE PROPOSED LIGHTING PLANS FOR EXACT POLE LOCATIONS.
7. INSTALL MAST ARM AND LUMINAIRE ON TEMPORARY TRAFFIC SIGNAL WOOD POLE.

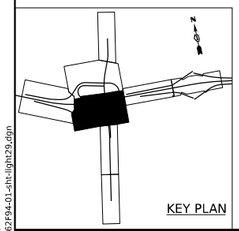

KEY PLAN

LT–29

MODEL: Default
FILE NAME: D162F94-01-sht-light29.dgn

SINGH
SINGH + ASSOCIATES, INC.
CONSULTING ENGINEERS

USER NAME = mgarvida	DESIGNED - VG	REVISED -	
	DRAWN - VN/MAG	REVISED -	
PLOT SCALE = 100.000 ' / in.	CHECKED - MG	REVISED -	
PLOT DATE = 10/28/2025	DATE - 10/31/2025	REVISED -	

STATE OF ILLINOIS
DEPARTMENT OF TRANSPORTATION

TEMPORARY AND REMOVAL LIGHTING PLAN I–80 – STAGE 3

SCALE: 1"=50' | SHEET 2 OF 5 SHEETS | STA. TO STA.

F.A.I. RTE.	SECTION	COUNTY	TOTAL SHEETS	SHEET NO.
80	2017-057F	WILL	1342	610
		CONTRACT NO. 62F94		
		ILLINOIS	FED. AID PROJECT	

NOTES:

1. SEE SHEET LT-01 FOR LEGEND, ABBREVIATIONS, AND GENERAL NOTES.
2. EXISTING LIGHTING UNIT SHALL REMAIN OPERATIONAL DURING STAGE 3.
3. TEMPORARY LIGHTING UNITS AND TEMPORARY BRANCH CIRCUITS SHALL BE INSTALLED AND OPERATIONAL PRIOR TO START OF STAGE 3.
4. EXISTING LIGHTING UNITS SHALL BE REMOVED AND DISCONNECTED ON STAGE 3.
5. WIRE AND CONDUIT SHOWN TO BE REMOVED SHALL BE ABANDONED IN PLACE UNLESS OTHERWISE SPECIFIED. CONTRACTOR MAY CHOOSE TO REMOVE WIRES FROM ABANDONED CONDUIT AT OWN EXPENSE.
6. PROPOSED LIGHT POLES SHALL BE INSTALLED PRIOR TO STAGE 3 AND ENERGIZED DURING STAGE 3. REFER TO THE PROPOSED LIGHTING PLANS FOR EXACT POLE LOCATIONS.

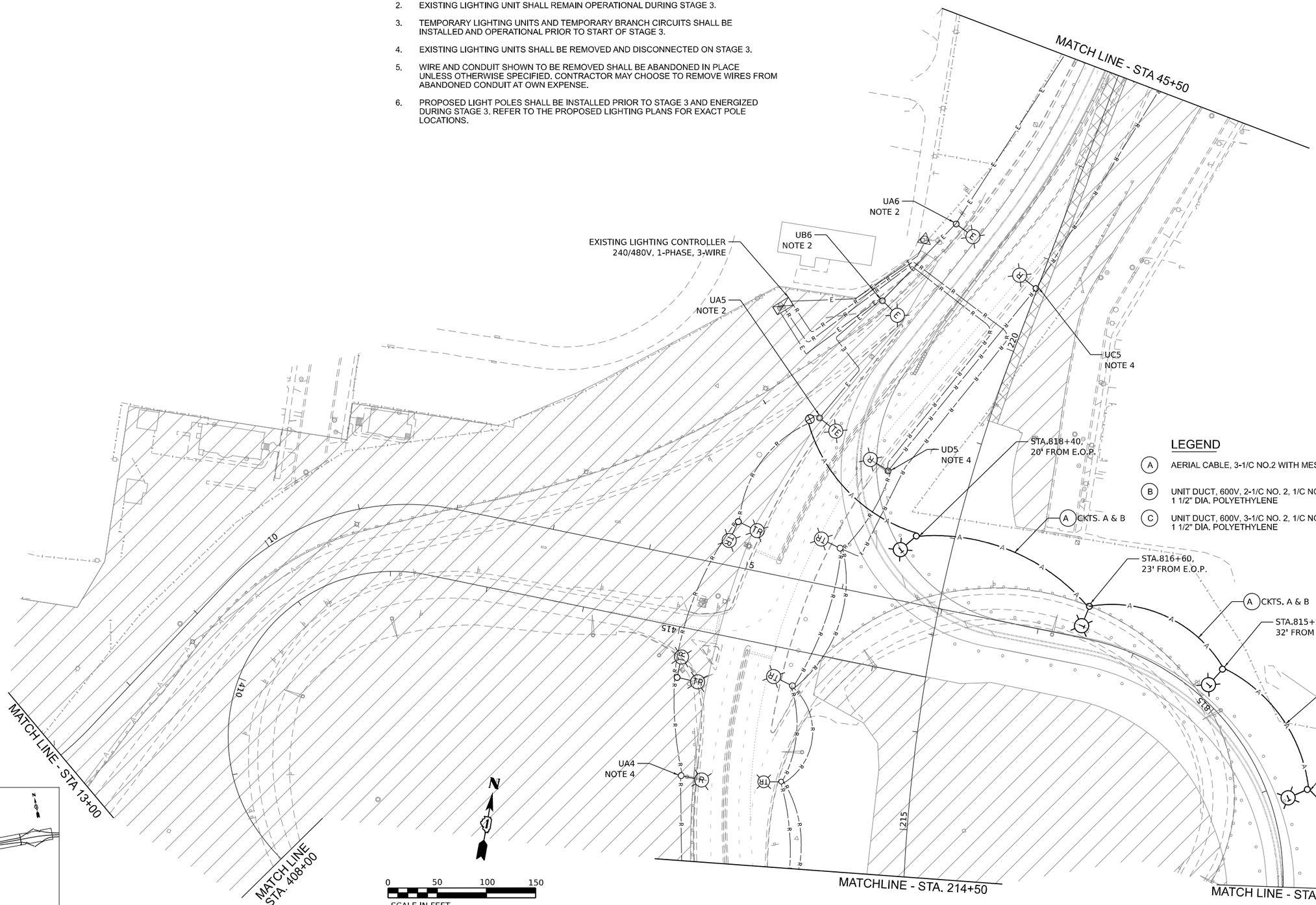

LEGEND

- (A) AERIAL CABLE, 3-1/C NO.2 WITH MESSENGER WIRE
- (B) UNIT DUCT, 600V, 2-1/C NO. 2, 1/C NO. 4 GROUND, (XLP-TYPE USE), 1 1/2" DIA. POLYETHYLENE
- (C) UNIT DUCT, 600V, 3-1/C NO. 2, 1/C NO. 4 GROUND, (XLP-TYPE USE), 1 1/2" DIA. POLYETHYLENE

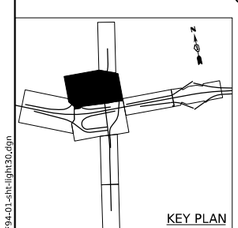

LT–30

MODEL: Default
FILE NAME: D162F94-01-sht-light30.dgn

SINGH
SINGH + ASSOCIATES, INC.
CONSULTING ENGINEERS

USER NAME = mgarvida	DESIGNED - VG	REVISED -	
	DRAWN - VN/MAG	REVISED -	
PLOT SCALE = 100.000 ' / in.	CHECKED - MG	REVISED -	
PLOT DATE = 10/28/2025	DATE - 10/31/2025	REVISED -	

STATE OF ILLINOIS
DEPARTMENT OF TRANSPORTATION

TEMPORARY AND REMOVAL LIGHTING PLAN I–80 – STAGE 3

SCALE: 1"=50' | SHEET 3 OF 5 SHEETS | STA. TO STA.

F.A.I. RTE.	SECTION	COUNTY	TOTAL SHEETS	SHEET NO.
80	2017-057F	WILL	1342	611
		CONTRACT NO. 62F94		
		ILLINOIS	FED. AID PROJECT	

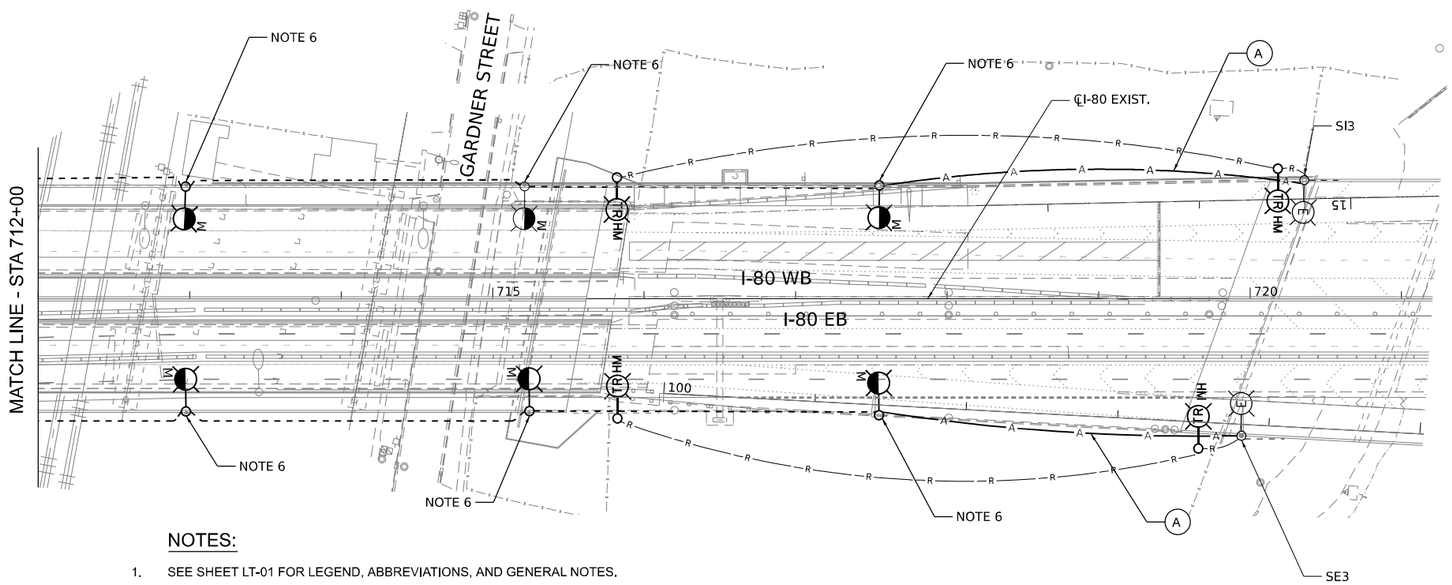

NOTES:

1. SEE SHEET LT-01 FOR LEGEND, ABBREVIATIONS, AND GENERAL NOTES.
2. EXISTING LIGHTING UNIT SHALL REMAIN OPERATIONAL DURING STAGE 3.
3. TEMPORARY LIGHTING UNITS AND TEMPORARY BRANCH CIRCUITS SHALL BE INSTALLED AND OPERATIONAL PRIOR TO START OF STAGE 3.
4. EXISTING LIGHTING UNITS SHALL BE REMOVED AND DISCONNECTED ON STAGE 3.
5. WIRE AND CONDUIT SHOWN TO BE REMOVED SHALL BE ABANDONED IN PLACE UNLESS OTHERWISE SPECIFIED. CONTRACTOR MAY CHOOSE TO REMOVE WIRES FROM ABANDONED CONDUIT AT OWN EXPENSE.
6. PROPOSED LIGHT POLES SHALL BE INSTALLED PRIOR TO STAGE 3 AND ENERGIZED DURING STAGE 3. REFER TO THE PROPOSED LIGHTING PLANS FOR EXACT POLE LOCATIONS.

LEGEND

(A) AERIAL CABLE, 3-1/C NO.2 WITH MESSENGER WIRE

(B) UNIT DUCT, 600V, 2-1/C NO. 2, 1/C NO. 4 GROUND, (XLP-TYPE USE). 1 1/2" DIA. POLYETHYLENE

0 50 100 150
SCALE IN FEET

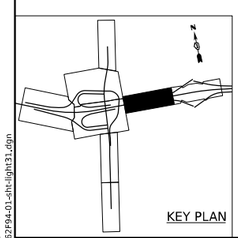

LT–31

MODEL: Default
FILE NAME: D162F94-01-sht-light31.dgn

SINGH
SINGH + ASSOCIATES, INC.
CONSULTING ENGINEERS

USER NAME = mgarvida	DESIGNED - VG	REVISED -	
	DRAWN - VN/MAG	REVISED -	
PLOT SCALE = 100.000 ' / in.	CHECKED - MG	REVISED -	
PLOT DATE = 10/28/2025	DATE - 10/31/2025	REVISED -	

STATE OF ILLINOIS
DEPARTMENT OF TRANSPORTATION

TEMPORARY AND REMOVAL LIGHTING PLAN I–80 – STAGE 3

SCALE: 1"=50' | SHEET 4 OF 5 SHEETS | STA. TO STA.

F.A.I. RTE.	SECTION	COUNTY	TOTAL SHEETS	SHEET NO.
80	2017-057F	WILL	1342	612
		CONTRACT NO. 62F94		
	ILLINOIS	FED. AID PROJECT		

NOTES:

1. SEE SHEET LT-01 FOR LEGEND, ABBREVIATIONS, AND GENERAL NOTES.
2. EXISTING LIGHTING UNIT SHALL REMAIN OPERATIONAL DURING STAGE 3.

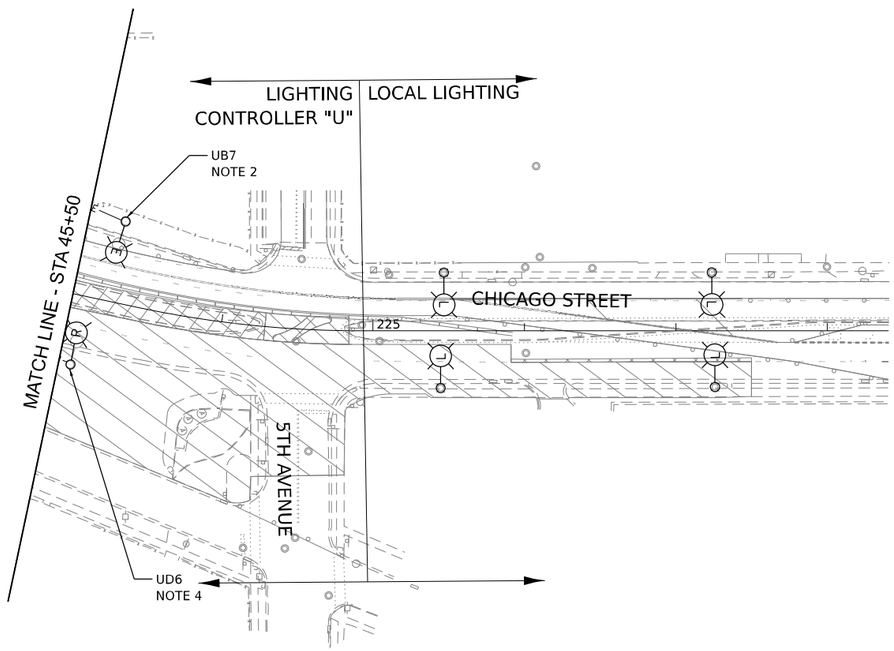

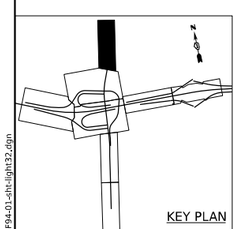

0 50 100 150
SCALE IN FEET

LT–32

MODEL: Default
FILE NAME: D162F94-01-sht-light32.dgn

SINGH
SINGH + ASSOCIATES, INC.
CONSULTING ENGINEERS

USER NAME = mgarvida	DESIGNED - VG	REVISED -	
	DRAWN - VN/MAG	REVISED -	
PLOT SCALE = 100.000 ' / in.	CHECKED - MG	REVISED -	
PLOT DATE = 10/28/2025	DATE - 10/31/2025	REVISED -	

STATE OF ILLINOIS
DEPARTMENT OF TRANSPORTATION

TEMPORARY AND REMOVAL LIGHTING PLAN CHICAGO ST. – STAGE 3

SCALE: 1"=50' | SHEET 5 OF 5 SHEETS | STA. TO STA.

F.A.I. RTE.	SECTION	COUNTY	TOTAL SHEETS	SHEET NO.
80	2017-057F	WILL	1342	613

CONTRACT NO. 62F94

ILLINOIS | FED. AID PROJECT

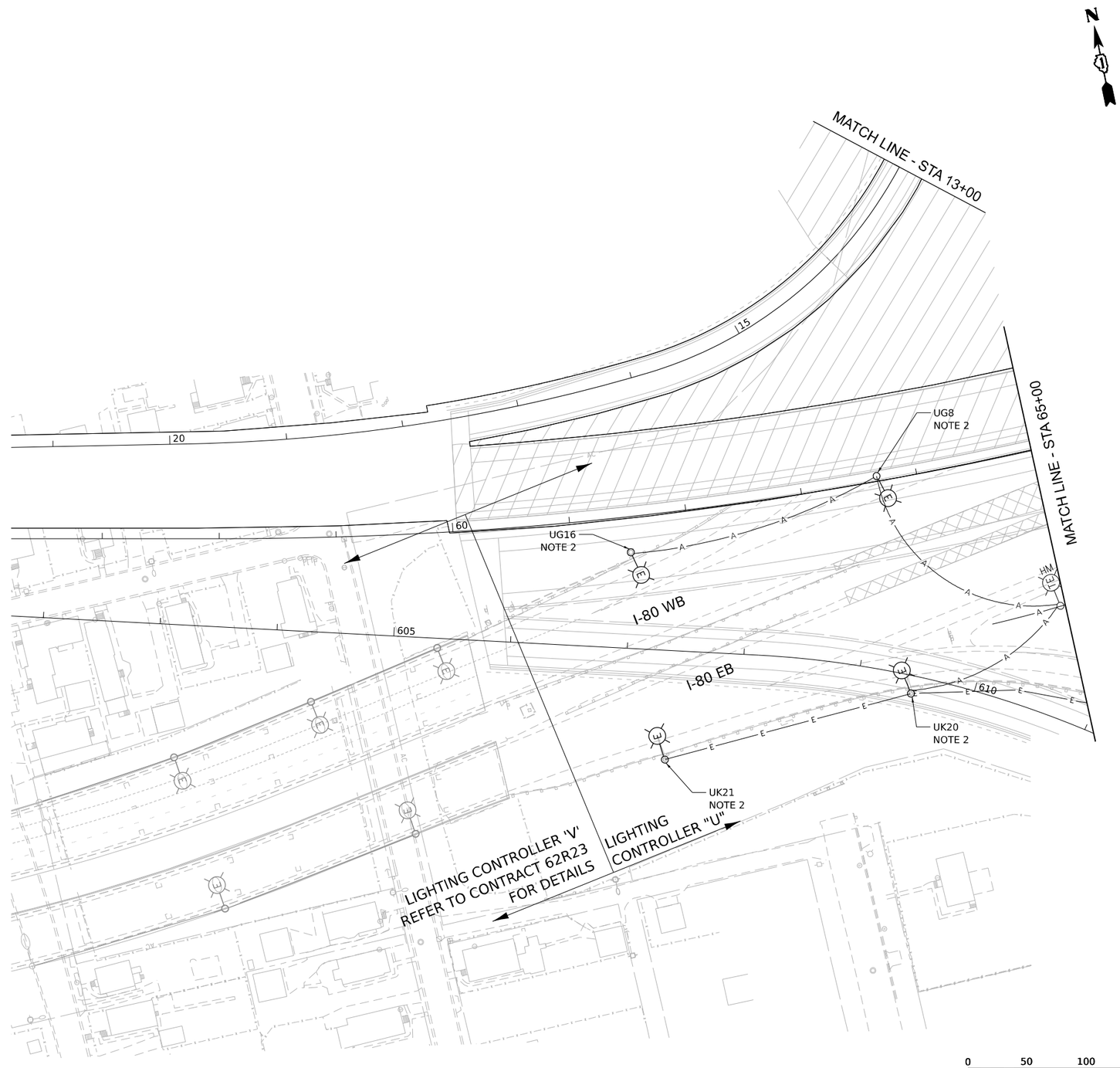

NOTES:

1. SEE SHEET LT-01 FOR LEGEND, ABBREVIATIONS, AND GENERAL NOTES.
2. EXISTING LIGHTING UNIT SHALL REMAIN OPERATIONAL DURING STAGE 3A.

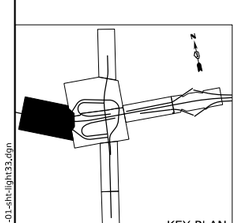

LT–33

MODEL: Default
FILE NAME: D162F94-01-sht-light33.dgn

SINGH
SINGH + ASSOCIATES, INC.
CONSULTING ENGINEERS

USER NAME = mgarvida	DESIGNED - VG	REVISED -	
	DRAWN - VN/MAG	REVISED -	
PLOT SCALE = 100.000 ' / in.	CHECKED - MG	REVISED -	
PLOT DATE = 10/28/2025	DATE - 10/31/2025	REVISED -	

STATE OF ILLINOIS
DEPARTMENT OF TRANSPORTATION

TEMPORARY AND REMOVAL LIGHTING PLAN I–80 – STAGE 3A

SCALE: 1"=50' | SHEET 1 OF 5 SHEETS | STA. TO STA.

F.A.I. RTE.	SECTION	COUNTY	TOTAL SHEETS	SHEET NO.
80	2017-057F	WILL	1342	614
		CONTRACT NO. 62F94		
		ILLINOIS FED. AID PROJECT		

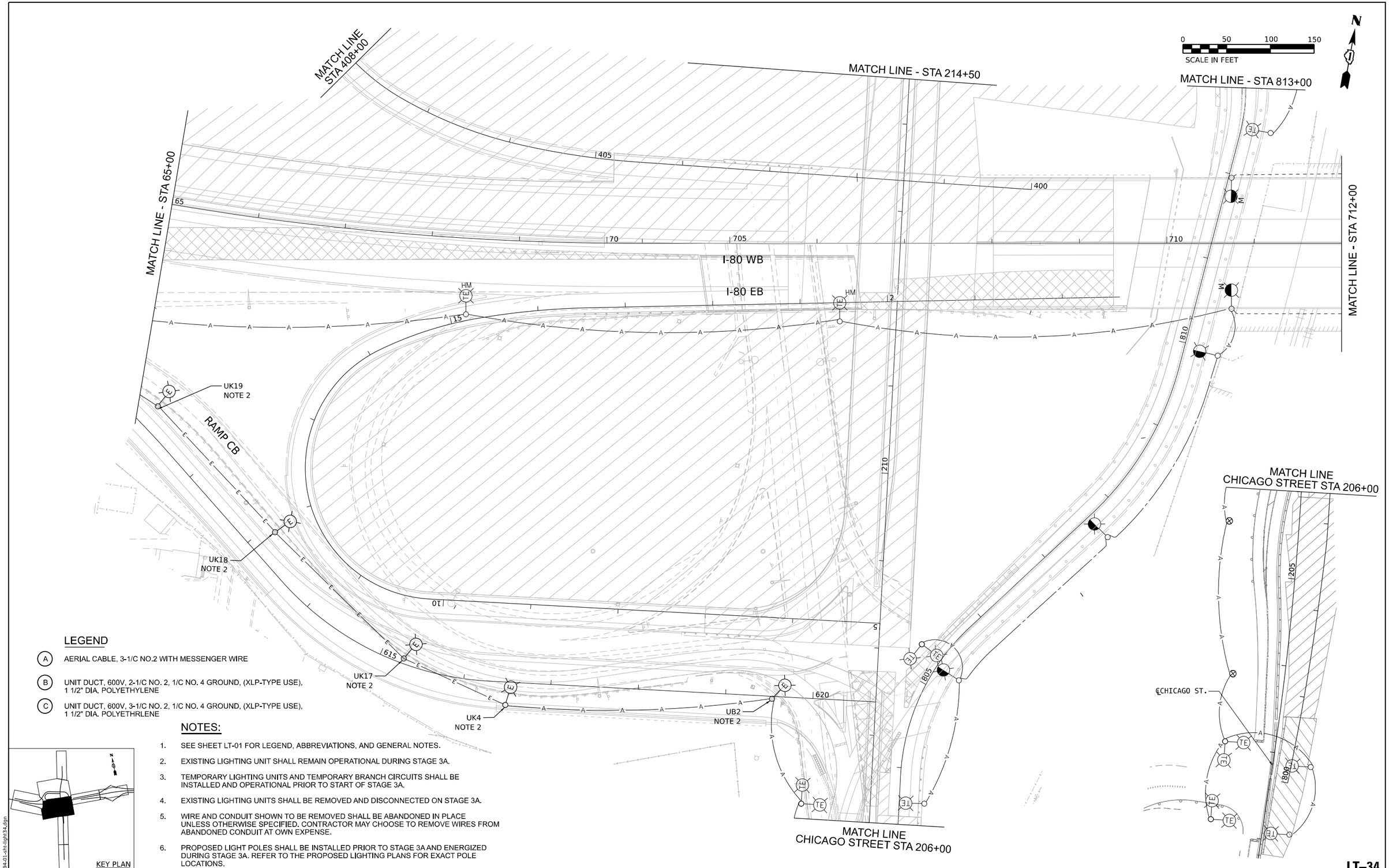

LT–34

MODEL: Default
FILE NAME: D162F94-01-sht-light34.dgn

SINGH
SINGH + ASSOCIATES, INC.
CONSULTING ENGINEERS

USER NAME = mgarvida	DESIGNED - VG	REVISED -	
	DRAWN - VN/MAG	REVISED -	
PLOT SCALE = 100.000 ' / in.	CHECKED - MG	REVISED -	
PLOT DATE = 10/28/2025	DATE - 10/31/2025	REVISED -	

STATE OF ILLINOIS
DEPARTMENT OF TRANSPORTATION

TEMPORARY AND REMOVAL LIGHTING PLAN I–80 – STAGE 3A

SCALE: 1"=50' | SHEET 2 OF 5 SHEETS | STA. TO STA.

F.A.I. RTE.	SECTION	COUNTY	TOTAL SHEETS	SHEET NO.
80	2017-057F	WILL	1342	615

CONTRACT NO. 62F94

ILLINOIS | FED. AID PROJECT

NOTES:

1. SEE SHEET LT-01 FOR LEGEND, ABBREVIATIONS, AND GENERAL NOTES.
2. EXISTING LIGHTING UNIT SHALL REMAIN OPERATIONAL DURING STAGE 3A.
3. TEMPORARY LIGHTING UNITS AND TEMPORARY BRANCH CIRCUITS SHALL BE INSTALLED AND OPERATIONAL PRIOR TO START OF STAGE 3A.
4. EXISTING LIGHTING UNITS SHALL BE REMOVED AND DISCONNECTED ON STAGE 3A.
5. WIRE AND CONDUIT SHOWN TO BE REMOVED SHALL BE ABANDONED IN PLACE UNLESS OTHERWISE SPECIFIED. CONTRACTOR MAY CHOOSE TO REMOVE WIRES FROM ABANDONED CONDUIT AT OWN EXPENSE.
6. PROPOSED LIGHT POLES SHALL BE INSTALLED PRIOR TO STAGE 3A AND ENERGIZED DURING STAGE 3A. REFER TO THE PROPOSED LIGHTING PLANS FOR EXACT POLE LOCATIONS.

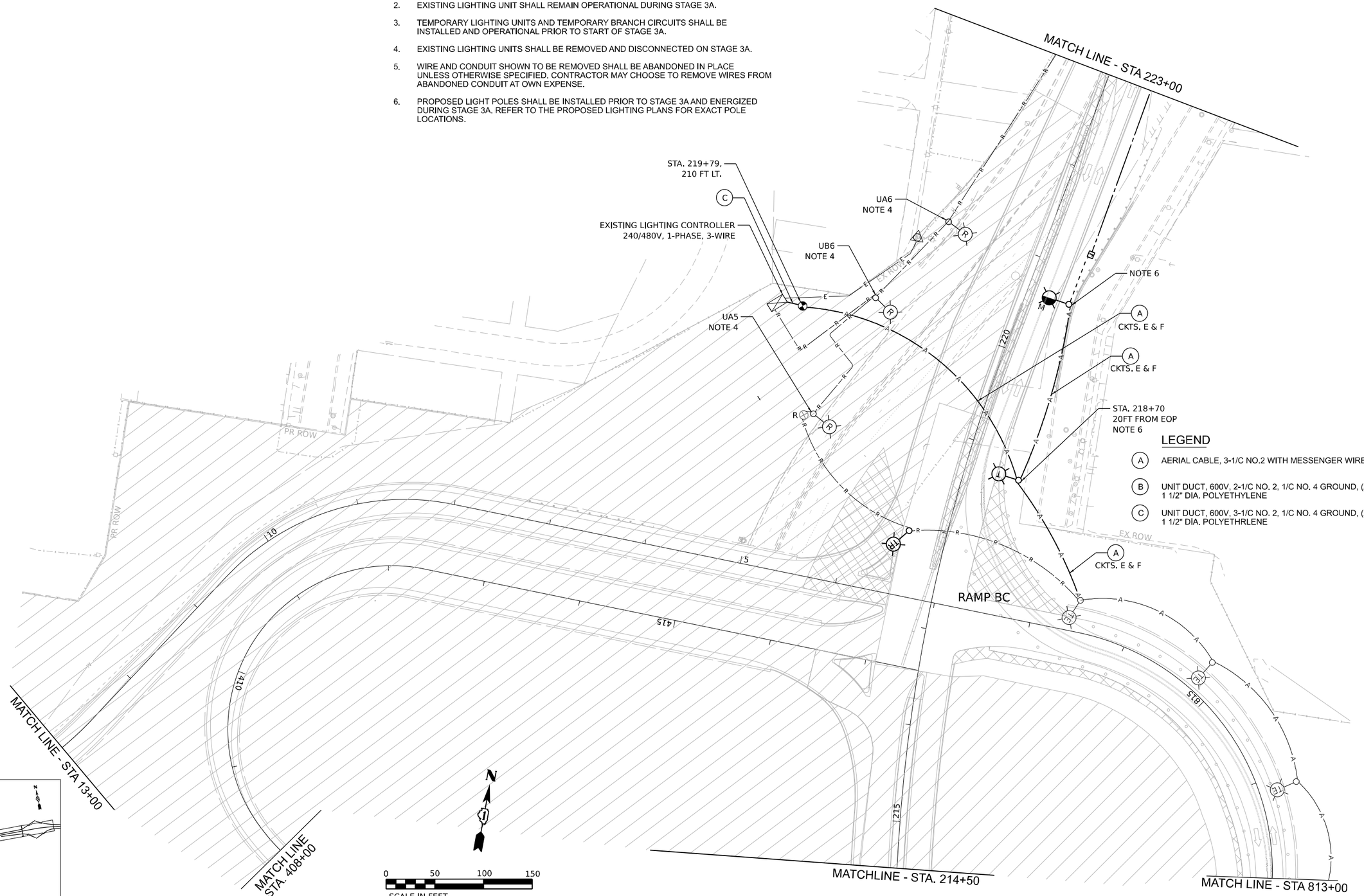

LEGEND

- (A) AERIAL CABLE, 3-1/C NO.2 WITH MESSENGER WIRE
- (B) UNIT DUCT, 600V, 2-1/C NO. 2, 1/C NO. 4 GROUND, (XLP-TYPE USE), 1 1/2" DIA. POLYETHYLENE
- (C) UNIT DUCT, 600V, 3-1/C NO. 2, 1/C NO. 4 GROUND, (XLP-TYPE USE), 1 1/2" DIA. POLYETHRLENE

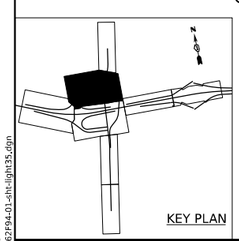

LT–35

MODEL: Default
FILE NAME: D162F94-01-sht-light35.dgn

SINGH
SINGH + ASSOCIATES, INC.
CONSULTING ENGINEERS

USER NAME = mgarvida	DESIGNED - VG	REVISED -	
	DRAWN - VN/MAG	REVISED -	
PLOT SCALE = 100.000 ' / in.	CHECKED - MG	REVISED -	
PLOT DATE = 10/28/2025	DATE - 10/31/2025	REVISED -	

STATE OF ILLINOIS
DEPARTMENT OF TRANSPORTATION

TEMPORARY AND REMOVAL LIGHTING PLAN I–80 – STAGE 3A

SCALE: 1"=50' | SHEET 3 OF 5 SHEETS | STA. | TO STA.

F.A.I. RTE.	SECTION	COUNTY	TOTAL SHEETS	SHEET NO.
80	2017-057F	WILL	1342	616
		CONTRACT NO. 62F94		
	ILLINOIS	FED. AID PROJECT		

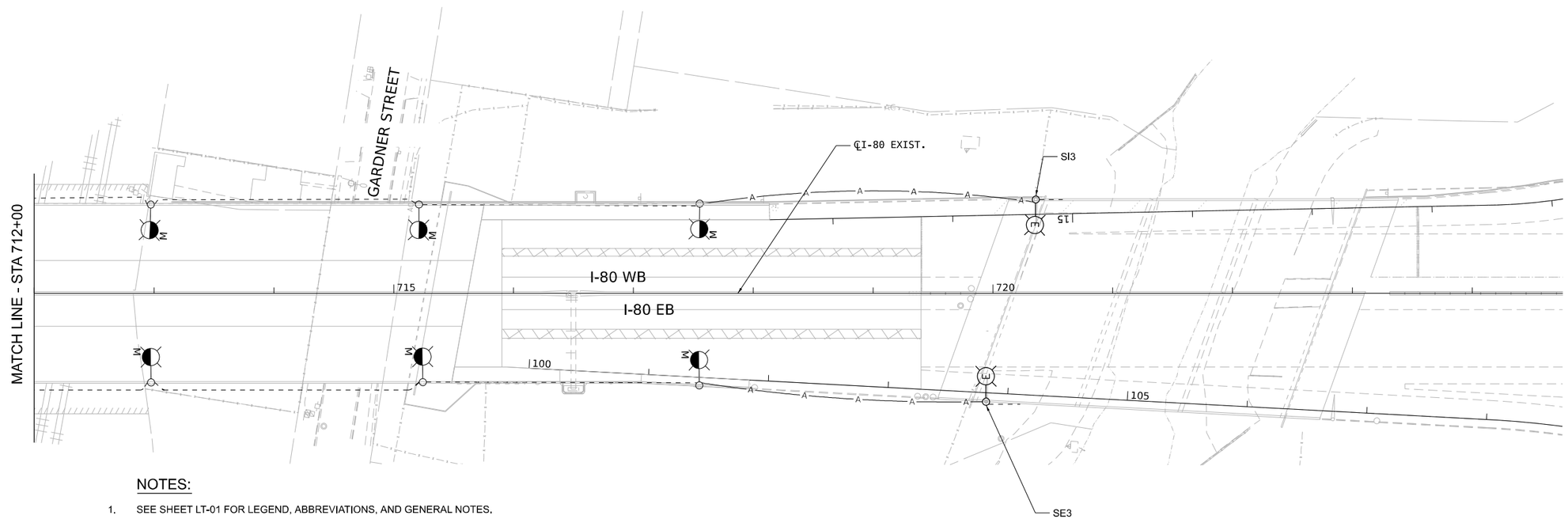

NOTES:

1. SEE SHEET LT-01 FOR LEGEND, ABBREVIATIONS, AND GENERAL NOTES.
2. EXISTING LIGHTING UNIT SHALL REMAIN OPERATIONAL DURING STAGE 3A.
3. TEMPORARY LIGHTING UNITS AND TEMPORARY BRANCH CIRCUITS SHALL BE INSTALLED AND OPERATIONAL PRIOR TO START OF STAGE 3A.
4. EXISTING LIGHTING UNITS SHALL BE REMOVED AND DISCONNECTED ON STAGE 3A.
5. WIRE AND CONDUIT SHOWN TO BE REMOVED SHALL BE ABANDONED IN PLACE UNLESS OTHERWISE SPECIFIED. CONTRACTOR MAY CHOOSE TO REMOVE WIRES FROM ABANDONED CONDUIT AT OWN EXPENSE.

LEGEND

(A) AERIAL CABLE, 3-1/C NO.2 WITH MESSENGER WIRE

(B) UNIT DUCT, 600V, 2-1/C NO. 2, 1/C NO. 4 GROUND, (XLP-TYPE USE). 1 1/2" DIA. POLYETHYLENE

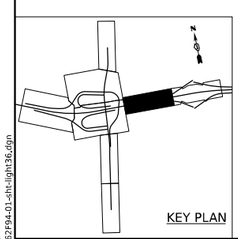

KEY PLAN

0 50 100 150
SCALE IN FEET

LT–36

MODEL: Default
FILE NAME: D162F94-01-lth-light36.dgn

SINGH
SINGH + ASSOCIATES, INC
CONSULTING ENGINEERS

USER NAME = mgarvida	DESIGNED - VG	REVISED -	
	DRAWN - VN/MAG	REVISED -	
PLOT SCALE = 100.000 ' / in.	CHECKED - MG	REVISED -	
PLOT DATE = 10/28/2025	DATE - 10/31/2025	REVISED -	

STATE OF ILLINOIS
DEPARTMENT OF TRANSPORTATION

TEMPORARY AND REMOVAL LIGHTING PLAN I–80 – STAGE 3A

SCALE: 1"=50' | SHEET 4 OF 5 SHEETS | STA. TO STA.

F.A.I. RTE.	SECTION	COUNTY	TOTAL SHEETS	SHEET NO.
80	2017-057F	WILL	1342	617
		CONTRACT NO. 62F94		
		ILLINOIS	FED. AID PROJECT	

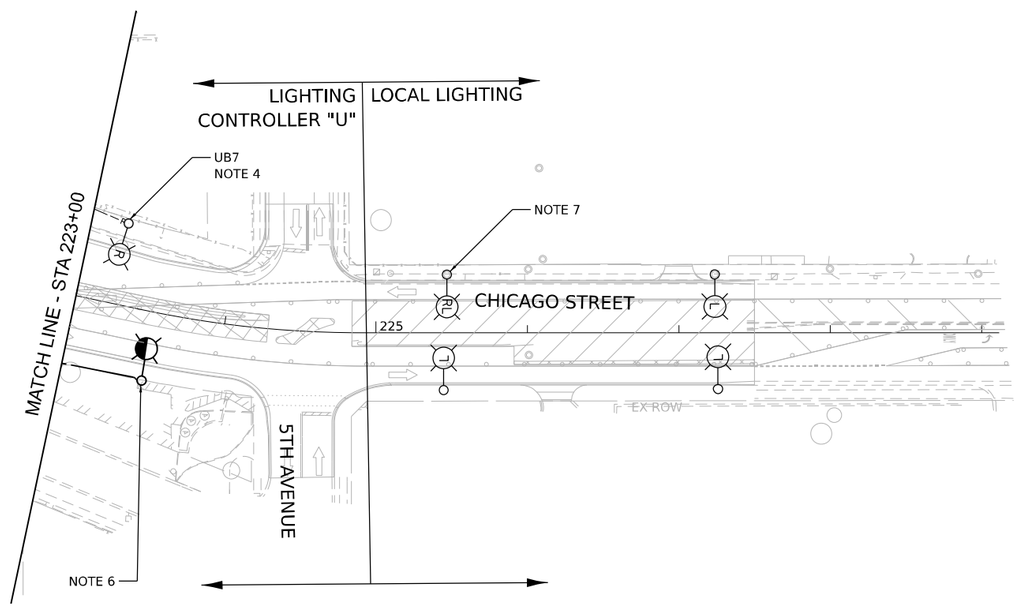

NOTES:

1. SEE SHEET LT-01 FOR LEGEND, ABBREVIATIONS, AND GENERAL NOTES.
2. EXISTING LIGHTING UNIT SHALL REMAIN OPERATIONAL DURING STAGE 3A.
3. TEMPORARY LIGHTING UNITS AND TEMPORARY BRANCH CIRCUITS SHALL BE INSTALLED AND OPERATIONAL PRIOR TO START OF STAGE 3A.
4. EXISTING LIGHTING UNITS SHALL BE REMOVED AND DISCONNECTED ON STAGE 3A.
5. WIRE AND CONDUIT SHOWN TO BE REMOVED SHALL BE ABANDONED IN PLACE UNLESS OTHERWISE SPECIFIED. CONTRACTOR MAY CHOOSE TO REMOVE WIRES FROM ABANDONED CONDUIT AT OWN EXPENSE.
6. PROPOSED LIGHT POLES SHALL BE INSTALLED PRIOR TO STAGE 3A AND ENERGIZED DURING STAGE 3A. REFER TO THE PROPOSED LIGHTING PLANS FOR EXACT POLE LOCATIONS.
7. CONTRACTOR SHALL FIELD VERIFY EXISTING CIRCUITING PRIOR TO START OF WORK CONTRACTOR SHALL DE-ENERGIZE CIRCUIT AT POWER SOURCE PRIOR TO START OF ANY WORK. EXISTING LIGHTING UNIT SHALL BE REMOVED AND SAFELY STORED UNTIL DRAINAGE WORK IS COMPLETE. REINSTALL UNIT ON NEW FOUNDATION UPON COMPLETION OF DRAINAGE WORK.

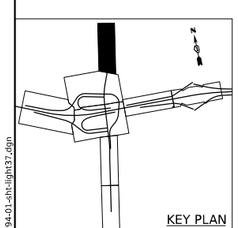

0 50 100 150
SCALE IN FEET

LT–37

MODEL: Default
FILE NAME: D162F94-01-ch-light37.dgn

SINGH
SINGH + ASSOCIATES, INC.
CONSULTING ENGINEERS

USER NAME = mgarvida	DESIGNED - VG	REVISED -	
	DRAWN - VN/MAG	REVISED -	
PLOT SCALE = 100.000 ' / in.	CHECKED - MG	REVISED -	
PLOT DATE = 10/28/2025	DATE - 10/31/2025	REVISED -	

STATE OF ILLINOIS
DEPARTMENT OF TRANSPORTATION

TEMPORARY AND REMOVAL LIGHTING PLAN CHICAGO ST. – STAGE 3A

SCALE: 1"=50' | SHEET 5 OF 5 SHEETS | STA. TO STA.

F.A.I. RTE.	SECTION	COUNTY	TOTAL SHEETS	SHEET NO.
80	2017-057F	WILL	1342	618
		CONTRACT NO. 62F94		
		ILLINOIS	FED. AID PROJECT	

LEGEND

(A) AERIAL CABLE, 3-1/C NO.2 WITH MESSENGER WIRE

(B) UNIT DUCT, 600V, 2-1/C NO. 2, 1/C NO. 4 GROUND, (XLP-TYPE USE). 1 1/2" DIA. POLYETHYLENE

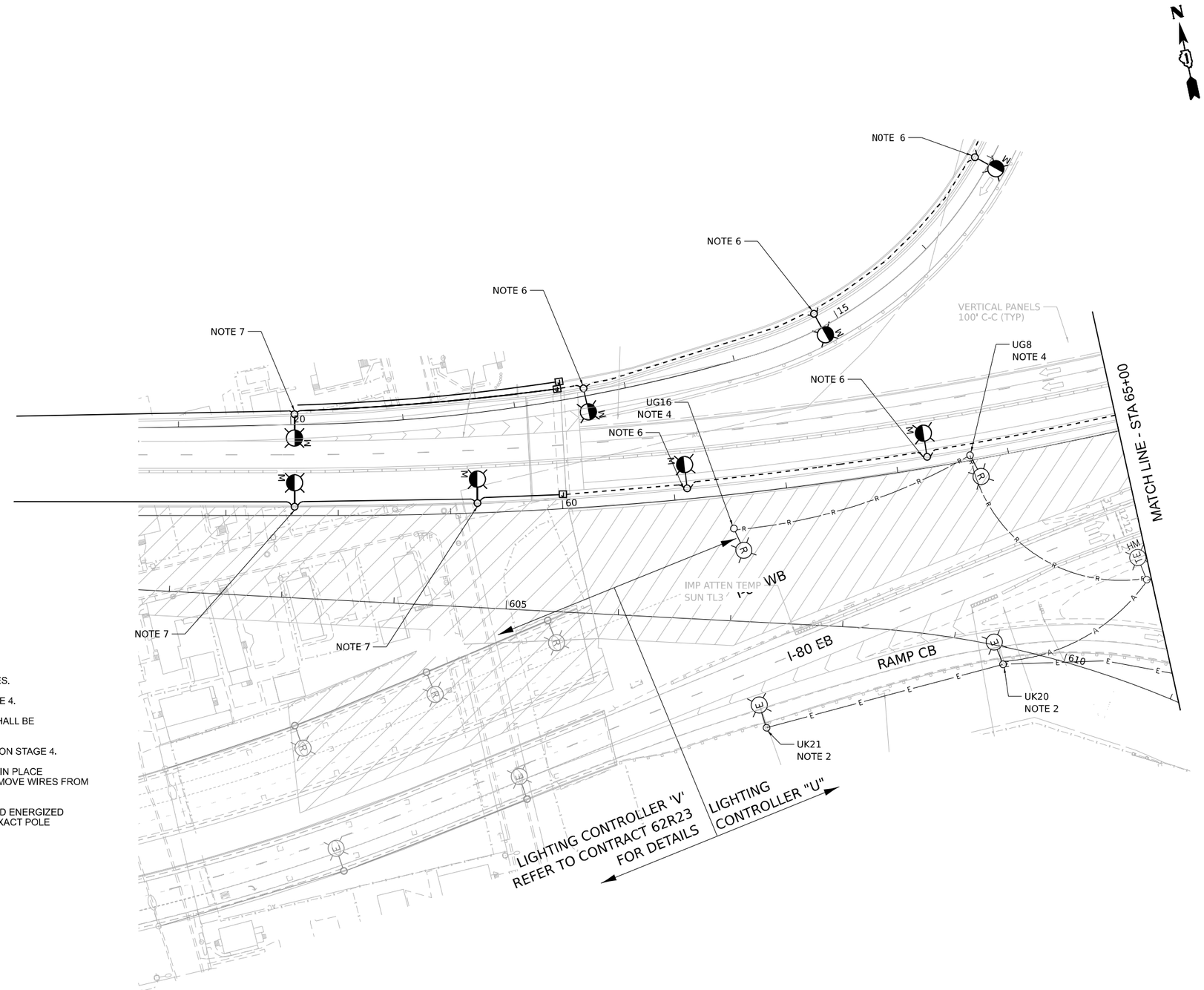

NOTES:

1. SEE SHEET LT-01 FOR LEGEND, ABBREVIATIONS, AND GENERAL NOTES.
2. EXISTING LIGHTING UNIT SHALL REMAIN OPERATIONAL DURING STAGE 4.
3. TEMPORARY LIGHTING UNITS AND TEMPORARY BRANCH CIRCUITS SHALL BE INSTALLED AND OPERATIONAL PRIOR TO START OF STAGE 4.
4. EXISTING LIGHTING UNITS SHALL BE REMOVED AND DISCONNECTED ON STAGE 4.
5. WIRE AND CONDUIT SHOWN TO BE REMOVED SHALL BE ABANDONED IN PLACE UNLESS OTHERWISE SPECIFIED. CONTRACTOR MAY CHOOSE TO REMOVE WIRES FROM ABANDONED CONDUIT AT OWN EXPENSE.
6. PROPOSED LIGHT POLES SHALL BE INSTALLED PRIOR TO STAGE 4 AND ENERGIZED DURING STAGE 4. REFER TO THE PROPOSED LIGHTING PLANS FOR EXACT POLE LOCATIONS.
7. REFER TO CONTRACT 62R23 FOR DETAILS.

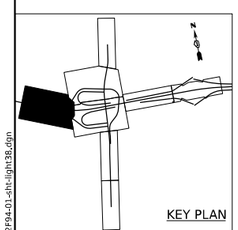

0 50 100 150
SCALE IN FEET

LT–38

MODEL: Default
FILE NAME: D162F94-01-sht-light38.dgn

SINGH
SINGH + ASSOCIATES, INC.
CONSULTING ENGINEERS

USER NAME = mgarvida	DESIGNED - VG	REVISED -	
	DRAWN - VN/MAG	REVISED -	
PLOT SCALE = 100.000 ' / in.	CHECKED - MG	REVISED -	
PLOT DATE = 10/28/2025	DATE - 10/31/2025	REVISED -	

STATE OF ILLINOIS
DEPARTMENT OF TRANSPORTATION

TEMPORARY AND REMOVAL LIGHTING PLAN I–80 – STAGE 4

SCALE: 1"=50' | SHEET 1 OF 5 SHEETS | STA. TO STA.

F.A.I. RTE.	SECTION	COUNTY	TOTAL SHEETS	SHEET NO.
80	2017-057F	WILL	1342	619
		CONTRACT NO. 62F94		
	ILLINOIS	FED. AID PROJECT		

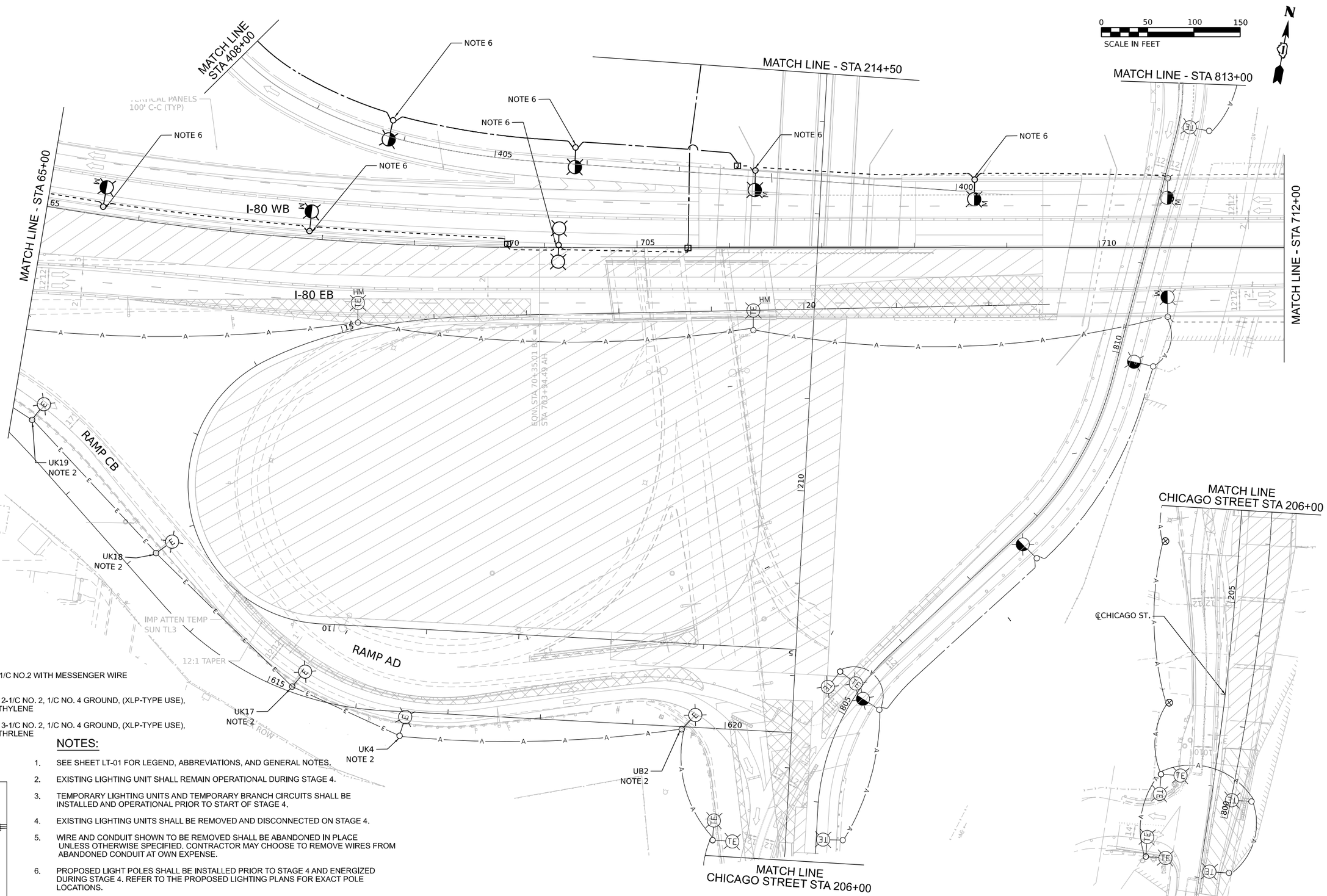

LEGEND

(A) AERIAL CABLE, 3-1/C NO.2 WITH MESSENGER WIRE

(B) UNIT DUCT, 600V, 2-1/C NO. 2, 1/C NO. 4 GROUND, (XLP-TYPE USE), 1 1/2" DIA. POLYETHYLENE

(C) UNIT DUCT, 600V, 3-1/C NO. 2, 1/C NO. 4 GROUND, (XLP-TYPE USE), 1 1/2" DIA. POLYETHRLENE

NOTES:

1. SEE SHEET LT-01 FOR LEGEND, ABBREVIATIONS, AND GENERAL NOTES.
2. EXISTING LIGHTING UNIT SHALL REMAIN OPERATIONAL DURING STAGE 4.
3. TEMPORARY LIGHTING UNITS AND TEMPORARY BRANCH CIRCUITS SHALL BE INSTALLED AND OPERATIONAL PRIOR TO START OF STAGE 4.
4. EXISTING LIGHTING UNITS SHALL BE REMOVED AND DISCONNECTED ON STAGE 4.
5. WIRE AND CONDUIT SHOWN TO BE REMOVED SHALL BE ABANDONED IN PLACE UNLESS OTHERWISE SPECIFIED. CONTRACTOR MAY CHOOSE TO REMOVE WIRES FROM ABANDONED CONDUIT AT OWN EXPENSE.
6. PROPOSED LIGHT POLES SHALL BE INSTALLED PRIOR TO STAGE 4 AND ENERGIZED DURING STAGE 4. REFER TO THE PROPOSED LIGHTING PLANS FOR EXACT POLE LOCATIONS.
7. REFER TO CONTRACT 62R23 FOR DETAILS.

KEY PLAN

LT–39

MODEL: Default
FILE NAME: D162F94-01-sht-light39.dgn

SINGH
SINGH + ASSOCIATES, INC.
CONSULTING ENGINEERS

USER NAME = mgarvida	DESIGNED - VG	REVISED -	
	DRAWN - VN/MAG	REVISED -	
PLOT SCALE = 100.000 ' / in.	CHECKED - MG	REVISED -	
PLOT DATE = 10/28/2025	DATE - 10/31/2025	REVISED -	

STATE OF ILLINOIS
DEPARTMENT OF TRANSPORTATION

TEMPORARY AND REMOVAL LIGHTING PLAN I–80 – STAGE 4

SCALE: 1"=50' | SHEET 2 OF 5 SHEETS | STA. TO STA.

F.A.I. RTE.	SECTION	COUNTY	TOTAL SHEETS	SHEET NO.
80	2017-057F	WILL	1342	620
		CONTRACT NO. 62F94		
	ILLINOIS	FED. AID PROJECT		

NOTES:

1. SEE SHEET LT-01 FOR LEGEND, ABBREVIATIONS, AND GENERAL NOTES.
2. EXISTING LIGHTING UNIT SHALL REMAIN OPERATIONAL DURING STAGE 4.
3. TEMPORARY LIGHTING UNITS AND TEMPORARY BRANCH CIRCUITS SHALL BE INSTALLED AND OPERATIONAL PRIOR TO START OF STAGE 4.
4. EXISTING LIGHTING UNITS SHALL BE REMOVED AND DISCONNECTED ON STAGE 4.
5. WIRE AND CONDUIT SHOWN TO BE REMOVED SHALL BE ABANDONED IN PLACE UNLESS OTHERWISE SPECIFIED. CONTRACTOR MAY CHOOSE TO REMOVE WIRES FROM ABANDONED CONDUIT AT OWN EXPENSE.
6. PROPOSED LIGHT POLES SHALL BE INSTALLED PRIOR TO STAGE 4 AND ENERGIZED DURING STAGE 4. REFER TO THE PROPOSED LIGHTING PLANS FOR EXACT POLE LOCATIONS.
7. PROPOSED LIGHTING CONTROLLER SHALL BE INSTALLED AND FULLY OPERATIONAL PRIOR TO THE START OF STAGE 4. SEE PROPOSED LIGHTING PLANS FOR EXACT LOCATION.
8. INSTALL MAST ARM AND LUMINAIRE ON TEMPORARY TRAFFIC SIGNAL WOOD POLE.

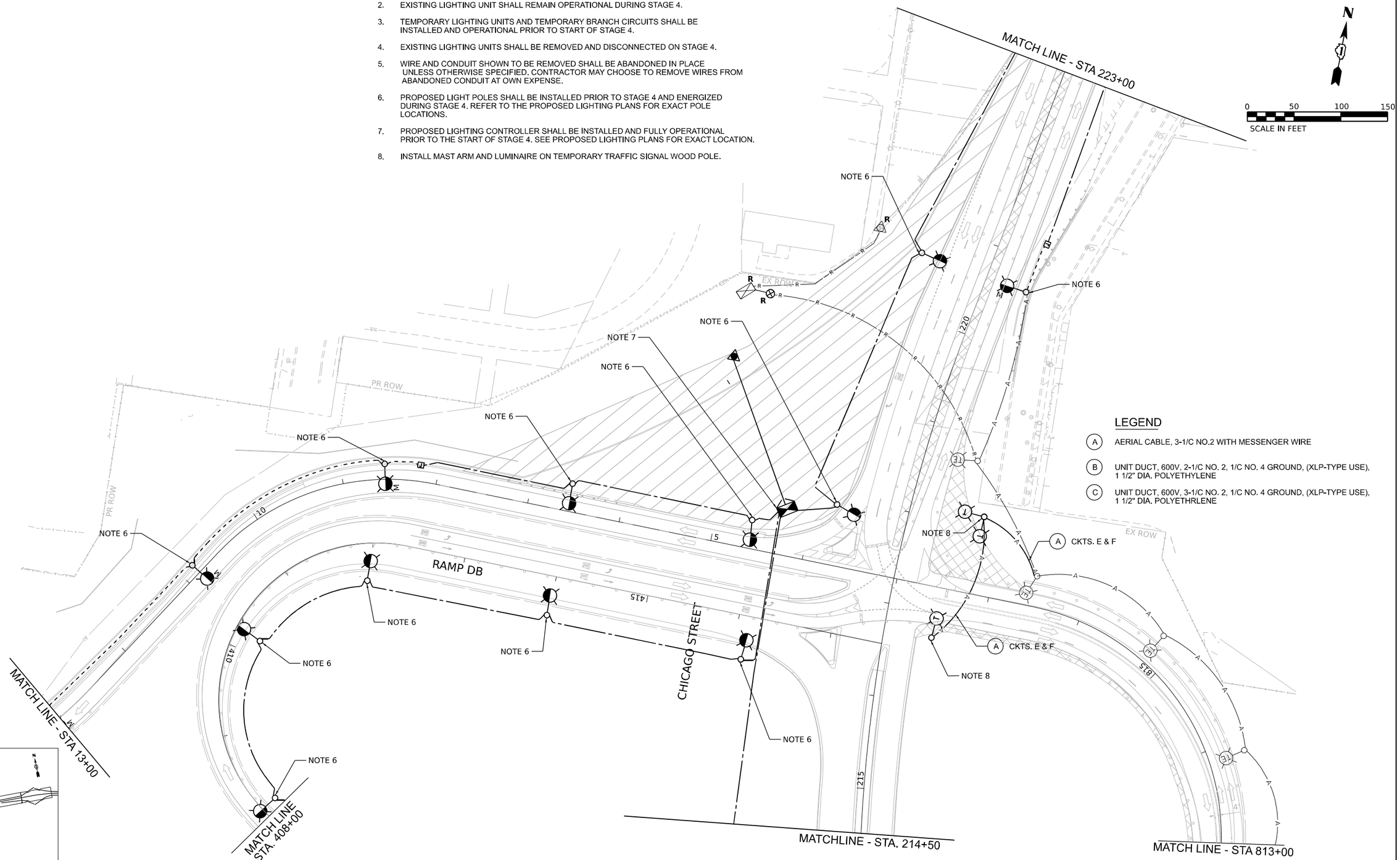

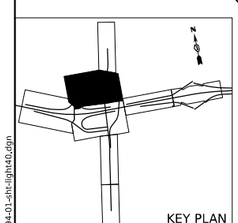

LT–40

MODEL: Default
FILE NAME: D162F94-01-sht-light40.dgn

SINGH
SINGH + ASSOCIATES, INC.
CONSULTING ENGINEERS

USER NAME = mgarvida	DESIGNED - VG	REVISED -	
	DRAWN - VN/MAG	REVISED -	
PLOT SCALE = 100.000 ' / in.	CHECKED - MG	REVISED -	
PLOT DATE = 10/28/2025	DATE - 10/31/2025	REVISED -	

STATE OF ILLINOIS
DEPARTMENT OF TRANSPORTATION

TEMPORARY AND REMOVAL LIGHTING PLAN I–80 – STAGE 4

SCALE: 1"=50' | SHEET 3 OF 5 SHEETS | STA. TO STA.

F.A.I. RTE.	SECTION	COUNTY	TOTAL SHEETS	SHEET NO.
80	2017-057F	WILL	1342	621
		CONTRACT NO. 62F94		
	ILLINOIS	FED. AID PROJECT		

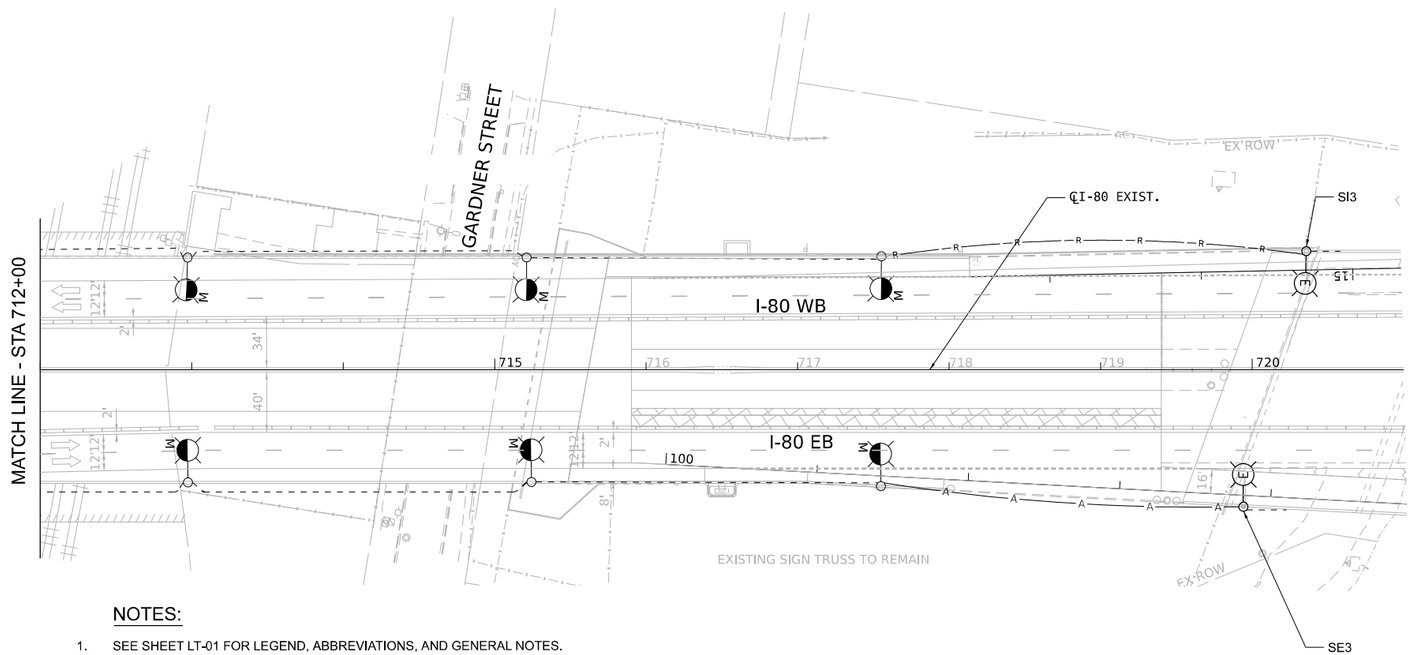

NOTES:

1. SEE SHEET LT-01 FOR LEGEND, ABBREVIATIONS, AND GENERAL NOTES.
2. EXISTING LIGHTING UNIT SHALL REMAIN OPERATIONAL DURING STAGE 4.

LEGEND

(A) AERIAL CABLE, 3-1/C NO.2 WITH MESSENGER WIRE

(B) UNIT DUCT, 600V, 2-1/C NO. 2, 1/C NO. 4 GROUND, (XLP-TYPE USE). 1 1/2" DIA. POLYETHYLENE

0 50 100 150
SCALE IN FEET

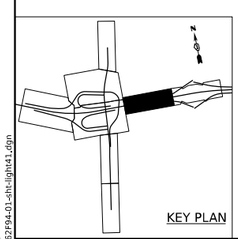

LT–41

MODEL: Default
FILE NAME: D162F94-01-ltk-light41.dgn

SINGH
SINGH + ASSOCIATES, INC
CONSULTING ENGINEERS

USER NAME = mgarvida	DESIGNED - VG	REVISED -	
	DRAWN - VN/MAG	REVISED -	
PLOT SCALE = 100.000 ' / in.	CHECKED - MG	REVISED -	
PLOT DATE = 10/28/2025	DATE - 10/31/2025	REVISED -	

STATE OF ILLINOIS
DEPARTMENT OF TRANSPORTATION

TEMPORARY AND REMOVAL LIGHTING PLAN I–80 – STAGE 4

SCALE: 1"=50' | SHEET 4 OF 5 SHEETS | STA. | TO STA.

F.A.I. RTE.	SECTION	COUNTY	TOTAL SHEETS	SHEET NO.
80	2017-057F	WILL	1342	622
		CONTRACT NO. 62F94		
	ILLINOIS	FED. AID PROJECT		

NOTES:

1. SEE SHEET LT-01 FOR LEGEND, ABBREVIATIONS, AND GENERAL NOTES.
2. EXISTING LIGHTING UNIT SHALL REMAIN OPERATIONAL DURING STAGE 4.
3. PROPOSED LIGHT POLES SHALL BE INSTALLED PRIOR TO STAGE 4 AND ENERGIZED DURING STAGE 4. REFER TO THE PROPOSED LIGHTING PLANS FOR EXACT POLE LOCATIONS.

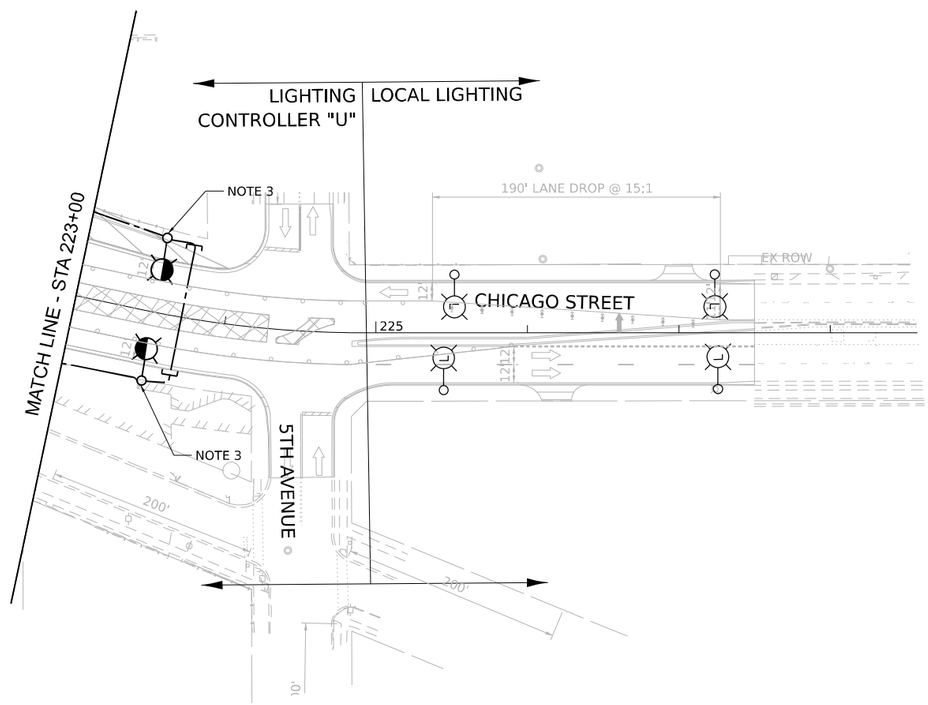

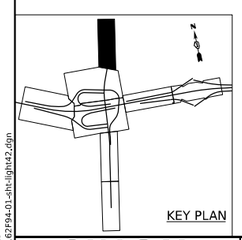

0 50 100 150
SCALE IN FEET

LT–42

MODEL: Default
FILE NAME: D162F94-01-sht-light42.dgn

SINGH
SINGH + ASSOCIATES, INC.
CONSULTING ENGINEERS

USER NAME = mgarvida	DESIGNED - VG	REVISED -	
	DRAWN - VN/MAG	REVISED -	
PLOT SCALE = 100.000 ' / in.	CHECKED - MG	REVISED -	
PLOT DATE = 10/28/2025	DATE - 10/31/2025	REVISED -	

STATE OF ILLINOIS
DEPARTMENT OF TRANSPORTATION

TEMPORARY AND REMOVAL LIGHTING PLAN CHICAGO ST. – STAGE 4

SCALE: 1"=50' | SHEET 5 OF 5 SHEETS | STA. TO STA.

F.A.I. RTE.	SECTION	COUNTY	TOTAL SHEETS	SHEET NO.
80	2017-057F	WILL	1342	623
		CONTRACT NO. 62F94		
	ILLINOIS	FED. AID PROJECT		

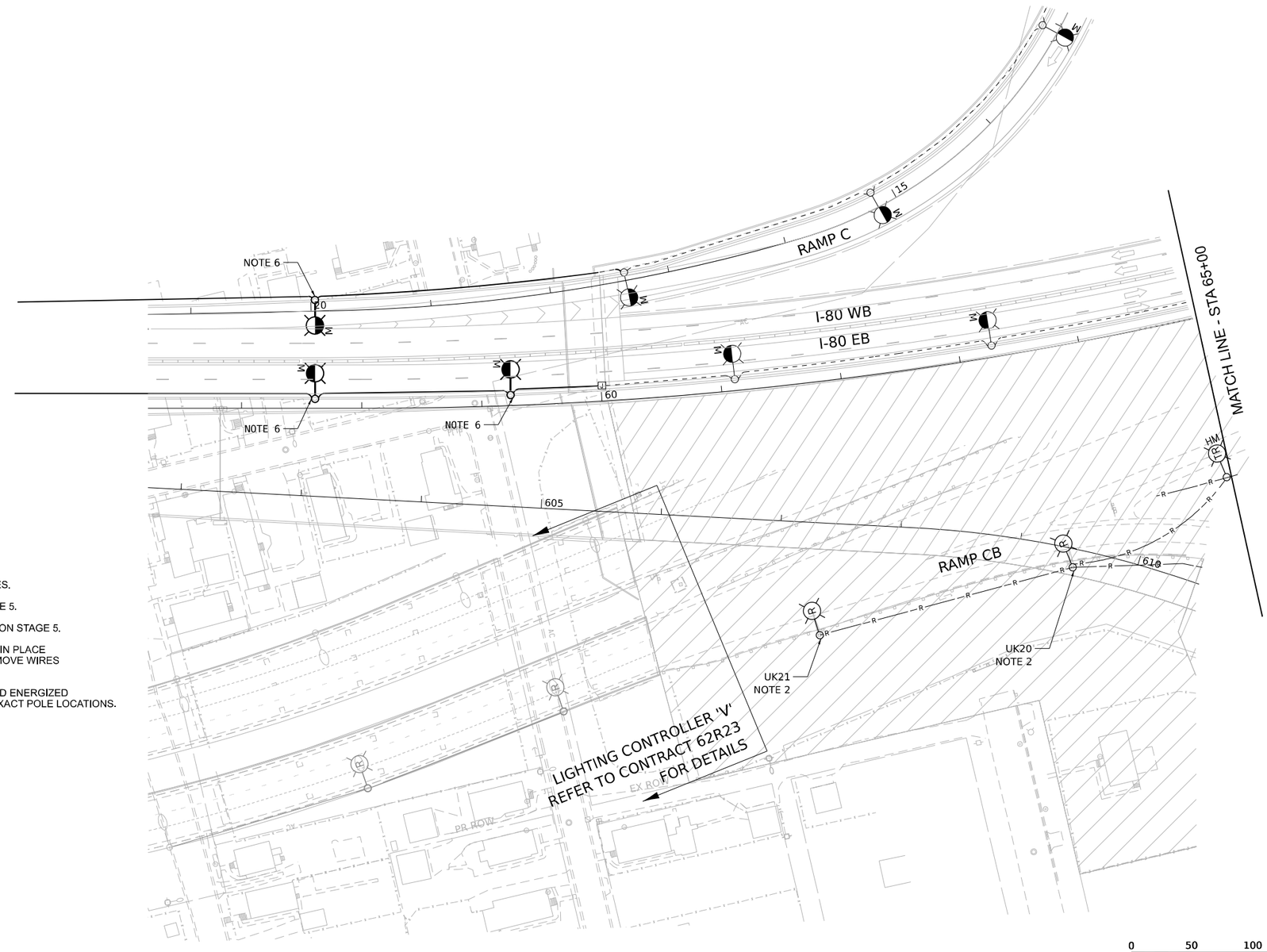

NOTES:

1. SEE SHEET LT-01 FOR LEGEND, ABBREVIATIONS, AND GENERAL NOTES.
2. EXISTING LIGHTING UNIT SHALL REMAIN OPERATIONAL DURING STAGE 5.
3. EXISTING LIGHTING UNITS SHALL BE REMOVED AND DISCONNECTED ON STAGE 5.
4. WIRE AND CONDUIT SHOWN TO BE REMOVED SHALL BE ABANDONED IN PLACE UNLESS OTHERWISE SPECIFIED. CONTRACTOR MAY CHOOSE TO REMOVE WIRES FROM ABANDONED CONDUIT AT OWN EXPENSE.
5. PROPOSED LIGHT POLES SHALL BE INSTALLED PRIOR TO STAGE 5 AND ENERGIZED DURING STAGE 5. REFER TO THE PROPOSED LIGHTING PLANS FOR EXACT POLE LOCATIONS.
6. REFER TO CONTRACT 62R23 FOR DETAILS.

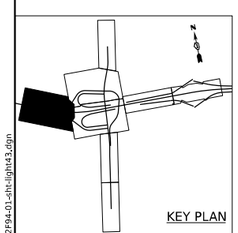

KEY PLAN

0 50 100 150
SCALE IN FEET

LT–43

MODEL: Default
FILE NAME: D162F94-01-sht-light43.dgn

SINGH
SINGH + ASSOCIATES, INC.
CONSULTING ENGINEERS

USER NAME = mgarvida	DESIGNED - VG	REVISED -	
	DRAWN - VN/MAG	REVISED -	
PLOT SCALE = 100.000 ' / in.	CHECKED - MG	REVISED -	
PLOT DATE = 10/28/2025	DATE - 10/31/2025	REVISED -	

STATE OF ILLINOIS
DEPARTMENT OF TRANSPORTATION

TEMPORARY AND REMOVAL LIGHTING PLAN I–80 – STAGE 5

SCALE: 1"=50' | SHEET 1 OF 5 SHEETS | STA. TO STA.

F.A.I. RTE.	SECTION	COUNTY	TOTAL SHEETS	SHEET NO.
80	2017-057F	WILL	1342	624
		CONTRACT NO. 62F94		
		ILLINOIS	FED. AID PROJECT	

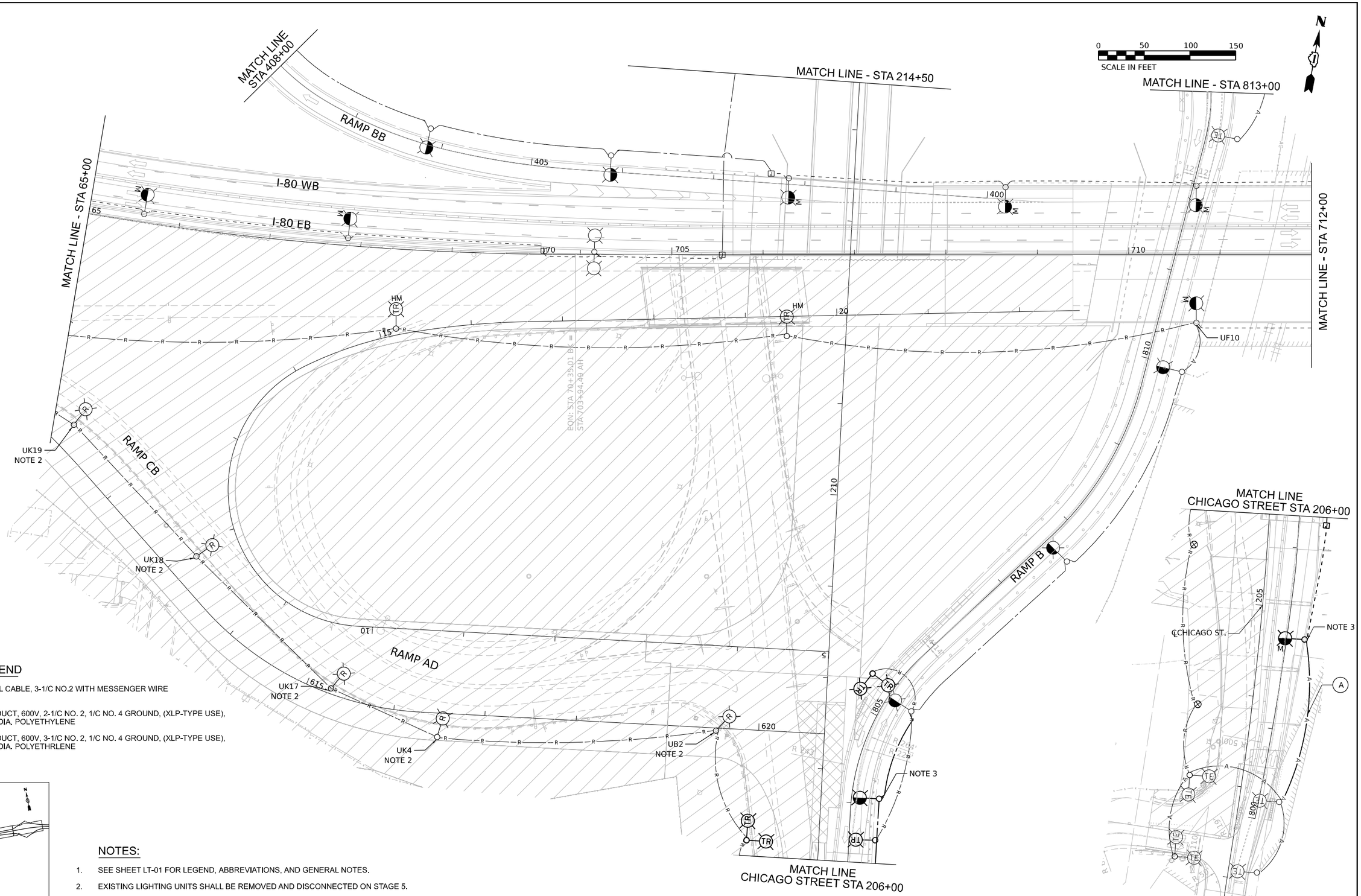

LEGEND

(A) AERIAL CABLE, 3-1/C NO.2 WITH MESSENGER WIRE

(B) UNIT DUCT, 600V, 2-1/C NO. 2, 1/C NO. 4 GROUND, (XLP-TYPE USE), 1 1/2" DIA. POLYETHYLENE

(C) UNIT DUCT, 600V, 3-1/C NO. 2, 1/C NO. 4 GROUND, (XLP-TYPE USE), 1 1/2" DIA. POLYETHRLENE

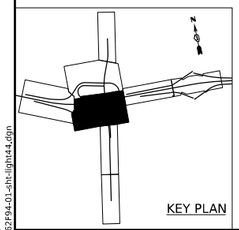

KEY PLAN

NOTES:

1. SEE SHEET LT-01 FOR LEGEND, ABBREVIATIONS, AND GENERAL NOTES.
2. EXISTING LIGHTING UNITS SHALL BE REMOVED AND DISCONNECTED ON STAGE 5.
3. PROPOSED LIGHT POLES SHALL BE INSTALLED PRIOR TO STAGE 5 AND ENERGIZED DURING STAGE 5. REFER TO THE PROPOSED LIGHTING PLANS FOR EXACT POLE LOCATIONS.

LT–44

MODEL: Default
FILE NAME: D162F94-01-lht-light44.dgn

SINGH
SINGH + ASSOCIATES, INC.
CONSULTING ENGINEERS

USER NAME = mgarvida	DESIGNED - VG	REVISED -	
	DRAWN - VN/MAG	REVISED -	
PLOT SCALE = 100.000 ' / in.	CHECKED - MG	REVISED -	
PLOT DATE = 10/28/2025	DATE - 10/31/2025	REVISED -	

STATE OF ILLINOIS
DEPARTMENT OF TRANSPORTATION

TEMPORARY AND REMOVAL LIGHTING PLAN I–80 – STAGE 5

SCALE: 1"=50' | SHEET 2 OF 5 SHEETS | STA. TO STA.

F.A.I. RTE.	SECTION	COUNTY	TOTAL SHEETS	SHEET NO.
80	2017-057F	WILL	1342	625
		CONTRACT NO. 62F94		
	ILLINOIS	FED. AID PROJECT		

NOTES:

1. SEE SHEET LT-01 FOR LEGEND, ABBREVIATIONS, AND GENERAL NOTES.
2. EXISTING LIGHTING UNIT SHALL REMAIN OPERATIONAL DURING STAGE 5.

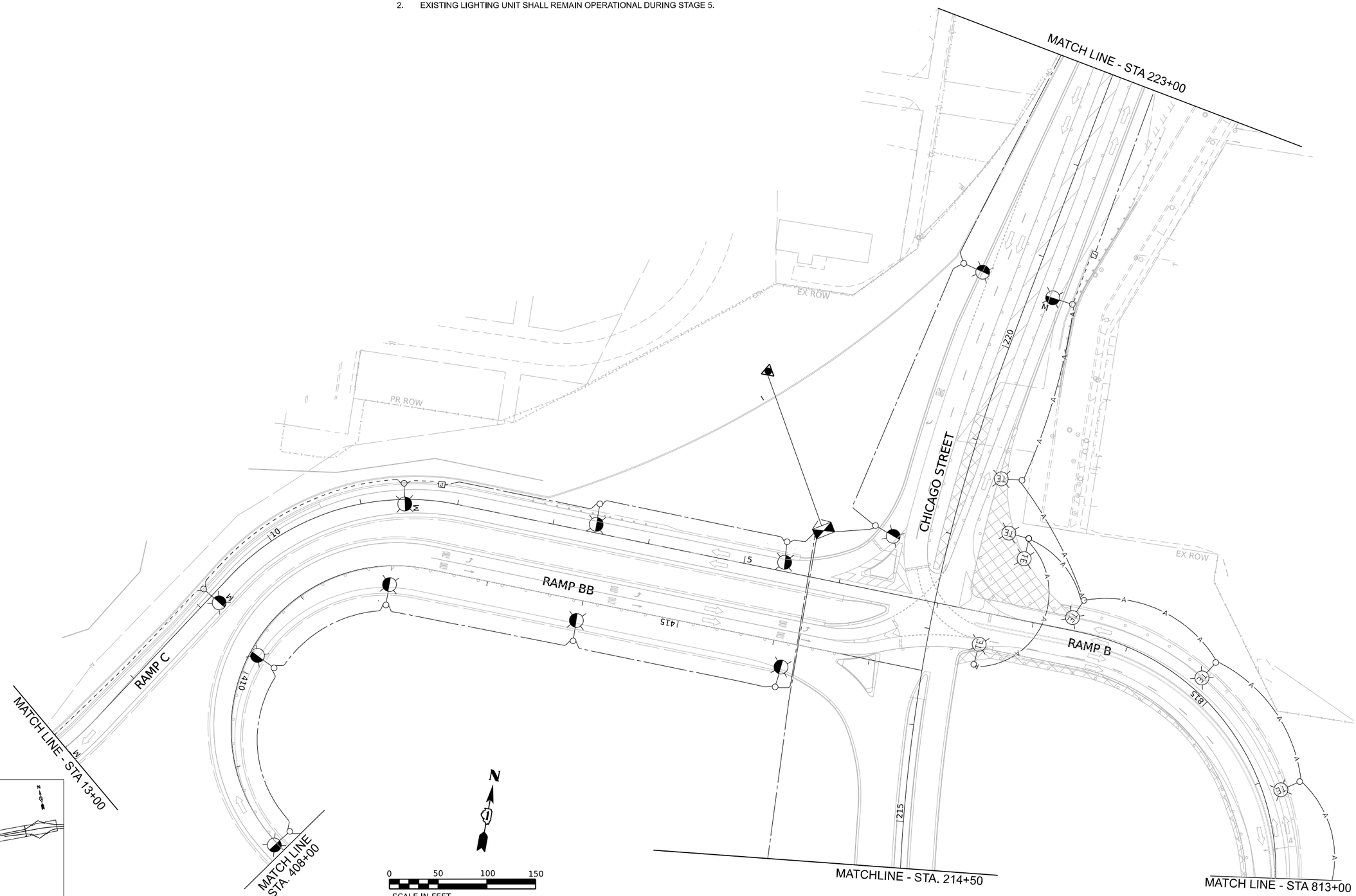

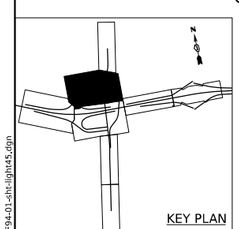

LT–45

MODEL: Default
FILE NAME: D162F94-01-sht-light45.dgn

SINGH
SINGH + ASSOCIATES, INC.
CONSULTING ENGINEERS

USER NAME = mgarvida	DESIGNED - VG	REVISED -	
	DRAWN - VN/MAG	REVISED -	
PLOT SCALE = 100.000 ' / in.	CHECKED - MG	REVISED -	
PLOT DATE = 10/28/2025	DATE - 10/31/2025	REVISED -	

STATE OF ILLINOIS
DEPARTMENT OF TRANSPORTATION

TEMPORARY AND REMOVAL LIGHTING PLAN I–80 – STAGE 5

SCALE: 1"=50' | SHEET 3 OF 5 SHEETS | STA. TO STA.

F.A.I. RTE.	SECTION	COUNTY	TOTAL SHEETS	SHEET NO.
80	2017-057F	WILL	1342	626
		CONTRACT NO. 62F94		
		ILLINOIS	FED. AID PROJECT	

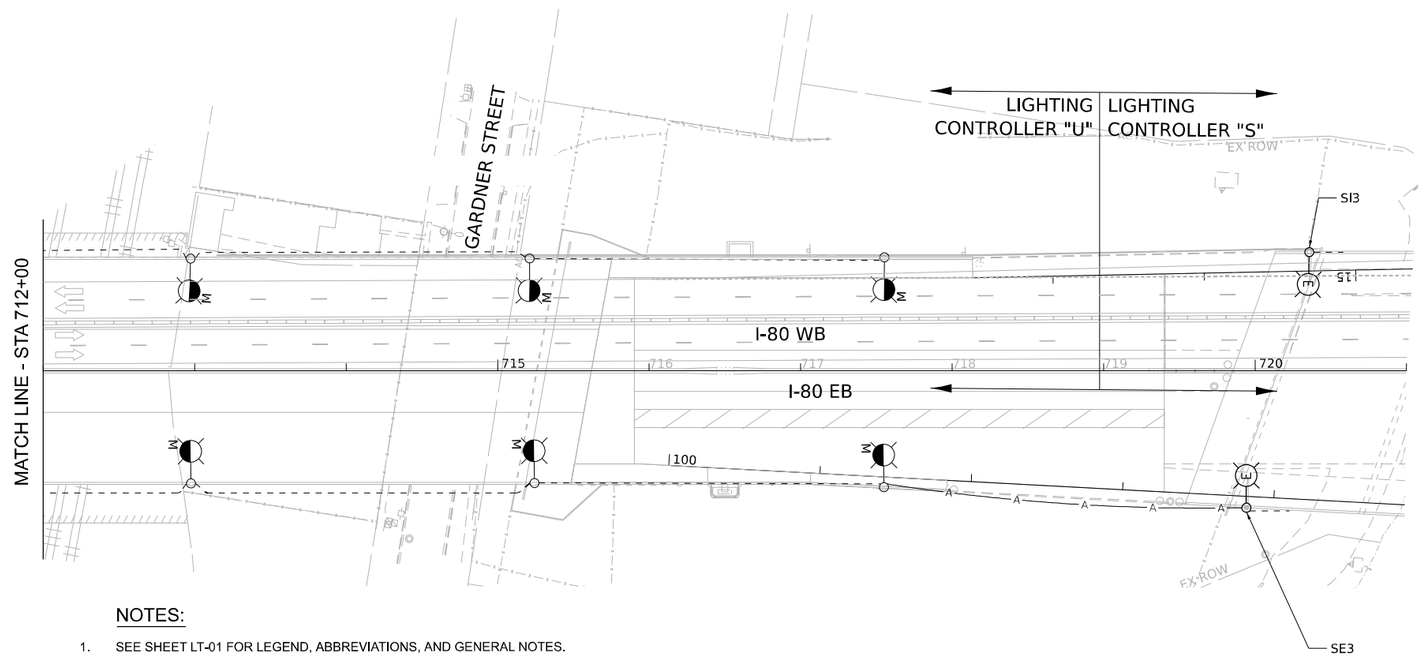

NOTES:

1. SEE SHEET LT-01 FOR LEGEND, ABBREVIATIONS, AND GENERAL NOTES.
2. EXISTING LIGHTING UNIT SHALL REMAIN OPERATIONAL DURING STAGE 5.

LEGEND

(A) AERIAL CABLE, 3-1/C NO.2 WITH MESSENGER WIRE

(B) UNIT DUCT, 600V, 2-1/C NO. 2, 1/C NO. 4 GROUND, (XLP-TYPE USE). 1 1/2" DIA. POLYETHYLENE

0 50 100 150
SCALE IN FEET

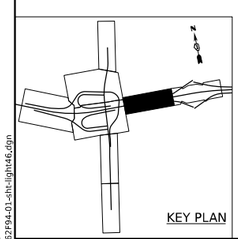

KEY PLAN

LT–46

MODEL: Default
FILE NAME: D162F94-01-ltt-light46.dgn

SINGH
SINGH + ASSOCIATES, INC
CONSULTING ENGINEERS

USER NAME = mgarvida	DESIGNED - VG	REVISED -	
	DRAWN - VN/MAG	REVISED -	
PLOT SCALE = 100.000 ' / in.	CHECKED - MG	REVISED -	
PLOT DATE = 10/28/2025	DATE - 10/31/2025	REVISED -	

STATE OF ILLINOIS
DEPARTMENT OF TRANSPORTATION

TEMPORARY AND REMOVAL LIGHTING PLAN I–80 – STAGE 5

SCALE: 1"=50' | SHEET 4 OF 5 SHEETS | STA. TO STA.

F.A.I. RTE.	SECTION	COUNTY	TOTAL SHEETS	SHEET NO.
80	2017-057F	WILL	1342	627
		CONTRACT NO. 62F94		
	ILLINOIS	FED. AID PROJECT		

NOTES:

1. SEE SHEET LT-01 FOR LEGEND, ABBREVIATIONS, AND GENERAL NOTES.
2. EXISTING LIGHTING UNIT SHALL REMAIN OPERATIONAL DURING STAGE 5.
3. PROPOSED LIGHT POLES SHALL BE INSTALLED PRIOR TO STAGE 5 AND ENERGIZED DURING STAGE 5. REFER TO PROPOSED LIGHTING PLANS FOR EXACT POLE LOCATIONS.

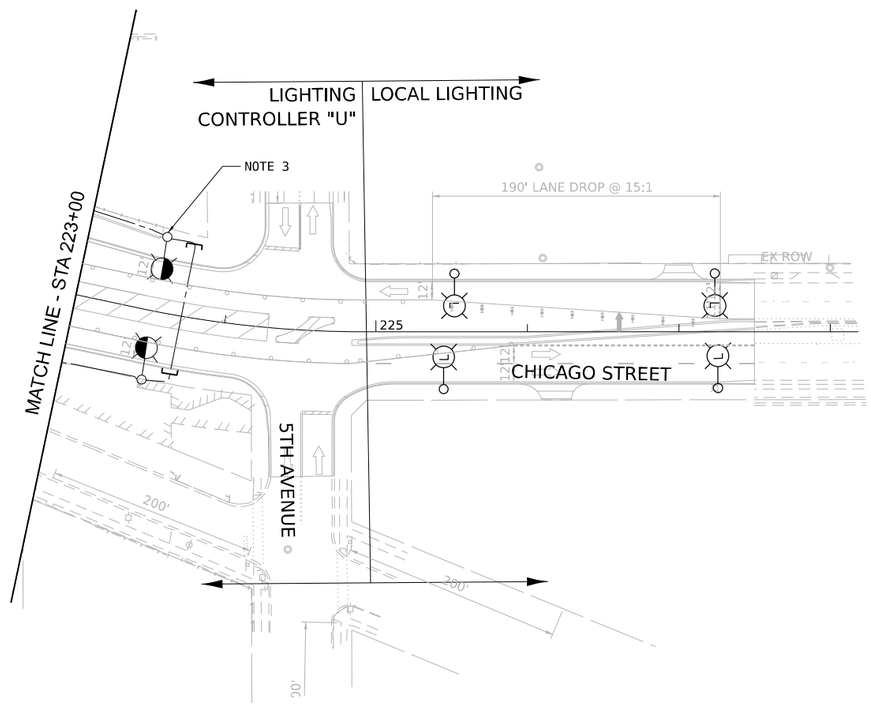

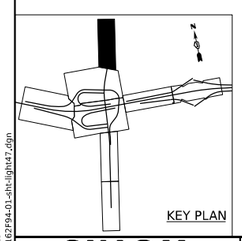

0 50 100 150
SCALE IN FEET

LT–47

MODEL: Default
FILE NAME: D162F94-01-sht-light47.dgn

SINGH
SINGH + ASSOCIATES, INC.
CONSULTING ENGINEERS

USER NAME = mgarvida	DESIGNED - VG	REVISED -	
	DRAWN - VN/MAG	REVISED -	
PLOT SCALE = 100.000 ' / in.	CHECKED - MG	REVISED -	
PLOT DATE = 10/28/2025	DATE - 10/31/2025	REVISED -	

STATE OF ILLINOIS
DEPARTMENT OF TRANSPORTATION

TEMPORARY AND REMOVAL LIGHTING PLAN CHICAGO ST. – STAGE 5

SCALE: 1"=50' | SHEET 5 OF 5 SHEETS | STA. TO STA.

F.A.I. RTE.	SECTION	COUNTY	TOTAL SHEETS	SHEET NO.
80	2017-057F	WILL	1342	628
		CONTRACT NO. 62F94		
	ILLINOIS	FED. AID PROJECT		

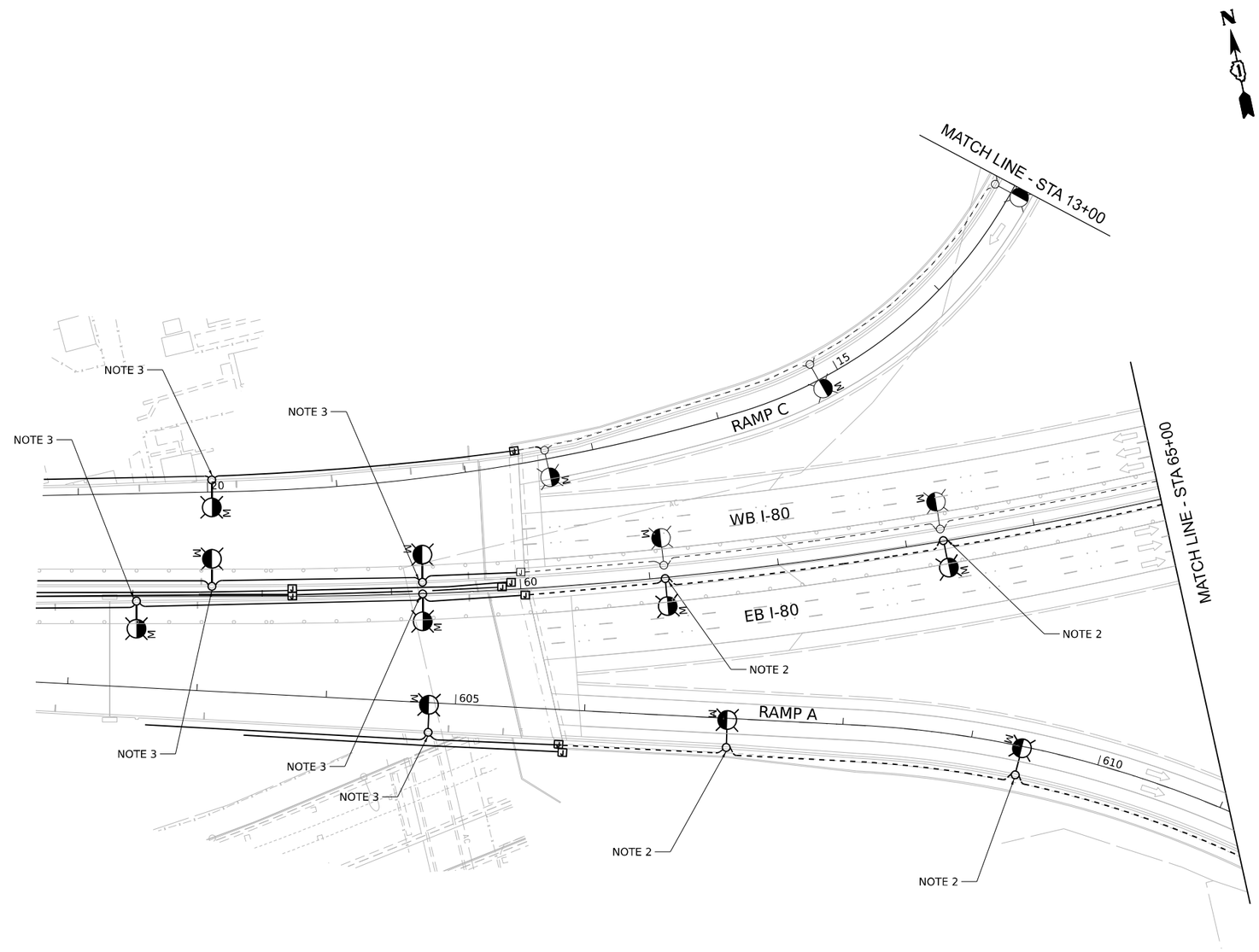

NOTES:

1. SEE SHEET LT-01 FOR LEGEND, ABBREVIATIONS, AND GENERAL NOTES.
2. PROPOSED LIGHT POLES SHALL BE INSTALLED PRIOR TO STAGE 6 AND ENERGIZED DURING STAGE 6. REFER TO THE PROPOSED LIGHTING PLANS FOR EXACT POLE LOCATIONS.
3. REFER TO CONTRACT 62R23 FOR DETAILS.

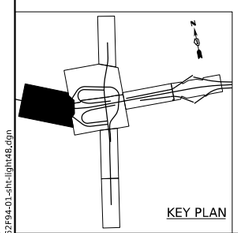

0 50 100 150
SCALE IN FEET

LT–48

MODEL: Default
FILE NAME: D162F94-01-lth-light48.dgn

SINGH
SINGH + ASSOCIATES, INC.
CONSULTING ENGINEERS

USER NAME = mgarvida	DESIGNED - VG	REVISED -	
	DRAWN - VN/MAG	REVISED -	
PLOT SCALE = 100.000 ' / in.	CHECKED - MG	REVISED -	
PLOT DATE = 10/28/2025	DATE - 10/31/2025	REVISED -	

STATE OF ILLINOIS
DEPARTMENT OF TRANSPORTATION

TEMPORARY AND REMOVAL LIGHTING PLAN I–80 – STAGE 6

SCALE: 1"=50' | SHEET 1 OF 5 SHEETS | STA. TO STA.

F.A.I. RTE.	SECTION	COUNTY	TOTAL SHEETS	SHEET NO.
80	2017-057F	WILL	1342	629
		CONTRACT NO. 62F94		
	ILLINOIS	FED. AID PROJECT		

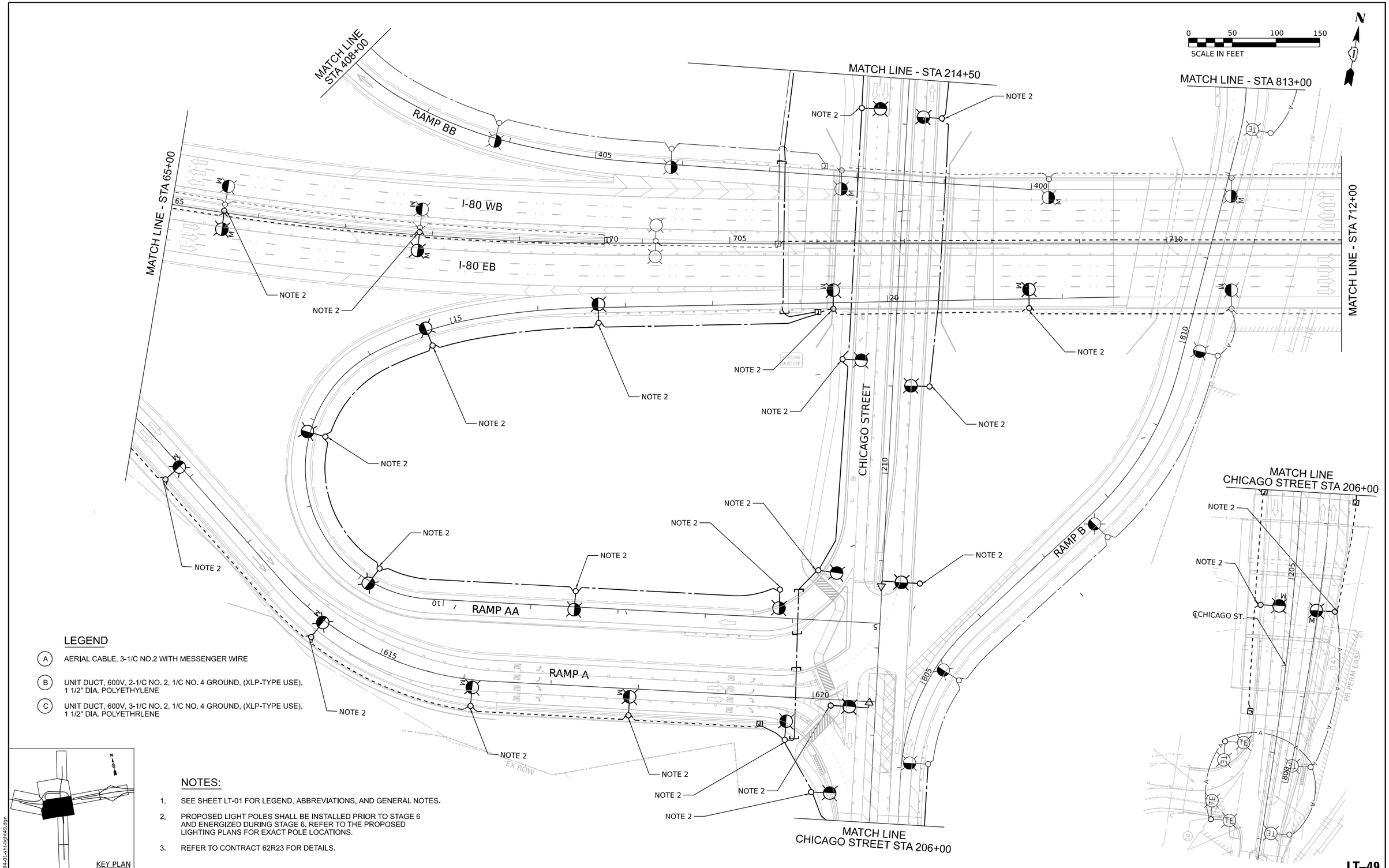

LEGEND

(A) AERIAL CABLE, 3-1/C NO.2 WITH MESSENGER WIRE

(B) UNIT DUCT, 600V, 2-1/C NO. 2, 1/C NO. 4 GROUND, (XLP-TYPE USE), 1 1/2" DIA. POLYETHYLENE

(C) UNIT DUCT, 600V, 3-1/C NO. 2, 1/C NO. 4 GROUND, (XLP-TYPE USE), 1 1/2" DIA. POLYETHRLENE

KEY PLAN

NOTES:

1. SEE SHEET LT-01 FOR LEGEND, ABBREVIATIONS, AND GENERAL NOTES.
2. PROPOSED LIGHT POLES SHALL BE INSTALLED PRIOR TO STAGE 6 AND ENERGIZED DURING STAGE 6. REFER TO THE PROPOSED LIGHTING PLANS FOR EXACT POLE LOCATIONS.
3. REFER TO CONTRACT 62R23 FOR DETAILS.

LT–49

MODEL: Default
FILE NAME: D162F94-01-sht-light49.dgn

SINGH
SINGH + ASSOCIATES, INC.
CONSULTING ENGINEERS

USER NAME = mgarvida	DESIGNED - VG	REVISED -	
	DRAWN - VN/MAG	REVISED -	
PLOT SCALE = 100.000 ' / in.	CHECKED - MG	REVISED -	
PLOT DATE = 10/28/2025	DATE - 10/31/2025	REVISED -	

STATE OF ILLINOIS
DEPARTMENT OF TRANSPORTATION

TEMPORARY AND REMOVAL LIGHTING PLAN I–80 – STAGE 6

SCALE: 1"=50' | SHEET 2 OF 5 SHEETS | STA. TO STA.

F.A.I. RTE.	SECTION	COUNTY	TOTAL SHEETS	SHEET NO.
80	2017-057F	WILL	1342	630
		CONTRACT NO. 62F94		
	ILLINOIS	FED. AID PROJECT		

NOTES:

1. SEE SHEET LT-01 FOR LEGEND, ABBREVIATIONS, AND GENERAL NOTES.
2. PROPOSED LIGHT POLES SHALL BE INSTALLED PRIOR TO STAGE 6 AND ENERGIZED DURING STAGE 6. REFER TO THE PROPOSED LIGHTING PLANS FOR EXACT POLE LOCATIONS.

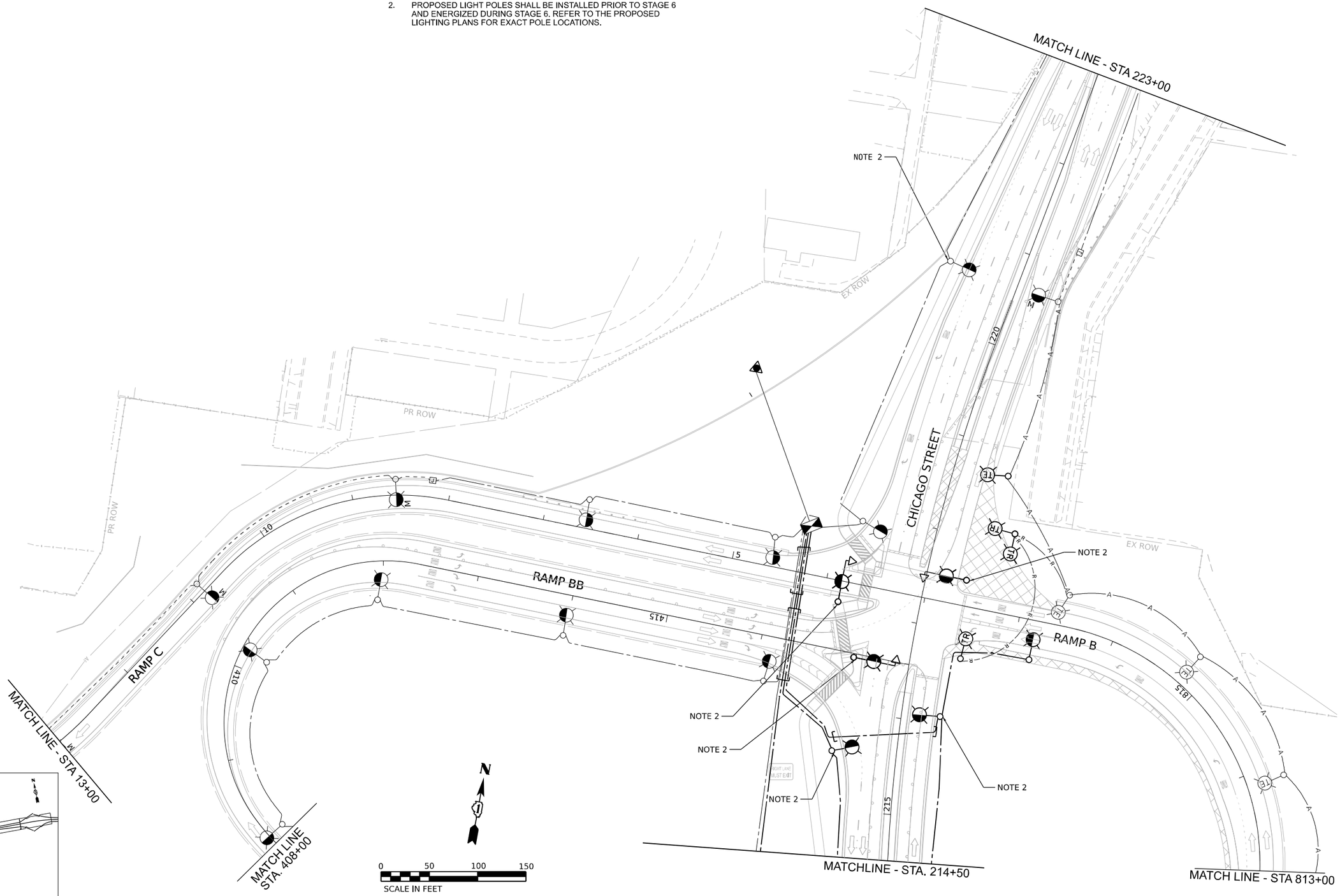

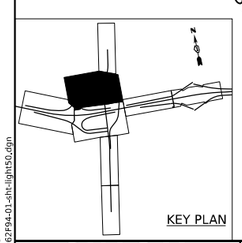

LT–50

SINGH + ASSOCIATES, INC. CONSULTING ENGINEERS	USER NAME = mgarvida	DESIGNED - VG	REVISED -	STATE OF ILLINOIS DEPARTMENT OF TRANSPORTATION	TEMPORARY AND REMOVAL LIGHTING PLAN I–80 – STAGE 6	F.A.I. RTE. 80	SECTION 2017-057F
		DRAWN - VN/MAG	REVISED -			COUNTY WILL	TOTAL SHEETS 1342 / SHEET NO. 631
	PLOT SCALE = 100.000 ' / in.	CHECKED - MG	REVISED -			CONTRACT NO. 62F94	
	PLOT DATE = 10/29/2025	DATE - 10/31/2025	REVISED -		SCALE: 1"=50' SHEET 3 OF 5 SHEETS STA. TO STA.	ILLINOIS	FED. AID PROJECT

MODEL: Default
FILE NAME: D162F94-01-lht-light50.dgn

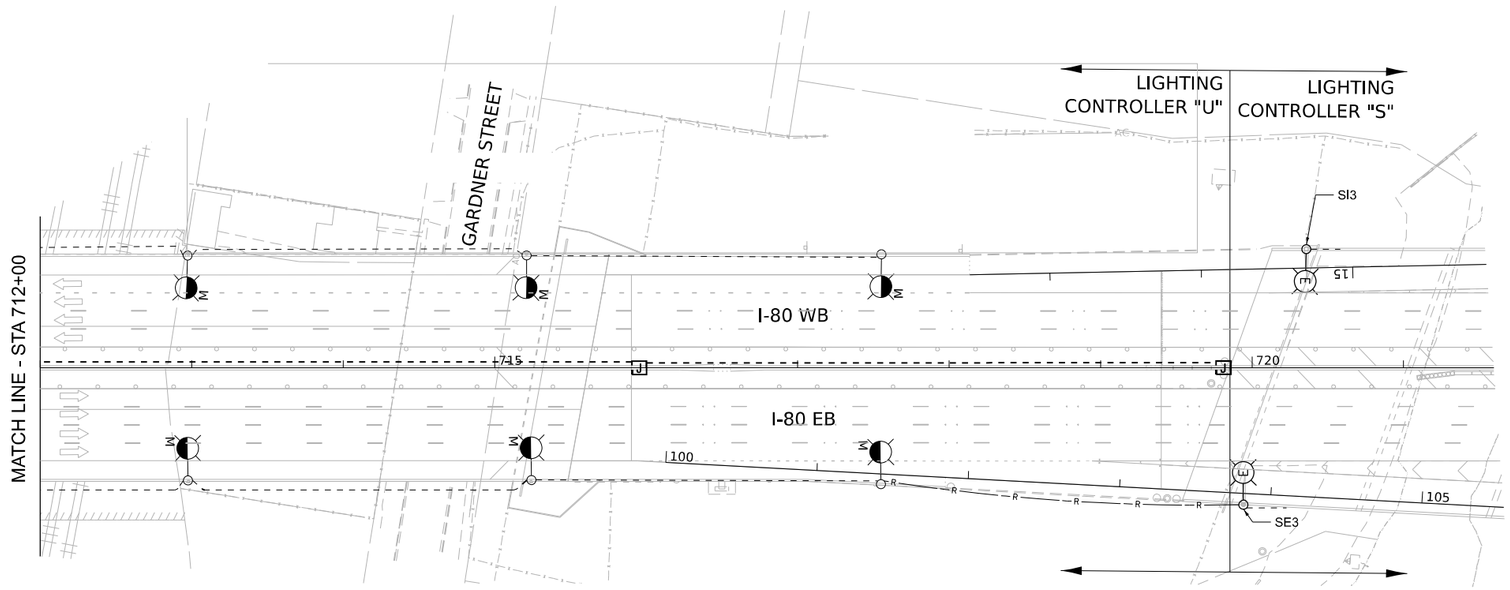

NOTES:

1. SEE SHEET LT-01 FOR LEGEND, ABBREVIATIONS, AND GENERAL NOTES.
2. EXISTING LIGHTING UNIT SHALL REMAIN OPERATIONAL DURING STAGE 6.

LEGEND

(A) AERIAL CABLE, 3-1/C NO.2 WITH MESSENGER WIRE

(B) UNIT DUCT, 600V, 2-1/C NO. 2, 1/C NO. 4 GROUND, (XLP-TYPE USE). 1 1/2" DIA. POLYETHYLENE

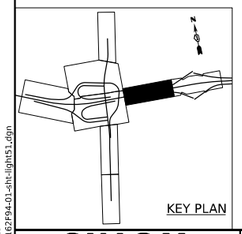

KEY PLAN

0 50 100 150
SCALE IN FEET

LT–51

MODEL: Default
FILE NAME: D162F94-01-sht-light51.dgn

SINGH
SINGH + ASSOCIATES, INC.
CONSULTING ENGINEERS

USER NAME = mgarvida	DESIGNED - VG	REVISED -	
	DRAWN - VN/MAG	REVISED -	
PLOT SCALE = 100.000 ' / in.	CHECKED - MG	REVISED -	
PLOT DATE = 10/28/2025	DATE - 10/31/2025	REVISED -	

STATE OF ILLINOIS
DEPARTMENT OF TRANSPORTATION

TEMPORARY AND REMOVAL LIGHTING PLAN I–80 – STAGE 6

SCALE: 1"=50' | SHEET 4 OF 5 SHEETS | STA. TO STA.

F.A.I. RTE.	SECTION	COUNTY	TOTAL SHEETS	SHEET NO.
80	2017-057F	WILL	1342	632
		CONTRACT NO. 62F94		
		ILLINOIS	FED. AID PROJECT	

NOTES:

1. SEE SHEET LT-01 FOR LEGEND, ABBREVIATIONS, AND GENERAL NOTES.

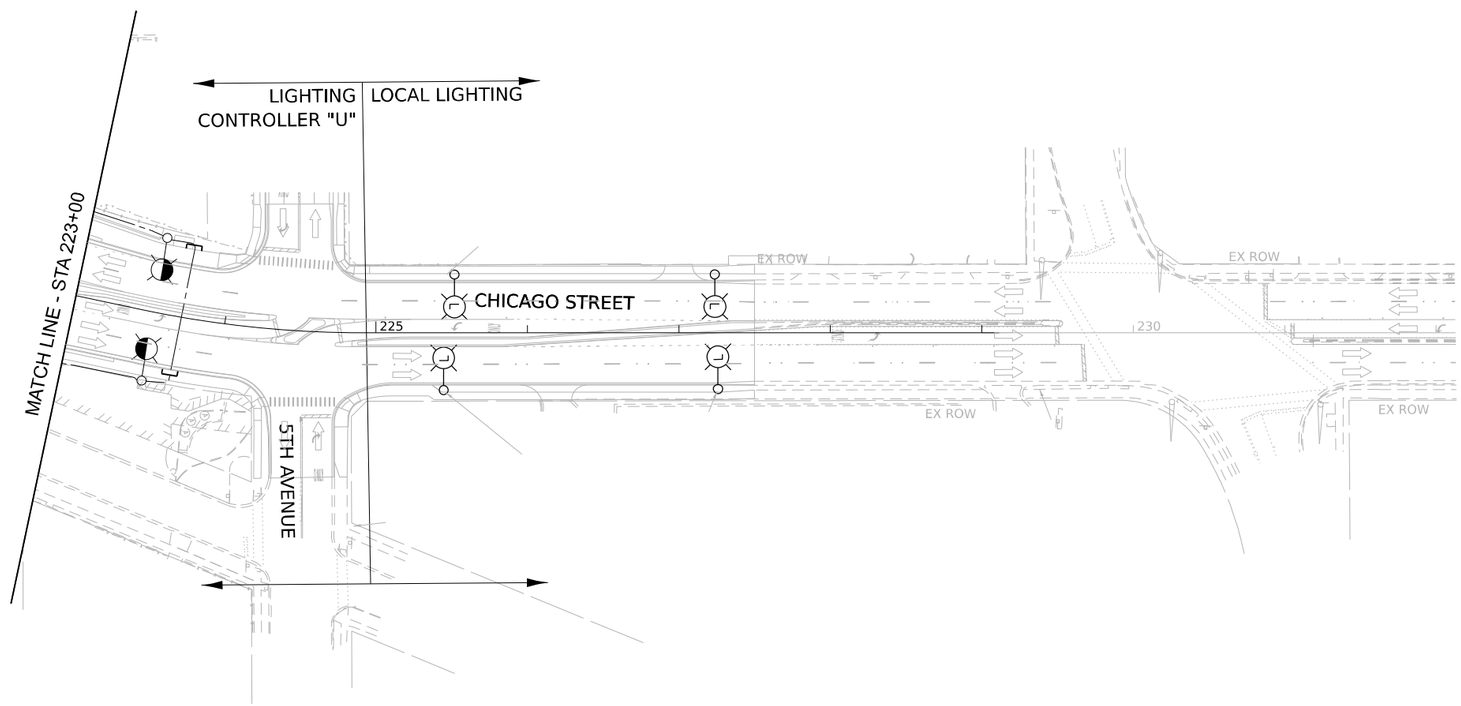

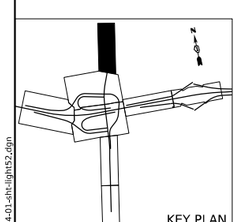

0 50 100 150
SCALE IN FEET

LT–52

MODEL: Default
FILE NAME: D162F94-01-sht-light52.dgn

SINGH
SINGH + ASSOCIATES, INC.
CONSULTING ENGINEERS

USER NAME = mgarvida	DESIGNED - VG	REVISED -	
	DRAWN - VN/MAG	REVISED -	
PLOT SCALE = 100.000 ' / in.	CHECKED - MG	REVISED -	
PLOT DATE = 10/28/2025	DATE - 10/31/2025	REVISED -	

STATE OF ILLINOIS
DEPARTMENT OF TRANSPORTATION

TEMPORARY AND REMOVAL LIGHTING PLAN CHICAGO ST. – STAGE 6

SCALE: 1"=50' | SHEET 5 OF 5 SHEETS | STA. TO STA.

F.A.I. RTE.	SECTION	COUNTY	TOTAL SHEETS	SHEET NO.
80	2017-057F	WILL	1342	633
		CONTRACT NO. 62F94		
	ILLINOIS	FED. AID PROJECT		

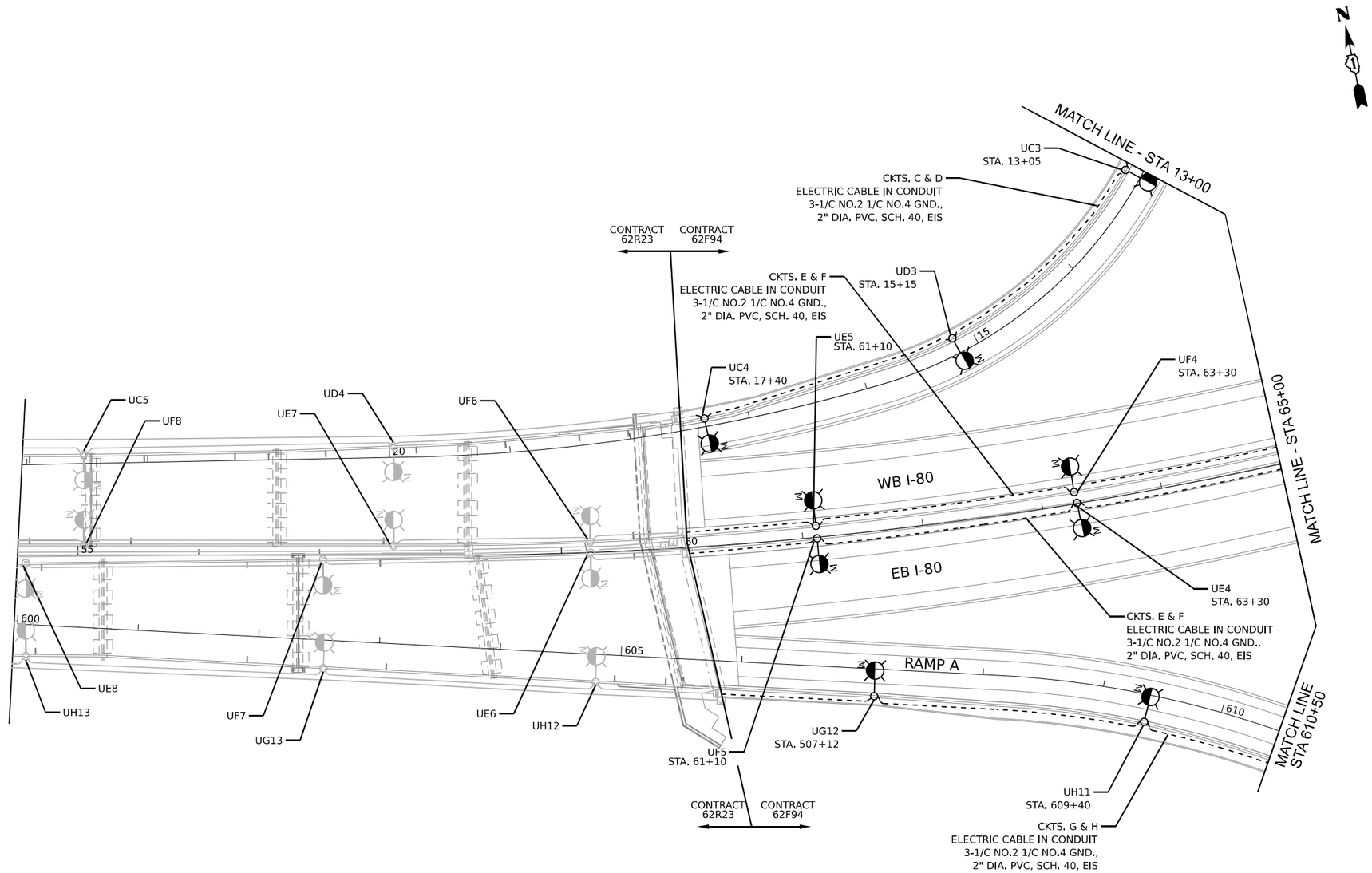

NOTES:

1. SEE SHEET LT-01 FOR LEGEND, ABBREVIATIONS, AND GENERAL NOTES.

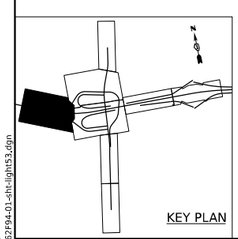

KEY PLAN

0 50 100 150
SCALE IN FEET

LT–53

MODEL: Default
FILE NAME: D162F94-01-ltn-light53.dgn

SINGH
SINGH + ASSOCIATES, INC.
CONSULTING ENGINEERS

USER NAME = mgarvida	DESIGNED - VG	REVISED -	
	DRAWN - VN/MAG	REVISED -	
PLOT SCALE = 100.000 ' / in.	CHECKED - MG	REVISED -	
PLOT DATE = 10/28/2025	DATE - 10/31/2025	REVISED -	

STATE OF ILLINOIS
DEPARTMENT OF TRANSPORTATION

PROPOSED LIGHTING PLAN I–80

SCALE: 1"=50' | SHEET 2 OF 7 SHEETS | STA. | TO STA.

F.A.I. RTE.	SECTION	COUNTY	TOTAL SHEETS	SHEET NO.
80	2017-057F	WILL	1342	634
		CONTRACT NO. 62F94		
	ILLINOIS	FED. AID PROJECT		

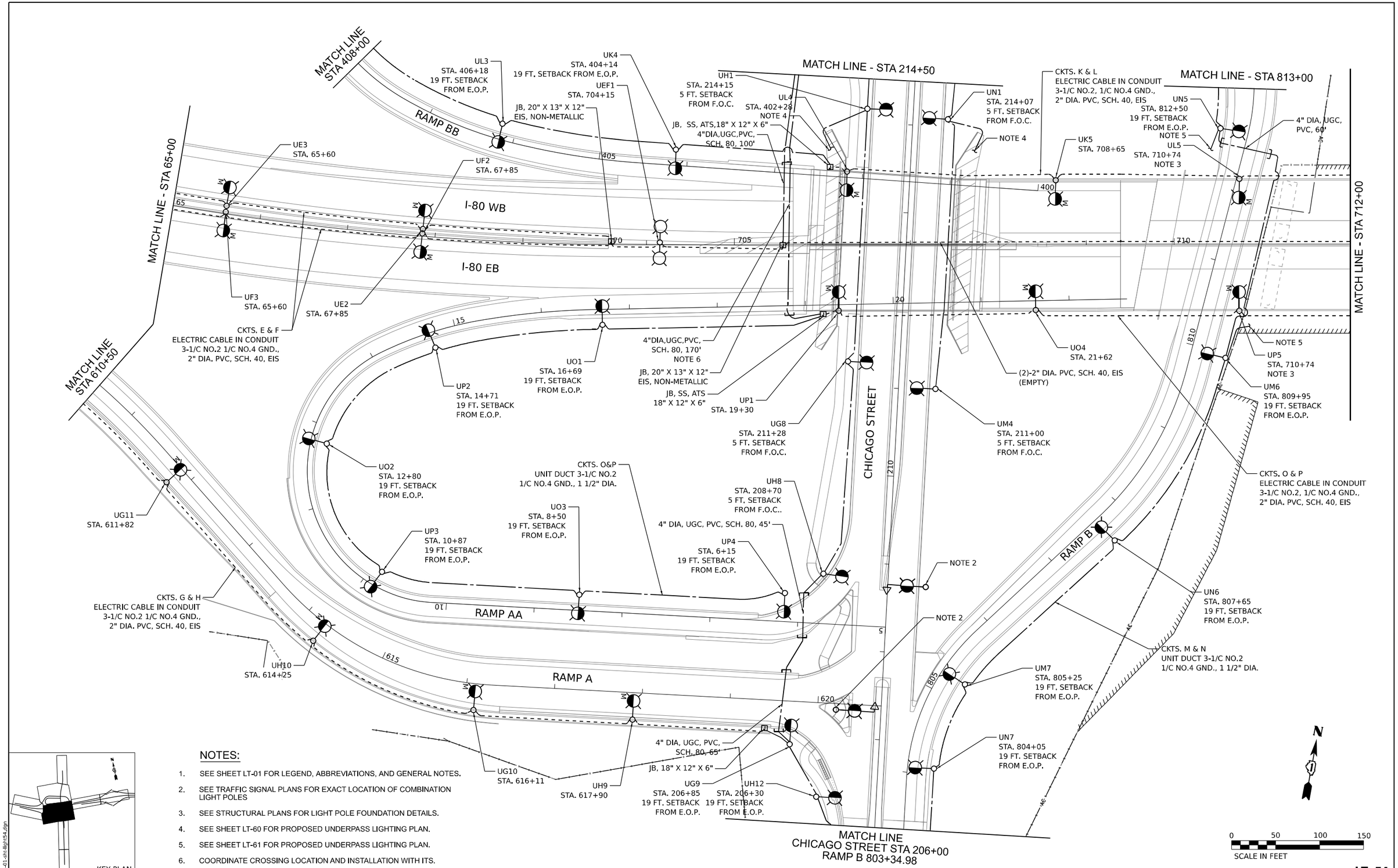

NOTES:

1. SEE SHEET LT-01 FOR LEGEND, ABBREVIATIONS, AND GENERAL NOTES.
2. SEE TRAFFIC SIGNAL PLANS FOR EXACT LOCATION OF COMBINATION LIGHT POLES
3. SEE STRUCTURAL PLANS FOR LIGHT POLE FOUNDATION DETAILS.
4. SEE SHEET LT-60 FOR PROPOSED UNDERPASS LIGHTING PLAN.
5. SEE SHEET LT-61 FOR PROPOSED UNDERPASS LIGHTING PLAN.
6. COORDINATE CROSSING LOCATION AND INSTALLATION WITH ITS.

LT–54

MODEL: Default
FILE NAME: D162F94-01-sht-light54.dgn

SINGH
SINGH + ASSOCIATES, INC.
CONSULTING ENGINEERS

USER NAME = mgarvida	DESIGNED - VG	REVISED -	
	DRAWN - VN/MAG	REVISED -	
PLOT SCALE = 100.024 ' / in.	CHECKED - MG	REVISED -	
PLOT DATE = 10/28/2025	DATE - 10/31/2025	REVISED -	

STATE OF ILLINOIS
DEPARTMENT OF TRANSPORTATION

PROPOSED LIGHTING PLAN I–80

SCALE: 1"=50' | SHEET 3 OF 7 SHEETS | STA. | TO STA.

F.A.I. RTE.	SECTION	COUNTY	TOTAL SHEETS	SHEET NO.
80	2017-057F	WILL	1342	635
		CONTRACT NO. 62F94		
	ILLINOIS	FED. AID PROJECT		

NOTES:

1. SEE SHEET LT-01 FOR LEGEND, ABBREVIATIONS, AND GENERAL NOTES.
2. SEE TRAFFIC SIGNAL PLANS FOR EXACT LOCATION OF COMBINATION LIGHT POLES
3. CAP SPARE CONDUIT ELBOW FOR FUTURE USE.

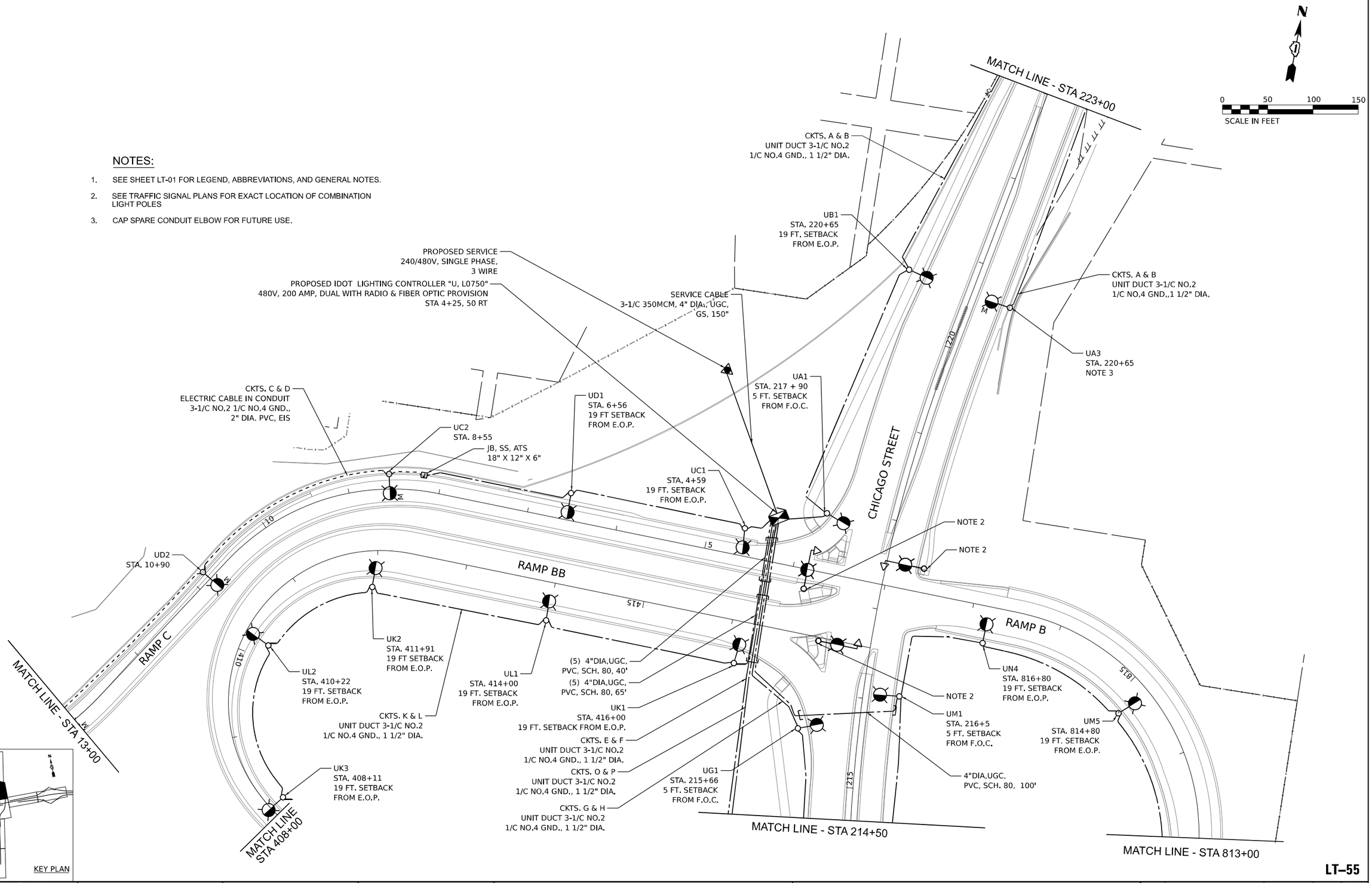

LT–55

MODEL: Default
FILE NAME: D162F94-01-sht-light55.dgn

SINGH
SINGH + ASSOCIATES, INC.
CONSULTING ENGINEERS

USER NAME = vgurskas	DESIGNED - VG	REVISED -	
	DRAWN - VN/MAG	REVISED -	
PLOT SCALE = 100.000 ' / in.	CHECKED - MG	REVISED -	
PLOT DATE = 10/30/2025	DATE - 10/31/2025	REVISED -	

STATE OF ILLINOIS
DEPARTMENT OF TRANSPORTATION

PROPOSED LIGHTING PLAN I–80

SCALE: 1"=50' | SHEET 4 OF 7 SHEETS | STA. TO STA.

F.A.I. RTE.	SECTION	COUNTY	TOTAL SHEETS	SHEET NO.
80	2017-057F	WILL	1342	636
		CONTRACT NO. 62F94		
		ILLINOIS	FED. AID PROJECT	

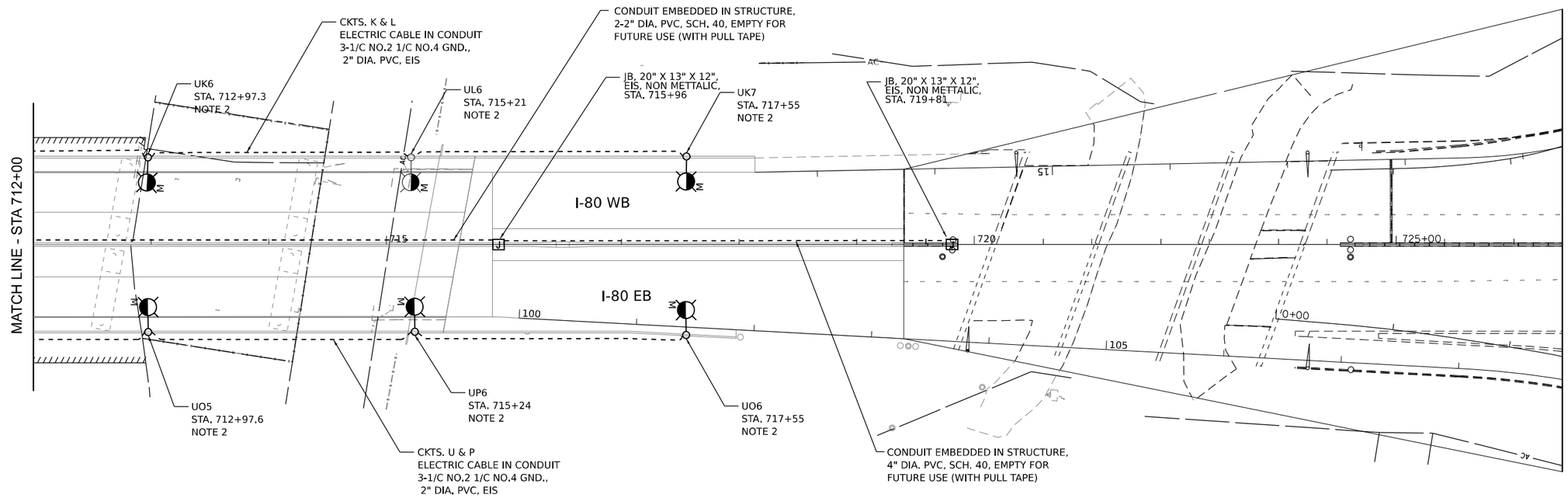

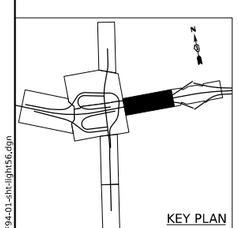

KEY PLAN

NOTES:

1. SEE SHEET LT-01 FOR LEGEND, ABBREVIATIONS, AND GENERAL NOTES.
2. SEE STRUCTURAL PLANS FOR LIGHT POLE FOUNDATION DETAILS.

N

0 50 100 150
SCALE IN FEET

LT–56

MODEL: Default
FILE NAME: D162F94-01-sht-light56.dgn

SINGH
SINGH + ASSOCIATES, INC.
CONSULTING ENGINEERS

USER NAME = mgarvida	DESIGNED - VG	REVISED -	
	DRAWN - VN/MAG	REVISED -	
PLOT SCALE = 100.000 ' / in.	CHECKED - MG	REVISED -	
PLOT DATE = 10/28/2025	DATE - 10/31/2025	REVISED -	

STATE OF ILLINOIS
DEPARTMENT OF TRANSPORTATION

PROPOSED LIGHTING PLAN I–80

SCALE: 1"=50' | SHEET 5 OF 7 SHEETS | STA. TO STA.

F.A.I. RTE.	SECTION	COUNTY	TOTAL SHEETS	SHEET NO.
80	2017-057F	WILL	1342	637
		CONTRACT NO. 62F94		
	ILLINOIS	FED. AID PROJECT		

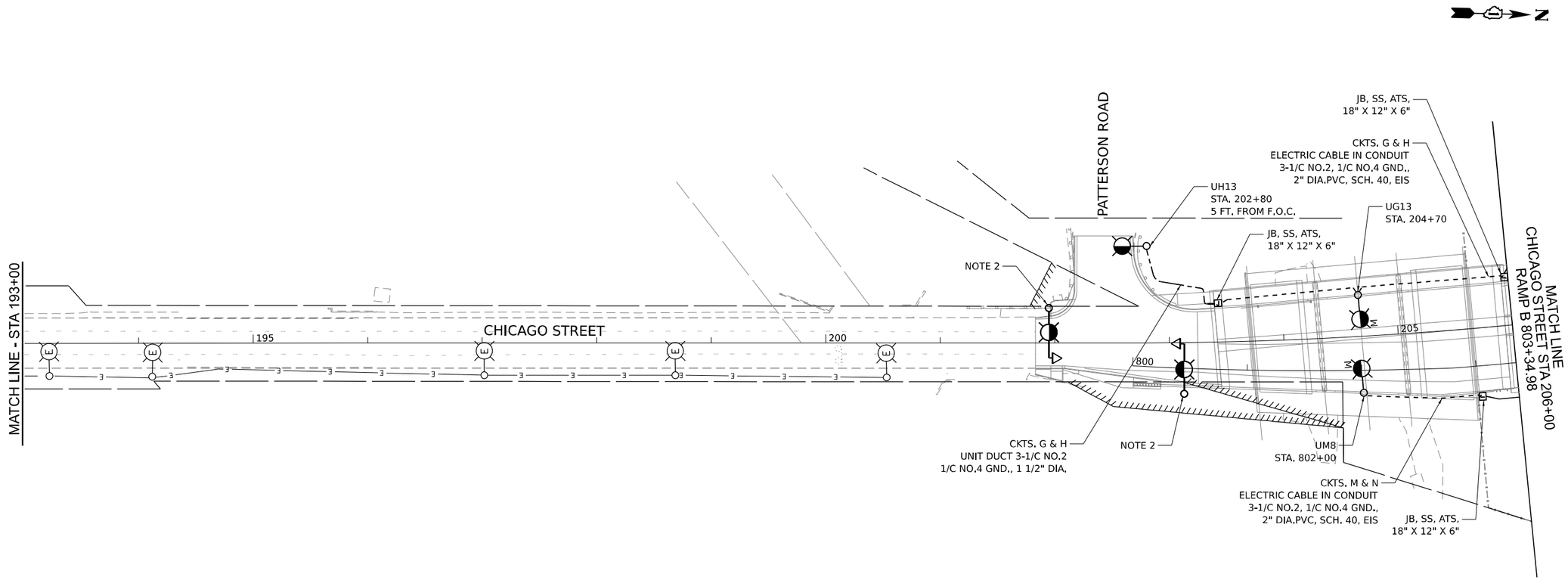

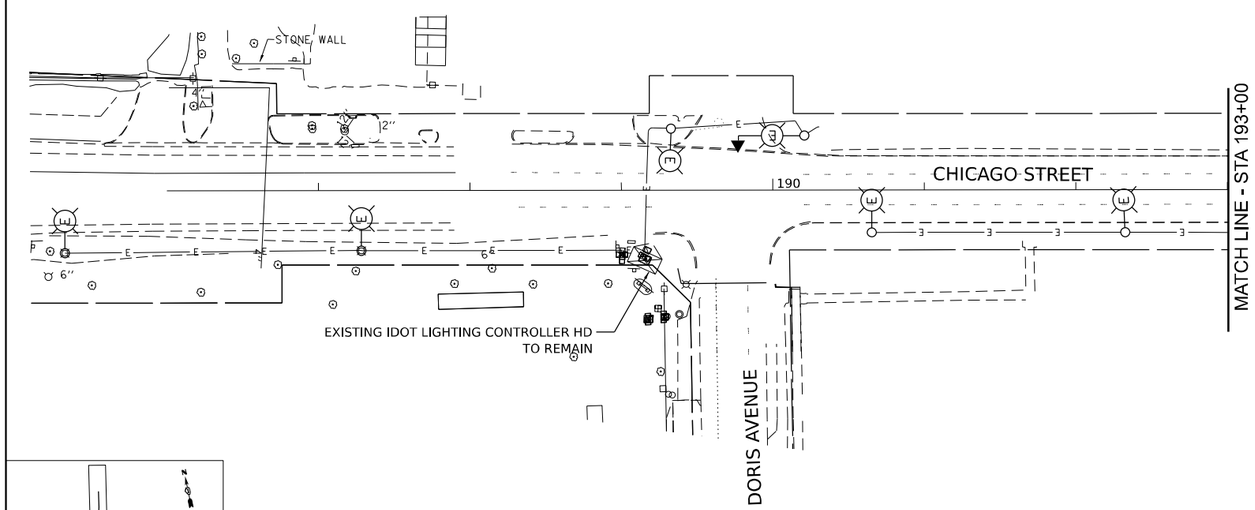

NOTES:

1. SEE SHEET LT-01 FOR LEGEND, ABBREVIATIONS, AND GENERAL NOTES.
2. SEE TRAFFIC SIGNAL PLANS FOR EXACT LOCATION OF COMBINATION LIGHT POLES.

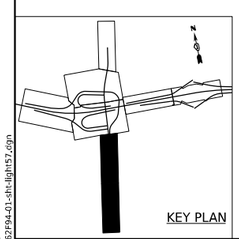

KEY PLAN

0 50 100 150
SCALE IN FEET

LT–57

MODEL: Default
FILE NAME: D162F94-01-sh-light57.dgn

SINGH
SINGH + ASSOCIATES, INC.
CONSULTING ENGINEERS

USER NAME = mgarvida	DESIGNED - VG	REVISED -	
	DRAWN - VN/MAG	REVISED -	
PLOT SCALE = 100.008 ' / in.	CHECKED - MG	REVISED -	
PLOT DATE = 10/28/2025	DATE - 10/31/2025	REVISED -	

STATE OF ILLINOIS
DEPARTMENT OF TRANSPORTATION

PROPOSED LIGHTING PLAN CHICAGO ST.

SCALE: 1" = 50' | SHEET 6 OF 7 SHEETS | STA. TO STA.

F.A.I. RTE.	SECTION	COUNTY	TOTAL SHEETS	SHEET NO.
80	2017-057F	WILL	1342	638

CONTRACT NO. 62F94

ILLINOIS | FED. AID PROJECT

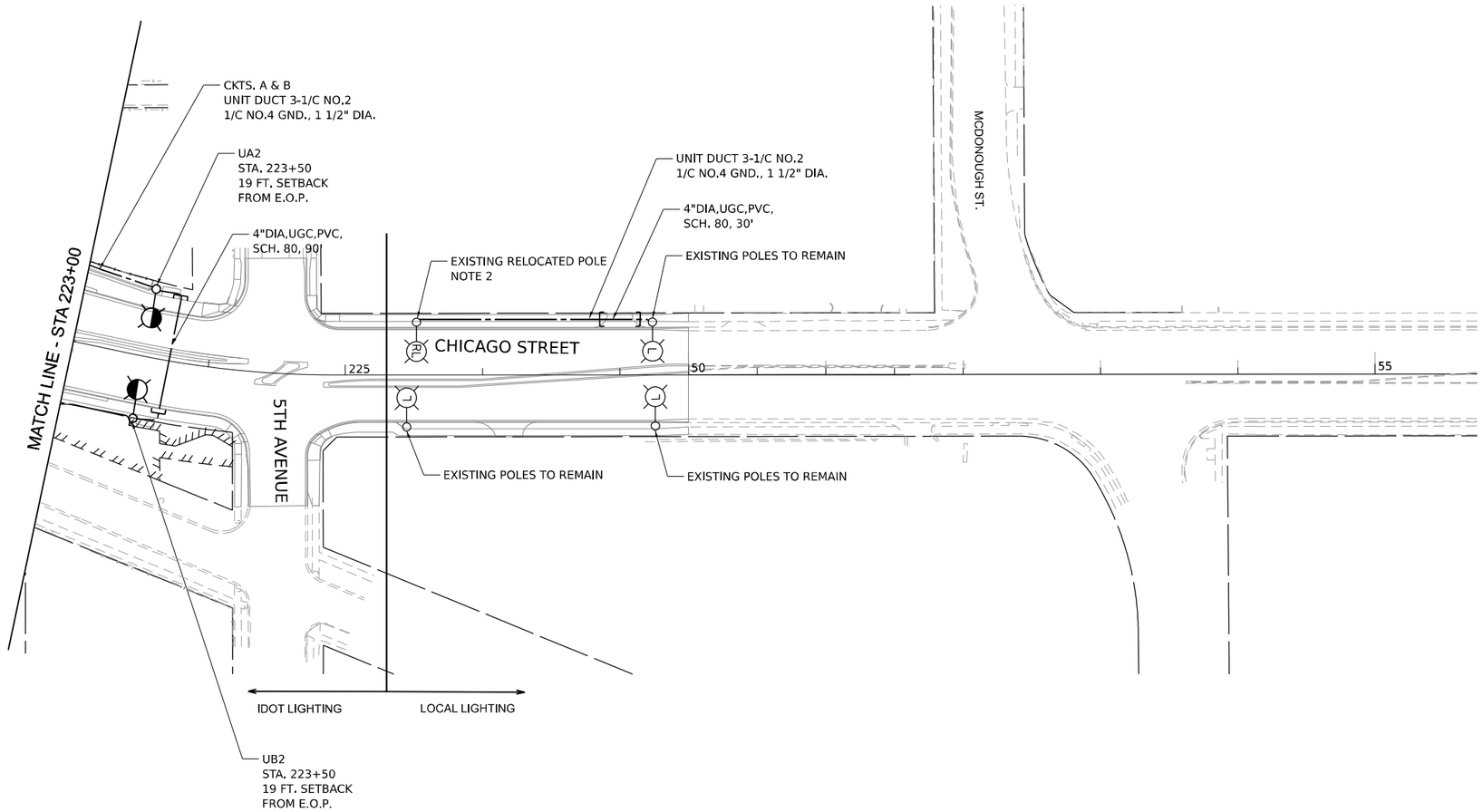

NOTES:

1. SEE SHEET LT-01 FOR LEGEND, ABBREVIATIONS, AND GENERAL NOTES.
2. SEE SHEET LT-83 FOR CITY OF JOLIET LIGHTING FOUNDATION DETAILS. RELOCATED POLE SHALL BE INSTALLED 5 FT NORTH OF THE EXISTING POLE. POLE SETBACK SHALL MATCH EXISTING. COORDINATE WITH THE CITY ENGINEER FOR SPECIFIC INSTALLATION DETAILS.

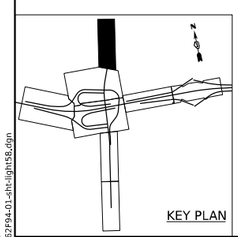

0 50 100 150
SCALE IN FEET

LT–58

MODEL: Default
FILE NAME: D162F94-01-lth-light58.dgn

SINGH
SINGH + ASSOCIATES, INC.
CONSULTING ENGINEERS

USER NAME = mgarvida	DESIGNED - VG	REVISED -	
	DRAWN - VN/MAG	REVISED -	
PLOT SCALE = 100.000 ' / in.	CHECKED - MG	REVISED -	
PLOT DATE = 10/28/2025	DATE - 10/31/2025	REVISED -	

STATE OF ILLINOIS
DEPARTMENT OF TRANSPORTATION

PROPOSED LIGHTING PLAN CHICAGO ST.

SCALE: 1"=50' | SHEET 7 OF 7 SHEETS | STA. | TO STA.

F.A.I. RTE.	SECTION	COUNTY	TOTAL SHEETS	SHEET NO.
80	2017-057F	WILL	1342	639
		CONTRACT NO. 62F94		
	ILLINOIS	FED. AID PROJECT		

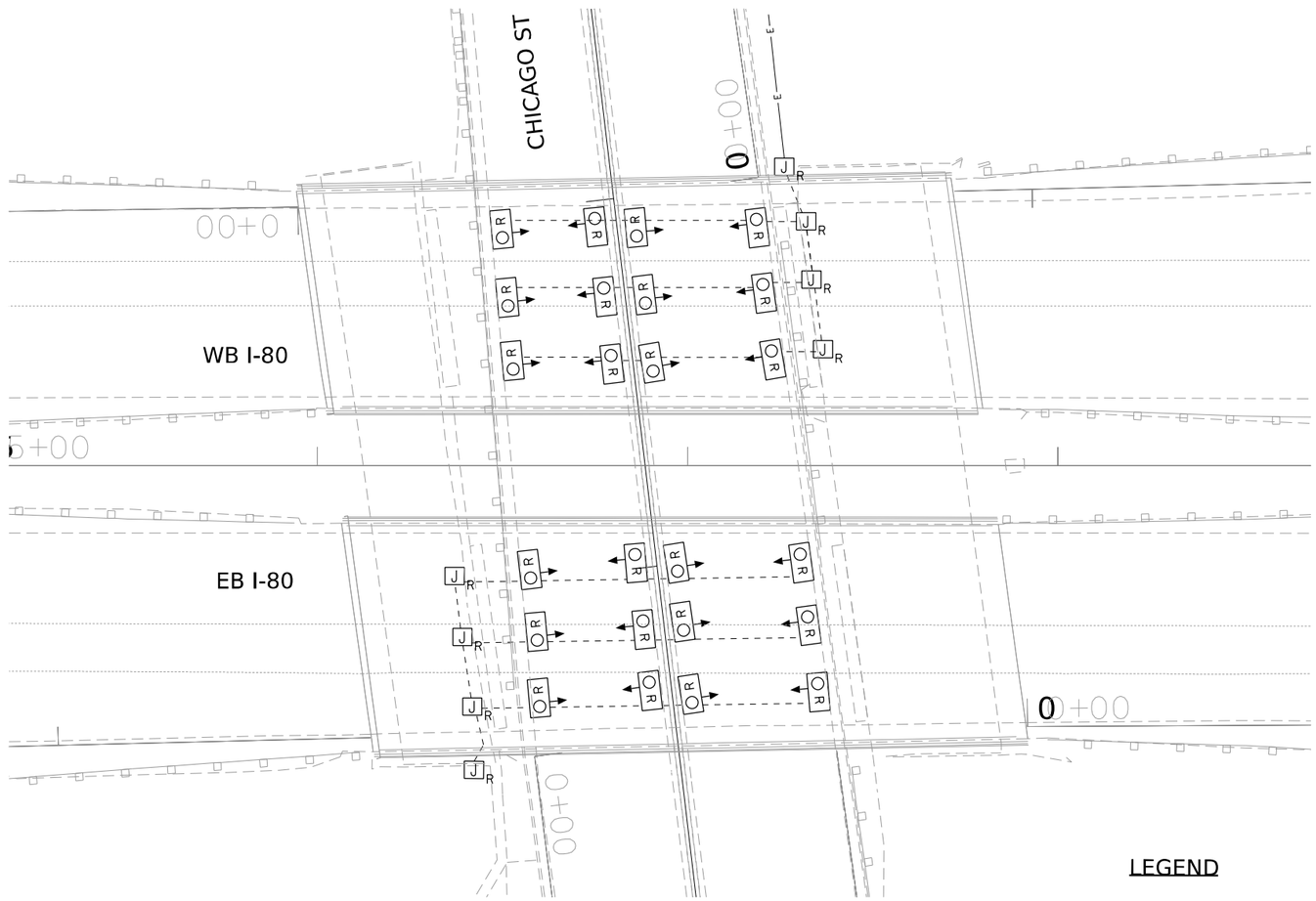

LEGEND

- REMOVE EXISTING UNDERPASS LIGHTING FIXTURE
- REMOVE EXISTING JUNCTION BOX
- REMOVE CABLE AND CONDUIT

NOTES

1. THE REMOVAL OF EXISTING SUSPENDED MOUNT UNDERPASS LUMINAIRES MUST INCLUDE THE REMOVAL OF ALL JUNCTION BOXES, CABLES, CONDUIT , AND HARDWARE ASSOCIATED WITH THE EXISTING UNDERPASS LIGHTING. THE COST OF THIS WORK WILL NOT BE PAID FOR SEPARATELY, BUT WILL BE INCLUDED IN THE COST OF THE ITEM "REMOVAL OF UNDERPASS LIGHTING UNIT, NO SALVAGE."

0 20 40 60
SCALE IN FEET

LT–59

MODEL: Default
FILE NAME: D162F94-01-lht-light59.dgn

SINGH
SINGH + ASSOCIATES, INC.
CONSULTING ENGINEERS

USER NAME = mgarvida	DESIGNED - VG	REVISED -	
	DRAWN - VN/MAG	REVISED -	
PLOT SCALE = 40.000 ' / in.	CHECKED - MG	REVISED -	
PLOT DATE = 10/28/2025	DATE - 10/31/2025	REVISED -	

STATE OF ILLINOIS
DEPARTMENT OF TRANSPORTATION

EXISTING UNDERPASS LIGHTING REMOVAL PLAN
CHICAGO ST UNDER I–80

SCALE: 1"=50' | SHEET 1 OF 1 SHEETS | STA. | TO STA.

F.A.I. RTE.	SECTION	COUNTY	TOTAL SHEETS	SHEET NO.
80	2017-057F	WILL	1342	640
		CONTRACT NO. 62F94		
	ILLINOIS	FED. AID PROJECT		

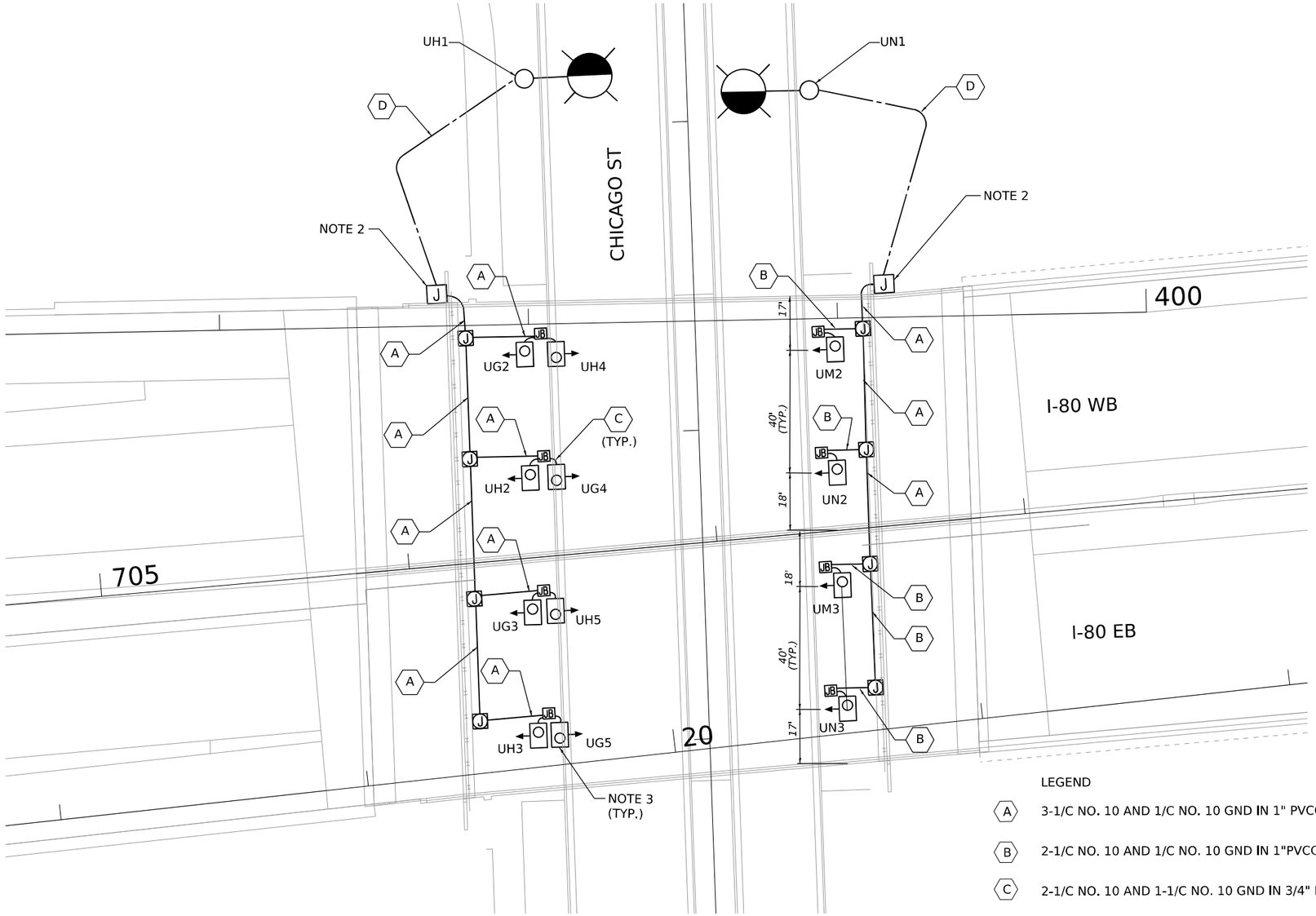

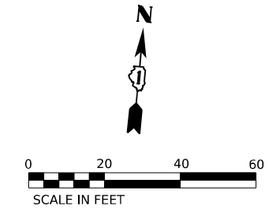

LEGEND

- (A) 3-1/C NO. 10 AND 1/C NO. 10 GND IN 1" PVCC RGC
- (B) 2-1/C NO. 10 AND 1/C NO. 10 GND IN 1"PVCC RGC
- (C) 2-1/C NO. 10 AND 1-1/C NO. 10 GND IN 3/4" LIQUID-TIGHT FLEXIBLE CONDUIT
- (D) UNIT DUCT 3-1/C NO. 2 1/C NO. 4 GND., 1 1/2" DIA., (XLP-TYPE USE)
- LUMINAIRE, LED, UNDERPASS, SUSPENDED, OUTPUT DESIGNATION E (21FT M.H.) 12' SETBACK FROM EOP FOR CHICAGO ST NB. 7' SETBACK FROM EOP AND EDGE OF PATH FOR CHICAGO ST SB
- JB JUNCTION BOX, STAINLESS STEEL, ATTACHED TO STRUCTURE, 6" X 6" X 4"
- (J) JUNCTION BOX, STAINLESS STEEL, ATTACHED TO STRUCTURE, 12" X 10" X 6"
- J JUNCTION BOX, STAINLESS STEEL, ATTACHED TO STRUCTURE, 18" X 18" X 8"

NOTES

1. SEE SHEET LT-01 FOR LEGEND, ABBREVIATIONS, AND GENERAL NOTES.
2. INSTALL FUSEHOLDER WITH 30 AMP FUSES AND NEUTRAL SLUG INSIDE THE JUNCTION BOX.
3. PROPOSED UNDERPASS LUMINAIRE SUSPENDED FROM THE BRIDGE DECK. LUMINAIRE SHALL BE CENTERED IN THE BEAM SPACE AND SHALL BE POSITIONED AT THE SPECIFIED SETBACK FROM THE EDGE OF PAVEMENT.

LT–60

MODEL: Default
FILE NAME: D162F94-01-sht-light60.dgn

SINGH
SINGH + ASSOCIATES, INC.
CONSULTING ENGINEERS

USER NAME = mgarvida	DESIGNED - VG	REVISED -	
	DRAWN - VN/MAG	REVISED -	
PLOT SCALE = 40.000 ' / in.	CHECKED - MG	REVISED -	
PLOT DATE = 10/28/2025	DATE - 10/31/2025	REVISED -	

STATE OF ILLINOIS
DEPARTMENT OF TRANSPORTATION

PROPOSED UNDERPASS LIGHTING PLAN
CHICAGO ST UNDER I–80

SCALE: 1"=50' | SHEET 1 OF 1 SHEETS | STA. | TO STA.

F.A.I. RTE.	SECTION	COUNTY	TOTAL SHEETS	SHEET NO.
80	2017-057F	WILL	1342	641
		CONTRACT NO. 62F94		
	ILLINOIS	FED. AID PROJECT		

A 3-1/C NO. 10 AND 1/C NO. 10 GND IN 1" PVCC RGC

B 2-1/C NO. 10 AND 1/C NO. 10 GND IN 1"PVCC RGC

C 2-1/C NO. 10 AND 1-1/C NO. 10 GND IN 3/4" LIQUID-TIGHT FLEXIBLE CONDUIT

D UNIT DUCT, 600V, 3-1/C NO. 2, 1/C NO. 4 GROUND IN 1 1/2" DIA, (XLP-TYPE USE)

LUMINAIRE, LED, UNDERPASS, SUSPENDED, OUTPUT DESIGNATION D (17FT M.H.) (240 VAC) U.N.O., 12' SETBACK FROM EOP

LUMINAIRE, LED, UNDERPASS, WALLMOUNT, OUTPUT DESIGNATION D (24FT M.H.) (240 VAC) U.N.O.

JB JUNCTION BOX, STAINLESS STEEL, ATTACHED TO STRUCTURE, 6" X 6" X 4"

JUNCTION BOX, STAINLESS STEEL, ATTACHED TO STRUCTURE, 12" X 10" X 6"

J JUNCTION BOX, STAINLESS STEEL, ATTACHED TO STRUCTURE, 18" X 18" X 8"

NOTES

1. SEE SHEET LT-01 FOR LEGEND, ABBREVIATIONS, AND GENERAL NOTES.
2. INSTALL FUSEHOLDER WITH 30 AMP FUSES AND NEUTRAL SLUG INSIDE THE JUNCTION BOX.
3. PROPOSED UNDERPASS LUMINAIRE SUSPENDED FROM THE BRIDGE DECK. LUMINAIRE SHALL BE CENTERED IN THE BEAM SPACE AND SHALL BE POSITIONED AT THE SPECIFIED SETBACK FROM THE EDGE OF PAVEMENT.
4. LUMINAIRE TILT SHALL BE ADJUSTED TO MEET PERFORMANCE TABLE REQUIREMENTS.
5. THE CONTRACTOR SHALL SUBMIT THE PROPOSED BNSF UNDERPASS LUMINAIRE LOCATIONS TO BNSF FOR REVIEW PRIOR TO INSTALLATION.
6. CONDUIT TO BE ATTACHED TO BRIDGE DECK. PROVIDE LIQUID TIGHT FLEXIBLE CONDUIT TRANSITIONS. SEE SHEET LT-82 FOR DETAILS.

LT–61

MODEL: Default
FILE NAME: D162F94-01-sht-light61.dgn

SINGH
SINGH + ASSOCIATES, INC.
CONSULTING ENGINEERS

USER NAME = mgarvida	DESIGNED - MAG	REVISED -	
	DRAWN - MAG	REVISED -	
PLOT SCALE = 40.000 ' / in.	CHECKED - MG/RP	REVISED -	
PLOT DATE = 10/28/2025	DATE - 10/31/2025	REVISED -	

STATE OF ILLINOIS
DEPARTMENT OF TRANSPORTATION

PROPOSED UNDERPASS LIGHTING PLAN
RAMP B AND BNSF/UPRR UNDER I–80

SCALE: 1"=50' | SHEET 1 OF 1 SHEETS | STA. TO STA.

F.A.I. RTE.	SECTION	COUNTY	TOTAL SHEETS	SHEET NO.
80	2017-057F	WILL	1342	642
		CONTRACT NO. 62F94		
		ILLINOIS	FED. AID PROJECT	

LEGEND

- PROPOSED IDOT LIGHTING UNIT, LED LUMINAIRE
- PROPOSED WALL MOUNTED IDOT LIGHTING UNIT, LED LUMINAIRE
- IDOT LIGHTING UNIT, INSTALLED UNDER CONTRACT 62R23
- IDOT WALL MOUNTED LIGHTING UNIT, INSTALLED UNDER CONTRACT 62R23
- PROPOSED IDOT TWIN LIGHTING UNIT, LED LUMINAIRE
- LIGHTING CONTROLLER, 240/480V, SINGLE PHASE, 3 WIRE, SCADA & FIBER OPTIC
- ELECTRIC UTILITY SERVICE
- PROPOSED UNDERPASS LIGHTING UNIT, LED LUMINAIRE
- PROPOSED UNIT DUCT
- PROPOSED CABLE IN CONDUIT
- UNIT DUCT, INSTALLED UNDER CONTRACT 62R23
- CABLE IN CONDUIT, INSTALLED UNDER CONTRACT 62R23

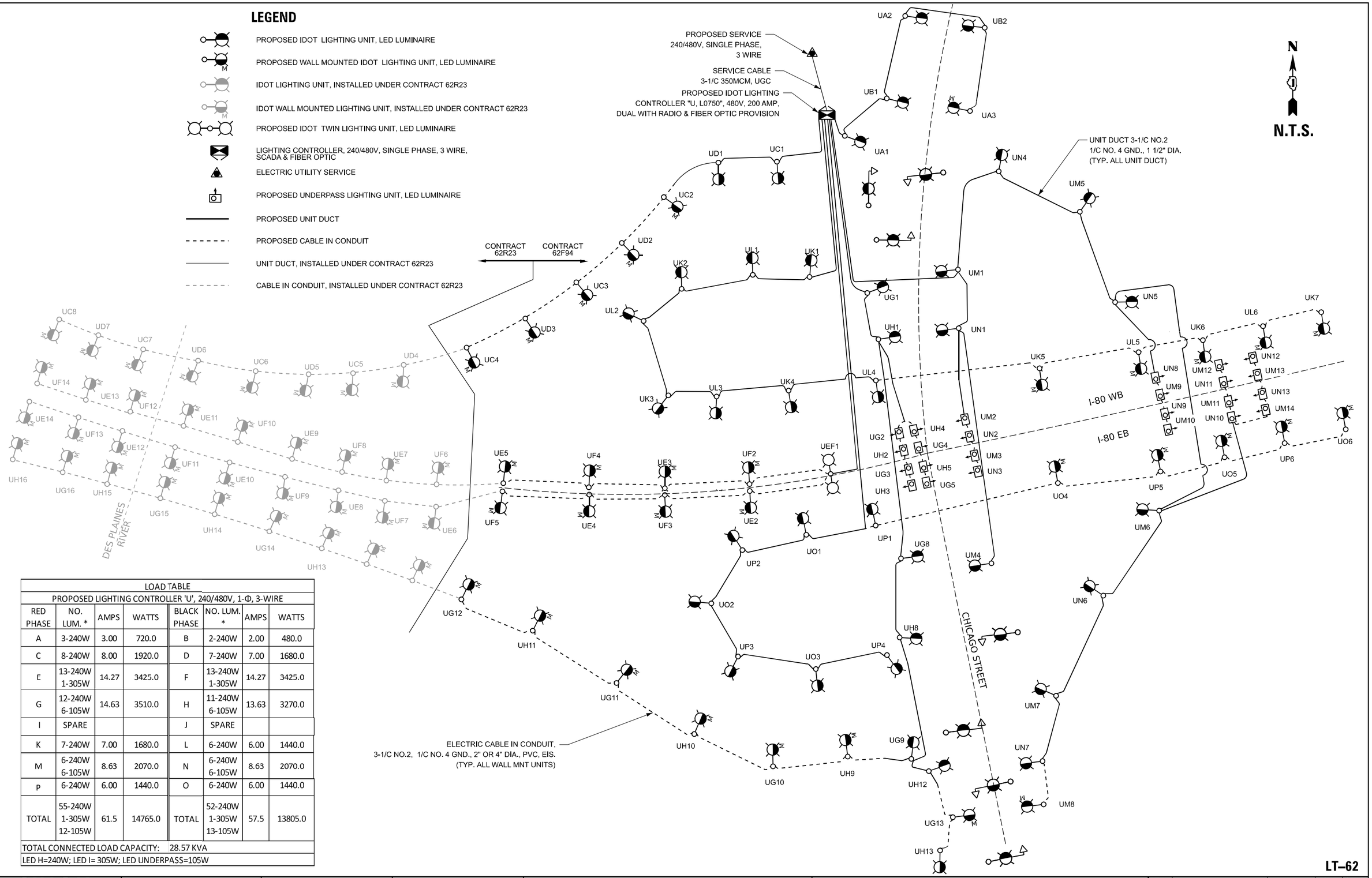

LOAD TABLE							
PROPOSED LIGHTING CONTROLLER 'U', 240/480V, 1-Φ, 3-WIRE							
RED PHASE	NO. LUM. *	AMPS	WATTS	BLACK PHASE	NO. LUM. *	AMPS	WATTS
A	3-240W	3.00	720.0	B	2-240W	2.00	480.0
C	8-240W	8.00	1920.0	D	7-240W	7.00	1680.0
E	13-240W 1-305W	14.27	3425.0	F	13-240W 1-305W	14.27	3425.0
G	12-240W 6-105W	14.63	3510.0	H	11-240W 6-105W	13.63	3270.0
I	SPARE			J	SPARE		
K	7-240W	7.00	1680.0	L	6-240W	6.00	1440.0
M	6-240W 6-105W	8.63	2070.0	N	6-240W 6-105W	8.63	2070.0
P	6-240W	6.00	1440.0	O	6-240W	6.00	1440.0
TOTAL	55-240W 1-305W 12-105W	61.5	14765.0	TOTAL	52-240W 1-305W 13-105W	57.5	13805.0
TOTAL CONNECTED LOAD CAPACITY: 28.57 KVA							
LED H=240W; LED I= 305W; LED UNDERPASS=105W							

LT–62

MODEL: Default
FILE NAME: D162F94-01-sht-light62.dgn

SINGH
SINGH + ASSOCIATES, INC.
CONSULTING ENGINEERS

USER NAME = mgarvida	DESIGNED - VG	REVISED -	
	DRAWN - VN/MAG	REVISED -	
PLOT SCALE = 0.167 ' / in.	CHECKED - MG	REVISED -	
PLOT DATE = 10/28/2025	DATE - 10/31/2025	REVISED -	

STATE OF ILLINOIS
DEPARTMENT OF TRANSPORTATION

PROPOSED IDOT CONTROLLER "U" WIRING SCHEMATIC

SCALE: | SHEET OF SHEETS | STA. TO STA.

F.A.I. RTE.	SECTION	COUNTY	TOTAL SHEETS	SHEET NO.
80	2017-057F	WILL	1342	643
		CONTRACT NO. 62F94		
	ILLINOIS	FED. AID PROJECT		

LEGEND

IDOT COMBINATION LIGHT POLE
45 FT LUMINAIRE MOUNTING HEIGHT
15 FT LUMINAIRE ARM
LUMINAIRE, LED, OUTPUT DESIGNATION H, 120V,
WITH 6 AMP FUSE & NEUTRAL SLUG

HANDHOLE

IDOT COMBINATION LIGHTING CONTROLLER
INSIDE TRAFFIC CONTROLLER

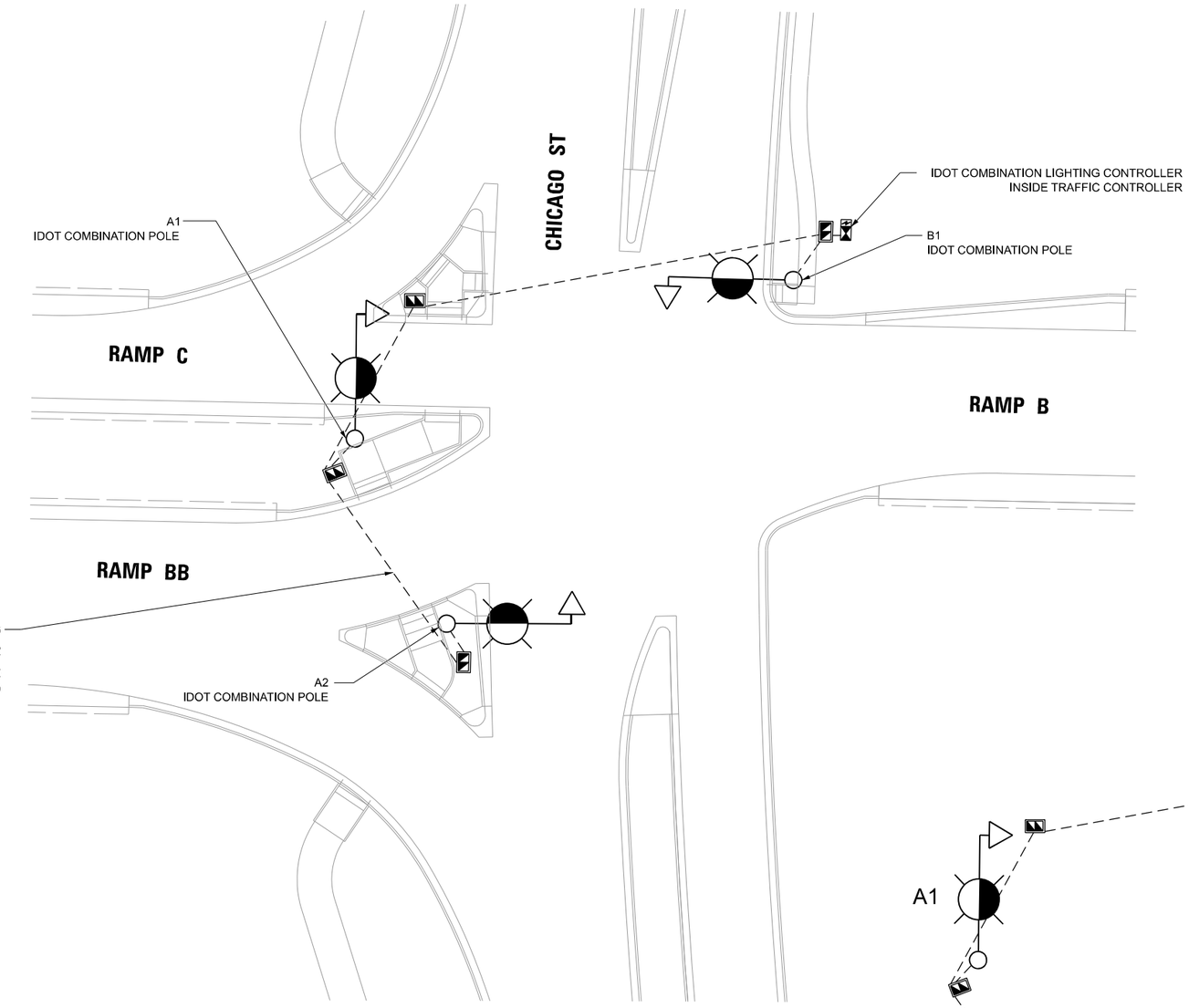

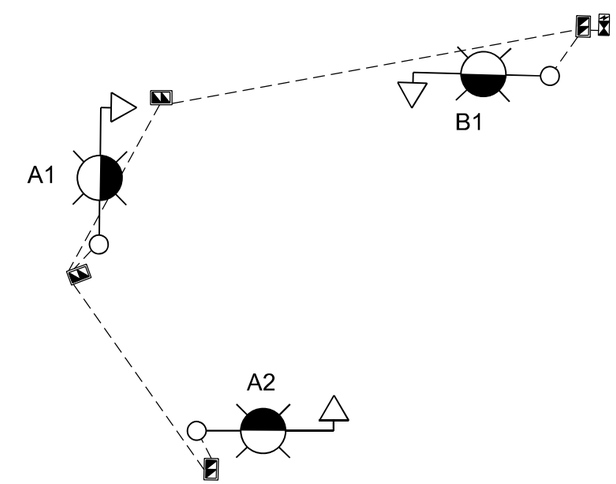

ONE LINE DIAGRAM

NOTES:

1. THE IDOT COMBINATION LIGHTING CIRCUITING SHALL NOT BE CONNECTED TO THE ROADWAY LIGHTING CIRCUITS.
2. LUMINAIRES ARE POWERED FROM IDOT TRAFFIC CONTROLLER, SEE DETAIL BE-240.
3. THE COMBINATION LIGHTING CABLE AND SIGNAL CABLES WILL BE IN SHARED CONDUIT.
4. SEE TRAFFIC SIGNAL PLANS FOR LOCATION OF COMBINATION POLES, HANDHOLES AND CONDUIT.
5. CIRCUIT DECALS SHALL NOT BE INSTALLED ON COMBINATION POLES. CIRCUITING DECALS SHOWN ARE FOR GUIDANCE ONLY.

IDOT COMBINATION LIGHTING SCHEDULE OF QUANTITIES

DESCRIPTION	UNIT	QUANTITY
LUMINAIRE, LED, ROADWAY, OUTPUT DESIGNATION H	EACH	3
COMBINATION LIGHTING CONTROLLER	EACH	1
LUMINAIRE SAFETY CABLE ASSEMBLY	EACH	3
ELECTRIC CABLE IN CONDUIT, 600V, (XLP TYPE USE) 1/C NO. 10	FOOT	550

LT–63

MODEL: Default
FILE NAME: D162F94-01-sht-light63.dgn

SINGH
SINGH + ASSOCIATES, INC.
CONSULTING ENGINEERS

USER NAME = mgarvida	DESIGNED - VG	REVISED -	
	DRAWN - VN/MAG	REVISED -	
PLOT SCALE = 40.000 ' / in.	CHECKED - MG	REVISED -	
PLOT DATE = 10/28/2025	DATE - 10/31/2025	REVISED -	

STATE OF ILLINOIS
DEPARTMENT OF TRANSPORTATION

PROPOSED COMBINATION LIGHTING PLAN
CHICAGO ST. AND WB RAMPS B/BB

SCALE: SHEET OF SHEETS STA. TO STA.

F.A.I. RTE.	SECTION	COUNTY	TOTAL SHEETS	SHEET NO.
80	2017-057F	WILL	1342	644

CONTRACT NO. 62F94
ILLINOIS FED. AID PROJECT

LEGEND

IDOT COMBINATION LIGHT POLE
45 FT LUMINAIRE MOUNTING HEIGHT
15 FT LUMINAIRE ARM
LUMINAIRE, LED, OUTPUT DESIGNATION H, 120V,
WITH 6 AMP FUSE & NEUTRAL SLUG

HANDHOLE

IDOT COMBINATION LIGHTING CONTROLLER
INSIDE TRAFFIC CONTROLLER

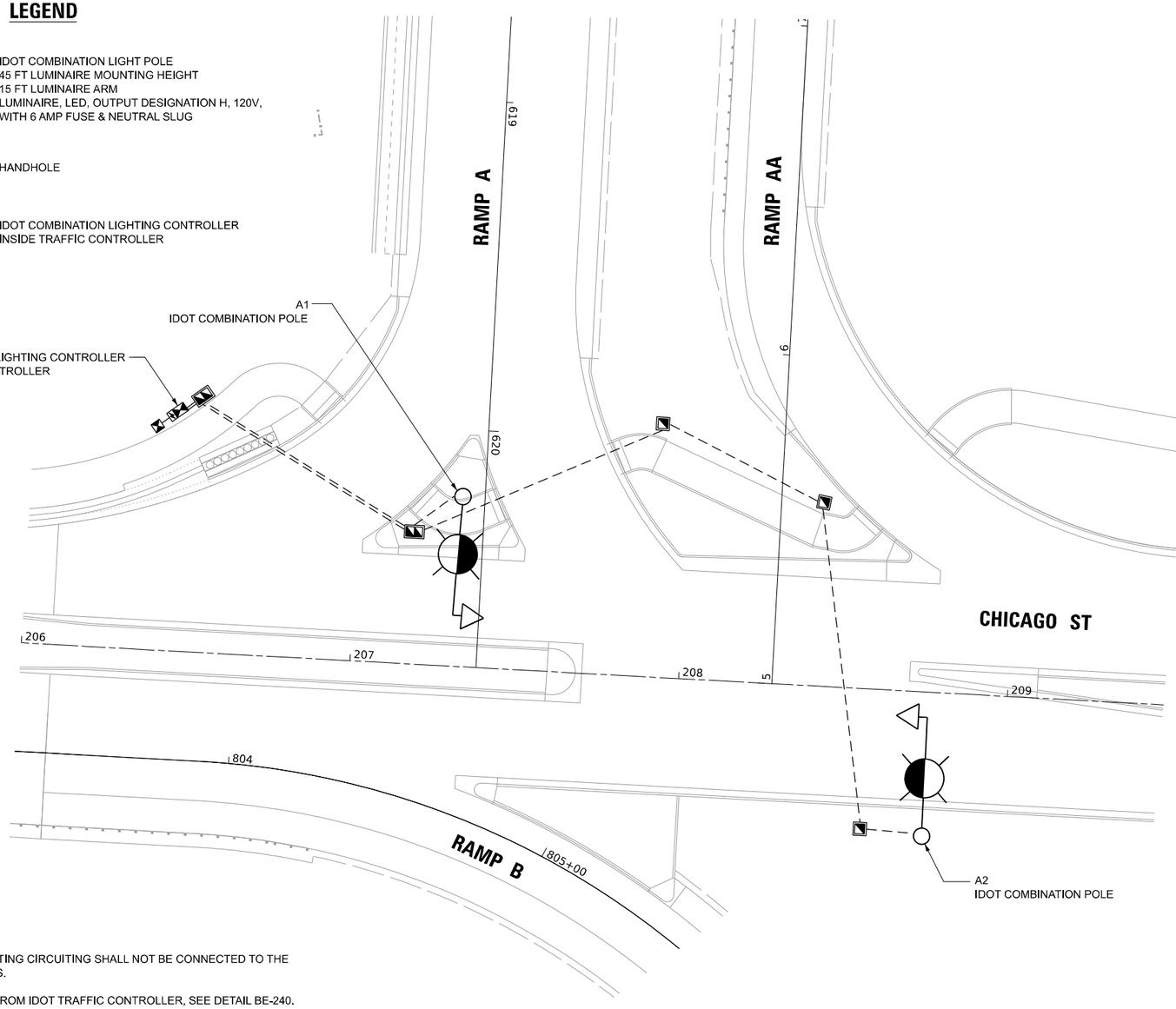

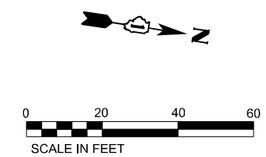

NOTES:

1. THE IDOT COMBINATION LIGHTING CIRCUITING SHALL NOT BE CONNECTED TO THE ROADWAY LIGHTING CIRCUITS.
2. LUMINAIRES ARE POWERED FROM IDOT TRAFFIC CONTROLLER, SEE DETAIL BE-240.
3. THE COMBINATION LIGHTING CABLE AND SIGNAL CABLES WILL BE IN SHARED CONDUIT.
4. SEE TRAFFIC SIGNAL PLANS FOR LOCATION OF COMBINATION POLES, HANDHOLES AND CONDUIT.
5. CIRCUIT DECALS SHALL NOT BE INSTALLED ON COMBINATION POLES. CIRCUITING DECALS SHOWN ARE FOR GUIDANCE ONLY.

IDOT COMBINATION LIGHTING SCHEDULE OF QUANTITIES

DESCRIPTION	UNIT	QUANTITY
LUMINAIRE, LED, ROADWAY, OUTPUT DESIGNATION H	EACH	2
COMBINATION LIGHTING CONTROLLER	EACH	1
LUMINAIRE SAFETY CABLE ASSEMBLY	EACH	2
ELECTRIC CABLE IN CONDUIT, 600V, (XLP TYPE USE) 1/C NO. 10	FOOT	340

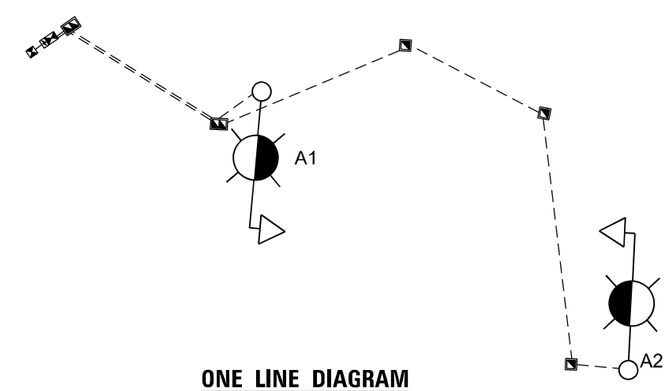

ONE LINE DIAGRAM

LT–64

MODEL: Default
FILE NAME: D162F94-01-sht-light64.dgn

SINGH
SINGH + ASSOCIATES, INC.
CONSULTING ENGINEERS

USER NAME = mgarvida	DESIGNED - VG	REVISED -	
	DRAWN - VN/MAG	REVISED -	
PLOT SCALE = 40.000 ' / in.	CHECKED - MG	REVISED -	
PLOT DATE = 10/28/2025	DATE - 10/31/2025	REVISED -	

STATE OF ILLINOIS
DEPARTMENT OF TRANSPORTATION

PROPOSED COMBINATION LIGHTING PLAN
CHICAGO ST. AND RAMPS A/AA/B

SCALE: | SHEET OF SHEETS | STA. TO STA.

F.A.I. RTE.	SECTION	COUNTY	TOTAL SHEETS	SHEET NO.
80	2017-057F	WILL	1342	645
		CONTRACT NO. 62F94		
	ILLINOIS	FED. AID PROJECT		

LEGEND

IDOT COMBINATION LIGHT POLE
45 FT LUMINAIRE MOUNTING HEIGHT
15 FT LUMINAIRE ARM
LUMINAIRE, LED, OUTPUT DESIGNATION H, 120V,
WITH 6 AMP FUSE & NEUTRAL SLUG

HANDHOLE

IDOT COMBINATION LIGHTING CONTROLLER
INSIDE TRAFFIC CONTROLLER

0 20 40 60
SCALE IN FEET

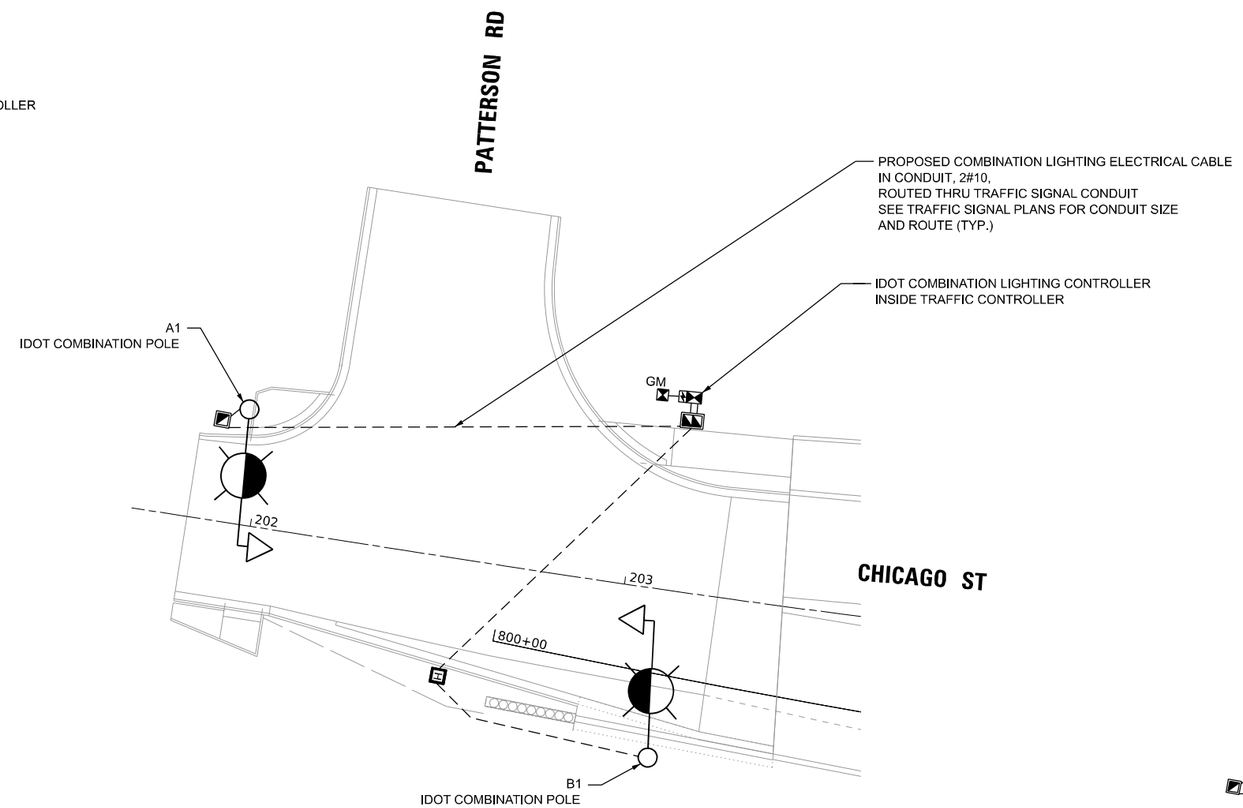

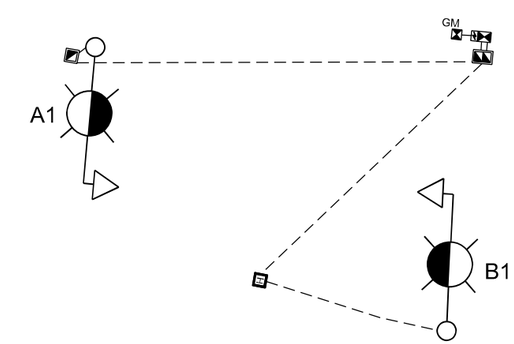

ONE LINE DIAGRAM

NOTES:

1. THE IDOT COMBINATION LIGHTING CIRCUITING SHALL NOT BE CONNECTED TO THE ROADWAY LIGHTING CIRCUITS.
2. LUMINAIRES ARE POWERED FROM IDOT TRAFFIC CONTROLLER, SEE DETAIL BE-240.
3. THE COMBINATION LIGHTING CABLE AND SIGNAL CABLES WILL BE IN SHARED CONDUIT.
4. SEE TRAFFIC SIGNAL PLANS FOR LOCATION OF COMBINATION POLES, HANDHOLES AND CONDUIT.
5. CIRCUIT DECALS SHALL NOT BE INSTALLED ON COMBINATION POLES. CIRCUITING DECALS SHOWN ARE FOR GUIDANCE ONLY.

IDOT COMBINATION LIGHTING SCHEDULE OF QUANTITIES

DESCRIPTION	UNIT	QUANTITY
LUMINAIRE, LED, ROADWAY, OUTPUT DESIGNATION H	EACH	2
COMBINATION LIGHTING CONTROLLER	EACH	1
LUMINAIRE SAFETY CABLE ASSEMBLY	EACH	2
ELECTRIC CABLE IN CONDUIT, 600V, (XLP TYPE USE) 1/C NO. 10	FOOT	370

LT–65

MODEL: Default
FILE NAME: D162F94-01-sht-light65.dgn

SINGH
SINGH + ASSOCIATES, INC.
CONSULTING ENGINEERS

USER NAME = mgarvida	DESIGNED - VG	REVISED -	
	DRAWN - VN/MAG	REVISED -	
PLOT SCALE = 40.000 ' / in.	CHECKED - MG	REVISED -	
PLOT DATE = 10/28/2025	DATE - 10/31/2025	REVISED -	

STATE OF ILLINOIS
DEPARTMENT OF TRANSPORTATION

PROPOSED COMBINATION LIGHTING PLAN
CHICAGO ST. AND PATTERSON ST.

SCALE: SHEET OF SHEETS STA. TO STA.

F.A.I. RTE.	SECTION	COUNTY	TOTAL SHEETS	SHEET NO.
80	2017-057F	WILL	1342	646
		CONTRACT NO. 62F94		
	ILLINOIS	FED. AID PROJECT		

NOTES:

1. ALL DIMENSIONS ARE IN INCHES (MILLIMETERS) UNLESS OTHERWISE SHOWN.

2. THE ANCHOR BOLTS AND RACEWAYS SHALL BE PROPERLY SECURED IN PLACE BEFORE THE CONCRETE IS PLACED IN THE FORMS.

3. THE CONTRACTOR AT HIS OPTION MAY SUBSTITUTE #4 (15 m) TIES AT 12" (304.8 m) CTRS. FOR THE #3 (3 m) SPIRAL. TACKWELDED TYPE BOLT MAY BE SUBSTITUTED FOR THE HOOK TYPE BOLT.

4. COLD BENDING OF THE HOOK BOLT SHALL NOT BE ALLOWED.

5. EXCAVATION FOR THE POLE FOUNDATION SHALL BE MADE WITH AN AUGER 24 INCHES (609.6 m) IN DIAMETER. ROCK EXCAVATION IF REQUIRED SHALL BE IN ACCORDANCE WITH STANDARD SPECIFICATIONS SECTION 502.

6. THE ENGINEER SHALL DETERMINE THE TYPE OF SOIL DURING EXCAVATION AND SELECT THE DESIGN DEPTH OF FOUNDATION FROM THE DESIGN TABLE USING THE DOMINANT CHARACTERISTIC OF THE SOIL ENCOUNTERED.

7. BARRIER WALL EXPANSION AND CONSTRUCTION JOINTS SHALL BE IN ACCORDANCE WITH STANDARD DETAIL 637006-05 AS APPLICABLE. SHAPE OF BARRIER TO MATCH ADJACENT BARRIER SECTIONS (TYPICAL OR VARIABLE HEIGHT).

8. ANCHOR RODS, NUTS, AND WASHERS SHALL BE IN ACCORDANCE WITH STANDARD SPECIFICATIONS ARTICLES 1070.02 AND 1006.09.

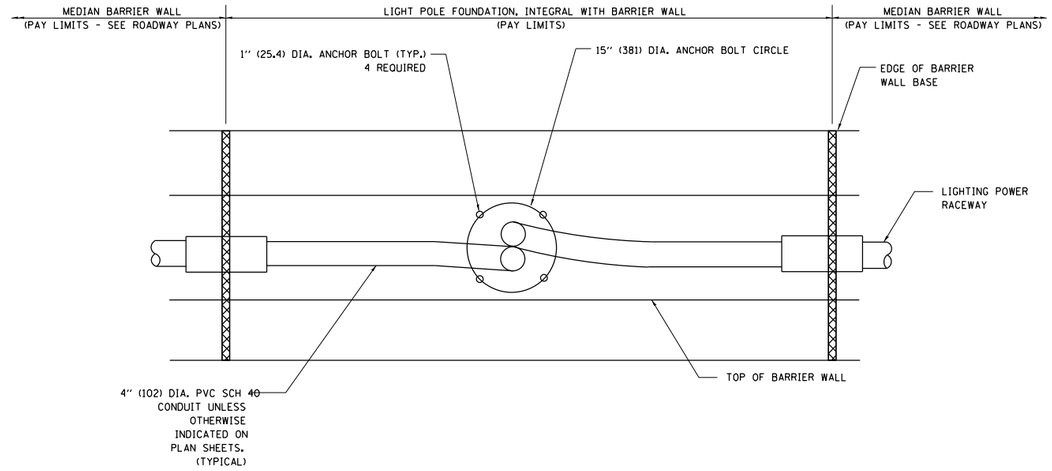

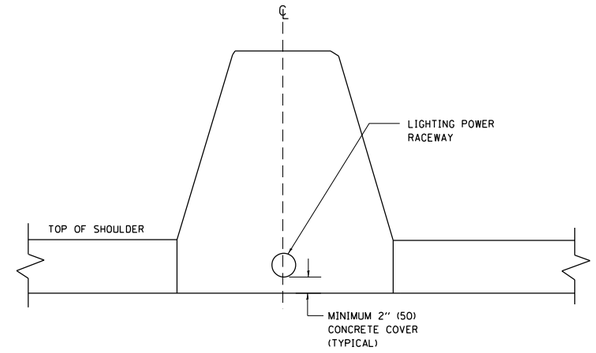

SECTION A-A

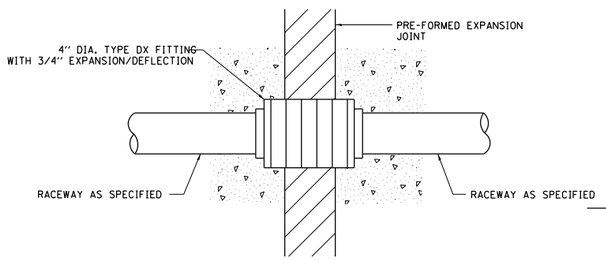

CONDUIT DEFLECTION FITTING DETAIL

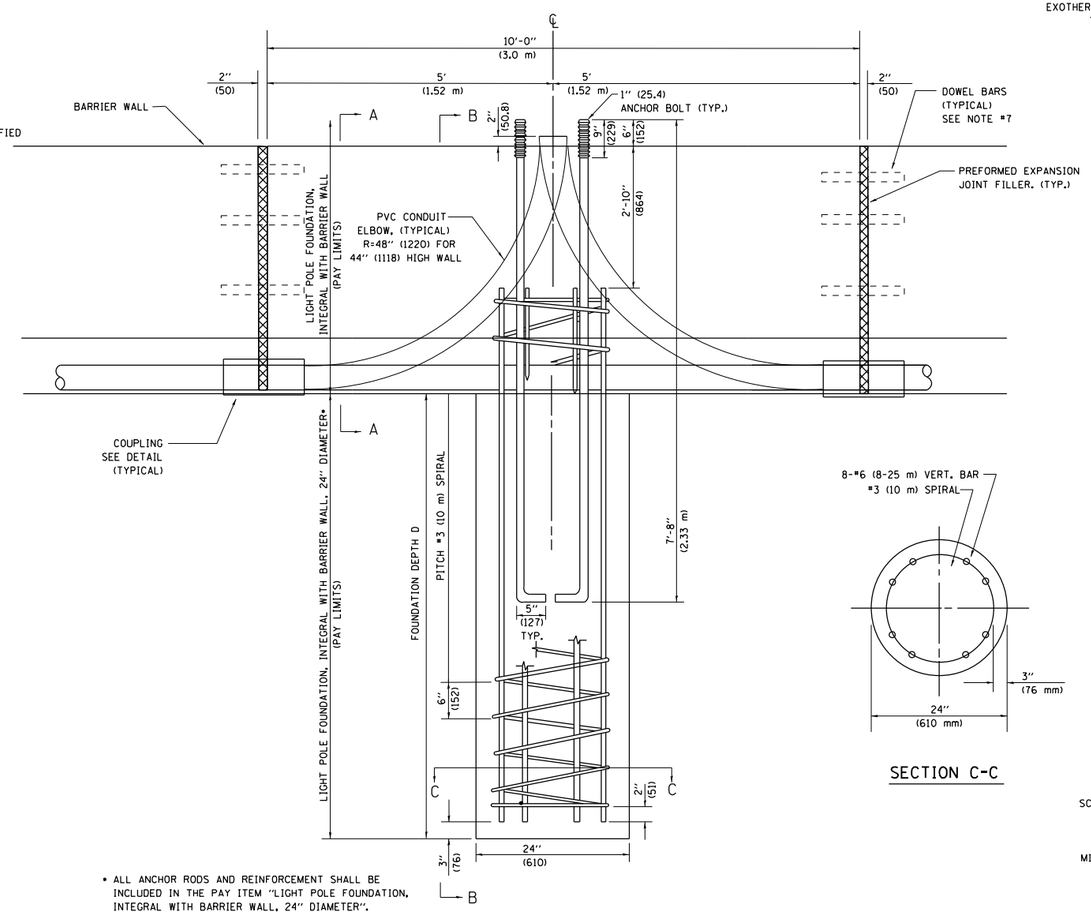

* ALL ANCHOR RODS AND REINFORCEMENT SHALL BE INCLUDED IN THE PAY ITEM "LIGHT POLE FOUNDATION, INTEGRAL WITH BARRIER WALL, 24" DIAMETER".

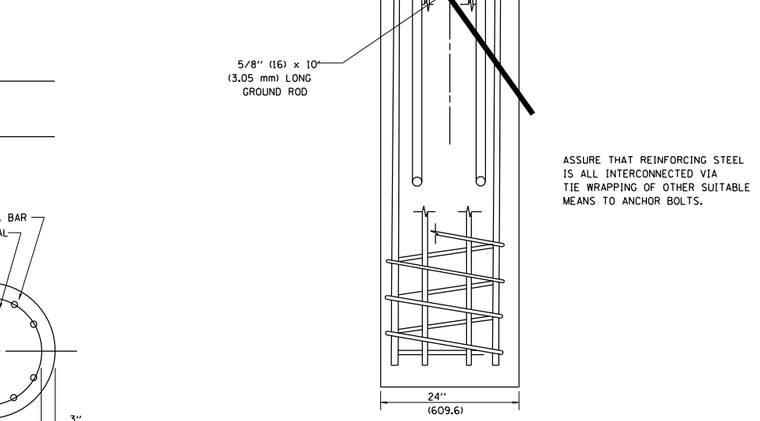

ASSURE THAT REINFORCING STEEL IS ALL INTERCONNECTED VIA TIE WRAPPING OF OTHER SUITABLE MEANS TO ANCHOR BOLTS.

SECTION B-B

SECTION C-C

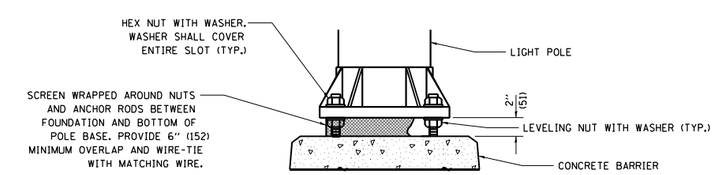

ELEVATION AT CONCRETE BARRIER

FOUNDATION DEPTH

TYPE OF SOIL	FOUND DEPTH D	REINFORCEMENT IN FOUNDATION	
		VERTICAL BARS	SPIRAL
ROCK OR SOLIDIFIED SLAG	5'-0" (1.52 m)	NONE	NONE
DENSE SAND	7'-9" (2.36 m)	8-#6 x 9'-0" (8-20 m x 2.74 m)	#3 x 90' (3 m x 27.43 m)
MEDIUM SAND	8'-3" (2.51 m)	8-#6 x 9'-5" (8-20 m x 2.87 m)	#3 x 94' (3 m x 28.65 m)
LOOSE SAND	9'-0" (2.74 m)	8-#6 x 10'-2" (8-20 m x 3.09 m)	#3 x 100' (3 m x 30.48 m)
STIFF CLAY	7'-0" (2.13 m)	8-#6 x 10'-8" (8-20 m x 2.48 m)	#3 x 80' (3 m x 24.38 m)
MEDIUM CLAY	9'-6" (2.89 m)	8-#6 x 10'-8" (8-20 m x 3.25 m)	#3 x 104' (3 m x 31.69 m)
SOFT CLAY	13'-0" (3.96 m)	8-#6 x 14'-2" (8-20 m x 4.32 m)	#3 x 144' (3 m x 43.89 m)

LT-66

MODEL: Default
FILE NAME: D162F94-01-sht-light66.dgn

SINGH
SINGH + ASSOCIATES, INC.
CONSULTING ENGINEERS

USER NAME = mgarvida	DESIGNED -	REVISED -	
	DRAWN -	REVISED -	
PLOT SCALE = 0.167 ' / in.	CHECKED -	REVISED -	
PLOT DATE = 10/28/2025	DATE - 10/31/2025	REVISED -	

STATE OF ILLINOIS
DEPARTMENT OF TRANSPORTATION

I-80 CORRIDOR DETAILS
24" (610 mm) DIA. LIGHT POLE FOUNDATION INTEGRAL WITH DOUBLE FACE BARRIER WALL

SCALE: SHEET OF SHEETS STA. TO STA.

F.A.I. RTE.	SECTION	COUNTY	TOTAL SHEETS	SHEET NO.
80	2017-057F	WILL	1342	647
		CONTRACT NO. 62F94		
		ILLINOIS	FED. AID PROJECT	

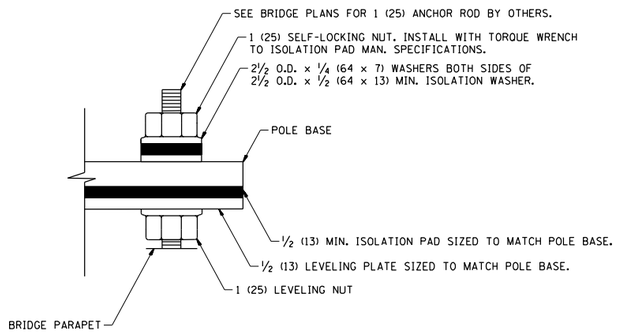

DETAIL A

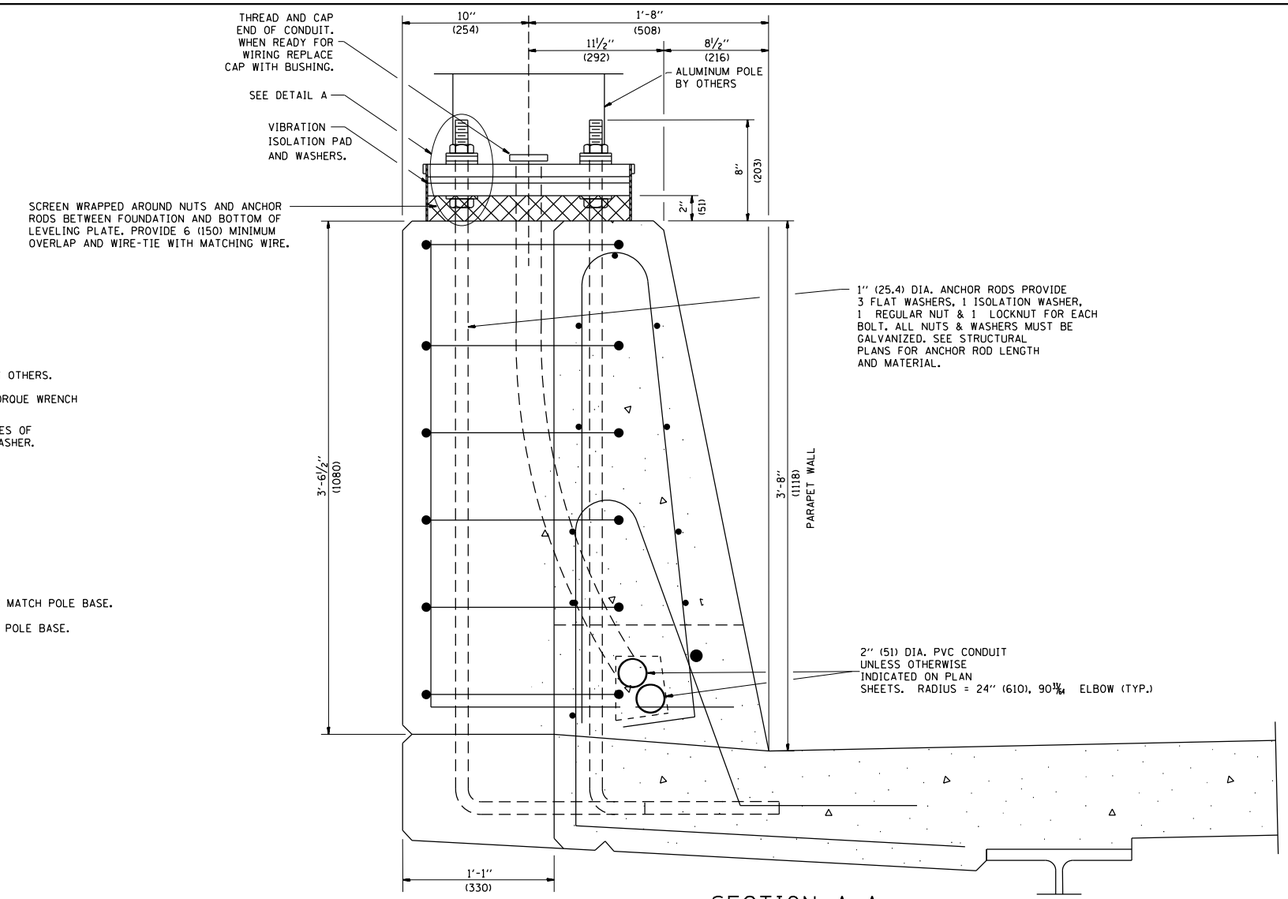

SECTION A-A

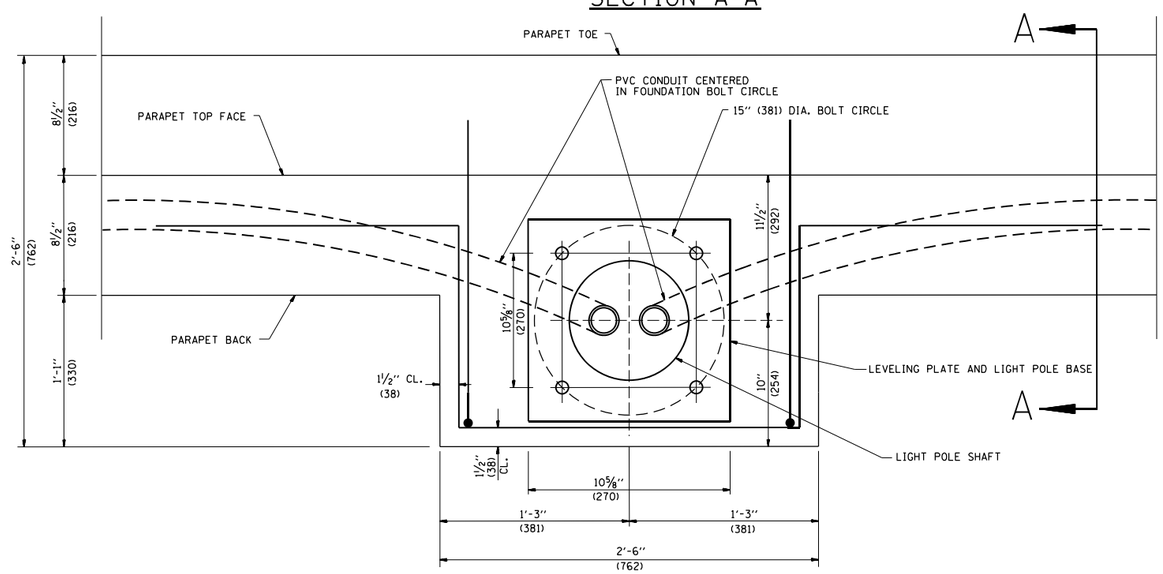

PLAN

NOTES

1. ALL DIMENSIONS ARE IN INCHES (MILLIMETERS) UNLESS OTHERWISE SHOWN.
2. THE COST OF ANCHOR RODS IS INCLUDED WITH CONCRETE SUPERSTRUCTURE.
3. SEE STRUCTURAL PLANS FOR ANCHOR ROD AND REBAR DETAILS.

LT–67

MODEL: Default
FILE NAME: D162F94-01-sht-light67.dgn

SINGH
SINGH + ASSOCIATES, INC.
CONSULTING ENGINEERS

USER NAME = mgarvida	DESIGNED -	REVISED -	
	DRAWN -	REVISED -	
PLOT SCALE = 0.167 ' / in.	CHECKED -	REVISED -	
PLOT DATE = 10/28/2025	DATE - 10/31/2025	REVISED -	

STATE OF ILLINOIS
DEPARTMENT OF TRANSPORTATION

I–80 CORRIDOR DETAILS
LIGHT POLE MOUNTED ON CONCRETE PARAPET WALL
15" (381 mm) BOLT CIRCLE

SCALE: | SHEET OF SHEETS | STA. TO STA.

F.A.I. RTE.	SECTION	COUNTY	TOTAL SHEETS	SHEET NO.
80	2017-057F	WILL	1342	648
		CONTRACT NO. 62F94		
		ILLINOIS	FED. AID PROJECT	

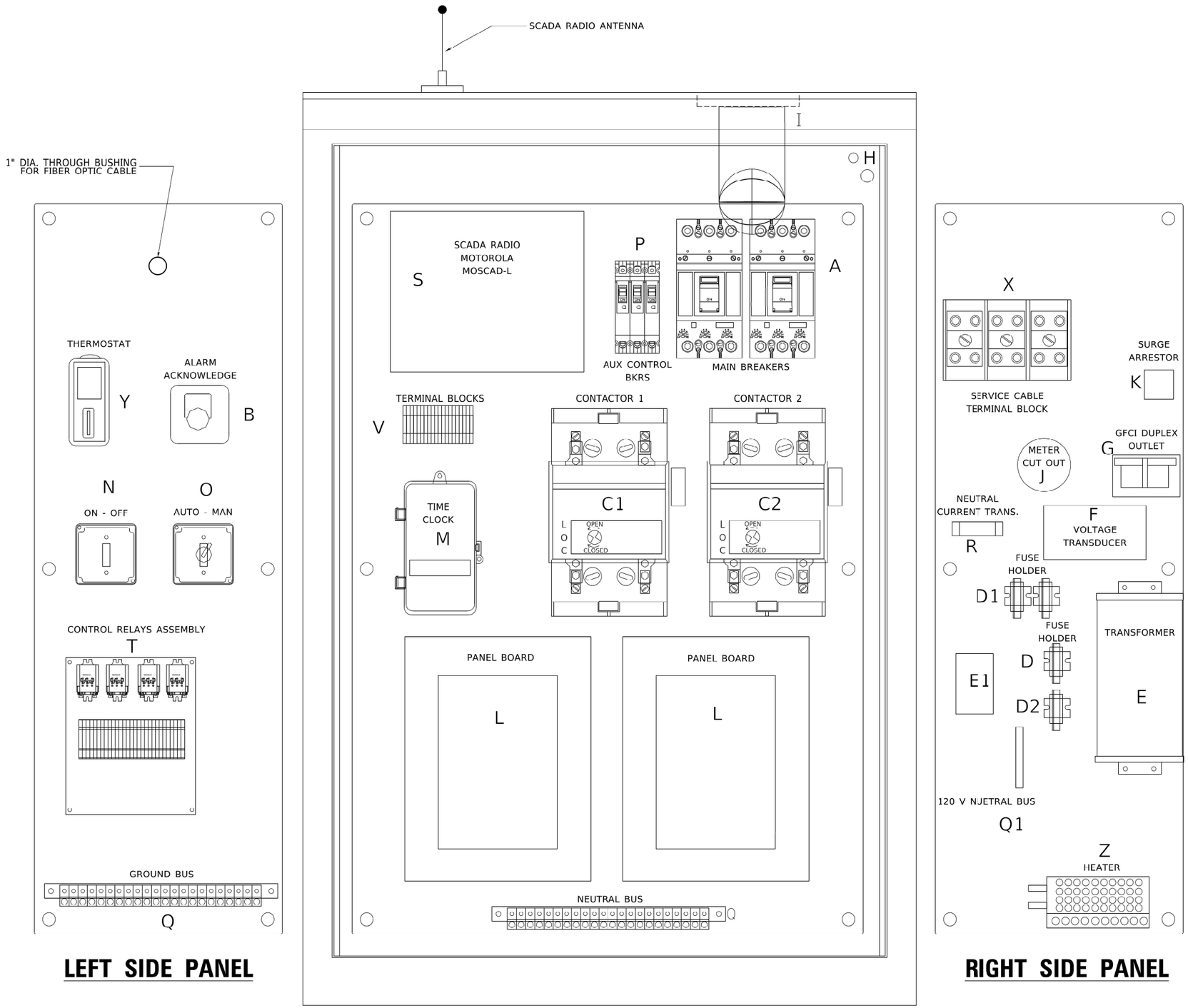

LEFT SIDE PANEL

RIGHT SIDE PANEL

BILL OF MATERIALS

ITEM	QTY	DESCRIPTION
A	2	MAIN CIRCUIT BREAKERS 2 POLE 200 AMP WITH AUX CONTACT
B	1	ACKNOWLEDGE SWITCH, PUSH BUTTON WITH YELLOW INSERT
C1. C2 *	2	CONTACTOR 2 POLE 200 AMP 240V COIL WITH AUX CONTACTS
D	1	FINGERSAFE FUSE HOLDER WITH KTK - 20A FUSE
D1	2	FINGERSAFE FUSE HOLDER WITH KTK - ½ A FUSE
D2	1	FINGERSAFE FUSE HOLDER WITH KTK - 2A FUSE
E	1	2.0 KVA 277V-240/120 TRANSFORMER
E1	1	0.25 KVA240/ 120 - 24 VAC TRANSFORMER
F	1	VOLTAGE TRANSDUCER WITH COVER TERMINALS
G	1	20 AMP GFCI DUPLEX OUTLET W/COVER
H	2	DOOR SWITCH
I	1	LIGHT FIXTURE
J	1	METER FITTING 1 PHASE 3 WIRE 200 AMP
K	1	SURGE ARRESTER
L	2	PANEL BOARD 480/ 240V 1 PHASE, 250 AMP COPPER BUS
M	1	2 CHANNEL DIGITAL TIME CLOCK
N	1	MOMENTARY SWITCH ON - OFF
O	1	SQUARE D, 9001KS11BH13, 2 POSITION SWITCH IN 9001KY1 ENCLOSURE OR APPROVED EQUAL
P	2	BREAKER 1P 15A
Q	2	COPPER GROUND AND NEUTRAL BUS 1 X 16 X 1/4
Q1	1	COPPER NEUTRAL BUS WITH 1 #6 AND 8 #12 CONDUCTOR POINTS
R	1	CURRENT TRANSDUCER
S	1	MOTOROLA MOSCAD-L RADIO, 240 V
T *	1	CONTROL RELAY ASSEMBLY 240V COILS WITH 4 - 3PDT 25A RELAYS (W389ACX-15) (R1, R2, R3, R4). QTY 32 TERMINAL BLOCKS
V	20	TERMINAL BLOCKS
X *	1	620 AMP SPLICE BLOCK
Y	1	40-80 DEGREE THERMOSTAT
Z	1	375 WATT HEATER

* TERMINALS SHALL BE COVERED WITH CLEAR PLEXIGLASS SHEET

LT–68

MODEL: Default
FILE NAME: pw:\\planroom.dot.illinois.gov:PWIDOT\Documents\IDOT Offices\District 1\Projects\BrSlid22-34\CADData\CADsheets\be246.dgn

USER NAME = leysa	DESIGNED - R. TOMSONS	REVISED -	
	DRAWN -	REVISED -	
PLOT SCALE = 50.0000 ' / in.	CHECKED -	REVISED -	
PLOT DATE = 1/15/2020	DATE - 01-15-2020	REVISED -	

STATE OF ILLINOIS
DEPARTMENT OF TRANSPORTATION

LIGHTING CONTROLLER, BASE MOUNTED,
480VOLT, 200AMP (DUAL) RADIO SCADA – FIBER OPTIC PROVISION

SCALE: NONE | SHEET 1 OF 4 SHEETS | STA. _____ TO STA. _____

F.A.I. RTE.	SECTION	COUNTY	TOTAL SHEETS	SHEET NO.
80	2017-057F	WILL	1342	649
	BE–206	CONTRACT NO. 62F94		
		ILLINOIS	FED. AID PROJECT	

be206.dgn 1/15/2020 8:58:53 AM User:leysa

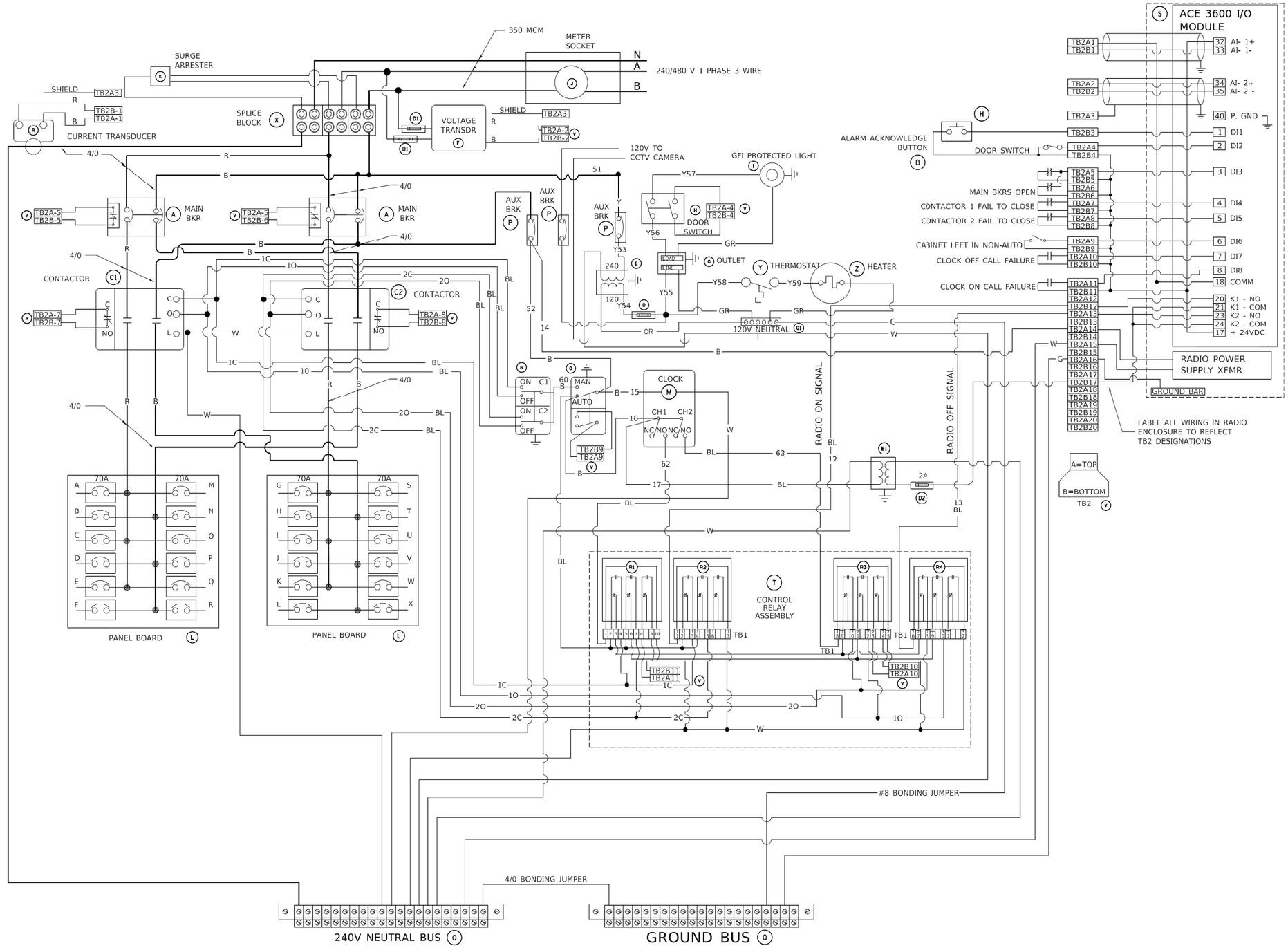

BILL OF MATERIALS

ITEM	QTY	DESCRIPTION
A	2	MAIN CIRCUIT BREAKERS 2 POLE 200 AMP WITH AUX CONTACT
B	1	ACKNOWLEDGE SWITCH, PUSH BUTTON WITH YELLOW INSERT
C1, C2 *	2	CONTACTOR 2 POLE 200 AMP 240V COIL WITH AUX CONTACTS
D	1	FINGERSAFE FUSE HOLDER WITH KTK - 20A FUSE
D1	2	FINGERSAFE FUSE HOLDER WITH KTK - ½ A FUSE
D2	1	FINGERSAFE FUSE HOLDER WITH KTK - 2A FUSE
E	1	2.0 KVA 277V-240/120 TRANSFORMER
E1	1	0.25 KVA240/ 120 - 24 VAC TRANSFORMER
F	1	VOLTAGE TRANSDUCER WITH COVER TERMINALS
G	1	20 AMP GFCI DUPLEX OUTLET W/COVER
H	2	DOOR SWITCH
I	1	LIGHT FIXTURE
J	1	METER FITTING 1 PHASE 3 WIRE 200 AMP
K	1	SURGE ARRESTER
L	2	PANEL BOARD 480/ 240V 1 PHASE, 250 AMP COPPER BUS
M	1	2 CHANNEL DIGITAL TIME CLOCK
N	1	MOMENTARY SWITCH ON - OFF
O	1	SQUARE D, 9001KS11BH13, 2 POSITION SWITCH IN 9001KY1 ENCLOSURE OR APPROVED EQUAL
P	2	BREAKER 1P 15A
Q	2	COPPER GROUND AND NEUTRAL BUS 1 X 16 X 1/4
Q1	1	COPPER NEUTRAL BUS WITH 1 #6 AND 8 #12 CONDUCTOR POINTS
R	1	CURRENT TRANSDUCER
S	1	MOTOROLA MOSCAD-L RADIO, 240 V
T *	1	CONTROL RELAY ASSEMBLY 240V COILS WITH 4 - 3PDT 25A RELAYS (W389ACX-15) (R1, R2, R3, R4). QTY 32 TERMINAL BLOCKS
V	20	TERMINAL BLOCKS
X *	1	620 AMP SPLICE BLOCK
Y	1	40-80 DEGREE THERMOSTAT
Z	1	375 WATT HEATER

* TERMINALS SHALL BE COVERED WITH CLEAR PLEXIGLASS SHEET

LT–69

MODEL: Default
FILE NAME: pw:\\planroom.dot.illinois.gov:PWIDOT\Documents\IDOT Offices\District 1\Projects\District22x34\CADData\CADsheets\lb2f6.dgn

USER NAME = leysa	DESIGNED - R. TOMSONS	REVISED -	
	DRAWN -	REVISED -	
PLOT SCALE = 50.0000 ' / in.	CHECKED -	REVISED -	
PLOT DATE = 1/15/2020	DATE - 01-15-2020	REVISED -	

STATE OF ILLINOIS
DEPARTMENT OF TRANSPORTATION

LIGHTING CONTROLLER, BASE MOUNTED,
480VOLT, 200AMP (DUAL) RADIO SCADA – FIBER OPTIC PROVISION

SCALE: NONE | SHEET 2 OF 4 SHEETS | STA. _____ TO STA. _____

F.A.I. RTE.	SECTION	COUNTY	TOTAL SHEETS	SHEET NO.
80	2017-057F	WILL	1342	650
	BE–206	CONTRACT NO. 62F94		
		ILLINOIS	FED. AID PROJECT	

lb206.dgn 1/15/2020 9:01:52 AM User=leysa

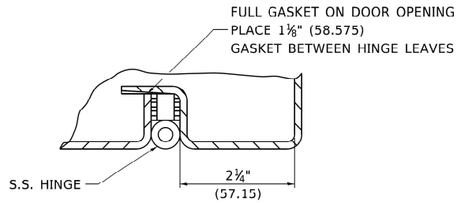

DETAIL "Y"

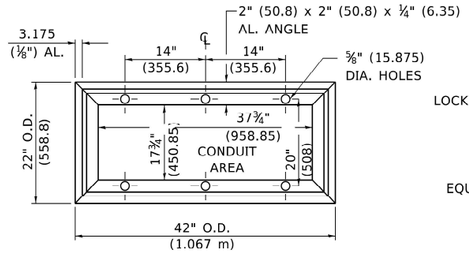

BASE MTG. DETAIL

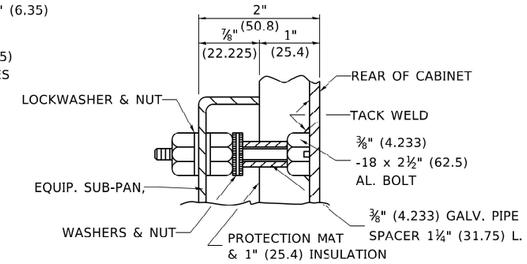

DETAIL "X"

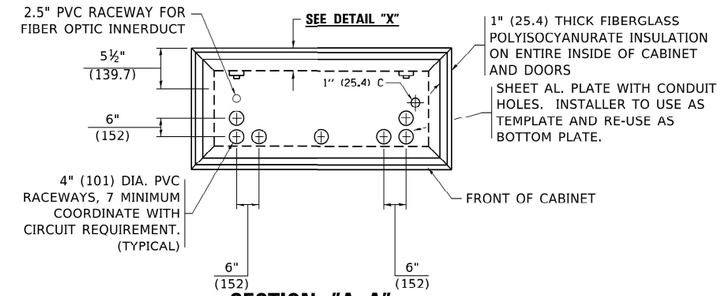

SECTION "A–A"

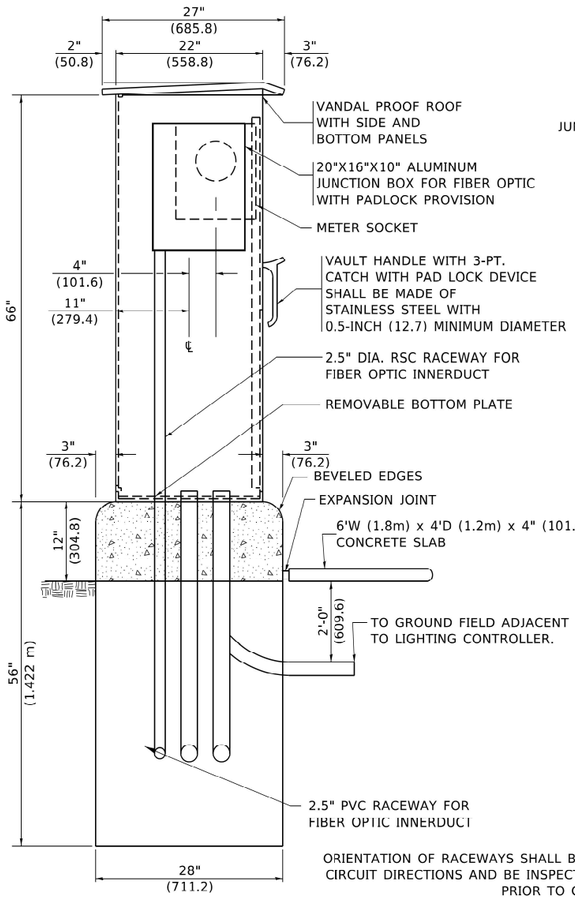

LEFT SIDE ELEVATION

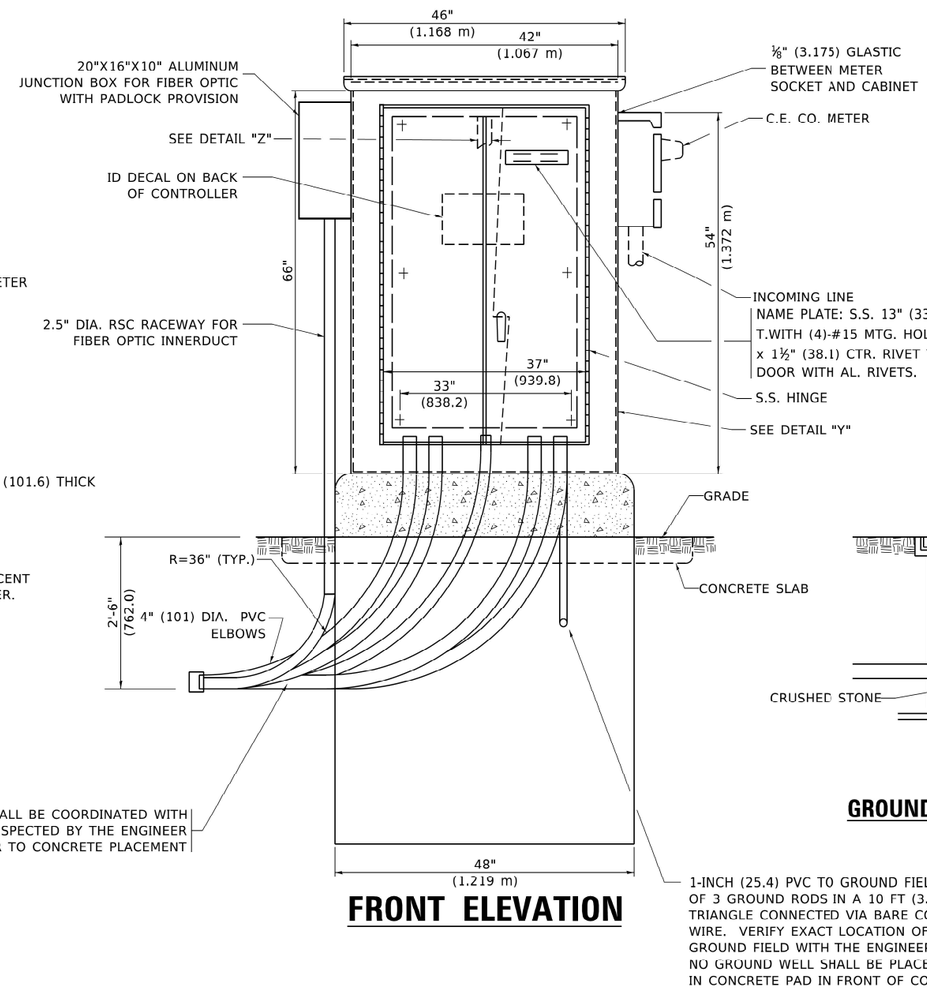

FRONT ELEVATION

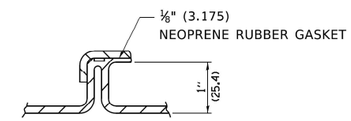

DETAIL "Z"

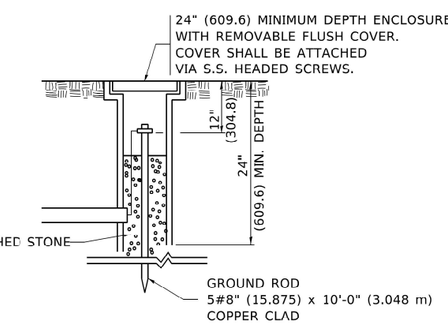

GROUND WELL DETAIL

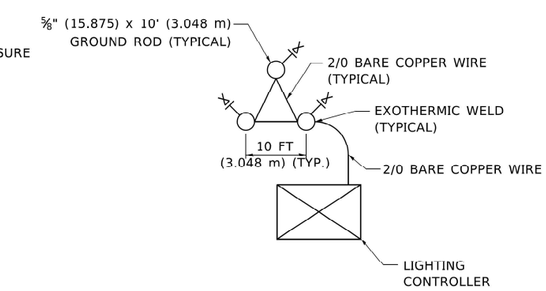

GROUND FIELD DETAIL
(N.T.S.)

THE CONTRACTOR SHALL
VERIFY EXACT LOCATION
WITH THE ENGINEER

LT–70

USER NAME = leysa	DESIGNED - R. TOMSONS	REVISED -	
	DRAWN -	REVISED -	
PLOT SCALE = 50.0000 ' / in.	CHECKED -	REVISED -	
PLOT DATE = 1/15/2020	DATE - 01-15-2020	REVISED -	

STATE OF ILLINOIS
DEPARTMENT OF TRANSPORTATION

LIGHTING CONTROLLER, BASE MOUNTED,
480VOLT, 200AMP (DUAL) RADIO SCADA – FIBER OPTIC PROVISION

SCALE: NONE | SHEET 3 OF 4 SHEETS | STA. _____ TO STA. _____

F.A.I. RTE.	SECTION	COUNTY	TOTAL SHEETS	SHEET NO.
80	2017-057F	WILL	1342	651
	BE–206	CONTRACT NO. 62F94		
		ILLINOIS FED. AID PROJECT		

MODEL: Default
FILE NAME: pw:\\planroom.dot.illinois.gov:PWIDOT\Documents\IDOT Offices\District 1\Projects\BidStd22x34\CADData\CADsheets\be266.dgn

be206.dgn 1/15/2020 9:02:06 AM User=leysa

NOTES

1. CABINET SHALL BE FABRICATED FROM 0.125-INCH (3.175) SHEET ALUMINUM #3003H14, FORMED AND ARC WELDED.
2. ALL SCREWS AND HARDWARE SHALL BE PLATED, GALVANIZED, OR MADE OF BRASS, ALUMINUM OR STAINLESS STEEL, UNLESS OTHERWISE NOTED.
3. NAME PLATE SHALL HAVE ENGRAVED 0.75-INCH (19.05) HIGH LETTERS FILLED IN BLACK: "STATE OF ILLINOIS LIGHTING CONTROLS" UNLESS OTHERWISE SPECIFIED.
4. ONE INCH THICK POLYISOCYANURATE INSULATION SHALL BE INSTALL AND PERMANENTLY CEMENTED ON ALL SIDES OF THE CABINET AND DOORS.
5. CABINET SHALL BE PRIMED AND PAINTED AS SPECIFIED.
6. ELECTRIC UTILITY METER BOX SHALL BE MOUNTED ON THE SIDE OF CONTROL CABINET AS SHOWN ON THE PANEL LAYOUT DIAGRAM.
7. THE COMPLETED CONTROLLER SHALL BE U.L. LISTED AS AN INDUSTRIAL CONTROL PANEL UNDER UL508.
8. METAL MOUNTING PANEL SHALL BE FABRICATED FROM THE SAME MATERIAL AS THE CABINET AND SHALL BE FLANGED BACK 0.75-INCHES I.D. ON 4 SIDES.
9. CIRCUIT BREAKERS AND CONTACTORS AND OTHER COMPONENTS SHALL BE MOUNTED ON 0.125-INCH (3.175) THICK GLASTIC INSULATION BACK PANEL.
10. ALL DEVICES SHALL BE FRONT REMOVABLE.
11. TIME CLOCK CHANNEL 1 N.O. CONTACT IS CLOSED NIGHT AND OPEN DAY (LIGHTS ON).
12. SET LATITUDE TO 42 DEGREES. SET CH.1 TO 23 MINUTES AFTER ASTRONOMICAL SUNSET, 50 MINUTES BEFORE ASTRONOMICAL SUNRISE. SET CH.2 TO 60 MINUTES AFTER ASTRONOMICAL SUNSET (WITH A SIGNAL LENGTH OF 1 SECOND), +28 MINUTES AFTER ASTRONOMICAL SUNRISE (WITH A SIGNAL LENGTH OF 7 SECONDS.)
13. BUS BAR SHALL HAVE 22 LUG TERMINALS SIZED TO ACCOMMODATE REQUIRED WIRE SIZES. 240V NEUTRAL BUS SHALL BE PAINTED WHITE, GROUND BUS SHALL BE PAINTED GREEN, AND THE 120V NEUTRAL BUS SHALL BE PAINTED GREY.
14. ALL LUGS SHALL BE OF COPPER SCREWS AND CONNECTORS, SPRING HELD.
15. ALL WIRING TERMINATIONS SHALL BE RATED NOT LESS THAN 75 DEGREE CENTIGRADE.
16. ALL CONTROL WIRING SHALL BE 600V #12 TYPE MTW, SCADA WIRING SHALL BE #18.
17. ALL POWER WIRING SHALL BE 600V TYPE RHH/RHW.
18. ALL WIRING WITHIN THE CABINET SHALL BE COLOR CODED AS INDICATED:

    R = RED Y = YELLOW
    B = BLACK W = WHITE
    BL = BLUE G = GREEN
    G = GREY

19. MOSCAD I/O WIRING SHALL BE:
    DIGITAL INPUT (DI) WIRING SHALL BE #18 MTW PURPLE.
    ANALOG INPUT (AI) WIRING SHALL BE #18, 2/C SHIELDED.
    AI AND DI WIRING MAY BE BUNDLED TOGETHER, BUT SHALL NOT BE BUNDLED WITH OTHER WIRING.
20. ALL DIMENSIONS ARE IN INCHES (MILLIMETERS) UNLESS OTHERWISE INDICATED.
21. SCHEMATIC SHOWN WITH BREAKER OPEN, CONTACTOR OPEN, CABINET DOOR CLOSED, CLOCK NOT ACTIVE (DE-ENERGIZED STATE).
22. A LAMINATED COPY OF THE CIRCUIT SCHEMATIC AND SCADA I/O DIAGRAM (NO SMALLER THAN 11"x17" EACH) SHALL BE ATTACHED TO THE INSIDE OF THE CONTROLLER WITH STAINLESS STEEL SCREWS.

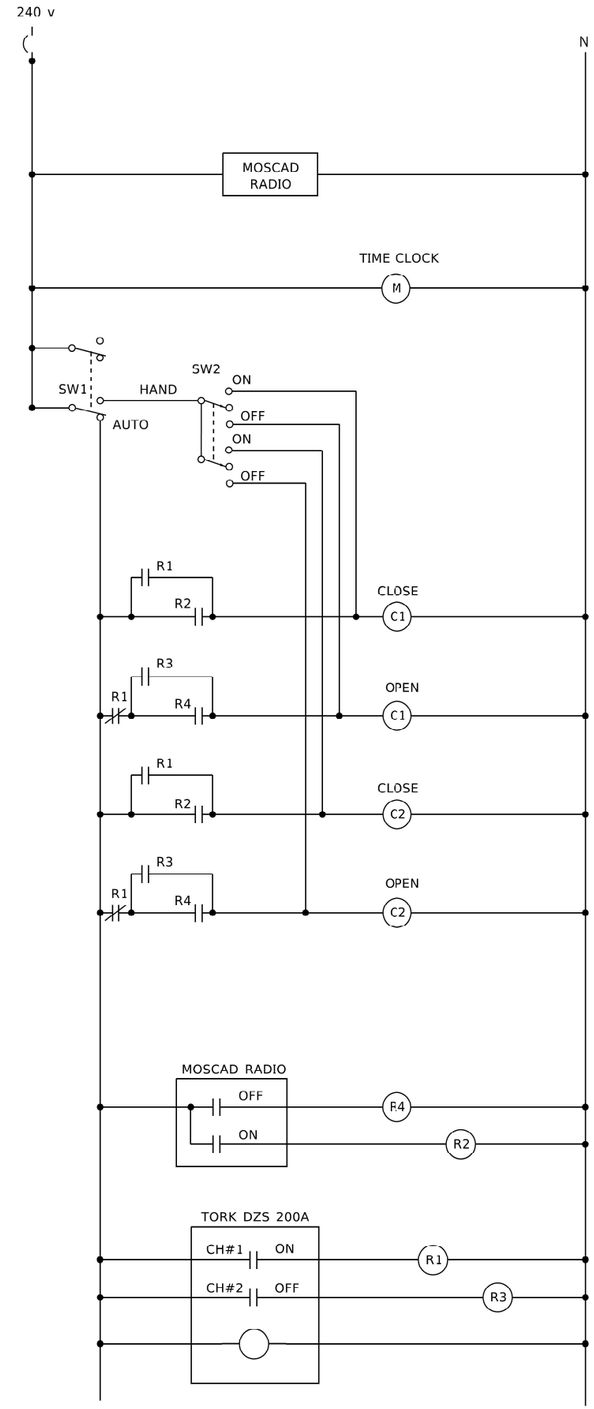

MOSCAD I/O ASSIGNMENTS		
TERM	MOSCAD DESTINATION	DESCRIPTION OF INPUT
1	DIGITAL INPUT 1	ALARM KNOWLEDGE
2	DIGITAL INPUT 2	DOOR OPEN
3	DIGITAL INPUT 3	MAIN(S) BREAKER OPEN
4	DIGITAL INPUT 4	CONTACTOR 1 OPEN
5	DIGITAL INPUT 5	CONTACTOR 2 OPEN
6	DIGITAL INPUT 6	CABINET IN NON-AUTO
7	DIGITAL INPUT 7	BACK-UP CLOCK OFF CALL
8	DIGITAL INPUT 8	BACK-UP CLOCK ON CALL
17	24 V+	24+VDC
18	DI COMMON	COMMON
21	K1 C	K1 COMMON
22	K1 NO	LIGHTS ON CALL
24	K2 C	K2 COMMON
25	K2 NO	LIGHTS OFF CALL
32	ANALOG INPUT 1 (+)	CABINET NEUTRAL CURRENT
33	ANALOG INPUT 1 (-)	CABINET NEUTRAL CURRENT
34	ANALOG INPUT 2 (+)	CABINET SERVICE VOLTAGE
35	ANALOG INPUT 2 (-)	CABINET SERVICE VOLTAGE
40	P. GROUND	GROUND

ALL ANALOG INPUTS WILL BE 4-20 MA ONLY. DIGITAL OUTPUT RELAYS WILL BE ELECTRICALLY ENERGIZED AND MOMENTARILY HELD

MIXED I/O MODULE MODEL NUMBER V436

CONTROL CIRCUIT LADDER LOGIC DIAGRAM

LT–71

MODEL: Default
FILE NAME: pw:\\plaroom.dot.illinois.gov:PWIDOT\Documents\IDOT Offices\District 1\Projects\District22x34\CADData\CADsheets\bc206.dgn

USER NAME = leysa	DESIGNED - R. TOMSONS	REVISED -	
	DRAWN -	REVISED -	
PLOT SCALE = 50.0000 ' / in.	CHECKED -	REVISED -	
PLOT DATE = 1/15/2020	DATE - 01-15-2020	REVISED -	

STATE OF ILLINOIS
DEPARTMENT OF TRANSPORTATION

LIGHTING CONTROLLER, BASE MOUNTED,
480VOLT, 200AMP (DUAL) RADIO SCADA – FIBER OPTIC PROVISION

SCALE: NONE | SHEET 4 OF 4 SHEETS | STA. _____ TO STA. _____

F.A.I. RTE.	SECTION	COUNTY	TOTAL SHEETS	SHEET NO.
80	2017-057F	WILL	1342	652
	BE-206	CONTRACT NO. 62F94		
		ILLINOIS FED. AID PROJECT		

bc206.dgn 1/15/2020 9:02:21 AM User=leysa

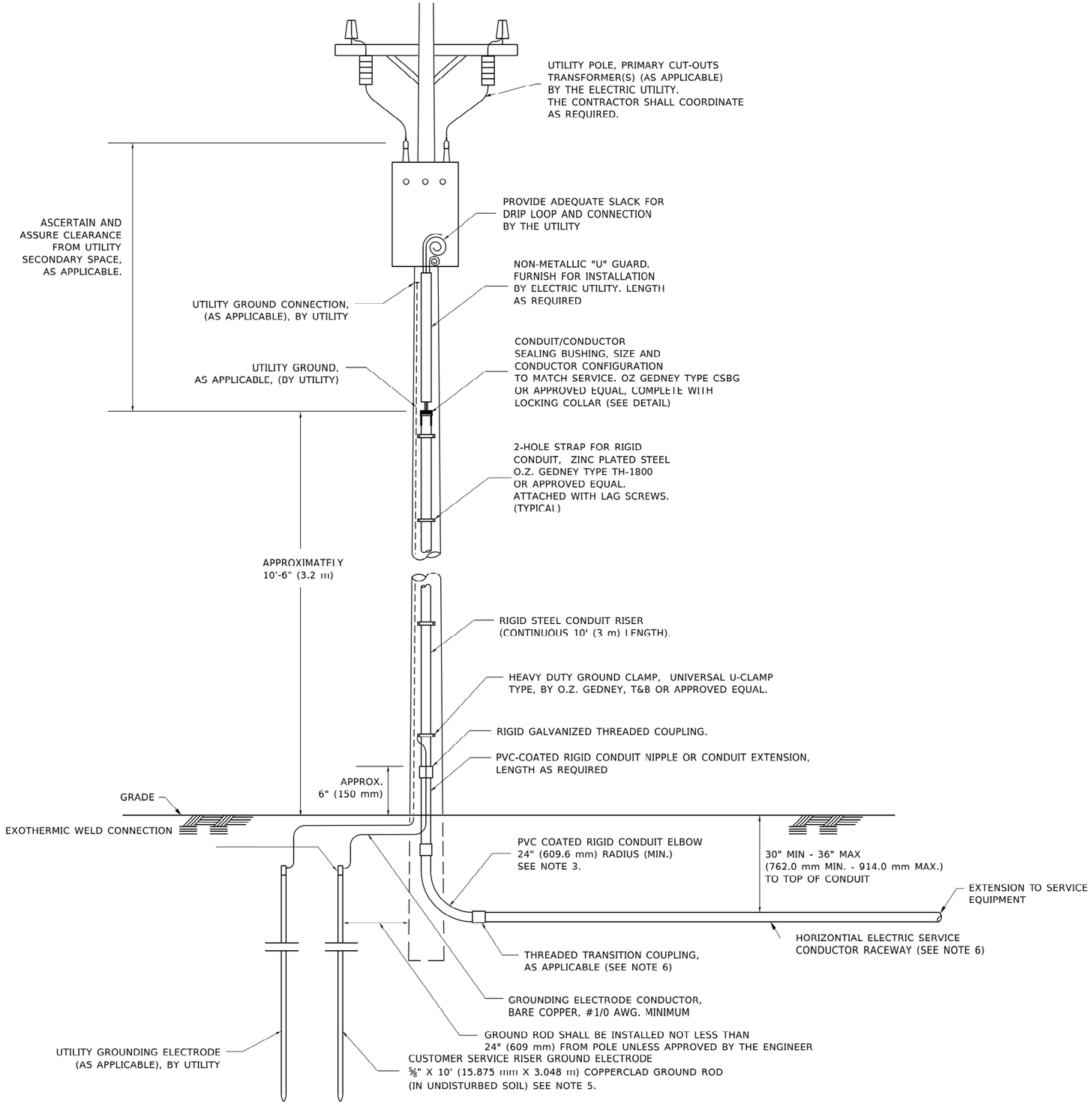

APPLICATION

THIS DETAIL APPLIES FOR LOW VOLTAGE ELECTRIC SERVICE (660 V OR LESS) FROM AN OVERHEAD UTILITY SUPPLY TO SEPERATLY-MOUNTED SERVICE EQUIPMENT.

NOTES

1. SERVICE VOLTAGE SHALL BE AS INDICATED ELSEWHERE IN THE DRAWINGS.
2. UNLESS OTHERWISE INDICATED, ITEMS AND WORK SHALL BE INCLUDED AND PAID AS PART OF THE ELECTRIC UTILITY SERVICE INSTALLATION PAY ITEM.
3. CONDUIT AND CONNECTOR DIAMETER SHALL MATCH THE DIAMETER OF THE SERVICE CONDUCTOR RACEWAY AS INDICATED ON THE PLANS.
4. PVC COATED RACEWAYS AND ACCESSORIES SHALL BE CAREFULLY INSTALLED WITH MFR RECOMMENDED TOOLS AND PROCEDURES TO AVOID DAMAGE. ANY DAMAGE SHALL BE REPAIRED WITH COMPATIBLE PVC TOUCH-UP MATERIAL TO THE SATISFACTION OF THE ENGINEER OR THE DAMAGED MATERIAL SHALL BE REPLACED AT NO ADDITIONAL COST.
5. THE CONTRACTOR SHALL OBTAIN INSPECTION AND APPROVAL BY THE ENGINEER OF SERVICE RISER GROUND ELECTRODE, RISER ELBOW, NIPPLE AND CONNECTION TO SERVICE CONDUCTOR RACEWAY EXTENSION BEFORE BACKFILL AND SHALL ALSO OBTAIN INSPECTION OF SERVICE RISER AND SEALING BUSHING BEFORE UTILITY "U" GUARD INSTALLATION AND SERVICE CONNECTION.
6. THE HORIZONTAL ELECTRIC SERVICE CONDUCTOR RACEWAY SHALL BE AS INDICATED AND SHALL BE MEASURED SEPARATELY FOR PAYMENT. WHEN THE RACEWAY IS PVC-COATED RIGID GALVANIZED STEEL, THE COUPLING SHALL BE THE SAME. WHEN THE RACEWAY IS PVC CONDUIT (IN CONCRETE), THE COUPLING SHALL BE A METALIC TO NON METALIC ADAPTER. WHEN THE RACEWAY IS ENCASED IN CONCRETE, THE CONCRETE SHALL EXTEND TO COVER THE COUPLING.
7. PLANS AND DETAILS INDICATE THE GENERAL NATURE AND REQUIREMENTS. THEY DO NOT SHOW EVERY ACCESSORY AND ATTACHMENT, AND THEY DO NOT RELIEVE THE CONTRACTOR OF THE REQUIREMENTS OF THE SPECIFICATIONS AND SPECIAL PROVISIONS TO ASCERTAIN UTILITY REQUIREMENTS AND TO COORDINATE ACCORDINGLY, FURNISHING ALL ITEMS AND WORK NOT PROVIDED BY THE UTILITY, BUT NECESSARY FOR A COMPLETE SERVICE INSTALLATION IS REQUIRED AND SHALL BE INCLUDED IN THE ELECTRIC UTILITY SERVICE INSTALLATION PAY ITEM.

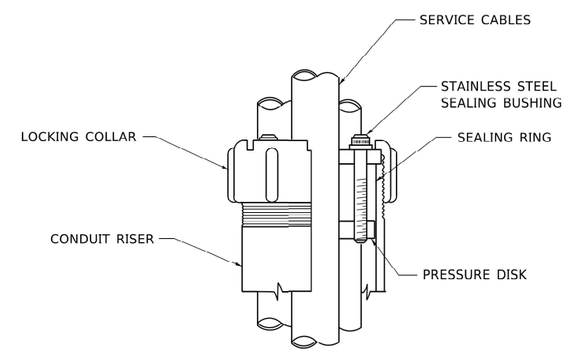

SEALING BUSHING DETAIL

LT–72

USER NAME = footemj	DESIGNED -	REVISED - 03-03-06	STATE OF ILLINOIS DEPARTMENT OF TRANSPORTATION	ELECTRIC SERVICE INSTALLATION AERIAL, REMOTE DISCONNECT	F.A. I. RTE.	SECTION	COUNTY	TOTAL SHEETS / SHEET NO.
	DRAWN -	REVISED -			80	2017-057F	WILL	1342 / 653
PLOT SCALE = 50.0000 ' / in.	CHECKED - MEA	REVISED -			BE–220		CONTRACT NO. 62F94	
PLOT DATE = 4/19/2019	DATE -	REVISED -		SCALE: NONE / SHEET 1 OF 1 SHEETS / STA. TO STA.			ILLINOIS / FED. AID PROJECT	

MODEL: Default
FILE NAME: pw:\\planroom.dot.illinois.gov:PWIDOT\Documents\IDOT Offices\District 1\Projects\Dist22x34\CADData\CADsheets\be220.dgn

be220.dgn 4/19/2019 2:14:18 PM User=footemj

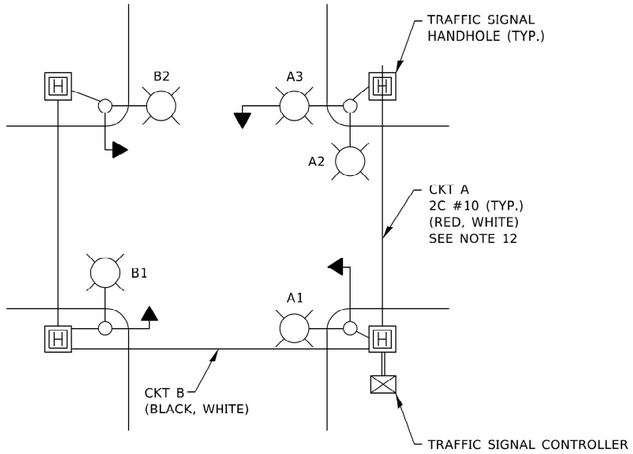

TYPICAL LIGHTING CIRCUIT

(NOT TO SCALE)

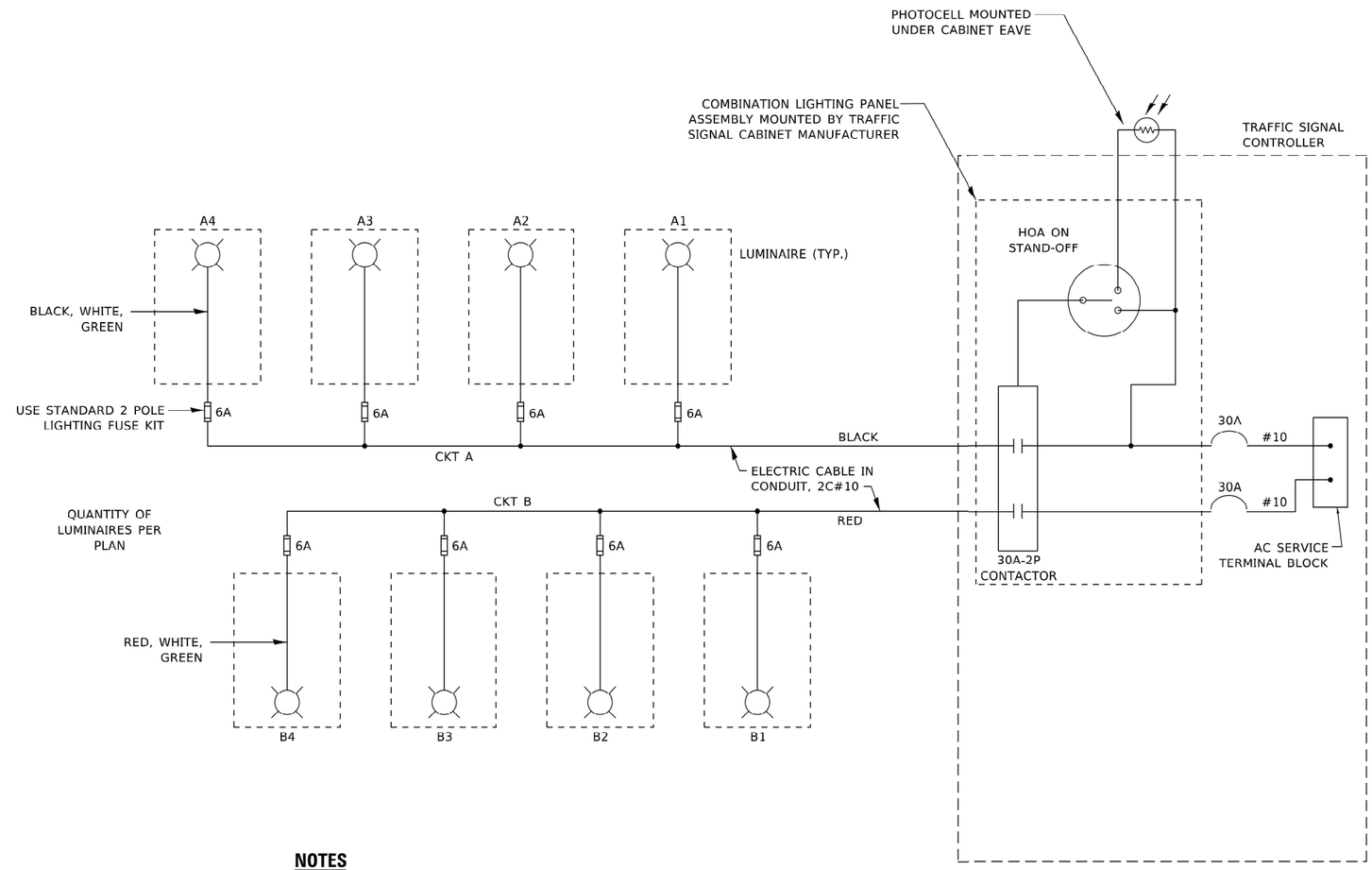

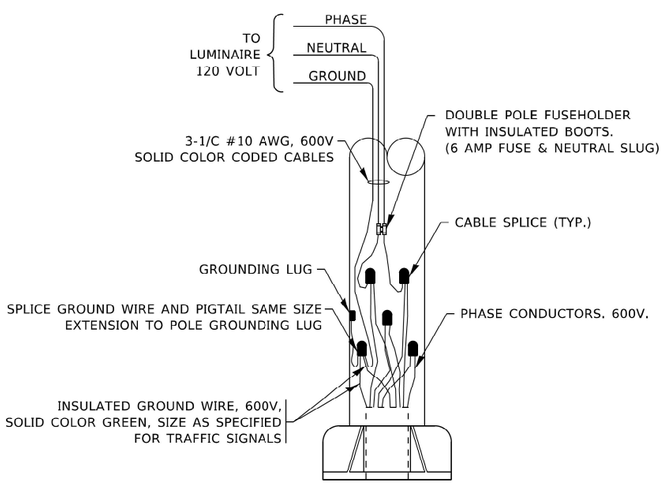

COMBINATION POLE WIRING DETAIL

(NOT TO SCALE)

NOTES

1. 4 LUMINAIRES PER CIRCUIT, MAXIMUM.
2. TWO #10 (XLP-TYPE USE) CABLES TO BE USED FOR LIGHTING CIRCUITS.
3. ROUTE LIGHTING CIRCUITS IN TRAFFIC SIGNAL CONDUIT SYSTEM.
4. ALL SPLICES AND CONNECTIONS FOR ROADWAY LIGHTING SHALL BE AT POLE BASE ONLY.
5. FOR LIGHTING CIRCUITS, CONNECT TWO CIRCUIT BREAKERS TO AC SERVICE TERMINAL BLOCK.
6. ALL WIRING SHALL BE NEATLY DRESSED, IDENTIFIED BY TAGS, AND SUPPORTED. (UNDERGROUND SPLICING OF LIGHTING CONDUCTORS IS NOT PERMITTED).
7. THE H.O.A. SWITCH SHALL BE LABELED AS "LIGHTING CONTROL" WITH THE POSITIONS "AUTO", "OFF" AND "TEST" WITH ENGRAVED NAME PLATES.
8. LIGHTING CONNECTED TO UPS BYPASS CIRCUIT.
9. COMBINATION LIGHTING MUST BE INSTALLED PRIOR TO SIGNAL TURN ON.
10. LUMINAIRE VOLTAGE SHALL BE 120V
11. POLE WIRING & FUSE KITS ARE INCLUDED IN THE LUMINAIRE PAY ITEM.
12. THE UNDERGROUND EQUIPMENT GROUND WIRE IS SHOWN IN THE TRAFFIC SIGNAL PLANS AND IS INCLUDED IN THE SIGNAL PLANS. IT IS SHARED GROUND BETWEEN SIGNALS AND LIGHTING.

LT–73

USER NAME = demanchelt	DESIGNED - RT	REVISED - T.G. 4/12/2017	STATE OF ILLINOIS DEPARTMENT OF TRANSPORTATION
	DRAWN -	REVISED - R. TOMSONS 3/22/18	
PLOT SCALE = 100.0000 ' / in.	CHECKED - RT	REVISED - T.G. 8/03/2021	
PLOT DATE = 5/5/2022	DATE - 08/18/2014	REVISED - T.G. 5/05/2022	

COMBINATION LIGHTING, TRAFFIC SIGNAL SCHEMATIC

SCALE: NONE | SHEET 1 OF 1 SHEETS | STA. TO STA.

F.A.I. RTE.	SECTION	COUNTY	TOTAL SHEETS	SHEET NO.
80	2017-057F	WILL	1342	654

BE–240 CONTRACT NO. 62F94

ILLINOIS | FED. AID PROJECT

LIGHT POLE FOUNDATION DEPTH TABLE
40 FT. (12.192 m) TO 47.5 FT. (14.478 m) MOUNTING HEIGHT

SOIL CONDITIONS	DESIGN DEPTH "D" OF FOUNDATION	
	SINGLE ARM POLE	TWIN ARM POLE
SOFT CLAY Qu = 0.375 TON/SQ. FT.	13'-0" (3.96 m)	15'-0" (4.57 m)
MEDIUM CLAY Qu = 0.75 TON/SQ.FT	9'-6" (2.09 m)	10'-9" (3.23 m)
STIFF CLAY Qu = 1.50 TON/SQ. FT.	7'-0" (2.13 m)	8'-0" (2.44 m)
LOOSE SAND ∅ = 34°	9'-0" (2.74 m)	10'-0" (3.05 m)
MEDIUM SAND ∅ = 37.5°	8'-3" (2.52 m)	9'-0" (2.74 m)
DENSE SAND ∅ = 40°	7'-9" (2.36 m)	9'-0" (2.74 m)

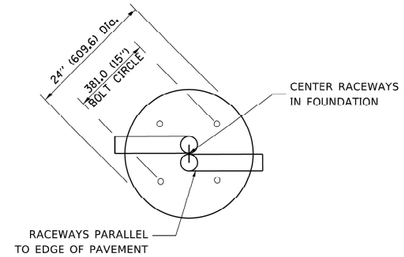

TOP VIEW

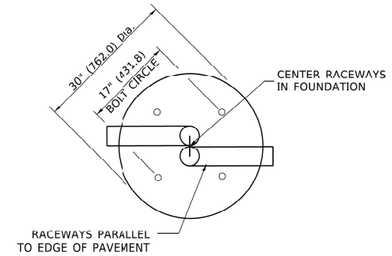

TOP VIEW

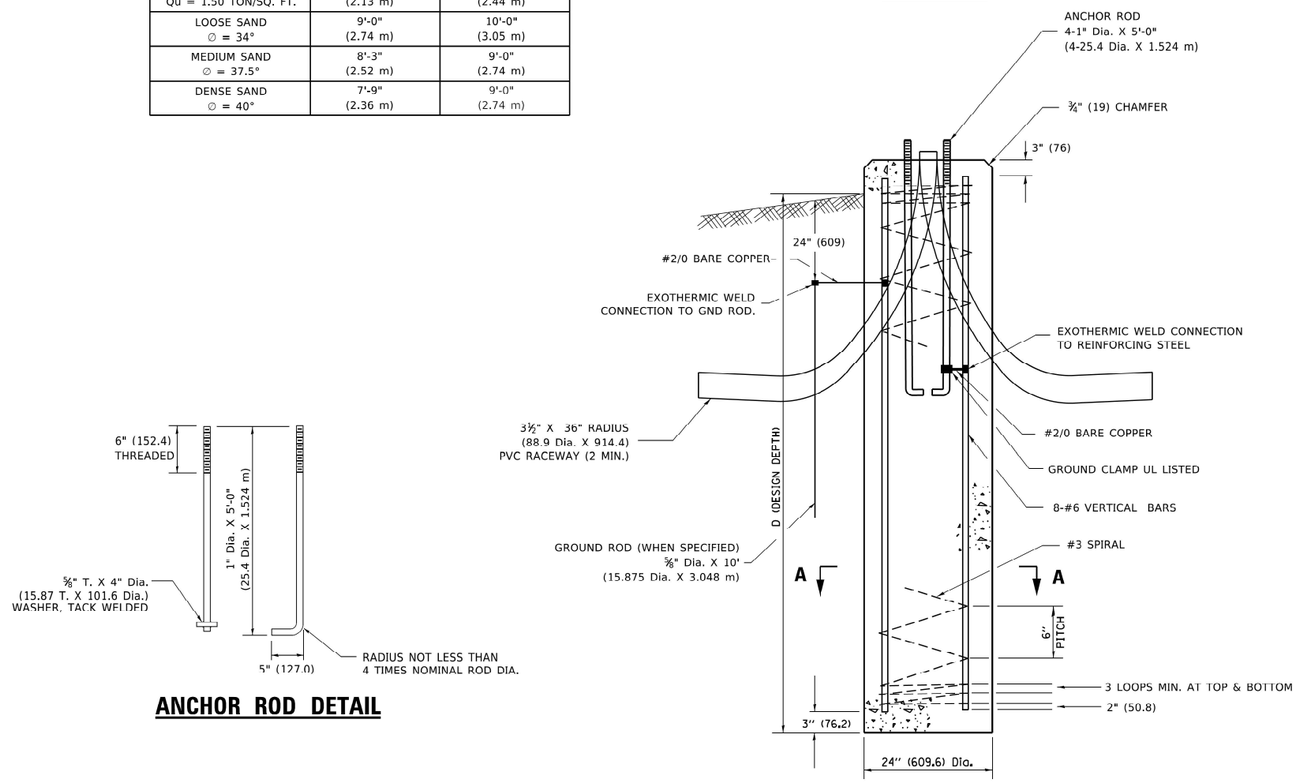

ANCHOR ROD DETAIL

FOUNDATION DETAIL

NOTES

1. ALL DIMENSIONS ARE IN INCHES (MILLIMETERS) UNLESS OTHERWISE SHOWN.
2. THE ANCHOR RODS AND RACEWAYS SHALL BE PROPERLY SECURED IN PLACE BEFORE THE CONCRETE IS PLACED.
3. THE FOUNDATION SHALL NOT PROTRUDE MORE THAN 100MM (4 IN.) ABOVE THE FINISHED GRADE WITHIN A 60 IN. (1.5 m) CHORD ACROSS THE FOUNDATION, WITH ANCHOR RODS INCLUDED, IN ACCORDANCE WITH AASHTO GUIDELINES. IF THE FOUNDATION HEIGHT, INCLUDING ANCHOR RODS, EXTENDS BEYOND THESE SPECIFIED LIMITS, THE FOUNDATION SHALL BE REPLACED AT THE CONTRACTOR'S EXPENSE. SEE FOUNDATION EXTENSION DETAIL.
4. THE HOLE FOR THE FOUNDATION SHALL BE MADE BY DRILLING WITH AN AUGER, OF THE SAME DIAMETER AS THE FOUNDATION. IF SOIL CONDITIONS REQUIRE THE USE OF A LINER TO FORM THE HOLE, THE LINER SHALL BE WITHDRAWN AS THE CONCRETE IS DEPOSITED.
5. THE TOP OF THE FOUNDATION SHALL BE CONSTRUCTED LEVEL. A LINER OR FORM SHALL BE USED TO PRODUCE A UNIFORM SMOOTH SIDE TO THE TOP OF THE FOUNDATION. FOUNDATION TOP SHALL BE CHAMFERED 3#4-IN. (20 mm).
6. THE CONCRETE SHALL BE CLASS SI. CONCRETE SHALL CURE ACCORDING TO ARTICLE 1020.13 BEFORE LIGHT POLES ARE INSTALLED.
7. THE ANCHOR ROD SHALL BE A HOOK ROD TYPE. COLD BENDING OF THE ANCHOR ROD WILL NOT BE ALLOWED. THE RADIUS OF THE HOOK BEND SHALL NOT BE LESS THAN 4 TIMES THE NOMINAL DIAMETER OF THE ANCHOR ROD. A TACK WELDED ANCHOR ROD MAY BE SUBSTITUTED WITH THE APPROVAL OF THE ENGINEER.
8. THE ANCHOR RODS SHALL BE ACCORDING TO ASTM F1554 GRADE 725 (GRADE 105). NUTS SHALL BE HEXAGON NUTS ACCORDING TO ASTM A 194 2H OR ASTM A 563 DH, AND WASHERS SHALL BE ACCORDING TO ASTM F 436.
9. ANCHOR RODS, NUTS AND WASHERS SHALL BE COMPLETELY GALVANIZED BY EITHER THE HOT-DIPPED PROCESS CONFORMING WITH AASHTO M 232, THE MECHANICAL PLATING METHOD CONFORMING TO AASHTO M 298, CLASS 50 WITH A MAXIMUM COATING THICKNESS OF 150 UM(6 MILS) OR THE ELECTROLYTIC PROCESS ACCORDING TO ASTM F 1136.
10. THE ANCHOR RODS SHALL BE THREADED A MINIMUM OF 6 INCHES (150 mm) WITH A MINIMUM OF 3 INCHES (75 mm) OF THREADED ANCHOR ROD EMBEDDED IN THE FOUNDATION.
11. ANCHOR RODS SHALL PROJECT 23#4" (69.9 mm) ABOVE THE TOP OF THE FOUNDATION. IF BREAKAWAY COUPLINGS ARE SPECIFIED, THE CONTRACTOR SHALL CAREFULLY COORDINATE THE ANCHOR ROD PROJECTION WITH THE INSTALLATION REQUIREMENTS OF THE BREAKAWAY COUPLINGS.
12. THE CONTRACTOR SHALL USE A #3 SPIRAL AT 6" (152.4 mm) PITCH OR MAY SUBSTITUTE #3 TIES AT 12" (304.8 mm) O.C. WITH THE APPROVAL OF THE ENGINEER.
13. THE CABLE TRENCHES AND FOUNDATION SHALL BE BACK FILLED AND COMPACTED AS SPECIFIED BEFORE THE LIGHT POLE IS ERECTED.
14. THE RACEWAYS SHALL PROJECT 1" (25.4 mm) ABOVE THE TOP OF THE FOUNDATION.

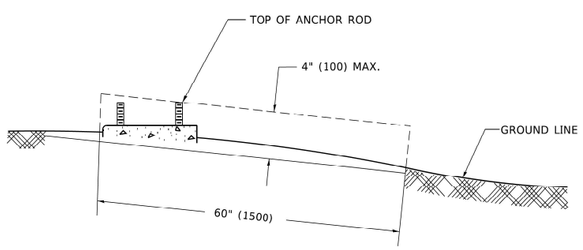

FOUNDATION EXTENSION DETAIL

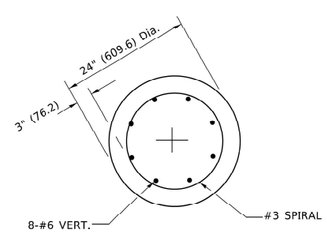

SECTION A–A

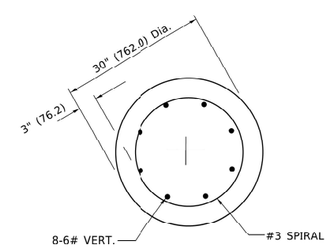

SECTION A–A

LT–74

MODEL: Default
FILE NAME: pw:\\planroom.dot.illinois.gov:PWIDOT\Documents\IDOT Offices\District 1\Projects\DistStd22x34\CADData\CADSheets\be301.dgn

USER NAME = footemj	DESIGNED -	REVISED - 04-22-02	STATE OF ILLINOIS DEPARTMENT OF TRANSPORTATION
	DRAWN -	REVISED -	
PLOT SCALE = 50.0000 ' / in.	CHECKED -	REVISED -	
PLOT DATE = 4/19/2019	DATE -	REVISED -	

LIGHT POLE FOUNDATION
40' (12.192 m) TO 47 1/2' (14.478 m) M.H. 15" (381 mm) BOLT CIRCLE

SCALE: NONE | SHEET 1 OF 1 SHEETS | STA. TO STA.

F.A. I. RTE.	SECTION	COUNTY	TOTAL SHEETS	SHEET NO.
80	2017-057F	WILL	1342	655
BE–301		CONTRACT NO. 62F94		
	ILLINOIS	FED. AID PROJECT		

be301.dgn 4/19/2019 2:20:38 PM User: footemj

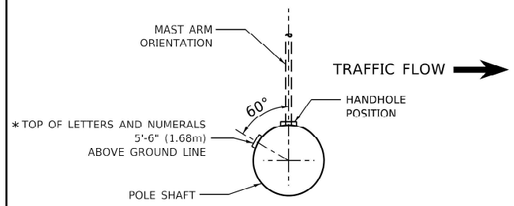

POSITION OF HANDHOLE AND POLE NUMBER FOR SINGLE MAST ARM POLES MOUNTED ON BRIDGE PARAPET OR BARRIER WALL

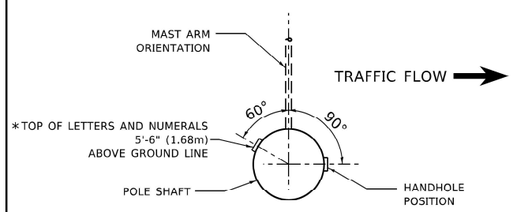

POSITION OF HANDHOLE AND POLE NUMBER FOR SINGLE MAST ARM POLES

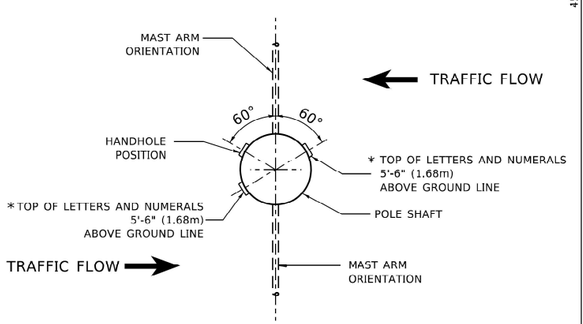

POSITION OF HANDHOLE AND POLE NUMBER FOR TWIN MAST ARM POLES

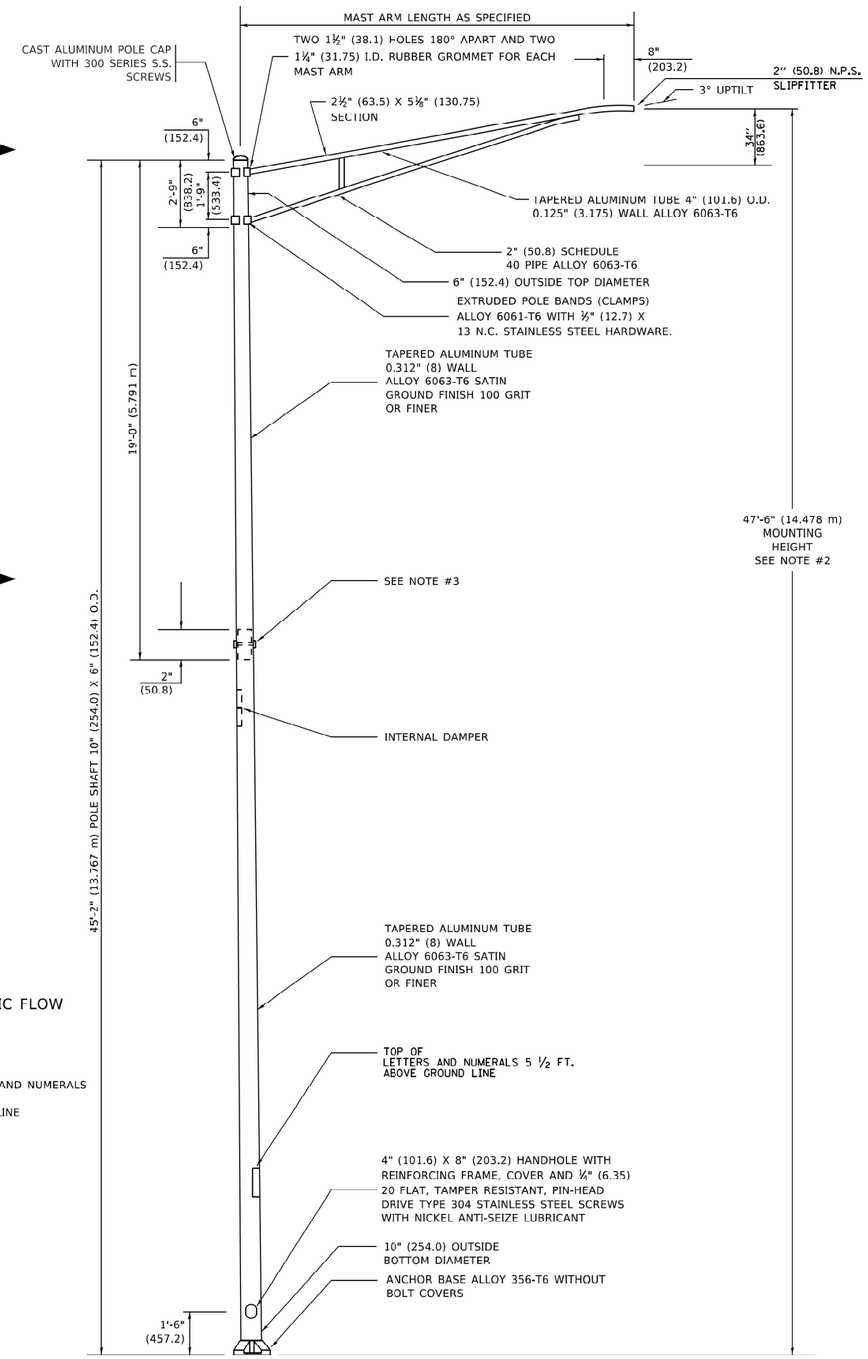

NOTES

1. ALL DIMENSIONS ARE IN INCHES (MILLIMETERS) UNLESS OTHERWISE SHOWN.
2. MOUNTING HEIGHT IS DEFINED AS THE DISTANCE FROM THE CENTERLINE OF THE TENON TO THE BOTTOM OF THE ANCHOR BASE.
3. TWO PIECE SHAFT WILL BE MATCHED MARKED AND INTERCHANGEABLE BETWEEN DIFFERENT UNITS. FIELD DRILLING OF THE HOLES WILL NOT BE ALLOWED.
4. THE LIGHT POLE WILL MEET AASHTO DESIGN CRITERIA AS SPECIFIED.
5. THE INSTALLING CONTRACTOR WILL PROVIDE A UL LISTED GROUNDING CONNECTOR. BURNDY K2C23, T&B SP4DL OR APPROVED EQUAL.
6. LIGHT POLES WILL NOT BE INSTALLED WITHOUT MAST ARMS AND LUMINAIRES.
7. LIGHT POLES WILL BE SET PLUMB ON THE FOUNDATION WITHOUT THE USE OF LEVELING NUTS, WASHERS OR SHIMS.
8. LIGHTING UNIT IDENTIFICATION NUMBERS SHALL BE INSTALLED BEFORE THE LIGHTING UNIT IS ENERGIZED.

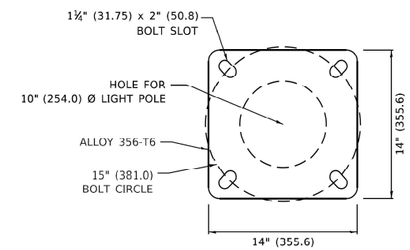

LIGHT POLE BASE PLATE DETAIL

15 INCH (381.0) BOLT CIRCLE

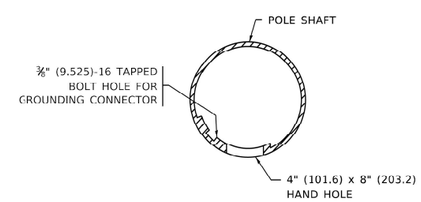

HANDHOLE DETAIL
(N.T.S.)

LT–75

USER NAME = Lawrence.DeManche	DESIGNED -	REVISED - R. TOMSONS 01-18-13	STATE OF ILLINOIS DEPARTMENT OF TRANSPORTATION	ALUMINUM LIGHT POLE 47'–6" (14.478 m) MOUNTING HEIGHT		F.A. I. RTE.	SECTION	COUNTY	TOTAL SHEETS	SHEET NO.
	DRAWN -	REVISED - R. TOMSONS 03-18-15				80	2017-057F	WILL	1342	656
PLOT SCALE = 100.0000 ' / in.	CHECKED -	REVISED - TG 06-13-22				BE–400		CONTRACT NO. 62F94		
PLOT DATE = 12/19/2023	DATE -	REVISED - R. TOMSONS 12-19-23		SCALE: NONE	SHEET 1 OF 1 SHEETS	STA.	TO STA.	ILLINOIS	FED. AID PROJECT	

MODEL: Default
FILE NAME: pw:\\ildot-pw.bentley.com:PWIDOT\Documents\IDOT Offices\District 1\Projects\D5st5tc22x34\CADData\ADsheets\lse406.dgn

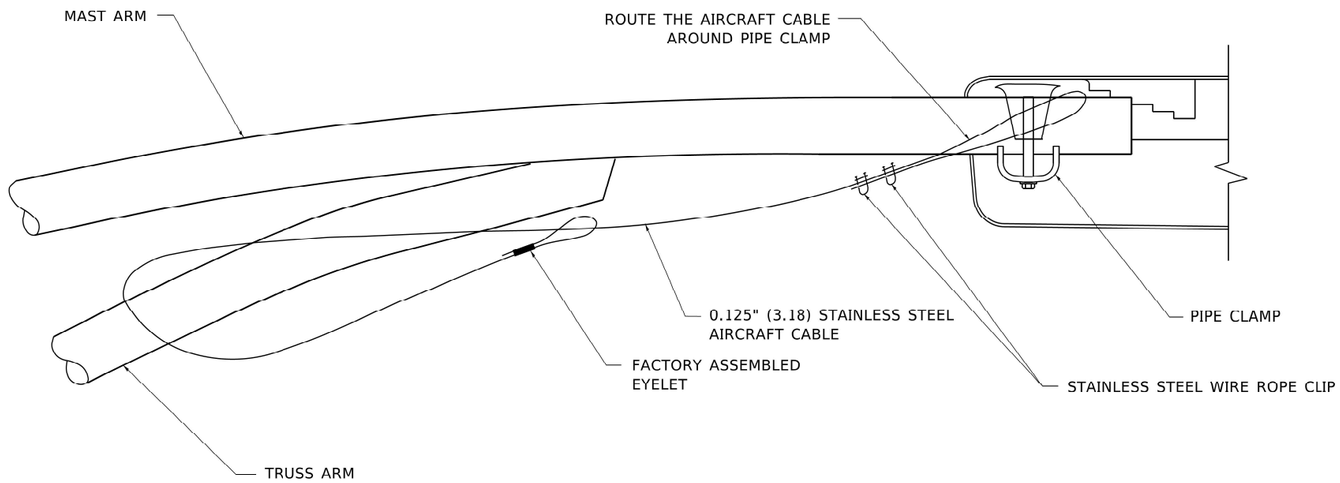

SIDE VIEW (TRUSS ARM)
N.T.S.

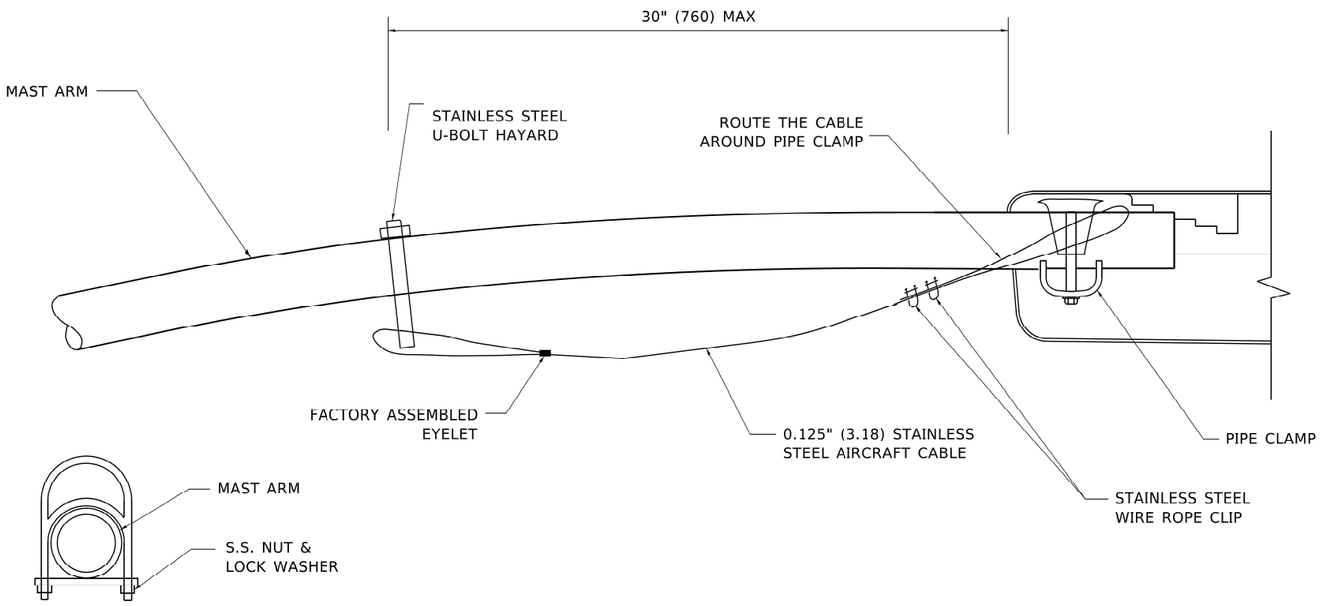

SIDE VIEW (SINGLE MEMBER OR DAVIT ARM)
N.T.S.

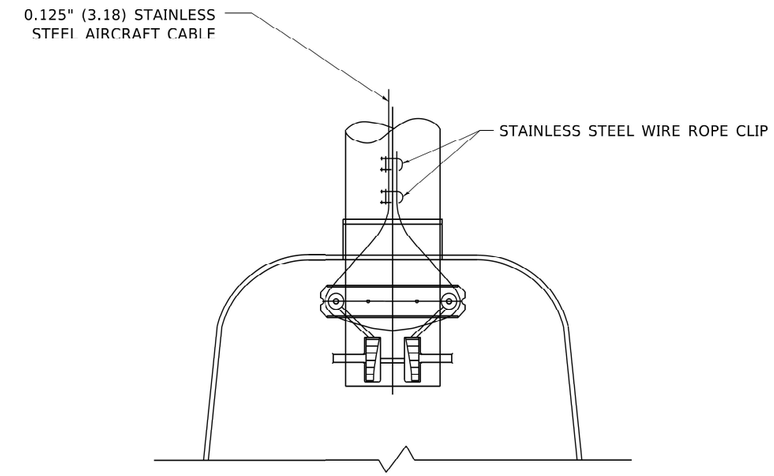

BOTTOM VIEW
N.T.S.

NOTES:

1. ALL DIMENSIONS ARE IN MILLIMETERS (INCHES) UNLESS OTHERWISE SHOWN.
2. CONTRACTOR SHALL ADJUST THE WIRE CLIP TO ELIMINATE ANY SLACK FROM THE WIRE ROPE.
3. THE 0.125" (3.18) STAINLESS STEEL AIRCRAFT CABLE SHALL REMAIN VISIBLE FROM THE GROUND LEVEL.
4. THE BREAKING STRENGTH OF THE CABLE SHALL BE 1700 LBS. MIN.

LT–76

USER NAME = footemj	DESIGNED -	REVISED - 08-08-03	STATE OF ILLINOIS DEPARTMENT OF TRANSPORTATION	LUMINAIRE SAFETY CABLE ASSEMBLY	F.A.I. RTE.	SECTION	COUNTY	TOTAL SHEETS	SHEET NO.
	DRAWN -	REVISED -			80	2017-057F	WILL	1342	657
PLOT SCALE = 50.0000 ' / in.	CHECKED -	REVISED -			BE–701		CONTRACT NO. 62F94		
PLOT DATE = 4/19/2019	DATE -	REVISED -		SCALE: NONE SHEET 1 OF 1 SHEETS STA. TO STA.	ILLINOIS	FED. AID PROJECT			

MODEL: Default
FILE NAME: pw:\\planroom.dot.illinois.gov:PWIDOT\Documents\IDOT Offices\District 1\Projects\DistStd22x34\CADData\CADsheets\lbe7C1.dgn

lbe701.dgn 4/19/2019 3:21:36 PM User=footemj

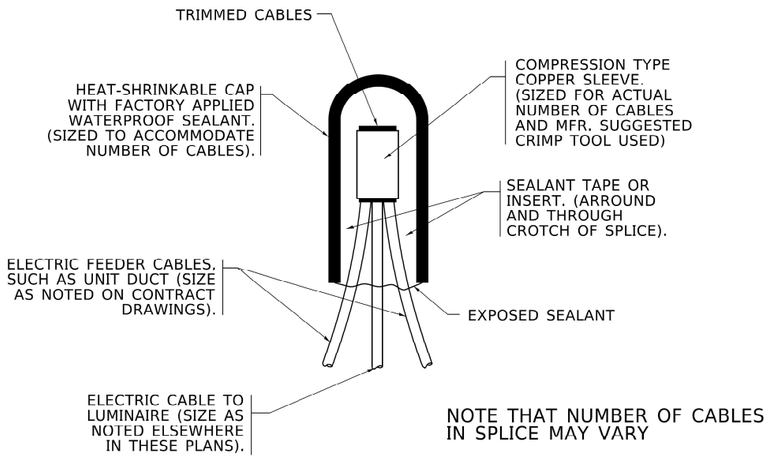

TYPICAL SPLICE DETAIL

N.T.S.

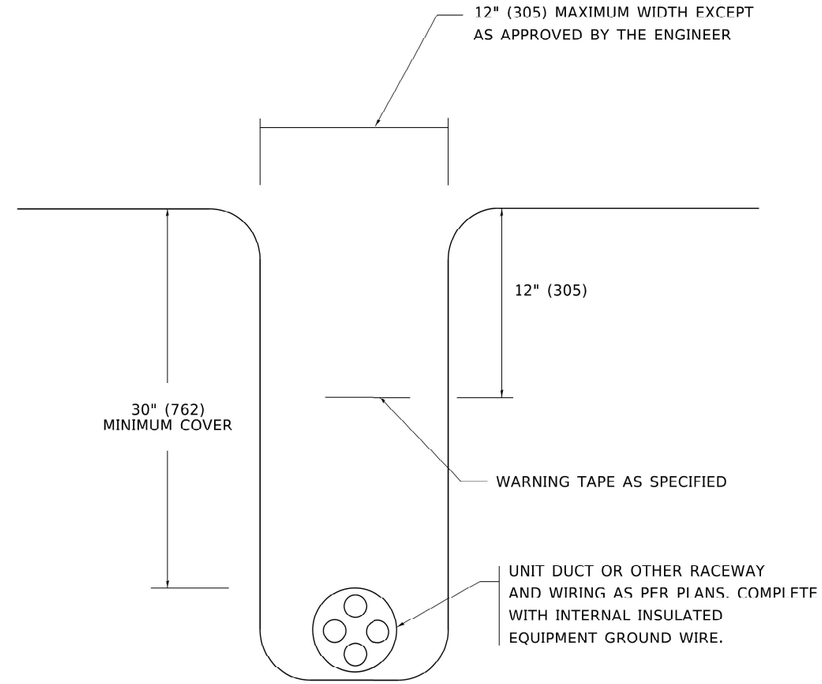

TYPICAL WIRING IN TRENCH DETAIL

N.T.S.

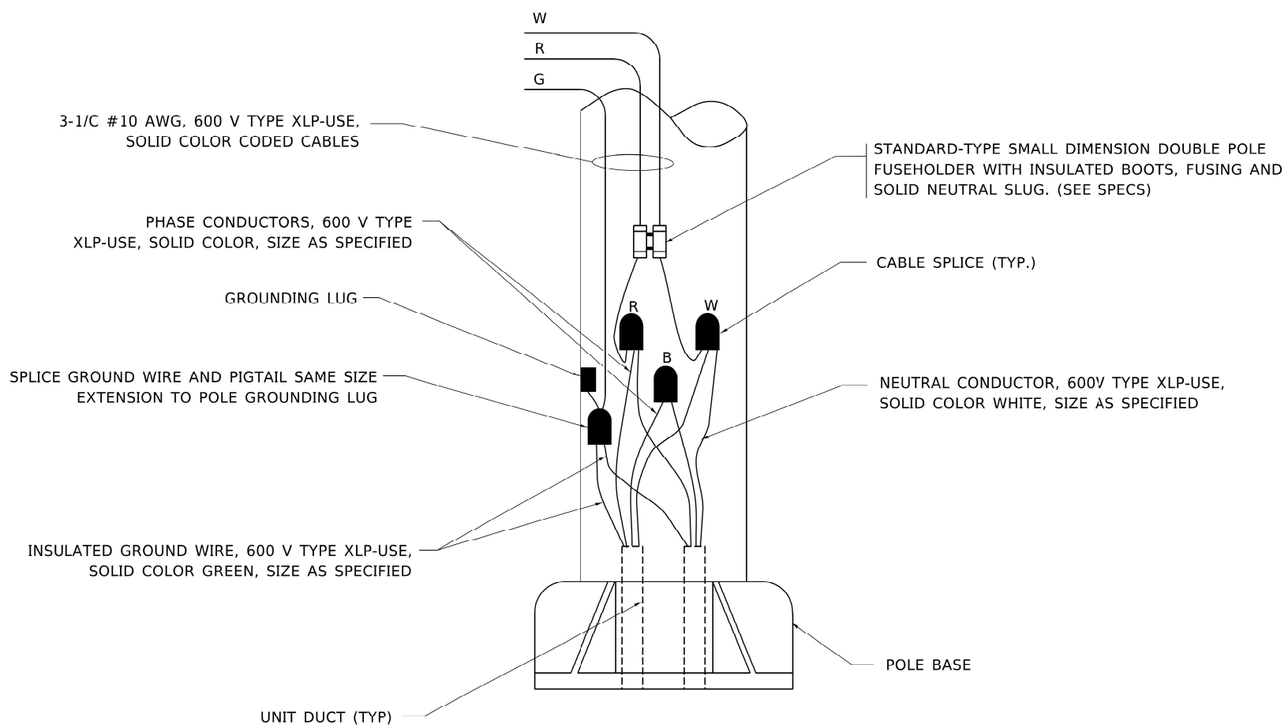

POLE WIRING DETAIL

N.T.S.

LT–77

MODEL: Default
FILE NAME: pw:\\planroom.dot.illinois.gov:PWIDOT\Documents\IDOT Offices\District 1\Projects\0bsSld22y34\CADData\CADsheets\be702.dgn

USER NAME = leysa	DESIGNED -	REVISED - 02/04/2020	STATE OF ILLINOIS DEPARTMENT OF TRANSPORTATION	MISC. ELECTRICAL DETAILS SHEET A			F.A. I. RTE.	SECTION	COUNTY	TOTAL SHEETS / SHEET NO.
	DRAWN -	REVISED -					80	2017-057F	WILL	1342 / 658
PLOT SCALE = 50.0000 ' / in.	CHECKED -	REVISED -					BE–702		CONTRACT NO. 62F94	
PLOT DATE = 3/2/2020	DATE - 08/08/2003	REVISED -		SCALE: NONE	SHEET 1 OF 1 SHEETS	STA. TO STA.			ILLINOIS FED. AID PROJECT	

be702.dgn 3/2/2020 7:37:37 AM User=leysa

NOTES

1. CONDUIT SHALL BE 4-INCH DIAMETER UNLESS OTHERWISE INDICATED IN THE PLANS.
2. JUNCTION BOX SIZE:
   SINGLE FACE WALL: 21" X 11" X 8"
   DOUBLE FACE WALL: 20" X 13" X 12"

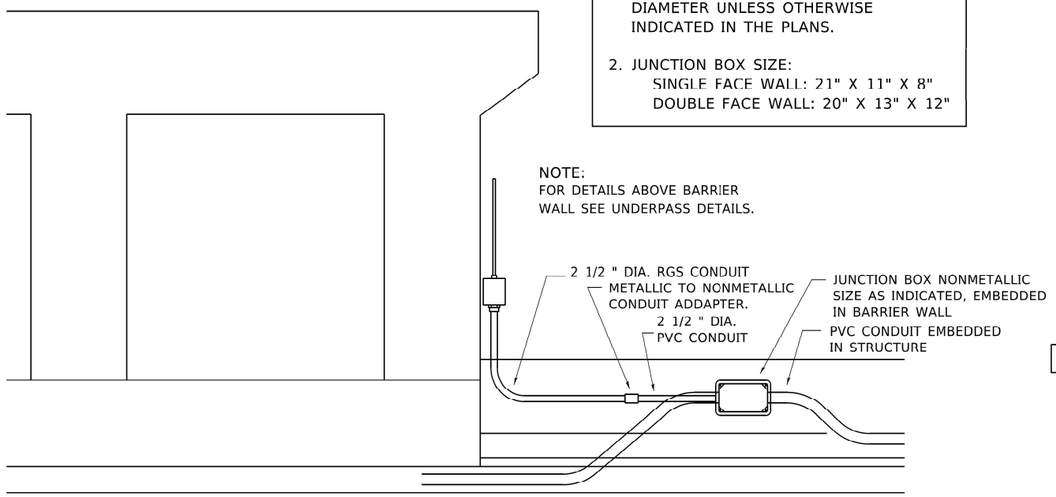

ED - BWD

ELECTRIC CONNECTION TO UNDERPASS LIGHTING

NOTES

1. CONDUIT SHALL BE 4-INCH DIAMETER UNLESS OTHERWISE INDICATED IN THE PLANS.
2. JUNCTION BOX SIZE:
   SINGLE FACE WALL: 21" X 11" X 8"
   DOUBLE FACE WALL: 20" X 13" X 12"

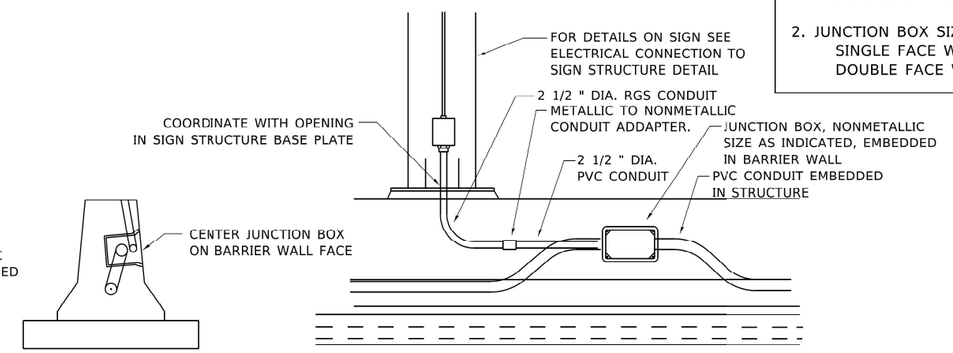

ED - SGN

JUNCTION BOX EMBEDDED IN BARRIER WALL FOR SIGN LIGHTING

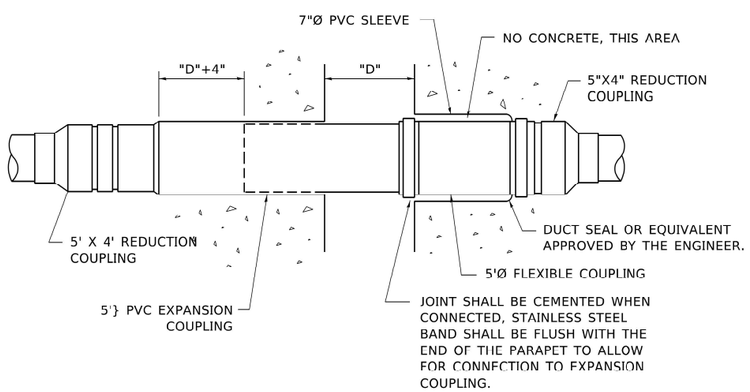

INSTALLATION OF CONDUIT IN BRIDGE PARAPET EXPANSION JOINT

(N.T.S.)

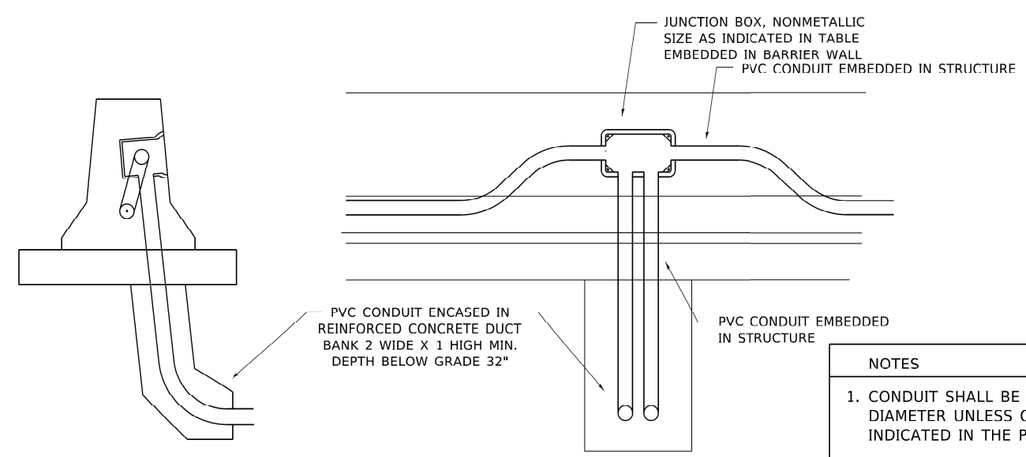

NOTES

1. CONDUIT SHALL BE 4-INCH DIAMETER UNLESS OTHERWISE INDICATED IN THE PLANS.
2. JUNCTION BOX SIZE:
   SINGLE FACE WALL: 21" X 11" X 8"
   DOUBLE FACE WALL: 20" X 13" X 12"

ED - BW

JUNCTION BOX EMBEDDED IN BARRIER WALL

LT–78

MODEL: Default
FILE NAME: pw:\\planroom.dot.illinois.gov:PWIDOT\Documents\IDOT Offices\District 1\Projects\BrSt\d22x31\CAD\Data\CADsheets\be703.dgn

USER NAME = footemj	DESIGNED -	REVISED -	
	DRAWN -	REVISED -	
PLOT SCALE = 50.0000 ' / in.	CHECKED -	REVISED -	
PLOT DATE = 4/19/2019	DATE - 01-20-2009	REVISED -	

STATE OF ILLINOIS
DEPARTMENT OF TRANSPORTATION

MISCELLANEOUS ELECTRICAL DETAILS, SHEET B
J BOX EMBEDDED IN BARRIER WALL – INSTALLATION OF CONDUIT IN BRIDGE PARAPET EXPANSION JOINT – ELECTRIC CONNECTION TO UNDERPASS LIGHTING

SCALE: NONE | SHEET 1 OF 1 SHEETS | STA. TO STA.

F.A.I. RTE.	SECTION	COUNTY	TOTAL SHEETS	SHEET NO.
80	2017-057F	WILL	1342	659
	BE-703	CONTRACT NO. 62F94		
	ILLINOIS	FED. AID PROJECT		

be703.dgn 4/19/2019 3:22:59 PM User: footemj

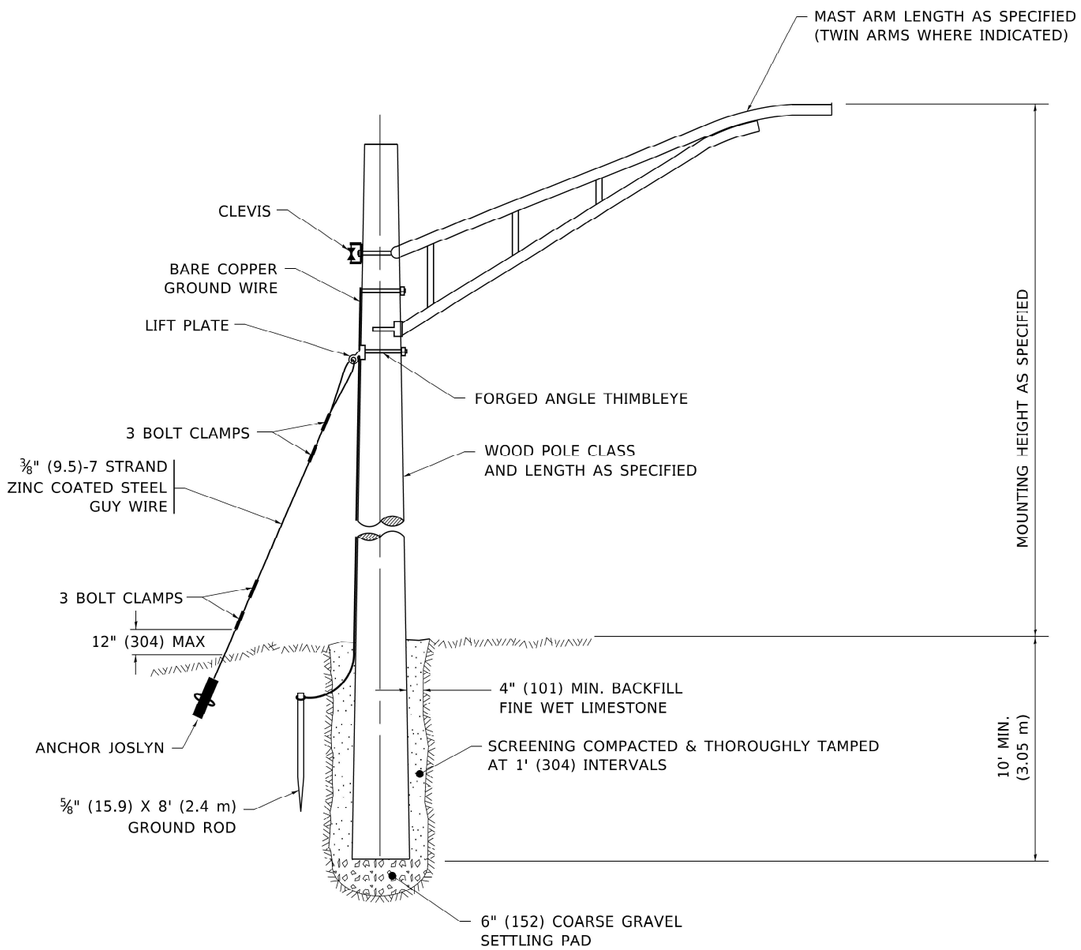

TEMPORARY LIGHT POLE DETAIL

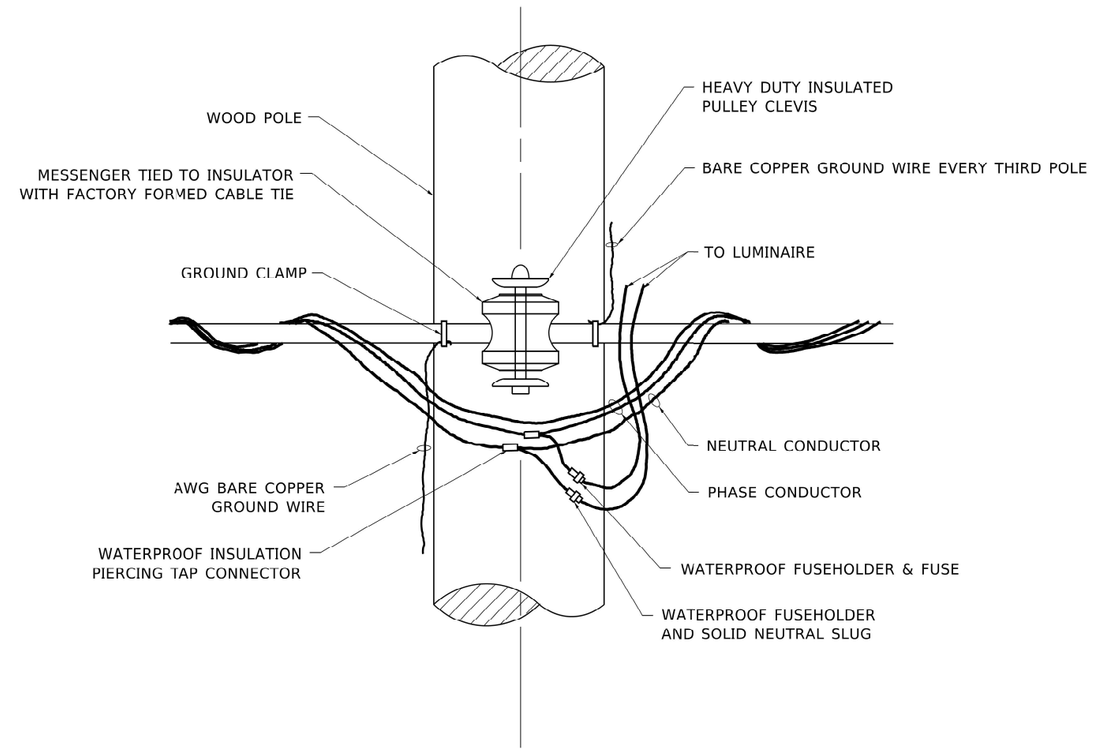

TEMPORARY LIGHT POLE ATTACHMENT DETAIL

NOTE:

1. ALL DIMENSIONS IN INCHES (MILLIMETERS) UNLESS OTHERWISE INDICATED.
2. MAST ARM SHALL BE RATED FOR THE SPECIFIED MOUNTING HEIGHT.

LT–79

USER NAME = footemj	DESIGNED -	REVISED - 08-08-03	STATE OF ILLINOIS DEPARTMENT OF TRANSPORTATION	TEMPORARY LIGHT POLE DETAILS	F.A.I. RTE.	SECTION	COUNTY	TOTAL SHEETS	SHEET NO.
	DRAWN -	REVISED - R.T. 07-26-16			80	2017-057F	WILL	1342	660
PLOT SCALE = 50.0010 ' / in.	CHECKED -	REVISED -			BE–800		CONTRACT NO. 62F94		
PLOT DATE = 4/19/2019	DATE -	REVISED -		SCALE: NONE SHEET 1 OF 1 SHEETS STA. TO STA.	ILLINOIS	FED. AID PROJECT			

MODEL: Default
FILE NAME: pw:\\planroom.dot.illinois.gov:PWIDOT\Documents\IDOT Offices\District 1\Projects\DistStd22x34\CADData\CADsheets\be800.dgn

be800.dgn 4/10/2019 3:24:15 PM User=footemj

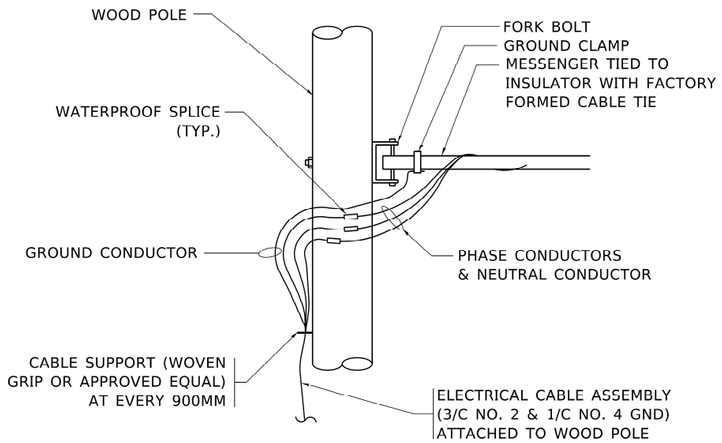

AERIAL CABLE CONNECTION DETAIL

N.T.S.

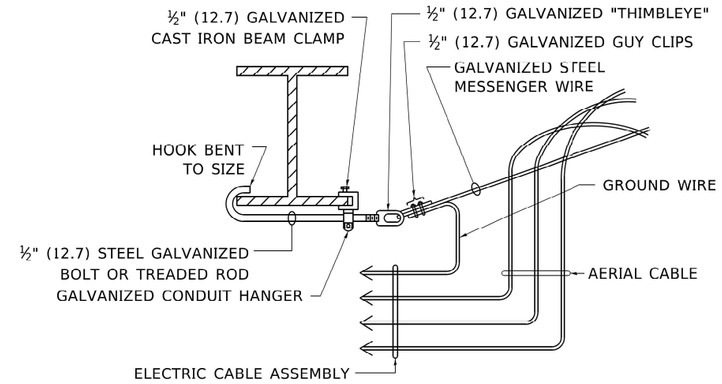

AERIAL CABLE ATTACHED TO STRUCTURE

NOT TO SCALE

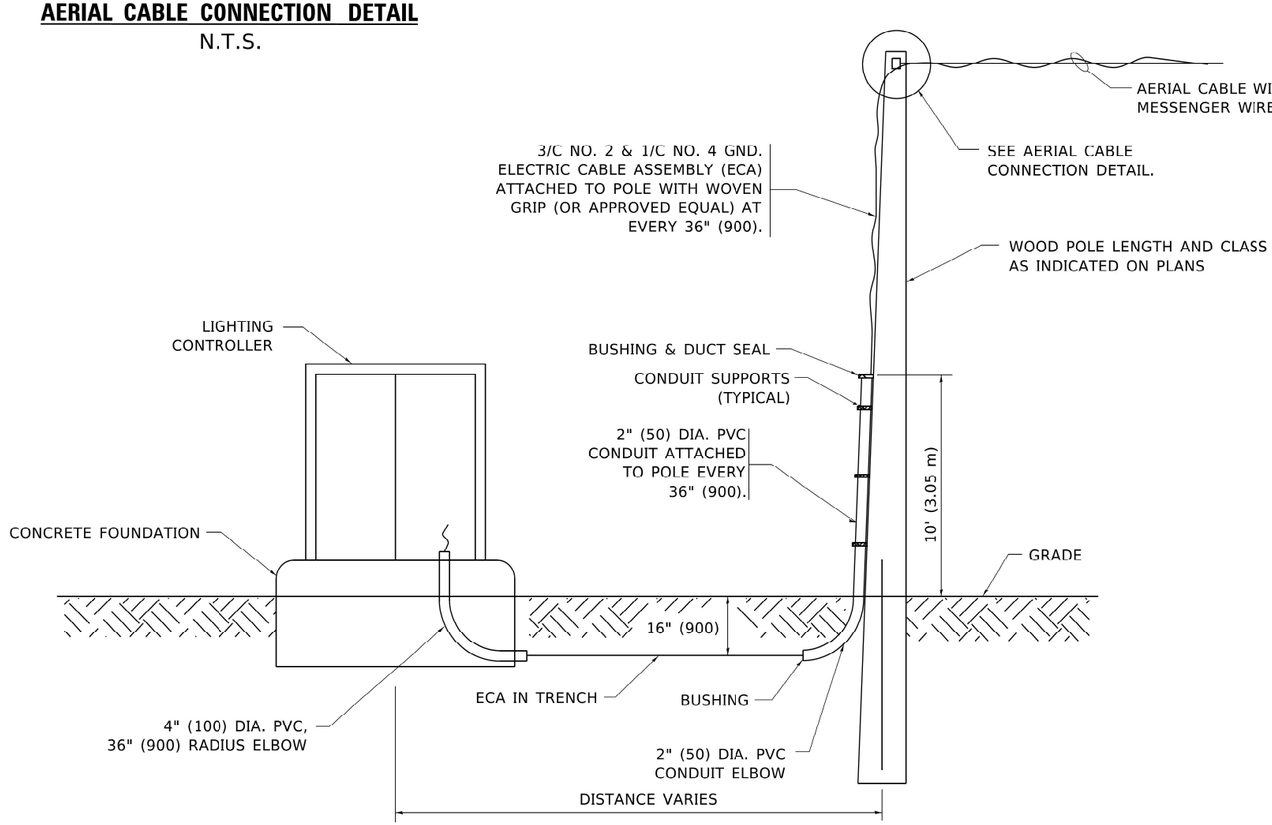

WOOD POLE TO LIGHTING CONTROLLER WIRING CONNECTION DETAIL

N.T.S.

NOTES:

1. ALL DIMENSIONS IN INCHES (MILLIMETERS) UNLESS OTHERWISE INDICATED.
2. SEE PROPOSED LIGHTING PLAN FOR CONDUIT, CABLE AND ROUTING.
3. THE CONTRACTOR SHALL PROVIDE INTERMEDIATE SUPPORTS TO MAINTAIN MINIMUM CLEARANCES. REFER TO AERIAL AERIAL CABLE ATTACHED TO STRUCTURE DETAIL.
4. COST OF SPLICES AND MOUNTING HARDWARE SHALL BE INCLUDED IN THE UNIT PRICE FOR AERIAL CABLE.

LT–80

MODEL: Default
FILE NAME: pw:\\plaroom.dot.illinois.gov:PWIDOT\Documents\IDOT Offices\District 1\Projects\Dist\Std22x34\CADData\CADsheets\bc81.dgn

USER NAME = footemj	DESIGNED -	REVISED - 08-08-03	STATE OF ILLINOIS DEPARTMENT OF TRANSPORTATION	TEMPORARY AERIAL CABLE INSTALLATION	
	DRAWN -	REVISED -			
PLOT SCALE = 50.0000 ' / in.	CHECKED -	REVISED -			
PLOT DATE = 4/19/2019	DATE -	REVISED -		SCALE: NONE	SHEET 1 OF 1 SHEETS STA. TO STA.

F.A.I. RTE.	SECTION	COUNTY	TOTAL SHEETS	SHEET NO.
80	2017-057F	WILL	1342	661
BE–801		CONTRACT NO. 62F94		
		ILLINOIS	FED. AID PROJECT	

bc801.dgn 4/10/2019 3:25:08 PM User=footemj

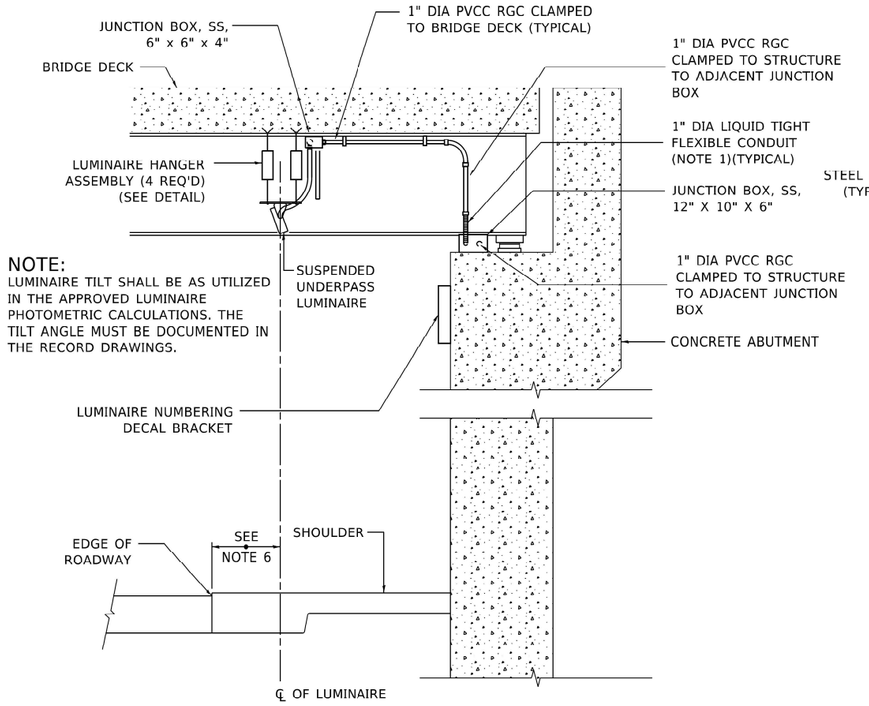

NOTE:
LUMINAIRE TILT SHALL BE AS UTILIZED IN THE APPROVED LUMINAIRE PHOTOMETRIC CALCULATIONS. THE TILT ANGLE MUST BE DOCUMENTED IN THE RECORD DRAWINGS.

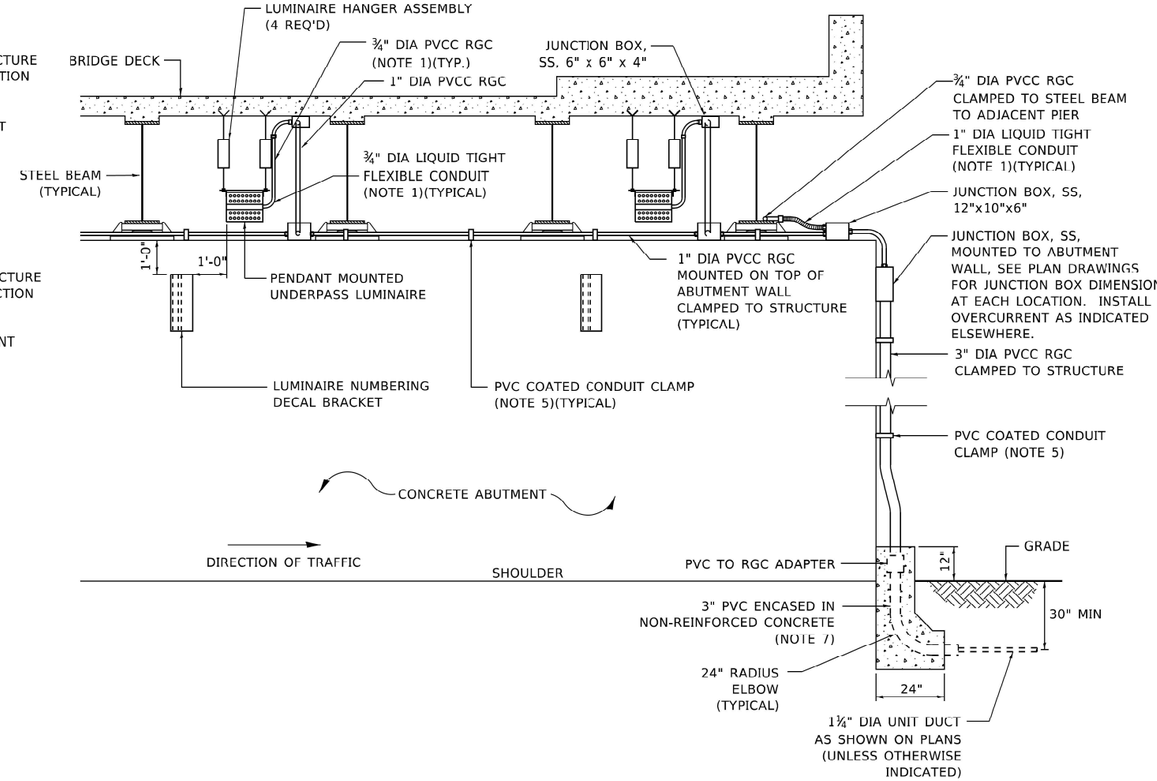

NOTES:

1. LIQUID TIGHT FLEXIBLE METAL CONDUIT, MAXIMUM LENGTH 6'-0", TYPICAL FOR EACH INSTANCE AS SHOWN. PROVIDE PVC COATED RIGID GALVANIZED STEEL CONDUIT AS REQUIRED NOT TO EXCEED 6'-0" OF FLEXIBLE LIQUID TIGHT METAL CONDUIT. LIQUID TIGHT FLEXIBLE METAL CONDUIT WILL BE INCLUDED IN THE COST OF THE CONDUIT ATTACHED TO STRUCTURE, OF THE CORRESPONDING DIA., GALVANIZED STEEL, PVC COATED PAY ITEM EXCEPT THAT " DIA. CONDUIT AND " DIA. FLEXIBLE CONDUIT SHALL BE INCLUDED IN THE COST OF UNDERPASS LUMINAIRE INSTALLATION.
2. SEE UNDERPASS LIGHTING PLANS FOR INSTALLATION LOCATION OF UNDERPASS LIGHTING LUMINAIRES.
3. THE CONTRACTOR SHALL USE APPROVED SINGLE COIL FLARED LOOP INSERTS WHEN SUSPENDED MOUNTING AN UNDERPASS LUMINAIRE TO A NEW BRIDGE DECK. THE FLARED LOOP INSERTS MUST BE CAST INTO THE CONCRETE DECK. THE CONTRACTOR IS RESPONSIBLE FOR LOCATING AND COORDINATING THE INSERT LOCATIONS FOR MOUNTING THE UNDERPASS LIGHTING SYSTEM AS SHOWN ON THE PLANS WITH THE BRIDGE DECK CONTRACTOR. SEE DETAIL.
4. THE UNDERPASS LUMINAIRE HANGER ASSEMBLY COMPLETE WITH HEAVY DUTY ANCHORS/INSERTS AND ALL APPLICABLE HARDWARE SHALL BE INCLUDED IN THE COST OF THE UNDERPASS LUMINAIRE PAY ITEM.
5. SECURE THE CONDUIT WITH PVC COATED CONDUIT CLAMPS OR CONDUIT BEAM CLAMPS AS SHOWN AT 5'-0" INTERVALS FOR LATERALS AND WITHIN 2'-0" MAXIMUM FROM ANY JUNCTION BOX, FLEXIBLE CONDUIT, OR CHANGE IN DIRECTION. ALL PVC COATED CONDUIT CLAMPS OR BEAM CLAMPS SHALL BE INCLUDED WITH THE COST OF THE "CONDUIT ATTACHED TO STRUCTURE. OF THE CORRESPONDING DIA.. GALVANIZED STEEL, PVC COATED" PAY ITEM.
6. ALL UNDERPASS LUMINAIRES MUST BE CENTERED IN THE BEAM SPACE AS INDICATED ON THE PLANS UNLESS OTHERWISE DIRECTED BY THE ENGR. LUMINAIRE SETBACK SHALL BE AS INDICATED IN PLANS FOR EACH SPECIFIC UNDERPASS
7. THE CONCRETE ENCASED CONDUIT TRANSITION SHALL BE INCLUDED IN THE COST OF THE GALVANIZED RIGID STEEL CONDUIT PAY ITEMS.
8. ALL CONDUIT ATTACHED TO STRUCTURE SHALL BE PVC COATED RIGID STEEL CONDUIT (PVCC RGC) TYPICAL.
9. IN NO INSTANCE SHALL ANY UNDERPASS LUMINAIRE OR ANY OTHER ELECTRICAL EQUIPMENT BE INSTALLED BELOW THE ELEVATION OF THE BOTTOM OF THE BRIDGE BEAM WHEN OVER ANY PAVEMENT (ROADWAY OR SHOULDER).

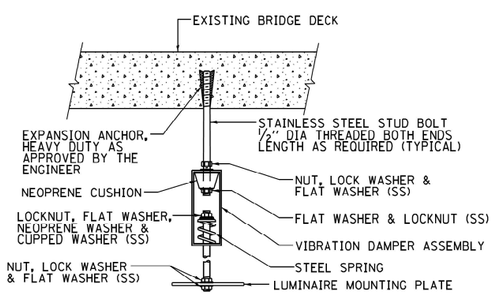

EXISTING BRIDGE DECK INSTALLATION

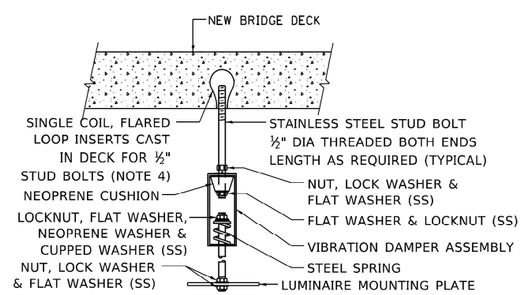

NEW BRIDGE DECK INSTALLATION

TYPICAL LUMINAIRE HANGER ASSEMBLY DETAILS

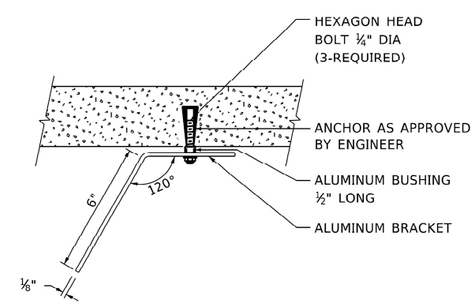

TOP VIEW

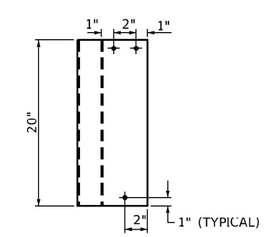

ELEVATION

LUMINAIRE NUMBERING DECAL BRACKET

NOT TO SCALE

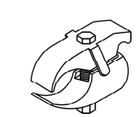

PVC COATED CONDUIT BEAM CLAMP
NOT TO SCALE

PVC COATED CONDUIT CLAMP
NOT TO SCALE

LT–81

MODEL: Default
FILE NAME: pw:\\pwtroom.dot.illinois.gov:PWIDOT\Documents\IDOT Offices\District 1\Projects\Uis\Sd22x34\CADData\CADsheets\bs60C1.dgn

USER NAME = gaglianobt	DESIGNED -	REVISED - 12-12-05	STATE OF ILLINOIS DEPARTMENT OF TRANSPORTATION
	DRAWN -	REVISED -	
PLOT SCALE = 100.0000 ' / in.	CHECKED -	REVISED -	
PLOT DATE = 1/15/2020	DATE -	REVISED -	

SUSPENDED MOUNT LED UNDERPASS LUMINAIRE INSTALLATION DETAILS

SCALE: NONE | SHEET 1 OF 1 SHEETS | STA. TO STA.

F.A.I. RTE.	SECTION	COUNTY	TOTAL SHEETS	SHEET NO.
80	2017-057F	WILL	1342	662
	BE-901	CONTRACT NO. 62F94		
	ILLINOIS	FED. AID PROJECT		

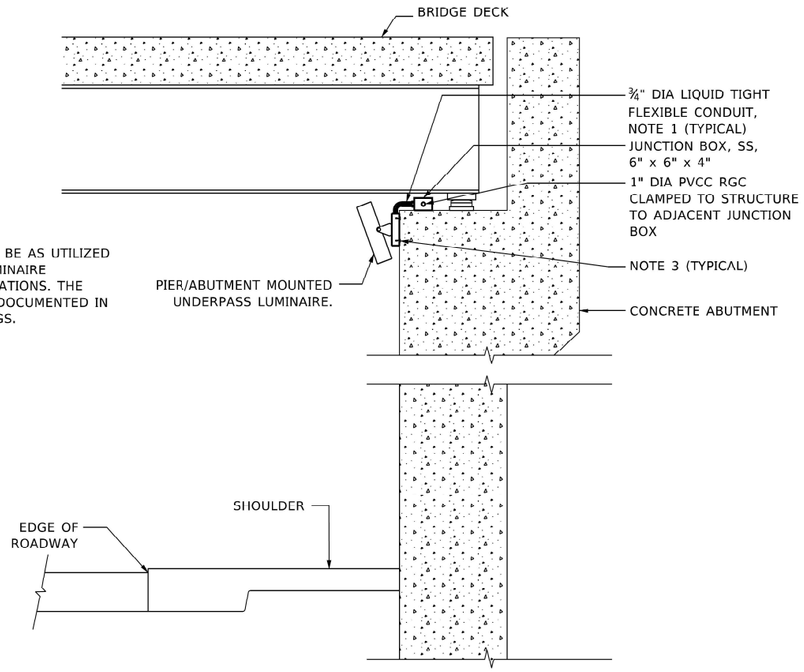

NOTE:

LUMINAIRE TILT SHALL BE AS UTILIZED IN THE APPROVED LUMINAIRE PHOTOMETRIC CALCULATIONS. THE TILT ANGLE MUST BE DOCUMENTED IN THE RECORD DRAWINGS.

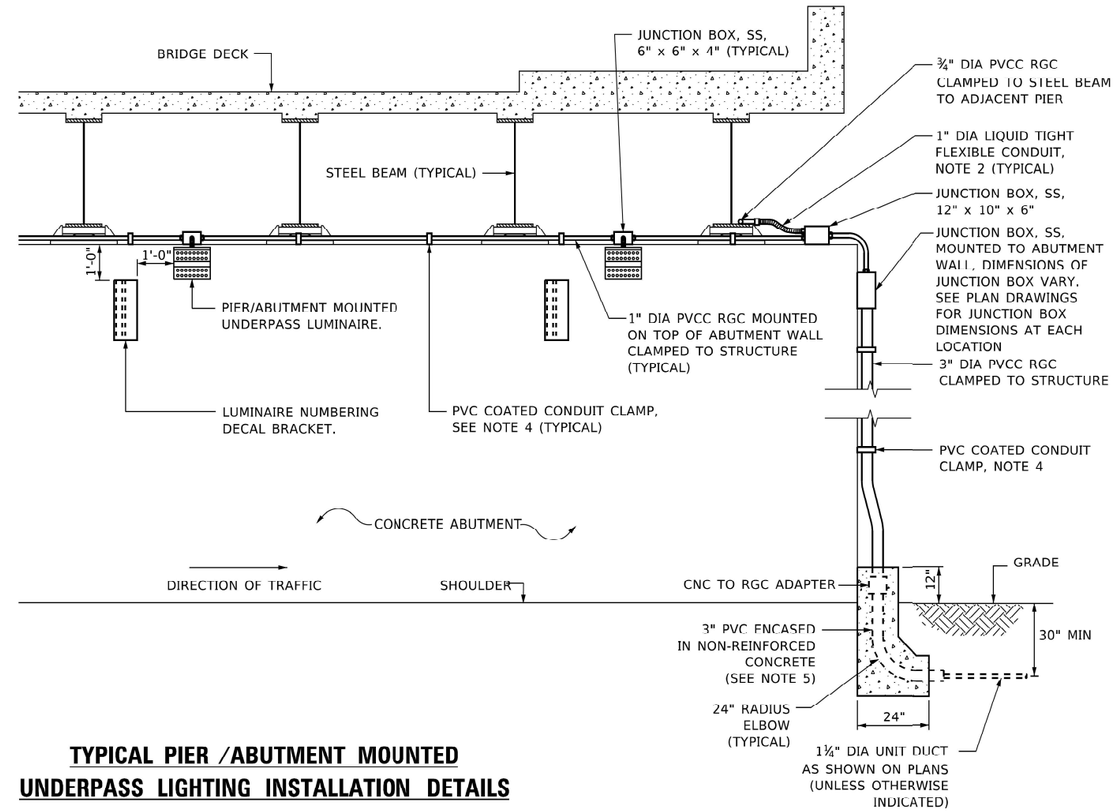

TYPICAL PIER /ABUTMENT MOUNTED UNDERPASS LIGHTING INSTALLATION DETAILS

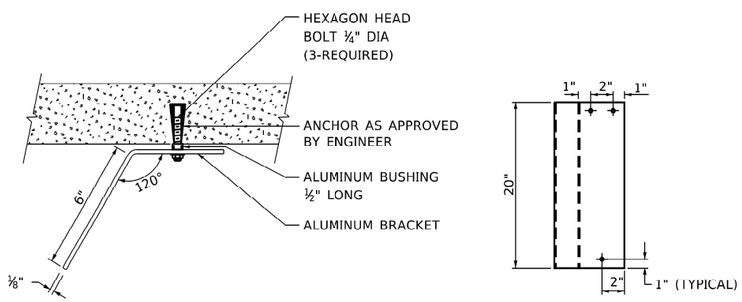

TOP VIEW **ELEVATION**

LUMINAIRE NUMBERING DECAL BRACKET

NOT TO SCALE

PVC COATED CONDUIT BEAM CLAMP

NOT TO SCALE

PVC COATED CONDUIT CLAMP

NOT TO SCALE

NOTES:

1. LIQUID TIGHT FLEXIBLE METAL CONDUIT, MAXIMUM LENGTH 6'-0", TYPICAL FOR EACH INSTANCE AS SHOWN. PROVIDE PVC COATED RIGID GALVANIZED STEEL CONDUIT AS REQUIRED NOT TO EXCEED 6'-0" OF FLEXIBLE LIQUID TIGHT METAL CONDUIT. LIQUID TIGHT FLEXIBLE METAL CONDUIT WILL BE INCLUDED IN THE COST OF THE CONDUIT ATTACHED TO STRUCTURE, OF THE CORRESPONDING DIA., GALVANIZED STEEL, PVC COATED PAY ITEM EXCEPT THAT THE COST OF THE " DIA. RIGID STEEL CONDUIT AND " DIA. FLEXIBLE CONDUIT SHALL BE INCLUDED IN THE LUMINAIRE INSTALLATION.
2. SEE UNDERPASS LIGHTING PLANS FOR INSTALLATION LOCATION OF UNDERPASS LIGHTING LUMINAIRES.
3. UNDERPASS LUMINAIRE MOUNTED TO FACE OF PIER OR ABUTMENT WALL WITH ½" ALUMINUM SPACERS. MOUNTING HEIGHT OF 1" BELOW THE TOP OF PIER OR ABUTMENT WALL TYPICAL FOR ALL PIER/ABUTMENT MOUNTED UNDERPASS LUMINAIRES UNLESS OTHERWISE NOTED.
4. EXPANSION ANCHOR, POWDER ACTUATED FASTENERS WILL NOT BE ALLOWED. EXPANSION ANCHOR MUST BE SIZED IN ACCORDANCE WITH MANUFACTURERS REQUIREMENTS.
5. SECURE THE CONDUIT WITH PVC COATED CONDUIT CLAMPS OR CONDUIT BEAM CLAMPS AS SHOWN AT 5'-0" INTERVALS FOR LATERALS AND WITHIN 2'-0" MAXIMUM FROM ANY JUNCTION BOX, FLEXIBLE CONDUIT, OR CHANGE IN DIRECTION. ALL PVC COATED CONDUIT CLAMPS OR BEAM CLAMPS SHALL BE INCLUDED WITH THE COST OF THE "CONDUIT ATTACHED TO STRUCTURE, OF THE CORRESPONDING DIA., GALVANIZED STEEL, PVC COATED" PAY ITEM.
6. THE CONCRETE ENCASED CONDUIT TRANSITION SHALL BE INCLUDED IN THE COST OF THE GALVANIZED RIGID STEEL CONDUIT PAY ITEMS.
7. ALL CONDUIT ATTACHED TO STRUCTURE SHALL BE PVC COATED RIGID STEEL CONDUIT (PVCC RGC) TYPICAL.

MODEL: Default
FILE NAME: ew:\\planroom.dot.illinois.gov:PWIDOT\Documents\IDOT Offices\District 1\Projects\DistStd22x3\CAD\Date\CADsheets\bs6903.dgn

USER NAME = gaglianobt	DESIGNED - MAG	REVISED - 01-25-05	
	DRAWN - MAG	REVISED -	
PLOT SCALE = 100.0000 ' / in.	CHECKED - MG/RP	REVISED -	
PLOT DATE = 1/15/2020	DATE -	REVISED -	

STATE OF ILLINOIS
DEPARTMENT OF TRANSPORTATION

PIER /ABUTMENT MOUNTED LED UNDERPASS LUMINARE INSTALLATION DETAILS

SCALE: NONE | SHEET 1 OF 1 SHEETS | STA. TO STA.

F.A.I. RTE.	SECTION	COUNTY	TOTAL SHEETS	SHEET NO.
80	2017-057F	WILL	1342	663
	BE–903	CONTRACT NO. 62F94		
	ILLINOIS	FED. AID PROJECT		

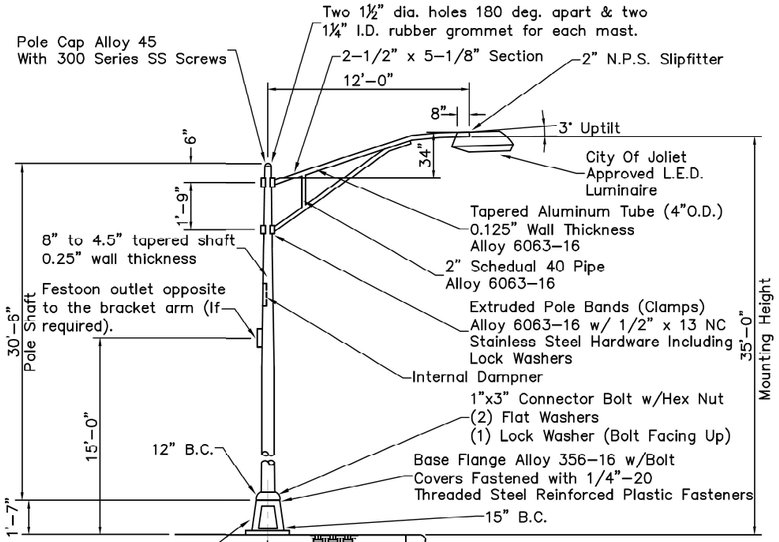

Street Light Detail

Not to scale.

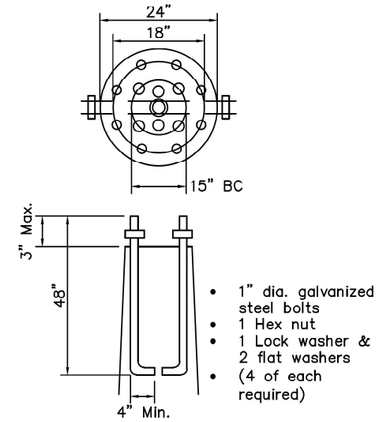

Anchor Bolts

No scale.

General Notes

The contractor shall submit detailed shop drawings or catalog cuts for all equipment & materials to the City of Joliet for approval prior to fabrication or installation. Failure to submit and approve material may result in unaccepted work and/or reinstallation.

The streetlight system shall be installed in accordance to the most current edition of the "District One Recurring Special Provisions for Roadway Lighting", the "National Electric Code", "AASHTO", and the standard specifications for road and bridge construction.

All conductors shall be copper with an XLP/USE insulation rating.

The contractor shall provide the service connection & meter assembly for Commonwealth Edison. All coordination shall be the responsibility of the contractor.

The electrical meter shall be installed on the side of the controller opposite that of oncoming traffic.

Two raceways or conduits shall be provided for each streetlight foundation. A junction of three raceways or conduits shall utilize a handhole.

Prior to beginning construction, the contractor shall contact the City of Joliet Traffic Engineer at (815)724-4200 to arrange an onsite project meeting. Confirmation of all approved materials and addressing any final questions shall take place at this time.

Foundation inspections will be required prior to pouring concrete.

All conduit between the streetlight controller and the service connection shall be rigid galvanize steel conduit.

Waterproof inline fuses (5Amp) are to be installed at the streetlight transformer base.

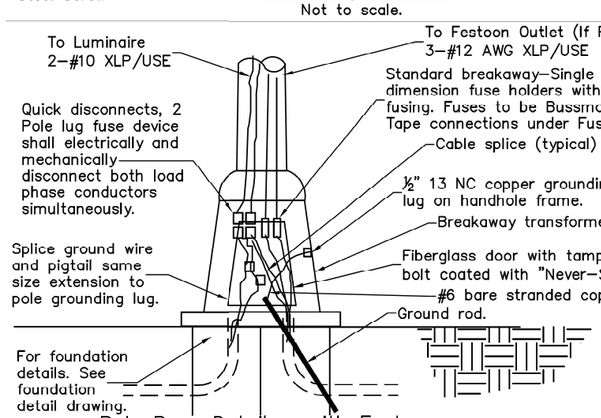

Pole Base Detail - with Festoon

Not to scale.

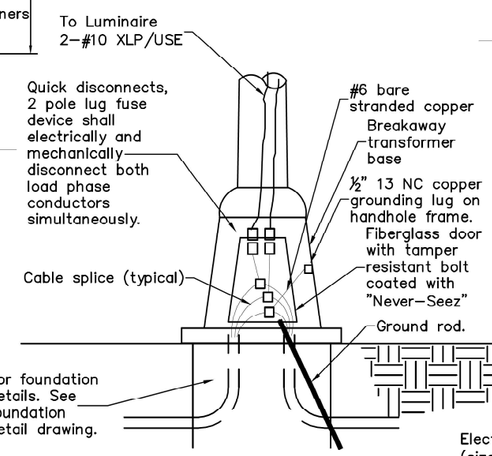

Pole Base Detail - without Festoon

Not to scale.

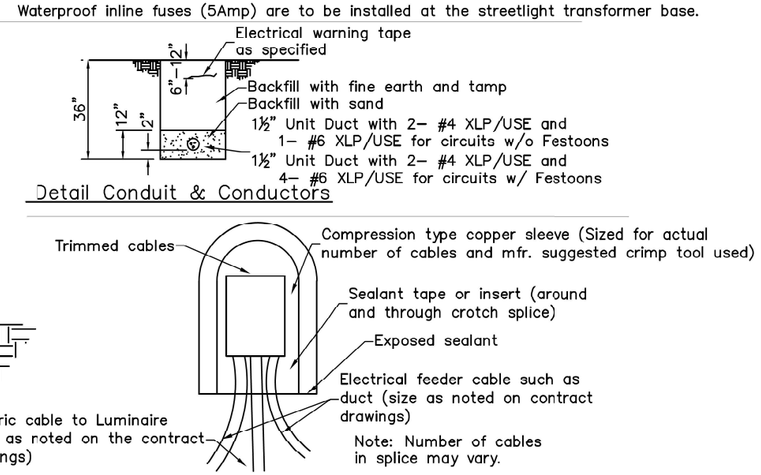

Detail Conduit & Conductors

Splicing Electric Cable

No scale

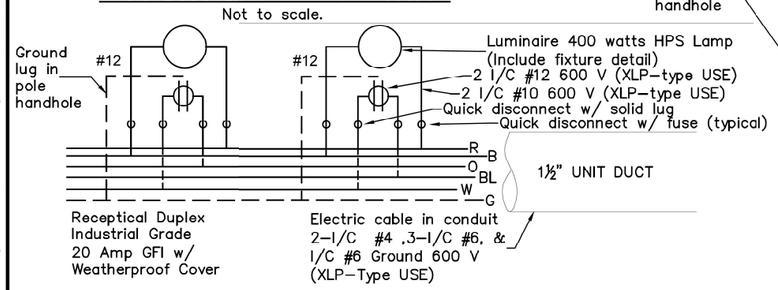

Light Pole Wiring - with Festoon

240/120 Volt 1 Phase 6 Conductor

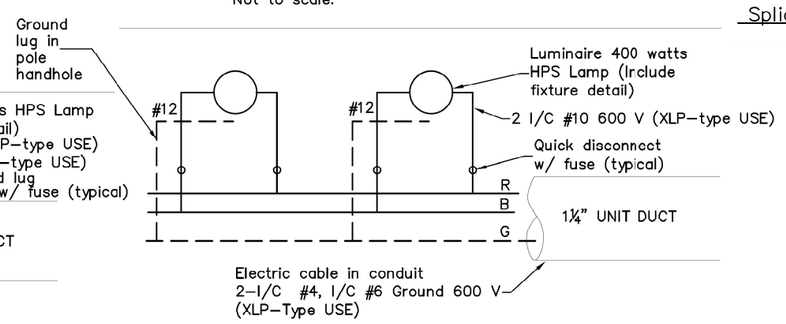

Light Pole Wiring - without Festoon

240/120 Volt 1 Phase 3 Conductor

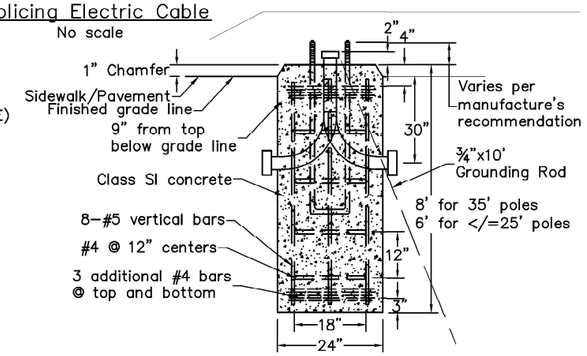

Street Light Pole Foundation Type A (typical)

No scale

Public Works Construction Standards
Street Light Requirements

SCALE: NONE | DATE: March 2024 | SHEET 28 OF 39

CHECKED BY: GPR | DESIGNED BY: SWM | DRAWN BY: SWM

CITY OF JOLIET
DEPARTMENT OF PUBLIC WORKS
150 W. JEFFERSON STREET, JOLIET, ILLINOIS 60431
(815)-724-4200

LT-83

Bench Mark: Square on S.E. wingwall of I-80 W.B. bridge S.N. 099-0061, Sta. 709+99.63, 12.99' Lt., Elev. 579.27

Existing Structure: S.N. 099-0060 (EB) and S.N. 099-0061 (WB) were built in 1964 under F.A.I. Route 80 Project I-IG-80-4(35)134, Section 99-4VB. Existing dual structures consist of a seven span structure composed of two three-span units and a single span unit. The reinforced concrete deck is carried by W36 rolled steel beams (composite between piers 3 and 4 and piers 9 and 10 only, supported by pile bent abutments and multi-column concrete piers on steel piles. The approach slabs are supported on timber piles. The EB structure measures 483'-5" back to back of abutments and the WB structure measures 477'-1" back to back of abutments. The out to out deck width is 48'-0" at each structure. The structure will be removed and replaced.

Stage construction will be utilized to maintain traffic during construction.

No salvage

R.R. CLEARANCES TO EXIST. STRUCTURE

Railroad	Track	Horiz. Clr.	Vert. Clr.
BNSF	Future	0"	23'-4"
BNSF	Main 1	13'-3"	23'-4"
BNSF	Main 2	26'-11"	23'-1"
UP RR	West	23'-2"	22'-5"
UP RR	East	8'-10"	22'-3"

APPROVED
For Structural Adequacy Only
Engineer of Bridges & Structures

EXP
STATE OF ILLINOIS
MAEN A. FARHAT
081.008545
LICENSED STRUCTURAL ENGINEER
DATE SIGNED: 10/31/2025
MAEN A. FARHAT, PHD, P.E., S.E.
NO. 081-008545
EXP. DATE: 11/30/2026
SEAL AND SIGNATURE APPLY TO:
SHEETS 1 - 3, 8 - 66, & 92

HNTB CORPORATION
LICENSED STRUCTURAL ENGINEER
Alan P. Cubas
081-008238
STATE OF ILLINOIS
DATE SIGNED: 10/31/2025
ALAN P. CUBAS, P.E., S.E.
NO. 081-008238
EXP. DATE: 11/30/2026
SEAL AND SIGNATURE APPLY TO:
SHEETS 4 - 7, 67 - 91, & 93 - 112

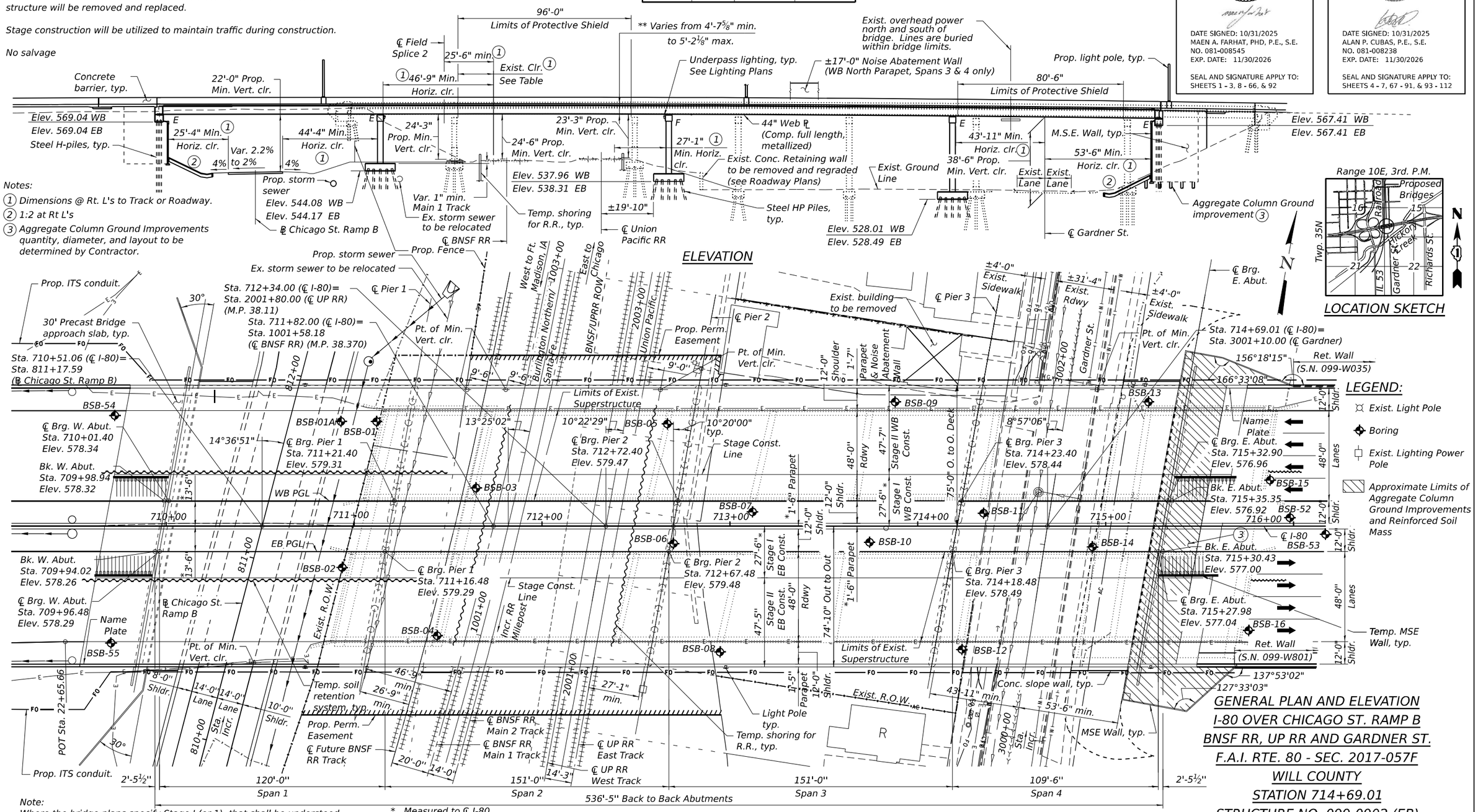

ELEVATION

PLAN

Note:
Where the bridge plans specify Stage I (or 1), that shall be understood to mean MOT Stage 2A. Where the bridge plans specify Stage II (or 2), that shall be understood to mean MOT Stage 2B.

* Measured to ℄ I-80
** Measured from top of deck to bottom of steel in Span 2

Notes:
(1) Dimensions @ Rt. L's to Track or Roadway.
(2) 1:2 at Rt L's
(3) Aggregate Column Ground Improvements quantity, diameter, and layout to be determined by Contractor.

GENERAL PLAN AND ELEVATION
I-80 OVER CHICAGO ST. RAMP B
BNSF RR, UP RR AND GARDNER ST.
F.A.I. RTE. 80 - SEC. 2017-057F
WILL COUNTY
STATION 714+69.01
STRUCTURE NO. 099-0902 (EB)
STRUCTURE NO. 099-0903 (WB)

USER NAME =	DESIGNED - BAR	REVISED -	
	CHECKED - KK	REVISED -	
PLOT SCALE =	DRAWN - MTR	REVISED -	
PLOT DATE =	CHECKED - BAR	REVISED -	

STATE OF ILLINOIS
DEPARTMENT OF TRANSPORTATION

GENERAL PLAN AND ELEVATION
STRUCTURE NOS. 099-0902 (EB) & 099-0903 (WB)
SHEET SA-1 OF SA-112 SHEETS

F.A.I. RTE.	SECTION	COUNTY	TOTAL SHEETS	SHEET NO.
80	2017-057F	WILL	1342	665
		CONTRACT NO. 62F94		
		ILLINOIS FED. AID PROJECT		

MODEL: SHEET 1
FILE NAME: C:\TRANSYSTEMS\PW_LOCAL\TRANSYSTEMS-PW-01\DMS20864\0990902_0903-62F94-001-GPE.DGN
10-27-2025, 16:46:11

GENERAL NOTES

1. The scope of this contract includes erection of the structural steel and bearings. All work shown related to the Beam and Bearing Fabrication Contract (80C53) is for information only.
2. FOR INFORMATION ONLY - Fasteners shall be ASTM F 3125 Grade A325 Type 1, mechanically galvanized bolts in painted or coated metallized areas. Bolts ⅞ in. ∅, holes $^{15}/_{16}$ in. ∅, unless otherwise noted. See Special Provision for "Metallizing of Structural Steel".
3. FOR INFORMATION ONLY - Calculated weight of Structural Steel = 3,764,960 lbs AASHTO M270 Grade 50
   = 118,970 lbs AASHTO M270 Grade 36
4. FOR INFORMATION ONLY - All structural steel shall be metallized. See Special Provision for "Metallizing of Structural Steel".
5. FOR INFORMATION ONLY - All metallized areas shall be painted with System 1. Exterior fascia girders shall be metallized and shop painted (System 3) on Fascia Girder Painting (System 3) Limits. See special provision for "Metallizing of Structural Steel." The color of the final finish coat of the paint shall be Gray, Munsell No. 5B 7/1.
6. No field welding is permitted except as specified in the contract documents.
7. Reinforcement bars designated (E) shall be epoxy coated.
8. Bearing seat surfaces shall be constructed or adjusted to the designated elevations within a tolerance of ⅛ inch (0.01 ft.). Adjustment shall be made either by grinding the surface or by shimming the bearings.
9. The existing structural steel coating contains lead. The Contractor shall take appropriate precautions to address the presence of lead on this project.
10. The embankment configuration shown shall be the minimum that must be placed and compacted prior to construction of the abutments.
11. Slipforming of the parapets is not allowed.
12. Existing protective shielding over railroads and Gardner St. was installed under Contract 60M66. If the Contractor elects to use the existing protective shielding, the Contractor shall inspect its condition prior to bidding and make necessary adjustments or modifications as necessary for reuse. In addition, the Contractor shall submit, to the Engineer, calculations and working drawings prepared and sealed by an Illinois Licensed Structural Engineer incorporating the existing protective shielding into this work. This work, along with modifications and adjustments shall be included in the cost of Protective Shield.
13. The removal and disposal of the existing protective shielding shall be included in the cost of Removal of Existing Structures No. 1 for WB and Removal of Existing Structures No. 2 for EB.
14. If the Contractor elects to use cantilever forming brackets on the exterior beams or girders, the brackets shall be placed at the same locations as required for the hardwood blocks in Article 503.06(b) of the Standard Specifications. If additional cantilever forming brackets are required, hardwood blocking shall be wedged between the exterior and first interior beam at each of these additional bracket locations.
15. Where the bridge plans specify Stage I (or 1), that shall be understood to mean MOT Stage 2A. Where the bridge plans specify Stage II (or 2), that shall be understood to mean MOT Stage 2B.

RAILROAD GENERAL NOTES

1. Within these notes, "Railroad" shall refer to both BNSF and the Union Pacific Railroad.
2. A contractor's right-of-entry permit is required before any work can commence on Railroad property. The cost to obtain this permit shall be considered incidental to the project.
3. No disruptions of Railroad operations will be permitted.
4. All work within 25 feet of the nearest track will require a Railroad flagman. To schedule a flagman for work on a UPRR commuter line, call Candice Miller at (312) 496-4738, a minimum 72 hours in advance of start of work. To schedule a flagman for work on UPRR freight lines, call Daryl Clark at (708) 649-5273, a minimum of 72 hours in advance of start of work. To schedule a flagman for work on BNSF lines, call Justin Morrison at (817) 880-2054.

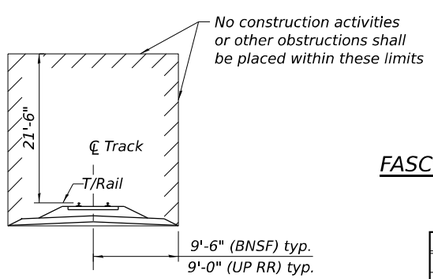

MINIMUM CONSTRUCTION CLEARANCE ENVELOPE

(Dimensions @ Rt. L to ℄ Track)

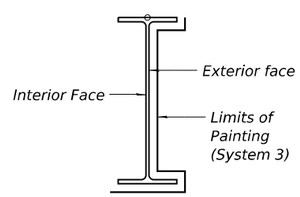

FASCIA GIRDER PAINTING (SYSTEM 3) LIMITS

RAILROAD INFORMATION

Railroad Owner	BNSF RR	UP RR
Subdivision	Chillicothe	
Latitude/ Longitude	41°30'43"N 88°04'47"W	41°30'44"N 88°04'46"W
City, State	Joliet, IL	Joliet, IL
Railroad Mile Post	38.370	

CONT, OF RAILROAD GENERAL NOTES

5. UPRR work windows within the 25 foot zone are only available from 9:00 AM - 3:00 PM, Monday through Friday. Night work windows are available from 8:00 PM - 4:00 AM. Please provide at least 72 hours of additional notice when requesting to work at night to ensure appropriate flagging coverage. Extended work windows may be available on the weekends. Not withstanding the forgoing, due to interstate freight train and commuter passenger train operations and schedules all work windows within the times listed above are subject to on site unilateral adjustment or denial from the UPRR's local field manager and/or corridor manager. This may result in denial or adjustment of access for any and all contractors, subcontractors and material men during work windows.

   BNSF will try to accommodate work windows when they are available.
6. No un-used work equipment will be allowed to remain on the UPRR's commuter platform if present.
7. BNSF and UPRR utilities are not included under JULIE. Call Candice Miller at (312) 496-4738 for UP RR locates. Call 1-800-533-2891 for BNSF locates.
8. UPRR Fiber optics may be present in this area. Call (800) 336-9193 for UPRR Operations to coordinate any required protection or relocation, prior to construction.
9. Railroad review and approval of shoring, demolition, erection, and falsework is required.
10. Erection over the Railroad Right-of-way shall be designed to cause no interruptions to Railroad operations. Erection over the Railroad track shall be developed such that it enables the tracks(s) to remain open to train traffic per Railroad rquirements.
11. Minimum Construction Clearance Envelope of 21.5 feet vertical above the plane of top-of-rail and 9 feet horizontal at right angle from centerline of track shall be maintained at all time during construction.
12. Falsework clearance shall comply with the Railroad's Minimum Construction Clearance Envelope.
13. For Railroad coordination please refer to the Railroad Minimum Requirements as part of special provisions.
14. The contractor must submit a proposed method of erosion and sediment control and have the method approved by the Railroad.
15. The proposed grade separation project shall not change the quantity and/or characteristics of the flow in the Railroad ditches and/or drainage structures.
16. The elevation of the existing top-of-rail profile shall be verified before beginning construction. All discrepancies shall be brought to the attention of the Railroad prior to construction.
17. Any shoring system that impact the Railroad operations and/or supports Railroad embankment shall be designed and constructed per the Railroad temporary Shoring requirements.
18. All demolition within the Railroad right-of-way and/or demolition that may impact the Railroad tracks or operations shall comply with the Railroad demolition requirements.
19. Railroad requirements do not allow work within 50 feet of track centerline when a train passes the work site and all personnel must clear the area within 25 feet of the track centerline and secure all equipment.
20. All permanent clearances shall be verified before project closing.
21. Railroad ditches disturbed for existing pier removal shall be restored to original or better condition. Positive drainage shall be maintained at all times.

STATION 714+69.01
BUILT 20__ BY
STATE OF ILLINOIS
F.A.I. RTE. 80 SEC. 2017-057F
LOADING HL-93
STRUCTURE NO. 099-0902

STATION 714+69.01
BUILT 20__ BY
STATE OF ILLINOIS
F.A.I. RTE. 80 SEC. 2017-057F
LOADING HL-93
STRUCTURE NO. 099-0903

NAME PLATE

See Std. 515001

TOTAL BILL OF MATERIAL

ITEM	UNIT	SUPER	SUB	TOTAL
Removal Of Existing Structures No. 1	Each	-	-	1
Removal Of Existing Structures No. 2	Each	-	-	1
Protective Shield	Sq Yd	1,884	-	1,884
Structure Excavation	Cu Yd	-	12,303	12,303
Concrete Structures	Cu Yd	99.8	2,195.4	2,295.2
Concrete Superstructure	Cu Yd	2,650.4	-	2,650.4
Protective Coat	Sq Yd	10,849	-	10,849
Erecting Structural Steel	L Sum	1	-	1
Stud Shear Connectors	Each	53,724	-	53,724
Reinforcement Bars, Epoxy Coated	Pound	770,400	336,800	1,107,200
Bar Splicers	Each	3,972	530	4,502
Mechanical Splicers	Each	-	96	96
Slope Wall 4 Inch	Sq Yd	-	1,092	1,092
Furnishing Steel Piles HP12X53	Foot	-	17,287	17,287
Driving Piles	Foot	-	17,287	17,287
Test Pile Steel HP12X53	Each	-	10	10
Pile Shoes	Each	-	500	500
Name Plates	Each	2	-	2
Preformed Joint Seal 3 1/2"	Foot	595	-	595
Preformed Joint Strip Seal	Foot	302	-	302
Erecting Elastomeric Bearing Assembly, Type I	Each	44	-	44
Anchor Bolts, 1 1/4"	Each	-	308	308
Temporary Soil Retention System	Sq Ft	-	9,921	9,921
Mechanically Stabilized Earth Retaining Wall	Sq Ft	-	11,433	11,433
Temporary Mechanically Stabilized Earth Retaining Wall	Sq Ft	-	5,004	5,004
Granular Backfill For Structures	Cu Yd	-	638	638
Geocomposite Wall Drain	Sq Yd	-	314	314
Noise Abatement Wall Anchor Rod Assembly	Each	24	-	24
Aggregate Column Ground Improvement	L Sum	-	0.4	0.4
Bridge Deck Grooving (Longitudinal)	Sq Yd	6,342	-	6,342
Concrete Wearing Surface, 5"	Sq Yd	999	-	999
Precast Bridge Approach Slab	Sq Ft	8,520	-	8,520
Bar Terminators	Each	860	-	860
Pile Removal	Each	-	18	18
Erecting High Load Multi-Rotational Bearings, Disc, Guided Expansion - 500K	Each	44	-	44
Chain Link Fence, 4' Attached To Structure	Foot	-	113	113
Diamond Grinding (Bridge Section)	Sq Yd	8,982	-	8,982
Temporary Support System	L Sum	-	1	1

Note: The cost for Temporary Shoring for the Rail Road is included in the Pay Items Removal of Existing Structures No. 1 and Removal of Existing Structures No. 2. See Sheet SA-7.

LOADING HL-93

Allow 50#/sq. ft. for future wearing surface.

NOISE ABATEMENT WALL LOADING

Factored Strength III or V Wind: 35 psf
Factored Service I Wind: 15 psf
Unfactored Dead Load: 65 psf
Max. Wall Ht. Above T/Parapet = 12'-0"

DESIGN SPECIFICATIONS

2020 AASHTO LRFD Bridge Design Specifications, 9th Edition

DESIGN STRESSES

FIELD UNITS

f'c = 3,500 psi (Substructure)
f'c = 4,000 psi (Superstructure)
f'c = 5,000 psi (Wearing Surface)
f'c = 6,000 psi (Precast Approach Slabs)
f'ci = 5,000 psi (Precast Approach Slabs)
fy = 60,000 psi (Reinforcement)
fy = 50,000 psi (M270 Grade 50)

SEISMIC DATA

Seismic Performance Zone (SPZ) = 1
Design Spectral Acceleration at 1.0 sec. (SD1) = 0.068g
Design Spectral Acceleration at 0.2 sec. (SD1) = 0.125g
Soil Site Class = C

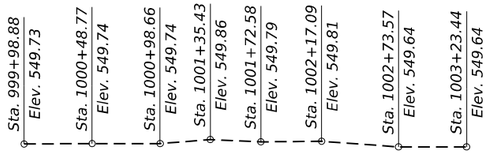

PROFILE GRADE EXIST. BNSF R.R.

(Top of Rail at East Track)

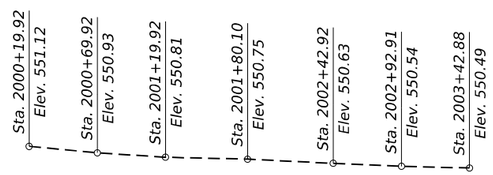

PROFILE GRADE EXIST. UNION PACIFIC R.R.

(Top of Rail at East Track)

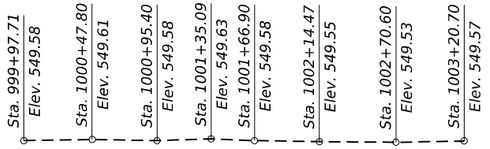

PROFILE GRADE EXIST. BNSF R.R.

(Top of Rail at West Track)

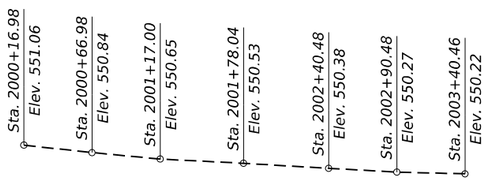

PROFILE GRADE EXIST. UNION PACIFIC R.R.

(Top of Rail at West Track)

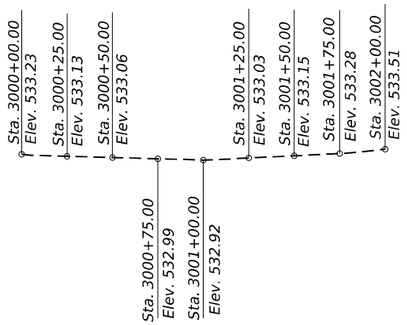

PROFILE GRADE EXIST. GARDNER ST.

(Along ℄ Roadway)

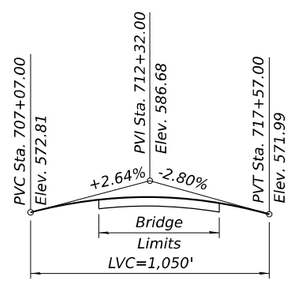

PROFILE GRADE PROP. I-80

(Along PGL of EB & WB Roadway)

Up to ¼" to be ground off the bridge deck and the bridge approach slabs. The Profile Grade shows the final grade after grinding.

INDEX OF SHEETS

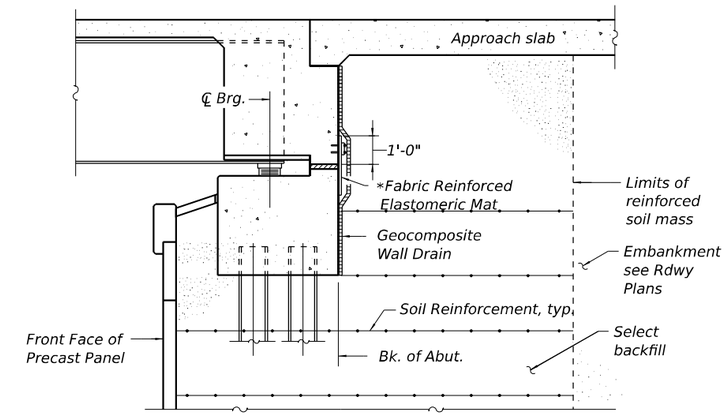

* According to Section 1028 of the Std. Specs.
Fabric mat shall be 24" wide and attached full
width and vertically at edges to the abutment cap
with a ⅜" x 5" steel plate and ½" Ø studs
with nuts and washers at 12" cts.
Cost included with Concrete Superstructure.

SECTION THRU ABUTMENT

(Horiz. dim. at Rt. ∠'s)

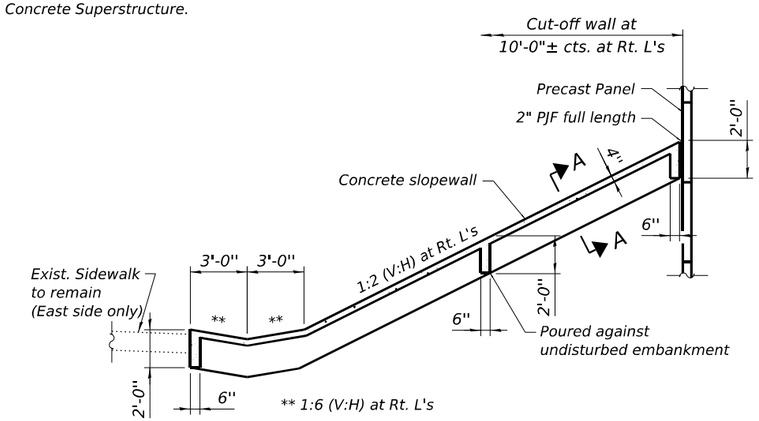

SECTION THRU CONCRETE SLOPE WALL

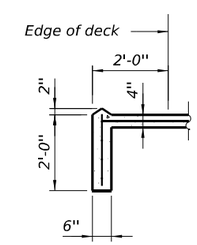

SECTION A-A

Notes:
1. Slopewall shall be reinforced with welded wire fabric,
   6" x 6" - W4.0 x W4.0, weighing 58 lbs. per 100 sq. ft.

MODEL: SHEET
FILE NAME: C:\TRANSYSTEMS\PW_LOCAL\TRANSYSTEMS-PW-01\DMS20864\0990902_0903-62F94-004-GN3.DGN

HNTB

USER NAME =	DESIGNED - SH	REVISED -	
	CHECKED - APC	REVISED -	
PLOT SCALE =	DRAWN - LK	REVISED -	
PLOT DATE =	CHECKED - APC	REVISED -	

STATE OF ILLINOIS
DEPARTMENT OF TRANSPORTATION

GENERAL DATA 3
STRUCTURE NOS. 099-0902 (EB) & 099-0903 (WB)

SHEET SA-4 OF SA-112 SHEETS

F.A.I. RTE.	SECTION	COUNTY	TOTAL SHEETS	SHEET NO.
80	2017-057F	WILL	1342	668
		CONTRACT NO. 62F94		
	ILLINOIS	FED. AID PROJECT		

10-27-2025, 16:46:22

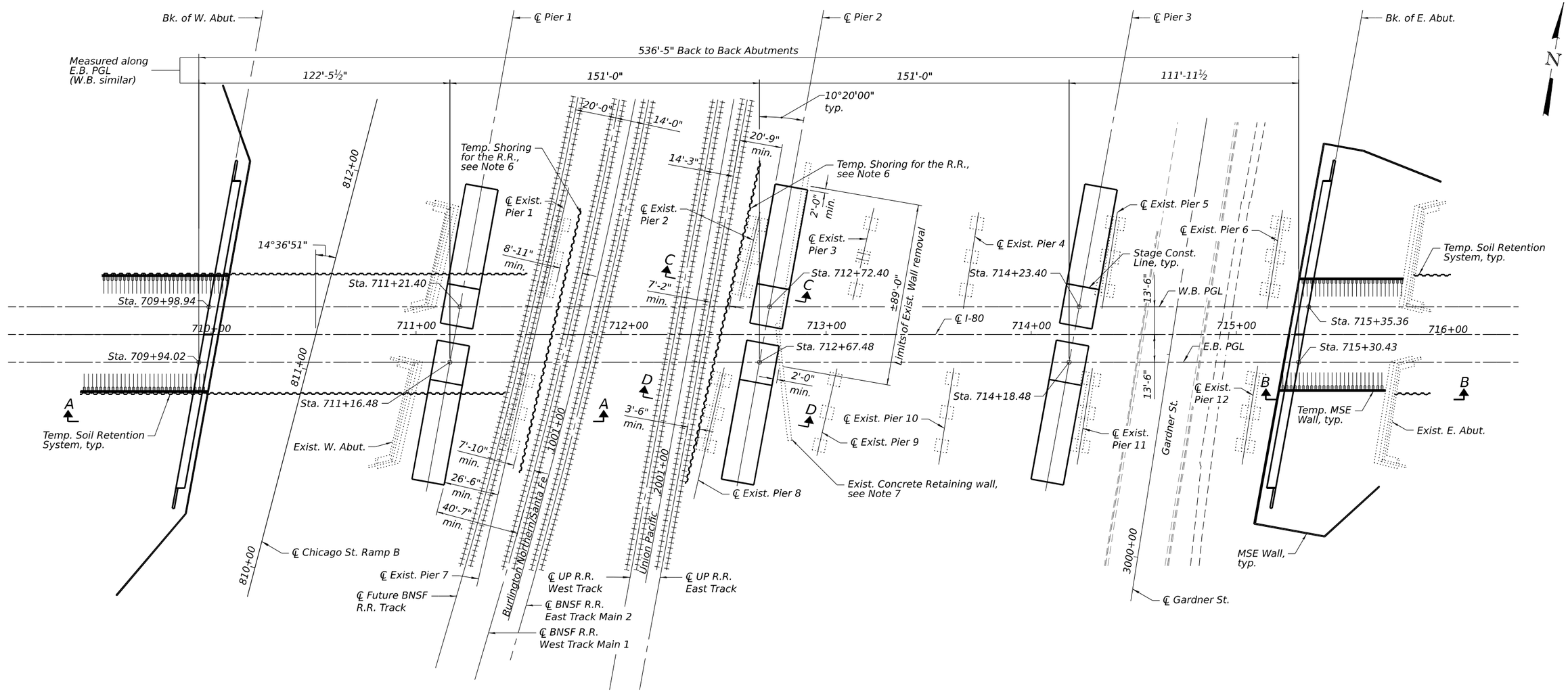

FOOTING & TEMPORARY SOIL RETENTION SYSTEM & MSE WALL LAYOUT

Notes:

1. For Section A-A, see Sheet SA-6.
2. For Sections B-B, C-C, and D-D, see Sheet SA-7.
3. For abutment footings, see Sheets SA-67, SA-68, SA-69, and SA-70.
4. For pier footings, see Sheets SA-80, SA-82, SA-84, SA-86, SA-88, and SA-90.
5. For MSE Wall layout, see Sheets SA-74 and SA-75.
6. For Temporary Shoring for the Railroad at Exist. Piers 1, 2, 7 & 8, see Sheets SA-77 and SA-78.
7. Cost for the Removal of Existing Concrete Retaining Wall and for Removal of Temporary Soil Retention System is included with Removal of Existing Structure No. 1 & 2.
8. All dimensions to tracks are measured perpendicular to CL track.

SUGGESTED CONSTRUCTION SEQUENCE

1. Install TSRS down to bottom of existing abutment caps.
2. Complete Stage I removal of existing substructure.
3. Install remainder of TSRS, while removing existing piles, and excavating as needed to construct Stage I substructure, MSE wall and temp. MSE wall.
4. Relocate existing utilities that are in conflict with proposed work.
5. Construct Stage I substructure, MSE wall and temp. MSE wall.
6. Construct Stage II substructure and MSE wall.

MODEL: SHEET
FILE NAME: C:\TRANSYSTEMS\PW_LOCAL\TRANSYSTEMS-PW-01\DM520864\0990902_0903-62F94-005-FND.DGN
10-27-2025, 16:46:24

HNTB

USER NAME =	DESIGNED - SH	REVISED -	
	CHECKED - APC	REVISED -	
PLOT SCALE =	DRAWN - LK	REVISED -	
PLOT DATE =	CHECKED - SH	REVISED -	

STATE OF ILLINOIS
DEPARTMENT OF TRANSPORTATION

SUBSTRUCTURE LAYOUT
STRUCTURE NOS. 099-0902 (EB) & 099-0903 (WB)

SHEET SA-5 OF SA-112 SHEETS

F.A.I. RTE.	SECTION	COUNTY	TOTAL SHEETS	SHEET NO.
80	2017-057F	WILL	1342	669
		CONTRACT NO. 62F94		
	ILLINOIS	FED. AID PROJECT		

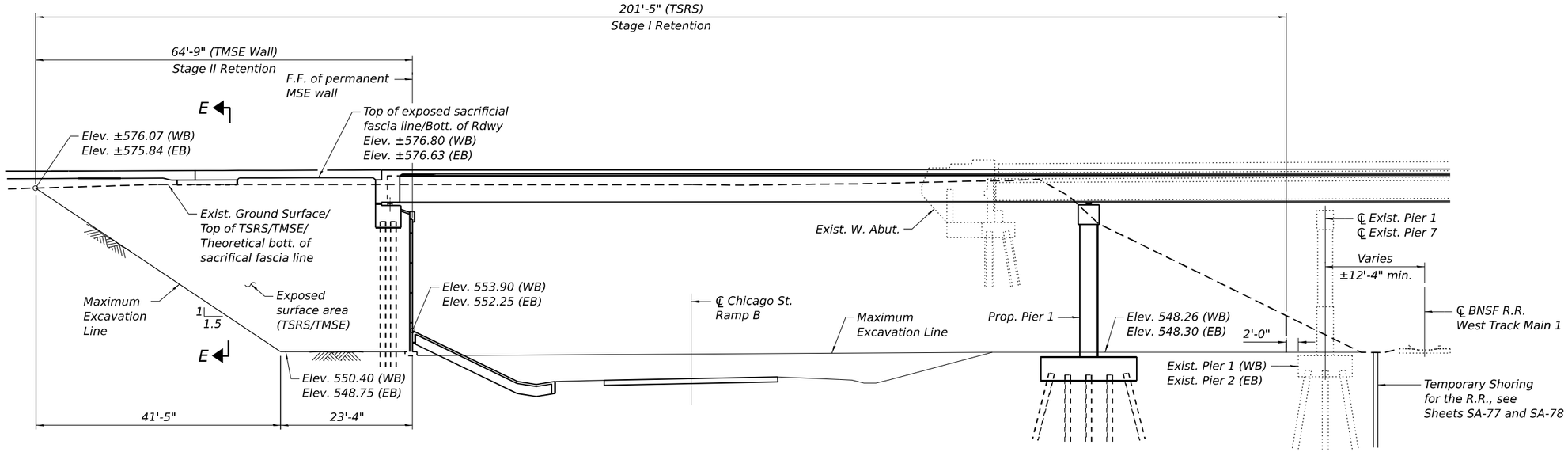

SECTION A-A - ELEVATION AT WEST ABUTMENT

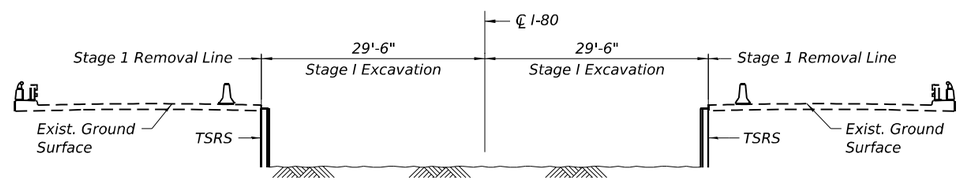

SECTION E-E

(During Stage I Removal)

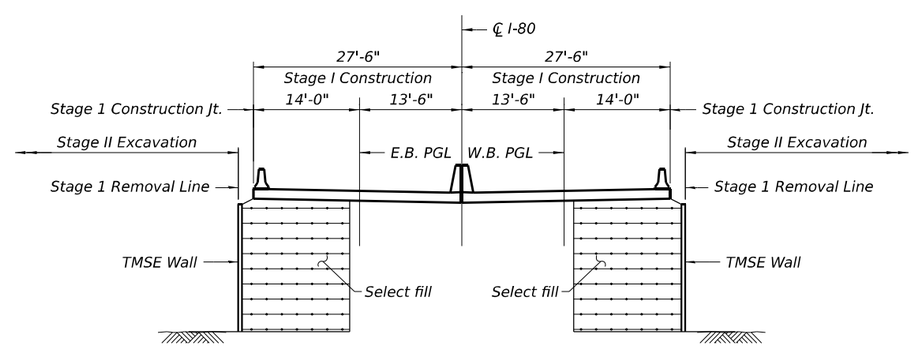

SECTION E-E

(During Stage I Construction)

Notes:

1. A cantilevered sheet piling design does not appear feasible at the locations shown and additional members or other retention systems may be necessary. The Contractor shall submit a temporary soil retention system design including plan details and calculations for review and acceptance by the Engineer.
2. Contractor's design of the temporary soil retention system must avoid piles.
3. The design of the Temporary Soil Retention System within the Railroad's right of way shall meet all Railroad and IDOT requirements.
4. The Temporary Shoring within the Railroad right of way shall be entirely removed, or if allowed by the Railroad, a portion of the system may remain in place.
5. The design of the Temporary Shoring within the Railroad's right of way shall meet all Railroad and IDOT requirements.

MODEL: SHEET
FILE NAME: C:\TRANSYSTEMS\PW_LOCAL\TRANSYSTEMS-PW-01\DMS20864\0990902_0903-62F94-006-TSRS1.DGN

HNTB

USER NAME =	DESIGNED - MVV	REVISED -	
	CHECKED - APC	REVISED -	
PLOT SCALE =	DRAWN - LK	REVISED -	
PLOT DATE =	CHECKED - MVV	REVISED -	

STATE OF ILLINOIS
DEPARTMENT OF TRANSPORTATION

TEMPORARY SOIL RETENTION SYSTEM DETAILS 1
STRUCTURE NOS. 099-0902 (EB) & 099-0903 (WB)

SHEET SA-6 OF SA-112 SHEETS

F.A.I. RTE.	SECTION	COUNTY	TOTAL SHEETS	SHEET NO.
80	2017-057F	WILL	1342	670
		CONTRACT NO. 62F94		
	ILLINOIS	FED. AID PROJECT		

10-27-2025, 16:46:27

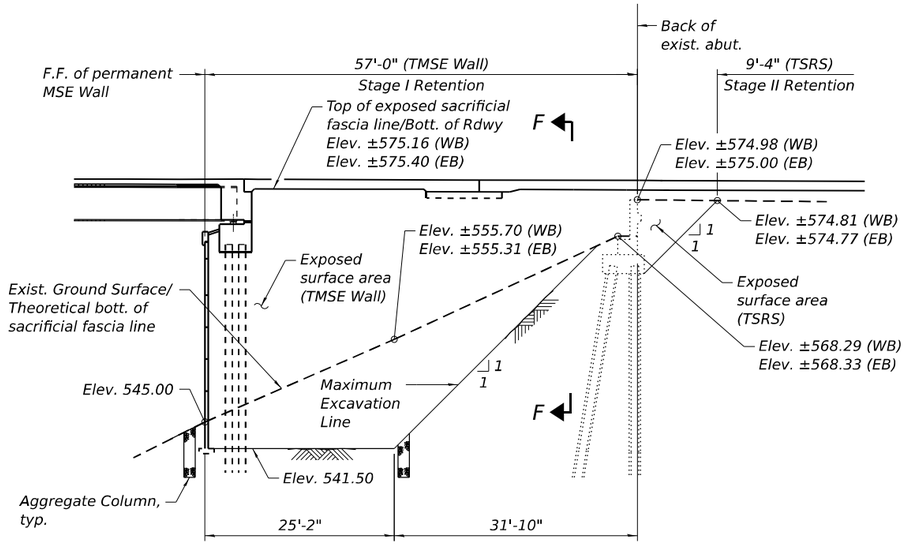

SECTION B-B - ELEVATION AT EAST ABUTMENT

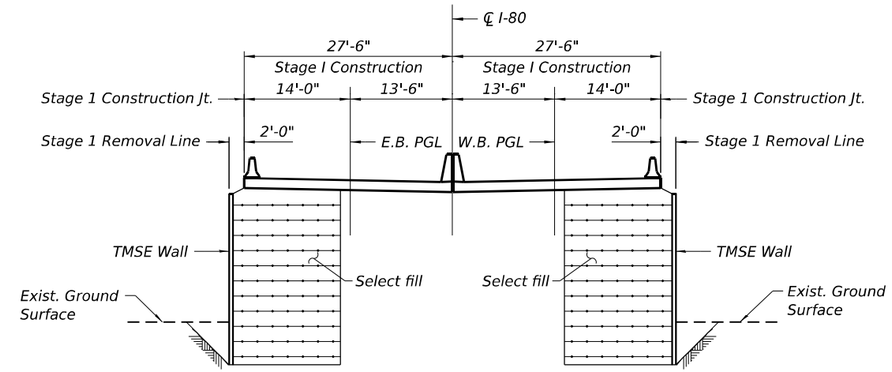

SECTION F-F

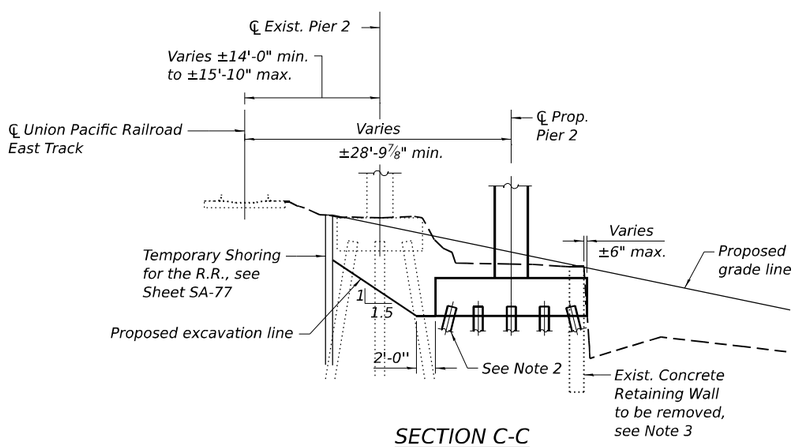

SECTION C-C

(At right angles to ℄ Pier 2)

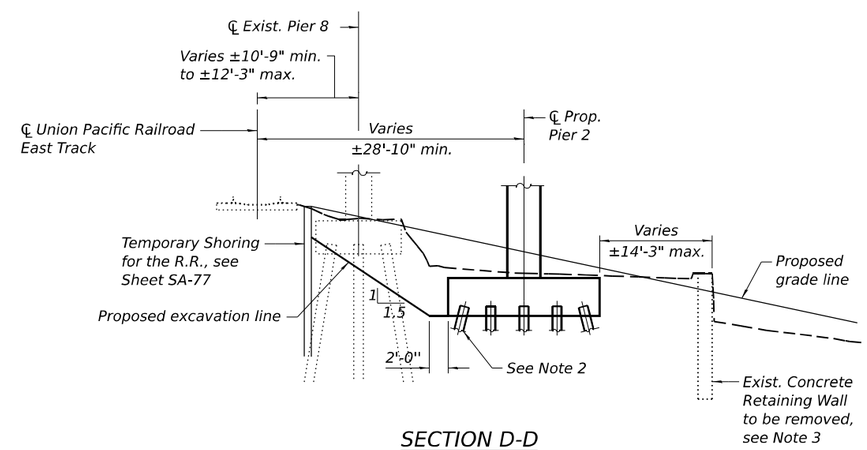

SECTION D-D

(At right angles to ℄ Pier 2)

TEMPORARY SHORING FOR THE RAILROAD ALONG PIER 2

BILL OF MATERIAL

ITEM	UNIT	QUANTITY
Temporary Mechanically Stabilized Earth Retaining Wall	Sq Ft	5,004
Temporary Soil Retention System	Sq Ft	9,921

Note: The cost for Temporary Shoring for the Rail Road is included in the Pay Items Removal of Exisitng Structures No. 1 and Removal of Exisitng Structures No. 2.

Notes:

1. For notes, see Sheet SA-6.
2. For locations of anticipated existing pile removal, see Sheets SA-84 and SA-86. Contractor to confirm any conflicts or additional necessary existing pile removals and submit location for Engineer's approval.
3. Cost for the Removal of Existing Concrete Retaining Wall is included with Removal of Existing Structure No. 1 & 2.

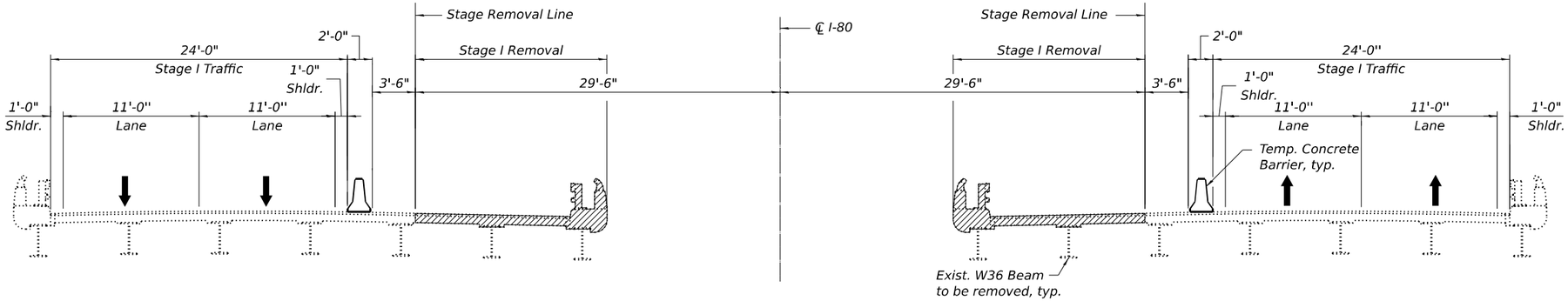

STAGE I REMOVAL

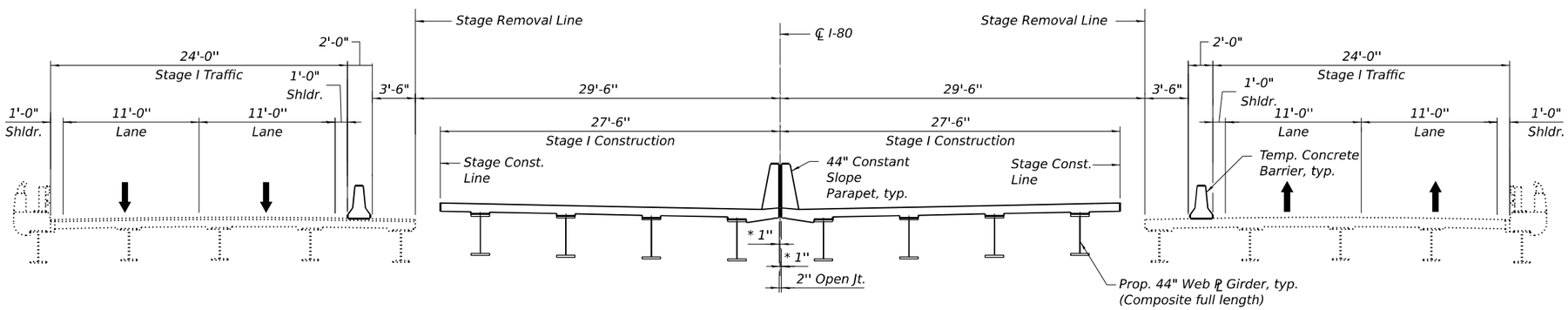

STAGE I CONSTRUCTION

* Measured to ℄ I-80

Notes:

1. All views are looking East.
2. Hatched areas indicates removal of existing structure.
3. All dimensions taken at Rt L's to ℄ I-80 except as noted.
4. For Temporary Concrete Barrier quantity, see Roadway Plans.
5. For Temporary Concrete Barrier details, see Sht. SA-10.
6. Stage line for abutment and piers are at different locations than for the superstructure. See sheets SA-67 thru SA-70 and SA-79 thru SA-90.

MODEL: SHEET
FILE NAME: C:\TRANSYSTEMS\PW_LOCAL\TRANSYSTEMS-PW-01\DMS20864\0990902_0903-62F94-008-STG1.DGN

10-27-2025, 16:46:34

exp.

USER NAME =	DESIGNED - BAR	REVISED -	
	CHECKED - KK	REVISED -	
PLOT SCALE =	DRAWN - MTR	REVISED -	
PLOT DATE =	CHECKED - BAR	REVISED -	

STATE OF ILLINOIS
DEPARTMENT OF TRANSPORTATION

CONSTRUCTION STAGING 1
STRUCTURE NOS. 099-0902 (EB) & 099-0903 (WB)

SHEET SA-8 OF SA-112 SHEETS

F.A.I. RTE.	SECTION	COUNTY	TOTAL SHEETS	SHEET NO.
80	2017-057F	WILL	1342	672
		CONTRACT NO. 62F94		
	ILLINOIS	FED. AID PROJECT		

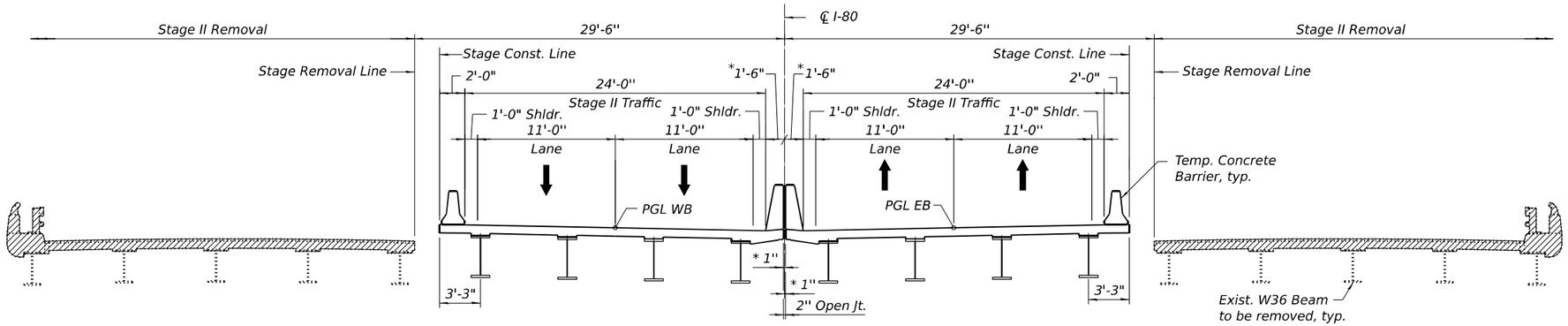

STAGE II REMOVAL

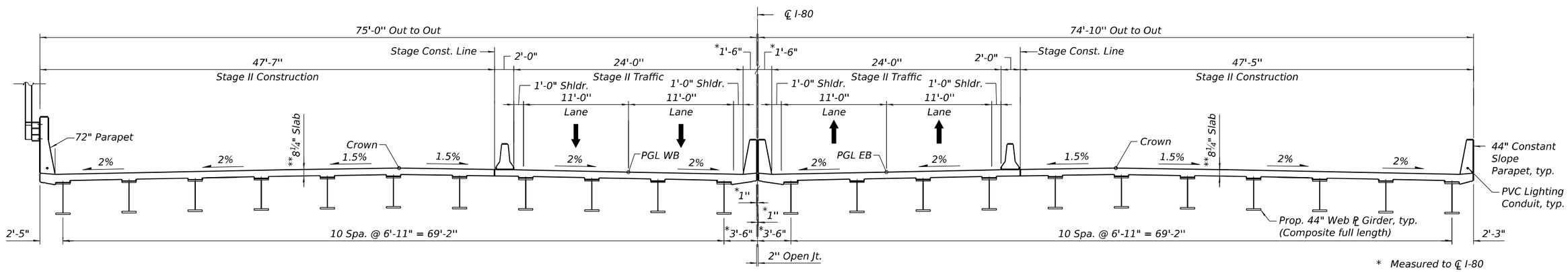

* Measured to ℄ I-80
** Prior to grinding

STAGE II CONSTRUCTION

Notes:

1. All views are looking East.
2. Hatched areas indicates removal of existing structure.
3. All dimensions taken at Rt L's to ℄ I-80 except as noted.
4. For Temporary Concrete Barrier quantity, see Roadway Plans.
5. For Temporary Concrete Barrier details, see Sht. SA-10.
6. Stage line for abutment and piers are at different locations than for the superstructure. See sheets SA-67 thru SA-70 and SA-79 thru SA-90.

MODEL: SHEET
FILE NAME: C:\TRANSYSTEMS\PW_LOCAL\TRANSYSTEMS-PW-01\DMS20864\0990902_0903-62F94-009-STG2.DGN

exp.

USER NAME =	DESIGNED - BAR	REVISED -	
	CHECKED - KK	REVISED -	
PLOT SCALE =	DRAWN - MTR	REVISED -	
PLOT DATE =	CHECKED - BAR	REVISED -	

STATE OF ILLINOIS
DEPARTMENT OF TRANSPORTATION

CONSTRUCTION STAGING 2
STRUCTURE NOS. 099-0902 (EB) & 099-0903 (WB)

SHEET SA-9 OF SA-112 SHEETS

F.A.I. RTE.	SECTION	COUNTY	TOTAL SHEETS	SHEET NO.
80	2017-057F	WILL	1342	673
		CONTRACT NO. 62F94		
	ILLINOIS	FED. AID PROJECT		

10-27-2025, 16:46:36

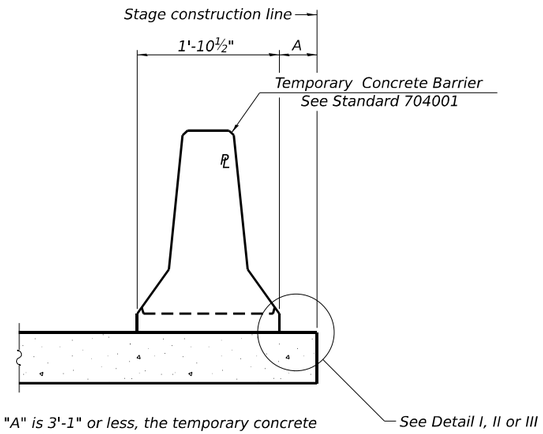

When "A" is 3'-1" or less, the temporary concrete barrier shall be restrained to the new slab according to Detail I, II or III. No restraint is required when "A" is greater than 3'-1".

NEW SLAB OR NEW DECK BEAM

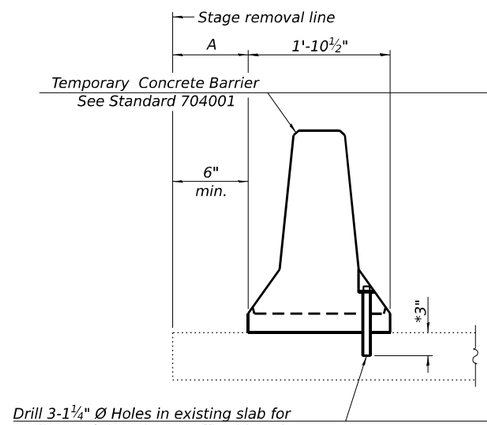

EXISTING SLAB

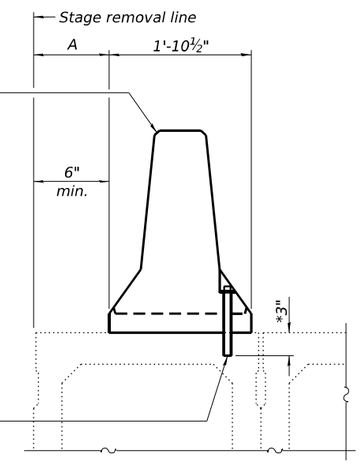

* When hot-mix asphalt wearing surface is present, embedment shall be 3" plus the wearing surface depth.

EXISTING DECK BEAM

SECTIONS THRU SLAB OR DECK BEAM

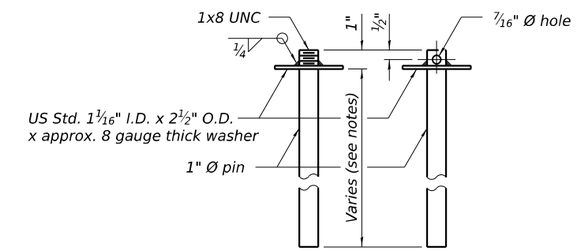

RESTRAINING PIN

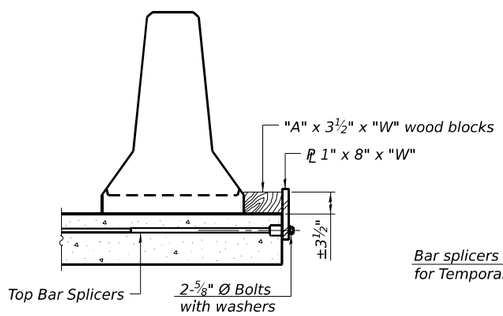

DETAIL I

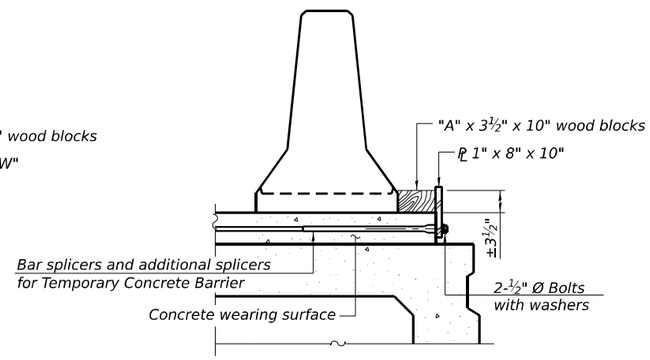

DETAIL II

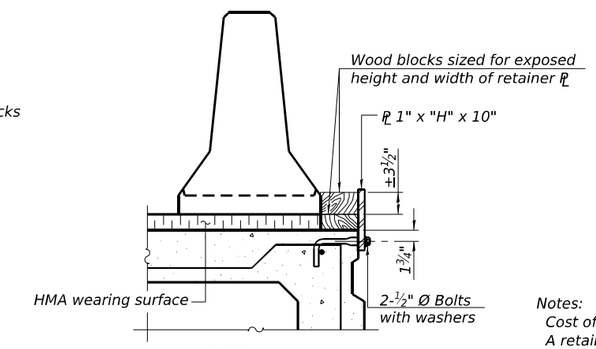

DETAIL III

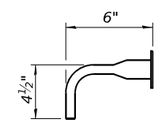

BAR SPLICER FOR #4 BAR - DETAIL III

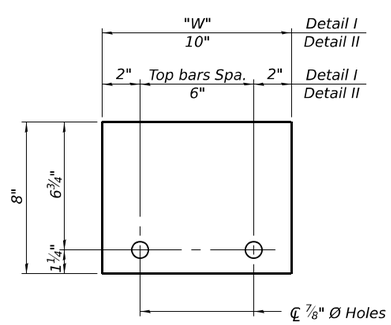

STEEL RETAINER ℄ 1" x 8" x "W"

(Detail I and II)

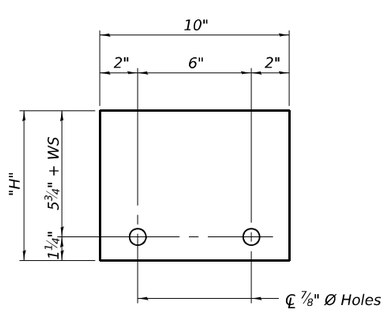

STEEL RETAINER ℄ 1" x "H" x 10"

(Detail III)

Notes:

Cost of retainer assembly is included with Temporary Concrete Barrier.

A retainer assembly shall be located at the approximate ℄ of each temporary concrete barrier.

The retainer plate shall not be removed until the concrete on the adjacent stage is ready to be poured. For Detail III applications the retainer plate shall not be removed until just prior to placing the adjacent beam.

When the 'A' dimension is less than 1½", the wood block shall be omitted and the barrier shall be placed in direct contact with the steel retainer plate. For deck beam applications the minimum required 'A' distance is 6" to accommodate the shear key clamping device.

Detail I - Installation for a new bridge deck or bridge slab.

Detail II - Installation for a new deck beam with an initial concrete wearing surface. Additional bar splicers shall be provided at 6'-0" centers and paired with the bar splicers of the concrete wearing surface reinforcement to accommodate the installation of the retainer assemblies. The cost of the additional bar splicers is included with the concrete wearing surface.

Detail III - Installation for a new deck beam with no initial wearing surface or with an initial hot-mix asphalt (HMA) wearing surface present. The deck beam directly beneath the temporary concrete barrier shall be fabricated with bar splicer inserts in the side of the beam, as detailed, to accommodate the installation of the retainer assemblies. A pair of bar splicers, 6" apart, shall be placed at 6'-0" centers along the length of the beam. The cost of the bar splicers is included with the deck beam.

RAILING CRITERIA

NCHRP 350 Test Level	3
Railing Weight (plf)	440

R-27 5-15-2023

USER NAME =	DESIGNED - BAR	REVISED -	STATE OF ILLINOIS DEPARTMENT OF TRANSPORTATION
	CHECKED - KK	REVISED -	
PLOT SCALE =	DRAWN - MTR	REVISED -	
PLOT DATE =	CHECKED - BAR	REVISED -	

TEMPORARY CONCRETE BARRIER
STRUCTURE NOS. 099-0902 (EB) & 099-0903 (WB)

SHEET SA-10 OF SA-112 SHEETS

F.A.I. RTE.	SECTION	COUNTY	TOTAL SHEETS	SHEET NO.
80	2017-057F	WILL	1342	674
		CONTRACT NO. 62F94		
		ILLINOIS FED. AID PROJECT		

MODEL: SHEET
FILE NAME: C:\TRANSYSTEMS\PW_LOCAL\TRANSYSTEMS-PW-01\DMS20864\09990902_0903-62F94-010-TCB.DGN

10-27-2025, 16:46:38

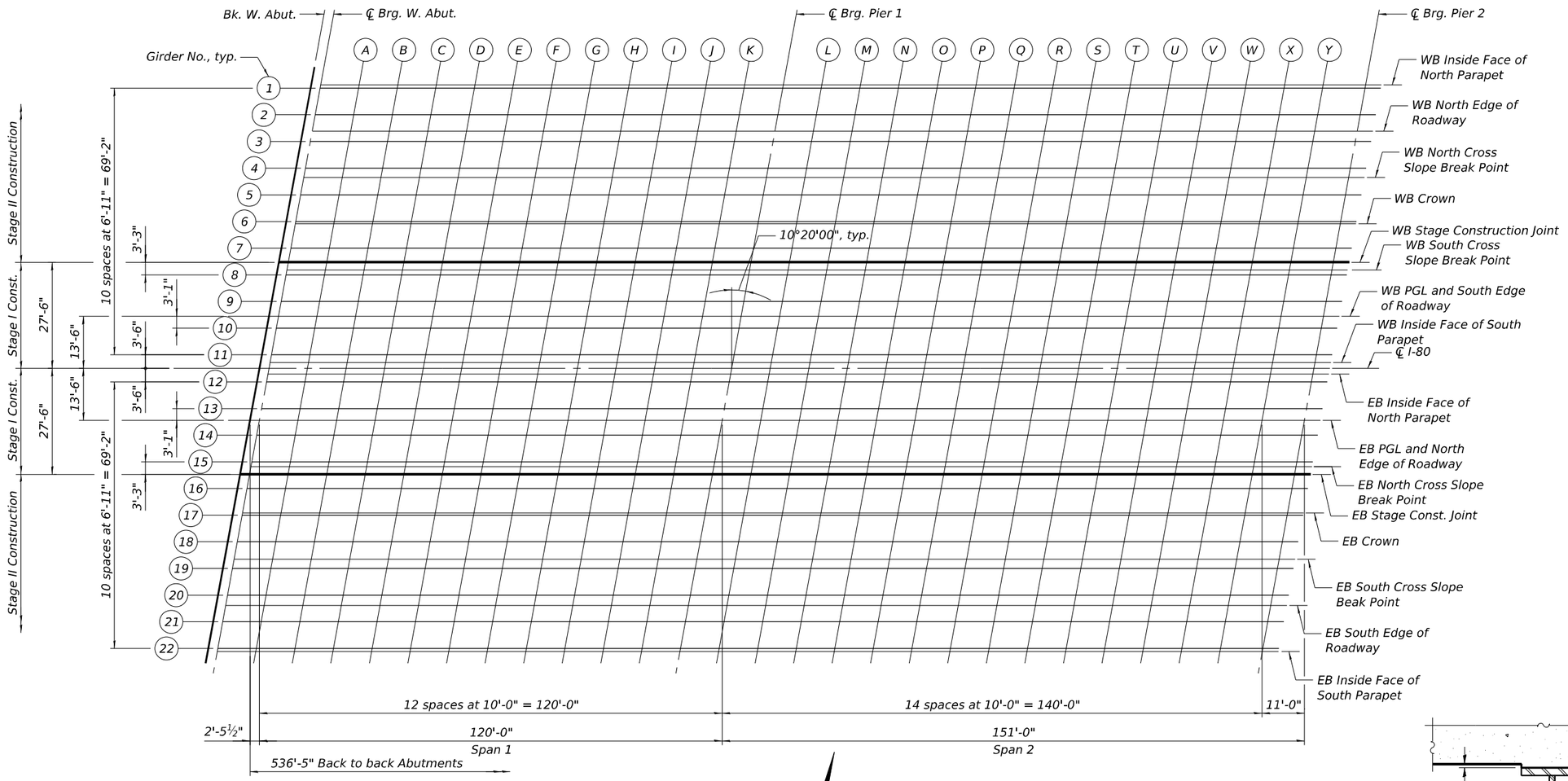

PLAN

N

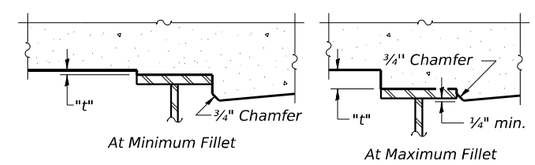

To determine "t": After all structural steel has been erected, elevations of the top flanges of the beams shall be taken at intervals shown above and on Sheet SA-12. These elevations subtracted from the "Theoretical Grade Elevations Adjusted for Dead Load Deflection and Grinding" shown on Sheets SA-13 thru SA-26, minus 8¼" deck thickness, equals the fillet heights "t" above top flange of beams. The slab is to be ground after curing to achieve smoothness, but the slab is not to be ground to elevations below the "Theoretical Grade Elevations" shown on Sheets SA-13 thru SA-26. For grinding the deck, see Special Provisions.

FILLET HEIGHTS

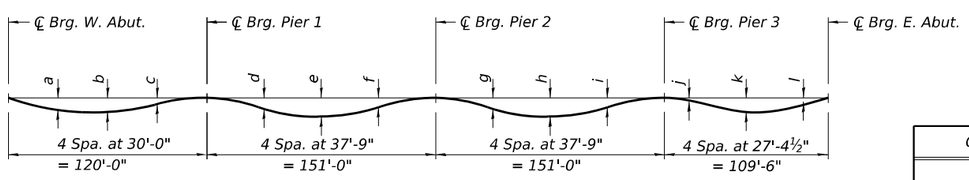

DEAD LOAD DEFLECTION DIAGRAM

(Includes weight of concrete only.)

Note:
The above deflections are not to be used in the field if the engineer is working from the grade elevations adjusted for dead load deflections and grinding as shown on Sheets SA-13 thru SA-26.

DEAD LOAD DEFLECTION TABLE

Girder No.	a	b	c	d	e	f	g	h	i	j	k	l
1	1 7/8"	2 1/8"	1"	7/8"	1 5/8"	5/8"	1 7/8"	3 1/4"	1 7/8"	1/4"	1 1/8"	1 1/8"
2-3	1 5/8"	1 7/8"	7/8"	3/4"	1 1/2"	5/8"	1 1/2"	2 5/8"	1 1/2"	1/4"	7/8"	7/8"
4-8, 15-19	1 1/4"	1 3/8"	5/8"	3/4"	1 3/8"	3/4"	1"	1 7/8"	1 1/8"	1/4"	3/4"	3/4"
9-10, 13-14, 20-21	1 3/8"	1 5/8"	3/4"	7/8"	1 5/8"	3/4"	1 1/8"	2 1/8"	1 1/4"	1/4"	7/8"	3/4"
11-12	1 5/8"	1 7/8"	3/4"	1"	1 7/8"	7/8"	1 1/4"	2 3/8"	1 3/8"	3/8"	1"	7/8"
22	1 3/8"	1 5/8"	5/8"	7/8"	1 5/8"	3/4"	1 1/8"	2"	1 1/4"	1/4"	7/8"	3/4"

Notes:

1. For Girder Framing Layout, see Sheets SA-59 & SA-60

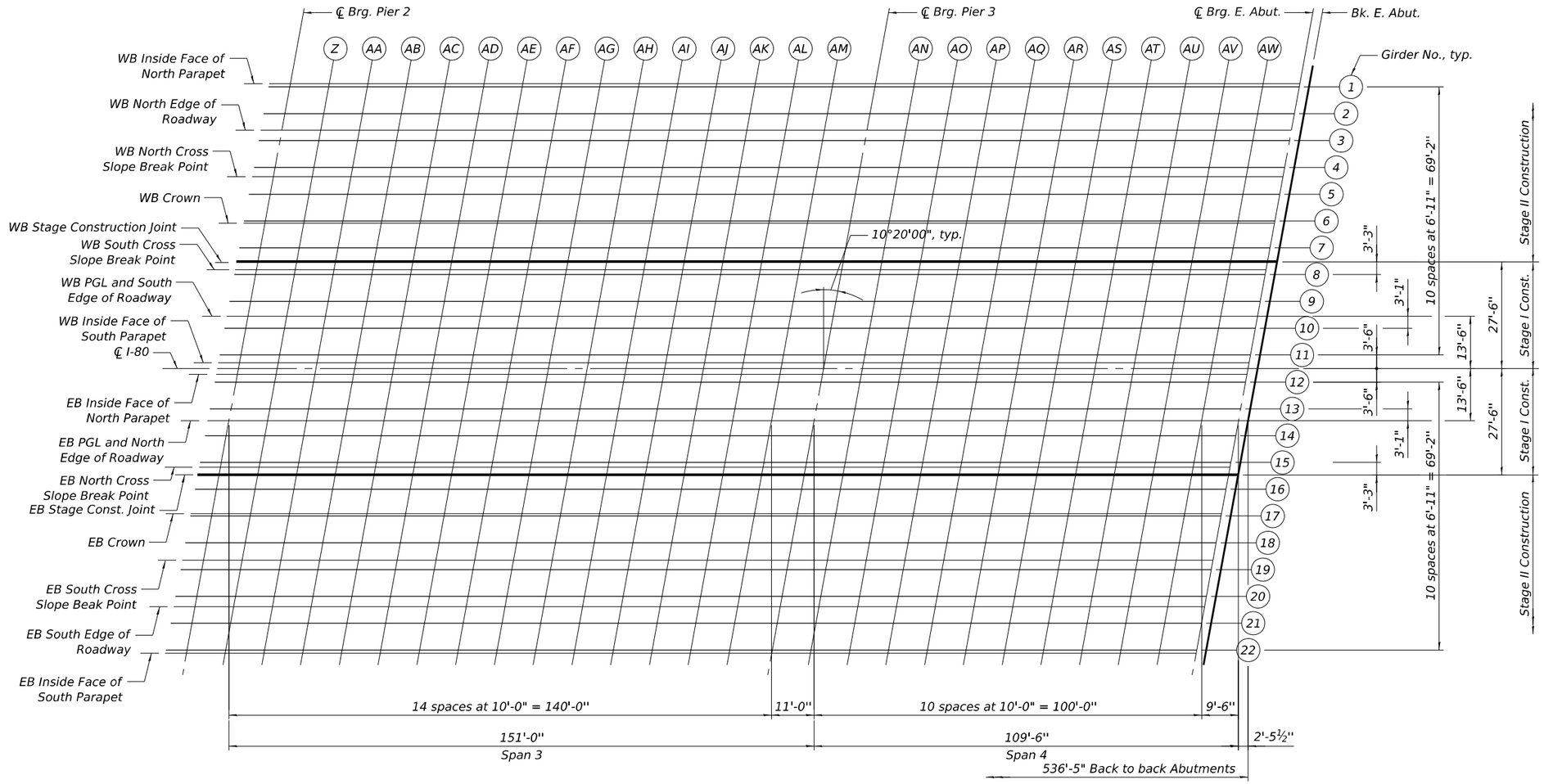

PLAN

N

Notes:

1. For Girder Framing Layout, see Sheets SA-59 & SA-60.

MODEL: SHEET
FILE NAME: C:\TRANSYSTEMS\PW_LOCAL\TRANSYSTEMS-PW-01\DMS20864\0990902_0903-62F94-012-TOSPL2.DGN

10-27-2025, 16:46:44

USER NAME =	DESIGNED - CCE	REVISED -	
	CHECKED - BAR	REVISED -	
PLOT SCALE =	DRAWN - MTR	REVISED -	
PLOT DATE =	CHECKED - BAR	REVISED -	

STATE OF ILLINOIS
DEPARTMENT OF TRANSPORTATION

TOP OF SLAB ELEVATIONS LAYOUT 2
STRUCTURE NOS. 099-0902 (EB) & 099-0903 (WB)

SHEET SA-12 OF SA-112 SHEETS

F.A.I. RTE.	SECTION	COUNTY	TOTAL SHEETS	SHEET NO.
80	2017-057F	WILL	1342	676
		CONTRACT NO. 62F94		
		ILLINOIS	FED. AID PROJECT	

WB INSIDE FACE OF NORTH PARAPET

Location	Station	Offset from ℄ I-80	Theoretical Grade Elevations	Theoretical Grade Elevations Adjusted For Dead Load Deflection & Grinding
Bk. W. Abut.	710+09.88	-73.50	578.20	578.22
℄ Brg. W. Abut.	710+12.34	-73.50	578.22	578.24
A	710+22.34	-73.50	578.33	578.41
B	710+32.34	-73.50	578.42	578.56
C	710+42.34	-73.50	578.52	578.69
D	710+52.34	-73.50	578.60	578.81
E	710+62.34	-73.50	578.69	578.90
F	710+72.34	-73.50	578.76	578.97
G	710+82.34	-73.50	578.84	579.01
H	710+92.34	-73.50	578.90	579.05
I	711+02.34	-73.50	578.97	579.07
J	711+12.34	-73.50	579.02	579.09
K	711+22.34	-73.50	579.07	579.11
℄ Brg. Pier 1	711+32.34	-73.50	579.12	579.14
L	711+42.34	-73.50	579.16	579.19
M	711+52.34	-73.50	579.20	579.24
N	711+62.34	-73.50	579.23	579.30
O	711+72.34	-73.50	579.25	579.36
P	711+82.34	-73.50	579.27	579.40
Q	711+92.34	-73.50	579.29	579.44
R	712+02.34	-73.50	579.30	579.46
S	712+12.34	-73.50	579.31	579.46
T	712+22.34	-73.50	579.31	579.45
U	712+32.34	-73.50	579.30	579.42
V	712+42.34	-73.50	579.29	579.38
W	712+52.34	-73.50	579.27	579.33
X	712+62.34	-73.50	579.25	579.29
Y	712+72.34	-73.50	579.23	579.25
℄ Brg. Pier 2	712+83.34	-73.50	579.19	579.21
Z	712+93.34	-73.50	579.15	579.20
AA	713+03.34	-73.50	579.11	579.20
AB	713+13.34	-73.50	579.07	579.20
AC	713+23.34	-73.50	579.01	579.20
AD	713+33.34	-73.50	578.95	579.19
AE	713+43.34	-73.50	578.89	579.16
AF	713+53.34	-73.50	578.82	579.11
AG	713+63.34	-73.50	578.75	579.04
AH	713+73.34	-73.50	578.67	578.94
AI	713+83.34	-73.50	578.59	578.82
AJ	713+93.34	-73.50	578.50	578.69
AK	714+03.34	-73.50	578.41	578.55
AL	714+13.34	-73.50	578.31	578.40
AM	714+23.34	-73.50	578.20	578.25
℄ Brg. Pier 3	714+34.34	-73.50	578.08	578.10
AN	714+44.34	-73.50	577.97	577.98
AO	714+54.34	-73.50	577.85	577.88
AP	714+64.34	-73.50	577.72	577.77
AQ	714+74.34	-73.50	577.59	577.67
AR	714+84.34	-73.50	577.45	577.56
AS	714+94.34	-73.50	577.31	577.43
AT	715+04.34	-73.50	577.17	577.29
AU	715+14.34	-73.50	577.01	577.13
AV	715+24.34	-73.50	576.86	576.95
AW	715+34.34	-73.50	576.70	576.76
℄ Brg. E. Abut.	715+43.84	-73.50	576.54	576.56
Bk. E. Abut.	715+46.29	-73.50	576.50	576.52

GIRDER 1

Location	Station	Offset from ℄ I-80	Theoretical Grade Elevations	Theoretical Grade Elevations Adjusted For Dead Load Deflection & Grinding
Bk. W. Abut.	710+09.73	-72.67	578.21	578.23
℄ Brg. W. Abut.	710+12.19	-72.67	578.24	578.26
A	710+22.19	-72.67	578.34	578.42
B	710+32.19	-72.67	578.44	578.57
C	710+42.19	-72.67	578.53	578.71
D	710+52.19	-72.67	578.62	578.82
E	710+62.19	-72.67	578.70	578.91
F	710+72.19	-72.67	578.78	578.98
G	710+82.19	-72.67	578.85	579.03
H	710+92.19	-72.67	578.92	579.06
I	711+02.19	-72.67	578.98	579.09
J	711+12.19	-72.67	579.04	579.10
K	711+22.19	-72.67	579.09	579.13
℄ Brg. Pier 1	711+32.19	-72.67	579.14	579.16
L	711+42.19	-72.67	579.18	579.20
M	711+52.19	-72.67	579.21	579.26
N	711+62.19	-72.67	579.24	579.32
O	711+72.19	-72.67	579.27	579.37
P	711+82.19	-72.67	579.29	579.42
Q	711+92.19	-72.67	579.31	579.46
R	712+02.19	-72.67	579.32	579.48
S	712+12.19	-72.67	579.32	579.48
T	712+22.19	-72.67	579.32	579.46
U	712+32.19	-72.67	579.32	579.43
V	712+42.19	-72.67	579.31	579.39
W	712+52.19	-72.67	579.29	579.35
X	712+62.19	-72.67	579.27	579.30
Y	712+72.19	-72.67	579.24	579.26
℄ Brg. Pier 2	712+83.19	-72.67	579.21	579.23
Z	712+93.19	-72.67	579.17	579.22
AA	713+03.19	-72.67	579.13	579.22
AB	713+13.19	-72.67	579.08	579.22
AC	713+23.19	-72.67	579.03	579.22
AD	713+33.19	-72.67	578.97	579.20
AE	713+43.19	-72.67	578.91	579.18
AF	713+53.19	-72.67	578.84	579.13
AG	713+63.19	-72.67	578.77	579.06
AH	713+73.19	-72.67	578.69	578.96
AI	713+83.19	-72.67	578.61	578.84
AJ	713+93.19	-72.67	578.52	578.71
AK	714+03.19	-72.67	578.42	578.56
AL	714+13.19	-72.67	578.32	578.41
AM	714+23.19	-72.67	578.22	578.27
℄ Brg. Pier 3	714+34.19	-72.67	578.10	578.12
AN	714+44.19	-72.67	577.98	578.00
AO	714+54.19	-72.67	577.86	577.89
AP	714+64.19	-72.67	577.74	577.79
AQ	714+74.19	-72.67	577.61	577.69
AR	714+84.19	-72.67	577.47	577.58
AS	714+94.19	-72.67	577.33	577.45
AT	715+04.19	-72.67	577.18	577.31
AU	715+14.19	-72.67	577.03	577.15
AV	715+24.19	-72.67	576.88	576.97
AW	715+34.19	-72.67	576.72	576.77
℄ Brg. E. Abut.	715+43.69	-72.67	576.56	576.58
Bk. E. Abut.	715+46.14	-72.67	576.51	576.54

GIRDER 2

Location	Station	Offset from ℄ I-80	Theoretical Grade Elevations	Theoretical Grade Elevations Adjusted For Dead Load Deflection & Grinding
Bk. W. Abut.	710+08.47	-65.75	578.34	578.36
℄ Brg. W. Abut.	710+10.93	-65.75	578.36	578.38
A	710+20.93	-65.75	578.47	578.54
B	710+30.93	-65.75	578.56	578.68
C	710+40.93	-65.75	578.66	578.81
D	710+50.93	-65.75	578.75	578.92
E	710+60.93	-65.75	578.83	579.01
F	710+70.93	-65.75	578.91	579.08
G	710+80.93	-65.75	578.98	579.14
H	710+90.93	-65.75	579.05	579.17
I	711+00.93	-65.75	579.11	579.20
J	711+10.93	-65.75	579.17	579.23
K	711+20.93	-65.75	579.22	579.26
℄ Brg. Pier 1	711+30.93	-65.75	579.27	579.29
L	711+40.93	-65.75	579.31	579.34
M	711+50.93	-65.75	579.35	579.39
N	711+60.93	-65.75	579.38	579.44
O	711+70.93	-65.75	579.41	579.50
P	711+80.93	-65.75	579.43	579.54
Q	711+90.93	-65.75	579.44	579.58
R	712+00.93	-65.75	579.45	579.60
S	712+10.93	-65.75	579.46	579.60
T	712+20.93	-65.75	579.46	579.59
U	712+30.93	-65.75	579.46	579.56
V	712+40.93	-65.75	579.45	579.53
W	712+50.93	-65.75	579.43	579.49
X	712+60.93	-65.75	579.41	579.45
Y	712+70.93	-65.75	579.39	579.41
℄ Brg. Pier 2	712+81.93	-65.75	579.35	579.37
Z	712+91.93	-65.75	579.32	579.36
AA	713+01.93	-65.75	579.27	579.35
AB	713+11.93	-65.75	579.23	579.34
AC	713+21.93	-65.75	579.18	579.33
AD	713+31.93	-65.75	579.12	579.31
AE	713+41.93	-65.75	579.06	579.28
AF	713+51.93	-65.75	578.99	579.23
AG	713+61.93	-65.75	578.92	579.16
AH	713+71.93	-65.75	578.84	579.07
AI	713+81.93	-65.75	578.76	578.95
AJ	713+91.93	-65.75	578.67	578.83
AK	714+01.93	-65.75	578.57	578.69
AL	714+11.93	-65.75	578.48	578.55
AM	714+21.93	-65.75	578.37	578.42
℄ Brg. Pier 3	714+32.93	-65.75	578.25	578.27
AN	714+42.93	-65.75	578.14	578.16
AO	714+52.93	-65.75	578.02	578.05
AP	714+62.93	-65.75	577.89	577.94
AQ	714+72.93	-65.75	577.76	577.83
AR	714+82.93	-65.75	577.63	577.72
AS	714+92.93	-65.75	577.49	577.59
AT	715+02.93	-65.75	577.34	577.45
AU	715+12.93	-65.75	577.19	577.29
AV	715+22.93	-65.75	577.04	577.12
AW	715+32.93	-65.75	576.87	576.93
℄ Brg. E. Abut.	715+42.43	-65.75	576.72	576.74
Bk. E. Abut.	715+44.88	-65.75	576.67	576.70

Notes:

All Elevations and Offsets are in feet.

WB NORTH EDGE OF ROADWAY

Location	Station	Offset from ℄ I-80	Theoretical Grade Elevations	Theoretical Grade Elevations Adjusted For Dead Load Deflection & Grinding
Bk. W. Abut.	710+07.69	-61.50	578.41	578.43
℄ Brg. W. Abut.	710+10.15	-61.50	578.44	578.46
A	710+20.15	-61.50	578.54	578.62
B	710+30.15	-61.50	578.64	578.76
C	710+40.15	-61.50	578.74	578.89
D	710+50.15	-61.50	578.83	579.00
E	710+60.15	-61.50	578.91	579.09
F	710+70.15	-61.50	578.99	579.16
G	710+80.15	-61.50	579.06	579.22
H	710+90.15	-61.50	579.13	579.25
I	711+00.15	-61.50	579.19	579.28
J	711+10.15	-61.50	579.25	579.31
K	711+20.15	-61.50	579.30	579.34
℄ Brg. Pier 1	711+30.15	-61.50	579.35	579.37
L	711+40.15	-61.50	579.39	579.42
M	711+50.15	-61.50	579.43	579.47
N	711+60.15	-61.50	579.46	579.53
O	711+70.15	-61.50	579.49	579.58
P	711+80.15	-61.50	579.51	579.63
Q	711+90.15	-61.50	579.53	579.66
R	712+00.15	-61.50	579.54	579.68
S	712+10.15	-61.50	579.54	579.69
T	712+20.15	-61.50	579.55	579.68
U	712+30.15	-61.50	579.54	579.65
V	712+40.15	-61.50	579.53	579.61
W	712+50.15	-61.50	579.52	579.57
X	712+60.15	-61.50	579.50	579.53
Y	712+70.15	-61.50	579.47	579.49
℄ Brg. Pier 2	712+81.15	-61.50	579.44	579.46
Z	712+91.15	-61.50	579.40	579.45
AA	713+01.15	-61.50	579.36	579.43
AB	713+11.15	-61.50	579.32	579.43
AC	713+21.15	-61.50	579.26	579.42
AD	713+31.15	-61.50	579.21	579.40
AE	713+41.15	-61.50	579.15	579.37
AF	713+51.15	-61.50	579.08	579.32
AG	713+61.15	-61.50	579.01	579.25
AH	713+71.15	-61.50	578.93	579.16
AI	713+81.15	-61.50	578.85	579.05
AJ	713+91.15	-61.50	578.76	578.92
AK	714+01.15	-61.50	578.67	578.79
AL	714+11.15	-61.50	578.57	578.65
AM	714+21.15	-61.50	578.47	578.51
℄ Brg. Pier 3	714+32.15	-61.50	578.35	578.37
AN	714+42.15	-61.50	578.23	578.25
AO	714+52.15	-61.50	578.11	578.14
AP	714+62.15	-61.50	577.99	578.03
AQ	714+72.15	-61.50	577.86	577.93
AR	714+82.15	-61.50	577.72	577.81
AS	714+92.15	-61.50	577.58	577.69
AT	715+02.15	-61.50	577.44	577.55
AU	715+12.15	-61.50	577.29	577.39
AV	715+22.15	-61.50	577.13	577.21
AW	715+32.15	-61.50	576.97	577.02
℄ Brg. E. Abut.	715+41.65	-61.50	576.81	576.84
Bk. E. Abut.	715+44.11	-61.50	576.77	576.79

GIRDER 3

Location	Station	Offset from ℄ I-80	Theoretical Grade Elevations	Theoretical Grade Elevations Adjusted For Dead Load Deflection & Grinding
Bk. W. Abut.	710+07.21	-58.83	578.46	578.48
℄ Brg. W. Abut.	710+09.66	-58.83	578.49	578.51
A	710+19.66	-58.83	578.59	578.66
B	710+29.66	-58.83	578.69	578.81
C	710+39.66	-58.83	578.79	578.94
D	710+49.66	-58.83	578.87	579.05
E	710+59.66	-58.83	578.96	579.14
F	710+69.66	-58.83	579.04	579.21
G	710+79.66	-58.83	579.11	579.27
H	710+89.66	-58.83	579.18	579.30
I	710+99.66	-58.83	579.24	579.33
J	711+09.66	-58.83	579.30	579.36
K	711+19.66	-58.83	579.35	579.39
℄ Brg. Pier 1	711+29.66	-58.83	579.40	579.42
L	711+39.66	-58.83	579.44	579.47
M	711+49.66	-58.83	579.48	579.52
N	711+59.66	-58.83	579.51	579.58
O	711+69.66	-58.83	579.54	579.63
P	711+79.66	-58.83	579.56	579.68
Q	711+89.66	-58.83	579.58	579.72
R	711+99.66	-58.83	579.59	579.74
S	712+09.66	-58.83	579.60	579.74
T	712+19.66	-58.83	579.60	579.73
U	712+29.66	-58.83	579.60	579.70
V	712+39.66	-58.83	579.59	579.67
W	712+49.66	-58.83	579.57	579.63
X	712+59.66	-58.83	579.55	579.59
Y	712+69.66	-58.83	579.53	579.55
℄ Brg. Pier 2	712+80.66	-58.83	579.49	579.51
Z	712+90.66	-58.83	579.46	579.50
AA	713+00.66	-58.83	579.42	579.49
AB	713+10.66	-58.83	579.37	579.48
AC	713+20.66	-58.83	579.32	579.48
AD	713+30.66	-58.83	579.26	579.46
AE	713+40.66	-58.83	579.20	579.43
AF	713+50.66	-58.83	579.14	579.38
AG	713+60.66	-58.83	579.06	579.30
AH	713+70.66	-58.83	578.99	579.21
AI	713+80.66	-58.83	578.90	579.10
AJ	713+90.66	-58.83	578.82	578.98
AK	714+00.66	-58.83	578.72	578.84
AL	714+10.66	-58.83	578.63	578.70
AM	714+20.66	-58.83	578.52	578.57
℄ Brg. Pier 3	714+31.66	-58.83	578.40	578.43
AN	714+41.66	-58.83	578.29	578.31
AO	714+51.66	-58.83	578.17	578.20
AP	714+61.66	-58.83	578.05	578.09
AQ	714+71.66	-58.83	577.92	577.99
AR	714+81.66	-58.83	577.78	577.87
AS	714+91.66	-58.83	577.64	577.75
AT	715+01.66	-58.83	577.50	577.61
AU	715+11.66	-58.83	577.35	577.45
AV	715+21.66	-58.83	577.19	577.27
AW	715+31.66	-58.83	577.03	577.09
℄ Brg. E. Abut.	715+41.16	-58.83	576.88	576.90
Bk. E. Abut.	715+43.62	-58.83	576.83	576.86

GIRDER 4

Location	Station	Offset from ℄ I-80	Theoretical Grade Elevations	Theoretical Grade Elevations Adjusted For Dead Load Deflection & Grinding
Bk. W. Abut.	710+05.95	-51.92	578.58	578.61
℄ Brg. W. Abut.	710+08.40	-51.92	578.61	578.63
A	710+18.40	-51.92	578.72	578.78
B	710+28.40	-51.92	578.82	578.91
C	710+38.40	-51.92	578.91	579.04
D	710+48.40	-51.92	579.00	579.14
E	710+58.40	-51.92	579.09	579.23
F	710+68.40	-51.92	579.17	579.31
G	710+78.40	-51.92	579.24	579.36
H	710+88.40	-51.92	579.31	579.41
I	710+98.40	-51.92	579.37	579.45
J	711+08.40	-51.92	579.43	579.48
K	711+18.40	-51.92	579.49	579.52
℄ Brg. Pier 1	711+28.40	-51.92	579.53	579.56
L	711+38.40	-51.92	579.58	579.61
M	711+48.40	-51.92	579.62	579.66
N	711+58.40	-51.92	579.65	579.71
O	711+68.40	-51.92	579.68	579.76
P	711+78.40	-51.92	579.70	579.81
Q	711+88.40	-51.92	579.72	579.84
R	711+98.40	-51.92	579.73	579.86
S	712+08.40	-51.92	579.74	579.87
T	712+18.40	-51.92	579.74	579.86
U	712+28.40	-51.92	579.73	579.84
V	712+38.40	-51.92	579.73	579.81
W	712+48.40	-51.92	579.71	579.77
X	712+58.40	-51.92	579.69	579.74
Y	712+68.40	-51.92	579.67	579.70
℄ Brg. Pier 2	712+79.40	-51.92	579.64	579.66
Z	712+89.40	-51.92	579.60	579.63
AA	712+99.40	-51.92	579.56	579.61
AB	713+09.40	-51.92	579.52	579.59
AC	713+19.40	-51.92	579.47	579.57
AD	713+29.40	-51.92	579.41	579.55
AE	713+39.40	-51.92	579.35	579.51
AF	713+49.40	-51.92	579.28	579.45
AG	713+59.40	-51.92	579.21	579.38
AH	713+69.40	-51.92	579.14	579.30
AI	713+79.40	-51.92	579.05	579.20
AJ	713+89.40	-51.92	578.97	579.09
AK	713+99.40	-51.92	578.87	578.97
AL	714+09.40	-51.92	578.78	578.84
AM	714+19.40	-51.92	578.68	578.71
℄ Brg. Pier 3	714+30.40	-51.92	578.56	578.58
AN	714+40.40	-51.92	578.44	578.46
AO	714+50.40	-51.92	578.33	578.36
AP	714+60.40	-51.92	578.20	578.25
AQ	714+70.40	-51.92	578.07	578.14
AR	714+80.40	-51.92	577.94	578.02
AS	714+90.40	-51.92	577.80	577.89
AT	715+00.40	-51.92	577.66	577.75
AU	715+10.40	-51.92	577.51	577.59
AV	715+20.40	-51.92	577.35	577.42
AW	715+30.40	-51.92	577.19	577.24
℄ Brg. E. Abut.	715+39.90	-51.92	577.04	577.06
Bk. E. Abut.	715+42.36	-51.92	576.99	577.01

Notes:

All Elevations and Offsets are in feet.

WB NORTH CROSS SLOPE BREAK POINT

Location	Station	Offset from ℄ I-80	Theoretical Grade Elevations	Theoretical Grade Elevations Adjusted For Dead Load Deflection & Grinding
Bk. W. Abut.	710+05.51	-49.50	578.63	578.65
℄ Brg. W. Abut.	710+07.96	-49.50	578.65	578.68
A	710+17.96	-49.50	578.76	578.82
B	710+27.96	-49.50	578.86	578.96
C	710+37.96	-49.50	578.96	579.08
D	710+47.96	-49.50	579.05	579.19
E	710+57.96	-49.50	579.13	579.28
F	710+67.96	-49.50	579.21	579.35
G	710+77.96	-49.50	579.29	579.41
H	710+87.96	-49.50	579.36	579.45
I	710+97.96	-49.50	579.42	579.49
J	711+07.96	-49.50	579.48	579.53
K	711+17.96	-49.50	579.53	579.56
℄ Brg. Pier 1	711+27.96	-49.50	579.58	579.60
L	711+37.96	-49.50	579.62	579.65
M	711+47.96	-49.50	579.66	579.70
N	711+57.96	-49.50	579.70	579.76
O	711+67.96	-49.50	579.72	579.81
P	711+77.96	-49.50	579.75	579.86
Q	711+87.96	-49.50	579.76	579.89
R	711+97.96	-49.50	579.78	579.91
S	712+07.96	-49.50	579.78	579.92
T	712+17.96	-49.50	579.79	579.91
U	712+27.96	-49.50	579.78	579.89
V	712+37.96	-49.50	579.77	579.86
W	712+47.96	-49.50	579.76	579.82
X	712+57.96	-49.50	579.74	579.78
Y	712+67.96	-49.50	579.72	579.75
℄ Brg. Pier 2	712+78.96	-49.50	579.69	579.71
Z	712+88.96	-49.50	579.65	579.68
AA	712+98.96	-49.50	579.61	579.66
AB	713+08.96	-49.50	579.57	579.64
AC	713+18.96	-49.50	579.52	579.62
AD	713+28.96	-49.50	579.46	579.60
AE	713+38.96	-49.50	579.40	579.56
AF	713+48.96	-49.50	579.33	579.50
AG	713+58.96	-49.50	579.26	579.44
AH	713+68.96	-49.50	579.19	579.35
AI	713+78.96	-49.50	579.11	579.25
AJ	713+88.96	-49.50	579.02	579.14
AK	713+98.96	-49.50	578.93	579.02
AL	714+08.96	-49.50	578.83	578.89
AM	714+18.96	-49.50	578.73	578.77
℄ Brg. Pier 3	714+29.96	-49.50	578.61	578.63
AN	714+39.96	-49.50	578.50	578.52
AO	714+49.96	-49.50	578.38	578.41
AP	714+59.96	-49.50	578.26	578.30
AQ	714+69.96	-49.50	578.13	578.19
AR	714+79.96	-49.50	577.99	578.07
AS	714+89.96	-49.50	577.85	577.94
AT	714+99.96	-49.50	577.71	577.80
AU	715+09.96	-49.50	577.56	577.64
AV	715+19.96	-49.50	577.41	577.47
AW	715+29.96	-49.50	577.25	577.29
℄ Brg. E. Abut.	715+39.46	-49.50	577.09	577.11
Bk. E. Abut.	715+41.92	-49.50	577.05	577.07

GIRDER 5

Location	Station	Offset from ℄ I-80	Theoretical Grade Elevations	Theoretical Grade Elevations Adjusted For Dead Load Deflection & Grinding
Bk. W. Abut.	710+04.69	-45.00	578.69	578.71
℄ Brg. W. Abut.	710+07.14	-45.00	578.71	578.73
A	710+17.14	-45.00	578.82	578.88
B	710+27.14	-45.00	578.92	579.02
C	710+37.14	-45.00	579.02	579.14
D	710+47.14	-45.00	579.11	579.25
E	710+57.14	-45.00	579.19	579.34
F	710+67.14	-45.00	579.27	579.41
G	710+77.14	-45.00	579.35	579.47
H	710+87.14	-45.00	579.42	579.52
I	710+97.14	-45.00	579.48	579.55
J	711+07.14	-45.00	579.54	579.59
K	711+17.14	-45.00	579.60	579.63
℄ Brg. Pier 1	711+27.14	-45.00	579.64	579.67
L	711+37.14	-45.00	579.69	579.72
M	711+47.14	-45.00	579.73	579.77
N	711+57.14	-45.00	579.76	579.82
O	711+67.14	-45.00	579.79	579.88
P	711+77.14	-45.00	579.81	579.92
Q	711+87.14	-45.00	579.83	579.96
R	711+97.14	-45.00	579.84	579.98
S	712+07.14	-45.00	579.85	579.99
T	712+17.14	-45.00	579.85	579.98
U	712+27.14	-45.00	579.85	579.96
V	712+37.14	-45.00	579.84	579.93
W	712+47.14	-45.00	579.83	579.89
X	712+57.14	-45.00	579.81	579.85
Y	712+67.14	-45.00	579.79	579.82
℄ Brg. Pier 2	712+78.14	-45.00	579.76	579.78
Z	712+88.14	-45.00	579.72	579.75
AA	712+98.14	-45.00	579.68	579.73
AB	713+08.14	-45.00	579.64	579.72
AC	713+18.14	-45.00	579.59	579.70
AD	713+28.14	-45.00	579.53	579.67
AE	713+38.14	-45.00	579.47	579.63
AF	713+48.14	-45.00	579.41	579.58
AG	713+58.14	-45.00	579.34	579.51
AH	713+68.14	-45.00	579.26	579.43
AI	713+78.14	-45.00	579.18	579.33
AJ	713+88.14	-45.00	579.09	579.21
AK	713+98.14	-45.00	579.00	579.09
AL	714+08.14	-45.00	578.91	578.97
AM	714+18.14	-45.00	578.80	578.84
℄ Brg. Pier 3	714+29.14	-45.00	578.69	578.71
AN	714+39.14	-45.00	578.57	578.60
AO	714+49.14	-45.00	578.46	578.49
AP	714+59.14	-45.00	578.33	578.38
AQ	714+69.14	-45.00	578.21	578.27
AR	714+79.14	-45.00	578.07	578.15
AS	714+89.14	-45.00	577.93	578.02
AT	714+99.14	-45.00	577.79	577.88
AU	715+09.14	-45.00	577.64	577.72
AV	715+19.14	-45.00	577.49	577.55
AW	715+29.14	-45.00	577.33	577.37
℄ Brg. E. Abut.	715+38.64	-45.00	577.17	577.19
Bk. E. Abut.	715+41.10	-45.00	577.13	577.15

GIRDER 6

Location	Station	Offset from ℄ I-80	Theoretical Grade Elevations	Theoretical Grade Elevations Adjusted For Dead Load Deflection & Grinding
Bk. W. Abut.	710+03.42	-38.08	578.78	578.80
℄ Brg. W. Abut.	710+05.88	-38.08	578.80	578.82
A	710+15.88	-38.08	578.91	578.97
B	710+25.88	-38.08	579.01	579.11
C	710+35.88	-38.08	579.11	579.23
D	710+45.88	-38.08	579.20	579.34
E	710+55.88	-38.08	579.29	579.43
F	710+65.88	-38.08	579.37	579.51
G	710+75.88	-38.08	579.44	579.56
H	710+85.88	-38.08	579.51	579.61
I	710+95.88	-38.08	579.58	579.65
J	711+05.88	-38.08	579.64	579.69
K	711+15.88	-38.08	579.69	579.72
℄ Brg. Pier 1	711+25.88	-38.08	579.74	579.76
L	711+35.88	-38.08	579.79	579.81
M	711+45.88	-38.08	579.83	579.87
N	711+55.88	-38.08	579.86	579.92
O	711+65.88	-38.08	579.89	579.98
P	711+75.88	-38.08	579.91	580.02
Q	711+85.88	-38.08	579.93	580.06
R	711+95.88	-38.08	579.95	580.08
S	712+05.88	-38.08	579.95	580.09
T	712+15.88	-38.08	579.96	580.08
U	712+25.88	-38.08	579.96	580.06
V	712+35.88	-38.08	579.95	580.03
W	712+45.88	-38.08	579.94	580.00
X	712+55.88	-38.08	579.92	579.96
Y	712+65.88	-38.08	579.90	579.92
℄ Brg. Pier 2	712+76.88	-38.08	579.86	579.88
Z	712+86.88	-38.08	579.83	579.86
AA	712+96.88	-38.08	579.79	579.84
AB	713+06.88	-38.08	579.75	579.83
AC	713+16.88	-38.08	579.70	579.81
AD	713+26.88	-38.08	579.64	579.78
AE	713+36.88	-38.08	579.58	579.74
AF	713+46.88	-38.08	579.52	579.69
AG	713+56.88	-38.08	579.45	579.62
AH	713+66.88	-38.08	579.37	579.54
AI	713+76.88	-38.08	579.29	579.44
AJ	713+86.88	-38.08	579.21	579.33
AK	713+96.88	-38.08	579.12	579.21
AL	714+06.88	-38.08	579.02	579.08
AM	714+16.88	-38.08	578.92	578.96
℄ Brg. Pier 3	714+27.88	-38.08	578.80	578.83
AN	714+37.88	-38.08	578.69	578.71
AO	714+47.88	-38.08	578.58	578.61
AP	714+57.88	-38.08	578.45	578.50
AQ	714+67.88	-38.08	578.33	578.39
AR	714+77.88	-38.08	578.19	578.27
AS	714+87.88	-38.08	578.06	578.14
AT	714+97.88	-38.08	577.91	578.00
AU	715+07.88	-38.08	577.76	577.85
AV	715+17.88	-38.08	577.61	577.68
AW	715+27.88	-38.08	577.45	577.50
℄ Brg. E. Abut.	715+37.38	-38.08	577.30	577.32
Bk. E. Abut.	715+39.84	-38.08	577.26	577.28

Notes:

All Elevations and Offsets are in feet.

MODEL: SHEET
FILE NAME: C:\TRANSYSTEMS\PW_LOCAL\TRANSYSTEMS-PW-01\DMS20864\0990902_0903-62F94-015-TOS3.DGN

10-27-2025, 16:46:52

exp.

USER NAME =	DESIGNED - CCE	REVISED -	
	CHECKED - BAR	REVISED -	
PLOT SCALE =	DRAWN - MTR	REVISED -	
PLOT DATE =	CHECKED - BAR	REVISED -	

STATE OF ILLINOIS
DEPARTMENT OF TRANSPORTATION

TOP OF SLAB ELEVATIONS 3
STRUCTURE NO. 099-0903 (WB)

SHEET SA-15 OF SA-112 SHEETS

F.A.I. RTE.	SECTION	COUNTY	TOTAL SHEETS	SHEET NO.
80	2017-057F	WILL	1342	679
		CONTRACT NO. 62F94		
	ILLINOIS	FED. AID PROJECT		

WB CROWN

Location	Station	Offset from ℄ I-80	Theoretical Grade Elevations	Theoretical Grade Elevations Adjusted For Dead Load Deflection & Grinding
Bk. W. Abut.	710+03.32	-37.50	578.78	578.80
℄ Brg. W. Abut.	710+05.77	-37.50	578.81	578.83
A	710+15.77	-37.50	578.92	578.98
B	710+25.77	-37.50	579.02	579.12
C	710+35.77	-37.50	579.12	579.24
D	710+45.77	-37.50	579.21	579.35
E	710+55.77	-37.50	579.29	579.44
F	710+65.77	-37.50	579.37	579.51
G	710+75.77	-37.50	579.45	579.57
H	710+85.77	-37.50	579.52	579.62
I	710+95.77	-37.50	579.59	579.66
J	711+05.77	-37.50	579.65	579.69
K	711+15.77	-37.50	579.70	579.73
℄ Brg. Pier 1	711+25.77	-37.50	579.75	579.77
L	711+35.77	-37.50	579.80	579.82
M	711+45.77	-37.50	579.83	579.88
N	711+55.77	-37.50	579.87	579.93
O	711+65.77	-37.50	579.90	579.99
P	711+75.77	-37.50	579.92	580.03
Q	711+85.77	-37.50	579.94	580.07
R	711+95.77	-37.50	579.95	580.09
S	712+05.77	-37.50	579.96	580.10
T	712+15.77	-37.50	579.97	580.09
U	712+25.77	-37.50	579.96	580.07
V	712+35.77	-37.50	579.96	580.04
W	712+45.77	-37.50	579.94	580.01
X	712+55.77	-37.50	579.93	579.97
Y	712+65.77	-37.50	579.90	579.93
℄ Brg. Pier 2	712+76.77	-37.50	579.87	579.89
Z	712+86.77	-37.50	579.84	579.87
AA	712+96.77	-37.50	579.80	579.85
AB	713+06.77	-37.50	579.76	579.83
AC	713+16.77	-37.50	579.71	579.82
AD	713+26.77	-37.50	579.65	579.79
AE	713+36.77	-37.50	579.59	579.75
AF	713+46.77	-37.50	579.53	579.70
AG	713+56.77	-37.50	579.46	579.63
AH	713+66.77	-37.50	579.38	579.55
AI	713+76.77	-37.50	579.30	579.45
AJ	713+86.77	-37.50	579.22	579.34
AK	713+96.77	-37.50	579.13	579.22
AL	714+06.77	-37.50	579.03	579.09
AM	714+16.77	-37.50	578.93	578.97
℄ Brg. Pier 3	714+27.77	-37.50	578.81	578.84
AN	714+37.77	-37.50	578.70	578.72
AO	714+47.77	-37.50	578.59	578.62
AP	714+57.77	-37.50	578.46	578.51
AQ	714+67.77	-37.50	578.34	578.40
AR	714+77.77	-37.50	578.20	578.28
AS	714+87.77	-37.50	578.07	578.15
AT	714+97.77	-37.50	577.92	578.01
AU	715+07.77	-37.50	577.77	577.86
AV	715+17.77	-37.50	577.62	577.69
AW	715+27.77	-37.50	577.46	577.51
℄ Brg. E. Abut.	715+37.27	-37.50	577.31	577.33
Bk. E. Abut.	715+39.73	-37.50	577.27	577.29

GIRDER 7

Location	Station	Offset from ℄ I-80	Theoretical Grade Elevations	Theoretical Grade Elevations Adjusted For Dead Load Deflection & Grinding
Bk. W. Abut.	710+02.16	-31.17	578.68	578.70
℄ Brg. W. Abut.	710+04.62	-31.17	578.70	578.72
A	710+14.62	-31.17	578.81	578.87
B	710+24.62	-31.17	578.91	579.01
C	710+34.62	-31.17	579.01	579.14
D	710+44.62	-31.17	579.10	579.24
E	710+54.62	-31.17	579.19	579.33
F	710+64.62	-31.17	579.27	579.41
G	710+74.62	-31.17	579.35	579.47
H	710+84.62	-31.17	579.42	579.52
I	710+94.62	-31.17	579.48	579.56
J	711+04.62	-31.17	579.54	579.59
K	711+14.62	-31.17	579.60	579.63
℄ Brg. Pier 1	711+24.62	-31.17	579.65	579.67
L	711+34.62	-31.17	579.70	579.72
M	711+44.62	-31.17	579.74	579.78
N	711+54.62	-31.17	579.77	579.83
O	711+64.62	-31.17	579.80	579.89
P	711+74.62	-31.17	579.82	579.93
Q	711+84.62	-31.17	579.84	579.97
R	711+94.62	-31.17	579.86	579.99
S	712+04.62	-31.17	579.87	580.00
T	712+14.62	-31.17	579.87	580.00
U	712+24.62	-31.17	579.87	579.98
V	712+34.62	-31.17	579.86	579.95
W	712+44.62	-31.17	579.85	579.91
X	712+54.62	-31.17	579.83	579.88
Y	712+64.62	-31.17	579.81	579.84
℄ Brg. Pier 2	712+75.62	-31.17	579.78	579.80
Z	712+85.62	-31.17	579.75	579.78
AA	712+95.62	-31.17	579.71	579.76
AB	713+05.62	-31.17	579.67	579.75
AC	713+15.62	-31.17	579.62	579.73
AD	713+25.62	-31.17	579.56	579.70
AE	713+35.62	-31.17	579.51	579.66
AF	713+45.62	-31.17	579.44	579.61
AG	713+55.62	-31.17	579.37	579.54
AH	713+65.62	-31.17	579.30	579.46
AI	713+75.62	-31.17	579.22	579.36
AJ	713+85.62	-31.17	579.13	579.25
AK	713+95.62	-31.17	579.04	579.13
AL	714+05.62	-31.17	578.95	579.01
AM	714+15.62	-31.17	578.85	578.89
℄ Brg. Pier 3	714+26.62	-31.17	578.73	578.75
AN	714+36.62	-31.17	578.62	578.64
AO	714+46.62	-31.17	578.50	578.53
AP	714+56.62	-31.17	578.38	578.43
AQ	714+66.62	-31.17	578.26	578.32
AR	714+76.62	-31.17	578.12	578.20
AS	714+86.62	-31.17	577.99	578.08
AT	714+96.62	-31.17	577.84	577.93
AU	715+06.62	-31.17	577.70	577.78
AV	715+16.62	-31.17	577.54	577.61
AW	715+26.62	-31.17	577.39	577.43
℄ Brg. E. Abut.	715+36.12	-31.17	577.23	577.25
Bk. E. Abut.	715+38.58	-31.17	577.19	577.21

WB STAGE CONSTRUCTION JOINT

Location	Station	Offset from ℄ I-80	Theoretical Grade Elevations	Theoretical Grade Elevations Adjusted For Dead Load Deflection & Grinding
Bk. W. Abut.	710+01.49	-27.50	578.61	578.63
CL Brg. W. Abut.	710+03.95	-27.50	578.64	578.66
A	710+13.95	-27.50	578.75	578.81
B	710+23.95	-27.50	578.85	578.95
C	710+33.95	-27.50	578.95	579.07
D	710+43.95	-27.50	579.04	579.18
E	710+53.95	-27.50	579.13	579.27
F	710+63.95	-27.50	579.21	579.35
G	710+73.95	-27.50	579.29	579.41
H	710+83.95	-27.50	579.36	579.46
I	710+93.95	-27.50	579.42	579.50
J	711+03.95	-27.50	579.49	579.53
K	711+13.95	-27.50	579.54	579.57
℄ Brg. Pier 1	711+23.95	-27.50	579.59	579.61
L	711+33.95	-27.50	579.64	579.66
M	711+43.95	-27.50	579.68	579.72
N	711+53.95	-27.50	579.71	579.78
O	711+63.95	-27.50	579.74	579.83
P	711+73.95	-27.50	579.77	579.88
Q	711+83.95	-27.50	579.79	579.91
R	711+93.95	-27.50	579.80	579.94
S	712+03.95	-27.50	579.81	579.95
T	712+13.95	-27.50	579.82	579.94
U	712+23.95	-27.50	579.81	579.92
V	712+33.95	-27.50	579.81	579.90
W	712+43.95	-27.50	579.80	579.86
X	712+53.95	-27.50	579.78	579.82
Y	712+63.95	-27.50	579.76	579.79
℄ Brg. Pier 2	712+74.95	-27.50	579.73	579.75
Z	712+84.95	-27.50	579.70	579.73
AA	712+94.95	-27.50	579.66	579.71
AB	713+04.95	-27.50	579.62	579.69
AC	713+14.95	-27.50	579.57	579.68
AD	713+24.95	-27.50	579.51	579.65
AE	713+34.95	-27.50	579.46	579.61
AF	713+44.95	-27.50	579.39	579.56
AG	713+54.95	-27.50	579.32	579.49
AH	713+64.95	-27.50	579.25	579.41
AI	713+74.95	-27.50	579.17	579.31
AJ	713+84.95	-27.50	579.08	579.20
AK	713+94.95	-27.50	578.99	579.09
AL	714+04.95	-27.50	578.90	578.96
AM	714+14.95	-27.50	578.80	578.84
℄ Brg. Pier 3	714+25.95	-27.50	578.68	578.70
AN	714+35.95	-27.50	578.57	578.59
AO	714+45.95	-27.50	578.46	578.49
AP	714+55.95	-27.50	578.34	578.38
AQ	714+65.95	-27.50	578.21	578.27
AR	714+75.95	-27.50	578.08	578.16
AS	714+85.95	-27.50	577.94	578.03
AT	714+95.95	-27.50	577.80	577.89
AU	715+05.95	-27.50	577.65	577.73
AV	715+15.95	-27.50	577.50	577.57
AW	715+25.95	-27.50	577.34	577.39
℄ Brg. E. Abut.	715+35.45	-27.50	577.19	577.21
Bk. E. Abut.	715+37.91	-27.50	577.15	577.17

Notes:

All Elevations and Offsets are in feet.

WB SOUTH CROSS SLOPE BREAK POINT

Location	Station	Offset from ℄ I-80	Theoretical Grade Elevations	Theoretical Grade Elevations Adjusted For Dead Load Deflection & Grinding
Bk. W. Abut.	710+01.13	-25.50	578.58	578.60
℄ Brg. W. Abut.	710+03.59	-25.50	578.61	578.63
A	710+13.59	-25.50	578.71	578.78
B	710+23.59	-25.50	578.82	578.92
C	710+33.59	-25.50	578.92	579.04
D	710+43.59	-25.50	579.01	579.15
E	710+53.59	-25.50	579.09	579.24
F	710+63.59	-25.50	579.18	579.32
G	710+73.59	-25.50	579.25	579.38
H	710+83.59	-25.50	579.33	579.42
I	710+93.59	-25.50	579.39	579.46
J	711+03.59	-25.50	579.45	579.50
K	711+13.59	-25.50	579.51	579.54
℄ Brg. Pier 1	711+23.59	-25.50	579.56	579.58
L	711+33.59	-25.50	579.61	579.63
M	711+43.59	-25.50	579.65	579.69
N	711+53.59	-25.50	579.68	579.74
O	711+63.59	-25.50	579.71	579.80
P	711+73.59	-25.50	579.74	579.85
Q	711+83.59	-25.50	579.76	579.88
R	711+93.59	-25.50	579.77	579.91
S	712+03.59	-25.50	579.78	579.92
T	712+13.59	-25.50	579.79	579.91
U	712+23.59	-25.50	579.78	579.89
V	712+33.59	-25.50	579.78	579.87
W	712+43.59	-25.50	579.77	579.83
X	712+53.59	-25.50	579.75	579.79
Y	712+63.59	-25.50	579.73	579.76
℄ Brg. Pier 2	712+74.59	-25.50	579.70	579.72
Z	712+84.59	-25.50	579.67	579.70
AA	712+94.59	-25.50	579.63	579.68
AB	713+04.59	-25.50	579.59	579.67
AC	713+14.59	-25.50	579.54	579.65
AD	713+24.59	-25.50	579.49	579.62
AE	713+34.59	-25.50	579.43	579.58
AF	713+44.59	-25.50	579.36	579.53
AG	713+54.59	-25.50	579.29	579.47
AH	713+64.59	-25.50	579.22	579.39
AI	713+74.59	-25.50	579.14	579.29
AJ	713+84.59	-25.50	579.06	579.18
AK	713+94.59	-25.50	578.97	579.06
AL	714+04.59	-25.50	578.87	578.93
AM	714+14.59	-25.50	578.77	578.81
℄ Brg. Pier 3	714+25.59	-25.50	578.66	578.68
AN	714+35.59	-25.50	578.55	578.57
AO	714+45.59	-25.50	578.43	578.46
AP	714+55.59	-25.50	578.31	578.36
AQ	714+65.59	-25.50	578.18	578.25
AR	714+75.59	-25.50	578.05	578.13
AS	714+85.59	-25.50	577.92	578.00
AT	714+95.59	-25.50	577.77	577.86
AU	715+05.59	-25.50	577.63	577.71
AV	715+15.59	-25.50	577.48	577.54
AW	715+25.59	-25.50	577.32	577.36
℄ Brg. E. Abut.	715+35.09	-25.50	577.16	577.18
Bk. E. Abut.	715+37.54	-25.50	577.12	577.14

GIRDER 8

Location	Station	Offset from ℄ I-80	Theoretical Grade Elevations	Theoretical Grade Elevations Adjusted For Dead Load Deflection & Grinding
Bk. W. Abut.	710+00.90	-24.25	578.55	578.57
℄ Brg. W. Abut.	710+03.36	-24.25	578.58	578.60
A	710+13.36	-24.25	578.69	578.75
B	710+23.36	-24.25	578.79	578.89
C	710+33.36	-24.25	578.89	579.01
D	710+43.36	-24.25	578.98	579.12
E	710+53.36	-24.25	579.07	579.21
F	710+63.36	-24.25	579.15	579.29
G	710+73.36	-24.25	579.23	579.35
H	710+83.36	-24.25	579.30	579.40
I	710+93.36	-24.25	579.37	579.44
J	711+03.36	-24.25	579.43	579.47
K	711+13.36	-24.25	579.48	579.51
℄ Brg. Pier 1	711+23.36	-24.25	579.53	579.55
L	711+33.36	-24.25	579.58	579.61
M	711+43.36	-24.25	579.62	579.66
N	711+53.36	-24.25	579.66	579.72
O	711+63.36	-24.25	579.69	579.77
P	711+73.36	-24.25	579.71	579.82
Q	711+83.36	-24.25	579.73	579.86
R	711+93.36	-24.25	579.75	579.88
S	712+03.36	-24.25	579.76	579.89
T	712+13.36	-24.25	579.76	579.89
U	712+23.36	-24.25	579.76	579.87
V	712+33.36	-24.25	579.75	579.84
W	712+43.36	-24.25	579.74	579.81
X	712+53.36	-24.25	579.73	579.77
Y	712+63.36	-24.25	579.71	579.73
℄ Brg. Pier 2	712+74.36	-24.25	579.68	579.70
Z	712+84.36	-24.25	579.64	579.68
AA	712+94.36	-24.25	579.61	579.66
AB	713+04.36	-24.25	579.56	579.64
AC	713+14.36	-24.25	579.51	579.62
AD	713+24.36	-24.25	579.46	579.60
AE	713+34.36	-24.25	579.40	579.56
AF	713+44.36	-24.25	579.34	579.51
AG	713+54.36	-24.25	579.27	579.44
AH	713+64.36	-24.25	579.20	579.36
AI	713+74.36	-24.25	579.12	579.26
AJ	713+84.36	-24.25	579.03	579.15
AK	713+94.36	-24.25	578.95	579.04
AL	714+04.36	-24.25	578.85	578.91
AM	714+14.36	-24.25	578.75	578.79
℄ Brg. Pier 3	714+25.36	-24.25	578.64	578.66
AN	714+35.36	-24.25	578.52	578.55
AO	714+45.36	-24.25	578.41	578.44
AP	714+55.36	-24.25	578.29	578.33
AQ	714+65.36	-24.25	578.16	578.23
AR	714+75.36	-24.25	578.03	578.11
AS	714+85.36	-24.25	577.89	577.98
AT	714+95.36	-24.25	577.75	577.84
AU	715+05.36	-24.25	577.61	577.69
AV	715+15.36	-24.25	577.45	577.52
AW	715+25.36	-24.25	577.30	577.34
℄ Brg. E. Abut.	715+34.86	-24.25	577.14	577.16
Bk. E. Abut.	715+37.31	-24.25	577.10	577.12

GIRDER 9

Location	Station	Offset from ℄ I-80	Theoretical Grade Elevations	Theoretical Grade Elevations Adjusted For Dead Load Deflection & Grinding
Bk. W. Abut.	709+99.64	-17.33	578.40	578.42
℄ Brg. W. Abut.	710+02.10	-17.33	578.43	578.45
A	710+12.10	-17.33	578.54	578.60
B	710+22.10	-17.33	578.64	578.75
C	710+32.10	-17.33	578.74	578.88
D	710+42.10	-17.33	578.83	578.99
E	710+52.10	-17.33	578.92	579.08
F	710+62.10	-17.33	579.00	579.16
G	710+72.10	-17.33	579.08	579.22
H	710+82.10	-17.33	579.15	579.26
I	710+92.10	-17.33	579.22	579.30
J	711+02.10	-17.33	579.28	579.33
K	711+12.10	-17.33	579.34	579.37
℄ Brg. Pier 1	711+22.10	-17.33	579.39	579.41
L	711+32.10	-17.33	579.44	579.46
M	711+42.10	-17.33	579.48	579.52
N	711+52.10	-17.33	579.51	579.58
O	711+62.10	-17.33	579.54	579.64
P	711+72.10	-17.33	579.57	579.69
Q	711+82.10	-17.33	579.59	579.73
R	711+92.10	-17.33	579.61	579.76
S	712+02.10	-17.33	579.62	579.77
T	712+12.10	-17.33	579.62	579.77
U	712+22.10	-17.33	579.62	579.74
V	712+32.10	-17.33	579.62	579.71
W	712+42.10	-17.33	579.61	579.68
X	712+52.10	-17.33	579.59	579.64
Y	712+62.10	-17.33	579.57	579.60
℄ Brg. Pier 2	712+73.10	-17.33	579.54	579.56
Z	712+83.10	-17.33	579.51	579.54
AA	712+93.10	-17.33	579.47	579.53
AB	713+03.10	-17.33	579.43	579.52
AC	713+13.10	-17.33	579.38	579.50
AD	713+23.10	-17.33	579.33	579.48
AE	713+33.10	-17.33	579.27	579.45
AF	713+43.10	-17.33	579.21	579.40
AG	713+53.10	-17.33	579.14	579.34
AH	713+63.10	-17.33	579.07	579.25
AI	713+73.10	-17.33	578.99	579.15
AJ	713+83.10	-17.33	578.91	579.04
AK	713+93.10	-17.33	578.82	578.92
AL	714+03.10	-17.33	578.72	578.79
AM	714+13.10	-17.33	578.63	578.67
℄ Brg. Pier 3	714+24.10	-17.33	578.51	578.53
AN	714+34.10	-17.33	578.40	578.42
AO	714+44.10	-17.33	578.29	578.32
AP	714+54.10	-17.33	578.17	578.22
AQ	714+64.10	-17.33	578.04	578.11
AR	714+74.10	-17.33	577.91	578.00
AS	714+84.10	-17.33	577.77	577.87
AT	714+94.10	-17.33	577.63	577.73
AU	715+04.10	-17.33	577.49	577.58
AV	715+14.10	-17.33	577.33	577.41
AW	715+24.10	-17.33	577.18	577.23
℄ Brg. E. Abut.	715+33.60	-17.33	577.02	577.05
Bk. E. Abut.	715+36.05	-17.33	576.98	577.01

Notes:

All Elevations and Offsets are in feet.

MODEL: SHEET
FILE NAME: C:\TRANSYSTEMS\PW_LOCAL\TRANSYSTEMS-PW-01\DMS20864\0990902_0903-62F94-017-TOS5.DGN

10-27-2025, 16:46:58

exp.

USER NAME =	DESIGNED - CCE	REVISED -	
	CHECKED - BAR	REVISED -	
PLOT SCALE =	DRAWN - MTR	REVISED -	
PLOT DATE =	CHECKED - BAR	REVISED -	

STATE OF ILLINOIS
DEPARTMENT OF TRANSPORTATION

TOP OF SLAB ELEVATIONS 5
STRUCTURE NO. 099-0903 (WB)

SHEET SA-17 OF SA-112 SHEETS

F.A.I. RTE.	SECTION	COUNTY	TOTAL SHEETS	SHEET NO.
80	2017-057F	WILL	1342	681
		CONTRACT NO. 62F94		
	ILLINOIS	FED. AID PROJECT		

WB PGL AND SOUTH EDGE OF ROADWAY

Location	Station	Offset from ℄ I-80	Theoretical Grade Elevations	Theoretical Grade Elevations Adjusted For Dead Load Deflection & Grinding
Bk. W. Abut.	709+98.94	-13.50	578.31	578.34
℄ Brg. W. Abut.	710+01.40	-13.50	578.34	578.36
A	710+11.40	-13.50	578.45	578.52
B	710+21.40	-13.50	578.56	578.66
C	710+31.40	-13.50	578.65	578.79
D	710+41.40	-13.50	578.75	578.91
E	710+51.40	-13.50	578.84	579.00
F	710+61.40	-13.50	578.92	579.08
G	710+71.40	-13.50	579.00	579.13
H	710+81.40	-13.50	579.07	579.18
I	710+91.40	-13.50	579.14	579.22
J	711+01.40	-13.50	579.20	579.25
K	711+11.40	-13.50	579.26	579.29
℄ Brg. Pier 1	711+21.40	-13.50	579.31	579.33
L	711+31.40	-13.50	579.36	579.38
M	711+41.40	-13.50	579.40	579.44
N	711+51.40	-13.50	579.43	579.50
O	711+61.40	-13.50	579.47	579.56
P	711+71.40	-13.50	579.49	579.62
Q	711+81.40	-13.50	579.51	579.66
R	711+91.40	-13.50	579.53	579.68
S	712+01.40	-13.50	579.54	579.69
T	712+11.40	-13.50	579.55	579.69
U	712+21.40	-13.50	579.55	579.67
V	712+31.40	-13.50	579.54	579.64
W	712+41.40	-13.50	579.53	579.60
X	712+51.40	-13.50	579.52	579.56
Y	712+61.40	-13.50	579.49	579.52
℄ Brg. Pier 2	712+72.40	-13.50	579.47	579.49
Z	712+82.40	-13.50	579.43	579.47
AA	712+92.40	-13.50	579.40	579.45
AB	713+02.40	-13.50	579.36	579.44
AC	713+12.40	-13.50	579.31	579.43
AD	713+22.40	-13.50	579.26	579.41
AE	713+32.40	-13.50	579.20	579.38
AF	713+42.40	-13.50	579.14	579.33
AG	713+52.40	-13.50	579.07	579.26
AH	713+62.40	-13.50	579.00	579.18
AI	713+72.40	-13.50	578.92	579.08
AJ	713+82.40	-13.50	578.84	578.97
AK	713+92.40	-13.50	578.75	578.85
AL	714+02.40	-13.50	578.65	578.72
AM	714+12.40	-13.50	578.56	578.60
℄ Brg. Pier 3	714+23.40	-13.50	578.44	578.46
AN	714+33.40	-13.50	578.33	578.35
AO	714+43.40	-13.50	578.22	578.25
AP	714+53.40	-13.50	578.10	578.15
AQ	714+63.40	-13.50	577.97	578.04
AR	714+73.40	-13.50	577.84	577.93
AS	714+83.40	-13.50	577.71	577.81
AT	714+93.40	-13.50	577.57	577.67
AU	715+03.40	-13.50	577.42	577.51
AV	715+13.40	-13.50	577.27	577.34
AW	715+23.40	-13.50	577.11	577.16
℄ Brg. E. Abut.	715+32.90	-13.50	576.96	576.98
Bk. E. Abut.	715+35.35	-13.50	576.92	576.94

GIRDER 10

Location	Station	Offset from ℄ I-80	Theoretical Grade Elevations	Theoretical Grade Elevations Adjusted For Dead Load Deflection & Grinding
Bk. W. Abut.	709+98.38	-10.42	578.25	578.27
℄ Brg. W. Abut.	710+00.84	-10.42	578.27	578.30
A	710+10.84	-10.42	578.38	578.45
B	710+20.84	-10.42	578.49	578.60
C	710+30.84	-10.42	578.59	578.73
D	710+40.84	-10.42	578.68	578.84
E	710+50.84	-10.42	578.77	578.93
F	710+60.84	-10.42	578.85	579.01
G	710+70.84	-10.42	578.93	579.07
H	710+80.84	-10.42	579.00	579.11
I	710+90.84	-10.42	579.07	579.15
J	711+00.84	-10.42	579.14	579.19
K	711+10.84	-10.42	579.19	579.22
℄ Brg. Pier 1	711+20.84	-10.42	579.25	579.27
L	711+30.84	-10.42	579.29	579.32
M	711+40.84	-10.42	579.33	579.38
N	711+50.84	-10.42	579.37	579.44
O	711+60.84	-10.42	579.40	579.50
P	711+70.84	-10.42	579.43	579.55
Q	711+80.84	-10.42	579.45	579.59
R	711+90.84	-10.42	579.47	579.62
S	712+00.84	-10.42	579.48	579.63
T	712+10.84	-10.42	579.48	579.63
U	712+20.84	-10.42	579.48	579.61
V	712+30.84	-10.42	579.48	579.58
W	712+40.84	-10.42	579.47	579.54
X	712+50.84	-10.42	579.45	579.50
Y	712+60.84	-10.42	579.43	579.46
℄ Brg. Pier 2	712+71.84	-10.42	579.41	579.43
Z	712+81.84	-10.42	579.38	579.41
AA	712+91.84	-10.42	579.34	579.39
AB	713+01.84	-10.42	579.30	579.38
AC	713+11.84	-10.42	579.25	579.37
AD	713+21.84	-10.42	579.20	579.35
AE	713+31.84	-10.42	579.14	579.32
AF	713+41.84	-10.42	579.08	579.27
AG	713+51.84	-10.42	579.01	579.21
AH	713+61.84	-10.42	578.94	579.13
AI	713+71.84	-10.42	578.86	579.03
AJ	713+81.84	-10.42	578.78	578.91
AK	713+91.84	-10.42	578.69	578.79
AL	714+01.84	-10.42	578.60	578.67
AM	714+11.84	-10.42	578.50	578.54
℄ Brg. Pier 3	714+22.84	-10.42	578.39	578.41
AN	714+32.84	-10.42	578.28	578.30
AO	714+42.84	-10.42	578.16	578.19
AP	714+52.84	-10.42	578.04	578.09
AQ	714+62.84	-10.42	577.92	577.99
AR	714+72.84	-10.42	577.79	577.88
AS	714+82.84	-10.42	577.65	577.75
AT	714+92.84	-10.42	577.51	577.61
AU	715+02.84	-10.42	577.37	577.46
AV	715+12.84	-10.42	577.22	577.29
AW	715+22.84	-10.42	577.06	577.11
℄ Brg. E. Abut.	715+32.34	-10.42	576.91	576.93
Bk. E. Abut.	715+34.79	-10.42	576.87	576.89

GIRDER 11

Location	Station	Offset from ℄ I-80	Theoretical Grade Elevations	Theoretical Grade Elevations Adjusted For Dead Load Deflection & Grinding
Bk. W. Abut.	709+97.12	-3.50	578.09	578.12
℄ Brg. W. Abut.	709+99.57	-3.50	578.12	578.14
A	710+09.57	-3.50	578.23	578.31
B	710+19.57	-3.50	578.34	578.46
C	710+29.57	-3.50	578.44	578.59
D	710+39.57	-3.50	578.53	578.71
E	710+49.57	-3.50	578.62	578.80
F	710+59.57	-3.50	578.70	578.88
G	710+69.57	-3.50	578.78	578.93
H	710+79.57	-3.50	578.86	578.98
I	710+89.57	-3.50	578.93	579.01
J	710+99.57	-3.50	578.99	579.04
K	711+09.57	-3.50	579.05	579.08
℄ Brg. Pier 1	711+19.57	-3.50	579.10	579.12
L	711+29.57	-3.50	579.15	579.18
M	711+39.57	-3.50	579.19	579.24
N	711+49.57	-3.50	579.23	579.30
O	711+59.57	-3.50	579.26	579.37
P	711+69.57	-3.50	579.29	579.42
Q	711+79.57	-3.50	579.31	579.47
R	711+89.57	-3.50	579.33	579.50
S	711+99.57	-3.50	579.34	579.51
T	712+09.57	-3.50	579.34	579.50
U	712+19.57	-3.50	579.35	579.48
V	712+29.57	-3.50	579.34	579.45
W	712+39.57	-3.50	579.33	579.41
X	712+49.57	-3.50	579.32	579.37
Y	712+59.57	-3.50	579.30	579.33
℄ Brg. Pier 2	712+70.57	-3.50	579.27	579.29
Z	712+80.57	-3.50	579.24	579.28
AA	712+90.57	-3.50	579.21	579.27
AB	713+00.57	-3.50	579.16	579.26
AC	713+10.57	-3.50	579.12	579.25
AD	713+20.57	-3.50	579.07	579.24
AE	713+30.57	-3.50	579.01	579.21
AF	713+40.57	-3.50	578.95	579.16
AG	713+50.57	-3.50	578.88	579.10
AH	713+60.57	-3.50	578.81	579.02
AI	713+70.57	-3.50	578.73	578.92
AJ	713+80.57	-3.50	578.65	578.80
AK	713+90.57	-3.50	578.56	578.68
AL	714+00.57	-3.50	578.47	578.54
AM	714+10.57	-3.50	578.37	578.42
℄ Brg. Pier 3	714+21.57	-3.50	578.26	578.28
AN	714+31.57	-3.50	578.15	578.17
AO	714+41.57	-3.50	578.04	578.07
AP	714+51.57	-3.50	577.92	577.97
AQ	714+61.57	-3.50	577.80	577.87
AR	714+71.57	-3.50	577.67	577.76
AS	714+81.57	-3.50	577.53	577.64
AT	714+91.57	-3.50	577.39	577.50
AU	715+01.57	-3.50	577.25	577.35
AV	715+11.57	-3.50	577.10	577.18
AW	715+21.57	-3.50	576.94	576.99
℄ Brg. E. Abut.	715+31.07	-3.50	576.79	576.81
Bk. E. Abut.	715+33.53	-3.50	576.75	576.77

Notes:

All Elevations and Offsets are in feet.

MODEL: SHEET
FILE NAME: C:\TRANSYSTEMS\PW_LOCAL\TRANSYSTEMS-PW-01\DMS20864\0990902_0903-62F94-018-TOS6.DGN
10-27-2025, 16:47:01

exp.

USER NAME =	DESIGNED - CCE	REVISED -	
	CHECKED - BAR	REVISED -	
PLOT SCALE =	DRAWN - MTR	REVISED -	
PLOT DATE =	CHECKED - BAR	REVISED -	

STATE OF ILLINOIS
DEPARTMENT OF TRANSPORTATION

TOP OF SLAB ELEVATIONS 6
STRUCTURE NO. 099-0903 (WB)

SHEET SA-18 OF SA-112 SHEETS

F.A.I. RTE.	SECTION	COUNTY	TOTAL SHEETS	SHEET NO.
80	2017-057F	WILL	1342	682
		CONTRACT NO. 62F94		
	ILLINOIS	FED. AID PROJECT		

WB INSIDE FACE OF SOUTH PARAPET

Location	Station	Offset from ℄ I-80	Theoretical Grade Elevations	Theoretical Grade Elevations Adjusted For Dead Load Deflection & Grinding
Bk. W. Abut.	709+96.75	-1.50	578.05	578.07
℄ Brg. W. Abut.	709+99.21	-1.50	578.08	578.10
A	710+09.21	-1.50	578.19	578.26
B	710+19.21	-1.50	578.29	578.41
C	710+29.21	-1.50	578.39	578.55
D	710+39.21	-1.50	578.49	578.66
E	710+49.21	-1.50	578.58	578.76
F	710+59.21	-1.50	578.66	578.84
G	710+69.21	-1.50	578.74	578.89
H	710+79.21	-1.50	578.81	578.94
I	710+89.21	-1.50	578.88	578.97
J	710+99.21	-1.50	578.95	579.00
K	711+09.21	-1.50	579.01	579.04
℄ Brg. Pier 1	711+19.21	-1.50	579.06	579.08
L	711+29.21	-1.50	579.11	579.14
M	711+39.21	-1.50	579.15	579.20
N	711+49.21	-1.50	579.19	579.26
O	711+59.21	-1.50	579.22	579.33
P	711+69.21	-1.50	579.25	579.38
Q	711+79.21	-1.50	579.27	579.43
R	711+89.21	-1.50	579.29	579.46
S	711+99.21	-1.50	579.30	579.47
T	712+09.21	-1.50	579.30	579.46
U	712+19.21	-1.50	579.31	579.44
V	712+29.21	-1.50	579.30	579.41
W	712+39.21	-1.50	579.29	579.37
X	712+49.21	-1.50	579.28	579.33
Y	712+59.21	-1.50	579.26	579.29
℄ Brg. Pier 2	712+70.21	-1.50	579.23	579.25
Z	712+80.21	-1.50	579.20	579.24
AA	712+90.21	-1.50	579.17	579.23
AB	713+00.21	-1.50	579.13	579.22
AC	713+10.21	-1.50	579.08	579.21
AD	713+20.21	-1.50	579.03	579.20
AE	713+30.21	-1.50	578.97	579.17
AF	713+40.21	-1.50	578.91	579.13
AG	713+50.21	-1.50	578.85	579.06
AH	713+60.21	-1.50	578.77	578.98
AI	713+70.21	-1.50	578.70	578.88
AJ	713+80.21	-1.50	578.62	578.76
AK	713+90.21	-1.50	578.53	578.64
AL	714+00.21	-1.50	578.44	578.51
AM	714+10.21	-1.50	578.34	578.38
℄ Brg. Pier 3	714+21.21	-1.50	578.22	578.25
AN	714+31.21	-1.50	578.12	578.14
AO	714+41.21	-1.50	578.00	578.04
AP	714+51.21	-1.50	577.88	577.94
AQ	714+61.21	-1.50	577.76	577.84
AR	714+71.21	-1.50	577.63	577.73
AS	714+81.21	-1.50	577.50	577.61
AT	714+91.21	-1.50	577.36	577.47
AU	715+01.21	-1.50	577.21	577.31
AV	715+11.21	-1.50	577.06	577.14
AW	715+21.21	-1.50	576.91	576.96
℄ Brg. E. Abut.	715+30.71	-1.50	576.76	576.78
Bk. E. Abut.	715+33.17	-1.50	576.72	576.74

Notes:

All Elevations and Offsets are in feet.

EB INSIDE FACE OF NORTH PARAPET

Location	Station	Offset from ℄ I-80	Theoretical Grade Elevations	Theoretical Grade Elevations Adjusted For Dead Load Deflection & Grinding
Bk. W. Abut.	709+96.21	1.50	578.04	578.06
℄ Brg. W. Abut.	709+98.66	1.50	578.07	578.09
A	710+08.66	1.50	578.18	578.26
B	710+18.66	1.50	578.29	578.41
C	710+28.66	1.50	578.39	578.54
D	710+38.66	1.50	578.48	578.66
E	710+48.66	1.50	578.57	578.75
F	710+58.66	1.50	578.66	578.83
G	710+68.66	1.50	578.74	578.89
H	710+78.66	1.50	578.81	578.93
I	710+88.66	1.50	578.88	578.97
J	710+98.66	1.50	578.94	579.00
K	711+08.66	1.50	579.00	579.03
℄ Brg. Pier 1	711+18.66	1.50	579.06	579.08
L	711+28.66	1.50	579.10	579.13
M	711+38.66	1.50	579.15	579.20
N	711+48.66	1.50	579.19	579.26
O	711+58.66	1.50	579.22	579.33
P	711+68.66	1.50	579.25	579.38
Q	711+78.66	1.50	579.27	579.43
R	711+88.66	1.50	579.29	579.46
S	711+98.66	1.50	579.30	579.47
T	712+08.66	1.50	579.30	579.46
U	712+18.66	1.50	579.31	579.44
V	712+28.66	1.50	579.30	579.41
W	712+38.66	1.50	579.29	579.37
X	712+48.66	1.50	579.28	579.33
Y	712+58.66	1.50	579.26	579.29
℄ Brg. Pier 2	712+69.66	1.50	579.23	579.25
Z	712+79.66	1.50	579.20	579.24
AA	712+89.66	1.50	579.17	579.23
AB	712+99.66	1.50	579.13	579.22
AC	713+09.66	1.50	579.08	579.22
AD	713+19.66	1.50	579.03	579.20
AE	713+29.66	1.50	578.98	579.17
AF	713+39.66	1.50	578.92	579.13
AG	713+49.66	1.50	578.85	579.07
AH	713+59.66	1.50	578.78	578.98
AI	713+69.66	1.50	578.70	578.88
AJ	713+79.66	1.50	578.62	578.77
AK	713+89.66	1.50	578.53	578.64
AL	713+99.66	1.50	578.44	578.51
AM	714+09.66	1.50	578.34	578.39
℄ Brg. Pier 3	714+20.66	1.50	578.23	578.25
AN	714+30.66	1.50	578.12	578.14
AO	714+40.66	1.50	578.01	578.04
AP	714+50.66	1.50	577.89	577.94
AQ	714+60.66	1.50	577.77	577.84
AR	714+70.66	1.50	577.64	577.73
AS	714+80.66	1.50	577.50	577.61
AT	714+90.66	1.50	577.36	577.48
AU	715+00.66	1.50	577.22	577.32
AV	715+10.66	1.50	577.07	577.15
AW	715+20.66	1.50	576.92	576.97
℄ Brg. E. Abut.	715+30.16	1.50	576.76	576.79
Bk. E. Abut.	715+32.62	1.50	576.72	576.74

GIRDER 12

Location	Station	Offset from ℄ I-80	Theoretical Grade Elevations	Theoretical Grade Elevations Adjusted For Dead Load Deflection & Grinding
Bk. W. Abut.	709+95.84	3.50	578.08	578.10
℄ Brg. W. Abut.	709+98.30	3.50	578.11	578.13
A	710+08.30	3.50	578.22	578.29
B	710+18.30	3.50	578.32	578.44
C	710+28.30	3.50	578.42	578.58
D	710+38.30	3.50	578.52	578.70
E	710+48.30	3.50	578.61	578.79
F	710+58.30	3.50	578.69	578.87
G	710+68.30	3.50	578.77	578.92
H	710+78.30	3.50	578.85	578.97
I	710+88.30	3.50	578.92	579.00
J	710+98.30	3.50	578.98	579.04
K	711+08.30	3.50	579.04	579.07
℄ Brg. Pier 1	711+18.30	3.50	579.09	579.11
L	711+28.30	3.50	579.14	579.17
M	711+38.30	3.50	579.19	579.24
N	711+48.30	3.50	579.22	579.30
O	711+58.30	3.50	579.26	579.37
P	711+68.30	3.50	579.28	579.42
Q	711+78.30	3.50	579.31	579.47
R	711+88.30	3.50	579.32	579.50
S	711+98.30	3.50	579.34	579.51
T	712+08.30	3.50	579.34	579.50
U	712+18.30	3.50	579.35	579.48
V	712+28.30	3.50	579.34	579.45
W	712+38.30	3.50	579.33	579.41
X	712+48.30	3.50	579.32	579.37
Y	712+58.30	3.50	579.30	579.33
℄ Brg. Pier 2	712+69.30	3.50	579.27	579.30
Z	712+79.30	3.50	579.25	579.28
AA	712+89.30	3.50	579.21	579.27
AB	712+99.30	3.50	579.17	579.27
AC	713+09.30	3.50	579.12	579.26
AD	713+19.30	3.50	579.07	579.24
AE	713+29.30	3.50	579.02	579.22
AF	713+39.30	3.50	578.96	579.17
AG	713+49.30	3.50	578.89	579.11
AH	713+59.30	3.50	578.82	579.03
AI	713+69.30	3.50	578.74	578.93
AJ	713+79.30	3.50	578.66	578.81
AK	713+89.30	3.50	578.58	578.69
AL	713+99.30	3.50	578.48	578.56
AM	714+09.30	3.50	578.39	578.43
℄ Brg. Pier 3	714+20.30	3.50	578.27	578.30
AN	714+30.30	3.50	578.17	578.19
AO	714+40.30	3.50	578.05	578.09
AP	714+50.30	3.50	577.94	577.99
AQ	714+60.30	3.50	577.81	577.89
AR	714+70.30	3.50	577.68	577.78
AS	714+80.30	3.50	577.55	577.66
AT	714+90.30	3.50	577.41	577.52
AU	715+00.30	3.50	577.27	577.37
AV	715+10.30	3.50	577.12	577.20
AW	715+20.30	3.50	576.96	577.01
℄ Brg. E. Abut.	715+29.80	3.50	576.81	576.83
Bk. E. Abut.	715+32.26	3.50	576.77	576.79

GIRDER 13

Location	Station	Offset from ℄ I-80	Theoretical Grade Elevations	Theoretical Grade Elevations Adjusted For Dead Load Deflection & Grinding
Bk. W. Abut.	709+94.58	10.42	578.20	578.22
℄ Brg. W. Abut.	709+97.04	10.42	578.23	578.25
A	710+07.04	10.42	578.34	578.41
B	710+17.04	10.42	578.45	578.56
C	710+27.04	10.42	578.55	578.69
D	710+37.04	10.42	578.65	578.80
E	710+47.04	10.42	578.74	578.90
F	710+57.04	10.42	578.82	578.98
G	710+67.04	10.42	578.90	579.04
H	710+77.04	10.42	578.98	579.09
I	710+87.04	10.42	579.05	579.13
J	710+97.04	10.42	579.11	579.16
K	711+07.04	10.42	579.17	579.20
℄ Brg. Pier 1	711+17.04	10.42	579.23	579.25
L	711+27.04	10.42	579.27	579.30
M	711+37.04	10.42	579.32	579.36
N	711+47.04	10.42	579.36	579.43
O	711+57.04	10.42	579.39	579.49
P	711+67.04	10.42	579.42	579.54
Q	711+77.04	10.42	579.44	579.59
R	711+87.04	10.42	579.46	579.61
S	711+97.04	10.42	579.47	579.63
T	712+07.04	10.42	579.48	579.63
U	712+17.04	10.42	579.48	579.61
V	712+27.04	10.42	579.48	579.58
W	712+37.04	10.42	579.47	579.54
X	712+47.04	10.42	579.46	579.51
Y	712+57.04	10.42	579.44	579.47
℄ Brg. Pier 2	712+68.04	10.42	579.42	579.44
Z	712+78.04	10.42	579.39	579.42
AA	712+88.04	10.42	579.35	579.41
AB	712+98.04	10.42	579.31	579.40
AC	713+08.04	10.42	579.27	579.39
AD	713+18.04	10.42	579.22	579.37
AE	713+28.04	10.42	579.16	579.34
AF	713+38.04	10.42	579.10	579.30
AG	713+48.04	10.42	579.04	579.23
AH	713+58.04	10.42	578.97	579.15
AI	713+68.04	10.42	578.89	579.06
AJ	713+78.04	10.42	578.81	578.95
AK	713+88.04	10.42	578.73	578.83
AL	713+98.04	10.42	578.63	578.70
AM	714+08.04	10.42	578.54	578.58
℄ Brg. Pier 3	714+19.04	10.42	578.43	578.45
AN	714+29.04	10.42	578.32	578.34
AO	714+39.04	10.42	578.21	578.24
AP	714+49.04	10.42	578.09	578.14
AQ	714+59.04	10.42	577.97	578.04
AR	714+69.04	10.42	577.84	577.93
AS	714+79.04	10.42	577.70	577.80
AT	714+89.04	10.42	577.57	577.67
AU	714+99.04	10.42	577.42	577.51
AV	715+09.04	10.42	577.27	577.35
AW	715+19.04	10.42	577.12	577.17
℄ Brg. E. Abut.	715+28.54	10.42	576.97	576.99
Bk. E. Abut.	715+30.99	10.42	576.93	576.95

Notes:

All Elevations and Offsets are in feet.

EB PGL AND NORTH EDGE OF ROADWAY

Location	Station	Offset from ℄ I-80	Theoretical Grade Elevations	Theoretical Grade Elevations Adjusted For Dead Load Deflection & Grinding
Bk. W. Abut.	709+94.02	13.50	578.26	578.28
℄ Brg. W. Abut.	709+96.48	13.50	578.29	578.31
A	710+06.48	13.50	578.40	578.47
B	710+16.48	13.50	578.51	578.61
C	710+26.48	13.50	578.61	578.75
D	710+36.48	13.50	578.70	578.86
E	710+46.48	13.50	578.79	578.96
F	710+56.48	13.50	578.88	579.04
G	710+66.48	13.50	578.96	579.10
H	710+76.48	13.50	579.03	579.14
I	710+86.48	13.50	579.11	579.18
J	710+96.48	13.50	579.17	579.22
K	711+06.48	13.50	579.23	579.26
℄ Brg. Pier 1	711+16.48	13.50	579.28	579.31
L	711+26.48	13.50	579.33	579.36
M	711+36.48	13.50	579.38	579.42
N	711+46.48	13.50	579.42	579.49
O	711+56.48	13.50	579.45	579.55
P	711+66.48	13.50	579.48	579.60
Q	711+76.48	13.50	579.50	579.65
R	711+86.48	13.50	579.52	579.68
S	711+96.48	13.50	579.54	579.69
T	712+06.48	13.50	579.54	579.69
U	712+16.48	13.50	579.55	579.67
V	712+26.48	13.50	579.54	579.64
W	712+36.48	13.50	579.54	579.61
X	712+46.48	13.50	579.52	579.57
Y	712+56.48	13.50	579.51	579.53
℄ Brg. Pier 2	712+67.48	13.50	579.48	579.50
Z	712+77.48	13.50	579.45	579.48
AA	712+87.48	13.50	579.42	579.47
AB	712+97.48	13.50	579.38	579.46
AC	713+07.48	13.50	579.33	579.45
AD	713+17.48	13.50	579.28	579.44
AE	713+27.48	13.50	579.23	579.41
AF	713+37.48	13.50	579.17	579.36
AG	713+47.48	13.50	579.10	579.30
AH	713+57.48	13.50	579.03	579.22
AI	713+67.48	13.50	578.96	579.12
AJ	713+77.48	13.50	578.88	579.01
AK	713+87.48	13.50	578.79	578.89
AL	713+97.48	13.50	578.70	578.77
AM	714+07.48	13.50	578.61	578.65
℄ Brg. Pier 3	714+18.48	13.50	578.49	578.51
AN	714+28.48	13.50	578.39	578.41
AO	714+38.48	13.50	578.27	578.31
AP	714+48.48	13.50	578.16	578.21
AQ	714+58.48	13.50	578.03	578.10
AR	714+68.48	13.50	577.91	577.99
AS	714+78.48	13.50	577.77	577.87
AT	714+88.48	13.50	577.64	577.74
AU	714+98.48	13.50	577.49	577.58
AV	715+08.48	13.50	577.34	577.42
AW	715+18.48	13.50	577.19	577.24
℄ Brg. E. Abut.	715+27.98	13.50	577.04	577.06
Bk. E. Abut.	715+30.43	13.50	577.00	577.02

GIRDER 14

Location	Station	Offset from ℄ I-80	Theoretical Grade Elevations	Theoretical Grade Elevations Adjusted For Dead Load Deflection & Grinding
Bk. W. Abut.	709+93.32	17.33	578.33	578.35
℄ Brg. W. Abut.	709+95.78	17.33	578.36	578.38
A	710+05.78	17.33	578.47	578.54
B	710+15.78	17.33	578.57	578.68
C	710+25.78	17.33	578.68	578.82
D	710+35.78	17.33	578.77	578.93
E	710+45.78	17.33	578.86	579.03
F	710+55.78	17.33	578.95	579.11
G	710+65.78	17.33	579.03	579.17
H	710+75.78	17.33	579.11	579.22
I	710+85.78	17.33	579.18	579.26
J	710+95.78	17.33	579.24	579.29
K	711+05.78	17.33	579.30	579.33
℄ Brg. Pier 1	711+15.78	17.33	579.36	579.38
L	711+25.78	17.33	579.41	579.44
M	711+35.78	17.33	579.45	579.50
N	711+45.78	17.33	579.49	579.56
O	711+55.78	17.33	579.53	579.62
P	711+65.78	17.33	579.55	579.68
Q	711+75.78	17.33	579.58	579.72
R	711+85.78	17.33	579.60	579.75
S	711+95.78	17.33	579.61	579.76
T	712+05.78	17.33	579.62	579.76
U	712+15.78	17.33	579.62	579.75
V	712+25.78	17.33	579.62	579.72
W	712+35.78	17.33	579.61	579.68
X	712+45.78	17.33	579.60	579.65
Y	712+55.78	17.33	579.58	579.61
℄ Brg. Pier 2	712+66.78	17.33	579.56	579.58
Z	712+76.78	17.33	579.53	579.56
AA	712+86.78	17.33	579.50	579.55
AB	712+96.78	17.33	579.46	579.54
AC	713+06.78	17.33	579.41	579.53
AD	713+16.78	17.33	579.36	579.52
AE	713+26.78	17.33	579.31	579.49
AF	713+36.78	17.33	579.25	579.44
AG	713+46.78	17.33	579.19	579.38
AH	713+56.78	17.33	579.12	579.30
AI	713+66.78	17.33	579.04	579.20
AJ	713+76.78	17.33	578.96	579.09
AK	713+86.78	17.33	578.88	578.98
AL	713+96.78	17.33	578.78	578.85
AM	714+06.78	17.33	578.69	578.73
℄ Brg. Pier 3	714+17.78	17.33	578.58	578.60
AN	714+27.78	17.33	578.47	578.49
AO	714+37.78	17.33	578.36	578.39
AP	714+47.78	17.33	578.24	578.29
AQ	714+57.78	17.33	578.12	578.19
AR	714+67.78	17.33	577.99	578.08
AS	714+77.78	17.33	577.86	577.96
AT	714+87.78	17.33	577.72	577.82
AU	714+97.78	17.33	577.58	577.67
AV	715+07.78	17.33	577.43	577.51
AW	715+17.78	17.33	577.28	577.33
℄ Brg. E. Abut.	715+27.28	17.33	577.13	577.15
Bk. E. Abut.	715+29.73	17.33	577.09	577.11

GIRDER 15

Location	Station	Offset from ℄ I-80	Theoretical Grade Elevations	Theoretical Grade Elevations Adjusted For Dead Load Deflection & Grinding
Bk. W. Abut.	709+92.06	24.25	578.45	578.47
℄ Brg. W. Abut.	709+94.52	24.25	578.48	578.50
A	710+04.52	24.25	578.59	578.65
B	710+14.52	24.25	578.70	578.80
C	710+24.52	24.25	578.80	578.93
D	710+34.52	24.25	578.90	579.04
E	710+44.52	24.25	578.99	579.14
F	710+54.52	24.25	579.08	579.22
G	710+64.52	24.25	579.16	579.28
H	710+74.52	24.25	579.24	579.33
I	710+84.52	24.25	579.31	579.38
J	710+94.52	24.25	579.37	579.42
K	711+04.52	24.25	579.43	579.46
℄ Brg. Pier 1	711+14.52	24.25	579.49	579.51
L	711+24.52	24.25	579.54	579.57
M	711+34.52	24.25	579.58	579.63
N	711+44.52	24.25	579.63	579.69
O	711+54.52	24.25	579.66	579.75
P	711+64.52	24.25	579.69	579.80
Q	711+74.52	24.25	579.71	579.84
R	711+84.52	24.25	579.73	579.87
S	711+94.52	24.25	579.75	579.88
T	712+04.52	24.25	579.76	579.88
U	712+14.52	24.25	579.76	579.87
V	712+24.52	24.25	579.76	579.85
W	712+34.52	24.25	579.75	579.82
X	712+44.52	24.25	579.74	579.78
Y	712+54.52	24.25	579.72	579.75
℄ Brg. Pier 2	712+65.52	24.25	579.70	579.72
Z	712+75.52	24.25	579.67	579.70
AA	712+85.52	24.25	579.64	579.69
AB	712+95.52	24.25	579.60	579.68
AC	713+05.52	24.25	579.56	579.67
AD	713+15.52	24.25	579.51	579.64
AE	713+25.52	24.25	579.46	579.61
AF	713+35.52	24.25	579.40	579.57
AG	713+45.52	24.25	579.33	579.50
AH	713+55.52	24.25	579.26	579.43
AI	713+65.52	24.25	579.19	579.33
AJ	713+75.52	24.25	579.11	579.23
AK	713+85.52	24.25	579.02	579.11
AL	713+95.52	24.25	578.93	579.00
AM	714+05.52	24.25	578.84	578.88
℄ Brg. Pier 3	714+16.52	24.25	578.73	578.75
AN	714+26.52	24.25	578.62	578.64
AO	714+36.52	24.25	578.51	578.54
AP	714+46.52	24.25	578.40	578.44
AQ	714+56.52	24.25	578.27	578.34
AR	714+66.52	24.25	578.15	578.23
AS	714+76.52	24.25	578.02	578.10
AT	714+86.52	24.25	577.88	577.97
AU	714+96.52	24.25	577.74	577.82
AV	715+06.52	24.25	577.59	577.66
AW	715+16.52	24.25	577.44	577.48
℄ Brg. E. Abut.	715+26.02	24.25	577.29	577.31
Bk. E. Abut.	715+28.47	24.25	577.25	577.27

Notes:

All Elevations and Offsets are in feet.

MODEL: SHEET
FILE NAME: C:\TRANSYSTEMS\PW_LOCAL\TRANSYSTEMS-PW-01\DMS20864\0990902_0903-62F94-021-TOS9.DGN

10-27-2025, 16:47:11

exp.

USER NAME =	DESIGNED - CCE	REVISED -	
	CHECKED - BAR	REVISED -	
PLOT SCALE =	DRAWN - MTR	REVISED -	
PLOT DATE =	CHECKED - BAR	REVISED -	

STATE OF ILLINOIS
DEPARTMENT OF TRANSPORTATION

TOP OF SLAB ELEVATIONS 9
STRUCTURE NO. 099-0902 (EB)

SHEET SA-21 OF SA-112 SHEETS

F.A.I. RTE.	SECTION	COUNTY	TOTAL SHEETS	SHEET NO.
80	2017-057F	WILL	1342	685
		CONTRACT NO. 62F94		
	ILLINOIS	FED. AID PROJECT		

EB NORTH CROSS SLOPE BREAK POINT

Location	Station	Offset from ℄ I-80	Theoretical Grade Elevations	Theoretical Grade Elevations Adjusted For Dead Load Deflection & Grinding
Bk. W. Abut.	709+91.83	25.50	578.47	578.49
℄ Brg. W. Abut.	709+94.29	25.50	578.50	578.52
A	710+04.29	25.50	578.61	578.68
B	710+14.29	25.50	578.72	578.82
C	710+24.29	25.50	578.82	578.95
D	710+34.29	25.50	578.92	579.06
E	710+44.29	25.50	579.01	579.16
F	710+54.29	25.50	579.10	579.24
G	710+64.29	25.50	579.18	579.30
H	710+74.29	25.50	579.26	579.36
I	710+84.29	25.50	579.33	579.40
J	710+94.29	25.50	579.40	579.44
K	711+04.29	25.50	579.46	579.49
℄ Brg. Pier 1	711+14.29	25.50	579.51	579.53
L	711+24.29	25.50	579.56	579.59
M	711+34.29	25.50	579.61	579.65
N	711+44.29	25.50	579.65	579.71
O	711+54.29	25.50	579.68	579.77
P	711+64.29	25.50	579.71	579.82
Q	711+74.29	25.50	579.74	579.87
R	711+84.29	25.50	579.76	579.89
S	711+94.29	25.50	579.77	579.91
T	712+04.29	25.50	579.78	579.91
U	712+14.29	25.50	579.79	579.89
V	712+24.29	25.50	579.78	579.87
W	712+34.29	25.50	579.78	579.84
X	712+44.29	25.50	579.77	579.81
Y	712+54.29	25.50	579.75	579.78
℄ Brg. Pier 2	712+65.29	25.50	579.73	579.75
Z	712+75.29	25.50	579.70	579.73
AA	712+85.29	25.50	579.66	579.72
AB	712+95.29	25.50	579.63	579.70
AC	713+05.29	25.50	579.58	579.69
AD	713+15.29	25.50	579.54	579.67
AE	713+25.29	25.50	579.48	579.64
AF	713+35.29	25.50	579.42	579.59
AG	713+45.29	25.50	579.36	579.53
AH	713+55.29	25.50	579.29	579.45
AI	713+65.29	25.50	579.22	579.36
AJ	713+75.29	25.50	579.14	579.26
AK	713+85.29	25.50	579.05	579.14
AL	713+95.29	25.50	578.96	579.02
AM	714+05.29	25.50	578.87	578.90
℄ Brg. Pier 3	714+16.29	25.50	578.76	578.78
AN	714+26.29	25.50	578.65	578.67
AO	714+36.29	25.50	578.54	578.57
AP	714+46.29	25.50	578.42	578.47
AQ	714+56.29	25.50	578.30	578.36
AR	714+66.29	25.50	578.18	578.25
AS	714+76.29	25.50	578.04	578.13
AT	714+86.29	25.50	577.91	578.00
AU	714+96.29	25.50	577.76	577.85
AV	715+06.29	25.50	577.62	577.68
AW	715+16.29	25.50	577.46	577.51
℄ Brg. E. Abut.	715+25.79	25.50	577.31	577.34
Bk. E. Abut.	715+28.24	25.50	577.28	577.30

EB STAGE CONSTRUCTION JOINT

Location	Station	Offset from ℄ I-80	Theoretical Grade Elevations	Theoretical Grade Elevations Adjusted For Dead Load Deflection & Grinding
Bk. W. Abut.	709+91.47	27.50	578.50	578.52
℄ Brg. W. Abut.	709+93.92	27.50	578.53	578.55
A	710+03.92	27.50	578.64	578.70
B	710+13.92	27.50	578.75	578.85
C	710+23.92	27.50	578.85	578.98
D	710+33.92	27.50	578.95	579.09
E	710+43.92	27.50	579.04	579.19
F	710+53.92	27.50	579.13	579.27
G	710+63.92	27.50	579.21	579.33
H	710+73.92	27.50	579.29	579.38
I	710+83.92	27.50	579.36	579.43
J	710+93.92	27.50	579.42	579.47
K	711+03.92	27.50	579.49	579.52
℄ Brg. Pier 1	711+13.92	27.50	579.54	579.56
L	711+23.92	27.50	579.59	579.62
M	711+33.92	27.50	579.64	579.68
N	711+43.92	27.50	579.68	579.74
O	711+53.92	27.50	579.71	579.80
P	711+63.92	27.50	579.74	579.85
Q	711+73.92	27.50	579.77	579.90
R	711+83.92	27.50	579.79	579.92
S	711+93.92	27.50	579.80	579.94
T	712+03.92	27.50	579.81	579.94
U	712+13.92	27.50	579.82	579.92
V	712+23.92	27.50	579.81	579.90
W	712+33.92	27.50	579.81	579.87
X	712+43.92	27.50	579.80	579.84
Y	712+53.92	27.50	579.78	579.81
℄ Brg. Pier 2	712+64.92	27.50	579.76	579.78
Z	712+74.92	27.50	579.73	579.76
AA	712+84.92	27.50	579.70	579.75
AB	712+94.92	27.50	579.66	579.74
AC	713+04.92	27.50	579.62	579.72
AD	713+14.92	27.50	579.57	579.70
AE	713+24.92	27.50	579.51	579.67
AF	713+34.92	27.50	579.46	579.62
AG	713+44.92	27.50	579.39	579.56
AH	713+54.92	27.50	579.32	579.49
AI	713+64.92	27.50	579.25	579.39
AJ	713+74.92	27.50	579.17	579.29
AK	713+84.92	27.50	579.08	579.18
AL	713+94.92	27.50	579.00	579.06
AM	714+04.92	27.50	578.90	578.94
℄ Brg. Pier 3	714+15.92	27.50	578.79	578.81
AN	714+25.92	27.50	578.68	578.71
AO	714+35.92	27.50	578.57	578.60
AP	714+45.92	27.50	578.46	578.50
AQ	714+55.92	27.50	578.34	578.40
AR	714+65.92	27.50	578.21	578.29
AS	714+75.92	27.50	578.08	578.17
AT	714+85.92	27.50	577.94	578.03
AU	714+95.92	27.50	577.80	577.88
AV	715+05.92	27.50	577.65	577.72
AW	715+15.92	27.50	577.50	577.55
℄ Brg. E. Abut.	715+25.42	27.50	577.35	577.37
Bk. E. Abut.	715+27.88	27.50	577.31	577.33

GIRDER 16

Location	Station	Offset from ℄ I-80	Theoretical Grade Elevations	Theoretical Grade Elevations Adjusted For Dead Load Deflection & Grinding
Bk. W. Abut.	709+90.80	31.17	578.55	578.57
℄ Brg. W. Abut.	709+93.25	31.17	578.57	578.60
A	710+03.25	31.17	578.69	578.75
B	710+13.25	31.17	578.80	578.89
C	710+23.25	31.17	578.90	579.02
D	710+33.25	31.17	579.00	579.14
E	710+43.25	31.17	579.09	579.24
F	710+53.25	31.17	579.18	579.32
G	710+63.25	31.17	579.26	579.38
H	710+73.25	31.17	579.34	579.43
I	710+83.25	31.17	579.41	579.48
J	710+93.25	31.17	579.47	579.52
K	711+03.25	31.17	579.54	579.57
℄ Brg. Pier 1	711+13.25	31.17	579.59	579.61
L	711+23.25	31.17	579.64	579.67
M	711+33.25	31.17	579.69	579.73
N	711+43.25	31.17	579.73	579.79
O	711+53.25	31.17	579.77	579.85
P	711+63.25	31.17	579.80	579.91
Q	711+73.25	31.17	579.82	579.95
R	711+83.25	31.17	579.84	579.98
S	711+93.25	31.17	579.86	579.99
T	712+03.25	31.17	579.87	579.99
U	712+13.25	31.17	579.87	579.98
V	712+23.25	31.17	579.87	579.96
W	712+33.25	31.17	579.86	579.93
X	712+43.25	31.17	579.85	579.90
Y	712+53.25	31.17	579.84	579.86
℄ Brg. Pier 2	712+64.25	31.17	579.81	579.83
Z	712+74.25	31.17	579.79	579.82
AA	712+84.25	31.17	579.75	579.80
AB	712+94.25	31.17	579.72	579.79
AC	713+04.25	31.17	579.67	579.78
AD	713+14.25	31.17	579.63	579.76
AE	713+24.25	31.17	579.57	579.73
AF	713+34.25	31.17	579.51	579.68
AG	713+44.25	31.17	579.45	579.62
AH	713+54.25	31.17	579.38	579.55
AI	713+64.25	31.17	579.31	579.45
AJ	713+74.25	31.17	579.23	579.35
AK	713+84.25	31.17	579.15	579.24
AL	713+94.25	31.17	579.06	579.12
AM	714+04.25	31.17	578.96	579.00
℄ Brg. Pier 3	714+15.25	31.17	578.85	578.87
AN	714+25.25	31.17	578.75	578.77
AO	714+35.25	31.17	578.64	578.67
AP	714+45.25	31.17	578.52	578.57
AQ	714+55.25	31.17	578.40	578.46
AR	714+65.25	31.17	578.27	578.35
AS	714+75.25	31.17	578.14	578.23
AT	714+85.25	31.17	578.01	578.10
AU	714+95.25	31.17	577.86	577.95
AV	715+05.25	31.17	577.72	577.78
AW	715+15.25	31.17	577.57	577.61
℄ Brg. E. Abut.	715+24.75	31.17	577.42	577.44
Bk. E. Abut.	715+27.21	31.17	577.38	577.40

Notes:

All Elevations and Offsets are in feet.

EB CROWN

Location	Station	Offset from ℄ I-80	Theoretical Grade Elevations	Theoretical Grade Elevations Adjusted For Dead Load Deflection & Grinding
Bk. W. Abut.	709+89.64	37.50	578.63	578.65
℄ Brg. W. Abut.	709+92.10	37.50	578.66	578.68
A	710+02.10	37.50	578.77	578.83
B	710+12.10	37.50	578.88	578.98
C	710+22.10	37.50	578.98	579.11
D	710+32.10	37.50	579.08	579.22
E	710+42.10	37.50	579.17	579.32
F	710+52.10	37.50	579.26	579.40
G	710+62.10	37.50	579.34	579.47
H	710+72.10	37.50	579.42	579.52
I	710+82.10	37.50	579.49	579.57
J	710+92.10	37.50	579.56	579.61
K	711+02.10	37.50	579.62	579.65
℄ Brg. Pier 1	711+12.10	37.50	579.68	579.70
L	711+22.10	37.50	579.73	579.76
M	711+32.10	37.50	579.78	579.82
N	711+42.10	37.50	579.82	579.88
O	711+52.10	37.50	579.86	579.94
P	711+62.10	37.50	579.89	580.00
Q	711+72.10	37.50	579.91	580.04
R	711+82.10	37.50	579.93	580.07
S	711+92.10	37.50	579.95	580.09
T	712+02.10	37.50	579.96	580.09
U	712+12.10	37.50	579.97	580.07
V	712+22.10	37.50	579.97	580.05
W	712+32.10	37.50	579.96	580.02
X	712+42.10	37.50	579.95	579.99
Y	712+52.10	37.50	579.93	579.96
℄ Brg. Pier 2	712+63.10	37.50	579.91	579.93
Z	712+73.10	37.50	579.88	579.92
AA	712+83.10	37.50	579.85	579.90
AB	712+93.10	37.50	579.82	579.89
AC	713+03.10	37.50	579.77	579.88
AD	713+13.10	37.50	579.73	579.86
AE	713+23.10	37.50	579.67	579.83
AF	713+33.10	37.50	579.62	579.79
AG	713+43.10	37.50	579.55	579.73
AH	713+53.10	37.50	579.49	579.65
AI	713+63.10	37.50	579.41	579.56
AJ	713+73.10	37.50	579.33	579.45
AK	713+83.10	37.50	579.25	579.34
AL	713+93.10	37.50	579.16	579.22
AM	714+03.10	37.50	579.07	579.11
℄ Brg. Pier 3	714+14.10	37.50	578.96	578.98
AN	714+24.10	37.50	578.85	578.87
AO	714+34.10	37.50	578.74	578.77
AP	714+44.10	37.50	578.63	578.67
AQ	714+54.10	37.50	578.51	578.57
AR	714+64.10	37.50	578.38	578.46
AS	714+74.10	37.50	578.25	578.34
AT	714+84.10	37.50	578.12	578.21
AU	714+94.10	37.50	577.98	578.06
AV	715+04.10	37.50	577.83	577.90
AW	715+14.10	37.50	577.68	577.72
℄ Brg. E. Abut.	715+23.60	37.50	577.53	577.55
Bk. E. Abut.	715+26.06	37.50	577.49	577.51

GIRDER 17

Location	Station	Offset from ℄ I-80	Theoretical Grade Elevations	Theoretical Grade Elevations Adjusted For Dead Load Deflection & Grinding
Bk. W. Abut.	709+89.54	38.08	578.62	578.64
℄ Brg. W. Abut.	709+91.99	38.08	578.65	578.67
A	710+01.99	38.08	578.76	578.82
B	710+11.99	38.08	578.87	578.97
C	710+21.99	38.08	578.97	579.10
D	710+31.99	38.08	579.07	579.21
E	710+41.99	38.08	579.16	579.31
F	710+51.99	38.08	579.25	579.39
G	710+61.99	38.08	579.34	579.46
H	710+71.99	38.08	579.41	579.51
I	710+81.99	38.08	579.49	579.56
J	710+91.99	38.08	579.55	579.60
K	711+01.99	38.08	579.61	579.64
℄ Brg. Pier 1	711+11.99	38.08	579.67	579.69
L	711+21.99	38.08	579.72	579.75
M	711+31.99	38.08	579.77	579.81
N	711+41.99	38.08	579.81	579.87
O	711+51.99	38.08	579.85	579.94
P	711+61.99	38.08	579.88	579.99
Q	711+71.99	38.08	579.90	580.03
R	711+81.99	38.08	579.93	580.06
S	711+91.99	38.08	579.94	580.08
T	712+01.99	38.08	579.95	580.08
U	712+11.99	38.08	579.96	580.07
V	712+21.99	38.08	579.96	580.04
W	712+31.99	38.08	579.95	580.01
X	712+41.99	38.08	579.94	579.98
Y	712+51.99	38.08	579.93	579.95
℄ Brg. Pier 2	712+62.99	38.08	579.90	579.92
Z	712+72.99	38.08	579.88	579.91
AA	712+82.99	38.08	579.84	579.90
AB	712+92.99	38.08	579.81	579.89
AC	713+02.99	38.08	579.77	579.87
AD	713+12.99	38.08	579.72	579.85
AE	713+22.99	38.08	579.67	579.82
AF	713+32.99	38.08	579.61	579.78
AG	713+42.99	38.08	579.55	579.72
AH	713+52.99	38.08	579.48	579.64
AI	713+62.99	38.08	579.40	579.55
AJ	713+72.99	38.08	579.33	579.45
AK	713+82.99	38.08	579.24	579.33
AL	713+92.99	38.08	579.15	579.21
AM	714+02.99	38.08	579.06	579.10
℄ Brg. Pier 3	714+13.99	38.08	578.95	578.97
AN	714+23.99	38.08	578.85	578.87
AO	714+33.99	38.08	578.74	578.77
AP	714+43.99	38.08	578.62	578.67
AQ	714+53.99	38.08	578.50	578.56
AR	714+63.99	38.08	578.38	578.45
AS	714+73.99	38.08	578.25	578.33
AT	714+83.99	38.08	578.11	578.20
AU	714+93.99	38.08	577.97	578.05
AV	715+03.99	38.08	577.82	577.89
AW	715+13.99	38.08	577.67	577.72
℄ Brg. E. Abut.	715+23.49	38.08	577.52	577.54
Bk. E. Abut.	715+25.95	38.08	577.48	577.50

GIRDER 18

Location	Station	Offset from ℄ I-80	Theoretical Grade Elevations	Theoretical Grade Elevations Adjusted For Dead Load Deflection & Grinding
Bk. W. Abut.	709+88.28	45.00	578.50	578.52
℄ Brg. W. Abut.	709+90.73	45.00	578.53	578.55
A	710+00.73	45.00	578.64	578.70
B	710+10.73	45.00	578.75	578.85
C	710+20.73	45.00	578.86	578.98
D	710+30.73	45.00	578.96	579.10
E	710+40.73	45.00	579.05	579.20
F	710+50.73	45.00	579.14	579.28
G	710+60.73	45.00	579.22	579.34
H	710+70.73	45.00	579.30	579.40
I	710+80.73	45.00	579.37	579.44
J	710+90.73	45.00	579.44	579.49
K	711+00.73	45.00	579.50	579.53
℄ Brg. Pier 1	711+10.73	45.00	579.56	579.58
L	711+20.73	45.00	579.61	579.64
M	711+30.73	45.00	579.66	579.70
N	711+40.73	45.00	579.70	579.77
O	711+50.73	45.00	579.74	579.83
P	711+60.73	45.00	579.77	579.88
Q	711+70.73	45.00	579.80	579.93
R	711+80.73	45.00	579.82	579.96
S	711+90.73	45.00	579.84	579.97
T	712+00.73	45.00	579.85	579.97
U	712+10.73	45.00	579.85	579.96
V	712+20.73	45.00	579.85	579.94
W	712+30.73	45.00	579.85	579.91
X	712+40.73	45.00	579.84	579.88
Y	712+50.73	45.00	579.82	579.85
℄ Brg. Pier 2	712+61.73	45.00	579.80	579.82
Z	712+71.73	45.00	579.78	579.81
AA	712+81.73	45.00	579.74	579.80
AB	712+91.73	45.00	579.71	579.79
AC	713+01.73	45.00	579.67	579.78
AD	713+11.73	45.00	579.62	579.76
AE	713+21.73	45.00	579.57	579.73
AF	713+31.73	45.00	579.51	579.68
AG	713+41.73	45.00	579.45	579.62
AH	713+51.73	45.00	579.38	579.55
AI	713+61.73	45.00	579.31	579.46
AJ	713+71.73	45.00	579.23	579.35
AK	713+81.73	45.00	579.15	579.24
AL	713+91.73	45.00	579.06	579.12
AM	714+01.73	45.00	578.97	579.01
℄ Brg. Pier 3	714+12.73	45.00	578.86	578.88
AN	714+22.73	45.00	578.76	578.78
AO	714+32.73	45.00	578.65	578.68
AP	714+42.73	45.00	578.53	578.58
AQ	714+52.73	45.00	578.41	578.48
AR	714+62.73	45.00	578.29	578.37
AS	714+72.73	45.00	578.16	578.25
AT	714+82.73	45.00	578.02	578.11
AU	714+92.73	45.00	577.88	577.97
AV	715+02.73	45.00	577.74	577.80
AW	715+12.73	45.00	577.59	577.63
℄ Brg. E. Abut.	715+22.23	45.00	577.44	577.46
Bk. E. Abut.	715+24.69	45.00	577.40	577.42

Notes:

All Elevations and Offsets are in feet.

EB SOUTH CROSS SLOPE BREAK POINT

Location	Station	Offset from ℄ I-80	Theoretical Grade Elevations	Theoretical Grade Elevations Adjusted For Dead Load Deflection & Grinding
Bk. W. Abut.	709+87.45	49.50	578.42	578.44
℄ Brg. W. Abut.	709+89.91	49.50	578.45	578.47
A	709+99.91	49.50	578.57	578.63
B	710+09.91	49.50	578.68	578.77
C	710+19.91	49.50	578.78	578.91
D	710+29.91	49.50	578.88	579.02
E	710+39.91	49.50	578.97	579.12
F	710+49.91	49.50	579.06	579.20
G	710+59.91	49.50	579.15	579.27
H	710+69.91	49.50	579.23	579.32
I	710+79.91	49.50	579.30	579.37
J	710+89.91	49.50	579.37	579.42
K	710+99.91	49.50	579.43	579.46
℄ Brg. Pier 1	711+09.91	49.50	579.49	579.51
L	711+19.91	49.50	579.54	579.57
M	711+29.91	49.50	579.59	579.63
N	711+39.91	49.50	579.63	579.70
O	711+49.91	49.50	579.67	579.76
P	711+59.91	49.50	579.70	579.81
Q	711+69.91	49.50	579.73	579.86
R	711+79.91	49.50	579.75	579.89
S	711+89.91	49.50	579.77	579.90
T	711+99.91	49.50	579.78	579.91
U	712+09.91	49.50	579.78	579.89
V	712+19.91	49.50	579.79	579.87
W	712+29.91	49.50	579.78	579.84
X	712+39.91	49.50	579.77	579.81
Y	712+49.91	49.50	579.76	579.78
℄ Brg. Pier 2	712+60.91	49.50	579.74	579.76
Z	712+70.91	49.50	579.71	579.74
AA	712+80.91	49.50	579.68	579.73
AB	712+90.91	49.50	579.64	579.72
AC	713+00.91	49.50	579.60	579.71
AD	713+10.91	49.50	579.56	579.69
AE	713+20.91	49.50	579.51	579.66
AF	713+30.91	49.50	579.45	579.62
AG	713+40.91	49.50	579.39	579.56
AH	713+50.91	49.50	579.32	579.48
AI	713+60.91	49.50	579.25	579.39
AJ	713+70.91	49.50	579.17	579.29
AK	713+80.91	49.50	579.09	579.18
AL	713+90.91	49.50	579.00	579.06
AM	714+00.91	49.50	578.91	578.95
℄ Brg. Pier 3	714+11.91	49.50	578.80	578.82
AN	714+21.91	49.50	578.70	578.72
AO	714+31.91	49.50	578.59	578.62
AP	714+41.91	49.50	578.47	578.52
AQ	714+51.91	49.50	578.36	578.42
AR	714+61.91	49.50	578.23	578.31
AS	714+71.91	49.50	578.10	578.19
AT	714+81.91	49.50	577.97	578.06
AU	714+91.91	49.50	577.83	577.91
AV	715+01.91	49.50	577.68	577.75
AW	715+11.91	49.50	577.53	577.58
℄ Brg. E. Abut.	715+21.41	49.50	577.38	577.41
Bk. E. Abut.	715+23.87	49.50	577.35	577.37

GIRDER 19

Location	Station	Offset from ℄ I-80	Theoretical Grade Elevations	Theoretical Grade Elevations Adjusted For Dead Load Deflection & Grinding
Bk. W. Abut.	709+87.01	51.92	578.37	578.39
℄ Brg. W. Abut.	709+89.47	51.92	578.40	578.42
A	709+99.47	51.92	578.51	578.57
B	710+09.47	51.92	578.62	578.72
C	710+19.47	51.92	578.73	578.85
D	710+29.47	51.92	578.83	578.97
E	710+39.47	51.92	578.92	579.07
F	710+49.47	51.92	579.01	579.15
G	710+59.47	51.92	579.10	579.22
H	710+69.47	51.92	579.17	579.27
I	710+79.47	51.92	579.25	579.32
J	710+89.47	51.92	579.32	579.36
K	710+99.47	51.92	579.38	579.41
℄ Brg. Pier 1	711+09.47	51.92	579.44	579.46
L	711+19.47	51.92	579.49	579.52
M	711+29.47	51.92	579.54	579.58
N	711+39.47	51.92	579.58	579.65
O	711+49.47	51.92	579.62	579.71
P	711+59.47	51.92	579.65	579.76
Q	711+69.47	51.92	579.68	579.81
R	711+79.47	51.92	579.70	579.84
S	711+89.47	51.92	579.72	579.85
T	711+99.47	51.92	579.73	579.86
U	712+09.47	51.92	579.74	579.85
V	712+19.47	51.92	579.74	579.82
W	712+29.47	51.92	579.73	579.80
X	712+39.47	51.92	579.72	579.77
Y	712+49.47	51.92	579.71	579.74
℄ Brg. Pier 2	712+60.47	51.92	579.69	579.71
Z	712+70.47	51.92	579.66	579.70
AA	712+80.47	51.92	579.63	579.68
AB	712+90.47	51.92	579.60	579.68
AC	713+00.47	51.92	579.56	579.66
AD	713+10.47	51.92	579.51	579.65
AE	713+20.47	51.92	579.46	579.62
AF	713+30.47	51.92	579.40	579.57
AG	713+40.47	51.92	579.34	579.51
AH	713+50.47	51.92	579.28	579.44
AI	713+60.47	51.92	579.20	579.35
AJ	713+70.47	51.92	579.13	579.25
AK	713+80.47	51.92	579.04	579.13
AL	713+90.47	51.92	578.96	579.02
AM	714+00.47	51.92	578.86	578.90
℄ Brg. Pier 3	714+11.47	51.92	578.76	578.78
AN	714+21.47	51.92	578.65	578.67
AO	714+31.47	51.92	578.55	578.58
AP	714+41.47	51.92	578.43	578.48
AQ	714+51.47	51.92	578.31	578.38
AR	714+61.47	51.92	578.19	578.27
AS	714+71.47	51.92	578.06	578.15
AT	714+81.47	51.92	577.92	578.01
AU	714+91.47	51.92	577.78	577.87
AV	715+01.47	51.92	577.64	577.71
AW	715+11.47	51.92	577.49	577.54
℄ Brg. E. Abut.	715+20.97	51.92	577.34	577.36
Bk. E. Abut.	715+23.43	51.92	577.30	577.32

GIRDER 20

Location	Station	Offset from ℄ I-80	Theoretical Grade Elevations	Theoretical Grade Elevations Adjusted For Dead Load Deflection & Grinding
Bk. W. Abut.	709+85.75	58.83	578.21	578.24
℄ Brg. W. Abut.	709+88.21	58.83	578.24	578.26
A	709+98.21	58.83	578.36	578.43
B	710+08.21	58.83	578.47	578.58
C	710+18.21	58.83	578.58	578.72
D	710+28.21	58.83	578.68	578.84
E	710+38.21	58.83	578.77	578.94
F	710+48.21	58.83	578.86	579.02
G	710+58.21	58.83	578.95	579.08
H	710+68.21	58.83	579.03	579.14
I	710+78.21	58.83	579.10	579.18
J	710+88.21	58.83	579.17	579.22
K	710+98.21	58.83	579.23	579.27
℄ Brg. Pier 1	711+08.21	58.83	579.29	579.31
L	711+18.21	58.83	579.35	579.38
M	711+28.21	58.83	579.40	579.44
N	711+38.21	58.83	579.44	579.51
O	711+48.21	58.83	579.48	579.58
P	711+58.21	58.83	579.51	579.63
Q	711+68.21	58.83	579.54	579.68
R	711+78.21	58.83	579.56	579.71
S	711+88.21	58.83	579.58	579.73
T	711+98.21	58.83	579.59	579.73
U	712+08.21	58.83	579.60	579.72
V	712+18.21	58.83	579.60	579.70
W	712+28.21	58.83	579.60	579.67
X	712+38.21	58.83	579.59	579.63
Y	712+48.21	58.83	579.57	579.60
℄ Brg. Pier 2	712+59.21	58.83	579.55	579.57
Z	712+69.21	58.83	579.53	579.56
AA	712+79.21	58.83	579.50	579.55
AB	712+89.21	58.83	579.46	579.55
AC	712+99.21	58.83	579.42	579.55
AD	713+09.21	58.83	579.38	579.53
AE	713+19.21	58.83	579.33	579.51
AF	713+29.21	58.83	579.27	579.46
AG	713+39.21	58.83	579.21	579.41
AH	713+49.21	58.83	579.15	579.33
AI	713+59.21	58.83	579.07	579.24
AJ	713+69.21	58.83	579.00	579.13
AK	713+79.21	58.83	578.92	579.02
AL	713+89.21	58.83	578.83	578.90
AM	713+99.21	58.83	578.74	578.78
℄ Brg. Pier 3	714+10.21	58.83	578.63	578.65
AN	714+20.21	58.83	578.53	578.55
AO	714+30.21	58.83	578.42	578.45
AP	714+40.21	58.83	578.31	578.36
AQ	714+50.21	58.83	578.19	578.26
AR	714+60.21	58.83	578.07	578.15
AS	714+70.21	58.83	577.94	578.04
AT	714+80.21	58.83	577.80	577.90
AU	714+90.21	58.83	577.66	577.76
AV	715+00.21	58.83	577.52	577.59
AW	715+10.21	58.83	577.37	577.42
℄ Brg. E. Abut.	715+19.71	58.83	577.22	577.25
Bk. E. Abut.	715+22.17	58.83	577.19	577.21

Notes:

All Elevations and Offsets are in feet.

EB SOUTH EDGE OF ROADWAY

Location	Station	Offset from ℄ I-80	Theoretical Grade Elevations	Theoretical Grade Elevations Adjusted For Dead Load Deflection & Grinding
Bk. W. Abut.	709+85.27	61.50	578.16	578.18
℄ Brg. W. Abut.	709+87.72	61.50	578.19	578.21
A	709+97.72	61.50	578.30	578.37
B	710+07.72	61.50	578.41	578.52
C	710+17.72	61.50	578.52	578.66
D	710+27.72	61.50	578.62	578.78
E	710+37.72	61.50	578.71	578.88
F	710+47.72	61.50	578.80	578.96
G	710+57.72	61.50	578.89	579.03
H	710+67.72	61.50	578.97	579.08
I	710+77.72	61.50	579.04	579.12
J	710+87.72	61.50	579.11	579.17
K	710+97.72	61.50	579.18	579.21
℄ Brg. Pier 1	711+07.72	61.50	579.24	579.26
L	711+17.72	61.50	579.29	579.32
M	711+27.72	61.50	579.34	579.39
N	711+37.72	61.50	579.38	579.45
O	711+47.72	61.50	579.42	579.52
P	711+57.72	61.50	579.46	579.58
Q	711+67.72	61.50	579.48	579.63
R	711+77.72	61.50	579.51	579.66
S	711+87.72	61.50	579.52	579.68
T	711+97.72	61.50	579.54	579.68
U	712+07.72	61.50	579.54	579.67
V	712+17.72	61.50	579.55	579.64
W	712+27.72	61.50	579.54	579.61
X	712+37.72	61.50	579.53	579.58
Y	712+47.72	61.50	579.52	579.55
℄ Brg. Pier 2	712+58.72	61.50	579.50	579.52
Z	712+68.72	61.50	579.48	579.51
AA	712+78.72	61.50	579.45	579.50
AB	712+88.72	61.50	579.41	579.50
AC	712+98.72	61.50	579.37	579.49
AD	713+08.72	61.50	579.33	579.48
AE	713+18.72	61.50	579.28	579.45
AF	713+28.72	61.50	579.22	579.41
AG	713+38.72	61.50	579.16	579.36
AH	713+48.72	61.50	579.10	579.28
AI	713+58.72	61.50	579.03	579.19
AJ	713+68.72	61.50	578.95	579.08
AK	713+78.72	61.50	578.87	578.97
AL	713+88.72	61.50	578.78	578.85
AM	713+98.72	61.50	578.69	578.73
℄ Brg. Pier 3	714+09.72	61.50	578.58	578.60
AN	714+19.72	61.50	578.48	578.50
AO	714+29.72	61.50	578.37	578.41
AP	714+39.72	61.50	578.26	578.31
AQ	714+49.72	61.50	578.14	578.21
AR	714+59.72	61.50	578.02	578.11
AS	714+69.72	61.50	577.89	577.99
AT	714+79.72	61.50	577.76	577.86
AU	714+89.72	61.50	577.62	577.71
AV	714+99.72	61.50	577.47	577.55
AW	715+09.72	61.50	577.33	577.37
℄ Brg. E. Abut.	715+19.22	61.50	577.18	577.20
Bk. E. Abut.	715+21.68	61.50	577.14	577.16

GIRDER 21

Location	Station	Offset from ℄ I-80	Theoretical Grade Elevations	Theoretical Grade Elevations Adjusted For Dead Load Deflection & Grinding
Bk. W. Abut.	709+84.49	65.75	578.06	578.08
℄ Brg. W. Abut.	709+86.95	65.75	578.09	578.11
A	709+96.95	65.75	578.21	578.27
B	710+06.95	65.75	578.32	578.43
C	710+16.95	65.75	578.42	578.57
D	710+26.95	65.75	578.53	578.68
E	710+36.95	65.75	578.62	578.79
F	710+46.95	65.75	578.71	578.87
G	710+56.95	65.75	578.80	578.93
H	710+66.95	65.75	578.88	578.99
I	710+76.95	65.75	578.95	579.03
J	710+86.95	65.75	579.02	579.08
K	710+96.95	65.75	579.09	579.12
℄ Brg. Pier 1	711+06.95	65.75	579.15	579.17
L	711+16.95	65.75	579.20	579.23
M	711+26.95	65.75	579.25	579.30
N	711+36.95	65.75	579.30	579.37
O	711+46.95	65.75	579.33	579.43
P	711+56.95	65.75	579.37	579.49
Q	711+66.95	65.75	579.40	579.54
R	711+76.95	65.75	579.42	579.57
S	711+86.95	65.75	579.44	579.59
T	711+96.95	65.75	579.45	579.59
U	712+06.95	65.75	579.46	579.58
V	712+16.95	65.75	579.46	579.56
W	712+26.95	65.75	579.46	579.53
X	712+36.95	65.75	579.45	579.50
Y	712+46.95	65.75	579.44	579.47
℄ Brg. Pier 2	712+57.95	65.75	579.42	579.44
Z	712+67.95	65.75	579.39	579.43
AA	712+77.95	65.75	579.36	579.42
AB	712+87.95	65.75	579.33	579.42
AC	712+97.95	65.75	579.29	579.41
AD	713+07.95	65.75	579.25	579.40
AE	713+17.95	65.75	579.20	579.37
AF	713+27.95	65.75	579.14	579.33
AG	713+37.95	65.75	579.08	579.28
AH	713+47.95	65.75	579.02	579.20
AI	713+57.95	65.75	578.95	579.11
AJ	713+67.95	65.75	578.87	579.00
AK	713+77.95	65.75	578.79	578.89
AL	713+87.95	65.75	578.70	578.77
AM	713+97.95	65.75	578.61	578.65
℄ Brg. Pier 3	714+08.95	65.75	578.51	578.53
AN	714+18.95	65.75	578.40	578.42
AO	714+28.95	65.75	578.30	578.33
AP	714+38.95	65.75	578.18	578.23
AQ	714+48.95	65.75	578.07	578.14
AR	714+58.95	65.75	577.94	578.03
AS	714+68.95	65.75	577.82	577.91
AT	714+78.95	65.75	577.68	577.78
AU	714+88.95	65.75	577.54	577.64
AV	714+98.95	65.75	577.40	577.47
AW	715+08.95	65.75	577.25	577.30
℄ Brg. E. Abut.	715+18.45	65.75	577.11	577.13
Bk. E. Abut.	715+20.90	65.75	577.07	577.09

GIRDER 22

Location	Station	Offset from ℄ I-80	Theoretical Grade Elevations	Theoretical Grade Elevations Adjusted For Dead Load Deflection & Grinding
Bk. W. Abut.	709+83.23	72.67	577.91	577.93
℄ Brg. W. Abut.	709+85.69	72.67	577.94	577.96
A	709+95.69	72.67	578.05	578.12
B	710+05.69	72.67	578.17	578.27
C	710+15.69	72.67	578.27	578.41
D	710+25.69	72.67	578.38	578.53
E	710+35.69	72.67	578.47	578.63
F	710+45.69	72.67	578.56	578.71
G	710+55.69	72.67	578.65	578.78
H	710+65.69	72.67	578.73	578.84
I	710+75.69	72.67	578.81	578.88
J	710+85.69	72.67	578.88	578.93
K	710+95.69	72.67	578.94	578.97
℄ Brg. Pier 1	711+05.69	72.67	579.00	579.02
L	711+15.69	72.67	579.06	579.09
M	711+25.69	72.67	579.11	579.15
N	711+35.69	72.67	579.15	579.22
O	711+45.69	72.67	579.19	579.29
P	711+55.69	72.67	579.23	579.35
Q	711+65.69	72.67	579.25	579.40
R	711+75.69	72.67	579.28	579.43
S	711+85.69	72.67	579.30	579.45
T	711+95.69	72.67	579.31	579.45
U	712+05.69	72.67	579.32	579.44
V	712+15.69	72.67	579.32	579.42
W	712+25.69	72.67	579.32	579.39
X	712+35.69	72.67	579.31	579.36
Y	712+45.69	72.67	579.30	579.33
℄ Brg. Pier 2	712+56.69	72.67	579.28	579.30
Z	712+66.69	72.67	579.26	579.29
AA	712+76.69	72.67	579.23	579.28
AB	712+86.69	72.67	579.20	579.28
AC	712+96.69	72.67	579.16	579.28
AD	713+06.69	72.67	579.11	579.26
AE	713+16.69	72.67	579.06	579.24
AF	713+26.69	72.67	579.01	579.20
AG	713+36.69	72.67	578.95	579.14
AH	713+46.69	72.67	578.89	579.07
AI	713+56.69	72.67	578.82	578.98
AJ	713+66.69	72.67	578.74	578.87
AK	713+76.69	72.67	578.66	578.76
AL	713+86.69	72.67	578.58	578.64
AM	713+96.69	72.67	578.49	578.53
℄ Brg. Pier 3	714+07.69	72.67	578.38	578.40
AN	714+17.69	72.67	578.28	578.30
AO	714+27.69	72.67	578.17	578.20
AP	714+37.69	72.67	578.06	578.11
AQ	714+47.69	72.67	577.94	578.01
AR	714+57.69	72.67	577.82	577.91
AS	714+67.69	72.67	577.69	577.79
AT	714+77.69	72.67	577.56	577.66
AU	714+87.69	72.67	577.42	577.51
AV	714+97.69	72.67	577.28	577.35
AW	715+07.69	72.67	577.13	577.18
℄ Brg. E. Abut.	715+17.19	72.67	576.99	577.01
Bk. E. Abut.	715+19.64	72.67	576.95	576.97

Notes:

All Elevations and Offsets are in feet.

MODEL: SHEET
FILE NAME: C:\TRANSYSTEMS\PW_LOCAL\TRANSYSTEMS-PW-01\DMS20864\09990902_0903-62F94-025-TOS13.DGN

10-27-2025, 16:47:27

exp.

USER NAME =	DESIGNED - CCE	REVISED -	
	CHECKED - BAR	REVISED -	
PLOT SCALE =	DRAWN - MTR	REVISED -	
PLOT DATE =	CHECKED - BAR	REVISED -	

STATE OF ILLINOIS
DEPARTMENT OF TRANSPORTATION

TOP OF SLAB ELEVATIONS 13
STRUCTURE NO. 099-0902 (EB)

SHEET SA-25 OF SA-112 SHEETS

F.A.I. RTE.	SECTION	COUNTY	TOTAL SHEETS	SHEET NO.
80	2017-057F	WILL	1342	689
		CONTRACT NO. 62F94		
	ILLINOIS	FED. AID PROJECT		

EB INSIDE FACE OF SOUTH PARAPET

Location	Station	Offset from ℄ I-80	Theoretical Grade Elevations	Theoretical Grade Elevations Adjusted For Dead Load Deflection & Grinding
Bk. W. Abut.	709+83.08	73.50	577.89	577.91
℄ Brg. W. Abut.	709+85.54	73.50	577.92	577.94
A	709+95.54	73.50	578.04	578.10
B	710+05.54	73.50	578.15	578.25
C	710+15.54	73.50	578.26	578.39
D	710+25.54	73.50	578.36	578.51
E	710+35.54	73.50	578.45	578.61
F	710+45.54	73.50	578.54	578.70
G	710+55.54	73.50	578.63	578.76
H	710+65.54	73.50	578.71	578.82
I	710+75.54	73.50	578.79	578.87
J	710+85.54	73.50	578.86	578.91
K	710+95.54	73.50	578.92	578.95
℄ Brg. Pier 1	711+05.54	73.50	578.98	579.01
L	711+15.54	73.50	579.04	579.07
M	711+25.54	73.50	579.09	579.13
N	711+35.54	73.50	579.13	579.20
O	711+45.54	73.50	579.17	579.27
P	711+55.54	73.50	579.21	579.33
Q	711+65.54	73.50	579.24	579.38
R	711+75.54	73.50	579.26	579.41
S	711+85.54	73.50	579.28	579.43
T	711+95.54	73.50	579.29	579.43
U	712+05.54	73.50	579.30	579.42
V	712+15.54	73.50	579.31	579.40
W	712+25.54	73.50	579.30	579.37
X	712+35.54	73.50	579.30	579.34
Y	712+45.54	73.50	579.28	579.31
℄ Brg. Pier 2	712+56.54	73.50	579.27	579.29
Z	712+66.54	73.50	579.24	579.28
AA	712+76.54	73.50	579.21	579.27
AB	712+86.54	73.50	579.18	579.27
AC	712+96.54	73.50	579.14	579.26
AD	713+06.54	73.50	579.10	579.25
AE	713+16.54	73.50	579.05	579.22
AF	713+26.54	73.50	578.99	579.18
AG	713+36.54	73.50	578.94	579.12
AH	713+46.54	73.50	578.87	579.05
AI	713+56.54	73.50	578.80	578.96
AJ	713+66.54	73.50	578.73	578.86
AK	713+76.54	73.50	578.65	578.74
AL	713+86.54	73.50	578.56	578.63
AM	713+96.54	73.50	578.47	578.51
℄ Brg. Pier 3	714+07.54	73.50	578.36	578.39
AN	714+17.54	73.50	578.26	578.28
AO	714+27.54	73.50	578.16	578.19
AP	714+37.54	73.50	578.05	578.09
AQ	714+47.54	73.50	577.93	578.00
AR	714+57.54	73.50	577.81	577.89
AS	714+67.54	73.50	577.68	577.77
AT	714+77.54	73.50	577.55	577.64
AU	714+87.54	73.50	577.41	577.50
AV	714+97.54	73.50	577.27	577.34
AW	715+07.54	73.50	577.12	577.17
℄ Brg. E. Abut.	715+17.04	73.50	576.97	576.99
Bk. E. Abut.	715+19.49	73.50	576.93	576.96

Notes:

All Elevations and Offsets are in feet.

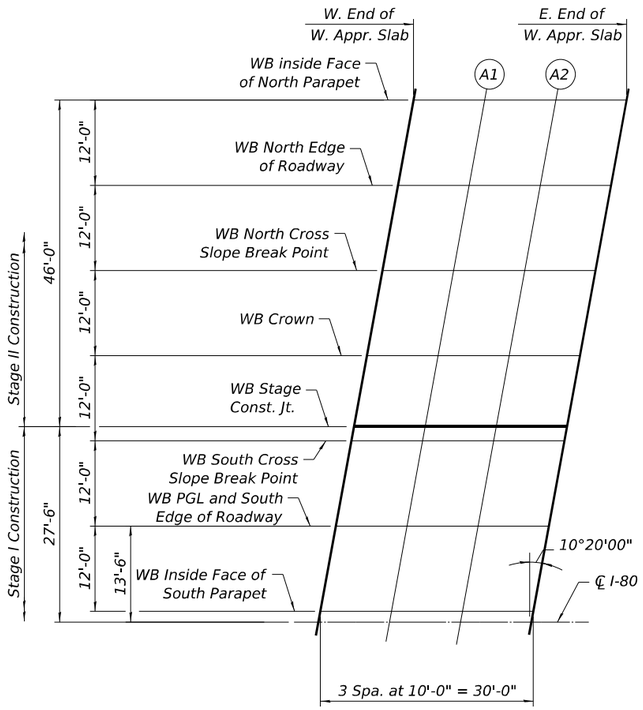

PLAN

West Approach (W.B.)

WB INSIDE FACE OF NORTH PARAPET

Location	Station	Offset	Theoretical Grade Elevation	Theoretical Grade Elevations Adjusted for Grinding
W. End of W. Appr. Slab	709+80.90	-73.50	577.86	577.88
A1	709+90.90	-73.50	577.98	578.00
A2	710+00.90	-73.50	578.10	578.12
E. End of W. Appr. Slab	710+10.90	-73.50	578.21	578.23

WB NORTH EDGE OF ROADWAY

Location	Station	Offset	Theoretical Grade Elevation	Theoretical Grade Elevations Adjusted for Grinding
W. End of W. Appr. Slab	709+78.71	-61.50	578.08	578.10
A1	709+88.71	-61.50	578.20	578.22
A2	709+98.71	-61.50	578.31	578.33
E. End of W. Appr. Slab	710+08.71	-61.50	578.42	578.44

WB NORTH CROSS SLOPE BREAK POINT

Location	Station	Offset	Theoretical Grade Elevation	Theoretical Grade Elevations Adjusted for Grinding
W. End of W. Appr. Slab	709+76.52	-49.50	578.29	578.31
A1	709+86.52	-49.50	578.41	578.43
A2	709+96.52	-49.50	578.53	578.55
E. End of W. Appr. Slab	710+06.52	-49.50	578.64	578.66

WB CROWN

Location	Station	Offset	Theoretical Grade Elevation	Theoretical Grade Elevations Adjusted for Grinding
W. End of W. Appr. Slab	709+74.33	-37.50	578.44	578.46
A1	709+84.33	-37.50	578.56	578.59
A2	709+94.33	-37.50	578.68	578.70
E. End of W. Appr. Slab	710+04.33	-37.50	578.80	578.82

WB STAGE CONSTRUCTION JOINT

Location	Station	Offset	Theoretical Grade Elevation	Theoretical Grade Elevations Adjusted for Grinding
W. End of W. Appr. Slab	709+72.51	-27.50	578.27	578.29
A1	709+82.51	-27.50	578.39	578.41
A2	709+92.51	-27.50	578.51	578.53
E. End of W. Appr. Slab	710+02.51	-27.50	578.62	578.65

WB SOUTH CROSS SLOPE BREAK POINT

Location	Station	Offset	Theoretical Grade Elevation	Theoretical Grade Elevations Adjusted for Grinding
W. End of W. Appr. Slab	709+72.15	-25.50	578.23	578.25
A1	709+82.15	-25.50	578.36	578.38
A2	709+92.15	-25.50	578.48	578.50
E. End of W. Appr. Slab	710+02.15	-25.50	578.59	578.61

WB PGL AND SOUTH EDGE OF ROADWAY

Location	Station	Offset	Theoretical Grade Elevation	Theoretical Grade Elevations Adjusted for Grinding
W. End of W. Appr. Slab	709+69.96	-13.50	577.97	577.99
A1	709+79.96	-13.50	578.09	578.11
A2	709+89.96	-13.50	578.21	578.23
E. End of W. Appr. Slab	709+99.96	-13.50	578.33	578.35

WB INSIDE FACE OF SOUTH PARAPET

Location	Station	Offset	Theoretical Grade Elevation	Theoretical Grade Elevations Adjusted for Grinding
W. End of W. Appr. Slab	709+67.77	-1.50	577.70	577.72
A1	709+77.77	-1.50	577.82	577.85
A2	709+87.77	-1.50	577.95	577.97
E. End of W. Appr. Slab	709+97.77	-1.50	578.06	578.08

Notes:
1. All Elevations and Offsets are in feet.

2. Offsets are measured with respect to ℄ I-80.

MODEL: SHEET
FILE NAME: C:\TRANSYSTEMS\PW_LOCAL\TRANSYSTEMS-PW-01\DMS20864\0990902_0903-62F94-027-TOSAPP1.DGN

10-27-2025, 16:47:34

exp.

USER NAME =	DESIGNED - CCE	REVISED -	
	CHECKED - BAR	REVISED -	
PLOT SCALE =	DRAWN - MTR	REVISED -	
PLOT DATE =	CHECKED - BAR	REVISED -	

STATE OF ILLINOIS
DEPARTMENT OF TRANSPORTATION

TOP OF WEST APPROACH SLAB ELEVATIONS
STRUCTURE NO. 099-0903 (WB)

SHEET SA-27 OF SA-112 SHEETS

F.A.I. RTE.	SECTION	COUNTY	TOTAL SHEETS	SHEET NO.
80	2017-057F	WILL	1342	691
		CONTRACT NO. 62F94		
		ILLINOIS	FED. AID PROJECT	

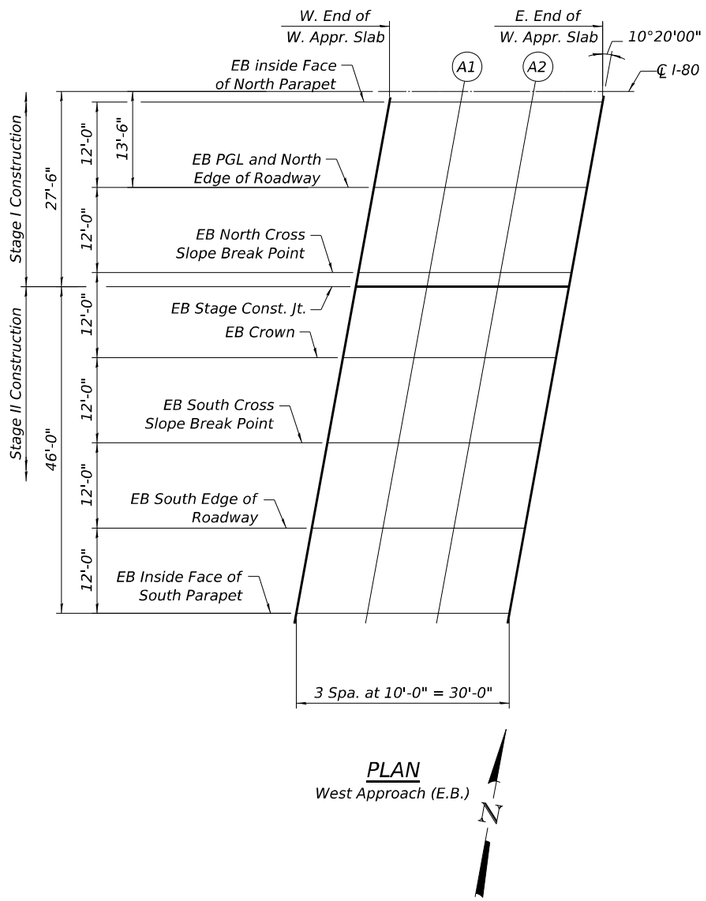

PLAN
West Approach (E.B.)

EB INSIDE FACE OF NORTH PARAPET

Location	Station	Offset	Theoretical Grade Elevation	Theoretical Grade Elevations Adjusted for Grinding
W. End of W. Appr. Slab	709+67.22	1.50	577.69	577.71
A1	709+77.22	1.50	577.82	577.84
A2	709+87.22	1.50	577.94	577.96
E. End of W. Appr. Slab	709+97.22	1.50	578.06	578.08

EB PGL AND NORTH EDGE OF ROADWAY

Location	Station	Offset	Theoretical Grade Elevation	Theoretical Grade Elevations Adjusted for Grinding
W. End of W. Appr. Slab	709+65.04	13.50	577.90	577.92
A1	709+75.04	13.50	578.03	578.05
A2	709+85.04	13.50	578.15	578.17
E. End of W. Appr. Slab	709+95.04	13.50	578.27	578.29

EB NORTH CROSS SLOPE BREAK POINT

Location	Station	Offset	Theoretical Grade Elevation	Theoretical Grade Elevations Adjusted for Grinding
W. End of W. Appr. Slab	709+62.85	25.50	578.11	578.13
A1	709+72.85	25.50	578.24	578.26
A2	709+82.85	25.50	578.37	578.39
E. End of W. Appr. Slab	709+92.85	25.50	578.49	578.51

EB STAGE CONSTRUCTION JOINT

Location	Station	Offset	Theoretical Grade Elevation	Theoretical Grade Elevations Adjusted for Grinding
W. End of W. Appr. Slab	709+62.48	27.50	578.14	578.16
A1	709+72.48	27.50	578.27	578.29
A2	709+82.48	27.50	578.39	578.41
E. End of W. Appr. Slab	709+92.48	27.50	578.51	578.53

EB CROWN

Location	Station	Offset	Theoretical Grade Elevation	Theoretical Grade Elevations Adjusted for Grinding
W. End of W. Appr. Slab	709+60.66	37.50	578.26	578.29
A1	709+70.66	37.50	578.39	578.42
A2	709+80.66	37.50	578.52	578.54
E. End of W. Appr. Slab	709+90.66	37.50	578.64	578.66

EB SOUTH CROSS SLOPE BREAK POINT

Location	Station	Offset	Theoretical Grade Elevation	Theoretical Grade Elevations Adjusted for Grinding
W. End of W. Appr. Slab	709+58.47	49.50	578.06	578.08
A1	709+68.47	49.50	578.19	578.21
A2	709+78.47	49.50	578.31	578.33
E. End of W. Appr. Slab	709+88.47	49.50	578.43	578.45

EB SOUTH EDGE OF ROADWAY

Location	Station	Offset	Theoretical Grade Elevation	Theoretical Grade Elevations Adjusted for Grinding
W. End of W. Appr. Slab	709+56.28	61.50	577.79	577.81
A1	709+66.28	61.50	577.92	577.94
A2	709+76.28	61.50	578.05	578.07
E. End of W. Appr. Slab	709+86.28	61.50	578.17	578.19

EB INSIDE FACE OF SOUTH PARAPET

Location	Station	Offset	Theoretical Grade Elevation	Theoretical Grade Elevations Adjusted for Grinding
W. End of W. Appr. Slab	709+54.10	73.50	577.52	577.54
A1	709+64.10	73.50	577.65	577.67
A2	709+74.10	73.50	577.78	577.80
E. End of W. Appr. Slab	709+84.10	73.50	577.90	577.92

Notes:
1. All Elevations and Offsets are in feet.

2. Offsets are measured with respect to ℄ I-80.

MODEL: SHEET
FILE NAME: C:\TRANSYSTEMS\PW_LOCAL\TRANSYSTEMS-PW-01\DMS20864\0990902_0903-62F94-028-TOSAPP2.DGN

10-27-2025, 16:47:37

exp.

USER NAME =	DESIGNED - CCE	REVISED -	
	CHECKED - BAR	REVISED -	
PLOT SCALE =	DRAWN - MTR	REVISED -	
PLOT DATE =	CHECKED - BAR	REVISED -	

STATE OF ILLINOIS
DEPARTMENT OF TRANSPORTATION

TOP OF WEST APPROACH SLAB ELEVATIONS
STRUCTURE NO. 099-0902 (EB)

SHEET SA-28 OF SA-112 SHEETS

F.A.I. RTE.	SECTION	COUNTY	TOTAL SHEETS	SHEET NO.
80	2017-057F	WILL	1342	692
		CONTRACT NO. 62F94		
	ILLINOIS	FED. AID PROJECT		

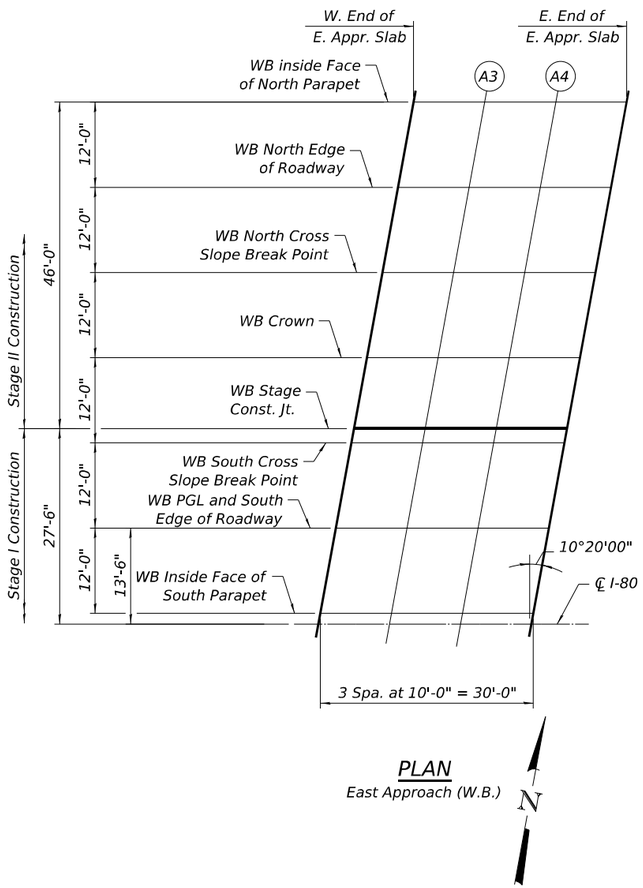

PLAN

East Approach (W.B.)

WB INSIDE FACE OF NORTH PARAPET

Location	Station	Offset	Theoretical Grade Elevation	Theoretical Grade Elevations Adjusted for Grinding
W. End of E. Appr. Slab	715+45.28	-73.50	576.51	576.53
A3	715+55.28	-73.50	576.34	576.36
A4	715+65.28	-73.50	576.16	576.18
E. End of E. Appr. Slab	715+75.28	-73.50	575.98	576.00

WB NORTH EDGE OF ROADWAY

Location	Station	Offset	Theoretical Grade Elevation	Theoretical Grade Elevations Adjusted for Grinding
W. End of E. Appr. Slab	715+43.09	-61.50	576.79	576.81
A3	715+53.09	-61.50	576.62	576.64
A4	715+63.09	-61.50	576.44	576.46
E. End of E. Appr. Slab	715+73.09	-61.50	576.26	576.28

WB NORTH CROSS SLOPE BREAK POINT

Location	Station	Offset	Theoretical Grade Elevation	Theoretical Grade Elevations Adjusted for Grinding
W. End of E. Appr. Slab	715+40.90	-49.50	577.07	577.09
A3	715+50.90	-49.50	576.90	576.92
A4	715+60.90	-49.50	576.72	576.74
E. End of E. Appr. Slab	715+70.90	-49.50	576.54	576.56

WB CROWN

Location	Station	Offset	Theoretical Grade Elevation	Theoretical Grade Elevations Adjusted for Grinding
W. End of E. Appr. Slab	715+38.71	-37.50	577.28	577.30
A3	715+48.71	-37.50	577.11	577.14
A4	715+58.71	-37.50	576.94	576.96
E. End of E. Appr. Slab	715+68.71	-37.50	576.76	576.78

WB STAGE CONSTRUCTION JOINT

Location	Station	Offset	Theoretical Grade Elevation	Theoretical Grade Elevations Adjusted for Grinding
W. End of E. Appr. Slab	715+36.89	-27.50	577.16	577.18
A3	715+46.89	-27.50	577.00	577.02
A4	715+56.89	-27.50	576.82	576.84
E. End of E. Appr. Slab	715+66.89	-27.50	576.64	576.66

WB SOUTH CROSS SLOPE BREAK POINT

Location	Station	Offset	Theoretical Grade Elevation	Theoretical Grade Elevations Adjusted for Grinding
W. End of E. Appr. Slab	715+36.53	-25.50	577.14	577.16
A3	715+46.53	-25.50	576.97	576.99
A4	715+56.53	-25.50	576.80	576.82
E. End of E. Appr. Slab	715+66.53	-25.50	576.62	576.64

WB PGL AND SOUTH EDGE OF ROADWAY

Location	Station	Offset	Theoretical Grade Elevation	Theoretical Grade Elevations Adjusted for Grinding
W. End of E. Appr. Slab	715+34.34	-13.50	576.94	576.96
A3	715+44.34	-13.50	576.77	576.79
A4	715+54.34	-13.50	576.60	576.62
E. End of E. Appr. Slab	715+64.34	-13.50	576.42	576.44

WB INSIDE FACE OF SOUTH PARAPET

Location	Station	Offset	Theoretical Grade Elevation	Theoretical Grade Elevations Adjusted for Grinding
W. End of E. Appr. Slab	715+32.15	-1.50	576.73	576.75
A3	715+42.15	-1.50	576.57	576.59
A4	715+52.15	-1.50	576.39	576.42
E. End of E. Appr. Slab	715+62.15	-1.50	576.22	576.24

Notes:
1. All Elevations and Offsets are in feet.

2. Offsets are measured with respect to ℄ I-80.

MODEL: SHEET
FILE NAME: C:\TRANSYSTEMS\PW_LOCAL\TRANSYSTEMS-PW-01\DMS20864\0990902_0903-62F94-029-TOSAPP3.DGN

exp.

USER NAME =	DESIGNED - CCE	REVISED -	
	CHECKED - BAR	REVISED -	
PLOT SCALE =	DRAWN - MTR	REVISED -	
PLOT DATE =	CHECKED - BAR	REVISED -	

STATE OF ILLINOIS
DEPARTMENT OF TRANSPORTATION

TOP OF EAST APPROACH SLAB ELEVATIONS
STRUCTURE NO. 099-0903 (WB)

SHEET SA-29 OF SA-112 SHEETS

F.A.I. RTE.	SECTION	COUNTY	TOTAL SHEETS	SHEET NO.
80	2017-057F	WILL	1342	693
		CONTRACT NO. 62F94		
	ILLINOIS	FED. AID PROJECT		

10-27-2025, 16:47:41

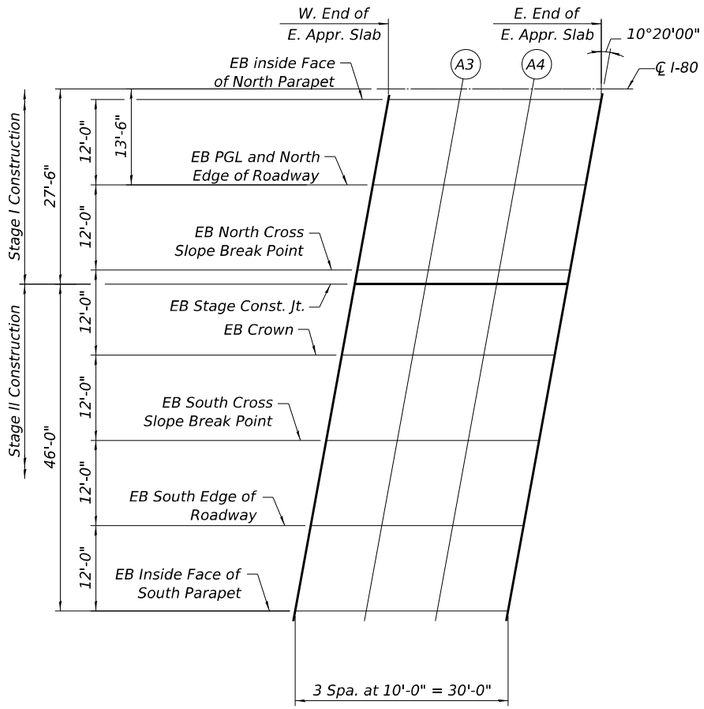

PLAN

East Approach (E.B.)

N

EB INSIDE FACE OF NORTH PARAPET

Location	Station	Offset	Theoretical Grade Elevation	Theoretical Grade Elevations Adjusted for Grinding
W. End of E. Appr. Slab	715+31.60	1.50	576.74	576.76
A3	715+41.60	1.50	576.58	576.60
A4	715+51.60	1.50	576.40	576.43
E. End of E. Appr. Slab	715+61.60	1.50	576.23	576.25

EB PGL AND NORTH EDGE OF ROADWAY

Location	Station	Offset	Theoretical Grade Elevation	Theoretical Grade Elevations Adjusted for Grinding
W. End of E. Appr. Slab	715+29.42	13.50	577.02	577.04
A3	715+39.42	13.50	576.85	576.87
A4	715+49.42	13.50	576.68	576.70
E. End of E. Appr. Slab	715+59.42	13.50	576.51	576.53

EB NORTH CROSS SLOPE BREAK POINT

Location	Station	Offset	Theoretical Grade Elevation	Theoretical Grade Elevations Adjusted for Grinding
W. End of E. Appr. Slab	715+27.23	25.50	577.29	577.31
A3	715+37.23	25.50	577.13	577.15
A4	715+47.23	25.50	576.96	576.98
E. End of E. Appr. Slab	715+57.23	25.50	576.79	576.81

EB STAGE CONSTRUCTION JOINT

Location	Station	Offset	Theoretical Grade Elevation	Theoretical Grade Elevations Adjusted for Grinding
W. End of E. Appr. Slab	715+26.86	27.50	577.33	577.35
A3	715+36.86	27.50	577.16	577.19
A4	715+46.86	27.50	577.00	577.02
E. End of E. Appr. Slab	715+56.86	27.50	576.82	576.84

EB CROWN

Location	Station	Offset	Theoretical Grade Elevation	Theoretical Grade Elevations Adjusted for Grinding
W. End of E. Appr. Slab	715+25.04	37.50	577.51	577.53
A3	715+35.04	37.50	577.34	577.37
A4	715+45.04	37.50	577.18	577.20
E. End of E. Appr. Slab	715+55.04	37.50	577.00	577.03

EB SOUTH CROSS SLOPE BREAK POINT

Location	Station	Offset	Theoretical Grade Elevation	Theoretical Grade Elevations Adjusted for Grinding
W. End of E. Appr. Slab	715+22.85	49.50	577.36	577.38
A3	715+32.85	49.50	577.20	577.22
A4	715+42.85	49.50	577.03	577.05
E. End of E. Appr. Slab	715+52.85	49.50	576.86	576.88

EB SOUTH EDGE OF ROADWAY

Location	Station	Offset	Theoretical Grade Elevation	Theoretical Grade Elevations Adjusted for Grinding
W. End of E. Appr. Slab	715+20.66	61.50	577.16	577.18
A3	715+30.66	61.50	577.00	577.02
A4	715+40.66	61.50	576.83	576.85
E. End of E. Appr. Slab	715+50.66	61.50	576.66	576.68

EB INSIDE FACE OF SOUTH PARAPET

Location	Station	Offset	Theoretical Grade Elevation	Theoretical Grade Elevations Adjusted for Grinding
W. End of E. Appr. Slab	715+18.48	73.50	576.95	576.97
A3	715+28.48	73.50	576.79	576.81
A4	715+38.48	73.50	576.63	576.65
E. End of E. Appr. Slab	715+48.48	73.50	576.46	576.48

Notes:
1. All Elevations and Offsets are in feet.

2. Offsets are measured with respect to ℄ I-80.

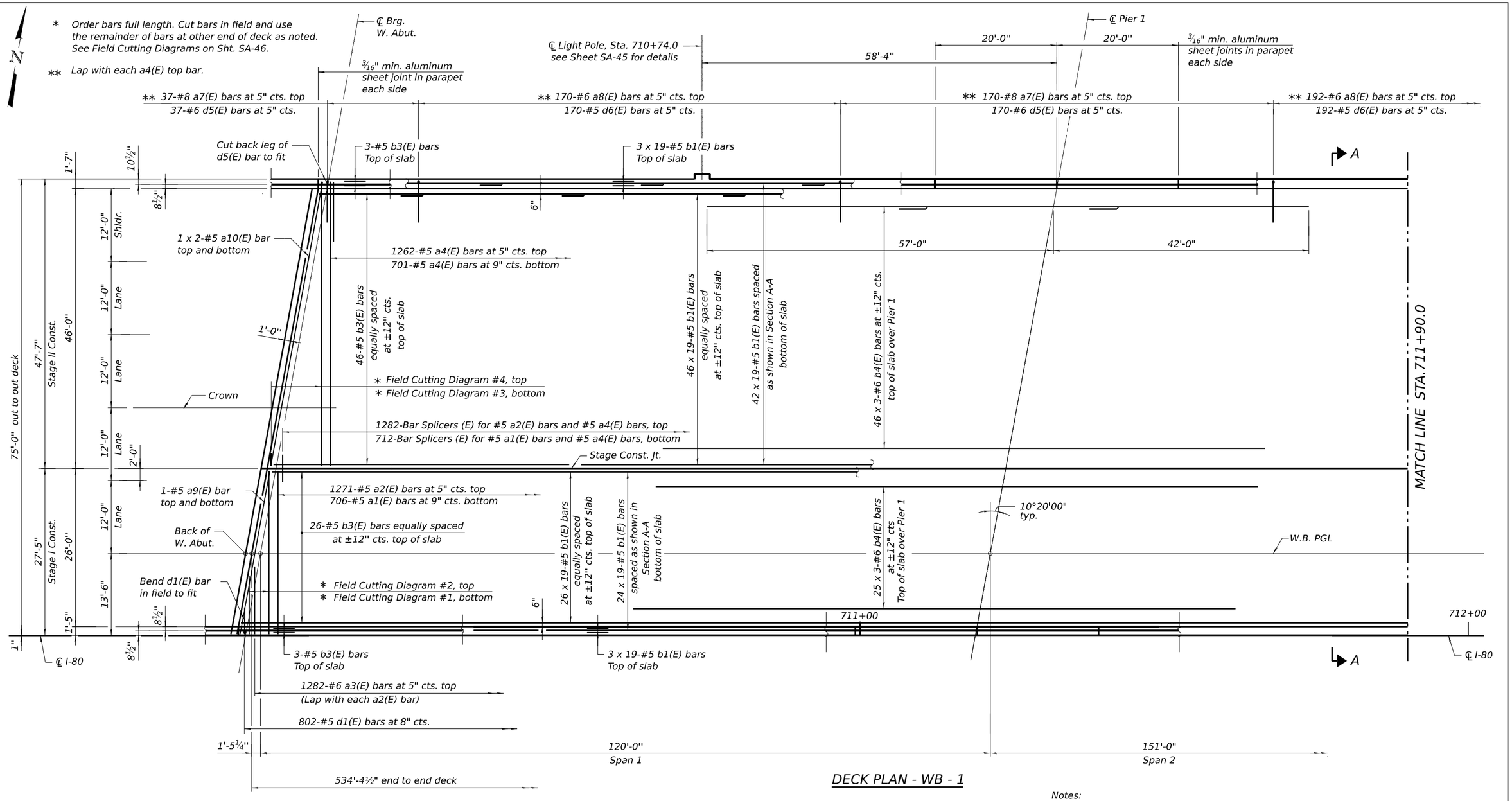

DECK PLAN - WB - 1

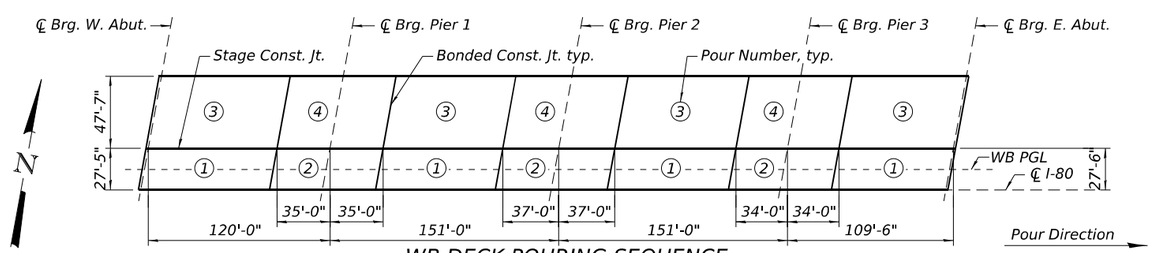

WB DECK POURING SEQUENCE

MINIMUM BAR LAP

#5 bar = 3'-6"
#6 bar = 4'-5"

Notes:

1. For superstructure details and Bill of Material, see Sht. SA-47.
2. Bars indicated thus 20 x 3-#5 etc. indicates 20 lines of bars with 3 lengths per line.
3. For parapet reinforcement, see Sht's. SA-39 and SA-40.
4. For Section A-A, see Sht. SA-37.
5. When the deck pour is stopped for the day at one or more of the transverse bonded construction joints in the deck pouring sequence as shown, the next pour shall not be made until both of the following are met:
   a) At least 72 hours shall have elapsed from the end of the previous pour.
   b) The concrete strength shall have attained a minimum flexural strength of 675 psi or a minimum compressive strength of 4000 psi.

MODEL: SHEET
FILE NAME: C:\TRANSYSTEMS\PW_LOCAL\TRANSYSTEMS-PW-01\DMS20864\0990902_0903-62F94-031-DECK1.DGN

10-27-2025, 16:47:48

exp.

USER NAME =	DESIGNED - BAR	REVISED -
	CHECKED - KK	REVISED -
PLOT SCALE =	DRAWN - HBJ	REVISED -
PLOT DATE =	CHECKED - BAR	REVISED -

STATE OF ILLINOIS
DEPARTMENT OF TRANSPORTATION

DECK PLAN 1
STRUCTURE NO. 099-0903 (WB)

SHEET SA-31 OF SA-112 SHEETS

F.A.I. RTE.	SECTION	COUNTY	TOTAL SHEETS	SHEET NO.
80	2017-057F	WILL	1342	695
		CONTRACT NO. 62F94		
	ILLINOIS	FED. AID PROJECT		

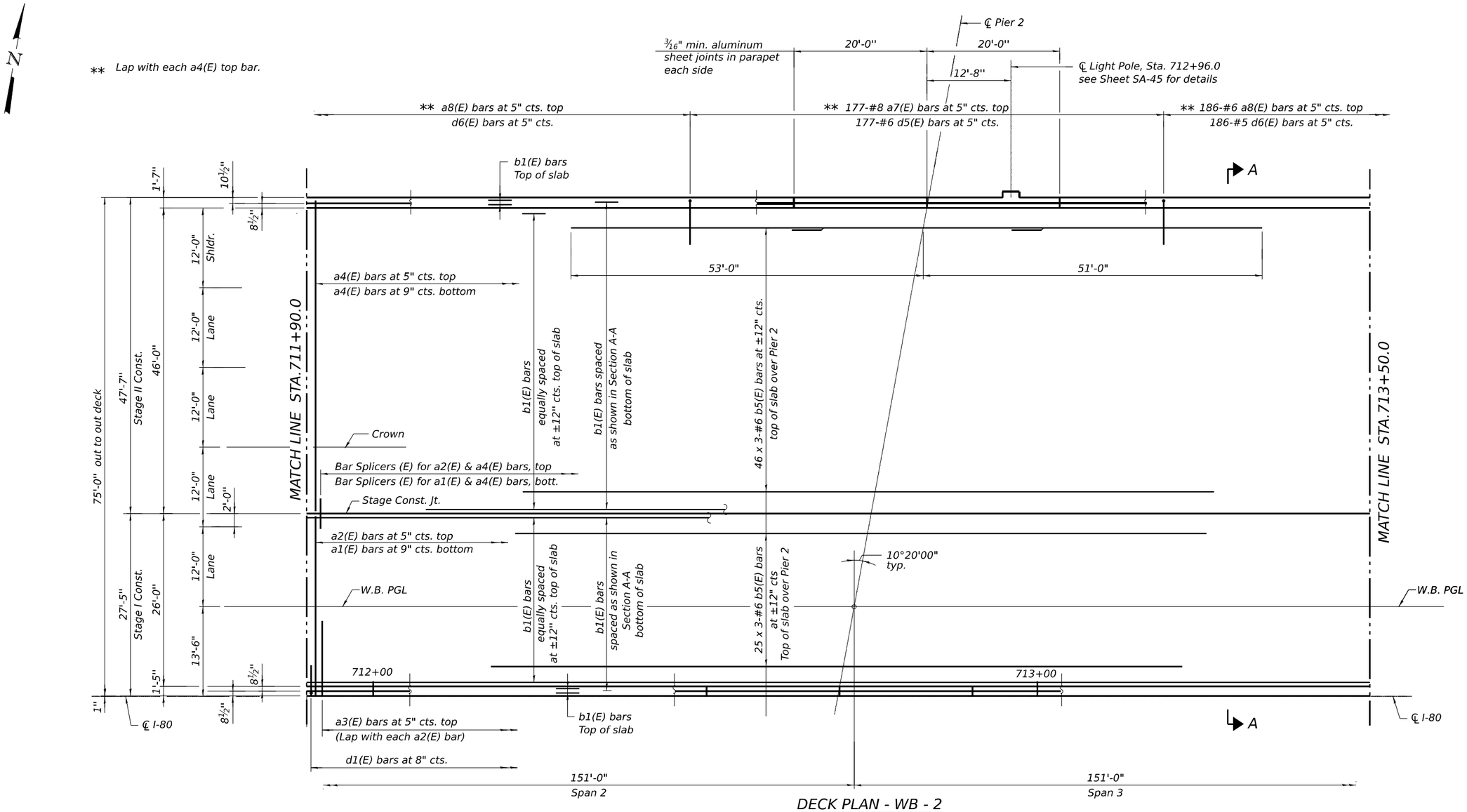

DECK PLAN - WB - 2

Note:
For Notes, see Sheet SA-31.

MODEL: SHEET
FILE NAME: C:\TRANSYSTEMS\PW_LOCAL\TRANSYSTEMS-PW-01\DMS20864\0990902_0903-62F94-032-DECK2.DGN

10-27-2025, 16:47:51

exp.	USER NAME =	DESIGNED - BAR	REVISED -	STATE OF ILLINOIS DEPARTMENT OF TRANSPORTATION	DECK PLAN 2 STRUCTURE NO. 099-0903 (WB)	F.A.I. RTE.	SECTION	COUNTY	TOTAL SHEETS / SHEET NO.
		CHECKED - KK	REVISED -			80	2017-057F	WILL	1342 / 696
	PLOT SCALE =	DRAWN - HBJ	REVISED -					CONTRACT NO. 62F94	
	PLOT DATE =	CHECKED - BAR	REVISED -		SHEET SA-32 OF SA-112 SHEETS		ILLINOIS	FED. AID PROJECT	

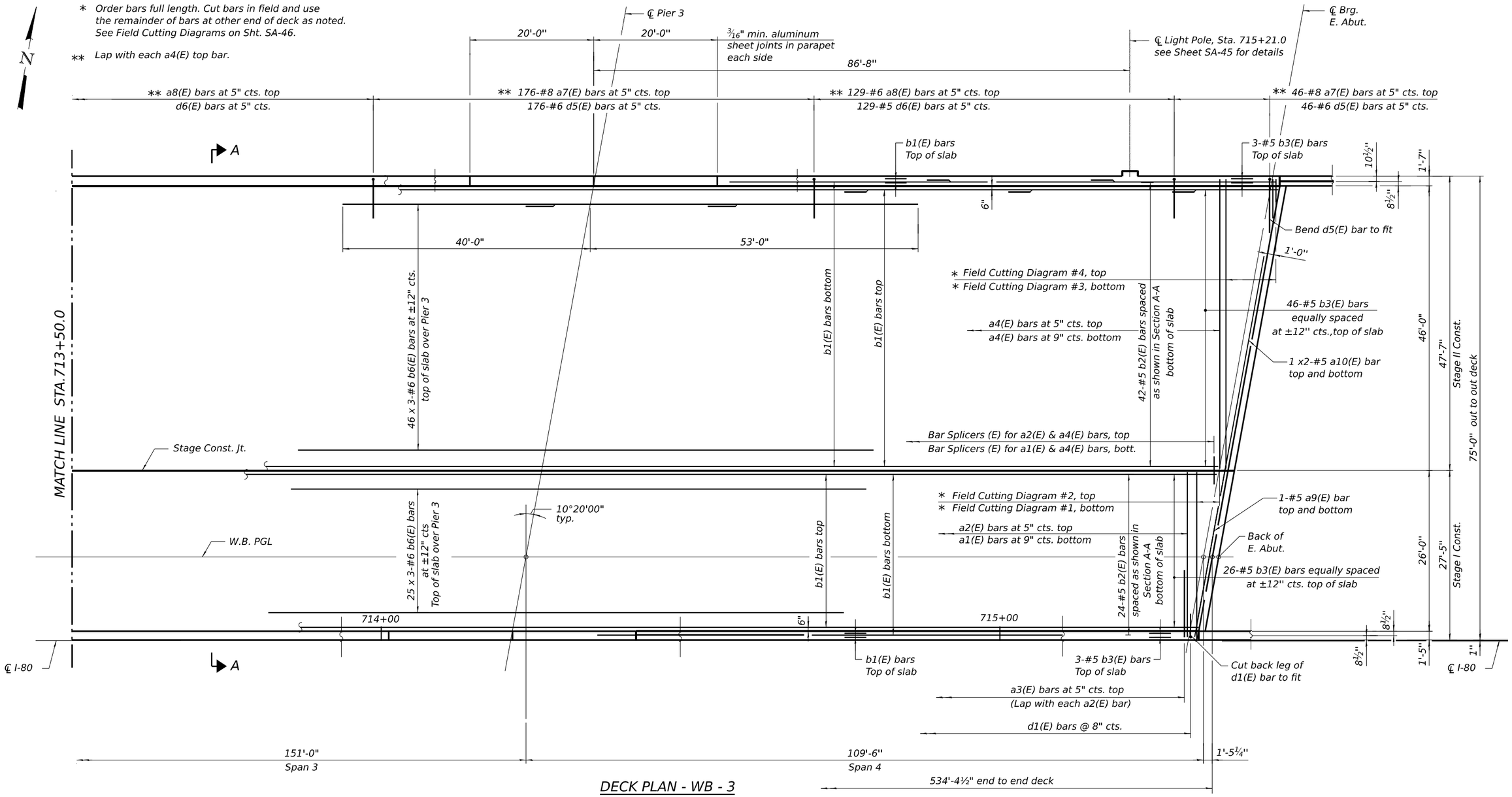

DECK PLAN - WB - 3

Note:
For Notes, see Sheet SA-31.

MODEL: SHEET
FILE NAME: C:\TRANSYSTEMS\PW_LOCAL\TRANSYSTEMS-PW-01\DMS20864\0990902_0903-62F94-033-DECK3.DGN

10-27-2025, 16:47:54

exp.

USER NAME =	DESIGNED - BAR	REVISED -	
	CHECKED - KK	REVISED -	
PLOT SCALE =	DRAWN - HBJ	REVISED -	
PLOT DATE =	CHECKED - BAR	REVISED -	

STATE OF ILLINOIS
DEPARTMENT OF TRANSPORTATION

DECK PLAN 3
STRUCTURE NO. 099-0903 (WB)

SHEET SA-33 OF SA-112 SHEETS

F.A.I. RTE.	SECTION	COUNTY	TOTAL SHEETS	SHEET NO.
80	2017-057F	WILL	1342	697
		CONTRACT NO. 62F94		
		ILLINOIS	FED. AID PROJECT	

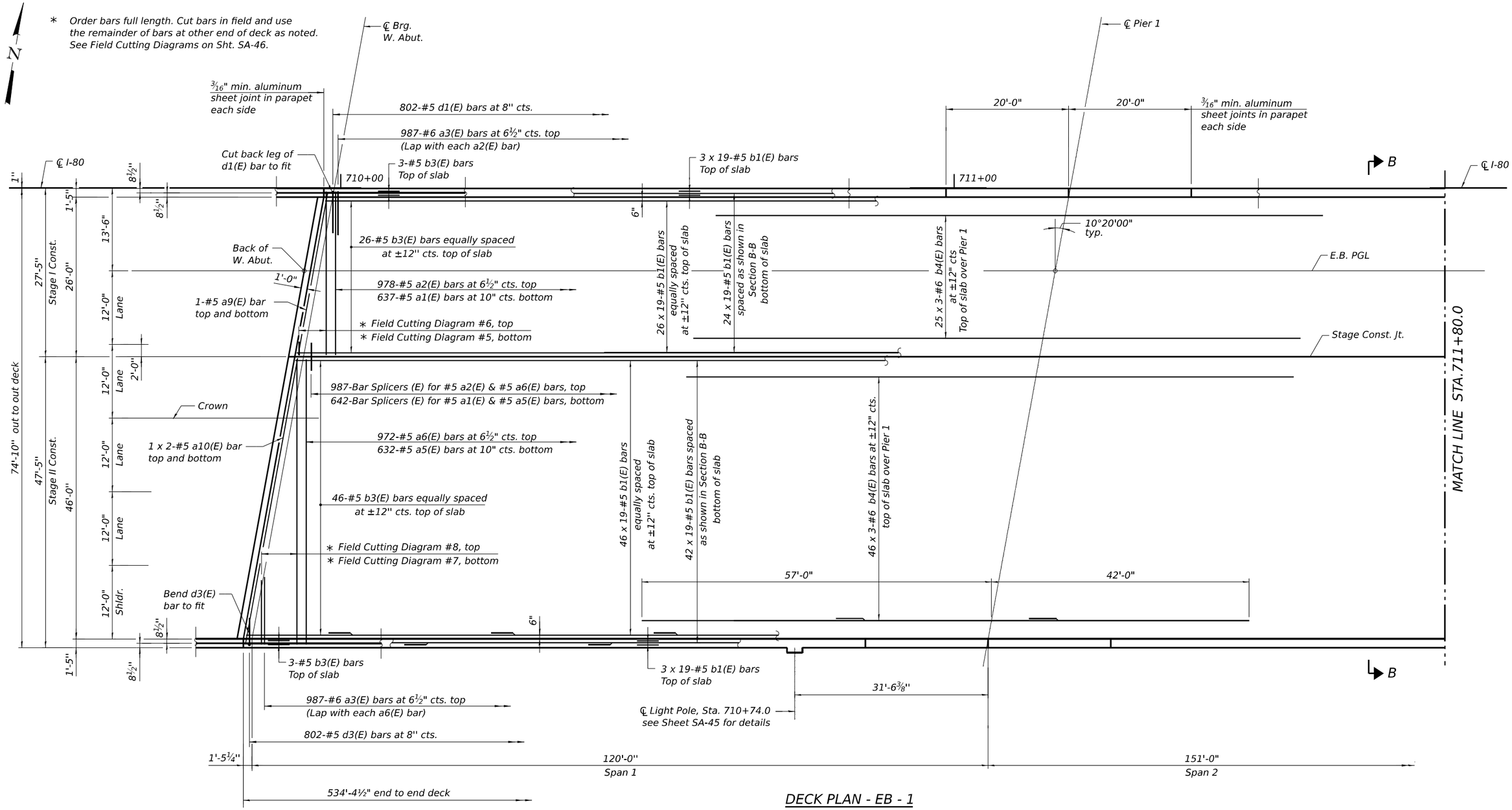

DECK PLAN - EB - 1

MINIMUM BAR LAP

#5 bar = 3'-6"
#6 bar = 4'-5"

Notes:

1. For superstructure details and Bill of Material, see Sht. SA-47.
2. Bars indicated thus 20 x 3-#5 etc. indicates 20 lines of bars with 3 lengths per line.
3. For parapet reinforcement, see Sht's. SA-41 and SA-42.
4. For Section B-B, see Sht. SA-38.
5. When the deck pour is stopped for the day at one or more of the transverse bonded construction joints in the deck pouring sequence as shown, the next pour shall not be made until both of the following are met:
   a) At least 72 hours shall have elapsed from the end of the previous pour.
   b) The concrete strength shall have attained a minimum flexural strength of 675 psi or a minimum compressive strength of 4000 psi.

MODEL: SHEET
FILE NAME: C:\TRANSYSTEMS\PW_LOCAL\TRANSYSTEMS-PW-01\DMS20864\09990902_0903-62F94-034-DECK4.DGN

exp.

USER NAME =	DESIGNED - BAR	REVISED -	
	CHECKED - KK	REVISED -	
PLOT SCALE =	DRAWN - HBJ	REVISED -	
PLOT DATE =	CHECKED - BAR	REVISED -	

STATE OF ILLINOIS
DEPARTMENT OF TRANSPORTATION

DECK PLAN 1
STRUCTURE NO. 099-0902 (EB)

SHEET SA-34 OF SA-112 SHEETS

F.A.I. RTE.	SECTION	COUNTY	TOTAL SHEETS	SHEET NO.
80	2017-057F	WILL	1342	698
		CONTRACT NO. 62F94		
	ILLINOIS	FED. AID PROJECT		

10-27-2025, 16:47:57

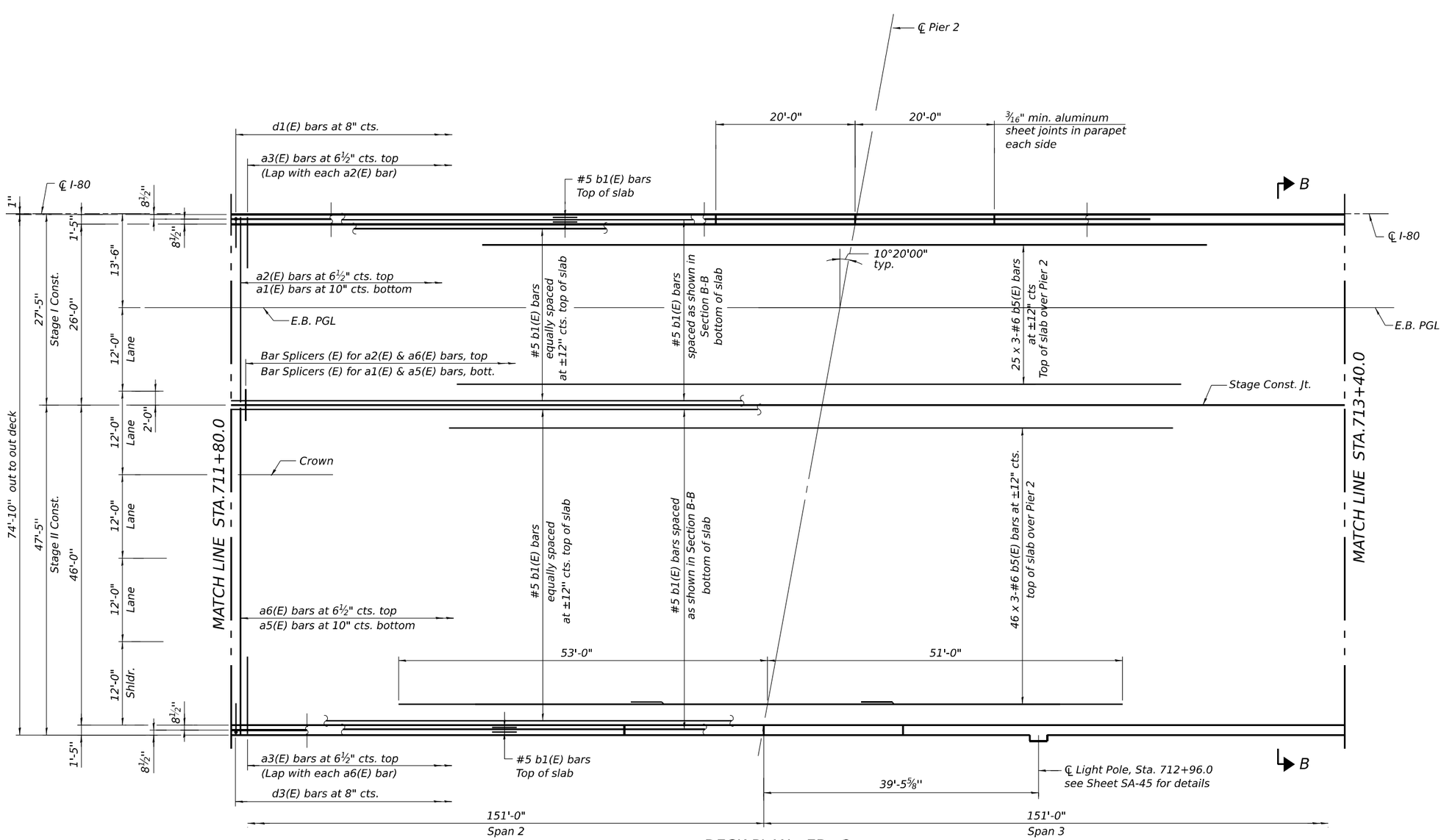

DECK PLAN - EB - 2

Note:
For Notes, see Sheet SA-34.

MODEL: SHEET
FILE NAME: C:\TRANSYSTEMS\PW_LOCAL\TRANSYSTEMS-PW-01\DMS20864\0990902_0903-62F94-035-DECKS.DGN

10-27-2025, 16:48:00

USER NAME =	DESIGNED - BAR	REVISED -	
	CHECKED - KK	REVISED -	
PLOT SCALE =	DRAWN - HBJ	REVISED -	
PLOT DATE =	CHECKED - BAR	REVISED -	

STATE OF ILLINOIS
DEPARTMENT OF TRANSPORTATION

DECK PLAN 2
STRUCTURE NO. 099-0902 (EB)

SHEET SA-35 OF SA-112 SHEETS

F.A.I. RTE.	SECTION	COUNTY	TOTAL SHEETS	SHEET NO.
80	2017-057F	WILL	1342	699
		CONTRACT NO. 62F94		
		ILLINOIS	FED. AID PROJECT	

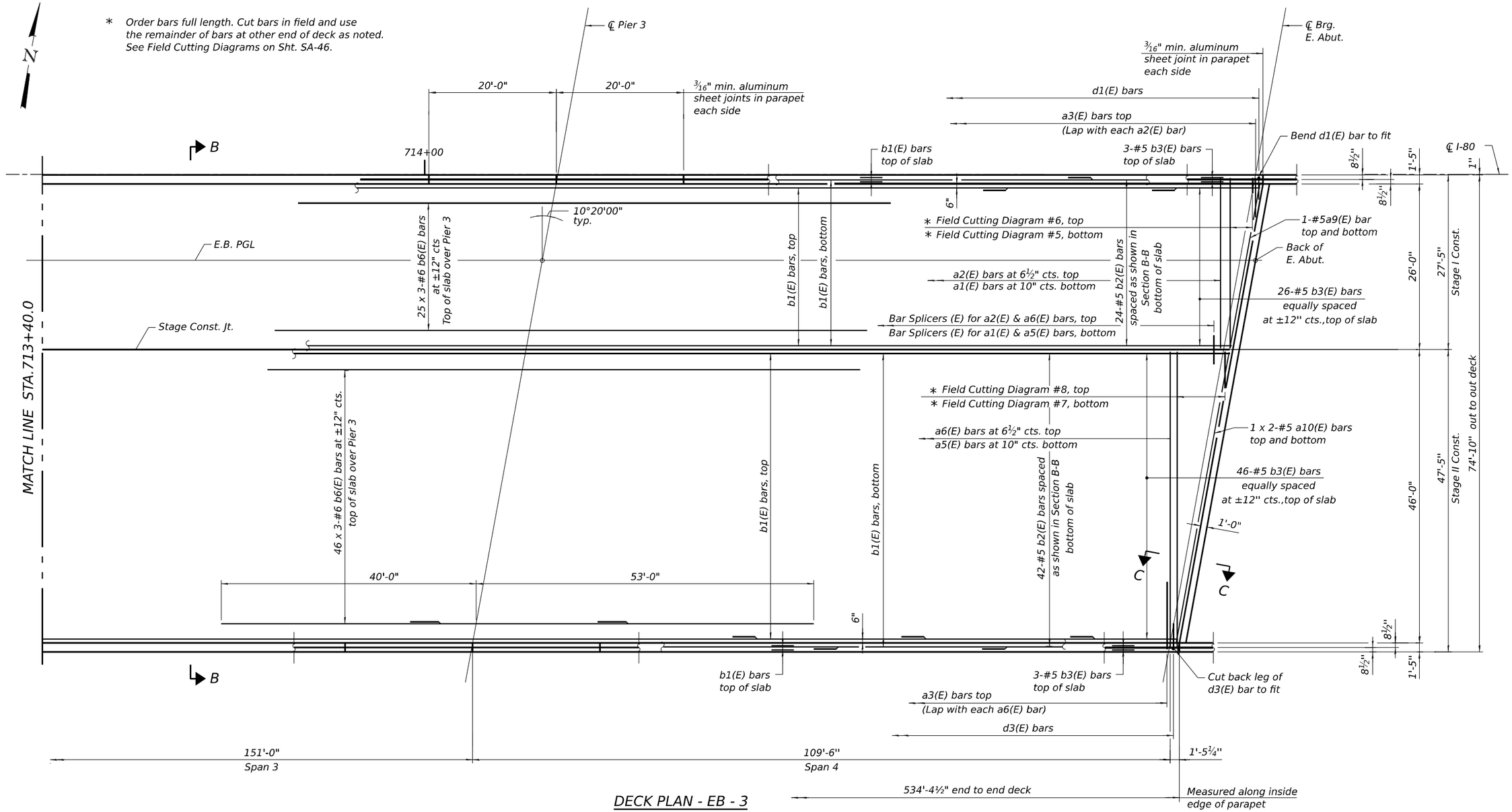

DECK PLAN - EB - 3

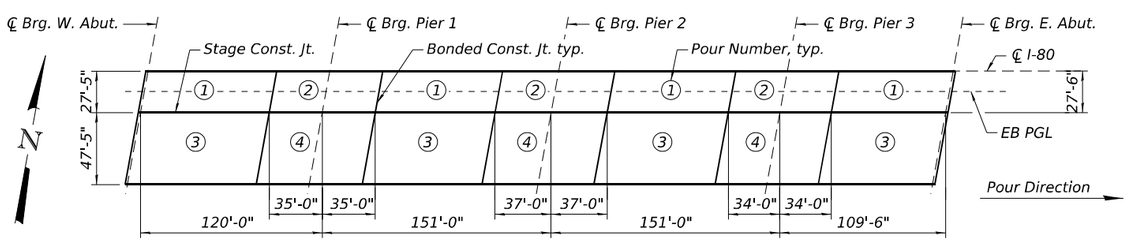

EB DECK POURING SEQUENCE

Note:
For Notes, see Sheet SA-34.

exp.	USER NAME =	DESIGNED - BAR	REVISED -	STATE OF ILLINOIS DEPARTMENT OF TRANSPORTATION	DECK PLAN 3 STRUCTURE NO. 099-0902 (EB)	F.A.I. RTE.	SECTION	COUNTY	TOTAL SHEETS	SHEET NO.
		CHECKED - KK	REVISED -			80	2017-057F	WILL	1342	700
	PLOT SCALE =	DRAWN - HBJ	REVISED -					CONTRACT NO. 62F94		
	PLOT DATE =	CHECKED - BAR	REVISED -		SHEET SA-36 OF SA-112 SHEETS		ILLINOIS	FED. AID PROJECT		

MODEL: SHEET
FILE NAME: C:\TRANSYSTEMS\PW_LOCAL\TRANSYSTEMS-PW-01\DMS20864\0990902_0903-62F94-036-DECK6.DGN
10-27-2025, 16:48:02