01-16-2026 LETTING ITEM 183

F.A. RTE.	SECTION	COUNTY	TOTAL SHEETS	SHEET NO.
NA	ILLINOIS BEACH 2025	LAKE	21	1
	ILLINOIS	CONTRACT NO. 46943		

STATE OF ILLINOIS
DEPARTMENT OF TRANSPORTATION
DEPARTMENT OF NATURAL RESOURCES

PROPOSED
HIGHWAY PLANS

IDOT / IDNR STATEWIDE
ILLINOIS BEACH STATE PARK
SECTION: ILLINOIS BEACH 2025
BRIDGE REPLACEMENT
LAKE COUNTY

C-30-010-25

IDNR FILE No. 2-25-015

INDEX OF SHEETS

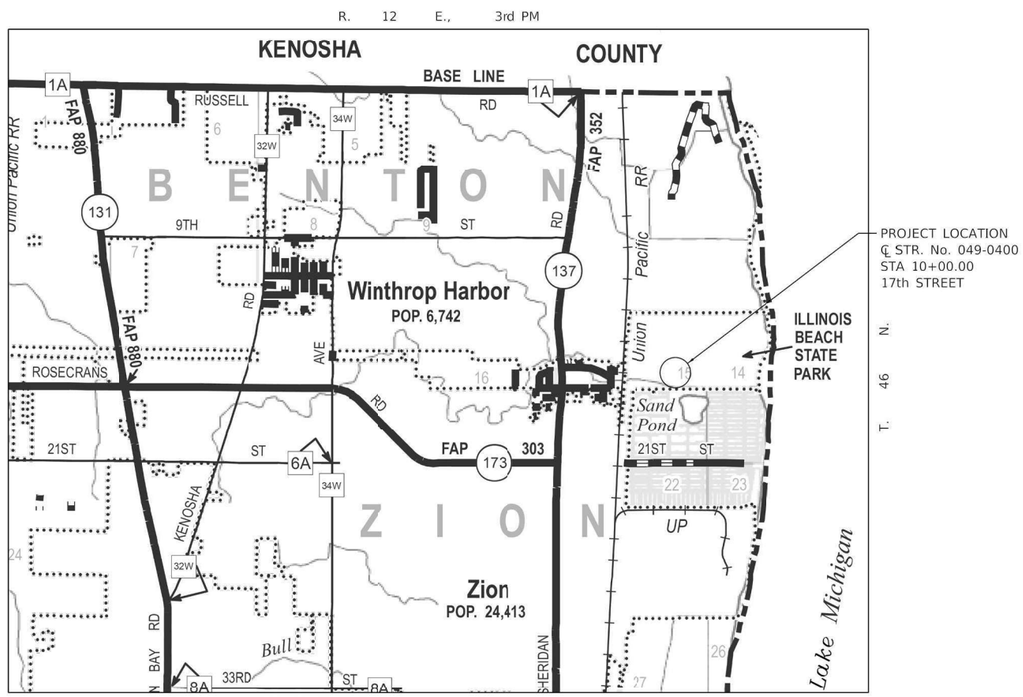

LOCATION MAP

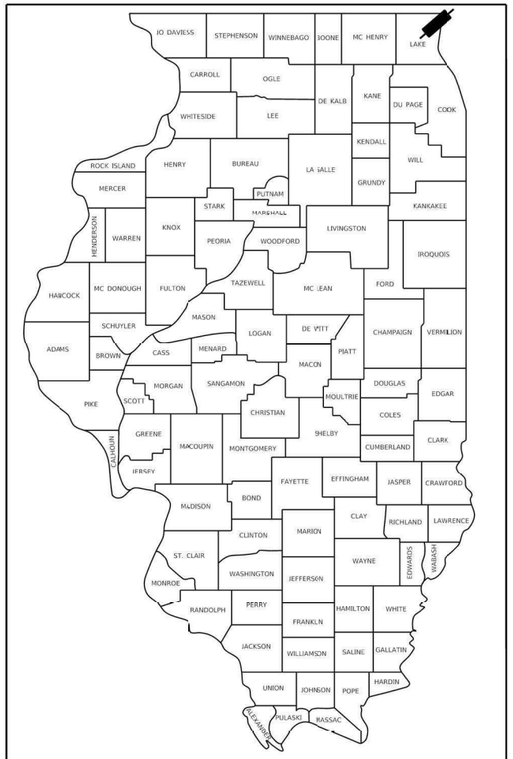

LOCATION OF SECTION INDICATED THUS:

DATE: 9/25/2025

ROBERT H. DALTON

ILLINOIS PROFESSIONAL ENGINEER
NO. 062-033925
EXPIRATION DATE 11/30/2025

062-033925 REGISTERED PROFESSIONAL ENGINEER OF ILLINOIS — ROBERT H. DALTON

100' 200' 300' — 1'' = 100'
0 10' 20' 30' — 1'' = 10'
0 50' 100' — 1'' = 50'
0 50' 100' — 1'' = 40'
0 50' 100' — 1'' = 30'
0 50' 100' — 1'' = 20'

FULL SIZE PLANS HAVE BEEN PREPARED USING STANDARD ENGINEERING SCALES. REDUCED SIZED PLANS WILL NOT CONFORM TO STANDARD SCALES. IN MAKING MEASUREMENTS ON REDUCED PLANS, THE ABOVE SCALES MAY BE USED.

J.U.L.I.E.
JOINT UTILITY LOCATING INFORMATION FOR EXCAVATORS
1 (800) 892-0123
OR 811

STATE OF ILLINOIS
DEPARTMENT OF TRANSPORTATION

SUBMITTED 10-3-25
REGIONAL ENGINEER

October 3, 20 25
ENGINEER OF DESIGN AND ENVIRONMENT

October 3, 20 25
DIRECTOR OF HIGHWAYS, PROJECT IMPLEMENTATION

PRINTED BY THE AUTHORITY OF THE STATE OF ILLINOIS

CONTRACT No. 46943

REV-SEP

JOB No. 7021-002 VEENSTRA & KIMM, INC. DESIGN FIRM REGISTRATION NUMBER 184-001939

IDOT HIGHWAY STANDARDS

000001-09	STANDARD SYMBOLS, ABBREVIATIONS, AND PATTERNS
001006	DECIMAL OF AN INCH & FOOT
280001-07	TEMPORARY EROSION CONTROL SYSTEMS
515001-04	NAME PLATE FOR BRIDGES
701901-11	TRAFFIC CONTROL DEVICES
B.L.R. 17-4	TRAFFIC CONTROL DEVICES - DAY LABOR CONSTRUCTION
B.L.R. 21-9	TYPICAL APPLICATION OF TRAFFIC CONTROL DEVICES FOR CONSTRUCTION ON RURAL LOCAL HIGHWAYS
B.L.R. 25-1	TYPE 1A BARRICADE FOR NON-NHS ROUTES

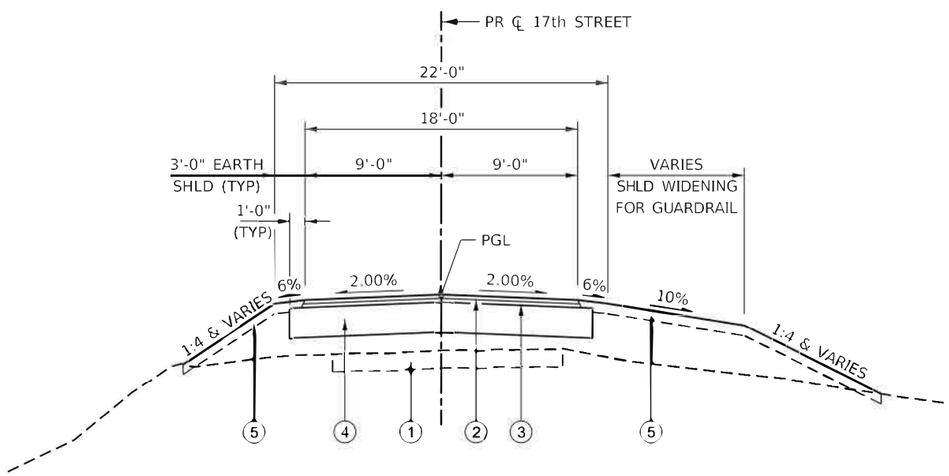

TYPICAL SECTION - 17th STREET

STA 8+30.00 TO 9+77.00
STA 10+23.00 TO 11+50.00

1. EXISTING PAVEMENT
2. HMA SURFACE COURSE, IL-9.5FG, MIX "C" N50 1½"
3. HMA BINDER COURSE, IL-9.5 MIX "C" N50 1½"
4. AGGREGATE BASE COURSE, TYPE A 12"
5. TOPSOIL FURNISH & PLACE 4"

LEGEND

- EXISTING POWER POLE
- EXISTING GUY WIRE
- EXISTING SIGN
- EXISTING WOOD POST
- EXISTING FENCE POST
- EXISTING MAILBOX
- 32" - EXISTING DECIDUOUS TREE
- 12" - EXISTING EVERGREEN TREE
- EXISTING BUSH
- EXISTING JUNCTION BOX
- EXISTING ELECTRIC SPLICE BOX
- EXISTING TELEPHONE SPLICE BOX
- EXISTING WATER VALVE
- EXISTING CATCH BASIN
- EXISTING MANHOLE
- EXISTING END SECTION
- EXISTING PARKING BLOCK
- EXISTING A.D.A. PARKING SYMBOL
- EXISTING RIPRAP
- EXISTING FENCE LINE
- EXISTING DITCH LINE
- EXISTING GUARD RAIL
- 825 - EXISTING CONTOURS
- EXISTING TREE LINE
- EXISTING BUILDING LIMITS
- EXISTING CULVERT
- SOIL BORINGS
- PROPOSED SILT FENCE

GENERAL NOTES

1) SPECIFICATIONS SHALL BE THE "STANDARD SPECIFICATIONS FOR ROAD AND BRIDGE CONSTRUCTION" ADOPTED JANUARY 1, 2022.

2) ALL ELEVATIONS ARE REFERENCED TO ELEVATIONS ESTABLISHED BY OTHERS.

3) WHERE SECTION OR SUBSECTION MONUMENTS ARE ENCOUNTERED, THE ENGINEER SHALL BE NOTIFIED BEFORE SUCH MONUMENTS ARE REMOVED. THE CONTRACTOR SHALL PROTECT AND CAREFULLY PRESERVE ALL PROPERTY MARKERS AND MONUMENTS UNTIL THE OWNER AND AUTHORIZED SURVEYOR OR AGENT HAS WITNESSED OR OTHERWISE REFERENCED THEIR LOCATION. IF THE ENGINEER DECIDES TO HAVE THE CONTRACTOR RESET THE MONUMENT, THIS WORK WILL BE PAID FOR IN ACCORDANCE WITH ARTICLE 109.04 OF THE STANDARD SPECIFICATIONS FOR HIGHWAY AND BRIDGE CONSTRUCTION.

4) THE CONTRACTOR SHALL CONTACT J.U.L.I.E. (JOINT UTILITY LOCATING INFORMATION FOR EXCAVATORS) TO HAVE PUBLIC AND PRIVATE UTILITIES LOCATED PRIOR TO ANY CONSTRUCTION.

5) THE CONTRACTOR SHALL BE RESPONSIBLE FOR PROTECTING UTILITY PROPERTY FROM CONSTRUCTION OPERATIONS AS OUTLINED IN ARTICLE 107.26 OF THE STANDARD SPECIFICATIONS. THE J.U.L.I.E. NUMBER IS (800) 892-0123. A MINIMUM OF 48 HOURS ADVANCE NOTICE IS REQUIRED.

6) ANY REFERENCE TO THE STANDARDS THROUGHOUT THE PLANS SHALL BE INTERPRETED TO BE THE LATEST HIGHWAY STANDARDS OF THE ILLINOIS DEPARTMENT OF TRANSPORTATION AS INCLUDED IN THESE PLANS.

7) ALL DETAILS IN THE PLANS SHALL GOVERN CONSTRUCTION OF THIS PROJECT, AND IN CASE OF CONFLICT WITH ANY STANDARD DRAWINGS INCLUDED, THE SAID DETAILS SHALL TAKE PRECEDENCE AND GOVERN.

8) THE CONTRACTOR SHALL ASSUME COMPLETE RESPONSIBILITY FOR JOB SITE CONDITIONS DURING THE COURSE OF CONSTRUCTION, INCLUDING SAFETY OF ALL PERSONS AND PROPERTY, THAT THIS REQUIREMENT SHALL APPLY CONTINOUSLY AND NOT BE LIMITED TO NORMAL WORKING HOURS, AND THAT THE CONTRACTOR SHALL DEFEND, IDEMNIFY, AND HOLD THE OWNER AND THE ENGINEER HARMLESS FROM ANY AND ALL LIABILITY, REAL OR ALLEGED, IN CONNECTION WITH THE PERFORMANCE OF WORK ON THIS PROJECT, EXCEPTING FOR THE LIABILITY ARISING FROM THE SOLE NEGLIGENCE OF THE OWNER OR THE ENGINEER.

9) ALL CONSTRUCTION LAYOUT SHALL BE THE RESPONSIBILITY OF THE CONTRACTOR.

10) THE BASELINES SHOWN THROUGHOUT THE PLANS ARE A "BEST FIT" ALIGNMENT OF THE CENTER OF THE EXISTING ROADWAYS FOR THE PURPOSE OF STATIONING AND DETERMINATION OF OFFSETS. IN MOST CASES, IT DOES NOT REPRESENT THE PHYSICAL CENTER OF THE EXISTING ROADWAY SURFACE.

THE FOLLOWING MIXTURE REQUIREMENTS ARE APPLICABLE FOR THIS PROJECT:

LOCATION(S):	VARIOUS		
MIXTURE USE(S):	BIND CSE	LEVEL BNDR	SURF CSE
PG:	PG58-28	PG58-28	PG58-28
DESIGN AIR VOIDS:	4.0%	4.0%	4.0%
MIXTURE COMPOSITION (MIXTURE GRADATION):	IL-9.5	IL-9.5	IL-9.5FG
FRICTION AGGREGATE:	N/A	N/A	D
MIXTURE WEIGHT:	112 LBS/SQ YD/INCH		
QUALITY MANAGEMENT PROGRAM:	QCQA		
SUBLOT SIZE:	N/A		

NOTE:
WHEN A NUMBER OF ROLLER PASSES IS SPECIFIED, THE CONTRACTOR MAY OPT TO USE INTELLIGENT COMPACTION IN LIEU OF DENSITY TESTING UNDER THE QUALITY CONTROL FOR PERFORMANCE (QCP) PROGRAM.

	CODE NO.	ITEM	UNIT	TOTAL QUANTITY	CONSTR CODE 100% STATE BRIDGE 0010 S.N. 049-0400
*	20100110	TREE REMOVAL (6 TO 15 UNITS DIAMETER)	UNIT	75	75
*	20100210	TREE REMOVAL (OVER 15 UNITS DIAMETER)	UNIT	102	102
*	20200100	EARTH EXCAVATION	CU YD	178	178
	20300100	CHANNEL EXCAVATION	CU YD	117	117
	20700110	POROUS GRANULAR EMBANKMENT	TON	41.1	41.1
*	21101615	TOPSOIL FURNISH AND PLACE, 4"	SQ YD	745	745
	28000400	PERIMETER EROSION BARRIER	FOOT	860	860
	28100807	STONE DUMPED RIPRAP, CLASS A4	TON	182	182
	28200200	FILTER FABRIC	SQ YD	263	263
	35101100	AGGREGATE BASE COURSE, TYPE A 12"	SQ YD	610	610
	40600275	BITUMINOUS MATERIALS (PRIME COAT)	POUND	1419	1419
	40600290	BITUMINOUS MATERIALS (TACK COAT)	POUND	548	548
	40600982	HOT-MIX ASPHALT SURFACE REMOVAL - BUTT JOINT	SQ YD	19	19
	40602978	HOT-MIX ASPHALT BINDER COURSE, IL- 9.5, N50	TON	47	47

* - DENOTES SPECIAL PROVISION

CODE NO.	ITEM	UNIT	TOTAL QUANTITY	CONSTR CODE 100% STATE BRIDGE 0010 S.N. 049-0400
40604000	HOT-MIX ASPHALT SURFACE COURSE, IL-9.5FG, MIX "C", N50	TON	49	49
50100100	REMOVAL OF EXISTING STRUCTURES	EACH	1	1
50200100	STRUCTURE EXCAVATION	CU YD	68	68
50300225	CONCRETE STRUCTURES	CU YD	21	21
50300280	CONCRETE ENCASEMENT	CU YD	4.4	4.4
50400405	PRECAST PRESTRESSED CONCRETE DECK BEAMS (21" DEPTH)	SQ FT	1069	1069
50800205	REINFORCEMENT BARS, EPOXY COATED	POUND	3570	3570
50900205	STEEL RAILING, TYPE S1	FOOT	92	92
51200958	FURNISHING METAL SHELL PILES 14" X 0.250"	FOOT	117	117
51202305	DRIVING PILES	FOOT	117	117
51203200	TEST PILE METAL SHELLS	EACH	2	2
51500100	NAME PLATES	EACH	1	1
63000001	STEEL PLATE BEAM GUARDRAIL, TYPE A, 6 FOOT POSTS	FOOT	100	100
63100075	TRAFFIC BARRIER TERMINAL, TYPE 5A	EACH	4	4

* - DENOTES SPECIAL PROVISION

	CODE NO.	ITEM	UNIT	TOTAL QUANTITY	CONSTR CODE 100% STATE BRIDGE 0010 S.N. 049-0400
	67100100	MOBILIZATION	L SUM	1	1
*	K1005421	SEEDING (SPECIAL)	ACRE	0.18	0.18
*	X0326806	WASHOUT BASIN	L SUM	1	1
*	X2511630	EROSION CONTROL BLANKET (SPECIAL)	SQ YD	745	745
*	X6640300	CHAIN LINK FENCE REMOVAL	FOOT	200	200
*	X7010216	TRAFFIC CONTROL AND PROTECTION, (SPECIAL)	L SUM	1	1
*	X8301801	WOODEN POLE REMOVAL	EACH	2	2
*	Z0013798	CONSTRUCTION LAYOUT	L SUM	1	1
	X6310164	TRAFFIC BARRIER TERMINAL, TYPE 1	EACH	4	4

* - DENOTES SPECIAL PROVISION

REMOVAL SCHEDULE

STATION	LT/RT	STATION	LT/RT	TREE REMOVAL (6 TO 15 UNITS) (UNIT) 20100110	TREE REMOVAL (OVER 15 UNITS) (UNIT) 20100210	REMOVAL OF EX STRUCTURES (EACH) 50100100	CHAIN LINK FENCE REMOVAL (FOOT) X6640300	WOODEN POLE REMOVAL (EACH) X8301801
9+13	36' LT	DEAD			24			
9+10	67' LT	9+90	67' RT				200	
9+76	17' LT			8				
9+77	25' LT				19			
9+81	18' RT			14				
9+81	LT/RT	10+17	LT/RT			1		
9+83	16' LT			8				
9+88	18' RT							1
9+98	20' RT	STUMP			24			
10+14	15' LT			12				
10+17	14' LT			6				
10+18	17' LT	DOWN			18			
10+20	10' LT							1
10+22	18' RT			7				
10+24	16' LT	DOWN		14				
10+36	17' RT				17			
10+57	14' RT	DEAD		6				
		TOTAL	=	75	102	1	200	2

EARTHWORK SCHEDULE

1 Location	2 Earth Excavation 20200100	3 Earth Excavation 25% Adjustment For Shrinkage	4 Embankment	5 Earthwork Balance Waste (+) or Shortage (-)
	Cubic Yard	Cubic Yard	Cubic Yard	Cubic Yard
17th Street				
Sta 8+30.00 to 9+77.00	97	73	168	-95
Bridge Omission				
Sta 10+23.00 to 11+50.00	81	61	80	-19
TOTAL	178	134	248	-114

Columns 1, 2, & 4 — Location and Quantities from Cross Sections: Earth Exc = Cut, Embankment = Fill
Column 3 — Quantity of Earth Excavation (Cut) With 25% Adjustment for Shrinkage
Column 5 — Earthwork Req'd: (-) = Quantity of Fill or Embankment needed.
(+) = Quantity to be Wasted

SEEDING AND EROSION CONTROL SCHEDULE

STATION	LT/RT	STATION	LT/RT	TOPSOIL F & P, 4" (SQ YD) 21101615	PER EROSION BARRIER (FOOT) 28000400	SEEDING (SPECIAL) (ACRE) K1005421	WASHOUT BASIN (L SUM) X0326806	EROS CONT BLANKET (SPL) (SQ YD) X2511630
8+30.00	LT	9+77.00	LT	196	190	0.05		196
8+30.00	RT	9+77.00	RT	251	260	0.06		251
10+23.00	LT	11+50.00	LT	163	210	0.04		163
10+23.00	RT	11+50.00	RT	135	200	0.03		135
AS DIRECTED							1	
TOTAL				**745**	**860**	**0.18**	**1**	**745**

RIP RAP SCHEDULE

STATION	TO	STATION	LT/RT	STONE DUMPED RIPRAP CL A4 (TON) 28100807	FILTER FABRIC (SQ YD) 28200200
17th Street - Str # 049-0400					
9+60.00	TO	9+98.00	LT/RT	91	132
10+02.00	TO	10+36.00	LT/RT	91	131
TOTAL				182	263

PAVING SCHEDULE

STATION	TO	STATION	AGG BASE CSE TA 12" (SQ YD) 35101100	BIT MATLS (PR CT) (POUND) 40600275	BIT MATLS (TACK CT) (POUND) 40600290	HMA SURFACE REM-BUTT JOINT (SQ YD) 40600982	HMA BC IL-9.5 N50 (TON) 40602978	HMA SC IL-9.5FG C N50 (TON) 40604000
8+30.00	TO	9+77.00	327	759	294	9	25	26
9+77.00	TO	10+23.00						
10+23.00	TO	11+50.00	283	660	254	10	22	23
TOTAL			**610**	**1,419**	**548**	**19**	**47**	**49**

GUARDRAIL SCHEDULE

STATION	TO	STATION	LT/RT	STEEL RAILING TYPE S1 (FOOT) 50900205	STEEL PLT BEAM GR, TA 6' POSTS (FOOT) 63000001	TRAFFIC BARRIER TERM, TYPE 5A (EACH) 63100075	TRAFFIC BARRIER TERM, TYPE 1 (EACH)
17th Street - Str # 049-0400							
9+00	TO	9+71	LT		25	1	1
9+25	TO	9+82	RT		25	1	1
9+71	TO	10+18	LT	46			
9+82	TO	10+28	RT	46			
10+18	TO	10+81	LT		25	1	1
10+28	TO	10+91	LT		25	1	1
TOTAL				**92**	**100**	**4**	**4**

MODEL: Default
FILE NAME: \\vksp-fs1\sprshare\0700\0702-DOT-IDNR-Park-Roads\0702-0001-0004 PTB207 055 WO4 Camp Logan Lake Col Design and Planning\CADD\CAD Sheets\D146943-sht 006 Schedules.dgn

JOB No. 7021-002 VEENSTRA & KIMM, INC. DESIGN FIRM REGISTRATION NUMBER 184-001939

USER NAME = jbegue	DESIGNED - DHC/JEB	REVISED -	
	DRAWN - JEB	REVISED -	
PLOT SCALE = 40.0000 ' / in.	CHECKED - MAH/RHC	REVISED -	
PLOT DATE = 9/25/2025	DATE - 9/25/2025	REVISED -	

STATE OF ILLINOIS
DEPARTMENT OF TRANSPORTATION
DEPARTMENT OF NATURAL RESOURCES

SCHEDULE OF QUANTITIES
ILLINOIS BEACH STATE PARK

SCALE: | SHEET 1 OF 1 SHEET | STA. TO STA.

F.A. RTE.	SECTION	COUNTY	TOTAL SHEETS	SHEET NO.
	ILLINOIS BEACH 2025	TAZEWELL	21	6
		CONTRACT NO. 46943		
	ILLINOIS	FED. AID PROJECT		

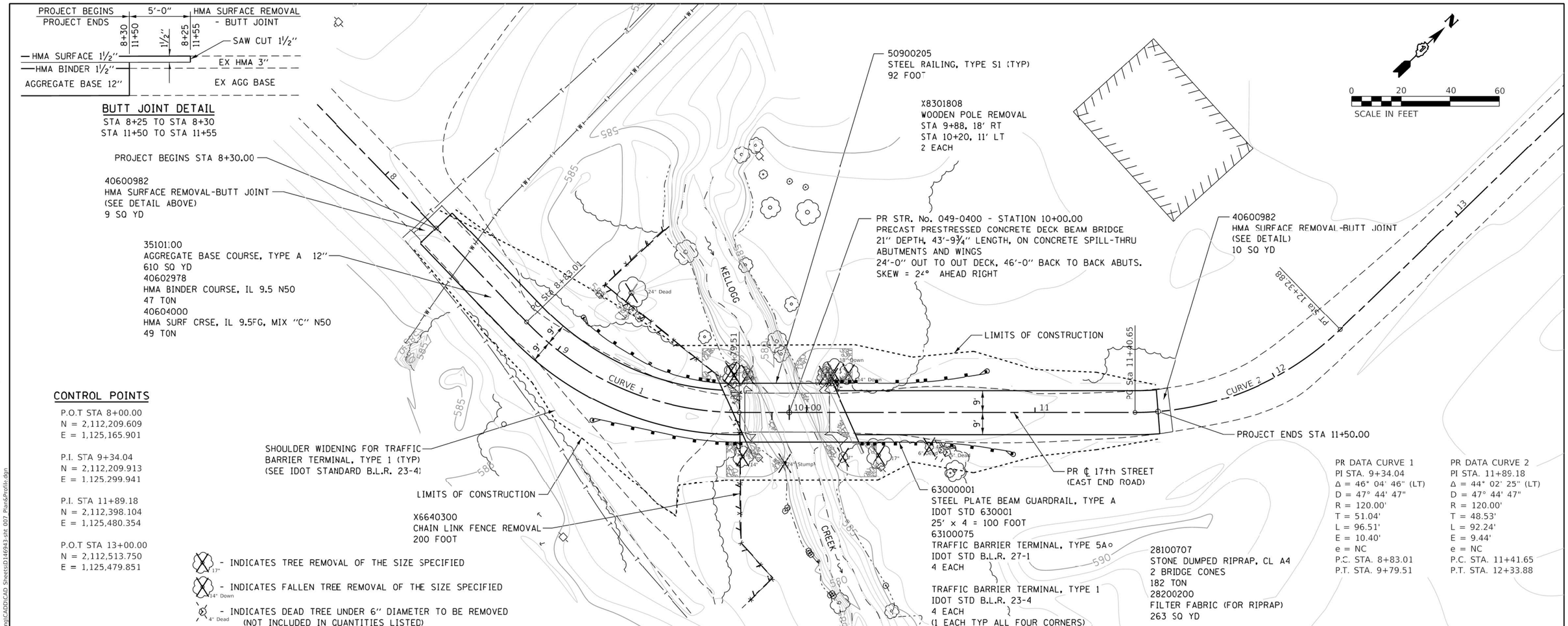

CONTROL POINTS

P.O.T STA 8+00.00
N = 2,112,209.609
E = 1,125,165.901

P.I. STA 9+34.04
N = 2,112,209.913
E = 1,125,299.941

P.I. STA 11+89.18
N = 2,112,398.104
E = 1,125,480.354

P.O.T STA 13+00.00
N = 2,112,513.750
E = 1,125,479.851

- INDICATES TREE REMOVAL OF THE SIZE SPECIFIED
- INDICATES FALLEN TREE REMOVAL OF THE SIZE SPECIFIED
- INDICATES DEAD TREE UNDER 6" DIAMETER TO BE REMOVED (NOT INCLUDED IN QUANTITIES LISTED)

PR DATA CURVE 1	PR DATA CURVE 2
PI STA. 9+34.04	PI STA. 11+89.18
Δ = 46° 04' 46" (LT)	Δ = 44° 02' 25" (LT)
D = 47° 44' 47"	D = 47° 44' 47"
R = 120.00'	R = 120.00'
T = 51.04'	T = 48.53'
L = 96.51'	L = 92.24'
E = 10.40'	E = 9.44'
e = NC	e = NC
P.C. STA. 8+83.01	P.C. STA. 11+41.65
P.T. STA. 9+79.51	P.T. STA. 12+33.88

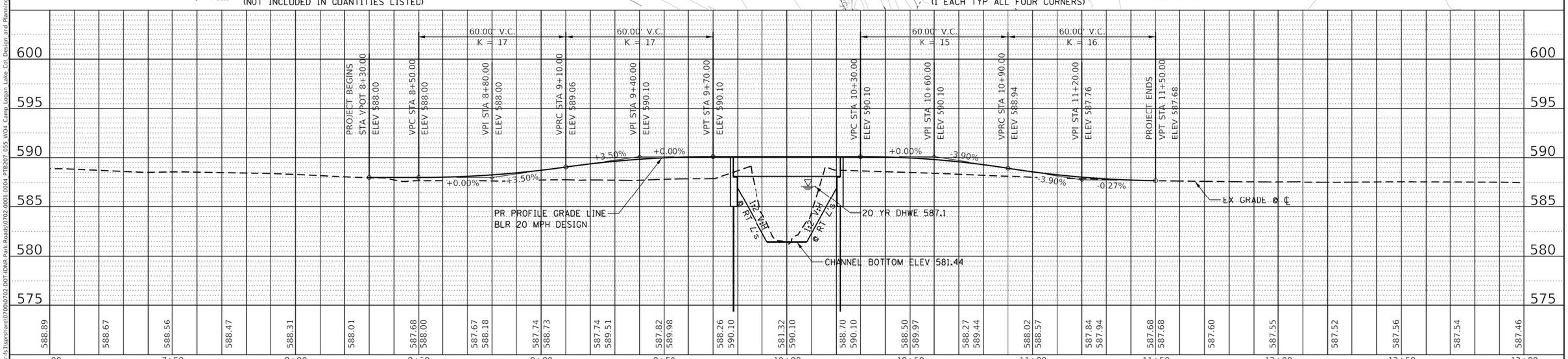

USER NAME = jbegue	DESIGNED - JEB	REVISED -	
	DRAWN - JEB	REVISED -	
PLOT SCALE = 40.0000 ' / in.	CHECKED - RHD	REVISED -	
PLOT DATE = 9/26/2025	DATE - 9/25/2025	REVISED -	

STATE OF ILLINOIS
DEPARTMENT OF TRANSPORTATION
DEPARTMENT OF NATURAL RESOURCES

PLAN & PROFILE - 17th STREET OVER KELLOGG CREEK
ILLINOIS BEACH STATE PARK

SCALE: SHEET 1 OF 1 SHEETS STA. TO STA.

F.A. RTE.	SECTION	COUNTY	TOTAL SHEETS	SHEET NO.
	ILLINOIS BEACH 2025	LAKE	21	7
		CONTRACT NO. 46943		
	ILLINOIS	FED. AID PROJECT		

PLAN — SURVEYED / PLOTTED / ALIGNMENT CHECKED / RT. OF WAY CHECKED / CADD FILE NAME — NOTE BOOK NO. — BY — DATE

PROFILE — SURVEYED / PLOTTED / GRADES CHECKED / E.M. NOTED / STRUCTURE NOTATNS CHKD — NOTE BOOK NO. — BY — DATE

MODEL: Default
FILE NAME: \\vkspr-fs1\sprshare\0700\0702-DOT-IDNR-Park-Roads\0702-0001-0004 PTB207 055 WO4 Camp Logan Lake Col Design and Planning\CADD\CAD Sheets\D146943-sht 007 Plan&Profile.dgn

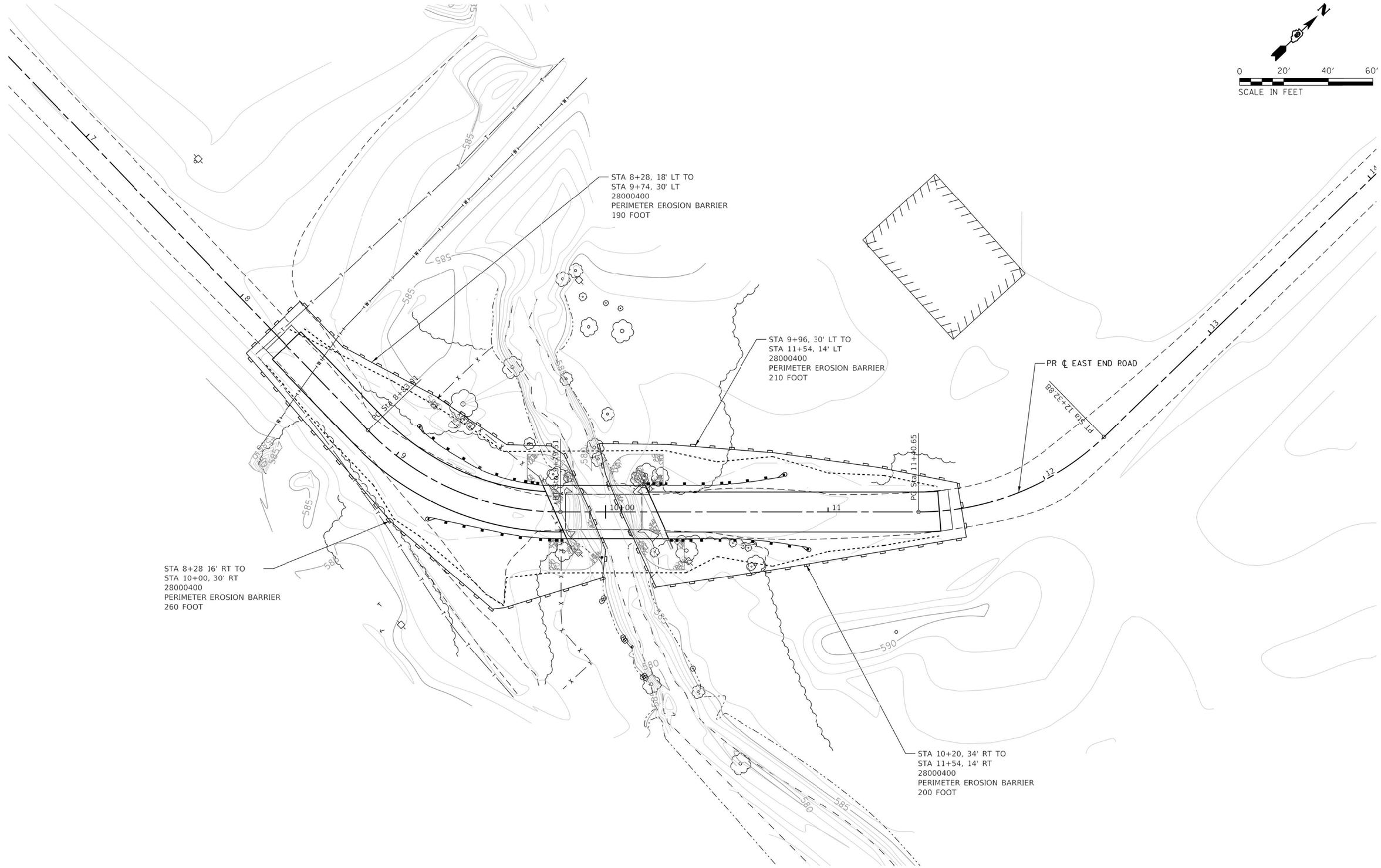

MODEL: Default
FILE NAME: \\dsgn-fs1\gpnshare\07000\0702-DOT-IDNR-Park-Roads\0702-0001-0004 PTB207 055 WO4 Camp Logan Lake Col Design and Planning\CADD\CAD Sheets\D146943-sht 008 Erosion Control Plan.dgn

USER NAME = jbegue	DESIGNED - JEB	REVISED -	
	DRAWN - JEB	REVISED -	
PLOT SCALE = 40.0000 ' / in.	CHECKED - RHD	REVISED -	
PLOT DATE = 9/25/2025	DATE - 9/25/2025	REVISED -	

STATE OF ILLINOIS
DEPARTMENT OF TRANSPORTATION
DEPARTMENT OF NATURAL RESOURCES

EROSION CONTROL PLAN
ILLINOIS BEACH STATE PARK

SCALE: SHEET 1 OF 1 SHEETS STA TO STA

F.A. RTE.	SECTION	COUNTY	TOTAL SHEETS	SHEET NO.
	ILLINOIS BEACH 2025	COOK	21	8
		CONTRACT NO. 46943		
	ILLINOIS	FED. AID PROJECT		

BM #1 – RR Spike in Power Pole 28.67' Lt. Sta. 9+00.30 Elev. 588.58

BM #2 – RR Spike in Power Pole 22.29' Rt. Sta. 10+36.43 Elev. 586.45

Existing Structure: The existing structure SN 049-0185 is a single span bridge constructed in 19xx as SN 049-0185 having a back to back abutment length of 34'-5", and an out to out bridge deck width of 16'-0". The superstructure consists of a curbed concrete deck w/ pipe railing on 8" beams. The substructure consists of closed concrete abutments with concrete wing walls. The bridge is not skewed.

17th Street will be closed during Bridge Construction.

No salvage.

INDEX OF SHEETS

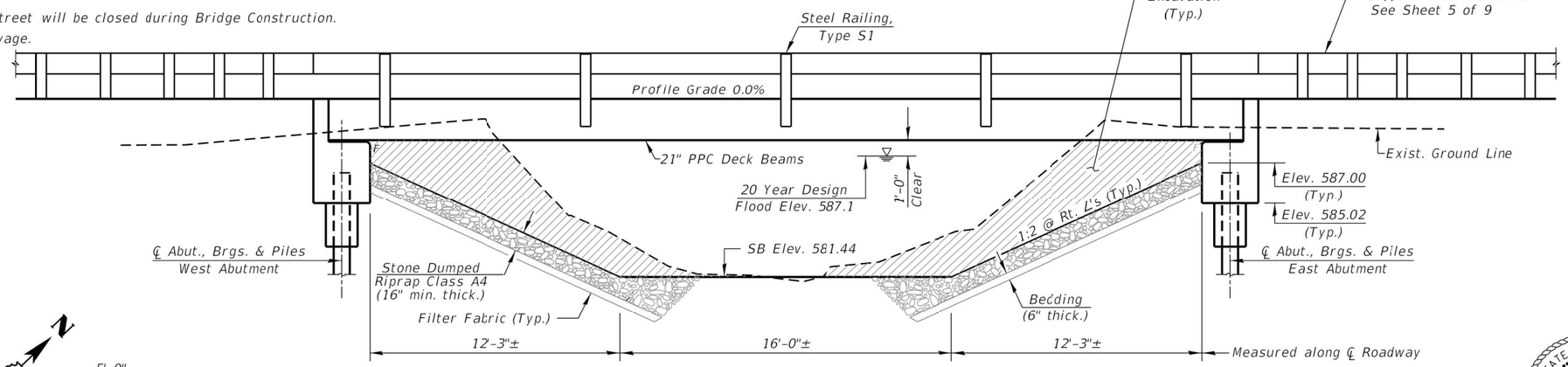

ELEVATION

(Looking NorthWest)

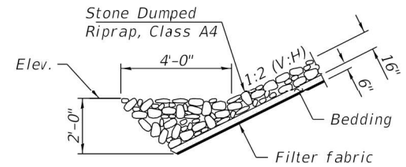

SECTION THRU TOE

I certify that to the best of my knowledge, information and belief, this bridge design is structurally adequate for the design loading shown on the plans. The design is an economical one for the style of structure and complies with requirements of the current "A.A.S.H.T.O. LRFD Bridge Design Specifications".

STATE OF ILLINOIS · DEWEY H. COULTAS · 81-4539 · SPRINGFIELD · LICENSED STRUCTURAL ENGINEER

Dewey H Coultas

Expiration Date 11/30/2026

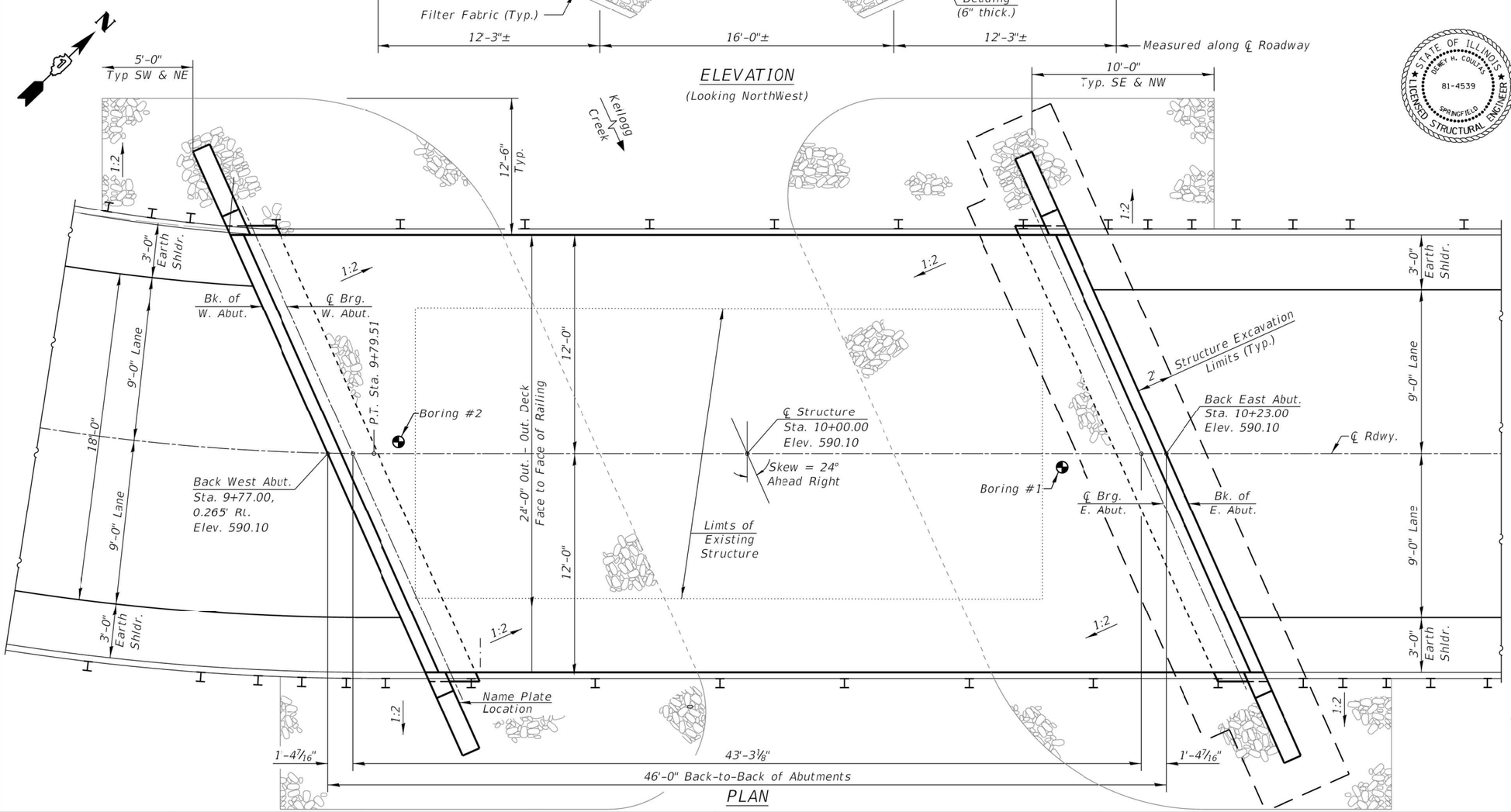

PLAN

17th STREET OVER KELLOGG CREEK
BUILT 20__ BY IDNR
ILLINOIS BEACH STATE PARK
LAKE COUNTY
SECTION: ILLINOIS BEACH 2024
STATION 10+00
STR. No. 049-0400 LOADING HL-93

NAME PLATE

See Std. 515001

R. 12 E., 3rd P.M.

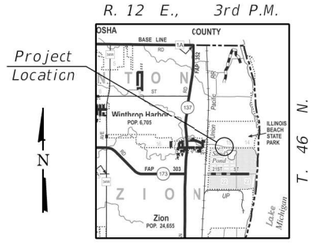

LOCATION SKETCH

GENERAL PLAN & ELEVATION
17th STREET OVER KELLOGG CREEK
SECTION: ILLINOIS BEACH 2024
LAKE COUNTY
STA. 10+00
STRUCTURE No. 049-0400

MODEL: Default
FILE NAME: \\ksp-fs1\sprshare\07000\0702-DOT-IDNR-Park-Roads\0702-0001-0004_PT3207_055_W04_Camp_Logan_Lake_Co_Design_and_Planning\CADD\CAD Sheets_Structure Plans\D146943-sht 009_0490400-001-GP&E.dgn

9/25/2025 2:14:40 PM

VEENSTRA & KIMM INC.
Springfield, IL. Phone: (217)544-8033
IL. Design Firm No. 184-001939

USER NAME =	DESIGNED - DHC	REVISED -	
	CHECKED - MAH	REVISED -	
PLOT SCALE =	DRAWN - JEB	REVISED -	
PLOT DATE = 9/25/2025	CHECKED - MAH	REVISED -	

STATE OF ILLINOIS
DEPARTMENT OF TRANSPORTATION
DEPARTMENT OF NATURAL RESOURCES

GENERAL PLAN AND ELEVATION
STRUCTURE No. 049-0400

SHEET 1 OF 9 SHEETS

RTE.	SECTION	COUNTY	TOTAL SHEETS	SHEET NO.
17th St	ILLINOIS BEACH 2025	LAKE	21	9
		CONTRACT No. 46943		
	ILLINOIS	FED. AID PROJECT		

GENERAL NOTES

Layout of the slope protection system may be varied to suit ground conditions in the field as directed by the Engineer.

The Contractor shall drive a test pile to 110% of the nominal required bearing specified in a production location at each abutment as approved by the Engineer before ordering the remainder of piles

Reinforcement bars designated (E) shall be epoxy coated.

The Contractor is responsible for the removal and disposal of any excess channel excavation not incorporated back into the project. The disposal of any excess material shall be in accordance with Article 202.03. Cost to dispose of excess excavation will be included in the unit cost of Channel Excavation.

TOTAL BILL OF MATERIAL

ITEM	UNIT	SUPER	SUB	TOTAL
Channel Excavation	Cu Yd			117
Porous Granular Embankment	Cu Yd		41.1	41.1
Stone Dumped Riprap, Class A4	Ton		182	182
Filter Fabric	Sq Yd		263	263
Removal Of Existing Structures	Each			1
Structure Excavation	Cu Yd		68	68
Concrete Structures	Cu Yd		21.0	21.0
Concrete Encasement	Cu Yd		4.4	4.4
Precast Prestressed Concrete Deck Beams (21" Depth)	Sq Ft	1,069		1,069
Reinforcement Bars, Epoxy Coated	Pound		3,570	3,570
Steel Railing, Type S1	Foot	92		92
Furnishing Metal Shell Piles 12" x 0.250"	Foot		117	117
Driving Piles	Foot		117	117
Test Pile Metal Shells	Each		2	2
Name Plates	Each			1

DESIGN SCOUR ELEVATION TABLE

Event / Limit State	Design Scour Elevations (ft.)		Item 113
	S.W. Abutment	N.E. Abutment	
Q100	585.02	585.02	8
Q200	585.02	585.02	
Design	585.02	585.02	
Check	585.02	585.02	

WATERWAY INFORMATION

Drainage Area = 5.4 Sq. Mi. Low Grade Elev. 587.6 @ Sta. 12+51.31

Flood	Freq. Yr.	Q C.F.S.	Opening Ft² Exist.	Opening Ft² Prop.	Nat. H.W.E.	Head – Ft. Exist.	Head – Ft. Prop.	Headwater El. Exist.	Headwater El. Prop.
	10	604	127	119	586.8	0.0	0.0	586.8	586.8
Design	20	755	134	128	587.1	0.0	0.0	587.1	587.1
Base	100	1150	152	147	587.7	0.3	0.2	588.0	587.7
	200	1340	153	153	587.9	0.3	0.3	588.2	588.2
Max. Calc.	500	1610	153	160	588.1	0.3	0.4	588.4	588.5

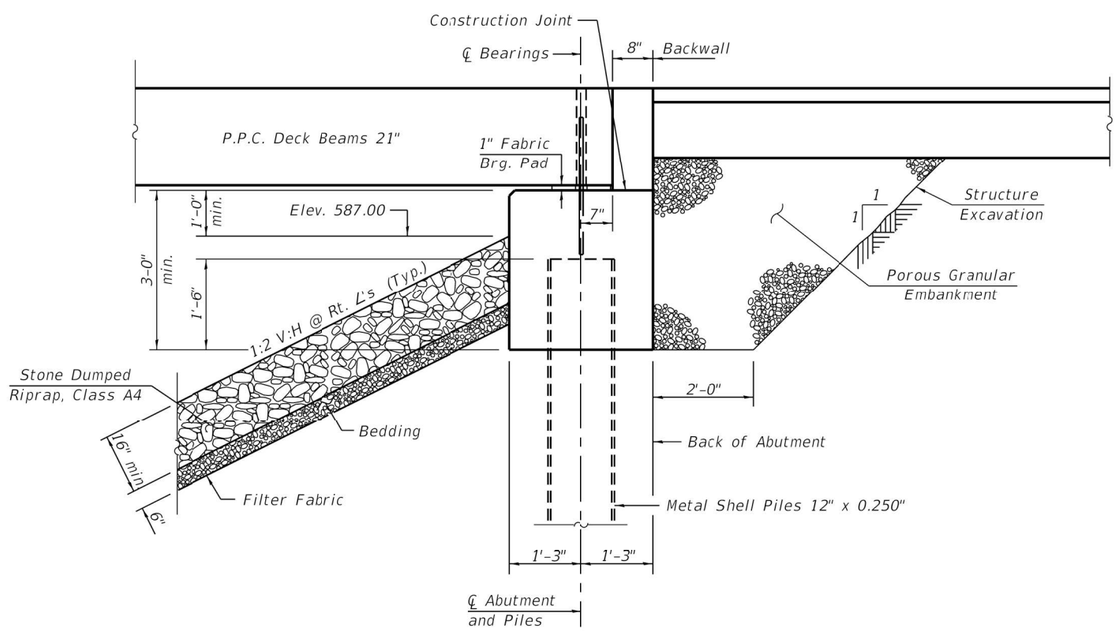

SECTION THRU ABUTMENT

(Horiz. dimensions at Rt. angles)

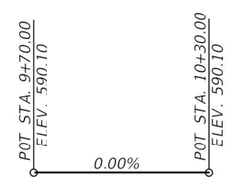

PROFILE GRADE

LOADING HL 93

Allow 50#/sq. ft. for future wearing surface.

DESIGN SPECIFICATIONS

2020 AASHTO LRFD Bridge Design Specifications, 9th Edition.

DESIGN STRESSES

FIELD UNITS

f'c = 3,500 psi
fy = 60,000 psi (Reinforcement)

PRECAST PRESTRESSED UNITS

f'c = 6,000 psi
f'ci = 5,000 psi
fpu = 270,000 psi (½" ∅ low lax strands)
fpbt = 201,960 psi (½" ∅ low lax strands)
fy = 60,000 psi

SEISMIC DATA

2023 AASHTO Seismic Hazard
Site Class D
Latitude 42.464376, Longitude -87.810438
Performance Level Operational

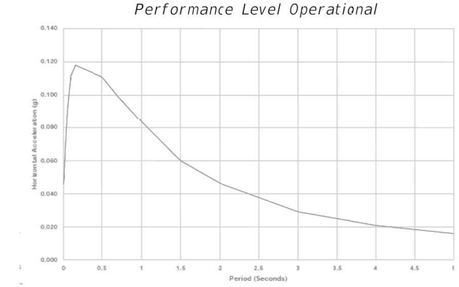

SD1 = 0.084 g
SDS = 0.117 g
SDC = A

MODEL: Default
FILE NAME: \\vkspr-fs1\sprshare\07000702-DOT-IDNR-Park-Roads\0702.0001-0004_PT3207_055_W04_Camp_Logan_Lake_Co_Design_and_Planning\CADD\CAD Sheets_Structure Plans\D146943-sht 010_0490400-002-General Data.dgn

9/25/2025 2:20:09 PM

VEENSTRA & KIMM INC.
Springfield, IL. Phone: (217)544-8033
IL. Design Firm No. 184-001939

USER NAME =	DESIGNED - DHC	REVISED -
	CHECKED - MAH	REVISED -
PLOT SCALE =	DRAWN - JEB	REVISED -
PLOT DATE = 9/25/2025	CHECKED - MAH	REVISED -

STATE OF ILLINOIS
DEPARTMENT OF TRANSPORTATION
DEPARTMENT OF NATURAL RESOURCES

GENERAL DATA
STRUCTURE No. 049 - 0400

SHEET 2 OF 9 SHEETS

RTE.	SECTION	COUNTY	TOTAL SHEETS	SHEET NO.
17th St	ILLINOIS BEACH 2025	LAKE	21	10

CONTRACT No. 46943

ILLINOIS FED. AID PROJECT

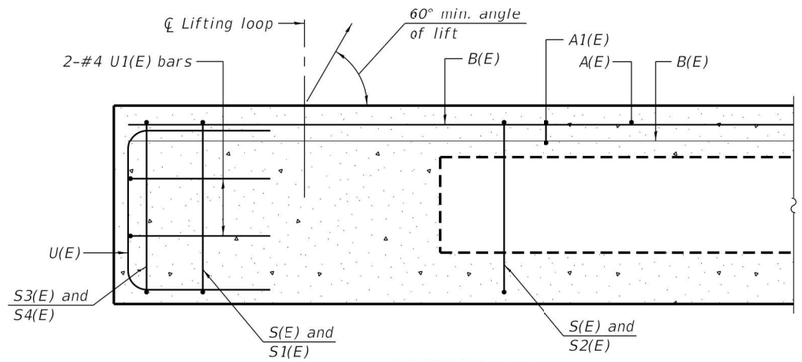

SECTION A-A

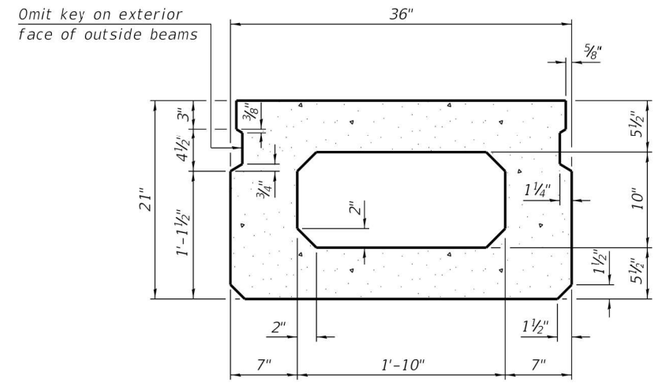

SECTION B-B
(Showing dimensions)

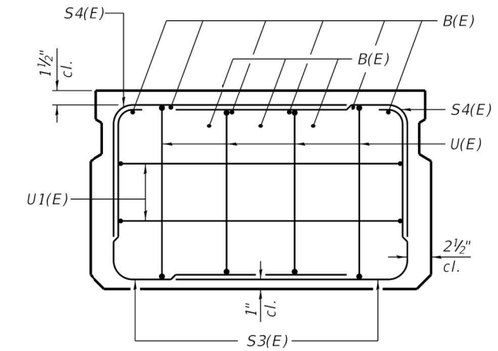

VIEW C-C

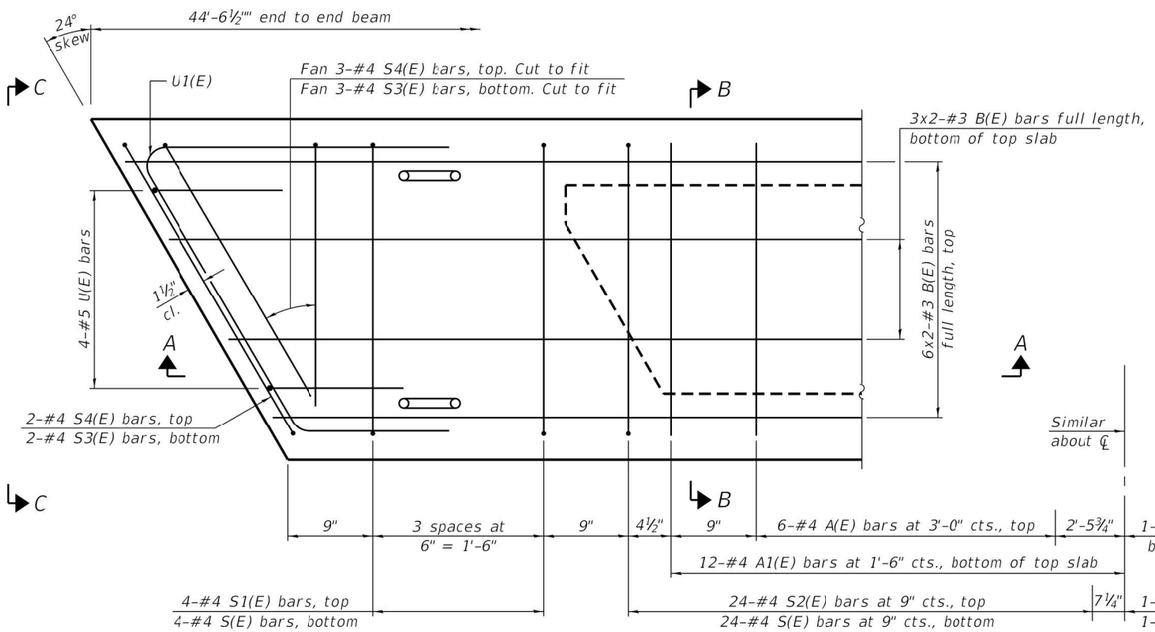

PLAN VIEW

Note:
Spacing of S(E) and S2(E) bars may be adjusted up to 4" in the immediate area of the transverse tie diaphragms to miss the block outs for the transverse ties.

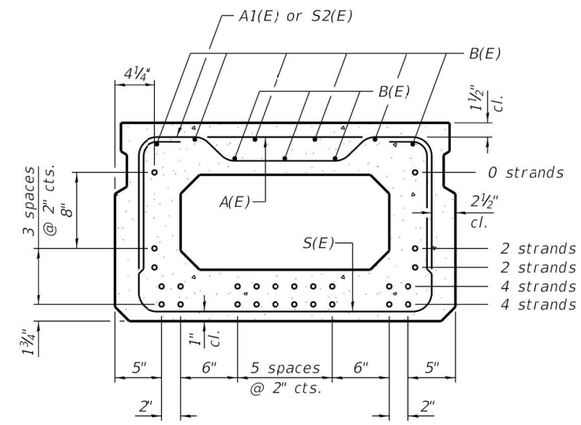

SECTION B-B
(Showing reinforcement and permissible strand locations)

Note:
Place the number of strands specified in each row symmetrically about the centerline of beam in the permissible strand locations shown.

MINIMUM BAR LAP
#3 bar = 1'-6"

BAR LIST
ONE BEAM ONLY
(For information only)

Bar	No.	Size	Length	Shape
A(E)	12	#4	2'-7"	
A1(E)	24	#4	2'-10"	
B(E)	18	#3	23'-0"	
S(E)	57	#4	6'-5"	
S1(E)	8	#4	4'-11"	
S2(E)	49	#4	5'-2"	
S3(E)	10	#4	4'-11"	
S4(E)	10	#4	4'-2"	
U(E)	8	#5	4'-0"	
U1(E)	4	#4	6'-4"	

Note:
See sheet 4 of 9 for additional details and Bill of Material.

PD-2136-R 5-15-2023

MODEL: Default
FILE NAME: \\vkspr-fs1\sprshare\0700\0702-DOT-IDNR-Park-Roads\0702-0001-0004_PT3207_055_WO4_Camp_Logan_Lake_Col_Design_and_Planning\CADD\CAD Sheets_Structure Plans\D146943-sht 011_0490400-003-Deck Beam Sheet.dgn

VEENSTRA & KIMM INC.
Springfield, IL. Phone: (217)544-8033
IL. Design Firm No. 184-001939

USER NAME =	DESIGNED - DHC	REVISED -
	CHECKED - MAH	REVISED -
PLOT SCALE =	DRAWN - JEB	REVISED -
PLOT DATE = 9/25/2025	CHECKED - MAH	REVISED -

STATE OF ILLINOIS
DEPARTMENT OF TRANSPORTATION
DEPARTMENT OF NATURAL RESOURCES

21" x 36" PPC DECK BEAM
STRUCTURE No. 049 - 0400
SHEET 3 OF 9 SHEETS

RTE.	SECTION	COUNTY	TOTAL SHEETS	SHEET NO.
17th St	ILLINOIS BEACH 2025	LAKE	21	11
		CONTRACT No. 46943		
		ILLINOIS FED. AID PROJECT		

9/25/2025 2:20:51 PM

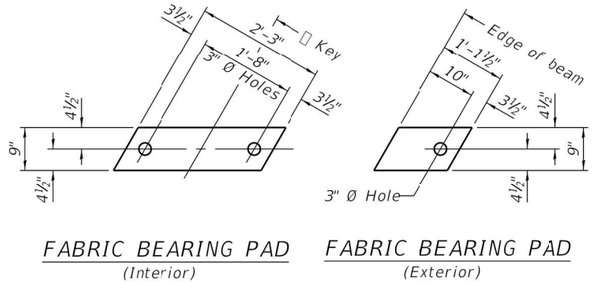

FIXED

Notes:
All bearing pads shall be 1" thick.
Omit holes when using expansion bearings.
Expansion bearing pads shall be bonded to the substructure.

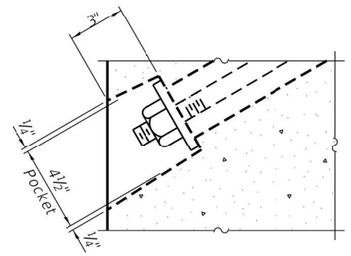

SECTION A-A

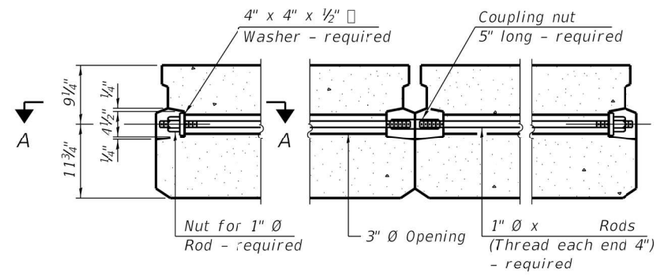

TYPICAL TRANSVERSE TIE ASSEMBLY

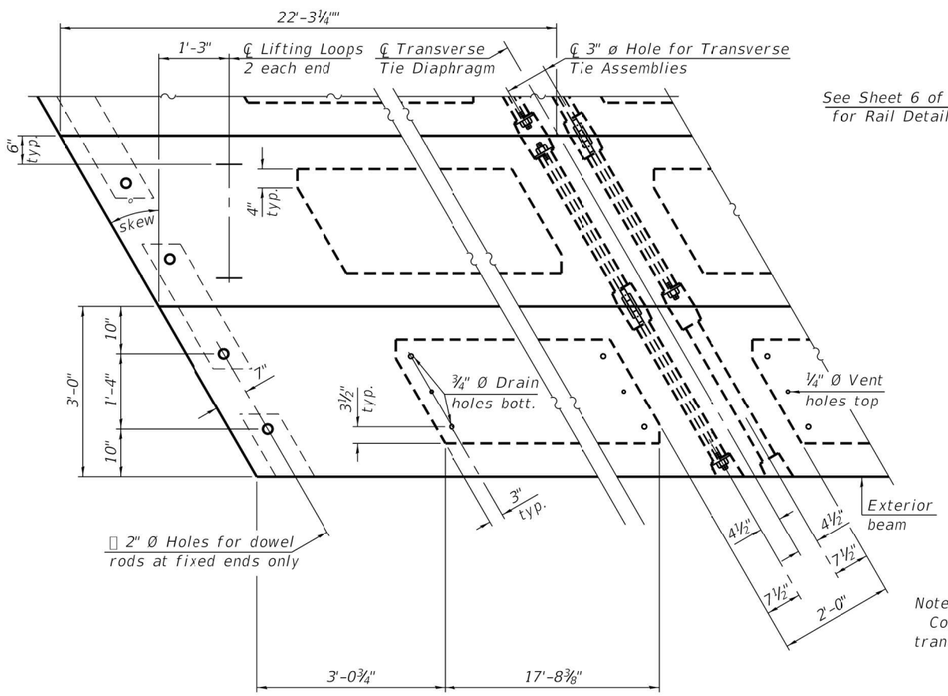

PLAN VIEW

Note:
Connect beams in pairs with the transverse tie configuration shown.

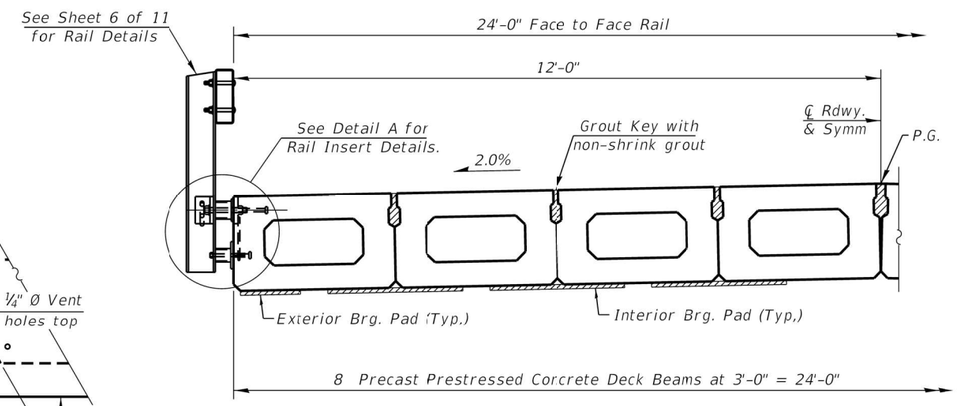

CROSS SECTION

Note: See Sheet 3 & 4 of 11 for Superstructure Details

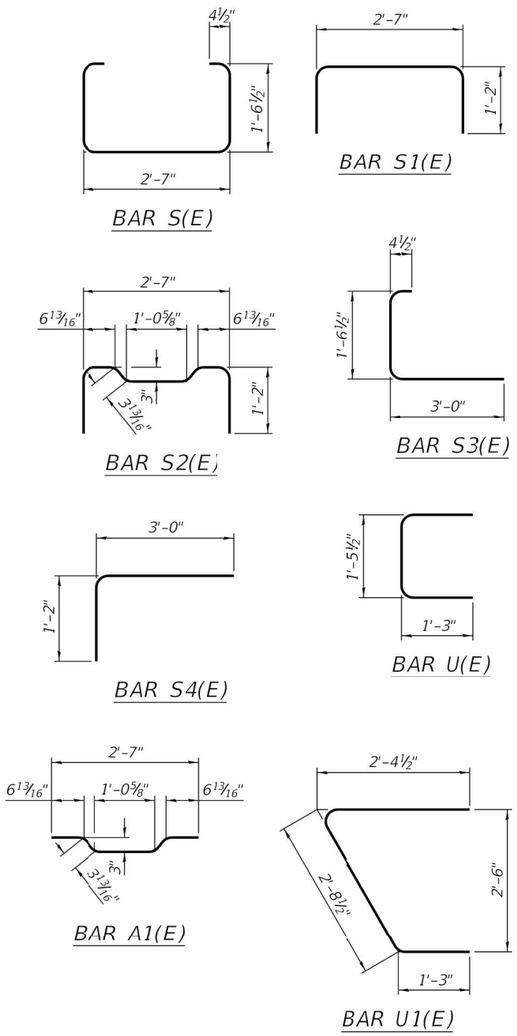

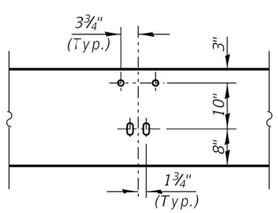

DETAIL A

NOTES

Prestressing steel shall be uncoated high strength, low relaxation 7-wire strand, Grade 270. The nominal diameter shall be ½" and the nominal cross-sectional area shall be 0.153 sq. in.

The 1" Ø rods in the transverse tie assembly shall be tightened to a snug fit and the threads set. Pockets on exterior faces of bridge shall be filled with grout after transverse tie assembly is in place.

Two ⅛" fabric adjusting shims of the dimensions of the exterior bearing pad shall be provided for each bearing pad location.

A minimum 2½" Ø lifting pin shall be used to engage the lifting loops during handling.

Corrosion Inhibitor, per Article 1020.05(b)(10) and 1021.07 of the Standard Specifications, shall be used in the concrete for precast prestressed concrete deck beams.

Compressive strength of prestressed concrete, f 'c, shall be 6000 psi.

Compressive strength of prestressed concrete at release, f 'ci, shall be 5000 psi.

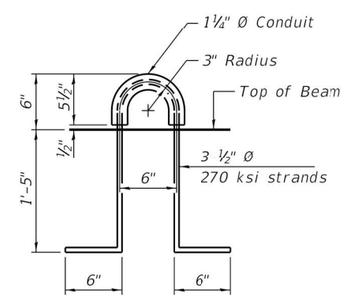

LIFTING LOOP DETAIL

BILL OF MATERIAL

Precast Prestressed Conc. Deck Bms. (21" depth)	Sq. Ft.	1,069

PDD-2136-R 5-15-2023

VEENSTRA & KIMM INC.
Springfield, IL. Phone: (217)544-8033
IL. Design Firm No. 184-001939

USER NAME =	DESIGNED - DHC	REVISED -
	CHECKED - MAH	REVISED -
PLOT SCALE =	DRAWN - JEB	REVISED -
PLOT DATE = 9/25/2025	CHECKED - MAH	REVISED -

STATE OF ILLINOIS
DEPARTMENT OF TRANSPORTATION
DEPARTMENT OF NATURAL RESOURCES

21" x 36" PPC DECK BEAM DETAILS
STRUCTURE No. 049-0400

SHEET 4 OF 9 SHEETS

RTE.	SECTION	COUNTY	TOTAL SHEETS	SHEET NO.
17th St	ILLINOIS BEACH 2025	LAKE	21	12
		CONTRACT No. 46943		
		ILLINOIS FED. AID PROJECT		

MODEL: Default
FILE NAME: \\kspr-fs1\sprshare\0700\0702-DOT-IDNR-Park-Roads\0702-0001-0004_PT3207_055_WO4_Camp_Logan_Lake_Co_Design_and_Planning\CADD\CAD Sheets_Structure Plans\D146943-sht 012_0490400-004-Deck Beam Details.dgn
9/25/2025 2:21:31 PM

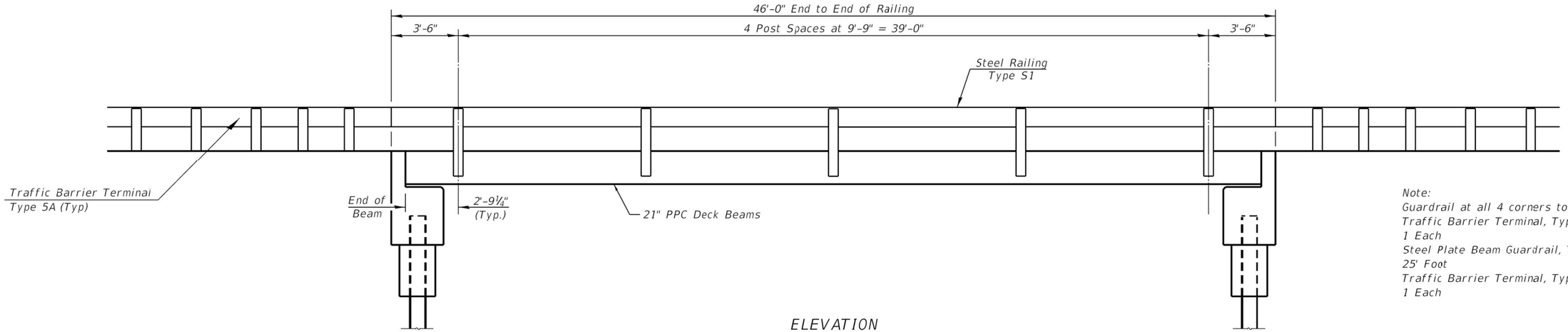

Note:
Guardrail at all 4 corners to consist of;
Traffic Barrier Terminal, Type 5A
1 Each
Steel Plate Beam Guardrail, Type A
25' Foot
Traffic Barrier Terminal, Type 1
1 Each

ELEVATION

(Showing Rail Post Spaces)
Note: See Sheet 6 of 9 for railing details.

MODEL: Default
FILE NAME: \\vkspr-fs1sprshare\07000\0702-DOT-IDNR-Park-Roads\0702-0001-0004_PT3207_055_WO4_Camp_Logan_Lake_Col_Design_and_Planning\CADD\CAD Sheets_Structure Plans\D146943-sht 013_0490400-005-Superstructure.dgn

VEENSTRA & KIMM INC. Springfield, IL. Phone: (217)544-8033 IL. Design Firm No. 184-001939	USER NAME =	DESIGNED - DHC	REVISED -	STATE OF ILLINOIS DEPARTMENT OF TRANSPORTATION DEPARTMENT OF NATURAL RESOURCES	SUPERSTRUCTURE STRUCTURE No. 049 - 0400	RTE.	SECTION	COUNTY	TOTAL SHEETS / SHEET NO.
		CHECKED - MAH	REVISED -			17th St	ILLINOIS BEACH 2025	LAKE	21 / 13
	PLOT SCALE =	DRAWN - JEB	REVISED -					CONTRACT No. 46943	
	PLOT DATE = 9/25/2025	CHECKED - MAH	REVISED -		SHEET 5 OF 9 SHEETS		ILLINOIS	FED. AID PROJECT	

9/25/2025 2:22:16 PM

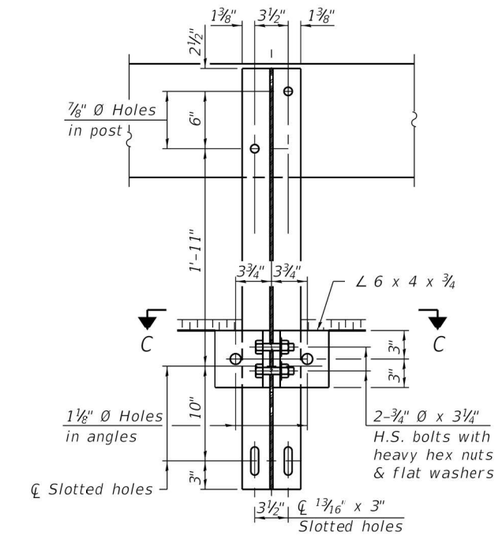

SECTION B-B

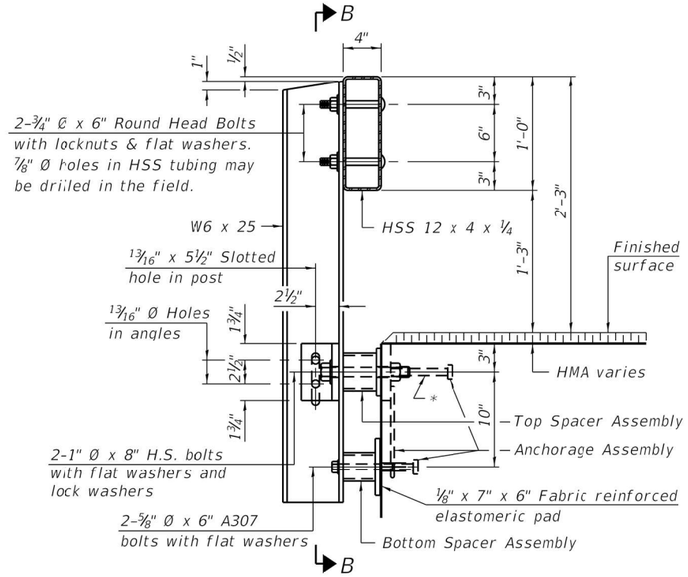

SECTION AT RAILING POST

* The outermost longitudinal reinforcement bar shall be placed directly above the studs of the rail post anchorage assembly. The anchorage studs may be bent down ½" to accommodate the top reinforcement bar placement.

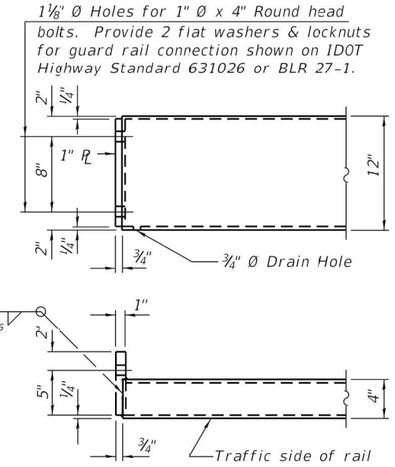

END OF RAIL DETAILS

Notes:

A sufficient number of shims of various thicknesses, sized to fit behind the top spacer assembly, 5" x 11½", and bottom spacer assembly, 6" x 7", shall be provided to adjust posts for proper alignment. If the summation of shims is greater than ¼" (top) or ½" (bottom), longer bolts are required. Cost included with Steel Railing, Type S1.

All steel rail elements including shims shall be galvanized according to Article 509.05 of the Standard Specifications.

All HSS tubing serving as railing shall be CVN tested according to Article 1006.34(b) of the Standard Specifications.

Rail splice inserts may be built out of 2 (⅜") bent plates in lieu of the 4 plate rail splice inserts shown, provided the outside dimensions are matched.

All round head bolts shall be ASTM A307 with locknuts according to ASTM A563 grade A.

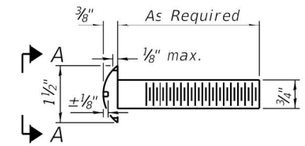

ROUND HEAD BOLT DETAIL

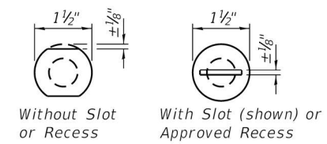

VIEW A-A

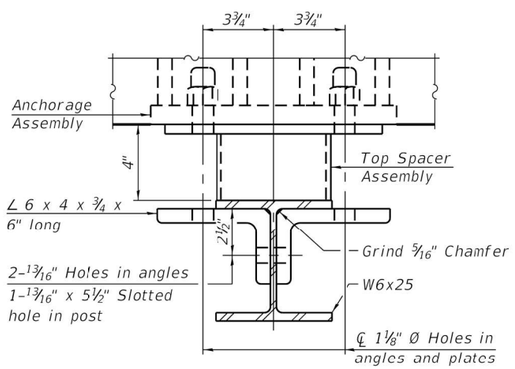

SECTION C-C

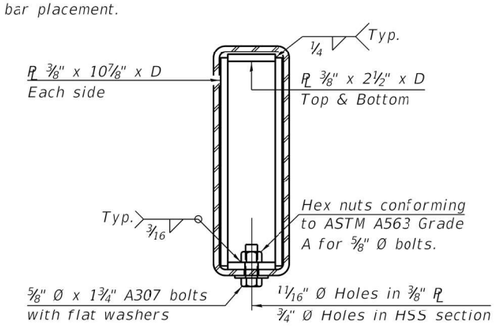

SECTION AT RAIL SPLICE

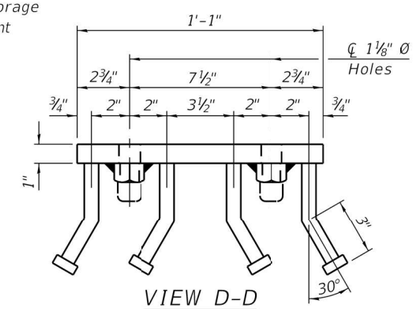

VIEW D-D

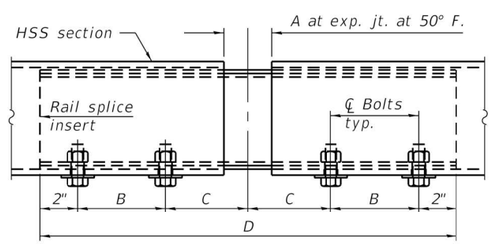

RAIL SPLICE ELEVATION

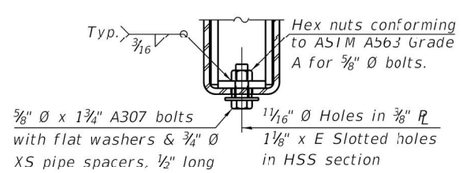

RAIL SPLICE CONNECTION AT EXPANSION JT.

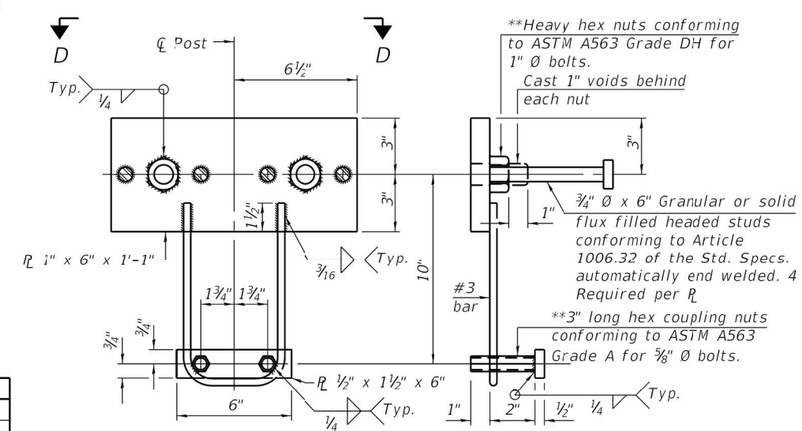

ANCHORAGE ASSEMBLY

** Threaded areas shall be plugged or blocked off during casting of concrete.

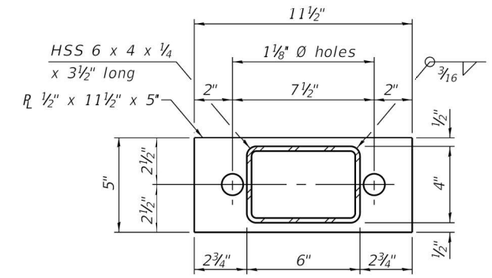

TOP SPACER ASSEMBLY

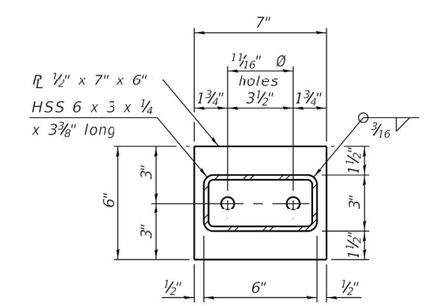

BOTTOM SPACER ASSEMBLY

RAILING CRITERIA

NCHRP 350 Test Level	2
Railing Weight (plf)	50
Max Post Spacing	10'-9"
HMA thickness range (in)	1¼ - 3⅛

SPLICE DIMENSIONS

Location	T	A	B	C	D	E
All locs. not over exp. jts.	0	¼"	4"	4"	1'-8"	-
Over Strip Seal Jt.	≤4"	2½"	4⅝"	4⅜"	1'-10"	3 1/16"
Over Finger or Modular Jt.	≤9½"	5½"	7⅜"	7¼"	2'-9¼"	5 13/16"
Over Finger or Modular Jt.	≤15"	8¼"	10⅛"	10"	3'-8¼"	8 9/16"

T = ; total movement along centerline of roadway at expansion joint.

BILL OF MATERIAL

Item	Unit	Quantity
Steel Railing, Type S1	Foot	92

R-23A 10-12-2021

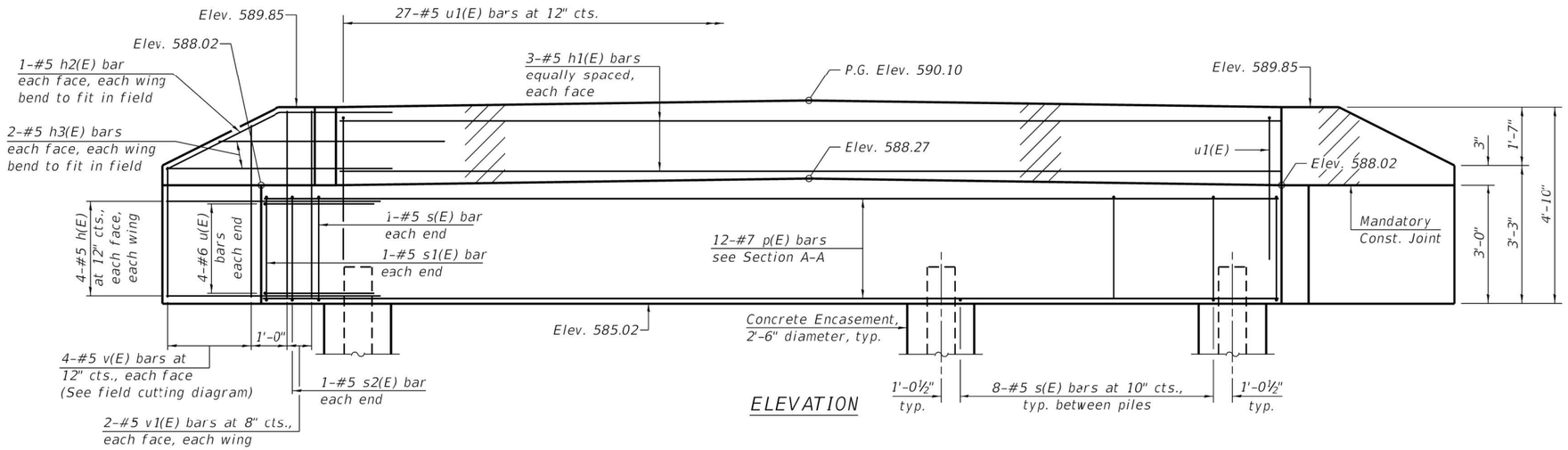

ELEVATION

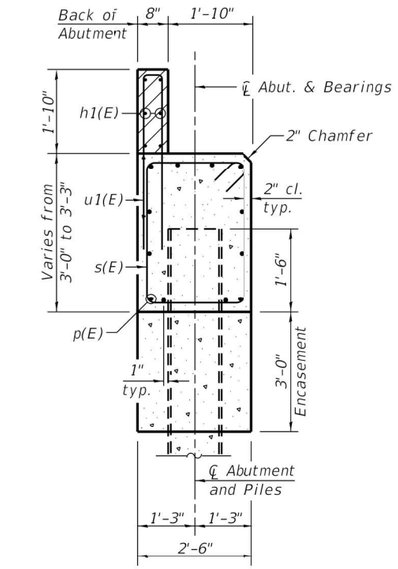

SECTION A-A

(Dimensions are at Right Angles to Abutment)

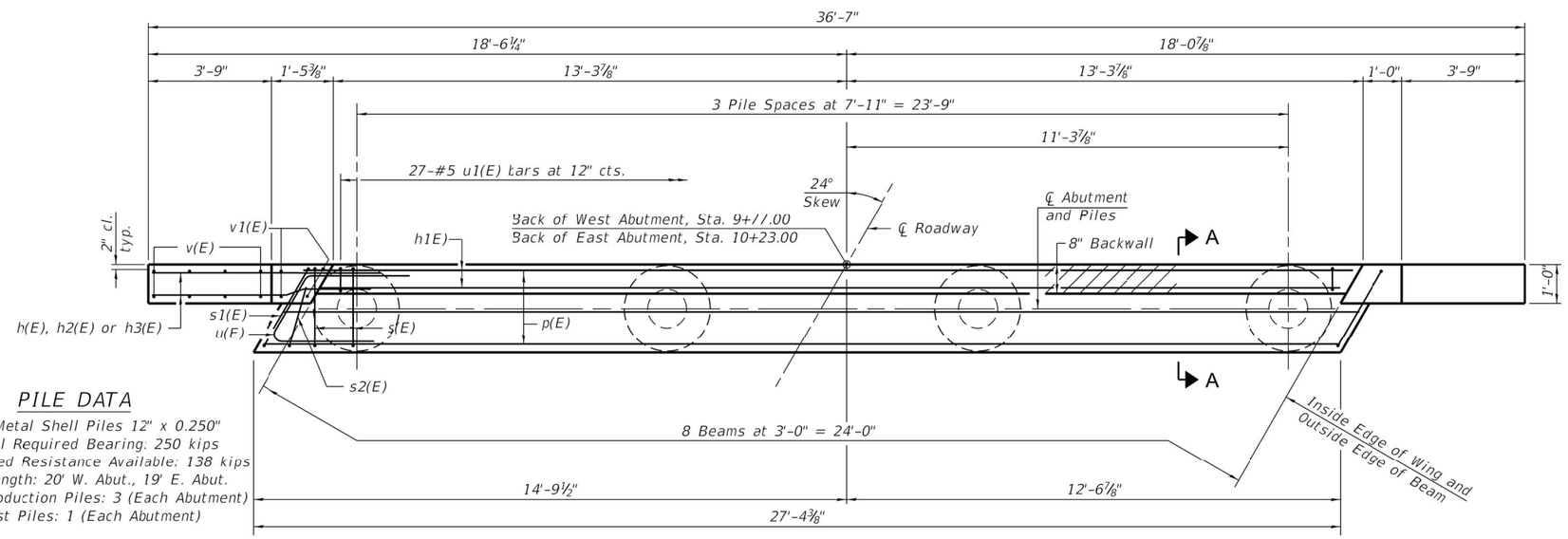

PLAN

PILE DATA

Type: Metal Shell Piles 12" x 0.250"
Nominal Required Bearing: 250 kips
Factored Resistance Available: 138 kips
Est. Length: 20' W. Abut., 19' E. Abut.
No. Production Piles: 3 (Each Abutment)
No. Test Piles: 1 (Each Abutment)

BILL OF MATERIAL (2 ABUTMENTS)

Bar	No.	Size	Length	Shape
h(E)	32	#5	7'-8"	
h1(E)	12	#5	26'-3"	
h2(E)	8	#5	7'-5"	
h3(E)	16	#5	6'-1"	
p(E)	24	#7	27'-0"	
s(E)	52	#5	10'-7"	
s1(E)	4	#5	11'-0"	
s2(E)	4	#5	7'-1"	
u(E)	16	#6	10'-11"	
u1(E)	54	#5	6'-10"	
v(E)	16	#5	7'-2"	
v1(E)	16	#5	4'-6"	
Structure Excavation		Cu. Yd.	68*	
Concrete Structures		Cu. Yd.	21.0	
Reinforcement Bars, Epoxy Coated		Pound	3,570	
Furn - Metal Shell Piles, 12" x 0.250"		Foot	117	
Driving Piles		Foot	117	
Test Pile Metal Shells		Each	2	
Concrete Encasement		Cu. Yd.	4.4	

* 32 Cu. Yd. West Abut.
36 Cu. Yd. East Abut.

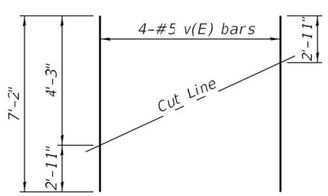

FIELD CUTTING DIAGRAM

Order v(E) bars full length. Cut as shown and use remainder of bars in opposite wing.

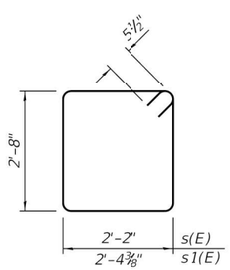

BARS s(E) & s1(E)

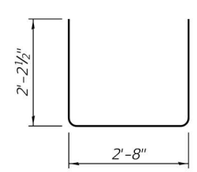

BAR s2(E)

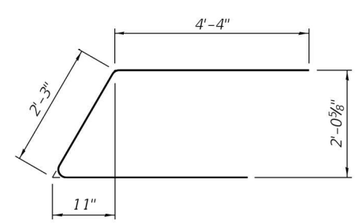

BAR u(E)

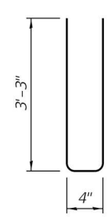

BAR u1(E)

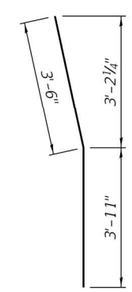

BAR h2(E)

Notes:
For details of Piles and Concrete Encasement, see sheet 8 of 9.
Cast Backwall and Top 1'-10" of Wingwalls (hatched area) after Beams have been erected.

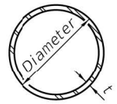

METAL SHELL PILE TABLE

Designation and outside diameter	Wall thickness t	Weight per foot (Lbs./ft.)	Inside volume (yd.³/ft.)
PP12	0.250"	31.40	0.0267
PP14	0.250"	36.75	0.0368
PP14	0.312"	45.65	0.0361
PP16	0.312"	52.32	0.0478
PP16	0.375"	62.64	0.0470

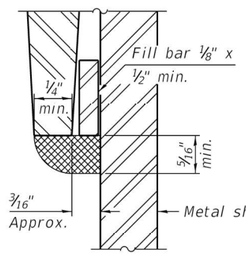

DETAIL A

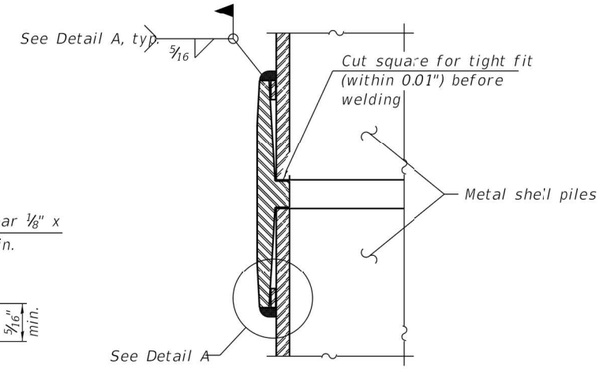

WELDED COMMERCIAL SPLICE

Notes:
The 1/8" x 1/2" min. fill bar may be constructed of 2 bars with a 1/8" max. gap between them.
Pile segments shall be driven to solid contact with splicer before welding.

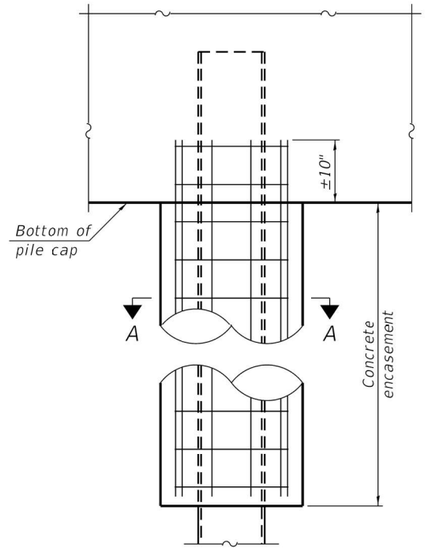

ELEVATION

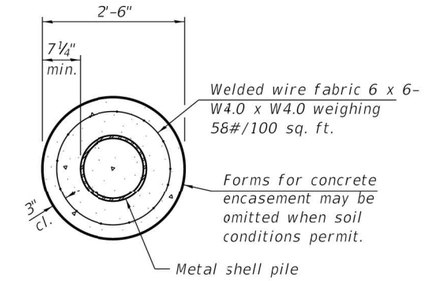

SECTION A-A

INDIVIDUAL PILE CONCRETE ENCASEMENT

(When specified)

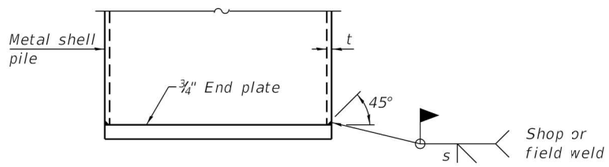

s = t - 1/8"

END PLATE ATTACHMENT

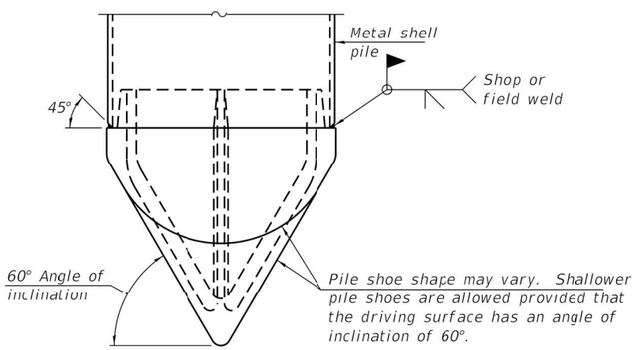

PILE SHOE ATTACHMENT

(When called for on the plans, the Contractor shall furnish metal shell pile shoes consisting of a single piece conical pile point as shown. The pile shoes shall be cast in one piece steel according to either ASTM A 148 Grade 80-50 or AASHTO M 103 Grade 65-35 and shall provide full bearing over the full circumference of the metal shell pile. The pile shoe shall have tapered leads to assure proper alignment and fitting and shall be secured to the pile with a circumferential weld).

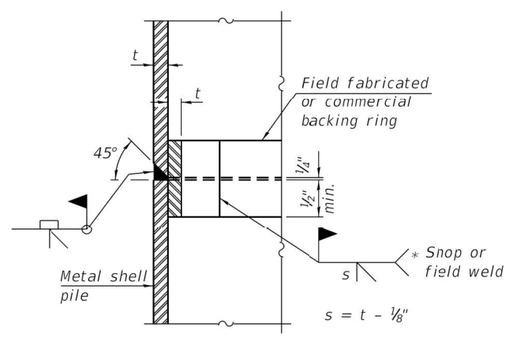

s = t - 1/8"

COMPLETE PENETRATION WELD SPLICE

* Field fabricated backing ring may be made from pile shell by removing segment to allow reducing circumference and vertically rejoin with partial joint penetration weld.

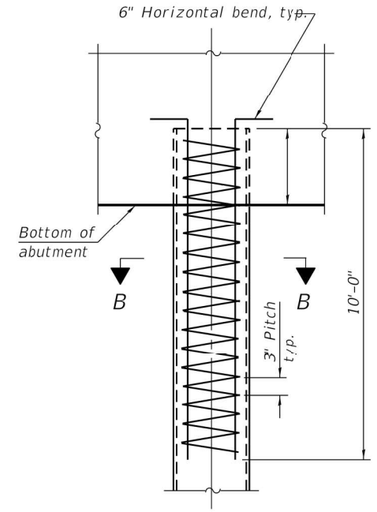

ELEVATION

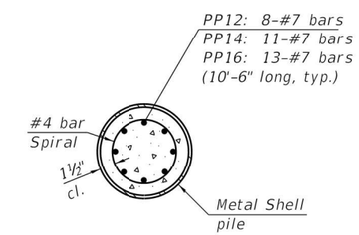

SECTION B-B

REINFORCEMENT AT ABUTMENTS

(Omit when concrete encasement is specified)

Note:
The metal shell piles shall be according to Article 1006.05 of the Standard Specifications.

F-MS 5-15-2023

VEENSTRA & KIMM INC.
Springfield, IL. Phone: (217)544-8033
IL. Design Firm No. 184-001939

USER NAME =	DESIGNED - DHC	REVISED -	
	CHECKED - MAH	REVISED -	
PLOT SCALE =	DRAWN - JEB	REVISED -	
PLOT DATE = 9/25/2025	CHECKED - MAH	REVISED -	

STATE OF ILLINOIS
DEPARTMENT OF TRANSPORTATION
DEPARTMENT OF NATURAL RESOURCES

METAL SHELL PILE DETAILS
STRUCTURE No. 049-0400

SHEET 8 OF 9 SHEETS

RTE.	SECTION	COUNTY	TOTAL SHEETS	SHEET NO.
17th St	ILLINOIS BEACH 2025	LAKE	21	16
		CONTRACT No. 46943		
		ILLINOIS FED. AID PROJECT		

MODEL: Default
FILE NAME: \\kspr-fs1\sprshare\07000\0702-DOT-IDNR-Park-Roads\0702-0001-0004_PT3207_055_WO4_Camp_Logan_Lake_Co_Design_and_Planning\CADD\CAD Sheets_Structure Plans\D146943-sht 016_0490400-008-Pile Sheet.dgn
9/25/2025 2:24:31 PM

Illinois Department of Transportation
Division of Highways

SOIL BORING LOG

Page 1 of 1

Date 7/1/24

ROUTE _____ DESCRIPTION Camp Logan Beach Bridge Replacement LOGGED BY KEG

SECTION _____ LOCATION East Abutment

COUNTY Lake DRILLING METHOD HSA HAMMER TYPE AUTO

STRUCT. NO. _____
Station _____

BORING NO. B-1
Station _____
Offset _____
Ground Surface Elev. _____ ft

Surface Water Elev. _____ ft
Stream Bed Elev. _____ ft

Groundwater Elev.:
First Encounter _____ ft ▼
Upon Completion _____ ft
After ____ Hrs. _____ ft

Description	DEPTH (ft)	BLOWS (/6")	UCS Qu (tsf)	MOIST (%)
ASPHALT - 3"				
BASE AGGREGATE - 6"				
SILTY CLAY - Brown, Medium Stiff, w/ Gravel		11		
		8	2.8	11
		5	P	
SAND - Brown, Medium Dense, Medium Coarse, w/ Black Peat Seams		3		
		4		26
	-5	5		
becomes brownish gray, wet %Sand = 96.3, %Silt = 2.0, %Clay = 1.7 ▼		6		
		3		28
		4		
		4		
		4		28
	-10	4		
		3		
		2		23
		3		
becomes gray		4		
		14		22
	-15	22		
		8		
		13		27
		25		
		20		
		16		22
	-20	23		

Description	DEPTH (ft)	BLOWS (/6")	UCS Qu (tsf)	MOIST (%)
SAND - Brown, Medium Dense, Medium Coarse, w/ Black Peat Seams *(continued)* becomes dark gray and fine to medium coarse		9		
		11		29
		16		
		14		
		31	>4.5	16
SILTY CLAY LOAM TILL - Hard, wet	-25	50/5.5"	P	
		16		
		40	2.5	17
		50/3"	P	
w/ sand seams		23		
		37	2.5	11
	-30	50/4"	P	
End of Boring				
	-35			
	-40			

The Unconfined Compressive Strength (UCS) Failure Mode is indicated by (B-Bulge, S-Shear, P-Penetrometer)
The SPT (N value) is the sum of the last two blow values in each sampling zone (AASHTO T206)

BBS, form 137 (Rev. 8-99)

Illinois Department of Transportation
Division of Highways

SOIL BORING LOG

Page 1 of 1

Date 7/1/24

ROUTE _____ DESCRIPTION Camp Logan Beach Bridge Replacement LOGGED BY KEG

SECTION _____ LOCATION West Abutment

COUNTY Lake DRILLING METHOD HSA HAMMER TYPE AUTO

STRUCT. NO. _____
Station _____

BORING NO. B-2
Station _____
Offset _____
Ground Surface Elev. _____ ft

Surface Water Elev. _____ ft
Stream Bed Elev. _____ ft

Groundwater Elev.:
First Encounter _____ ft ▼
Upon Completion _____ ft
After ____ Hrs. _____ ft

Description	DEPTH (ft)	BLOWS (/6")	UCS Qu (tsf)	MOIST (%)
ASPHALT - 3"				
SILTY CLAY - Brown, Hard		21		
		8	>4.5	12
		6	P	
SAND - Brown, Loose, Poorly Graded		2		
PEAT		2	-	43
SAND - Gray, Dense, Medium Coarse, Poorly Graded	-5	2		
▼ becomes wet		4		
		3	-	26
		7		
		10		
		9	-	20
	-10	14		
		11		
		11	-	23
		14		
		4		
		11	-	26
	-15	14		
		21		
%Gravel = 9.0, %Sand = 85.8, %Silt = 3.4, %Clay = 1.7 becomes coarse		29	-	14
		35		
becomes very fine		8		
		14	-	22
	-20	15		

Description	DEPTH (ft)	BLOWS (/6")	UCS Qu (tsf)	MOIST (%)
SAND - Gray, Dense, Medium Coarse, Poorly Graded *(continued)*				
SILTY CLAY LOAM TILL - Gray, Stiff LL = 20, PL = 12, PI = 8		11		
		10	>4.5	19
		24	P	
becomes saturated		12		
		24	1.5	12
	-25	30	P	
		19		
		19	1.5	19
		25	P	
		11		
		16	1.5	19
	-30	21	P	
End of Boring				
	-35			
	-40			

The Unconfined Compressive Strength (UCS) Failure Mode is indicated by (B-Bulge, S-Shear, P-Penetrometer)
The SPT (N value) is the sum of the last two blow values in each sampling zone (AASHTO T206)

BBS, form 137 (Rev. 8-99)

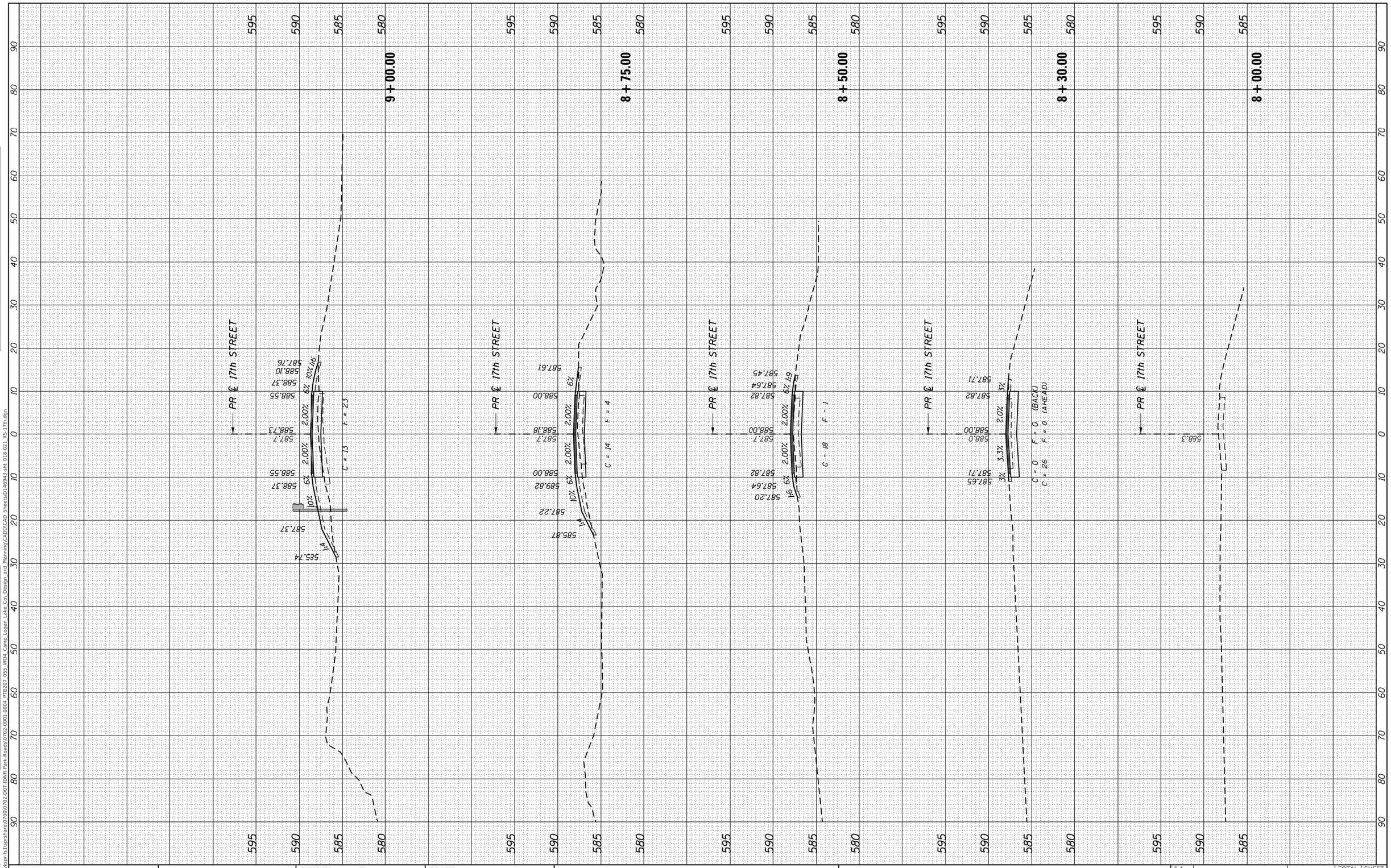

FINAL SURVEY	BY	DATE
SURVEYED		
PLOTTED		
TEMPLATE		
AREAS		
AREAS CHECKED		
NOTE BOOK		
NO.		

ORIGINAL SURVEY	BY	DATE
SURVEYED		
PLOTTED		
TEMPLATE		
AREAS		
AREAS CHECKED		
NOTE BOOK		
NO.		

MODEL: Default
FILE NAME: \\vkspr-fs1\sprshare\0700\0702-DOT-IDNR-Park-Roads\0702-0001-0004 PTB207 055 WO4 Camp Logan Lake Col Design and Planning\CADD\CAD Sheets\D146943-sht 018-021 XS-17th.dgn

VEENSTRA & KIMM INC.
Springfield, IL. Phone: (217)544-8033
IL. Design Firm No. 184-001939

USER NAME = jbegue	DESIGNED - JEB	REVISED -
	DRAWN - JEB	REVISED -
PLOT SCALE = 20.0000 ' / in.	CHECKED - RHD	REVISED -
PLOT DATE = 9/25/2025	DATE - 9/25/2025	REVISED -

STATE OF ILLINOIS
DEPARTMENT OF TRANSPORTATION

CROSS SECTIONS – 17th STREET

SCALE: | SHEET OF SHEETS | STA. 8+00.00 TO STA. 9+00.00

F.A. RTE.	SECTION	COUNTY	TOTAL SHEETS	SHEET NO.
	ILLINOIS BEACH 2025	LAKE	21	18

CONTRACT NO. 46943

ILLINOIS | FED. AID PROJECT

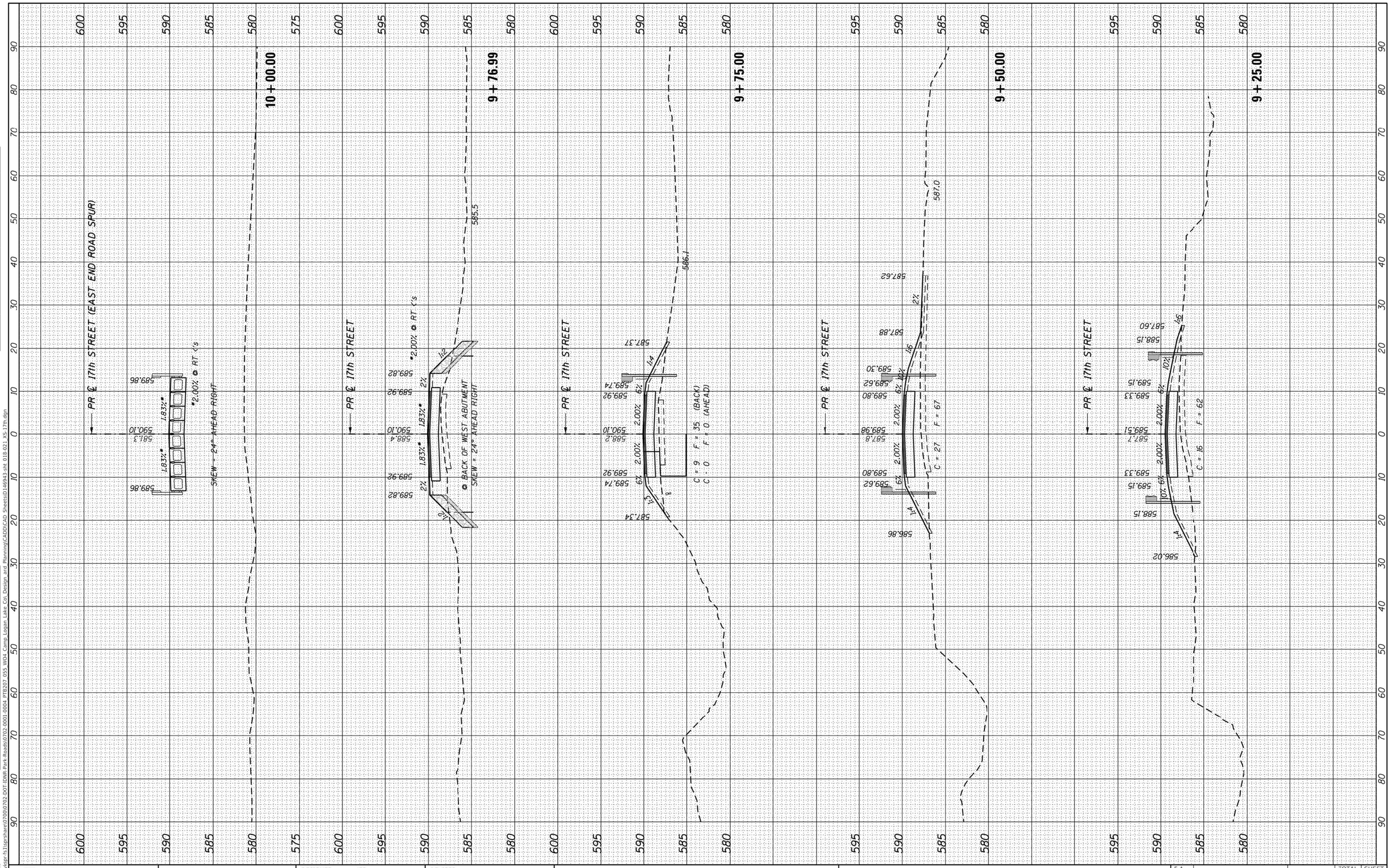

FINAL SURVEY		BY	DATE
NOTE BOOK	SURVEYED		
	PLOTTED		
	TEMPLATE		
	AREAS		
	AREAS CHECKED		
NO.			

ORIGINAL SURVEY		BY	DATE
NOTE BOOK	SURVEYED		
	PLOTTED		
	TEMPLATE		
	AREAS		
	AREAS CHECKED		
NO.			

MODEL: Default
FILE NAME: \\vksprfs1\sprshare\0700\0702-DOT-IDNR-Park-Roads\0702-0001-0004-PTB207-055-W04-Camp Logan Lake Co\-Design and Planning\CADD\CAD Sheets\D146943-sht 018-021-XS-17th.dgn

VEENSTRA & KIMM INC.
Springfield, IL. Phone: (217)544-8033
IL. Design Firm No. 184-001939

USER NAME = jbegue	DESIGNED - JEB	REVISED -
	DRAWN - JEB	REVISED -
PLOT SCALE = 20.0000 ' / in.	CHECKED - RHD	REVISED -
PLOT DATE = 9/25/2025	DATE - 9/25/2025	REVISED -

STATE OF ILLINOIS
DEPARTMENT OF TRANSPORTATION

CROSS SECTIONS – 17th STREET

SCALE: | SHEET OF SHEETS | STA. 9+25.00 | TO STA. 10+00.00

F.A. RTE.	SECTION	COUNTY	TOTAL SHEETS	SHEET NO.
	ILLINOIS BEACH 2025	LAKE	21	19
		CONTRACT NO. 46943		
		ILLINOIS FED. AID PROJECT		

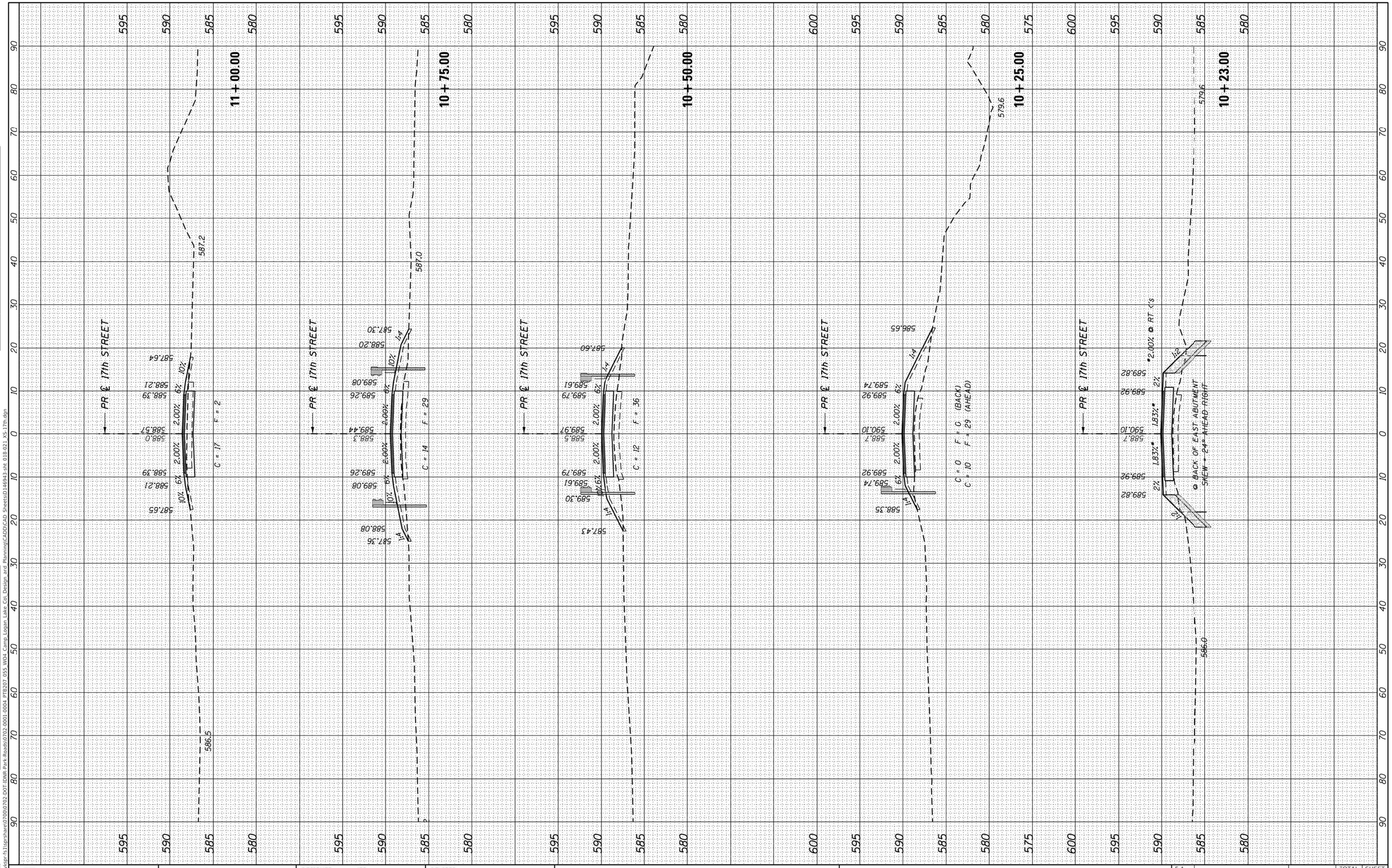

FINAL SURVEY		BY	DATE
NOTE BOOK	SURVEYED		
	PLOTTED		
	TEMPLATE		
	AREAS		
NO.	AREAS CHECKED		

ORIGINAL SURVEY		BY	DATE
NOTE BOOK	SURVEYED		
	PLOTTED		
	TEMPLATE		
	AREAS		
NO.	AREAS CHECKED		

MODEL: Default
FILE NAME: \\vksprfs1\sprshare\0700\0702-DOT-IDNR-Park-Roads\0702-0001-0004 PTB207 055 WO4 Camp Logan Lake Col. Design and Planning\CADD\CAD Sheets\D146943-sht 018-021 XS-17th.dgn

VEENSTRA & KIMM INC.
Springfield, IL. Phone: (217)544-8033
IL. Design Firm No. 184-001939

USER NAME = jbegue	DESIGNED - JEB	REVISED -	
	DRAWN - JEB	REVISED -	
PLOT SCALE = 20.0000 ' / in.	CHECKED - RHD	REVISED -	
PLOT DATE = 9/25/2025	DATE - 9/25/2025	REVISED -	

STATE OF ILLINOIS
DEPARTMENT OF TRANSPORTATION

CROSS SECTIONS – 17th STREET

SCALE: | SHEET OF SHEETS | STA. 10+23.00 | TO STA. 11+00.00

F.A. RTE.	SECTION	COUNTY	TOTAL SHEETS	SHEET NO.
	ILLINOIS BEACH 2025	LAKE	21	20
		CONTRACT NO. 46943		
	ILLINOIS	FED. AID PROJECT		

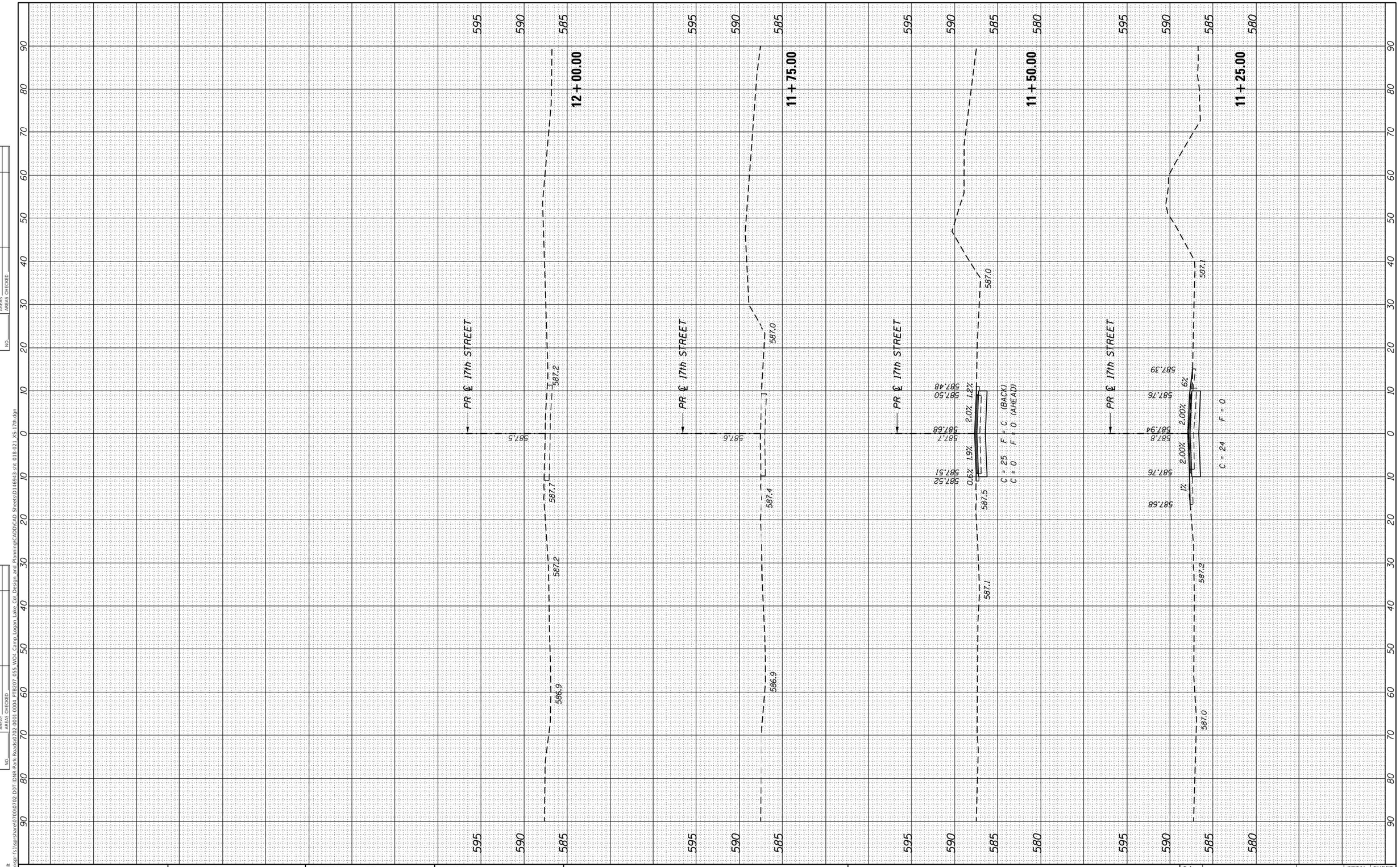

FINAL SURVEY		BY	DATE
NOTE BOOK	SURVEYED		
	PLOTTED		
	TEMPLATE		
	AREAS		
NO.	AREAS CHECKED		

ORIGINAL SURVEY		BY	DATE
NOTE BOOK	SURVEYED		
	PLOTTED		
	TEMPLATE		
	AREAS		
NO.	AREAS CHECKED		

MODEL: Default
FILE NAME: \\vkspr-fs1\sprshare\0700\0702-DOT:IDNR-Park-Roads\0702-0001-0004 PTB207 055 WO4 Camp Logan Lake Co\ Design and Planning\CADD\CAD Sheets\D146943-sht 018-021 XS-17th.dgn

USER NAME = jbegue	DESIGNED - JEB	REVISED -
	DRAWN - JEB	REVISED -
PLOT SCALE = 20.0000 ' / in.	CHECKED - RHD	REVISED -
PLOT DATE = 9/25/2025	DATE - 9/25/2025	REVISED -

STATE OF ILLINOIS
DEPARTMENT OF TRANSPORTATION

CROSS SECTIONS – 17th STREET

SCALE: | SHEET OF SHEETS | STA. 11+25.00 TO STA. 12+00.00

F.A. RTE.	SECTION	COUNTY	TOTAL SHEETS	SHEET NO.
	ILLINOIS BEACH 2025	LAKE	21	21
		CONTRACT NO. 46943		
	ILLINOIS	FED. AID PROJECT		