01-16-2026 LETTING ITEM 137

F.A.P. RTE.	SECTION	COUNTY	TOTAL SHEETS	SHEET NO.
726	127CR-1	FRANKLIN	42	1
		ILLINOIS	CONTRACT NO. 78A09	

FOR INDEX OF SHEETS, SEE SHEET NO. 3
FOR SUMMARY OF QUANTITIES, SEE SHEET NO. 4–9

STATE OF ILLINOIS
DEPARTMENT OF TRANSPORTATION

PROPOSED HIGHWAY PLANS

FAP ROUTE 726 (IL 148)
SECTION 127CR–1
PROJECT NHPP–R0GN(683)
CULVERT REPLACEMENT
OVER DRAINAGE DITCH (NORTH OF 11TH ST)
FRANKLIN COUNTY
C–99–058–23

D–99–042–23

LOCATION OF SECTION INDICATED THUS:–

TRAFFIC DATA

FUNCTIONAL CLASSIFICATION:	OTHER PRINCIPAL ARTERIAL
ADT:	4,490 (2024)
PV:	94.9%
TRUCKS:	5.1%
DESIGN SPEED:	30 MPH
POSTED SPEED:	30 MPH

TOWNSHIP

TYRONE

DESIGN DESIGNATION: N/A

COORDINATE SYSTEM: NAD 1983 STATE PLANE ILLINOIS EAST FIPS 1201 FEET (HORIZONTAL) NAVD88 (VERTICAL)

R1E, 3RD PM

T6S

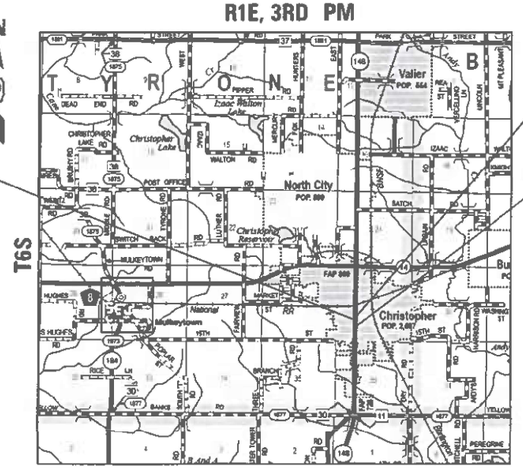

EXISTING STRUCTURE NO. 028-7900
STATION 991+80+00
PROPOSED STRUCTURE NO. 028-7138
STATION 991+81.00
OVER DRAINAGE DITCH
11' X 2' BOX CULVERT

IL 148
IMPROVEMENTS END
STA. 993+00.00

IL 148
IMPROVEMENTS BEGIN
STA. 990+21.00

LOCATION MAP

GROSS LENGTH = 262.00 FT = 0.05 MILES
NET LENGTH = 262.00 FT = 0.05 MILES

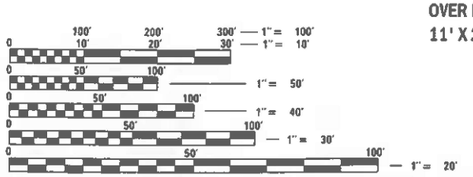

FULL SIZE PLANS HAVE BEEN PREPARED USING STANDARD ENGINEERING SCALES. REDUCED SIZED PLANS WILL NOT CONFORM TO STANDARD SCALES. IN MAKING MEASUREMENTS ON REDUCED PLANS, THE ABOVE SCALES MAY BE USED.

J.U.L.I.E.
JOINT UTILITY LOCATION INFORMATION FOR EXCAVATION
1–800–892–0123
OR 811

PROJECT ENGINEER : EHREN KIRBY (618) 351–5227
PROJECT DESIGNER : PATRICK ENGINEERING INC.

PATRICK
a RIS company

CONTRACT NO. 78A09

PATRICK ENGINEERING, INC.
LICENSED PROFESSIONAL ENGINEER
KENNETH ENG
062-048871
STATE OF ILLINOIS

KENNETH ENG, P.E.
NO. 062–048871
EXP. DATE: 11/30/27
APPLY TO DRAWINGS: 1–42

STATE OF ILLINOIS
DEPARTMENT OF TRANSPORTATION

SUBMITTED Oct 15, 2025
Zora S. Rensing
REGIONAL ENGINEER

December 5, 20 25
ENGINEER OF DESIGN AND ENVIRONMENT

December 5, 20 25
DIRECTOR OF HIGHWAYS PROJECT IMPLEMENTATION

PRINTED BY THE AUTHORITY OF THE STATE OF ILLINOIS

Prepared By: Susan Rue
DISTRICT STUDIES & PLANS ENGINEER

Examined By: Nancy Lee
DISTRICT LAND ACQUISITION ENGINEER

Examined By: Cor Nela
DISTRICT PROGRAM DEVELOPMENT ENGINEER

Examined By: R C
DISTRICT OPERATIONS ENGINEER

Examined By:
DISTRICT PROJECT IMPLEMENTATION ENGINEER

Examined By: Ben Wilds
DISTRICT CONSTRUCTION ENGINEER

Examined By: Aaron Wage
DISTRICT MATERIALS ENGINEER

MODEL: Sheet
FILE NAME: pw://patrickco-pw.bentley.com:patrickco-pw-01/Documents/IL_CE/25PTRTM005_IL148_PH2/CADData/CADsheets/D978A09-Sht-signatures.dgn

PATRICK ENGINEERING INC.
55 EAST MONROE STREET
SUITE 3450
CHICAGO IL 60603
www.rina-us.org
Design Firm License No. 184-000-002-01

USER NAME = DT004	DESIGNED - DT	REVISED -	
	DRAWN - DT	REVISED -	
	CHECKED - KE	REVISED -	
PLOT DATE = 10/8/2025	DATE - 10/8/2025	REVISED -	

STATE OF ILLINOIS
DEPARTMENT OF TRANSPORTATION

SIGNATURE SHEET
ILLINOIS ROUTE 148

SCALE: SHEET OF SHEETS STA. TO STA.

F.A.P. RTE.	SECTION	COUNTY	TOTAL SHEETS	SHEET NO.
T26	127CR-1	FRANKLIN	42	2
		CONTRACT NO. 78A09		
		ILLINOIS FED. AID PROJECT		

INDEX OF SHEETS

IDOT HIGHWAY STANDARDS

000001-09	STANDARD SYMBOLS, ABBREVIATIONS AND PATTERNS
001001-02	AREAS OF REINFORCEMENT BARS
001006	DECIMAL OF AN INCH AND A FOOT
280001-07	TEMPORARY EROSION CONTROL SYSTEMS
420001-11	PAVEMENT JOINTS
420701-03	PAVEMENT WELDED WIRE REINFORCEMENT
424026-04	ENTRANCE / ALLEY PEDESTRIAN CROSSINGS
442201-04	CLASS C AND D PATCHES
602001-02	CATCH BASIN TYPE A
602306-03	INLET - TYPE B
602701-02	MANHOLE STEPS
604001-05	FRAME AND LIDS, TYPE 1
604051-04	FRAME AND GRATE, TYPE 11
604066-02	FRAME AND LID, TYPE 15
606001-09	CONCRETE CURB TYPE B AND COMBINATION CONCRETE CURB AND GUTTER
701006-05	OFF-RD OPERATIONS, 2L, 2W, 15' (4.5 m) TO 24" (600 mm) FROM PAVEMENT EDGE
701301-04	LANE CLOSURE, 2L 2W, SHORT TIME OPERATIONS
701501-06	URBAN LANE CLOSURE, 2L, 2W, UNDIVIDED
701801-06	SIDEWALK CORNER OR CROSSWALK CLOSURE
701901-11	TRAFFIC CONTROL DEVICES
704001-08	TEMPORARY CONCRETE BARRIER
780001-05	TYPICAL PAVEMENT MARKINGS

GENERAL NOTES

1. FACTORS USED FOR ESTIMATING PLAN QUANTITIES ARE AS FOLLOWS AND SHALL NOT BE USED FOR THE BASIS OF FINAL QUANTITIES:

ALL HOT MIX ASPHALT	2.016 TONS/CU. YD.
ALL AGGREGATE	2.05 TONS/CU. YD.
RIPRAP	1.50 TONS/CU. YD.
EARTH	110 LBS/CU. FT.

2. TRENCH BACKFILL REQUIRED FOR STORM SEWER, SANITARY SEWER, OR WATER MAINS SHALL ONLY BE PLACED UP TO ONE FOOT BELOW THE FINAL GRADE IN AREAS HAVING A PROPOSED GRASS OR SOD SURFACE.

3. CONNECTING OF NEW OR EXISTING STORM SEWER TO NEW OR EXISTING INLETS OR MANHOLES SHALL BE MADE IN A MANNER WHICH RESULTS IN A NEAT AND WATERTIGHT JOINT. WHEN PLACED THROUGH THE WALL OF AN INLET OR MANHOLE, STORM SEWER PIPE SHALL BE PLACED OR CUT FLUSH WITH THE FACE OF THE WALL AND DRESSED WITH MORTAR TO PROVIDE A SMOOTH ROUNDED OR BEVELED EDGE. THIS WORK WILL NOT BE PAID FOR SEPARATELY, BUT SHALL BE CONSIDERED AS INCLUDED IN THE CONTRACT UNIT PRICES OF THE STORM SEWERS OR STRUCTURES INVOLVED.

COMMITMENTS

1. NONE

REV - MS

CODE NO.	ITEM	UNIT	TOTAL QUANTITY	80% FED / 20% STATE BOX CULVERT: SN 028-7138 0004 URBAN
20200100	EARTH EXCAVATION	CU YD	68	68
20400800	FURNISHED EXCAVATION	CU YD	18	18
20700220	POROUS GRANULAR EMBANKMENT	CU YD	272	272
20800150	TRENCH BACKFILL	CU YD	35	35
25000200	SEEDING, CLASS 2	ACRE	0.1	0.1
25000350	SEEDING, CLASS 7	ACRE	0.1	0.1
25000400	NITROGEN FERTILIZER NUTRIENT	POUND	7.5	7.5
25000500	PHOSPHORUS FERTILIZER NUTRIENT	POUND	7.5	7.5
25000600	POTASSIUM FERTILIZER NUTRIENT	POUND	7.5	7.5
25000700	AGRICULTURAL GROUND LIMESTONE	TON	0.2	0.2
25100630	EROSION CONTROL BLANKET	SQ YD	459	459
28000250	TEMPORARY EROSION CONTROL SEEDING	POUND	8.3	8.3
28000400	PERIMETER EROSION BARRIER	FOOT	265	265
28000510	INLET FILTERS	EACH	9	9

REV - MS

CODE NO.	ITEM	UNIT	TOTAL QUANTITY	80% FED / 20% STATE BOX CULVERT: SN 028-7138 0004 URBAN
28100101	STONE RIPRAP, CLASS A1	SQ YD	36	36
28100107	STONE RIPRAP, CLASS A4	SQ YD	36	36
28200200	FILTER FABRIC	SQ YD	44	44
30300112	AGGREGATE SUBGRADE IMPROVEMENT 12"	SQ YD	90	90
42000060	WELDED WIRE REINFORCEMENT	SQ YD	71	71
42000400	PORTLAND CEMENT CONCRETE PAVEMENT 9"	SQ YD	71	71
42300200	PORTLAND CEMENT CONCRETE DRIVEWAY PAVEMENT, 6 INCH	SQ YD	48	48
42300300	PORTLAND CEMENT CONCRETE DRIVEWAY PAVEMENT, 7 INCH	SQ YD	135	135
42400200	PORTLAND CEMENT CONCRETE SIDEWALK 5 INCH	SQ FT	1045	1045
44000100	PAVEMENT REMOVAL	SQ YD	99	99
44000165	HOT-MIX ASPHALT SURFACE REMOVAL, 4"	SQ YD	88	88
44000200	DRIVEWAY PAVEMENT REMOVAL	SQ YD	112	112
44000300	CURB REMOVAL	FOOT	38	38
44000500	COMBINATION CURB AND GUTTER REMOVAL	FOOT	312	312

REV - MS

CODE NO.	ITEM	UNIT	TOTAL QUANTITY	80% FED / 20% STATE BOX CULVERT: SN 028-7138 0004 URBAN
44000600	SIDEWALK REMOVAL	SQ FT	833	833
44201345	CLASS C PATCHES, TYPE III, 9 INCH	SQ YD	43	43
50100100	REMOVAL OF EXISTING STRUCTURES	EACH	1	1
50800105	REINFORCEMENT BARS	POUND	4240	4240
52200020	TEMPORARY SOIL RETENTION SYSTEM	SQ FT	2397	2397
54001001	BOX CULVERT END SECTIONS, CULVERT NO. 1	EACH	1	1
54003000	CONCRETE BOX CULVERTS	CU YD	15	15
54010803	PRECAST CONCRETE BOX CULVERTS 8' X 3'	FOOT	120	120
54011102	PRECAST CONCRETE BOX CULVERTS 11' X 2'	FOOT	28	28
54248510	CONCRETE COLLAR	CU YD	2	2
550A0050	STORM SEWERS, CLASS A, TYPE 1 12"	FOOT	103	103
550A0070	STORM SEWERS, CLASS A, TYPE 1 15"	FOOT	28	28
550A0120	STORM SEWERS, CLASS A, TYPE 1 24"	FOOT	17	17
55100300	STORM SEWER REMOVAL 8"	FOOT	9	9

REV - MS

CODE NO.	ITEM	UNIT	TOTAL QUANTITY	80% FED / 20% STATE BOX CULVERT: SN 028-7138 0004 URBAN
55100500	STORM SEWER REMOVAL 12"	FOOT	51	51
55101200	STORM SEWER REMOVAL 24"	FOOT	27	27
59100100	GEOCOMPOSITE WALL DRAIN	SQ YD	227	227
60201105	CATCH BASINS, TYPE A, 4'-DIAMETER, TYPE 11 FRAME AND GRATE	EACH	2	2
60201305	CATCH BASINS, TYPE A, 4'-DIAMETER, TYPE 15 FRAME AND LID	EACH	2	2
60218400	MANHOLES, TYPE A, 4'-DIAMETER, TYPE 1 FRAME, CLOSED LID	EACH	1	1
60240310	INLETS, TYPE B, TYPE 11 FRAME AND GRATE	EACH	2	2
60500040	REMOVING MANHOLES	EACH	1	1
60500060	REMOVING INLETS	EACH	2	2
60600605	CONCRETE CURB, TYPE B	FOOT	69	69
60604400	COMBINATION CONCRETE CURB AND GUTTER, TYPE B-6.18	FOOT	312	312
* 66900200	NON-SPECIAL WASTE DISPOSAL	CU YD	292	292
* 66900530	SOIL DISPOSAL ANALYSIS	EACH	1	1
* 66901001	REGULATED SUBSTANCES PRE-CONSTRUCTION PLAN	L SUM	1	1
* 66901003	REGULATED SUBSTANCES FINAL CONSTRUCTION REPORT	L SUM	1	1

REV - MS

* SPECIALTY ITEM

MODEL: Sheet 4
FILE NAME: pw://patrickco-pw.bentley.com:patrickco-pw-07/Documents/IL_CE/25PTRTM005_IL148_PH2/CADData/CADsheets/D978A09-Sht-SOQ.dgn

PATRICK ENGINEERING INC.
55 EAST MONROE STREET
SUITE 3450
CHICAGO, IL 60603
www.rina-us.org
Design Firm License No. 184000409-0014

USER NAME = DT004	DESIGNED - DT	REVISED -	
	DRAWN - DT	REVISED -	
	CHECKED - KE	REVISED -	
PLOT DATE = 10/16/2025	DATE - 10/16/2025	REVISED -	

STATE OF ILLINOIS
DEPARTMENT OF TRANSPORTATION

SUMMARY OF QUANTITIES
ILLINOIS ROUTE 148

SCALE: | SHEET OF SHEETS | STA. TO STA.

F.A.P. RTE.	SECTION	COUNTY	TOTAL SHEETS	SHEET NO.
726	127CR-1	FRANKLIN	42	7

CONTRACT NO. 78A09

ILLINOIS | FED. AID PROJECT

	CODE NO.	ITEM	UNIT	TOTAL QUANTITY	80% FED / 20% STATE BOX CULVERT: SN 028-7138 0004 URBAN
*	66901006	REGULATED SUBSTANCES MONITORING	CAL DA	5	5
	67000400	ENGINEER'S FIELD OFFICE, TYPE A	CAL MO	6	6
	67100100	MOBILIZATION	L SUM	1	1
	70107025	CHANGEABLE MESSAGE SIGN	CAL DA	28	28
	70307120	TEMPORARY PAVEMENT MARKING - LINE 4" - TYPE IV TAPE	FOOT	1245	1245
	70400100	TEMPORARY CONCRETE BARRIER	FOOT	255	255
	70600241	IMPACT ATTENUATORS, TEMPORARY (NON- REDIRECTIVE, NARROW), TEST LEVEL 2	EACH	2	2
	72400200	REMOVE SIGN PANEL ASSEMBLY - TYPE B	EACH	1	1
*	78001110	PAINT PAVEMENT MARKING - LINE 4"	FOOT	830	830
	78300201	PAVEMENT MARKING REMOVAL - GRINDING	SQ FT	2075	2075
	X5012504	CONCRETE SLAB REMOVAL	SQ YD	75	75
	X5040150	PRECAST CONCRETE JUNCTION CHAMBER	EACH	2	2
	X5510011	PROPOSED STORM SEWER CONNECTION TO EXISTING MANHOLE	EACH	1	1
	X5810103	MEMBRANE WATERPROOFING SYSTEM FOR BURIED STRUCTURES	SQ YD	227	227

REV - MS

* SPECIALTY ITEM

CODE NO.	ITEM	UNIT	TOTAL QUANTITY	80% FED / 20% STATE BOX CULVERT: SN 028-7138 0004 URBAN
X7010216	TRAFFIC CONTROL AND PROTECTION, (SPECIAL)	L SUM	1	1
Z0013798	CONSTRUCTION LAYOUT	L SUM	1	1
Z0016702	DETOUR SIGNING	L SUM	1	1

REV - MS

MODEL: $MODELNAME$
FILE NAME: pw://patrickco-pw.bentley.com:patrickco-pw-07/Documents/IL_CE/25PTRTM005_IL148_PH2/CADData/CADsheets/D978A09-Sht-SOQ.dgn

PATRICK ENGINEERING INC.
55 EAST MONROE STREET
SUITE 3450
CHICAGO, IL 60603
www.fina-us.org
Design Firm License No. 184000494-0014

USER NAME = DT004	DESIGNED - DT	REVISED -	
	DRAWN - DT	REVISED -	
	CHECKED - KE	REVISED -	
PLOT DATE = 10/16/2025	DATE - 10/16/2025	REVISED -	

STATE OF ILLINOIS
DEPARTMENT OF TRANSPORTATION

SUMMARY OF QUANTITIES
ILLINOIS ROUTE 148

SCALE: SHEET OF SHEETS STA. TO STA.

F.A.P. RTE.	SECTION	COUNTY	TOTAL SHEETS	SHEET NO.
726	127CR-1	FRANKLIN	42	9
		CONTRACT NO. 78A09		
	ILLINOIS	FED. AID PROJECT		

CURB REMOVAL								
ALIGNMENT	SHEET NO.	STA. FROM	OFFSET	LT/RT	STA. TO	OFFSET	LT/RT	FOOT
IL-148	14	990+40.00	12.0	RT	990+57.20	21.2	RT	20
IL-148	14	990+90.50	23.5	RT	991+03.00	12.0	RT	18
							TOTAL	38

CONCRETE CURB, TYPE B								
ALIGNMENT	SHEET NO.	STA. FROM	OFFSET	LT/RT	STA. TO	OFFSET	LT/RT	FOOT
IL-148	15	990+40.00	12.0	RT	990+56.70	20.7	RT	19
IL-148	15	990+91.80	20.8	RT	991+03.00	12.0	RT	18
IL-148	15	992+37.90	12.7	RT	992+48.80	23.5	RT	16
IL-148	15	992+76.60	23.8	RT	992+87.70	13.1	RT	16
							TOTAL	69

COMBINATION CURB AND GUTTER REMOVAL								
ALIGNMENT	SHEET NO.	STA. FROM	OFFSET	LT/RT	STA. TO	OFFSET	LT/RT	FOOT
IL-148	14	990+21.00	12.0	RT	992+87.50	12.0	RT	267
IL-148	14	991+66.00	12.0	LT	992+11.00	12.0	LT	45
							TOTAL	312

COMBINATION CURB AND GUTTER, TYPE B-6.18								
ALIGNMENT	SHEET NO.	STA. FROM	OFFSET	LT/RT	STA. TO	OFFSET	LT/RT	FOOT
IL-148	15	990+21.00	12.0	RT	992+87.50	12.0	RT	267
IL-148	15	991+66.00	12.0	LT	992+11.00	12.0	LT	45
							TOTAL	312

SIDEWALK REMOVAL								
ALIGNMENT	SHEET NO.	STA. FROM	OFFSET	LT/RT	STA. TO	OFFSET	LT/RT	SQ FT
IL-148	14	990+25.00	21.6	RT	990+59.00	22.4	RT	130
IL-148	14	990+91.00	22.5	RT	993+00.00	23.8	RT	703
							TOTAL	833

PORTLAND CEMENT CONCRETE SIDEWALK 5 INCH								
ALIGNMENT	SHEET NO.	STA. FROM	OFFSET	LT/RT	STA. TO	OFFSET	LT/RT	SQ FT
IL-148	15	990+25.00	21.6	RT	990+56.80	20.7	RT	164
IL-148	15	990+91.80	20.8	RT	992+49.30	23.6	RT	785
IL-148	15	992+76.00	23.8	RT	993+00.00	23.8	RT	96
							TOTAL	1045

MODEL: Sheet
FILE NAME: pw://patrickco-pw.bentley.com:patrickco-pw-07/Documents/IL_CE/25PTRTM005_IL148_PH2/CADData/CADsheets/D978A09-Sht-schedule.dgn

PATRICK ENGINEERING INC.
55 EAST MONROE STREET
SUITE 3450
CHICAGO, IL 60603
www.fina-us.org
Design Firm License No. 184000494-0014

USER NAME = DT004	DESIGNED - JG	REVISED -	
	DRAWN - JG	REVISED -	
	CHECKED - SA	REVISED -	
PLOT DATE = 9/30/2025	DATE - 9/30/2025	REVISED -	

STATE OF ILLINOIS
DEPARTMENT OF TRANSPORTATION

SCHEDULE OF QUANTITIES
ILLINOIS ROUTE 148

SCALE: SHEET OF SHEETS STA. TO STA.

F.A.P. RTE.	SECTION	COUNTY	TOTAL SHEETS	SHEET NO.
726	127CR-1	FRANKLIN	42	10
		CONTRACT NO. 78A09		
	ILLINOIS	FED. AID PROJECT		

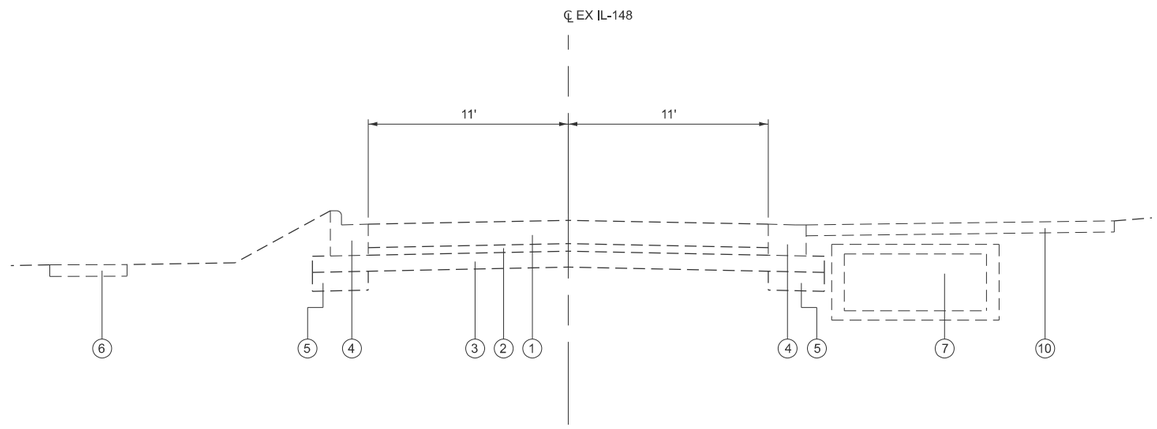

IL-148 EXISTING TYPICAL SECTION

STA. 990+26 TO STA. 991+72

EXISTING LEGEND

1. HMA OVERLAY WITH SURFACE COURSE & BINDER COURSE, 7"±
2. BRICK SURFACE COURSE, 3"±
3. PCC BASE COURSE, 5"±
4. CC&G, TYPE B, SPECIAL (6" FRONT CURB, 1'-7" BACK OF CURB)
5. SUBBASE GRANULAR MATERIAL, TYPE B, 6"
6. PCC SIDEWALK, 5"
7. 7.5' X 3' BOX CULVERT
8. 10' X 2' BOX CULVERT
9. PCC SLAB PAVEMENT, 8½" (WITH REINFORCEMENT)
10. PCC DRIVEWAY
11. MANHOLE
12. STORM SEWER, 24" DIA.
13. STORM SEWER, 12" DIA.
14. PARKING LOT

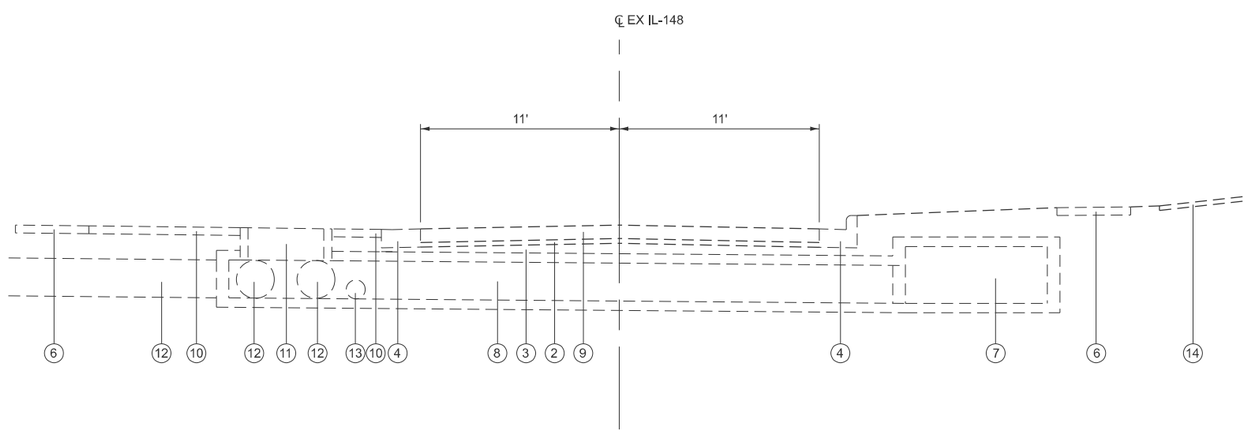

IL-148 EXISTING TYPICAL SECTION

STA. 991+72 TO STA. 991+88

MODEL: Existing Sheet
FILE NAME: pw://patrickco-pw.bentley.com:patrickco-pw-07/Documents/IL_CE/29PTRTM005_IL148_PH2/CADData/CADsheets/D978A09-Sht-typical.dgn

PATRICK ENGINEERING INC.
55 EAST MONROE STREET
SUITE 3450
CHICAGO, IL 60603
www.rina-us.org
Design Firm License No. 184000400-0014

USER NAME = DT004	DESIGNED - DT	REVISED -	
	DRAWN - DT	REVISED -	
	CHECKED - KE	REVISED -	
PLOT DATE = 10/8/2025	DATE - 10/8/2025	REVISED -	

STATE OF ILLINOIS
DEPARTMENT OF TRANSPORTATION

TYPICAL SECTIONS
ILLINOIS ROUTE 148

SCALE: 1"=20' | SHEET 1 OF SHEETS | STA. 988+50.00 TO STA. 994+50.00

F.A.P. RTE.	SECTION	COUNTY	TOTAL SHEETS	SHEET NO.
726	127CR-1	FRANKLIN	42	11

CONTRACT NO. 78A09

ILLINOIS | FED. AID PROJECT

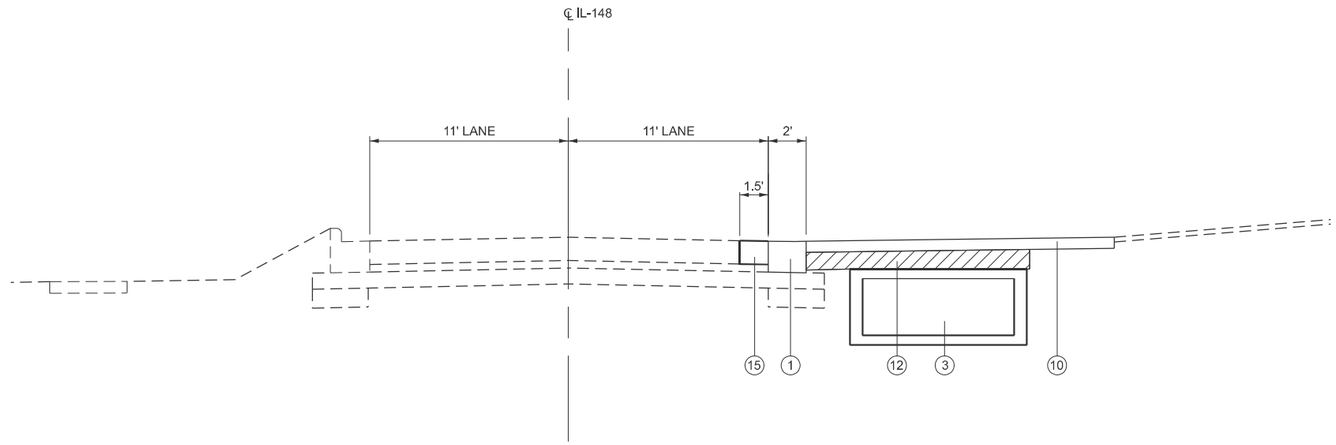

IL-148 PROPOSED TYPICAL SECTION

STA. 990+26 TO STA. 991+72

PROPOSED LEGEND

1. COMBINATION CONCRETE CURB AND GUTTER, TYPE B-6.18
2. SEEDING, CLASS 2 & SEEDING, CLASS 7
3. PRECAST CONCRETE BOX CULVERT, 8' X 3'
4. PORTLAND CEMENT CONCRETE SIDEWALK, 5"
5. PORTLAND CEMENT CONCRETE PAVEMENT, 9"
6. PRECAST CONCRETE BOX CULVERT, 11' X 2'
7. PRECAST CONCRETE JUNCTION CHAMBER
8. STORM SEWER, CLASS A, TYPE 1, 24"
9. PORTLAND CEMENT CONCRETE DRIVEWAY PAVEMENT, 6"
10. PORTLAND CEMENT CONCRETE DRIVEWAY PAVEMENT, 7"
11. AGGREGATE SUBGRADE IMPROVEMENT, 12"
12. POROUS GRANULAR EMBANKMENT
13. FURNISHED EXCAVATION
14. STORM SEWER, CLASS A, TYPE 1, 12" CONNECTION
15. CLASS C PATCH, TYPE III, 9"

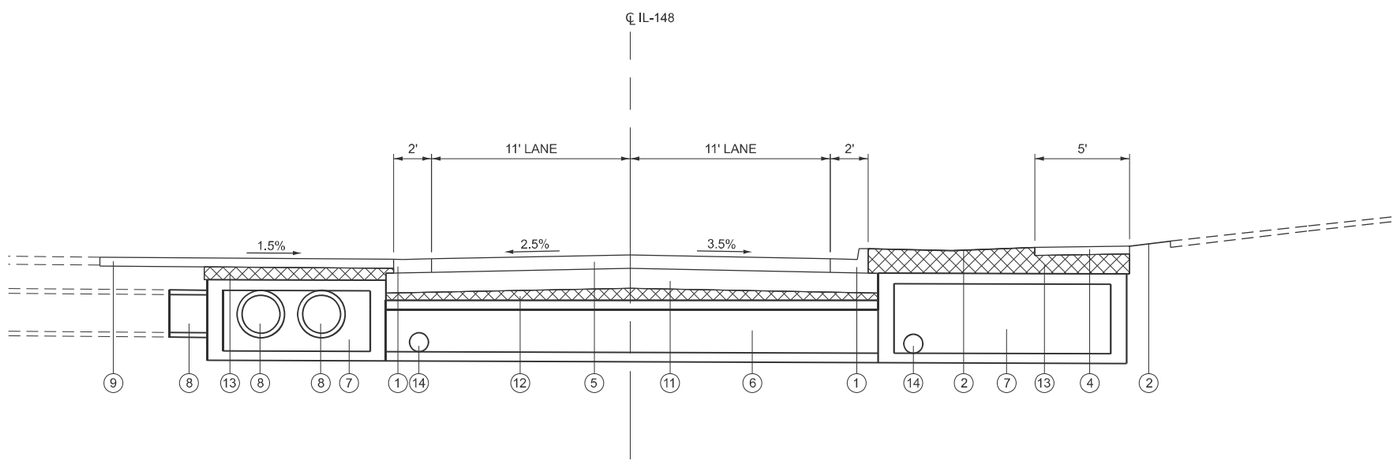

IL-148 PROPOSED TYPICAL SECTION

STA. 991+72 TO STA. 991+88

NOTE: CONTRACTOR SHALL USE EXTREME CARE WHEN WORKING NEAR EXISTING PARKING LOT. DAMAGES WILL BE ADDRESSED AT CONTRACTORS OWN EXPENSE.

MODEL: Proposed Sheet
FILE NAME: pw://patrickco-pw.bentley.com:patrickco-pw-07/Documents/IL_CE/29PTRTM005_IL148_PH2/CADData/CADsheets/D978A09-Sht-typical.dgn

PATRICK ENGINEERING INC.
55 EAST MONROE STREET
SUITE 3450
CHICAGO, IL 60603
www.rina-us.org
Design Firm License No. 184000400-0014

USER NAME = DT004	DESIGNED - DT	REVISED -	
	DRAWN - DT	REVISED -	
	CHECKED - KE	REVISED -	
PLOT DATE = 10/8/2025	DATE - 10/8/2025	REVISED -	

STATE OF ILLINOIS
DEPARTMENT OF TRANSPORTATION

TYPICAL SECTIONS
ILLINOIS ROUTE 148

SCALE: 1"=20' | SHEET 1 OF SHEETS | STA. 988+50.00 TO STA. 994+50.00

F.A.P. RTE.	SECTION	COUNTY	TOTAL SHEETS	SHEET NO.
726	127CR-1	FRANKLIN	42	12

CONTRACT NO. 78A09

ILLINOIS | FED. AID PROJECT

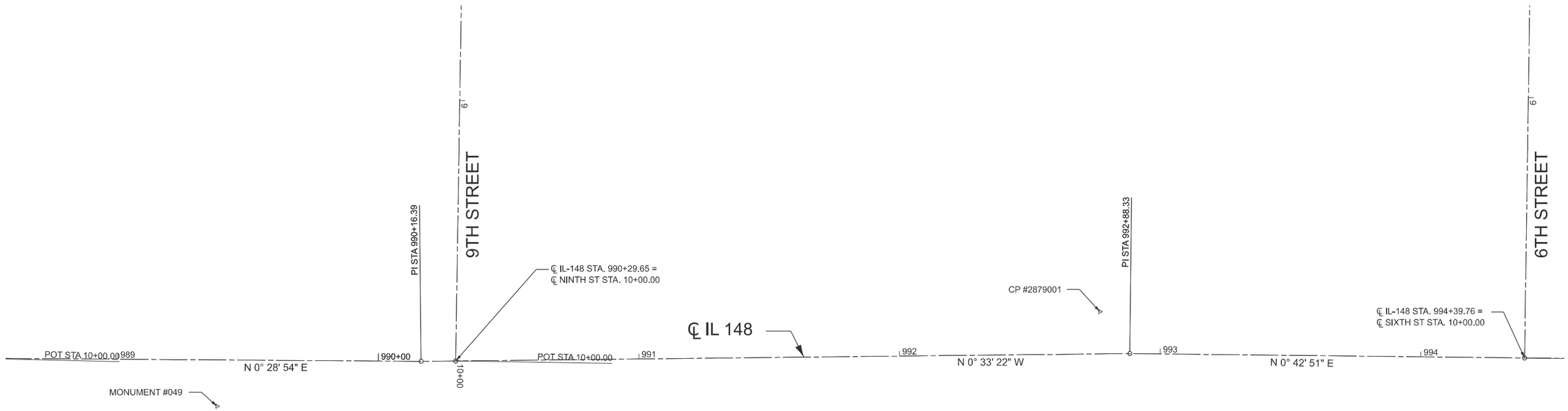

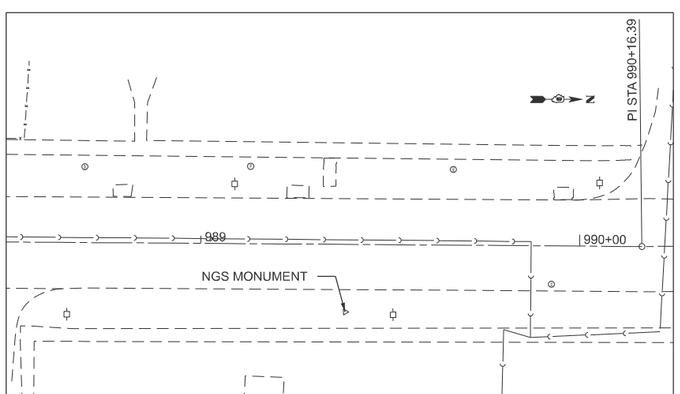

MONUMENT #049

STA 989+38.19, 17.8' RT, ℄ IL-148
N= 474366.664 E=776645.237
ELEV. 427.09

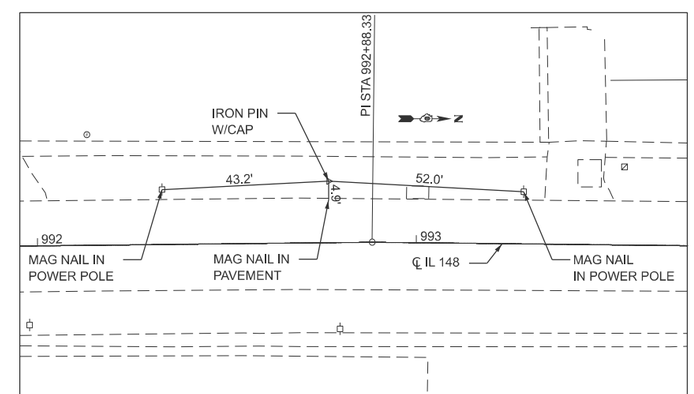

CONTROL POINT #2879001

STA 992+77.00, 16.2' LT, ℄ IL-148
N= 474705.481 E=776609.354
ELEV. 424.91

MODEL: IL148 - PLAN-1 [Sheet]
FILE NAME: pw://patrickco-pw.bentley.com:patrickco-pw-07/Documents/IL_CE/25PTRTM005_IL148_PH2/CADData/CADsheets/D978A09-Sht-align.dgn

PATRICK ENGINEERING INC.
55 EAST MONROE STREET
SUITE 3450
CHICAGO, IL 60603
www.rina-us.org
Design Firm License No. 184000494-0014

USER NAME = DT004	DESIGNED - DT	REVISED -	
	DRAWN - DT	REVISED -	
	CHECKED - KE	REVISED -	
PLOT DATE = 9/30/2025	DATE - 9/30/2025	REVISED -	

STATE OF ILLINOIS
DEPARTMENT OF TRANSPORTATION

ALIGNMENT, TIES, AND BENCHMARKS
ILLINOIS ROUTE 148

SCALE: 1"=20' | SHEET 1 OF SHEETS | STA. 988+50.00 TO STA. 994+50.00

F.A.P. RTE.	SECTION	COUNTY	TOTAL SHEETS	SHEET NO.
726	127CR-1	FRANKLIN	42	13
		CONTRACT NO. 78A09		
		ILLINOIS	FED. AID PROJECT	

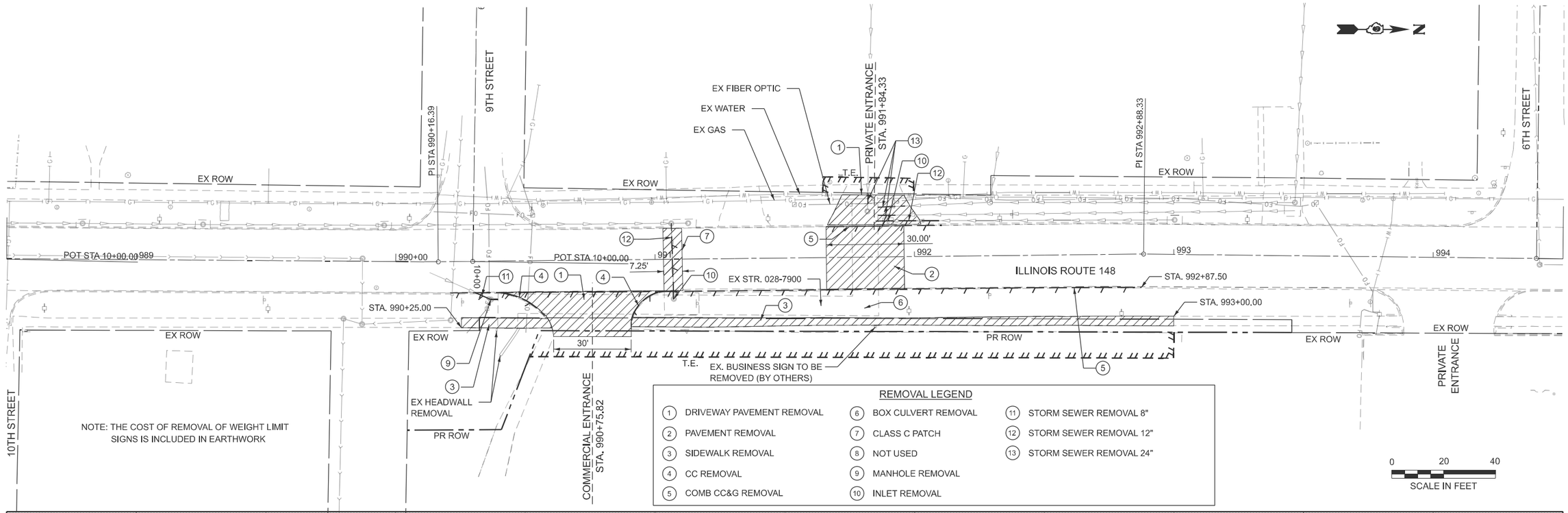

REMOVAL LEGEND

1 DRIVEWAY PAVEMENT REMOVAL	6 BOX CULVERT REMOVAL	11 STORM SEWER REMOVAL 8"
2 PAVEMENT REMOVAL	7 CLASS C PATCH	12 STORM SEWER REMOVAL 12"
3 SIDEWALK REMOVAL	8 NOT USED	13 STORM SEWER REMOVAL 24"
4 CC REMOVAL	9 MANHOLE REMOVAL	
5 COMB CC&G REMOVAL	10 INLET REMOVAL	

MODEL: $MODELNAME$
FILE NAME: $FILEL$

RINA
PATRICK ENGINEERING INC.
55 EAST MONROE STREET
SUITE 3450
CHICAGO, IL 60603
www.rina-us.org
Design Firm License No. 184000400-0014

USER NAME = DT004	DESIGNED - DT	REVISED -	
	DRAWN - DT	REVISED -	
	CHECKED - KE	REVISED -	
PLOT DATE = 9/30/2025	DATE - 9/30/2025	REVISED -	

STATE OF ILLINOIS
DEPARTMENT OF TRANSPORTATION

EXISTING REMOVAL ROADWAY PLAN AND PROFILE
ILLINOIS ROUTE 148

SCALE: | SHEET 1 OF 1 SHEETS | STA. 988+50.00 TO STA. 994+50.00

F.A.P. RTE.	SECTION	COUNTY	TOTAL SHEETS	SHEET NO.
726	127CR-1	FRANKLIN	42	14

CONTRACT NO. 78A09

ILLINOIS | FED. AID PROJECT

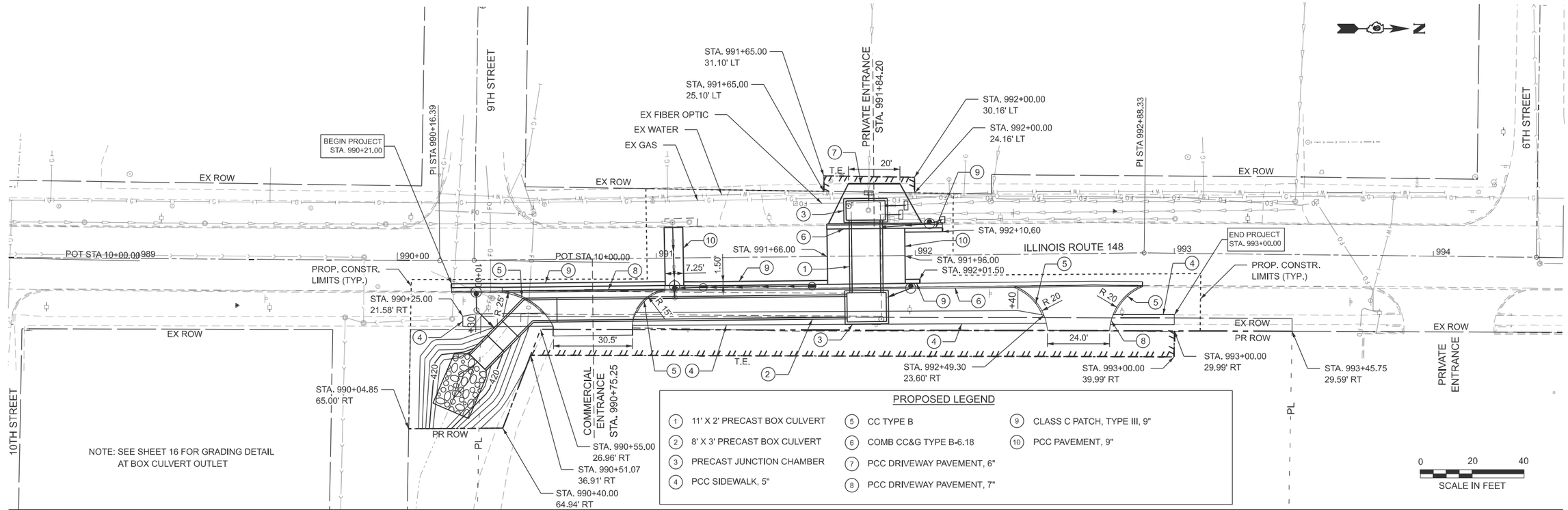

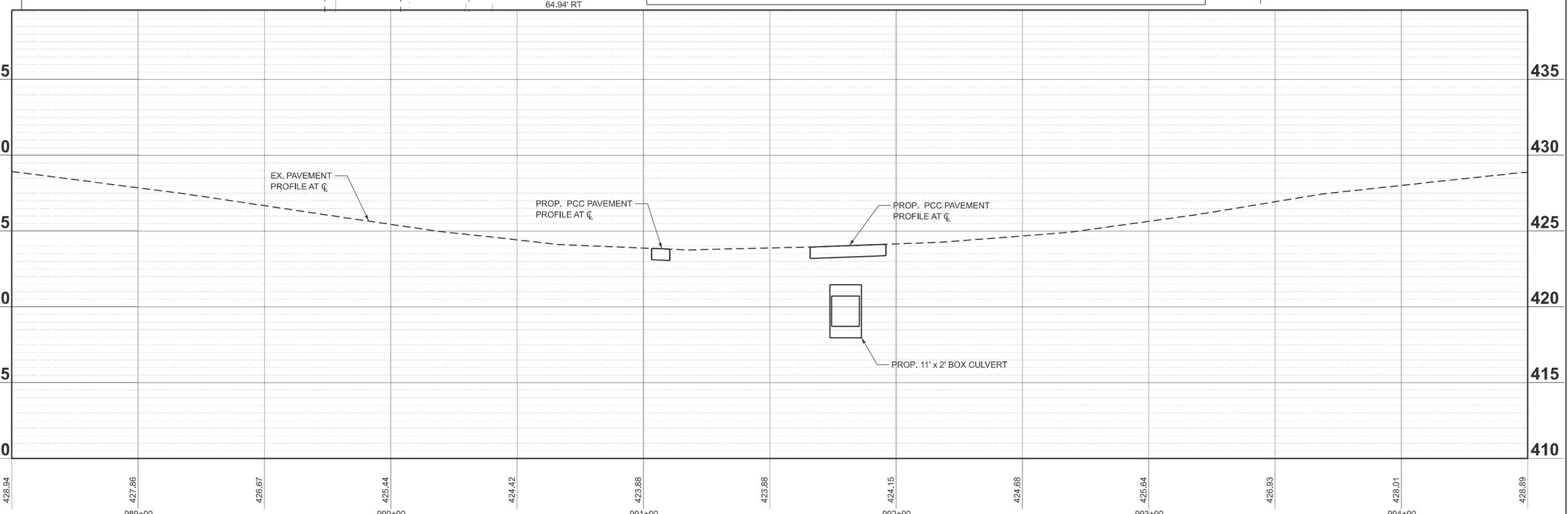

MODEL: IL148 - PLAN-1 [Sheet]
FILE NAME: pw://patrickco-pw.bentley.com:patrickco-pw-07/Documents/IL_CE/25PTRTM005_IL148_PH2/CADData/CADsheets/D978A09-Sht-plprof.dgn

PATRICK ENGINEERING INC.
55 EAST MONROE STREET
SUITE 3450
CHICAGO, IL 60603
www.rina-us.org
Design Firm License No. 184000494-0014

USER NAME = DT004	DESIGNED - DT	REVISED -	
	DRAWN - DT	REVISED -	
	CHECKED - KE	REVISED -	
PLOT DATE = 9/30/2025	DATE - 9/30/2025	REVISED -	

STATE OF ILLINOIS
DEPARTMENT OF TRANSPORTATION

PROPOSED ROADWAY PLAN AND PROFILE
ILLINOIS ROUTE 148

SCALE: 1"=20' | SHEET 1 OF SHEETS | STA. 988+50.00 TO STA. 994+50.00

F.A.P. RTE.	SECTION	COUNTY	TOTAL SHEETS	SHEET NO.
726	127CR-1	FRANKLIN	42	15

CONTRACT NO. 78A09

ILLINOIS | FED. AID PROJECT

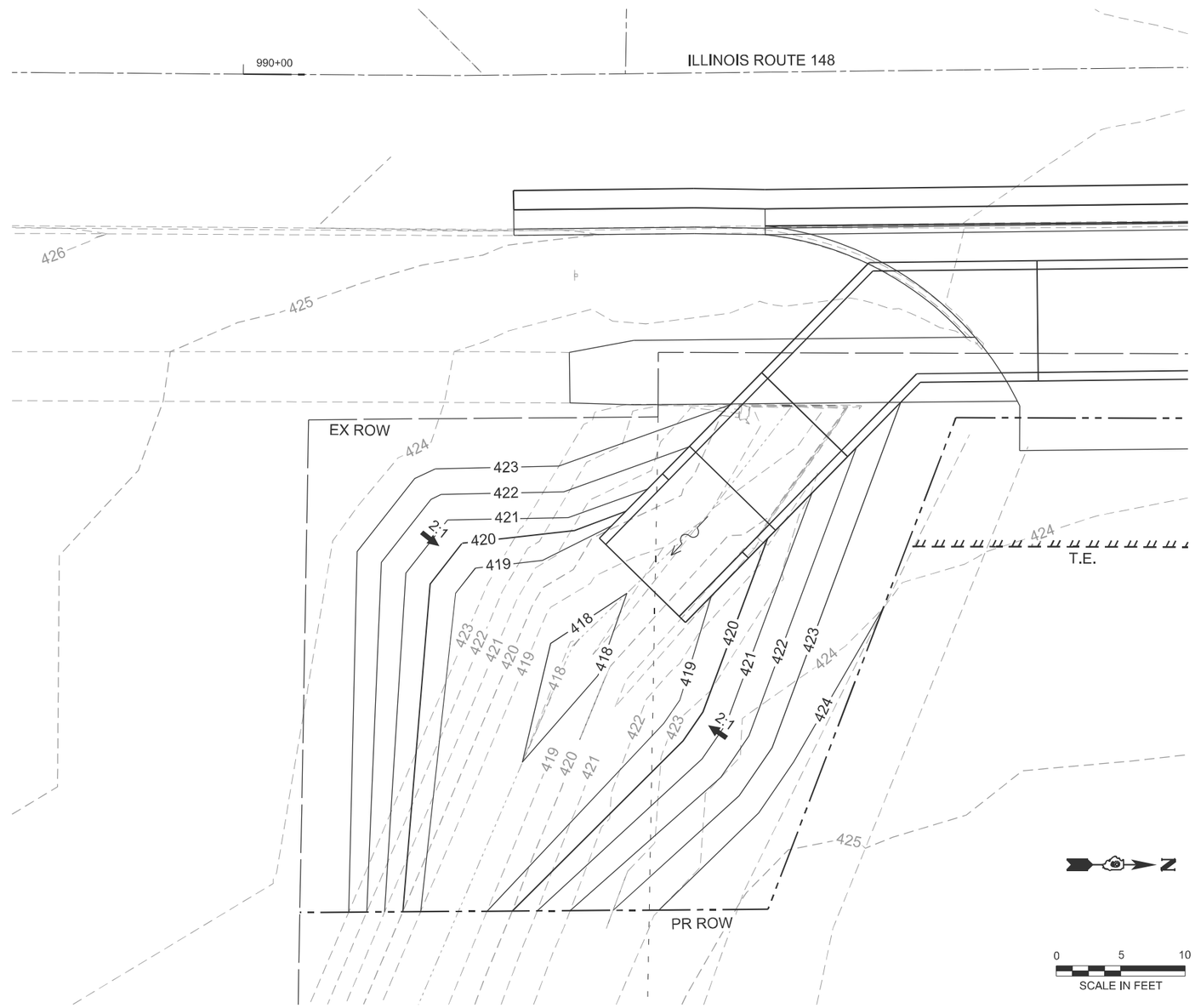

MODEL: IL148 - PLAN-1 [Sheet]
FILE NAME: pw://patrickco-pw.bentley.com:patrickco-pw-07/Documents/IL_CE/25PTRTM005_IL148_PH2/CADData/CADsheets/D978A09-Sht-gradingdetail.dgn

PATRICK ENGINEERING INC.
55 EAST MONROE STREET
SUITE 3450
CHICAGO, IL 60603
www.rina-us.org
Design Firm License No. 184000400-0014

USER NAME = DT004	DESIGNED - DT	REVISED -	
	DRAWN - DT	REVISED -	
	CHECKED - KE	REVISED -	
PLOT DATE = 9/30/2025	DATE - 9/30/2025	REVISED -	

STATE OF ILLINOIS
DEPARTMENT OF TRANSPORTATION

GRADING DETAIL
ILLINOIS ROUTE 148

SCALE: 1"=5' | SHEET 1 OF SHEETS | STA. TO STA.

F.A.P. RTE.	SECTION	COUNTY	TOTAL SHEETS	SHEET NO.
726	127CR-1	FRANKLIN	42	16
		CONTRACT NO. 78A09		
		ILLINOIS	FED. AID PROJECT	

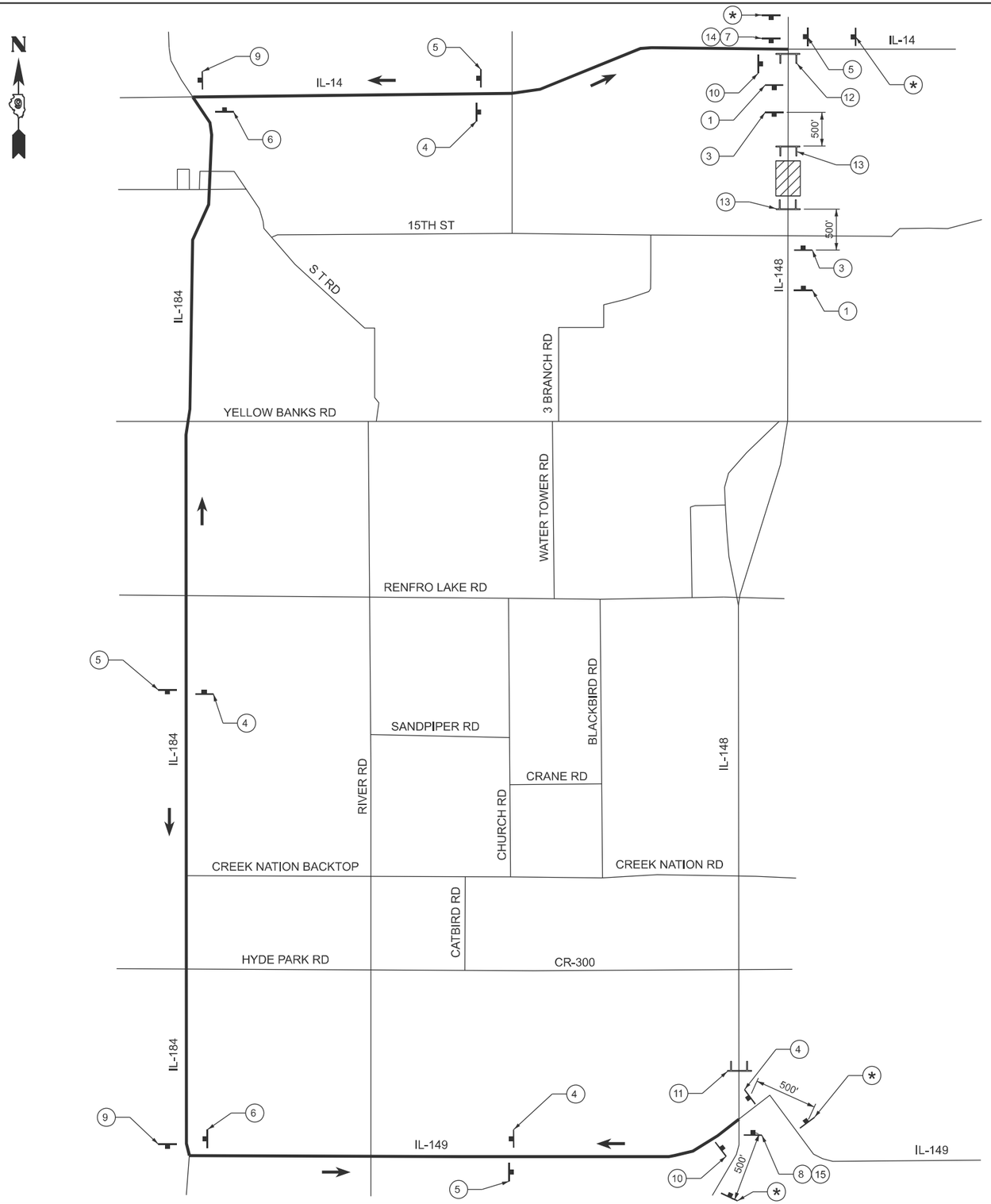

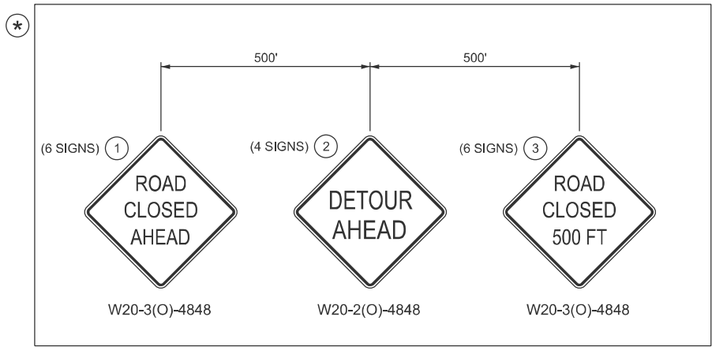

4 (4 SETS)
DETOUR M4-8(O)-2412
NORTH M3-1-2412
ILLINOIS 148 M1-I100-3024
M06-3-2115

5 (4 SETS)
DETOUR M4-8(O)-2412
SOUTH M3-3-2412
ILLINOIS 148 M1-I100-3024
M06-3-2115

6 (2 SETS)
DETOUR M4-8(O)-2412
NORTH M3-1-2412
ILLINOIS 148 M1-I100-3024
M01R-3-2115

7 (1 SET)
DETOUR M4-8(O)-2412
SOUTH M3-3-2412
ILLINOIS 148 M1-I100-3024
M01R-3-2115

8 (1 SET)
DETOUR M4-8(O)-2412
NORTH M3-1-2412
ILLINOIS 148 M1-I100-3024
M01L-3-2115

9 (2 SETS)
DETOUR M4-8(O)-2412
SOUTH M3-3-2412
ILLINOIS 148 M1-I100-3024
M01L-3-2115

10 (2 SIGNS)
END DETOUR M4-8A-2418

14 (1 SIGN)
MAX WIDTH
9'-0"
1 MILE AHEAD
W12-I103(O)-48

15 (1 SIGN)
MAX WIDTH
9'-0"
5 MILES AHEAD
W12-I103(O)-48

11 (1 SET)
ROAD CLOSED
5 MILES AHEAD
LOCAL TRAFFIC ONLY
R11-3a(O)-6030
DETOUR M4-10L-4848

12 (1 SET)
ROAD CLOSED
1 MILE AHEAD
LOCAL TRAFFIC ONLY
R11-3a(O)-6030
DETOUR M4-10R-4848

13 (2 SIGNS)
ROAD CLOSED
R11-2-4830

LEGEND

- WORK AREA
- DETOUR ROUTE
- TRAFFIC FLOW
- TYPE III BARRICADE WITH FLASHING LIGHTS
- SIGN

NOTES

1. A DETOUR ROUTE WILL BE USED TO MAINTAIN TRAFFIC DURING CONSTRUCTION OF THE NEW CULVERT UNDER IL-148. THE ROADWAY AT THE PROJECT LOCATION WILL BE CLOSED TO THROUGH TRAFFIC DURING THE SPECIFIED DAYS. LOCAL ACCESS SHALL BE MAINTAINED TO ALL ENTRANCES OUTSIDE OF THE IMPROVEMENT LIMITS.
2. A WIDE LOAD DETOUR SHALL BE IMPLEMENTED ONCE THE TEMPORARY BARRIER WALL IS INSTALLED. THE PROPOSED IL-148 DETOUR SIGNING SHALL BE INSTALLED.

MODEL: $MODELNAME$
FILE NAME: pw://patrickco-pw.bentley.com:patrickco-pw-07/Documents/IL_CE/25PTRTM005_IL148_PH2/CADData/CADsheets/D978A09-Sht-detour.dgn

PATRICK ENGINEERING INC.
55 EAST MONROE STREET
SUITE 3450
CHICAGO, IL 60603
www.rina-us.org
Design Firm License No. 184000494-0014

USER NAME = DT004	DESIGNED - DT	REVISED -	
	DRAWN - DT	REVISED -	
	CHECKED - KE	REVISED -	
PLOT DATE = 9/30/2025	DATE - 9/30/2025	REVISED -	

STATE OF ILLINOIS
DEPARTMENT OF TRANSPORTATION

DETOUR PLAN
ILLINOIS ROUTE 148

SCALE: 1"=20' | SHEET 1 OF SHEETS | STA. 988+50.00 TO STA. 994+50.00

F.A.P. RTE.	SECTION	COUNTY	TOTAL SHEETS	SHEET NO.
726	127CR-1	FRANKLIN	42	17

CONTRACT NO. 78A09

ILLINOIS | FED. AID PROJECT

PARCEL #	PURPOSE	ACREAGE
9003423	TE	0.002 ACRES
9003523	TE	0.003 ACRES
9003823	ROW / TE	0.050 ACRES (ROW) 0.057 ACRES (TE)
9003923	ROW	0.024 ACRES

COORDINATE DATA									
POINT #	NORTHING	EASTING	STATION	OFFSET	POINT #	NORTHING	EASTING	STATION	OFFSET
AS1	474658.105'	776595.152'	992+29.79	30.87 LT	AS19	474480.052'	776664.669'	990+51.07	36.91 RT
AS2	474657.978'	776602.651'	992+29.59	23.38 LT	AS20	474469.255'	776692.798'	990+40	64.94 RT
AS3	474628.382'	776602.149'	992+00	24.16 LT	AS21	474432.926'	776692.995'	990+04.85	65 RT
AS5	474628.324'	776596.149'	992+00	30.16 LT	AS22	474433.661'	776654.784'	990+05.26	26.78 RT
AS8	474593.317'	776595.556'	991+65	31.10 LT	AS23	474460.793'	776649.669'	990+31.96	21.65 RT
AS9	474593.375'	776601.556'	991+65	25.10 LT	AS24	474460.774'	776654.597'	990+31.89	26.65 RT
AS13	474845.496'	776597.193'	994+16.52	29.86 LT	AS27	474459.776'	776692.850'	990+30.52	64.90 RT
AS14	474774.007'	776650.764'	993+45.71	24.60 RT	AS28	474728.238'	776655.592'	993+00	29.99 RT
AS15	474773.990'	776655.762'	993+45.75	29.59 RT	AS30	474478.004'	776599.601'	990+49.65	28.17 LT
AS17	474728.113'	776665.591'	993+00	39.99 RT	AS31	475003.208'	776657.098'	995+74.97	28.07 RT
AS18	474483.885'	776654.683'	990+55	26.96 RT					

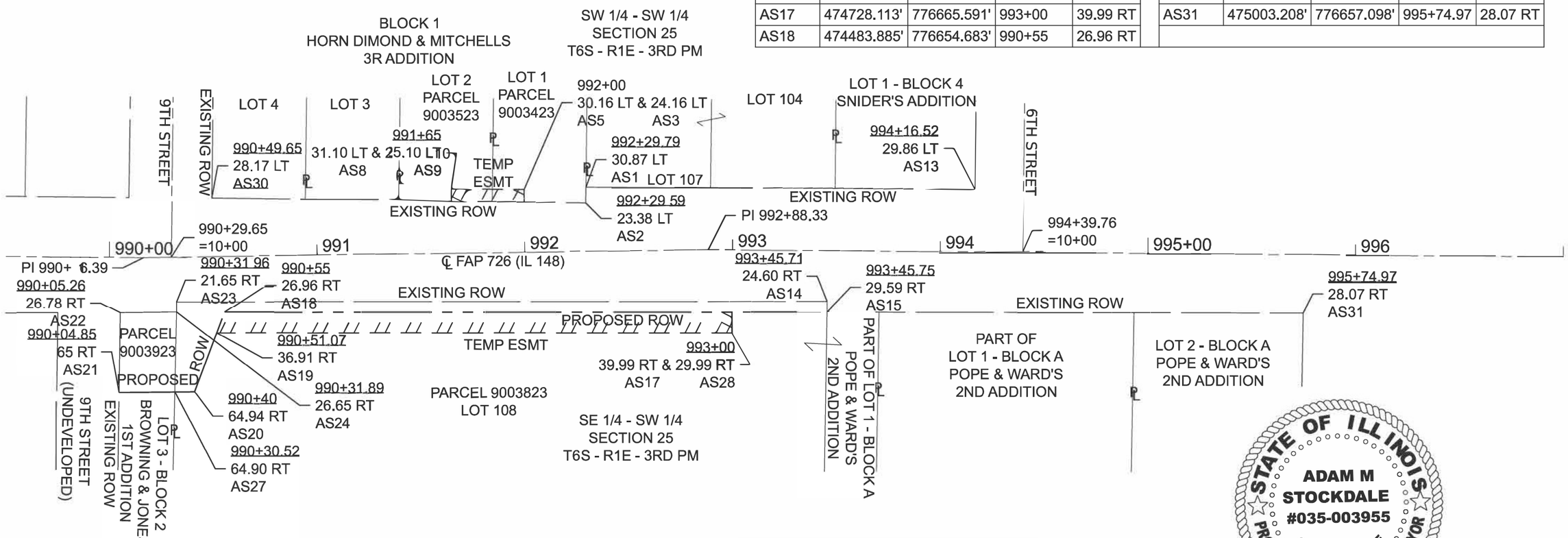

ALIGNMENT INFO		
IL 148 (FAP 726)		
POINT #	NORTHING	EASTING
PI 980+41.60	473470.260'	776619.901'
PI 990+16.39	474445.015'	776628.095'
PI 992+88.33	474716.942'	776625.455'
POT 1004+06.77	475835.300'	776639.396'

0 50 100
SCALE IN FEET

N

STATE OF ILLINOIS
ADAM M
STOCKDALE
#035-003955
CARBONDALE
PROFESSIONAL LAND SURVEYOR

ADAM M STOCKDALE
ILLINOIS PROFESSIONAL LAND SURVEYOR

CURRENT LICENSE EXPIRES 11/30/2026
THIS PROFESSIONAL SERVICE CONFORMS TO THE CURRENT
ILLINOIS MINIMUM STANDARDS FOR A BOUNDARY SURVEY

COORDINATES BASED ON NAD 83 (2011 ADJ) ILLINOINS EAST ZONE

MODEL: IL148 - IL 148 [Sheet]
FILE NAME: c:\pw_work\pwidot\stockdaleam\d0878301\D9xxxxx-ShtK-ROW.dgn

USER NAME = adam.stockdale	DESIGNED -	REVISED -
	DRAWN -	REVISED -
	CHECKED -	REVISED -
PLOT DATE = 8/20/2025	DATE -	REVISED -

STATE OF ILLINOIS
DEPARTMENT OF TRANSPORTATION

RIGHT OF WAY PLANS

PROJECT
JOB NO. R-99-009-23
SCALE: 1" = 50 FEET | SHEET 1 OF 1 SHEETS | STA. 990+05 TO STA. 993+46

F.A.P. RTE.	SECTION	COUNTY	TOTAL SHEETS	SHEET NO.
726	127CR-1	FRANKLIN	42	18
	IL 148: SEC 25 - T6S - R1E	CONTRACT NO. 78A09		
FED. ROAD DIST. NO.	ILLINOIS	FED. AID PROJECT		

GENERAL NOTES

1. SEE SPECIAL PROVISIONS FOR ADDITIONAL TRAFFIC CONTROL REQUIREMENTS.
2. ADDITIONAL SIGNAGE FOR THE TEMPORARY DRIVEWAY ENTRANCES AND ADVANCE WIDTH RESTRICTION WARNINGS SHALL BE INCLUDED IN THE COST OF "TRAFFIC CONTROL AND PROTECTION, (SPECIAL)".

SUGGESTED SEQUENCE OF CONSTRUCTION

1. REMOVE EXISTING PAVEMENT MARKINGS WITH GRINDING AND PROVIDE TEMPORARY PAVEMENT MARKINGS AS SHOWN IN THE MOT PLAN.
2. CONSTRUCT PROPOSED DRIVEWAY FOR NEW NORTH ENTRANCE.
3. REMOVE EXISTING 7.5' X 3' BOX CULVERT UNDER FLAGGER CONDITIONS.
4. INSTALL TEMPORARY CONCRETE BARRIER WALL AND IMPACT ATTENUATORS WHEN DROP-OFFS EXIST USING THE SUGGESTED MOT PLAN.
5. CLOSE IL-148 AS SHOWN IN THE DETOUR PLAN FOR A MAXIMUM OF 3 DAYS TO CONSTRUCT THE CROSS ROAD BOX CULVERT AND INSTALL STORM SEWERS AND DRAINAGE STRUCTURES.
6. REMOVE EXISTING 10' X 2' BOX CULVERT UNDER IL-148.
7. INSTALL PROPOSED JUNCTION CHAMBERS, NEW PRECAST BOX CULVERTS, AND 12" STORM SEWER AND DRAINAGE STRUCTURES ON EAST SIDE OF IL-148.
8. CONSTRUCT PAVEMENT OVER NEW 11' X 2' BOX CULVERT ON IL-148 AND PLACE BACKFILL OVER 8' X 3' BOX CULVERT AND NEW STORM SEWER ON EAST SIDE OF IL-148.
9. INSTALL NEW STORM SEWER (S-2, S-3, & S-4) AND INSTALL NEW DRAINAGE STRUCTURES (P-2, P-3, P-4, & P-11) DURING FULL ROAD CLOSURE.
10. REMOVE TEMPORARY CONCRETE BARRIER WALL AND INSTALL VERTICADES ON THE EAST SIDE OF IL-148.
11. CONSTRUCT ALL NEW COMBINATION CONCRETE CURB AND GUTTER UNDER FLAGGING CONDITIONS.
12. CONSTRUCT PRPOSED DRIVEWAY FOR SOUTH ENTRANCE AND PCC SIDEWALK ON EAST SIDE OF IL-148.
13. REMOVE TEMPORARY PAVEMENT MARKINGS AND INSTALL FINAL PERMANENT PAVEMENT MARKINGS.

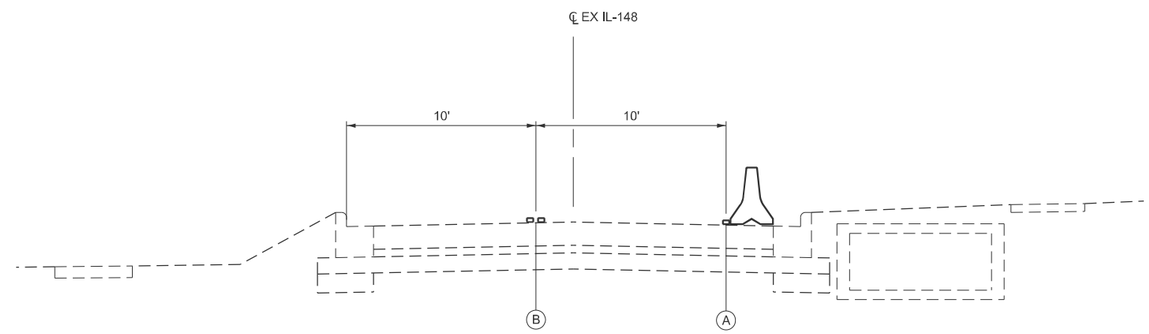

IL-148 TEMPORARY TYPICAL SECTION

LEGEND

TEMPORARY CONCRETE BARRIER

(A) TEMPORARY PAVEMENT MARKING - LINE 4" - TYPE IV TAPE, SOLID WHITE

(B) TEMPORARY PAVEMENT MARKING - LINE 4" - TYPE IV TAPE, SOLID DOUBLE YELLOW @ 11" C-C

MODEL: Sheet
FILE NAME: pw://patrickco-pw.bentley.com:patrickco-pw-07/Documents/IL_CE/25PTRTM005_IL148_PH2/CADData/CADsheets/D978A09-Sht-MOTnotes.dgn

PATRICK ENGINEERING INC. 55 EAST MONROE STREET SUITE 3450 CHICAGO, IL 60603 www.linkhus.org Design Firm License No. 184000494-0014	USER NAME = DT004	DESIGNED - DT	REVISED -	STATE OF ILLINOIS DEPARTMENT OF TRANSPORTATION	MOT NOTES, STAGING, TYPICAL ILLINOIS ROUTE 148
		DRAWN - DT	REVISED -		
		CHECKED - KE	REVISED -		
	PLOT DATE = 10/16/2025	DATE - 10/16/2025	REVISED -		SCALE: SHEET OF SHEETS STA. TO STA.

F.A.P. RTE.	SECTION	COUNTY	TOTAL SHEETS	SHEET NO.
726	127CR-1	FRANKLIN	42	19
		CONTRACT NO. 78A09		
	ILLINOIS	FED. AID PROJECT		

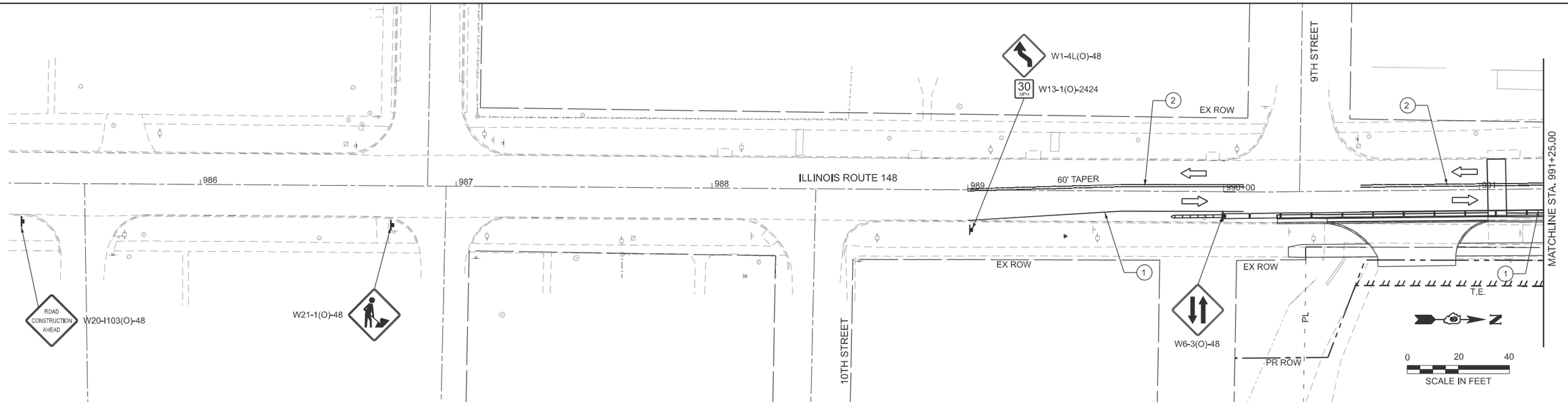

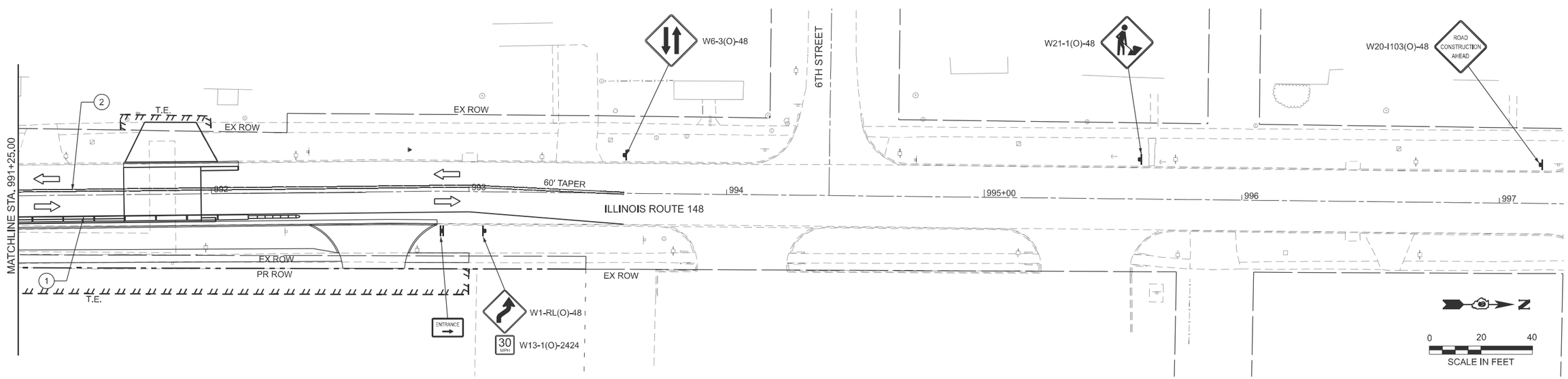

MAINTENANCE OF TRAFFIC LEGEND

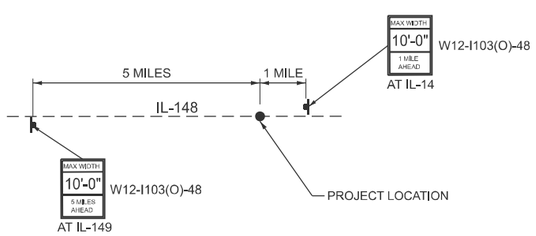

TEMPORARY CONCRETE BARRIER

IMPACT ATTENUATOR, TEMPORARY (NON-REDIRECIVE, NARROW) TEST LEVEL 2

TRAFFIC FLOW

CONSTRUCTION SIGN

(1) TEMPORARY PAVEMENT MARKING - LINE 4" - TYPE IV TAPE, SOLID WHITE

(2) TEMPORARY PAVEMENT MARKING - LINE 4" - TYPE IV TAPE, SOLID DOUBLE YELLOW @ 11" C-C

MODEL: IL148 - PLAN-1 [Sheet]
FILE NAME: pw://patrickco-pw.bentley.com:patrickco-pw-07/Documents/IL_CE/25PTRTM005_IL148_PH2/CADData/CADsheets/D978A09-Sht-MOT.dgn

PATRICK ENGINEERING INC. 55 EAST MONROE STREET SUITE 3450 CHICAGO, IL 60603 www.rina-us.org Design Firm License No. 184000494-0014	USER NAME = DT004	DESIGNED - DT	REVISED -	STATE OF ILLINOIS DEPARTMENT OF TRANSPORTATION	SUGGESTED MAINTENANCE OF TRAFFIC PLAN ILLINOIS ROUTE 148	F.A.P. RTE.	SECTION	COUNTY	TOTAL SHEETS	SHEET NO.
		DRAWN - DT	REVISED -			726	127CR-1	FRANKLIN	42	20
		CHECKED - KE	REVISED -					CONTRACT NO. 78A09		
	PLOT DATE = 9/30/2025	DATE - 9/30/2025	REVISED -		SCALE: 1"=20' SHEET 1 OF SHEETS STA. 985+00.00 TO STA. 997+00.00		ILLINOIS	FED. AID PROJECT		

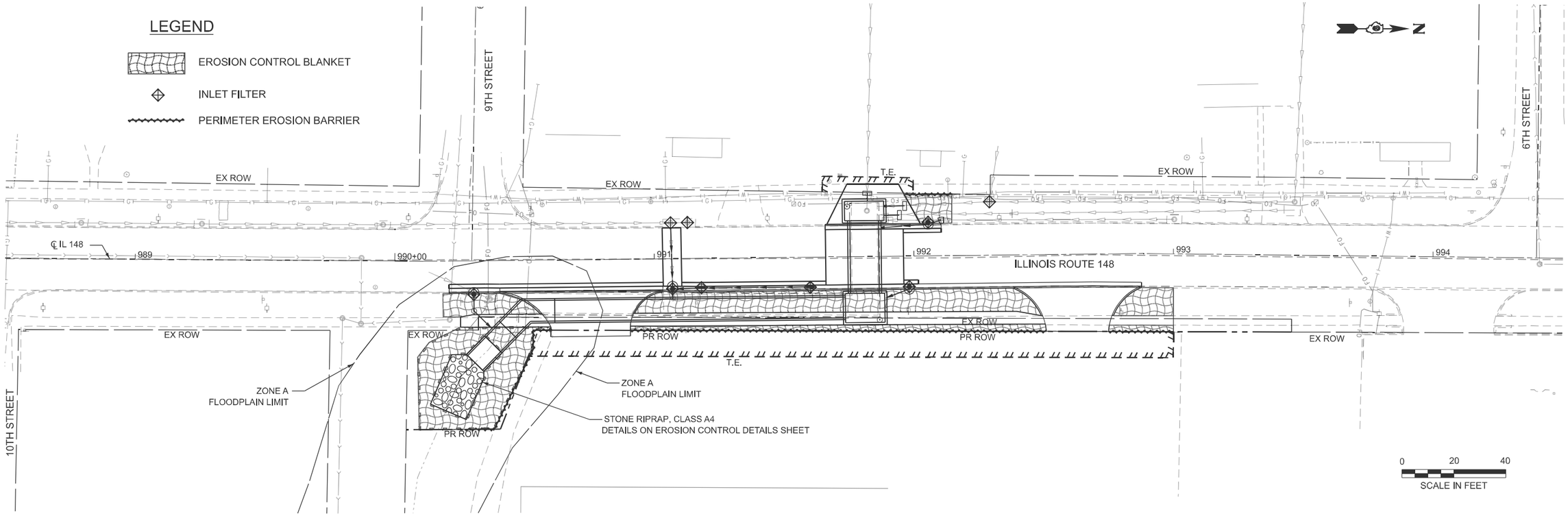

MODEL: $MODELNAME$
FILE NAME: pw://patrickco-pw.bentley.com:patrickco-pw-07/Documents/IL_CE/25PTRTM005_IL148_PH2/CADData/CADsheets/D978A09-Sht-eros.dgn

PATRICK ENGINEERING INC.
55 EAST MONROE STREET
SUITE 3450
CHICAGO, IL 60603
www.fina-us.org
Design Firm License No. 184000494-0014

USER NAME = DT004	DESIGNED - JG	REVISED -	
	DRAWN - JG	REVISED -	
	CHECKED - SA	REVISED -	
PLOT DATE = 9/30/2025	DATE - 9/30/2025	REVISED -	

STATE OF ILLINOIS
DEPARTMENT OF TRANSPORTATION

EROSION CONTROL & SEDIMENT CONTROL PLAN
ILLINOIS ROUTE 148

SCALE: 1"=20' | SHEET 1 OF SHEETS | STA. 988+50.00 TO STA. 994+50.00

F.A.P. RTE.	SECTION	COUNTY	TOTAL SHEETS	SHEET NO.
726	127CR-1	FRANKLIN	42	21

CONTRACT NO. 78A09

ILLINOIS | FED. AID PROJECT

INLET PROTECTION - PAVED AREAS DROP-IN PROTECTION

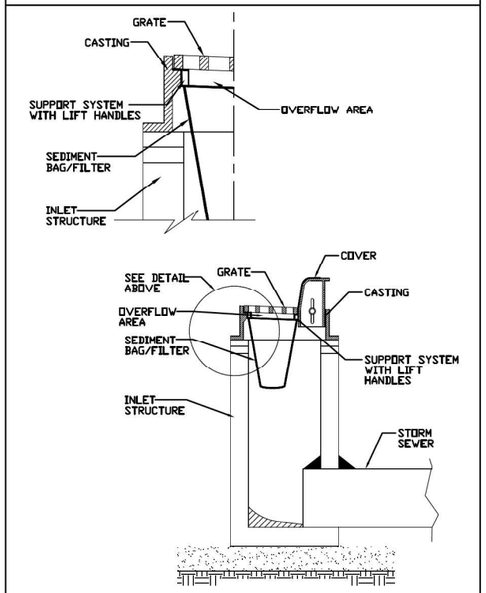

REFERENCE
Project
Designed Date
Checked Date
Approved Date

STANDARD DWG. NO.
IUM-561D
SHEET 1 OF 1
DATE 01-11-11

INLET PROTECTION - IMPERVIOUS AREAS CURB PROTECTION

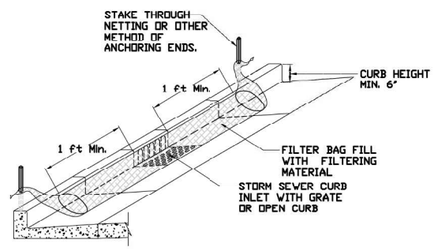

REFERENCE
Project
Designed Date
Checked Date
Approved Date

STANDARD DWG. NO.
IUM-561C
SHEET 1 OF 1
DATE 01-11-11

SILT FENCE - SPLICING TWO FENCES

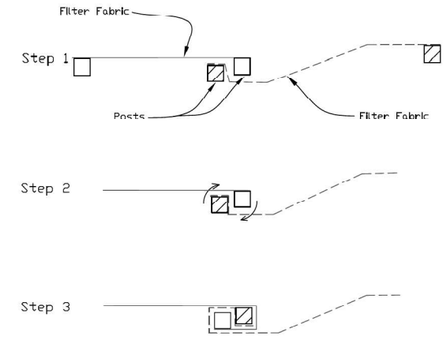

ATTACHING TWO SILT FENCES

1. Place the end post of the second fence inside the end post of the first fence.
2. Rotate both posts at least 180 degrees in a clockwise direction to create a tight seal with the fabric material.
3. Cut the fabric near the bottom of the stakes to accommodate the 6" flap.
4. Drive both posts a minimum of 18 inches into the ground and bury the flap.
5. Compact backfill (particularly at splices) completely to prevent stormwater piping.

REFERENCE
Project
Designed Date
Checked Date
Approved Date

STANDARD DWG. NO.
IUM-620B(W)
SHEET 1 OF 1
DATE 3-15-2012

SILT FENCE PLAN

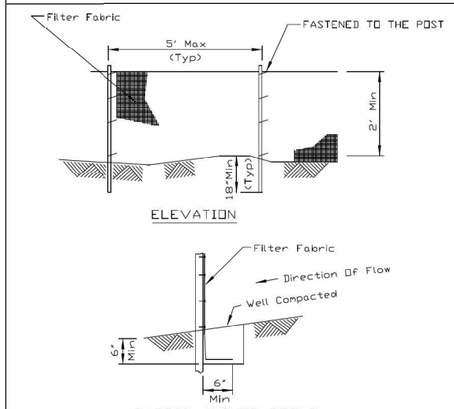

NOTES:
1. Temporary sediment fence shall be installed prior to any grading work in the area to be protected. They shall be maintained throughout the construction period and removed in conjunction with the final grading and site stabilization.
2. Filter fabric shall meet the requirements of material specification 592 Geotextile Table 1, Class 2.
3. Fence posts shall be either standard steel post or wood post 2" X 2" nominal.

REFERENCE
Project
Designed Date
Checked Date
Approved Date

STANDARD DWG. NO.
IUM-620A
SHEET 1 OF 2
DATE 04-15-2021

AUTOCAD2006

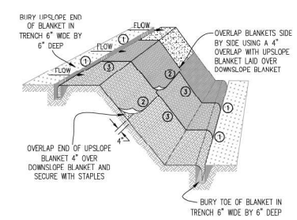

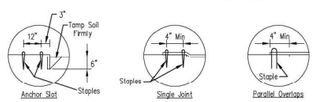

DETAIL 1 DETAIL 2 DETAIL 3

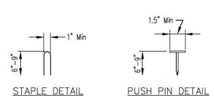

STAPLE DETAIL PUSH PIN DETAIL

NOTES:

1. Staples shall be placed in a diamond pattern at 2 per s.y. for stiched blankets. Non-stiched shall use 4 staples per s.y. of material. This equates to 200 staples with stiched blanket and 400 stapels with non-stiched blanket per 100 s.y. of material.
2. Staple or push pin lengths shall be selected based on soil type and conditions. (minimum staple length is 6")
3. Erosion control material shall be placed in contact with the soil over a prepared seedbed.
4. All anchor slots shall be stapled at approximately 12" intervals.

EROSION CONTROL BLANKET INSTALLATION DETAILS

Date
Designed
Drawn S. JOHNSON FLOR.
Checked
Approved

AUTOCAD2006

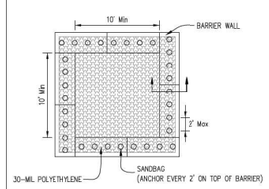

PLAN VIEW

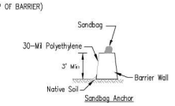

Sandbag Anchor

BARRIER WALL ANCHOR SECTION

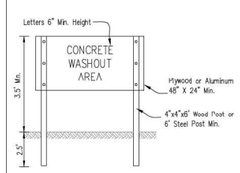

SIGN DETAIL

NOTES:

1. Maintaining temporary concrete washout facilities shall include removing and disposing of hardened concrete and/or slurry and returning the facilities to a functional condition.
2. Facility shall be cleaned or reconstructed in a new area once washout becomes two-thirds full.

TEMPORARY CONCRETE WASHOUT FACILITY - BARRIER WALL

Date
Designed
Drawn S. JOHNSON 6/06
Checked
Approved

PIPE OUTLET TO CHANNEL

Pipe Outlet To Well-Defined Channel

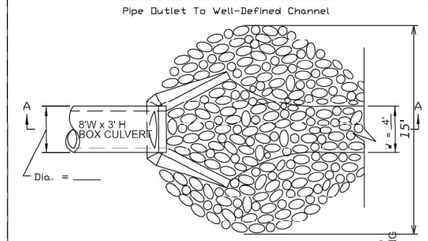

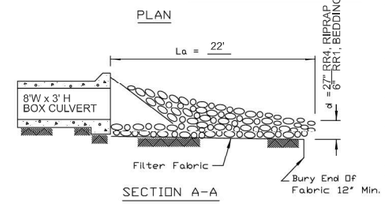

NOTES:
1. The filter fabric shall meet the requirements in material specification 592 GEOTEXTILE Table 1 or 2, Class I, II or III.
2. The rock riprap shall meet the IDOT requirements for the following gradation RR4 and RR1.
3. The riprap shall be placed according to construction specification 61 LOOSE ROCK RIPRAP. The rock may be equipment placed.

REFERENCE
Project
Designed Date
Checked Date
Approved Date

NRCS Natural Resources Conservation Service

STANDARD DWG. NO.
IL-611
SHEET 1 OF 1
DATE 8-18-94

MODEL: CIP Culvert [Sheet]
FILE NAME: pw://patrickco-pw.bentley.com:patrickco-pw07/Documents/IL_CE/25PTRTM005_IL148_PH2/CADData/CADsheets/D978A09-sht-erosdetails.dgn

PATRICK ENGINEERING INC.
55 EAST MONROE STREET
SUITE 3450
CHICAGO, IL 60603
www.rina-us.org
Design Firm License No. 184000494-0014

USER NAME = DT004	DESIGNED - JG	REVISED -	
	DRAWN - JG	REVISED -	
	CHECKED - SA	REVISED -	
PLOT DATE = 9/30/2025	DATE - 9/30/2025	REVISED -	

STATE OF ILLINOIS
DEPARTMENT OF TRANSPORTATION

EROSION CONTROL DETAILS
ILLINOIS ROUTE 148

SCALE: N.T.S. | SHEET 1 OF 1 SHEETS | STA. - | TO STA. -

F.A.P. RTE.	SECTION	COUNTY	TOTAL SHEETS	SHEET NO.
726	127CR-1	FRANKLIN	42	22
		CONTRACT NO. 78A09		
		ILLINOIS	FED. AID PROJECT	

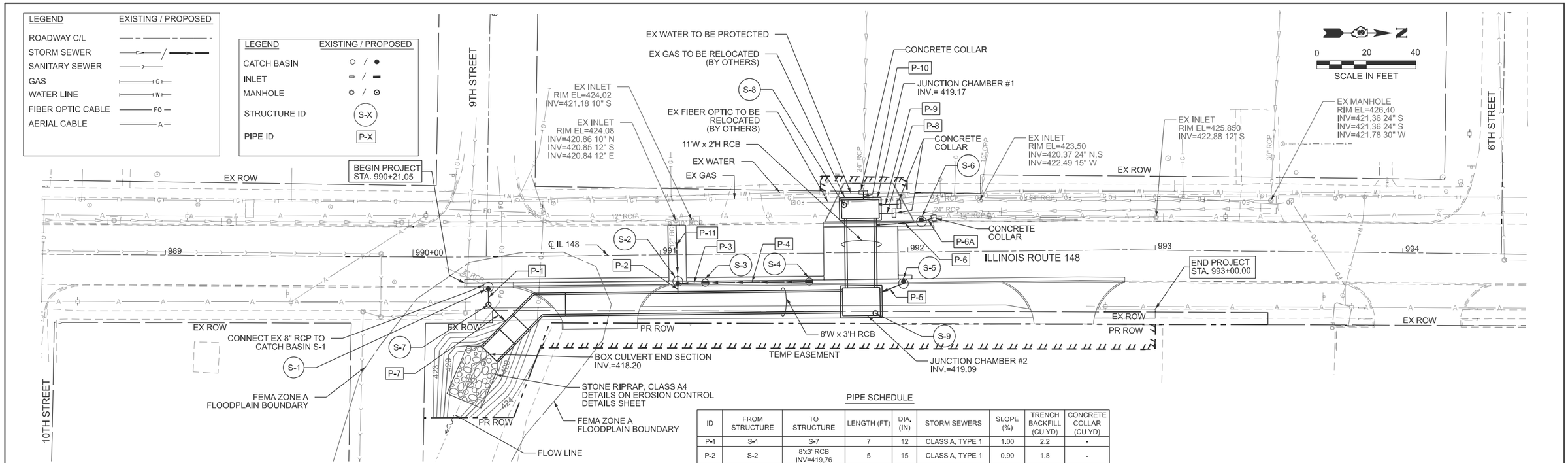

STRUCTURE SCHEDULE

ID.	STRUCTURE TYPE	STATION	OFFSET (FT)		RIM ELEV.	INVERTS N	INVERTS S	INVERTS E	INVERTS W
S-1	CATCH BASINS, TYPE A, 4'-DIAMETER, TYPE 15 FRAME AND LID	990+30.56	12.0	RT	424.46	-	421.06 +/- (EX)	419.78	-
S-2	CATCH BASINS, TYPE A, 4'-DIAMETER, TYPE 11 FRAME AND GRATE	991+06.94	10.6	RT	423.69	419.81	-	419.81	420.71
S-3	INLETS, TYPE B, TYPE 11 FRAME AND GRATE	991+18.00	10.8	RT	423.51	419.87	419.87	-	-
S-4	INLETS, TYPE B, TYPE 11 FRAME AND GRATE	991+60.00	10.8	RT	423.68	-	420.08	-	-
S-5	CATCH BASINS, TYPE A, 4'-DIAMETER, TYPE 11 FRAME AND GRATE	991+98.06	10.8	RT	423.89	-	419.14	-	-
S-6	CATCH BASINS, TYPE A, 4'-DIAMETER, TYPE 15 FRAME AND LID	992+05.59	12.0	LT	423.89	421.31	419.25	-	-
S-7	MANHOLES, TYPE A, 4'-DIAMETER, TYPE 1 FRAME, CLOSED LID	990+30.69	19.3	RT	424.00	-	-	419.71	419.71
S-8	JUNCTION CHAMBER #1, TYPE 1 FRAME, CLOSED LID	991+74.41	19.3	LT	423.96	420.21 420.21	-	419.17	420.21
S-9	JUNCTION CHAMBER #2, TYPE 1 FRAME, CLOSED LID	991+86.58	24.1	RT	424.18	419.09	419.09	-	419.09

PIPE SCHEDULE

ID	FROM STRUCTURE	TO STRUCTURE	LENGTH (FT)	DIA. (IN)	STORM SEWERS	SLOPE (%)	TRENCH BACKFILL (CU YD)	CONCRETE COLLAR (CU YD)
P-1	S-1	S-7	7	12	CLASS A, TYPE 1	1.00	2.2	-
P-2	S-2	8'x3' RCB INV=419.76	5	15	CLASS A, TYPE 1	0.90	1.8	-
P-3	S-3	S-2	11	12	CLASS A, TYPE 1	0.50	2.4	-
P-4	S-4	S-3	42	12	CLASS A, TYPE 1	0.50	8.1	-
P-5	S-5	JUNCTION CHAMBER #2	10	12	CLASS A, TYPE 1	0.50	3.2	-
P-6	S-6	11'x2' RCB INV=419.16	18	12	CLASS A, TYPE 1	0.50	5.4	-
P-6A	EX 12" RCP INV=421.39 +/-	S-6	5	12	CLASS A, TYPE 1	1.66	0.7	0.26
P-7	S-7	8'x3' RCB INV=419.61	10	12	CLASS A, TYPE 1	1.00	3.0	-
P-8	EX 24" RCP INV=420.24 +/-	JUNCTION CHAMBER #1	6	24	CLASS A, TYPE 1	0.73	1.2	0.51
P-9	EX 24" RCP INV=420.25 +/-	JUNCTION CHAMBER #1	8	24	CLASS A, TYPE 1	0.37	1.6	0.51
P-10	EX 24" RCP INV=420.26 +/-	JUNCTION CHAMBER #1	3	24	CLASS A, TYPE 1	1.79	0.6	0.51
P-11	EX INLET INV=420.84	S-2	23	15	CLASS A, TYPE 1	0.58	2.8	-

NOTES:

1. STATION, OFFSET AND RIM ELEVATION NOTED IS TAKEN AT THE EDGE OF PAVEMENT FOR INLETS AND CATCH BASINS WITH TYPE 11 GRATE, AT THE FLOW LINE OF GUTTER FOR INLETS AND CATCH BASINS WITH TYPE 15 GRATE AND AT THE CENTER OF THE LID FOR MANHOLES.
2. SIZES FOR GAS AND WATER ARE PENDING.
3. SEE STRUCTURAL SHEETS FOR DETAILS OF JUNCTION CHAMBERS AND BOX CULVERTS.
4. SEE CROSS SECTION SHEETS FOR 11'Wx2'H RCB PROFILE.

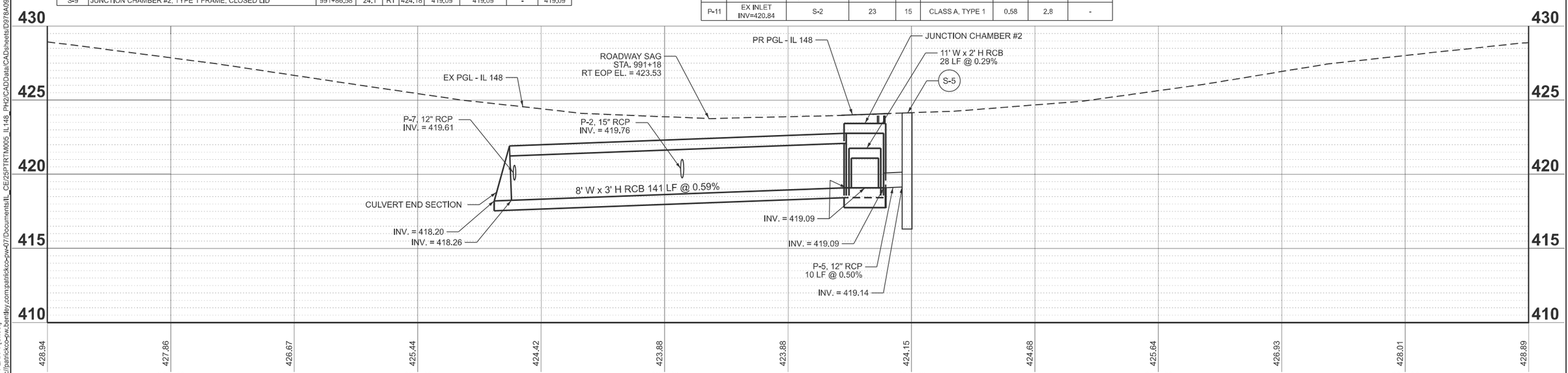

MODEL: IL148 - PLAN-1 [Sheet]
FILE NAME: pw://patrickco-pw.bentley.com:patrickco-pw-07/Documents/IL_CE/25PTRTM005_IL148_PH2/CADData/CADsheets/D976A09-Sht-drainage.dgn

PATRICK ENGINEERING INC.
55 EAST MONROE STREET
SUITE 3450
CHICAGO, IL 60603
www.pinhus.org
Design Firm License No. 184000494-0014

USER NAME = DT004	DESIGNED - JG/SA	REVISED -
	DRAWN - JG	REVISED -
	CHECKED - SA	REVISED -
PLOT DATE = 9/30/2025	DATE - 9/30/2025	REVISED -

STATE OF ILLINOIS
DEPARTMENT OF TRANSPORTATION

PROPOSED DRAINAGE PLAN
ILLINOIS ROUTE 148

SCALE: 1"=20' | SHEET 1 OF 1 SHEETS | STA. 988+50.00 TO STA. 994+50.00

F.A.P. RTE.	SECTION	COUNTY	TOTAL SHEETS	SHEET NO.
726	127CR-1	FRANKLIN	42	23

CONTRACT NO. 78A09

ILLINOIS | FED. AID PROJECT

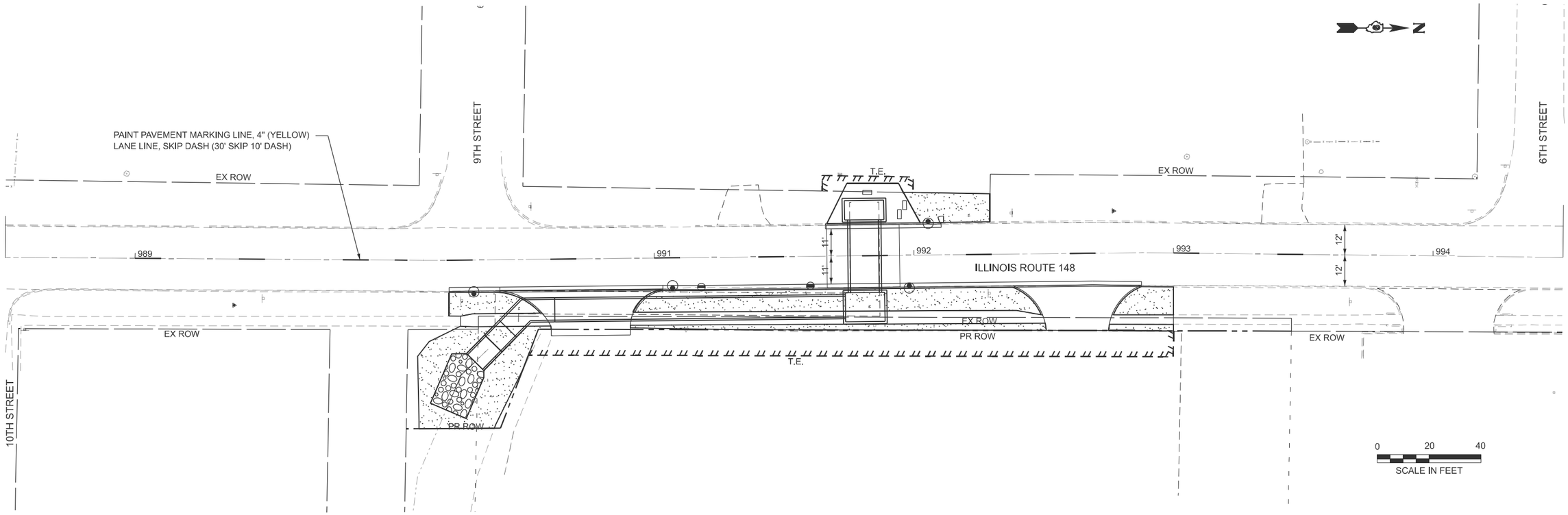

LEGEND

SEEDING, CLASS 2 &
SEEDING, CLASS 7

MODEL: IL148 - PLAN-1 [Sheet]
FILE NAME: pw://patrickco-pw.bentley.com:patrickco-pw-07/Documents/IL_CE/25PTRTM005_IL148_PH2/CADData/CADsheets/D978A09-Sht-pavemark.dgn

PATRICK ENGINEERING INC.
55 EAST MONROE STREET
SUITE 3450
CHICAGO, IL 60603
www.rina-us.org
Design Firm License No. 184000494-0014

USER NAME = DT004	DESIGNED - DT	REVISED -	
	DRAWN - DT	REVISED -	
	CHECKED - KE	REVISED -	
PLOT DATE = 9/30/2025	DATE - 9/30/2025	REVISED -	

STATE OF ILLINOIS
DEPARTMENT OF TRANSPORTATION

PAVEMENT MARKING PLAN & LANDSCAPING PLAN
ILLINOIS ROUTE 148

SCALE: 1"=20' | SHEET 1 OF SHEETS | STA. 988+50.00 TO STA. 994+50.00

F.A.P. RTE.	SECTION	COUNTY	TOTAL SHEETS	SHEET NO.
726	127CR-1	FRANKLIN	42	24

CONTRACT NO. 78A09

ILLINOIS | FED. AID PROJECT

Benchmark: C.P. #2879001, Sta. 992+77.00, 16.2' Lt., Elev. 424.91

Existing Structure: S.N. 028-7900. The existing structure is 10'x2' box culvert turning to a 7.5'x3' box culvert. The existing structure is to be removed and replaced with an 11'x2" box culvert leading to an 8'x3' box culvert. The culvert work along the East side of IL 148 will be performed behind the temporary concrete barrier wall with two 10-foot traffic lanes in each direction. The culvert work across IL 148 will require a 3-day full road closure.

No Salvage

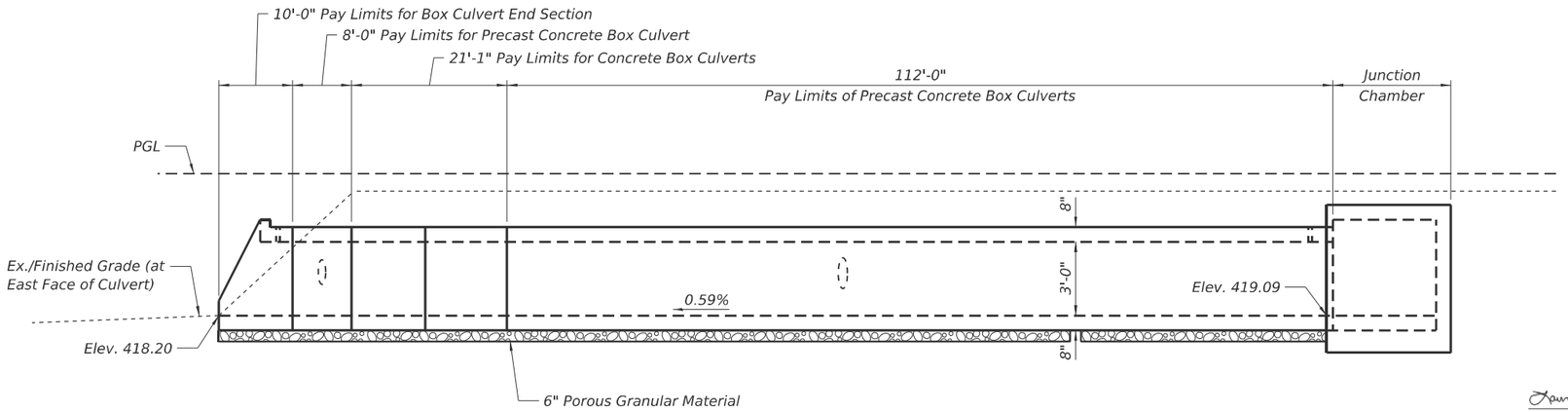

ELEVATION

LEGEND

G	Exist. Gas
W	Exist. Water
FO	Exist. Fiber
	Ex. Storm Sewer
	Prop. Storm Sewer
C&G	Curb and Gutter

LICENSED STRUCTURAL ENGINEER
LAURA F. BLOOMBERG
081-007649
STATE OF ILLINOIS

Laura F. Bloomberg P.E., S.E.
License No.: 081.007649
Expires: 11/30/2026
Date: 05/30/2025

I certify to the best of knowledge, information and belief, this culvert design is structurally adequate for the design loading shown on the plans. The design is an economical one for the style of structure and complies with requirements of the current AASHTO LRFD Bridge Design Specifications

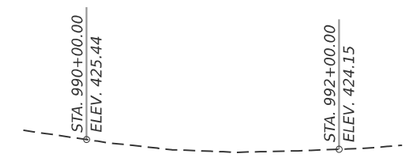

PROFILE GRADE IL ROUTE 148

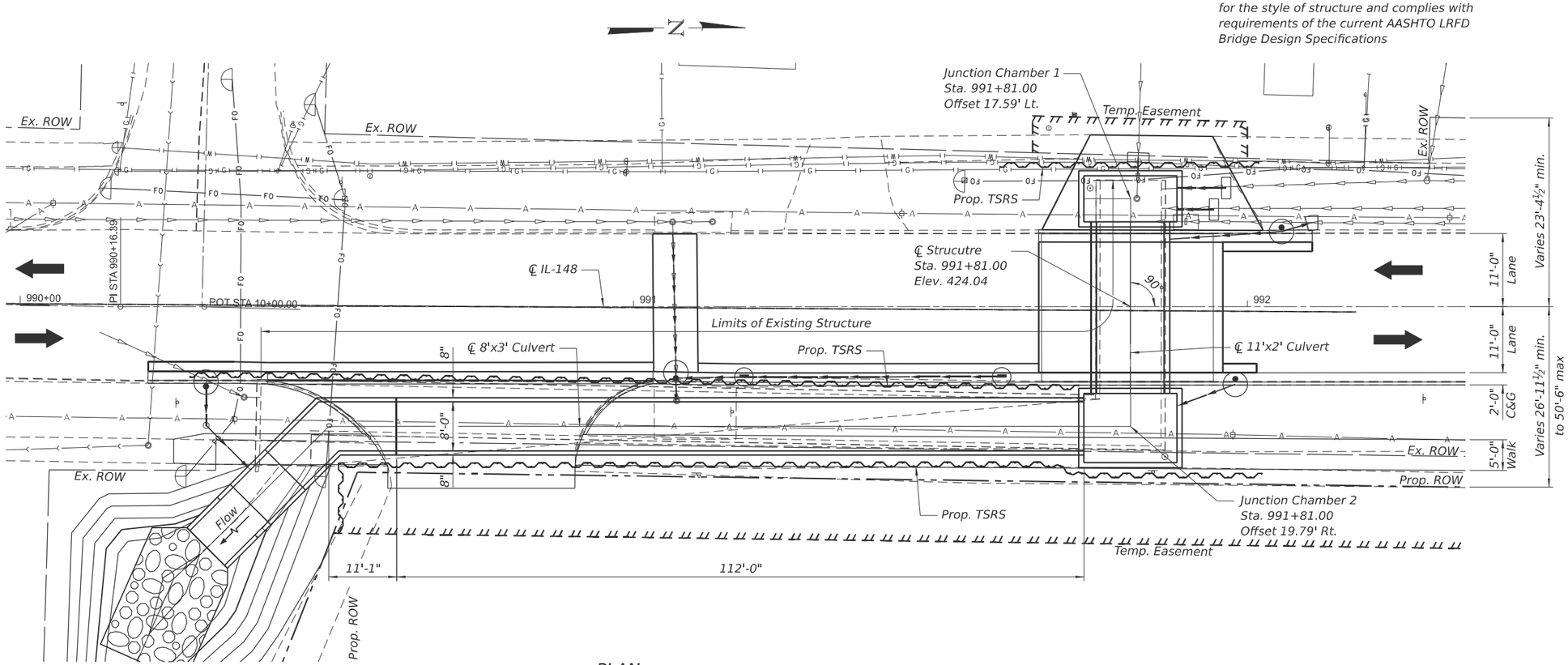

PLAN

Range 1E, 3rd P.M.

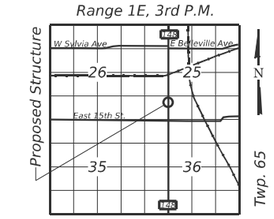

LOCATION SKETCH

DESIGN SPECIFICATIONS

2024 AASHTO LRFD Bridge Design Specifications
Customary U.S. Units, 10th Edition

LOADING HL-93

DESIGN STRESSES

PRECAST UNITS

f'c = 5,000 psi
fy = 65,000 psi (Welded Wire Reinforcement)

FIELD UNITS

f'c = 3,500 psi
fy = 60,000 psi (Reinforcement)

GENERAL PLAN AND ELEVATION
IL RTE. 148
F.A.P. RTE. 726 SEC. 127 CR-1
FRANKLIN COUNTY
STATION 991+81.00
S.N. 028-7138

MODEL: GPE [Sheet]
FILE NAME: pw://patrickco-pw.bentley.com:patrickco-pw-07/Documents/IL_CE/25PTRTM005_IL148_PH2/CADData/CADsheets/0978A09-SHT-0287138-GPE-S01.dgn

PATRICK ENGINEERING INC.
55 EAST MONROE STREET
SUITE 3450
CHICAGO, IL 60603
www.rina-us.org
Design Firm License No. 184000490-0014

USER NAME = BP003	DESIGNED - EMA	REVISED -	
	CHECKED - LFB	REVISED -	
PLOT SCALE =	DRAWN - BMP	REVISED -	
PLOT DATE =	CHECKED - LFB	REVISED -	

STATE OF ILLINOIS
DEPARTMENT OF TRANSPORTATION

SHEET S-01 OF S-10 SHEETS

F.A.P. RTE.	SECTION	COUNTY	TOTAL SHEETS	SHEET NO.
726	127CR-1	FRANKLIN	42	25
		CONTRACT NO. 78A09		
		ILLINOIS	FED. AID PROJECT	

9/30/2025 3:11:40 PM

GENERAL NOTES

1. Protective coat shall not be applied to surfaces to which Waterproofing Membrane System is applied.

INDEX OF SHEETS

TOTAL BILL OF MATERIAL

ITEM	UNIT	TOTAL
Porous Granular Embankment	Cu Yd	203
Removal Of Existing Structures	Each	1
Reinforcement Bars	Pound	4,240
Temporary Soil Retention System	Sq Ft	2,397
Box Culvert End Sections, Culvert No. 1	Each	1
Concrete Box Culverts	Cu Yd	15
Precast Concrete Box Culverts 8' X 3'	Foot	120
Precast Concrete Box Culverts 11' X 2'	Foot	28
Geocomposite Wall Drain	Sq Yd	227
Precast Concrete Junction Chamber	Each	2
Membrane Waterproofing System For Buried Structures	Sq Yd	227

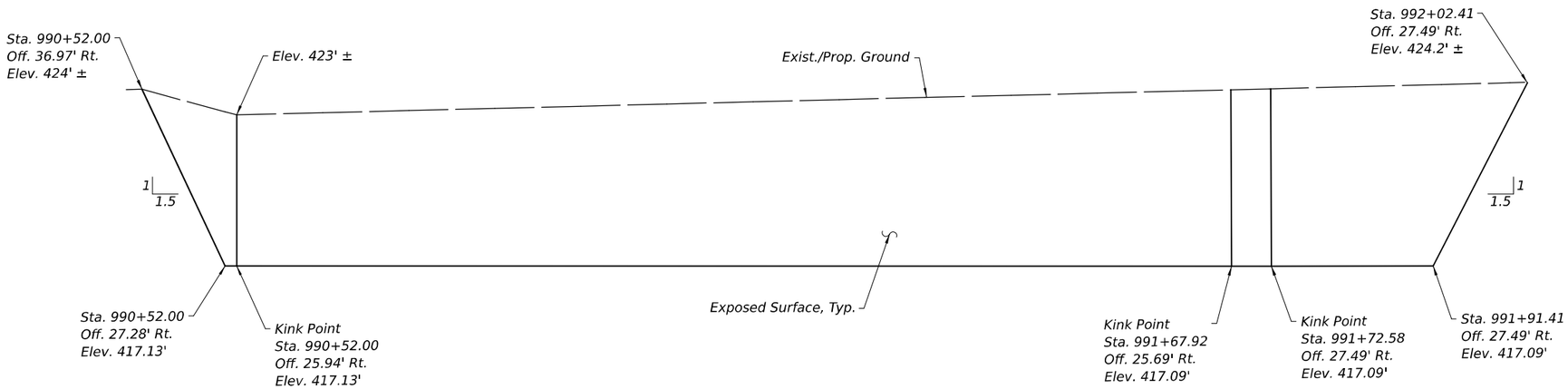

ELEVATIONS

(Looking West)
(Unfolded Elevation)

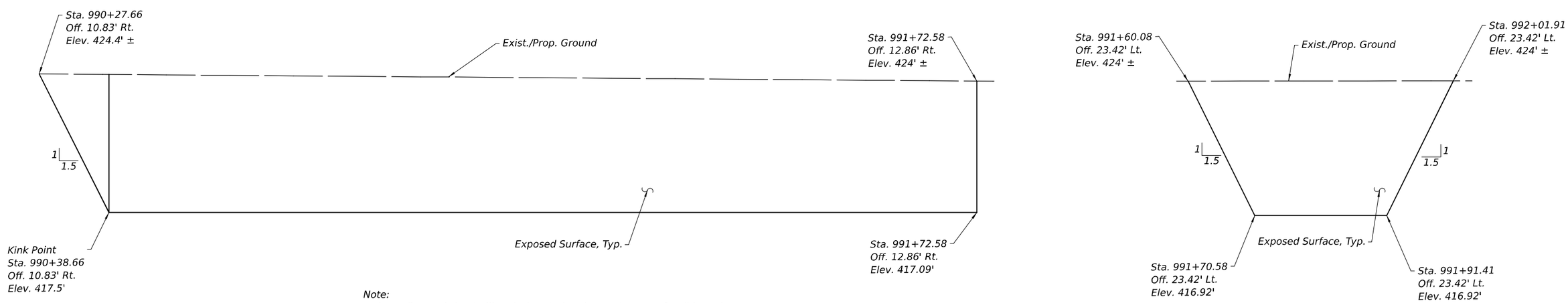

Note:
A cantilevered sheet piling design design does not appear feasible and additional members or other retention systems may be necessary. The Contractor shall submit a temporary soil retention system design including plan details and calculations for review and acceptance by the engineer

ELEVATIONS

(Looking East)

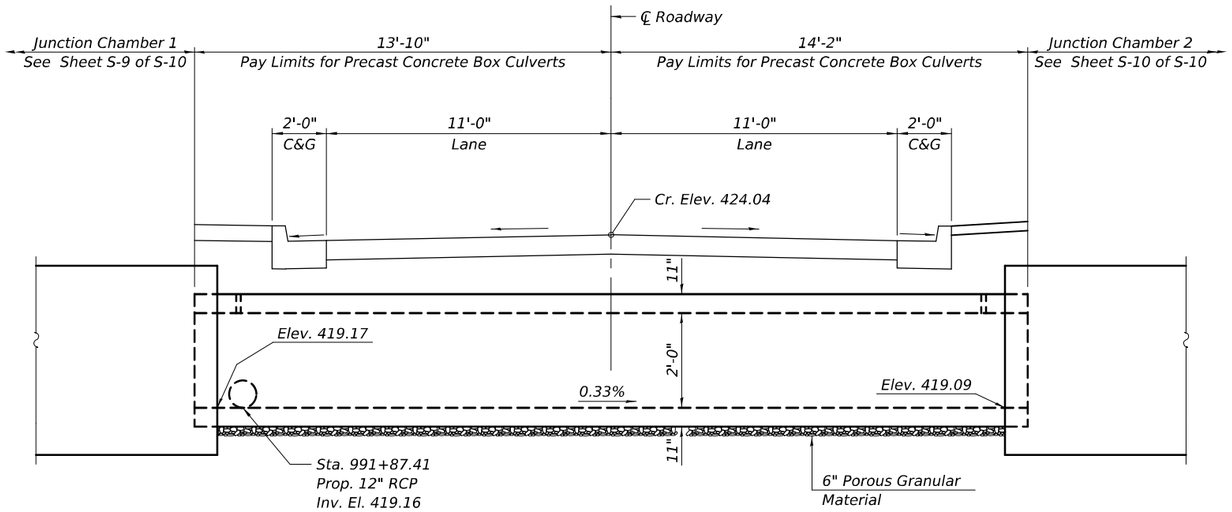

ELEVATION

(Looking North)

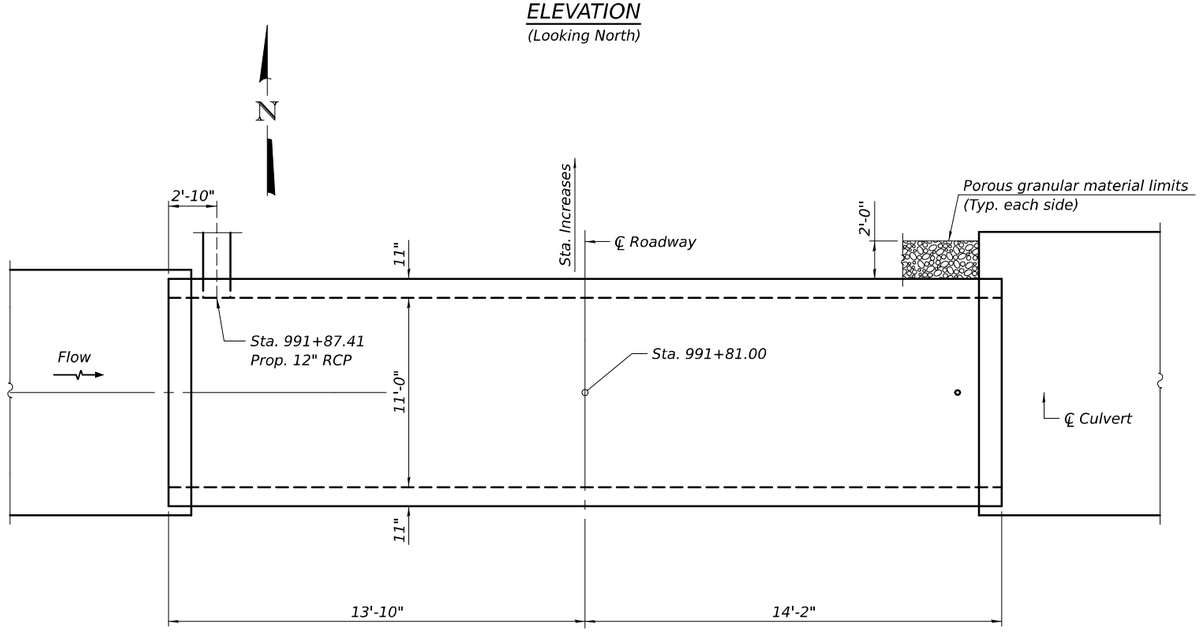

PLAN

GENERAL NOTES

The design fill height for this box is 1ft. The precast box culvert sections shall conform to the requirements of ASTM C 1577.

Drain holes shall be provided on exterior culvert walls for each precast box segment with a clear rise greater than 3 ft. The drain hole shall be located within 1/3 of the clear rise of the box culvert, shall not intercept the haunch, and shall conform to the requirements of Article 503.11 of the Standard Specification.

Nonwoven geotextile fabric shall conform to the requirements of Art. 1080.01 of the Standard Specifications. The minimum weight of the fabric shall be 6 ounces per square yard.

Precast concrete box culverts and box culvert end sections shall be backfilled with Porous Granular Embankment in the required excavation areas on the sides of the box culvert from the top of the box culvert to the bottom of the box culvert. This area of PGE is included in the Porous Granular Embankment pay item. The 6-inch thick layer of porous granular material required under the precast concrete box culvert, according to Section 540.06 of the standard specifications, shall also apply to the end sections. Cost of this porous granular material will not be paid for separately but shall be included in the unit price of the work for which it is required.

Porous granular embankment shall be CA7 or CA11 and topped with 1" of CA10.

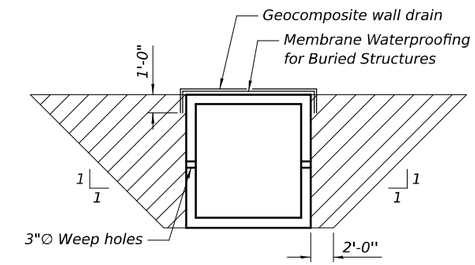

PAY LIMITS FOR POROUS GRANULAR EMBANKMENT

(Hatched area)

Geocomposite Wall Drain shall be according to Section 591 of the Standard Specifications, except that concrete nails shall not be used in areas where it overlaps Membrane Waterproofing System for Buried Structures.

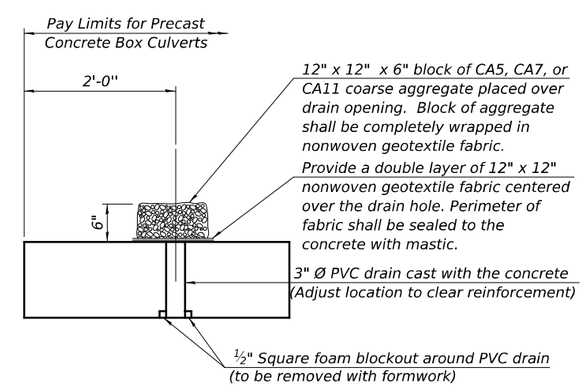

DRAIN DETAIL

(All costs associated with furnishing and constructing the above drain detail will not be measured for payment but shall be included in the contract unit price for the associated work.)

MODEL: Culvery Plan and Elevation 01 [Sheet]
FILE NAME: pw://patrickcc-pw.bentley.com:patrickcc-pw-07/Documents/IL_CE/25PTRTM005_IL148_PH2/CADData/CADsheets/D978A09-SHT-028/138-DETAILS-S03.dgn
12/10/2025 8:17:14 AM

PATRICK ENGINEERING INC. 55 EAST MONROE STREET SUITE 3450 CHICAGO, IL 60603 www.PAeng.us.org Design Firm License No. 184003496-0014	USER NAME = BP003	DESIGNED - EMA	REVISED -	STATE OF ILLINOIS DEPARTMENT OF TRANSPORTATION	CULVERT PLAN AND ELEVATION - 11'x2'	F.A.P. RTE.	SECTION	COUNTY	TOTAL SHEETS	SHEET NO.
		CHECKED - LFB	REVISED -			726	127CR-1	FRANKLIN	42	27
	PLOT SCALE =	DRAWN - BMP	REVISED -					CONTRACT NO. 78A09		
	PLOT DATE =	CHECKED - LFB	REVISED -		SHEET S-03 OF S-10 SHEETS		ILLINOIS	FED. AID PROJECT		

GENERAL NOTES

The design fill height for this box is 1ft. The precast box culvert sections shall conform to the requirements of ASTM C 1577.

Drain holes shall be provided on exterior culvert walls for each precast box segment with a clear rise greater than 3 ft. The drain hole shall be located within 1/3 of the clear rise of the box culvert, shall not intercept the haunch, and shall conform to the requirements of Article 503.11 of the Standard Specification.

Nonwoven geotextile fabric shall conform to the requirements of Art. 1080.01 of the Standard Specifications. The minimum weight of the fabric shall be 6 ounces per square yard.

Precast concrete box culverts and box culvert end sections shall be backfilled with Porous Granular Embankment in the required excavation areas on the sides of the box culvert from the top of the box culvert to the bottom of the box culvert. This area of PGE is included in the Porous Granular Embankment pay item. The 6-inch thick layer of porous granular material required under the precast concrete box culvert, according to Section 540.06 of the standard specifications, shall also apply to the end sections. Cost of this porous granular material will not be paid for separately but shall be included in the unit price of the work for which it is required.

Extend precast concrete box culvert welded wire fabric into CIP bent section. Bend as necessary to provide 1" clear cover. See Sections A-A and C-C.

See Sheet S-5 of S-10 for Sections A-A thru F-F.

* Measured along ℄ of bent section

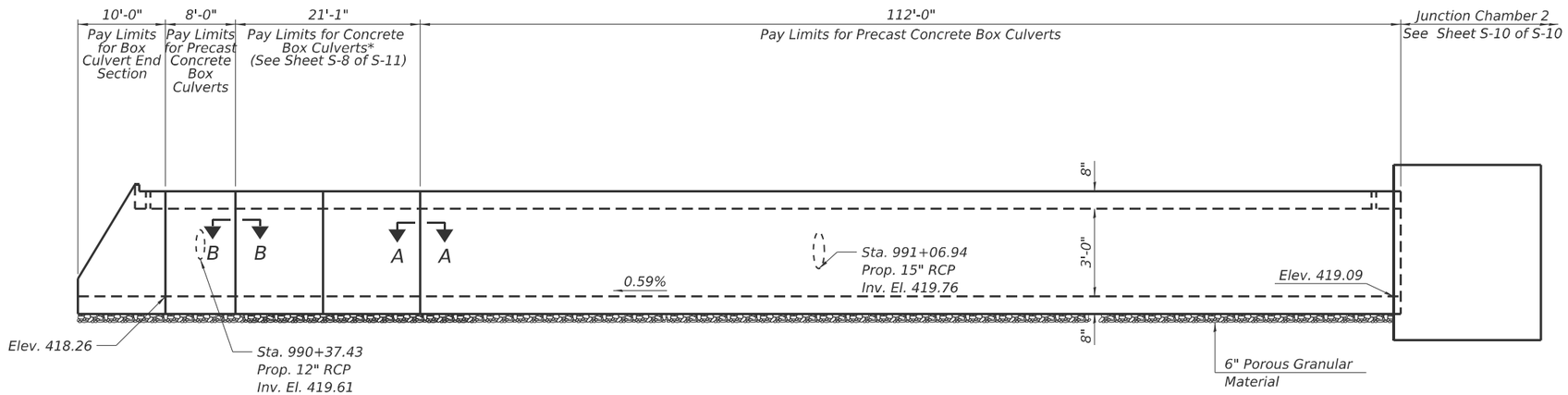

ELEVATION

(Looking East, Unfolded View)

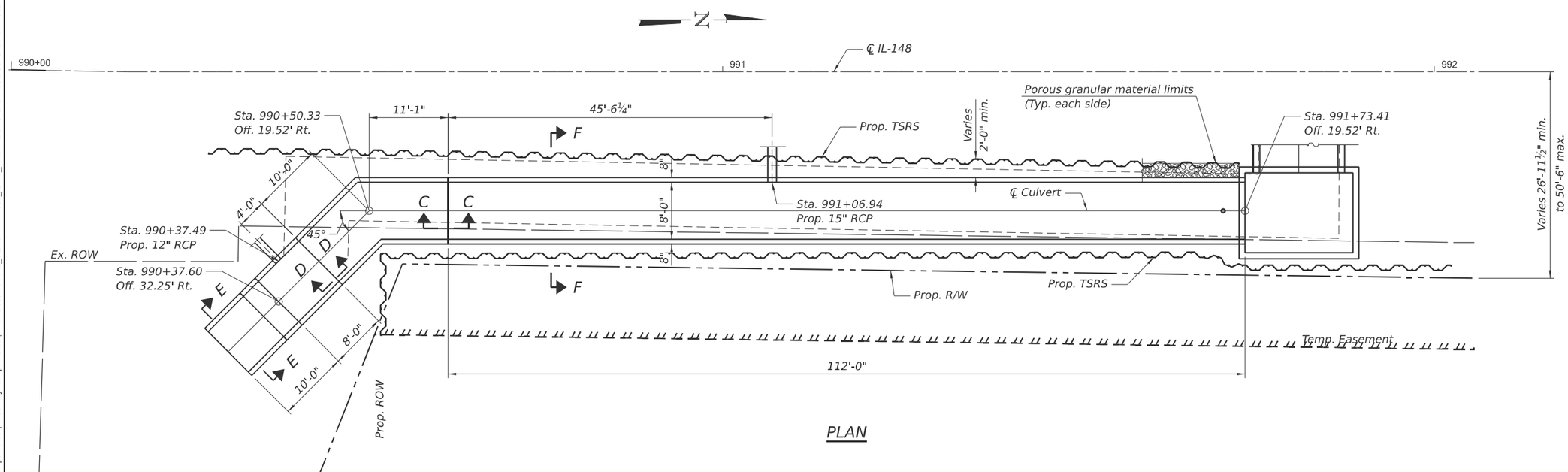

PLAN

USER NAME = BP003	DESIGNED - EMA	REVISED -	
	CHECKED - LFB	REVISED -	
PLOT SCALE =	DRAWN - BMP	REVISED -	
PLOT DATE =	CHECKED - LFB	REVISED -	

STATE OF ILLINOIS
DEPARTMENT OF TRANSPORTATION

CULVERT PLAN AND ELEVATION 8'x3'

SHEET S-04 OF S-10 SHEETS

F.A.P. RTE.	SECTION	COUNTY	TOTAL SHEETS	SHEET NO.
726	127CR-1	FRANKLIN	42	28

CONTRACT NO. 78A09

ILLINOIS FED. AID PROJECT

MODEL: Plan and Elevation 2 [Sheet]
FILE NAME: pw://patrickco-pw.bentley.com:patrickco-pw-07/Documents/IL_CE/25PTRTM005_IL148_PH2/CADData/CADsheets/D978A09-SHT-0287138-DETAILS-S04.dgn

9/30/2025 3:12:12 PM

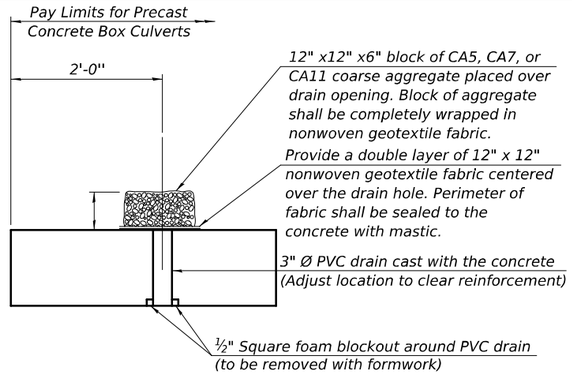

DRAIN DETAIL AT PRECAST END

(All costs associated with furnishing and constructing the above drain detail will not be measured for payment but shall be included in the contract unit price for the associated work.)

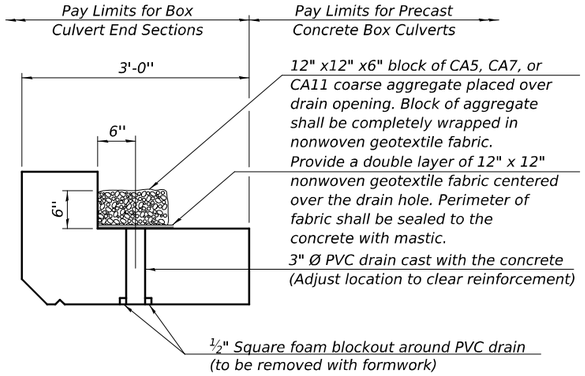

DRAIN DETAIL AT END SECTION

(All costs associated with furnishing and constructing the above drain detail will not be measured for payment but shall be included in the contract unit price for the associated work.)

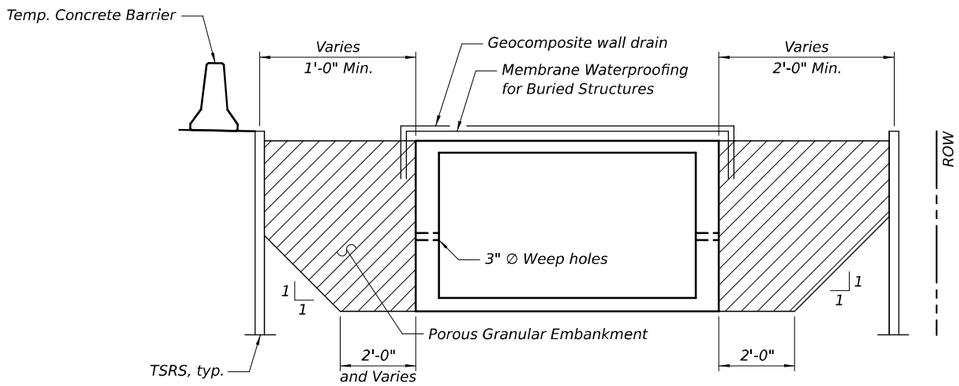

SECTION F-F

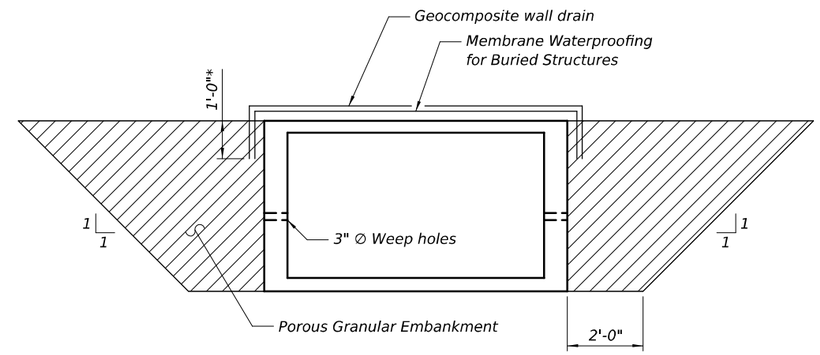

*Membrane Waterproofing System for Buried Structures and Geocomposite Wall Drain shall extend 1'-0" past the top of slab for the precast culvert and 1'-0" past the top joint for the CIP culvert.

SECTION E-E

Geocomposite Wall Drain shall be according to Section 591 of the Standard Specifications, except that concrete nails shall not be used in areas where it overlaps Membrane Waterproofing System for Buried Structures.

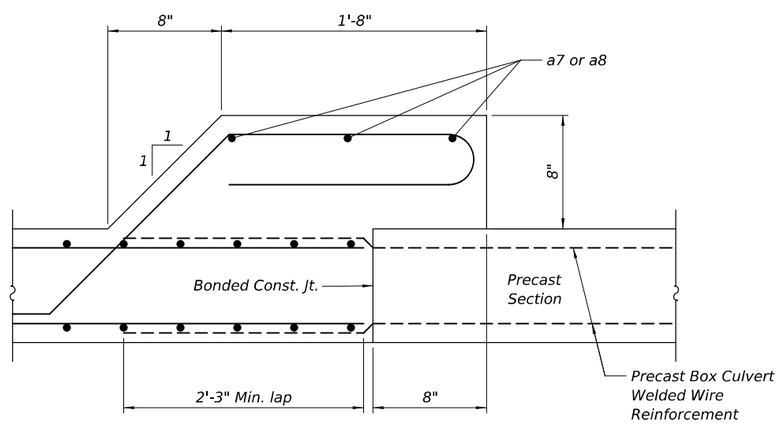

SECTION A-A

(Section B-B similar, opposite hand)

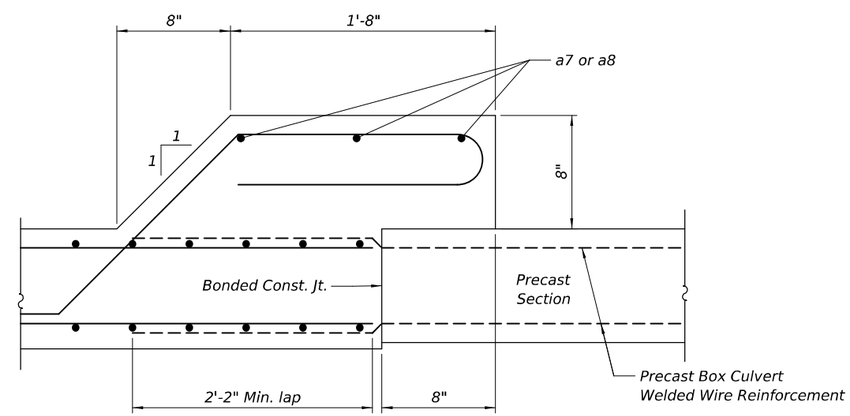

SECTION C-C

(Section D-D similar, opposite hand, typ. top and bottom slabs)

MODEL: Culvert Details [Sheet]
FILE NAME: pw://patrickcc-pw.bentley.com:patrickcc-pw-07/Documents/IL_CE/25PTRTN005_IL148_PH2/CADData/CADsheets/D978A09-SHT-0287138-DETAILS-S05.dgn

PATRICK ENGINEERING INC.
55 EAST MONROE STREET
SUITE 3450
CHICAGO, IL 60603
www.rina-us.org
Design Firm License No. 184003439-0014

USER NAME = BP003	DESIGNED - EMA	REVISED -	
	CHECKED - LFB	REVISED -	
PLOT SCALE =	DRAWN - BMP	REVISED -	
PLOT DATE =	CHECKED - LFB	REVISED -	

STATE OF ILLINOIS
DEPARTMENT OF TRANSPORTATION

CULVERT DETAILS

SHEET S-05 OF S-10 SHEETS

F.A.P. RTE.	SECTION	COUNTY	TOTAL SHEETS	SHEET NO.
726	127CR-1	FRANKLIN	42	29

CONTRACT NO. 78A09

ILLINOIS FED. AID PROJECT

12/10/2025 8:17:28 AM

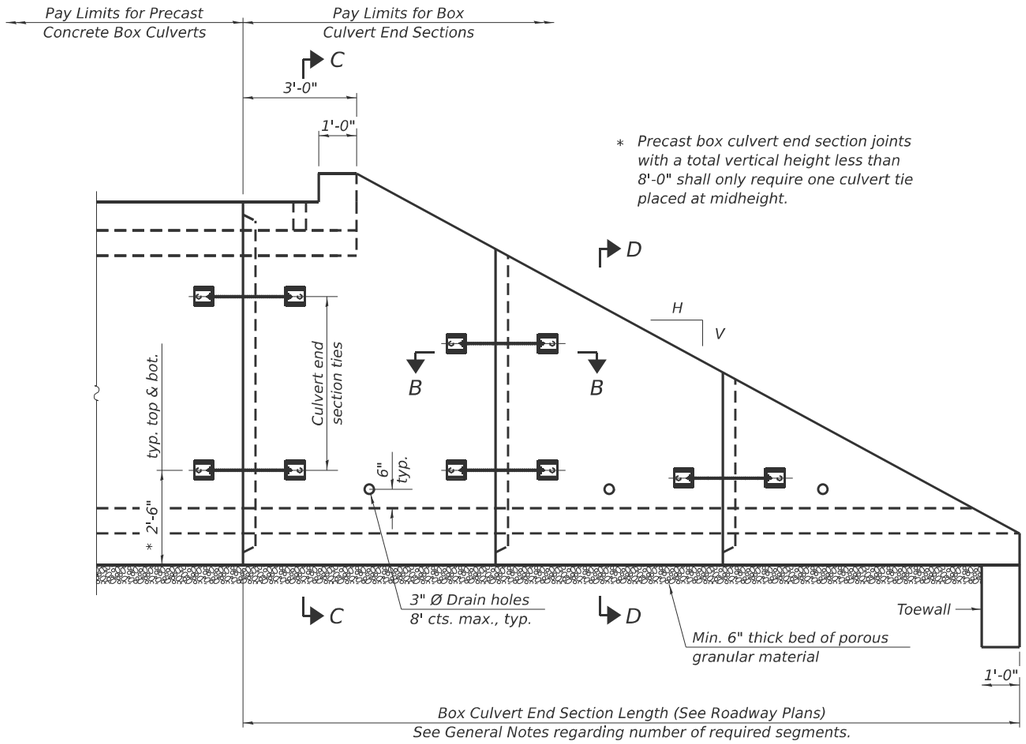

ELEVATION

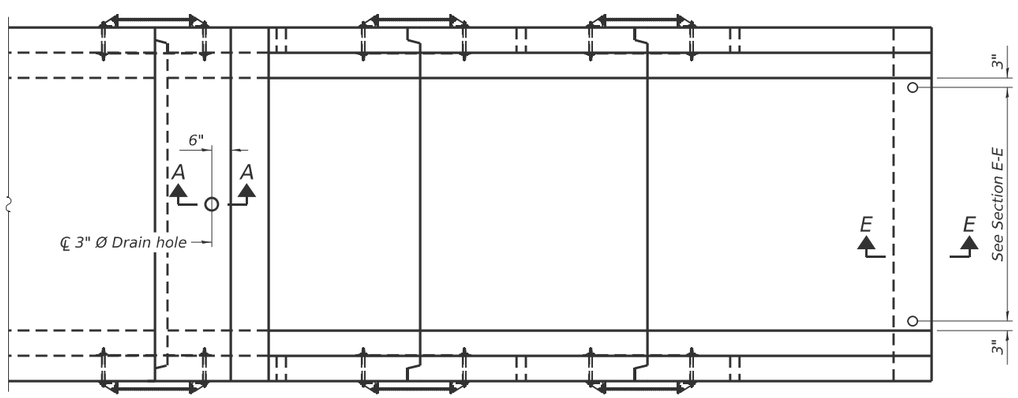

PLAN

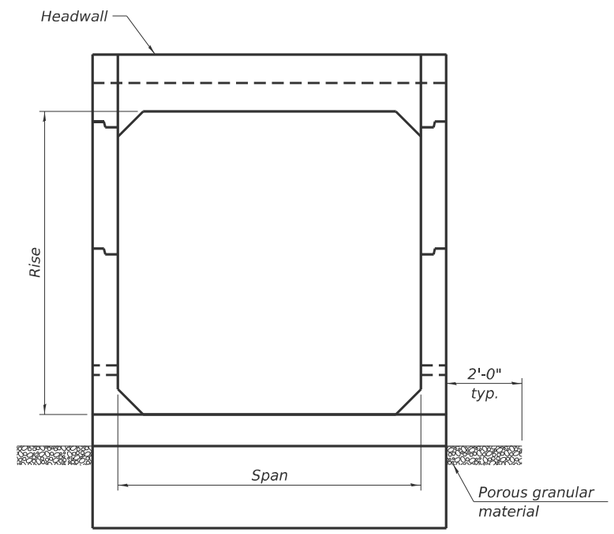

END VIEW

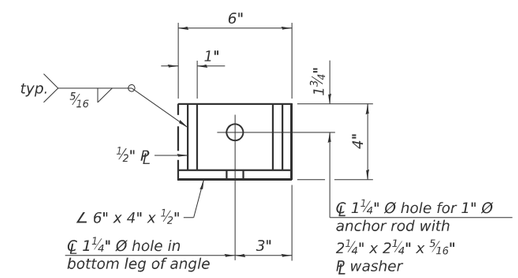

RESTRAINT ANGLE DETAIL

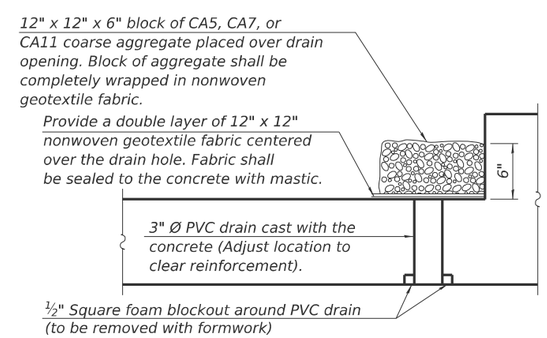

SECTION A-A

(All costs associated with furnishing and constructing the above drain detail will not be measured for payment but shall be included in the contract unit price for the associated work.)

GENERAL NOTES

Box Culvert End Sections shall be constructed according to the requirements of Section 540 of the Standard Specifications except as modified herein. This work will be measured for payment as each, with each end of each culvert being one each. End sections will be paid for at the contract unit price per each for Box Culvert End Sections of the culvert number specified.

Typical box section dimensions, materials, and reinforcement details for Box Culvert End Sections shall be according to the requirements of ASTM C 1577 as required for
the design of the portion of the culvert within the limits of Precast Concrete Box Culverts except as modified herein.

Number of segments shown in Elevation is for example only. Length and number of precast box sections required to construct Box Culvert End Sections shall be determined by the Contractor.

See roadway plans for embankment slope (V:H).

1" Ø anchor rods for the culvert ties shall conform to the requirements of ASTM F1554, Grade 105. Structural steel for tie plate and restraint angle shall conform to the requirements of Article 1006.04 of the Standard Specifications. All components of the culvert tie detail shall be galvanized according to the requirements of AASHTO M 111 or M 232 as applicable. 2¼" x 2¼" x 5/16" plate washers shall be provided under each nut required for the anchor rods. Anchor rods connecting precast sections shall be brought to a snug tight condition followed by an additional ½ turn on one of the nuts for anchor rods installed in the walls. Match marks shall be provided on the bolt and nut to verify relative rotation between the bolt and the nut. Holes in the walls for the culvert tie assembly may be drilled using core bits in lieu of using formed holes.

All costs associated with furnishing and installing or constructing the toewall and culvert ties will not be measured for payment but shall be included in the contract unit price for Box Culvert End Sections of the culvert number specified.

Drain holes shall conform to the requirements of Article 503.11 of the Standard Specifications unless noted otherwise.

Nonwoven geotextile fabric shall conform to the requirements of Article 1080.01. The minimum weight of the fabric shall be 6 oz. / sq. yd..

For end sections with traversable pipe grate systems, see grate detail sheet for required modifications.

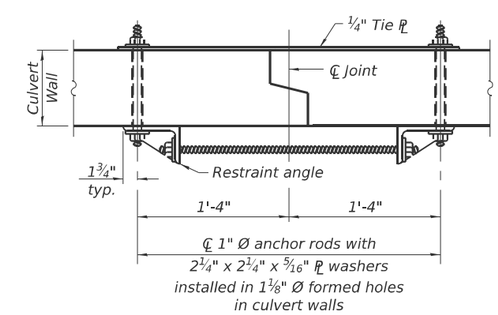

SECTION B-B

(Showing end section tie details)

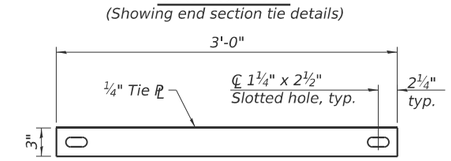

TIE PLATE DETAIL

(Sheet 1 of 2)

SCB-TES 5-15-2023

USER NAME = BP003	DESIGNED - EMA	REVISED -	STATE OF ILLINOIS DEPARTMENT OF TRANSPORTATION
	CHECKED - LFB	REVISED -	
PLOT SCALE =	DRAWN - BMP	REVISED -	
PLOT DATE =	CHECKED - LFB	REVISED -	

SINGLE CELL PRECAST BOX CULVERT TAPERED END SECTIONS

SHEET S-06 OF S-10 SHEETS

F.A.P. RTE.	SECTION	COUNTY	TOTAL SHEETS	SHEET NO.
726	127CR-1	FRANKLIN	42	30

CONTRACT NO. 78A09

ILLINOIS FED. AID PROJECT

MODEL: SCB-TES SHEET 1 [Sheet]
FILE NAME: pw://patrickco-pw.bentley.com:patrickco-pw-07/Documents/IL_CE/25PTRTM005_IL148_PH2/CADData/CADsheets/D978A09-SHT-0287138-DETAILS-S06.dgn

9/30/2025 3:12:31 PM

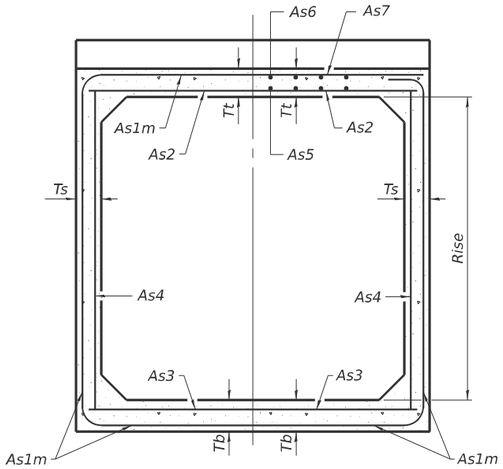

(Design Earth Cover ≥ 2 ft) (Design Earth Cover < 2 ft)

SECTION C-C

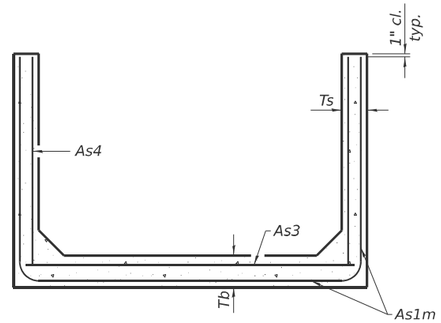

SECTION D-D

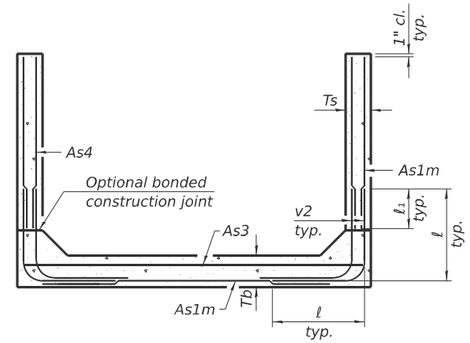

ALTERNATE SECTION D-D

As1m REINFORCEMENT

(in.²/ ft)

Ts (in.) \ Rise (ft)	2	3	4	5	6	7	8	9	10	11	12
4	0.19	0.17									
5	0.26	0.21	0.18								
6	0.22	0.26	0.23	0.22							
7	0.25	0.33	0.59	0.27	0.28						
8	0.40	0.35	0.43	0.39	0.36	0.34	0.40				
9	0.44	0.39	0.35	0.43	0.40	0.37	0.36	0.48			
10	0.48	0.42	0.38	0.47	0.44	0.41	0.38	0.42	0.56		
11	0.52	0.45	0.54	0.50	0.46	0.44	0.41	0.46	0.50	0.65	
12	0.55	0.49	0.58	0.54	0.50	0.48	0.45	0.46	0.46	0.61	0.75

(As1m reinforcement based upon welded wire reinforcement conforming to AASHTO M 55 or M 221).

ℓ1 DIMENSION

#3 bar = 2'-0"
#4 bar = 2'-8"
#5 bar = 3'-4"
#6 bar = 3'-11"

Notes:

Alternate Section D-D is provided to allow the Contractor the option of casting the bottom slab of the end section first followed by construction of the sidewalls using conventional forming methods. Shop drawings that detail slab thickness and reinforcement layout shall be submitted to the Engineer for review and approval when using Alternate Section D-D.

The size and spacing of the v2 bars shall provide a minimum reinforcement area along each face of the walls (in.²/ft.) equal to 1.10*(As1m). v2 bars may consist of #3 thru #6 size reinforcement bars and the longitudinal spacing shall not exceed the lesser of the wall thickness or 8 inches.

Bonded construction joints shall be prepared according to Article 503.09 of the Standard Specifications.

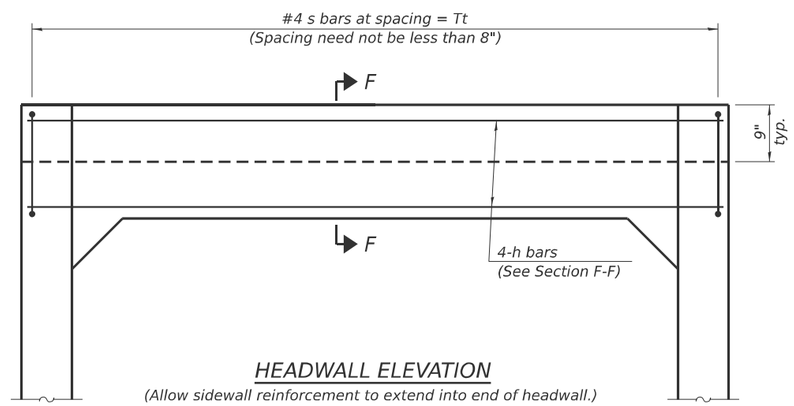

HEADWALL ELEVATION

(Allow sidewall reinforcement to extend into end of headwall.)

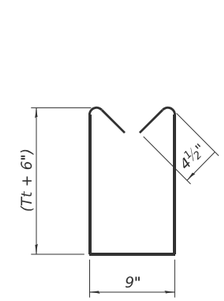

BAR s

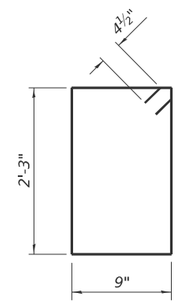

BAR s1

TOEWALL CONSTRUCTION SEQUENCE

1. Perform excavation and construct toewall.
2. Backfill according to the applicable paragraphs of Article 502.10 of the Standard Specifications and place bedding for precast box culvert end sections.
3. Set precast box culvert end section.
4. Drill and epoxy grout reinforcement in toewall in accordance with Section 584 of the Standard Specifications.
5. Pressure grout voids using non-shrink grout conforming to Section 1024 of the Standard Specifications.

* The Contractor may furnish a precast or cast-in-place toewall. The Contractor shall be responsible for the strength and stability of the precast toewall during handling. Additional lifting points may be required depending upon the length of the toewall or the Contractor may need to modify the design of the toewall for the proposed handling the method.

** If soil conditions permit, the sides of the toewall may be poured directly against the soil. The clear cover on the sides of the toewall shall be increased to 3" by increasing the thickness of the toewall.

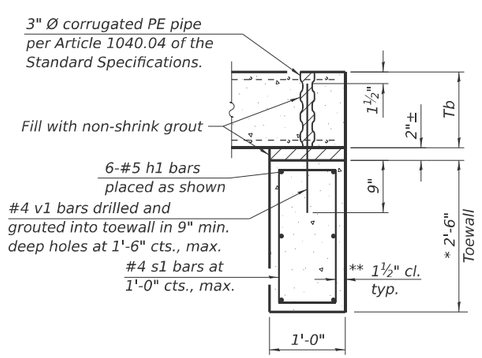

SECTION E-E

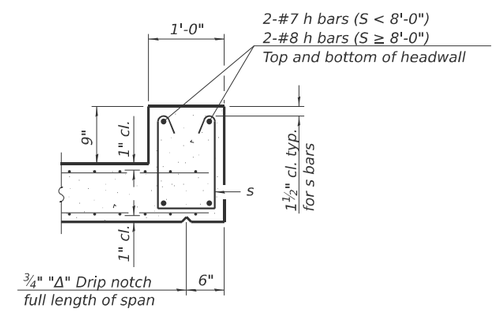

SECTION F-F

SCB-TES 5-15-2023

(Sheet 2 of 2)

USER NAME = BP003	DESIGNED - EMA	REVISED -	STATE OF ILLINOIS DEPARTMENT OF TRANSPORTATION
	CHECKED - LFB	REVISED -	
PLOT SCALE =	DRAWN - BMP	REVISED -	
PLOT DATE =	CHECKED - LFB	REVISED -	

SINGLE CELL PRECAST BOX CULVERT TAPERED END SECTIONS

SHEET S-07 OF S-10 SHEETS

F.A.P. RTE.	SECTION	COUNTY	TOTAL SHEETS	SHEET NO.
726	127CR-1	FRANKLIN	42	31

CONTRACT NO. 78A09

ILLINOIS FED. AID PROJECT

MODEL: SCB-TES SHEET 2 [Sheet]
FILE NAME: pw://patrickco-pw.bentley.com:patrickco-pw-07/Documents/IL_CE/25PTRTM005_IL148_PH2/CADData/CADsheets/D978A09-SHT-0287138-DETAILS-S07.dgn
9/30/2025 3:12:41 PM

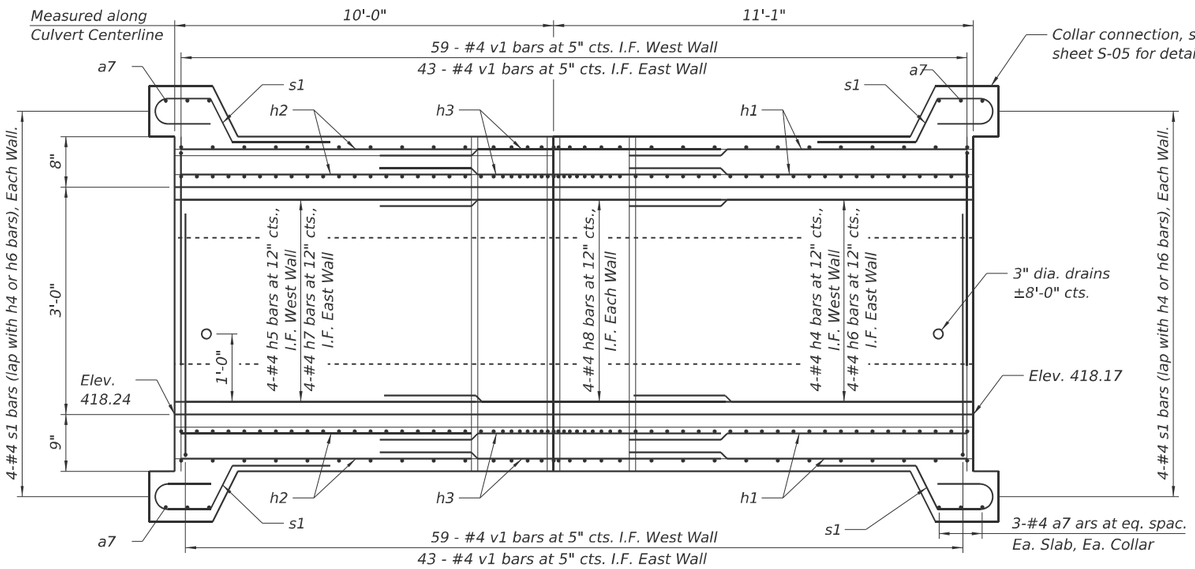

LONGITUDINAL SECTION

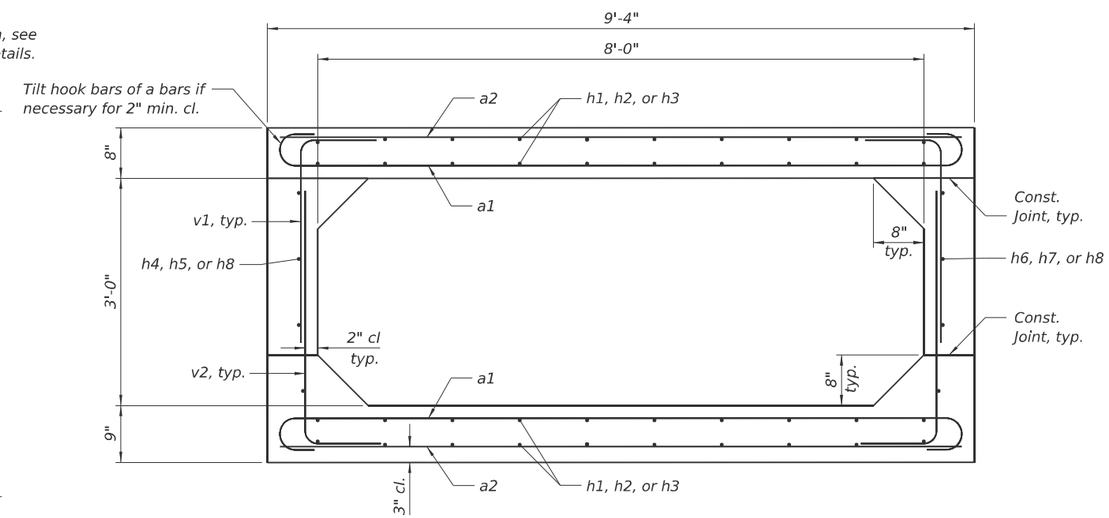

SECTION THRU BARREL

MIN. BAR LAP

#4 bar = 1'-10"
#5 bar = 1'-9"

BILL OF MATERIAL

Bar	No.	Size	Length	Shape
a1	86	#6	10'-4"	
a2	44	#5	9'-0"	
a3	8	#6	13'-2"	
a4	5	#5	11'-10"	
a5	7	#6	13'-9"	
a6	4	#5	12'-5"	
a7	12	#4	10'-4"	
a8	12	#4	5'-5"	
h1	20	#5	21'-9"	
h2	20	#5	19'-7"	
h3	40	#5	3'-6"	
h4	4	#4	12'-7"	
h5	4	#4	11'-6"	
h6	4	#4	9'-2"	
h7	4	#4	8'-1"	
h8	4	#4	3'-8"	
s1	56	#4	7'-2"	
v1	102	#4	3'-8"	
v2	102	#4	4'-4"	
Reinforcement Bars			Pound	4,240
Concrete Box Culverts			Cu Yd	15.0

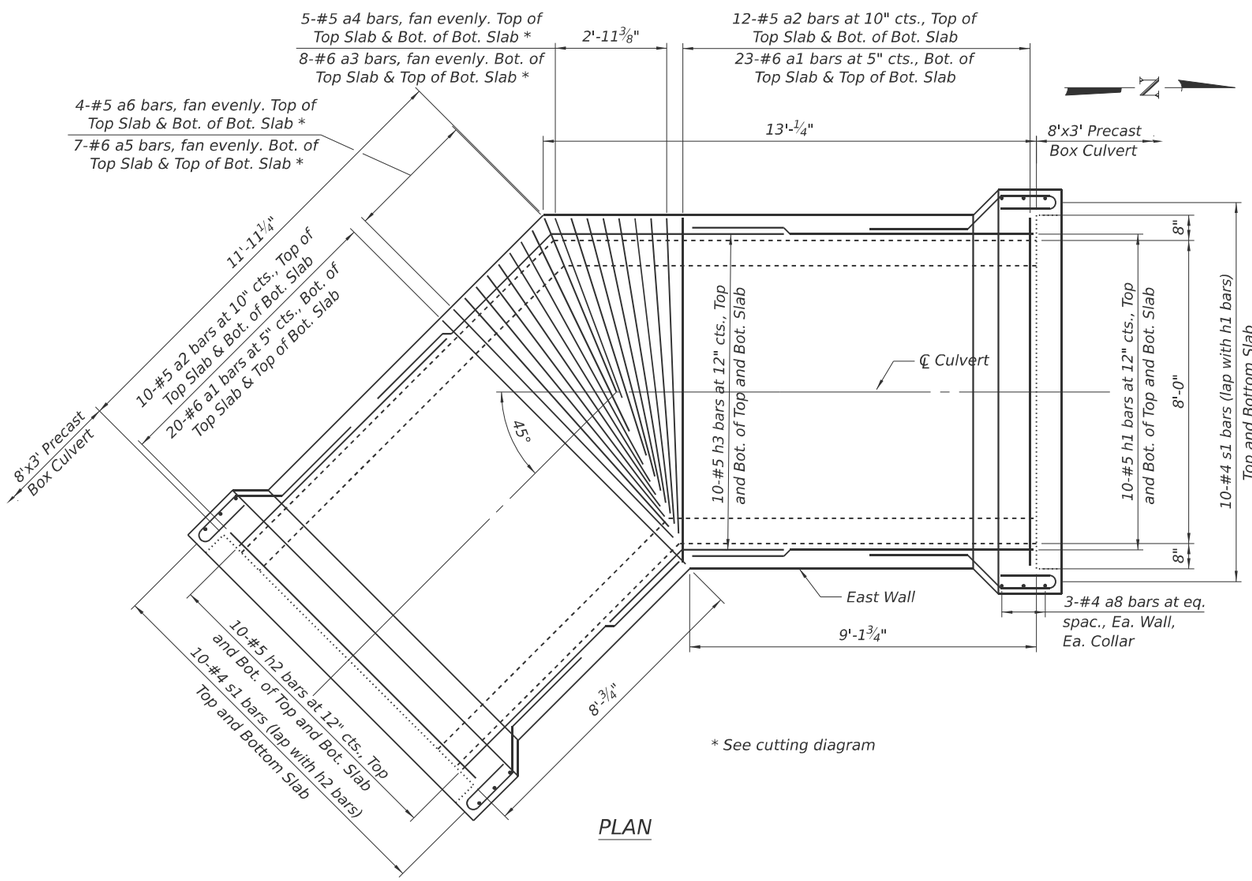

PLAN

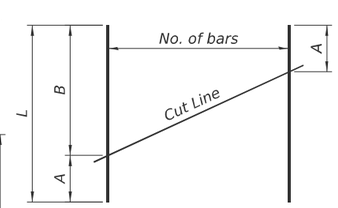

FIELD CUTTING DIAGRAM

Bar	A	B	L	No. of Bars
a3	4'-2"	7'-8"	11'-10"	8
a4	4'-2"	7'-8"	11'-10"	5
a5	4'-9"	7'-8"	12'-5"	7
a6	4'-9"	7'-8"	12'-5"	4
h1	8'-11"	12'-10"	21'-9"	20
h2	7'-10"	11'-9"	19'-7"	20

Order bars full length. Cut as shown and use remainder of bars in opposite slab of opposite slab.

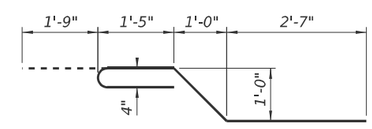

BAR s1

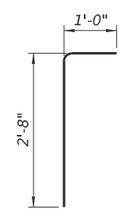

BAR v1

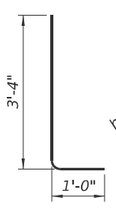

BAR v2

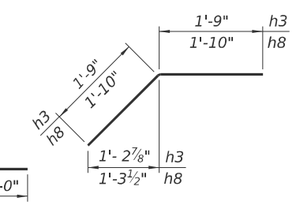

BARS h3 and h8

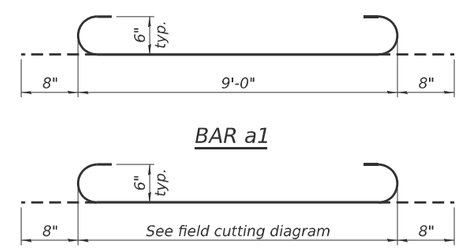

BAR a1

BARS a3 and a5

a3 and a5 bars shall be placed in the top and bottom slabs so that the hook is at the west end.

USER NAME = BP003	DESIGNED - KP	REVISED -	
	CHECKED - LFB	REVISED -	
PLOT SCALE =	DRAWN - EMA	REVISED -	
PLOT DATE =	CHECKED - LFB	REVISED -	

STATE OF ILLINOIS
DEPARTMENT OF TRANSPORTATION

CIP CULVERT BEND DETAILED PLAN AND ELEVATION

SHEET S-08 OF S-10 SHEETS

F.A.P. RTE.	SECTION	COUNTY	TOTAL SHEETS	SHEET NO.
726	127CR-1	FRANKLIN	42	32
		CONTRACT NO. 78A09		
	ILLINOIS	FED. AID PROJECT		

MODEL: CIP Culvert [Sheet]
FILE NAME: pw://patrickco-pw.bentley.com:patrickco-pw-07/Documents/IL_CE/25PTRTM005_IL148_PH2/CADData/CADsheets/D978A09-SHT-0287138-DETAILS-S08.dgn

9/30/2025 3:12:50 PM

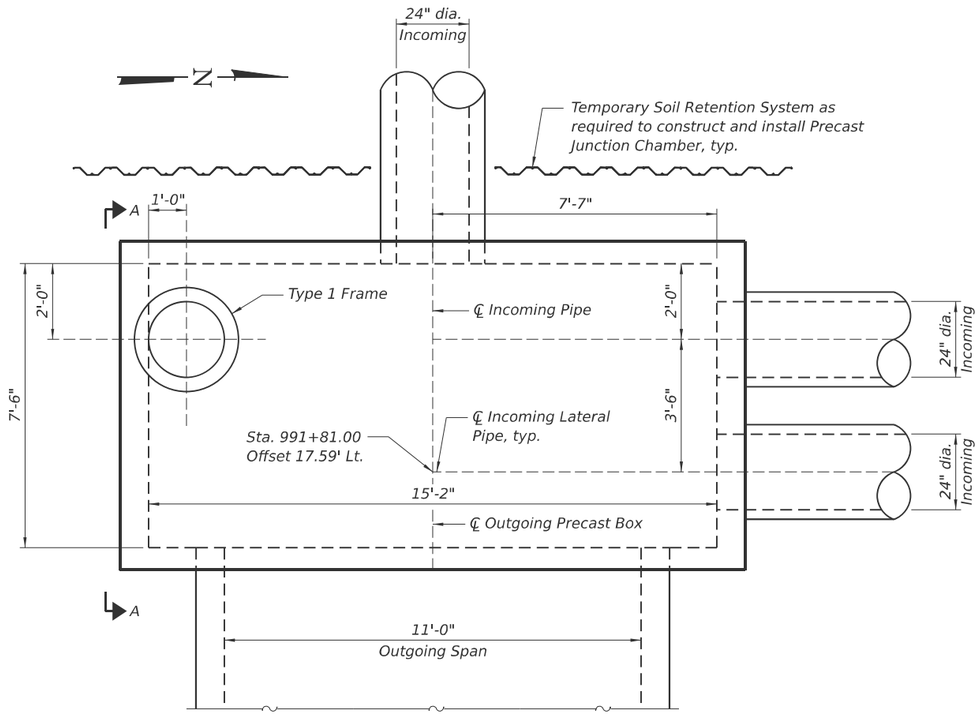

JUNCTION CHAMBER 1 PLAN

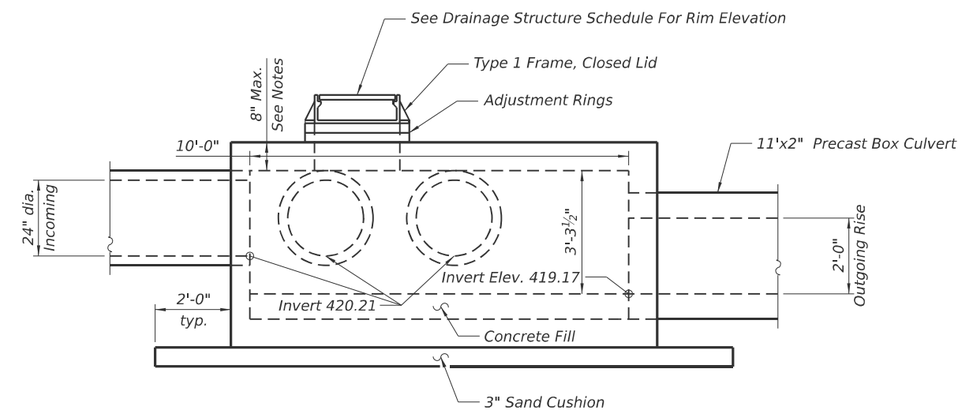

VIEW A-A

NOTES

Precast concrete junction chamber shall be constructed in accordance with the special provision "Precast Concrete Junction Chamber" and the Standard Specifications.

Appropriate sizing and location of lifting inserts shall be the responsibility of the contractor to assure balanced handling during installation.

The contractor is to patch all lifting insert holes and place a minimum of one (1) inch cover over the hardware of these devices on both top and bottom surfaces.

Temporary soil retention systems shown on the plan is conceptual. See Sheet S-02 of S-10 for Temporary Soil Retention System details.

Precast concrete junction chamber shall be precast with no joints. See Highway Standards 602701-02 and 604001-05 for additional information and requirements.

All inverts and elevations shall be field verified by the contractor prior to ordering materials and construction. This work will not be paid for separately, but shall be included within the contract unit price for precast concrete junction chamber.

Precast junction chamber shall be designed to be structurally adequate for vehicular loading. See Special Provision for Precast Concrete Junction Chamber.

The design fill height for this junction chamber varies 7½" to 8½" to the top of pavement.

USER NAME = BP003	DESIGNED - KP	REVISED -	STATE OF ILLINOIS DEPARTMENT OF TRANSPORTATION
	CHECKED - LFB	REVISED -	
PLOT SCALE =	DRAWN - BMP	REVISED -	
PLOT DATE =	CHECKED - LFB	REVISED -	

JUNCTION CHAMBER 1 DETAILS

SHEET S-09 OF S-10 SHEETS

F.A.P. RTE.	SECTION	COUNTY	TOTAL SHEETS	SHEET NO.
726	127CR-1	FRANKLIN	42	33

CONTRACT NO. 78A09

ILLINOIS FED. AID PROJECT

MODEL: Junction Chamber 1 [Sheet]
FILE NAME: pw://patrickco-pw.bentley.com:patrickco-pw-07/Documents/IL_CE/25PTRTM005_IL148_PH2/CADData/CADsheets/D978A09-SHT-0287138-JCDETAILS-S09.dgn

9/30/2025 3:13:00 PM

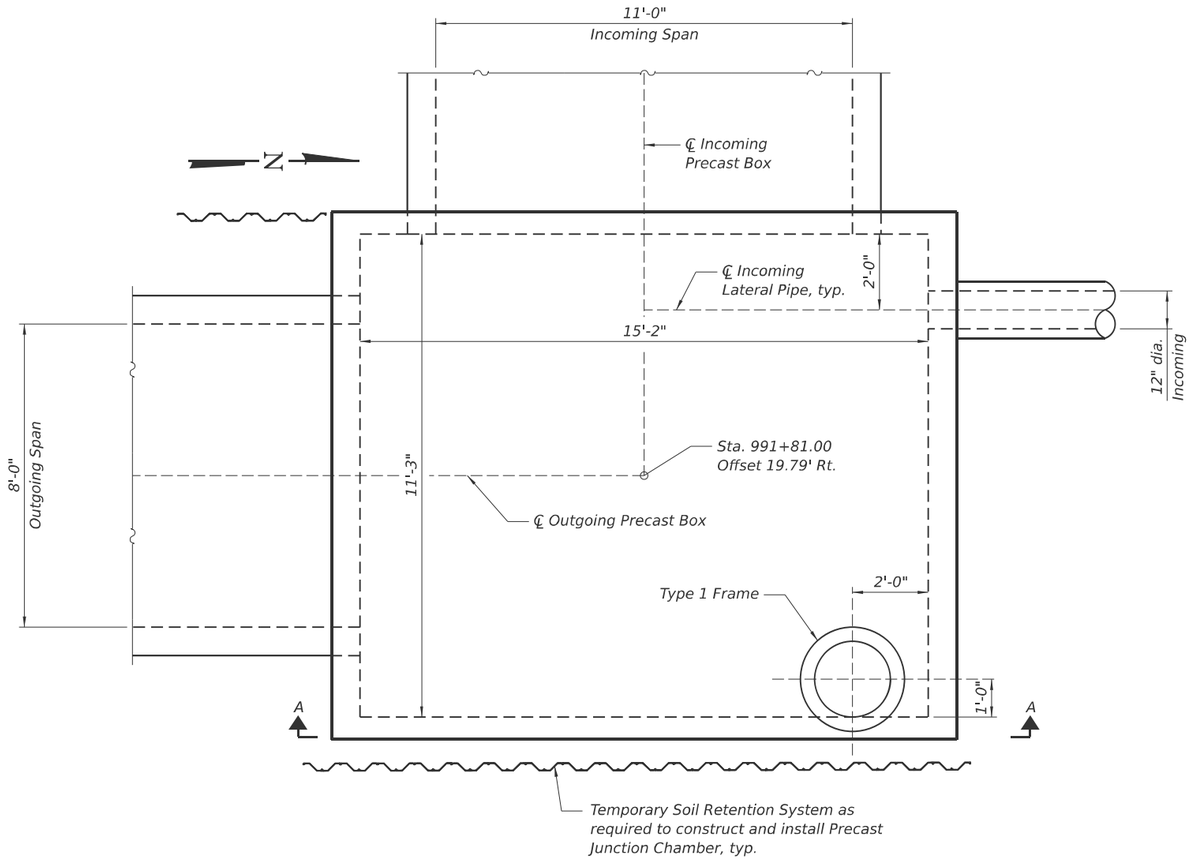

JUNCTION CHAMBER 2 PLAN

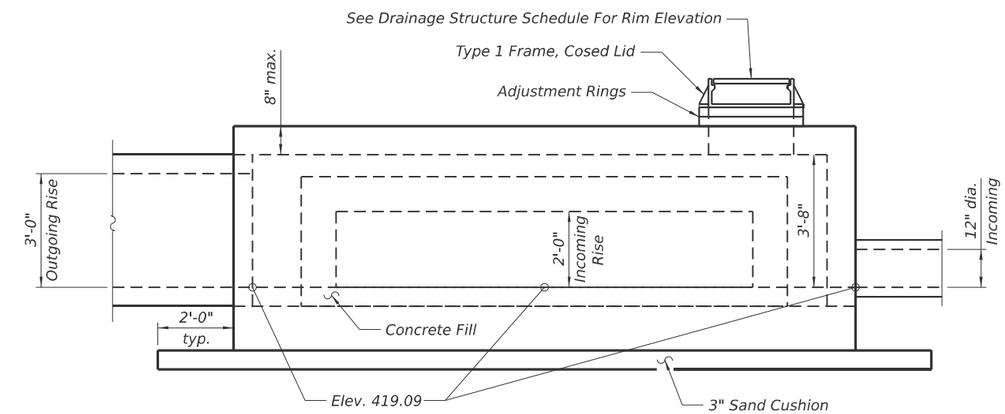

VIEW A-A

NOTES

Precast concrete junction chamber shall be constructed in accordance with the special provision "Precast Concrete Junction Chamber" and the Standard Specifications.

Appropriate sizing and location of lifting inserts shall be the responsibility of the contractor to assure balanced handling during installation.

The contractor is to patch all lifting insert holes and place a minimum of one (1) inch cover over the hardware of these devices on both top and bottom surfaces.

Temporary soil retention systems shown on the plan is conceptual. See Sheet S-02 of S-10 for Temporary Soil Retention System details.

Precast concrete junction chamber shall be precast with no joints. See Highway Standards 602701-02 and 604001-05 for additional information and requirements.

All inverts and elevations shall be field verified by the contractor prior to ordering materials and construction. This work will not be paid for separately, but shall be included within the contract unit price for precast concrete junction chamber.

The design fill height for this junction chamber varies 11½" to 1'-7" to top of pavement.

24' (7.2 m) PCC PAVEMENT OVER BOX CULVERT

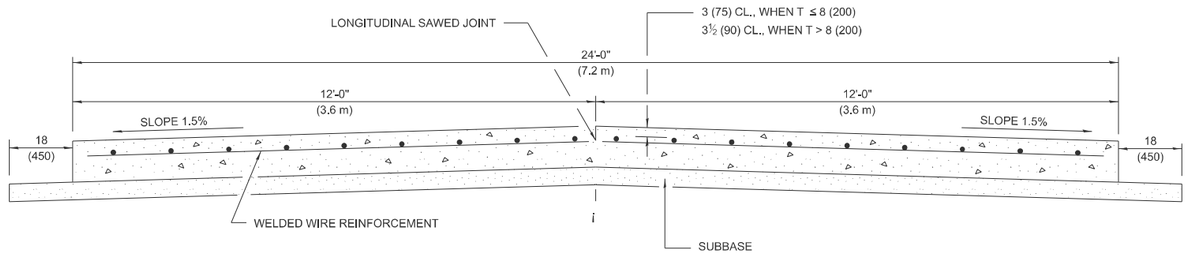

SECTION A–A

(TYPICAL 2-LANE WITH SHOULDERS)

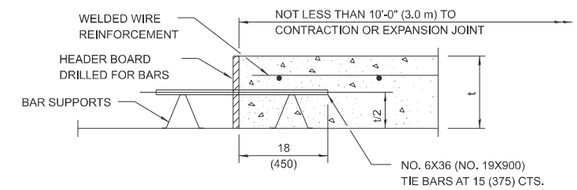

TRANSVERSE CONSTRUCTION JOINT

(IF NEEDED PER STANDARD SPECIFICATIONS)

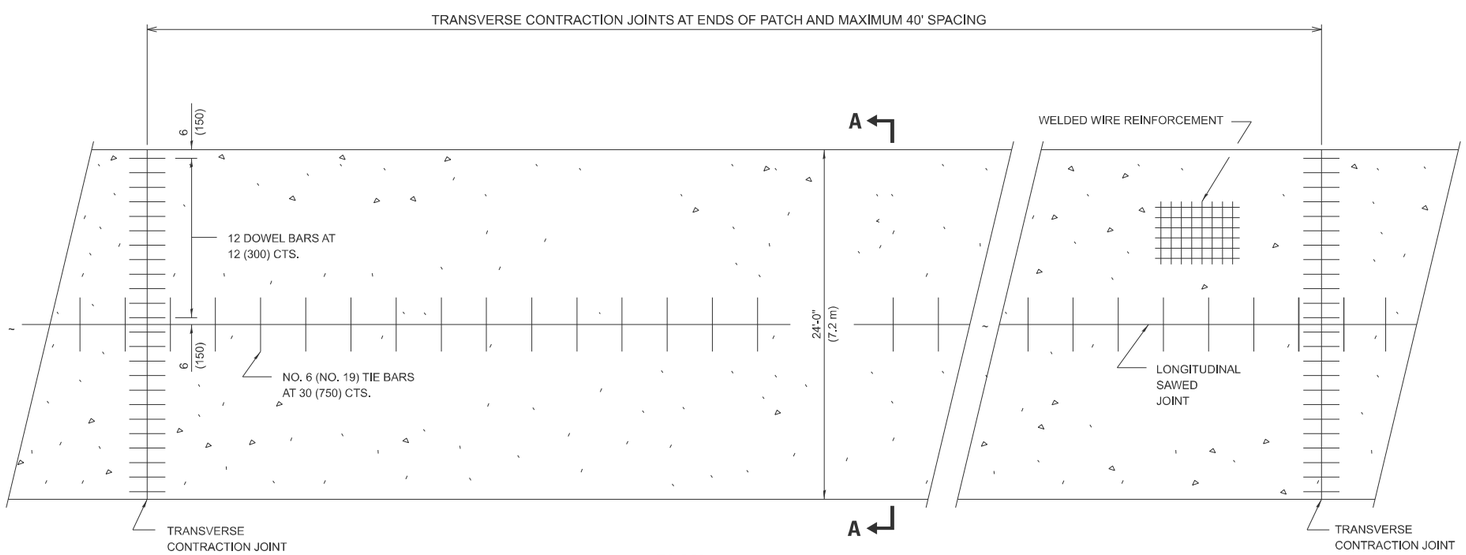

PLAN

GENERAL NOTES

SEE STANDARD 420001 FOR DETAILS NOT SHOWN.

SEE STANDARD 420701 FOR WELDED WIRE REINFORCEMENT DETAILS.

ALL DIMENSIONS ARE IN INCHES (MILLIMETERS) UNLESS OTHERWISE SHOWN.

ACTUAL DIMENSIONS TO MATCH FIELD CONDITIONS AND CONSTRUCTION METHODS.

DRAWN	11-09-17
REVISED	07-23-18
REVISED	10-21-21
REVISED	05-04-22

STD. 9-13

MODEL: Sheet
FILE NAME: pw://patrickco-pw.bentley.com:patrickco-pw-07/Documents/IL_CE/29PTRTM005_IL148_PH2/CADData/CADsheets/D978A09-Sht-D9details.dgn

PATRICK ENGINEERING INC.
55 EAST MONROE STREET
SUITE 3450
CHICAGO, IL 60603
www.pinc-us.org
Design Firm License No. 184000494-0014

USER NAME = DT004	DESIGNED - DT	REVISED -	STATE OF ILLINOIS DEPARTMENT OF TRANSPORTATION
	DRAWN - DT	REVISED -	
	CHECKED - KE	REVISED -	
PLOT DATE = 9/30/2025	DATE - 9/30/2025	REVISED -	

D9 PLAN DETAILS
ILLINOIS ROUTE 148

SCALE: SHEET OF SHEETS STA. TO STA.

F.A.P. RTE.	SECTION	COUNTY	TOTAL SHEETS	SHEET NO.
726	127CR-1	FRANKLIN	42	35

CONTRACT NO. 78A09

ILLINOIS FED. AID PROJECT

DRIVEWAY DETAILS

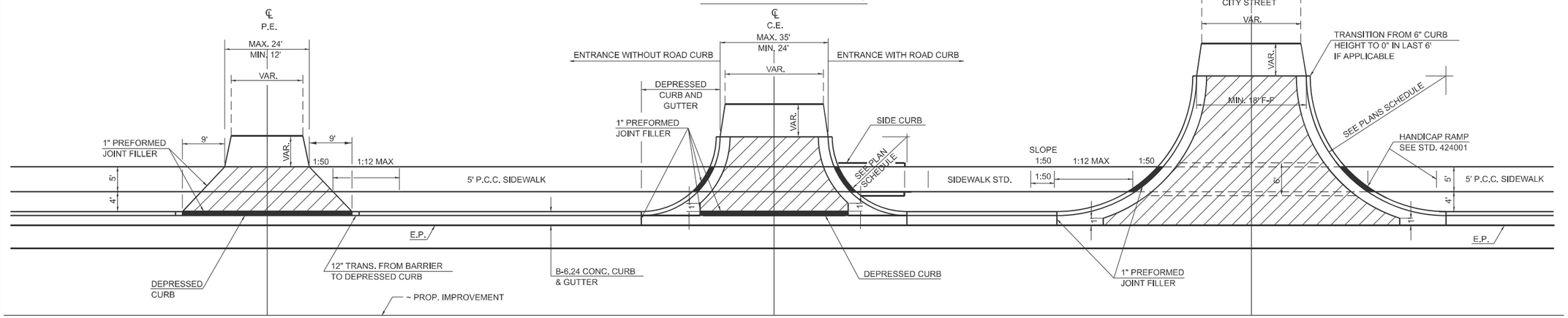

DETAILS PRIVATE ENTRANCE

DETAILS COMMERCIAL ENTRANCE

DETAILS CITY STREETS

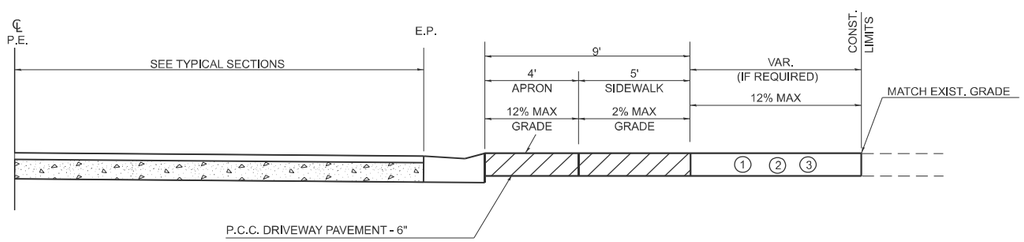

PROFILE OF PRIVATE ENTRANCES

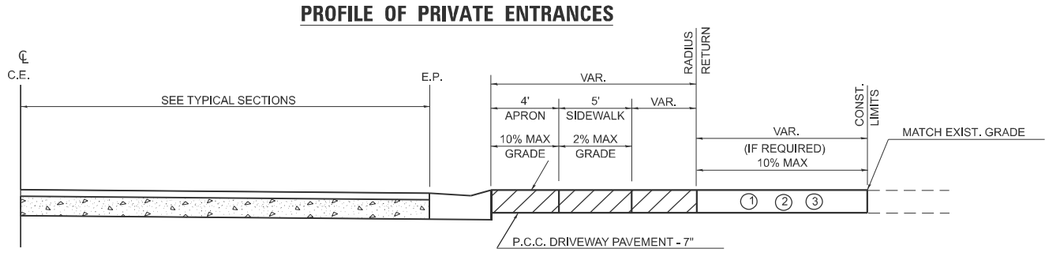

PROFILE OF COMMERCIAL ENTRANCES

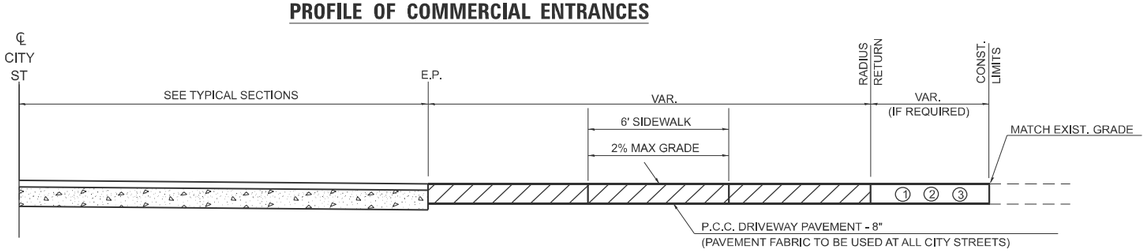

PROFILE OF CITY STREETS

GENERAL NOTES

1. SEE PLAN SCHEDULES FOR DIMENSIONS AND QUANTITIES.
2. SEE CROSS SECTIONS FOR PROPOSED PROFILE OF SIDEROAD AND ENTRANCES.
3. IN GENERAL, WIDTH TRANSITION TAPER RATES ARE TO BE 5:1 FOR ENTRANCES, AND 10:1 FOR CITY STREETS.
4. THE SAWING OF ALL JOINTS IN PCC DRIVEWAY PAVEMENT AT ALL LOCATIONS DESIGNATED BY THE ENGINEER, SHALL BE CONSIDERED INCIDENTAL TO THE COST OF THE PCC DRIVEWAY PAVEMENT.
5. THE SIDEWALK AREA OF THE DRIVEWAY PAVEMENT SHALL BE CONSTRUCTED AS A SEPARATE POUR.

LEGEND

1. EXISTING AGGREGATE SURFACE:
   CONSTRUCT AGGREGATE SURFACE CSE, TYPE A WEDGE TO MATCH EXISTING GRADE. USE 6" MIN. (8" MIN. FOR CITY STREETS) THICKNESS FOR ANY REQUIRED WIDENING.
2. EXISTING BITUMINOUS SURFACE:
   USE 2" MIN. BITUMINOUS RESURFACING ON 4" MIN. AGGREGATE BASE COURSE.
3. EXISTING CONCRETE SURFACE: (6" MIN. FOR CITY STREETS)
   P.C.C. DRIVEWAY PAVEMENT 6" P.E.'S
   P.C.C. DRIVEWAY PAVEMENT 7" C.E.'S
   P.C.C. DRIVEWAY PAVEMENT 8" CITY STREETS

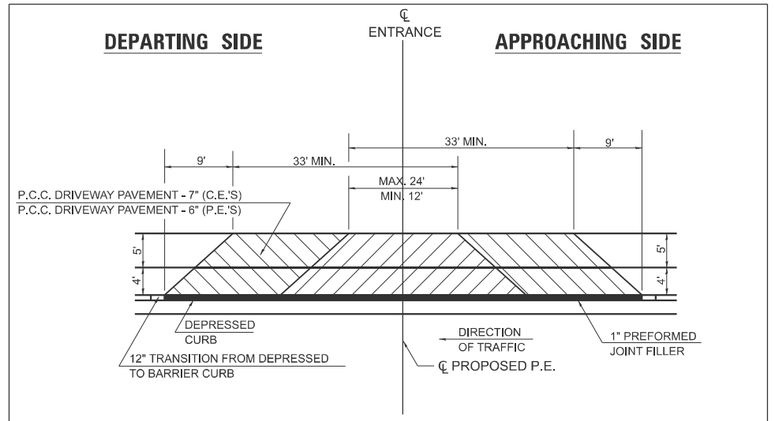

DETAILS FOR CONST. MAILBOX TURNOUTS

(AT EITHER APPROACHING OR DEPARTING SIDE OF ENTRANCE)

STD. 9-

DRAWN	
REVISED	
REVISED	
REVISED	

MODEL: Sheet 2
FILE NAME: pw://patrickco-pw.bentley.com:patrickco-pw-07/Documents/IL_CE/25PTRTM005_IL148_PH2/CADData/CADsheets/D978A09-Sht-D9details.dgn

PATRICK ENGINEERING INC.
55 EAST MONROE STREET
SUITE 3450
CHICAGO, IL 60603
www.rina-us.org
Design Firm License No. 184000494-0014

USER NAME = DT004	DESIGNED - DT	REVISED -	
	DRAWN - DT	REVISED -	
	CHECKED - KE	REVISED -	
PLOT DATE = 9/30/2025	DATE - 9/30/2025	REVISED -	

STATE OF ILLINOIS
DEPARTMENT OF TRANSPORTATION

D9 PLAN DETAILS
ILLINOIS ROUTE 148

SCALE: SHEET OF SHEETS STA. TO STA.

F.A.P. RTE.	SECTION	COUNTY	TOTAL SHEETS	SHEET NO.
726	127CR-1	FRANKLIN	42	36
		CONTRACT NO. 78A09		
		ILLINOIS	FED. AID PROJECT	

CONCRETE COLLAR

PIPE TO PIPE

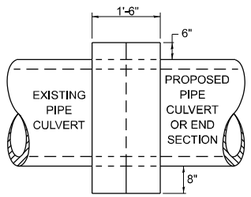

SIDE VIEW

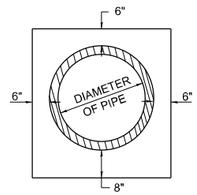

END VIEW

TABULATION

DIAMETER OF PIPE	CL SI CONC CU YDS EST
12"	0.24
15"	0.29
18"	0.32
24"	0.44
30"	0.56
36"	0.66
42"	0.80
48"	0.93
54"	1.07
60"	1.22
72"	1.55

THE CONCRETE COLLAR SHALL BE PAID FOR AT THE CONTRACT UNIT PRICE PER CUBIC YARD FORCONCRETE COLLAR, AS SHOWN ON THE PLANS, WHICH PRICE SHALL INCLUDE THE REMOVAL OF SUCH PORTIONS THE EXISTING HEADWALLS AS MAY BE REQUIRED.

CLASS SI CONCRETE SHALL BE USED THROUGHOUT.

DRAWN	07-13-90
REVISED	03-26-08
REVISED	10-21-21
REVISED	05-03-22

STD. 9-02

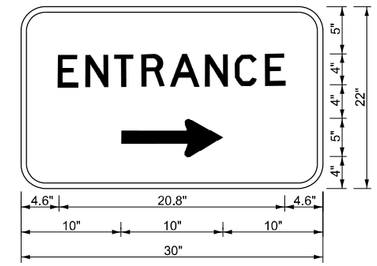

3.0" RADIUS, 0.5" BORDER, WHITE ON GREEN; REFLECTORIZED "ENTRANCE" D; STANDARD ARROW CUSTOM 12.0" x 5.0"

NOTES:

1. HALF OF THE SIGNS WILL REQUIRE A LEFT HAND FACING ARROW.
2. TWO SIGNS SHALL BE USED AT EACH COMMERICIAL ENTRANCE PLACED BACK-TO-BACK: ONE WITH A RIGHT HAND ARROW (SHOWN) SHALL BE PLACED ON THE NEAR RIGHT SIDE OF THE DRIVEWAY AND ONE WITH A LEFT HAND ARROW SHALL BE PLACED ON THE FAR LEFT SIDE OF THE DRIVEWAY.
3. SIGNS TO BE PAID FOR AS ITEM "TRAFFIC CONTROL AND PROTECTION, (SPECIAL)"

MODEL: $MODELNAME$
FILE NAME: pw://patrickco-pw.bentley.com:patrickco-pw-07/Documents/IL_OE/29PTRTM005_IL148_PH2/CADData/CADsheets/D978A09-Sht-D9details.dgn

PATRICK ENGINEERING INC.
55 EAST MONROE STREET
SUITE 3450
CHICAGO, IL 60603
www.rina-us.org
Design Firm License No. 184000494-0014

USER NAME = DT004	DESIGNED - DT	REVISED -	
	DRAWN - DT	REVISED -	
	CHECKED - KE	REVISED -	
PLOT DATE = 9/30/2025	DATE - 9/30/2025	REVISED -	

STATE OF ILLINOIS
DEPARTMENT OF TRANSPORTATION

D9 PLAN DETAILS
ILLINOIS ROUTE 148

SCALE: SHEET OF SHEETS STA. TO STA.

F.A.P. RTE.	SECTION	COUNTY	TOTAL SHEETS	SHEET NO.
726	127CR-1	FRANKLIN	42	37

CONTRACT NO. 78A09

ILLINOIS FED. AID PROJECT

Illinois Department of Transportation
Division of Highways
District 9

SOIL BORING LOG

Date 4/7/25

ROUTE IL 148 DESCRIPTION IL 148 Over Ditch LOGGED BY L. Estel

SECTION 127CR-1 LOCATION Christopher, Between 6th and 9th Street, SEC. 25, TWP. 6S, RNG. 1E, PM

COUNTY Franklin DRILLING METHOD HSA (8" O.D.; 3.25" I.D.) HAMMER TYPE Auto SPT 140 Lbs

STRUCT. NO. 028-7900
Station
BORING NO. 1-S
Station
Offset 5.0ft Rt
Ground Surface Elev. 423.71 ft

Surface Water Elev. ft
Stream Bed Elev. 418.61 ft
Groundwater Elev.:
First Encounter ft
Upon Completion ft
After Hrs. ft

Description	Elev.	DEPTH (ft)	BLOWS	UCS Qu (tsf)	MOIST (%)
Augered Through Pavement to First Sample Location					
	421.71				
Very Soft Dark Brown, Moist to Very Moist LOAM			3 1 2	0.2 B	23
	419.21				
Very Soft Dark Brown, Moist to Very Moist SILTY LOAM		-5	2 2 2	0.05 B	19
	416.71				
Stiff Brown and Grey, Moist SILTY CLAY LOAM			3 4 7	1.25 S	16
	414.21				
Stiff Brown, Moist SILTY CLAY LOAM		-10	3 4 10	1.7 B	17
	411.71				
Hard Brown, Moist SILTY CLAY			8 10 14	4.1 B	15
	409.21				
Medium Stiff Brown, Moist, Weathered, Layered CLAY SHALE		-15	30 60 50/1"	0.9 S	15
		-20			

Bottom of Hole at 15.58 Feet

No Free Water Encountered

To Convert 'N' Values to 'N60" Multiply by 1.557; Hammer Efficiency = 93.4%

Ground Surface Elevation Referenced to BM 634, Cut Square on NE Headwall; EL. = 423.31

-25 -30 -35 -40

The Unconfined Compressive Strength (UCS) Failure Mode is indicated by (B-Bulge, S-Shear, P-Penetrometer, E-Estimated)
Abbreviations W.O.H - Sampler Advanced By Weight of Hammer, W.O.P - Advanced by Weight of Pipe, B.S. - Before Seating
The SPT (N value) is the sum of the last two blow values in each sampling zone (AASHTO T206) BBS, from 137 (Rev. 8-99)

File Name S:\MATERIALS GEOTECHNICAL UNIT\GINTPROJECTS\PROJECTS FILE\FRANKLIN 028\STRUCTURES\028-7900 IL 148 OVER DITCH CHRISTOPHER.GPJ Date Template D6TEMPLT.GDT Date Printed 7/1/25
Latitude 37.9678831 Longitude -89.0535245 Datum NAD83 Job Number

Illinois Department of Transportation
Division of Highways
District 9

SOIL BORING LOG

Date 4/7/25

ROUTE IL 148 DESCRIPTION IL 148 Over Ditch LOGGED BY L. Estel

SECTION 127CR-1 LOCATION Christopher, Between 6th and 9th Street, SEC. 25, TWP. 6S, RNG. 1E, PM

COUNTY Franklin DRILLING METHOD HSA (8" O.D.; 3.25" I.D.) HAMMER TYPE Auto SPT 140 Lbs

STRUCT. NO. 028-7900
Station
BORING NO. 2-S
Station
Offset 10.0ft Lt
Ground Surface Elev. 424.57 ft

Surface Water Elev. ft
Stream Bed Elev. 418.61 ft
Groundwater Elev.:
First Encounter ft
Upon Completion ft
After Hrs. ft

Description	Elev.	DEPTH (ft)	BLOWS	UCS Qu (tsf)	MOIST (%)
Augered Through Pavement to First Sample Location					
	422.57				
Stiff Brown, Moist CLAY			2 3 3	1.25 B	17
	420.07				
Stiff Brown, Moist CLAY LOAM		-5	3 2 3	1.35 S	15
	417.57				
Very Stiff Brown, Moist CLAY			3 3 4	2.05 B	16
	415.07				
Hard Brown, Moist to Dry CLAY LOAM/CLAY TILL		-10	5 7 12	4.5 B	13
	412.57				
Hard Brown, Moist to Dry CLAY LOAM/CLAY TILL			6 7 10	4.3 B	13
	410.07				
Stiff Brown, Moist, Weak, Weathered, Layered CLAY SHALE		-15	20 21 50/4"	1.45 S	9
		-20			

Bottom of Hole at 15.83 Feet

No Free Water Encountered

To Convert 'N' Values to 'N60" Multiply by 1.557; Hammer Efficiency = 93.4%

Ground Surface Elevation Referenced to BM 634, Cut Square on NE Headwall; EL. = 423.31

-25 -30 -35 -40

The Unconfined Compressive Strength (UCS) Failure Mode is indicated by (B-Bulge, S-Shear, P-Penetrometer, E-Estimated)
Abbreviations W.O.H - Sampler Advanced By Weight of Hammer, W.O.P - Advanced by Weight of Pipe, B.S. - Before Seating
The SPT (N value) is the sum of the last two blow values in each sampling zone (AASHTO T206) BBS, from 137 (Rev. 8-99)

File Name S:\MATERIALS GEOTECHNICAL UNIT\GINTPROJECTS\PROJECTS FILE\FRANKLIN 028\STRUCTURES\028-7900 L 148 OVER DITCH CHRISTOPHER.GPJ Data Template D6TEMPLT.GDT Date Printed 7/1/25
Latitude 37.36799944 Longitude -89.053585 Datum NAD83 Job Number

MODEL: Sheet
FILE NAME: pw://patrickco-pw.bentley.com:patrickco-pw-07/Documents/IL_CE/29PTRTM009_IL148_PH2/CADData/CADsheets/D978A09-Sht-borings.dgn

PATRICK ENGINEERING INC.
55 EAST MONROE STREET
SUITE 3450
CHICAGO, IL 60603
www.rina-us.org
Design Firm License No. 184000400-0014

USER NAME = DT004	DESIGNED - DT	REVISED -	
	DRAWN - DT	REVISED -	
	CHECKED - KE	REVISED -	
PLOT DATE = 9/30/2025	DATE - 9/30/2025	REVISED -	

STATE OF ILLINOIS
DEPARTMENT OF TRANSPORTATION

SOIL BORING LOGS
ILLINOIS ROUTE 148

SCALE: SHEET OF SHEETS STA. TO STA.

F.A.P. RTE.	SECTION	COUNTY	TOTAL SHEETS	SHEET NO.
726	127CR-1	FRANKLIN	42	38

CONTRACT NO. 78A09
ILLINOIS FED. AID PROJECT

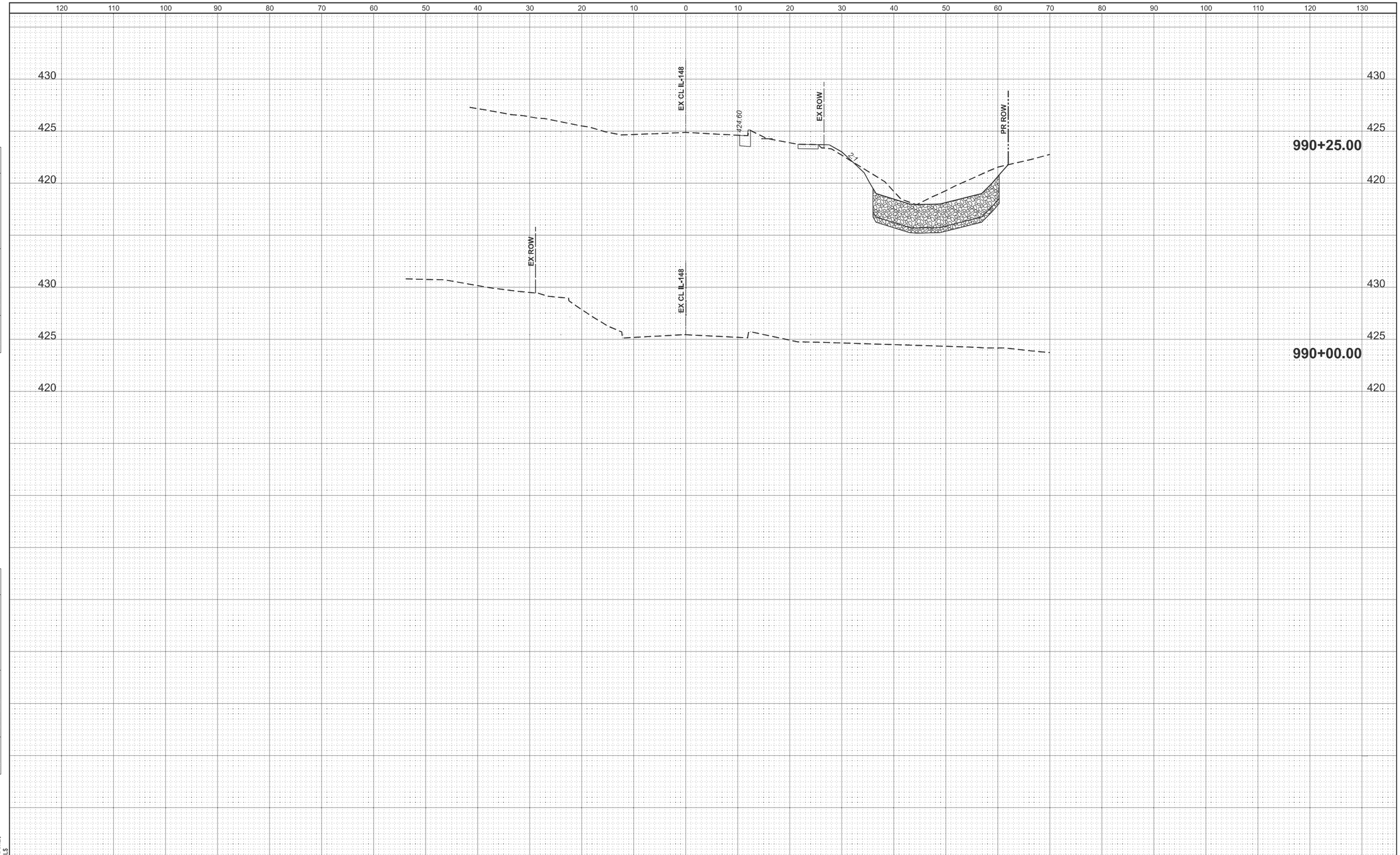

FINAL SURVEY	BY	DATE
SURVEYED		
PLOTTED		
TEMPLATE		
AREAS		
AREAS CHECKED		
NOTE BOOK		
NO.		

ORIGINAL SURVEY	BY	DATE
SURVEYED		
PLOTTED		
TEMPLATE		
AREAS		
AREAS CHECKED		
NOTE BOOK		
NO.		

MODEL: $MODELNAME$
FILE NAME: $FILEL$

PATRICK ENGINEERING INC.
55 EAST MONROE STREET
SUITE 3450
CHICAGO, IL 60603
www.pina-us.org
Design Firm License No. 184000409-0014

USER NAME = DT004	DESIGNED - DT	REVISED -	
	DRAWN - DT	REVISED -	
PLOT SCALE = $SCALE$	CHECKED - KE	REVISED -	
PLOT DATE = 9/30/2025	DATE - 9/30/2025	REVISED -	

STATE OF ILLINOIS
DEPARTMENT OF TRANSPORTATION

CROSS SECTIONS
ILLINOIS ROUTE 148

SCALE: | SHEET 1 OF 4 SHEETS | STA. 990+00.00 TO STA. 990+25.00

F.A.P. RTE.	SECTION	COUNTY	TOTAL SHEETS	SHEET NO.
726	127CR-1	FRANKLIN	42	39

CONTRACT NO. 78A09

ILLINOIS | FED. AID PROJECT

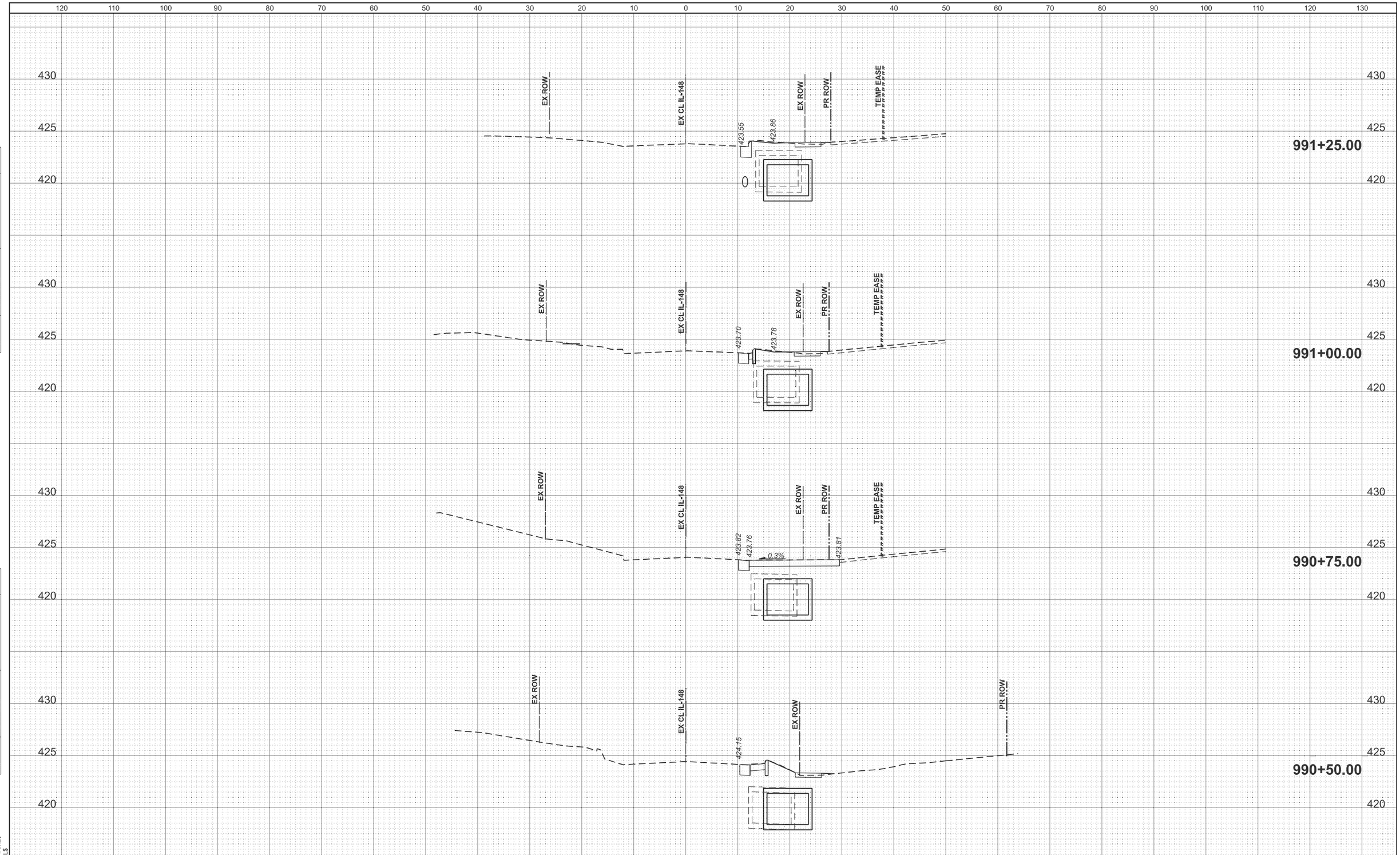

FINAL SURVEY		BY	DATE
NOTE BOOK	SURVEYED		
	PLOTTED		
	TEMPLATE		
	AREAS		
NO.	AREAS CHECKED		

ORIGINAL SURVEY		BY	DATE
NOTE BOOK	SURVEYED		
	PLOTTED		
	TEMPLATE		
	AREAS		
NO.	AREAS CHECKED		

MODEL: $MODELNAME$
FILE NAME: $FILEL$

PATRICK ENGINEERING INC.
55 EAST MONROE STREET
SUITE 3450
CHICAGO, IL 60603
www.pine-us.org
Design Firm License No. 184000406-0014

USER NAME = DT004	DESIGNED - DT	REVISED -	
	DRAWN - DT	REVISED -	
PLOT SCALE = $SCALE$	CHECKED - KE	REVISED -	
PLOT DATE = 9/30/2025	DATE - 9/30/2025	REVISED -	

STATE OF ILLINOIS
DEPARTMENT OF TRANSPORTATION

CROSS SECTIONS
ILLINOIS ROUTE 148

SCALE: | SHEET 2 OF 4 SHEETS | STA. 990+50.00 | TO STA. 991+25.00

F.A.P. RTE.	SECTION	COUNTY	TOTAL SHEETS	SHEET NO.
726	127CR-1	FRANKLIN	42	40

CONTRACT NO. 78A09

ILLINOIS | FED. AID PROJECT

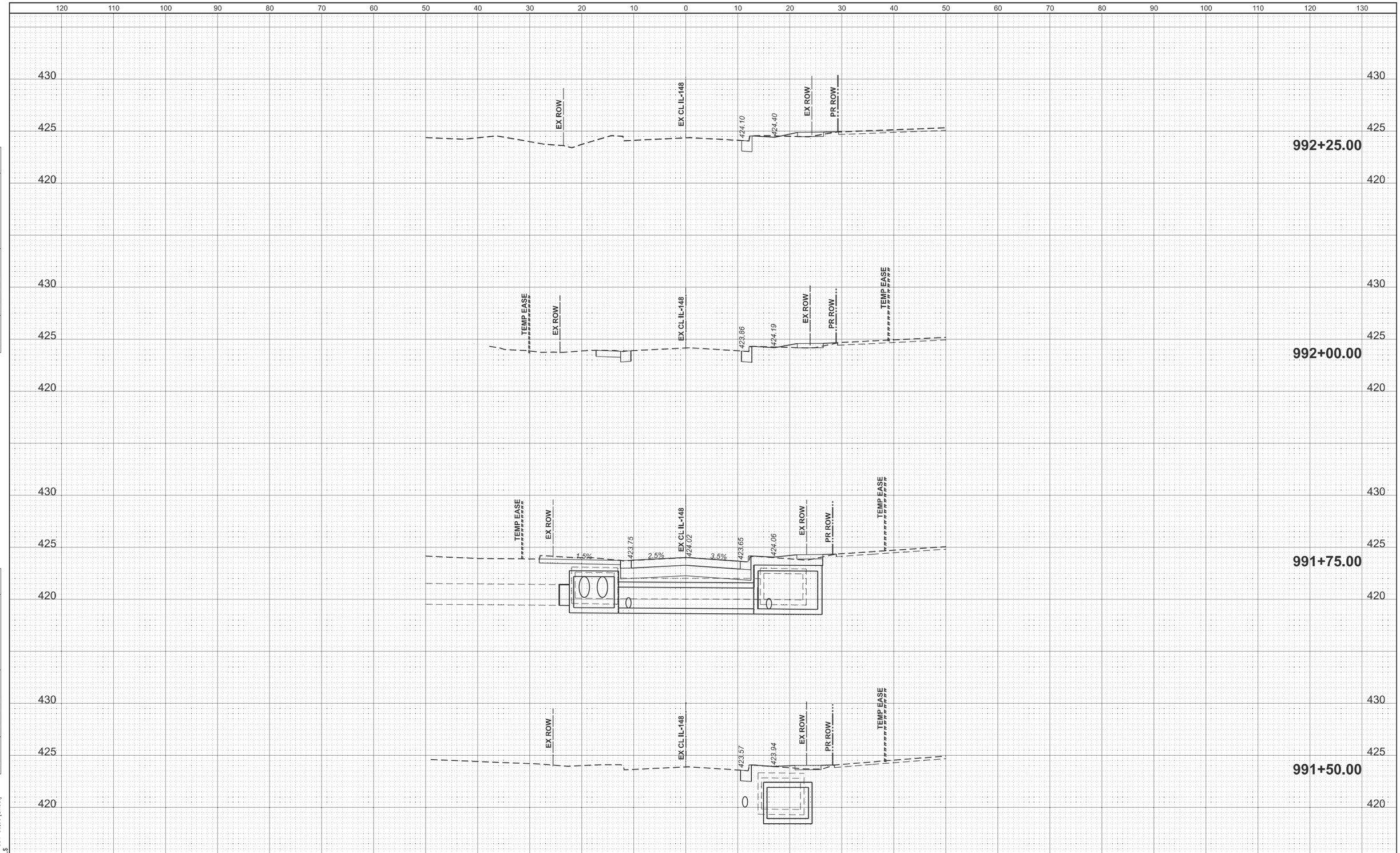

FINAL SURVEY		BY	DATE
NOTE BOOK	SURVEYED		
	PLOTTED		
	TEMPLATE		
	AREAS		
NO.	AREAS CHECKED		

ORIGINAL SURVEY		BY	DATE
NOTE BOOK	SURVEYED		
	PLOTTED		
	TEMPLATE		
	AREAS		
NO.	AREAS CHECKED		

MODEL: IL148 New - 991+50.00 [Sheet]
FILE NAME: $FILEL$

PATRICK ENGINEERING INC.
55 EAST MONROE STREET
SUITE 3450
CHICAGO, IL 60603
www.pina-us.org
Design Firm License No. 184000406-0014

USER NAME = DT004	DESIGNED - DT	REVISED -	
	DRAWN - DT	REVISED -	
PLOT SCALE = $SCALE$	CHECKED - KE	REVISED -	
PLOT DATE = 9/30/2025	DATE - 9/30/2025	REVISED -	

STATE OF ILLINOIS
DEPARTMENT OF TRANSPORTATION

CROSS SECTIONS
ILLINOIS ROUTE 148

SCALE: | SHEET 3 OF 4 SHEETS | STA. 991+50.00 | TO STA. 992+25.00

F.A.P. RTE.	SECTION	COUNTY	TOTAL SHEETS	SHEET NO.
726	127CR-1	FRANKLIN	42	41

CONTRACT NO. 78A09

ILLINOIS | FED. AID PROJECT

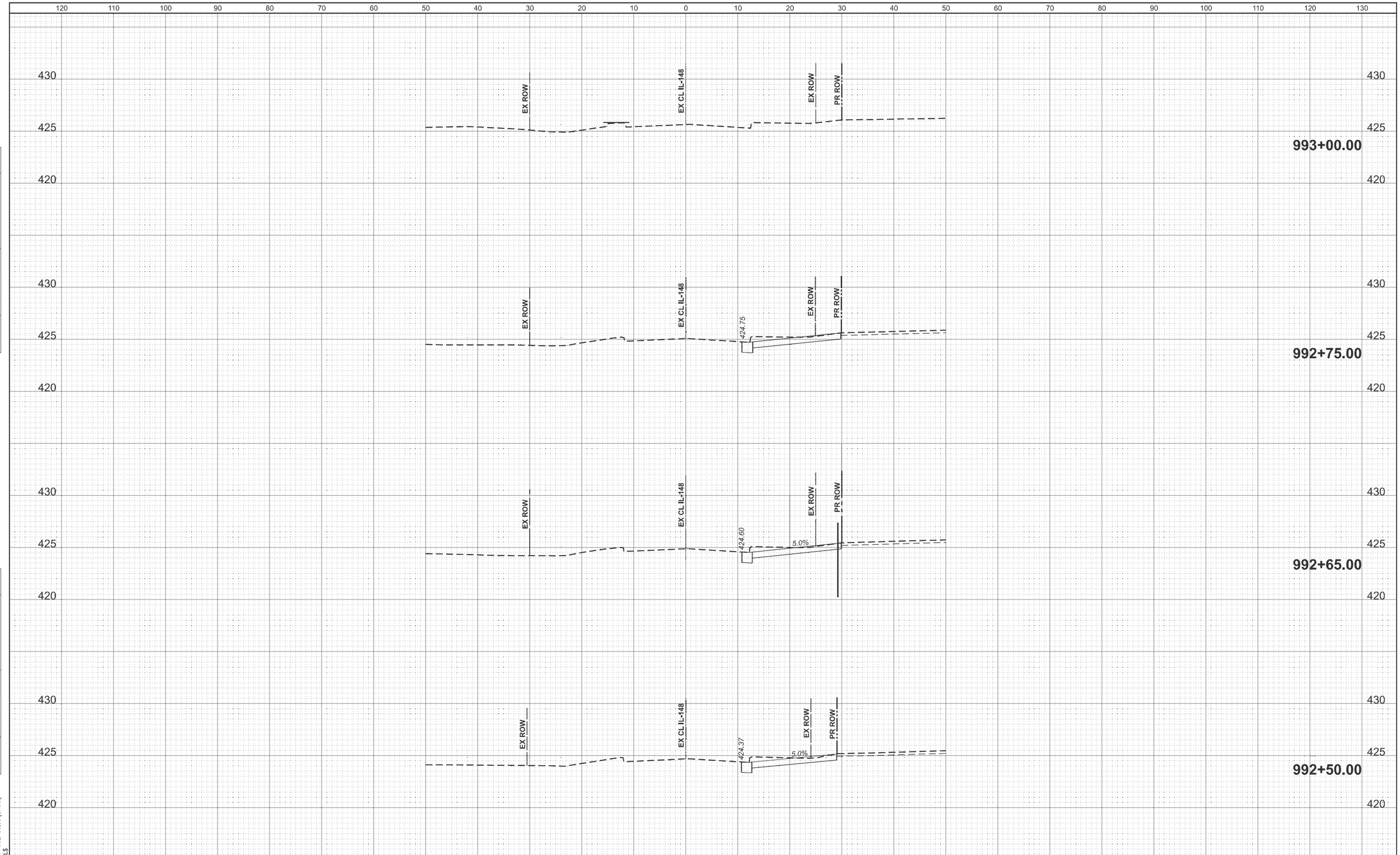

FINAL SURVEY		BY	DATE
NOTE BOOK	SURVEYED		
	PLOTTED		
	TEMPLATE		
	AREAS		
NO.	AREAS CHECKED		

ORIGINAL SURVEY		BY	DATE
NOTE BOOK	SURVEYED		
	PLOTTED		
	TEMPLATE		
	AREAS		
NO.	AREAS CHECKED		

MODEL: IL148 New - 992+50.00 [Sheet]
FILE NAME: $FILEL$

PATRICK ENGINEERING INC.
55 EAST MONROE STREET
SUITE 3450
CHICAGO, IL 60603
www.pina-us.org
Design Firm License No. 184000406-0014

USER NAME = DT004	DESIGNED - DT	REVISED -	
	DRAWN - DT	REVISED -	
PLOT SCALE = $SCALE$	CHECKED - KE	REVISED -	
PLOT DATE = 9/30/2025	DATE - 9/30/2025	REVISED -	

STATE OF ILLINOIS
DEPARTMENT OF TRANSPORTATION

CROSS SECTIONS
ILLINOIS ROUTE 148

SCALE: | SHEET 4 OF 4 SHEETS | STA. 992+50.00 | TO STA. 993+00.00

F.A.P. RTE.	SECTION	COUNTY	TOTAL SHEETS	SHEET NO.
726	127CR-1	FRANKLIN	42	42

CONTRACT NO. 78A09

ILLINOIS | FED. AID PROJECT