01-16-2026 LETTING ITEM 136

F.A.P. RTE.	SECTION	COUNTY	TOTAL SHEETS	SHEET NO.
331	(10-1,10-3-1)B-2	GALLATIN	86	1
	ILLINOIS	CONTRACT NO. 78969		

STATE OF ILLINOIS
DEPARTMENT OF TRANSPORTATION

PROPOSED HIGHWAY PLANS

FAP ROUTE 331 (IL 13)
SECTION (10-1,10-3-1)B-2
PROJECT NHPP-BBL0(674)
BRIDGE REPLACEMENT OVER NORTH FORK SALINE RIVER
GALLATIN COUNTY

C-99- 012-23

D-99-003-23

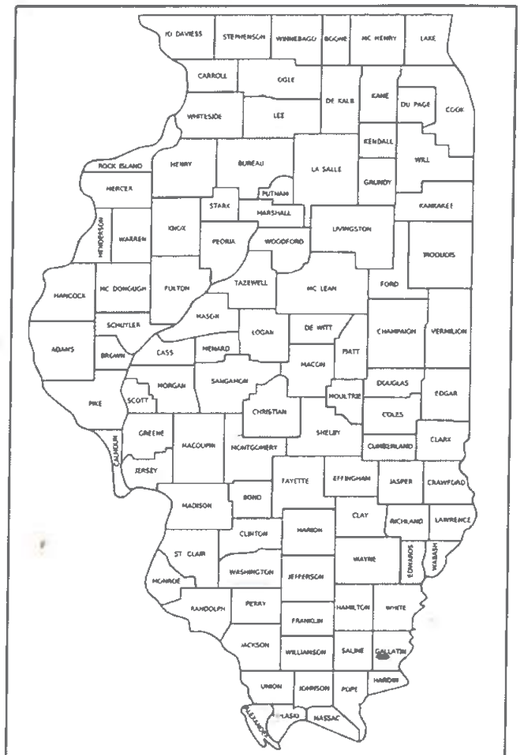

LOCATION OF SECTION INDICATED THUS:-

FOR INDEX OF SHEETS, SEE SHEET NO. 3

FOR SUMMARY OF QUANTITIES, SEE SHEET NO. 4-9

TRAFFIC DATA

FAP 331 (IL 13)
EXISTING ADT = 3680 (2026)
%SU = 160 (4.35%)
%MU = 265 (7.20%)

TOWNSHIPS

EQUALITY TOWNSHIP

DESIGN DESIGNATION : MINOR ARTERIAL

COORDINATE SYSTEM : NORTH AMERICAN DATUM (NAD) 83
POSTED SPEED : 55 MPH

PROPOSED SN 030-0026
℄ STRUCTURE STA. 1690+10
3-SPAN STEEL I-BEAM STRUCTURE WITH
CONCRETE DECK 275'-0" BK.-BK. ABUTS.
40'-0" CL. DECK WIDTH NO SKEW

EXISTING SN 030-0015
℄ STRUCTURE STA. 1690+10
5-SPAN CONTINUOUS NON-COMPOSITE
STEEL I-BEAM STRUCTURE WITH CONCRETE
DECK 252'-0" BK.-BK. ABUTS. 30-0" CL. DECK WIDTH
NO SKEW

FULL SIZE PLANS HAVE BEEN PREPARED USING STANDARD ENGINEERING SCALES. REDUCED SIZED PLANS WILL NOT CONFORM TO STANDARD SCALES. IN MAKING MEASUREMENTS ON REDUCED PLANS, THE ABOVE SCALES MAY BE USED.

J.U.L.I.E.
JOINT UTILITY LOCATION INFORMATION FOR EXCAVATION
1-800-892-0123
OR 811

PROJECT ENGINEER: EHREN KIRBY
PROJECT DESIGNER: VEENSTRA & KIMM, INC.

CONTRACT NO. 78969

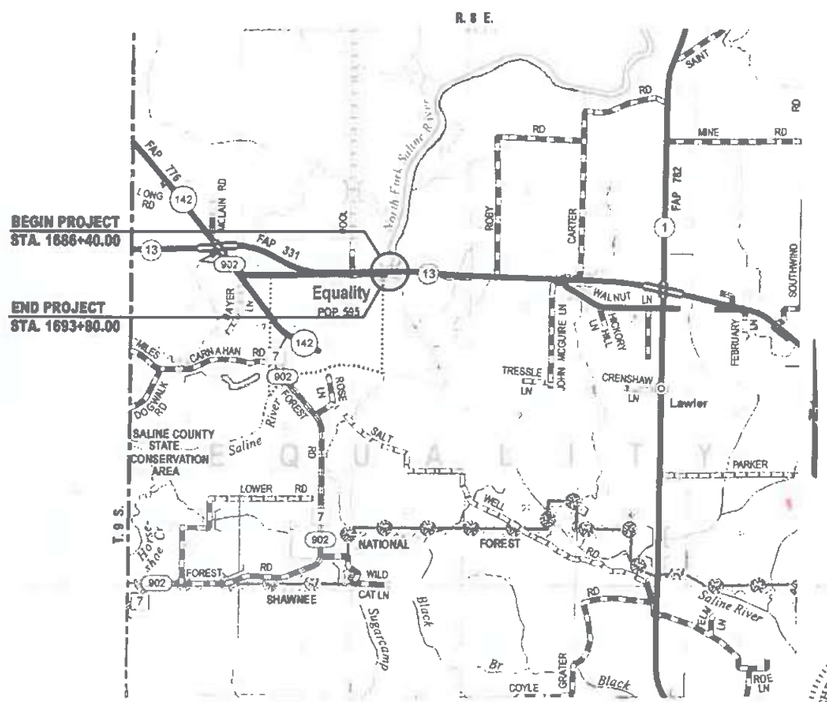

LOCATION MAP

GROSS LENGTH = 740.00 FT. = 0.140 MILES
NET LENGTH = 740.00 FT. = 0.140 MILES

CHRISTOPHER P. KOHLRUS
062-040128
LICENSED PROFESSIONAL ENGINEER OF
STATE OF ILLINOIS

Christopher P. Kohlrus 10/13/25
EXPIRATION DATE 11/30/2025

STATE OF ILLINOIS
DEPARTMENT OF TRANSPORTATION

SUBMITTED Oct 27 20 25
Lora S. Rensing
REGION FIVE ENGINEER

December 5 20 25
ENGINEER OF DESIGN AND ENVIRONMENT

December 5 20 25
DIRECTOR OF HIGHWAYS PROJECT IMPLEMENTATION

PRINTED BY THE AUTHORITY
OF THE STATE OF ILLINOIS

Prepared By: _____
DISTRICT STUDIES & PLANS ENGINEER

Examined By: _____
DISTRICT LAND ACQUISITION ENGINEER

Examined By: _____
DISTRICT PROGRAM DEVELOPMENT ENGINEER

Examined By: _____
DISTRICT OPERATIONS ENGINEER

Examined By: _____
DISTRICT PROJECT IMPLEMENTATION ENGINEER

Examined By: _____
DISTRICT CONSTRUCTION ENGINEER

Examined By: _____
DISTRICT MATERIALS ENGINEER

MODEL: Default
FILE NAME: \\vksc-s-hsprshare\95060595-4_DOT_District_9\0595-0001-0001\8_13 over Ill Fox_Saline River_Ph1_Gallatin_Co\CADD\CADD Sheets\d9TB969-site-signature.dgn

VEENSTRA & KIMM INC
A Kleinfelder Company

DESIGNED - CPK	REVISED -		
DRAWN - DMS	REVISED -		
CHECKED - CPK	REVISED -		
DATE - 10-13-2025	REVISED -		

STATE OF ILLINOIS
DEPARTMENT OF TRANSPORTATION

SIGNATURES

SCALE: SHEET 1 OF 1 SHEETS STA. TO STA.

F.A.P. RTE.	SECTION	COUNTY	TOTAL SHEETS	SHEET NO.
331	(10-1,10-3-1)B-2	GALLATIN	86	2
		CONTRACT NO. 78969		
		ILLINOIS FED. AID PROJECT		

GENERAL NOTES

1. THE CENTERLINE PAVEMENT MARKING SHALL BE REMOVED FROM THE STOP BAR TO THE SAND ATTENUATORS OR DRUMS. EDGE LINE PAVEMENT MARKING SHALL BE REMOVED IF A 10 FOOT LANE WIDTH CANNOT BE MAINTAINED. TEMPORARY EDGE LINES SHALL BE INSTALLED WHEN THE EDGE LINES ARE REMOVED.

2. THE QUANTITY OF SHORT TERM PAVEMENT MARKING SHOWN IN THE PLANS IS BASED ON ONE APPLICATION EACH FOR THE HMA SURFACE REMOVAL AND BINDER COURSE.

3. AT ALL LOCATIONS WHERE THE PROPOSED HOT MIX ASPHALT OR CONCRETE PAVEMENT JOINS AN EXISTING HOT MIX ASPHALT OR CONCRETE PAVEMENT, A FULL DEPTH SAWED JOINT SHALL BE CONSTRUCTED. THE COST OF THIS JOINT WILL BE INCLUDED IN THE COST OF THE TYPE OF PAVEMENT BEING CONSTRUCTED.

4. LONGITUDINAL JOINT SEALANT SHALL BE PLACED UNDER THE HMA SURFACE COURSE.

5. EDGE LINE PAVEMENT MARKING SHALL BE REMOVED IF A 10 FOOT LANE WIDTH CANNOT BE MAINTAINED. TEMPORARY EDGE LINES SHALL BE INSTALLED WHEN THE EDGE LINES ARE REMOVED.

6. FACTORS USED FOR ESTIMATING PLAN QUANTITIES ARE AS FOLLOWS AND SHALL NOT BE USED FOR THE BASIS OF FINAL QUANTITIES:

ALL AGGREGATE MATERIAL	2.05 TON/CU YD
ALL HOT-MIX ASPHALT	2.016 TON/CU YD
RIPRAP	1.5 TON/CU YD
EARTH	110 LBS/CU YD

INDEX OF SHEETS

COMMITMENTS

TREES THREE (3) INCHES IN DIAMETER AND AT BREAST HEIGHT WILL NOT BE CLEARED FROM APRIL 1 TO SEPTEMBER 30.

MIXTURE REQUIREMENTS

LOCATIONS	HMA SURFACE COURSE	HMA SHOULDERS 8" & 10" (LOWER LIFT)	HMA SHOULDERS 8" & 10" (TOP LIFT)	HMA BINDER COURSE
MIXTURE USES:	HMA SURFACE COURSE, IL-9.5, MIX C, N70	HMA BINDER COURSE, IL-19.0, N70	HMA SURFACE COURSE, IL-9.5, MIX C, N70	HMA BINDER COURSE, IL-19.0, N70
AB/PG	PG64-22	PG64-22	PG64-22	PG64-22
DESIGN AIR VOIDS	4.0%, 70 GYRATION DESIGN	4.0%, 70 GYRATION DESIGN	4.0%, 70 GYRATION DESIGN	4.0%, 70 GYRATION DESIGN
MIXTURE COMPOSITION (GRADATION MIXTURE)	IL-9.5MM	IL-19.0MM	IL-9.5MM	IL-19.0MM
FRICTION AGGREGATE	MIX C	NONE	MIX C	NONE
MIXTURE WEIGHT	112 LBS./SQ. YD./INCH	112 LBS./SQ. YD./INCH	112 LBS./SQ. YD./INCH	112 LBS./SQ. YD./INCH
QUALITY MANAGEMENT PROGRAM	QCQA	QCQA	QCQA	QCQA
SUBLOT SIZE	3000 TONS	3000 TONS	3000 TONS	3000 TONS
MATERIAL TRANSFER DEVICE	NO	NO	NO	NO

LIFT THICKNESS REQUIREMENTS

SHOULDERS 8":
- 2" SURFACE COURSE
- 2¼" BINDER COURSE
- 3¾" BINDER COURSE

SHOULDERS 10":
- 2" SURFACE COURSE
- 4" BINDER COURSE
- 4" BINDER COURSE

STANDARDS

000001-09	STANDARD SYMBOLS, ABBREVIATIONS AND PATTERNS
001001-02	AREAS OF REINFORCEMENT BARS
280001-07	TEMPORARY EROSION CONTROL SYSTEMS
420401-13	PAVEMENT CONNECTOR (PCC) FOR BRIDGE APPROACH SLAB
482001-02	HMA SHOULDER ADJACENT TO FLEXIBLE PAVEMENT
515001-04	NAME PLATES FOR BRIDGES
630001-13	STEEL PLATE BEAM GUARDRAIL
630201-07	PCC-HMA STABILIZATION AT STEEL PLATE BEAM GUARDRAIL
630301-09	SHOULDER WIDENING FOR TYPE 1 (SPECIAL) GUARDRAIL TERMINALS
631031-18	TRAFFIC BARRIER TERMINAL TYPE 6
701001-02	OFF-RD OPERATIONS 2L 2W MORE THAN 15FT
701006-05	OFF-RD OPERATIONS 2L 2W 15' TO 24" FROM PAVEMENT EDGE
701011-04	OFF-RD MOVING OPERATIONS 2L 2W DAY ONLY
701201-05	LANE CLOSURE, 2L 2W, DAY ONLY 45MPH OR MORE
701311-03	LANE CLOSURE, 2L 2W, MOVING OPERATIONS DAY ONLY
701321-19	LANE CLOSURE, 2L 2W, BRIDGE REPAIR WITH BARRIER
701326-04	LANE CLOSURE, 2L 2W, PAVEMENT WIDENING 45MPH OR MORE
701901-11	TRAFFIC CONTROL DEVICES
704001-08	TEMPORARY CONCRETE BARRIER
725001-01	OBJECT AND TERMINAL MARKERS
780001-05	TYPICAL PAVEMENT MARKINGS
782006-01	GUARDRAIL AND BARRIER WALL REFLECTOR MOUNTING DETAILS
862001-01	UNINTERRUPTABLE POWER SUPPLY

REV - MS

CODE NO.	ITEM	UNIT	TOTAL QUANTITY	CONSTRUCTION CODE 80% FEDERAL 20% STATE ROADWAY 0010 RURAL	CONSTRUCTION CODE 80% FEDERAL 20% STATE BRIDGE 0010 S.N. 030-0026
20100500	TREE REMOVAL, ACRES	ACRE	0.7	0.7	
20200100	EARTH EXCAVATION	CU YD	257	257	
20300100	CHANNEL EXCAVATION	CU YD	4210	4210	
20400800	FURNISHED EXCAVATION	CU YD	1788	1788	
25000200	SEEDING, CLASS 2	ACRE	1.3	1.3	
25000350	SEEDING, CLASS 7	ACRE	1.3	1.3	
25000400	NITROGEN FERTILIZER NUTRIENT	POUND	120	120	
25000500	PHOSPHORUS FERTILIZER NUTRIENT	POUND	120	120	
25000600	POTASSIUM FERTILIZER NUTRIENT	POUND	120	120	
25000700	AGRICULTURAL GROUND LIMESTONE	TON	2.6	2.6	
25100115	MULCH, METHOD 2	ACRE	2.6	2.6	
25100630	EROSION CONTROL BLANKET	SQ YD	3382	3382	
28000250	TEMPORARY EROSION CONTROL SEEDING	POUND	130	130	
28000400	PERIMETER EROSION BARRIER	FOOT	1531	1531	

REV - MS

MODEL: Default
FILE NAME: \\vksgis-fs1\approjects\25000595-IL DOT District 6\595-0001-0007-IL_13 over N Fork Saline River Ph1 Gallatin Co\CADD\CADD Sheets\078969-sht-soq.dgn

VEENSTRA & KIMM INC.
A Kleinfelder Company

DESIGNED	CPK	REVISED	-
DRAWN	DMS	REVISED	-
CHECKED	CPK	REVISED	-
DATE	11-06-2025	REVISED	-

STATE OF ILLINOIS
DEPARTMENT OF TRANSPORTATION

SUMMARY OF QUANTITIES

SCALE: | SHEET 1 OF 7 SHEETS | STA. | TO STA.

F.A.P. RTE.	SECTION	COUNTY	TOTAL SHEETS	SHEET NO.
331	(10-1,10-3-1)B-2	GALLATIN	86	4

CONTRACT NO. 78969

ILLINOIS | FED. AID PROJECT

CODE NO.	ITEM	UNIT	TOTAL QUANTITY	CONSTRUCTION CODE 80% FEDERAL 20% STATE ROADWAY 0010 RURAL	CONSTRUCTION CODE 80% FEDERAL 20% STATE BRIDGE 0010 S.N. 030-0026
28100105	STONE RIPRAP, CLASS A3	SQ YD	228		228
28100107	STONE RIPRAP, CLASS A4	SQ YD	2471		2471
28200200	FILTER FABRIC	SQ YD	2699		2699
31101100	SUBBASE GRANULAR MATERIAL, TYPE B	CU YD	226	226	
40600290	BITUMINOUS MATERIALS (TACK COAT)	POUND	1245	1245	
40600370	LONGITUDINAL JOINT SEALANT	FOOT	375	375	
40600982	HOT-MIX ASPHALT SURFACE REMOVAL - BUTT JOINT	SQ YD	414	414	
40603085	HOT-MIX ASPHALT BINDER COURSE, IL-19.0, N70	TON	159	159	
40604052	HOT-MIX ASPHALT SURFACE COURSE, IL-9.5, MIX "C", N70	TON	104	104	
42000060	WELDED WIRE REINFORCEMENT	SQ YD	134	134	
42000080	PAVEMENT CONNECTOR (PCC) FOR BRIDGE APPROACH SLAB	SQ YD	134	134	
44000100	PAVEMENT REMOVAL	SQ YD	302	302	
44004250	PAVED SHOULDER REMOVAL	SQ YD	506	506	
48203029	HOT-MIX ASPHALT SHOULDERS, 8"	SQ YD	474	474	

REV - MS

CODE NO.	ITEM	UNIT	TOTAL QUANTITY	CONSTRUCTION CODE 80% FEDERAL 20% STATE ROADWAY 0010 RURAL	CONSTRUCTION CODE 80% FEDERAL 20% STATE BRIDGE 0010 S.N. 030-0026
48203037	HOT-MIX ASPHALT SHOULDERS, 10"	SQ YD	763	763	
50100100	REMOVAL OF EXISTING STRUCTURES	EACH	1		1
50200100	STRUCTURE EXCAVATION	CU YD	237		237
50300100	FLOOR DRAINS	EACH	20		20
50300225	CONCRETE STRUCTURES	CU YD	227.8		227.8
50300255	CONCRETE SUPERSTRUCTURE	CU YD	431.6		431.6
50300260	BRIDGE DECK GROOVING	SQ YD	1407		1407
50300300	PROTECTIVE COAT	SQ YD	1763		1763
50500105	FURNISHING AND ERECTING STRUCTURAL STEEL	L SUM	1		1
50500505	STUD SHEAR CONNECTORS	EACH	6792		6792
50800105	REINFORCEMENT BARS	POUND	59790		59790
50800205	REINFORCEMENT BARS, EPOXY COATED	POUND	171950		171950
50800515	BAR SPLICERS	EACH	1263		1263
50800530	MECHANICAL SPLICERS	EACH	80		80
51201700	FURNISHING STEEL PILES HP12X74	FOOT	535		535

REV - MS

CODE NO.	ITEM	UNIT	TOTAL QUANTITY	CONSTRUCTION CODE 80% FEDERAL 20% STATE ROADWAY 0010 RURAL	CONSTRUCTION CODE 80% FEDERAL 20% STATE BRIDGE 0010 S.N. 030-0026
51202305	DRIVING PILES	FOOT	535		535
51203700	TEST PILE STEEL HP12X74	EACH	2		2
51204650	PILE SHOES	EACH	12		12
51500100	NAME PLATES	EACH	1		1
51602000	PERMANENT CASING	FOOT	329		329
* 51603000	DRILLED SHAFT IN SOIL	CU YD	147.7		147.7
* 51604000	DRILLED SHAFT IN ROCK	CU YD	47.1		47.1
52000110	PREFORMED JOINT STRIP SEAL	FOOT	84		84
52100520	ANCHOR BOLTS, 1"	EACH	48		48
52200010	TEMPORARY SHEET PILING	SQ FT	803		803
58600101	GRANULAR BACKFILL FOR STRUCTURES	CU YD	235		235
59100100	GEOCOMPOSITE WALL DRAIN	SQ YD	82		82
60146304	PIPE UNDERDRAINS FOR STRUCTURES 4"	FOOT	141		141
* 63000001	STEEL PLATE BEAM GUARDRAIL, TYPE A, 6 FOOT POSTS	FOOT	150	150	

* SPECIALTY ITEM

REV - MS

MODEL: Default
FILE NAME: \\vksgi-fs1\approhare\0500059S-IL DOT District 6\5650-0001-0007-IL_13 over N Fork Saline River Ph1 Gallatin_C\CADD\CADD Sheets\078969-sht-soq.dgn

VEENSTRA & KIMM INC.
A Kleinfelder Company

DESIGNED - CPK	REVISED -		
DRAWN - DMS	REVISED -		
CHECKED - CPK	REVISED -		
DATE - 11-06-2025	REVISED -		

STATE OF ILLINOIS
DEPARTMENT OF TRANSPORTATION

SUMMARY OF QUANTITIES

SCALE: | SHEET 4 OF 7 SHEETS | STA. TO STA.

F.A.P. RTE.	SECTION	COUNTY	TOTAL SHEETS	SHEET NO.
331	(10-1,10-3-1)B-2	GALLATIN	86	7

CONTRACT NO. 78969

ILLINOIS | FED. AID PROJECT

	CODE NO.	ITEM	UNIT	TOTAL QUANTITY	CONSTRUCTION CODE 80% FEDERAL 20% STATE ROADWAY 0010 RURAL	CONSTRUCTION CODE 80% FEDERAL 20% STATE BRIDGE 0010 S.N. 030-0026
*	63100085	TRAFFIC BARRIER TERMINAL, TYPE 6	EACH	4	4	
*	63100167	TRAFFIC BARRIER TERMINAL, TYPE 1 (SPECIAL) TANGENT	EACH	4	4	
	63200310	GUARDRAIL REMOVAL	FOOT	1076	1076	
	67000400	ENGINEER'S FIELD OFFICE, TYPE A	CAL MO	18	18	
	67100100	MOBILIZATION	L SUM	1	1	
	70100405	TRAFFIC CONTROL AND PROTECTION, STANDARD 701321	EACH	1	1	
	70100450	TRAFFIC CONTROL AND PROTECTION, STANDARD 701201	L SUM	1	1	
	70100500	TRAFFIC CONTROL AND PROTECTION, STANDARD 701326	L SUM	1	1	
	70103815	TRAFFIC CONTROL SURVEILLANCE	CAL DA	10	10	
	70106500	TEMPORARY BRIDGE TRAFFIC SIGNALS	EACH	1	1	
	70106700	TEMPORARY RUMBLE STRIPS	EACH	6	6	
	70107025	CHANGEABLE MESSAGE SIGN	CAL DA	28	28	
	70300100	SHORT TERM PAVEMENT MARKING	FOOT	136	136	
	70300150	SHORT TERM PAVEMENT MARKING REMOVAL	SQ FT	46	46	

* SPECIALTY ITEM

REV - MS

	CODE NO.	ITEM	UNIT	TOTAL QUANTITY	CONSTRUCTION CODE 80% FEDERAL 20% STATE ROADWAY 0010 RURAL	CONSTRUCTION CODE 80% FEDERAL 20% STATE BRIDGE 0010 S.N. 030-0026
	70400100	TEMPORARY CONCRETE BARRIER	FOOT	1000	1000	
	70400125	PINNING TEMPORARY CONCRETE BARRIER	EACH	36	36	
	70400200	RELOCATE TEMPORARY CONCRETE BARRIER	FOOT	1000	1000	
	70600251	IMPACT ATTENUATORS, TEMPORARY (NON- REDIRECTIVE, NARROW), TEST LEVEL 3	EACH	2	2	
	70600352	IMPACT ATTENUATORS, RELOCATE (NON- REDIRECTIVE,NARROW), TEST LEVEL 3	EACH	2	2	
*	72501000	TERMINAL MARKER - DIRECT APPLIED	EACH	4	4	
*	78001110	PAINT PAVEMENT MARKING - LINE 4"	FOOT	3010	3010	
*	78200005	GUARDRAIL REFLECTORS, TYPE A	EACH	16	16	
	78300200	RAISED REFLECTIVE PAVEMENT MARKER REMOVAL	EACH	9	9	
	78300201	PAVEMENT MARKING REMOVAL - GRINDING	SQ FT	280	280	
*	86200300	UNINTERRUPTABLE POWER SUPPLY, EXTENDED	EACH	1	1	
	X0320051	CROSSHOLE SONIC LOGGING ACCESS DUCTS	FOOT	200		200
	X0320052	CROSSHOLE SONIC LOGGING TESTING	EACH	6		6
	X0325687	AESTHETIC ENHANCEMENTS	L SUM	1	1	

* SPECIALTY ITEM

REV - MS

CODE NO.	ITEM	UNIT	TOTAL QUANTITY	CONSTRUCTION CODE 80% FEDERAL 20% STATE ROADWAY 0010 RURAL	CONSTRUCTION CODE 80% FEDERAL 20% STATE BRIDGE 0010 S.N. 030-0026
X5030305	CONCRETE WEARING SURFACE, 5"	SQ YD	280		280
X5040100	PRECAST BRIDGE APPROACH SLAB	SQ FT	2380		2380
X5080530	BAR TERMINATORS	EACH	498		498
Z0013798	CONSTRUCTION LAYOUT	L SUM	1	0.5	0.5

REV - MS

MODEL: Default
FILE NAME: \\vksp-fs1\sprinkee\95000\595-IL_DOT District 9\595-0001-0007-8_13 over N Fork Saline River Prj\ Gallatin Co\CADD\CADD Sheets\378969-sht-soq.dgn

VEENSTRA & KIMM INC.
A Kleinfelder Company

DESIGNED - CPK	REVISED -		
DRAWN - DMS	REVISED -		
CHECKED - CPK	REVISED -		
DATE - 11-06-2025	REVISED -		

STATE OF ILLINOIS
DEPARTMENT OF TRANSPORTATION

SUMMARY OF QUANTITIES

SCALE: SHEET 7 OF 7 SHEETS STA. TO STA.

F.A.P. RTE.	SECTION	COUNTY	TOTAL SHEETS	SHEET NO.
331	(10-1,10-3-1)B-2	GALLATIN	86	10

CONTRACT NO. 78969

ILLINOIS FED. AID PROJECT

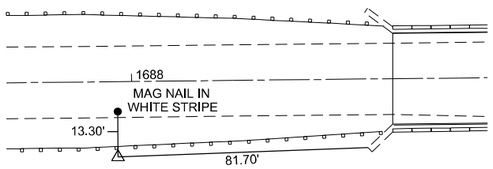

3000153

#5 REBAR WITH ORANGE IDOT CAP
24.90' RT STA. 1687+95.3
N. 984955.224
E 392210.164'
EL. 370.46

A - 13.45'
B - 10.60'
C - 41.40'

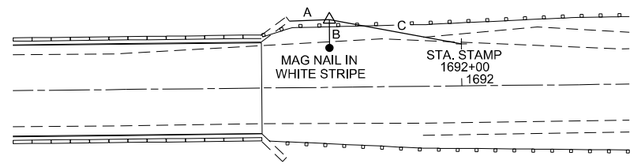

3000152

#5 REBAR WITH ORANGE IDOT CAP
22.41' LT STA. 1691+56.5
N 985315.978
E 392261.322
EL. 370.33

BM 137A - CHISELED " " ON TOP LEVEL OF WINGWALL
AT SW CORNER OF STRUCTURE NO. 030-0015
ELEV. 374.48

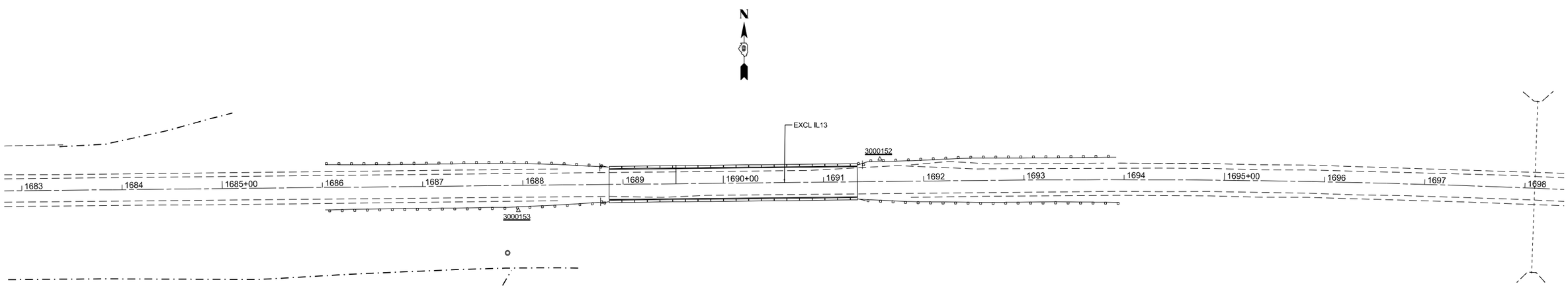

PLAN

0 50 100
SCALE: 1" = 50'

MODEL: Default
FILE NAME: \\vksp-s51sprshare\050\050595-01\050595-01_DOT_District_9\050595-01\050595-01-0074L_13_over_N_Fork_Saline_River_Pt1_Gallatin_Co\CADD\CADD Sheets\078969-bh-ds3.dgn

VEENSTRA & KIMM INC.
A Kleinfelder Company

DESIGNED - CPK	REVISED -		
DRAWN - DMS	REVISED -		
CHECKED - CPK	REVISED -		
DATE - 11-06-2025	REVISED -		

STATE OF ILLINOIS
DEPARTMENT OF TRANSPORTATION

ALIGNMENT, TIES & BENCHMARKS

SCALE: 1"=50' | SHEET 1 OF 1 SHEETS | STA. | TO STA.

F.A.P. RTE.	SECTION	COUNTY	TOTAL SHEETS	SHEET NO.
331	(10-1,10-3-1)B-2	GALLATIN	86	11
		CONTRACT NO. 78969		
		ILLINOIS	FED. AID PROJECT	

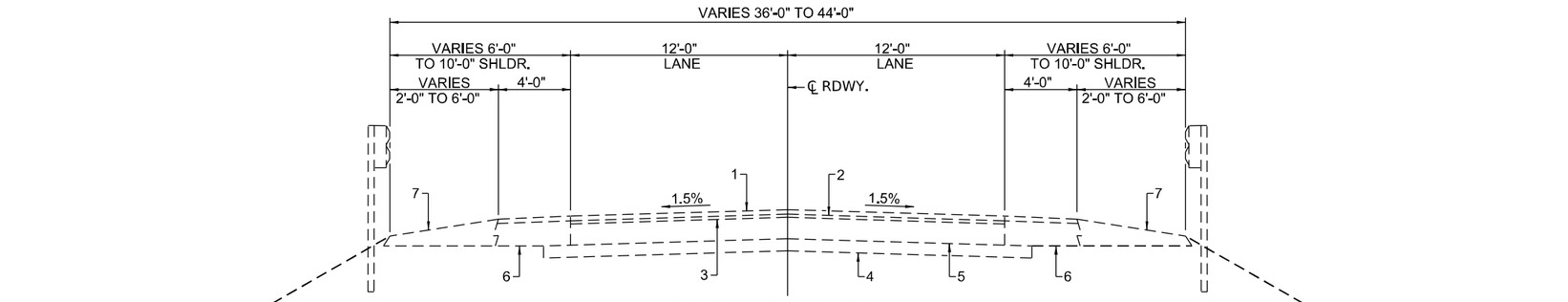

EXISTING CROSS SECTION

(STA. 1686+40.00 TO STA. 1693+80.00)
BRIDGE OMISSION - STA. 1688+83.50 TO STA. 1691+35.50)

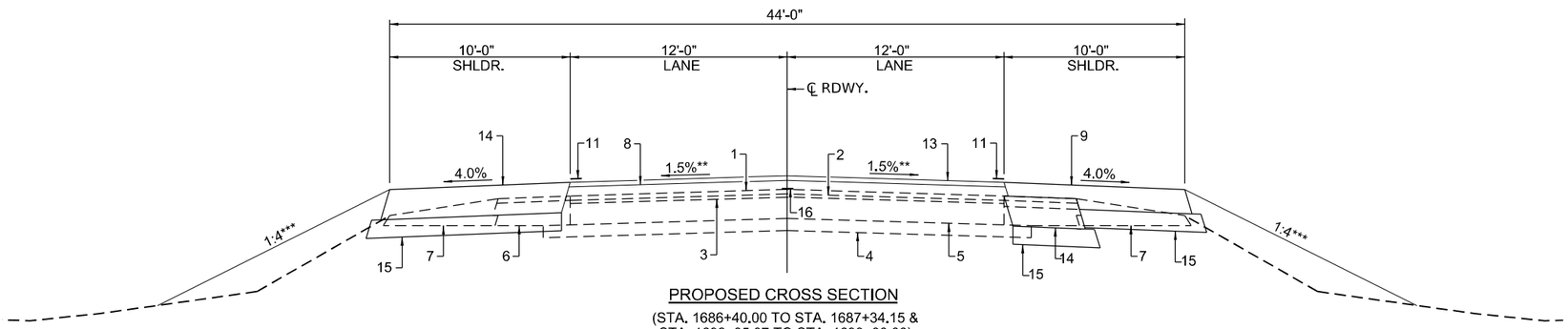

PROPOSED CROSS SECTION

(STA. 1686+40.00 TO STA. 1687+34.15 &
STA. 1692+85.87 TO STA. 1693+80.00)

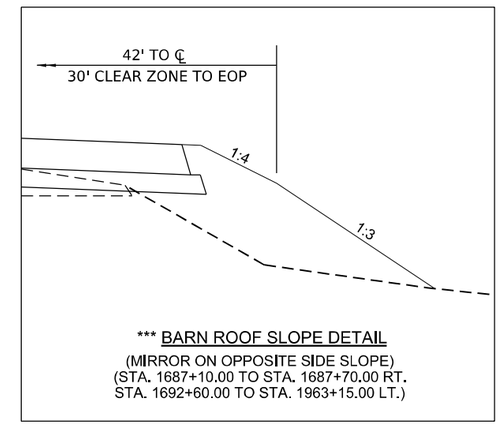

*** BARN ROOF SLOPE DETAIL

(MIRROR ON OPPOSITE SIDE SLOPE)
(STA. 1687+10.00 TO STA. 1687+70.00 RT.
STA. 1692+60.00 TO STA. 1963+15.00 LT.)

* TAPER SHOULDERS FROM 10'-0" TO 8'-0" FROM STA. 1687+84.1 TO STA. 1688+21.6 LT. & RT.
* TAPER SHOULDERS FROM 8'-0" TO 10'-0" FROM STA. 1691+98.4 TO STA. 1692+35.9 LT. & RT.

** TRANSITION PAVEMENT CROSS SLOPE ON LEFT SIDE FROM NORMAL CROWN AT STA. 1693+00 TO 1.47% SUPERELEVATION AT STA. 1693+80
** TRANSITION PAVEMENT CROSS SLOPE ON RIGHT SIDE FROM NORMAL CROWN AT STA. 1693+50 TO -2.3% SUPERELEVATION AT STA. 1693+80

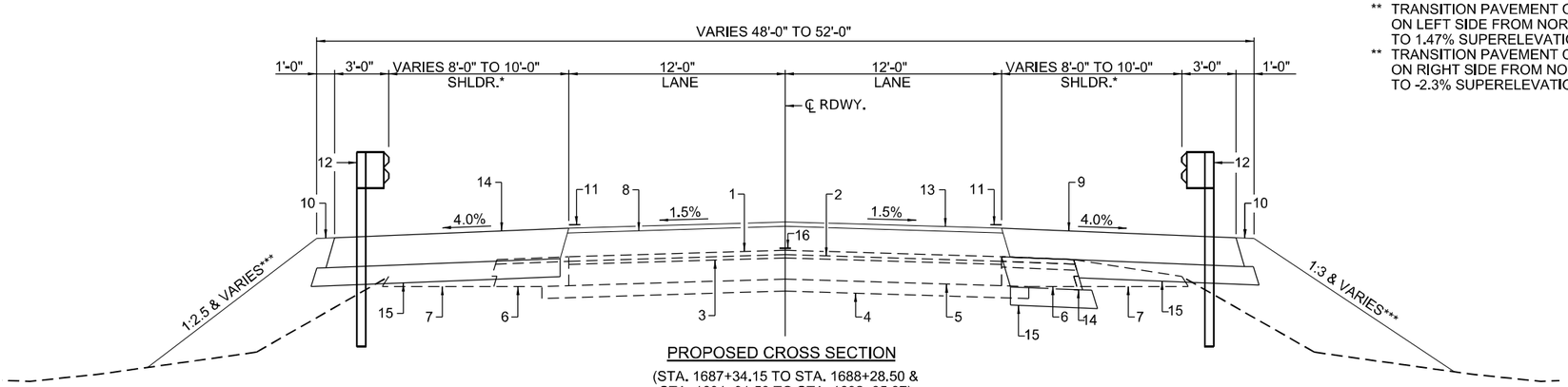

PROPOSED CROSS SECTION

(STA. 1687+34.15 TO STA. 1688+28.50 &
STA. 1691+91.50 TO STA. 1692+85.87)

PAVEMENT LEGEND

1 - EX HMA SURFACE
2 - EX HMA BINDER
3 - EX HMA BASE COURSE
4 - EX STAB. SUB-BASE
5 - EX PCC PAVEMENT (8")
6 - EX HMA SHOULDER
7 - EX AGG. SHOULDER
8 - PR HMA BINDER CSE (VAR. DEPTH)
9 - PR HMA SHOULDERS 8"
10 - PR EARTH SHOULDERS
11 - PR PAINT PVMT MARKING - LINE 4"
12 - PR GUARDRAIL
13 - PR HMA SURFACE COURSE (1½")
14 - PR HMA SHOULDERS 10"
15 - PR SUBBASE GRANULAR MATERIAL, TYPE B
16 - PR LONGITUDINAL JOINT SEALANT
17 - PR BRIDGE APPROACH SLAB OR PAVEMENT CONNECTOR (PCC)

MODEL: Default
FILE NAME: \\vksp-fs1\sprsfiles\050\0505954_DOT_District_9\0595-0014-0007-4_13_over_N_Fork_Saline_River_Prj1_Gallatin_Co\CADD\CADD Sheets\0978969-typicals.dgn

VEENSTRA & KIMM INC.
A Kleinfelder Company

DESIGNED - CPK	REVISED -		
DRAWN - DMS	REVISED -		
CHECKED - CPK	REVISED -		
DATE - 11-06-2025	REVISED -		

STATE OF ILLINOIS
DEPARTMENT OF TRANSPORTATION

TYPICAL ROADWAY SECTIONS

SCALE: | SHEET 1 OF 2 SHEETS | STA. | TO STA.

F.A.P. RTE.	SECTION	COUNTY	TOTAL SHEETS	SHEET NO.
331	(10-1,10-3-1)B-2	GALLATIN	86	12

CONTRACT NO. 78969

ILLINOIS | FED. AID PROJECT

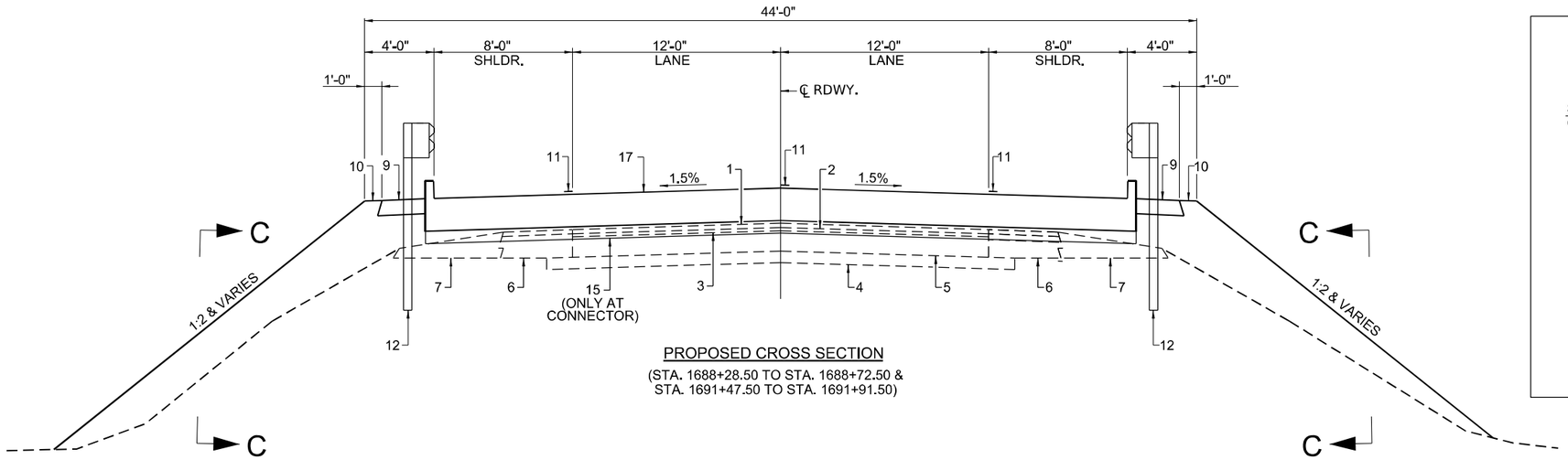

PROPOSED CROSS SECTION

(STA. 1688+28.50 TO STA. 1688+72.50 &
STA. 1691+47.50 TO STA. 1691+91.50)

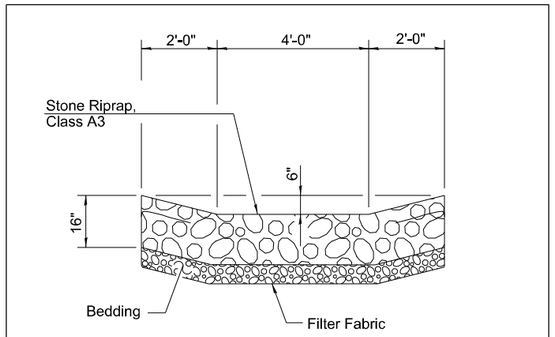

SECTION C-C

(STA. 1688+39.50 TO STA. 1688+47.50 LT. & RT.
& STA. 1691+72.50 TO STA. 1691+80.50 LT. & RT.)

PAVEMENT LEGEND

1 - EX HMA SURFACE
2 - EX HMA BINDER
3 - EX HMA BASE COURSE
4 - EX STAB. SUB-BASE
5 - EX PCC PAVEMENT (8")
6 - EX HMA SHOULDER
7 - EX AGG. SHOULDER
8 - PR HMA BINDER CSE (VAR. DEPTH)
9 - PR HMA SHOULDERS 8"
10 - PR EARTH SHOULDERS
11 - PR PAINT PVMT MARKING - LINE 4"
12 - PR GUARDRAIL
13 - PR HMA SURFACE COURSE (1½")
14 - PR HMA SHOULDERS 10"
15 - PR SUBBASE GRANULAR MATERIAL, TYPE B
16 - PR LONGITUDINAL JOINT SEALANT
17 - PR BRIDGE APPROACH SLAB
OR PAVEMENT CONNECTOR (PCC)

MODEL: Default
FILE NAME: \\vksp-fs1\sprdsave\050\0505054_DOT_District_9\0595-0014-0007-4_13_over_N_Fork_Saline_River_Prj1_Gallatin_Co\CADD\CADD Sheets\d9786959-h4-typicals.dgn

VEENSTRA & KIMM INC.
A Kleinfelder Company

DESIGNED - CPK	REVISED -	STATE OF ILLINOIS DEPARTMENT OF TRANSPORTATION	TYPICAL ROADWAY SECTIONS
DRAWN - DMS	REVISED -		
CHECKED - CPK	REVISED -		
DATE - 11-06-2025	REVISED -		SCALE: SHEET 2 OF 2 SHEETS STA. TO STA.

F.A.P. RTE.	SECTION	COUNTY	TOTAL SHEETS	SHEET NO.
331	(10-1,10-3-1)B-2	GALLATIN	86	13
		CONTRACT NO. 78969		
	ILLINOIS	FED. AID PROJECT		

EARTHWORK

LOCATION	EARTH EXCAVATION	ADJUSTED SHRINKAGE FACTOR	EARTH EXCAVATION (ADJUSTED)	EMBANKMENT	EARTHWORK BALANCE		FURNISHED EXCAVATION	CHANNEL EXCAVATION	REMARKS
					EXCAVATION REQUIRED TO COMPLETE	EXCESS EXCAVATION			
	CU. YD.	%	CU. YD.	CU. YD.	CU. YD.	CU. YD.	CU. YD.	CU. YD.	
STA. 1686+40.00 TO STA. 1686+50.00	7.6	0.25	5.7	0.0	0.0	5.7	-5.7		
STA. 1686+50.00 TO STA. 1686+75.00	19.2	0.25	14.4	0.0	0.0	14.4	-14.4		
STA. 1686+75.00 TO STA. 1687+00.00	19.4	0.25	14.6	0.0	0.0	14.6	-14.6		
STA. 1687+00.00 TO STA. 1687+14.03	11.6	0.25	8.7	32.0	23.3	0.0	23.3		
STA. 1687+14.03 TO STA. 1687+25.00	10.0	0.25	7.5	75.5	68.0	0.0	68.0		
STA. 1687+25.00 TO STA. 1687+50.00	23.2	0.25	17.4	192.2	174.8	0.0	174.8		
STA. 1687+50.00 TO STA. 1687+75.00	21.0	0.25	15.8	172.0	156.2	0.0	156.2		
STA. 1687+75.00 TO STA. 1688+00.00	17.4	0.25	13.1	139.1	126.0	0.0	126.0		
STA. 1688+00.00 TO STA. 1688+25.00	14.8	0.25	11.1	85.9	74.8	0.0	74.8		
STA. 1688+25.00 TO STA. 1688+50.00	21.3	0.25	16.0	118.6	102.6	0.0	102.6		
STA. 1688+50.00 TO STA. 1688+72.50	15.0	0.25	11.3	92.0	80.7	0.0	80.7		
BRIDGE OMISSION									
STA. 1688+72.50 TO STA. 1691+47.50								4209.6	
BRIDGE OMISSION									
STA. 1691+47.50 TO STA. 1691+50.00	0.3	0.25	0.2	12.0	11.8	0.0	11.8		
STA. 1691+50.00 TO STA. 1691+75.00	4.7	0.25	3.5	209.8	206.3	0.0	206.3		
STA. 1691+75.00 TO STA. 1692+00.00	5.0	0.25	3.8	215.2	211.4	0.0	211.4		
STA. 1692+00.00 TO STA. 1692+25.00	4.3	0.25	3.2	120.6	117.4	0.0	117.4		
STA. 1692+25.00 TO STA. 1692+50.00	5.5	0.25	4.1	97.4	93.3	0.0	93.3		
STA. 1692+50.00 TO STA. 1692+75.00	7.2	0.25	5.4	162.3	156.9	0.0	156.9		
STA. 1692+75.00 TO STA. 1693+00.00	9.7	0.25	7.3	184.7	177.4	0.0	177.4		
STA. 1693+00.00 TO STA. 1693+25.00	10.9	0.25	8.2	71.9	63.7	0.0	63.7		
STA. 1693+25.00 TO STA. 1693+50.00	11.9	0.25	8.9	3.9	0.0	8.9	-8.9		
STA. 1693+50.00 TO STA. 1693+75.00	14.2	0.25	10.7	1.2	0.0	10.7	-10.7		
STA. 1693+75.00 TO STA. 1693+80.00	3.2	0.25	2.4	0.1	0.0	2.4	-2.4		
TOTAL	257		193	1,986	1,845	57	1,788	4,210	

PERMANENT SEEDING & TEMPORARY SEEDING

LOCATION	SEEDING CLASS 2	SEEDING CLASS 7	NITROGEN FERTILIZER NUTRIENT	PHOSPHOROUS FERTILIZER NUTRIENT	POTASSIUM FERTILIZER NUTRIENT	AGRICULTURAL GROUND LIMESTONE	MULCH METHOD, 2	EROSION CONTROL BLANKET	TEMP EROSION CONTROL SEEDING	PERIMETER EROSION BARRIER
	ACRE	ACRE	POUND	POUND	POUND	TON	ACRE	SQ YD	POUND	FOOT
STA. 1686+40.00 TO STA. 1689+62.00, RT.	0.23	0.23	21	21	21	0.46	0.46	308	23	362
STA. 1690+66.00 TO STA. 1693+80.00, RT.	0.23	0.23	21	21	21	0.46	0.46	308	23	366
STA. 1686+40.00 TO STA. 1689+70.00, LT.	0.47	0.47	43	43	43	0.94	0.94	1777	47	397
STA. 1690+78.00 TO STA. 1693+80.00, LT.	0.37	0.37	34	34	34	0.74	0.74	989	37	406
TOTAL	1.3	1.3	120	120	120	2.6	2.6	3382	130	1531

PAVEMENT CONNECTOR (PCC) FOR BRIDGE APPROACH SLAB

LOCATION	PAVEMENT CONNECTOR (PCC) FOR BRIDGE APPROACH SLAB	WELDED WIRE REINFORCEMENT
	SQ. YD.	SQ. YD.
STA. 1688+28.5 TO STA. 1688+43.5	67	67
STA. 1691+76.5 TO STA. 1691+91.5	67	67
TOTAL	134	134

HMA SHOULDERS

LOCATION	PAVED SHOULDER REMOVAL	HOT-MIX ASPHALT SHOULDERS 8"	HOT-MIX ASPHALT SHOULDERS 10"
	SQ. YD.	SQ. YD.	SQ. YD.
STA. 1686+40 TO STA. 1688+83.5 LT. & RT.	217		
STA. 1691+35.5 TO STA. 1694+60 LT. & RT.	289		
STA. 1686+40 TO STA. 1687+83.1 RT.		159	
STA. 1687+83.1 TO STA. 1688+72.5 RT.		69	
STA. 1691+47.5 TO STA. 1692+36.9 RT.		69	
STA. 1692+36.9 TO STA. 1693+80 RT.		159	
STA. 1688+28.5 TO STA. 1688+58.5 LT.		9	
STA. 1691+61.5 TO STA. 1691+91.5 LT.		9	
STA. 1685+85 TO STA. 1688+83.5 RT.			133
STA. 1691+35.5 TO STA. 1694+25 RT.			129
STA. 1686+40 TO STA. 1687+83.1 LT.			159
STA. 1687+83.1 TO STA. 1688+72.5 LT.			60
STA. 1691+47.5 TO STA. 1692+36.9 LT.			60
STA. 1692+36.9 TO STA. 1694+60 LT.			222
TOTAL	506	474	763

SUBBASE GRANULAR MATERIAL, TYPE B

LOCATION	SUBBASE GRAN. MATERIAL, TYPE B
	CU YD
PRESTAGE	
STA. 1686+40.00 RT TO STA. 1688+86.04 RT	20
STA. 1691+33.92 RT TO STA. 1693+80.00 RT	20
RIGHT SHOULDER	
STA. 1686+40.00 RT TO STA. 1688+40.50 RT	44
STA. 1691+79.50 RT TO STA. 1693+80.00 RT	44
LEFT SHOULDER	
STA. 1686+40.00 LT TO STA. 1688+40.50 LT	44
STA. 1691+79.50 LT TO STA. 1693+80.00 LT	44
CONNECTOR PAVEMENT	
STA. 1688+28.50 CTR TO STA. 1688+40.50 CTR	5
STA. 1691+79.50 CTR TO STA. 1691+91.50 CTR	5
TOTAL	226

TREE REMOVAL

LOCATION	TREE REMOVAL
	ACRE
STA. 1686+56 TO STA. 1689+88 - 26' LT. TO 112' LT.	0.47
STA. 1688+31 TO STA. 1689+58 - 24' RT. TO 83' RT.	0.09
STA. 1690+45 TO STA. 1691+89 - 22' RT. TO 72' RT.	0.14
TOTAL	0.70

STONE RIPRAP, CLASS A3 & FILTER FABRIC

LOCATION	STONE RIPRAP, CLASS A3	FILTER FABRIC
	SQ. YD.	SQ. YD.
STA. 1688+39.50 TO STA. 1688+47.50 RT.	55	55
STA. 1688+39.50 TO STA. 1688+47.50 LT.	68	68
STA. 1691+72.50 TO STA. 1691+80.50 RT.	44	44
STA. 1691+72.50 TO STA. 1691+80.50 LT.	61	61
BRIDGE QUANTITY		2471
TOTAL	228	2699

PAVEMENT REMOVAL

LOCATION	PAVEMENT REMOVAL
	SQ. YD.
STA. 1688+27.5 TO STA. 1688+83.5	150
STA. 1691+35.5 TO STA. 1691+92.5	152
TOTAL	302

HOT-MIX ASPHALT

LOCATION	HOT-MIX ASPHALT SURFACE REMOVAL (BUTT JOINT)	BITUMINOUS MATERIALS (TACK COAT)	HOT-MIX ASPHALT BINDER COURSE, IL-19.0, N70	HOT-MIX ASPHALT SURFACE COURSE, IL-9.5, MIX"C", N70
	SQ. YD.	POUND	TON	TON
STA. 1686+40 TO STA. 1687+71	350			
STA. 1693+56 TO STA. 1693+80	64			
STA. 1686+40 TO STA. 1688+42.5 INCLUDES SHOULDERS LT. & RT.		487		
STA. 1691+77.5 TO STA. 1693+80 INCLUDES SHOULDERS LT. & RT.		487		
STA. 1691+77.5 TO STA. 1693+00 (FOG COAT)		73		
8" SHOULDERS RT. (ONE FOG COAT)		99		
10" SHOULDERS LT. (ONE FOG COAT)		99		
STA. 1691+92.50 TO STA. 1693+40			159	
STA. 1686+40 TO STA. 1688+27.5				59
STA. 1691+92.5 TO STA. 1693+80				45
TOTAL	414	1245	159	104

PAINT PAVEMENT MARKING

LOCATION	PAINT PAVEMENT MARKING - LINE 4"		
	SOLID LINE NO PASSING (YELLOW)	30' SKIP 10' DASH (YELLOW)	EDGE LINE (WHITE)
	FOOT	FOOT	FOOT
STA. 1683+70 TO STA. 1697+05 LT.			1335
STA. 1683+70 TO STA. 1697+05 CENTERLINE		340	
STA. 1683+70 TO STA. 1697+05 RT.			1335
SUBTOTAL		340	2670
TOTAL	3010		

PAVEMENT MARKING REMOVAL - GRINDING

LOCATION	PAVEMENT MARKING REMOVAL - GRINDING
	SQ. FT.
STA. 1683+70 TO STA. 1685+85 RT. EDGE	72
STA. 1683+70 TO STA. 1697+05 RT. CENTERLINE SKIP DASH	114
STA. 1694+25 TO STA. 1697+05 RT. EDGE	94
TOTAL	280

GUARDRAIL SCHEDULE

LOCATION	TRAFFIC BARRIER TERMINAL, TYPE 1 (SPECIAL) TANGENT	STEEL PLATE BEAM GUARDRAIL 6 FOOT POSTS	TRAFFIC BARRIER TERMINAL, TYPE 6	TERMINAL MARKER - DIRECT APPLIED	GUARDRAIL REFLECTORS, TYPE A	GUARDRAIL REMOVAL
	EACH	FOOT	EACH	EACH	EACH	FOOT
STA. 1687+33.1 TO STA. 1687+83.1 RT.	1			1		
STA. 1687+83.1 TO STA. 1688+20.6 RT.		37.5			4	
STA. 1688+20.6 TO STA. 1688+57.5 RT.			1			
STA. 1691+62.5 TO STA. 1691+99.4 RT.			1			
STA. 1691+99.4 TO STA. 1692+36.9 RT.		37.5			4	
STA. 1692+36.9 TO STA. 1692+86.9 RT.	1			1		
STA. 1687+33.1 TO STA. 1687+83.1 LT.	1			1		
STA. 1687+83.1 TO STA. 1688+20.6 LT.		37.5	1		4	
STA. 1688+20.6 TO STA. 1688+57.5 LT.			1			
STA. 1691+62.5 TO STA. 1691+99.4 LT.						
STA. 1691+99.4 TO STA. 1692+36.9 LT.		37.5		1	4	
STA. 1692+36.9 TO STA. 1692+86.9 LT.	1					
STA. 1686+03 TO STA. 1688+83 RT.						280
STA. 1686+03 TO STA. 1688+83 LT.						280
STA. 1691+36 TO STA. 1693+94 RT.						258
STA. 1691+36 TO STA. 1693+94 LT.						258
TOTAL	4	150	4	4	16	1076

LONGITUDINAL JOINT SEALANT

LOCATION	LONGITUDINAL JOINT SEALANT
	FOOT
STA. 1686+40 TO STA. 1688+27.50	187
STA. 1691+92.50 TO STA. 1693+80	188
TOTAL	375

TEMPORARY BRIDGE TRAFFIC SIGNALS

LOCATION	TEMPORARY BRIDGE TRAFFIC SIGNALS
	EACH
STA. 1684+19 20' RT.	0.25
STA. 1684+44 20' LT.	0.25
STA. 1696+30 20' LT.	0.25
STA. 1696+55 20' RT.	0.25
TOTAL	1.0

PINNING TEMPORARY CONCRETE BARRIER

LOCATION	PINNING TEMPORARY CONCRETE BARRIER
	EACH
STAGE I	
STA. 1685+10 TO STA. 1686+10.3	6*
STA. 1686+10.3 TO STA. 1687+97.8	0
STA. 1687+97.8 TO STA. 1688+10.3	1
STA. 1688+10.3 TO STA. 1688+22.8	2
STA. 1688+22.8 TO STA. 1688+47.8	6
STA. 1688+47.8 TO STA. 1691+72.8	0
STA. 1691+72.8 TO STA. 1691+97.8	6
STA. 1691+97.8 TO STA. 1692+10.3	2
STA. 1692+10.3 TO STA. 1692+22.8	1
STA. 1692+22.8 TO STA. 1694+10.3	0
STA. 1694+10.3 TO STA. 1695+10	6*
STAGE II	
STA. 1685+10 TO STA. 1686+10.3	6*
STA. 1686+10.3 TO STA. 1687+97.8	0
STA. 1687+97.8 TO STA. 1688+10.3	1
STA. 1688+10.3 TO STA. 1688+22.8	2
STA. 1688+22.8 TO STA. 1688+47.8	6
STA. 1688+47.8 TO STA. 1691+72.8	0
STA. 1691+72.8 TO STA. 1691+97.8	6
STA. 1691+97.8 TO STA. 1692+10.3	2
STA. 1692+10.3 TO STA. 1692+22.8	1
STA. 1692+22.8 TO STA. 1694+10.3	0
STA. 1694+10.3 TO STA. 1695+10	6*
TOTAL	36

*INCLUDED WITH COST OF TEMPORARY CONCRETE BARRIER

CHANGEABLE MESSAGE SIGNS

LOCATION	CHANGEABLE MESSAGE SIGNS
	CAL DAY
EAST OF INTERSECTION OF IL 142 AND IL 13 WEST OF EQUALITY	14
WEST OF INTERSECTION OF IL 1 AND IL 13 EAST OF EQUALITY	14
TOTAL	28

RAISED REFLECTIVE PAVEMENT MARKER REMOVAL

LOCATION	RAISED REFLECTIVE PAVEMENT MARKER REMOVAL
	EACH
STA. 1686+40 TO STA. 1693+80	9
TOTAL	9

TEMPORARY CONCRETE BARRIER AND IMPACT ATTENUATORS

LOCATION	IMPACT ATTENUATORS, TEMPORARY (NON-REDIRECTIVE, NARROW), TEST LEVEL 3	TEMPORARY CONCRETE BARRIER	RELOCATE TEMPORARY CONCRETE BARRIER	IMPACT ATTENUATORS, RELOCATE (NON-REDIRECTIVE, NARROW) TEST LEVEL 3
	EACH	FOOT	FOOT	EACH
STA. 1684+80.4 TO STA. 1685+10 RT.	1			
STA. 1685+10 TO STA. 1695+10 (STAGE I)		1000		
STA. 1695+10 TO STA. 1695+39.6 RT.	1			
STA. 1684+80.4 TO STA. 1685+10 LT.				1
STA. 1685+10 TO STA. 1695+10 (STAGE II)			1000	
STA. 1695+10 TO STA. 1695+39.6 LT.				1
TOTAL	2	1000	1000	2

SHORT TERM PAVEMENT MARKING

LOCATION	SHORT TERM PAVEMENT MARKING	SHORT TERM PVT. MARK. REMOVAL
	FOOT	SQ. FT.
STA. 1683+70 TO STA. 1697+05 (ASSUME 4' STRIPES AT 40' CENTERS)	136	46
TOTAL	136	46

TEMPORARY RUMBLE STRIPS

LOCATION	TEMPORARY RUMBLE STRIPS
	EACH
STA. 1666+69 RT. NORTHBOUND	1
STA. 1671+69 RT. NORTHBOUND	1
STA. 1676+69 RT. NORTHBOUND	1
STA. 1704+05 LT. SOUTHBOUND	1
STA. 1709+05 LT. SOUTHBOUND	1
STA. 1714+05 LT. SOUTHBOUND	1
TOTAL	6

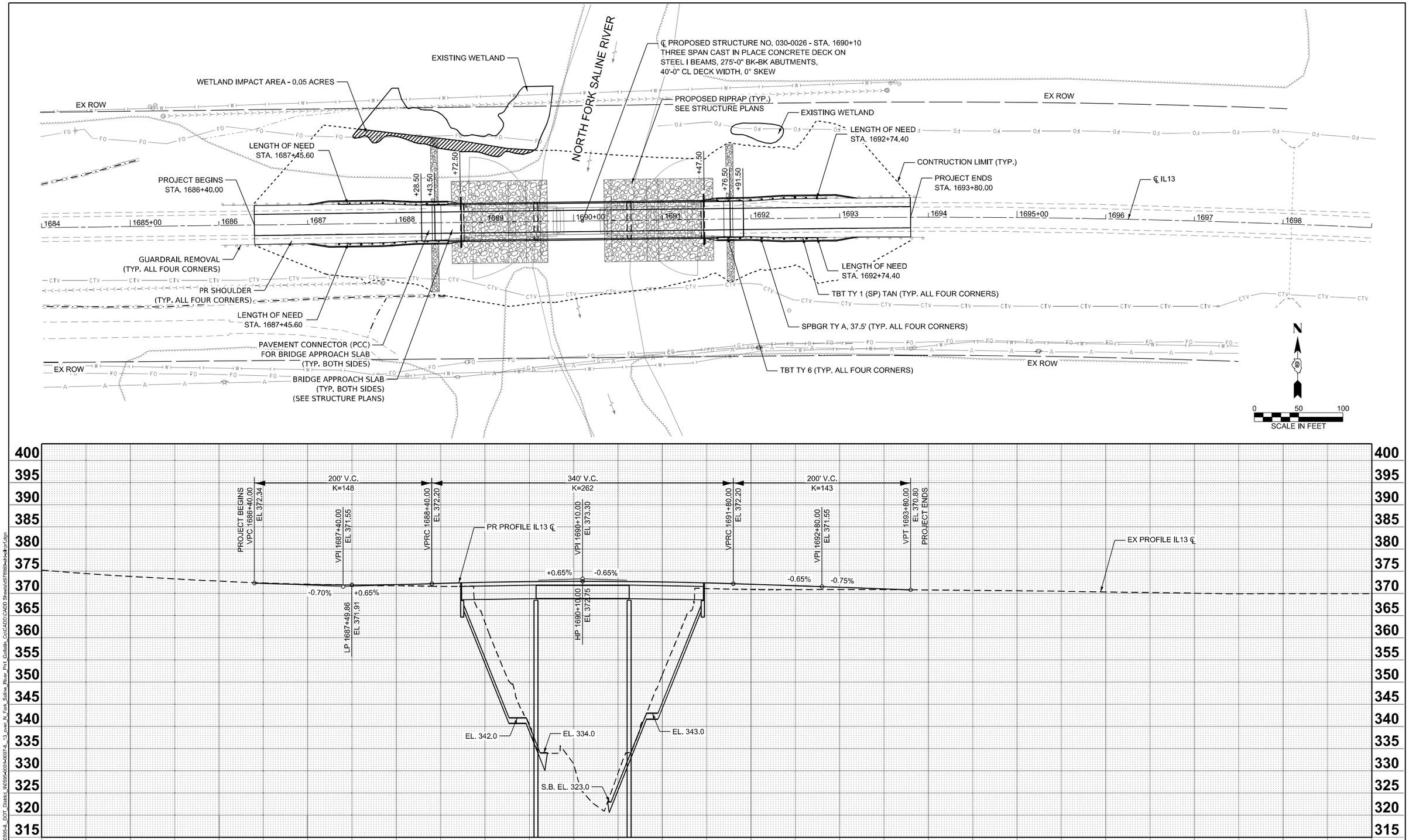

MODEL: IL13 - IL13 [Sheet]
FILE NAME: \\vksps-s1\sprshare\05000595-IL_DOT_District_9\599-0001-0007-IL_13_over_N_Fork_Saline_River_Prj1_Gallatin_Co\CADD\CADD Sheets\97969ell-sk-prof.dgn

VEENSTRA & KIMM INC.
A Kleinfelder Company

DESIGNED -	CPK	REVISED -	
DRAWN -	DMS	REVISED -	
CHECKED -	CPK	REVISED -	
DATE -	11-06-2025	REVISED -	

STATE OF ILLINOIS
DEPARTMENT OF TRANSPORTATION

PLAN AND PROFILE

SCALE: 1"=50' | SHEET 1 OF 1 SHEETS | STA. 1684+00.00 TO STA. 1699+00.00

F.A.P. RTE.	SECTION	COUNTY	TOTAL SHEETS	SHEET NO.
331	(10-1,10-3-1)B-2	GALLATIN	86	18

CONTRACT NO. 78969

ILLINOIS | FED. AID PROJECT

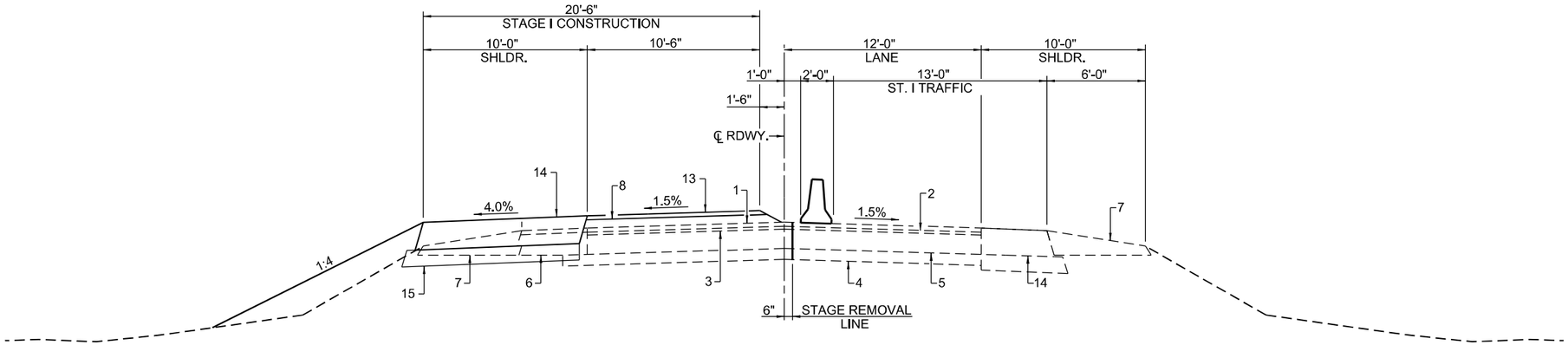

STAGE I CROSS SECTION
(STA. 1686+40 TO STA. 1687+45 &
STA. 1692+49.40 TO STA. 1693+80)

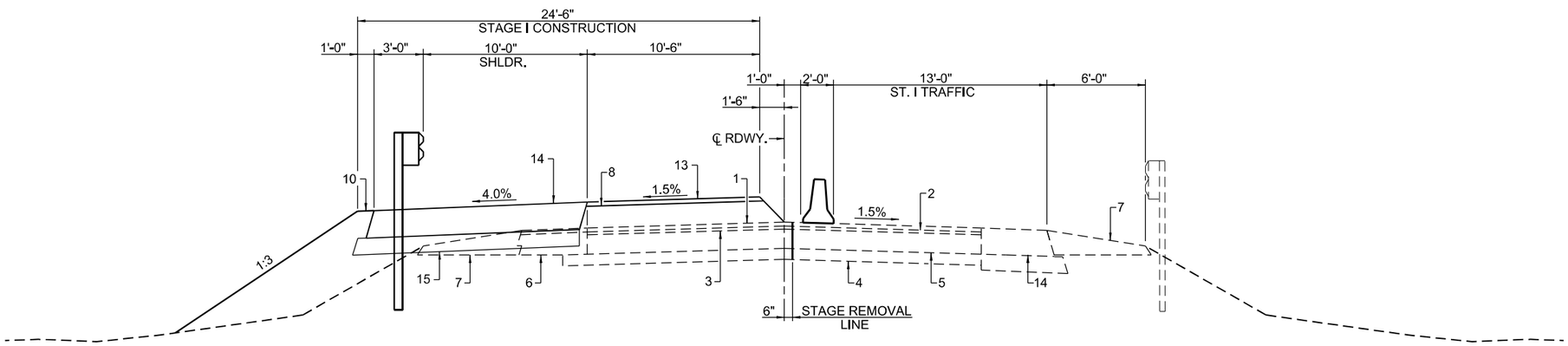

STAGE I CROSS SECTION
(STA. 1687+45.60 TO STA. 1692+49.40)
BRIDGE OMISSION - STA. 1688+72.50 TO STA. 1691+47.50)

PAVEMENT LEGEND

1 - EX HMA SURFACE
2 - EX HMA BINDER
3 - EX HMA BASE COURSE
4 - EX STAB. SUB-BASE
5 - EX PCC PAVEMENT (8")
6 - EX HMA SHOULDER
7 - EX AGG. SHOULDER
8 - PR HMA BINDER CSE (VAR. DEPTH)
9 - PR HMA SHOULDERS 8"
10 - PR EARTH SHOULDERS
11 - PR PAINT PVMT MARKING - LINE 4"
12 - PR GUARDRAIL
13 - PR HMA SURFACE COURSE (1½")
14 - PR HMA SHOULDERS 10"
15 - PR SUBBASE GRANULAR MATERIAL, TYPE B
16 - PR LONGITUDINAL JOINT SEALANT
17 - PR BRIDGE APPROACH SLAB
OR PAVEMENT CONNECTOR (PCC)

MODEL: Default
FILE NAME: \\vksp-451sprshare\05010259S4L_DOT_District_9\0595-4001-0074L_13_over_N_Fork_Saline_River_Pt1_Gallatin_Co\CADD\CADD Sheets\d97969b-sht-typlng typicalk.dgn

VEENSTRA & KIMM INC.
A Kleinfelder Company

DESIGNED - CPK	REVISED -		
DRAWN - DMS	REVISED -		
CHECKED - CPK	REVISED -		
DATE - 11-06-2025	REVISED -		

STATE OF ILLINOIS
DEPARTMENT OF TRANSPORTATION

STAGE I TYPICAL ROADWAY SECTIONS

SCALE: | SHEET 1 OF 2 SHEETS | STA. | TO STA.

F.A.P. RTE.	SECTION	COUNTY	TOTAL SHEETS	SHEET NO.
331	(10-1,10-3-1)B-2	GALLATIN	86	19
		CONTRACT NO. 78969		
	ILLINOIS	FED. AID PROJECT		

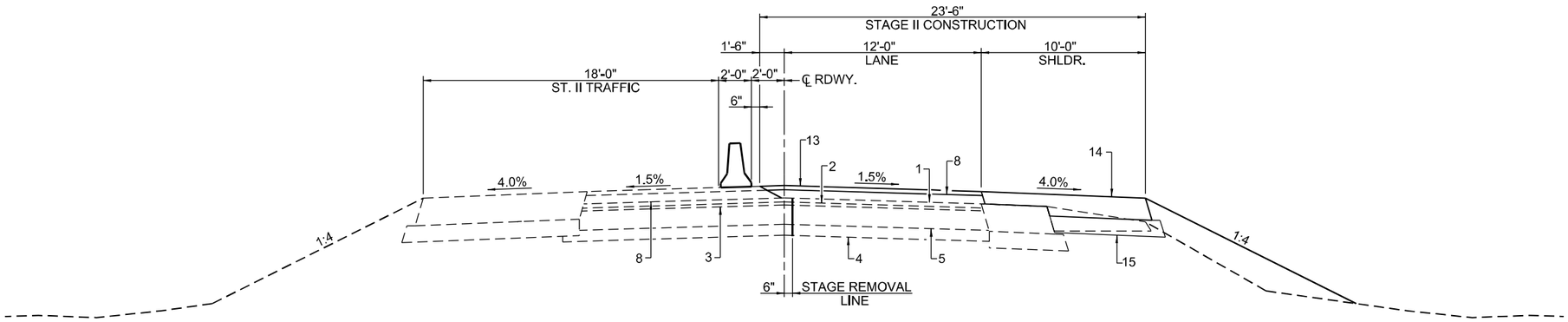

STAGE II CROSS SECTION

(STA. 1686+40 TO STA. 1687+33.10 & STA. 1692+86.90 TO STA. 1693+80)

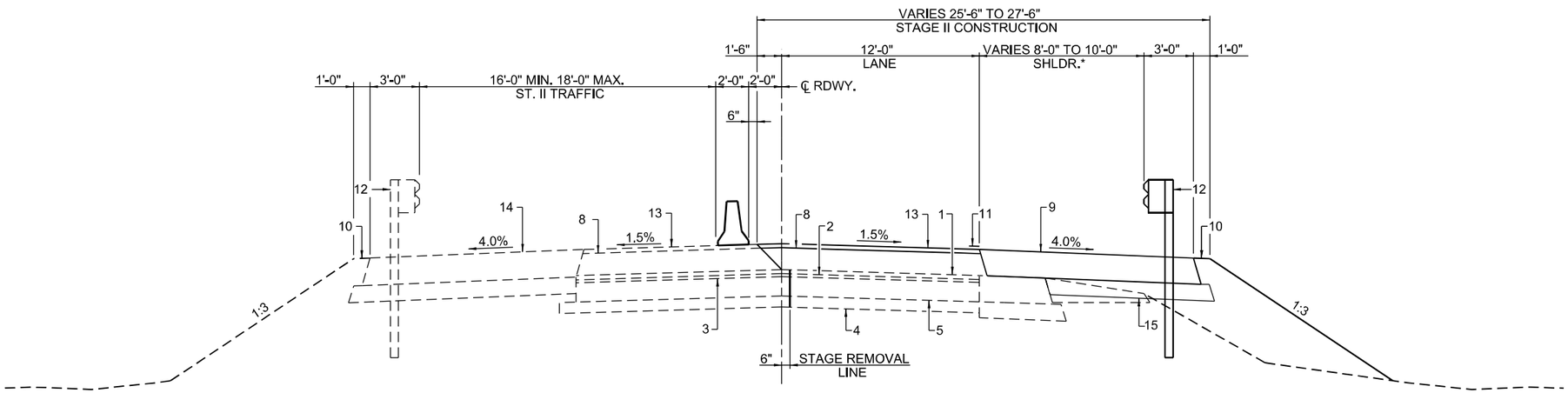

STAGE II CROSS SECTION

(STA. 1687+33.10 TO STA. 1692+86.90)
BRIDGE OMISSION - STA. 1688+72.50 TO STA. 1691+47.50)

PAVEMENT LEGEND

1 - EX HMA SURFACE
2 - EX HMA BINDER
3 - EX HMA BASE COURSE
4 - EX STAB. SUB-BASE
5 - EX PCC PAVEMENT (8")
6 - EX HMA SHOULDER
7 - EX AGG. SHOULDER
8 - PR HMA BINDER CSE (VAR. DEPTH)
9 - PR HMA SHOULDERS 8"
10 - PR EARTH SHOULDERS
11 - PR PAINT PVMT MARKING - LINE 4"
12 - PR GUARDRAIL
13 - PR HMA SURFACE COURSE (1½")
14 - PR HMA SHOULDERS 10"
15 - PR SUBBASE GRANULAR MATERIAL, TYPE B
16 - PR LONGITUDINAL JOINT SEALANT
17 - PR BRIDGE APPROACH SLAB
OR PAVEMENT CONNECTOR (PCC)

MODEL: Default
FILE NAME: \\vksgc-ds1\sprshare\005\0005995-IL_DOT_District_9\2595-4001-00714L_13_over_N_Fork_Saline_River_Pin1_Gallatin_Co\CADD\CADD Sheets\d78969-sh-staging typicals.dgn

VEENSTRA & KIMM INC.
A Kleinfelder Company

DESIGNED - CPK	REVISED -		
DRAWN - DMS	REVISED -		
CHECKED - CPK	REVISED -		
DATE - 11-06-2025	REVISED -		

STATE OF ILLINOIS
DEPARTMENT OF TRANSPORTATION

STAGE II TYPICAL ROADWAY SECTIONS

SCALE: | SHEET 2 OF 2 SHEETS | STA. | TO STA.

F.A.P. RTE.	SECTION	COUNTY	TOTAL SHEETS	SHEET NO.
331	(10-1,10-3-1)B-2	GALLATIN	86	20
		CONTRACT NO. 78969		
		ILLINOIS	FED. AID PROJECT	

GENERAL NOTES

1. THE CENTERLINE PAVEMENT MARKING SHALL BE REMOVED FROM THE STOP BAR TO STOP BAR EDGE LINE PAVEMENT MARKING SHALL BE REMOVED IF A 10 FOOT LANE WIDTH CANNOT BE MAINTAINED. TEMPORARY EDGE LINES SHALL BE INSTALLED WHEN THE EDGE LINES ARE REMOVED.
2. VERTICAL PANELS SHOWN ON STANDARD 701321 WILL NOT BE REQUIRED ON THE STAGE 2 NEW CO-10 RAIL. THE BARRIER WALL REFLECTORS SHALL BE INSTALLED PRIOR TO OPENING TO TRAFFIC.
3. ANY TIME THE CONCRETE BARRIER IS NOT IN THE PROPER POSITION, FLAGGERS SHALL BE IN PLACE TO CONTROL TRAFFIC AND THE TEMPORARY TRAFFIC SIGNALS SHALL BE TURNED OFF OR COVERED.

SUGGESTED SEQUENCE OF CONSTRUCTION

PRE-STAGE I

1. PERFORM PAVED SHOULDER REMOVAL FROM STA. 1686+40 TO STA. 1688+83.5 RT. AND STA. 1691+35.5 TO STA. 1693+80 RT.
2. INSTALL HOT-MIX ASPHALT SHOULDERS 10" FROM STA. 1686+40 TO STA. 1688+83.5 RT. AND FROM STA. 1691+35.5 TO STA. 1693+80 RT.

STAGE I

3. INSTALL TEMPORARY BRIDGE TRAFFIC SIGNALS AND ALL OTHER SIGNS PER STANDARD 701321 INCLUDING WIDTH RESTRICTION SIGNS.
4. PLACE TEMPORARY CONCRETE BARRIER FROM STA.1687+10.3 TO STA. 1695+10 AS SHOWN BELOW.
5. PERFORM WORK FOR STAGE I CONSTRUCTION INCLUDING INSTALLATION OF NEW THREE SPAN STRUCTURE, HMA BINDER COURSE (EAST SIDE ONLY), SURFACE COURSE AND SHOULDERS, GUARDRAIL, RIPRAP AND EARTHWORK.

STAGE II

6. RELOCATE TEMPORARY CONCRETE BARRIER FROM STA. 1687+10.3 TO STA. 1695+10 AS SHOWN ON STAGE II CONSTRUCTION SHEET.
7. PERFORM WORK FOR STAGE ii CONSTRUCTION INCLUDING INSTALLATION OF NEW THREE SPAN STRUCTURE, HMA BINDER COURSE (EAST SIDE ONLY), SURFACE COURSE AND SHOULDERS, GUARDRAIL, RIPRAP AND EARTHWORK.

STAGE III

8. REMOVE TEMPORARY CONCRETE BARRIER.
9. INSTALL STRIPING PER PAVEMENT MARKING PLAN.

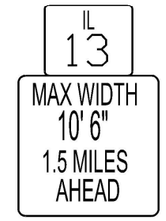

WIDTH RESTRICTION SIGN

W12-I103 48" X 48" WITH 10' 6" LETTERS BLACK ON ORANGE MAX WIDTH & 1.5 MILES AHEAD BLACK ON WHITE WITH M3-1 30X15 AND M1-I100 30X24

LOCATED EAST AND WEST OF THE INTERSECTION OF IL 13 AND IL 142.

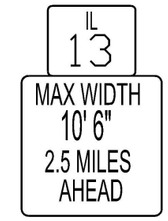

WIDTH RESTRICTION SIGN

W12-I103 48" X 48" WITH 10' 6" LETTERS BLACK ON ORANGE MAX WIDTH & 2 MILES AHEAD BLACK ON WHITE WITH M3-1 30X15 AND M1-I100 30X24

LOCATED EAST AND WEST OF THE INTERSECTION OF IL 13 AND IL 1.

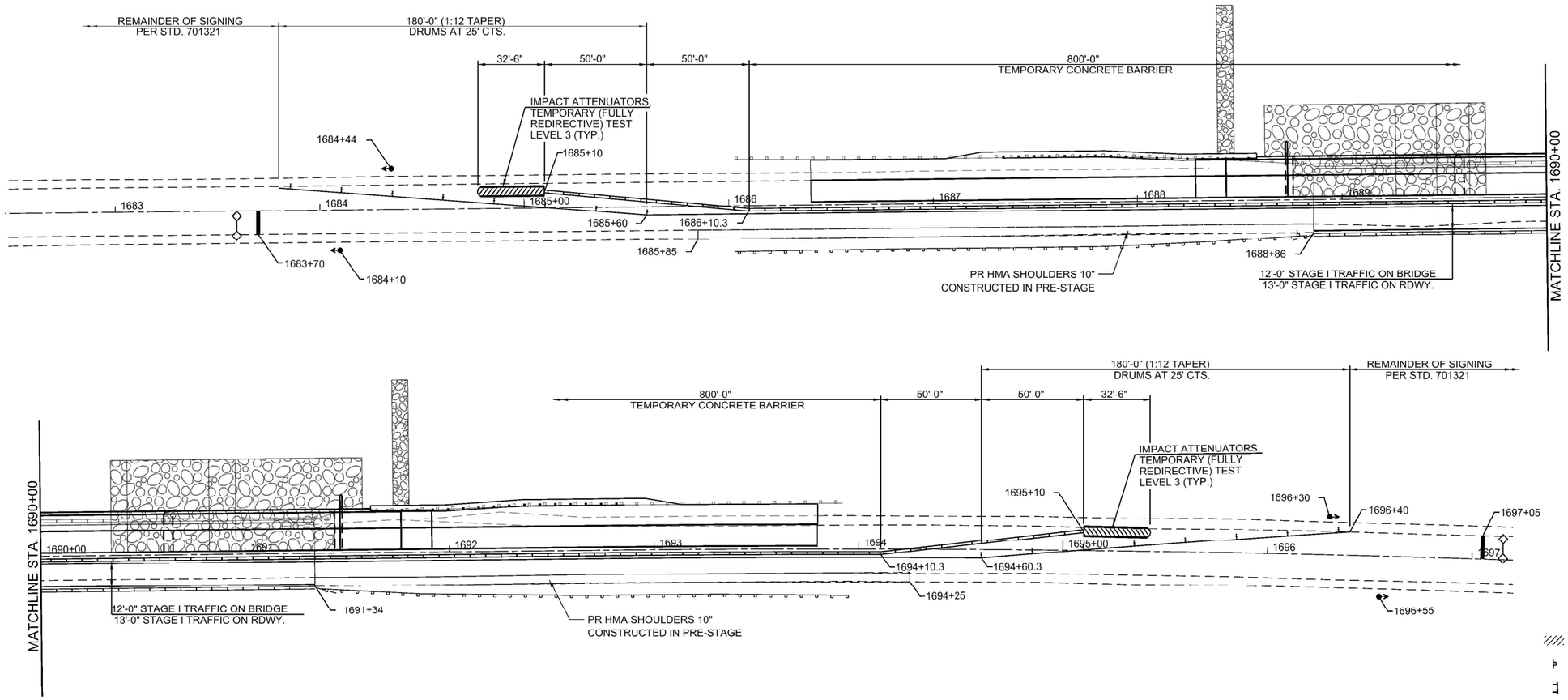

LEGEND

- REMOVAL ITEMS
- SIGN
- TYPE III BARRICADE
- DRUM WITH STEADY BURNING LIGHT
- BARRICADE WITH STEADY BURNING LIGHT
- TRAFFIC SIGNAL
- INDUCTION LOOP DETECTOR
- DOUBLE VERTICAL PANEL
- TYPE C BIDIRECTIONAL REFLECTOR
- TEMPORARY CONCRETE BARRIER
- IMPACT ATTENUATOR
- STEADY BURNING LIGHTS AND DOUBLE VERTICAL PANELS

N

0 30 60
SCALE IN FEET

VEENSTRA & KIMM INC.
A Kleinfelder Company

DESIGNED - CPK	REVISED -	STATE OF ILLINOIS DEPARTMENT OF TRANSPORTATION	STAGE I CONTRUCTION PLAN
DRAWN - DMS	REVISED -		
CHECKED - CPK	REVISED -		
DATE - 11-06-2025	REVISED -		SCALE: 1"=30' SHEET 1 OF 2 SHEETS STA. 1684+00 TO STA. 1696+00

F.A.P. RTE.	SECTION	COUNTY	TOTAL SHEETS	SHEET NO.
331	(10-1,10-3-1)B-2	GALLATIN	86	21
		CONTRACT NO. 78969		
		ILLINOIS FED. AID PROJECT		

MODEL: Default
FILE NAME: \\vksgis-fs1\sgrshare\0500\0595-L_DOT_District_9\0595-0001-0007-L_13_over_N_Fork_Saline_River_Pt1_Gallatin_Co\CADD\CADD Sheets\d978969-sht-staging_01.dgn

GENERAL NOTES

1. THE CENTERLINE PAVEMENT MARKING SHALL BE REMOVED FROM THE STOP BAR TO STOP BAR EDGE LINE PAVEMENT MARKING SHALL BE REMOVED IF A 10 FOOT LANE WIDTH CANNOT BE MAINTAINED. TEMPORARY EDGE LINES SHALL BE INSTALLED WHEN THE EDGE LINES ARE REMOVED.
2. VERTICAL PANELS SHOWN ON STANDARD 701321 WILL NOT BE REQUIRED ON THE STAGE 2 NEW CO-10 RAIL. THE BARRIER WALL REFLECTORS SHALL BE INSTALLED PRIOR TO OPENING TO TRAFFIC.
3. ANY TIME THE CONCRETE BARRIER IS NOT IN THE PROPER POSITION, FLAGGERS SHALL BE IN PLACE TO CONTROL TRAFFIC AND THE TEMPORARY TRAFFIC SIGNALS SHALL BE TURNED OFF OR COVERED.

SUGGESTED SEQUENCE OF CONSTRUCTION

PRE-STAGE I

1. PERFORM PAVED SHOULDER REMOVAL FROM STA. 1686+40 TO STA. 1688+83.5 RT. AND STA. 1691+35.5 TO STA. 1693+80 RT.
2. INSTALL HOT-MIX ASPHALT SHOULDERS 10" FROM STA. 1686+40 TO STA. 1688+83.5 RT. AND FROM STA. 1691+35.5 TO STA. 1693+80 RT.

STAGE I

3. INSTALL TEMPORARY BRIDGE TRAFFIC SIGNALS AND ALL OTHER SIGNS PER STANDARD 701321 INCLUDING WIDTH RESTRICTION SIGNS.
4. PLACE TEMPORARY CONCRETE BARRIER FROM STA.1687+10.3 TO STA. 1695+10 AS SHOWN BELOW.
5. PERFORM WORK FOR STAGE I CONSTRUCTION INCLUDING INSTALLATION OF NEW THREE SPAN STRUCTURE, HMA BINDER COURSE (EAST SIDE ONLY), SURFACE COURSE AND SHOULDERS, GUARDRAIL, RIPRAP AND EARTHWORK.

STAGE II

6. RELOCATE TEMPORARY CONCRETE BARRIER FROM STA. 1687+10.3 TO STA. 1695+10 AS SHOWN ON STAGE II CONSTRUCTION SHEET.
7. PERFORM WORK FOR STAGE ii CONSTRUCTION INCLUDING INSTALLATION OF NEW THREE SPAN STRUCTURE, HMA BINDER COURSE (EAST SIDE ONLY), SURFACE COURSE AND SHOULDERS, GUARDRAIL, RIPRAP AND EARTHWORK.

STAGE III

8. REMOVE TEMPORARY CONCRETE BARRIER.
9. INSTALL STRIPING PER PAVEMENT MARKING PLAN.

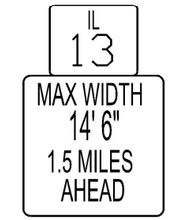

WIDTH RESTRICTION SIGN

W12-I103 48" X 48" WITH 14' 6" LETTERS BLACK ON ORANGE MAX WIDTH & 1.5 MILES AHEAD BLACK ON WHITE WITH M3-1 30X15 AND M1-I100 30X24

LOCATED EAST AND WEST OF THE INTERSECTION OF IL 13 AND IL 142.

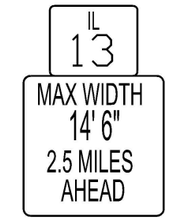

WIDTH RESTRICTION SIGN

W12-I103 48" X 48" WITH 14' 6" LETTERS BLACK ON ORANGE MAX WIDTH & 2 MILES AHEAD BLACK ON WHITE WITH M3-1 30X15 AND M1-I100 30X24

LOCATED EAST AND WEST OF THE INTERSECTION OF IL 13 AND IL 1.

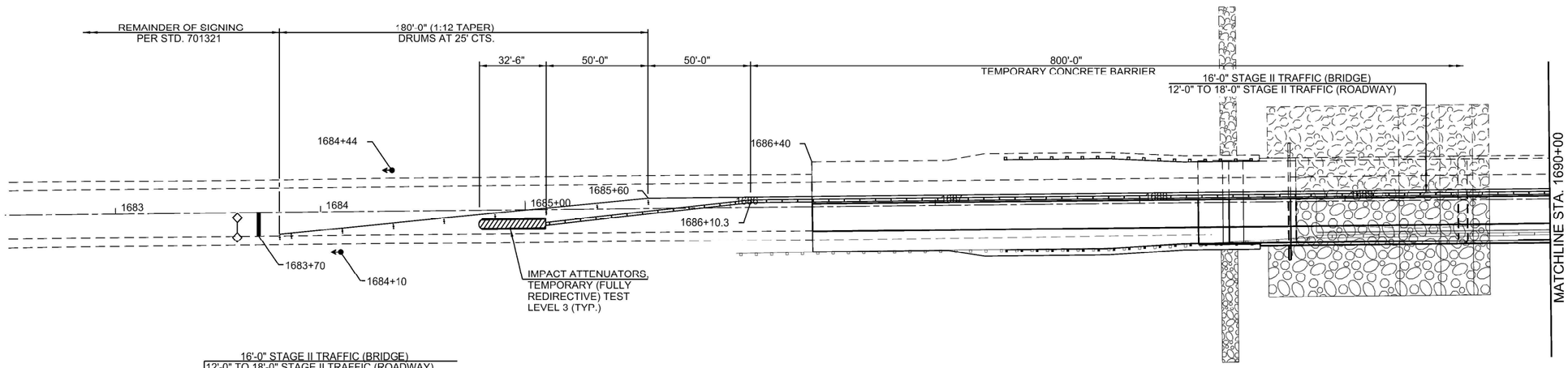

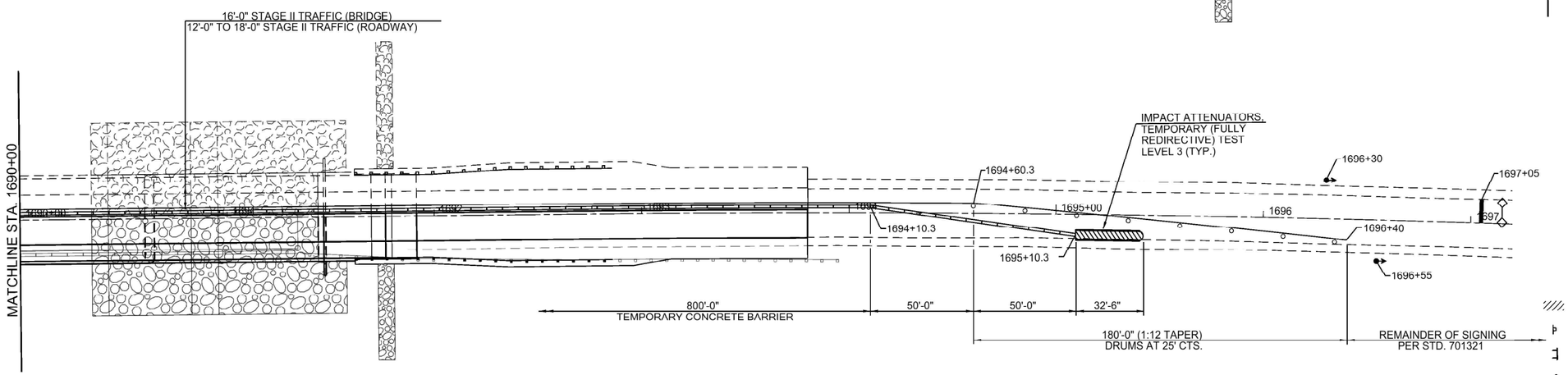

LEGEND

- REMOVAL ITEMS
- SIGN
- TYPE III BARRICADE
- DRUM WITH STEADY BURNING LIGHT
- BARRICADE WITH STEADY BURNING LIGHT
- TRAFFIC SIGNAL
- INDUCTION LOOP DETECTOR
- DOUBLE VERTICAL PANEL
- TYPE C BIDIRECTIONAL REFLECTOR
- TEMPORARY CONCRETE BARRIER
- IMPACT ATTENUATOR
- STEADY BURNING LIGHTS AND DOUBLE VERTICAL PANELS

N

0 30 60
SCALE IN FEET

MODEL: Default
FILE NAME: \\vksgr-fs1\gresharev0500\0595-IL_DOT_District_9\0595-A001-0007-IL_13_over_N_Fork_Saline_River_Ph1_Gallatin_Co\CADD\CADD Sheets\d978969-sht-staging_02.dgn

VEENSTRA & KIMM INC.
A Kleinfelder Company

DESIGNED - CPK	REVISED -		
DRAWN - DMS	REVISED -		
CHECKED - CPK	REVISED -		
DATE - 11-06-2025	REVISED -		

STATE OF ILLINOIS
DEPARTMENT OF TRANSPORTATION

STAGE II CONTRUCTION PLAN

SCALE: 1"=30' | SHEET 2 OF 2 SHEETS | STA. 1684+00 TO STA. 1696+00

F.A.P. RTE.	SECTION	COUNTY	TOTAL SHEETS	SHEET NO.
331	(10-1,10-3-1)B-2	GALLATIN	86	22
		CONTRACT NO. 78969		
		ILLINOIS FED. AID PROJECT		

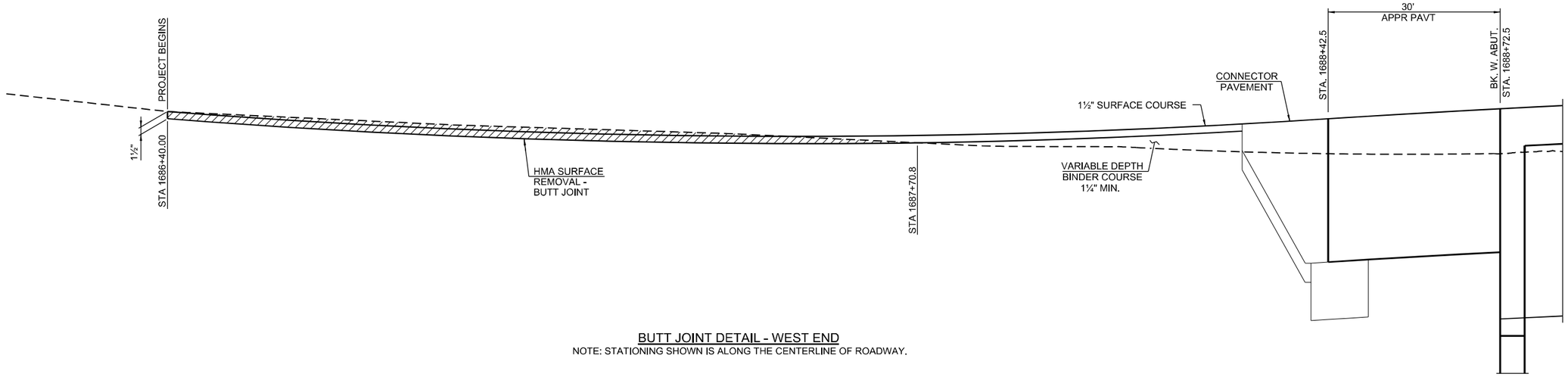

BUTT JOINT DETAIL - WEST END

NOTE: STATIONING SHOWN IS ALONG THE CENTERLINE OF ROADWAY.

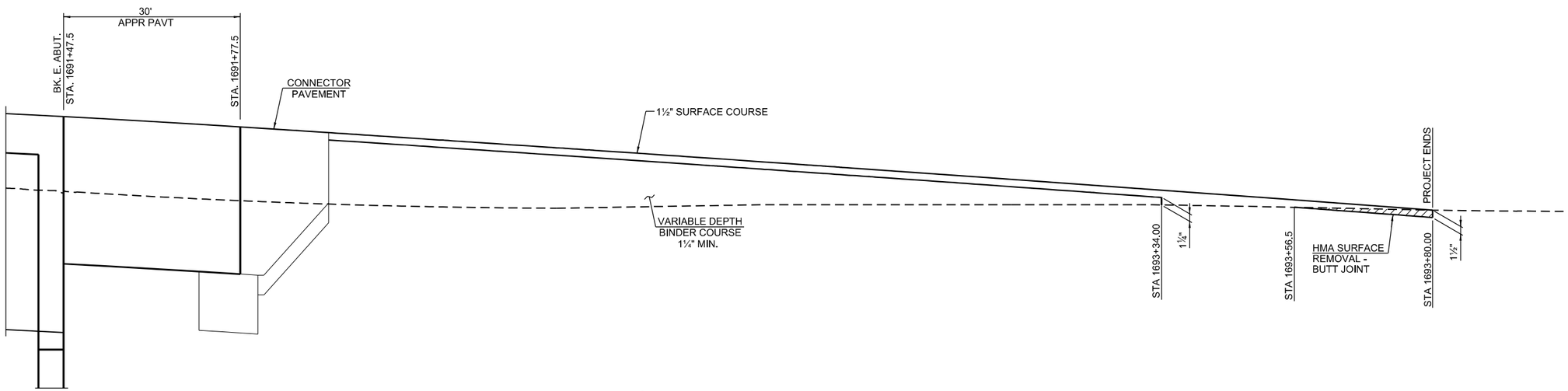

BUTT JOINT DETAIL - EAST END

NOTE: STATIONING SHOWN IS ALONG THE CENTERLINE OF ROADWAY.

MODEL: Default
FILE NAME: \\vksp-s1\sprshare\0500\0595-IL_DOT_District_9\0595-0001-0007-IL_13_over_N_Fork_Saline_River_Pt1_Gallatin_Co\CADD\CADD Sheets\97969butt-joint.dgn

VEENSTRA & KIMM INC.
A Kleinfelder Company

DESIGNED - CPK	REVISED -	STATE OF ILLINOIS DEPARTMENT OF TRANSPORTATION	BUTT JOINT DETAILS
DRAWN - DMS	REVISED -		
CHECKED - CPK	REVISED -		
DATE - 11-06-2025	REVISED -		SCALE: SHEET 1 OF 1 SHEETS STA. TO STA.

F.A.P. RTE.	SECTION	COUNTY	TOTAL SHEETS	SHEET NO.
331	(10-1,10-3-1)B-2	GALLATIN	86	23
		CONTRACT NO. 78969		
		ILLINOIS	FED. AID PROJECT	

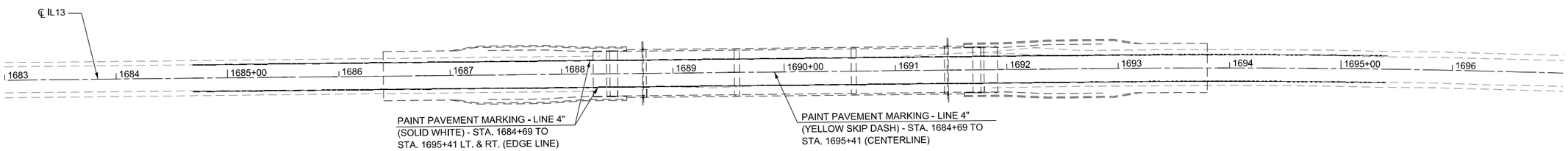

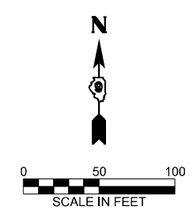

MODEL: Default
FILE NAME: \\vksqs4\sqshare\0500\0596-IL_DOT_District_9\0596-0001\0007-IL_13_over_N_Fork_Saline_River_Pt1_Gallatin_Co\CADD\CADD Sheets\0578969all-berrk.dgn

VEENSTRA & KIMM INC.
A Kleinfelder Company

DESIGNED - CPK	REVISED -		
DRAWN - DMS	REVISED -		
CHECKED - CPK	REVISED -		
DATE - 11-06-2025	REVISED -		

STATE OF ILLINOIS
DEPARTMENT OF TRANSPORTATION

PAVEMENT MARKING PLAN

SCALE: 1"=50' | SHEET 1 OF 1 SHEETS | STA. 1683+00 TO STA. 1697+00

F.A.P. RTE.	SECTION	COUNTY	TOTAL SHEETS	SHEET NO.
331	(10-1,10-3-1)B-2	GALLATIN	86	24
		CONTRACT NO. 78969		
	ILLINOIS	FED. AID PROJECT		

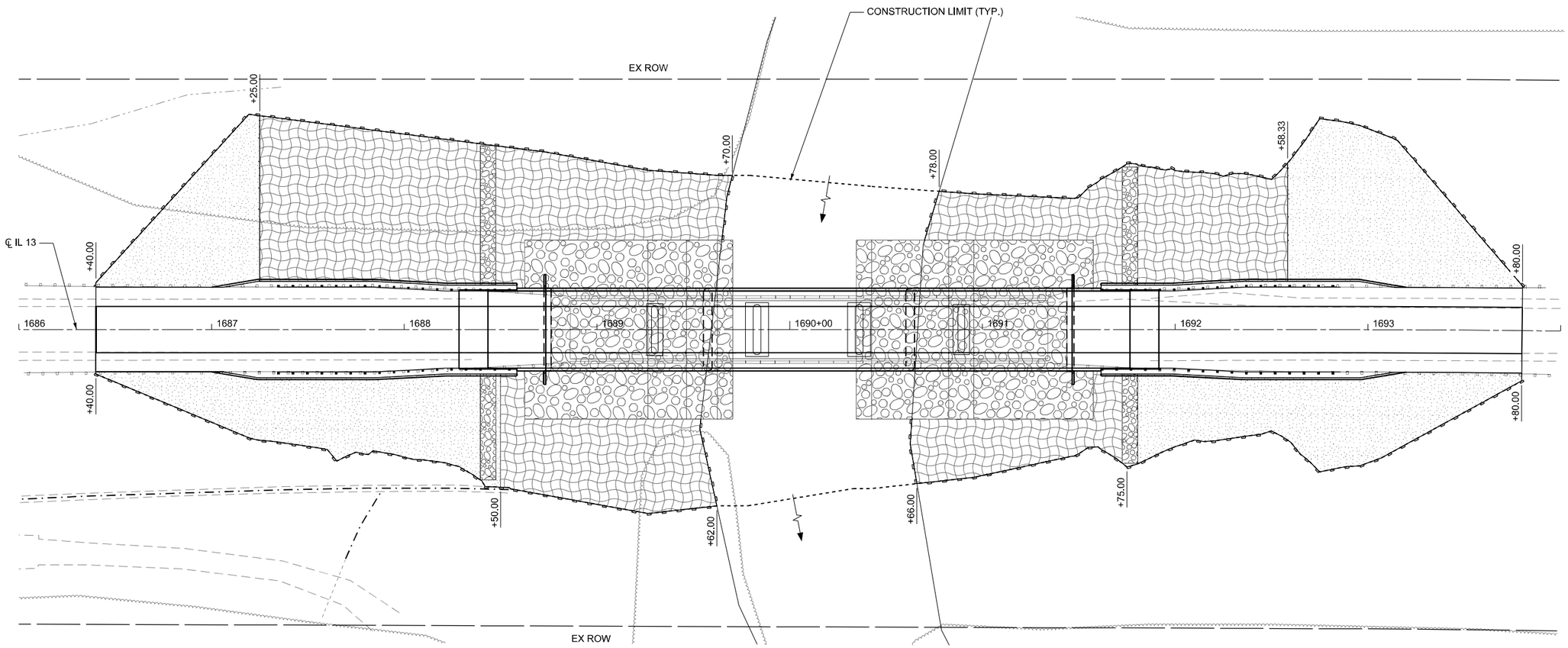

LEGEND

- SEEDING, CLASS 2 & 7, TEMPORARY EROSION CONTROL SEEDING, MULCH, METHOD 2, EROSION CONTROL BLANKET (LOCATED ON SLOPES STEEPER THAN 1:3)
- SEEDING, CLASS 2 & 7, TEMPORARY EROSION CONTROL SEEDING, MULCH, METHOD 2
- PERIMETER EROSION BARRIER

N

0 30 60
SCALE IN FEET

MODEL: Default
FILE NAME: \\vksgs-fs1\gcs\shave\050\050954_DOT_District_9\059-0014-0007-4_13_over_N_Fork_Saline_River_Pt1_Gallatin_Co\CADD\CADD Sheets\d78969-ellhero.dgn

VEENSTRA & KIMM INC.
A Kleinfelder Company

DESIGNED	-	CPK	REVISED -
DRAWN	-	DMS	REVISED -
CHECKED	-	CPK	REVISED -
DATE	-	11-06-2025	REVISED -

STATE OF ILLINOIS
DEPARTMENT OF TRANSPORTATION

EROSION CONTROL PLAN

SCALE: 1"=30' | SHEET 1 OF 1 SHEETS | STA. 1686+00 TO STA. 1694+00

F.A.P. RTE.	SECTION	COUNTY	TOTAL SHEETS	SHEET NO.
331	(10-1,10-3-1)B-2	GALLATIN	86	25

CONTRACT NO. 78969

ILLINOIS | FED. AID PROJECT

Benchmark: BM 137A: Chiseled "□" on top level of wingwall at southwest corner of SN 030-0015. Station 1688+79.25, 19.1' Rt., Elevation = 374.484.

Existing Structure:
Structure No. 030-0015 was originally constructed in 1964 as S.B.I. Route 13, Section 10-2B at Station 1690+10.00. The superstructure consists of 5 span, continuous, non-composite W30 steel beams and was originally constructed with a 7" thick concrete deck. The superstructure rests on stub abutments founded on steel H-piles and solid wall piers founded on either steel H-piles or on rock. The structure is square and an overall length of 252'-0" from back-to-back of abutments. The out-to-out width of the structure is 36'-0". The deck consists of 3'-0" wide curbs with a clear width of 30'-0".

The structure will be replaced utilizing stage construction.

No salvage.

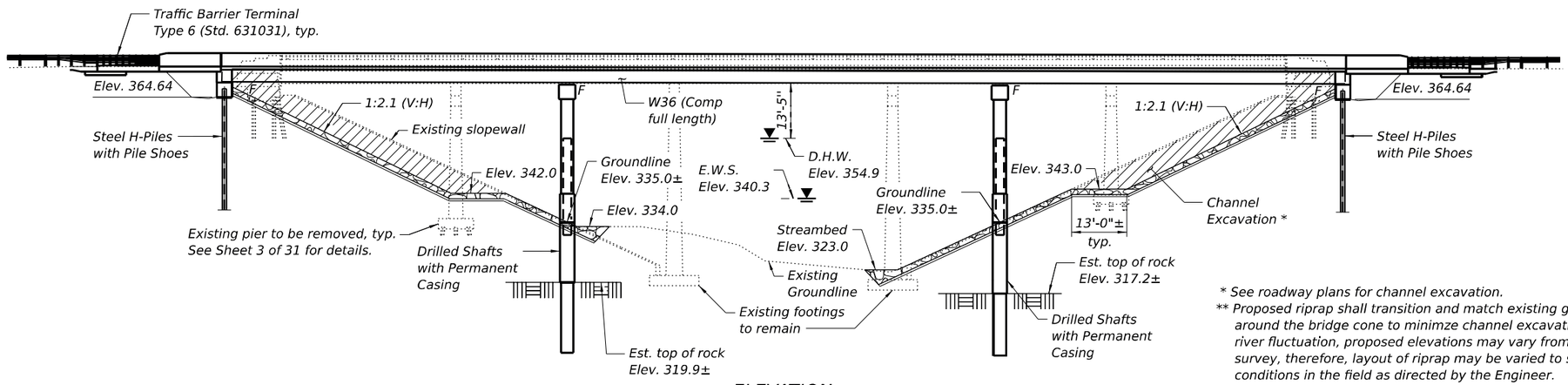

ELEVATION

* See roadway plans for channel excavation.
** Proposed riprap shall transition and match existing groundline around the bridge cone to minimze channel excavation. Due to river fluctuation, proposed elevations may vary from initial survey, therefore, layout of riprap may be varied to suit ground conditions in the field as directed by the Engineer.

LOADING HL-93

Allow 50#/sq. ft. for future wearing surface.

DESIGN SPECIFICATIONS

2020 AASHTO LRFD Bridge Design Specifications, 9th Edition
2023 Guide Specifications for LRFD Seismic Bridge Design, 3rd Edition

DESIGN STRESSES

FIELD UNITS

f'c = 4,000 psi (Superstructure & Drilled Shafts)
f'c = 3,500 psi (Substructure)
fy = 60,000 psi (Reinforcement)
fy = 50,000 psi (M270 Grade 50)
All structural steel shall be galvanized

SEISMIC DATA

2023 AASHTO Seismic Hazard
Seismic Design Category (SDC) = C
Design Spectral Acceleration at 1.0 sec. (SD1) = 0.339g
Soil Site Class = D
Performance Level = Operational
Latitude = 37.7439, Longitude -88.3301

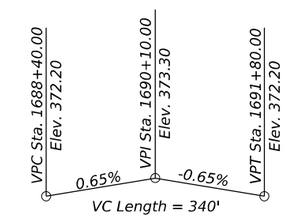

PROFILE GRADE
(Along ℄ IL-13)

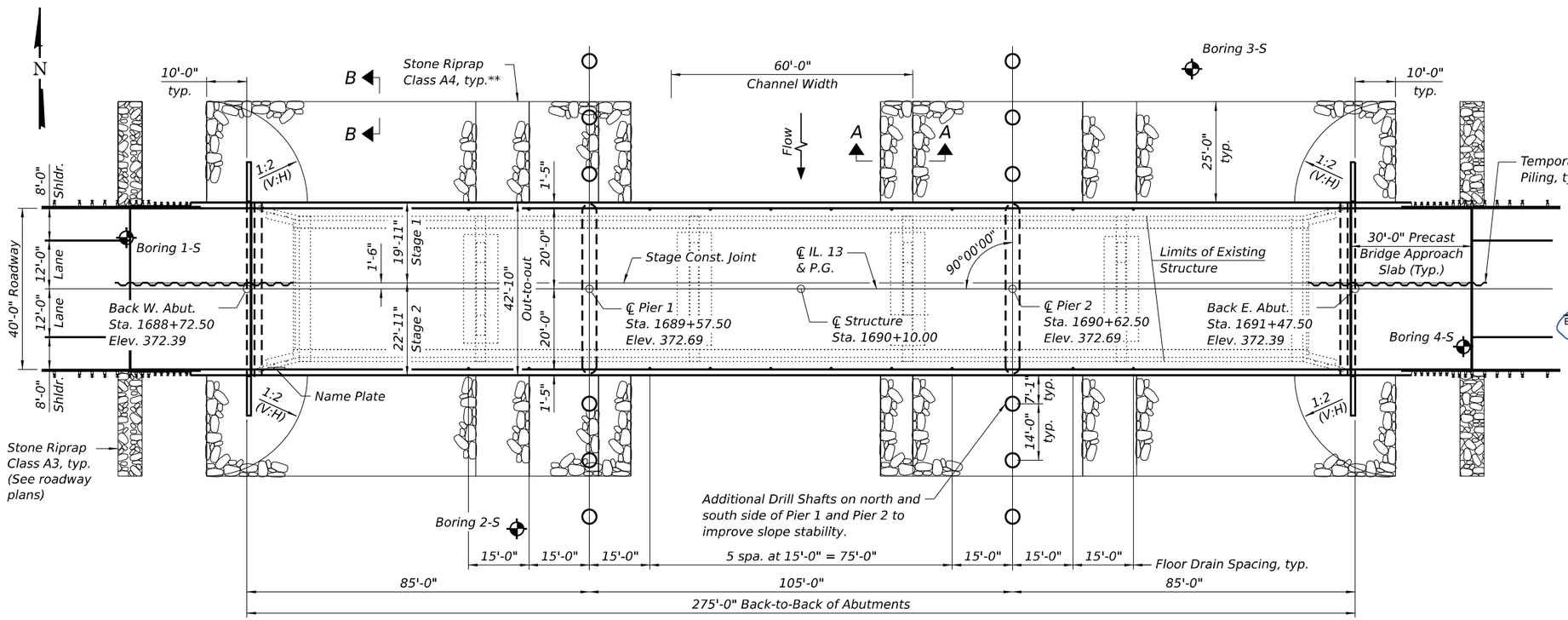

PLAN

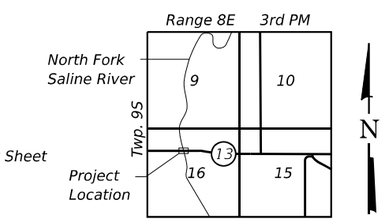

LOCATION SKETCH

APPROVED
For Structural Adequacy Only
Engineer of Bridges & Structures

LICENSED STRUCTURAL ENGINEER
ALEX C BENZ
081-007814
STATE OF ILLINOIS

Signed: Alex C. Benz
Date: 11/4/2025
License Expires: 11/30/2026

GENERAL PLAN & ELEVATION
IL 13 OVER NORTH FORK SALINE RIVER
PUBLIC WATER
F.A.P. ROUTE 331 SECTION (10-1, 10-3-1)B-2
GALLATIN COUNTY
STATION 1690+10.00
STRUCTURE NO. 030-0026

EFK•Moen Civil Engineering Design	USER NAME = ABenz	DESIGNED - KRH	REVISED -
		CHECKED - ACB	REVISED -
	PLOT SCALE =	DRAWN - KRH	REVISED -
	PLOT DATE = 11/4/2025	CHECKED - ACB	REVISED -

STATE OF ILLINOIS
DEPARTMENT OF TRANSPORTATION

GENERAL PLAN & ELEVATION
STRUCTURE NO. 030-0026
SHEET 1 OF 31 SHEETS

F.A.P. RTE.	SECTION	COUNTY	TOTAL SHEETS	SHEET NO.
331	(10-1, 10-3-1)B-2	GALLATIN	86	26
		CONTRACT NO. 78969		
	ILLINOIS	FED. AID PROJECT		

MODEL: Default
FILE NAME: O:\2022R3\IDOT\CAD CONNECT\23012.20 V&K IL 13 over North Fork Saline River\CADD Data\Bridge\Plotsheets\030026-78969-001-General Plan and Elevation.dgn
11/4/2025 6:01:20 PM

GENERAL NOTES:

1. All new structural steel shall be galvanized. See Special Provision for "Hot-Dip Galvanizing for Structural Steel".
2. Calculated weight of Structural Steel (M270 Gr. 50) = 429,000 lbs.
   Calculated weight of Structural Steel (M270 Gr. 36) = 32,210 lbs.
3. No field welding is permitted except as specified in the contract documents.
4. Fasteners shall be ASTM F 3125 Grade A325 Type 1, hot-dip galvanized. See Special Provision for "Hot Dip Galvanizing for Structural Steel." Bolts 7/8 in. diameter, holes 15/16 in. diameter, unless otherwise noted.
5. Reinforcement bars designated (E) shall be epoxy coated.
6. If the Contractor elects to use cantilever forming brackets on the exterior beams or girders, the brackets shall be placed at the same locations as required for the hardwood blocks in Article 503.06(b) of the Standard Specifications. If additional cantilever forming brackets are required, hardwood blocking shall be wedged between the exterior and first interior beam at each of these additional bracket locations.
7. Bearing seat surfaces shall be constructed or adjusted to the designated elevations within a tolerance of 1/8 in. (0.01 ft.). Adjustment shall be made either by grinding the surface or by shimming the bearings.
8. Layout of the slope protection system may be varied to suit ground conditions in the field as directed by the Engineer.
9. The Contractor shall obtain a construction permit from the Illinois Department of Natural Resources (IDNR), Office of Water Resources for any temporary construction activity placed in the water except cofferdams. This shall include the placement of material for run-arounds, causeways, etc. Any permit application by the Contractor shall refer to the IDNR 3704 Floodway Construction permit number allowing permanent construction as shown in the contract plans.
10. The existing structural steel coating contains lead. The Contractor shall take appropriate precautions to address the prescence of lead on this project.
11. Slipforming of the parapets is not allowed.
12. The cost of concrete slope wall removal is included in Removal of Existing Structures.

INDEX OF SHEETS:

STA. 1690+10.00
BUILT 20 BY
STATE OF ILLINOIS
F.A.P. RTE. 331 SEC. (10-1,10-3-1)B-2
LOADING HL-93
STR. NO. 030-0026

NAME PLATE

See Std. 515001

TOTAL BILL OF MATERIAL

ITEM	UNIT	SUPER	SUB	TOTAL
Stone Riprap, Class A4	Sq Yd		2,471	2,471
Filter Fabric	Sq Yd		2,471	2,471
Removal of Existing Structures	Each	1		1
Structure Excavation	Cu Yd		237	237
Floor Drains	Each	20		20
Concrete Structures	Cu Yd		227.8	227.8
Concrete Superstructure	Cu Yd	431.6		431.6
Bridge Deck Grooving	Sq Yd	1,407		1,407
Protective Coat	Sq Yd	1,763		1,763
Furnishing and Erecting Structural Steel	L Sum	1		1
Stud Shear Connectors	Each	6,792		6,792
Reinforcement Bars	Pound		59,790	59,790
Reinforcement Bars, Epoxy Coated	Pound	104,460	67,490	171,950
Bar Splicers	Each	923	340	1,263
Mechanical Splicers	Each	14	66	80
Furnishing Steel Piles HP12X74	Foot		535	535
Driving Piles	Foot		535	535
Test Pile Steel HP12X74	Each		2	2
Pile Shoes	Each		12	12
Name Plates	Each	1		1
Permanent Casing	Foot		329	329
Drilled Shaft in Soil	Cu Yd		147.7	147.7
Drilled Shaft in Rock	Cu Yd		47.1	47.1
Preformed Joint Strip Seal	Foot		84	84
Anchor Bolts, 1"	Each		48	48
Temporary Sheet Piling	Sq Ft		803	803
Granular Backfill for Structures	Cu Yd		235	235
Geocomposite Wall Drain	Sq Yd		82	82
Pipe Underdrains for Structures 4"	Foot		141	141
Crosshole Sonic Logging Access Ducts	Foot		200	200
Crosshole Sonic Logging Testing	Each		6	6
Concrete Wearing Surface, 5"	Sq Yd	280		280
Precast Bridge Approach Slab	Sq Ft	2,380		2,380
Bar Terminators	Each	86	412	498

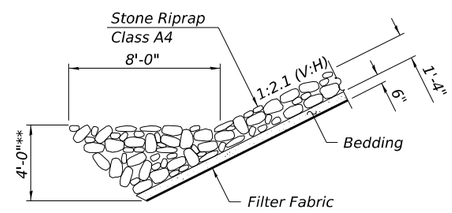

SECTION A-A

** Depth of riprap shall be reduced as necessary above existing footings.

DESIGN SCOUR ELEVATION TABLE

Event / Limit State	Design Scour Elevations (ft.)				Item 113
	W. Abut.	Pier 1	Pier 2	E. Abut.	
Q100	364.64	318.19	323.00	364.64	5
Q200	364.64	317.66	321.70	364.64	
Design	364.64	318.19	323.00	364.64	
Check	364.64	317.66	321.70	364.64	

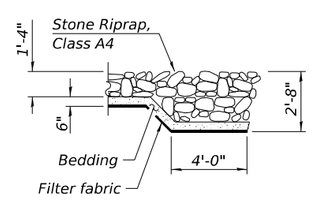

SECTION B-B

WATERWAY INFORMATION

Drainage Area = 450.0 Sq. Mi.

Exist. Overtopping Elev. = 369.90 @ Sta. 1698+00
Prop. Overtopping Elev. = 369.90 @ Sta. 1698+00

Flood Event	Structure	Freq. Yr.	Discharge C.F.S.		Opening Ft²		Nat. H.W.E.	Head - Ft.		Headwater El.	
			Exist.	Prop.	Exist.	Prop.		Exist.	Prop.	Exist.	Prop.
	Main Channel	10	13988	13995	2508	2776	348.7	0.2	0.1	348.9	348.8
	Relief Structure		46	39	9	9	348.7	0.2	0.1	348.9	348.8
	TOTAL		14034	14034	2517	2785					
Design	Main Channel	50	23739	23771	3573	4023	354.9	0.6	0.5	355.5	355.4
	Relief Structure		217	185	46	46	354.9	0.6	0.5	355.5	355.4
	TOTAL		23956	23956	3619	4069					
Base	Main Channel	100	28636	28665	4007	4524	357.2	0.9	0.7	358.1	357.9
	Relief Structure		235	206	46	46	357.2	0.9	0.7	358.1	357.9
	TOTAL		28871	28871	4053	4570					
Scour Design Check	Main Channel	200	33746	33779	4382	4955	359.1	1.1	1.0	360.2	360.1
	Relief Structure		254	221	46	46	359.1	1.1	1.0	360.2	360.1
	TOTAL		34000	34000	4428	5001					
Max. Calc.	Main Channel	500	41314	41349	4750	5376	360.9	1.5	1.3	362.4	362.2
	Relief Structure		281	246	46	46	360.9	1.5	1.3	362.4	362.2
	TOTAL		41595	41595	4796	5422					

10 Yr. Outlet Velocity through Exist. Main Structure = 5.6 ft/s
10 Yr. Outlet Velocity through Prop. Main Structure = 5.0 ft/s
10 Yr. Outlet Velocity through Prop. Relief Structure = 2.0 ft/s

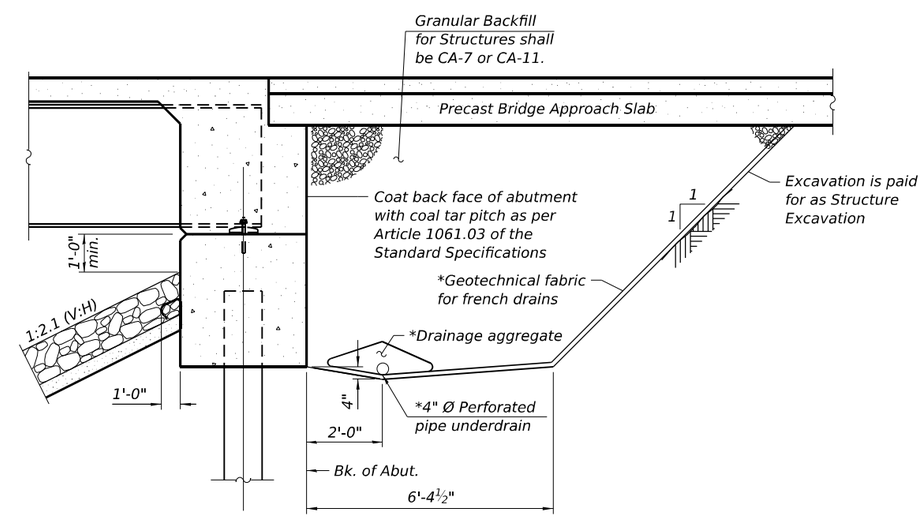

SECTION THRU INTEGRAL ABUTMENT

* Included in the cost of Pipe Underdrains for Structures

Note:
All drainage system components shall extend to 2'-0" from the end of each wingwall except an outlet pipe shall extend until intersecting with the side slopes. The pipes shall drain into concrete headwalls. (See Article 601.05 of the Standard Specifications and Highway Standard 601101).

Granular Backfill behind the abutments shall be compacted according to Article 205.06 of the Standard Specifications.

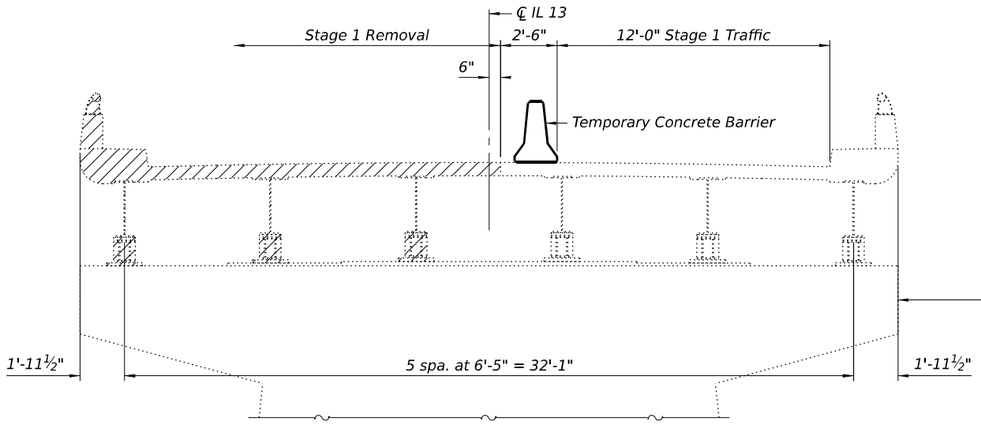

STAGE 1 REMOVAL
(Looking East)

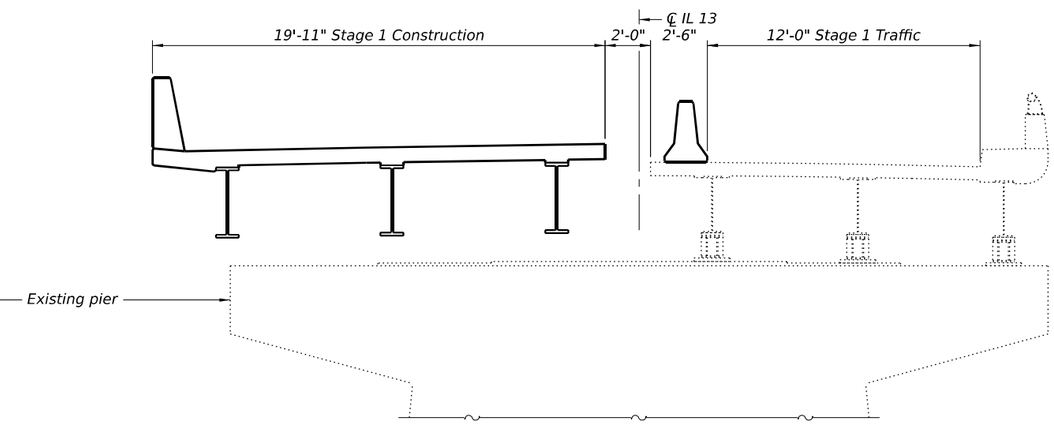

STAGE 1 CONSTRUCTION
(Looking East)

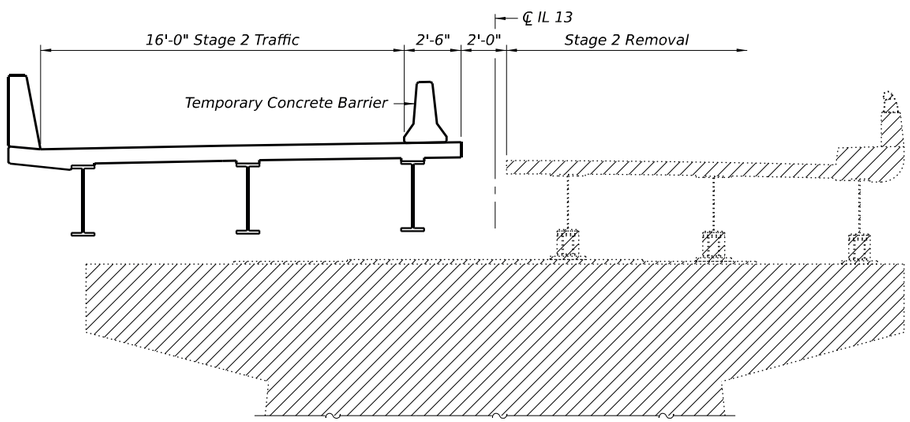

STAGE 2 REMOVAL
(Looking East)

STAGE 2 CONSTRUCTION
(Looking East)

SUGGESTED SEQUENCE OF CONSTRUCTION

1. Stage 1 superstructure removal
2. Stage 1 abutment removal
3. Stage 1 structure excavation and abutment construction
4. Stage 1 drilled shaft construction with permanent casing
5. Stage 1 pier column and webwall construction
6. Complete remaining Stage 1 construction
7. Stage 2 superstructure removal
8. Stage 2 abutment removal
9. Complete pier removal
10. Channel excavation and slopewall removal
11. Stage 2 Construction
12. Riprap placement

Notes:
Hatched area indicates Removal of Existing Structures.
For quantity of temporary concrete barrier, see Roadway plans.
For details of temporary concrete barrier, see Sheet 5 of 31.

EFK♦Moen
Civil Engineering Design

USER NAME = ABenz	DESIGNED - KRH	REVISED -	
	CHECKED - ACB	REVISED -	
PLOT SCALE =	DRAWN - KRH	REVISED -	
PLOT DATE = 10/31/2025	CHECKED - ACB	REVISED -	

STATE OF ILLINOIS
DEPARTMENT OF TRANSPORTATION

STAGE CONSTRUCTION DETAILS
STRUCTURE NO. 030-0026

SHEET 3 OF 31 SHEETS

F.A.P. RTE.	SECTION	COUNTY	TOTAL SHEETS	SHEET NO.
331	(10-1, 10-3-1)B-2	GALLATIN	86	28
		CONTRACT NO. 78969		
	ILLINOIS	FED. AID PROJECT		

MODEL: Default
FILE NAME: O:\2022R3\IDOT\CAD CONNECT\23012.20 V&K IL 13 over North Fork Saline River\CADD Data\Bridge\Plotsheets\0300026-78969-003-Stage Construction Details.dgn
10/31/2025 9:08:43 AM

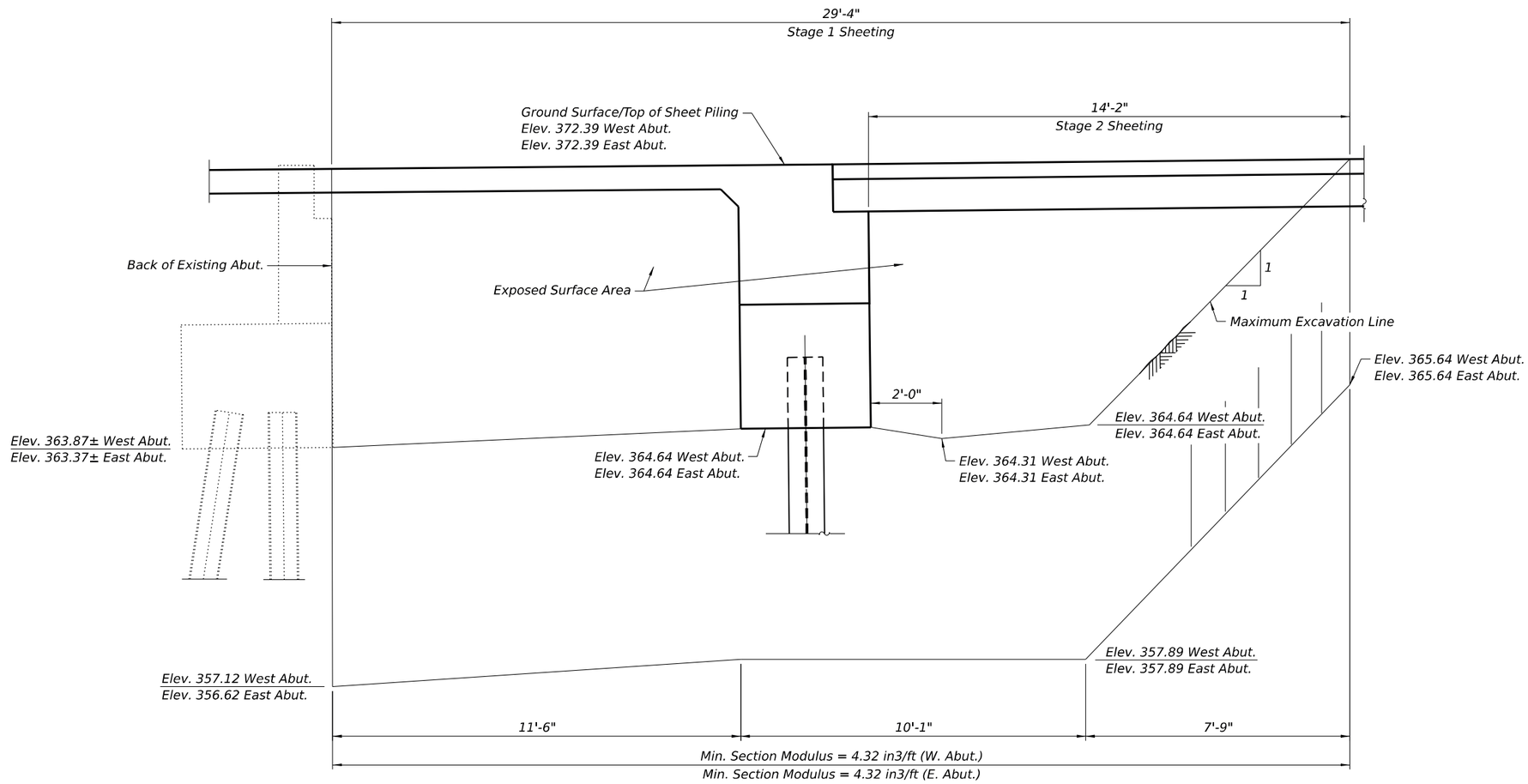

TEMPORARY SHEET PILING

Notes:
If the contractor chooses to alter the temporary cantilevered sheet piling design requirements shown on the plans, a design submittal including plan details and calculations will be required for review and acceptance by the Engineer.

MODEL: Default
FILE NAME: O:\2022R3\IDOTCAD CONNECT\23012.20 V&K IL 13 over North Fork Saline River\CADD Data\Bridge\Plotsheets\0300026-78969-004-Temporary Sheet Piling.dgn
10/31/2025 9:08:46 AM

EFK•Moen Civil Engineering Design	USER NAME = ABenz	DESIGNED - KRH	REVISED -
		CHECKED - ACB	REVISED -
	PLOT SCALE =	DRAWN - KRH	REVISED -
	PLOT DATE = 10/31/2025	CHECKED - ACB	REVISED -

STATE OF ILLINOIS
DEPARTMENT OF TRANSPORTATION

TEMPORARY SHEET PILING
STRUCTURE NO. 030-0026

SHEET 4 OF 31 SHEETS

F.A.P. RTE.	SECTION	COUNTY	TOTAL SHEETS	SHEET NO.
331	(10-1, 10-3-1)B-2	GALLATIN	86	29
		CONTRACT NO. 78969		
		ILLINOIS	FED. AID PROJECT	

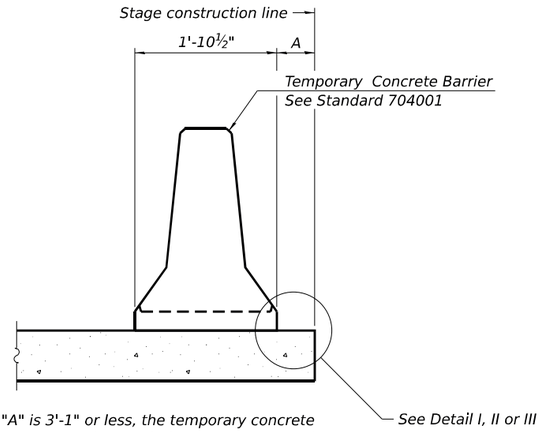

When "A" is 3'-1" or less, the temporary concrete barrier shall be restrained to the new slab according to Detail I, II or III. No restraint is required when "A" is greater than 3'-1".

NEW SLAB OR NEW DECK BEAM

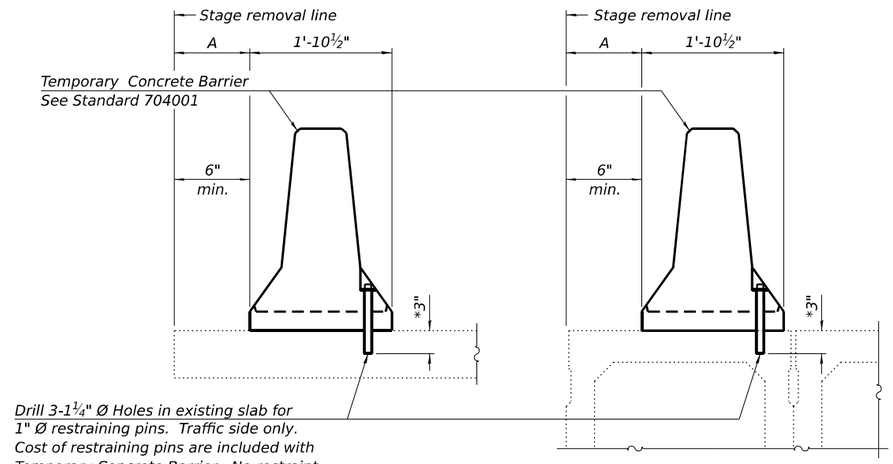

EXISTING SLAB

* When hot-mix asphalt wearing surface is present, embedment shall be 3" plus the wearing surface depth.

EXISTING DECK BEAM

SECTIONS THRU SLAB OR DECK BEAM

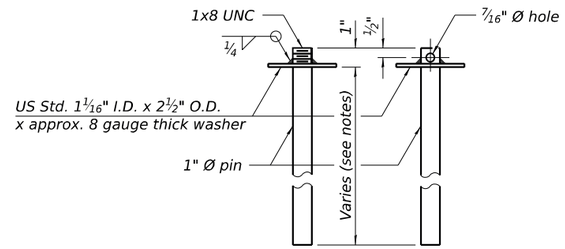

RESTRAINING PIN

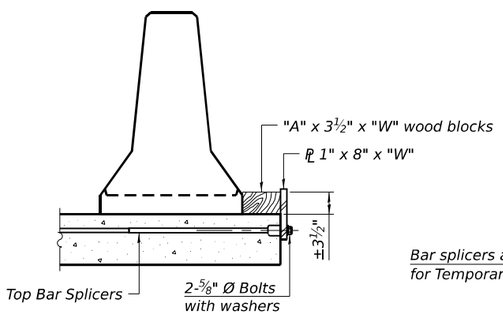

DETAIL I

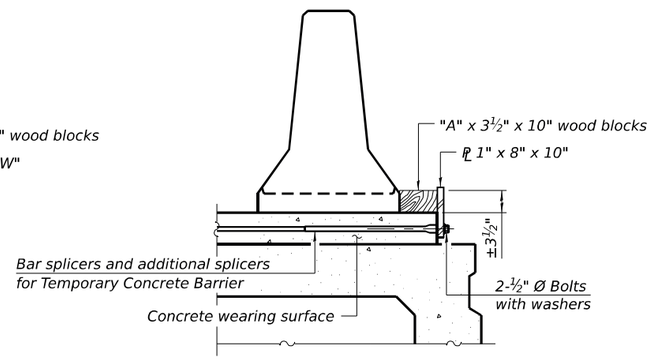

DETAIL II

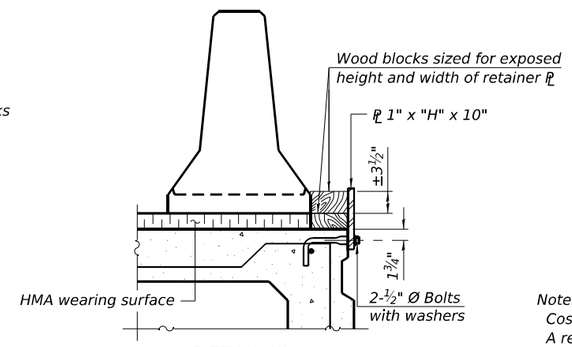

DETAIL III

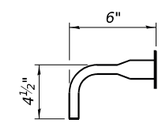

BAR SPLICER FOR #4 BAR - DETAIL III

Notes:

Cost of retainer assembly is included with Temporary Concrete Barrier.

A retainer assembly shall be located at the approximate ℄ of each temporary concrete barrier.

The retainer plate shall not be removed until the concrete on the adjacent stage is ready to be poured. For Detail III applications the retainer plate shall not be removed until just prior to placing the adjacent beam.

When the 'A' dimension is less than 1½", the wood block shall be omitted and the barrier shall be placed in direct contact with the steel retainer plate. For deck beam applications the minimum required 'A' distance is 6" to accommodate the shear key clamping device.

Detail I - Installation for a new bridge deck or bridge slab.

Detail II - Installation for a new deck beam with an initial concrete wearing surface. Additional bar splicers shall be provided at 6'-0" centers and paired with the bar splicers of the concrete wearing surface reinforcement to accommodate the installation of the retainer assemblies. The cost of the additional bar splicers is included with the concrete wearing surface.

Detail III - Installation for a new deck beam with no initial wearing surface or with an initial hot-mix asphalt (HMA) wearing surface present. The deck beam directly beneath the temporary concrete barrier shall be fabricated with bar splicer inserts in the side of the beam, as detailed, to accommodate the installation of the retainer assemblies. A pair of bar splicers, 6" apart, shall be placed at 6'-0" centers along the length of the beam. The cost of the bar splicers is included with the deck beam.

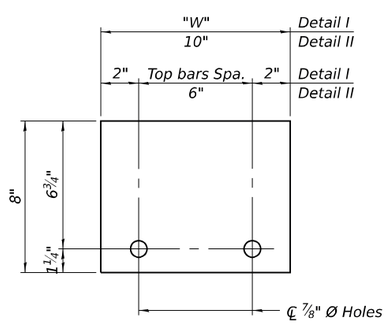

STEEL RETAINER PL 1" x 8" x "W"

(Detail I and II)

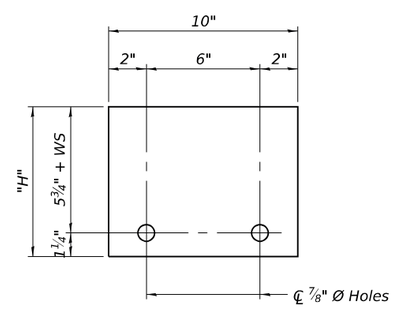

STEEL RETAINER PL 1" x "H" x 10"

(Detail III)

RAILING CRITERIA

NCHRP 350 Test Level	3
Railing Weight (plf)	440

R-27

5-15-2023

EFK♦Moen
Civil Engineering Design

USER NAME = ABenz	DESIGNED - KRH	REVISED -	STATE OF ILLINOIS DEPARTMENT OF TRANSPORTATION	TEMPORARY CONCRETE BARRIER STRUCTURE NO. 030-0026	
	CHECKED - ACB	REVISED -			
PLOT SCALE =	DRAWN - KRH	REVISED -			
PLOT DATE = 10/31/2025	CHECKED - ACB	REVISED -		SHEET 5 OF 31 SHEETS	

F.A.P. RTE.	SECTION	COUNTY	TOTAL SHEETS	SHEET NO.
331	(10-1, 10-3-1)B-2	GALLATIN	86	30
		CONTRACT NO. 78969		
		ILLINOIS	FED. AID PROJECT	

MODEL: Default
FILE NAME: O:\2022R3\IDOT\CAD CONNECT\23012.20 V&K IL 13 over North Fork Saline River\CADD Data\Bridge\Plotsheets\0300026-78969-005-Temporary Barrier.dgn
10/31/2025 9:08:48 AM

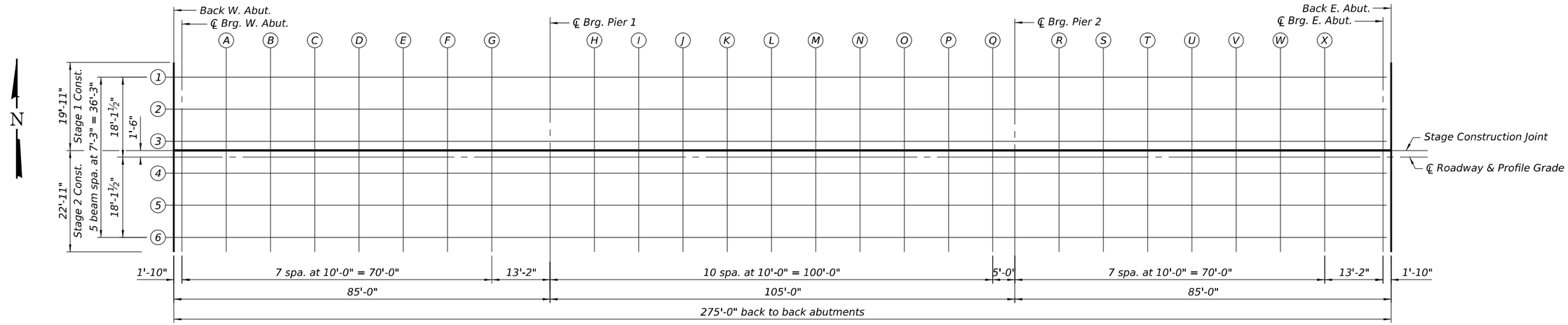

PLAN

Beam 1

Location	Station	Offset	Theoretical Grade Elevations	Theoretical Grade Elevations Adjusted For Dead Load Deflection
Back W. Abut.	1688+72.50	-18.13	372.08	372.08
℄ Brg. W. Abut.	1688+74.33	-18.13	372.09	372.09
A	1688+84.33	-18.13	372.14	372.18
B	1688+94.33	-18.13	372.19	372.25
C	1689+04.33	-18.13	372.23	372.31
D	1689+14.33	-18.13	372.27	372.34
E	1689+24.33	-18.13	372.30	372.37
F	1689+34.33	-18.13	372.34	372.37
G	1689+44.33	-18.13	372.36	372.38
℄ Brg. Pier 1	1689+57.50	-18.13	372.39	372.39
H	1689+67.50	-18.13	372.41	372.43
I	1689+77.50	-18.13	372.42	372.47
J	1689+87.50	-18.13	372.44	372.51
K	1689+97.50	-18.13	372.44	372.54
L	1690+07.50	-18.13	372.44	372.55
M	1690+17.50	-18.13	372.44	372.55
N	1690+27.50	-18.13	372.44	372.52
O	1690+37.50	-18.13	372.43	372.49
P	1690+47.50	-18.13	372.42	372.45
Q	1690+57.50	-18.13	372.40	372.41
℄ Brg. Pier 2	1690+62.50	-18.13	372.39	372.39
R	1690+72.50	-18.13	372.37	372.38
S	1690+82.50	-18.13	372.34	372.38
T	1690+92.50	-18.13	372.31	372.37
U	1691+02.50	-18.13	372.28	372.35
V	1691+12.50	-18.13	372.24	372.32
W	1691+22.50	-18.13	372.20	372.27
X	1691+32.50	-18.13	372.16	372.20
℄ Brg. E. Abut.	1691+45.67	-18.13	372.09	372.09
Back E. Abut.	1691+47.50	-18.13	372.08	372.08

Beam 2

Location	Station	Offset	Theoretical Grade Elevations	Theoretical Grade Elevations Adjusted For Dead Load Deflection
Back W. Abut.	1688+72.50	-10.88	372.22	372.22
℄ Brg. W. Abut.	1688+74.33	-10.88	372.23	372.23
A	1688+84.33	-10.88	372.28	372.32
B	1688+94.33	-10.88	372.33	372.39
C	1689+04.33	-10.88	372.37	372.44
D	1689+14.33	-10.88	372.41	372.48
E	1689+24.33	-10.88	372.44	372.50
F	1689+34.33	-10.88	372.47	372.51
G	1689+44.33	-10.88	372.50	372.52
℄ Brg. Pier 1	1689+57.50	-10.88	372.53	372.53
H	1689+67.50	-10.88	372.55	372.57
I	1689+77.50	-10.88	372.56	372.61
J	1689+87.50	-10.88	372.57	372.65
K	1689+97.50	-10.88	372.58	372.68
L	1690+07.50	-10.88	372.58	372.69
M	1690+17.50	-10.88	372.58	372.68
N	1690+27.50	-10.88	372.58	372.66
O	1690+37.50	-10.88	372.57	372.63
P	1690+47.50	-10.88	372.56	372.59
Q	1690+57.50	-10.88	372.54	372.55
℄ Brg. Pier 2	1690+62.50	-10.88	372.53	372.53
R	1690+72.50	-10.88	372.51	372.52
S	1690+82.50	-10.88	372.48	372.51
T	1690+92.50	-10.88	372.45	372.51
U	1691+02.50	-10.88	372.42	372.49
V	1691+12.50	-10.88	372.38	372.46
W	1691+22.50	-10.88	372.34	372.41
X	1691+32.50	-10.88	372.30	372.34
℄ Brg. E. Abut.	1691+45.67	-10.88	372.23	372.23
Back E. Abut.	1691+47.50	-10.88	372.22	372.22

Beam 3

Location	Station	Offset	Theoretical Grade Elevations	Theoretical Grade Elevations Adjusted For Dead Load Deflection
Back W. Abut.	1688+72.50	-3.63	372.33	372.33
℄ Brg. W. Abut.	1688+74.33	-3.63	372.34	372.34
A	1688+84.33	-3.63	372.39	372.43
B	1688+94.33	-3.63	372.44	372.50
C	1689+04.33	-3.63	372.48	372.55
D	1689+14.33	-3.63	372.52	372.59
E	1689+24.33	-3.63	372.55	372.61
F	1689+34.33	-3.63	372.58	372.62
G	1689+44.33	-3.63	372.61	372.63
℄ Brg. Pier 1	1689+57.50	-3.63	372.64	372.64
H	1689+67.50	-3.63	372.66	372.67
I	1689+77.50	-3.63	372.67	372.72
J	1689+87.50	-3.63	372.68	372.76
K	1689+97.50	-3.63	372.69	372.79
L	1690+07.50	-3.63	372.69	372.80
M	1690+17.50	-3.63	372.69	372.79
N	1690+27.50	-3.63	372.69	372.77
O	1690+37.50	-3.63	372.68	372.74
P	1690+47.50	-3.63	372.67	372.70
Q	1690+57.50	-3.63	372.65	372.66
℄ Brg. Pier 2	1690+62.50	-3.63	372.64	372.64
R	1690+72.50	-3.63	372.62	372.63
S	1690+82.50	-3.63	372.59	372.62
T	1690+92.50	-3.63	372.56	372.62
U	1691+02.50	-3.63	372.53	372.60
V	1691+12.50	-3.63	372.49	372.57
W	1691+22.50	-3.63	372.45	372.52
X	1691+32.50	-3.63	372.41	372.45
℄ Brg. E. Abut.	1691+45.67	-3.63	372.34	372.34
Back E. Abut.	1691+47.50	-3.63	372.33	372.33

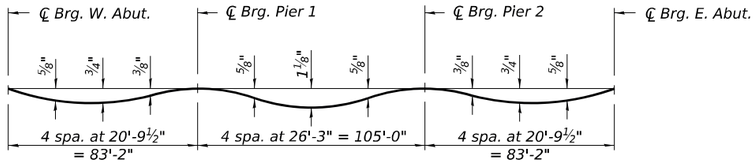

DEAD LOAD DEFLECTION DIAGRAM

(Includes weight of concrete only.)

Note:
The above deflections are not to be used in the field if the engineer is working from the grade elevations adjusted for dead load deflections as shown on sheets 6 thru 8 of 31.

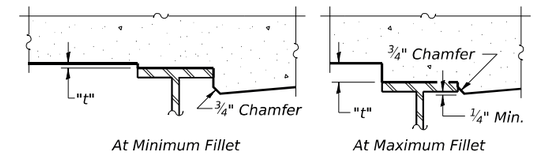

To determine "t": After all structural steel has been erected, elevations of the top flanges of the beams shall be taken at intervals shown on sheet 6 of 31. These elevations subtracted from the "Theoretical Grade Elevations Adjusted for Dead Load Deflection" shown on sheets 6 thru 8 of 31, minus slab thickness, equals the fillet heights "t" above top flange of beams.

FILLET HEIGHTS

Stage Construction Joint

Location	Station	Offset	Theoretical Grade Elevations	Theoretical Grade Elevations Adjusted For Dead Load Deflection
Back W. Abut.	1688+72.50	-1.50	372.36	372.36
℄ Brg. W. Abut.	1688+74.33	-1.50	372.37	372.37
A	1688+84.33	-1.50	372.42	372.46
B	1688+94.33	-1.50	372.47	372.53
C	1689+04.33	-1.50	372.51	372.59
D	1689+14.33	-1.50	372.55	372.62
E	1689+24.33	-1.50	372.58	372.65
F	1689+34.33	-1.50	372.62	372.65
G	1689+44.33	-1.50	372.64	372.66
℄ Brg. Pier 1	1689+57.50	-1.50	372.67	372.67
H	1689+67.50	-1.50	372.69	372.71
I	1689+77.50	-1.50	372.70	372.75
J	1689+87.50	-1.50	372.72	372.79
K	1689+97.50	-1.50	372.72	372.82
L	1690+07.50	-1.50	372.72	372.83
M	1690+17.50	-1.50	372.72	372.83
N	1690+27.50	-1.50	372.72	372.80
O	1690+37.50	-1.50	372.71	372.77
P	1690+47.50	-1.50	372.70	372.73
Q	1690+57.50	-1.50	372.68	372.69
℄ Brg. Pier 2	1690+62.50	-1.50	372.67	372.67
R	1690+72.50	-1.50	372.65	372.66
S	1690+82.50	-1.50	372.62	372.66
T	1690+92.50	-1.50	372.59	372.65
U	1691+02.50	-1.50	372.56	372.63
V	1691+12.50	-1.50	372.52	372.60
W	1691+22.50	-1.50	372.48	372.55
X	1691+32.50	-1.50	372.44	372.48
℄ Brg. E. Abut.	1691+45.67	-1.50	372.37	372.37
Back E. Abut.	1691+47.50	-1.50	372.36	372.36

℄ Roadway & Profile Grade

Location	Station	Offset	Theoretical Grade Elevations	Theoretical Grade Elevations Adjusted For Dead Load Deflection
Back W. Abut.	1688+72.50	0.00	372.39	372.39
℄ Brg. W. Abut.	1688+74.33	0.00	372.40	372.40
A	1688+84.33	0.00	372.45	372.48
B	1688+94.33	0.00	372.49	372.55
C	1689+04.33	0.00	372.53	372.61
D	1689+14.33	0.00	372.57	372.65
E	1689+24.33	0.00	372.61	372.67
F	1689+34.33	0.00	372.64	372.68
G	1689+44.33	0.00	372.67	372.68
℄ Brg. Pier 1	1689+57.50	0.00	372.69	372.69
H	1689+67.50	0.00	372.71	372.73
I	1689+77.50	0.00	372.73	372.77
J	1689+87.50	0.00	372.74	372.81
K	1689+97.50	0.00	372.74	372.84
L	1690+07.50	0.00	372.75	372.85
M	1690+17.50	0.00	372.75	372.85
N	1690+27.50	0.00	372.74	372.83
O	1690+37.50	0.00	372.73	372.79
P	1690+47.50	0.00	372.72	372.75
Q	1690+57.50	0.00	372.70	372.71
℄ Brg. Pier 2	1690+62.50	0.00	372.69	372.69
R	1690+72.50	0.00	372.67	372.68
S	1690+82.50	0.00	372.65	372.68
T	1690+92.50	0.00	372.62	372.67
U	1691+02.50	0.00	372.58	372.65
V	1691+12.50	0.00	372.55	372.62
W	1691+22.50	0.00	372.51	372.57
X	1691+32.50	0.00	372.46	372.50
℄ Brg. E. Abut.	1691+45.67	0.00	372.40	372.40
Back E. Abut.	1691+47.50	0.00	372.39	372.39

Beam 4

Location	Station	Offset	Theoretical Grade Elevations	Theoretical Grade Elevations Adjusted For Dead Load Deflection
Back W. Abut.	1688+72.50	3.63	372.33	372.33
℄ Brg. W. Abut.	1688+74.33	3.63	372.34	372.34
A	1688+84.33	3.63	372.39	372.43
B	1688+94.33	3.63	372.44	372.50
C	1689+04.33	3.63	372.48	372.55
D	1689+14.33	3.63	372.52	372.59
E	1689+24.33	3.63	372.55	372.61
F	1689+34.33	3.63	372.58	372.62
G	1689+44.33	3.63	372.61	372.63
℄ Brg. Pier 1	1689+57.50	3.63	372.64	372.64
H	1689+67.50	3.63	372.66	372.67
I	1689+77.50	3.63	372.67	372.72
J	1689+87.50	3.63	372.68	372.76
K	1689+97.50	3.63	372.69	372.79
L	1690+07.50	3.63	372.69	372.80
M	1690+17.50	3.63	372.69	372.79
N	1690+27.50	3.63	372.69	372.77
O	1690+37.50	3.63	372.68	372.74
P	1690+47.50	3.63	372.67	372.70
Q	1690+57.50	3.63	372.65	372.66
℄ Brg. Pier 2	1690+62.50	3.63	372.64	372.64
R	1690+72.50	3.63	372.62	372.63
S	1690+82.50	3.63	372.59	372.62
T	1690+92.50	3.63	372.56	372.62
U	1691+02.50	3.63	372.53	372.60
V	1691+12.50	3.63	372.49	372.57
W	1691+22.50	3.63	372.45	372.52
X	1691+32.50	3.63	372.41	372.45
℄ Brg. E. Abut.	1691+45.67	3.63	372.34	372.34
Back E. Abut.	1691+47.50	3.63	372.33	372.33

Beam 5

Location	Station	Offset	Theoretical Grade Elevations	Theoretical Grade Elevations Adjusted For Dead Load Deflection
Back W. Abut.	1688+72.50	10.88	372.22	372.22
℄ Brg. W. Abut.	1688+74.33	10.88	372.23	372.23
A	1688+84.33	10.88	372.28	372.32
B	1688+94.33	10.88	372.33	372.39
C	1689+04.33	10.88	372.37	372.44
D	1689+14.33	10.88	372.41	372.48
E	1689+24.33	10.88	372.44	372.50
F	1689+34.33	10.88	372.47	372.51
G	1689+44.33	10.88	372.50	372.52
℄ Brg. Pier 1	1689+57.50	10.88	372.53	372.53
H	1689+67.50	10.88	372.55	372.57
I	1689+77.50	10.88	372.56	372.61
J	1689+87.50	10.88	372.57	372.65
K	1689+97.50	10.88	372.58	372.68
L	1690+07.50	10.88	372.58	372.69
M	1690+17.50	10.88	372.58	372.68
N	1690+27.50	10.88	372.58	372.66
O	1690+37.50	10.88	372.57	372.63
P	1690+47.50	10.88	372.56	372.59
Q	1690+57.50	10.88	372.54	372.55
℄ Brg. Pier 2	1690+62.50	10.88	372.53	372.53
R	1690+72.50	10.88	372.51	372.52
S	1690+82.50	10.88	372.48	372.51
T	1690+92.50	10.88	372.45	372.51
U	1691+02.50	10.88	372.42	372.49
V	1691+12.50	10.88	372.38	372.46
W	1691+22.50	10.88	372.34	372.41
X	1691+32.50	10.88	372.30	372.34
℄ Brg. E. Abut.	1691+45.67	10.88	372.23	372.23
Back E. Abut.	1691+47.50	10.88	372.22	372.22

Beam 6

Location	Station	Offset	Theoretical Grade Elevations	Theoretical Grade Elevations Adjusted For Dead Load Deflection
Back W. Abut.	1688+72.50	18.13	372.08	372.08
℄ Brg. W. Abut.	1688+74.33	18.13	372.09	372.09
A	1688+84.33	18.13	372.14	372.18
B	1688+94.33	18.13	372.19	372.25
C	1689+04.33	18.13	372.23	372.31
D	1689+14.33	18.13	372.27	372.34
E	1689+24.33	18.13	372.30	372.37
F	1689+34.33	18.13	372.34	372.37
G	1689+44.33	18.13	372.36	372.38
℄ Brg. Pier 1	1689+57.50	18.13	372.39	372.39
H	1689+67.50	18.13	372.41	372.43
I	1689+77.50	18.13	372.42	372.47
J	1689+87.50	18.13	372.44	372.51
K	1689+97.50	18.13	372.44	372.54
L	1690+07.50	18.13	372.44	372.55
M	1690+17.50	18.13	372.44	372.55
N	1690+27.50	18.13	372.44	372.52
O	1690+37.50	18.13	372.43	372.49
P	1690+47.50	18.13	372.42	372.45
Q	1690+57.50	18.13	372.40	372.41
℄ Brg. Pier 2	1690+62.50	18.13	372.39	372.39
R	1690+72.50	18.13	372.37	372.38
S	1690+82.50	18.13	372.34	372.38
T	1690+92.50	18.13	372.31	372.37
U	1691+02.50	18.13	372.28	372.35
V	1691+12.50	18.13	372.24	372.32
W	1691+22.50	18.13	372.20	372.27
X	1691+32.50	18.13	372.16	372.20
℄ Brg. E. Abut.	1691+45.67	18.13	372.09	372.09
Back E. Abut.	1691+47.50	18.13	372.08	372.08

North Edge of Shoulder

Location	Station	Offset	Theoretical Grade Elevations
West End of W. Appr. Slab	1688+43.50	-20.00	371.88
A1	1688+53.50	-20.00	371.94
A2	1688+63.50	-20.00	372.00
East End of W. Appr. Slab	1688+73.50	-20.00	372.05

North Edge of Pavement

Location	Station	Offset	Theoretical Grade Elevations
West End of W. Appr. Slab	1688+43.50	-12.00	372.04
A1	1688+53.50	-12.00	372.10
A2	1688+63.50	-12.00	372.16
East End of W. Appr. Slab	1688+73.50	-12.00	372.21

Stage Construction Joint

Location	Station	Offset	Theoretical Grade Elevations
West End of W. Appr. Slab	1688+43.50	-1.50	372.20
A1	1688+53.50	-1.50	372.26
A2	1688+63.50	-1.50	372.32
East End of W. Appr. Slab	1688+73.50	-1.50	372.37

℄ Roadway & Profile Grade Line

Location	Station	Offset	Theoretical Grade Elevations
West End of W. Appr. Slab	1688+43.50	0.00	372.22
A1	1688+53.50	0.00	372.28
A2	1688+63.50	0.00	372.34
East End of W. Appr. Slab	1688+73.50	0.00	372.39

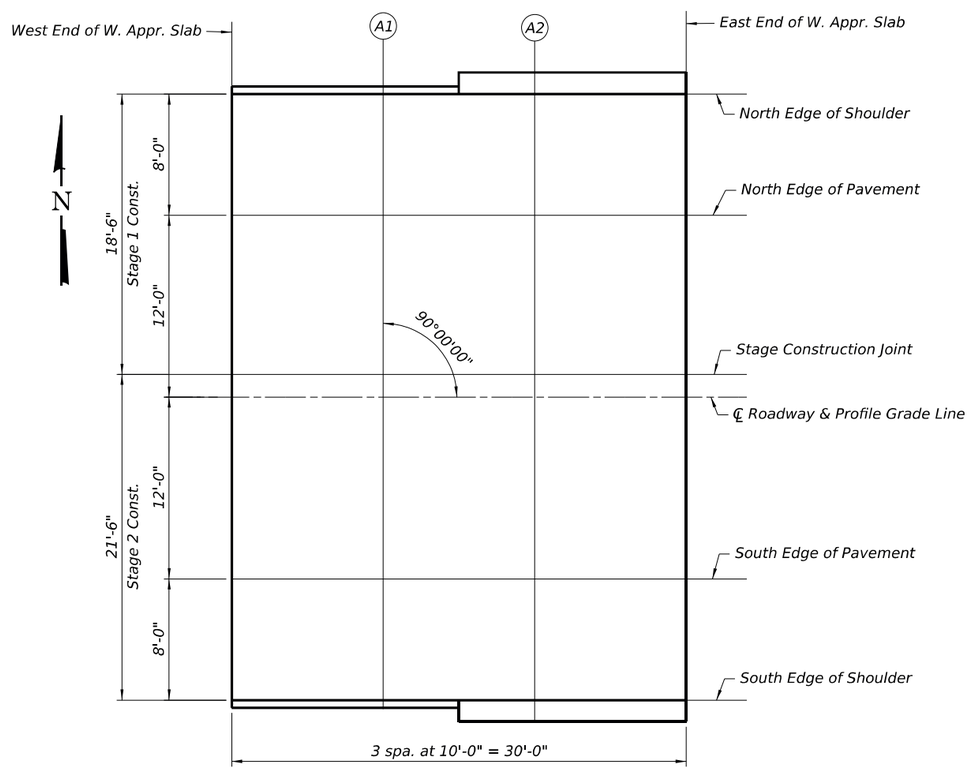

PLAN

South Edge of Pavement

Location	Station	Offset	Theoretical Grade Elevations
West End of W. Appr. Slab	1688+43.50	12.00	372.04
A1	1688+53.50	12.00	372.10
A2	1688+63.50	12.00	372.16
East End of W. Appr. Slab	1688+73.50	12.00	372.21

South Edge of Shoulder

Location	Station	Offset	Theoretical Grade Elevations
West End of W. Appr. Slab	1688+43.50	20.00	371.88
A1	1688+53.50	20.00	371.94
A2	1688+63.50	20.00	372.00
East End of W. Appr. Slab	1688+73.50	20.00	372.05

North Edge of Shoulder

Location	Station	Offset	Theoretical Grade Elevations
West End of E. Appr. Slab	1691+46.50	-20.00	372.05
A3	1691+56.50	-20.00	372.00
A4	1691+66.50	-20.00	371.94
East End of E. Appr. Slab	1691+76.50	-20.00	371.88

North Edge of Pavement

Location	Station	Offset	Theoretical Grade Elevations
West End of E. Appr. Slab	1691+46.50	-12.00	372.21
A3	1691+56.50	-12.00	372.16
A4	1691+66.50	-12.00	372.10
East End of E. Appr. Slab	1691+76.50	-12.00	372.04

Stage Construction Joint

Location	Station	Offset	Theoretical Grade Elevations
West End of E. Appr. Slab	1691+46.50	-1.50	372.37
A3	1691+56.50	-1.50	372.32
A4	1691+66.50	-1.50	372.26
East End of E. Appr. Slab	1691+76.50	-1.50	372.20

℄ Roadway & Profile Grade Line

Location	Station	Offset	Theoretical Grade Elevations
West End of E. Appr. Slab	1691+46.50	0.00	372.39
A3	1691+56.50	0.00	372.34
A4	1691+66.50	0.00	372.28
East End of E. Appr. Slab	1691+76.50	0.00	372.22

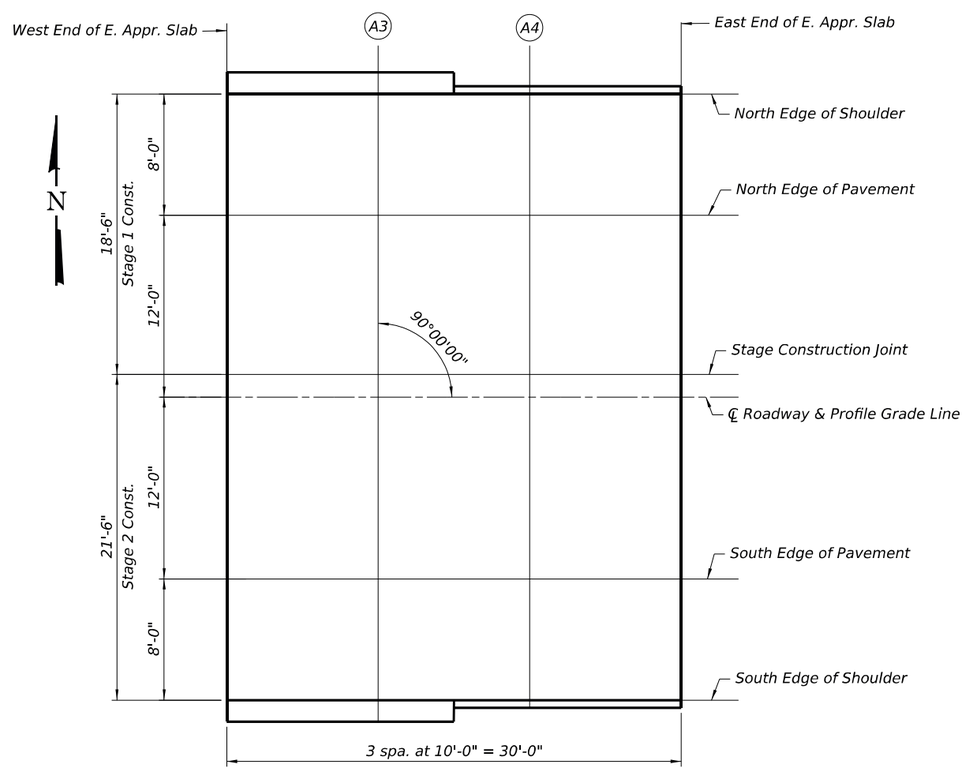

PLAN

South Edge of Pavement

Location	Station	Offset	Theoretical Grade Elevations
West End of E. Appr. Slab	1691+46.50	12.00	372.21
A3	1691+56.50	12.00	372.16
A4	1691+66.50	12.00	372.10
East End of E. Appr. Slab	1691+76.50	12.00	372.04

South Edge of Shoulder

Location	Station	Offset	Theoretical Grade Elevations
West End of E. Appr. Slab	1691+46.50	20.00	372.05
A3	1691+56.50	20.00	372.00
A4	1691+66.50	20.00	371.94
East End of E. Appr. Slab	1691+76.50	20.00	371.88

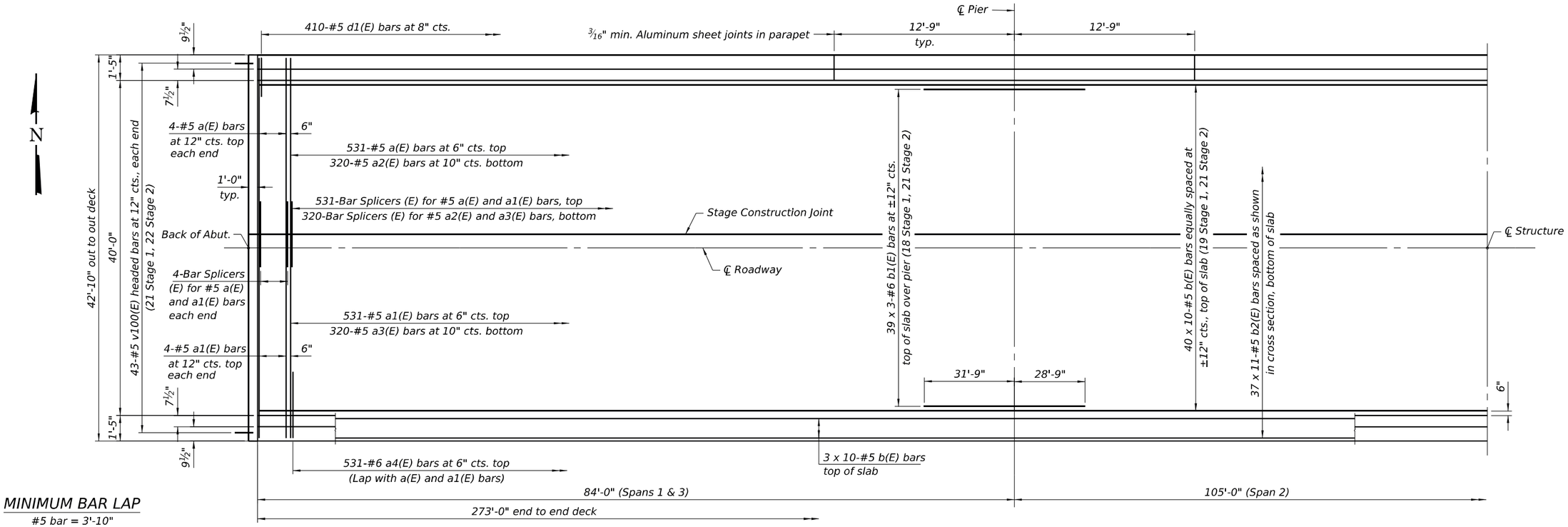

MINIMUM BAR LAP

#5 bar = 3'-10"
#6 bar = 3'-1"

PARTIAL PLAN

Notes:
See Sheet 12 of 31 for superstructure details and Bill of Material.
Bars indicated thus 20 x 3-#5 etc. indicates 20 lines of bars with 3 lengths per line.

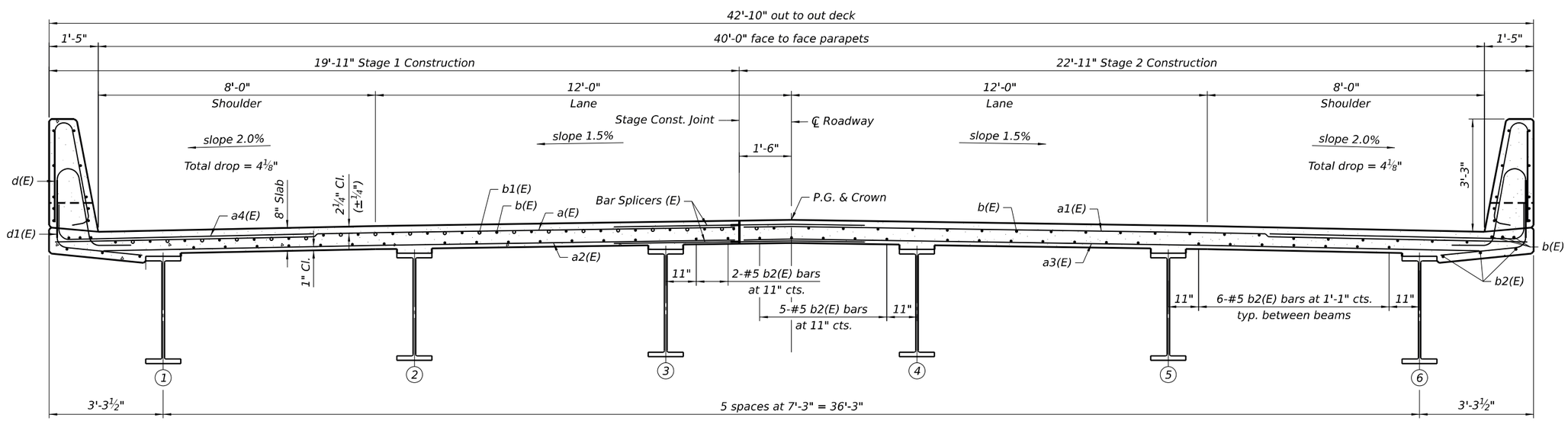

NEAR PIER

NEAR MIDSPAN

CROSS SECTION

(Looking East)

SI-SB-2-0 4-4-2025

MODEL: Default
FILE NAME: O:\2022R3\IDOTCAD CONNECT\23012.20 V&K IL 13 over North Fork Saline River\CADD Data\Bridge\Platsheets\0300026-78969-011-Superstructure.dgn
10/31/2025 9:10:32 AM

EFK♦Moen
Civil Engineering Design

USER NAME = ABenz	DESIGNED - KRH	REVISED -	
	CHECKED - ACB	REVISED -	
PLOT SCALE =	DRAWN - KRH	REVISED -	
PLOT DATE = 10/31/2025	CHECKED - ACB	REVISED -	

STATE OF ILLINOIS
DEPARTMENT OF TRANSPORTATION

SUPERSTRUCTURE
STRUCTURE NO. 030-0026

SHEET 11 OF 31 SHEETS

F.A.P. RTE.	SECTION	COUNTY	TOTAL SHEETS	SHEET NO.
331	(10-1, 10-3-1)B-2	GALLATIN	86	36
		CONTRACT NO. 78969		
	ILLINOIS	FED. AID PROJECT		

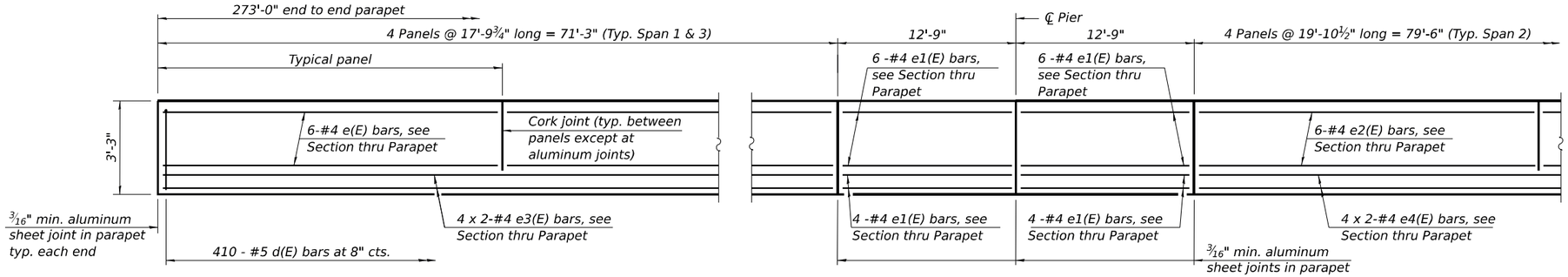

INSIDE ELEVATION OF PARAPET

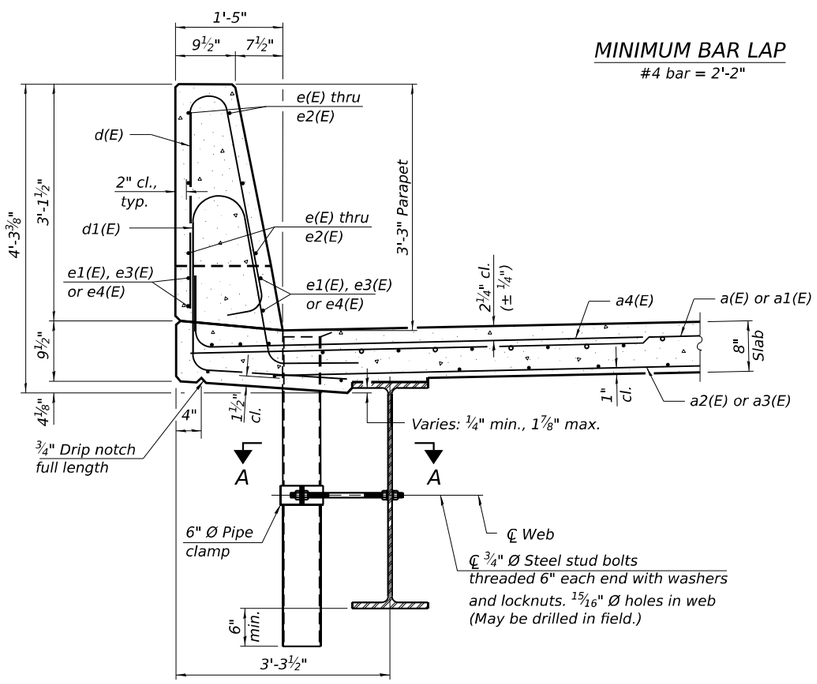

MINIMUM BAR LAP

#4 bar = 2'-2"

SECTION THRU PARAPET

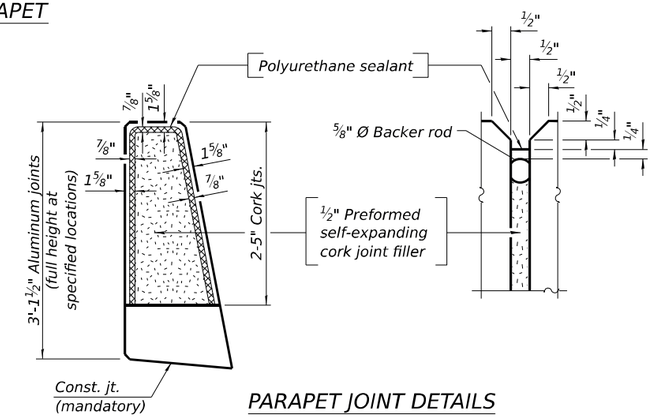

PARAPET JOINT DETAILS

Notes:

Fiberglass pipe shall conform to ASTM D2996, with short-time rupture strength hoop tensile stress of 30,000 p.s.i. minimum.

The exterior surfaces of floor drains, downspouts, and exterior exposed surfaces of the scupper frame below deck shall be the color of the adjacent beam. The exterior surfaces of the drains shall be cleaned according to the Society of Protective Coating's Spec. SSPC-SP1 prior to painting.

The top portion of aluminum floor drains shall be coated with 5 mils of either bitumen paint or epoxy paint to minimize reaction with wet concrete.

The clamping device shall be galvanized according to AASHTO M 232. Cost of clamping device included with Floor Drains.

The 3/16" min. aluminum sheet shall be ASTM B 209 alloy 3003-H14 and coated with 5 mils of either bitumen paint or epoxy paint to minimize reaction with wet concrete. Cost included with Concrete Superstructure.

The polyurethane sealant shall be according to Article 1050.04 of the Std. Spec. and the color shall be gray.

Bar terminators, paid for separately. See Total Bill of Material.

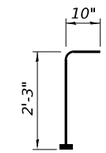

BAR v100(E)

(Headed. 86 - #5 Bar terminators)

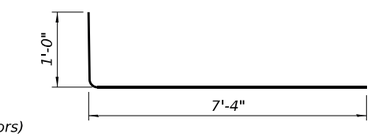

BAR a4(E)

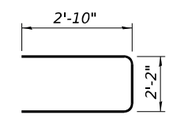

BAR s10(E)

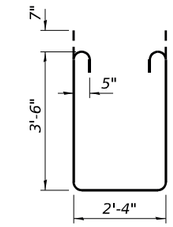

BAR s11(E)

SUPERSTRUCTURE BILL OF MATERIAL

Bar	No.	Size	Length	Shape
a(E)	539	#5	19'-7"	
a1(E)	539	#5	22'-7"	
a2(E)	320	#5	19'-0"	
a3(E)	320	#5	22'-0"	
a4(E)	1062	#6	8'-4"	
b(E)	460	#5	30'-9"	
b1(E)	234	#6	22'-3"	
b2(E)	407	#5	28'-4"	
d(E)	410	#5	6'-5"	
d1(E)	410	#5	8'-5"	
e(E)	96	#4	17'-5"	
e1(E)	80	#4	12'-5"	
e2(E)	48	#4	19'-6"	
e3(E)	32	#4	36'-6"	
e4(E)	16	#4	40'-10"	
m10(E)	8	#6	19'-7"	
m11(E)	24	#6	6'-11"	
m12(E)	12	#6	3'-0"	
m13(E)	8	#6	22'-7"	
m14(E)	6	#6	1'-10"	
m15(E)	6	#6	4'-10"	
s10(E)	86	#5	7'-10"	
s11(E)	86	#5	10'-6"	
v100(E)	86	#5	3'-1"	
Reinforcement Bars, Epoxy Coated			Lbs.	98,040
Concrete Superstructure			Cu. Yds.	423.8
Bridge Deck Grooving			Sq. Yds.	1,153
Protective Coat			Sq. Yds.	1,463

Bars indicated thus 1 x 2-#4 etc. indicates 1 line of bars with 2 lengths per line.

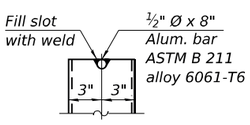

ALUMINUM TUBE

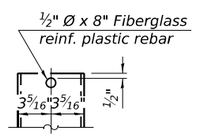

FIBERGLASS PIPE

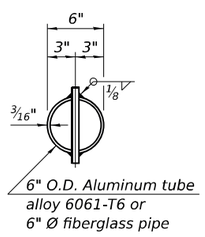

TOP PLAN

(Showing aluminum tube)

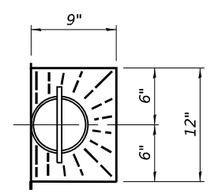

TOP PLAN

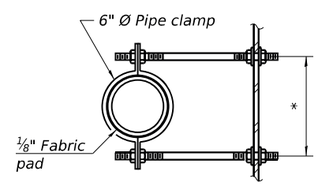

SECTION A-A

*Dimension as required by pipe clamp

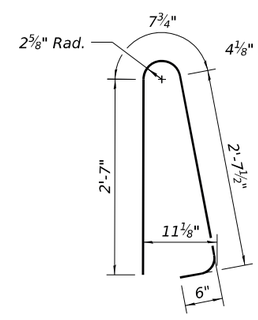

BAR d(E)

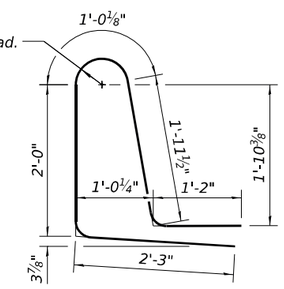

BAR d1(E)

SDI-SB-2 4-4-2025

MODEL: Default
FILE NAME: O:\2022R3\IDOTCAD CONNECT\23012.20 V&K IL 13 over North Fork Saline River\CADD Data\Bridge\Plotsheets\0300026-78969-012-Superstructure Details.dgn
10/31/2025 9:10:35 AM

EFK•Moen Civil Engineering Design

USER NAME = ABenz	DESIGNED - KRH	REVISED -	
	CHECKED - ACB	REVISED -	
PLOT SCALE =	DRAWN - KRH	REVISED -	
PLOT DATE = 10/31/2025	CHECKED - ACB	REVISED -	

STATE OF ILLINOIS
DEPARTMENT OF TRANSPORTATION

SUPERSTRUCTURE DETAILS
STRUCTURE NO. 030-0026

SHEET 12 OF 31 SHEETS

F.A.P. RTE.	SECTION	COUNTY	TOTAL SHEETS	SHEET NO.
331	(10-1, 10-3-1)B-2	GALLATIN	86	37
		CONTRACT NO. 78969		
		ILLINOIS	FED. AID PROJECT	

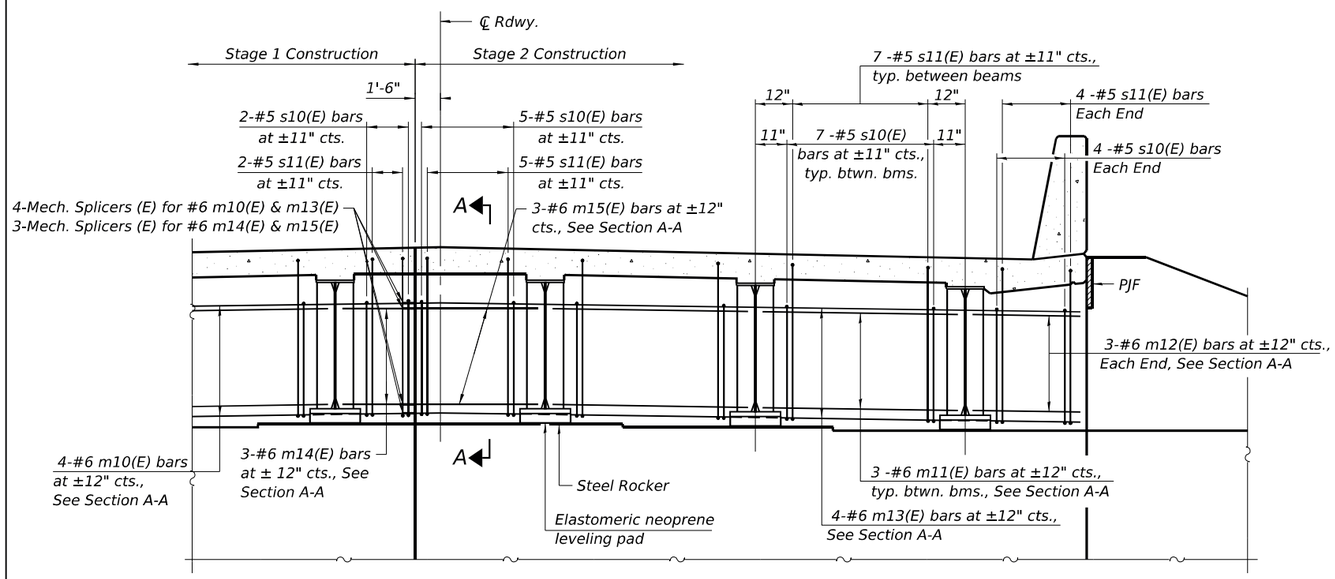

DIAPHRAGM AT ABUTMENT

(Looking East at East Abutment, West Abutment similar)

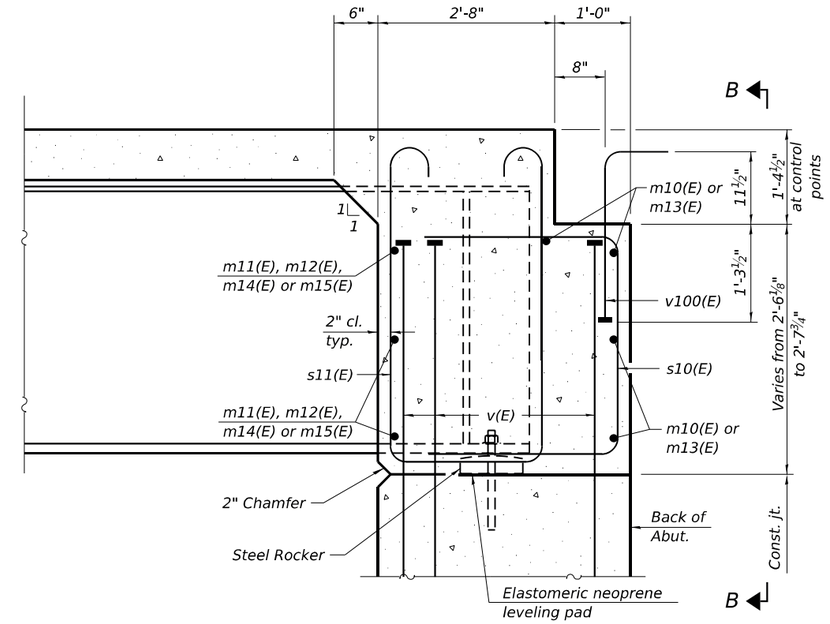

SECTION A-A

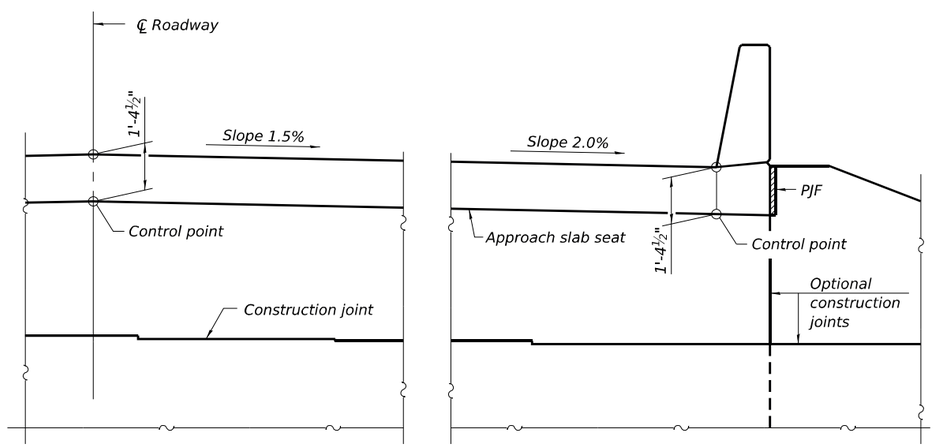

VIEW B-B

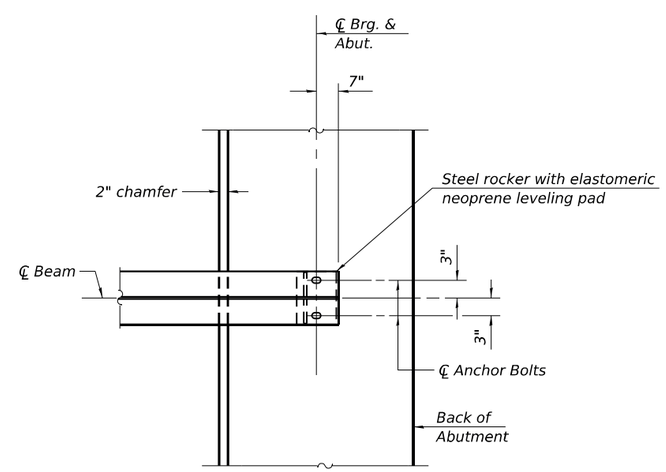

PLAN AT ABUTMENT

(Showing bottom flange of beam)

Notes:
See sheet 12 of 31 for superstructure details and Bill of Material.
See sheet 14 of 31 for PJF details.
The approach slab seat shall have a constant slope determined from the control points shown.

MODEL: Default
FILE NAME: O:\2022R3\IDOTCAD CONNECT\23012.20 V&K IL 13 over North Fork Saline River\CADD Data\Bridge\Plotsheets\0300026-78969-013-Diaphragm Details.dgn
10/31/2025 9:10:43 AM

EFK•Moen Civil Engineering Design

USER NAME = ABenz	DESIGNED - KRH	REVISED -	
	CHECKED - ACB	REVISED -	
PLOT SCALE =	DRAWN - KRH	REVISED -	
PLOT DATE = 10/31/2025	CHECKED - ACB	REVISED -	

STATE OF ILLINOIS
DEPARTMENT OF TRANSPORTATION

DIAPHRAGM DETAILS
STRUCTURE NO. 030-0026

SHEET 13 OF 31 SHEETS

F.A.P. RTE.	SECTION	COUNTY	TOTAL SHEETS	SHEET NO.
331	(10-1, 10-3-1)B-2	GALLATIN	86	38
		CONTRACT NO. 78969		
	ILLINOIS	FED. AID PROJECT		

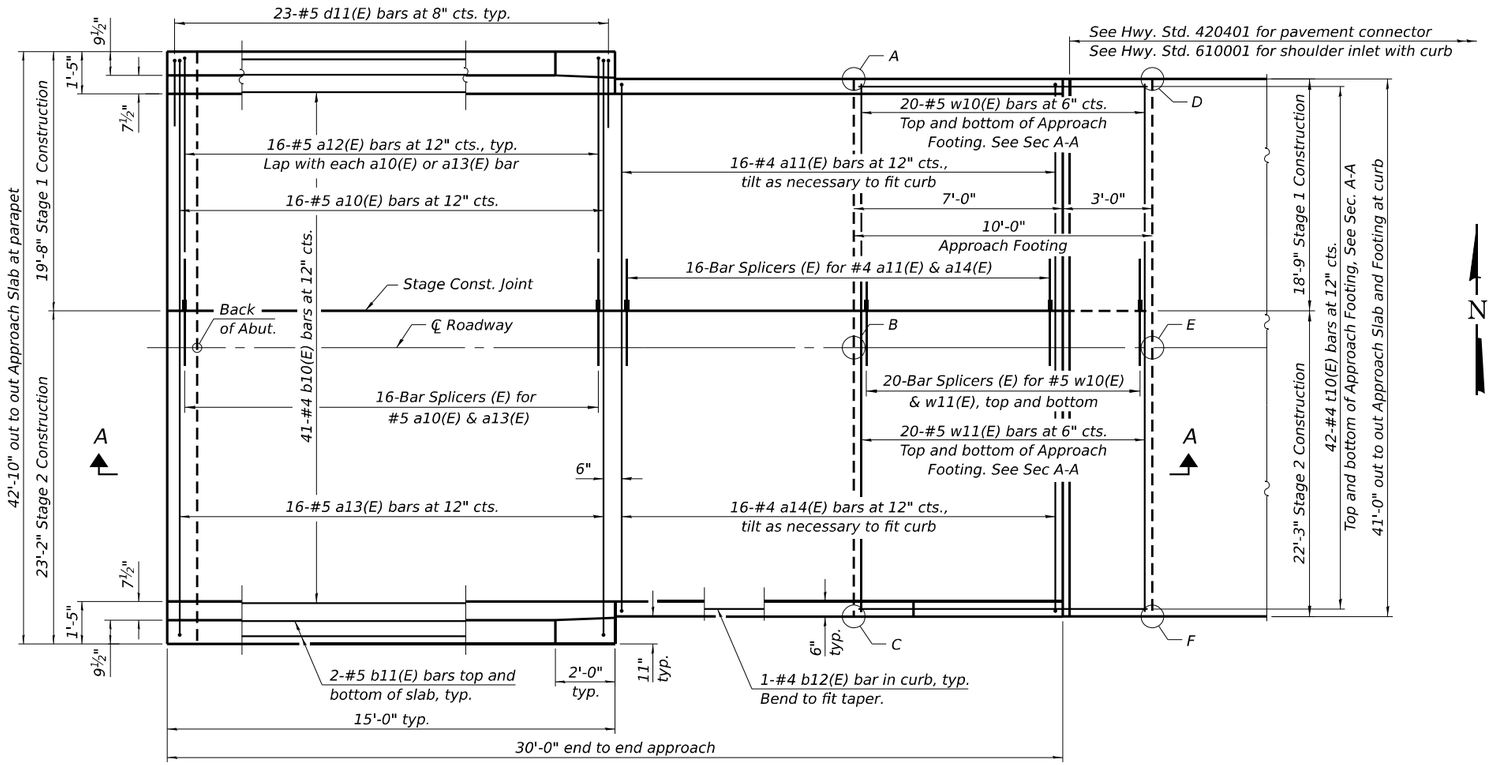

PLAN

(East approach slab shown; West approach slab similar by 180° rotation)

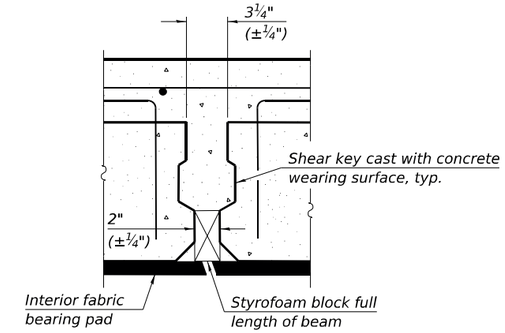

DETAIL 'A'

TOP AND BOTTOM ELEVATIONS FOR APPROACH FOOTING

West Approach			East Approach		
Point/ Location	Top	Bottom	Point/ Location	Top	Bottom
A - SE	370.54	369.70	A - NW	370.54	369.70
B - CL	370.89	370.05	B - CL	370.89	370.05
C - NE	370.54	369.70	C - SW	370.54	369.70
D - SW	370.47	369.64	D - NE	370.47	369.64
E - CL	370.82	369.99	E - CL	370.82	369.99
F - NW	370.47	369.64	F - SE	370.47	369.64

* Fabric bearing pads at the expansion end shall be recessed ¼" into the approach footing and bonded. Adjusting shims, when required, shall be bonded to the top of the fabric bearing pads.

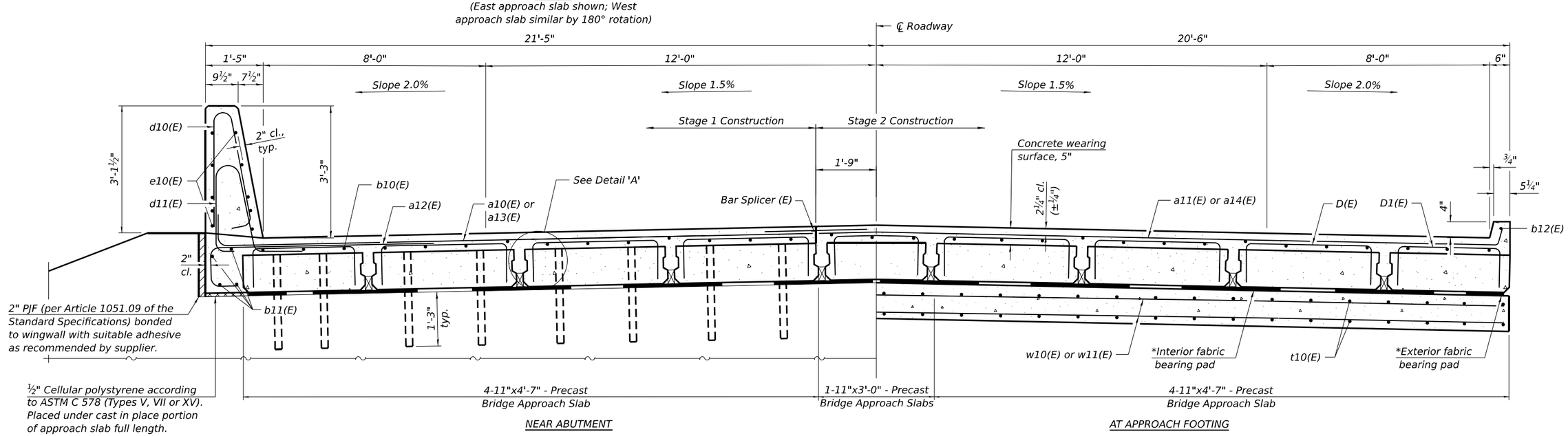

CROSS SECTION

(Looking East)

BA-PDP-39CS-0 4-4-2025 (Beams: 36" min. width; 72" max. width) (Sheet 1 of 3)

EFK•Moen Civil Engineering Design

USER NAME = ABenz	DESIGNED - KRH	REVISED -	
	CHECKED - ACB	REVISED -	
PLOT SCALE =	DRAWN - KRH	REVISED -	
PLOT DATE = 10/31/2025	CHECKED - ACB	REVISED -	

STATE OF ILLINOIS
DEPARTMENT OF TRANSPORTATION

PARTIAL DEPTH PRECAST BRIDGE APPROACH SLAB
STRUCTURE NO. 030-0026

SHEET 14 OF 31 SHEETS

F.A.P. RTE.	SECTION	COUNTY	TOTAL SHEETS	SHEET NO.
331	(10-1, 10-3-1)B-2	GALLATIN	86	39
		CONTRACT NO. 78969		
	ILLINOIS	FED. AID PROJECT		

MODEL: Default
FILE NAME: O:\2022R3\IDOTCAD CONNECT\23012.20 V&K IL 13 over North Fork Saline River\CADD Data\Bridge\Plotsheets\0300026-78969-014-Approach.dgn
10/31/2025 9:11:44 AM

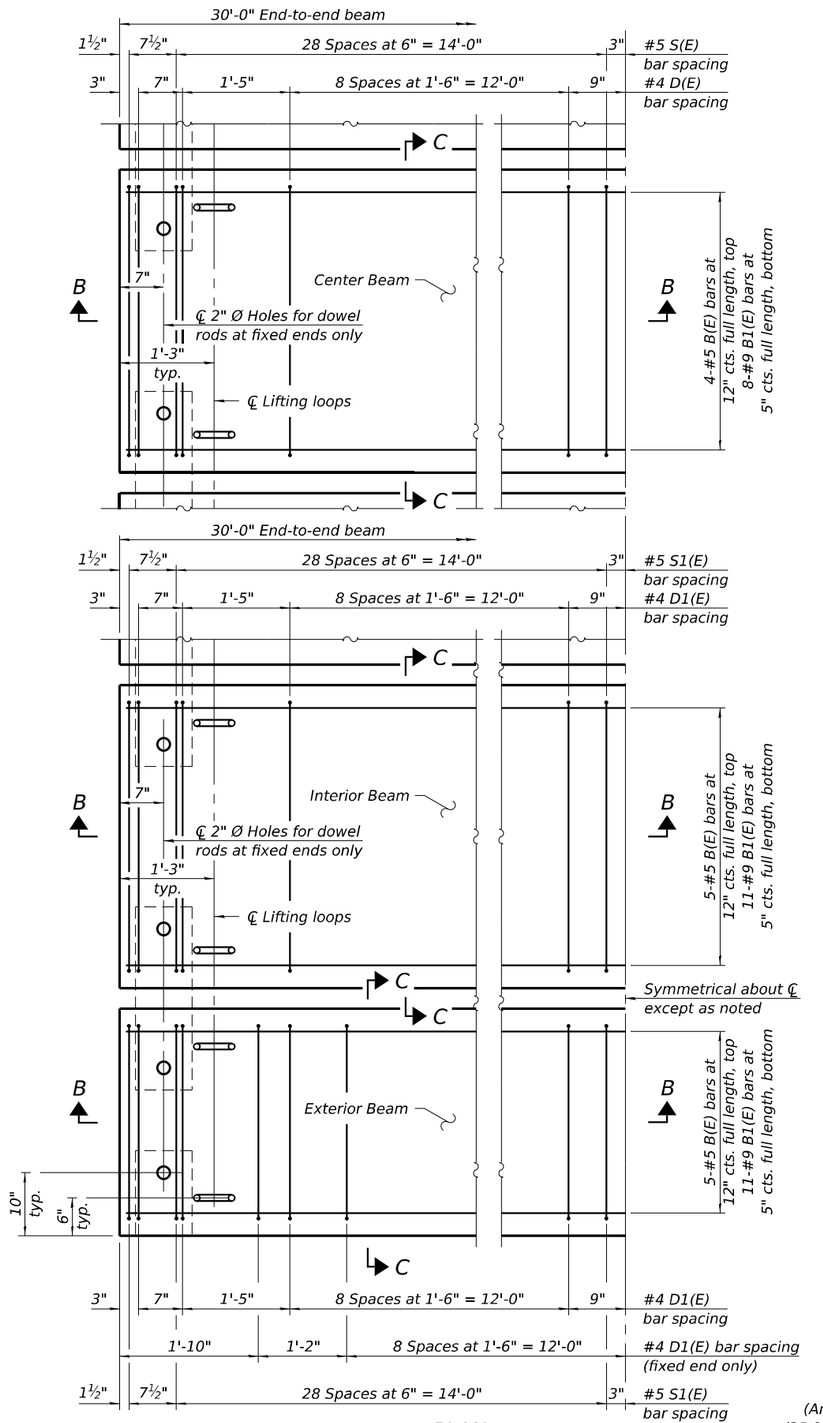

PLAN

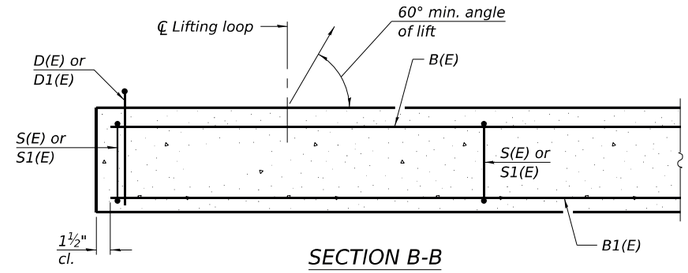

SECTION B-B

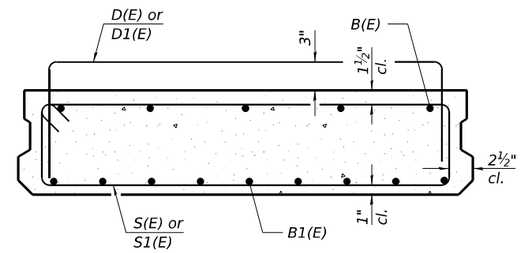

SECTION C-C
(Showing reinforcement)

Notes:

The precast bridge approach slab shall be according to Section 504 of the Standard Specifications and shall be paid for at the contract unit price per square foot for Precast Bridge Approach Slab.

Cast-in-place substitution of Precast Bridge Approach Slab is not allowed.

The top surface of precast bridge approach slabs shall be finished similar to precast prestressed deck beams with concrete wearing surface as specified in the IDOT "Manual for Fabrication of Precast Prestressed Concrete Products."

Two ⅛" fabric adjusting shims of the dimensions of the exterior bearing pad shall be provided for each bearing pad location. Cost included with Precast Bridge Approach Slab.

A minimum 2½" Ø lifting pins shall be used to engage the lifting loops during handling.

Compressive strength of precast concrete, f'c shall be 6,000 psi.

Compressive strength of precast concrete during initial lifting, f'ci shall be 5,000 psi.

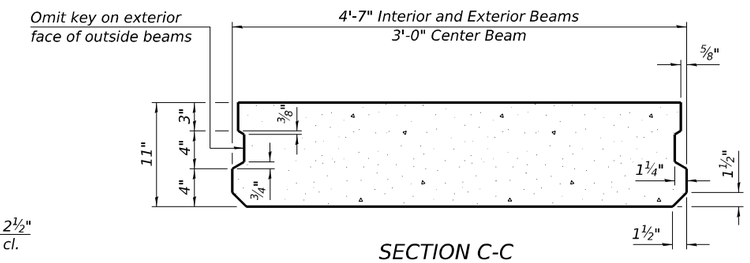

SECTION C-C
(Showing dimensions)

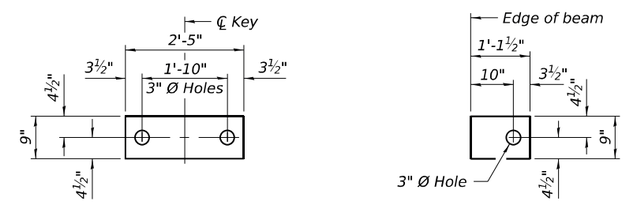

INTERIOR EXTERIOR

FABRIC BEARING PAD

Notes:

Bearing pads at fixed end shall be ½" thick and bearing pads at expansion end shall be ¾" thick.

Omit holes for fabric bearing pads at approach slab footing end of beams.

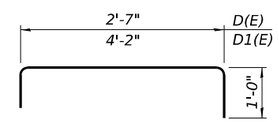

BARS D(E) & D1(E)

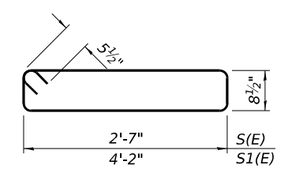

BARS S(E) & S1(E)

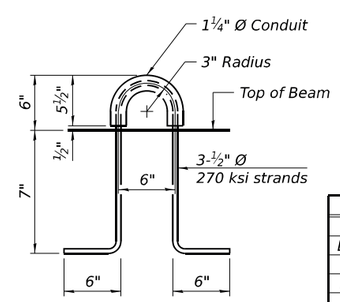

LIFTING LOOP DETAIL

(An alternate lifting loop with a Safe Working Load of 6,250 lbs. (25,000 lbs. Proof Load / Factor of Safety of 4) and utilized according to the manufacturer's recommendations may be used.)

BAR LIST
EACH CENTER BEAM
(For information only)

Bar	No.	Size	Length	Shape
B(E)	4	#5	29'-8"	—
B1(E)	8	#9	29'-8"	—
D(E)	22	#4	4'-7"	⊓
S(E)	60	#5	7'-6"	⊏

BAR LIST
EACH INTERIOR BEAM
(For information only)

Bar	No.	Size	Length	Shape
B(E)	5	#5	29'-8"	—
B1(E)	11	#9	29'-8"	—
D1(E)	22	#4	6'-2"	⊓
S1(E)	60	#5	10'-8"	⊏

BAR LIST
EACH EXTERIOR BEAM
(For information only)

Bar	No.	Size	Length	Shape
B(E)	5	#5	29'-8"	—
B1(E)	11	#9	29'-8"	—
D1(E)	32	#4	6'-2"	⊓
S1(E)	60	#5	10'-8"	⊏

BA-PDP-39CS-0 4-4-2025 (Beams: 36" min. width; 72" max. width)

(Sheet 2 of 3)

EFK•Moen Civil Engineering Design

USER NAME = ABenz	DESIGNED - KRH	REVISED -	
	CHECKED - ACB	REVISED -	
PLOT SCALE =	DRAWN - KRH	REVISED -	
PLOT DATE = 10/31/2025	CHECKED - ACB	REVISED -	

STATE OF ILLINOIS
DEPARTMENT OF TRANSPORTATION

PARTIAL DEPTH PRECAST BRIDGE APPROACH SLAB
STRUCTURE NO. 030-0026

SHEET 15 OF 31 SHEETS

F.A.P. RTE.	SECTION	COUNTY	TOTAL SHEETS	SHEET NO.
331	(10-1, 10-3-1)B-2	GALLATIN	86	40
		CONTRACT NO. 78969		
	ILLINOIS	FED. AID PROJECT		

MODEL: Default
FILE NAME: O:\2022R3\IDOTCAD CONNECT\23012.20 V&K IL 13 over North Fork Saline River\CADD Data\Bridge\Plotsheets\0300026-78969-015-Approach.dgn
10/31/2025 9:12:44 AM

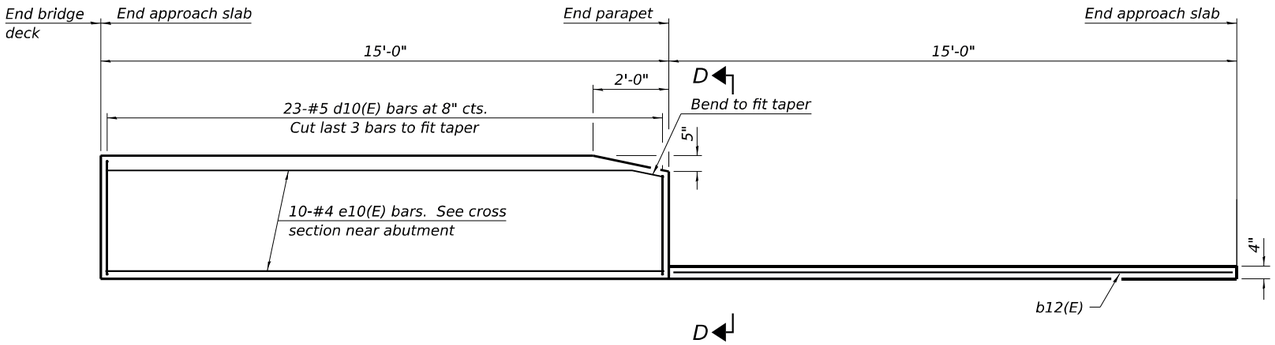

INSIDE ELEVATION OF PARAPET AND CURB

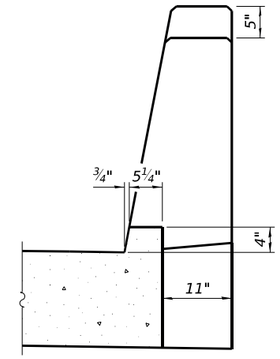

VIEW D-D

Notes:

The joint opening shall be adjusted for temperature per Article 520.04 of the Standard Specifications. However, since this detail is for jointless structures, the length of bridge used to calculate the adjustment shall be equal to half the total bridge length plus the length of the bridge approach slab.

After precast bridge approach slabs have been erected, holes shall be drilled into abutment and anchor dowels placed. Dowel holes shall be filled with non-shrink grout to top of precast slab and cured according to Article 1020.13(a)(3) or 1020.13(a)(5) of the Standard Specifications for a minimum of 24 hours before casting the shear keys and wearing surface.

Any concrete poured monolithically with the wearing surface, such as curbs, shall not be paid for separately, but will be included in the cost of Concrete Wearing Surface, 5".

Parapet concrete shall be paid for as Concrete Superstructure.

Approach footing concrete shall be paid for as Concrete Structures.

The approach footing maximum applied service bearing pressure (Qmax) = 2.0 ksf.

Cost of excavation for approach footing included with Concrete Structures.

For Granular Backfill for Structures and drainage treatment details, see sheet 2 of 31.

Cost of cellular polystyrene is included with Concrete Superstructure.

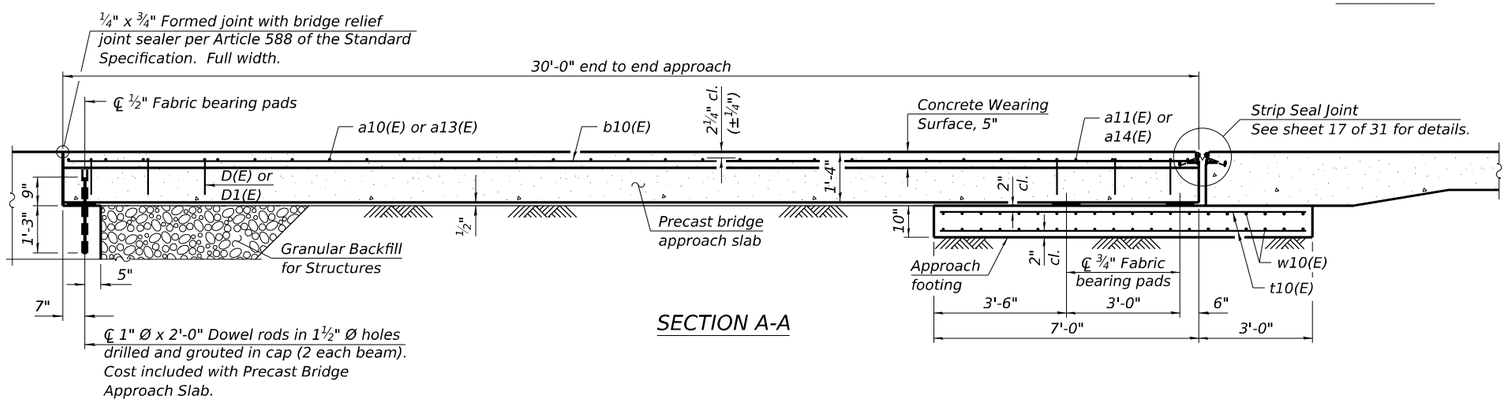

SECTION A-A

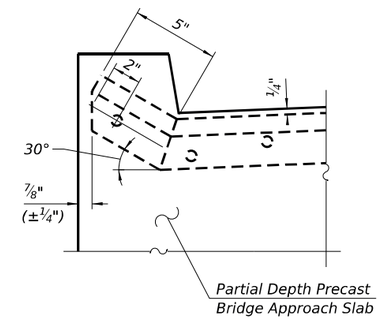

END OF SEAL DETAIL

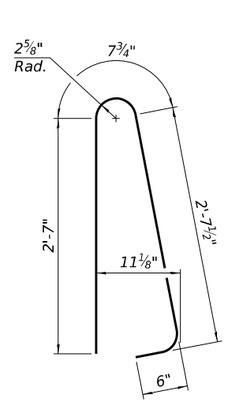

BAR d10(E)

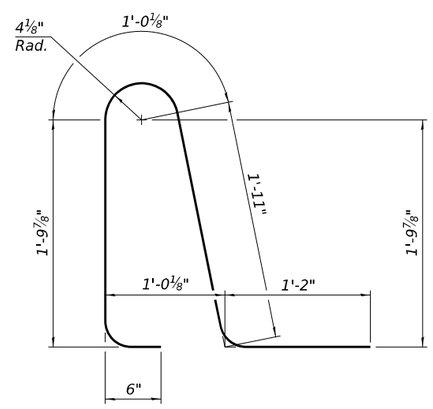

BAR d11(E)

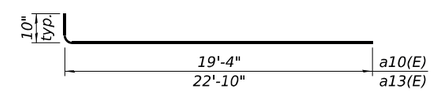

BAR a10(E) & a13(E)

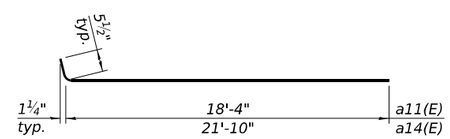

BAR a11(E) & a14(E)

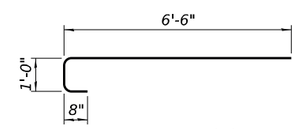

BAR a12(E)

TWO APPROACHES
BILL OF MATERIAL

Bar	No.	Size	Length	Shape
a10(E)	32	#5	20'-2"	
a11(E)	32	#4	18'-10"	
a12(E)	64	#5	8'-2"	
a13(E)	32	#5	23'-8"	
a14(E)	32	#4	22'-4"	
b10(E)	82	#4	29'-8"	
b11(E)	16	#5	14'-8"	
b12(E)	4	#4	14'-8"	
d10(E)	92	#5	6'-5"	
d11(E)	92	#5	6'-5"	
e10(E)	40	#4	14'-8"	
t10(E)	168	#4	9'-8"	
w10(E)	80	#5	18'-5"	
w11(E)	80	#5	21'-11"	
Concrete Superstructure			Cu. Yd.	7.8
Concrete Structures			Cu. Yd.	25.4
Reinforcement Bars, Epoxy Coated			Pound	10,870
Precast Bridge Approach Slab			Sq. Ft.	2,380
Concrete Wearing Surface, 5"			Sq. Yd.	280

BA-PDP-39CS-0 03-08-2024 (Beams: 36" min. width; 72" max. width) (Sheet 3 of 3)

EFK•Moen Civil Engineering Design

USER NAME = ABenz	DESIGNED - KRH	REVISED -	
	CHECKED - ACB	REVISED -	
PLOT SCALE =	DRAWN - KRH	REVISED -	
PLOT DATE = 10/31/2025	CHECKED - ACB	REVISED -	

STATE OF ILLINOIS
DEPARTMENT OF TRANSPORTATION

PARTIAL DEPTH PRECAST BRIDGE APPROACH SLAB
STRUCTURE NO. 030-0026

SHEET 16 OF 31 SHEETS

F.A.P. RTE.	SECTION	COUNTY	TOTAL SHEETS	SHEET NO.
331	(10-1, 10-3-1)B-2	GALLATIN	86	41
		CONTRACT NO. 78969		
	ILLINOIS	FED. AID PROJECT		

MODEL: Default
FILE NAME: O:\2022R3\IDOT\CAD CONNECT\23012.20 V&K IL 13 over North Fork Saline River\CAD Data\Bridge\Plotsheets\0300026-78969-015-approach.dgn
10/31/2025 9:12:49 AM

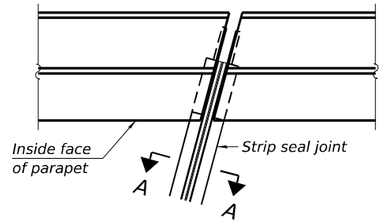

FOR SKEWS ≤ 30°

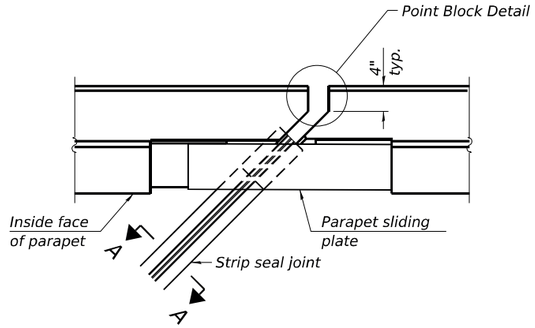

FOR SKEWS > 30°

PLAN AT PARAPET

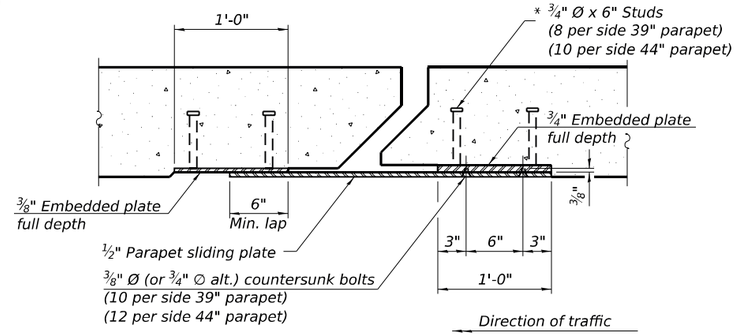

SECTION B-B

(¾" ∅ countersunk bolts extending into concrete shall have hex nuts tack welded to the back of the embedded plates with end caps provided.)

Notes:

The strip seal shall be made continuous and shall have a minimum thickness of ¼". The configuration of the strip seal shall match the configuration of the locking edge rails. Open or "webbed" strip seal gland configurations are not permitted. The gland shall be sized for a maximum rated movement of 4 inches.

The locking edge rails depicted are configured for typical applications and are conceptual only. The actual configuration of the locking edge rails and matching strip seal may vary from manufacturer to manufacturer provided they fit the application and meet the minimum anchorage shown. Flanged edge rails, however, will not be allowed. Locking edge rails may exceed the 4½" maximum depth provided the anchorage system is revised according to the manufacturer's recommendation.

The manufacturer's recommended installation methods shall be followed.

All steel components shall be galvanized after fabrication according to Article 520.03 of the Standard Specifications.

The Maximum space between locking edge rail segments shall be 3/16" and sealed with a suitable sealant; however, any rail joint within 10' measured perpendicular to the face of the curb or parapet shall be welded as shown in the locking edge rail splice detail.

Cost of parapet sliding plates, embedded plates, and anchorage studs included with Preformed Joint Strip Seal.

39" constant slope barrier shown, 44" constant slope barrier similar as noted.

The concrete opening below the strip seal will vary based on the locking edge rail chosen by the Contractor. Deck and parapet lengths shown elsewhere in the plans are dimensioned to the concrete opening, not the joint opening, and are based on the rolled locking edge rail. If the Contractor elects to use a different locking edge rail, dimensional adjustments may be required. One exception to this would be the strip seal joint at the end of the precast bridge approach slab. For these cases the pavement connector length shall be adjusted, not the length of the bridge approach slab.

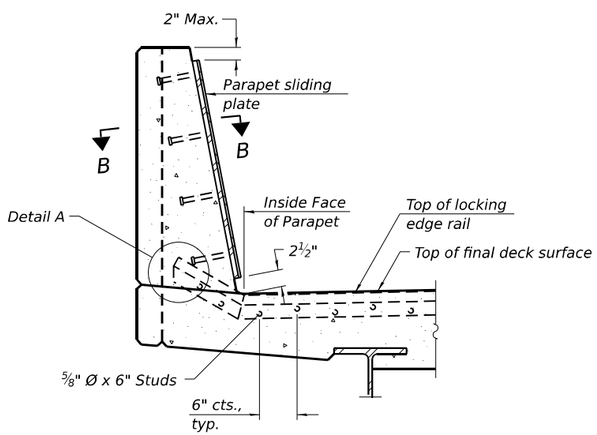

SECTION AT PARAPET

(Skews > 30° shown. Skews ≤ 30° similar except as shown in plan view.)

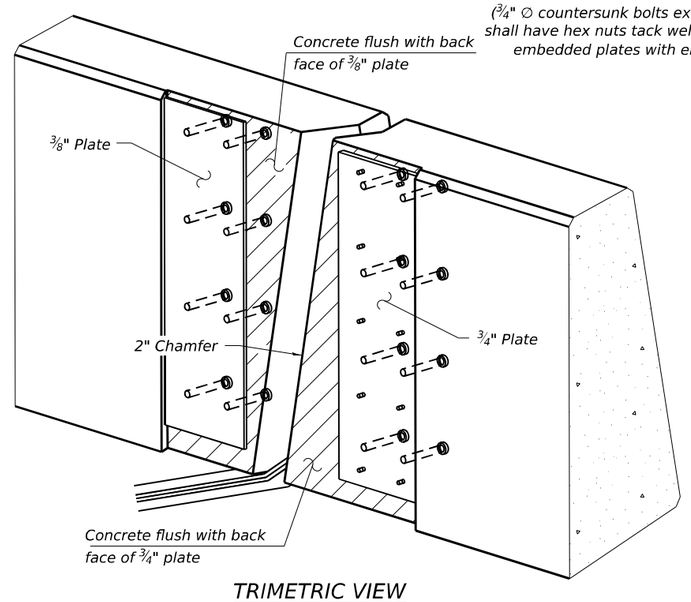

TRIMETRIC VIEW

(Showing embedded plates only)

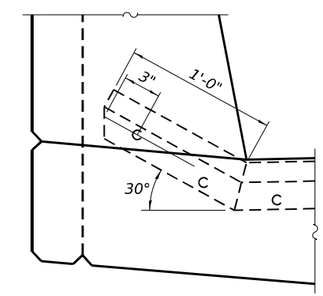

DETAIL A

(Kick-up at parapet locations shown. See sheet 16 of 31 for kick-up at curb locations.)

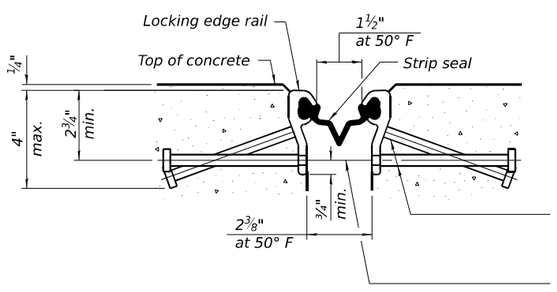

SHOWING ROLLED RAIL JOINT

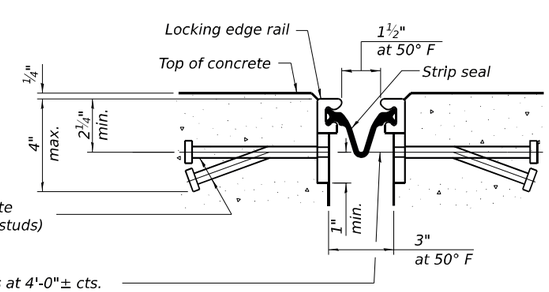

SHOWING WELDED RAIL JOINT

* ⅝" Ø x 6" studs @ 6" cts. (alternate angled/bent studs with horizontal studs)

⅜" Ø threaded rods in 7/16" Ø holes at 4'-0"± cts. for holding the proper joint opening based on the temperature during the deck pour. Place to miss studs. All rods shall be burned, or sawed off flush with the plates after concrete is set.

SECTION A-A

* Granular or solid flux filled headed studs conforming to Article 1006.32 of the Std. Specs., automatically end welded.

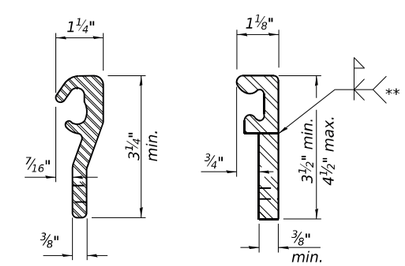

ROLLED (EXTRUDED) RAIL

WELDED RAIL

LOCKING EDGE RAILS

** Back gouge not required if complete joint penetration is verified by mock-up.

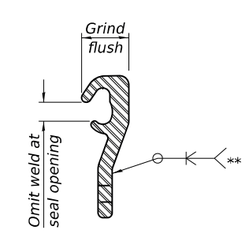

LOCKING EDGE RAIL SPLICE

The inside of the locking edge rail groove shall be free of weld residue. Rolled rail shown, welded rail similar.

BILL OF MATERIAL

Item	Unit	Total
Preformed Joint Strip Seal	Foot	84

EJ-SS 4-4-2025

EFK•Moen Civil Engineering Design

USER NAME = ABenz	DESIGNED - KRH	REVISED -	
	CHECKED - ACB	REVISED -	
PLOT SCALE =	DRAWN - KRH	REVISED -	
PLOT DATE = 10/31/2025	CHECKED - ACB	REVISED -	

STATE OF ILLINOIS
DEPARTMENT OF TRANSPORTATION

PREFORMED JOINT STRIP SEAL
STRUCTURE NO. 030-0026

SHEET 17 OF 31 SHEETS

F.A.P. RTE.	SECTION	COUNTY	TOTAL SHEETS	SHEET NO.
331	(10-1, 10-3-1)B-2	GALLATIN	86	42
		CONTRACT NO. 78969		
	ILLINOIS	FED. AID PROJECT		

MODEL: Default
FILE NAME: O:\2022R3\IDOTCAD CONNECT\23012.20 V&K IL 13 over North Fork Saline River\CADD Data\Bridge\Plotsheets\0300026-78969-017-Strip Seal Joint Details.dgn
10/31/2025 9:12:51 AM

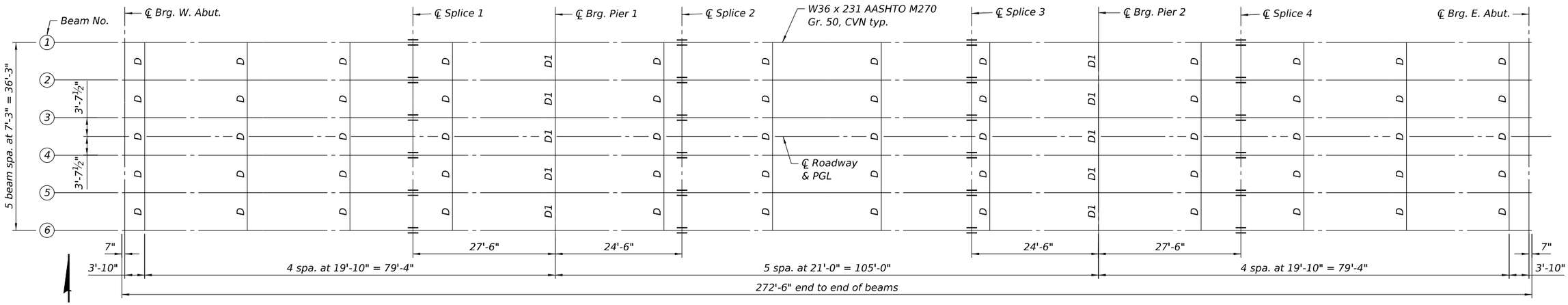

FRAMING PLAN

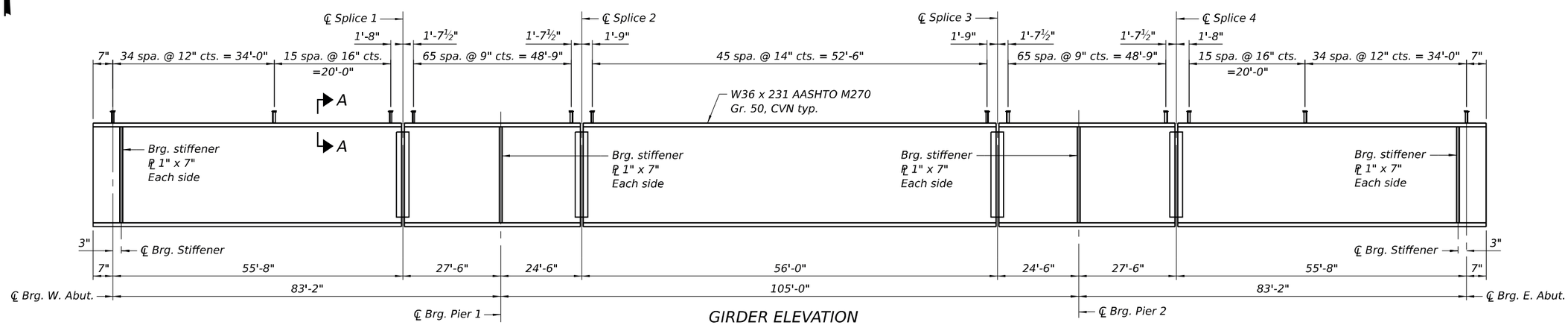

GIRDER ELEVATION

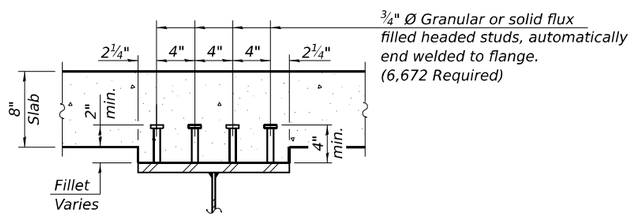

SECTION A-A

TOP OF BEAM ELEVATIONS

LOCATION	BEAM 1	BEAM 2	BEAM 3	BEAM 4	BEAM 5	BEAM 6
℄ Brg. W. Abut.	371.35	371.49	371.60	371.60	371.49	371.35
℄ Splice 1	371.50	371.64	371.74	371.74	371.64	371.50
℄ Brg. Pier 1	371.61	371.75	371.86	371.86	371.75	371.61
℄ Splice 2	371.60	371.74	371.85	371.85	371.74	371.60
℄ Splice 3	371.60	371.74	371.85	371.85	371.74	371.60
℄ Brg. Pier 2	371.61	371.75	371.86	371.86	371.75	371.61
℄ Splice 4	371.50	371.64	371.74	371.74	371.64	371.50
℄ Brg. E. Abut.	371.35	371.49	371.60	371.60	371.49	371.35

For Fabrication Only

Notes:

All diaphragms shall be installed as steel is erected and secured with erection pins and bolts except as otherwise noted. Individual diaphragms at supports may be temporarily disconnected to install bearing anchor bolts.

Load carrying components designated "CVN" shall conform to the Charpy-V-Notch Impact Energy Requirements, Zone 2.

All bearing stiffeners and splice plates shall be AASHTO M270 Grade 50.

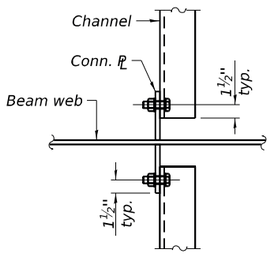

DETAIL A

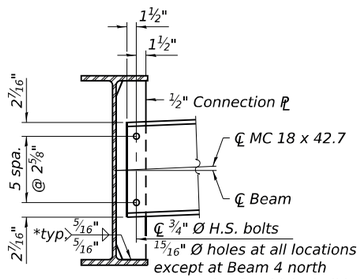

INTERIOR DIAPHRAGM D

* 3 sides of each stiffener and/or connection PL

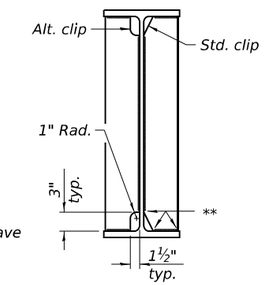

WELD LIMITS AND CLIP DETAILS

** Stop welds ¼" (±⅛") from edges as shown. Typical.

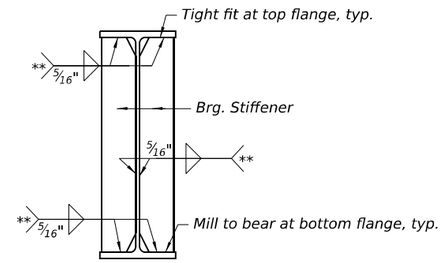

SECTION AT BEARING STIFFENER

** Stop welds ¼" (±⅛") from edges as shown. Typical.

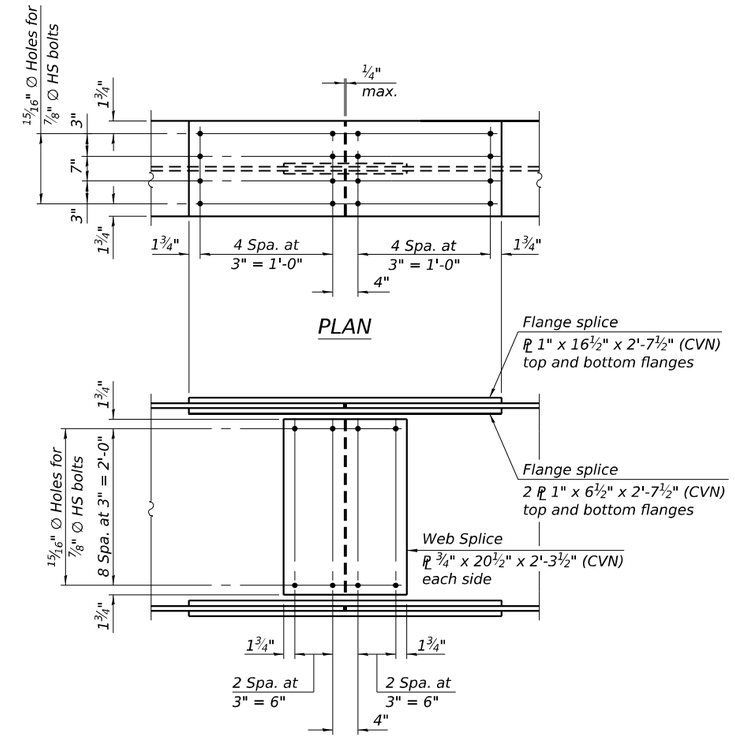

PLAN

ELEVATION

SPLICE DETAIL

(24 Required)

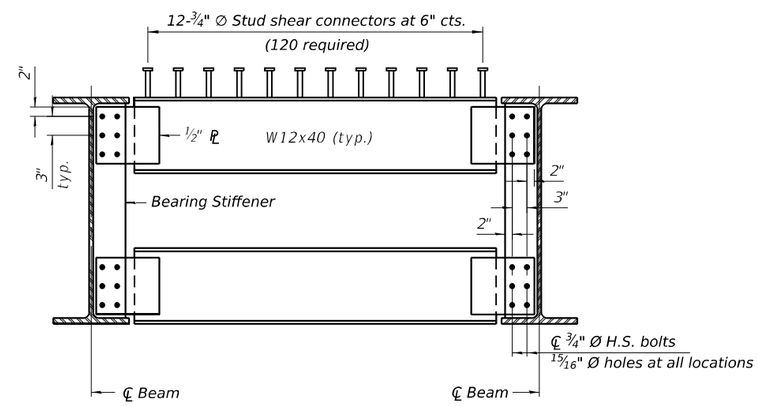

PIER DIAPHRAGM D1

Notes:

Two hardened washers required for each set of oversized holes.

Alternate channels of equal depth and larger weight are permitted to facilitate material acquisition. Alternate channels, if utilized, shall be provided at no additional cost to the Department.

All diaphragms shall be installed as steel is erected and secured with erection pins and bolts except as otherwise noted. Individuals diaphragms at supports may be temporarily disconnected to install bearing anchor bolts.

EXTERIOR BEAM MOMENT TABLE						
		0.4 Sp. 1	Pier 1	0.5 Sp. 2	Pier 2	0.6 Sp. 3
I_s	(in⁴)	15,600	15,600	15,600	15,600	15,600
I_c (n)	(in⁴)	35,411	-	35,411	-	35,411
I_c (3n)	(in⁴)	26,178	-	26,178	-	26,178
I_c (cr)	(in⁴)	-	18,643	-	18,643	-
S_s	(in³)	854	854	854	854	854
S_c (n)	(in³)	1,143	-	1,143	-	1,143
S_c (3n)	(in³)	1,042	-	1,042	-	1,042
S_c (cr)	(in³)	-	920	-	920	-
S_x	(in³)	-	-	-	-	-
DC1	(k/ft)	0.954	0.954	0.954	0.954	0.954
M_{DC1}	('k)	456	879	466	879	456
DC2	(k/ft)	0.175	0.175	0.175	0.175	0.175
M_{DC2}	('k)	82	157	84	157	82
DW	(k/ft)	0.333	0.333	0.333	0.333	0.333
M_{DW}	('k)	157	300	160	300	157
LLDF		0.5722	0.5559	0.5416	0.5559	0.5722
M_{LL+IM}	('k)	1016	1094	1062	1094	1016
f_f (Strength I)	(ksi)	0	0	0	0	0
$M_u + \frac{1}{3} f_f S_x$	('k)	2,686	3,661	2,785	3,661	2,686
$\Phi_f M_n$	('k)	5,545	4,562	5,545	4,562	5,545
f_s DC1	(ksi)	6.4	12.4	6.5	12.4	6.4
f_s DC2	(ksi)	0.9	2.1	1.0	2.1	0.9
f_s DW	(ksi)	1.8	3.9	1.8	3.9	1.8
f_s (LL+IM)	(ksi)	10.7	14.3	11.2	14.3	10.7
f_f (Service II)	(ksi)	0	0	0	0	0
$f_s + \frac{f_f}{2}$ (Service II)	(ksi)	23.0	36.9	23.8	36.9	23.0
Service II Resistance	(ksi)	47.5	47.5	47.5	47.5	47.5
$f_s + \frac{f_f}{3}$ (Strength I)	(ksi)	-	-	-	-	-
$\Phi_f F_n$	(ksi)	-	-	-	-	-
V_f	(k)	30.3	34.1	23.7	34.1	30.3

INTERIOR BEAM MOMENT TABLE						
		0.4 Sp. 1	Pier 1	0.5 Sp. 2	Pier 2	0.6 Sp. 3
I_s	(in⁴)	15,600	15,600	15,600	15,600	15,600
I_c (n)	(in⁴)	35,822	-	35,822	-	35,822
I_c (3n)	(in⁴)	26,528	-	26,528	-	26,528
I_c (cr)	(in⁴)	-	18,891	-	18,891	-
S_s	(in³)	854	854	854	854	854
S_c (n)	(in³)	1,147	-	1,147	-	1,147
S_c (3n)	(in³)	1,047	-	1,047	-	1,047
S_c (cr)	(in³)	-	925	-	925	-
S_x	(in³)	-	-	-	-	-
DC1	(k/ft)	0.987	0.987	0.987	0.987	0.987
M_{DC1}	('k)	475	916	485	916	475
DC2	(k/ft)	0.175	0.175	0.175	0.175	0.175
M_{DC2}	('k)	82	157	84	157	82
DW	(k/ft)	0.333	0.333	0.333	0.333	0.333
M_{DW}	('k)	157	300	160	300	157
LLDF		0.5863	0.5695	0.5549	0.5695	0.5863
M_{LL+IM}	('k)	1031	1107	1014	1107	1031
f_f (Strength I)	(ksi)	0	0	0	0	0
$M_u + \frac{1}{3} f_f S_x$	('k)	2,736	3,728	2,725	3,728	2,736
$\Phi_f M_n$	('k)	5,603	4,693	5,603	4,693	5,603
f_s DC1	(ksi)	6.7	12.9	6.8	12.9	6.7
f_s DC2	(ksi)	0.9	2.0	1.0	2.0	0.9
f_s DW	(ksi)	1.8	3.9	1.8	3.9	1.8
f_s (LL+IM)	(ksi)	10.8	14.4	10.6	14.4	10.8
f_f (Service II)	(ksi)	0	0	0	0	0
$f_s + \frac{f_f}{2}$ (Service II)	(ksi)	23.4	37.5	23.4	37.5	23.4
Service II Resistance	(ksi)	47.5	47.5	47.5	47.5	47.5
$f_s + \frac{f_f}{3}$ (Strength I)	(ksi)	-	-	-	-	-
$\Phi_f F_n$	(ksi)	-	-	-	-	-
V_f	(k)	28.8	32.4	22.6	32.4	28.8

EXTERIOR BEAM REACTION TABLE					
		W. Abut.	Pier 1	Pier 2	E. Abut.
LLDF		0.60	0.60	0.60	0.60
R_{DC1}	(k)	29.9	102.5	102.5	29.9
R_{DC2}	(k)	5.4	18.4	18.4	5.4
R_{DW}	(k)	10.3	35.0	35.0	10.3
R_{LL}	(k)	51.8	100.2	100.2	51.8
R_{Im}	(k)	12.3	19.0	19.0	12.3
R_{Total} (Strength I)(Impact)	(k)	171.5	412.0	412.0	171.5
R_{Total} (Strength I)(No Impact)	(k)	150.0	378.8	378.8	150.0

INTERIOR BEAM REACTION TABLE					
		W. Abut.	Pier 1	Pier 2	E. Abut.
LLDF		0.76	0.76	0.76	0.76
R_{DC1}	(k)	31.2	106.8	106.8	31.2
R_{DC2}	(k)	5.4	18.4	18.4	5.4
R_{DW}	(k)	10.3	35.0	35.0	10.3
R_{LL}	(k)	65.7	127.2	127.2	65.7
R_{Im}	(k)	15.6	24.1	24.1	15.6
R_{Total} (Strength I)(Impact)	(k)	203.4	473.6	473.6	203.4
R_{Total} (Strength I)(No Impact)	(k)	176.1	431.5	431.5	176.1

I_s , S_s : Non-composite moment of inertia and section modulus of the steel section used for computing f_s (Total-Strength I, and Service II) due to non-composite dead loads (in.⁴ and in.³).

I_c (n), S_c (n): Composite moment of inertia and section modulus of the steel and deck based upon the modular ratio, "n", used for computing f_s (Total-Strength I, and Service II) in uncracked sections due to short-term composite live loads (in.⁴ and in.³).

I_c (3n), S_c (3n): Composite moment of inertia and section modulus of the steel and deck based upon 3 times the modular ratio, "3n", used for computing f_s (Total-Strength I, and Service II) in uncracked sections, due to long-term composite (superimposed) dead loads (in.⁴ and in.³).

I_c (cr), S_c (cr): Composite moment of inertia and section modulus of the steel and longitudinal deck reinforcement, used for computing f_s (Total-Strength I and Service II) in cracked sections, due to both short-term composite live loads and long-term composite (superimposed) dead loads (in.⁴ and in.³).

S_x : Section modulus about the major axis of a section to the controlling flange, tension or compression, taken as yield moment with respect to the controlling flange over the yield strength of the controlling flange (in.³).

DC1: Un-factored non-composite dead load (kips/ft.).

M_{DC1}: Un-factored moment due to non-composite dead load (kip-ft.).

DC2: Un-factored long-term composite (superimposed excluding future wearing surface) dead load (kips/ft.).

M_{DC2}: Un-factored moment due to long-term composite (superimposed excluding future wearing surface) dead load (kip-ft.).

DW: Un-factored long-term composite (superimposed future wearing surface only) dead load (kips/ft.).

M_{DW} : Un-factored moment due to long-term composite (superimposed future wearing surface only) dead load (kip-ft.).

LLDF: Live Load Distribution Factor for moment and shear computed according to Article 4.6.2.2 and further IDOT provisions.

M_{LL+IM}: Un-factored live load moment plus dynamic load allowance (impact) (kip-ft.).

M_u : Strength I load combination of factored design moments (kip-ft.).
$1.25 (M_{DC1} + M_{DC2}) + 1.5 M_{DW} + 1.75 M_{LL+IM}$

f_f : Factored calculated flange lateral bending stress as calculated using Article 6.10.1.6 and as further simplified by IDOT provisions (ksi).

$\Phi_f M_n$: Factored nominal flexural resistance of the section determined as specified in Article 6.10.7.1 or A6 as applicable (kip-ft.).

f_s DC1: Un-factored stress at edge of flange for controlling steel flange due to vertical non-composite dead loads as calculated below (ksi).
M_{DC1} / S_s

f_s DC2: Un-factored stress at edge of flange for controlling steel flange due to vertical composite dead loads as calculated below (ksi).
M_{DC2} / S_c (3n) or M_{DC2} / S_c (cr) as applicable.

f_s DW: Un-factored stress at edge of flange for controlling steel flange due to vertical composite future wearing surface loads as calculated below (ksi).
M_{DW} / S_c (3n) or M_{DW} / S_c (cr) as applicable.

f_s (LL+ IM): Un-factored stress at edge of flange for controlling steel flange due to vertical composite live load plus impact loads as calculated below (ksi).
M_{LL+IM} / S_c (n) or M_{LL+IM} / S_c (cr) as applicable.

$f_s + f_f / 2$ (Service II): Sum of stresses as computed below (ksi).
f_s DC1 + f_s DC2 + f_s DW + 1.3 f_s (LL+ IM) + f_f /2

Service II Resistance: Composite ($0.95R_hF_{yf}$) or noncomposite ($0.80R_hF_{yf}$) stress capacity according to Article 6.10.4.2 (ksi).

$f_s + f_f / 3$ (Strength I): Sum of stresses as computed below on non-compact sections (ksi).
$1.25 (f_s$ DC1 + f_s DC2) + 1.5 f_s DW + 1.75 f_s (LL+ IM) + f_f /3

$\Phi_f F_n$: Factored nominal flexural resistance of the section as specified in Article 6.10.7.2 or 6.10.8 as applicable (ksi).

V_f: Maximum factored shear range in span computed according to Article 6.10.10.

R_{DC1}: Un-factored reaction due to non-composite dead load (kip).

R_{DC2}: Un-factored reaction due to long-term composite (superimposed excluding future wearing surface) dead load (kip).

R_{DW} : Un-factored reaction due to long-term composite (superimposed future wearing surface only) dead load (kip).

R_{LL} : Un-factored live load reaction (kip).

R_{IM} : Un-factored dynamic load allowance (impact) (kip).

R_{Total} (Strength I)(Impact): Strength I load combination of factored design reactions (kip).
$1.25 (R_{DC1} + R_{DC2}) + 1.5R_{DW} + 1.75 (R_{LL} + R_{IM})$

R_{Total} (Strength I)(No Impact): Strength I load combination of factored design reactions, not including dynamic load allowance (Impact) (kip).
$1.25 (R_{DC1} + R_{DC2}) + 1.5R_{DW} + 1.75 (R_{LL})$

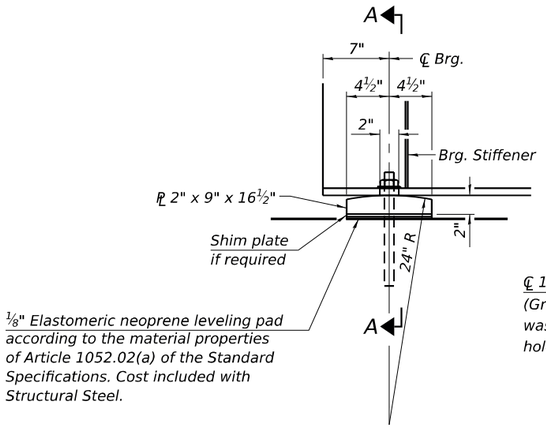

ELEVATION AT ABUTMENT

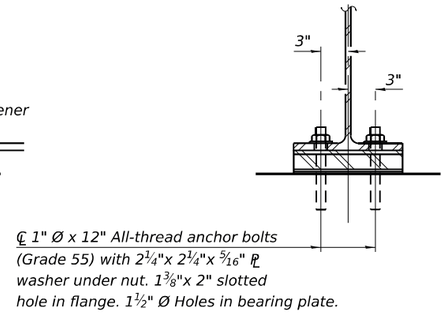

SECTION A-A

FIXED BEARING

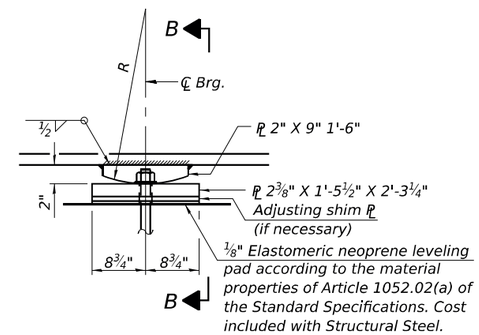

ELEVATION AT PIER

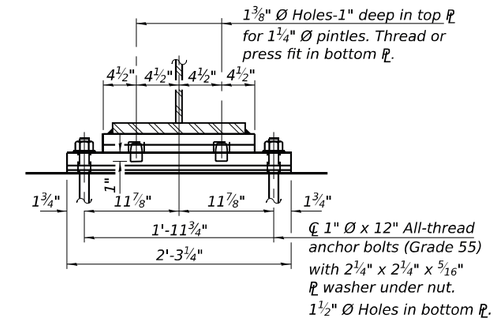

SECTION B-B

FIXED BEARING

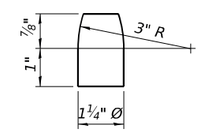

PINTLE

Notes:

The structural steel plates and pintles of the Bearing Assembly shall conform to the requirements of AASHTO M270 Grade 50.

Two 1/8 in. adjusting shims shall be provided for each bearing in addition to all other plates or shims and placed as shown on bearing details.

The anchor bolt sizes and grades shown constitute a calculated seismic structural fuse. Substitution of higher diameter and/or grade anchor bolts will not be allowed.

Anchor bolts at all supports shall be installed as each member is erected unless an equivalent temporary means of lateral restraint is used.

All bearing plates, shim plates, fill plates, anchor bolts, nuts, washers and pintles shall be galvanized according to AASHTO M111 or M232 as applicable.

BILL OF MATERIAL

Item	Unit	Total
Anchor Bolts, 1"	Each	48

MODEL: Default
FILE NAME: O:\2022R3\IDOTCAD CONNECT\23012.20 V&K IL 13 over North Fork Saline River\CADD Data\Bridge\Plotsheets\0300026-78969-021-Bearing Details.dgn
10/31/2025 9:13:03 AM

EFK♦Moen
Civil Engineering Design

USER NAME = ABenz	DESIGNED - KRH	REVISED -	
	CHECKED - ACB	REVISED -	
PLOT SCALE =	DRAWN - KRH	REVISED -	
PLOT DATE = 10/31/2025	CHECKED - ACB	REVISED -	

STATE OF ILLINOIS
DEPARTMENT OF TRANSPORTATION

BEARING DETAILS
STRUCTURE NO. 030-0026

SHEET 21 OF 31 SHEETS

F.A.P. RTE.	SECTION	COUNTY	TOTAL SHEETS	SHEET NO.
331	(10-1, 10-3-1)B-2	GALLATIN	86	46
		CONTRACT NO. 78969		
	ILLINOIS	FED. AID PROJECT		

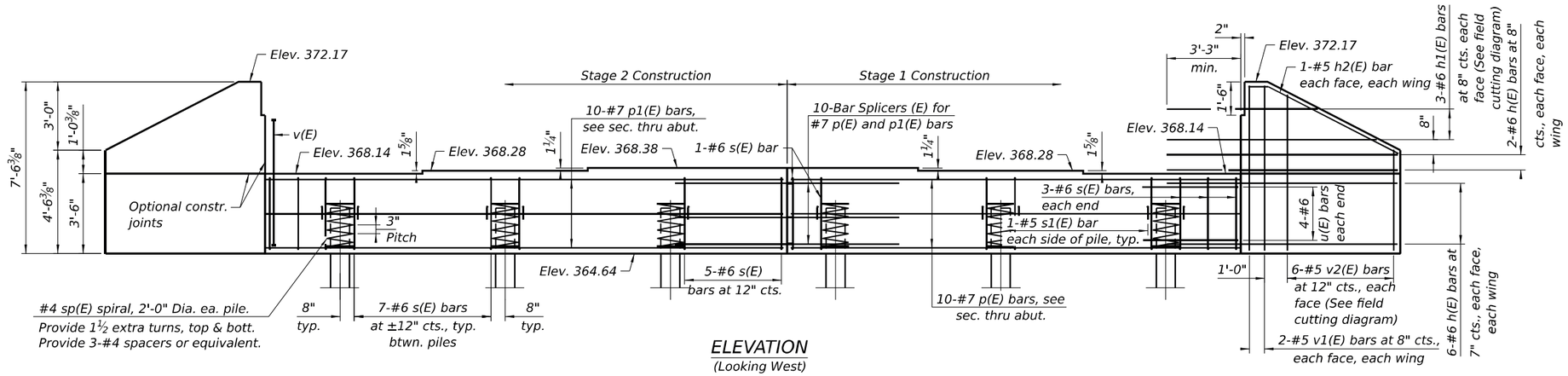

ELEVATION
(Looking West)

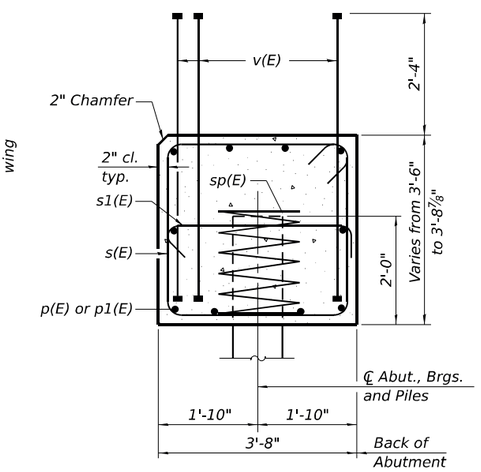

SEC. THRU ABUT.

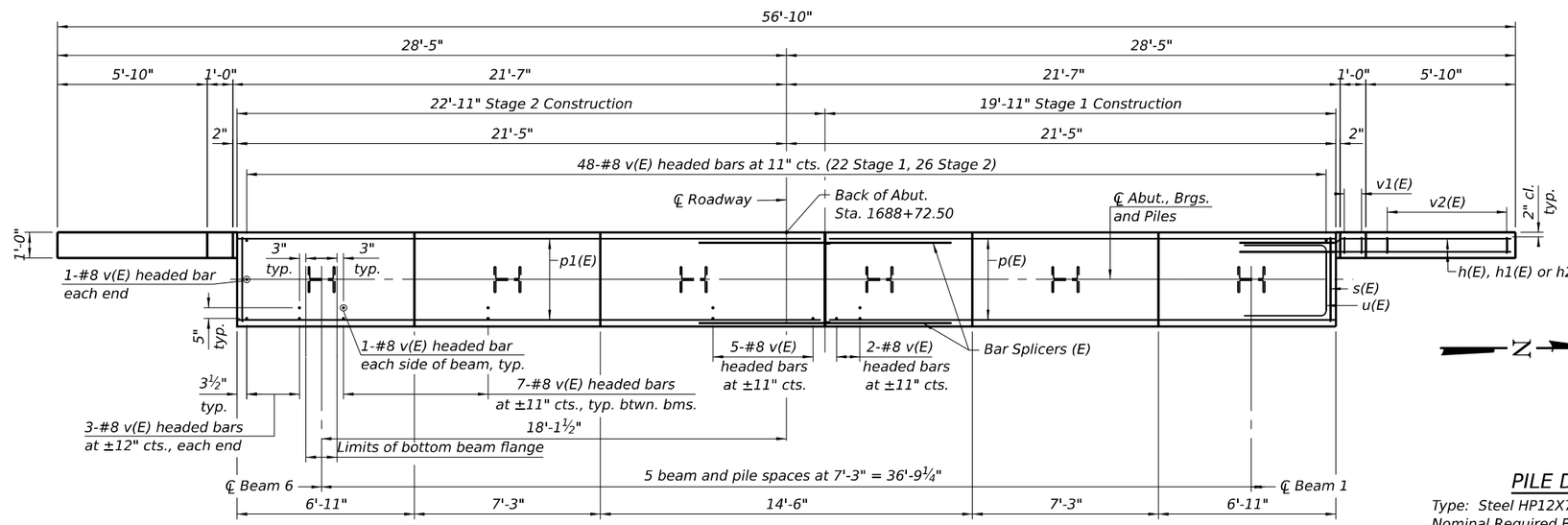

PLAN

BILL OF MATERIAL

Bar	No.	Size	Length	Shape
h(E)	32	#6	10'-2"	
h1(E)	6	#6	15'-11"	
h2(E)	4	#5	7'-3"	
p(E)	10	#7	19'-7"	
p1(E)	10	#7	22'-7"	
s(E)	41	#6	14'-4"	
s1(E)	12	#5	4'-4"	
* sp(E)	6	#4	2'-0"	
u(E)	8	#6	9'-8"	
v(E)	103	#8	5'-6"	
v1(E)	8	#5	7'-3"	
v2(E)	12	#5	11'-2"	
Structure Excavation			Cu. Yd.	118
Concrete Structures			Cu. Yd.	25.7
Reinforcement Bars, Epoxy Coated			Pound	4,570
Furnishing Steel Piles HP12X74			Foot	260
Driving Piles			Foot	260
Test Pile Steel HP12X74			Each	1
Pile Shoes			Each	6

* Length is height of spiral.

PILE DATA

Type: Steel HP12X74 with Pile Shoes
Nominal Required Bearing: 589 kips
Factored Resistance Available: 324 kips
Est. Length: 52 ft
No. Production Piles: 5
No. Test Piles: 1

Notes:
Pour steps monolithically with cap.
For details of piles see sheet 26 of 31.
Bar terminators, paid for separately.
See Total Bill of Material.

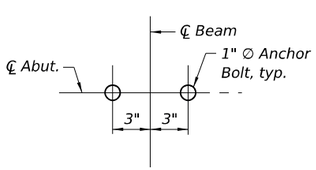

ANCHOR BOLT INSTALLATION DETAIL

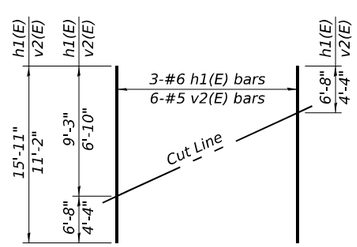

FIELD CUTTING DIAGRAM

Order h1(E) and v2(E) full length. Cut as shown and use remainder of bars in opposite wing.

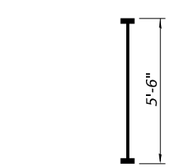

BAR v(E)
(Headed. 206 - #8 Bar terminators)

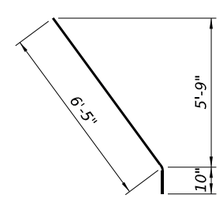

BAR h2(E)

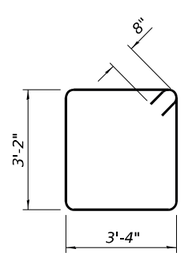

BAR s(E)

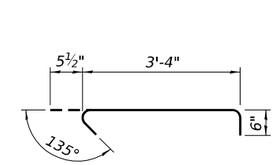

BAR s1(E)

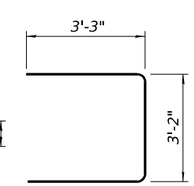

BAR u(E)

AI-SB-0 3-08-2024

EFK•Moen Civil Engineering Design	USER NAME = ABenz	DESIGNED - KRH	REVISED -
		CHECKED - ACB	REVISED -
	PLOT SCALE =	DRAWN - KRH	REVISED -
	PLOT DATE = 10/31/2025	CHECKED - ACB	REVISED -

STATE OF ILLINOIS
DEPARTMENT OF TRANSPORTATION

WEST ABUTMENT
STRUCTURE NO. 030-0026

SHEET 22 OF 31 SHEETS

F.A.P. RTE.	SECTION	COUNTY	TOTAL SHEETS	SHEET NO.
331	(10-1, 10-3-1)B-2	GALLATIN	86	47
		CONTRACT NO. 78969		
		ILLINOIS	FED. AID PROJECT	

MODEL: Default
FILE NAME: O:\2022R3\IDOTCAD CONNECT\2012.20 V&K IL 13 over North Fork Saline River\CADD Data\BridgePlotsheets\030026-78969-022-West Abutment.dgn
10/31/2025 9:13:07 AM

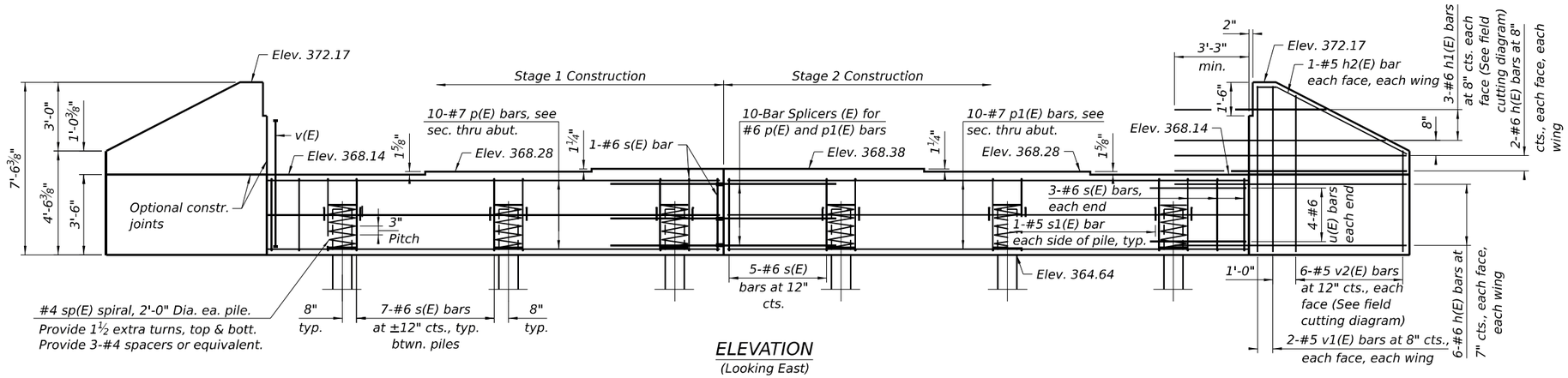

ELEVATION
(Looking East)

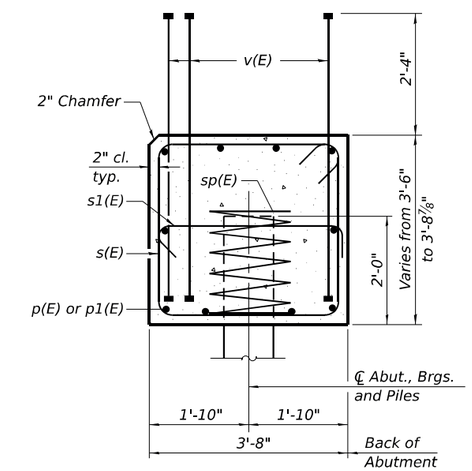

SEC. THRU ABUT.

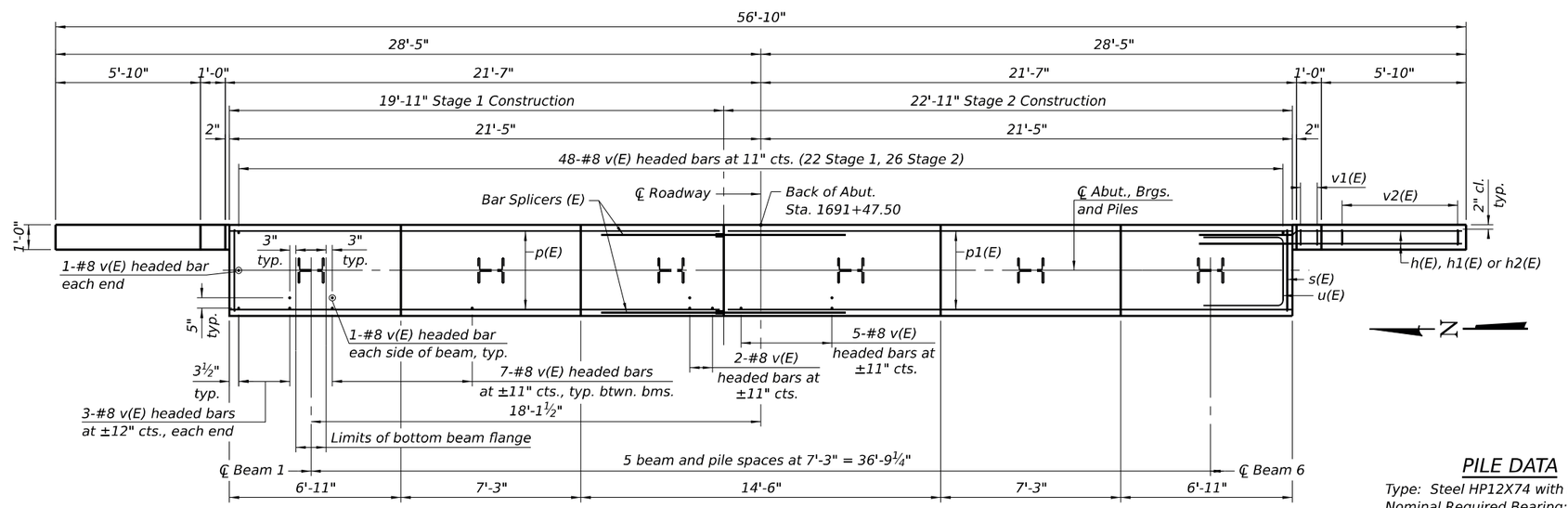

PLAN

PILE DATA

Type: Steel HP12X74 with Pile Shoes
Nominal Required Bearing: 589 kips
Factored Resistance Available: 324 kips
Est. Length: 55 ft
No. Production Piles: 5
No. Test Piles: 1

BILL OF MATERIAL

Bar	No.	Size	Length	Shape
h(E)	32	#6	10'-2"	
h1(E)	6	#6	15'-11"	
h2(E)	4	#5	7'-3"	
p(E)	10	#7	19'-7"	
p1(E)	10	#7	22'-7"	
s(E)	41	#6	14'-4"	
s1(E)	12	#5	4'-4"	
* sp(E)	6	#4	2'-0"	
u(E)	8	#6	9'-8"	
v(E)	103	#8	5'-6"	
v1(E)	8	#5	7'-7"	
v2(E)	12	#5	11'-2"	
Structure Excavation			Cu. Yd.	118
Concrete Structures			Cu. Yd.	25.7
Reinforcement Bars, Epoxy Coated			Pound	4,570
Furnishing Steel Piles HP12X74			Foot	275
Driving Piles			Foot	275
Test Pile Steel HP12X74			Each	1
Pile Shoes			Each	6

* Length is height of spiral.

Notes:
Pour steps monolithically with cap.
For details of piles see sheet 26 of 31.
Bar terminators, paid for separately.
See Total Bill of Material.

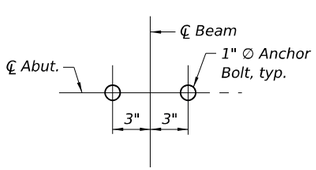

ANCHOR BOLT INSTALLATION DETAIL

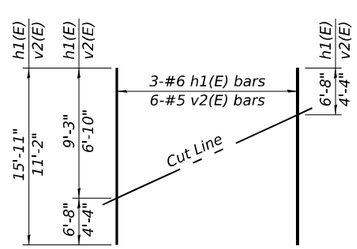

FIELD CUTTING DIAGRAM
Order h1(E) and v2(E) full length. Cut as shown and use remainder of bars in opposite wing.

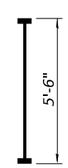

BAR v(E)
(Headed. 206 - #8 Bar terminators)

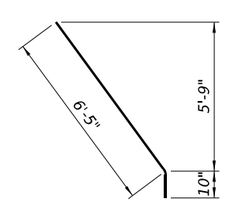

BAR h2(E)

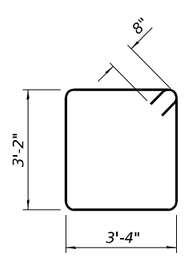

BAR s(E)

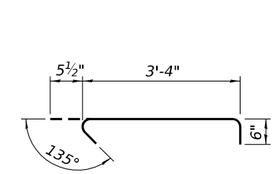

BAR s1(E)

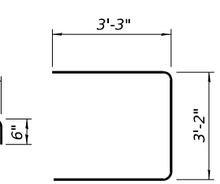

BAR u(E)

AI-SB-0 3-08-2024

EFK•Moen Civil Engineering Design

USER NAME = ABenz	DESIGNED - KRH	REVISED -
	CHECKED - ACB	REVISED -
PLOT SCALE =	DRAWN - KRH	REVISED -
PLOT DATE = 10/31/2025	CHECKED - ACB	REVISED -

STATE OF ILLINOIS
DEPARTMENT OF TRANSPORTATION

EAST ABUTMENT
STRUCTURE NO. 030-0026
SHEET 23 OF 31 SHEETS

F.A.P. RTE.	SECTION	COUNTY	TOTAL SHEETS	SHEET NO.
331	(10-1, 10-3-1)B-2	GALLATIN	86	48
		CONTRACT NO. 78969		
		ILLINOIS	FED. AID PROJECT	

MODEL: Default
FILE NAME: O:\2022R3\IDOTCAD CONNECT\23012.20 V&K IL 13 over North Fork Saline River\CADD Data\BridgePlotsheets\0300026-78969-023-East Abutment.dgn
10/31/2025 9:13:11 AM

* If the prevailing water surface elevation during construction is consistently different than estimated on the plans, the contractor may propose an adjustment to the top of the drilled shaft elevation as part of their installation procedure. The top of all drilled shafts within a substructure unit shall be constructed to the same elevation and extend above the prevailing water surface. The quantities and reinforcement detailing are based on the top of shaft and the estimated elevations shown and may change based on the actual elevations encountered at each shaft and the final top of shaft elevation.

If a portion of the drilled shaft web walls is under water, reinforcement may be placed underwater into forms. Concrete shall be tremied according to Article 503.08 of the Standard Specifications to an elevation of 1'-0" above the water line at the time of the construction.

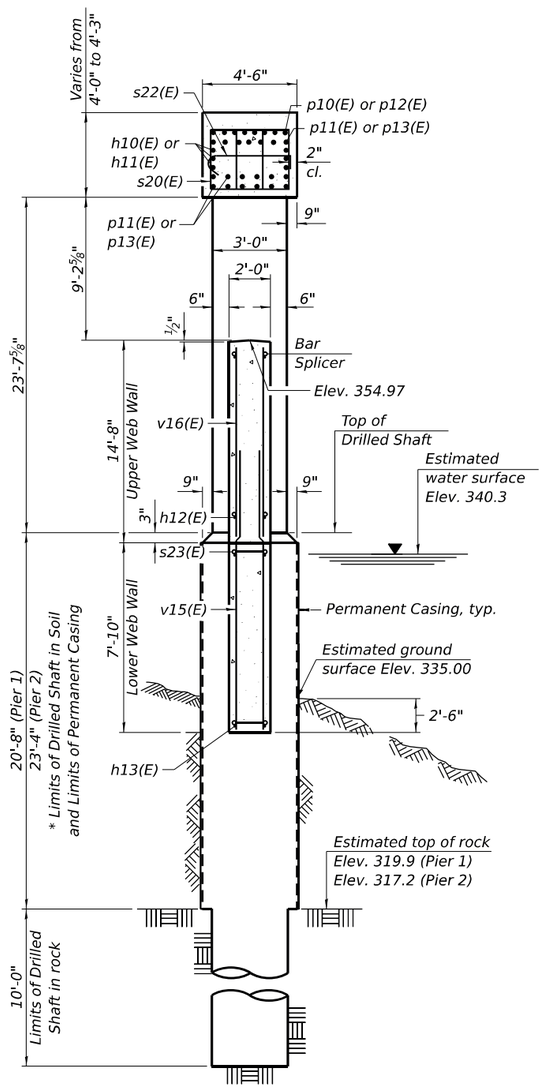

SECTION C-C

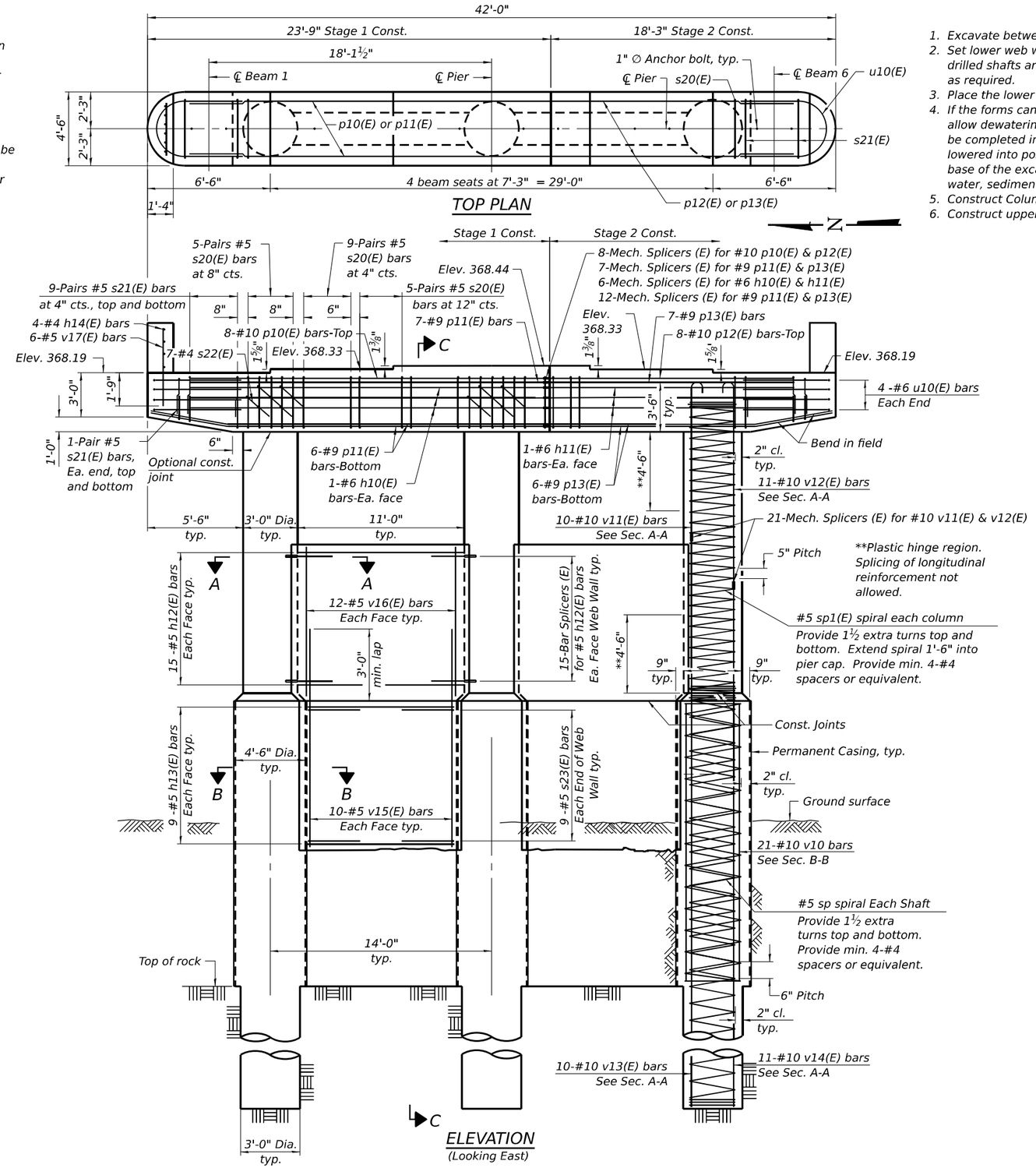

ELEVATION
(Looking East)

Construction Sequence for Web Wall:

1. Excavate between shafts to elevation of web wall base.
2. Set lower web wall forms through water to bear on the circular edge of drilled shafts and secure in place with fill, struts or tie forms together as required.
3. Place the lower web wall reinforcement cage into the forms using spacers
4. If the forms can be sealed against the shafts and streambed to allow dewatering, the reinforcement and the concrete placement may be completed in the dry. Alternatively, the rebar cage can be lowered into position through water and the concrete discharged at the base of the excavation through a tremie pipe or pump hose, displacing water, sediment, and tainted concrete out the top of the forms.
5. Construct Columns.
6. Construct upper web walls.

Notes:
Space reinforcement in cap to miss anchor bolts.
Pour steps monolithically with cap.
Minimum lap for spirals = 2'-9".
Cut sp, sp1(E) and v10(E) bars to fit.

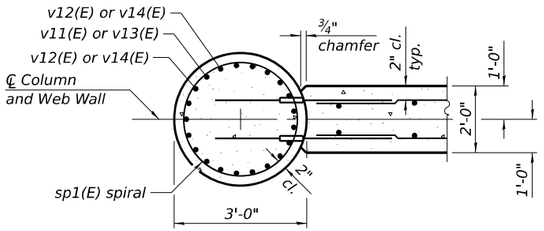

SECTION A-A

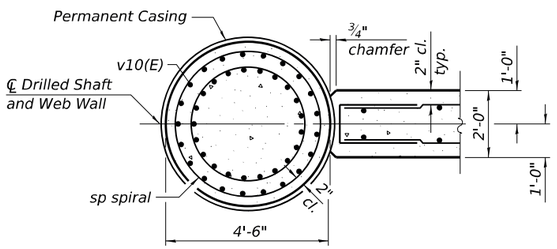

SECTION B-B

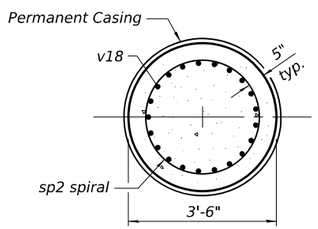

SECTION D-D

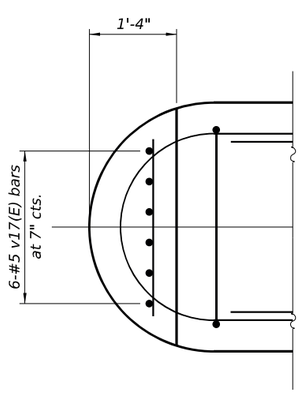

PLAN OF SHEAR KEY

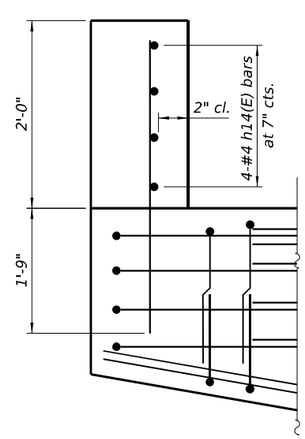

ELEVATION OF SHEAR KEY

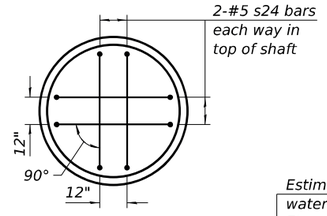

TOP PLAN

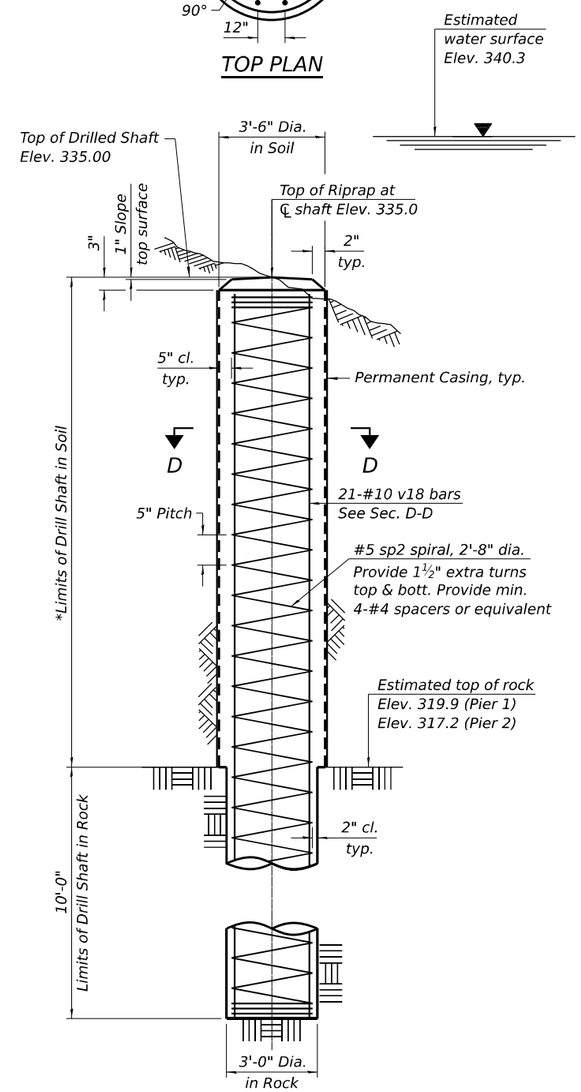

TYPICAL DRILLED SHAFT FOR SLOPE STABILITY

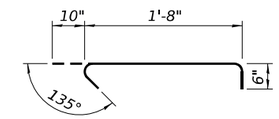

BAR s22(E)

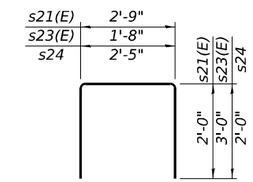

BARS s21(E), s23(E) & s24

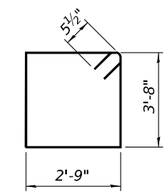

BAR s20(E)

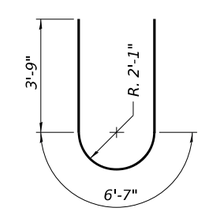

BAR u10(E)

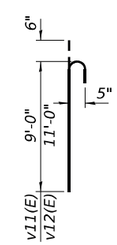

BARS v11(E) & v12(E)

BILL OF MATERIAL (2 PIERS)

	Bar	No.	Size	Length	Shape
	h10(E)	12	#6	21'-1"	
	h11(E)	12	#6	15'-9"	
	h12(E)	120	#5	11'-0"	
	h13(E)	72	#4	9'-4"	
	h14(E)	16	#4	3'-6"	
	p10(E)	16	#10	21'-1"	
	p11(E)	38	#9	21'-1"	
	p12(E)	16	#10	15'-9"	
	p13(E)	38	#9	15'-9"	
	s20(E)	244	#5	13'-9"	
	s21(E)	160	#5	6'-2"	
	s22(E)	42	#4	3'-0"	
	s23(E)	72	#5	7'-8"	
**	sp	6	#5	23'-0"	
**	sp1(E)	6	#5	58'-6"	
	u10(E)	16	#6	14'-1"	
	v10	126	#10	23'-0"	
	v11(E)	60	#10	9'-6"	
	v12(E)	66	#10	11'-6"	
	v13(E)	60	#10	51'-6"	
	v14(E)	66	#10	48'-6"	
	v15(E)	80	#5	10'-8"	
	v16(E)	96	#5	14'-4"	
	v17(E)	24	#5	4'-7"	
	Concrete Structures			Cu. Yd.	151.0
	Reinforcement Bars			Pound	22,310
	Reinforcement Bars, Epoxy Coated			Pound	53,900
	Bar Splicers			Each	240
	Permanent Casing			Foot	132
	Drilled Shaft in Soil			Cu. Yd.	77.5
	Drilled Shaft in Rock			Cu. Yd.	15.7
	Crosshole Sonic Logging Access Ducts			Foot	200
	Crosshole Sonic Logging Testing			Each	6

*If the prevailing water surface elevation during construction is consistently different than estimated on the plans, the Contractor may propose an adjustment to the top of the drilled shaft elevation as part of their installation procedure. The top of all drilled shafts for slope stability shall be constructed to the same elevation and extend above the prevailing water surface. The quantities and reinforcement detailing are based on the top of shaft ad the estimated elevations shown and may change based on the actual elevations encountered at each shaft and the final top of shaft elevation.

TWELVE DRILLED SHAFTS FOR SLOPE STABILITY BILL OF MATERIAL

	Bar	No.	Size	Length	Shape
**	sp2	12	#5	27'-5"	
	s24	48	#5	6'-5"	
	v18	252	#10	27'-7"	
	Reinforcement Bars			Pound	37,480
	Permanent Casing			Foot	197
	Drilled Shaft in Soil			Cu. Yd.	70.2
	Drilled Shaft in Rock			Cu. Yd.	31.4

** Length is height of spiral.
Cut sp2 and v18 bars to fit.

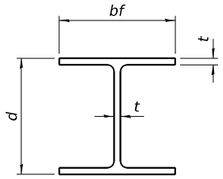

STEEL PILE TABLE

Designation	Depth d	Flange width bf	Web and Flange thickness t	Encasement diameter A
HP 18x181	18	18	1	36"
x157	17¾"	17⅞"	⅞"	36"
x135	17½"	17¾"	¾"	36"
HP 16x183	16½"	16½"	1⅛"	36"
x162	16¼"	16⅛"	1"	36"
x141	16	16	⅞"	36"
x121	15¾"	15⅞"	¾"	36"
HP 14x117	14¼"	14⅞"	13/16"	30"
x102	14"	14¾"	11/16"	30"
x89	13⅞"	14¾"	⅝"	30"
x73	13⅝"	14⅝"	½"	30"
HP 12x84	12¼"	12¼"	11/16"	24"
x74	12⅛"	12¼"	⅝"	24"
x63	12"	12⅛"	½"	24"
x53	11¾"	12"	7/16"	24"
HP 10x57	10"	10¼"	9/16"	24"
x42	9¾"	10⅛"	7/16"	24"
HP 8x36	8"	8⅛"	7/16"	18"

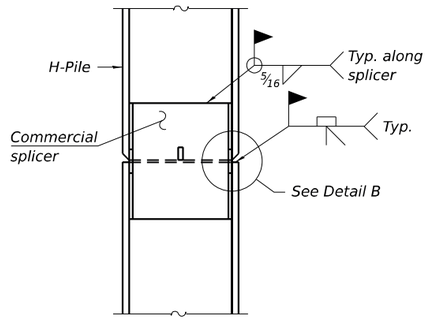

ELEVATION

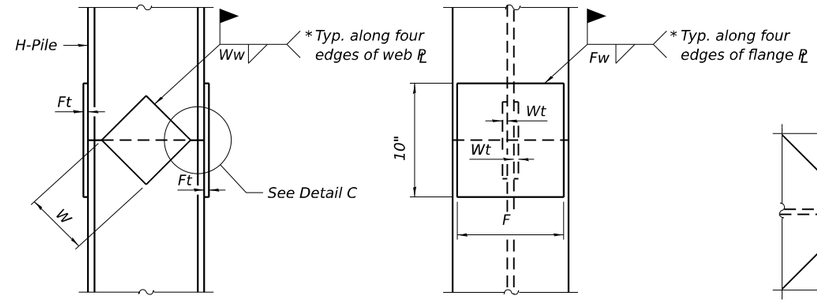

ELEVATION

END VIEW

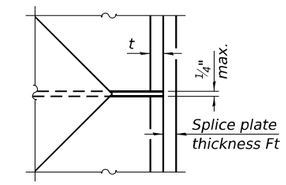

DETAIL C

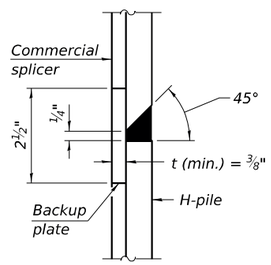

DETAIL B

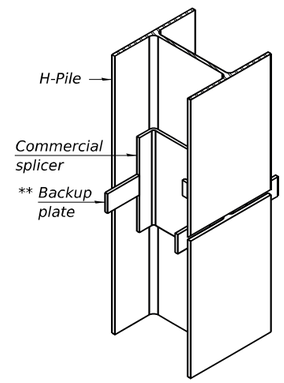

ISOMETRIC VIEW

WELDED COMMERCIAL SPLICE

Designation	F	Ft	Fw	W	Wt	Ww
HP 18x181	15½"	1½"	1"	9½"	⅞"	¾"
x157	15¼"	1¼"	1"	9½"	⅞"	¾"
x135	15¼"	1¼"	1"	9½"	⅞"	¾"
HP 16x183	13¾"	1½"	1"	8¼"	⅞"	¾"
x162	13½"	1½"	1"	8¼"	¾"	⅝"
x141	13½"	1¼"	⅞"	8¼"	¾"	⅝"
x121	13½"	1¼"	⅞"	8¼"	¾"	⅝"
HP 14x117	12½"	1¼"	⅞"	7¾"	⅝"	½"
x102	12½"	1"	¾"	7¾"	⅝"	½"
x89	12½"	⅞"	11/16"	7¾"	⅝"	½"
x73	12½"	¾"	9/16"	7¾"	⅝"	½"
HP 12x84	10"	1"	11/16"	6½"	⅝"	½"
x74	10"	⅞"	11/16"	6½"	⅝"	½"
x63	10"	¾"	½"	6½"	½"	⅜"
x53	10"	¾"	½"	6½"	½"	⅜"
HP 10x57	8"	⅞"	9/16"	5¼"	½"	⅜"
x42	8"	¾"	9/16"	5¼"	½"	⅜"
HP 8x36	6¾"	⅝"	7/16"	4"	½"	⅜"

WELDED PLATE FIELD SPLICE

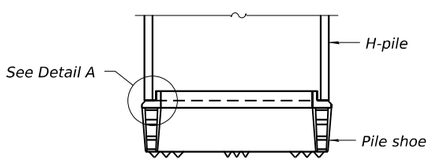

ELEVATION

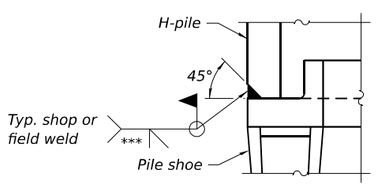

DETAIL A

SHOE ATTACHMENT

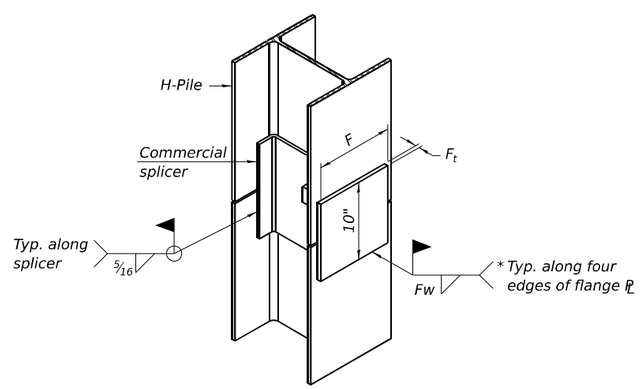

ISOMETRIC VIEW

WELDED COMMERCIAL SPLICE ALTERNATE

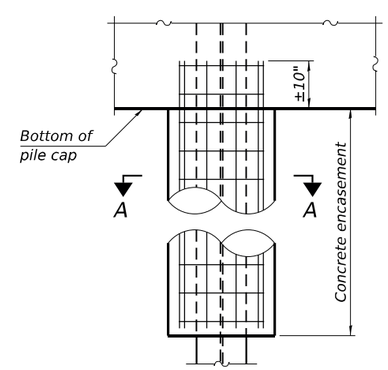

ELEVATION

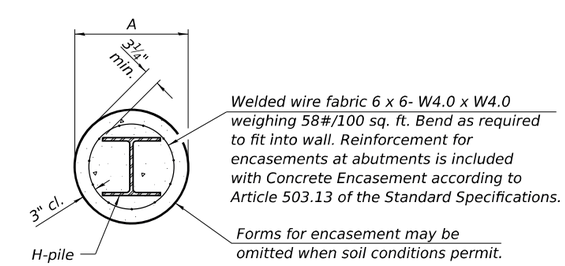

SECTION A-A

INDIVIDUAL PILE CONCRETE ENCASEMENT

(when specified)

Note:
The steel H-piles shall be according to AASHTO M270 Grade 50.

* Interrupt welds ¼" from end of web and/or each flange.

** Remove portions of backup plates that extend outside the flanges.

*** Weld size per pile shoe manufacturer (5/16" min.).

F-HP 4-4-2025

EFK•Moen Civil Engineering Design

USER NAME = ABenz	DESIGNED - KRH	REVISED -	
	CHECKED - ACB	REVISED -	
PLOT SCALE =	DRAWN - KRH	REVISED -	
PLOT DATE = 10/31/2025	CHECKED - ACB	REVISED -	

STATE OF ILLINOIS
DEPARTMENT OF TRANSPORTATION

HP PILE DETAILS
STRUCTURE NO. 030-0026

SHEET 26 OF 31 SHEETS

F.A.P. RTE.	SECTION	COUNTY	TOTAL SHEETS	SHEET NO.
331	(10-1, 10-3-1)B-2	GALLATIN	86	51
		CONTRACT NO. 78969		
	ILLINOIS	FED. AID PROJECT		

MODEL: Default
FILE NAME: O:\2022R3\IDOTCAD CONNECT\23012.20 V&K IL 13 over North Fork Saline River\CADD Data\Bridge\Plotsheets\0300026-78969-026-HP Pile Details.dgn
10/31/2025 9:13:24 AM

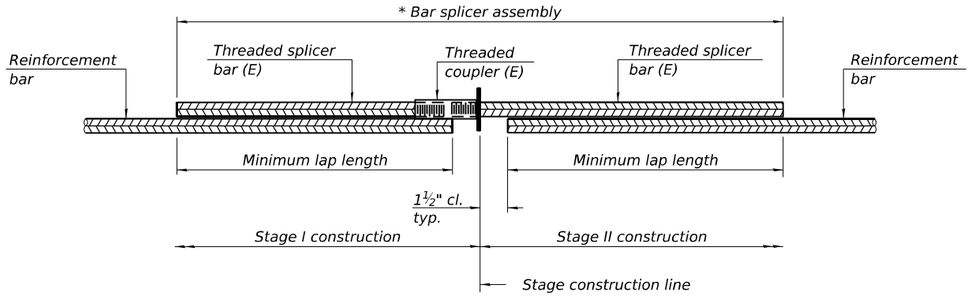

STANDARD BAR SPLICER ASSEMBLY PLAN

Only bar splicer assemblies as presented on the approved QPL list may be used.

Threaded splicer bar length = min. lap length + 1½" + thread length

* Epoxy not required on Bar Splicer Assembly components used in conjunction with black bars.

Location	Bar size	No. assemblies required	Minimum lap length
Deck	#5	859	3'-10"
West Approach	#5	16	2'-6"
West Approach	#4	16	2'-0"
East Approach	#5	16	2'-6"
East Approach	#4	16	2'-0"
West Abutment	#7	10	4'-1"
East Abutment	#7	10	4'-1"
West Appr. Footing	#5	40	2'-1"
East Appr. Footing	#5	40	2'-1"
Piers	#5	120	4'-8"

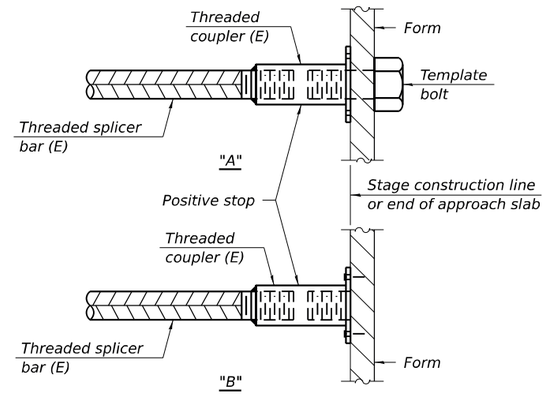

INSTALLATION AND SETTING METHODS

"A" : Set bar splicer assembly by means of a template bolt.
"B" : Set bar splicer assembly by nailing to wood forms or cementing to steel forms.
(E) : Indicates epoxy coating.

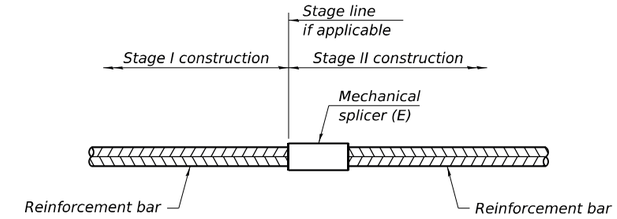

STANDARD MECHANICAL SPLICER

Location	Bar size	No. assemblies required
Diaphragm	#6	14
Piers	#6	12
Piers	#9	38
Piers	#10	16

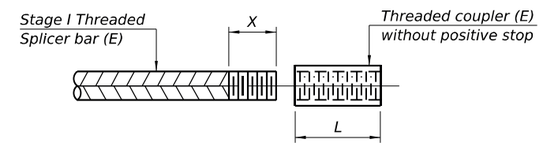

THREADING OF ASSEMBLIES

The threaded length "X" shall be no more than L/2. The bar should be tightened until 0-1 thread(s) is/are exposed.

Notes:
Splicer bars shall be deformed with threaded ends and have a minimum 60 ksi yield strength.
All reinforcement shall be lapped and tied to the splicer bars.
Bar splicer assemblies shall be epoxy coated according to the requirements for reinforcement bars. See Section 508 of the Standard Specifications.
See approved list of bar splicer assemblies and mechanical splicers for alternatives.

BSD-1 4-4-2025

EFK•Moen Civil Engineering Design

USER NAME = ABenz	DESIGNED - KRH	REVISED -	
	CHECKED - ACB	REVISED -	
PLOT SCALE =	DRAWN - KRH	REVISED -	
PLOT DATE = 10/31/2025	CHECKED - ACB	REVISED -	

STATE OF ILLINOIS
DEPARTMENT OF TRANSPORTATION

BAR SPLICER ASSEMBLY AND MECHANICAL SPLICER DETAILS
STRUCTURE NO. 030-0026

SHEET 27 OF 31 SHEETS

F.A.P. RTE.	SECTION	COUNTY	TOTAL SHEETS	SHEET NO.
331	(10-1, 10-3-1)B-2	GALLATIN	86	52

CONTRACT NO. 78969

ILLINOIS FED. AID PROJECT

MODEL: Default
FILE NAME: O:\2022R3\IDOTCAD CONNECT\23012.20 V&K IL 13 over North Fork Saline River\CADD Data\Bridge\Plotsheets\0300026-78969-027-Bar Splicer.dgn
10/31/2025 9:13:26 AM

Illinois Department of Transportation
Division of Highways
District 9

SOIL BORING LOG

Date 11/3/21

ROUTE IL 13 DESCRIPTION Bridge over the North Fork of the Saline River (near W. Abut.) LOGGED BY L. Estel

SECTION 10-2B (ex.) LOCATION 2.5 miles West of IL 1, SEC. 16, TWP. 9S, RNG. 8E, PM

COUNTY Gallatin DRILLING METHOD Hollow Stem Auger (8" O.D., 3.25" I.D.) HAMMER TYPE Auto SPT 140 lbs (HE=86.5%)

STRUCT. NO. 030-0015
Station 1690+10

BORING NO. 1-S
Station 1688+41
Offset 13.0ft Lt
Ground Surface Elev. 371.8 ft

Surface Water Elev. 324.9 ft
Stream Bed Elev. 318.9 ft

Groundwater Elev.:
First Encounter ft
Upon Completion ft
After Hrs. ft

Description	Elev.	DEPTH (ft)	BLOWS	UCS Qu (tsf)	MOIST (%)
Cored Shoulder, 8 in. HMA	371.13				
Hard dark Grey and Brown Laminate, Damp CLAY			20		
			6 6	4.9 B	15
Stiff dark Grey and Brown Laminate, Damp CLAY	367.30	-5	3		
			4 4	1.5 B	21
Stiff dark Greyish Brown, Damp SILTY CLAY	364.80		3		
			4 6	1.9 S	17
M. Stiff dark Greyish Brown, Damp SILTY CLAY	362.30	-10	2		
			2 2	0.8 B	23
			2		
			2 2	0.75 B	22
V. Soft dark Greyish Brown, Moist SILTY CLAY	357.30	-15	2		
			2 3	0.2 B	25
M. Stiff dark Grey, Moist CLAY	354.80		1		
			2 3	1.0 B	23
Soft Brown, Moist CLAY	352.30	-20	1		
Soft Brown, Moist CLAY *(continued)*			3 3	0.4 B	25
V. Stiff dark Grey, Damp CLAY	349.80		3		
			4 4	2.9 B	20
Stiff dark Grey and Brown, Damp CLAY	347.30	-25	2		
			3 4	1.0 B	22
V. Stiff dark Grey with streaks of Black, Damp CLAY	344.80		2		
			3 4	2.2 B	19
Stiff dark Grey and Brown with streaks of Black, Damp CLAY	342.30	-30	3		
			5 6	1.6 B	20
(dark Grey and Brown)			2		
			3 5	1.4 B	22
Stiff dark Grey and Brown, Damp SILTY CLAY	337.30	-35	2		
			4 5	1.5 B	18
(Grey)			3		
			4 6	1.0 B	21
	332.30	-40	2		

The Unconfined Compressive Strength (UCS) Failure Mode is indicated by (B-Bulge, S-Shear, P-Penetrometer, E-Estimated)
Abbreviations W.O.H - Sampler Advanced By Weight of Hammer, W.O.P - Advanced by Weight of Pipe, B.S. - Before Seating
The SPT (N value) is the sum of the last two blow values in each sampling zone (AASHTO T206) BBS, from 137 (Rev. 8-99)

File Name S:\MATERIALS GEOTECHNICAL UNIT\GINT\PROJECTS\PROJECTS FILE\GALLATIN\STRUCTURES\030-0015 IL 13 OVER N F SALINE R 2021\030-0015 IL 13 OVER N F SALINE R 2221.GPJ Data Template D6TEMPLT.GDT Date Printed 6/21/22
Latitude 37 44 38.32 Longitude -88 19 50.65 Datum NAD83 Job Number

Illinois Department of Transportation
Division of Highways
District 9

SOIL BORING LOG

Date 11/3/21

ROUTE IL 13 DESCRIPTION Bridge over the North Fork of the Saline River (near W. Abut.) LOGGED BY L. Estel

SECTION 10-2B (ex.) LOCATION 2.5 miles West of IL 1, SEC. 16, TWP. 9S, RNG. 8E, PM

COUNTY Gallatin DRILLING METHOD Hollow Stem Auger (8" O.D., 3.25" I.D.) HAMMER TYPE Auto SPT 140 lbs (HE=86.5%)

STRUCT. NO. 030-0015
Station 1690+10

BORING NO. 1-S
Station 1688+41
Offset 13.0ft Lt
Ground Surface Elev. 371.8 ft

Surface Water Elev. 324.9 ft
Stream Bed Elev. 318.9 ft

Groundwater Elev.:
First Encounter ft
Upon Completion ft
After Hrs. ft

Description	Elev.	DEPTH (ft)	BLOWS	UCS Qu (tsf)	MOIST (%)
Stiff Grey with streaks of Brown, Damp CLAY - SILTY CLAY *(continued)*			4 6	1.6 B	22
Stiff Brownish Grey, Damp CLAY	327.30	-45	5		
			7 10	2.0 B	20
Hard Grey, Dry CLAY SHALE	321.30	-50	4		
			8 100/3"		3
		-55			
		-60			

Bottom of hole @ 50.7 ft

No free water encountered

To convert "N" values to "N60", multiply by 1.44; Hammer efficiency = 86.5%

Ground surface elevation referenced to BM 137, chiseled square on hub guard at SW corner of SN 030-0015, EL. 372.04

DEPTH (ft)	BLOWS	UCS Qu (tsf)	MOIST (%)
-65			
-70			
-75			
-80			

The Unconfined Compressive Strength (UCS) Failure Mode is indicated by (B-Bulge, S-Shear, P-Penetrometer, E-Estimated)
Abbreviations W.O.H - Sampler Advanced By Weight of Hammer, W.O.P - Advanced by Weight of Pipe, B.S. - Before Seating
The SPT (N value) is the sum of the last two blow values in each sampling zone (AASHTO T206) BBS, from 137 (Rev. 8-99)

File Name S:\MATERIALS GEOTECHNICAL UNIT\GINT\PROJECTS\PROJECTS FILE\GALLATIN\STRUCTURES\030-0015 IL 13 OVER N F SALINE R 2021\030-0015 IL 13 OVER N F SALINE R 2221.GPJ Data Template D6TEMPLT.GDT Date Printed 6/21/22
Latitude 37 44 38.32 Longitude -88 19 50.65 Datum NAD83 Job Number

SOIL BORING LOG

gonzalez COMPANIES, LLC

Page 1 of 1

Date 05/31/22

ROUTE IL 13 DESCRIPTION 030-0015 Bridge over North Fork Saline River near Ex. Pier 1 LOGGED BY Gonzalez (NRK)

SECTION 10-2B (ex.) LOCATION 2.5 miles west of IL 1 on IL 13, **SEC.** 16, **TWP.** 9S, **RNG.** 8E, 3rd **PM**, **Latitude** 37.744128, **Longitude** -88.329816

COUNTY Gallatin DRILLING METHOD Hollow Stem Auger(8"O.D.,3.25"I.D.) HAMMER TYPE Auto SPT 140lb HE 92

STRUCT. NO. 030-0015
Station 1690+10

BORING NO. 2-S
Station 1689+38
Offset 61.0 ft RT
Ground Surface Elev. 345.9 ft

Surface Water Elev. ft
Stream Bed Elev. ft

Groundwater Elev.:
First Encounter 312.4 ft ▼
Upon Completion 325.9 ft ▽
After ____ Hrs. ft

Description	Elev.	DEPTH (ft)	BLOWS (/6")	UCS Qu (tsf)	MOIST (%)
Soft to Medium Stiff, Brown, Moist, CLAY (FILL)			1		
			1 1	0.6 B	29
			1		
	341.6		63 13	0.8 P	22
Medium Dense, Gray, GRAVEL, with clay (FILL)	340.4	-5			
Soft to Medium Stiff, Moist, Brown, CLAY (FILL)	339.2		2		
Soft to Medium Stiff, Moist, Gray and Brown, SILTY CLAY LOAM; A-6(21) LL=40 PL=20 PI=20 3% Sand, 72%Silt, 26% Clay			1 2	0.9 B	27
			2		
			1 1	2.3 B	22
		-10			
			2		
			3 5	1.7 B	22
			3		
			3 5	2.7 B	20
		-15			
			2		
			3 5	1.5 B	24
LL=37 PL=21 PI=16 4% Sand, 75%Silt, 22% Clay			2		
	326.1	-20	2 55	1.7 B	23

Description	Elev.	DEPTH (ft)	BLOWS (/6")	UCS Qu (tsf)	MOIST (%)
Gray, CLAY SHALE, Dry, Weathered, Soft Field Hardness *(continued)*			100/3"		
					4
			100/6"		
		-25			4
				23.6 MSPT	3
				27.7 MSPT	4
		-30			
				23.6 MSPT	4
	312.9				
Black, COAL, Soft Field Hardness ▼				14.2 MSPT	29
		-35			
	309.9				
Gray to Black, CLAY SHALE, Dry, Weathered, Soft Field Hardness				47.1 MSPT	11
	307.3				
Boring terminated at 38.6 feet.				88.1 MSPT	14
		-40			

The Unconfined Compressive Strength (UCS) Failure Mode is indicated by (B-Bulge, S-Shear, P-Penetrometer)
The SPT (N value) is the sum of the last two blow values in each sampling zone (AASHTO T206)

BBS, form 137 (Rev. 8-99)

SOIL BORING LOG

gonzalez COMPANIES, LLC

Page 1 of 1

Date 05/31-06/01/22

ROUTE IL 13 DESCRIPTION 030-0015 Bridge over North Fork Saline River Near Ex. Pier 4 LOGGED BY Gonzalez (NRK)

SECTION 10-2B (ex.) LOCATION 2.5 miles west of IL 1 on IL 13, **SEC.** 16, **TWP.** 9S, **RNG.** 8E, 3rd **PM**, **Latitude** 37.74376447, **Longitude** -88.33039705

COUNTY Gallatin DRILLING METHOD Hollow Stem Auger(8"O.D.,3.25"I.D.) HAMMER TYPE Auto SPT 140lb HE 92

STRUCT. NO. 030-0015
Station 1690+10

BORING NO. 3-S
Station 1691+07
Offset 72.0 ft LT
Ground Surface Elev. 341.7 ft

Surface Water Elev. ft
Stream Bed Elev. ft

Groundwater Elev.:
First Encounter 324.5 ft ▼
Upon Completion 325.7 ft ▽
After ____ Hrs. ft

Description	Elev.	DEPTH (ft)	BLOWS (/6")	UCS Qu (tsf)	MOIST (%)
Medium Stiff to Stiff, Moist, Brown and Gray, SILTY CLAY (FILL)			2		
			3 5	1.8 B	21
			2		
			3 4	1.8 S	23
		-5			
A-7-6(29) LL=50 PL=23 PI=27 5% Sand, 53%Silt, 42% Clay			3		
			3 4	2.2 B	21
	333.7				
Medium Stiff, Moist, Brown to Gray, SILTY CLAY, with iron nodules; A-7-6(25) LL=43 PL=18 PI=25 4% Sand, 60%Silt, 36% Clay			1		
			2 3	1.3 B	22
		-10			
			2		
			2 2	1.1 B	23
			1		
			1 2	0.7 B	25
		-15			
		▽	1		
		▼	2 3	1.3 B	22
with Gravel			1		
	321.7	-20	3 6	1.5 B	22

Description	Elev.	DEPTH (ft)	BLOWS (/6")	UCS Qu (tsf)	MOIST (%)
Very Stiff, Dry, Brown, CLAY			8		
			10 14	4.8 B	23
	317.7		4		
Medium Stiff, Dry, Brown, SANDY CLAY	317.2	-25	14 44	1.0 B	20
Brown to Gray, CLAY SHALE, Dry, Weathered, Soft Field Hardness				47.1 MSPT	15
				39.3 MSPT	10
		-30			
				21.1 MSPT	9
				12.4 MSPT	5
		-35			
	306.2				
Black, COAL, Soft Field Hardness				26.7 MSPT	12
	303.7				
Dark Gray, CLAY SHALE, Dry, Weathered, Soft Field Hardness	302.9			31.4 MSPT	8
Boring terminated at 38.8 feet.		-40			

The Unconfined Compressive Strength (UCS) Failure Mode is indicated by (B-Bulge, S-Shear, P-Penetrometer), MSPT-Modified SPT). The SPT (N value) is the sum of the last two blow values in each sampling zone (AASHTO T206)

BBS, form 137 (Rev. 8-99)

Illinois Department of Transportation
Division of Highways
District 9

SOIL BORING LOG

Date 11/2/21

ROUTE IL 13 DESCRIPTION Bridge over the North Fork of the Saline River (near E. Abut.) LOGGED BY L. Estel

SECTION 10-2B (ex.) LOCATION 2.5 miles West of IL 1, SEC. 16, TWP. 9S, RNG. 8E, PM

COUNTY Gallatin DRILLING METHOD Hollow Stem Auger (8" O.D., 3.25" I.D.) HAMMER TYPE Auto SPT 140 lbs (HE=86.5%)

STRUCT. NO. 030-0015
Station 1690+10

BORING NO. 4-S
Station 1691+74
Offset 13.0ft Rt
Ground Surface Elev. 371.1 ft

Surface Water Elev. 324.9 ft
Stream Bed Elev. 318.9 ft

Groundwater Elev.:
First Encounter ft
Upon Completion ft
After Hrs. ft

Description	Elev.	DEPTH (ft)	BLOWS	UCS Qu (tsf)	MOIST (%)
Cored Shoulder, 8 in. HMA	370.43				
V. Stiff dark Grey with specks of Black, Damp CLAY			6		
			4 4	3.5 B	19
V. Stiff dark Grey, Damp CLAY	366.60	-5	2		
			2 3	2.6 B	20
			3		
			4 4	2.0 B	20
		-10	2		
			3 5	3.1 B	19
			2		
			3 3	2.0 B	20
		-15	2		
			3 5	2.4 B	19
			2		
			4 6	2.4 B	21
		-20	3		
V. Stiff dark Grey, Damp CLAY *(continued)*			4 6	3.3 B	19
	349.10				
V. Stiff dark Grey, Damp SILTY CLAY			3		
			3 5	2.6 B	19
		-25	2		
			3 4	2.4 B	20
	344.10				
(Stiff)			3		
			3 5	1.9 B	20
	341.60				
Stiff dark Grey, Damp CLAY		-30	3		
			4 3	2.0 B	24
	339.10				
Stiff Tannish Brown, Moist CLAY			3		
			3 4	1.9 B	27
	336.60				
V. Stiff Brownish Tan with specks of Black, Damp CLAY		-35	4		
			5 6	3.7 B	19
			3		
			4 7	3.3 B	21
		-40	3		

The Unconfined Compressive Strength (UCS) Failure Mode is indicated by (B-Bulge, S-Shear, P-Penetrometer, E-Estimated)
Abbreviations W.O.H - Sampler Advanced By Weight of Hammer, W.O.P - Advanced by Weight of Pipe, B.S. - Before Seating
The SPT (N value) is the sum of the last two blow values in each sampling zone (AASHTO T206) BBS, from 137 (Rev. 8-99)

File Name S:\MATERIALS GEOTECHNICAL UNIT\GINT\PROJECTS\PROJECTS FILE\GALLATIN\STRUCTURES\030-0015 IL 13 OVER N F SALINE R 2021 GPJ Data Template D6TEMPLT.GDT Date Printed 6/21/22
Latitude 37 44 38.08 Longitude -88 19 46.57 Datum NAD83 Job Number

Illinois Department of Transportation
Division of Highways
District 9

SOIL BORING LOG

Date 11/2/21

ROUTE IL 13 DESCRIPTION Bridge over the North Fork of the Saline River (near E. Abut.) LOGGED BY L. Estel

SECTION 10-2B (ex.) LOCATION 2.5 miles West of IL 1, SEC. 16, TWP. 9S, RNG. 8E, PM

COUNTY Gallatin DRILLING METHOD Hollow Stem Auger (8" O.D., 3.25" I.D.) HAMMER TYPE Auto SPT 140 lbs (HE=86.5%)

STRUCT. NO. 030-0015
Station 1690+10

BORING NO. 4-S
Station 1691+74
Offset 13.0ft Rt
Ground Surface Elev. 371.1 ft

Surface Water Elev. 324.9 ft
Stream Bed Elev. 318.9 ft

Groundwater Elev.:
First Encounter ft
Upon Completion ft
After Hrs. ft

Description	Elev.	DEPTH (ft)	BLOWS	UCS Qu (tsf)	MOIST (%)
V. Stiff Brownish Tan with specks of Black, Damp CLAY *(continued)*			6 6	2.0 B	25
		-45	4		
			5 10	3.5 B	21
	321.60				
Hard Brown with specks of Black, Damp CLAY		-50	5		
			6 13	4.9 B	18
	316.60				
Hard Grey, Dry CLAY SHALE Borehole continued with rock coring.		-55	100/3"		7
		-60			

Bottom of hole @ 64.75 ft

No free water encountered

To convert "N" values to "N60", multiply by 1.44; Hammer efficiency = 86.5%

Ground surface elevation referenced to BM 137, chiseled square on hub guard at SW corner of SN 030-0015, EL. 372.04

The Unconfined Compressive Strength (UCS) Failure Mode is indicated by (B-Bulge, S-Shear, P-Penetrometer, E-Estimated)
Abbreviations W.O.H - Sampler Advanced By Weight of Hammer, W.O.P - Advanced by Weight of Pipe, B.S. - Before Seating
The SPT (N value) is the sum of the last two blow values in each sampling zone (AASHTO T206) BBS, from 137 (Rev. 8-99)

File Name S:\MATERIALS GEOTECHNICAL UNIT\GINT\PROJECTS\PROJECTS FILE\GALLATIN\STRUCTURES\030-0015 IL 13 OVER N F SALINE R 2021 GPJ Data Template D6TEMPLT.GDT Date Printed 6/21/22
Latitude 37 44 38.08 Longitude -88 19 46.57 Datum NAD83 Job Number

Illinois Department of Transportation
Division of Highways
District 9

ROCK CORE LOG

Date 11/2/21

ROUTE IL 13 **DESCRIPTION** Bridge over the North Fork of the Saline River (near E. Abut.) **LOGGED BY** L. Estel

SECTION 10-2B (ex.) **LOCATION** 2.5 miles West of IL 1, **SEC.** 16, **TWP.** 9S, **RNG.** 8E, **PM**

COUNTY Gallatin **CORING METHOD** Conventional rotary with polymer modified water

STRUCT. NO. 030-0015
Station 1690+10

CORING BARREL TYPE & SIZE NV3 5FT NWJ

Core Diameter 1.78 in
Top of Rock Elev. 316.60 ft
Begin Core Elev. 316.35 ft

BORING NO. 4-S
Station 1691+74
Offset 13.0ft Rt
Ground Surface Elev. 371.1 ft

	DEPTH (ft)	CORE (#)	RECOVERY (%)	R.Q.D. (%)	CORE TIME (min/ft)	STRENGTH (tsf)
Hard Grey, Dry CLAY SHALE, Field Hardness: Moderately Hard	-55	1	92	0	22	*114.3
311.35						
Hard Black, Dry COAL	-60	2	88	21	27	
310.00						
Hard Grey, Dry CLAY SHALE, Field Hardness: Moderately Hard						*175.9 *370.2
306.35	-65					
Bottom of hole @ 64.75 ft						
Ground surface elevation referenced to BM 137, chiseled square on hub guard at SW corner of SN 030-0015, EL. 372.04						
* Unconfined Compression Strength test results: desirable L/D ratios are between 2:1 and 2.5:1. Test specimens L/D ratios ranged between 1.5:1 and 1.7:1. Results may differ from results obtained from test specimens that meet the requirements.	-70					

Color pictures of the cores Yes, attached
Cores will be stored for examination until 5 Years after Construction
The "Strength" column represents the uniaxial compressive strength of the core sample (ASTM D-2938)
RQD is the ratio of the total length of sound core specimens >4" to total length of core run

BBS, form 138 (Rev. 8-99)

ROCK CORE 030-0015 IL 13 OVER N F SALINE R 2021.GPJ D6TEMPLT.GDT 6/21/22

MODEL: Default
FILE NAME: O:\2022R3\IDOTCAD CONNECT\23012.20 V&K IL 13 over North Fork Saline River\CADD Data\Bridge\Platsheets\0300026-78969-031-Boring Logs.dgn

EFK•Moen Civil Engineering Design

USER NAME = ABenz	DESIGNED - KRH	REVISED -	
	CHECKED - ACB	REVISED -	
PLOT SCALE =	DRAWN - KRH	REVISED -	
PLOT DATE = 10/31/2025	CHECKED - ACB	REVISED -	

STATE OF ILLINOIS DEPARTMENT OF TRANSPORTATION

BORING LOGS STRUCTURE NO. 030-0026

SHEET 31 OF 31 SHEETS

F.A.P. RTE.	SECTION	COUNTY	TOTAL SHEETS	SHEET NO.
331	(10-1, 10-3-1)B-2	GALLATIN	86	56

CONTRACT NO. 78969

ILLINOIS FED. AID PROJECT

10/31/2025 9:14:06 AM

B.M. Cut in South East corner of North East Wingwall 106' Rt. Sta. 1691+70 Elev. 358.18

Existing structure: 2 Span Truss one at 100' and one at 200'
Concrete Abuts. 20' Rdwy.
To be removed by Paving Contractor when old Rt. 13 is no longer used as a detour. Trusses to be salvaged.

STATE OF ILLINOIS
DEPARTMENT OF PUBLIC WORKS & BUILDINGS
DIVISION OF HIGHWAYS

ROUTE NO.	SECTION	COUNTY	TOTAL SHEETS	SHEET NO.
S.B.I. 13 / F.A.	10-2B	GALLATIN	31	5
FED. ROAD DIST. NO. 9	ILLINOIS	FED. AID PROJECT F-57(13)		

SHEET NO. 1
11 SHEETS

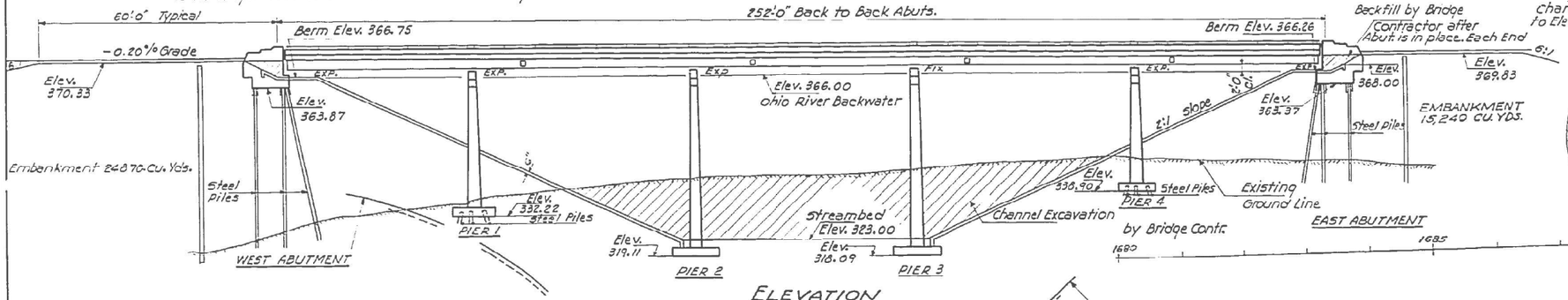

ELEVATION

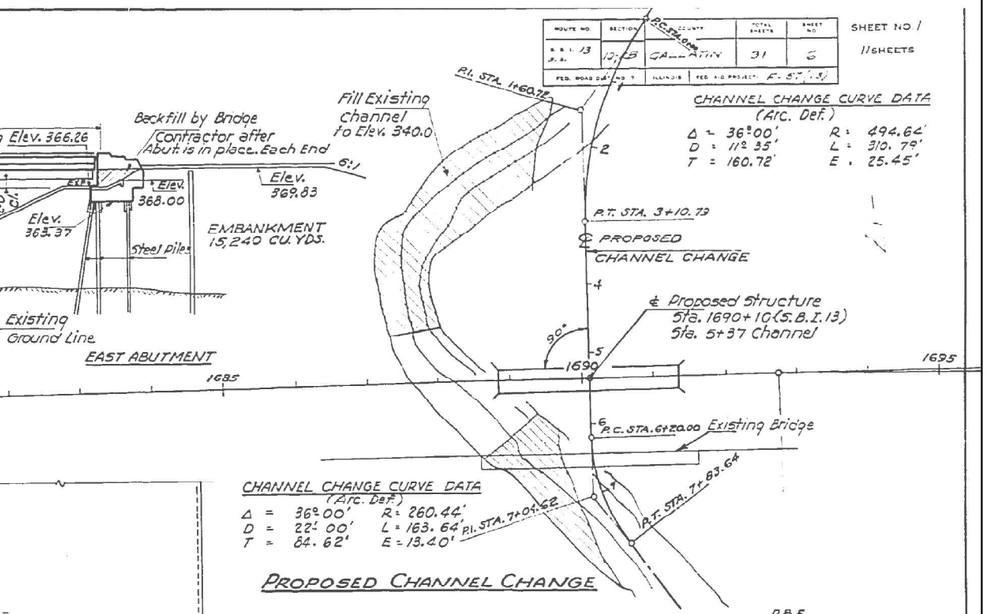

CHANNEL CHANGE CURVE DATA
(Arc. Def.)

Δ =	36°00'	R =	494.64'
D =	11°35'	L =	310.79'
T =	160.72'	E =	25.45'

CHANNEL CHANGE CURVE DATA
(Arc. Def.)

Δ =	36°00'	R =	260.44'
D =	22°00'	L =	163.64'
T =	84.62'	E =	13.40'

PROPOSED CHANNEL CHANGE

STATION 1690+10
BUILT 196 BY
STATE OF ILLINOIS
S.B.I. RT. 13-SEC. 10-2B
F.A. P.20J. F-57(13)
LOADING H20-S16

NAME PLATE
see Standard 2113
Locate at inside face of S.W. Wing. See Sheet 6

WATERWAY INFORMATION

Drainage Area - - -	306123 Acres
Character - - - - Level	
Req'd. Opening (30 Year Flood)	6000 Sq. Ft.
Present Opening	6034 Sq. Ft.
Proposed Opening	6000 Sq. Ft.

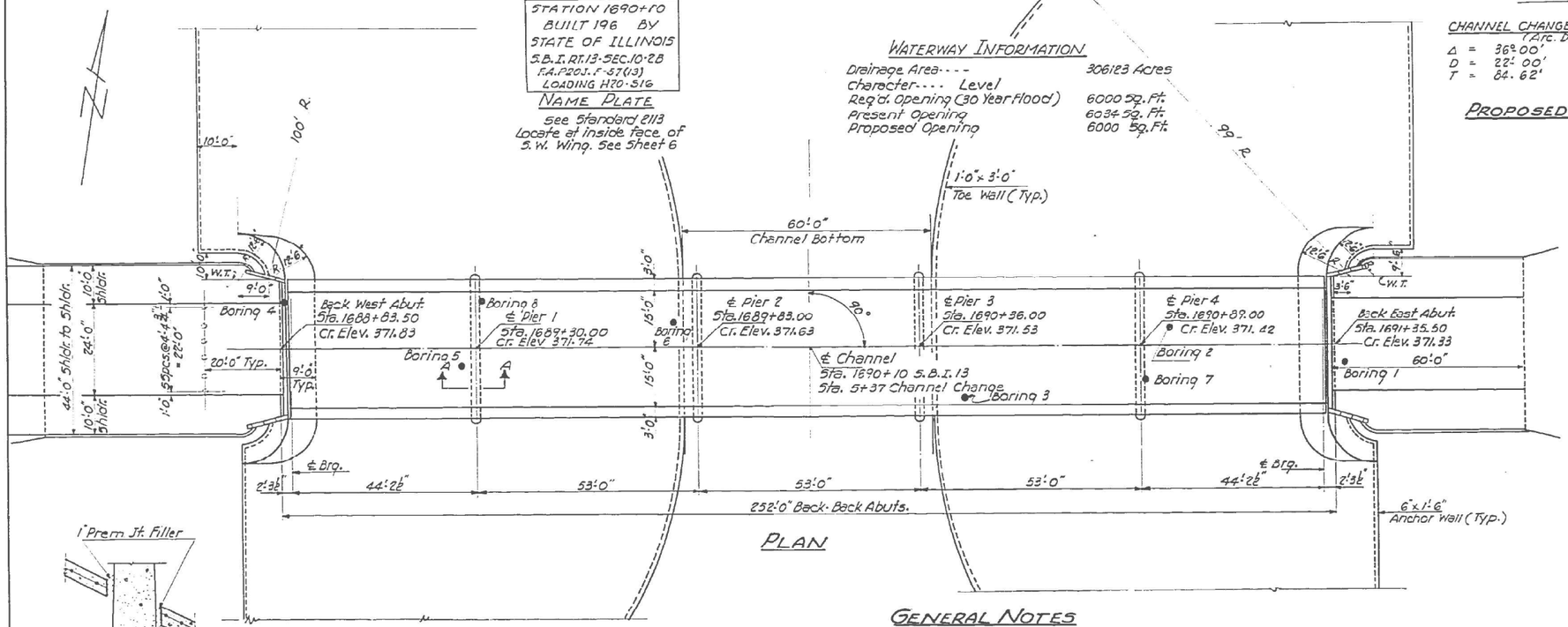

PLAN

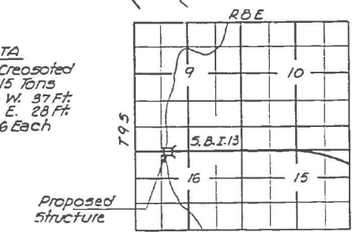

LOCATION PLAN

APP. PILE DATA

Type	Creosoted
Capacity	15 Tons
Estimated Length	W. 37 Ft.
	E. 28 Ft.
No. Req'd.	6 Each

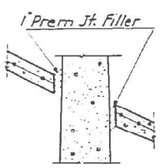

SECTION A-A

TOTAL BILL OF MATERIAL

ITEM	UNIT	SUPER.	SUBSTR.	TOTAL
† Bridge Seat Sealant	L.S.			L.S.
* Class-A-Excavation for Struct.	Cu. Yds.		340	340
Class-X-Concrete	Cu. Yds.	272.4	576.9	849.3
Structural Steel	Lbs.	202490		202490
Aluminum Handrail	Lin. Ft.	498		498
Reinforcement Bars	Lbs.	62670	34230	96900
Steel Piles (10 BP 42)	Lin. Ft.		1453	1453
Test Piles Steel (10 BP 42)	Each		2	2
Name Plates	Each		1	1
Slope Wall (6")	Sq. Yds.			5240
Protective Coat	Sq. Yds.			1083
Creosoted Piles	Lin. Ft.			390
Channel Excavation	Cu. Yds.			36,407
Rock Excav. for Struct.	Cu. Yds.			70

* Includes Excav. for Toe Wall
† Abutments Only

GENERAL NOTES

Coarse aggregate to be used in parapet handrail and end post must free of chert, flint, limonite, lignite and soft sandstone.

The concrete floor slab shall be finished in accordance with Art. 51.19 of the Standard Specifications.

Slope Wall shall be reinforced with welded wire fabric 6"x6" mesh, weighing 58 Lbs. per 100 sq. ft.

Layout of slope walls may be varied to suit ground conditions in the field as directed by the Engineer.

All reinforcement bars shall be lapped 20 diameters unless otherwise shown.

Rivets ¾", Open Holes 13/16", unless otherwise noted.

Anchor Bolts shall be set before riveting diaphragms over support.

The exposed surfaces of the expansion guard shall be given two shop coats of red lead paint; the contact surfaces shall be given one coat of red lead paint. Anchor studs shall not be painted.

Expansion Guards are included in quantity of Structural Steel. Estimated Weight = 1660 Lbs.

Except as otherwise provided all structural steel shall receive one shop coat of red lead paint and two field coats of aluminum paint. See Arts. 56.1 to 56.5 inclusive of the Standard Specifications.

The Contractor shall drive two steel (10 BP 42) test piles in permanent location one at East Abutment and one at Pier 1, as directed by the Engineer before ordering the remainder of piles.

Piles shall be driven to refusal.

DESIGN STRESSES
fc - - - - 1400 #/□" Super. & Sub.
vc - - - - 75 #/□" Ftgs.
fs - - - - 20000 #/□" Reinf.
fs - - - - 20000 #/□" Struct. (A-36)
n - - - - 10

Loading H20-516-44

DESIGNED	J.M. Tyworth	
CHECKED		
DRAWN	M. Miller	
CHECKED		

Aug. 8 1963
EXAMINED — ENGINEER OF BRIDGE AND TRAFFIC STRUCTURES
PASSED — ENGINEER OF DESIGN
APPROVED — CHIEF HIGHWAY ENGINEER

PROJ. F-57(13)
GENERAL PLAN & ELEVATION
NORTH FORK SALINE RIVER
S.B.I. RT. 13 - SEC. 10-2B
GALLATIN COUNTY
STATION 1690+10

Note:
Bars indicated thus 20x3-#5 etc. indicates 20 lines of bars with 3 lengths per line.
Min bar laps = 20 dia.

STATE OF ILLINOIS
DEPARTMENT OF PUBLIC WORKS & BUILDINGS
DIVISION OF HIGHWAYS

ROUTE NO.	SECTION	COUNTY	TOTAL SHEETS	SHEET NO.
S.B.I. 13	10-28	GALLATIN	31	7
FED. ROAD DIST. NO. 7		ILLINOIS	FED. AID PROJECT-	

SHEET NO. 2
11 SHEETS

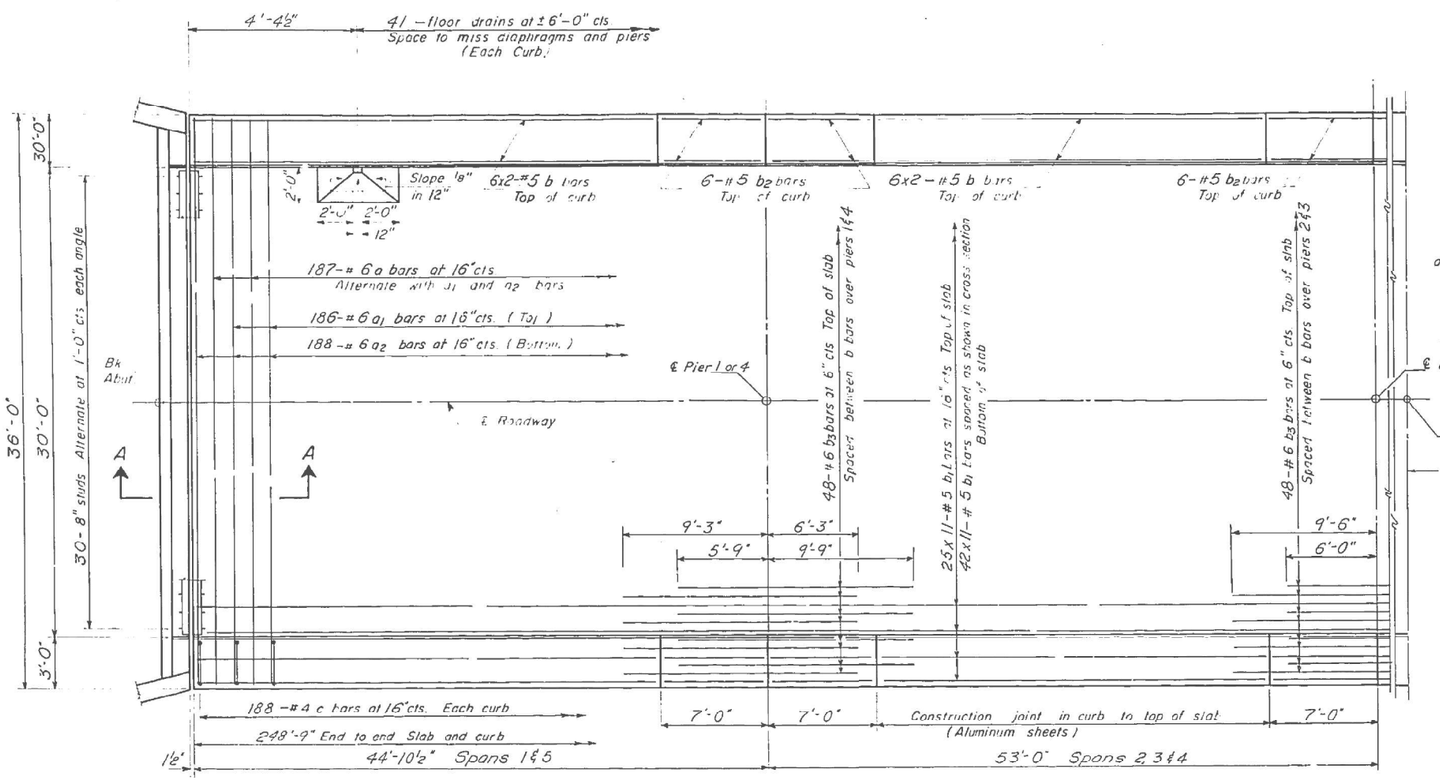

HALF PLAN

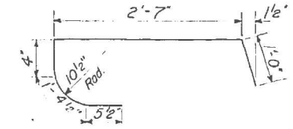

BAR c

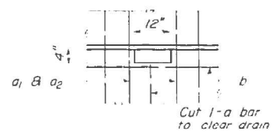

TYP. DETAIL AT DRAIN

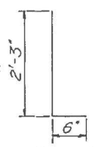

Bar d

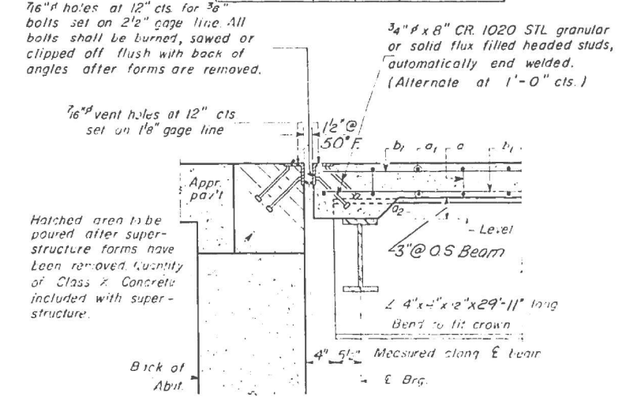

SECTION A-A

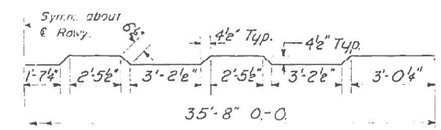

BAR a

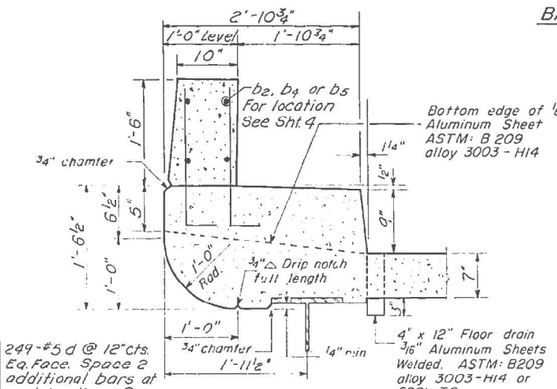

CURB DETAIL

Cost of aluminum sheets and drains shall be incidental to Class X Concrete.

BILL OF MATERIAL

Bar	No.	Size	Length	Shape
a	187	#6	37'-4"	
a1	186	#6	35'-6"	
a2	188	#6	34'-3"	
b	120	#5	20'-0"	
b1	737	#5	23'-9"	
b2	160	#5	6'-9"	
b3	192	#6	15'-6"	
b4	32	#5	18'-8"	
b5	48	#5	19'-3"	
c	376	#4	5'-9"	
d	1116	#5	2'-9"	L
Reinforcement Bars			Lbs.	62,670
* Structural Steel			Lbs.	20240
Class X Concrete			Cu Yds.	272.4

* Weight of bearing assemblies with lead plates and anchor bolts are included as structural steel.
Est. Weight = 9430#

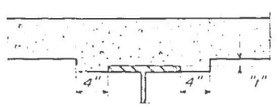

STANDARD FILLET DETAIL

To determine "1". After all structural steel has been erected, elevations of the top flanges of the beams shall be taken at intervals shown on sheet #5. These elevations subtracted from the "Grade Elevations Adjusted for Dead Load Deflections" shown on sheet #5, minus slab thickness, equals the fillet heights "1" above top of beams.

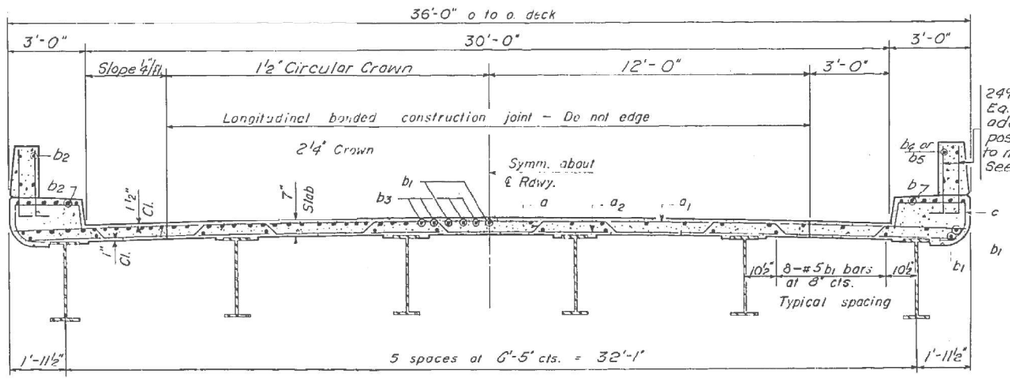

NEAR PIERS NEAR MIDSPAN

CROSS SECTION

249-#5 d @ 12" cts. Eq. Face. Space 2 additional bars at post locations. Space to miss Jt. in parapet. See Sht. 4 for details

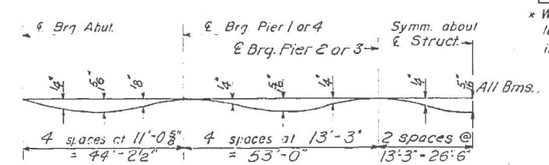

DEAD LOAD DEFLECTION DIAGRAM

(Includes weight of concrete only)

Note: The above deflections are not to be used in the field if the engineer is working from the grade elevations adjusted for dead load deflections as shown on sheet #5.

DESIGNED	J.M. Tyawoth	EXAMINED	Aug. 8 1963 A.V. Baumann
CHECKED	Wei Hsiung	PASSED	
DRAWN	J.M.J. D.L. Seemer	APPROVED	U.G. Hoff
CHECKED	Wei Hsiung		

I-6-0 7-2-62 Rev. 11-9-62

SUPERSTRUCTURE
S.B.I. RT. 13 SEC. 10-28
GALLATIN COUNTY
STA. 1690 + 10

MODEL: Default
FILE NAME: \\vksgs-fs1\sgroshare\005010599-IL_DOT_District_9\005940001-00374L_13_over_N_Fork_Saline_River_Pt1_Gallatin_Co\CADD\CADD Sheets\d978969-all-ex-structure.dgn

VEENSTRA & KIMM INC.
A Kleinfelder Company

DESIGNED - CPK	REVISED -		
DRAWN - DMS	REVISED -		
CHECKED - CPK	REVISED -		
DATE - 11-06-2025	REVISED -		

STATE OF ILLINOIS
DEPARTMENT OF TRANSPORTATION

EXISTING STRUCTURE PLANS

SCALE: SHEET 2 OF 8 SHEETS STA. TO STA.

F.A.P. RTE.	SECTION	COUNTY	TOTAL SHEETS	SHEET NO.
331	(10-1,10-3-1)B-2	GALLATIN	86	58
		CONTRACT NO. 78969		
		ILLINOIS	FED. AID PROJECT	

STATE OF ILLINOIS
DEPARTMENT OF PUBLIC WORKS & BUILDINGS
DIVISION OF HIGHWAYS

ROUTE NO.	SECTION	COUNTY	TOTAL SHEETS	SHEET NO
S.B.I. 13 F.A.	10-2B	GALLATIN	31	8
FED. ROAD DIST. NO. 7	ILLINOIS	FED. AID PROJECT-		

SHEET NO. 3 / 111 SHEETS

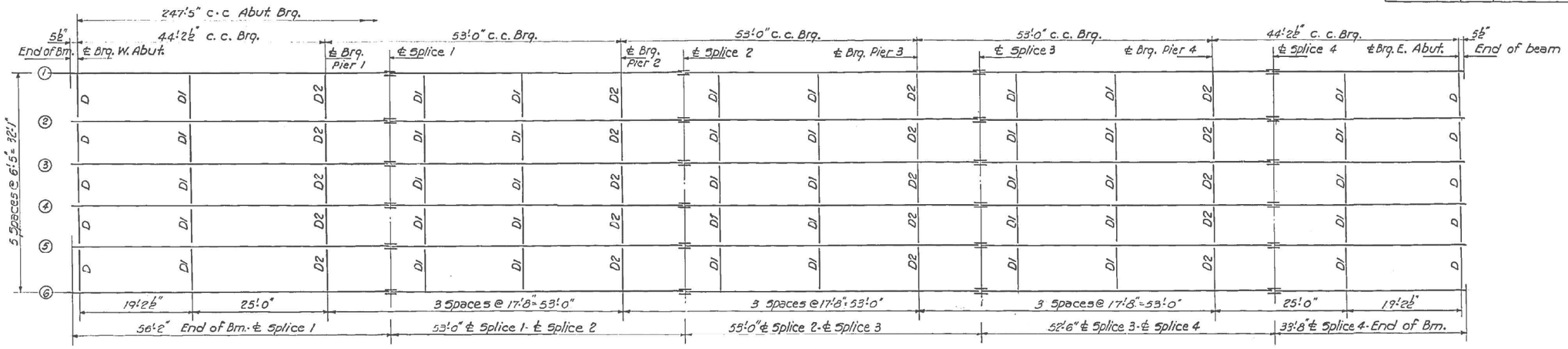

FRAMING PLAN

All beams are 90#/ft 108 and shall conform to A-36 Steel

Note: Run all Diaphragms Level

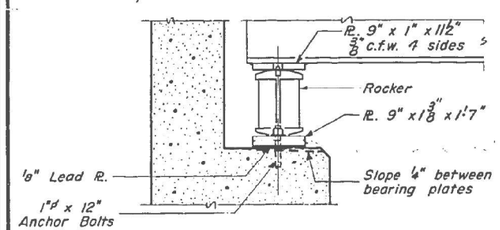

SECTION AT ABUTMENT

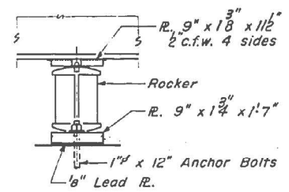

PIERS 1-2 & 4

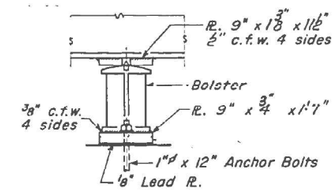

PIER 3

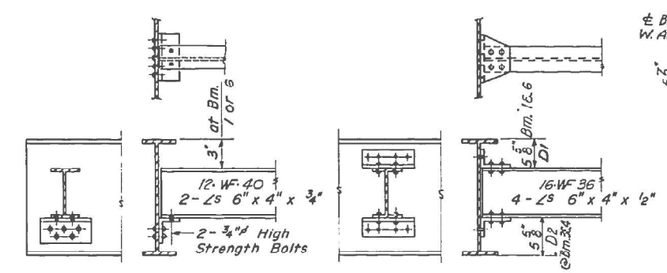

DIAPHRAGM D
10 Required

DIAPHRAGM D1 & D2
60 Required

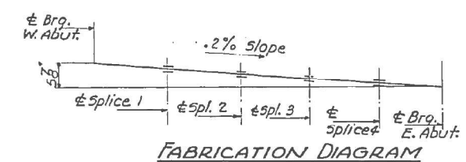

FABRICATION DIAGRAM
All beams

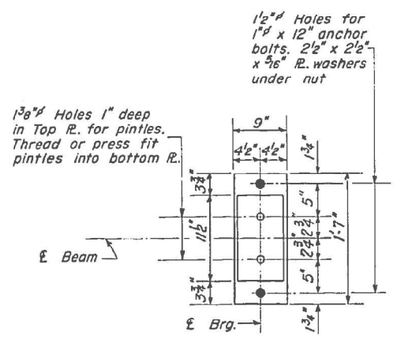

PLAN

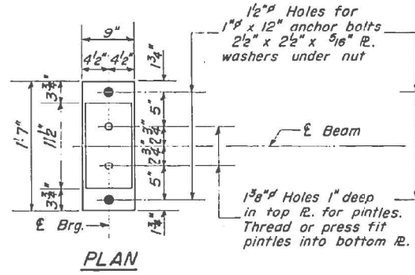

PLAN

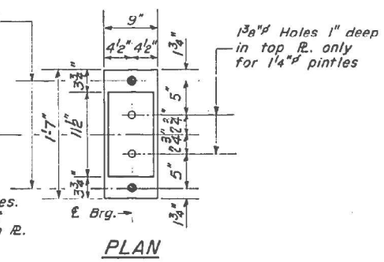

PLAN

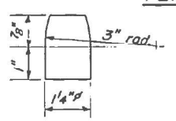

DETAIL OF PINTLE

ELEVATION TOP OF WF

LOCATION	BM. 1	BM. 2	BM. 3	BM. 4	BM. 5	BM. 6
℄ Brg. W. Abut.	370.99	371.12	371.19	371.19	371.12	370.99
℄ Brg. Pier 1	370.91	371.04	371.11	371.11	371.04	370.91
℄ Splice 1	370.88	371.01	371.08	371.08	371.01	370.88
℄ Brg. Pier 2	370.80	370.93	371.00	371.00	370.93	370.80
℄ Splice 2	370.77	370.90	370.97	370.97	370.90	370.77
℄ Brg. Pier 3	370.70	370.83	370.90	370.90	370.83	370.70
℄ Splice 3	370.67	370.80	370.87	370.87	370.80	370.67
℄ Brg. Pier 4	370.59	370.72	370.79	370.79	370.72	370.59
℄ Splice 4	370.56	370.69	370.76	370.76	370.69	370.56
℄ Brg. E. Abut.	370.50	370.63	370.70	370.70	370.63	370.50

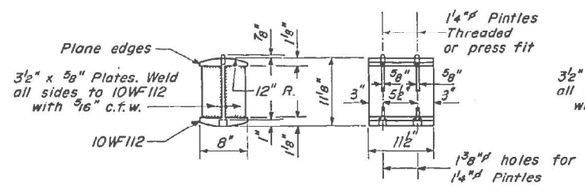

DETAIL OF ROCKER AT PIERS 1-2-4 & ABUT.

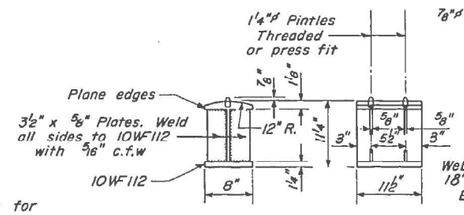

DETAIL OF BOLSTER AT PIER 3

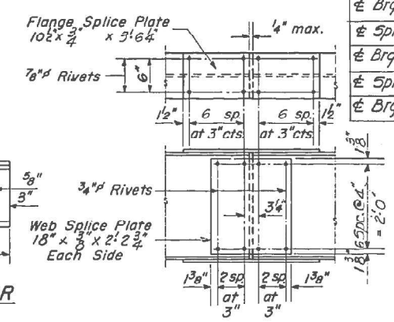

DETAIL OF SPLICE

STRUCTURAL STEEL
NORTH FORK SALINE RIVER
S.B.I. RT. 13-SEC. 10-2B
GALLATIN COUNTY
STATION 1690+10

DESIGNED	J. M. Tjaarsch
CHECKED	Wei Hsiang
DRAWN	J. M. J. / W. A. Sousoman Jr.
CHECKED	Wei Hsiang

AUG 8 1963
EXAMINED — W. E. Baumann, ENGINEER OF BRIDGE AND TRAFFIC STRUCTURES
PASSED — ENGINEER OF DESIGN
APPROVED — CHIEF HIGHWAY ENGINEER

I-2 7-2-62

MODEL: Default
FILE NAME: \\vksgs-41\sgs4share\0550\0595HI_DOT_District_9\60950001\00074L_13_over_N_Fork_Saline_River_Pt1_Gallatin_Co\CADD\CADD Sheets\d97969-sh-wx structure.dgn

VEENSTRA & KIMM INC.
A Kleinfelder Company

DESIGNED - CPK	REVISED -		
DRAWN - DMS	REVISED -		
CHECKED - CPK	REVISED -		
DATE - 11-06-2025	REVISED -		

STATE OF ILLINOIS
DEPARTMENT OF TRANSPORTATION

EXISTING STRUCTURE PLANS

SCALE: SHEET 3 OF 8 SHEETS STA. TO STA.

F.A.P. RTE.	SECTION	COUNTY	TOTAL SHEETS	SHEET NO.
331	(10-1,10-3-1)B-2	GALLATIN	86	59
		CONTRACT NO. 78969		
		ILLINOIS	FED. AID PROJECT	

STATE OF ILLINOIS
DEPARTMENT OF PUBLIC WORKS & BUILDINGS
DIVISION OF HIGHWAYS

ROUTE NO.	SECTION	COUNTY	TOTAL SHEETS	SHEET NO.
S.B.I. 13 F.A.	10-2B	GALLATIN	31	11
FED. ROAD DIST. NO. 7	ILLINOIS	FED. AID PROJECT-		

SHEET NO. 5
11 SHEETS

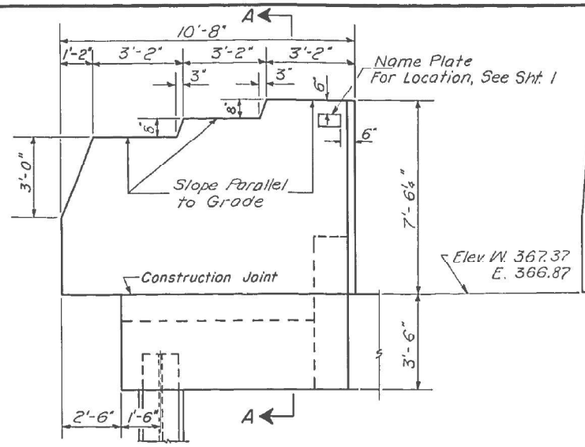

WING WALL ELEVATION
Dimensions

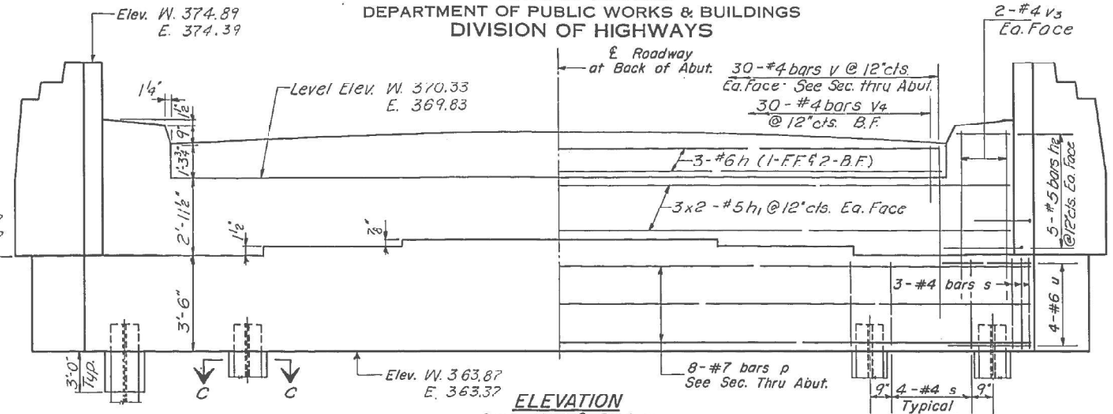

ELEVATION
Symm. about ℄ Roadway

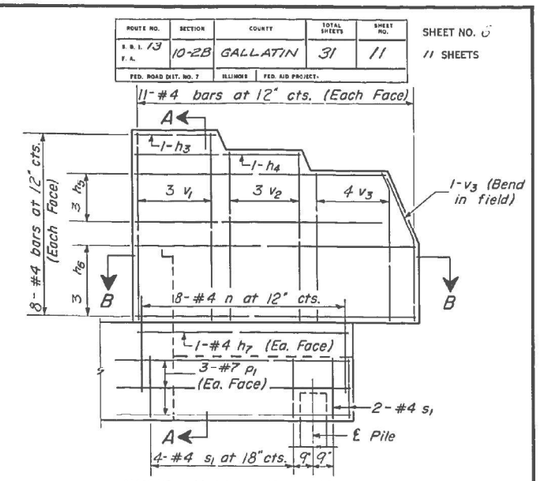

WING WALL ELEVATION
Reinforcement

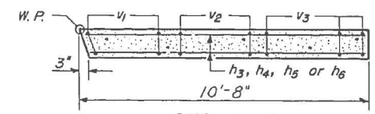

SEC. B-B

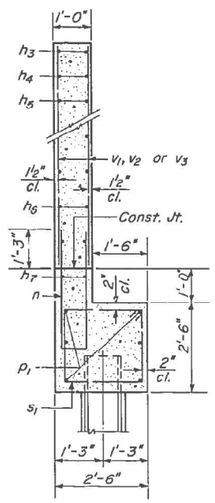

SEC. A-A

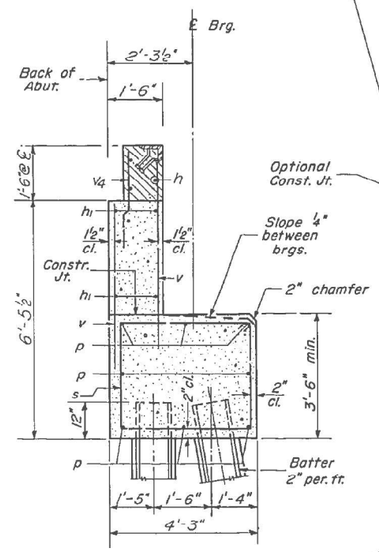

SEC. THRU ABUT.

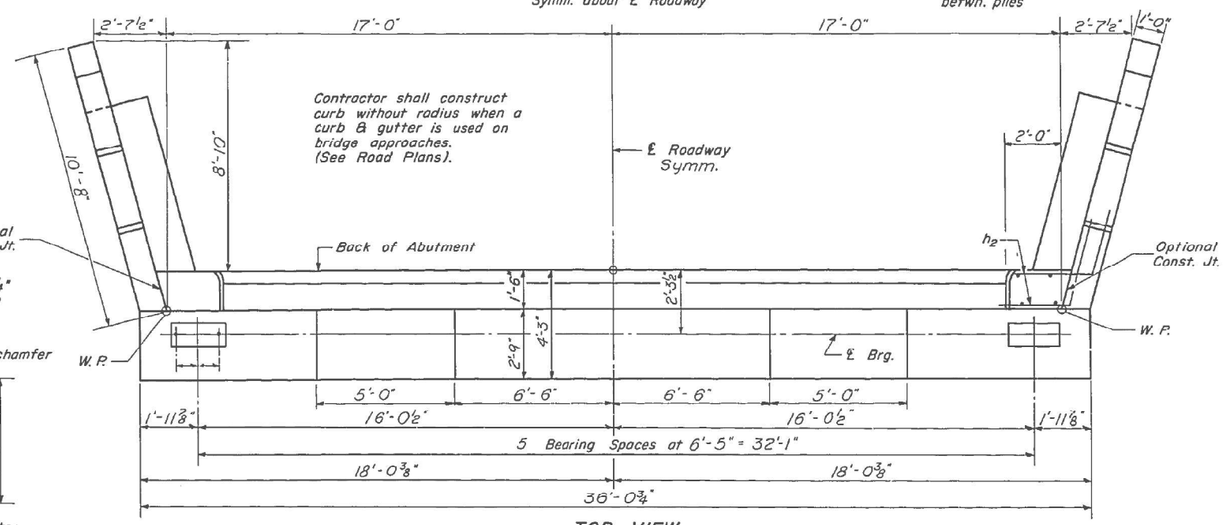

TOP VIEW

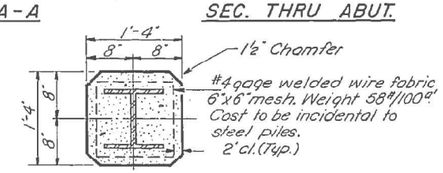

SECTION C-C

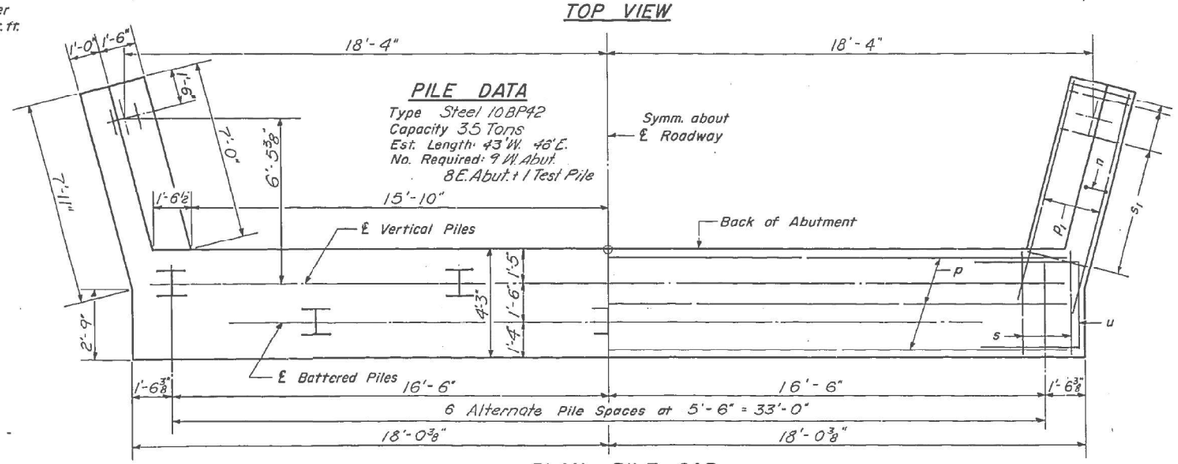

PLAN - PILE CAP

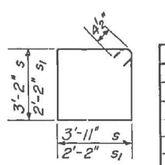

BAR s & s1

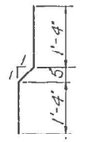

BAR v4

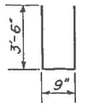

BAR n

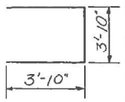

BAR u

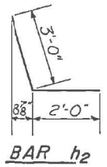

BAR h2

TWO ABUTMENTS
BILL OF MATERIAL

Bar	No.	Size	Length	Shape
h1	6	#6	29'-9"	
h1	24	#5	17'-9"	
h2	40	#5	5'-0"	
h3	8	#4	2'-9"	
h4	8	#4	5'-9"	
h5	24	#4	8'-9"	
h6	24	#4	10'-0"	
h7	8	#4	8'-0"	
n	32	#4	7'-9"	
p	16	#7	35'-9"	
p1	24	#7	8'-0"	
s	60	#4	14'-11"	
s1	24	#4	9'-5"	
u	16	#6	11'-6"	
v	120	#4	5'-0"	
v1	24	#4	7'-3"	
v2	24	#4	6'-9"	
v3	56	#4	6'-0"	
v4	60	#4	3'-3"	
Class X Concrete			Cu. Yds.	70.0
Reinforcement Bars			Lbs.	5040
Steel Piles (10BP42)			Lin. Ft.	771
Test Piles Steel (10BP42)			Ea.	1
Name Plates			Ea.	1

ABUTMENTS
S.B.I. RT. 13 SEC. 10-2B
GALLATIN COUNTY
STA. 1690 + 10

DESIGNED	J. M. Jgnowski	
CHECKED	Wei Hsiung	
DRAWN	J.M.J. / W. A. Sausaman Jr.	(H.R.B.)
CHECKED	Wei Hsiung	

AUG 8 1963
EXAMINED H. E. Baumann — ENGINEER OF BRIDGE AND TRAFFIC STRUCTURES
PASSED E. L. Hess — ENGINEER OF DESIGN
APPROVED U. E. Staff — CHIEF HIGHWAY ENGINEER

A-8 7-18-62 Rev. 11-27-62

MODEL: Default
FILE NAME: \\vssp46\1sprshare\0500\0595-II_DOT_District_9\0595-001\0037-II_-13_over_N_Fork_Saline_River_Pt1_Gallatin_Co\CADD\CADD Sheets\4978969-alt-wx structure.dgn

VEENSTRA & KIMM INC.
A Kleinfelder Company

DESIGNED	- CPK	REVISED	-
DRAWN	- DMS	REVISED	-
CHECKED	- CPK	REVISED	-
DATE	- 11-06-2025	REVISED	-

STATE OF ILLINOIS
DEPARTMENT OF TRANSPORTATION

EXISTING STRUCTURE PLANS

SCALE: SHEET 4 OF 8 SHEETS STA. TO STA.

F.A.P. RTE.	SECTION	COUNTY	TOTAL SHEETS	SHEET NO.
331	(10-1,10-3-1)B-2	GALLATIN	86	60

CONTRACT NO. 78969
ILLINOIS FED. AID PROJECT

STATE OF ILLINOIS
DEPARTMENT OF PUBLIC WORKS & BUILDINGS
DIVISION OF HIGHWAYS

ROUTE NO.	SECTION	COUNTY	TOTAL SHEETS	SHEET NO.
S.B.I. 13 F.A.	10-2B	GALLATIN	31	12
FED. ROAD DIST. NO. 7		ILLINOIS	FED. AID PROJECT.	

SHEET NO. 7 OF 11 SHEETS

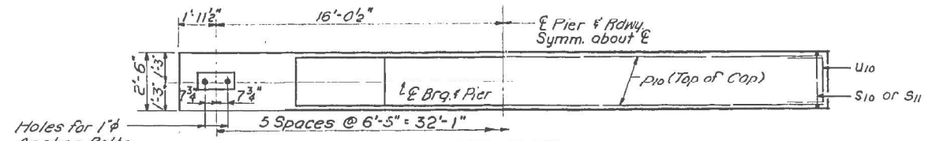

TOP PLAN

Note: All edges shall have standard ¾" chamfers except footings.
Space reinforcement to miss anchor bolts.
Pour steps monolithically with cap.

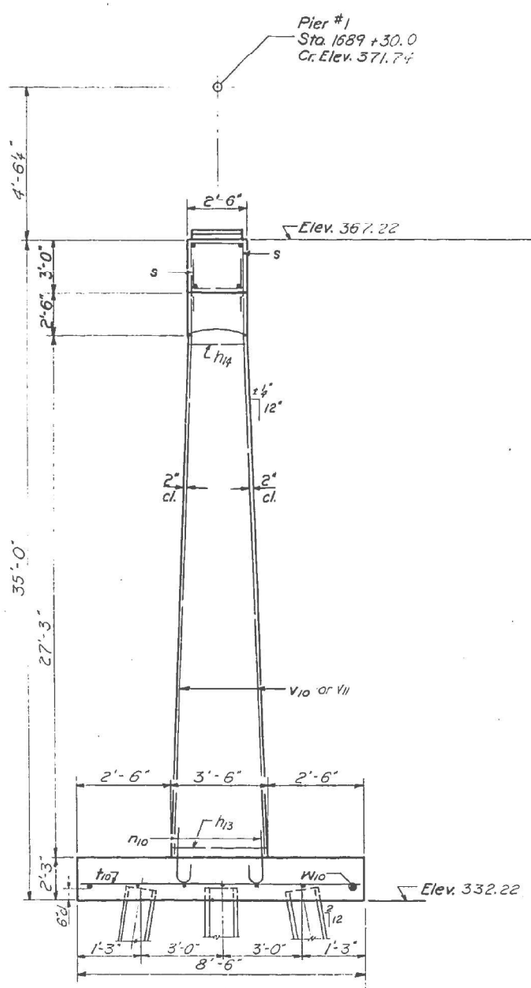

END VIEW

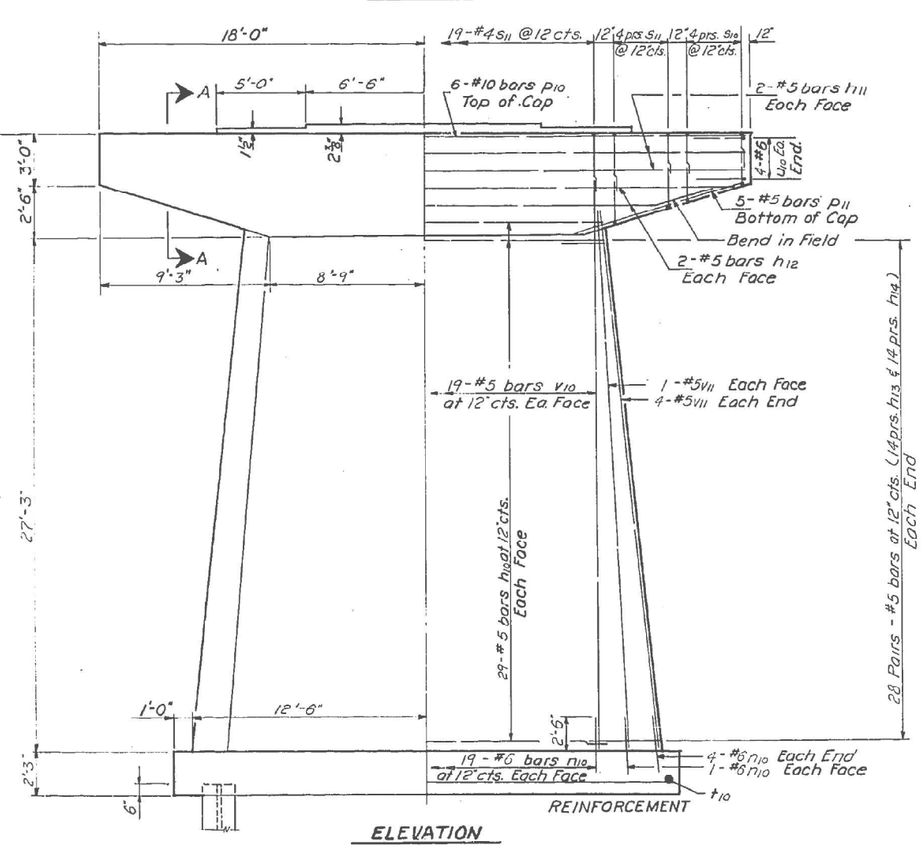

ELEVATION

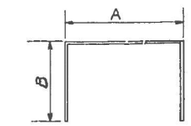

A & B DIMENSIONS

Bar	A	B
S10	2'-2"	2'-5"
S11	2'-2"	3'-0"

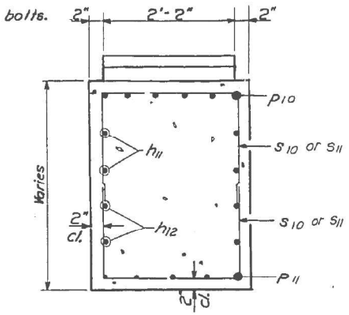

SECTION A-A

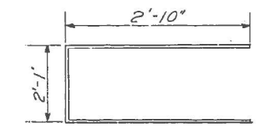

U10 BAR

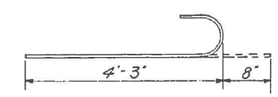

n10 BAR

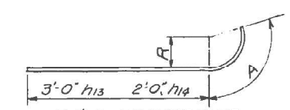

R & A DIMENSIONS

Bar	R	A
h13	1'-6"	3'-3"
h14	1'-3"	2'-9"

BILL OF MATERIAL

Bar	No.	Size	Length	Shape
h10	58	#5	17'-6"	—
h11	4	#5	35'-9"	—
h12	4	#5	32'-0"	—
h13	56	#5	6'-3"	⌋
h14	56	#5	4'-9"	⌋
n10	50	#6	4'-11"	⊃
p10	6	#10	35'-9"	—
p11	10	#5	9'-0"	—
s10	16	#4	7'-0"	⊓
s11	35	#4	8'-2"	⊓
t10	41	#6	8'-3"	—
u10	8	#6	7'-9"	⊔
v10	38	#5	31'-0"	—
v11	12	#5	28'-6"	—
w10	7	#5	26'-9"	—
Class X Concrete			Cu. Yds.	103.3
Reinforcement Bars			Lbs.	6030
Steel Piles (10BP42)			Lin. Ft.	220
Test Pile - Steel (10BP42)			Ea.	1

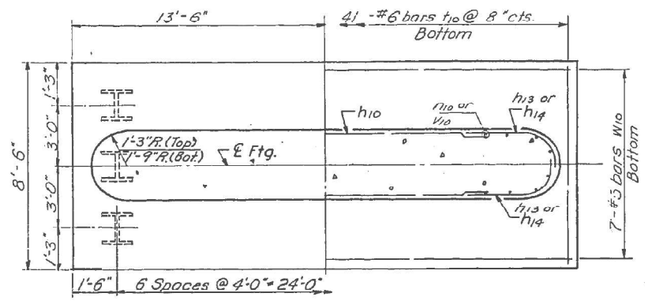

FOOTING PLAN

PILE DATA
Type: Steel 10BP42
Capacity: 37 Tons
Est. Length: 11'-0"
No. Req'd: 20 + 1 Test Pile

PIER 1
NORTH FORK SALINE RIVER
S.B.I. RT. 13 SEC. 10-2B
GALLATIN COUNTY
STA. 1690 + 10

DESIGNED	J.M. Tyawoth
CHECKED	Wei Hsing
DRAWN	J.M.J. Deason
CHECKED	Wei Hsing

AUG 8 1963

EXAMINED	W.E. Baumann — ENGINEER OF BRIDGE AND TRAFFIC STRUCTURES
PASSED	E.L. Hauch — ENGINEER OF DESIGN
APPROVED	U.E. Ott — CHIEF HIGHWAY ENGINEER

MODEL: Default
FILE NAME: \\vksgs-4s1\sgshare\005000\595-IL_DOT_District_9\0595-4001-0074-IL_13_over_N_Fork_Saline_River_Pin1_Gallatin_Co\CADD\CADD Sheets\d9786983-all-ex-structure.dgn

VEENSTRA & KIMM INC.
A Kleinfelder Company

DESIGNED	- CPK	REVISED	-
DRAWN	- DMS	REVISED	-
CHECKED	- CPK	REVISED	-
DATE	- 11-06-2025	REVISED	-

STATE OF ILLINOIS
DEPARTMENT OF TRANSPORTATION

EXISTING STRUCTURE PLANS

SCALE: SHEET 5 OF 8 SHEETS STA. TO STA.

F.A.P. RTE.	SECTION	COUNTY	TOTAL SHEETS	SHEET NO.
331	(10-1,10-3-1)B-2	GALLATIN	86	61
		CONTRACT NO. 78969		
		ILLINOIS	FED. AID PROJECT	

STATE OF ILLINOIS
DEPARTMENT OF PUBLIC WORKS & BUILDINGS
DIVISION OF HIGHWAYS

ROUTE NO.	SECTION	COUNTY	TOTAL SHEETS	SHEET NO.
S.B.I. 13 F.A.	10-2B	GALLATIN	31	13
FED. ROAD DIST. NO. 7	ILLINOIS	FED. AID PROJECT.		

SHEET NO. 8
11 SHEETS

Note: All edges shall have standard ¾" chamfers except footings.
Space reinforcement to miss anchor bolts.
Pour steps monolithically with cap.

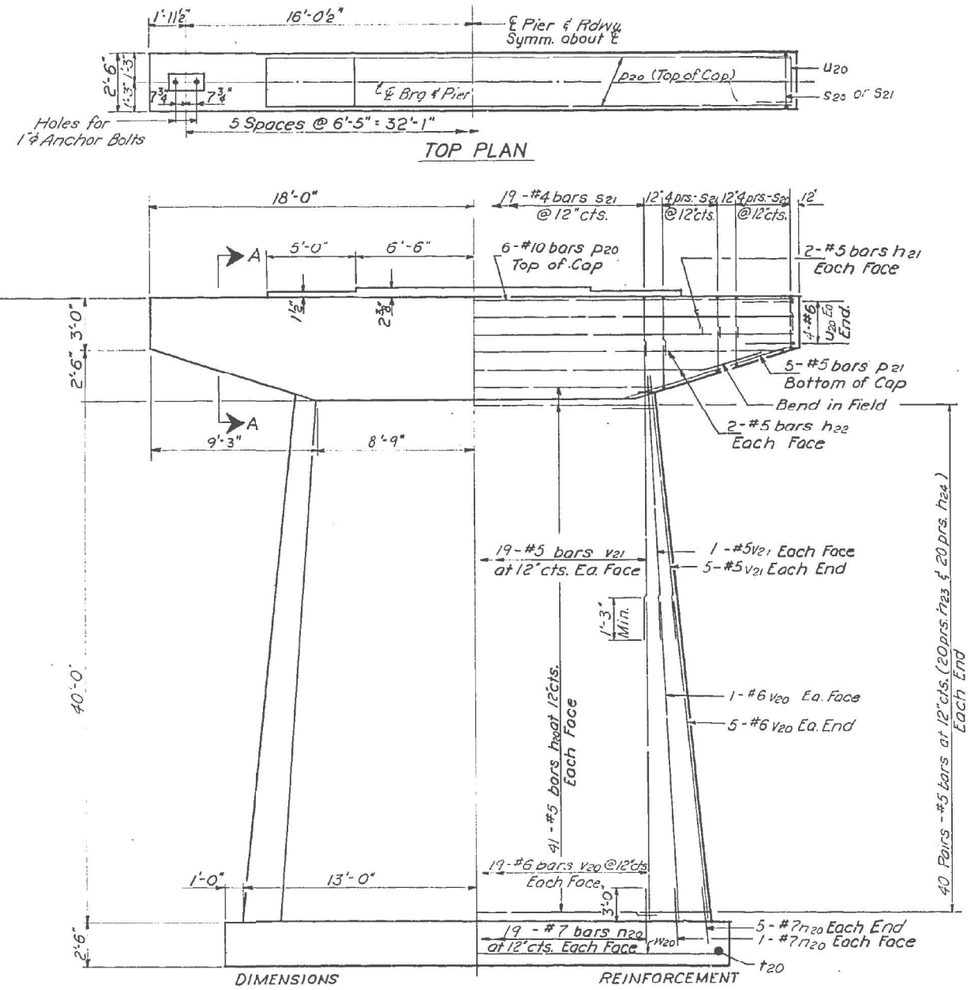

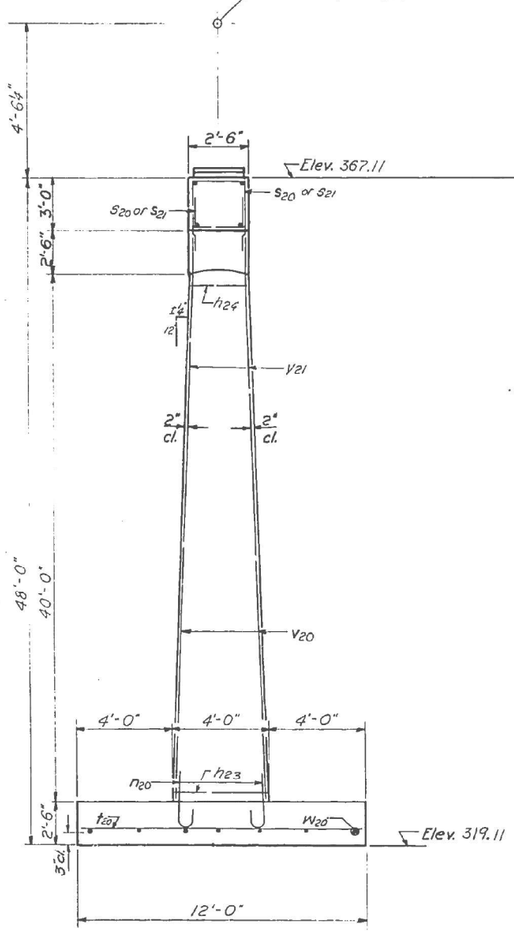

Maximum Footing Pressure = 4.0 K/□'

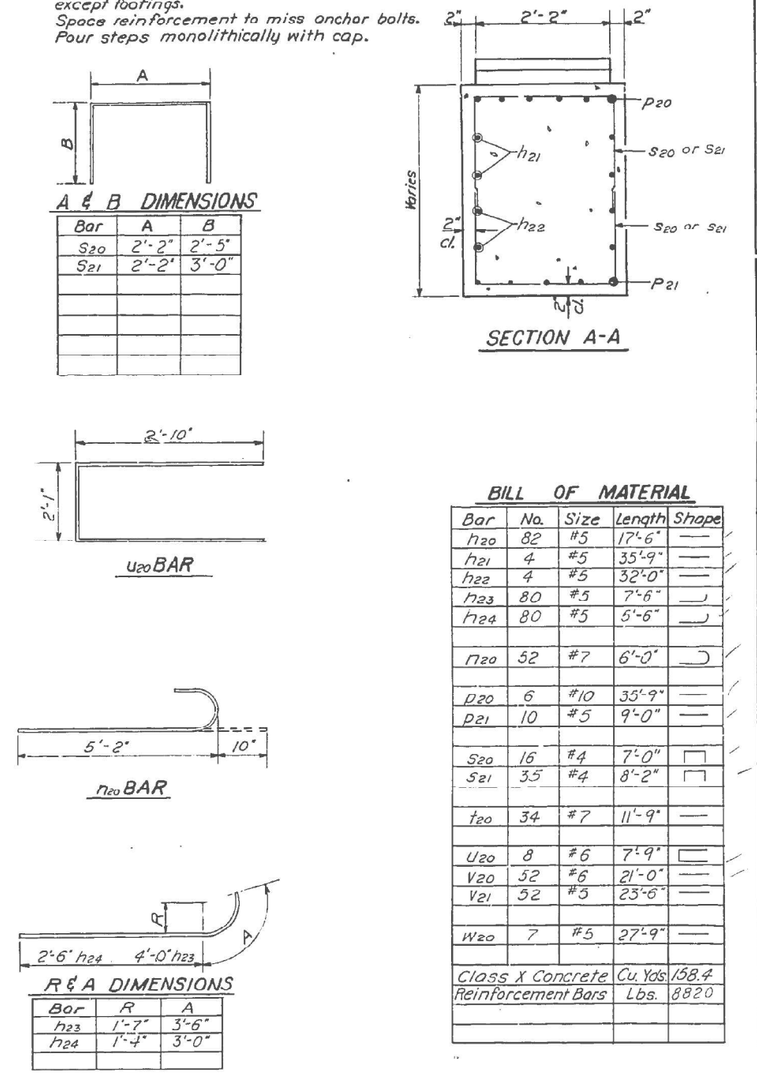

Bar	A	B
s20	2'-2"	2'-5"
s21	2'-2"	3'-0"

Bar	R	A
h23	1'-7"	3'-6"
h24	1'-4"	3'-0"

BILL OF MATERIAL

Bar	No.	Size	Length	Shape
h20	82	#5	17'-6"	
h21	4	#5	35'-9"	
h22	4	#5	32'-0"	
h23	80	#5	7'-6"	
h24	80	#5	5'-6"	
n20	52	#7	6'-0"	
p20	6	#10	35'-9"	
p21	10	#5	9'-0"	
s20	16	#4	7'-0"	
s21	35	#4	8'-2"	
t20	34	#7	11'-9"	
u20	8	#6	7'-9"	
v20	52	#6	21'-0"	
v21	52	#5	23'-6"	
w20	7	#5	27'-9"	
Class X Concrete			Cu. Yds.	158.4
Reinforcement Bars			Lbs.	8820

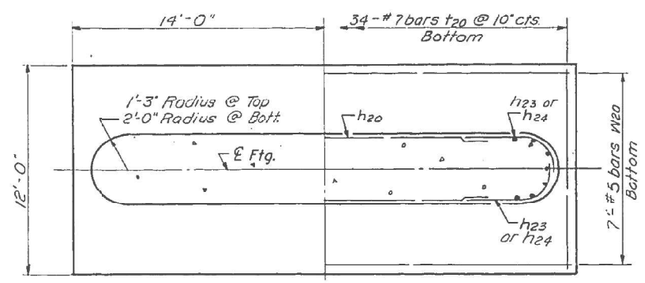

DESIGNED	J. M. Tyamoch	AUG 8 1963
CHECKED	Wei Hsing	EXAMINED W. E. Baumann ENGINEER OF BRIDGE AND TRAFFIC STRUCTURES
DRAWN	J.M.T. W.R. Deason	PASSED ENGINEER OF DESIGN
CHECKED	Wei Hsing	APPROVED U. E. Aff CHIEF HIGHWAY ENGINEER

PIER 2
NORTH FORK SALINE RIVER
S.B.I. RT. 13 SEC. 10-2B
GALLATIN COUNTY
STA. 1690 + 10

MODEL: Default
FILE NAME: \\vksgis-fs1\gis\shared\050\050954_DOT_District_9\059-0014-0074-_13_over_N_Fork_Saline_River_Pt1_Gallatin_Co\CADD\CADD Sheets\0978969-sheet-structure.dgn

VEENSTRA & KIMM INC.
A Kleinfelder Company

DESIGNED	- CPK	REVISED	-
DRAWN	- DMS	REVISED	-
CHECKED	- CPK	REVISED	-
DATE	- 11-06-2025	REVISED	-

STATE OF ILLINOIS
DEPARTMENT OF TRANSPORTATION

EXISTING STRUCTURE PLANS

SCALE: SHEET 6 OF 8 SHEETS STA. TO STA.

F.A.P. RTE.	SECTION	COUNTY	TOTAL SHEETS	SHEET NO.
331	(10-1,10-3-1)B-2	GALLATIN	86	62
		CONTRACT NO. 78969		
		ILLINOIS	FED. AID PROJECT	

STATE OF ILLINOIS
DEPARTMENT OF PUBLIC WORKS & BUILDINGS
DIVISION OF HIGHWAYS

ROUTE NO.	SECTION	COUNTY	TOTAL SHEETS	SHEET NO.
S.B.I. 13 F.A.	10-2B	GALLATIN	31	14
FED. ROAD DIST. NO. 7	ILLINOIS	FED. AID PROJECT-		

SHEET NO. 9
11 SHEETS

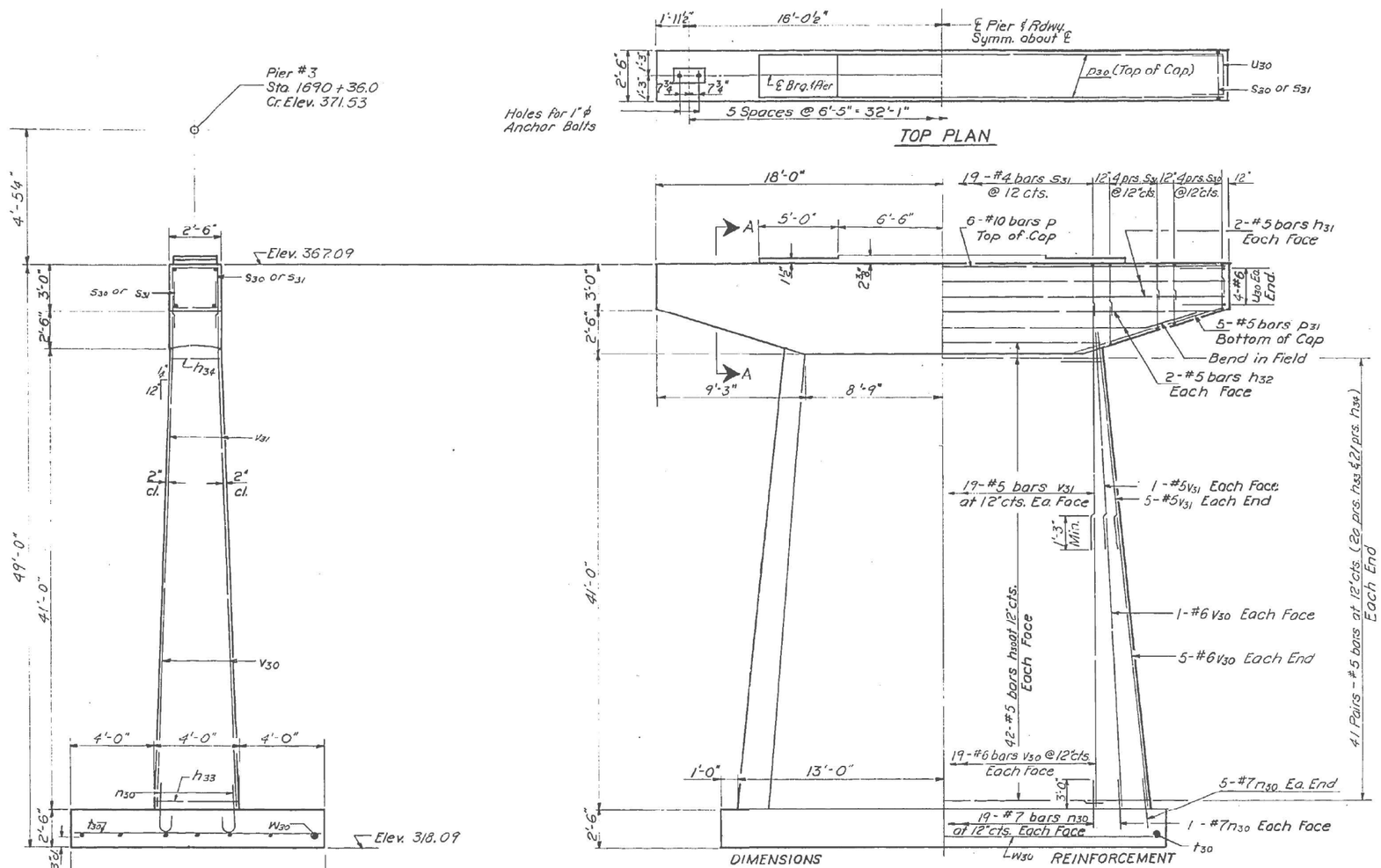

Note: All edges shall have standard ¾" chamfers except footings.
Space reinforcement to miss anchor bolts.
Pour steps monolithically with cap.

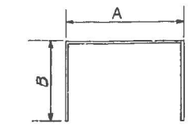

A & B DIMENSIONS

Bar	A	B
s30	2'-2"	2'-5"
s31	2'-2"	3'-0"

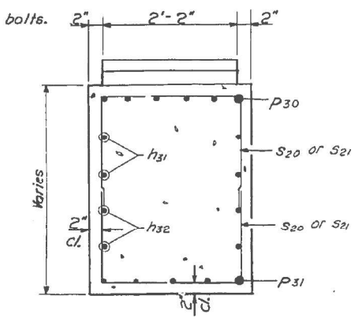

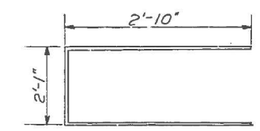

u30 BAR

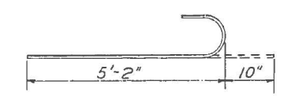

n30 BAR

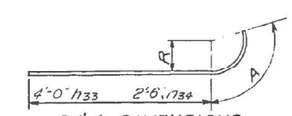

R & A DIMENSIONS

Bar	R	A
h33	1'-7"	3'-6"
h34	1'-4"	3'-0"

BILL OF MATERIAL

Bar	No.	Size	Length	Shape
h30	84	#5	17'-6"	—
h31	4	#5	35'-9"	—
h32	4	#5	32'-0"	—
h33	80	#5	7'-6"	⌒
h34	84	#5	5'-6"	⌒
n30	52	#7	6'-0"	⌒
p30	6	#10	35'-9"	—
p31	10	#5	9'-0"	—
s30	16	#4	7'-0"	⊓
s31	35	#4	8'-2"	⊓
t30	34	#8	11'-9"	—
u30	8	#6	7'-9"	⊏
v30	52	#6	21'-0"	—
v31	52	#5	24'-0"	—
w30	7	#5	27'-9"	—
Class X Concrete			Cu. Yd.	161.2
Reinforcement Bars			Lbs.	9140

Maximum Footing Pressure = 7.0 K/□'

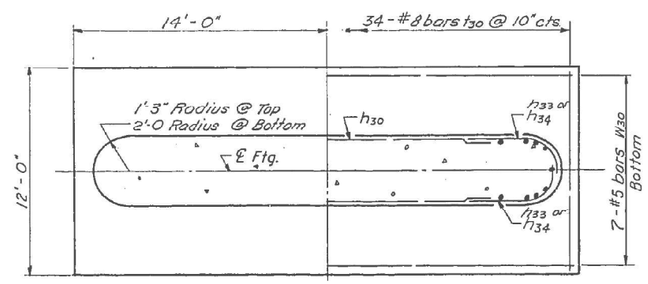

DESIGNED	J. M. Tyawott	
CHECKED	Wei Heiang	
DRAWN	J. M. T / W.R. Deason	
CHECKED	Wei Heiang	

AUG 8 1963

EXAMINED	H. G. Baumann — ENGINEER OF BRIDGE AND TRAFFIC STRUCTURES	
PASSED	E. L. Sheets — ENGINEER OF DESIGN	
APPROVED	U. E. Duff — CHIEF ENGINEER	

PIER 3
NORTH FORK SALINE RIVER
S.B.I. RT. 13 SEC. 10-2B
GALLATIN COUNTY
STA. 1690+10

MODEL: Default
FILE NAME: \\vksps-c1\sprojects\05000595-IL_DOT_District_6\05595-001-K007-IL_13_over_N_Fork_Saline_River_Pin_Gallatin_Co\CADD\CADD Sheets\5978969-hex structure.dgn

VEENSTRA & KIMM INC.
A Kleinfelder Company

DESIGNED - CPK	REVISED -		
DRAWN - DMS	REVISED -		
CHECKED - CPK	REVISED -		
DATE - 11-06-2025	REVISED -		

STATE OF ILLINOIS
DEPARTMENT OF TRANSPORTATION

EXISTING STRUCTURE PLANS

SCALE: SHEET 7 OF 8 SHEETS STA. TO STA.

F.A.P. RTE.	SECTION	COUNTY	TOTAL SHEETS	SHEET NO.
331	(10-1,10-3-1)B-2	GALLATIN	86	63
		CONTRACT NO. 78969		
		ILLINOIS	FED. AID PROJECT	

STATE OF ILLINOIS
DEPARTMENT OF PUBLIC WORKS & BUILDINGS
DIVISION OF HIGHWAYS

ROUTE NO.	SECTION	COUNTY	TOTAL SHEETS	SHEET NO.
S.B.I. 13 F.A.	10-2B	GALLATIN	31	15
FED. ROAD DIST. NO. 5	ILLINOIS	FED. AID PROJECT		

SHEET NO. 10
11 SHEETS

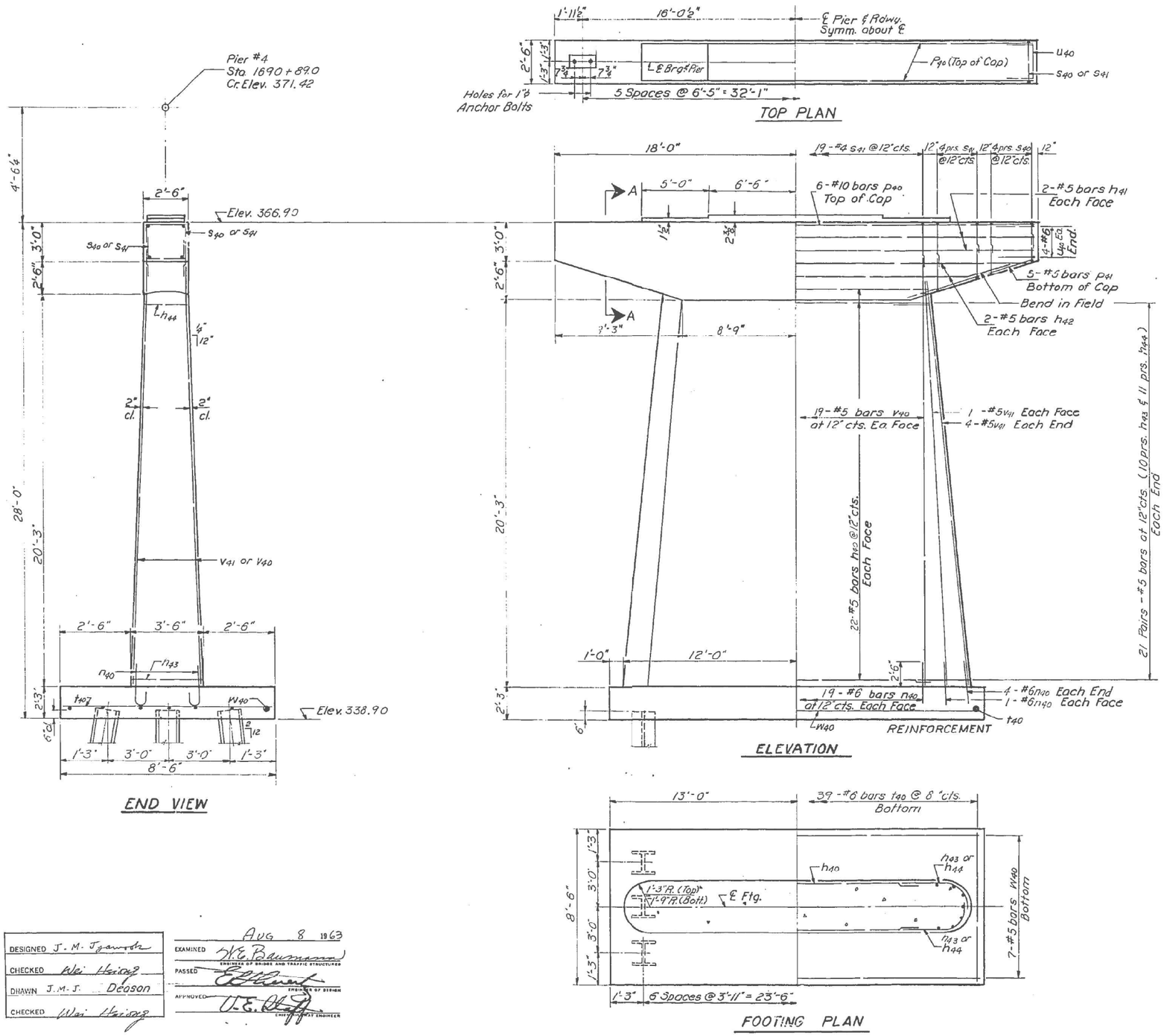

Note: All edges shall have standard ¾" chamfers except footings.
Space reinforcement to miss anchor bolts.
Pour steps monolithically with cap.

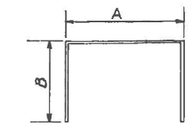

A & B DIMENSIONS

Bar	A	B
s40	2'-2"	2'-5"
s41	2'-2"	3'-0"

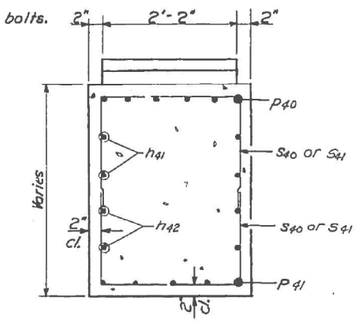

SECTION A-A

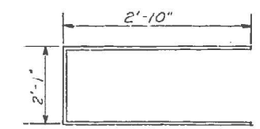

U40 BAR

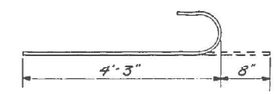

n40 BAR

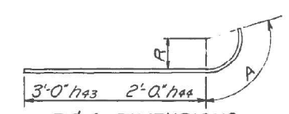

R & A DIMENSIONS

Bar	R	A
h43	1'-6"	3'-3"
h44	1'-3"	2'-9"

BILL OF MATERIAL

Bar	No.	Size	Length	Shape
h40	44	#5	17'-6"	—
h41	4	#5	35'-9"	—
h42	4	#5	32'-0"	—
h43	40	#5	6'-3"	⌒
h44	44	#5	4'-9"	⌒
n40	50	#6	4'-11"	⌒
p40	6	#10	35'-9"	—
p41	10	#5	9'-0"	—
s40	16	#4	7'-0"	⊓
s41	35	#4	8'-2"	⊓
t40	39	#6	8'-3"	—
U40	8	#6	7'-9"	⊏
V40	38	#5	23'-9"	—
V41	12	#5	21'-3"	—
W40	7	#5	25'-9"	—
Class X Concrete			Cu Yds	840
Reinforcement Bars			Lbs.	5200
Steel Piles (10BP42)			Lin. Ft.	462

FOOTING PLAN

PILE DATA
Type: Steel 10BP42
Capacity: 37 Tons
Est. Length: 22'
No. Req'd.: 21

DESIGNED	J. M. Jgawah	
CHECKED	Wei Heisig	
DRAWN	J. M. J. Deason	
CHECKED	Wei Heisig	

AUG 8 1963
EXAMINED W. E. Baumann — ENGINEER OF BRIDGE AND TRAFFIC STRUCTURES
PASSED — ENGINEER OF DESIGN
APPROVED — CHIEF HIGHWAY ENGINEER

PIER 4
NORTH FORK SALINE RIVER
S.B.I. RT. 13 SEC. 10-2B
GALLATIN COUNTY
STA. 1690 + 10

MODEL: Default
FILE NAME: \\vksgs-fs1\sprshare\050\0059\IL_DOT_District_9\0059-0074\IL_13_over_N_Fork_Saline_River_Pt1_Gallatin_Co\CADD\CADD Sheets\d9786983-all-ex-structure.dgn

VEENSTRA & KIMM INC.
A Kleinfelder Company

DESIGNED - CPK	REVISED -		
DRAWN - DMS	REVISED -		
CHECKED - CPK	REVISED -		
DATE - 11-06-2025	REVISED -		

STATE OF ILLINOIS
DEPARTMENT OF TRANSPORTATION

EXISTING STRUCTURE PLANS

SCALE: SHEET 8 OF 8 SHEETS STA. TO STA.

F.A.P. RTE.	SECTION	COUNTY	TOTAL SHEETS	SHEET NO.
331	(10-1,10-3-1)B-2	GALLATIN	86	64

CONTRACT NO. 78969
ILLINOIS FED. AID PROJECT

SEEDING & MULCHING

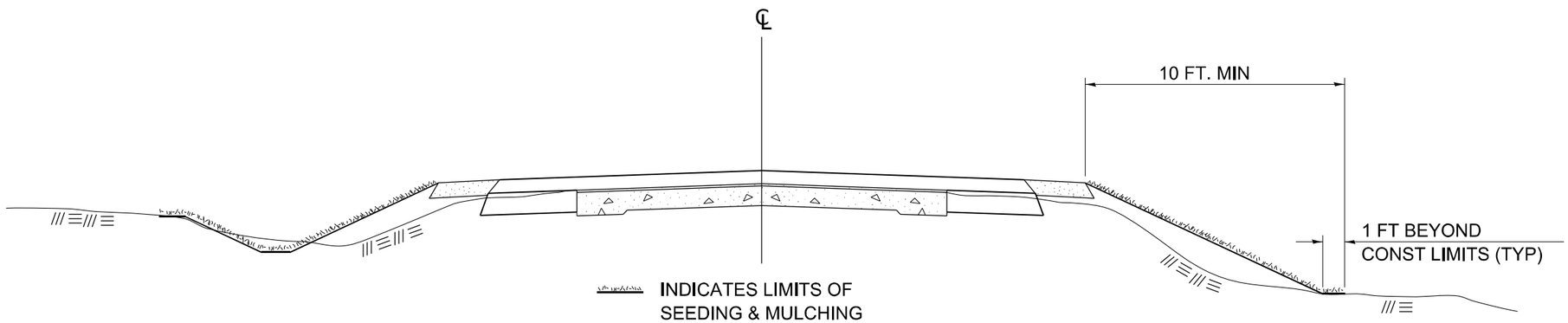

GENERAL NOTES

IN GENERAL, ALL EARTH SURFACES DISTURBED DURING CONSTRUCTION OPERATIONS SHALL BE SEEDED AND MULCHED UPON COMPLETION OF ALL GRADING OPERATIONS.

ON DETOUR ROADS, SLOPES SHALL BE SEEDED IMMEDIATELY UPON COMPLETION OF ANY GIVEN STAGE GRADING. TEMPORARY SEEDING SHALL BE CLASS 7.

FERTILIZER NUTRIENTS SHALL BE APPLIED TO ALL SEEDED AREAS.
LIMESTONE SHALL BE APPLIED TO ALL AREAS OF FINAL SEEDING.

THE RATES OF APPLICATION OF FERTILIZER, MULCH AND LIMESTONE SHALL BE AS SPECIFIED IN THE SPECIAL PROVISIONS FOR ROAD AND BRIDGE CONSTRUCTION.

SECTIONS 250 AND 251 SHALL GOVERN THIS WORK EXCEPT AS SPECIFIED HEREIN OR AS NOTED IN THE SPECIAL PROVISIONS.

DRAWN	02-15-89
REVISED	03-27-08
REVISED	10-21-21
REVISED	05-27-22

STD. 9-19

MODEL: Default
FILE NAME: \\vksp-fs1\gcs\Save\050\0505054_DOT_District_9\059-0014-0007-4_13_over_N_Fork_Saline_River_Prj1_Gallatin_Co\CADD\CADD Sheets\ds78969-IntroSheet\Multi.dgn

VEENSTRA & KIMM INC.
A Kleinfelder Company

DESIGNED	-	CPK	REVISED -
DRAWN	-	DMS	REVISED -
CHECKED	-	CPK	REVISED -
DATE	-	11-06-2025	REVISED -

STATE OF ILLINOIS
DEPARTMENT OF TRANSPORTATION

SEEDING AND MULCHING

SCALE: SHEET 1 OF 1 SHEETS STA. TO STA.

F.A.P. RTE.	SECTION	COUNTY	TOTAL SHEETS	SHEET NO.
331	(10-1,10-3-1)B-2	GALLATIN	86	65

CONTRACT NO. 78969

ILLINOIS FED. AID PROJECT

ILLINOIS STANDARD

ROUGH GROOVED SURFACE SIGN

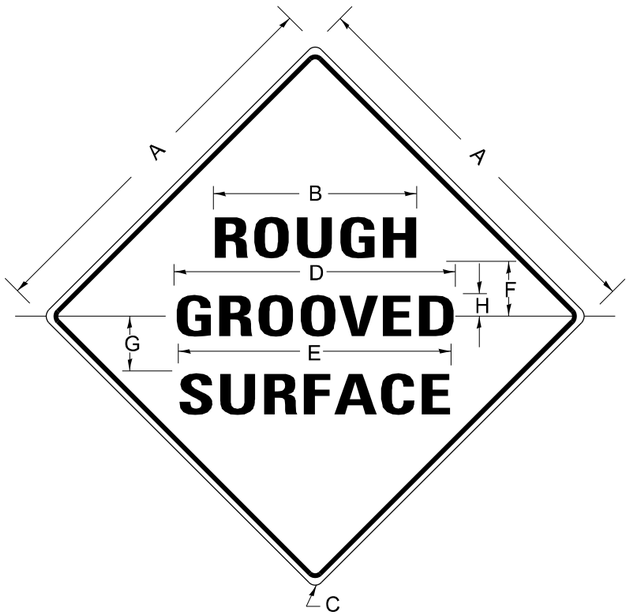

COLORS

LEGEND AND BORDER- BLACK NON-REFLECTORIZED
BACKGROUND- ORANGE REFLECTORIZED

SIGN SIZE	DIMENSIONS							
	A	B	C	D	E	F	G	H
48X48	48.0	24.1	3.0	34.0	33.0	6.0	13.0	3.5

SIGN SIZE	SERIES LINES			MAR-GIN	BOR-DER	BLANK STD.
	1	2	3			
48X48	7C	7C	7C	0.8	1.2	B4-48D

ALL DIMENSIONS IN INCHES

NOTES

PRIOR TO ALLOWING TRAFFIC ON ANY PORTION OF THE ROADWAY THAT HAS BEEN COLDMILLED, THE CONTRACTOR SHALL HAVE ERECTED "ROUGH GROOVED SURFACE" SIGNS THAT CONFORM TO THE ABOVE DETAILS. A MINIMUM OF ONE SIGN AT EACH END OF THE IMPROVEMENT WILL BE REQUIRED. THE CONTRACTOR SHALL MAINTAIN THE "ROUGH GROOVED SURFACE" SIGNS UNTIL THE COLDMILLED SURFACE IS COVERED WITH LEVELING BINDER OR SURFACE COURSE.

IF AT ANY TIME THE SIGNS ARE IN PLACE BUT NOT APPLICABLE, THEY SHALL BE TURNED FROM THE VIEW OF MOTORISTS OR COVERED AS DIRECTED BY THE ENGINEER.

THE COST OF FURNISHING, ERECTING, MAINTAINING, AND REMOVING THE REQUIRED SIGNS SHALL BE INCLUDED IN THE CONTRACT.

DRAWN	02-15-89
REVISED	03-27-08
REVISED	10-21-21
REVISED	05-27-22

STD. 9-23

MODEL: Default
FILE NAME: \\vksgs-41\gis4\sure\0550\0595\IL_DOT_District_9\0595-4001-0074L_13_over_N_Fork_Saline_River_Ph1_Gallatin_Co\CADD\CADD Sheets\d978969-sht-SignRoughGrooveSurf.dgn

VEENSTRA & KIMM INC.
A Kleinfelder Company

DESIGNED - CPK	REVISED -	STATE OF ILLINOIS DEPARTMENT OF TRANSPORTATION	ROUGH GROOVED SURFACE SIGN
DRAWN - DMS	REVISED -		
CHECKED - CPK	REVISED -		
DATE - 11-06-2025	REVISED -		SCALE: SHEET 1 OF 1 SHEETS STA. TO STA.

F.A.P. RTE.	SECTION	COUNTY	TOTAL SHEETS	SHEET NO.
331	(10-1,10-3-1)B-2	GALLATIN	86	66
		CONTRACT NO. 78969		
	ILLINOIS	FED. AID PROJECT		

UNEVEN LANES SIGN

W8–11 (48″ X 48″)

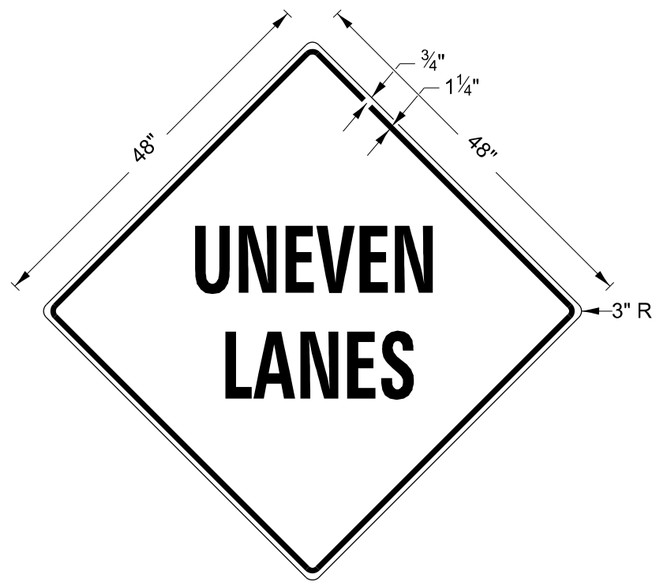

COLORS:

LEGEND AND BORDER - BLACK NON-REFLECTORIZED
BACKGROUND - ORANGE REFLECTORIZED

NOTE: PRIOR TO ALLOWING TRAFFIC ON ANY PORTION OF THE ROADWAY THAT HAS BEEN COLDMILLED OR BEFORE RESURFACING OPERATIONS BEGIN, THE CONTRACTOR SHALL HAVE ERECTED "UNEVEN PAVEMENT" SIGNS THAT CONFORM TO THE ABOVE DETAILS. A MINIMUM OF ONE SIGN AT EACH END OF THE IMPROVEMENT WILL BE REQUIRED. THE CONTRACTOR SHALL MAINTAIN THE "UNEVEN PAVEMENT" SIGNS UNTIL THE RESURFACING OPERATIONS ARE COMPLETED.

IF AT ANY TIME THE SIGNS ARE IN PLACE BUT NOT APPLICABLE, THEY SHALL BE TURNED FROM THE VIEW OF MOTORISTS OR COVERED AS DIRECTED BY THE ENGINEER.

THE COST OF FURNISHING, ERECTING, MAINTAINING, AND REMOVING THE REQUIRED SIGNS SHALL BE INCLUDED IN THE CONTRACT.

DRAWN	02-15-89
REVISED	05-08-08
REVISED	10-21-21
REVISED	05-27-22

STD. 9-24

TYPICAL CROSS SECTION SHOWING STEP CONSTRUCTION ON EXISTING FILL

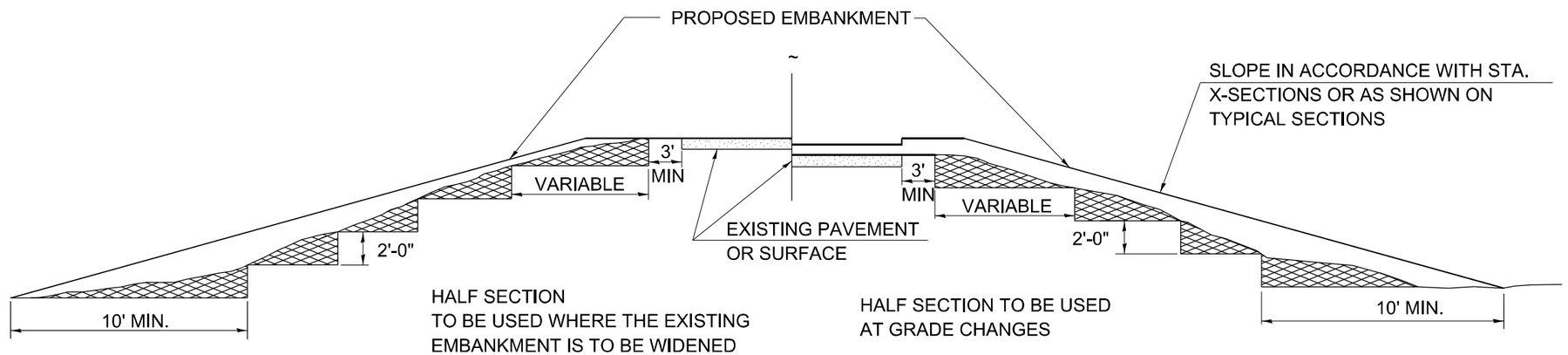

STEPS SHALL BE CUT IN THE EXISTING SLOPE IN ACCORDANCE WITH ART. 205.03 EXCEPT THAT THE REQUIREMENT THAT STEPS SHALL BE CUT INTO THE EXISTING SLOPE BEFORE THE CONTRUCTION OF THE EXISTING EMBANKMENT IS STARTED SHALL NOT APPLY. MATERIAL TO BE REMOVED AND REPLACED IN THE EMBANKMENT IN ACCORDANCE WITH ART. 205.04. COST TO BE INCLUDED IN THE VARIOUS ITEMS OF EXCAVATION AND NO ADDITIONAL COMPENSATION WILL BE ALLOWED BECAUSE OF THIS WORK.

DRAWN	02-15-89
REVISED	05-07-08
REVISED	10-21-21
REVISED	05-27-22

STD. 9-25

MODEL: Default
FILE NAME: \\vksp-fs1\sprdsave\050\0505-01\ 90595-0014-0007-4_13_over_N_Fork_Saline_River_Pt1_Gallatin_Co\CADD\CADD Sheets\0978969-InlnStepCorsEXFill.dgn

VEENSTRA & KIMM INC.
A Kleinfelder Company

DESIGNED - CPK	REVISED -	STATE OF ILLINOIS DEPARTMENT OF TRANSPORTATION	STEP CONSTRUCTION DETAIL
DRAWN - DMS	REVISED -		
CHECKED - CPK	REVISED -		
DATE - 11-06-2025	REVISED -		SCALE: SHEET 1 OF 1 SHEETS STA. TO STA.

F.A.P. RTE.	SECTION	COUNTY	TOTAL SHEETS	SHEET NO.
331	(10-1,10-3-1)B-2	GALLATIN	86	68
		CONTRACT NO. 78969		
	ILLINOIS	FED. AID PROJECT		

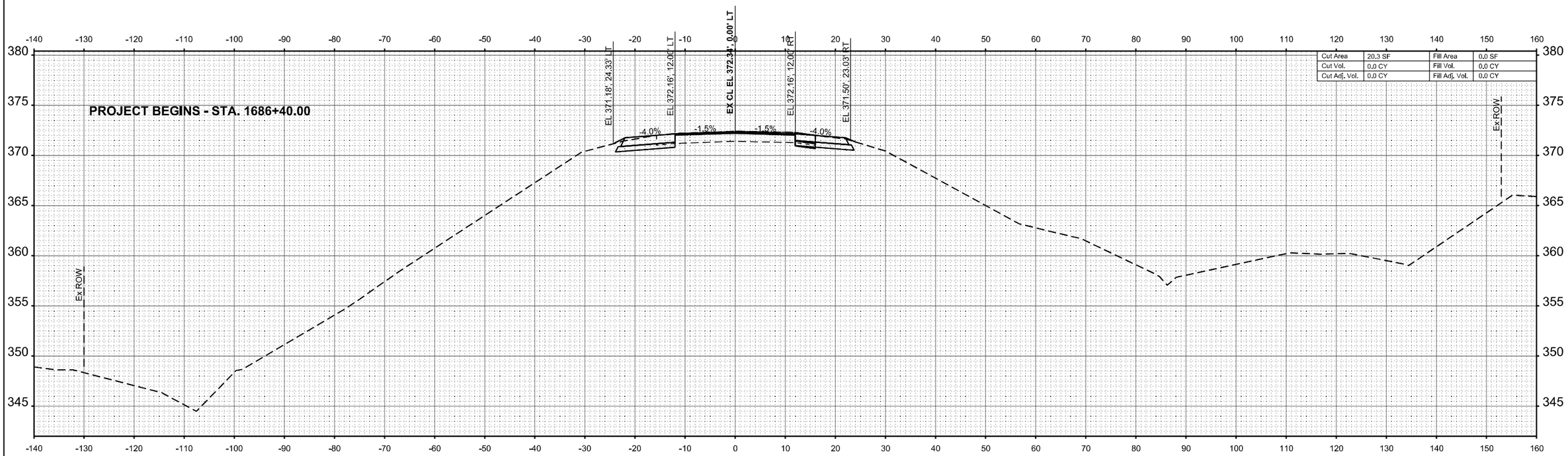

STA 1686+40.00

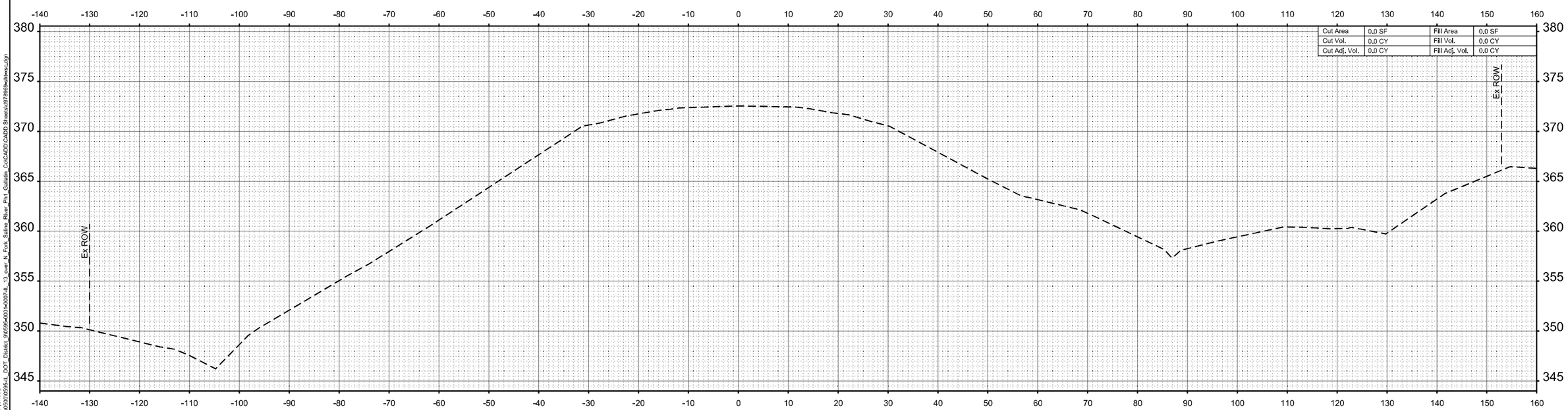

STA 1686+25.00

MODEL: Excl_Jt 13 - 1686+25.00 [Sheet]
FILE NAME: \\vksgis-fs1\gis\shared\050\0305\4_DOT_District_9\0595-0001-0007-4_13_over_N_Fork_Saline_River_Pt1_Gallatin_Co\CADD\CADD Sheets\d78969-sht-xsc.dgn

VEENSTRA & KIMM INC.
A Kleinfelder Company

DESIGNED - CPK	REVISED -		
DRAWN - DMS	REVISED -		
CHECKED - CPK	REVISED -		
DATE - 11-06-2025	REVISED -		

STATE OF ILLINOIS
DEPARTMENT OF TRANSPORTATION

CROSS SECTIONS

SCALE: 1"=10' | SHEET 1 OF 18 SHEETS | STA. | TO STA.

F.A.P. RTE.	SECTION	COUNTY	TOTAL SHEETS	SHEET NO.
331	(10-1,10-3-1)B-2	GALLATIN	86	69
		CONTRACT NO. 78969		
		ILLINOIS	FED. AID PROJECT	

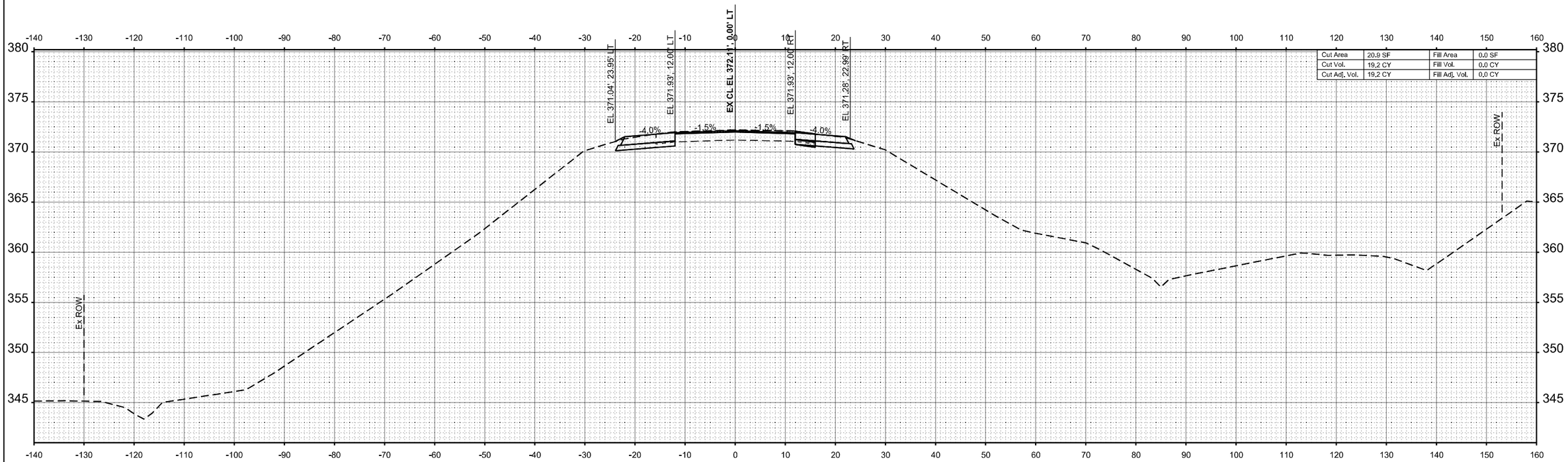

Cut Area	20.9 SF	Fill Area	0.0 SF
Cut Vol.	19.2 CY	Fill Vol.	0.0 CY
Cut Adj. Vol.	19.2 CY	Fill Adj. Vol.	0.0 CY

STA 1686+75.00

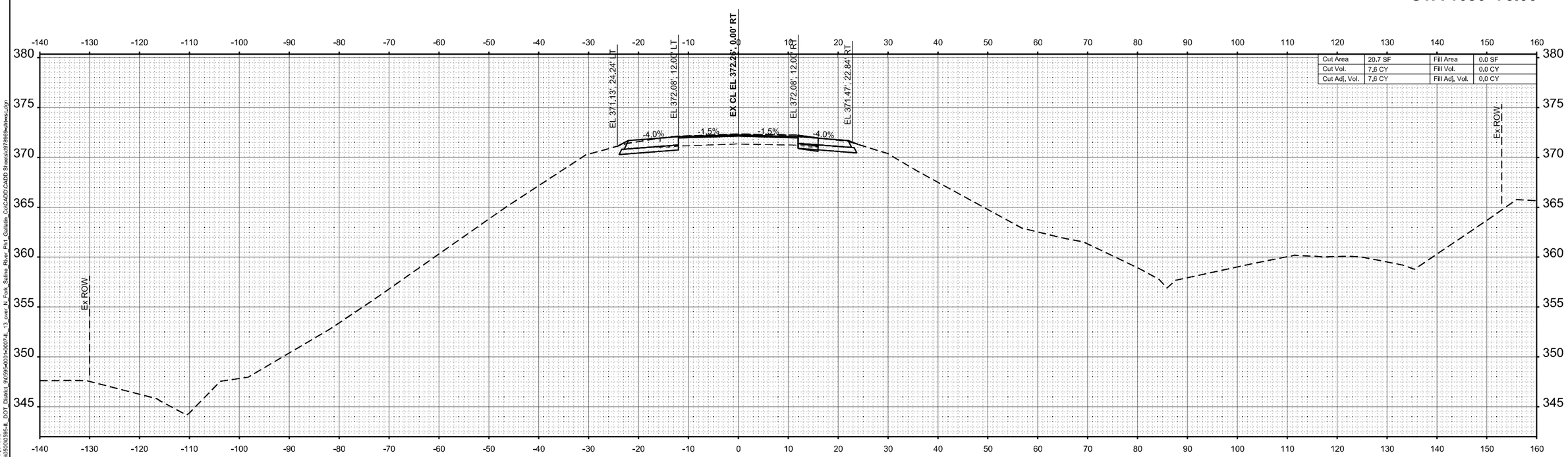

Cut Area	20.7 SF	Fill Area	0.0 SF
Cut Vol.	7.6 CY	Fill Vol.	0.0 CY
Cut Adj. Vol.	7.6 CY	Fill Adj. Vol.	0.0 CY

STA 1686+50.00

MODEL: ExCL_IL13 - 1686+50.00 [Sheet]
FILE NAME: \\vksgs-fs1\gpshare\005000595-IL_DOT_District_9\2595-4001-00074L_13_over_N_Fork_Sattna_River_Pn1_Gallatin_Co\CADD CADD Sheets\d9786903-sh-sec.dgn

VEENSTRA & KIMM INC.
A Kleinfelder Company

DESIGNED - CPK	REVISED -		
DRAWN - DMS	REVISED -		
CHECKED - CPK	REVISED -		
DATE - 11-06-2025	REVISED -		

STATE OF ILLINOIS
DEPARTMENT OF TRANSPORTATION

CROSS SECTIONS

SCALE: 1"=10' | SHEET 2 OF 18 SHEETS | STA. | TO STA.

F.A.P. RTE.	SECTION	COUNTY	TOTAL SHEETS	SHEET NO.
331	(10-1,10-3-1)B-2	GALLATIN	86	70

CONTRACT NO. 78969

ILLINOIS | FED. AID PROJECT

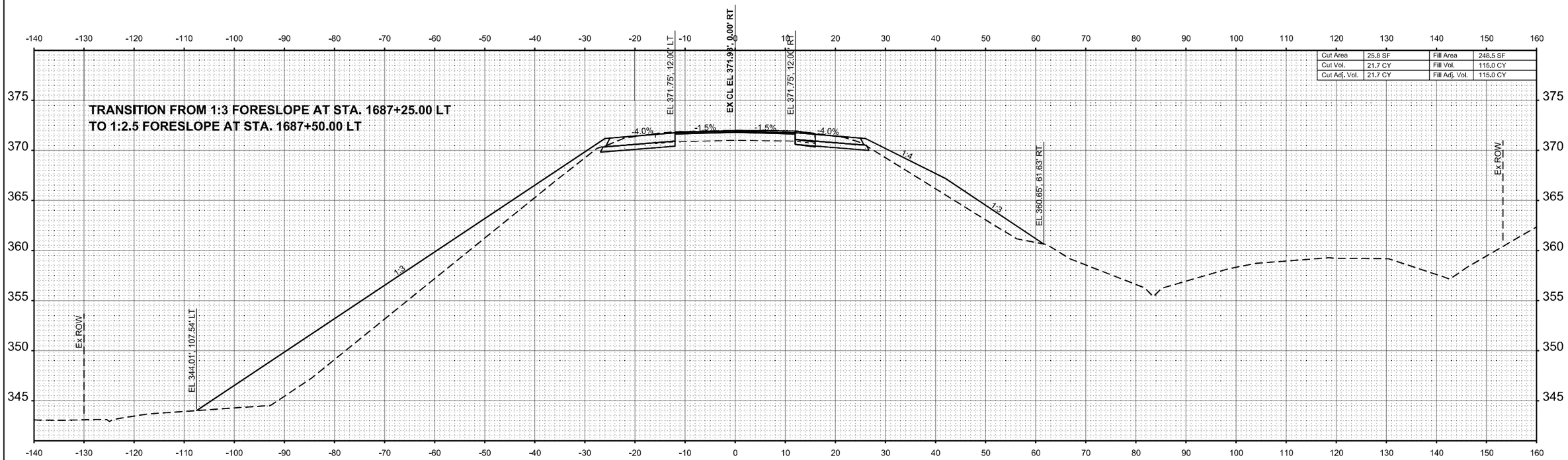

Cut Area	25.8 SF	Fill Area	248.5 SF
Cut Vol.	21.7 CY	Fill Vol.	115.0 CY
Cut Adj. Vol.	21.7 CY	Fill Adj. Vol.	115.0 CY

STA 1687+25.00

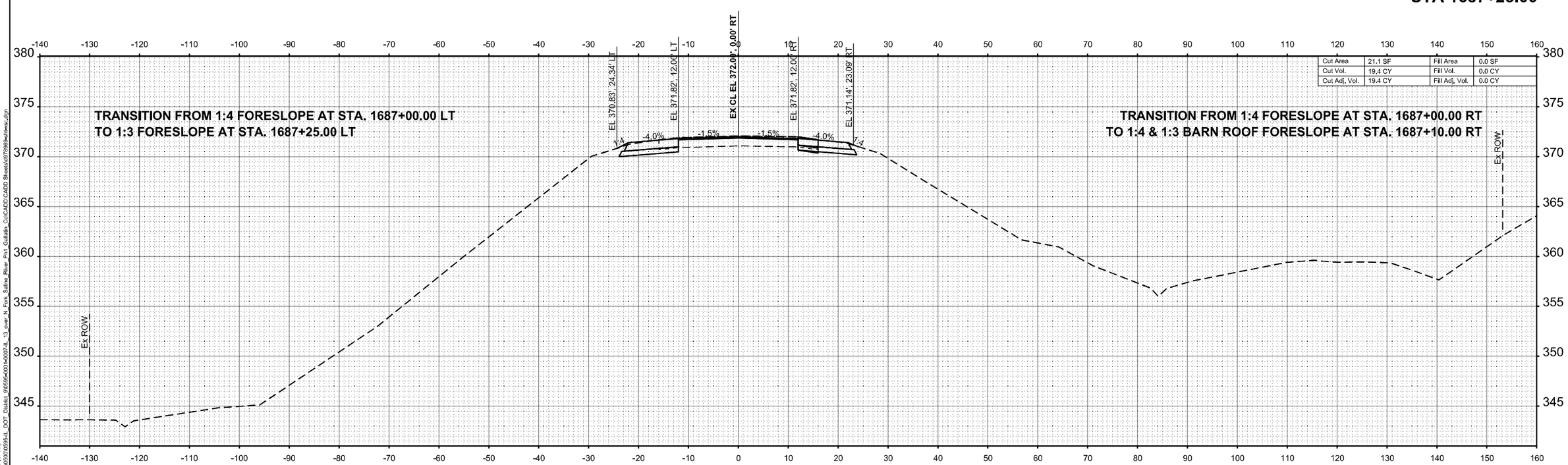

Cut Area	21.1 SF	Fill Area	0.0 SF
Cut Vol.	19.4 CY	Fill Vol.	0.0 CY
Cut Adj. Vol.	19.4 CY	Fill Adj. Vol.	0.0 CY

STA 1687+00.00

MODEL: Ex_IL13 - 1687+00.00 [Sheet]
FILE NAME: \\vksps-fs1\sprshare\050\0599-IL_DOT_District_9\60595-001\-0007-IL_13_over_N_Fork_Salina_River_Ph1_Gallatin_Co\CADD\CADD Sheets\d5786963-all-xsc.dgn

VEENSTRA & KIMM INC.
A Kleinfelder Company

DESIGNED -	CPK	REVISED -	
DRAWN -	DMS	REVISED -	
CHECKED -	CPK	REVISED -	
DATE -	11-06-2025	REVISED -	

STATE OF ILLINOIS
DEPARTMENT OF TRANSPORTATION

CROSS SECTIONS

SCALE: 1"=10' | SHEET 3 OF 18 SHEETS | STA. | TO STA.

F.A.P. RTE.	SECTION	COUNTY	TOTAL SHEETS	SHEET NO.
331	(10-1,10-3-1)B-2	GALLATIN	86	71

CONTRACT NO. 78969

ILLINOIS | FED. AID PROJECT

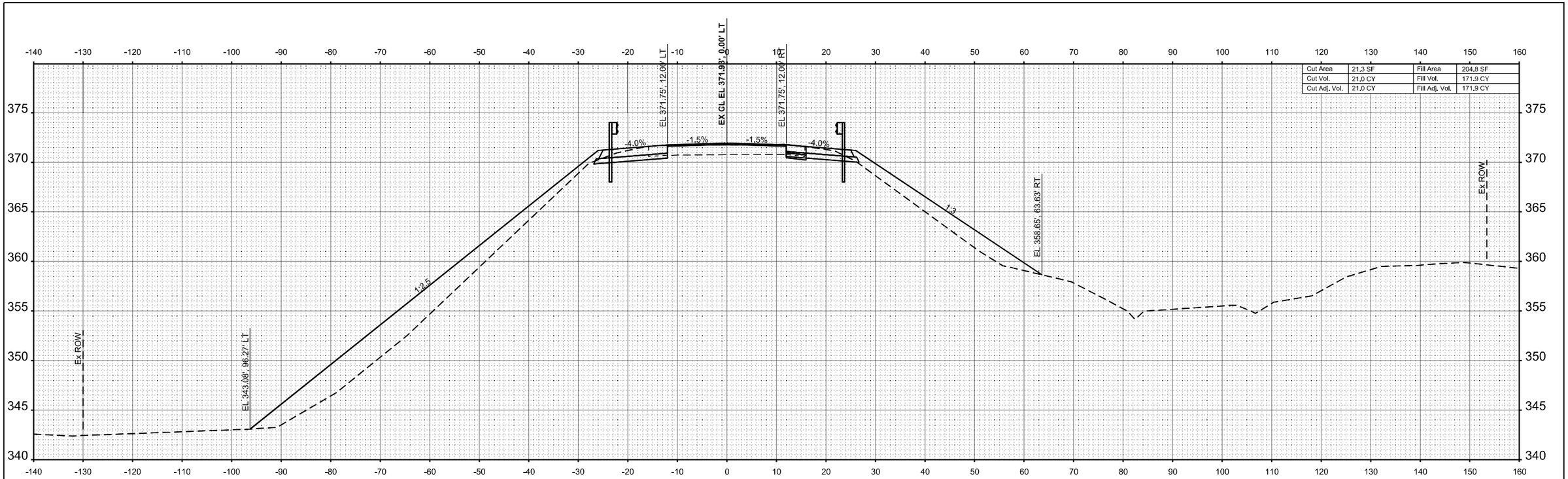

Cut Area	21.3 SF	Fill Area	204.8 SF
Cut Vol.	21.0 CY	Fill Vol.	171.9 CY
Cut Adj. Vol.	21.0 CY	Fill Adj. Vol.	171.9 CY

STA 1687+75.00

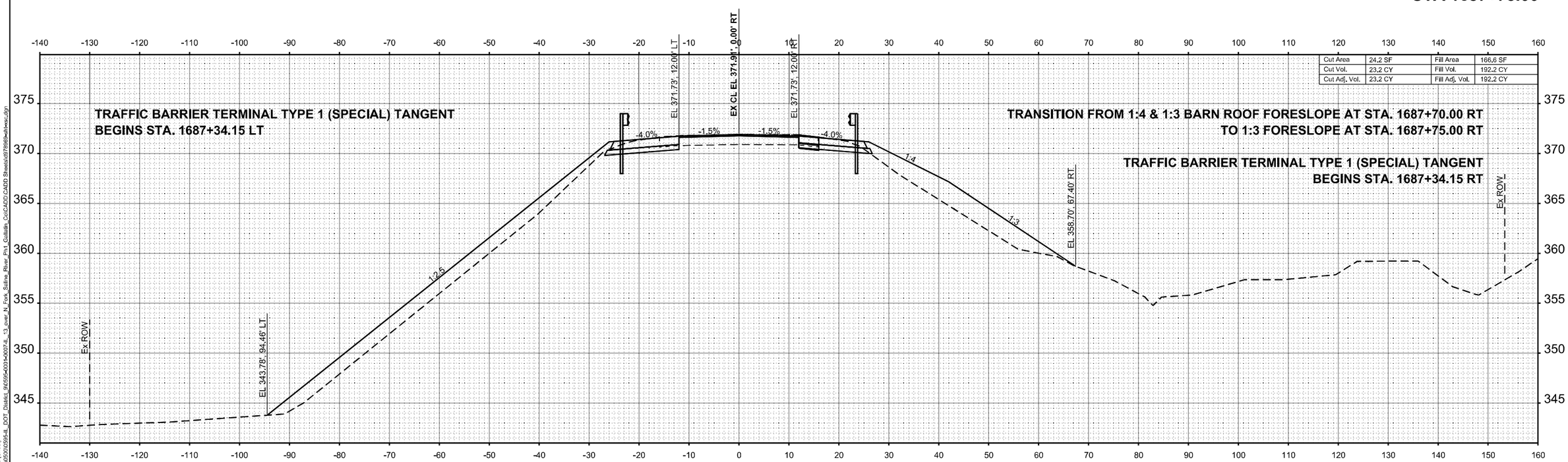

TRAFFIC BARRIER TERMINAL TYPE 1 (SPECIAL) TANGENT
BEGINS STA. 1687+34.15 LT

TRANSITION FROM 1:4 & 1:3 BARN ROOF FORESLOPE AT STA. 1687+70.00 RT
TO 1:3 FORESLOPE AT STA. 1687+75.00 RT

TRAFFIC BARRIER TERMINAL TYPE 1 (SPECIAL) TANGENT
BEGINS STA. 1687+34.15 RT

Cut Area	24.2 SF	Fill Area	166.6 SF
Cut Vol.	23.2 CY	Fill Vol.	192.2 CY
Cut Adj. Vol.	23.2 CY	Fill Adj. Vol.	192.2 CY

STA 1687+50.00

MODEL: ExCL_IL13 - 1687+50.00 [Sheet]
FILE NAME: \\vksps4s1\spraiseve\050\0596-IL_DOT_District_9\59596-0010-0007-IL_13_over_IL_Fork_Saline_River_Pt1_Gallatin_Co\CADD\CADD Sheets\4978969eli-wsc.dgn

VEENSTRA & KIMM INC.
A Kleinfelder Company

DESIGNED	- CPK	REVISED	-
DRAWN	- DMS	REVISED	-
CHECKED	- CPK	REVISED	-
DATE	- 11-06-2025	REVISED	-

STATE OF ILLINOIS
DEPARTMENT OF TRANSPORTATION

CROSS SECTIONS

SCALE: 1"=10' | SHEET 4 OF 18 SHEETS | STA. | TO STA.

F.A.P. RTE.	SECTION	COUNTY	TOTAL SHEETS	SHEET NO.
331	(10-1,10-3-1)B-2	GALLATIN	86	72

CONTRACT NO. 78969

ILLINOIS | FED. AID PROJECT

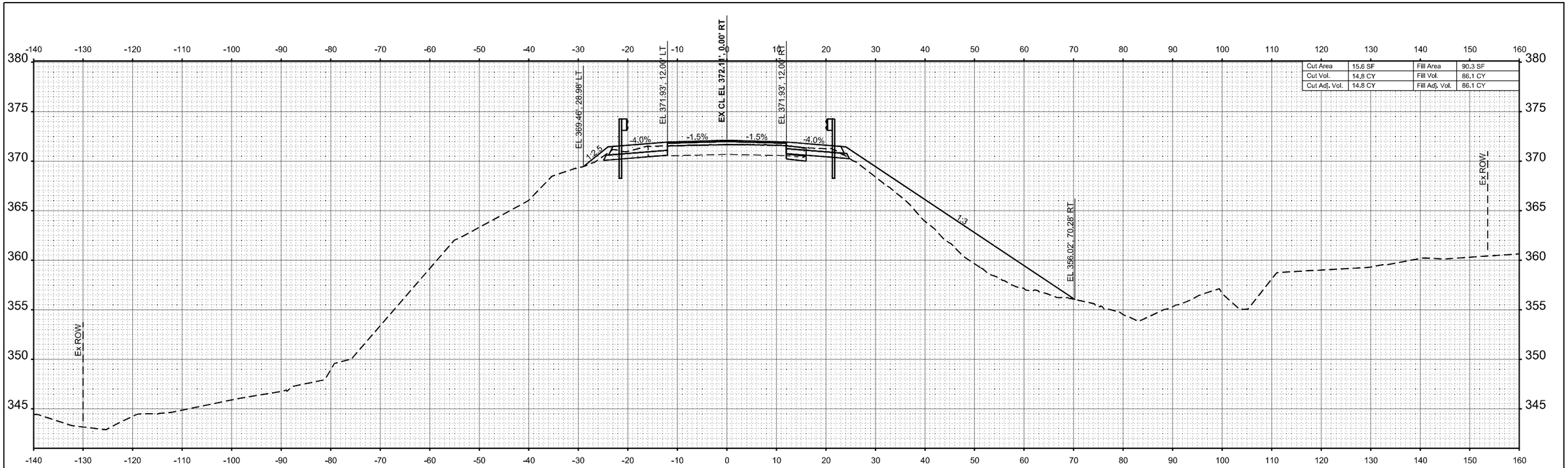

Cut Area	15.6 SF	Fill Area	90.3 SF
Cut Vol.	14.8 CY	Fill Vol.	86.1 CY
Cut Adj. Vol.	14.8 CY	Fill Adj. Vol.	86.1 CY

STA 1688+25.00

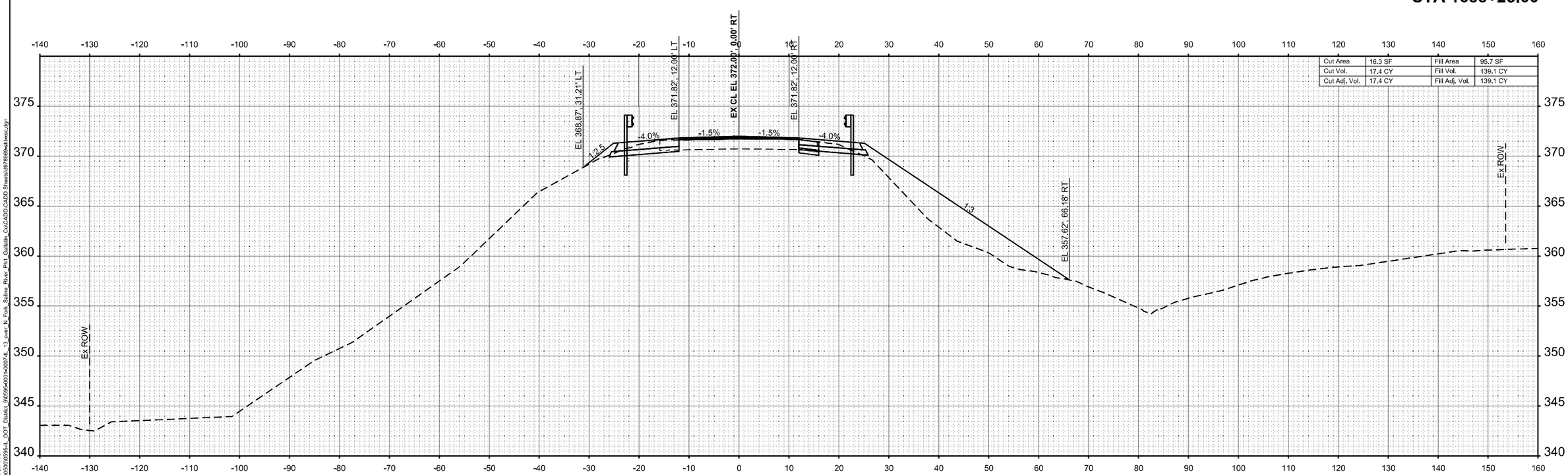

Cut Area	16.3 SF	Fill Area	95.7 SF
Cut Vol.	17.4 CY	Fill Vol.	139.1 CY
Cut Adj. Vol.	17.4 CY	Fill Adj. Vol.	139.1 CY

STA 1688+00.00

MODEL: Ex-CL_IL13 - 1688+00.00 [Sheet]
FILE NAME: \\vksgs-fs1\sgroshare\0050\0509\IL_DOT_District_9\60594-0001-0007\IL_13_over_N_Fork_Saline_River_Ph1_Gallatin_Co\CADD\CADD Sheets\d978969sh-xsc.dgn

VEENSTRA & KIMM INC.
A Kleinfelder Company

DESIGNED - CPK	REVISED -		
DRAWN - DMS	REVISED -		
CHECKED - CPK	REVISED -		
DATE - 11-06-2025	REVISED -		

STATE OF ILLINOIS
DEPARTMENT OF TRANSPORTATION

CROSS SECTIONS

SCALE: 1"=10' | SHEET 5 OF 18 SHEETS | STA. | TO STA.

F.A.P. RTE.	SECTION	COUNTY	TOTAL SHEETS	SHEET NO.
331	(10-1,10-3-1)B-2	GALLATIN	86	73

CONTRACT NO. 78969

ILLINOIS | FED. AID PROJECT

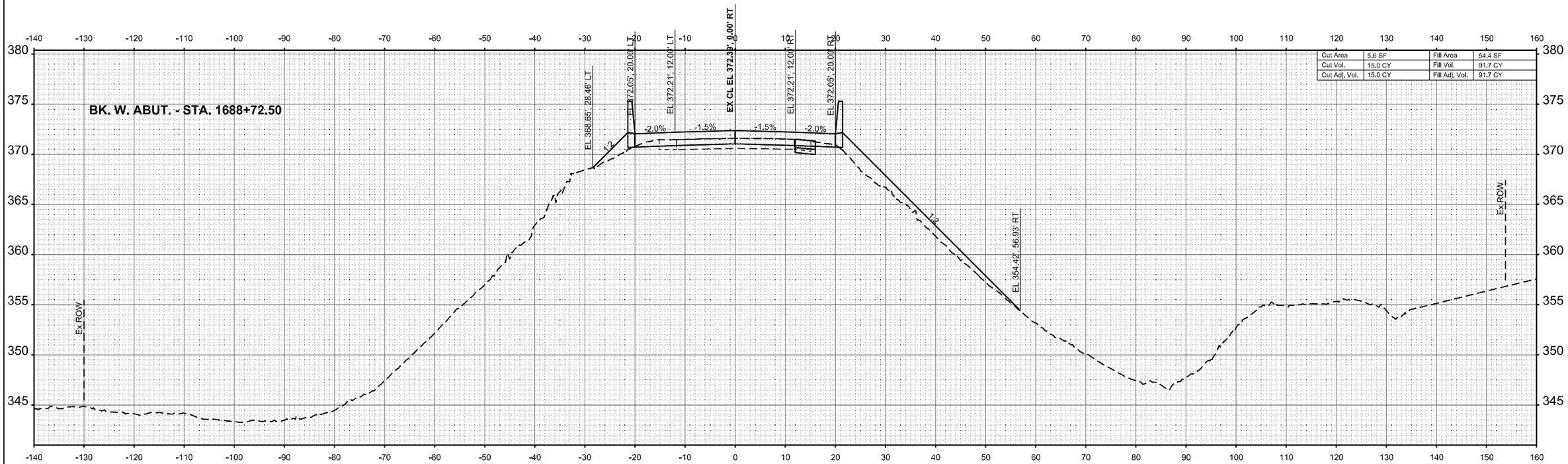

Cut Area	5.6 SF	Fill Area	54.4 SF
Cut Vol.	15.0 CY	Fill Vol.	91.7 CY
Cut Adj. Vol.	15.0 CY	Fill Adj. Vol.	91.7 CY

STA 1688+72.50

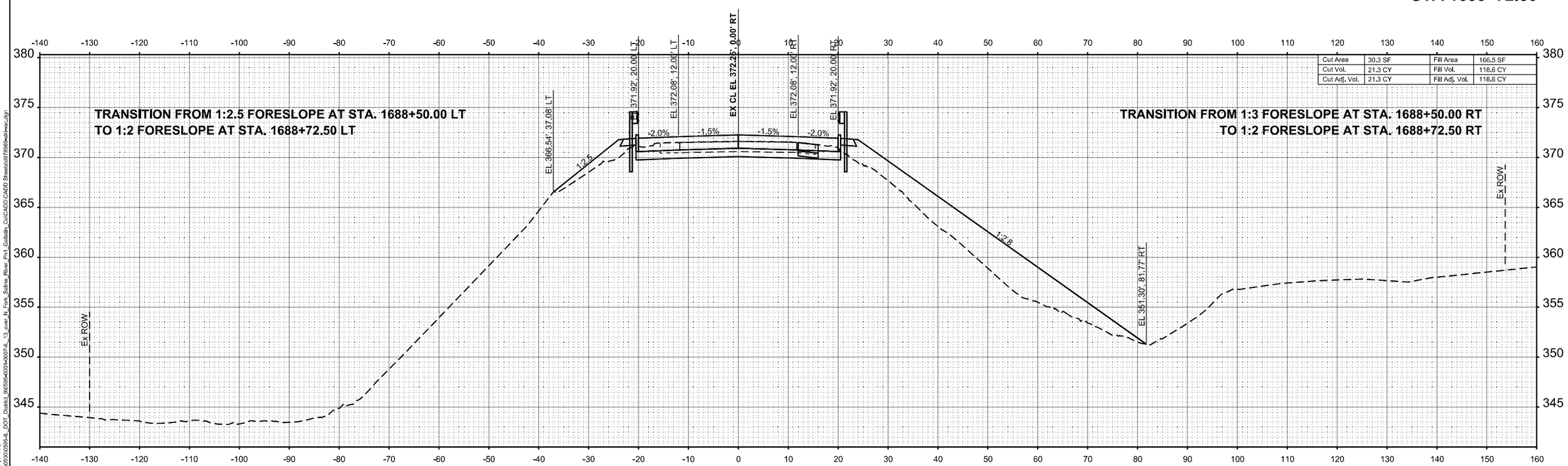

Cut Area	30.3 SF	Fill Area	166.5 SF
Cut Vol.	21.3 CY	Fill Vol.	118.6 CY
Cut Adj. Vol.	21.3 CY	Fill Adj. Vol.	118.6 CY

STA 1688+50.00

MODEL: ExCL_IL13 - 1688+50.00 [Sheet]
FILE NAME: \\vksgs-fs1\gis\share\0550\0595HI_DOT_District_9\60950400\+00074L_13_over_N_Fork_Saline_River_Ph1_Gallatin_Co\CADD\CADD Sheets\d78969sh1-xsc.dgn

VEENSTRA & KIMM INC.
A Kleinfelder Company

DESIGNED	- CPK	REVISED	-
DRAWN	- DMS	REVISED	-
CHECKED	- CPK	REVISED	-
DATE	- 11-06-2025	REVISED	-

STATE OF ILLINOIS
DEPARTMENT OF TRANSPORTATION

CROSS SECTIONS

SCALE: 1"=10' | SHEET 6 OF 18 SHEETS | STA. | TO STA.

F.A.P. RTE.	SECTION	COUNTY	TOTAL SHEETS	SHEET NO.
331	(10-1,10-3-1)B-2	GALLATIN	86	74

CONTRACT NO. 78969

ILLINOIS | FED. AID PROJECT

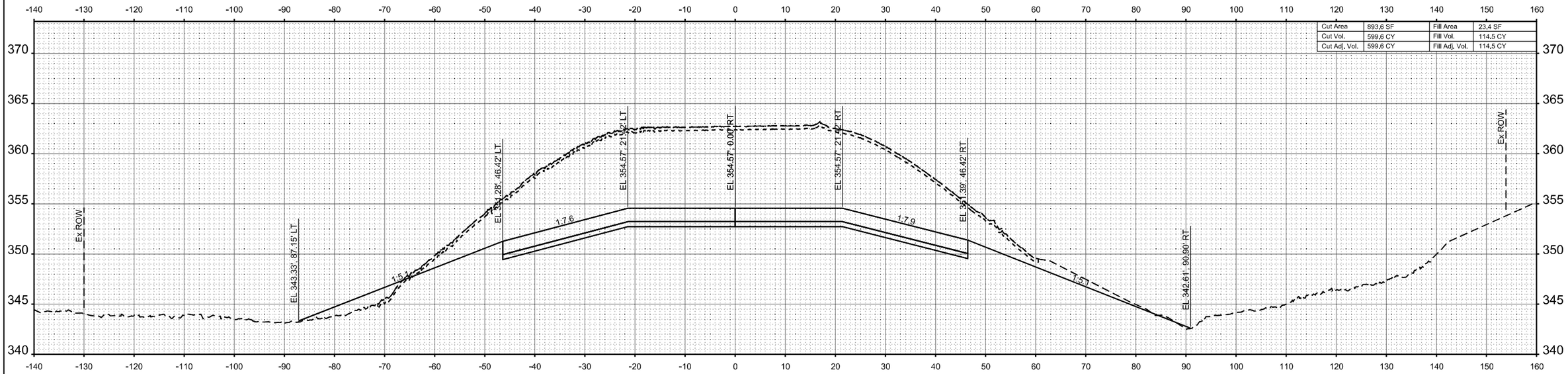

Cut Area	893.6 SF	Fill Area	23.4 SF
Cut Vol.	599.6 CY	Fill Vol.	114.5 CY
Cut Adj. Vol.	599.6 CY	Fill Adj. Vol.	114.5 CY

STA 1689+01.31

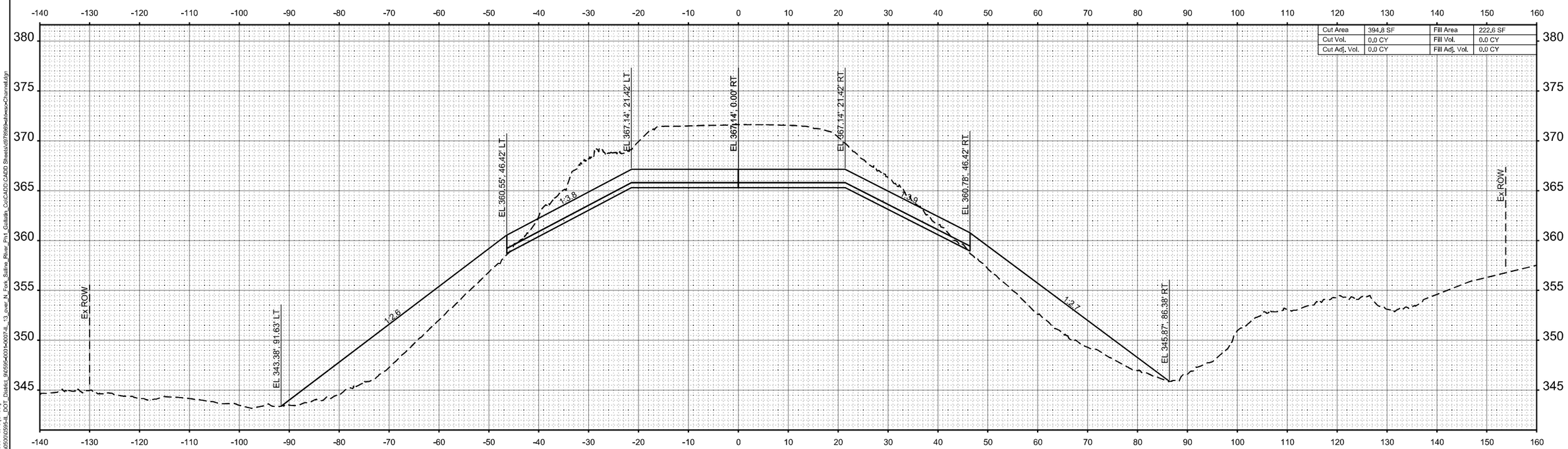

Cut Area	394.8 SF	Fill Area	222.6 SF
Cut Vol.	0.0 CY	Fill Vol.	0.0 CY
Cut Adj. Vol.	0.0 CY	Fill Adj. Vol.	0.0 CY

STA 1688+76.18

MODE: Exc_Jt 13_Channel - 1688+76.18 [Sheet]
FILE NAME: \\vksp-fs1\gcrshaw\050\0595-41_DOT_District_9\059-0001-0007-4_13_over_N_Fork_Saline_River_Prj1_Gallatin_Co\CADD\CADD Sheets\078969-sht-xsc-Channel.dgn

VEENSTRA & KIMM INC.
A Kleinfelder Company

DESIGNED	-	CPK	REVISED -
DRAWN	-	DMS	REVISED -
CHECKED	-	CPK	REVISED -
DATE	-	11-06-2025	REVISED -

STATE OF ILLINOIS
DEPARTMENT OF TRANSPORTATION

CROSS SECTIONS

SCALE: 1"=10' | SHEET 7 OF 18 SHEETS | STA. | TO STA.

F.A.P. RTE.	SECTION	COUNTY	TOTAL SHEETS	SHEET NO.
331	(10-1,10-3-1)B-2	GALLATIN	86	75

CONTRACT NO. 78969

ILLINOIS | FED. AID PROJECT

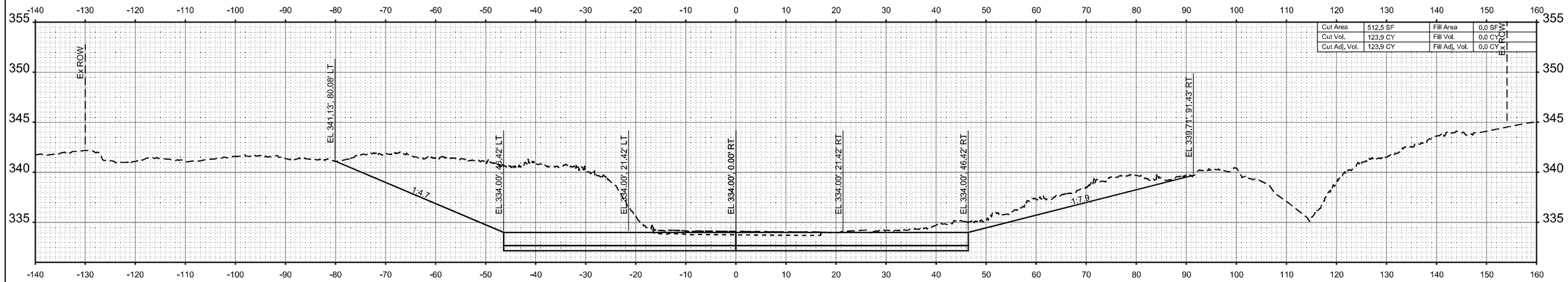

Cut Area	512.5 SF	Fill Area	0.0 SF
Cut Vol.	123.9 CY	Fill Vol.	0.0 CY
Cut Adj. Vol.	123.9 CY	Fill Adj. Vol.	0.0 CY

STA 1689+62.44

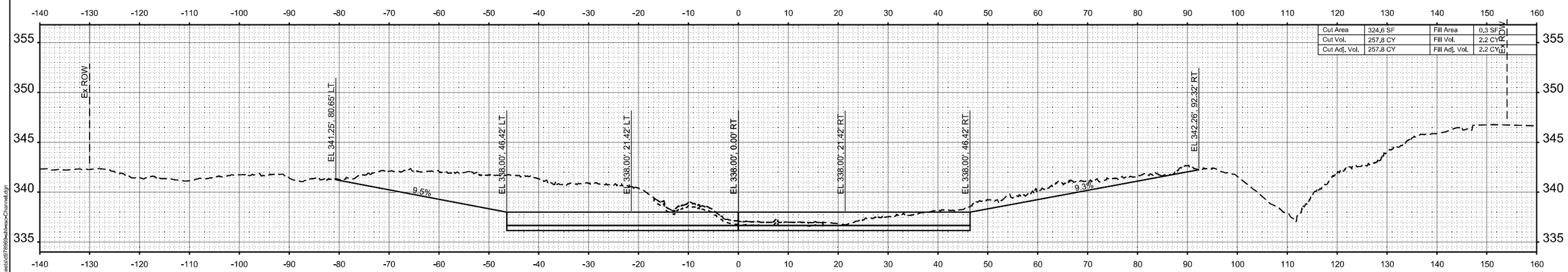

Cut Area	324.6 SF	Fill Area	0.3 SF
Cut Vol.	257.8 CY	Fill Vol.	2.2 CY
Cut Adj. Vol.	257.8 CY	Fill Adj. Vol.	2.2 CY

STA 1689+54.45

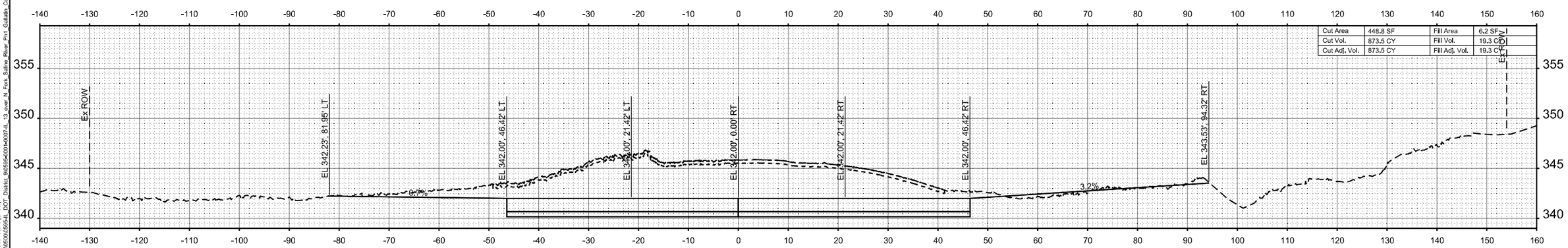

Cut Area	448.8 SF	Fill Area	6.2 SF
Cut Vol.	873.5 CY	Fill Vol.	19.3 CY
Cut Adj. Vol.	873.5 CY	Fill Adj. Vol.	19.3 CY

STA 1689+36.45

MODEL: Ex_IL_13_Channel - 1689+36.45 [Sheet]
FILE NAME: \\vksps-s41\sprshare\0250\10595-IL_DOT_District_9\60595-0001-0007-IL_13_over_N_Fork_Saline_River_Ph1_Gallatin_Co\CADD\CADD Sheets\d9786969all-xs-Channel.dgn

VEENSTRA & KIMM INC.
A Kleinfelder Company

DESIGNED -	CPK	REVISED -	
DRAWN -	DMS	REVISED -	
CHECKED -	CPK	REVISED -	
DATE -	11-06-2025	REVISED -	

STATE OF ILLINOIS
DEPARTMENT OF TRANSPORTATION

CROSS SECTIONS

SCALE: 1"=10' | SHEET 8 OF 18 SHEETS | STA. | TO STA.

F.A.P. RTE.	SECTION	COUNTY	TOTAL SHEETS	SHEET NO.
331	(10-1,10-3-1)B-2	GALLATIN	86	76

CONTRACT NO. 78969

ILLINOIS | FED. AID PROJECT

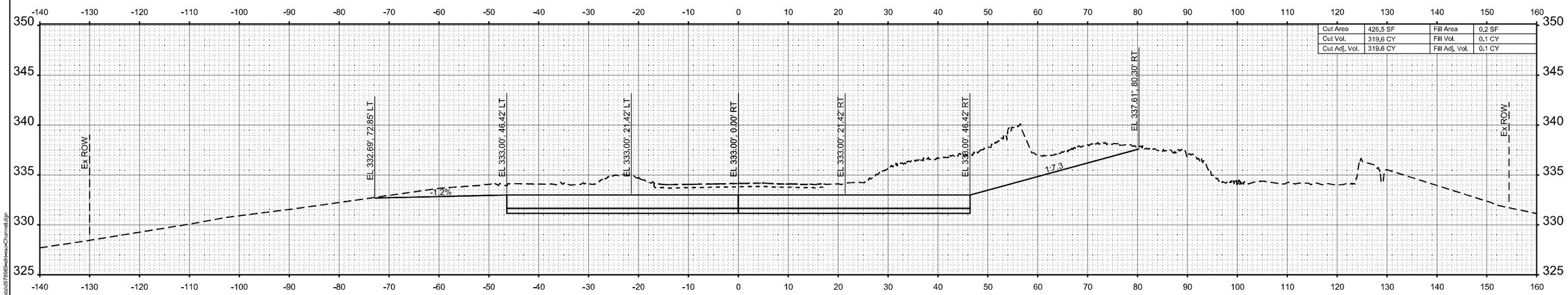

STA 1690+62.55

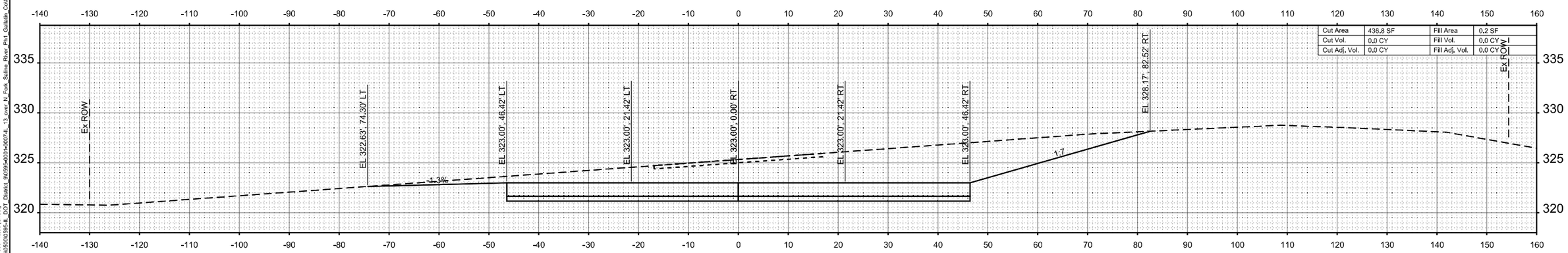

STA 1690+42.56

MODEL: ExCL_IL13_Channel - 1690+42.56 [Sheet]
FILE NAME: \\vksgo-ws1\sprshare\005\000599-IL_DOT_District_9\2595-4001-00074L_13_over_N_Fork_Saline_River_Ph1_Gallatin_Co\CADD\CADD Sheets\d978969-sht-xs-Channel.dgn

VEENSTRA & KIMM INC.
A Kleinfelder Company

DESIGNED - CPK	REVISED -		
DRAWN - DMS	REVISED -		
CHECKED - CPK	REVISED -		
DATE - 11-06-2025	REVISED -		

STATE OF ILLINOIS
DEPARTMENT OF TRANSPORTATION

CROSS SECTIONS

SCALE: 1"=10' | SHEET 9 OF 18 SHEETS | STA. | TO STA.

F.A.P. RTE.	SECTION	COUNTY	TOTAL SHEETS	SHEET NO.
331	(10-1,10-3-1)B-2	GALLATIN	86	77

CONTRACT NO. 78969

ILLINOIS | FED. AID PROJECT

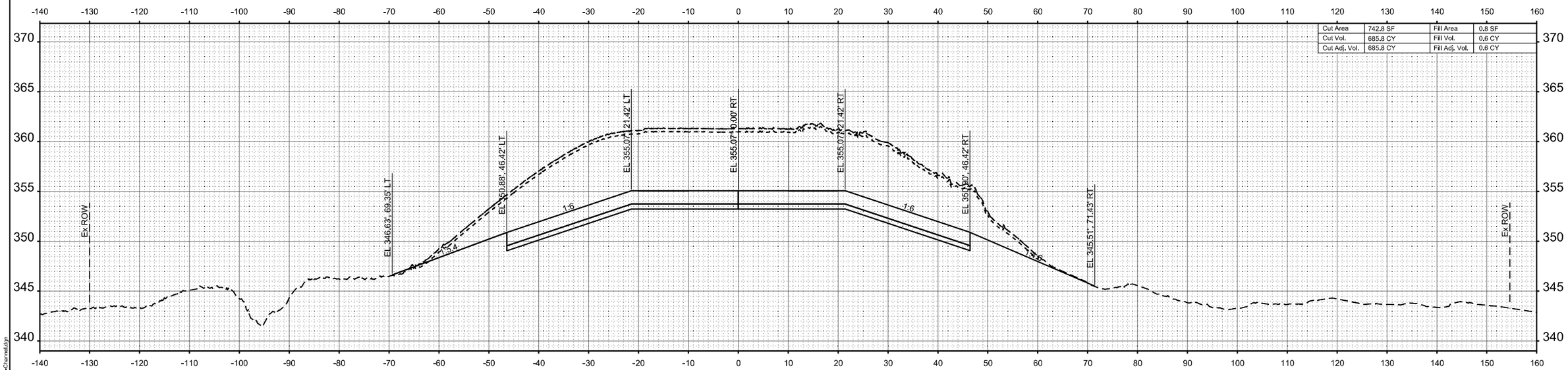

STA 1691+19.69

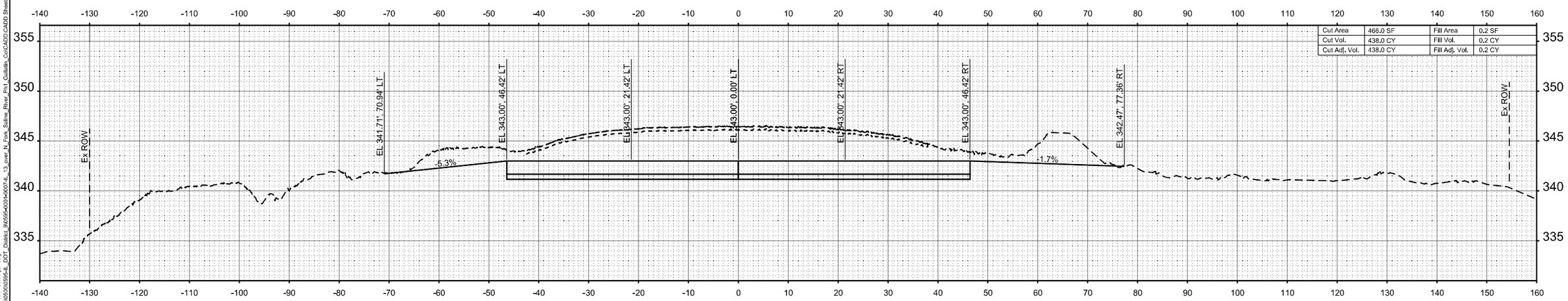

STA 1690+89.05

MODEL: ExCl_IL13_Channel - 1690+89.05 [Sheet]
FILE NAME: \\vksps-c1\spcshare\05000595-IL_DOT_District_9\2599-4000-K007-IL_13_over_N_Fork_Saline_River_Pt1_Gallatin_Co\CADD-CADD Sheets\457969\el\vksps-Channel.dgn

VEENSTRA & KIMM INC.
A Kleinfelder Company

DESIGNED - CPK	REVISED -		
DRAWN - DMS	REVISED -		
CHECKED - CPK	REVISED -		
DATE - 11-06-2025	REVISED -		

STATE OF ILLINOIS
DEPARTMENT OF TRANSPORTATION

CROSS SECTIONS

SCALE: 1"=10' | SHEET 10 OF 18 SHEETS | STA. | TO STA.

F.A.P. RTE.	SECTION	COUNTY	TOTAL SHEETS	SHEET NO.
331	(10-1,10-3-1)B-2	GALLATIN	86	78

CONTRACT NO. 78969

ILLINOIS | FED. AID PROJECT

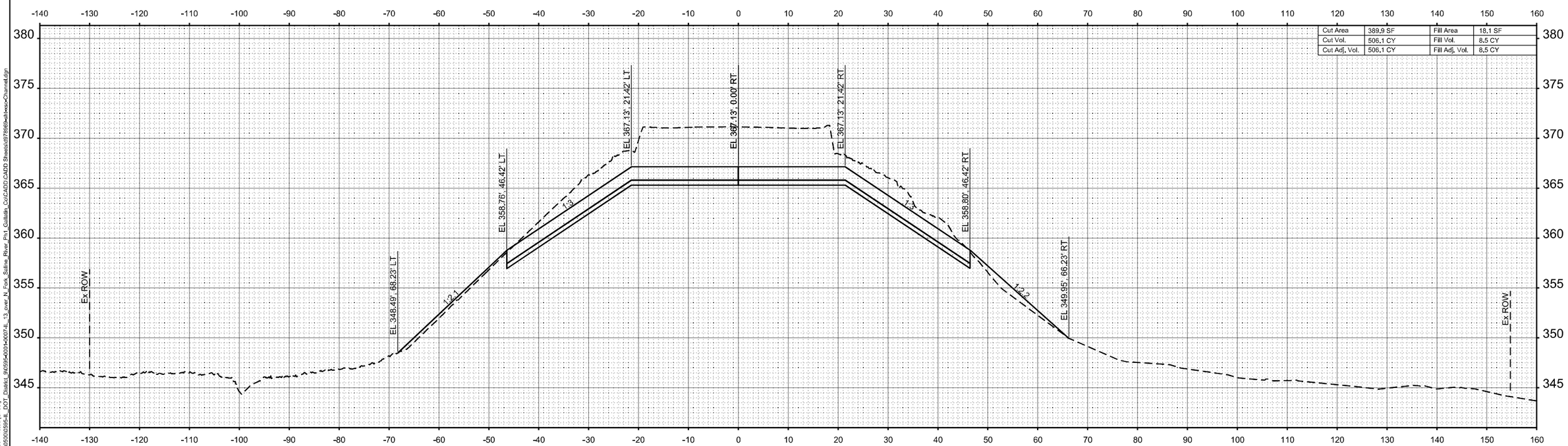

STA 1691+43.82

MODEL: ExCL_IL13_Channel - 1691+43.82 [Sheet]
FILE NAME: \\vksgs-fs1\gis\share\0550\0595-IL_DOT_District_9\60954000\-00074L_13_over_N_Fork_Saline_River_Ph1_Gallatin_Co\CADD CADD Sheets\d978969-h1-xsc-Channel.dgn

VEENSTRA & KIMM INC.
A Kleinfelder Company

DESIGNED -	CPK	REVISED -	
DRAWN -	DMS	REVISED -	
CHECKED -	CPK	REVISED -	
DATE -	11-06-2025	REVISED -	

STATE OF ILLINOIS
DEPARTMENT OF TRANSPORTATION

CROSS SECTIONS

SCALE: 1"=10' | SHEET 11 OF 18 SHEETS | STA. | TO STA.

F.A.P. RTE.	SECTION	COUNTY	TOTAL SHEETS	SHEET NO.
331	(10-1,10-3-1)B-2	GALLATIN	86	79
		CONTRACT NO. 78969		
		ILLINOIS	FED. AID PROJECT	

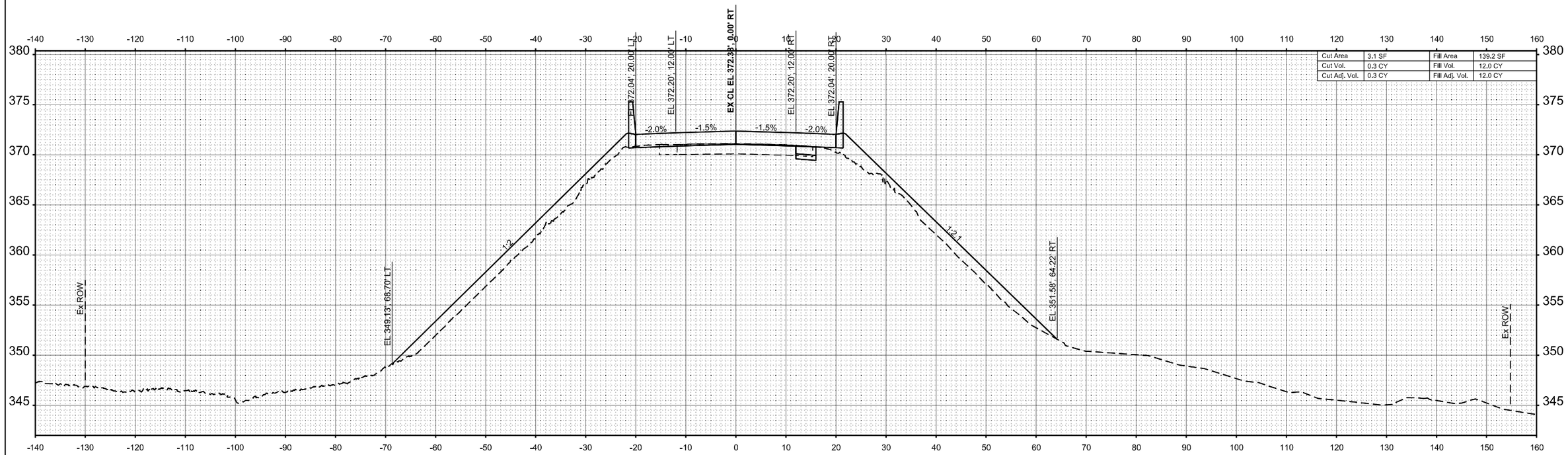

STA 1691+50.00

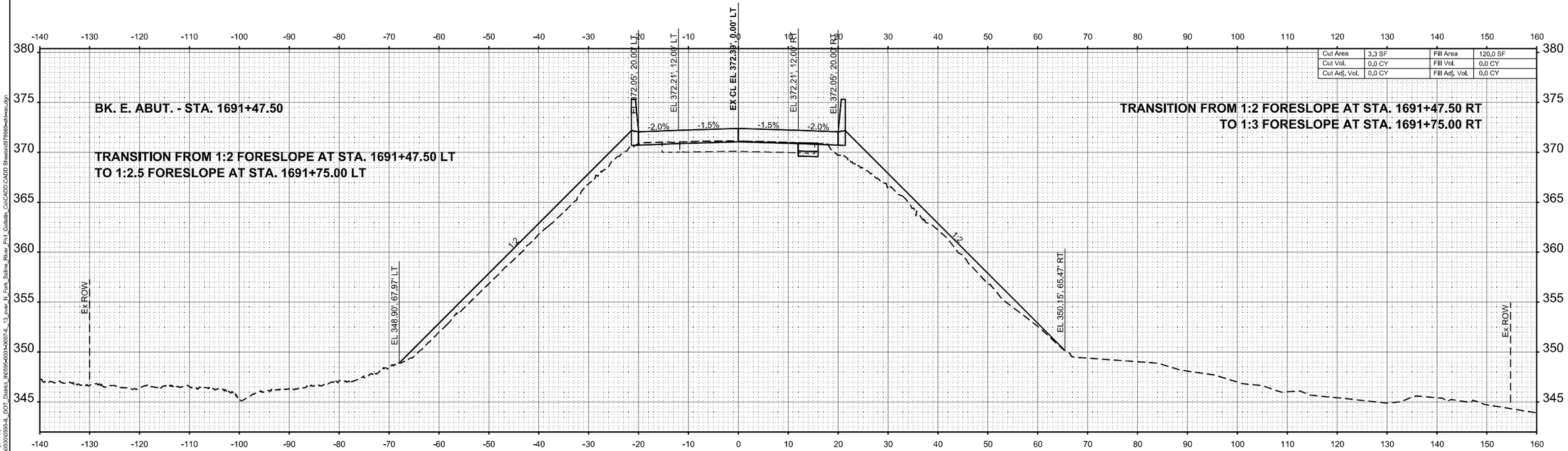

STA 1691+47.50

MODEL: ExCL_IL13 - 1691+47.51 [Sheet]
FILE NAME: \\vksgs-fs1\sgs-share\0550\0595\IL_DOT_District_9\60954001\60074L_13_over_N_Fork_Saline_River_Ph1_Gallatin_Co\CADD CADD Sheets\d978969-sh1-xsc.dgn

VEENSTRA & KIMM INC.
A Kleinfelder Company

DESIGNED - CPK	REVISED -		
DRAWN - DMS	REVISED -		
CHECKED - CPK	REVISED -		
DATE - 11-06-2025	REVISED -		

STATE OF ILLINOIS
DEPARTMENT OF TRANSPORTATION

CROSS SECTIONS

SCALE: 1"=10' | SHEET 12 OF 18 SHEETS | STA. | TO STA.

F.A.P. RTE.	SECTION	COUNTY	TOTAL SHEETS	SHEET NO.
331	(10-1,10-3-1)B-2	GALLATIN	86	80
		CONTRACT NO. 78969		
		ILLINOIS	FED. AID PROJECT	

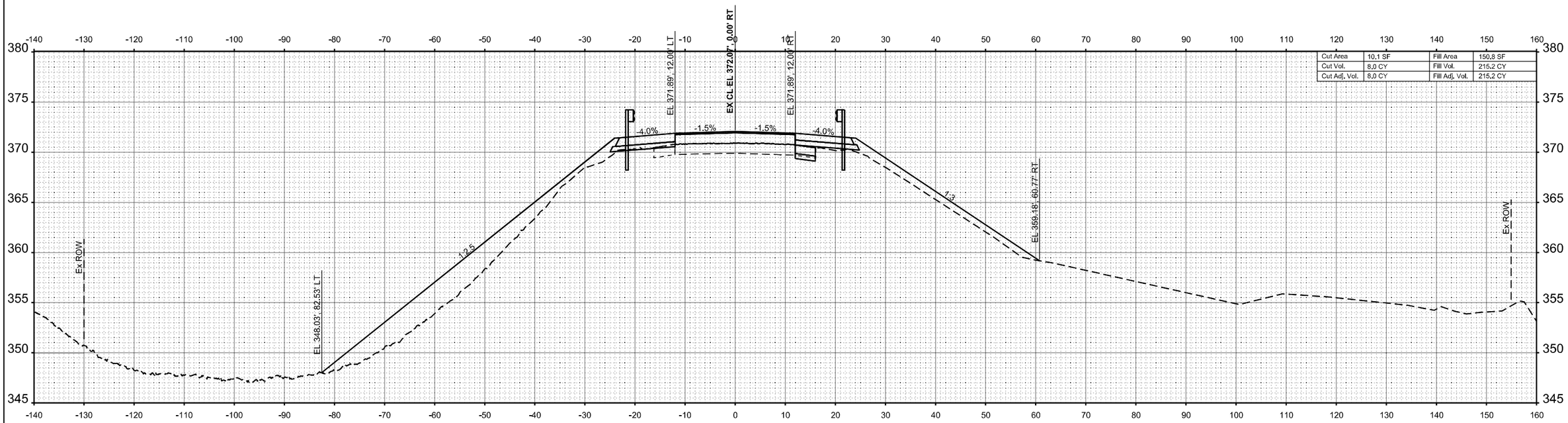

Cut Area	10.1 SF	Fill Area	150.8 SF
Cut Vol.	8.0 CY	Fill Vol.	215.2 CY
Cut Adj. Vol.	8.0 CY	Fill Adj. Vol.	215.2 CY

STA 1692+00.00

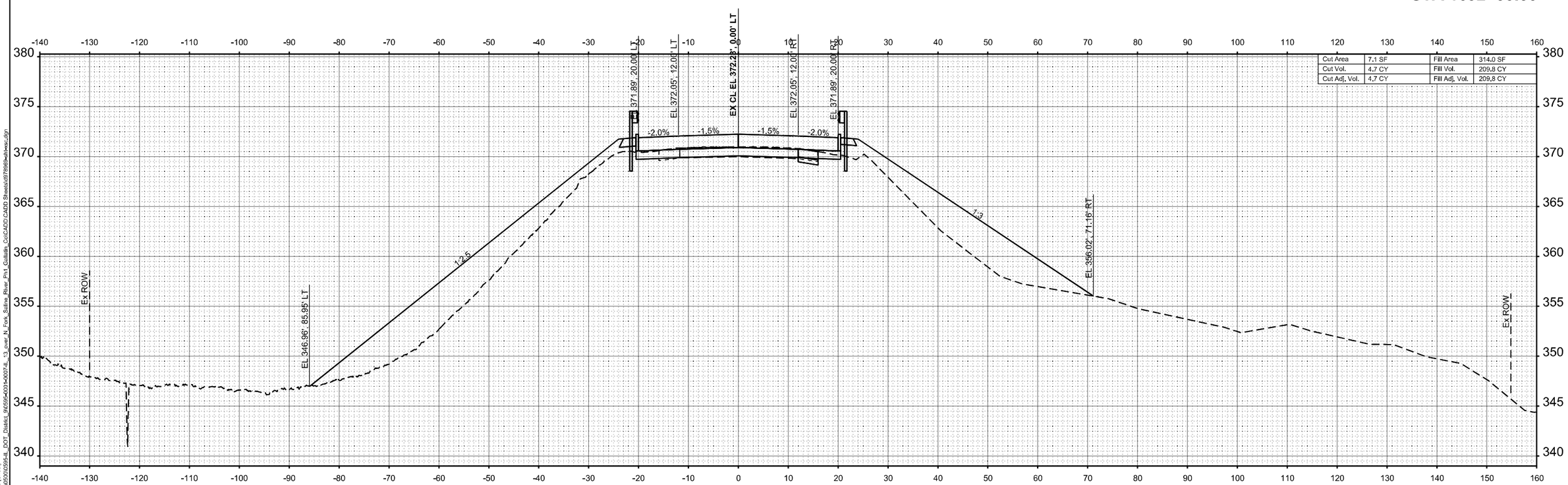

Cut Area	7.1 SF	Fill Area	314.0 SF
Cut Vol.	4.7 CY	Fill Vol.	209.8 CY
Cut Adj. Vol.	4.7 CY	Fill Adj. Vol.	209.8 CY

STA 1691+75.00

MODEL: ExCL_IL13 - 1691+75.00 [Sheet]
FILE NAME: \\vksgo-fs1\sprdshare\005\0005\4_DOT_District_\#0595-4003-00074L_13_over_N_Fork_Saline_River_Ph1_Gallatin_Co\CADD\CADD Sheets\d78969-sht-exc.dgn

VEENSTRA & KIMM INC.
A Kleinfelder Company

DESIGNED -	CPK	REVISED -	
DRAWN -	DMS	REVISED -	
CHECKED -	CPK	REVISED -	
DATE -	11-06-2025	REVISED -	

STATE OF ILLINOIS
DEPARTMENT OF TRANSPORTATION

CROSS SECTIONS

SCALE: 1"=10' | SHEET 13 OF 18 SHEETS | STA. | TO STA.

F.A.P. RTE.	SECTION	COUNTY	TOTAL SHEETS	SHEET NO.
331	(10-1,10-3-1)B-2	GALLATIN	86	81
		CONTRACT NO. 78969		
		ILLINOIS	FED. AID PROJECT	

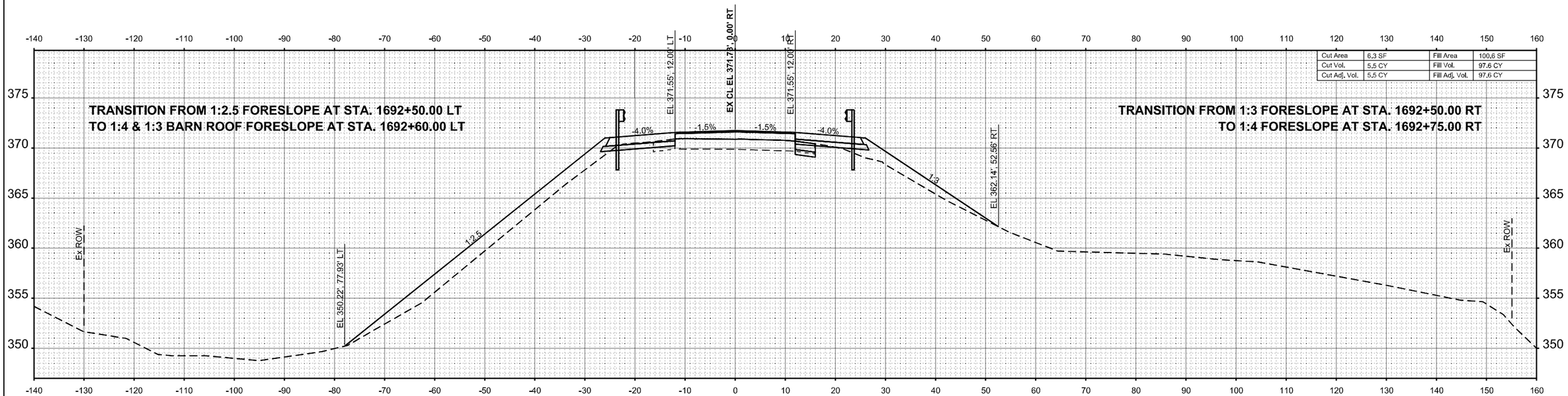

Cut Area	6.3 SF	Fill Area	100.6 SF
Cut Vol.	5.5 CY	Fill Vol.	97.6 CY
Cut Adj. Vol.	5.5 CY	Fill Adj. Vol.	97.6 CY

STA 1692+50.00

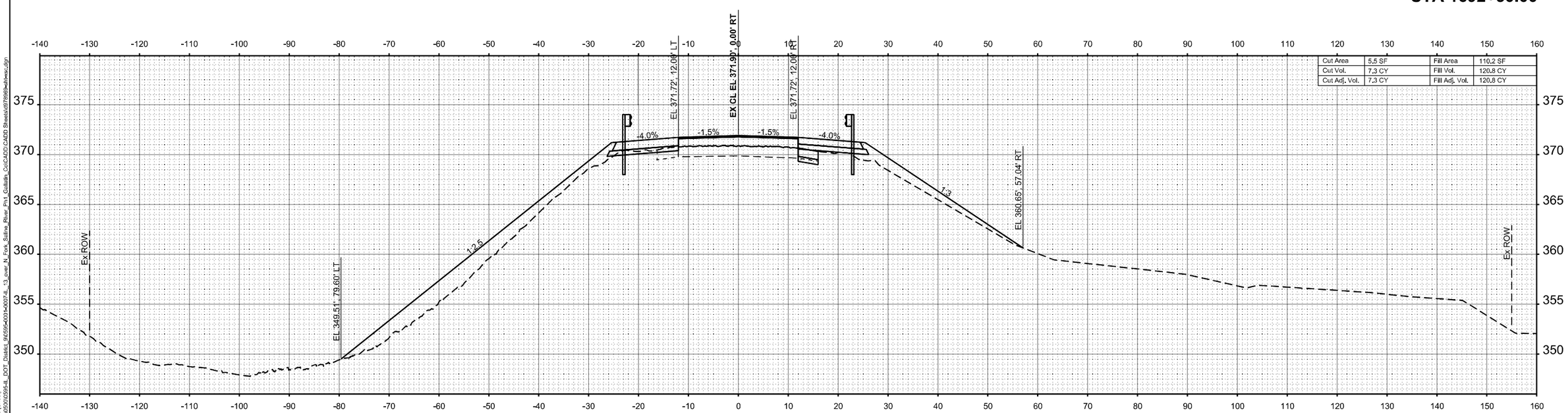

Cut Area	5.5 SF	Fill Area	110.2 SF
Cut Vol.	7.3 CY	Fill Vol.	120.8 CY
Cut Adj. Vol.	7.3 CY	Fill Adj. Vol.	120.8 CY

STA 1692+25.00

MODEL: ExCl_Jt 13 - 1692+25.00 [Sheet]
FILE NAME: \\vksp-s51\sprshare\05010\0595-4L_DOT_District_9\0595-4001-0007-4L_13_over_N_Fork_Saline_River_Ph1_Gallatin_Co\CADD\CADD Sheets\d978969-dt-exc.dgn

VEENSTRA & KIMM INC.
A Kleinfelder Company

DESIGNED	-	CPK	REVISED -
DRAWN	-	DMS	REVISED -
CHECKED	-	CPK	REVISED -
DATE	-	11-06-2025	REVISED -

STATE OF ILLINOIS
DEPARTMENT OF TRANSPORTATION

CROSS SECTIONS

SCALE: 1"=10' | SHEET 14 OF 18 SHEETS | STA. | TO STA.

F.A.P. RTE.	SECTION	COUNTY	TOTAL SHEETS	SHEET NO.
331	(10-1,10-3-1)B-2	GALLATIN	86	82
		CONTRACT NO. 78969		
		ILLINOIS	FED. AID PROJECT	

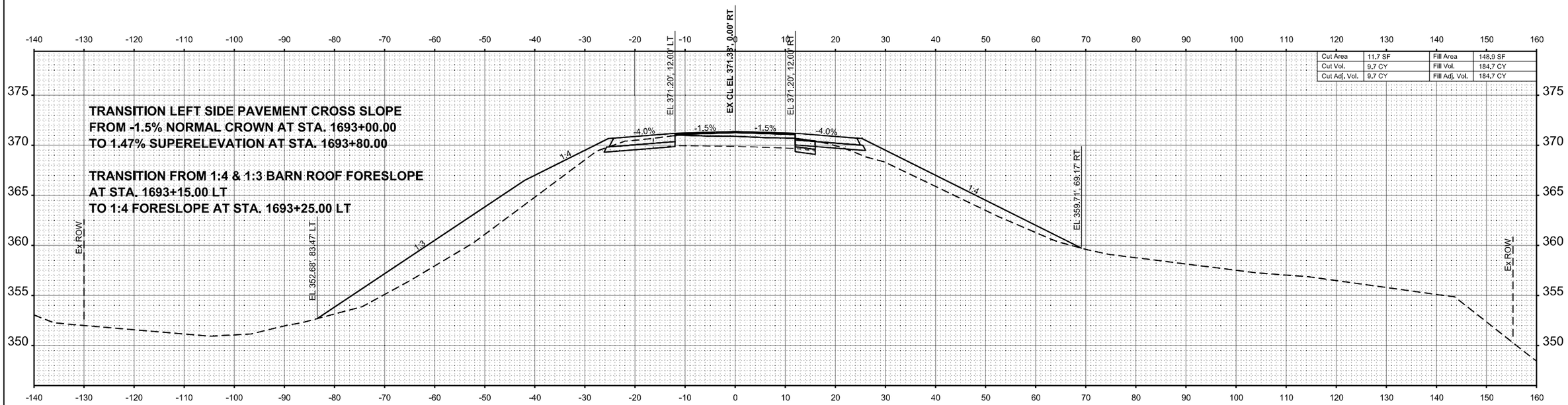

Cut Area	11.7 SF	Fill Area	148.9 SF
Cut Vol.	9.7 CY	Fill Vol.	184.7 CY
Cut Adj. Vol.	9.7 CY	Fill Adj. Vol.	184.7 CY

STA 1693+00.00

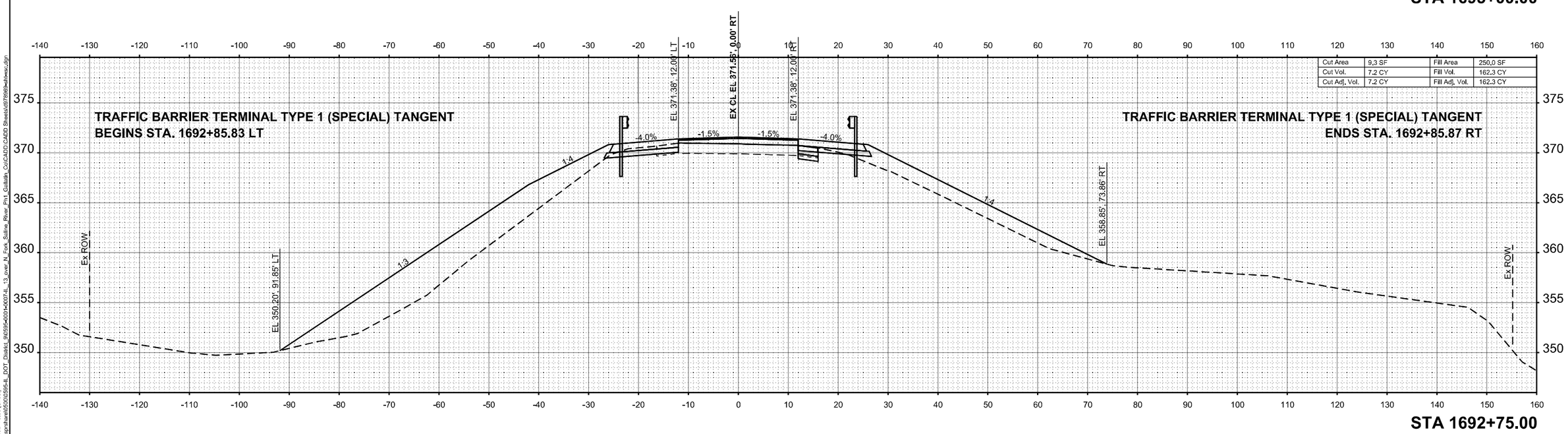

Cut Area	9.3 SF	Fill Area	250.0 SF
Cut Vol.	7.2 CY	Fill Vol.	162.3 CY
Cut Adj. Vol.	7.2 CY	Fill Adj. Vol.	162.3 CY

STA 1692+75.00

MODEL: ExCL_IL13 - 1692+75.00 [Sheet]
FILE NAME: \\vksp45\sprshare\050010596-IL_DOT_District_9\59540010007-IL_13_over_N_Fork_Saline_River_Pt1_Gallatin_Co\CADD\CADD Sheets\4978969ell-xsec.dgn

VEENSTRA & KIMM INC.
A Kleinfelder Company

DESIGNED	- CPK	REVISED	-
DRAWN	- DMS	REVISED	-
CHECKED	- CPK	REVISED	-
DATE	- 11-06-2025	REVISED	-

STATE OF ILLINOIS
DEPARTMENT OF TRANSPORTATION

CROSS SECTIONS

SCALE: 1"=10' | SHEET 15 OF 18 SHEETS | STA. | TO STA.

F.A.P. RTE.	SECTION	COUNTY	TOTAL SHEETS	SHEET NO.
331	(10-1,10-3-1)B-2	GALLATIN	86	83

CONTRACT NO. 78969

ILLINOIS | FED. AID PROJECT

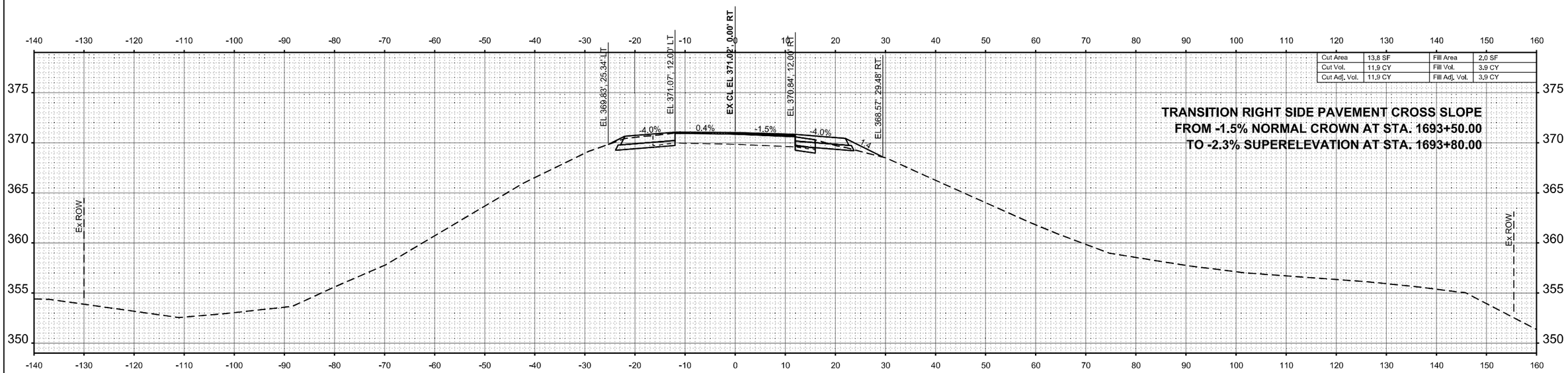

Cut Area	13.8 SF	Fill Area	2.0 SF
Cut Vol.	11.9 CY	Fill Vol.	3.9 CY
Cut Adj. Vol.	11.9 CY	Fill Adj. Vol.	3.9 CY

TRANSITION RIGHT SIDE PAVEMENT CROSS SLOPE
FROM -1.5% NORMAL CROWN AT STA. 1693+50.00
TO -2.3% SUPERELEVATION AT STA. 1693+80.00

STA 1693+50.00

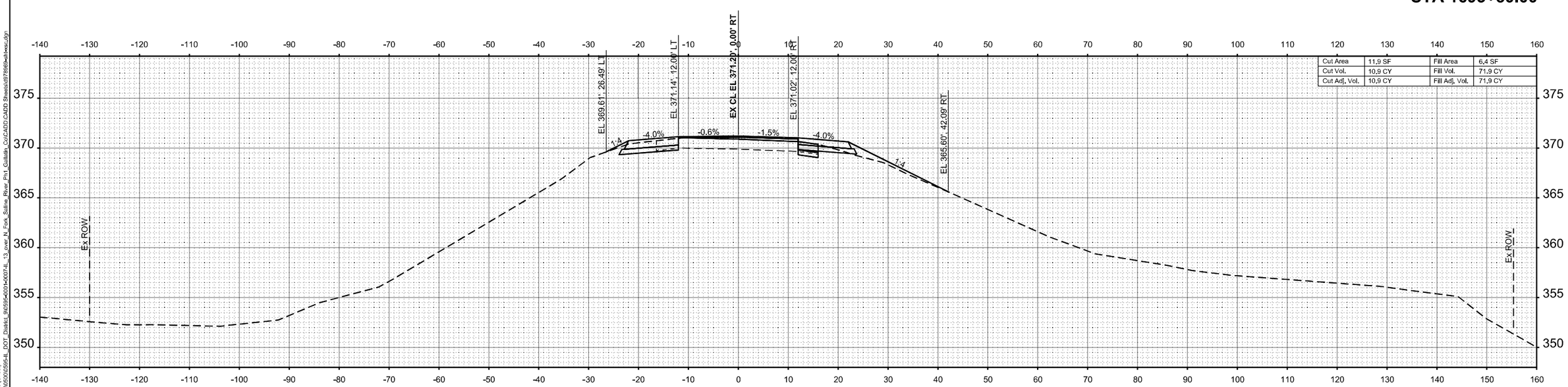

Cut Area	11.9 SF	Fill Area	6.4 SF
Cut Vol.	10.9 CY	Fill Vol.	71.9 CY
Cut Adj. Vol.	10.9 CY	Fill Adj. Vol.	71.9 CY

STA 1693+25.00

MODEL: ExCL_IL13 - 1693+25.00 [Sheet]
FILE NAME: \\vksp46\sprshare\05000\0596-IL_DOT_District_9\0596-0001\0007-IL_13_over_N_Fork_Saline_River_Ph1_Gallatin_Co\CADD\CADD Sheets\4578969all-xsc.dgn

VEENSTRA & KIMM INC.
A Kleinfelder Company

DESIGNED	- CPK	REVISED	-
DRAWN	- DMS	REVISED	-
CHECKED	- CPK	REVISED	-
DATE	- 11-06-2025	REVISED	-

STATE OF ILLINOIS
DEPARTMENT OF TRANSPORTATION

CROSS SECTIONS

SCALE: 1"=10' | SHEET 16 OF 18 SHEETS | STA. | TO STA.

F.A.P. RTE.	SECTION	COUNTY	TOTAL SHEETS	SHEET NO.
331	(10-1,10-3-1)B-2	GALLATIN	86	84

CONTRACT NO. 78969

ILLINOIS | FED. AID PROJECT

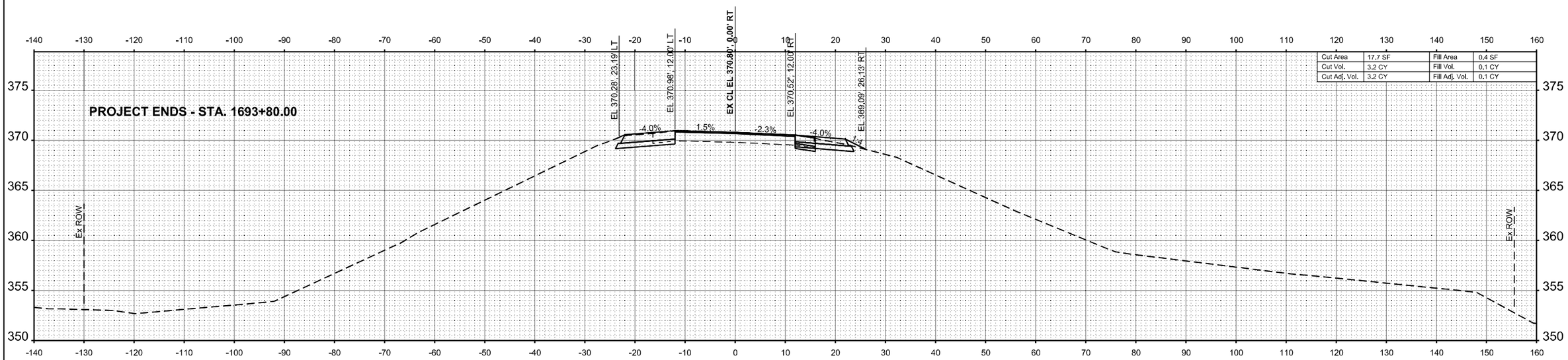

Cut Area	17.7 SF	Fill Area	0.4 SF
Cut Vol.	3.2 CY	Fill Vol.	0.1 CY
Cut Adj. Vol.	3.2 CY	Fill Adj. Vol.	0.1 CY

STA 1693+80.00

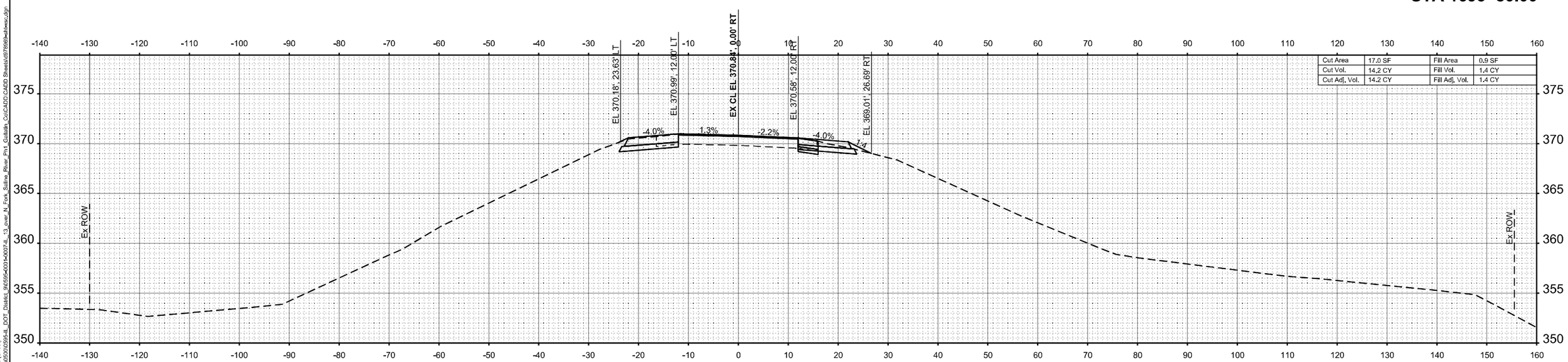

Cut Area	17.0 SF	Fill Area	0.9 SF
Cut Vol.	14.2 CY	Fill Vol.	1.4 CY
Cut Adj. Vol.	14.2 CY	Fill Adj. Vol.	1.4 CY

STA 1693+75.00

MODEL: ExCL_IL13 - 1693+75.00 [Sheet]
FILE NAME: \\vksgs-s41\sprd\sev\0050\0595HI_DOT_District_9\0595-4001\-0007-HI_13_over_N_Fork_Saline_River_Ph1_Gallatin_Co\CADD\CADD Sheets\d78969sh1-xsc.dgn

VEENSTRA & KIMM INC.
A Kleinfelder Company

DESIGNED -	CPK	REVISED -	
DRAWN -	DMS	REVISED -	
CHECKED -	CPK	REVISED -	
DATE -	11-06-2025	REVISED -	

STATE OF ILLINOIS
DEPARTMENT OF TRANSPORTATION

CROSS SECTIONS

SCALE: 1"=10' | SHEET 17 OF 18 SHEETS | STA. | TO STA.

F.A.P. RTE.	SECTION	COUNTY	TOTAL SHEETS	SHEET NO.
331	(10-1,10-3-1)B-2	GALLATIN	86	85

CONTRACT NO. 78969

ILLINOIS | FED. AID PROJECT

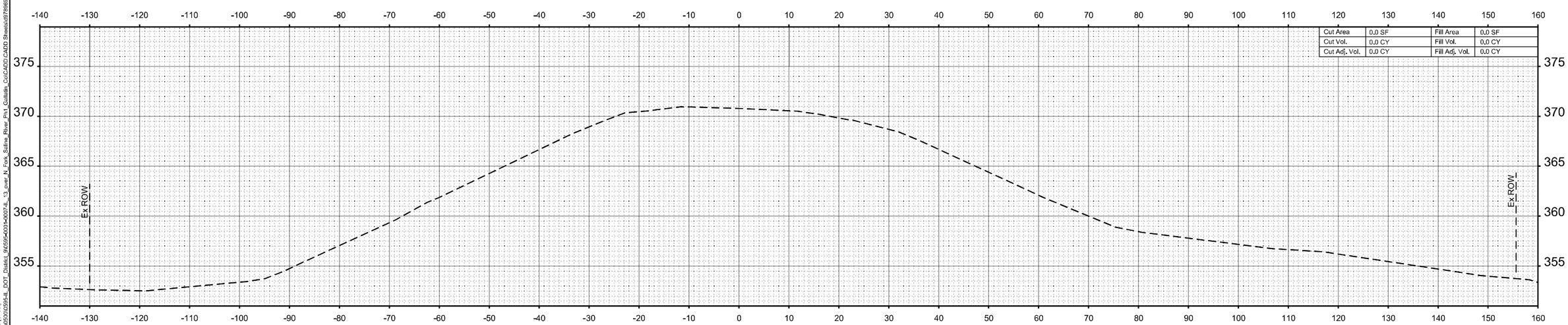

Cut Area	0.0 SF	Fill Area	0.0 SF
Cut Vol.	0.0 CY	Fill Vol.	0.0 CY
Cut Adj. Vol.	0.0 CY	Fill Adj. Vol.	0.0 CY

STA 1694+00.00

VEENSTRA & KIMM INC.
A Kleinfelder Company

DESIGNED	-	CPK	REVISED -
DRAWN	-	DMS	REVISED -
CHECKED	-	CPK	REVISED -
DATE	-	11-06-2025	REVISED -

STATE OF ILLINOIS
DEPARTMENT OF TRANSPORTATION

CROSS SECTIONS

SCALE: 1"=10' | SHEET 18 OF 18 SHEETS | STA. | TO STA.

F.A.P. RTE.	SECTION	COUNTY	TOTAL SHEETS	SHEET NO.
331	(10-1,10-3-1)B-2	GALLATIN	86	86

CONTRACT NO. 78969

ILLINOIS | FED. AID PROJECT

MODEL: Excl_Jl.13 - 1694+00.00 [Sheet]
FILE NAME: \\vksgis-fs1\gis\shave\050\0595-4_DOT_District_9\0595-4001-X0007-4_13_over_N_Fork_Saline_River_Pt1_Gallatin_Co\CADD\CADD Sheets\d78969-dlh-sc.dgn