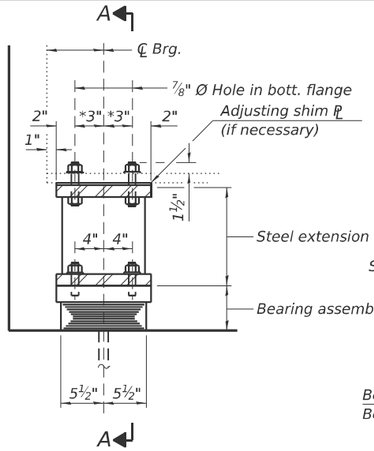

ELEVATION AT WEST ABUT.

* Match existing

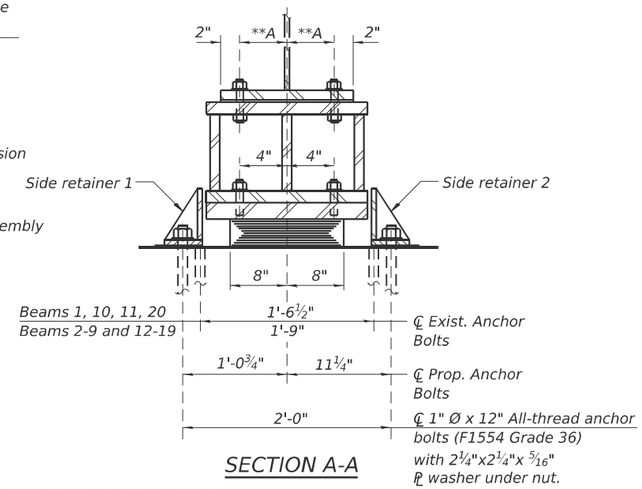

SECTION A-A

TYPE I ELASTOMERIC EXP. BRG.

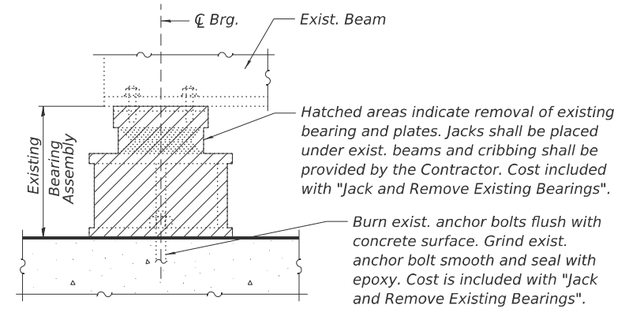

EXISTING BEARING REMOVAL

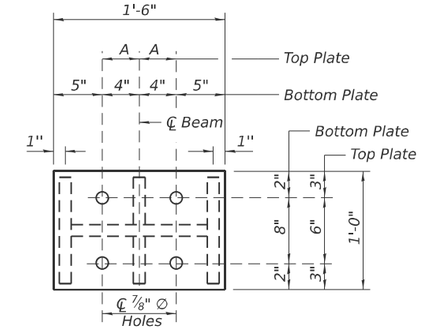

PLAN STEEL EXTENSION

** Match existing
Beams 1, 2, 9, 10, 11, 12, 19, 20 A = 4"
Beams 3 - 8, 13 - 18 A = 6¼"

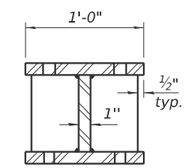

SECTION B-B

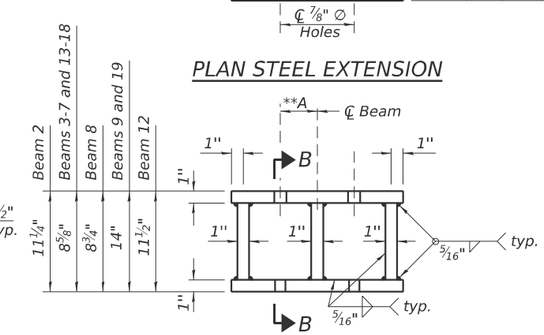

ELEVATION STEEL EXTENSION

*** 6" - Beams 1, 10, 11, & 20

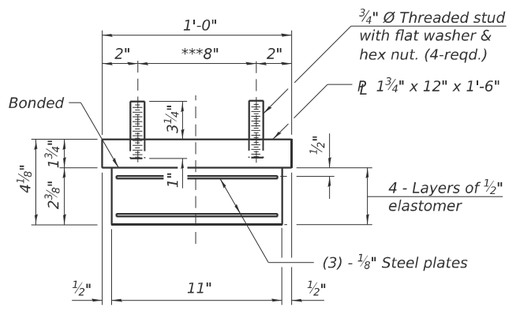

BEARING ASSEMBLY

Notes:

1. Side retainers and stainless steel plates shall be included in the cost of Elastomeric Bearing Assembly Type I.
2. The structural steel plates of the Bearing Assembly shall conform to the requirements of AASHTO M270 Grade 50.
3. Two ⅛ in. adjusting shims shall be provided for each bearing in addition to all other plates or shims and placed as shown on bearing details.
4. All (embedded and separate) bearing plates, side retainers, anchor bolts, nuts, washers and pintles shall be galvanized according to AASHTO M111 or M232 as applicable.
5. Prior to ordering any material, the Contractor shall verify in the field all bearing height and shim thickness dimensions.

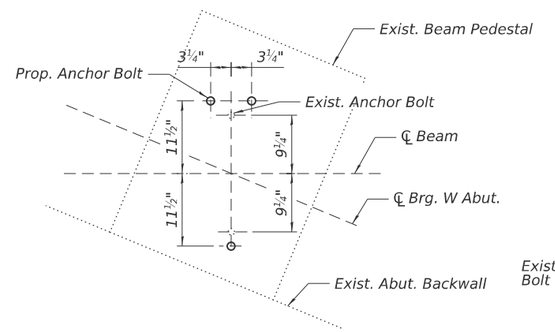

EXISTING AND PROPOSED ANCHOR BOLT LAYOUT

For Beams 1, 10, 11, 20

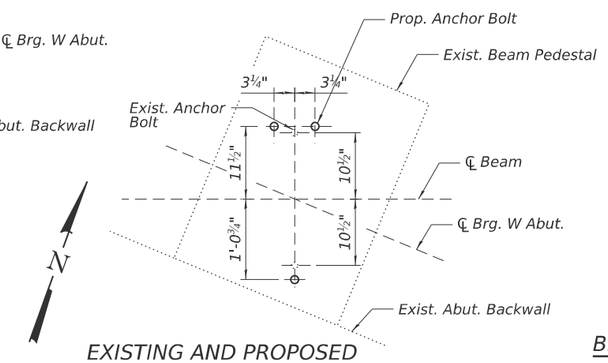

EXISTING AND PROPOSED ANCHOR BOLT LAYOUT

For Beams 2-9 & 12-19

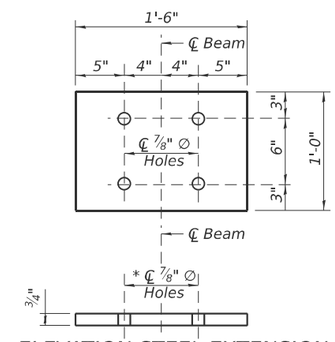

ELEVATION STEEL EXTENSION

Beams 1, 10, 11 & 20

Note:
Shim plates shall not be placed under bearing assembly.

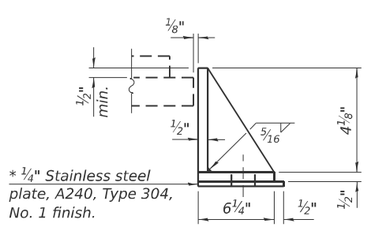

* Stainless steel plate to be cut to fit, if required.

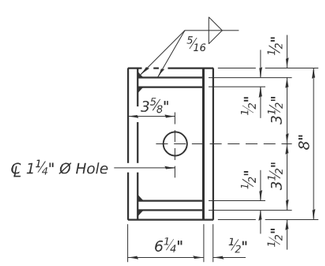

SIDE RETAINER 1

(South side of bearing)

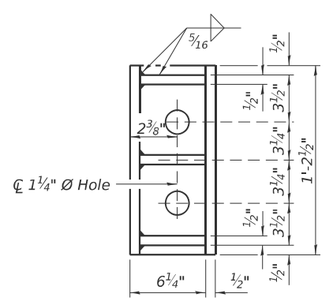

SIDE RETAINER 2

(North side of bearing)

SIDE RETAINER

Equivalent rolled angle with stiffeners will be allowed in lieu of welded plates.

BILL OF MATERIAL

Item	Unit	QUANTITY		
		SN 060-0010	SN 060-0011	Total
Furnishing and Erecting Structural Steel	Pound	2,150	2,150	4,300
Elastomeric Bearing Assembly Type I	Each	10	10	20
Anchor Bolts, 1"	Each	30	30	60
Jack and Remove Existing Bearings	Each	10	10	20

INTERIOR BEAM REACTION TABLE

		Existing Service Loads Beams 3 thru 8 & 13 thru 18	Proposed Service Loads Beams 3 thru 8 & 13 thru 18	Existing Service Loads Beams 1. 2, 9, 12, 19 & 20	Proposed Service Loads Beams 1. 2, 9, 12, 19 & 20
R DL	(k)	38.0	77.36	31.9	68.14
R LL	(k)	38.9	38.9	35.6	35.6
Imp.	(k)	9.3	9.3	8.5	8.5
R Total	(k)	86.2	125.56	76.0	112.24

The Minimum Jack Capacity shall be 155 kips.

MODEL: West Abutment Bearing Details
FILE NAME: pw://jacobs-us-vis-pw.bentley.com:jacobs-us-vis-pw-04/Documents/D3152206.02 - ILDOT - I-55 I-70 Rehabilitation/30 Project Data/PID/ST/Collins/Sht/060-0010 & 060-0011/D876E45-sht-060001080600011-014-West Abutment Bearing Details

11/25/2025 9:24:14 AM

COLLINS ENGINEERS INC.

USER NAME = kzalewski	DESIGNED - CRM	REVISED -	STATE OF ILLINOIS DEPARTMENT OF TRANSPORTATION
	CHECKED - EKM	REVISED -	
PLOT SCALE = $SCALE$	DRAWN - DR	REVISED -	
PLOT DATE = 11/25/2025	CHECKED - 2025/10/03	REVISED -	

WEST ABUTMENT BEARING DETAILS
STRUCTURE NO. 060–0010 & 060–0011
SHEET S-14 OF S-20 SHEETS

F.A.I. RTE.	SECTION	COUNTY	TOTAL SHEETS	SHEET NO.
70	82-(5,6)RS-2, 60-6RS-2	MADISON & ST. CLAIR	678	501
		CONTRACT NO. 76E84		
		ILLINOIS	FED. AID PROJECT	

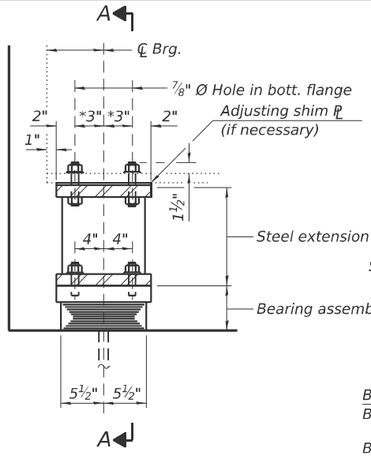

ELEVATION AT WEST ABUT.

* Match existing

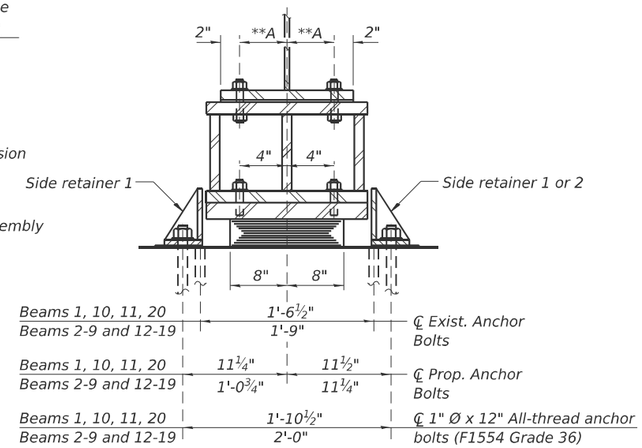

SECTION A-A

TYPE I ELASTOMERIC EXP. BRG.

*** 6½" - Beams 1, 10, 11, & 20

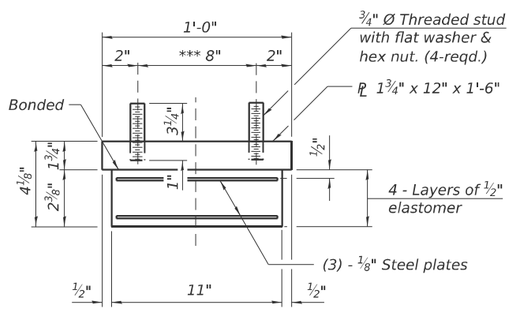

BEARING ASSEMBLY

Note:
Shim plates shall not be placed under bearing assembly.

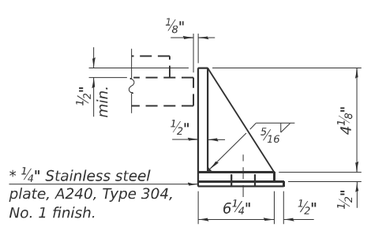

* Stainless steel plate to be cut to fit, if required.

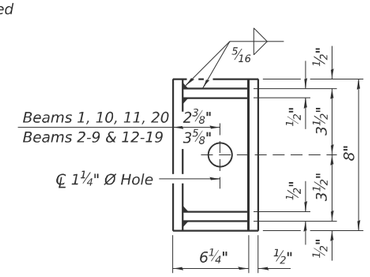

SIDE RETAINER 1

2 Required at Beams 1, 10, 11, 20
1 Required at Beams 2-9 & 12-19
(North side of bearing)

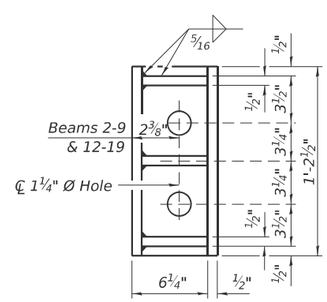

SIDE RETAINER 2

1 Required at Beams 2-9 & 12-19
(South side of bearing)

SIDE RETAINER

Equivalent rolled angle with stiffeners will be allowed in lieu of welded plates.

Notes:

1. Side retainers and stainless steel plates shall be included in the cost of Elastomeric Bearing Assembly Type I.
2. The structural steel plates of the Bearing Assembly shall conform to the requirements of AASHTO M270 Grade 50.
3. Two ⅛ in. adjusting shims shall be provided for each bearing in addition to all other plates or shims and placed as shown on bearing details.
4. All (embedded and separate) bearing plates, side retainers, anchor bolts, nuts, washers and pintles shall be galvanized according to AASHTO M111 or M232 as applicable.
5. Prior to ordering any material, the Contractor shall verify in the field all bearing height and shim thickness dimensions.

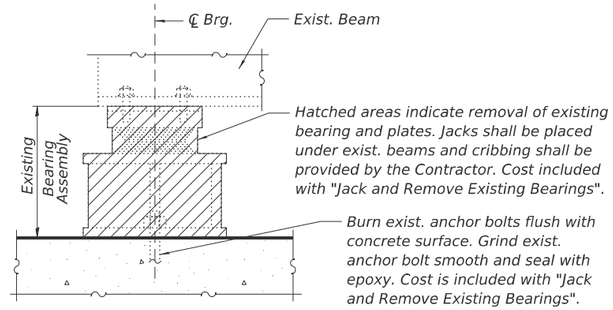

EXISTING BEARING REMOVAL

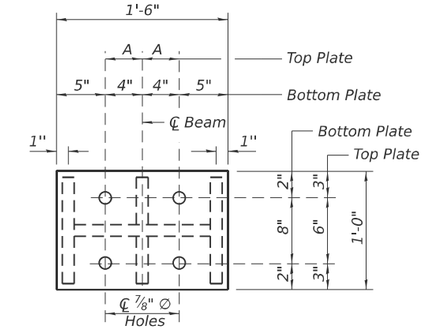

PLAN STEEL EXTENSION

** Match existing
Beams 1, 2, 9, 10, 11, 12, 19, 20 A = 4"
Beams 3 - 8, 13 - 18 A = 6¼"

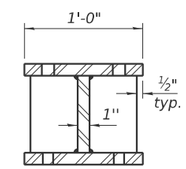

SECTION B-B

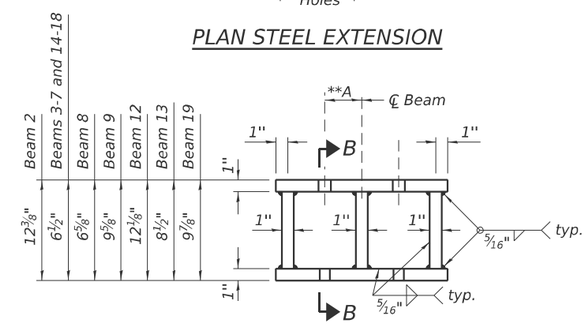

ELEVATION STEEL EXTENSION

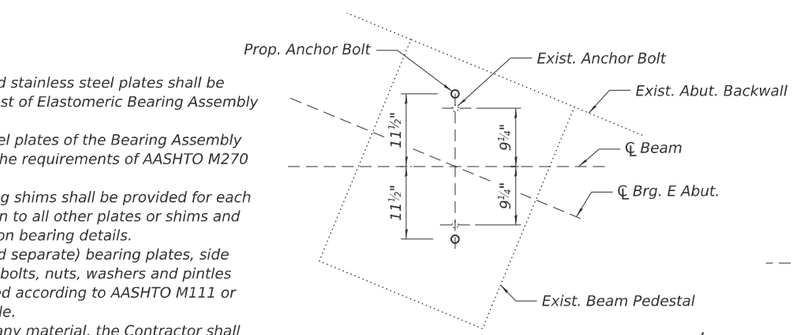

EXISTING AND PROPOSED ANCHOR BOLT LAYOUT

For Beams 1, 10, 11, 20

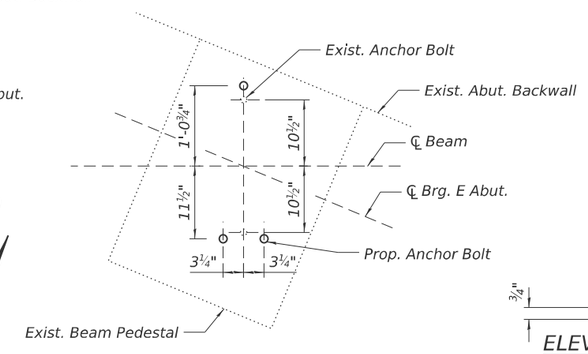

EXISTING AND PROPOSED ANCHOR BOLT LAYOUT

For Beams 2-9 & 12-19

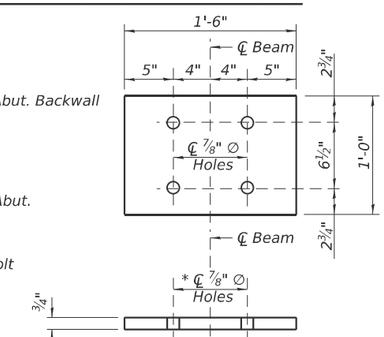

ELEVATION STEEL EXTENSION

Beams 1, 10, 11 & 20

BILL OF MATERIAL

Item	Unit	QUANTITY		
		SN 060-0010	SN 060-0011	Total
Furnishing and Erecting Structural Steel	Pound	2,110	2,080	4,190
Elastomeric Bearing Assembly Type I	Each	10	10	20
Anchor Bolts, 1"	Each	30	30	60
Jack and Remove Existing Bearings	Each	10	10	20

INTERIOR BEAM REACTION TABLE

		Existing Service Loads Beams 3 thru 8 & 13 thru 18	Proposed Service Loads Beams 3 thru 8 & 13 thru 18	Existing Service Loads Beams 1. 2, 9, 12, 19 & 20	Proposed Service Loads Beams 1. 2, 9, 12, 19 & 20
R DL	(k)	38.0	77.36	31.9	68.14
R LL	(k)	38.9	38.9	35.6	35.6
Imp.	(k)	9.3	9.3	8.5	8.5
R Total	(k)	86.2	125.56	76.0	112.24

The Minimum Jack Capacity shall be 155 kips.

MODEL: East Abutment Bearing Details
FILE NAME: pw://jacobs-us-vis-pw.bentley.com:jacobs-us-vis-pw-04/Documents/D3152206.02 - ILDOT - I-55 I-70 Rehabilitation\30 Project Data\PID\ST/Collins\Sht\060-0010 & 060-0011\D876E45-sht-060001060&060001-015-East Abutment Bearing Details
11/25/2025 10:00:54 AM

COLLINS ENGINEERS INC.

USER NAME = kzalewski	DESIGNED - CRM	REVISED -	
	CHECKED - EKM	REVISED -	
PLOT SCALE = $SCALE$	DRAWN - DR	REVISED -	
PLOT DATE = 11/25/2025	CHECKED - 2025/10/03	REVISED -	

STATE OF ILLINOIS
DEPARTMENT OF TRANSPORTATION

EAST ABUTMENT BEARING DETAILS
STRUCTURE NO. 060–0010 & 060–0011
SHEET S-15 OF S-20 SHEETS

F.A.I. RTE.	SECTION	COUNTY	TOTAL SHEETS	SHEET NO.
70	82-(5,6)RS-2, 60-6RS-2	MADISON & ST. CLAIR	678	502

CONTRACT NO. 76E84
ILLINOIS | FED. AID PROJECT

TOP AND BOTTOM ELEVATIONS FOR SN 060-0010 APPROACH FOOTING

West Approach			East Approach		
Point/ Location	Top	Bottom	Point/ Location	Top	Bottom
A - 377+58.96	421.43	420.60	A - 380+67.92	421.02	420.18
B - 376+89.95	421.89	421.06	B - 379+98.91	421.52	420.69
C - 376+20.94	421.23	420.39	C - 379+29.90	421.02	420.18
D - 377+34.81	421.43	420.60	D - 380+92.06	421.02	420.18
E - 376+65.81	421.85	421.01	E - 380+23.05	421.52	420.69
F - 375+96.80	421.15	420.31	F - 380+23.05	421.03	420.18

TOP AND BOTTOM ELEVATIONS FOR SN 060-0011 APPROACH FOOTING

West Approach			East Approach		
Point/ Location	Top	Bottom	Point/ Location	Top	Bottom
A - 375+75.48	421.06	420.33	A - 378+84.43	421.27	420.43
B - 375+06.47	421.22	420.38	B - 378+15.42	421.89	421.05
C - 374+37.46	420.20	419.37	C - 377+46.41	421.43	420.60
D - 375+51.33	420.95	420.12	D - 379+08.57	421.27	420.43
E - 374+82.33	421.07	420.24	E - 378+39.56	421.84	421.01
F - 374+13.32	419.93	419.10	F - 377+70.56	421.43	420.60

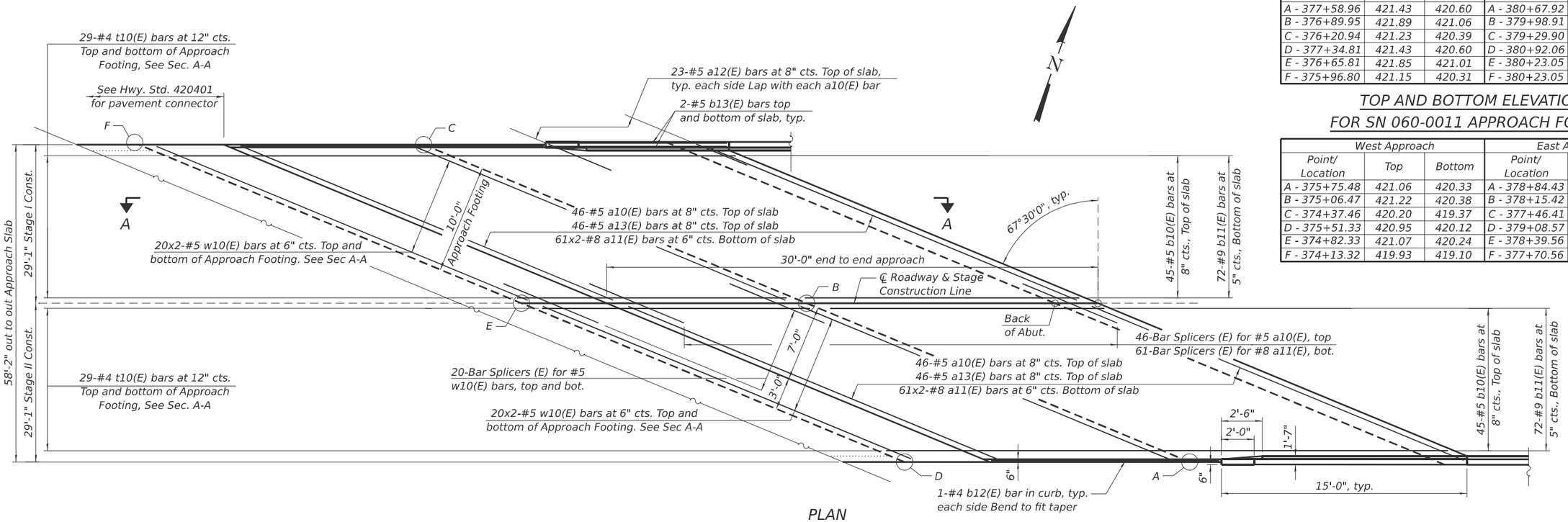

PLAN

(Shown for WB SN 060-0011 West Approach Slab, others similar)
Not to Scale

MINIMUM BAR LAP:

#5 bar = 2'-0" (Footing)
#5 bar = 2'-6" (Slab)
#8 bar = 5'-2"

Notes:
1. Bars indicated thus 10x2-#5 etc. indicates 10 lines of bars with 2 lengths per line

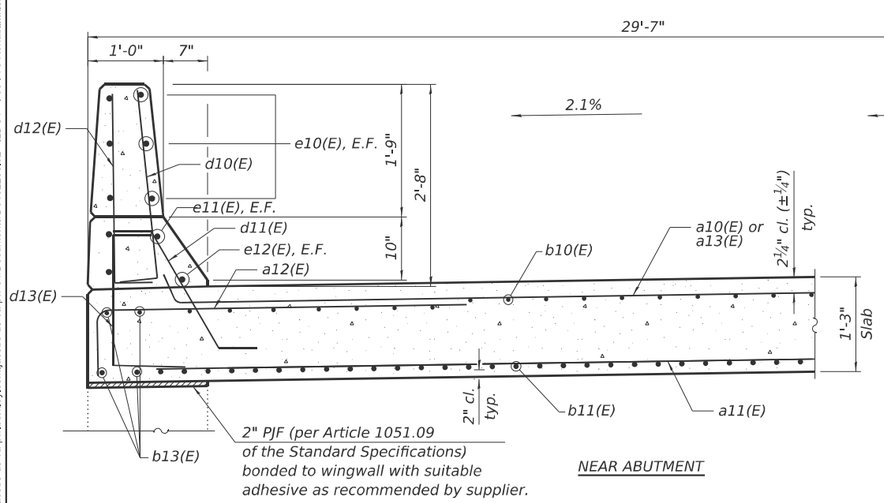

NEAR ABUTMENT

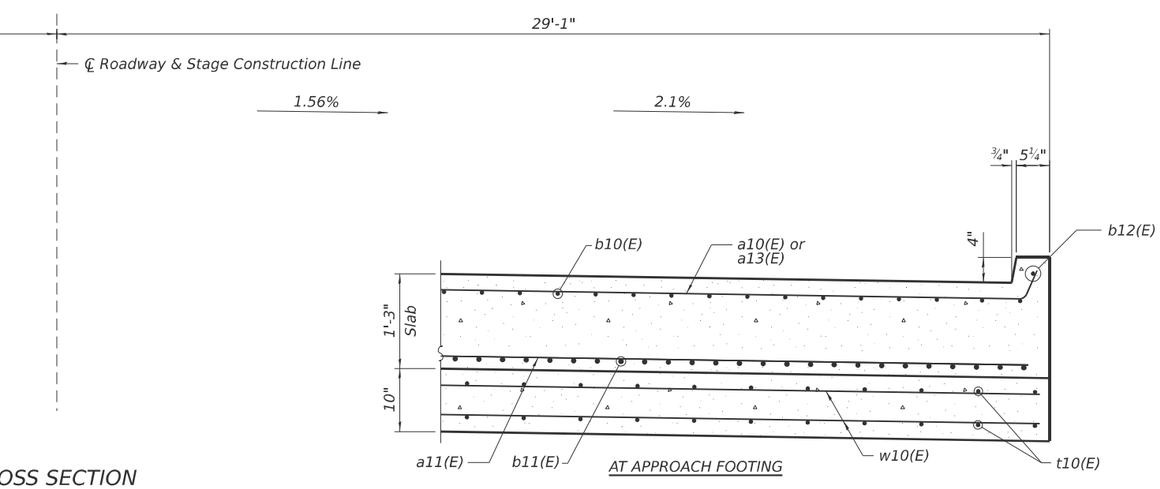

AT APPROACH FOOTING

CROSS SECTION

(Looking East)

COLLINS ENGINEERS INC.

USER NAME = kzalewski	DESIGNED - CRM	REVISED -	
	CHECKED - EKM	REVISED -	
PLOT SCALE = $SCALE$	DRAWN - DR	REVISED -	
PLOT DATE = 11/25/2025	CHECKED - 2025/10/03	REVISED -	

STATE OF ILLINOIS
DEPARTMENT OF TRANSPORTATION

APPROACH SLAB DETAILS I
STRUCTURE NO. 060–0010 & 060–0011

SHEET S-16 OF S-20 SHEETS

F.A.I. RTE.	SECTION	COUNTY	TOTAL SHEETS	SHEET NO.
70	82-(5,6)RS-2, 60-6RS-2	MADISON & ST. CLAIR	678	503
		CONTRACT NO. 76E84		
		ILLINOIS	FED. AID PROJECT	

MODEL: Approach Slab Details I
FILE NAME: pw://jacobs-us-vis-pw.bentley.com:jacobs-us-vis-pw-04/Documents/D3152206.02 - ILDOT - I-55 I-70 Rehabilitation/30 Project Data/PID/ST/Collins/Sht/060-0010 & 060-0011/D876E45-sht-060001 0&060001 1-0116-Approach Slab Details I
11/25/2025 9:24:59 AM

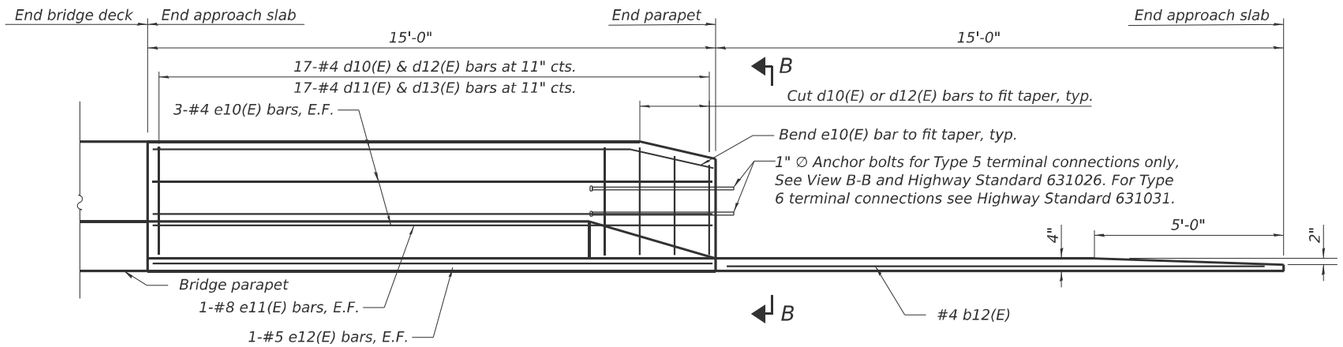

ELEVATION

Notes:

1. The joint opening shall be adjusted for temperature per Article 520.04 of the Standard Specifications. However, since this detail is for jointless structures, the length of bridge used to calculate the adjustment shall be equal to the bridge length from a fixed bearing plus the length of the bridge approach slab.
2. Parapet concrete shall be paid for as Concrete Superstructure.
3. Approach slab shall be paid for as Concrete Superstructure (Approach Slab).
4. Approach footing concrete shall be paid for as Concrete Structures.
5. The approach footing maximum applied service bearing pressure (Qmax) = 2.0 ksf.
6. Cost of excavation for approach footing included with Concrete Structures.
7. For Granular Backfill for Structures and drainage treatment details, see Sheet S-13.

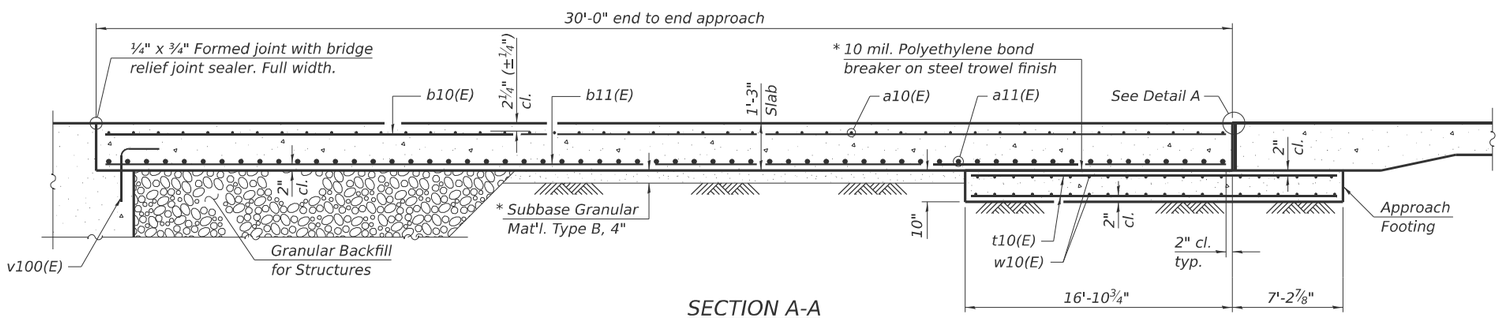

SECTION A-A

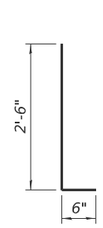

BAR d10(E) & d12(E)

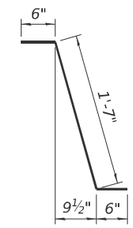

BAR d11(E)

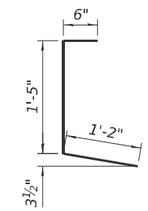

BAR d13(E)

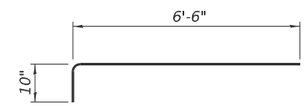

BAR a12(E)

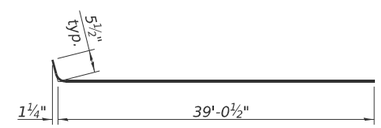

BAR a13(E)

TWO APPROACHES BILL OF MATERIAL

Bar	No.	Size	Length	Shape
a10(E)	184	#5	39'-1"	
a11(E)	488	#8	40'-5"	
a12(E)	92	#5	7'-4"	
a13(E)	184	#5	39'-7"	
b10(E)	180	#5	29'-8"	
b11(E)	288	#9	29'-8"	
b12(E)	4	#4	14'-8"	
b13(E)	16	#5	14'-8"	
d10(E)	68	#5	3'-0"	
d11(E)	68	#5	2'-7"	
d12(E)	68	#4	3'-0"	
d13(E)	68	#4	3'-4"	
e10(E)	24	#4	14'-8"	
e11(E)	8	#8	14'-8"	
e12(E)	8	#5	14'-8"	
t10(E)	248	#4	25'-10"	
w10(E)	320	#5	38'-10"	

Item	Unit	Total
Concrete Structures	Cu. Yd.	93.8
Concrete Superstructure	Cu. Yd.	6.1
Bridge Deck Grooving	Sq. Yd.	373
Protective Coat	Sq. Yd.	402
Concrete Superstructure (Approach Slab)	Cu. Yd.	161.8
Reinforcement Bars, Epoxy Coated	Pound	121,970

Note: Quantities shown for one structure.
Other Bridge similar.

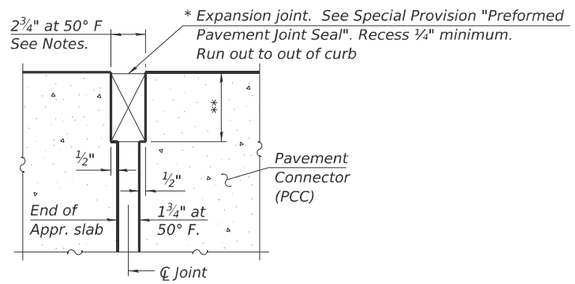

DETAIL A
(at Rt. ∠'s)

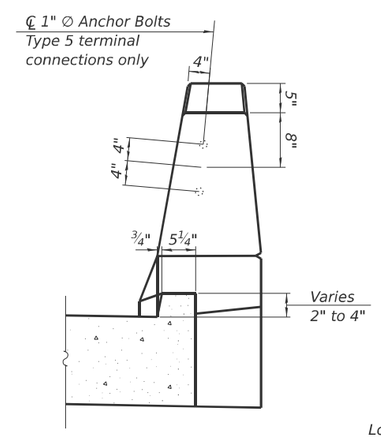

SECTION B-B

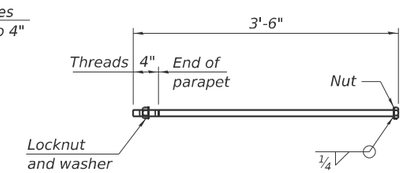

*1" Ø ANCHOR BOLT
(Anchor bolt assemblies shall be galvanized according to Article 1006.09 of the Standard Specifications)

* Cost included with Concrete Superstructure (Approach Slab).

** Per manufacturer recommendations

MODEL: Bridge Approach Slab Details II
FILE NAME: pw://jacobs-ds-vis-pw.bentley.com:jacobs-ds-vis-pw-04/Documents/D3152206.02 - ILLDOT - I-55 I-70 Rehabilitation\30 Project Data\PID\ST\Collins\Sht\060-0010 & 060-0011\D876E45-sht-060001060600011-017-Approach Slab Details II
11/25/2025 9:25:14 AM

COLLINS ENGINEERS INC.

USER NAME = kzalewskl	DESIGNED - CRM	REVISED -	STATE OF ILLINOIS DEPARTMENT OF TRANSPORTATION	APPROACH SLAB DETAILS II STRUCTURE NO. 060–0010 & 060–0011	
	CHECKED - EKM	REVISED -			
PLOT SCALE = $SCALE$	DRAWN - DR	REVISED -			
PLOT DATE = 11/25/2025	CHECKED - 2025/10/03	REVISED -		SHEET S-17 OF S-20 SHEETS	

F.A.I. RTE.	SECTION	COUNTY	TOTAL SHEETS	SHEET NO.
70	82-(5,6)RS-2, 60-6RS-2	MADISON & ST. CLAIR	678	504
		CONTRACT NO. 76E84		
		ILLINOIS	FED. AID PROJECT	

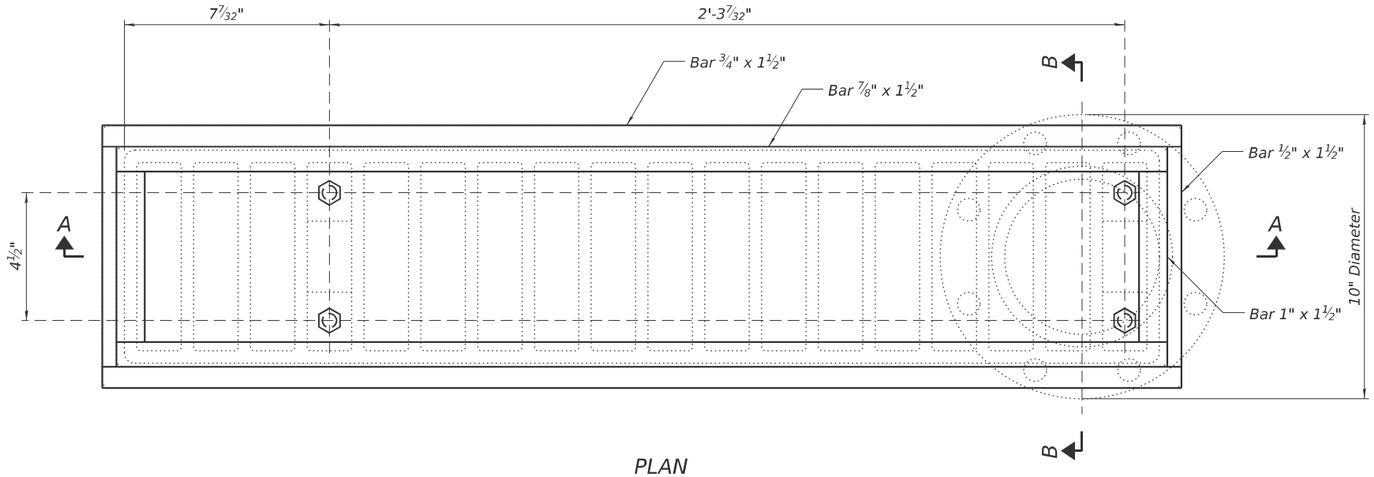

PLAN

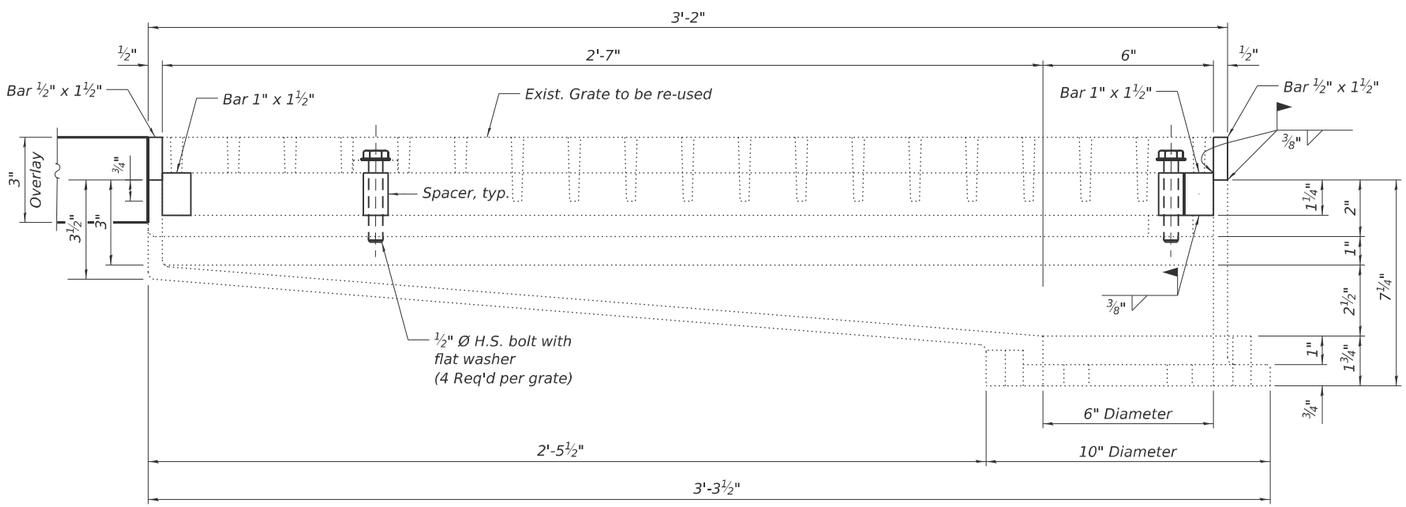

SECTION A-A

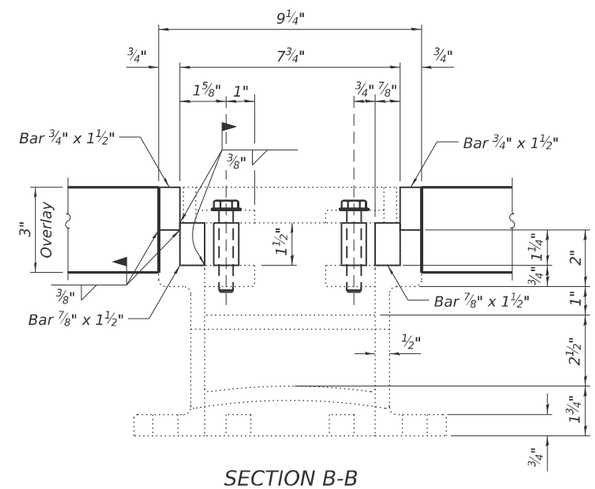

SECTION B-B

BILL OF MATERIAL

ITEM	UNIT	QUANTITY		
		060-0010	060-0011	TOTAL
Drainage Scuppers to be Adjusted	Each	4	4	8

Note: Contractor shall verify if scuppers are cast iron or steel prior to adjusting.

MODEL: Drainage Scupper Details
FILE NAME: pw://jacobs-us-vis-pw.bentley.com:jacobs-us-vis-pw-04/Documents/D3152206.02 - ILDOT - I-55 I-70 Rehabilitation\30 Project Data\PID\ST/Collins\Sht\060-0010 & 060-0011\D876E45-sht-060001 0&060001 1-018-Drainage Scupper Details
11/25/2025 9:25:27 AM

COLLINS ENGINEERS INC.

USER NAME = kzalewski	DESIGNED - CRM	REVISED -	
	CHECKED - EKM	REVISED -	
PLOT SCALE = $SCALE$	DRAWN - DR	REVISED -	
PLOT DATE = 11/25/2025	CHECKED - 2025/10/03	REVISED -	

STATE OF ILLINOIS
DEPARTMENT OF TRANSPORTATION

DRAINAGE SCUPPER DETAILS (CAST IRON)
STRUCTURE NO. 060–0010 & 060–0011

SHEET S-18 OF S-20 SHEETS

F.A.I. RTE.	SECTION	COUNTY	TOTAL SHEETS	SHEET NO.
70	82-(5,6)RS-2, 60-6RS-2	MADISON & ST. CLAIR	678	505
		CONTRACT NO. 76E84		
		ILLINOIS	FED. AID PROJECT	

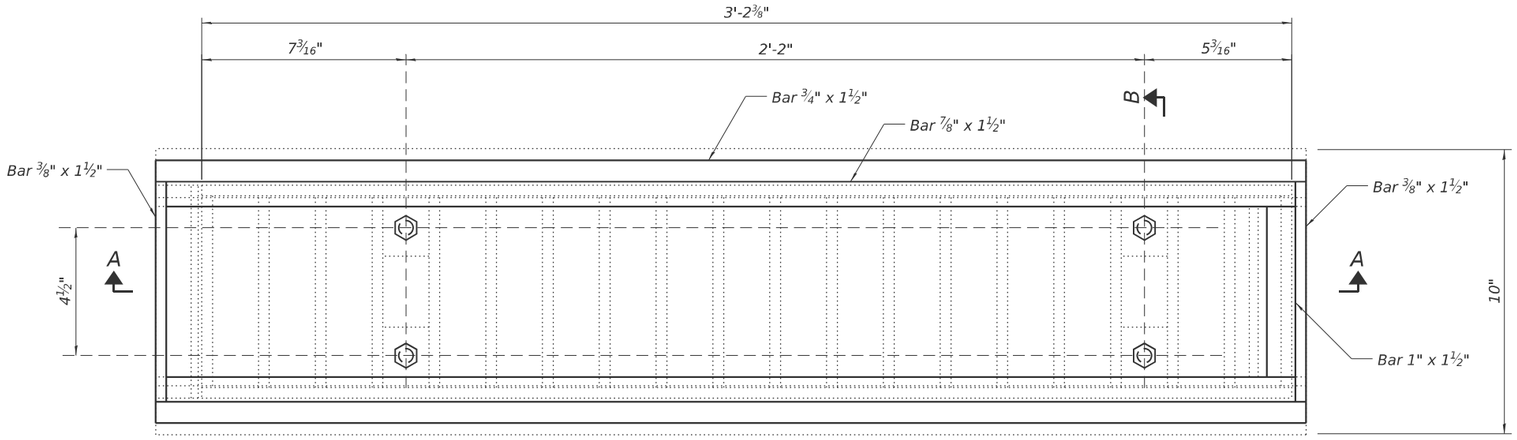

PLAN

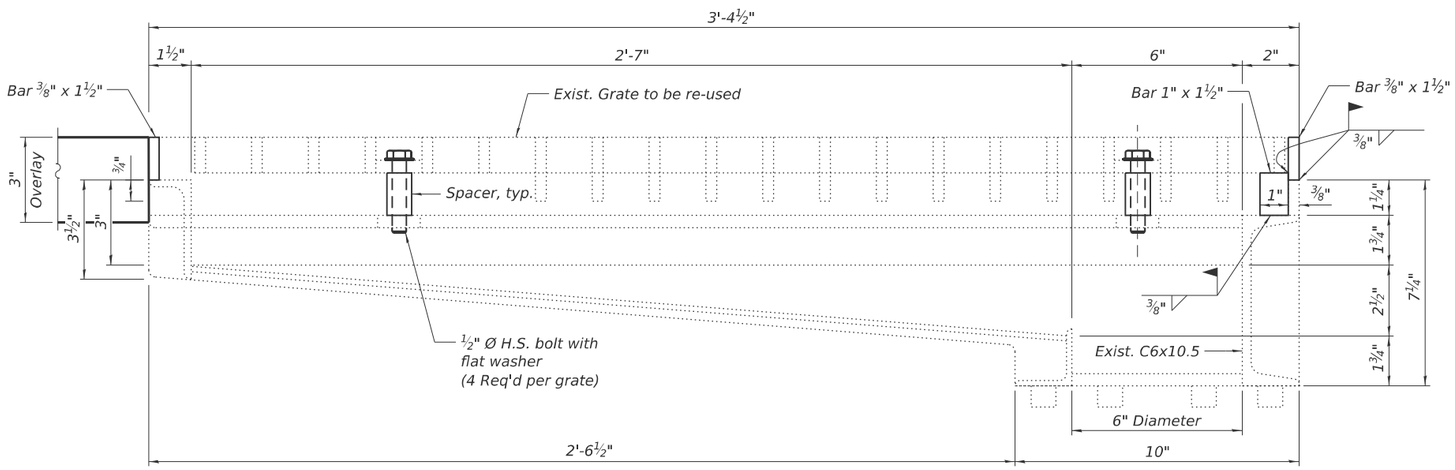

SECTION A-A

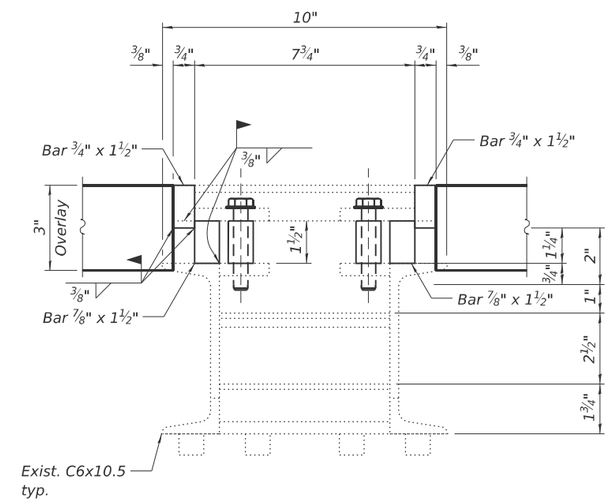

SECTION B-B

Note: Contractor shall verify if scuppers are cast iron or steel prior to adjusting.
See Sheet S-18 for Bill of Material for Drainage Scuppers to be Adjusted.

MODEL: Drainage Scupper Details
FILE NAME: pw://jacobs-ds-va-pw.bentley.com:jacobs-ds-va-pw-04/Documents/D3152206.02 - ILDOT - I-55 I-70 Rehabilitation\30 Project Data\PID\ST\Collins\Sht\060-0010 & 060-0011/D876E45-sht-060001010&060000011-019-Drainage Scupper Details.dgn

COLLINS ENGINEERS INC.

USER NAME = kzalewski	DESIGNED - CRM	REVISED -	STATE OF ILLINOIS DEPARTMENT OF TRANSPORTATION	DRAINAGE SCUPPER DETAILS (STEEL) STRUCTURE NO. 060–0010 & 060–0011
	CHECKED - EKM	REVISED -		
PLOT SCALE = $SCALE$	DRAWN - DR	REVISED -		
PLOT DATE = 11/25/2025	CHECKED - 2025/10/03	REVISED -		SHEET S-19 OF S-20 SHEETS

F.A.I. RTE.	SECTION	COUNTY	TOTAL SHEETS	SHEET NO.
70	82-(5,6)RS-2, 60-6RS-2	MADISON & ST. CLAIR	678	506
		CONTRACT NO. 76E84		
		ILLINOIS	FED. AID PROJECT	

11/25/2025 9:25:41 AM

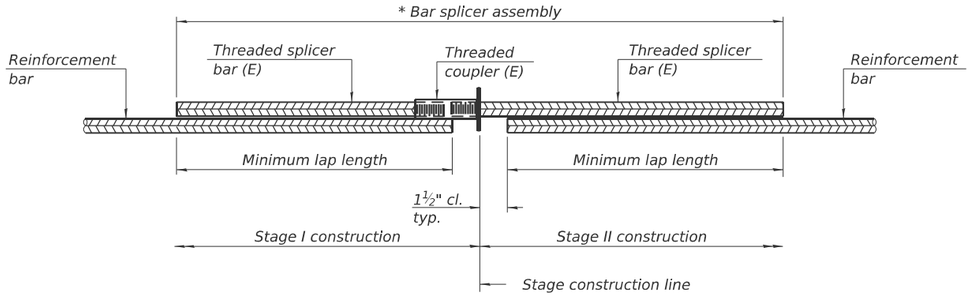

STANDARD BAR SPLICER ASSEMBLY PLAN

Only bar splicer assemblies as presented on the approved QPL list may be used.

Threaded splicer bar length = min. lap length + 1½" + thread length

* Epoxy not required on Bar Splicer Assembly components used in conjunction with black bars.

Location	Bar size	No. assemblies required			Minimum lap length
		SN 060-0010	SN 060-0011	TOTAL	
Superstructure Deck	#4	4	4	8	2'-4"
	#5	36	36	72	2'-0"
	#6	10	10	20	3'-9"
Approach Slab	#5	172	172	344	2'-0"
	#8	122	122	244	5'-2'

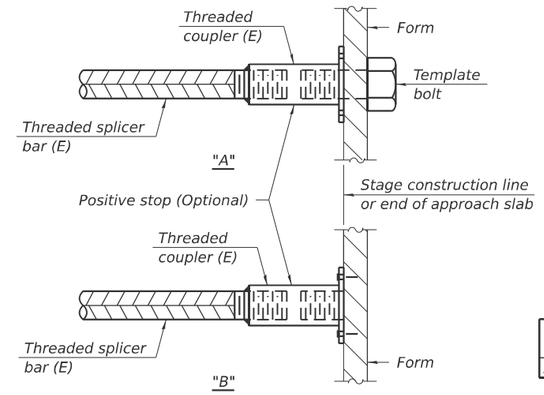

INSTALLATION AND SETTING METHODS

"A" : Set bar splicer assembly by means of a template bolt.
"B" : Set bar splicer assembly by nailing to wood forms or cementing to steel forms.
(E) : Indicates epoxy coating.

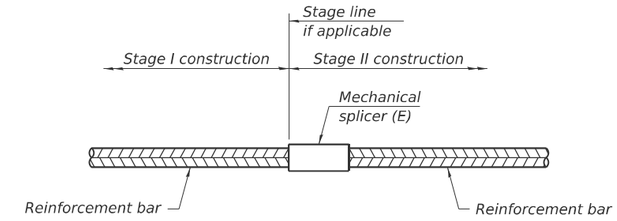

STANDARD MECHANICAL SPLICER

Location	Bar size	No. assemblies required		
		SN 060-0010	SN 060-0011	TOTAL
Abutment Diaphragm	#6	8	8	16

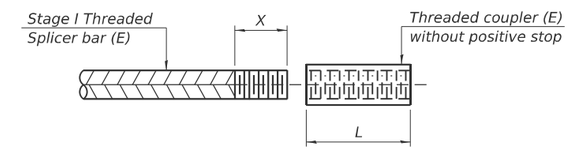

THREADING OF ASSEMBLIES

The threaded length "X" shall be no more than L/2. The bar should be tightened until 0-1 thread(s) is/are exposed.

Notes:

Splicer bars shall be deformed with threaded ends and have a minimum 60 ksi yield strength.

All reinforcement shall be lapped and tied to the splicer bars.

Bar splicer assemblies shall be epoxy coated according to the requirements for reinforcement bars. See Section 508 of the Standard Specifications.

See approved list of bar splicer assemblies and mechanical splicers for alternatives.

BSD-1 4-4-2025

COLLINS ENGINEERS INC.

USER NAME = kzalewski	DESIGNED - CRM	REVISED -	STATE OF ILLINOIS DEPARTMENT OF TRANSPORTATION
	CHECKED - EKM	REVISED -	
PLOT SCALE = $SCALE$	DRAWN - DR	REVISED -	
PLOT DATE = 11/25/2025	CHECKED - 2025/10/03	REVISED -	

BAR SPLICER ASSEMBLY AND MECHANICAL SPLICER DETAILS
STRUCTURE NO. 060–0010 & 060–0011

SHEET S-20 OF S-20 SHEETS

F.A.I. RTE.	SECTION	COUNTY	TOTAL SHEETS	SHEET NO.
70	82-(5,6)RS-2, 60-6RS-2	MADISON & ST. CLAIR	678	507
		CONTRACT NO. 76E84		
		ILLINOIS	FED. AID PROJECT	

MODEL: Bar Splicer Assembly and Mechanical Splicer Details
FILE NAME: pw://jacobs-us-pw.bentley.com:jacobs-us-pw-04/Documents/D315220602 - ILDOT - I-55 I-70 Rehabilitation\30 Project Data\PID\STCollins\Sht\060-0010 & 060-0011\D876E45-sht-060001060060011-020-Bar Splicer Assembly and Mechanical Splicer Details
11/25/2025 9:25:56 AM

Benchmark: R.R. Spike in 42" Cottonwood 87.5' Lt. Sta 87+90, Elev. 416.20

Existing Structure: SN 060-0146 was built in 1961 under Project I-70-1(5)6. The structure a 9-span, WF beam superstructure supported by concrete dual-column piers and concrete stub abutments founded on cast-in-place concrete piles. The bridge measures 528'-3" back-to-back abutments and 31'-2" out-to-out, with a 20°38'30" skew.

Traffic Control: Stage construction with one open lane shared in both directions.

No Salvage.

SCOPE OF WORK

1. Apply a hot-mix asphalt / waterproofing membrane system (HMA/WMS) overlay to bridge deck and approach slabs.
2. Replace all expansion joints with strip seals.
3. Remove and replace 3' of deck ends at all joint replacement locations.
4. Clean and paint all superstructure steel.
5. Replace all end diaphragms at the abutments and Piers 2 and 6 with galvanized steel members.
6. Replace bearings at Abutments and Piers 2 and 6.
7. Formed concrete repairs on Pier 2 and Pier 6.
8. Graffiti removal on Piers and Abutments.
9. Crashwall retrofit on Piers 3 and 5.

DESIGN SPECIFICATIONS

2002 AASHTO LFD Bridge Design Specifications, 17 Edition

DESIGN STRESSES

FIELD UNITS (NEW CONDITION)

f 'c = 4,000 psi (Superstructure)
f 'c = 3,500 psi (Substructure)
fy = 60,000 psi (Reinforcement)
fy = 50,000 psi (M270 Grade 50)

FIELD UNITS (EXISTING CONSTRUCTION)

f 'c = 3,500 psi
fs = 20,000 psi (Reinforcement)
fs = 18,000 psi (Structural Steel)

LOADING HS-20-44

(Original Construction)
No allowance for future wearing surface.

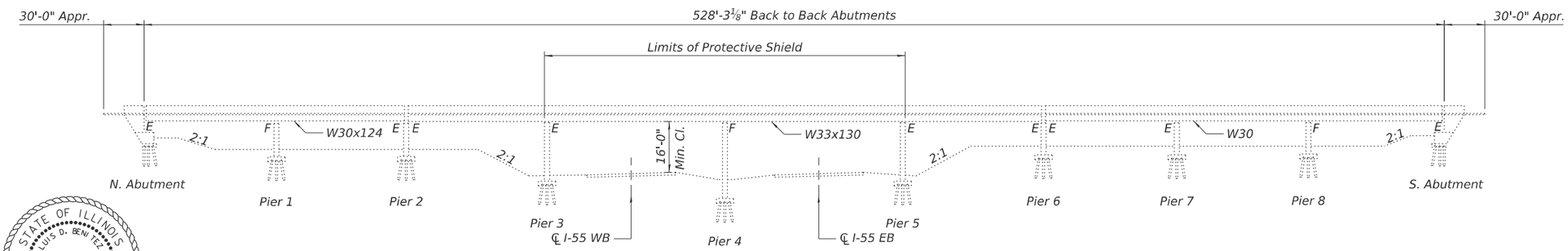

ELEVATION

(Looking East)

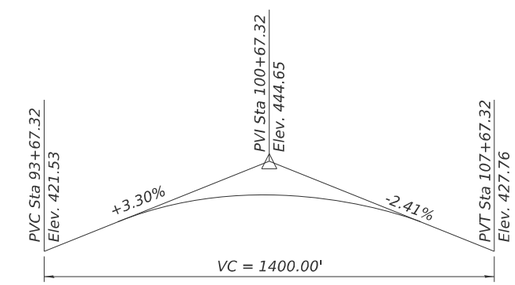

EXISTING PROFILE GRADE

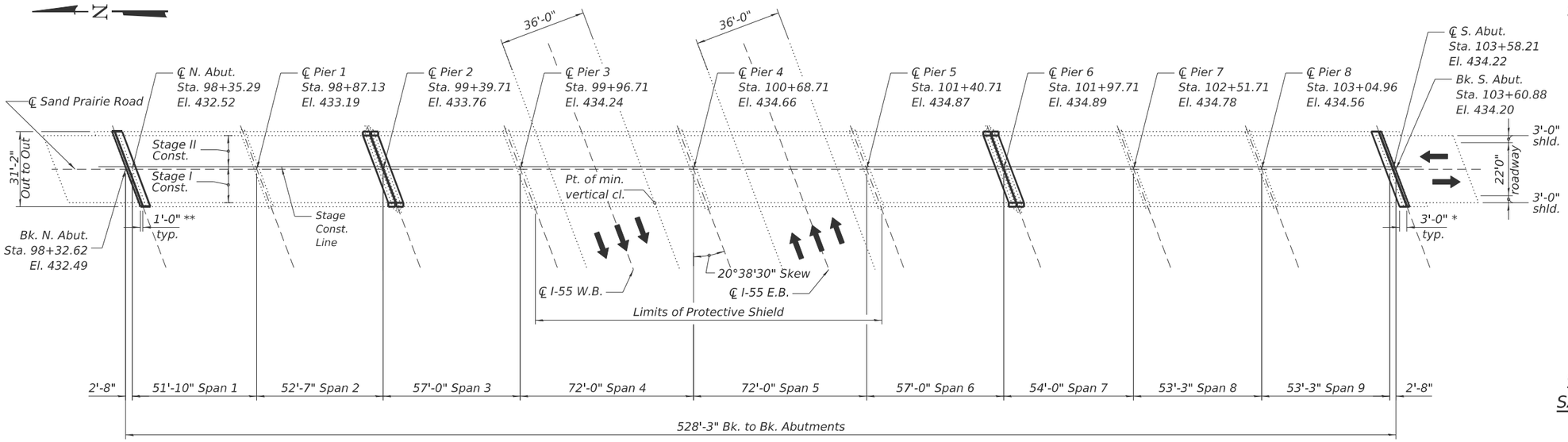

PLAN

* Remove and replace 3'-0" of deck ends at all joint replacement locations.
** Remove and replace 1'-0" of back wall at N. and S. abutments.

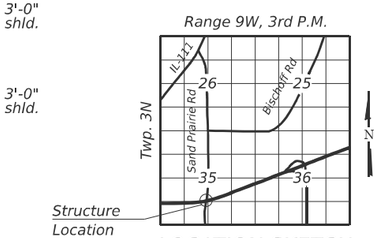

LOCATION SKETCH

STATE OF ILLINOIS
LUIS D. BENITEZ
81-006415
CHICAGO, ILLINOIS
LICENSED STRUCTURAL ENGINEER

COLLINS ENGINEERS, INC.
LUIS D. BENITEZ, P.E., S.E.
NO. 81-006415
EXP.: 11/30/2026

GENERAL PLAN AND ELEVATION
SAND PRAIRIE ROAD OVER I-55/70
F.A.I 70 - SECTION 60-6RS-2
MADISON COUNTY
STA: 100+68.71
SN. 060-0146

COLLINS ENGINEERS INC.

USER NAME = dredzlc	DESIGNED - A. SPALETTO	REVISED -	STATE OF ILLINOIS DEPARTMENT OF TRANSPORTATION	GENERAL PLAN AND ELEVATION STRUCTURE NO. 060-0146	
	CHECKED - L. BENITEZ	REVISED -			
PLOT SCALE = $SCALE$	DRAWN - A. SPALETTO	REVISED -			
PLOT DATE = 11/26/2025	CHECKED - 2025/10/03	REVISED -		SHEET 1 OF 15 SHEETS	

F.A.I. RTE.	SECTION	COUNTY	TOTAL SHEETS	SHEET NO.
70	82-(5,6)RS-2, 60-6RS-2	MADISON & ST. CLAIR	678	508
		CONTRACT NO. 76E84		
		ILLINOIS	FED. AID PROJECT	

MODEL: GPE
FILE NAME: pw://jacobs-us-a-pw.bentley.com:jacobs-us-a-pw-04/Documents/D3152206.02 - ILDOT - I-55 I-70 Rehabilitation/30 Project Data/PID/ST/Collins/Sht/060-0146/D876E45-SHT-0600146-001-GPE
11/26/2025 1:44:10 PM

GENERAL NOTES

1. All new structural steel shall be AASHTO M270 Grade 50, unless otherwise noted.

2. All new structural steel and bearing assemblies shall be hot-dip galvanized. See Special Provision for "Hot Dip Galvanizing for Structural Steel".

3. No field welding is permitted except as specified in the contract documents.

4. Fasteners shall be ASTM F 3125 Grade A325 Type 1, hot-dip galvanized. See Special Provision for "Hot Dip Galvanizing for Structural Steel." Bolts ¾" diameter, holes $^{13}/_{16}$" diameter, unless otherwise noted.

5. Prior to pouring the new concrete deck, all heavy or loose rust, loose mill scale, and other loose detrimental foreign material shall be removed from the surfaces in contact with concrete (SSPC - SP3 standards). Tightly adhered paint may remain unless otherwise noted. Removal shall be accomplished by methods that will not damage the steel and the cost will be paid for according to Article 109.04 of the Standard Specifications. As directed by the Engineer, existing construction accessories welded to the top flange of beams and girders shall be removed. The weld areas shall be ground flush and inspected for cracks using magnetic particle testing (MT) or dye penetrant testing (PT) by qualified personnel approved by the Engineer. Any cracks that cannot be removed by grinding ¼" deep shall be identified and reported to the Bureau of Bridges & Structures for further disposition. The cost of removing welded accessories, grinding and inspecting weld areas and grinding cracks will be paid for according to Article 109.04 of the Standard Specifications.

6. Reinforcement bars designated (E) shall be epoxy coated.

7. Plan dimensions and details relative to the existing structure have been taken from existing plans are subject to nominal construction variations. The Contractor shall field verify existing dimensions and details affecting new construction and make necessary approved adjustments prior to construction or ordering of materials. Such variations shall not be cause for additional compensation for a change in scope of work, however, the Contractor will be paid for the quantity actually furnished at the unit price bid for the work.

8. Existing reinforcement bars extending into the removal area shall be cleaned, straightened, and incorporated into the new construction. Any reinforcement bars that are damaged during concrete removal shall be replaced with an approved bar splicer or anchorage system at the Contractors expense.

9. The existing structural steel coating contains lead. The Contractor shall take appropriate precautions to address the presence of lead on this project.

10. The existing bearings contain lead plates. The Contractor shall take precautions to deal with the presence of lead on this project.

11. Cost of removal and disposal of existing expansion joints shall be included in the cost of Concrete Removal.

12. Joint openings shall be adjusted to Article 520.04 of the Standard Specifications when the concrete adjacent to joints is poured at an ambient temperature other than 50° F.

13. The Organic Zinc Rich Primer / Epoxy / Urethane paint system shall be used for shop and field painting of new structural steel except where otherwise noted. The entire system shall be shop applied, with the exception that the exterior surfaces and bottom of the bottom flange of the fascia beams, masked off connection surfaces, and field installed fasteners, shall all be touched up and finish coated in the field. The color of the final finish coat for all steel surfaces shall be Gray, Munsell No. 5B 7/1.

14. Treat all structural steel repair areas as primary connections.

15. A minimum of 4 air monitors will be required to monitor abrasive blasting operations at this site. See special provision for "Containment and Disposal of Lead Paint Cleaning Residues."

16. SSPC QP1 and QP2 Painting Contractor Certification required for the cleaning and painting work.

INDEX OF SHEETS

TOTAL BILL OF MATERIAL

ITEM	UNIT	QUANTITY
Polymerized Hot-Mix Asphalt Surface Course, Stone Matrix Asphalt, 9.5, Mix "E", N80	Ton	150
Concrete Removal	Cu. Yd.	23
Protective Shield	Sq. Yd.	499
Concrete Superstructure	Cu. Yd.	27.1
Cleaning and Painting Steel Bridge No. 7	L. Sum	1
Reinforcement Bars, Epoxy Coated	Pound	5010
Bar Splicers	Each	78
Preformed Joint Strip Seal	Foot	129
Elastomeric Bearing Assembly, Type I	Each	18
Elastomeric Bearing Assembly, Type II	Each	18
Full Lane Sealant Waterproofing System	Sq. Yd.	1831
Concrete Sealer	Sq. Ft.	1562
Graffiti Removal	Sq. Yd.	75
Structural Steel Removal	Pound	7370
Jack and Remove Existing Bearings	Each	36
Containment and Disposal of Lead Paint Cleaning Residues No. 7	L. Sum	1
Structural Repair of Concrete (depth equal to or less than 5 inches)	Sq. Ft.	85
Anchor Bolts, 1"	Each	72
Concrete Structure	Cu. Yd.	5
Furnishing and Erecting Structural Steel	Pound	7370

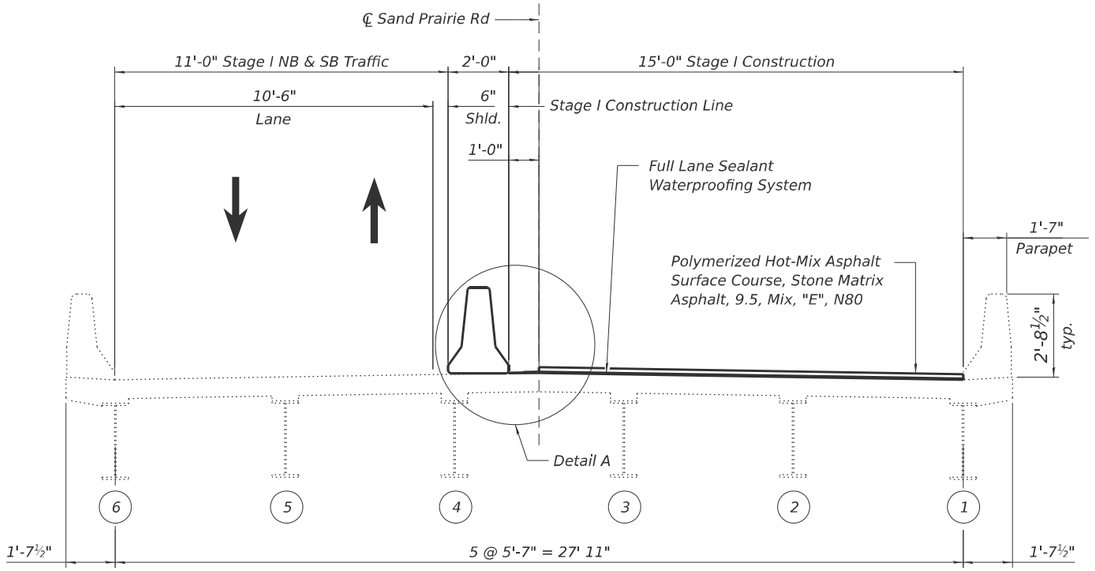

STAGE I CONSTRUCTION

(Looking North)

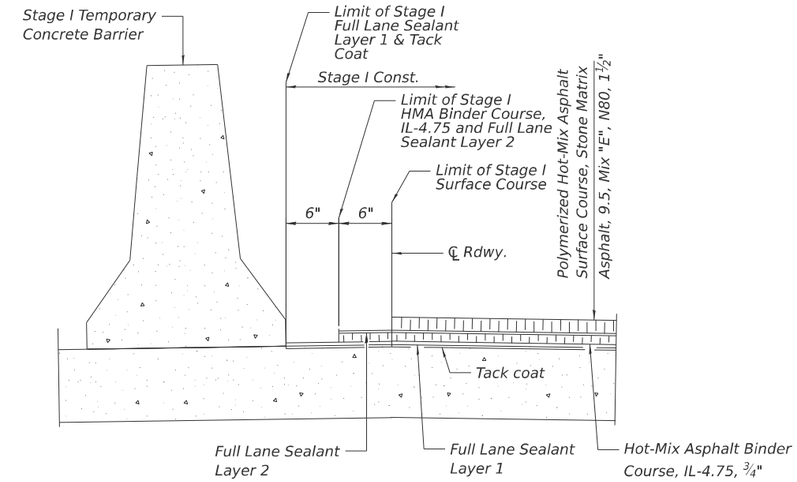

DETAIL A

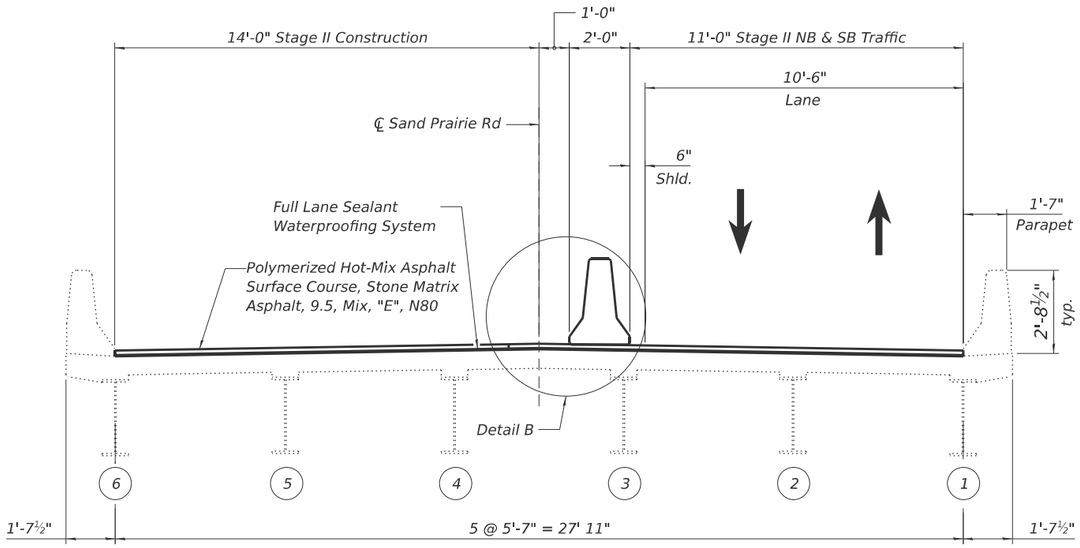

STAGE II CONSTRUCTION

(Looking North)

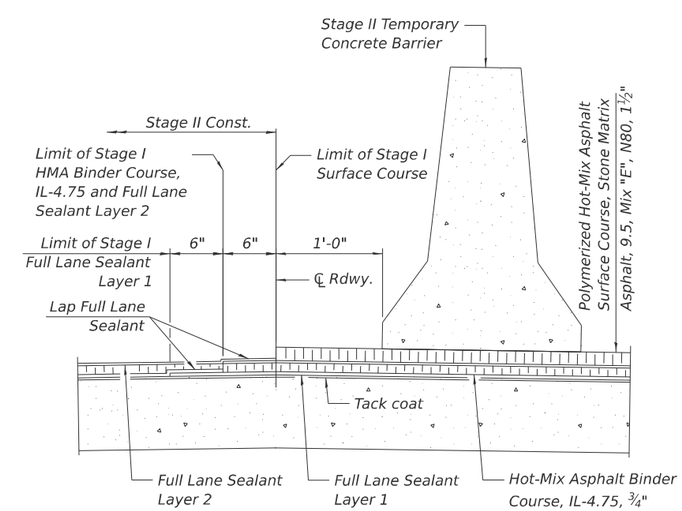

DETAIL B

LEGEND:

Temporary Concrete Barrier.

Notes:
For quantity of Temporary Concree Barrier, see roadway plans.
Full depth deck replacements at the abutment joints not shown.

MODEL: STAGED CONSTRUCTION DETAILS
FILE NAME: pw://jacobs-us-pw.bentley.com:jacobs-us-pw-04/Documents/D315220602 - ILDOT - I-55 I-70 Rehabilitation\30 Project Data\PID\ST\Collins\Sht\060-0146\D876E45-SHT-0600146-003-STAGED CONSTRUCTION DETAILS
11/21/2025 8:58:48 AM

COLLINS ENGINEERS INC

USER NAME = dredzlc	DESIGNED - A. SPALETTO	REVISED -	STATE OF ILLINOIS DEPARTMENT OF TRANSPORTATION	STAGED CONSTRUCTION DETAILS STRUCTURE NO. 060–0146	
	CHECKED - L. BENITEZ	REVISED -			
PLOT SCALE = $SCALE$	DRAWN - A. SPALETTO	REVISED -			
PLOT DATE = 11/21/2025	CHECKED - 2025/10/03	REVISED -		SHEET 3 OF 15 SHEETS	

F.A.I. RTE.	SECTION	COUNTY	TOTAL SHEETS	SHEET NO.
70	82-(5,6)RS-2, 60-6RS-2	MADISON & ST. CLAIR	678	510
		CONTRACT NO. 76E84		
	ILLINOIS	FED. AID PROJECT		

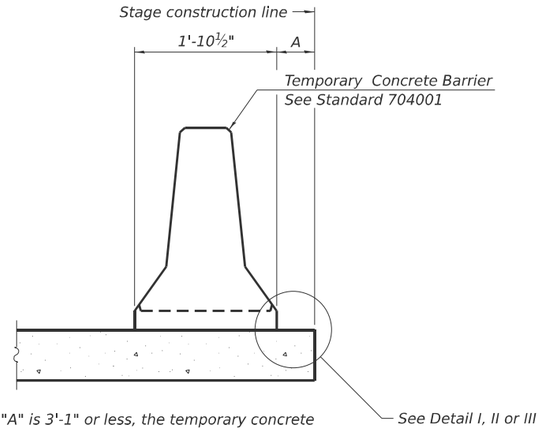

When "A" is 3'-1" or less, the temporary concrete barrier shall be restrained to the new slab according to Detail I, II or III. No restraint is required when "A" is greater than 3'-1".

NEW SLAB OR NEW DECK BEAM

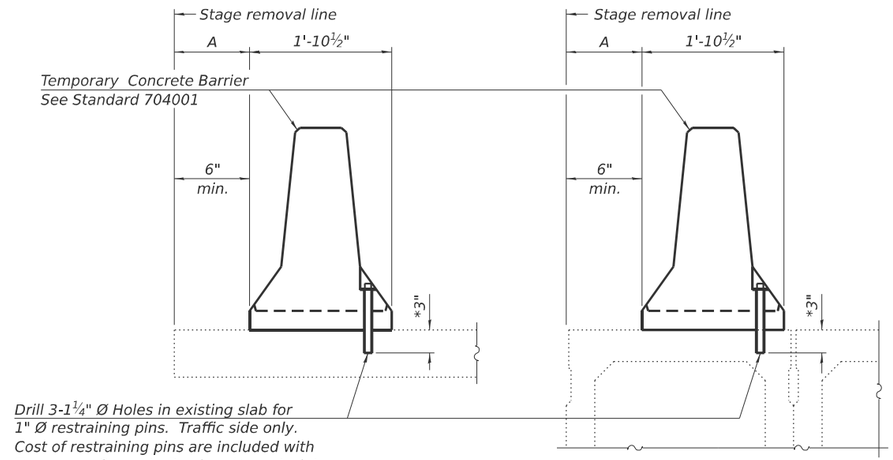

EXISTING SLAB

EXISTING DECK BEAM

* When hot-mix asphalt wearing surface is present, embedment shall be 3" plus the wearing surface depth.

SECTIONS THRU SLAB OR DECK BEAM

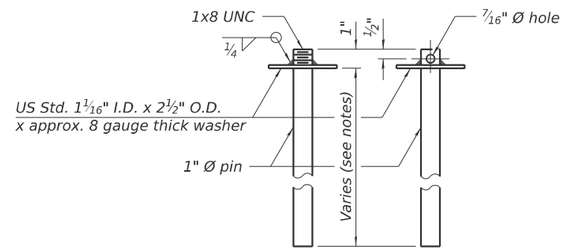

RESTRAINING PIN

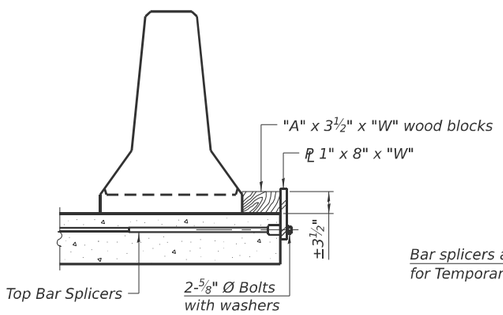

DETAIL I

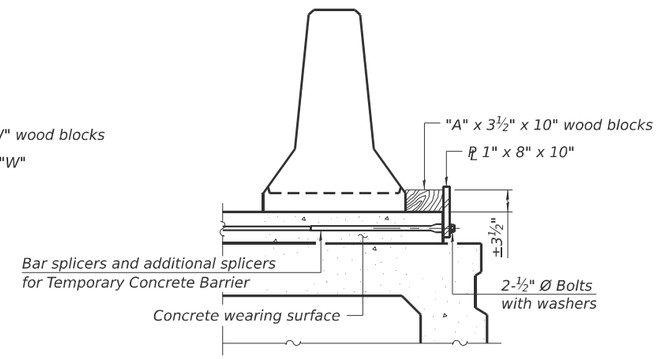

DETAIL II

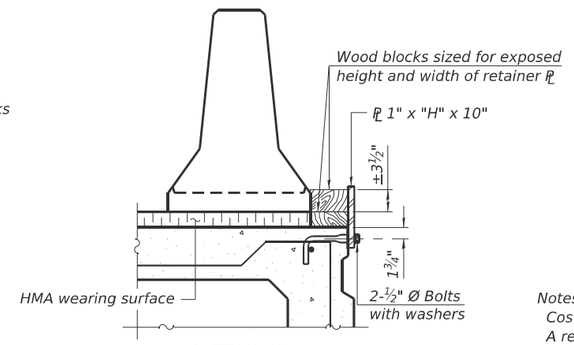

DETAIL III

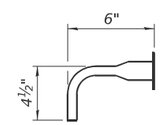

BAR SPLICER FOR #4 BAR - DETAIL III

Notes:

Cost of retainer assembly is included with Temporary Concrete Barrier.

A retainer assembly shall be located at the approximate ℄ of each temporary concrete barrier.

The retainer plate shall not be removed until the concrete on the adjacent stage is ready to be poured. For Detail III applications the retainer plate shall not be removed until just prior to placing the adjacent beam.

When the 'A' dimension is less than 1½", the wood block shall be omitted and the barrier shall be placed in direct contact with the steel retainer plate. For deck beam applications the minimum required 'A' distance is 6" to accommodate the shear key clamping device.

Detail I - Installation for a new bridge deck or bridge slab.

Detail II - Installation for a new deck beam with an initial concrete wearing surface. Additional bar splicers shall be provided at 6'-0" centers and paired with the bar splicers of the concrete wearing surface reinforcement to accommodate the installation of the retainer assemblies. The cost of the additional bar splicers is included with the concrete wearing surface.

Detail III - Installation for a new deck beam with no initial wearing surface or with an initial hot-mix asphalt (HMA) wearing surface present. The deck beam directly beneath the temporary concrete barrier shall be fabricated with bar splicer inserts in the side of the beam, as detailed, to accommodate the installation of the retainer assemblies. A pair of bar splicers, 6" apart, shall be placed at 6'-0" centers along the length of the beam. The cost of the bar splicers is included with the deck beam.

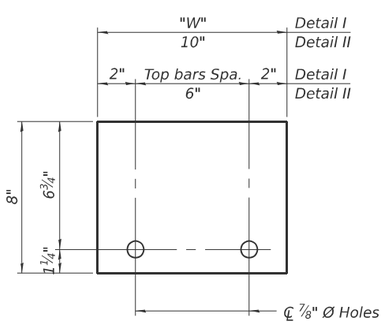

STEEL RETAINER PL 1" x 8" x "W"

(Detail I and II)

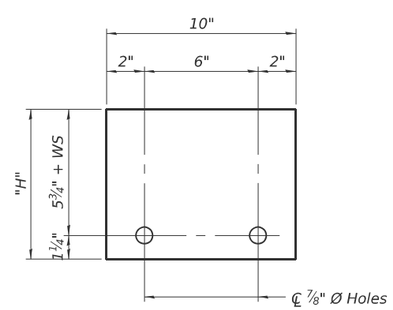

STEEL RETAINER PL 1" x "H" x 10"

(Detail III)

RAILING CRITERIA

NCHRP 350 Test Level	3
Railing Weight (plf)	440

R-27

5-15-2023

MODEL: TEMPORARY CONCRETE BARRIER
FILE NAME: pw://jacobs-us-a-pw.bentley.com:jacobs-us-va-pw-04/Documents/D3152206.02 - ILDOT - I-55 I-70 Rehabilitation\30 Project Data\PID\ST\Collins\Sht\060-0146\D876E45-SHT-0600146-004-TEMPORARY CONCRETE BARRIER

COLLINS ENGINEERS INC.

11/21/2025 9:04:01 AM

USER NAME = dredzlc	DESIGNED - A. SPALETTO	REVISED -	
	CHECKED - L. BENITEZ	REVISED -	
PLOT SCALE = $SCALE$	DRAWN - A. SPALETTO	REVISED -	
PLOT DATE = 11/21/2025	CHECKED - 2025/10/03	REVISED -	

STATE OF ILLINOIS
DEPARTMENT OF TRANSPORTATION

TEMPORARY CONCRETE BARRIER
STRUCTURE NO. 060–0146

SHEET 4 OF 15 SHEETS

F.A.I. RTE.	SECTION	COUNTY	TOTAL SHEETS	SHEET NO.
70	82-(5,6)RS-2, 60-6RS-2	MADISON & ST. CLAIR	678	511

CONTRACT NO. 76E84

ILLINOIS | FED. AID PROJECT

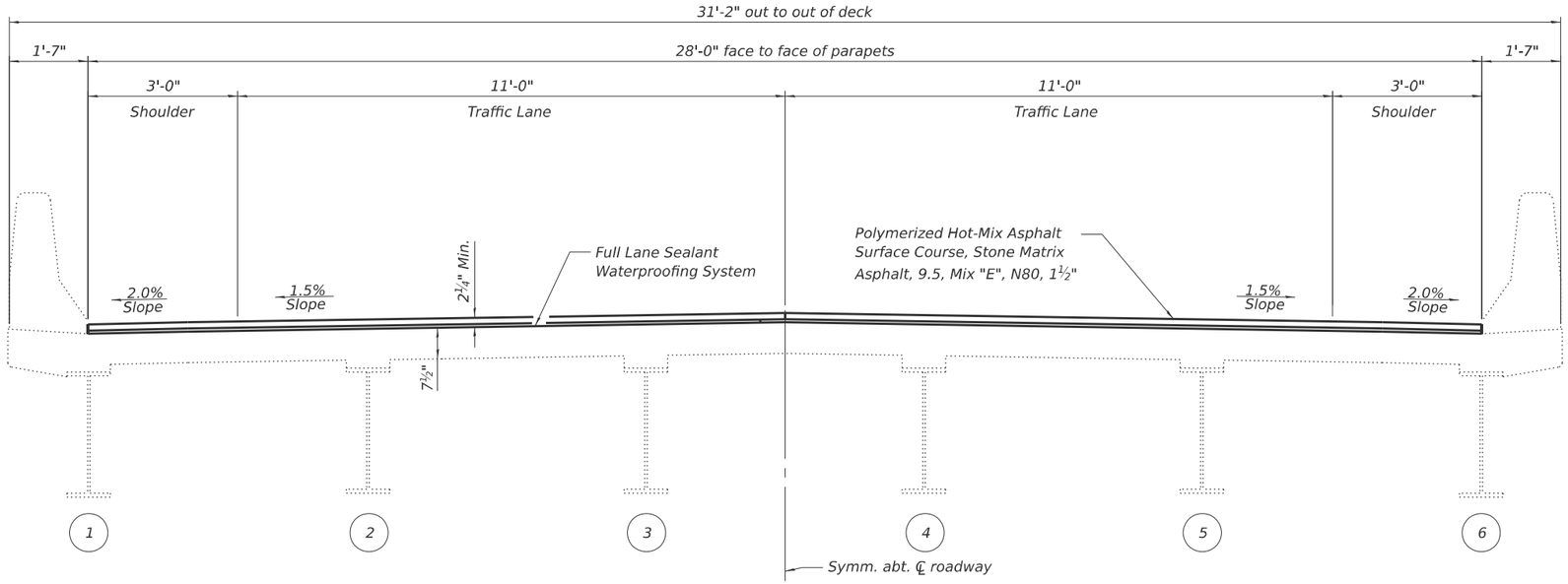

TYPICAL CROSS SECTION

(Looking South)

Note:
Full Lane Sealant Waterproofing System consists of an initial tack coat to promote bonding, Layer 1 of Full Lane Sealant, a layer of Hot-Mix Asphalt Binder Coarse, IL-4.75, and Layer 2 of Full Lane Sealant.
Full Lane Sealant Waterproofing System is to be placed on the deck and approaches.

TOP OF SLAB ELEVATIONS AT APPROACHES

Point/Location	060-0146 N. Approach	060-0146 S. Approach
A	432.26	433.98
B	432.49	434.20
C	432.26	433.98
D	431.82	433.73
E	432.05	433.96
F	431.82	433.73

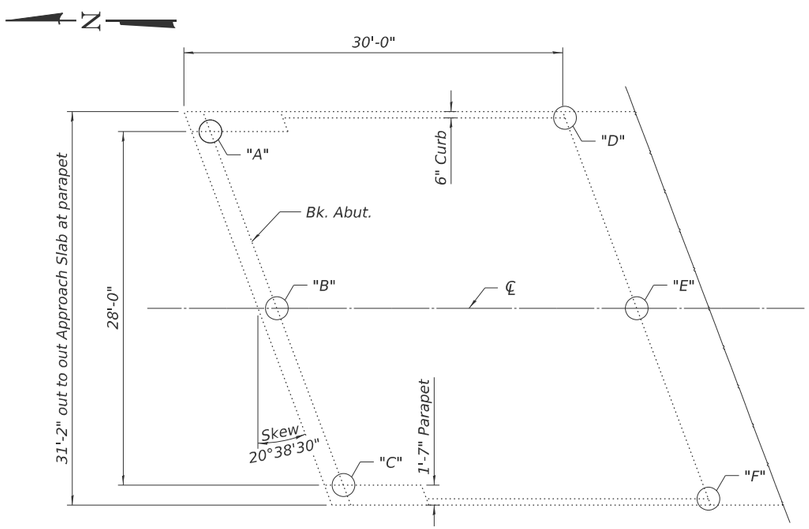

PLAN

(South approach slab shown, north approach slab similar by 180° rotation)

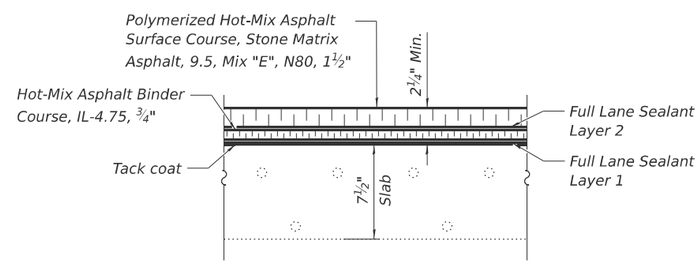

CROSS SECTION DETAILS

BILL OF MATERIAL

ITEM	UNIT	QUANTITY
Polymerized Hot-Mix Asphalt Surface Course, Stone Matrix Asphalt, 9.5, Mix "E", N80	TON	150
Full Lane Sealant Waterproofing System	SQ YD	1831

MODEL: FULL SEALANT WATERPROOF SYSTEM
FILE NAME: pw://jacobs-us-a-pw.bentley.com:jacobs-us-a-pw-04/Documents/D315220602 - ILDOT - I-55 I-70 Rehabilitation\30 Project Data\PID\ST\Collins\Sht\060-0146\D876E45-SHT-0600146-005-FULL SEALANT WATERPROOF SYSTEM

COLLINS ENGINEERS INC.

USER NAME = dredzlc	DESIGNED - A. SPALETTO	REVISED -	
	CHECKED - L. BENITEZ	REVISED -	
PLOT SCALE = $SCALE$	DRAWN - A. SPALETTO	REVISED -	
PLOT DATE = 11/21/2025	CHECKED - 2025/10/03	REVISED -	

STATE OF ILLINOIS
DEPARTMENT OF TRANSPORTATION

FULL LANE SEALANT WATERPROOFING SYSTEM
STRUCTURE NO. 060–0146

SHEET 5 OF 15 SHEETS

F.A.I. RTE.	SECTION	COUNTY	TOTAL SHEETS	SHEET NO.
70	82-(5,6)RS-2, 60-6RS-2	MADISON & ST. CLAIR	678	512

CONTRACT NO. 76E84

ILLINOIS FED. AID PROJECT

11/21/2025 9:05:30 AM

Notes:
All new fasteners shall be high strength bolts. Diaphragm connection holes shall be $^{15}/_{16}$" ∅ holes for $^{3}/_{4}$" ∅ bolts. Two hardened washers shall be required at diaphragm connections.
Diaphragms and connection hardware shall be galvanized. See Special Provision for "Hot Dip Galvanizing for Structural Steel".
Surface preparation of existing steel in contact with new steel members shall be done according to GBSP 21 cleaning and painting contact surface area of existing steel structures.
Cost for removal and replacement of end diaphragms shall be included in Structural Steel Repair

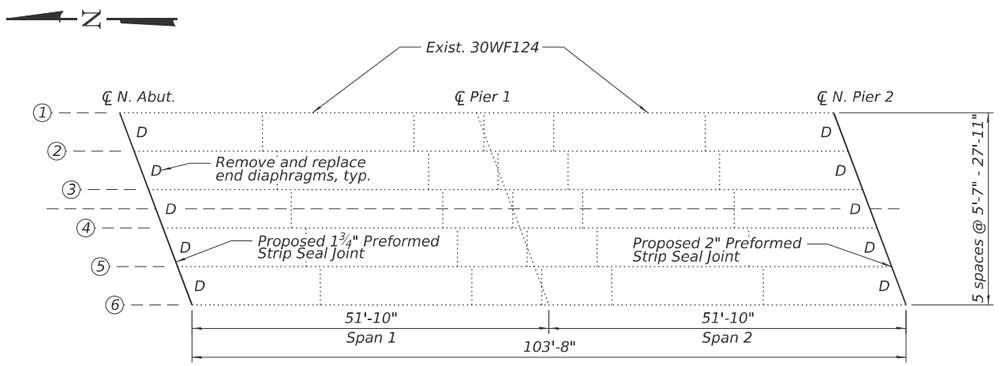

PLAN VIEW - SPANS 1 & 2

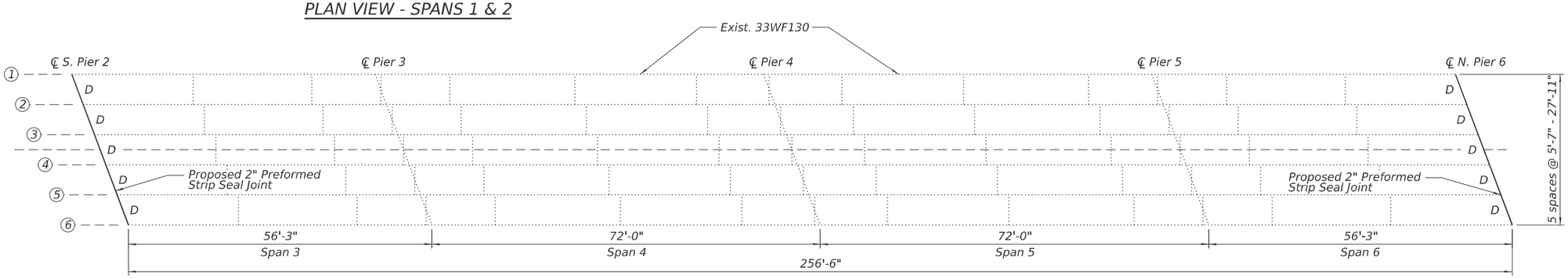

PLAN VIEW - SPANS 3, 4, 5, & 6

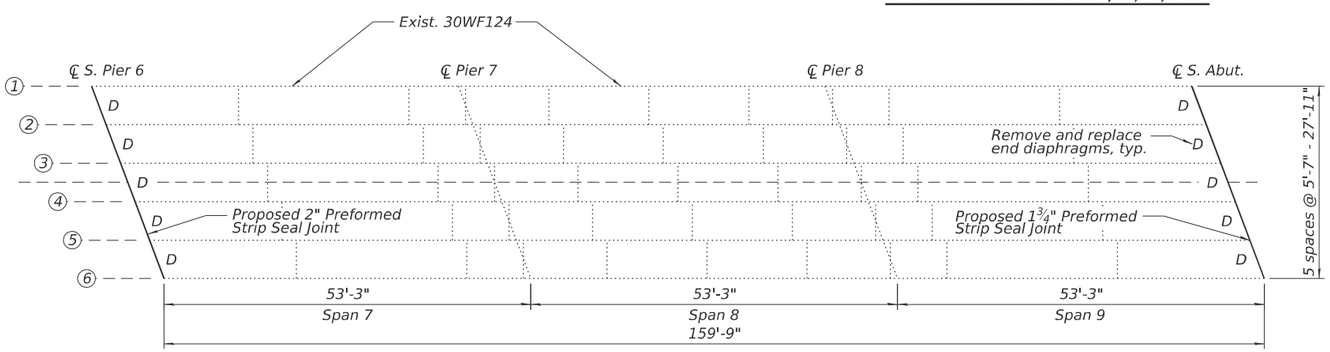

PLAN VIEW - SPANS 7, 8, & 9

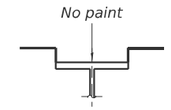

PAINT @ TOP FLANGE
(Typ. all girders)

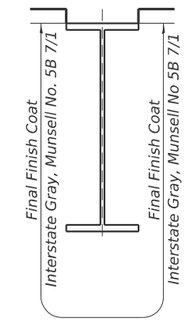

GIRDER PAINTING
(Typ. all girders)

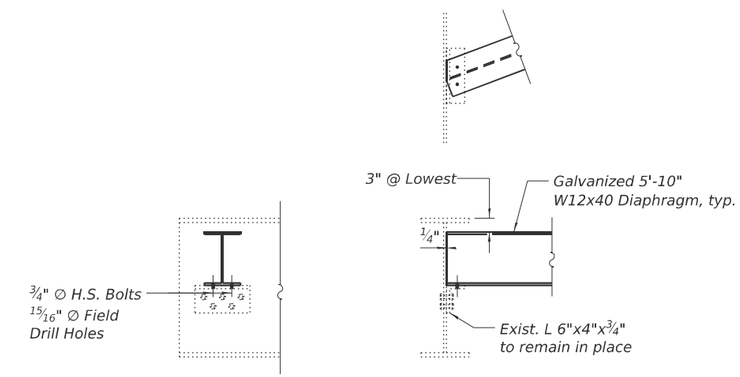

DIAPHRAGM "D"
(30 - UNITS)

BILL OF MATERIAL

ITEM	UNIT	QUANTITY
Structural Steel Removal	Pound	7370
Furnishing and Erecting Structural Steel	Pound	7370
Cleaning and Painting Structural Steel, Location 7	L Sum	1
Containment and Disposal of Lead Paint Cleaning Residues No. 2	L Sum	1

Notes:

Removal of existing expansion joint devices shall be incidental to the "Concrete Removal" Pay item.

Cost of removal and disposal of existing expansion joints shall be included in the cost of Concrete Removal.

Existing reinforcing steel bars extending into the removal area shall be cleaned, straightened, and incorporated into the new construction. Any reinforcing steel bars that are damaged during Concrete Removal shall be replaced with approved bar splicer or anchorage system. Cost included with Concrete Removal.

All existing reinforcement in the parapets to remain in place.

See Sheet 13 of 13 for Bar Splicers.

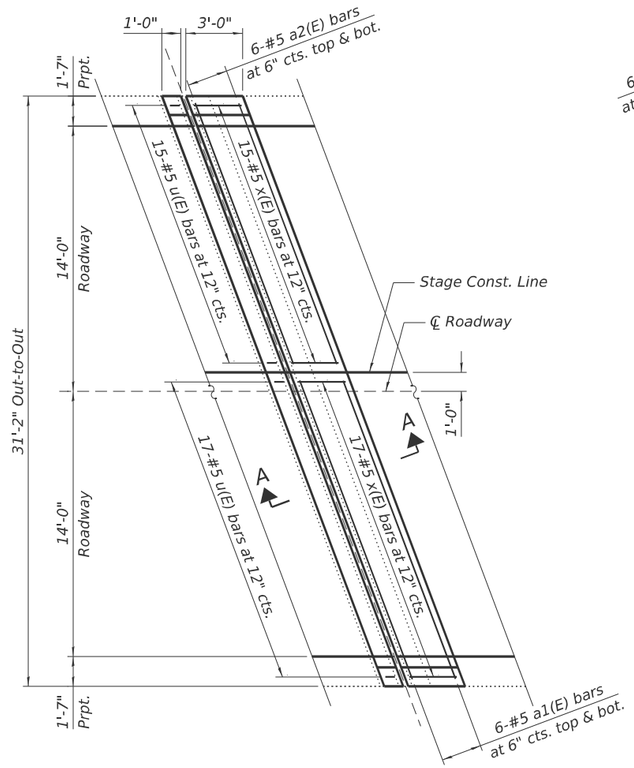

ABUTMENT JOINT RECONSTRUCTION PLAN

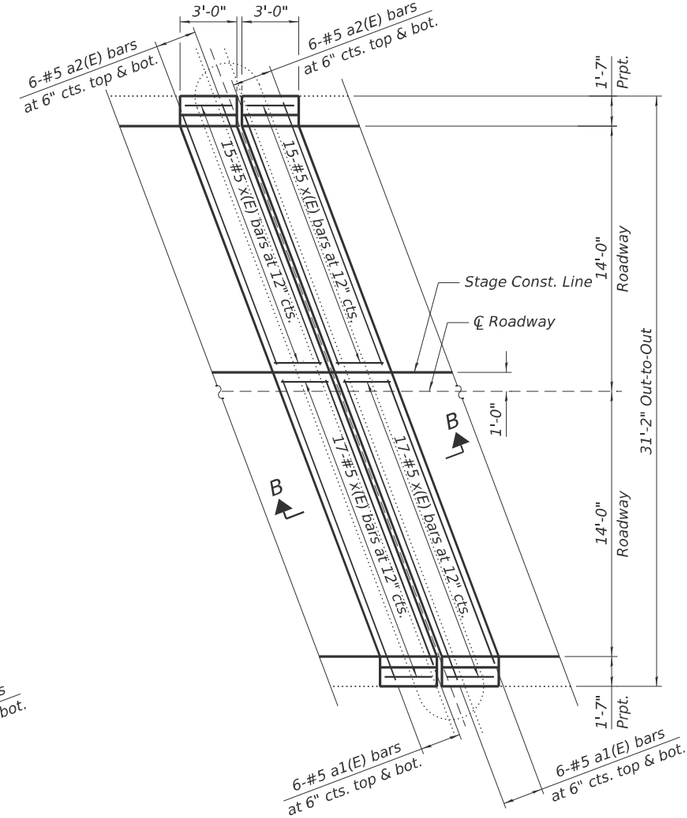

PIER JOINT RECONSTRUCTION PLAN

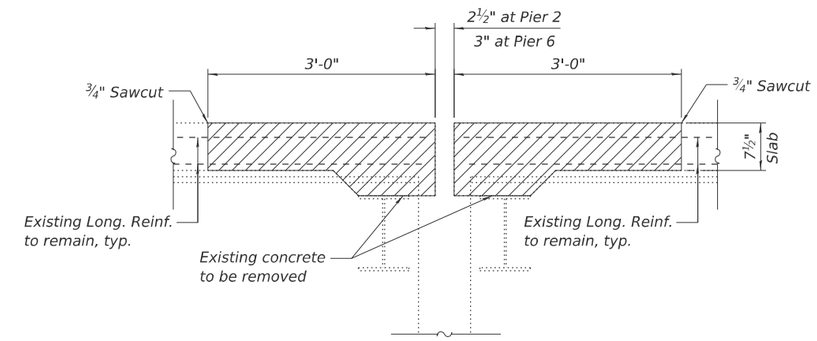

TYPICAL EXISTING PIER JOINT

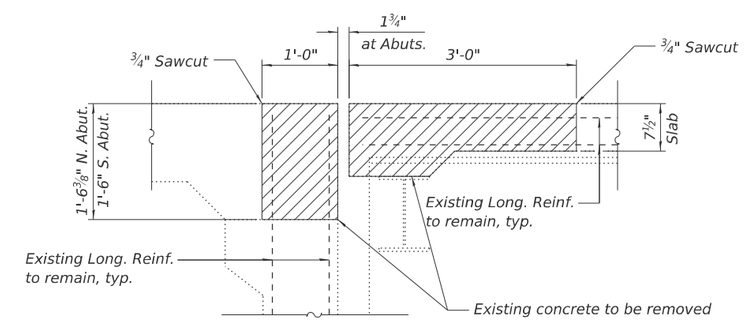

TYPICAL EXISTING ABUTMENT JOINT

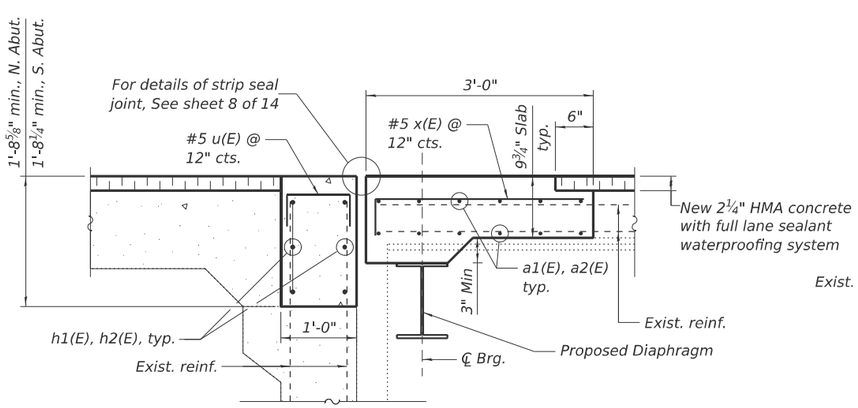

SECTION A-A
ABUTMENT JOINT RECONSTRUCTION

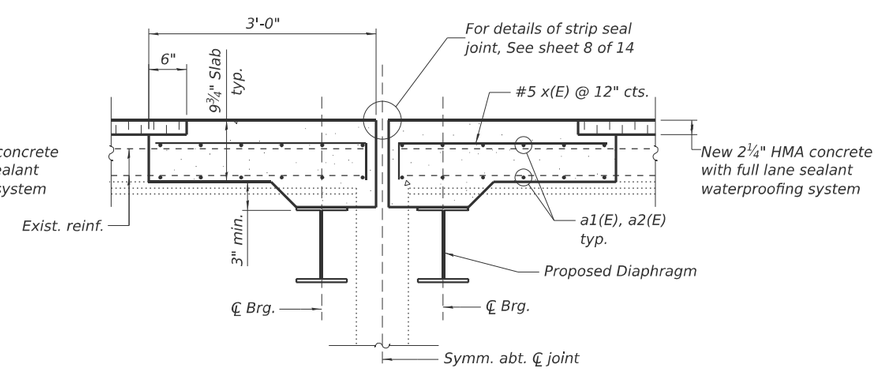

SECTION B-B
PIER JOINT RECONSTRUCTION

MODEL: EXPANSION JOINT REPLACEMENT
FILE NAME: pw://jacobs-us-pw.bentley.com:jacobs-us-pw-04/Documents/D315220602 - ILDOT - I-55 I-70 Rehabilitation/30 Project Data/PID/ST/Collins/Sht/060-0146/D876E45-SHT-060014S-007-EXPANSION JOINT REPLACEMENT DETAIL I
11/21/2025 10:24:43 AM

COLLINS ENGINEERS INC.

USER NAME = credzlc	DESIGNED - A. SPALETTO	REVISED -	STATE OF ILLINOIS DEPARTMENT OF TRANSPORTATION	EXPANSION JOINT REPLACEMENT DETAIL I STRUCTURE NO. 060–0146
	CHECKED - L. BENITEZ	REVISED -		
PLOT SCALE = $SCALE$	DRAWN - A. SPALETTO	REVISED -		
PLOT DATE = 11/21/2025	CHECKED - 2025/10/03	REVISED -		SHEET 7 OF 15 SHEETS

F.A.I. RTE.	SECTION	COUNTY	TOTAL SHEETS	SHEET NO.
70	82-(5,6)RS-2, 60-6RS-2	MADISON & ST. CLAIR	678	514
		CONTRACT NO. 76E84		
		ILLINOIS	FED. AID PROJECT	

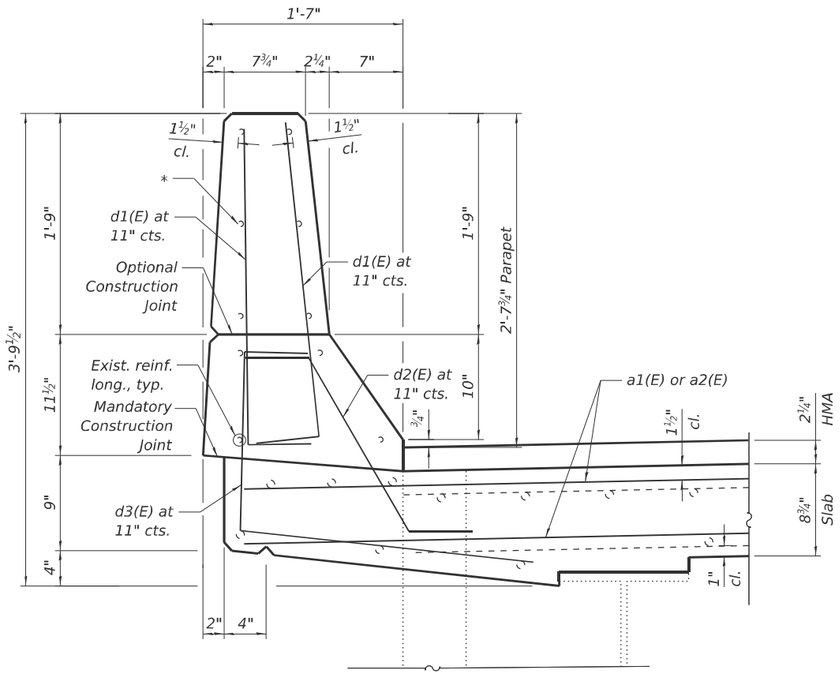

SECTION THRU PARAPET

* Existing parapet reinforcement to incorporated into new parapet, typ.

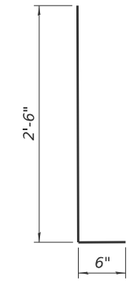

BARS d1(E)

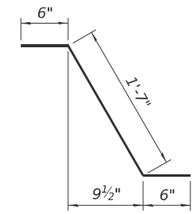

BAR d2(E)

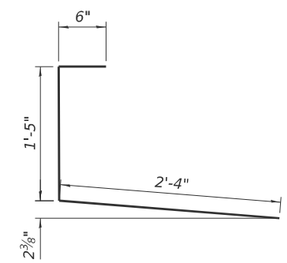

BAR d3(E)

BILL OF MATERIAL

Bar	No.	Size	Length	Shape
a1(E)	72	#5	17'-4¾"	
a2(E)	72	#5	15'-3"	
d1(E)	48	#5	3'-0"	
d2(E)	48	#5	4'-3"	
d3(E)	48	#5	2'-7"	
h1(E)	12	#6	17'-4¾"	
h2(E)	12	#6	15'-3"	
u(E)	68	#5	1'-11"	
x(E)	204	#5	3'-4"	
Concrete Removal			Cu. Yd.	23
Concrete Superstructure			Cu. Yd.	27.1
Reinforcement Bars, Epoxy Coated			Pound	4390
Bar Splicers			Each	84

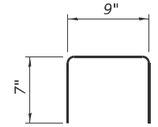

u(E) BAR

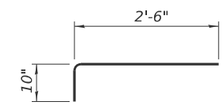

x(E) BAR

MODEL: EXPANSION JOINT REPLACEMENT
FILE NAME: pw://jacobs-us-pw.bentley.com:jacobs-us-pw-04/Documents/D315220602 - ILDOT - I-55 I-70 Rehabilitation\30 Project Data\PID\ST\Collins\Sht\060-0146\D876E45-SHT-0600146-008-EXPANSION JOINT REPLACEMENT DETAIL II.dgn

COLLINS ENGINEERS INC

USER NAME = dredzlc	DESIGNED - A. SPALETTO	REVISED -	STATE OF ILLINOIS DEPARTMENT OF TRANSPORTATION	EXPANSION JOINT REPLACEMENT DETAIL II STRUCTURE NO. 060–0146	
	CHECKED - L. BENITEZ	REVISED -			
PLOT SCALE = $SCALE$	DRAWN - A. SPALETTO	REVISED -			
PLOT DATE = 11/24/2025	CHECKED - 2025/11/21	REVISED -		SHEET 8 OF 15 SHEETS	

F.A.I. RTE.	SECTION	COUNTY	TOTAL SHEETS	SHEET NO.
70	82-(5,6)RS-2, 60-6RS-2	MADISON & ST. CLAIR	678	514A
		CONTRACT NO. 76E84		
		ILLINOIS	FED. AID PROJECT	

11/24/2025 12:52:58 PM

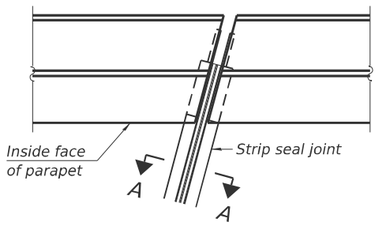

FOR SKEWS ≤ 30°

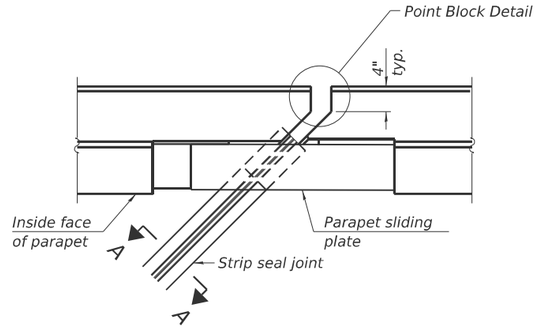

FOR SKEWS > 30°

PLAN AT PARAPET

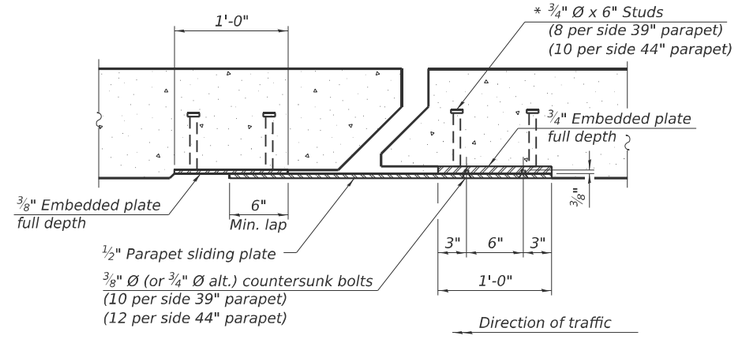

SECTION B-B

(¾" Ø countersunk bolts extending into concrete shall have hex nuts tack welded to the back of the embedded plates with end caps provided.)

Notes:

The strip seal shall be made continuous and shall have a minimum thickness of ¼". The configuration of the strip seal shall match the configuration of the locking edge rails. Open or "webbed" strip seal gland configurations are not permitted. The gland shall be sized for a maximum rated movement of 4 inches.

The locking edge rails depicted are configured for typical applications and are conceptual only. The actual configuration of the locking edge rails and matching strip seal may vary from manufacturer to manufacturer provided they fit the application and meet the minimum anchorage shown. Flanged edge rails, however, will not be allowed. Locking edge rails may exceed the 4½" maximum depth provided the anchorage system is revised according to the manufacturer's recommendation.

The manufacturer's recommended installation methods shall be followed.

All steel components shall be galvanized after fabrication according to Article 520.03 of the Standard Specifications.

The Maximum space between locking edge rail segments shall be 3/16" and sealed with a suitable sealant; however, any rail joint within 10' measured perpendicular to the face of the curb or parapet shall be welded as shown in the locking edge rail splice detail.

Cost of parapet sliding plates, embedded plates, and anchorage studs included with Preformed Joint Strip Seal.

39" constant slope barrier shown, 44" constant slope barrier similar as noted.

The concrete opening below the strip seal will vary based on the locking edge rail chosen by the Contractor. Deck and parapet lengths shown elsewhere in the plans are dimensioned to the concrete opening, not the joint opening, and are based on the rolled locking edge rail. If the Contractor elects to use a different locking edge rail, dimensional adjustments may be required. One exception to this would be the strip seal joint at the end of the precast bridge approach slab. For these cases the pavement connector length shall be adjusted, not the length of the bridge approach slab.

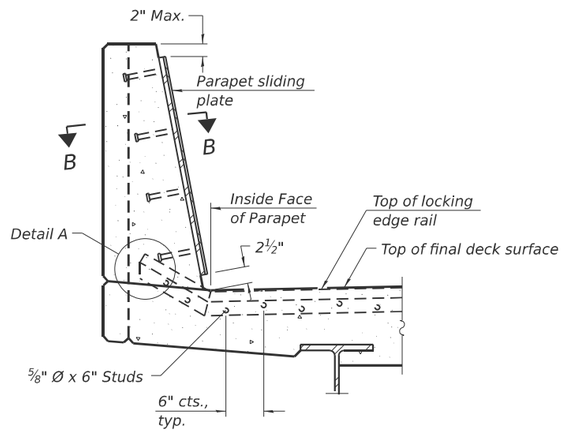

SECTION AT PARAPET

(Skews > 30° shown. Skews ≤ 30° similar except as shown in plan view.)

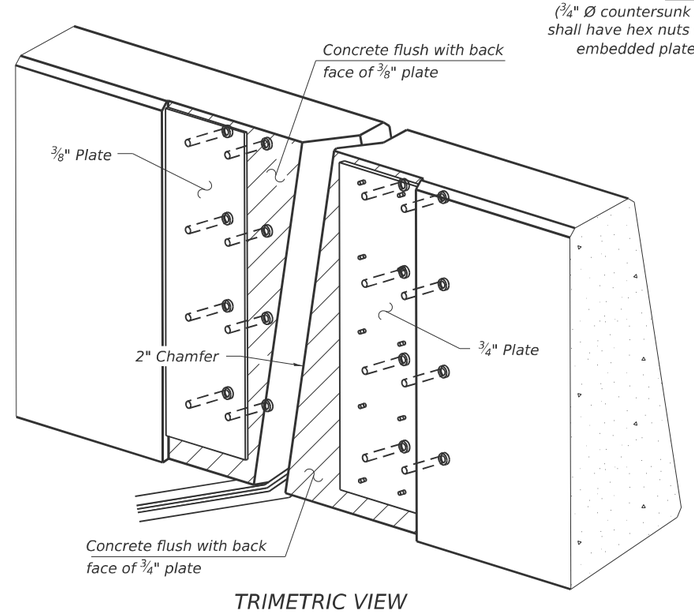

TRIMETRIC VIEW

(Showing embedded plates only)

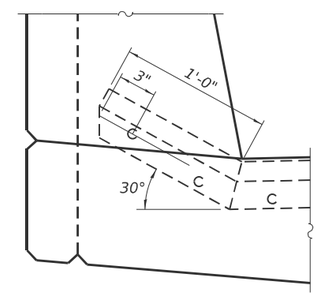

DETAIL A

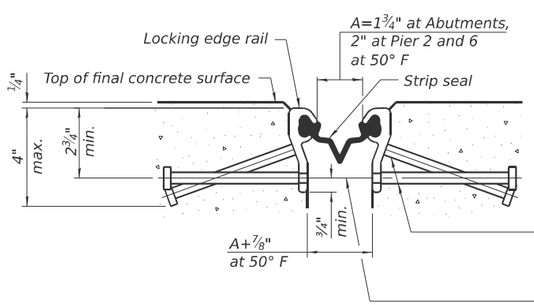

SHOWING ROLLED RAIL JOINT

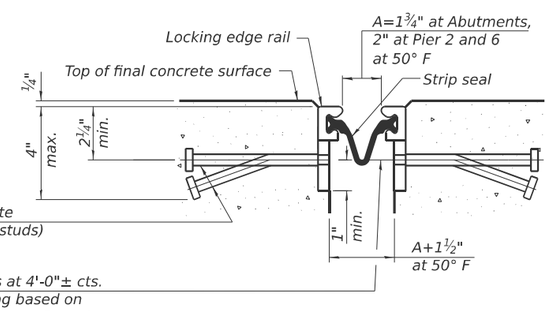

SHOWING WELDED RAIL JOINT

* ⅝" Ø x 6" studs @ 6" cts. (alternate angled/bent studs with horizontal studs)

⅜" Ø threaded rods in 7/16" Ø holes at 4'-0"± cts. for holding the proper joint opening based on the temperature during the deck pour. Place to miss studs. All rods shall be burned, or sawed off flush with the plates after concrete is set.

SECTION A-A

* Granular or solid flux filled headed studs conforming to Article 1006.32 of the Std. Specs., automatically end welded.

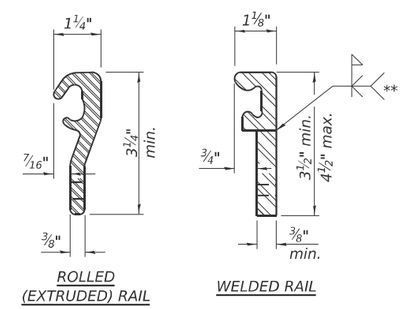

ROLLED (EXTRUDED) RAIL

WELDED RAIL

LOCKING EDGE RAILS

** Back gouge not required if complete joint penetration is verified by mock-up.

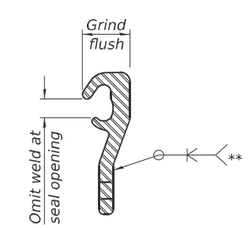

LOCKING EDGE RAIL SPLICE

The inside of the locking edge rail groove shall be free of weld residue. Rolled rail shown, welded rail similar.

BILL OF MATERIAL

Item	Unit	Total
Preformed Joint Strip Seal	Foot	129

MODEL: PREFORMED JOINT STRIP SEAL
FILE NAME: pw://jacobs-us-co-pw.bentley.com:jacobs-us-co-pw-04/Documents/D315220602 - ILDOT - I-55 I-70 Rehabilitation\30 Project Data\PID\ST\Collins\Sht\060-0146\D876E45-SHT-0600146-009-PREFORMED JOINT STRIP SEAL
11/21/2025 11:29:09 AM

COLLINS ENGINEERS INC.

USER NAME = credzlc	DESIGNED - A. SPALETTO	REVISED -	STATE OF ILLINOIS DEPARTMENT OF TRANSPORTATION	PREFORMED JOINT STRIP SEAL STRUCTURE NO. 060–0146
	CHECKED - L. BENITEZ	REVISED -		
PLOT SCALE = $SCALE$	DRAWN - A. SPALETTO	REVISED -		
PLOT DATE = 11/21/2025	CHECKED - 2025/10/03	REVISED -		SHEET 9 OF 15 SHEETS

F.A.I. RTE.	SECTION	COUNTY	TOTAL SHEETS	SHEET NO.
70	82-(5,6)RS-2, 60-6RS-2	MADISON & ST. CLAIR	678	515
		CONTRACT NO. 76E84		
		ILLINOIS	FED. AID PROJECT	

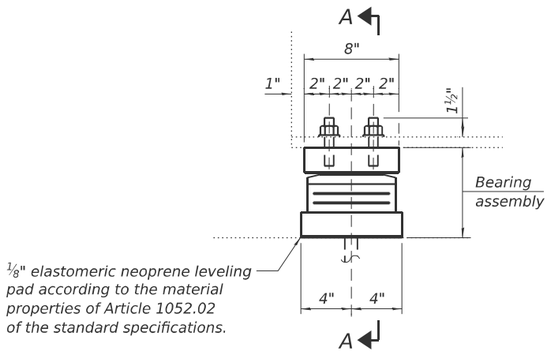

ELEVATION

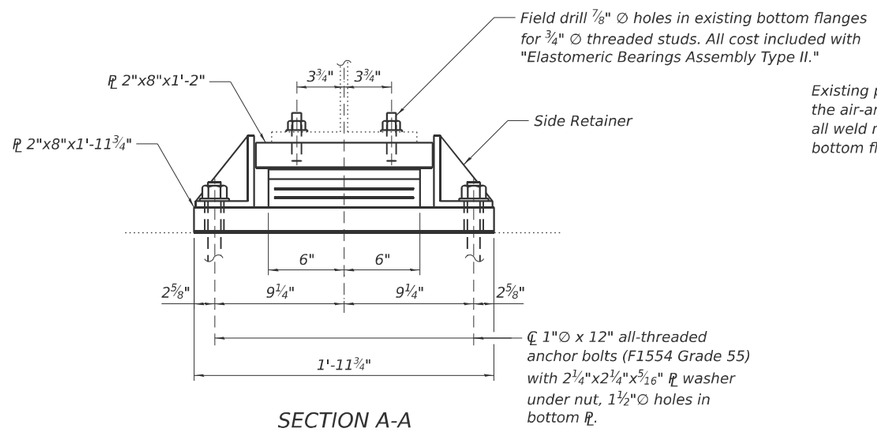

SECTION A-A

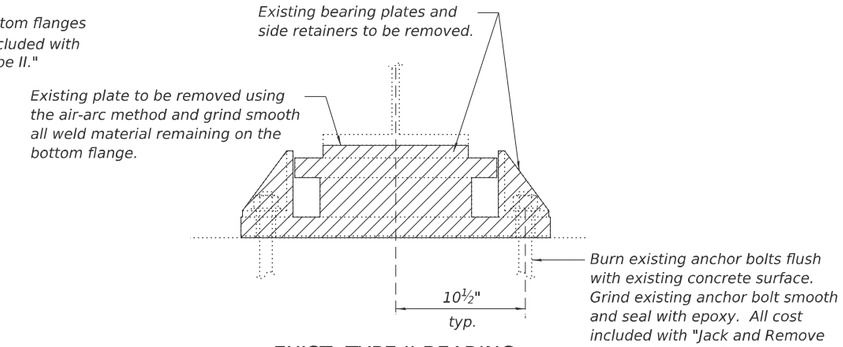

EXIST. TYPE II BEARING

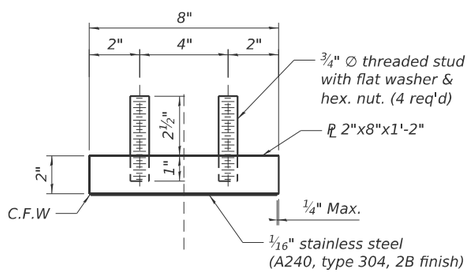

TOP BEARING ASSEMBLY

(12 Units)

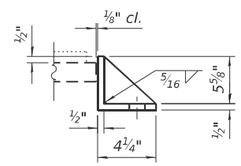

SIDE VIEW

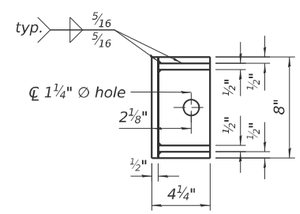

PLAN VIEW

SIDE RETAINER

(24 Units)

Equivalent rolled angle with stiffeners will be allowed in lieu of welded plates.

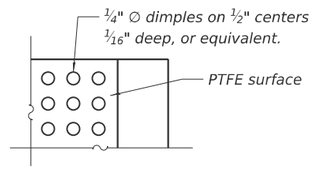

PLAN-TFE SURFACE

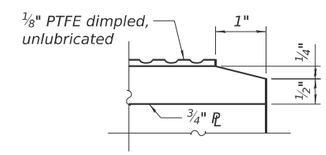

SECTION THROUGH TFE

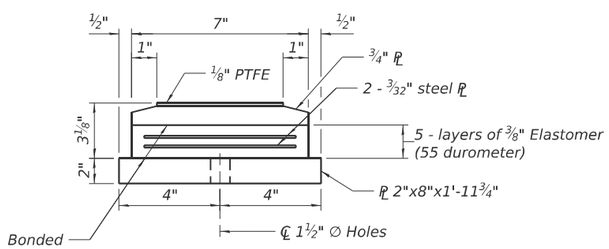

BOTTOM BEARING ASSEMBLY

(12 Units)

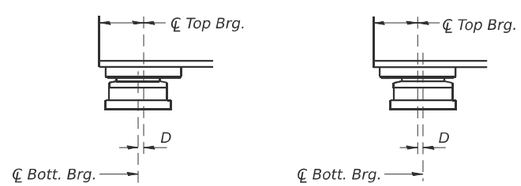

BELOW 50°F. ABOVE 50°F.

D=⅛" per each 100' of expansion for every 15° temp. change from the normal temp. of 50°F.

EXPANSION BEARING ORIENTATION

The above diagrams are for informational purposes only to show the amount of expected offset "D" for the current temperature in the field.

Interior Girder Reaction Table			
		S. Pier 2	N. Pier 6
R DL	(k)	19	19
R LL	(k)	30	30
Imp.	(k)	9	9
R Total	(k)	58	58

Interior Girder Reactions taken from previous 1995 repairs.
40 ton min. jacks shall be used, and all work to be performed per GBSP 14.

Notes:

Field measure all existing bearing heights and adjust proposed system as required.

Side retainers and leveling pad required for the elastomeric bearing assembly shall be included in the cost of Elastomeric Bearing Assembly, Type II.

The ⅛" PTFE sheet shall be bonded directly to the top steel plate with a two-component, medium viscosity epoxy resin, conforming to the requirements of the Federal Specification MM-A-134, Type I. The bond agent shall be applied on the full area of the contact surfaces.

Bonding of ⅛" PTFE sheet during vulcanizing process will be permitted provided the process and method of adjusting assembly height is approved by the Engineer.

Anchor bolts and side retainers at all supports shall be installed as each member is erected unless an equivalent temporary means of lateral restraint is used.

Cost of removal and disposal of existing elastomeric bearings shall be included under "Jack and Remove Existing Bearings" pay item.

Anchor bolts shall be ASTM F1554 all-thread of the diameter specified.

Two ⅛" adjusting shim plates shall be provided for each bearing in addition to all other plates or shims and placed on bearings as required.

All (embedded and separate) bearing plates, side retainers, anchor bolts, nuts, washers and pintles shall be galvanized according to AASHTO M111 or M232 as applicable.

BILL OF MATERIAL

ITEM	UNIT	QUANTITY
Elastomeric Bearing Assembly, Type II	Each	12
Jack and Remove Existing Bearings	Each	12
Anchor Bolts, 1"	Each	24

COLLINS ENGINEERS INC.

USER NAME = dredzic	DESIGNED - A. SPALETTO	REVISED -	
	CHECKED - L. BENITEZ	REVISED -	
PLOT SCALE = $SCALE$	DRAWN - A. SPALETTO	REVISED -	
PLOT DATE = 11/21/2025	CHECKED - 2025/10/03	REVISED -	

STATE OF ILLINOIS
DEPARTMENT OF TRANSPORTATION

BEARING REPLACEMENT S. PIER 2 & N. PIER 6
STRUCTURE NO. 060–0146

SHEET 10 OF 15 SHEETS

F.A.I. RTE.	SECTION	COUNTY	TOTAL SHEETS	SHEET NO.
70	82-(5,6)RS-2, 60-6RS-2	MADISON & ST. CLAIR	678	516
		CONTRACT NO. 76E84		
		ILLINOIS	FED. AID PROJECT	

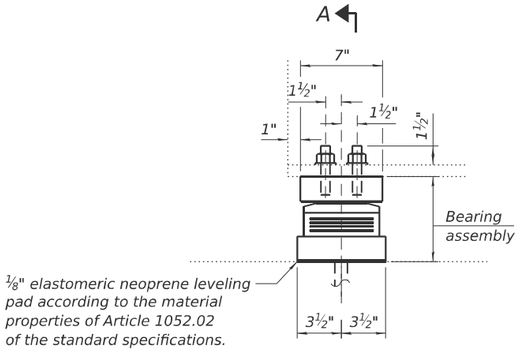

ELEVATION

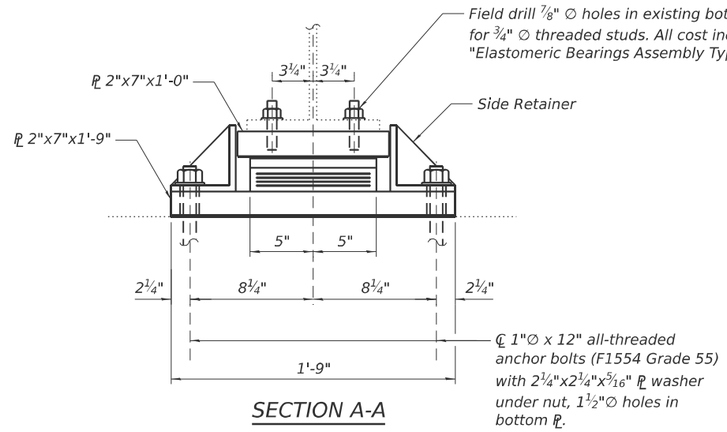

SECTION A-A

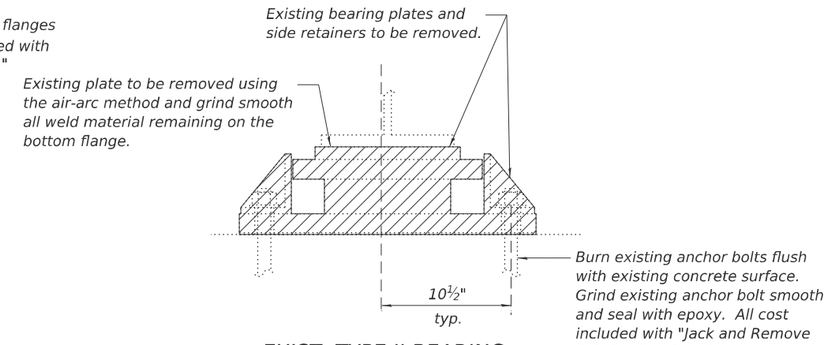

EXIST. TYPE II BEARING

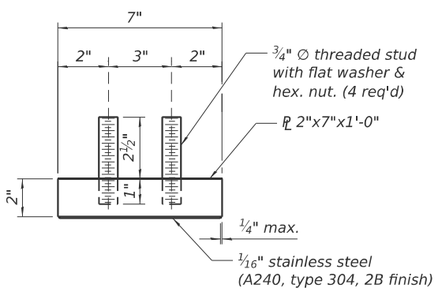

TOP BEARING ASSEMBLY
(6 Units)

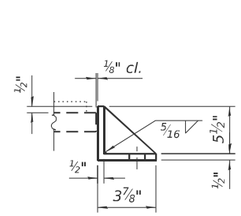

SIDE VIEW

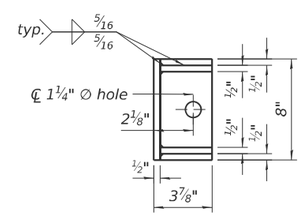

PLAN VIEW

SIDE RETAINER
(12 Units)
Equivalent rolled angle with stiffeners will be allowed in lieu of welded plates.

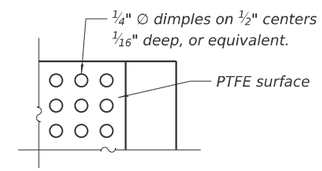

PLAN-TFE SURFACE

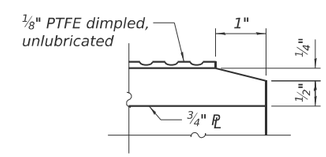

SECTION THROUGH TFE

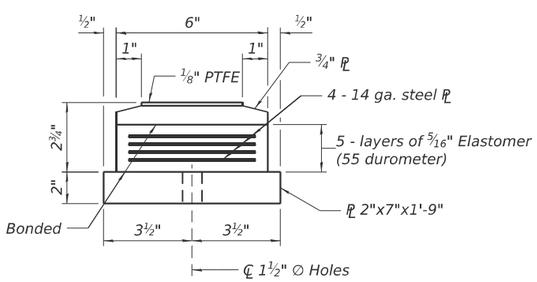

BOTTOM BEARING ASSEMBLY
(6 Units)

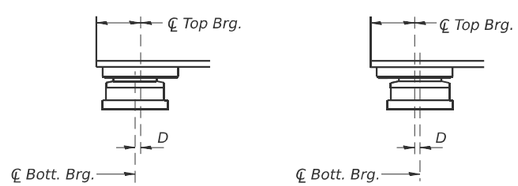

BELOW 50°F. ABOVE 50°F.

D=⅛" per each 100' of expansion for every 15° temp. change from the normal temp. of 50°F.

EXPANSION BEARING ORIENTATION

The above diagrams are for informational purposes only to show the amount of expected offset "D" for the current temperature in the field.

Interior Girder Reaction Table		
		S. Pier 6
R DL	(k)	19
R LL	(k)	29
Imp.	(k)	9
R Total	(k)	57

Interior Girder Reactions taken from previous 1995 repairs.
40 ton min. jacks shall be used, and all work to be performed per GBSP 14.

Notes:

Field measure all existing bearing heights and adjust proposed system as required.

Side retainers and leveling pad required for the elastomeric bearing assembly shall be included in the cost of Elastomeric Bearing Assembly, Type II.

The ⅛" PTFE sheet shall be bonded directly to the top steel plate with a two-component, medium viscosity epoxy resin, conforming to the requirements of the Federal Specification MM-A-134, Type I. The bond agent shall be applied on the full area of the contact surfaces.

Bonding of ⅛" PTFE sheet during vulcanizing process will be permitted provided the process and method of adjusting assembly height is approved by the Engineer.

Anchor bolts and side retainers at all supports shall be installed as each member is erected unless an equivalent temporary means of lateral restraint is used.

Cost of removal and disposal of existing elastomeric bearings shall be included under "Jack and Remove Existing Bearings" pay item.

Anchor bolts shall be ASTM F1554 all-thread of the diameter specified.

Two ⅛" adjusting shim plates shall be provided for each bearing in addition to all other plates or shims and placed on bearings as required.

All (embedded and separate) bearing plates, side retainers, anchor bolts, nuts, washers and pintles shall be galvanized according to AASHTO M111 or M232 as applicable.

BILL OF MATERIAL

ITEM	UNIT	QUANTITY
Elastomeric Bearing Assembly, Type II	Each	6
Jack and Remove Existing Bearings	Each	6
Anchor Bolts, 1"	Each	12

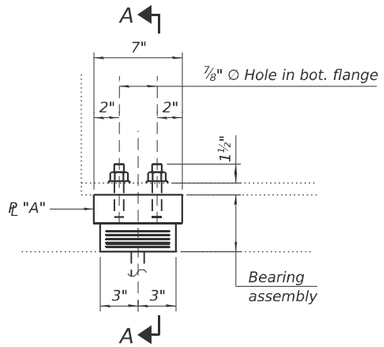

ELEVATION

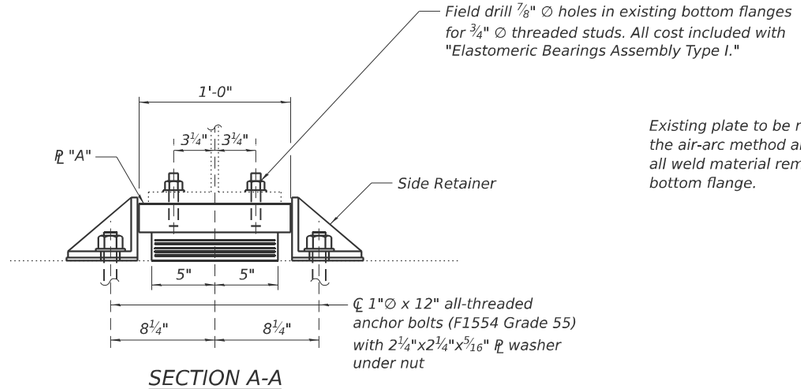

SECTION A-A

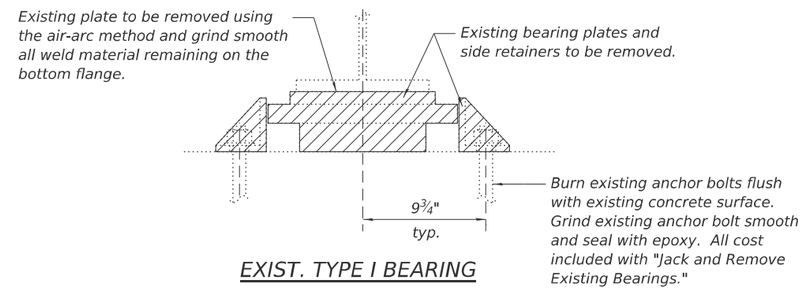

EXIST. TYPE I BEARING

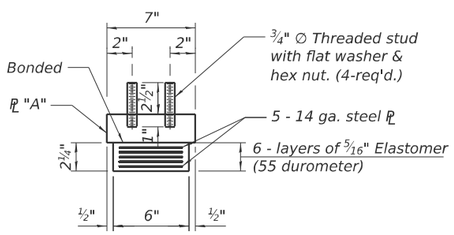

BEARING ASSEMBLY

(18 Units)

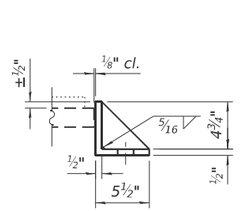

SIDE VIEW

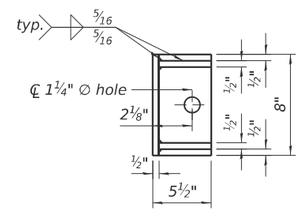

PLAN VIEW

SIDE RETAINER

(36 Units)

Equivalent rolled angle with stiffeners will be allowed in lieu of welded plates.

Notes:

The structural steel plates of the Bearing Assembly shall conform to the requirements of AASHTO M270 Grade 50.

Side retainers and stainless steel plates shall be included in the cost of Elastomeric Bearing Assembly, Type I.

Anchor bolts and side retainers at all supports shall be installed as each member is erected unless an equivalent temporary means of lateral restraint is used.

Cost of removing and disposal of exiting elastomeric bearings shall be included under "Jack and Remove Existing Bearings" pay item.

Anchor bolts shall be ASTM F1554 all-thread of the diameter specified.

Two 1/8" adjusting shim plates shall be provided for each bearing in addition to all other plates or shims and placed on bearings as required.

All (embedded and separate) bearing plates, side retainers, anchor bolts, nuts, washers and pintles shall be galvanized according to AASHTO M111 or M232 as applicable.

Location	"A"	"B"
N. Abut. & N. Pier 2	℄ 2 1/2"x7"x1'-0"	4 3/4"
S. Abut.	℄ 2 1/8"x7"x1'-0"	4 3/8"

Interior Girder Reaction Table				
		N. Abut.	N. Pier 2	S. Abut.
R DL	(k)	17	17	19
R LL	(k)	29	29	29
Imp.	(k)	9	9	9
R Total	(k)	55	55	57

Interior Girder Reactions taken from previous 1995 repairs.
40 ton min. jacks shall be used, and all work to be performed per GBSP 14.

BILL OF MATERIAL

ITEM	UNIT	QUANTITY
Elastomeric Bearing Assembly, Type I	Each	18
Jack and Remove Existing Bearings	Each	18
Anchor Bolts, 1"	Each	36

MODEL: BEARING REPLACEMENT NA SA NP2
FILE NAME: pw://jacobs-us-cs-pw.bentley.com:jacobs-us-cs-pw-04/Documents/D3152206.02 - ILDOT - I-55 I-70 Rehabilitation/30 Project Data/PHD/ST/Collins/Sht/060-0146/D876E45-SHT-0600146-012-BEARING REPAIRS NA SA NP2

COLLINS ENGINEERS INC.

USER NAME = credzlc	DESIGNED - A. SPALETTO	REVISED -	
	CHECKED - L. BENITEZ	REVISED -	
PLOT SCALE = $SCALE$	DRAWN - A. SPALETTO	REVISED -	
PLOT DATE = 11/21/2025	CHECKED - 2025/10/03	REVISED -	

STATE OF ILLINOIS
DEPARTMENT OF TRANSPORTATION

BEARING REPLACEMENT – N. ABUT, S. ABUT, & N. PIER 2
STRUCTURE NO. 060–0146

SHEET 12 OF 15 SHEETS

F.A.I. RTE.	SECTION	COUNTY	TOTAL SHEETS	SHEET NO.
70	82-(5,6)RS-2, 60-6RS-2	MADISON & ST. CLAIR	678	518

CONTRACT NO. 76E84

ILLINOIS FED. AID PROJECT

11/21/2025 11:34:11 AM

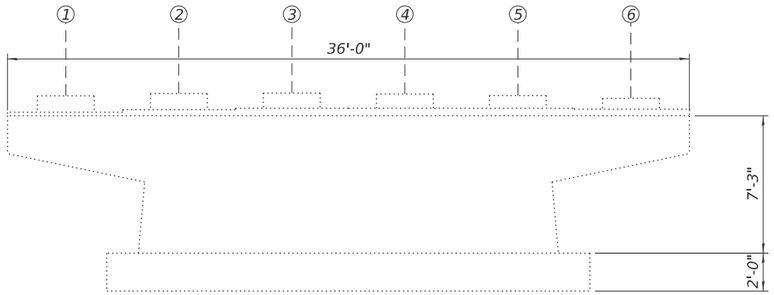

PIER 2 ELEVATION - NORTH FACE

(Looking south)

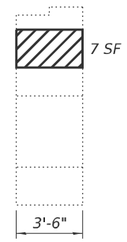

PIER 2 ELEVATION - WEST FACE

(Looking east)

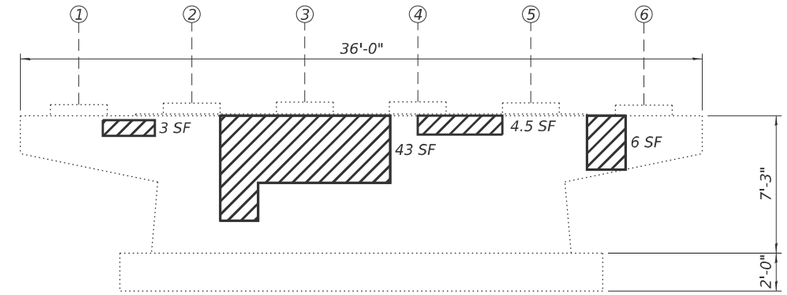

PIER 6 ELEVATION - NORTH FACE

(Looking south)

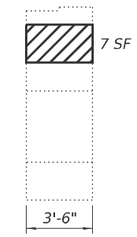

PIER 6 ELEVATION - WEST FACE

(Looking east)

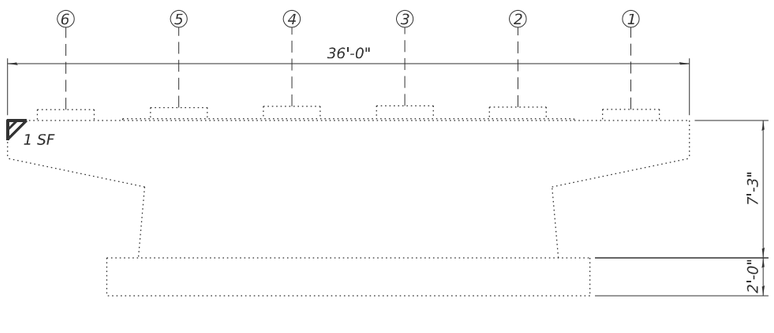

PIER 2 ELEVATION - SOUTH FACE

(Looking north)

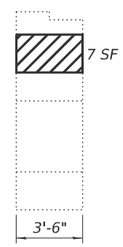

PIER 2 ELEVATION - EAST FACE

(Looking west)

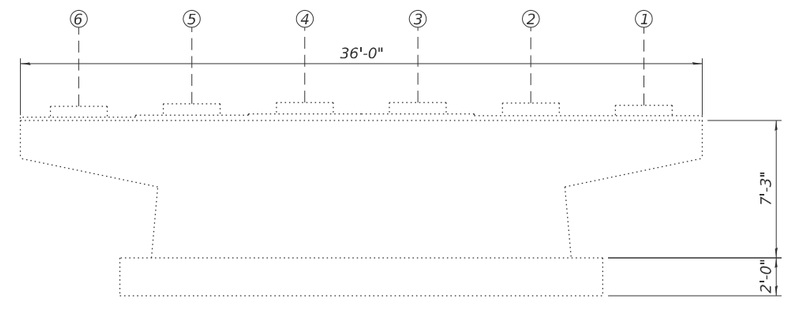

PIER 6 ELEVATION - SOUTH FACE

(Looking north)

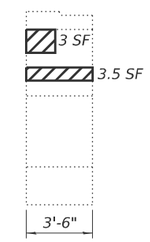

PIER 6 ELEVATION - EAST FACE

(Looking west)

LEGEND:

SF Square feet

Structural repair of concrete (depth equal to or less than 5 inches)

Notes:

All measurements and locations of concrete repairs are approximate and shall be verified in the field by the contractor and checked by engineer.

Remove graffiti from all the piers and abutments.

Structural repair of concrete (depth equal to or less than 5 in.) quantity is estimated based on the inspection report dated March 2023. The engineer shall mark removal areas.

Concrete Sealer shall be applied to the vertical and horizontal faces of the exposed abutment and pier caps below the strip seal joints.

BILL OF MATERIAL

ITEM	UNIT	QUANTITY
Structural repair of concrete (depth equal to or less than 5 inches)	SQ FT	85
Concrete Sealer	SQ FT	1562
Graffiti Removal	SQ YD	75

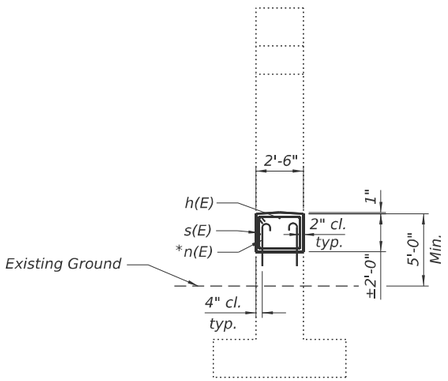

SECTION B-B

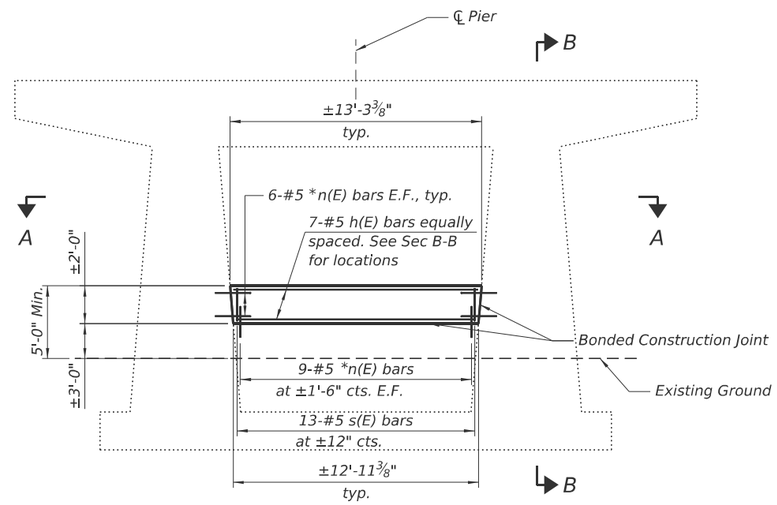

PIER 3 ELEVATION

(Pier 5 Similar)

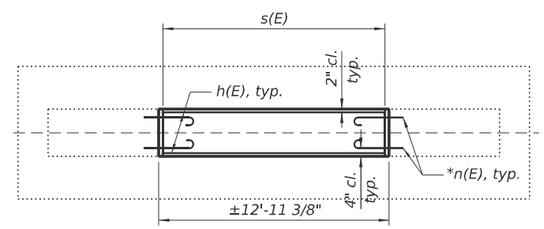

SECTION A-A

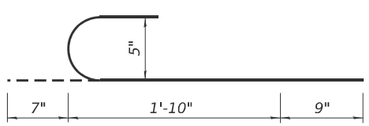

BAR n(E)

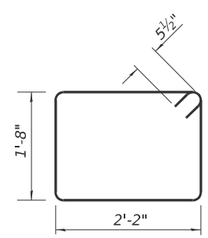

BAR s(E)

Notes:
E.F. indicates each face.

*Epoxy grout n(E) bars in 9" min holes according to Article 584 of the Standard Specifications

BILL OF MATERIAL

Bar	No.	Size	Length	Shape
h(E)	14	#5	12'-7"	
n(E)	60	#5	3'-2"	
s(E)	26	#5	8'-7"	
Concrete Structures			Cu. Yd.	5
Reinforcement Bars, Epoxy Coated			Pound	620

MODEL: PIERS 3 AND 5 CRASHWALL DETAILS
FILE NAME: pw://jacobs-us-pw.bentley.com:jacobs-us-pw-04/Documents/D315220 6.02 - ILDOT - I-55 I-70 Rehabilitation\30 Project Data\PID\DST\Collins\Sht\060-0146\D876E45-SHT-0600146-014-PIERS 3 & 5 CRASHWALL DET

COLLINS ENGINEERS INC.

USER NAME = dredzlc	DESIGNED - A. SPALETTO	REVISED -	
	CHECKED - L. BENITEZ	REVISED -	
PLOT SCALE = $SCALE$	DRAWN - A. SPALETTO	REVISED -	
PLOT DATE = 11/21/2025	CHECKED - 2025/10/03	REVISED -	

STATE OF ILLINOIS
DEPARTMENT OF TRANSPORTATION

PIERS 3 AND 5 CRASHWALL DETAILS
STRUCTURE NO. 060–0146

SHEET 14 OF 15 SHEETS

F.A.I. RTE.	SECTION	COUNTY	TOTAL SHEETS	SHEET NO.
70	82-(5,6)RS-2, 60-6RS-2	MADISON & ST. CLAIR	678	520
		CONTRACT NO. 76E84		
	ILLINOIS	FED. AID PROJECT		

11/21/2025 11:36:34 AM

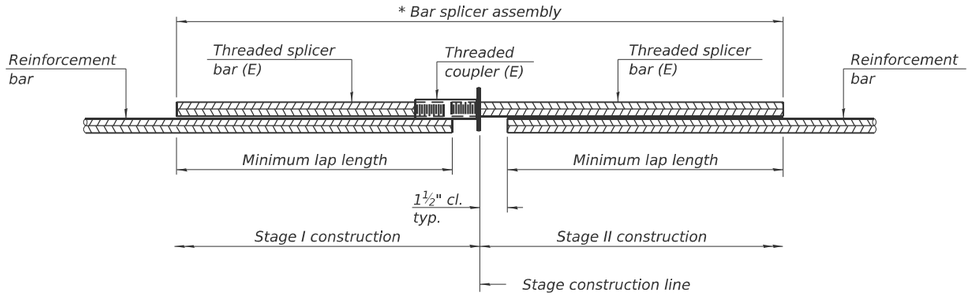

STANDARD BAR SPLICER ASSEMBLY PLAN

Only bar splicer assemblies as presented on the approved QPL list may be used.

Threaded splicer bar length = min. lap length + 1½" + thread length

* Epoxy not required on Bar Splicer Assembly components used in conjunction with black bars.

Standard Bar Splicer Assembly Location	Bar Size	No. assemblies required	Minimum lap length
Abutment Back Wall	#6	12	3'-1"
Deck Bars	#5	72	3'-10"

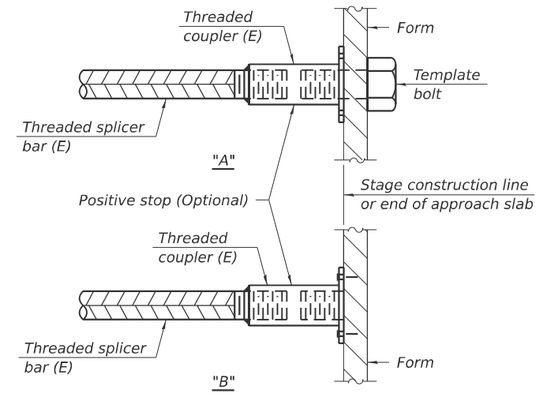

INSTALLATION AND SETTING METHODS

"A" : Set bar splicer assembly by means of a template bolt.
"B" : Set bar splicer assembly by nailing to wood forms or cementing to steel forms.
(E) : Indicates epoxy coating.

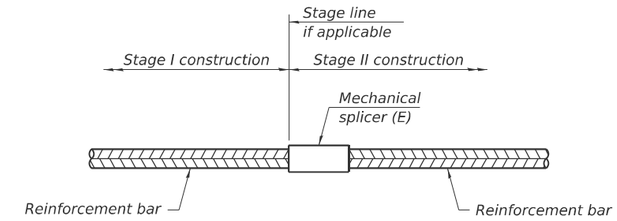

STANDARD MECHANICAL SPLICER

Location	Bar size	No. assemblies required

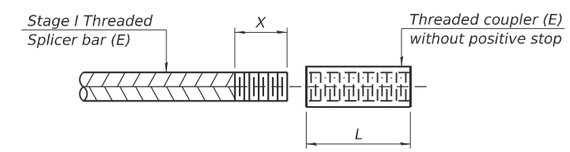

THREADING OF ASSEMBLIES

The threaded length "X" shall be no more than L/2. The bar should be tightened until 0-1 thread(s) is/are exposed.

Notes:
Splicer bars shall be deformed with threaded ends and have a minimum 60 ksi yield strength.
All reinforcement shall be lapped and tied to the splicer bars.
Bar splicer assemblies shall be epoxy coated according to the requirements for reinforcement bars. See Section 508 of the Standard Specifications.
See approved list of bar splicer assemblies and mechanical splicers for alternatives.

BSD-1 4-4-2025

MODEL: BAR SPLICER ASSEMBLY AND MECHANICAL SPLICER DETAILS
FILE NAME: pw://jacobs-us-pw.bentley.com:jacobs-us-pw-04/Documents/D3152206.02 - ILDOT - I-55 I-70 Rehabilitation/30 Project Data/PID/STA/Collins/Sht/060-0146/D876E45-SHT-0600146-015-BAR SPLICERS
11/21/2025 12:00:58 PM

COLLINS ENGINEERS INC.

USER NAME = dredzic	DESIGNED - A. SPALETTO	REVISED -	STATE OF ILLINOIS DEPARTMENT OF TRANSPORTATION
	CHECKED - L. BENITEZ	REVISED -	
PLOT SCALE = $SCALE$	DRAWN - A. SPALETTO	REVISED -	
PLOT DATE = 11/21/2025	CHECKED - 2025/10/03	REVISED -	

BAR SPLICER ASSEMBLY AND MECHANICAL SPLICER DETAIL
STRUCTURE NO. 060–0146
SHEET 15 OF 15 SHEETS

F.A.I. RTE.	SECTION	COUNTY	TOTAL SHEETS	SHEET NO.
70	82-(5,6)RS-2, 60-6RS-2	MADISON & ST. CLAIR	678	521
		CONTRACT NO. 76E84		
		ILLINOIS	FED. AID PROJECT	

Benchmark: Southwest corner of steel lid on concrete box, ℄ F.A.I. Rte 70, West side railroad track electrical junction box El. 418.51.

Existing Structures: SN 060-0208 & 060-0209 were built in 1980 as FAI Route 70, Section 60-6VBR at Sta. 303+47.90. The structures were repaired in 2001 by means of deck repairs and mudwall replacements. The structures are 5-span composite steel beam (weathering steel) bridges supported by reinforced concrete stub abutments founded on concrete and steel piles and reinforced concrete piers founded on battered steel piles. The bridges measure 411'-3" back-to-back abutments and 59'-2" out-to-out, with 0° skews.

Traffic Control: Stage Construction.

No Salvage.

DESIGN SPECIFICATIONS

2002 AASHTO LRFD Bridge Design Specifications, 17 Edition

LOADING HS-20

No future wearing surface.

SCOPE OF WORK

1. Perform localized full depth repairs to the bridge deck.
2. Perform scarification (½") and hydo-demolition (½") and apply a 3" latex concrete overlay on the deck.
3. Install 48 floor drains on the N. and S. sides of Spans 1, 2, 4, and 5.
4. Replace silicone expansion joints at both abutments with preformed strip seals.
5. Remove and replace 3 feet of the deck ends at all joint replacement locations.
6. Install steel angle repair plates on all beam ends along 2 feet of beam ends.
7. Clean and paint, matching the color brown, 10 linear feet of beam ends.
8. Remove and replace all end diaphragms over the abutments.
9. Replace all expansion bearings at both abutments.
10. Perform formed concrete repairs to the abutments.
11. Replace the entire west approach on Structure 060-0209.
12. Perform formed concrete repairs to the N. & S. parapets on Structure 060-0209.
13. Re-grade and install riprap at all wingwalls and the median between wingwalls.

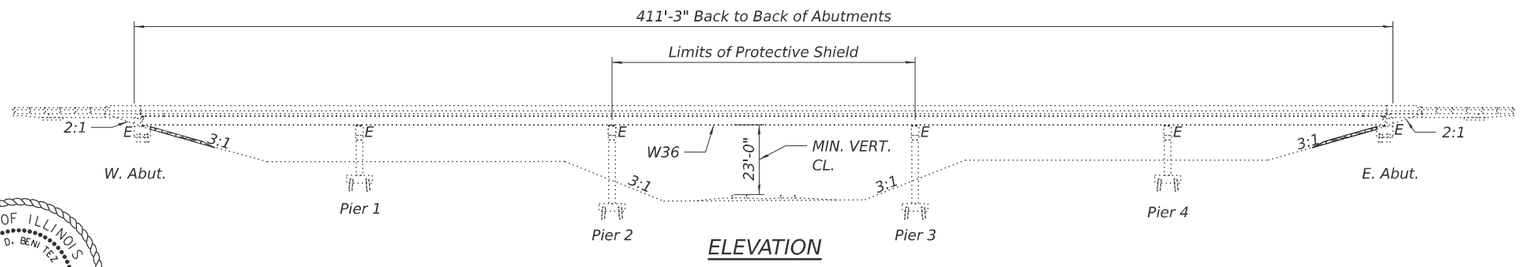

ELEVATION

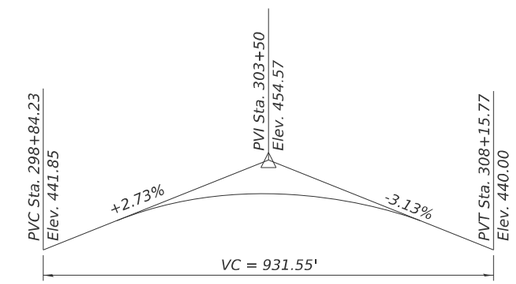

EXISTING PROFILE GRADE
F.A.I RTE 70

STATE OF ILLINOIS
LUIS D. BENITEZ
81-006415
CHICAGO, ILLINOIS
LICENSED STRUCTURAL ENGINEER

COLLINS ENGINEERS, INC.
LUIS D. BENITEZ, P.E., S.E.
NO. 81–006415
EXP.: 11/30/2026

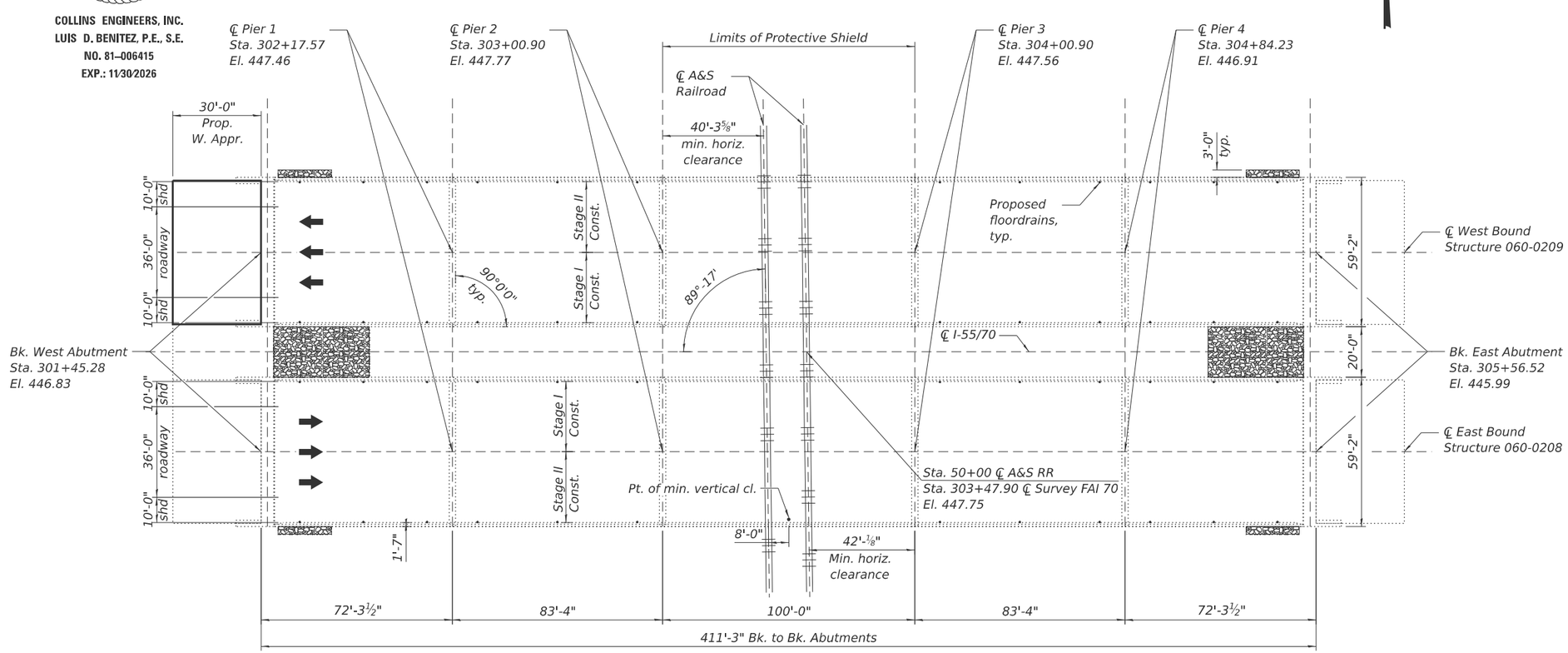

PLAN

DESIGN STRESSES

FIELD UNITS (EXISTING CONDITION)

f 'c = 3,500 psi
fy = 60,000 psi (Reinforcement)
fy = 50,000 psi (Structural Weathering Steel)

FIELD UNITS (NEW CONSTRUCTION)

f 'c = 4,000 psi (Superstructure)
f 'c = 3,500 psi (Substructure)
fy = 60,000 psi (Reinforcement)
fy = 50,000 psi (M270 Grade 50)

Range 9W, 3rd P.M.

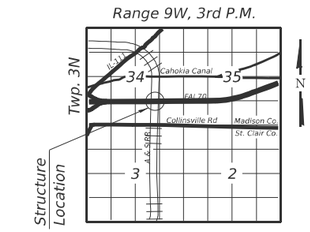

LOCATION SKETCH

GENERAL PLAN AND ELEVATION
I-55/70 OVER THE A&S RAILROAD
F.A.I. 70 - SECTION 60-6RS-2
MADISON COUNTY
STATION 303+47.90
SN: 060-0208 & 060-0209

MODEL: GPE
FILE NAME: pw://jacobs-us-pw.bentley.com:jacobs-us-pw-04/Documents/D3152206.02 - ILDOT - I-55 I-70 Rehabilitation/30 Project Data/PID/ST/Collins/Sht/060-0208 & 060-0209/D676E45-SHT-060020806060209-001-GPE

COLLINS ENGINEERS INC.

USER NAME = dredzlc	DESIGNED - C. MORROW	REVISED -	STATE OF ILLINOIS DEPARTMENT OF TRANSPORTATION	GENERAL PLAN AND ELEVATION STRUCTURE NO. 060–0208 & 060–0209	
	CHECKED - L. BENITEZ	REVISED -			
PLOT SCALE = $SCALE$	DRAWN - C. MORROW	REVISED -			
PLOT DATE = 11/26/2025	CHECKED - ~~2025~~/10/03	REVISED -		SHEET 1 OF 18 SHEETS	

F.A.I. RTE.	SECTION	COUNTY	TOTAL SHEETS	SHEET NO.
70	82-(5,6)RS-2, 60-6RS-2	MADISON & ST. CLAIR	678	522
		CONTRACT NO. 76E84		
	ILLINOIS	FED. AID PROJECT		

11/26/2025 1:46:33 PM

GENERAL NOTES

1. All new structural steel shall be AASHTO M270 Grade 50, unless otherwise noted.
2. The Contractor shall obtain a construction permit from the railroad.
3. No field welding is permitted except as specified in the contract documents.
4. Fasteners shall be ASTM F 3125 Grade A325 Type 1, hot-dip galvanized. See Special Provision for "Hot Dip Galvanizing for Structural Steel." Bolts ¾" diameter, holes $\frac{13}{16}$" diameter, unless otherwise noted.
5. Prior to pouring the new concrete deck, all heavy or loose rust, loose mill scale, and other loose detrimental foreign material shall be removed from the surfaces in contact with concrete (SSPC – SP3 standards). Tightly adhered paint may remain unless otherwise noted. Removal shall be accomplished by methods that will not damage the steel and the cost will be paid for according to Article 109.04 of the Standard Specifications.

   As directed by the Engineer, existing construction accessories welded to the top flange of beams and girders shall be removed. The weld areas shall be ground flush and inspected for cracks using magnetic particle testing (MT) or dye penetrant testing (PT) by qualified personnel approved by the Engineer. Any cracks that cannot be removed by grinding ¼ in. deep shall be identified and reported to the Bureau of Bridges & Structures for further disposition. The cost of removing welded accessories, grinding and inspecting weld areas and grinding cracks will be paid for according to Article 109.04 of the Standard Specifications.
6. Reinforcement bars designated (E) shall be epoxy coated.
7. Plan dimensions and details relative to the existing structure have been taken from existing plans are subject to nominal construction variations. The Contractor shall field verify existing dimensions and details affecting new construction and make necessary approved adjustments prior to construction or ordering of materials. Such variations shall not be cause for additional compensation for a change in scope of the work, however, the Contractor will be paid for the quantity actually furnished at the unit price bid for the work.
8. Existing reinforcement bars extending into the removal area shall be cleaned, straightened, and incorporated into the new construction. Any reinforcement bars damage during concrete removal shall be replaced with an approved bar splicer or anchorage system at the Contractors expense.
9. The existing structural steel and bearings coating contains lead. The Contractor shall take precautions to deal with the presence of lead on this project.
10. Cost of removal and disposal of existing expansion joints shall be included in the cost of Concrete Removal.
11. Joint openings shall be adjusted to Article 520.04 of the Std. Specs. When the concrete adjacent to joints is poured at an ambient temperature other than 50° F.
12. The Inorganic Zinc Rich Primer / Epoxy / Urethane paint system shall be used in shop and field for painting of new structural steel except where otherwise noted. The entire system shall be shop applied, with the exception that the exterior surfaces and bottom of the bottom flange of the fascia beams, masked off connection surfaces, and field installed fasteners, shall be touched up and finish coated in the field. The color of the final finish coat for all steel surfaces shall be Reddish Brown, Munsell No 2.5YR 3/4. Cost to be included in Cleaning and Painting Steel Bridge.
13. Cleaning and painting of existing structural steel shall be as specified in the special provision for GBSP-21 "Cleaning and Painting Contact Surface Areas of Existing Steel Structures". All beams, and other structural steel within 5 feet (measured along the beam) of either side of a repair area shall be cleaned per Near White Blast Cleaning - SSPC-SP10 and/or per Commercial Grade Power Tool Cleaning - SSPC-SP15. All cost is included under with Cleaning and Painting Steel Bridge or Structural Steel Repair pay item.
14. Treat all structural steel repair areas as primary connections.
15. A minimum of 4 air monitors will be required to monitor abrasive blasting operations at this site. See special provision for "Containment and Disposal of Lead Paint Cleaning Residues."
16. SSPC QP1 and QP2 Painting Contractor Certification are required for the cleaning and painting work.
17. The placement of the Bridge Deck Latex Concrete Overlay is recommended to be poured overnight.

INDEX OF SHEETS

TOTAL BILL OF MATERIAL

ITEM	UNIT	Quantity
Stone Rip Rap, Class A1	Tons	48
Stone Rip Rap, Class A4	Sq. Yd.	248.4
Filter Fabric	Sq. Yd.	248.4
Concrete Removal	Cu. Yd.	134.1
Protective Shield	Sq. Yd.	1320
Floor Drains	Each	48
Concrete Structures	Cu. Yd.	17.7
Concrete Superstructure	Cu. Yd.	42.4
Concrete Superstructure (Approach Slab)	Cu. Yd.	81.8
Furnishing and Erecting Structural Steel	Pound	13592
Cleaning and Painting Steel Bridge No. 8	L. Sum	1
Cleaning and Painting Steel Bridge No. 9	L. Sum	1
Reinforcement Bars, Epoxy Coated	Pound	39,090
Bar Splicers	Each	220
Preformed Joint Strip Seal	Foot	236.8
Elastomeric Bearing Assembly, Type II	Each	28
Anchor Bolts, 1"	Each	56
Concrete Sealer	Sq. Ft.	2834
Bridge Deck Grooving	Sq. Yd.	5560
Structural Steel Removal	Pound	9150
Protective Coat	Sq. Yd.	5880
Jack and Remove Existing Bearings	Each	28
Bridge Deck Latex Concrete Overlay, 3 Inches	Sq. Yd.	5580
Containment and Disposal of Lead Paint Cleaning Residue No. 8	L. Sum	1
Containment and Disposal of Lead Paint Cleaning Residue No. 9	L. Sum	1
Bridge Deck Scarification 1"	Sq. Yd.	5020
Structural Repair of Concrete (Depth Equal to or Less Than 5 Inches)	Sq. Ft.	31
Deck Slab Repair (Full Depth, Type II)	Sq. Yd.	22

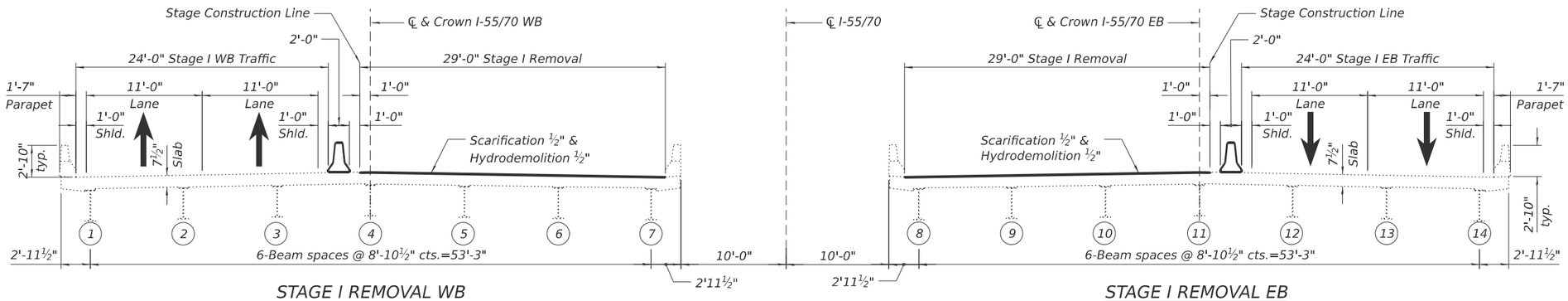

STAGE I REMOVAL WB
(SN 060-0209)

STAGE I REMOVAL
(Looking East)

STAGE I REMOVAL EB
(SN 060-0208)

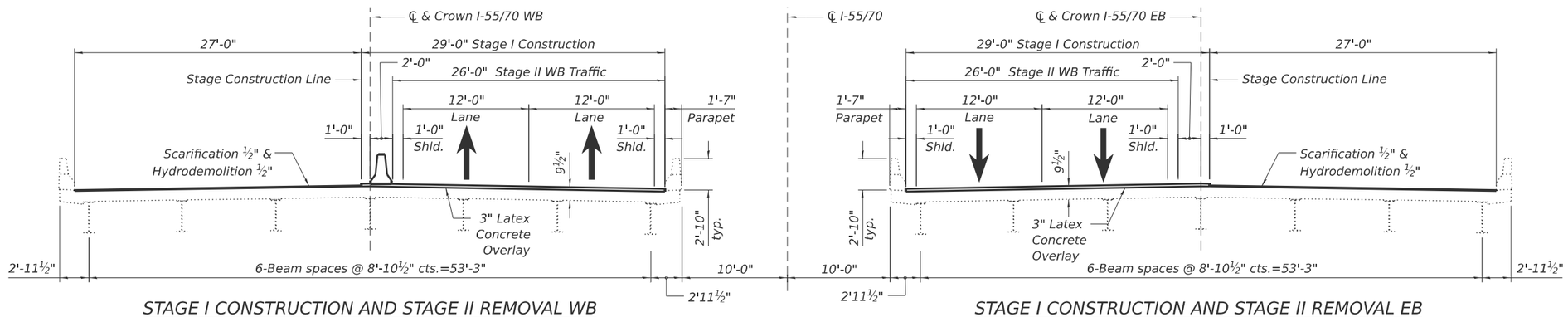

STAGE I CONSTRUCTION AND STAGE II REMOVAL WB
(SN 060-0209)

STAGE I CONSTRUCTION AND STAGE II REMOVAL
(Looking East)

STAGE I CONSTRUCTION AND STAGE II REMOVAL EB
(SN 060-0208)

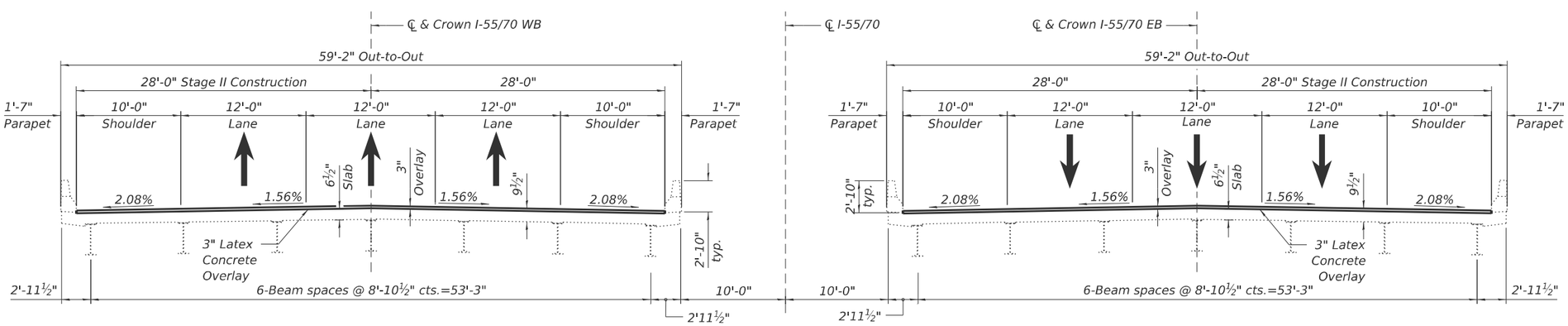

STAGE II CONSTRUCTION AND FINAL CROSS SECTION WB
(SN 060-0209)

STAGE II CONSTRUCTION AND FINAL CROSS SECTION
(Looking East)

STAGE II CONSTRUCTION AND FINAL CROSS SECTION EB
(SN 060-0208)

LEGEND

Temporary Concrete Barrier.

Notes:
For quantity of Temporary Concrete Barrier, see roadway plans. Stage removal and construction shown in sections is limited to expansion joint replacement, bearing replacement, and deck end treatment repairs.

MODEL: STAGED CONSTRUCTION DETAILS
FILE NAME: pw://jacobs-us-cs-pw.bentley.com:jacobs-us-cs-pw-04/Documents/D315206.02 - ILDOT - I-55 I-70 Rehabilitation\30 Project Data\PHD\ST\Collins\Sht\060-0208 & 060-0209\D676E45-SHT-060020806060209-003-STAGED CONSTRUCTION DETAILS

11/22/2025 5:15:28 PM

COLLINS ENGINEERS INC.

USER NAME = credzlc	DESIGNED - C. MORROW	REVISED -	
	CHECKED - L. BENITEZ	REVISED -	
PLOT SCALE = $SCALE$	DRAWN - C. MORROW	REVISED -	
PLOT DATE = 11/22/2025	CHECKED - 2025/10/03	REVISED -	

STATE OF ILLINOIS
DEPARTMENT OF TRANSPORTATION

STAGED CONSTRUCTION DETAILS
STRUCTURE NO. 060–0208 & 060–0209

SHEET 3 OF 18 SHEETS

F.A.I. RTE.	SECTION	COUNTY	TOTAL SHEETS	SHEET NO.
70	82-(5,6)RS-2, 60-6RS-2	MADISON & ST. CLAIR	678	524

CONTRACT NO. 76E84

ILLINOIS FED. AID PROJECT

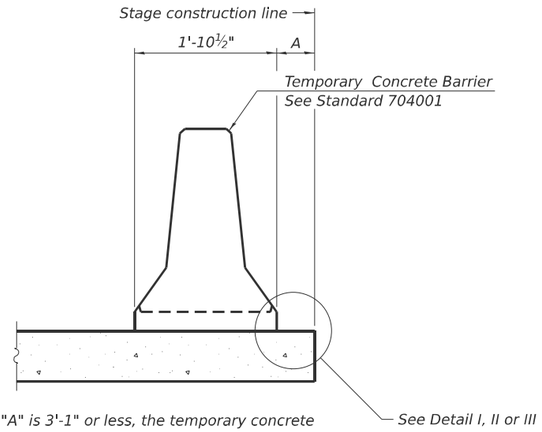

When "A" is 3'-1" or less, the temporary concrete barrier shall be restrained to the new slab according to Detail I, II or III. No restraint is required when "A" is greater than 3'-1".

NEW SLAB OR NEW DECK BEAM

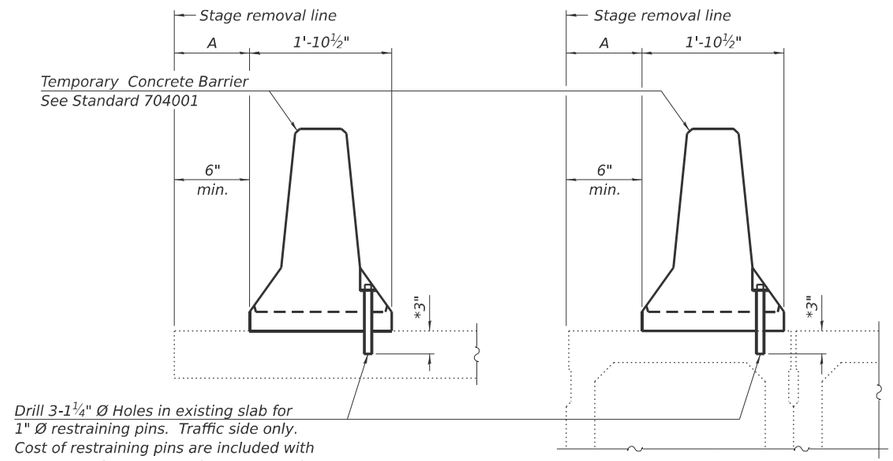

EXISTING SLAB

EXISTING DECK BEAM

* When hot-mix asphalt wearing surface is present, embedment shall be 3" plus the wearing surface depth.

SECTIONS THRU SLAB OR DECK BEAM

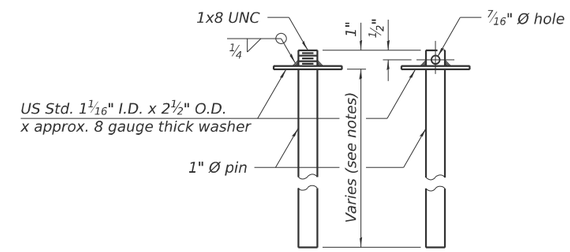

RESTRAINING PIN

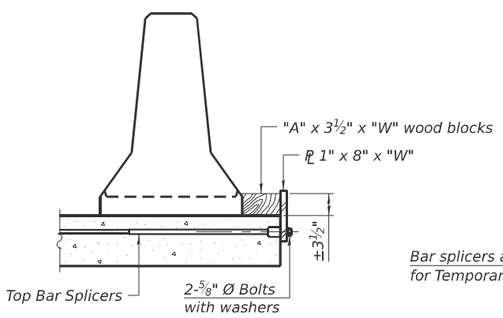

DETAIL I

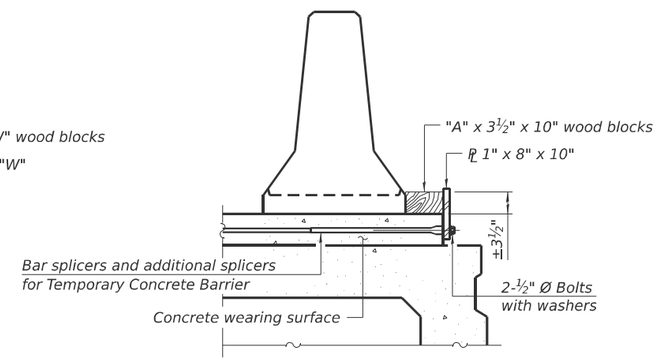

DETAIL II

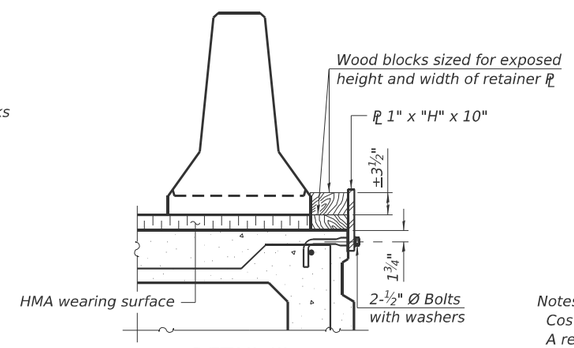

DETAIL III

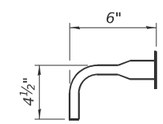

BAR SPLICER FOR #4 BAR - DETAIL III

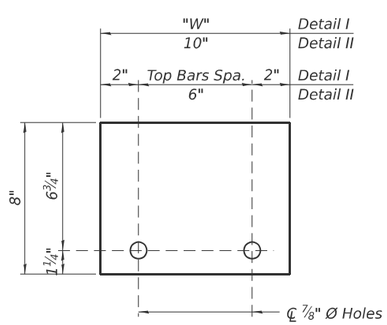

STEEL RETAINER PL 1" x 8" x "W"

(Detail I and II)

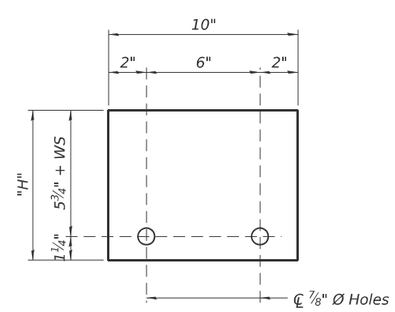

STEEL RETAINER PL 1" x "H" x 10"

(Detail III)

Notes:

Cost of retainer assembly is included with Temporary Concrete Barrier.

A retainer assembly shall be located at the approximate ℄ of each temporary concrete barrier.

The retainer plate shall not be removed until the concrete on the adjacent stage is ready to be poured. For Detail III applications the retainer plate shall not be removed until just prior to placing the adjacent beam.

When the 'A' dimension is less than 1½", the wood block shall be omitted and the barrier shall be placed in direct contact with the steel retainer plate. For deck beam applications the minimum required 'A' distance is 6" to accommodate the shear key clamping device.

Detail I - Installation for a new bridge deck or bridge slab.

Detail II - Installation for a new deck beam with an initial concrete wearing surface. Additional bar splicers shall be provided at 6'-0" centers and paired with the bar splicers of the concrete wearing surface reinforcement to accommodate the installation of the retainer assemblies. The cost of the additional bar splicers is included with the concrete wearing surface.

Detail III - Installation for a new deck beam with no initial wearing surface or with an initial hot-mix asphalt (HMA) wearing surface present. The deck beam directly beneath the temporary concrete barrier shall be fabricated with bar splicer inserts in the side of the beam, as detailed, to accommodate the installation of the retainer assemblies. A pair of bar splicers, 6" apart, shall be placed at 6'-0" centers along the length of the beam. The cost of the bar splicers is included with the deck beam.

RAILING CRITERIA

NCHRP 350 Test Level	3
Railing Weight (plf)	440

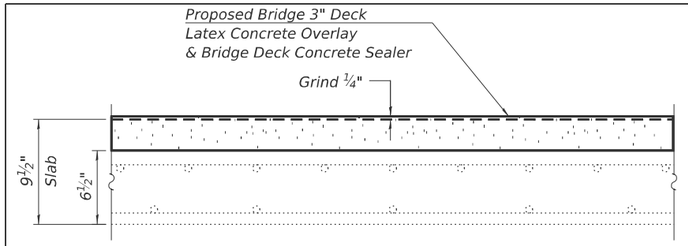

TYPICAL PROPOSED BRIDGE DECK CROSS SECTION

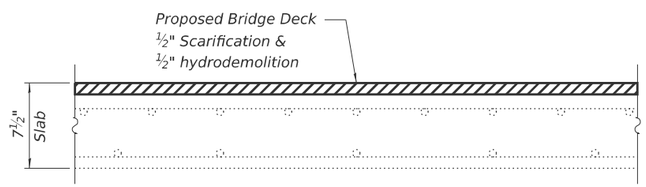

TYPICAL EXISTING BRIDGE DECK CROSS SECTION

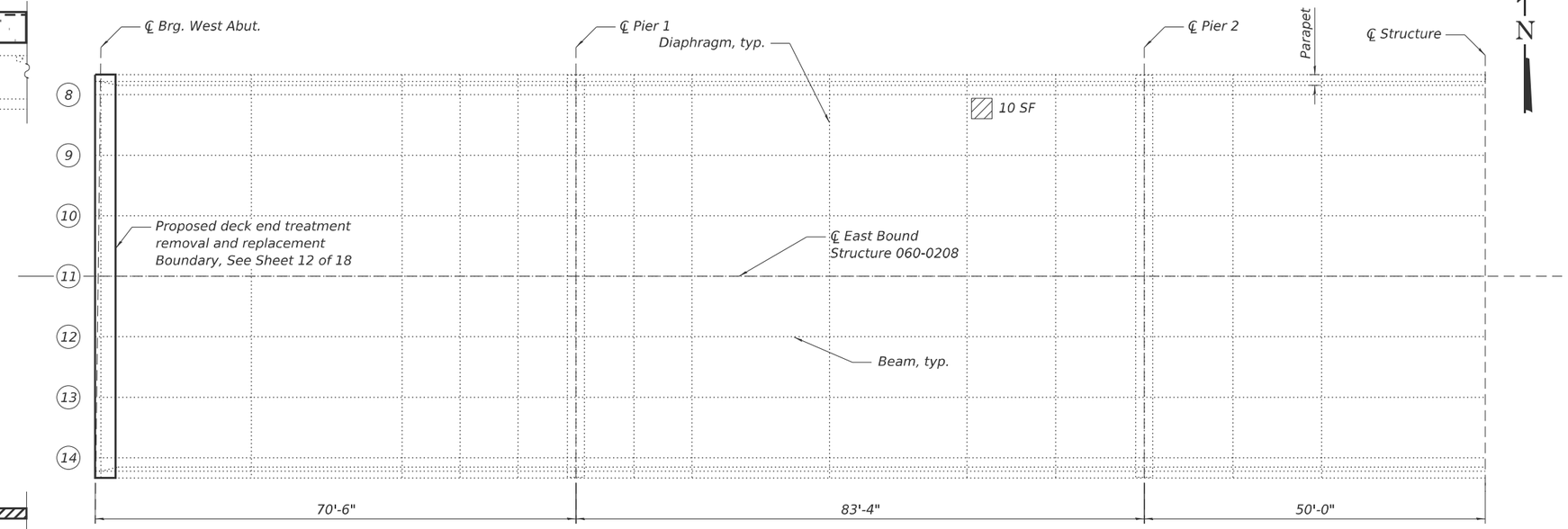

DECK PLAN VIEW

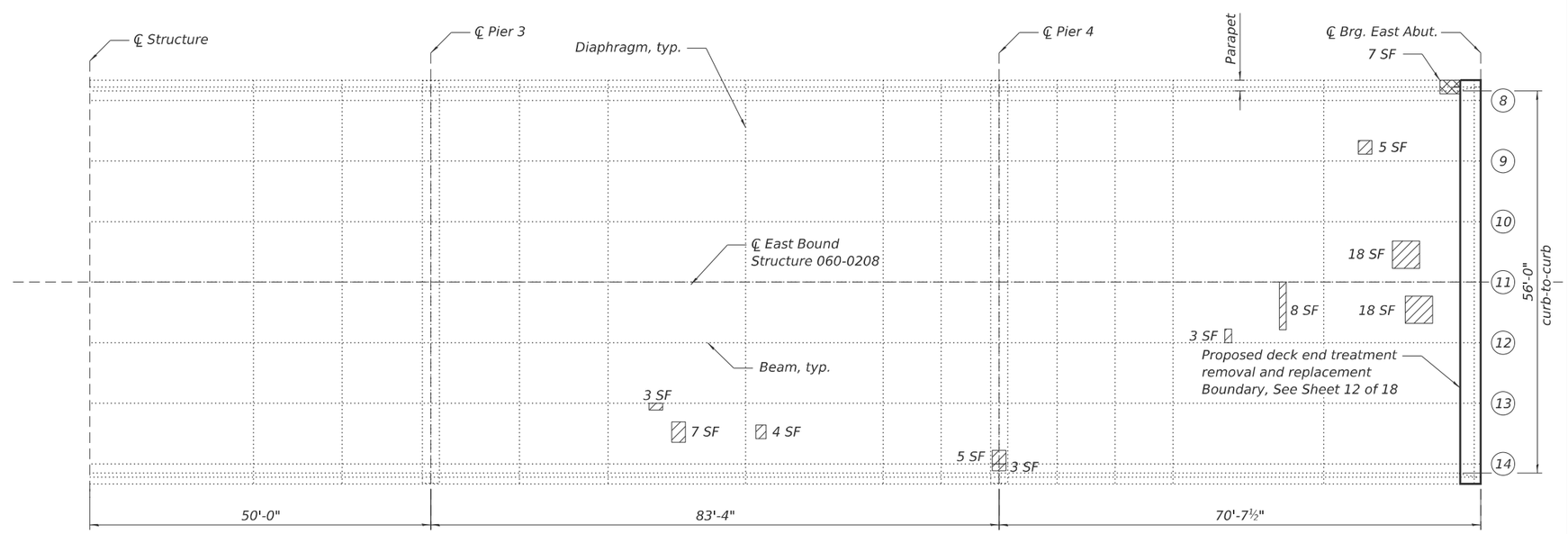

DECK PLAN VIEW

LEGEND

Deck Slab Repair (Full Depth)

Chip away loose concrete, clean and paint exposed reinforcing steel bars on deck underside.

SF Square Feet

BILL OF MATERIAL

ITEM	UNIT	QUANTITY
Deck Slab Repair (Full Depth)	SQ YD	10
Bridge Deck Latex Concrete Overlay, 3"	SQ YD	2510
Concrete Bridge Deck Scarification 1"	SQ YD	2510
Bridge Deck Grooving	SQ YD	2420
Protective Coat	SQ YD	2560

Notes:

Repair areas and locations shown are estimates. The Engineer shall document actual areas and locations of full depth on As-Built Plans.

Prior to Deck Slab Repairs, a ¾" deep saw cut shall be made along all boundaries of removal areas adjacent to areas to remain in place.

MODEL: 0600208 DECK REPAIRS
FILE NAME: pw://jacobs-us-a-pw.bentley.com:jacobs-us-a-pw-04/Documents/D315220 6.02 - ILDOT - I-55 I-70 Rehabilitation\30 Project Data\PID\DST\Collins\Sht\060-0208 & 060-0209\D676E45-SHT-060020 8&0600209-005-0600208 DECK REPAIRS
11/22/2025 5:29:10 PM

COLLINS ENGINEERS INC.

USER NAME = dredzlc	DESIGNED - C. MORROW	REVISED -	STATE OF ILLINOIS DEPARTMENT OF TRANSPORTATION	SN 060–0208 DECK REPAIRS STRUCTURE NO. 060–0208 & 060–0209	
	CHECKED - L. BENITEZ	REVISED -			
PLOT SCALE = $SCALE$	DRAWN - C. MORROW	REVISED -			
PLOT DATE = 11/22/2025	CHECKED - ~~20~~25/10/03	REVISED -		SHEET 5 OF 18 SHEETS	

F.A.I. RTE.	SECTION	COUNTY	TOTAL SHEETS	SHEET NO.
70	82-(5,6)RS-2, 60-6RS-2	MADISON & ST. CLAIR	678	526
		CONTRACT NO. 76E84		
		ILLINOIS	FED. AID PROJECT	

BILL OF MATERIAL

ITEM	UNIT	QUANTITY
Deck Slab Repair (Full Depth, Type II)	SQ YD	10
Bridge Deck Latex Concrete Overlay, 3"	SQ YD	2510
Concrete Bridge Deck Scarification, 1"	SQ YD	2510
Bridge Deck Grooving	SQ YD	2420
Protective Coat	SQ YD	2560

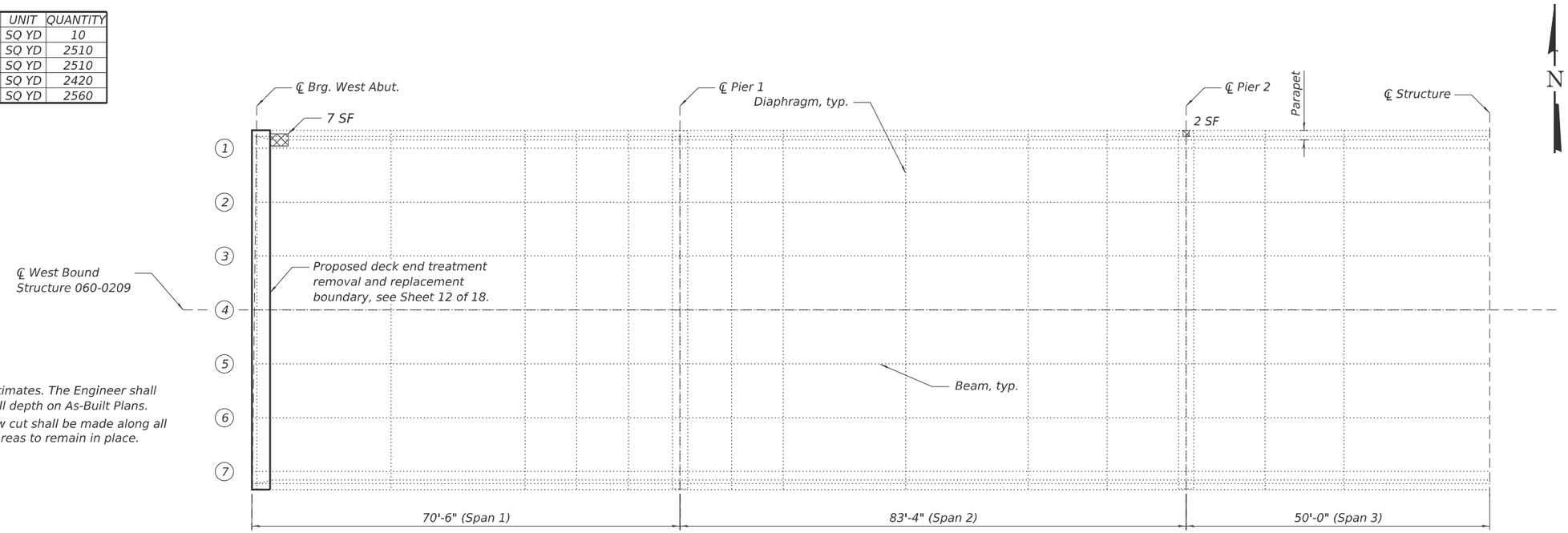

DECK PLAN VIEW

Notes:

Repair areas and locations shown are estimates. The Engineer shall document actual areas and locations of full depth on As-Built Plans.

Prior to Deck Slab Repairs, a ¾" deep saw cut shall be made along all boundaries of removal areas adjacent to areas to remain in place.

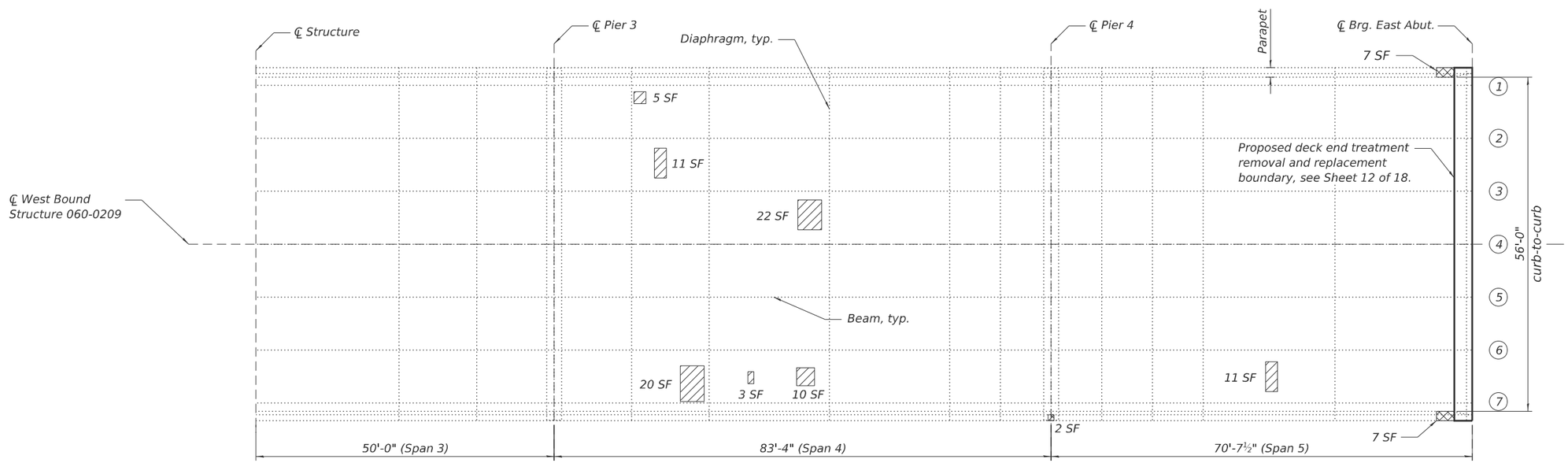

DECK PLAN VIEW

LEGEND

- Deck Slab Repair (Full Depth)
- Chip away loose concrete, clean and paint exposed reinforcing steel bars on the deck underside
- SF Square Feet

MODEL: 0600209 Deck Repairs
FILE NAME: pw://jacobs-us-a-pw.bentley.com:jacobs-us-a-pw-04/Documents/D3152206.02 - ILDOT - I-55 I-70 Rehabilitation\30 Project Data\PID\ST/Collins\Sht\060-0208 & 060-0209\D676E45-SHT-060020&0600209-006-0600209 DECK REPAIRS

11/22/2025 5:34:25 PM

COLLINS ENGINEERS INC.

USER NAME = dredzlc	DESIGNED - C. MORROW	REVISED -	
	CHECKED - L. BENITEZ	REVISED -	
PLOT SCALE = $SCALE$	DRAWN - C. MORROW	REVISED -	
PLOT DATE = 11/22/2025	CHECKED - 2025/10/03	REVISED -	

STATE OF ILLINOIS
DEPARTMENT OF TRANSPORTATION

SN 060–0209 DECK REPAIRS
STRUCTURE NO. 060–0208 & 060–0209

SHEET 6 OF 18 SHEETS

F.A.I. RTE.	SECTION	COUNTY	TOTAL SHEETS	SHEET NO.
70	82-(5,6)RS-2, 60-6RS-2	MADISON & ST. CLAIR	678	527

CONTRACT NO. 76E84

ILLINOIS FED. AID PROJECT

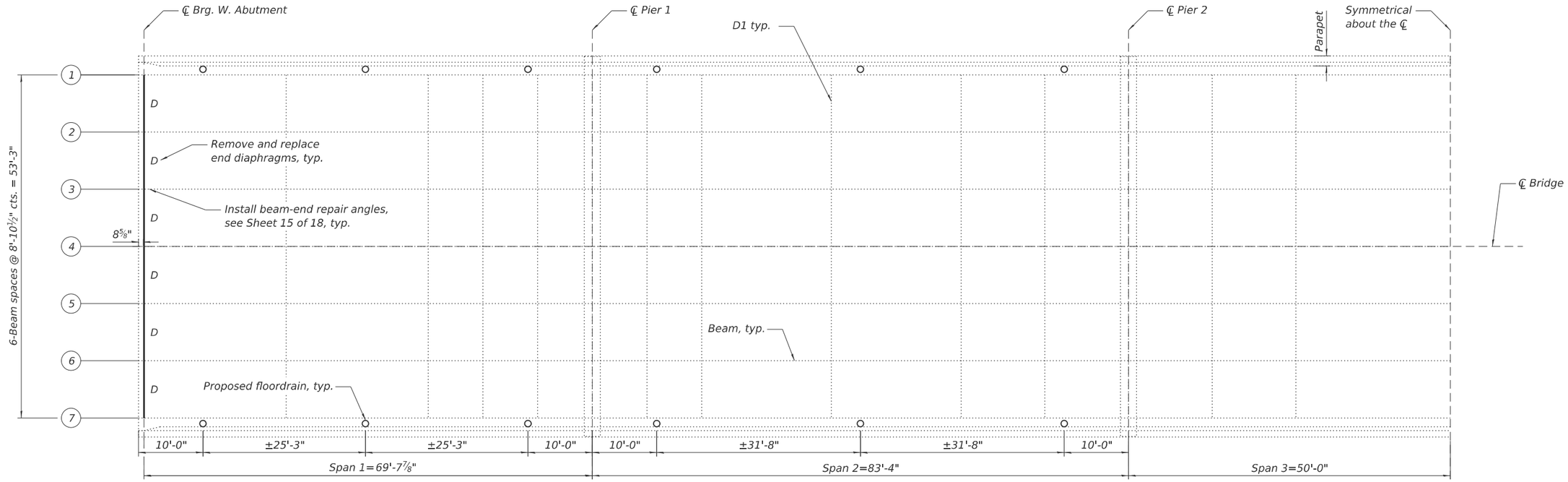

FRAMING PLAN

(SN 060-0208 & 060-0209)
Half Plan shown, symmetrical about ℄ Span 3

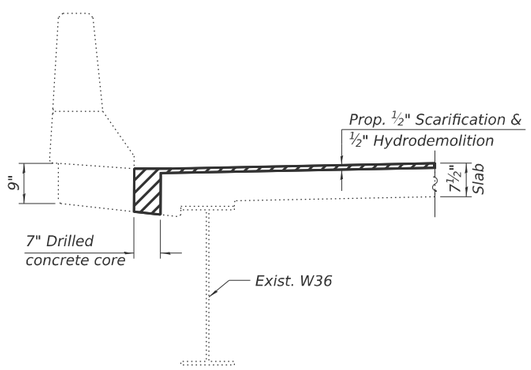

FLOOR DRAIN CONCRETE DECK REMOVAL FOR SPANS 1, 2, 4, & 5

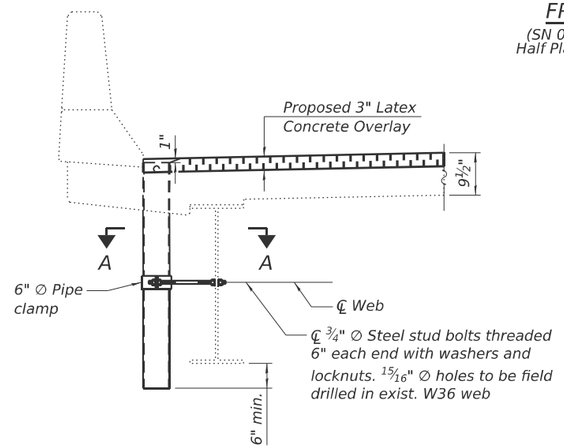

FLOOR DRAIN INSTALLATION FOR SPANS 1, 2, 4, & 5

(48 - Count)

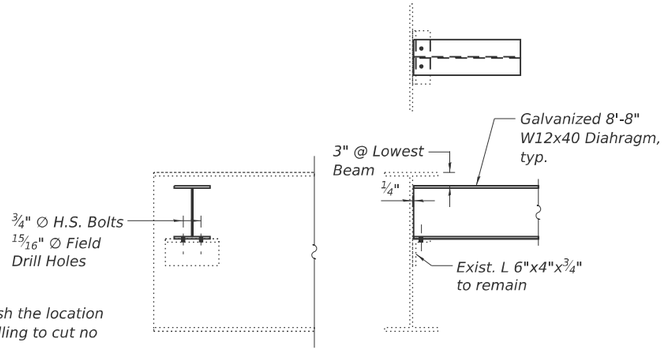

Diaphragm "D"

(24 - Count)

LEGEND

D	Diaphragm "D"
D1	Diaphragm "D1"

Notes:

The contractor shall use the Nondestructive Method to establish the location of existing top transverse reinforcement in the deck prior to drilling to cut no more than 1 transverse rebar for the floor drain installation.

Perimeter of the fiberglass pipe through the deck shall be sealed with approved epoxy, all cost included with Floor Drains pay item.

Floor drains shall be cored and set in place prior to the 3" latex concrete overlay installation.

Floor drains need not be painted.

Fiberglass pipe shall conform to ASTM D 2996, with short-time rupture strength hoop tensile stress of 30,000 P.S.I. minimum.

The clamping device shall be galvanized according to AASHTO M 232. Cost included with floor drains.

Drains shall be located clear of diaphragms

Cost of removing concrete for the proposed floor drains shall be included with Floor Drains.

Fasteners shall be ASTM F3125 Grade A325 Type 1, hot-dip galvanized. See Special Provision for "Hot Dip Galvanizing for Structural Steel", 15⁄16" ∅ holes for ¾" ∅ bolts.

Diaphragms and connection hardware shall be hot-dipped galvanized. See Special Provision for "Hot Dip Galvanizing for Structural Steel".

Surface preparation of existing steel in contact with new steel members shall be done according to GBSP 21 cleaning and painting contact surface area of existing steel structures.

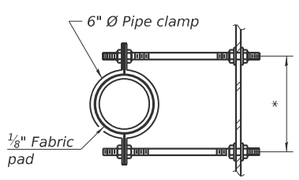

SECTION A-A

*Dimension as required by pipe clamp

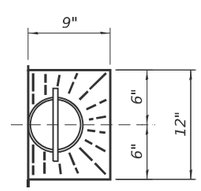

TOP PLAN

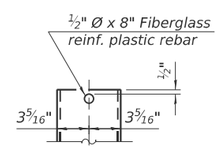

FIBERGLASS PIPE

BILL OF MATERIAL

ITEM	UNIT	QUANTITY
Floor Drains	Each	48
Structural Steel Removal	Pound	9150
Deck Slab Repair Full Depth, Type II	SQ YD	2
Furnishing and Erecting Structural Steel	Pound	9150

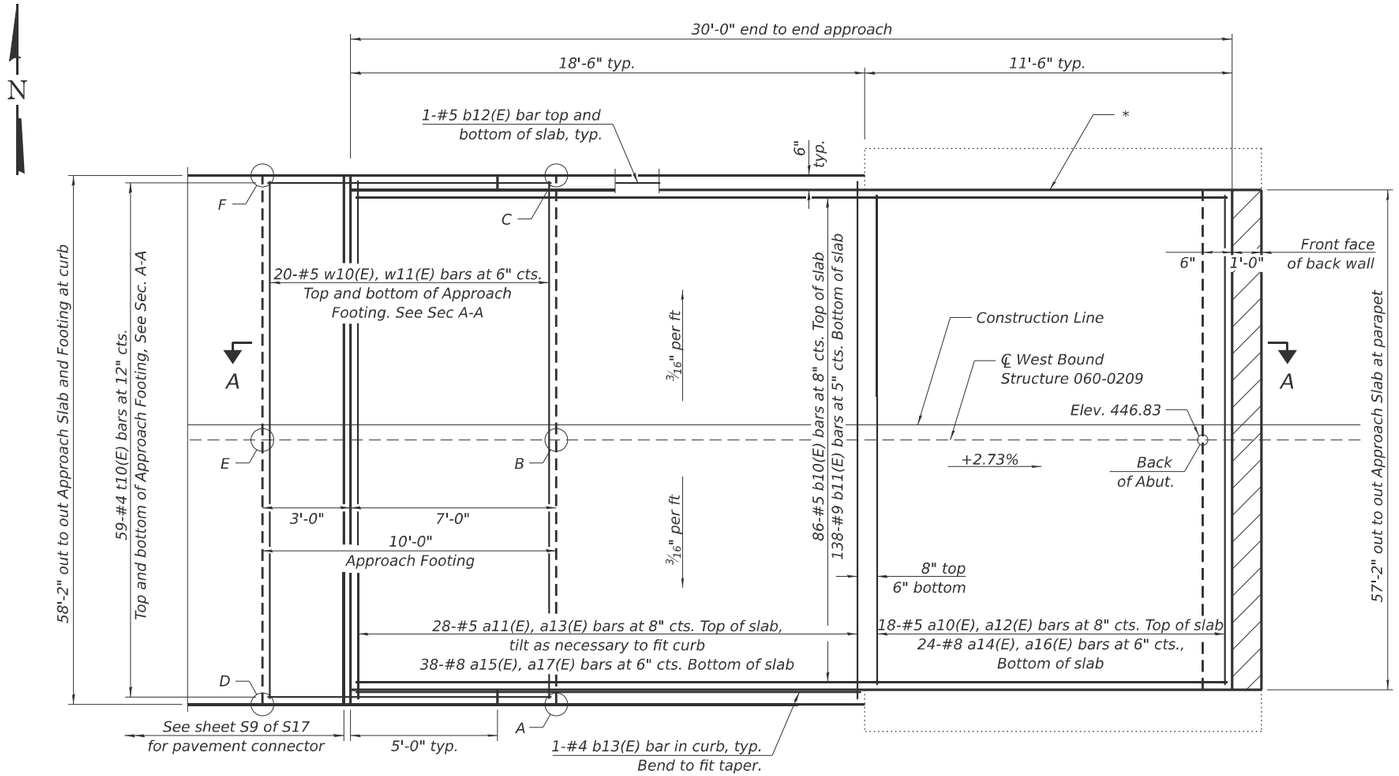

PLAN

(SN: 060-0209 west approach slab shown)

TOP AND BOTTOM ELEVATIONS FOR APPROACH FOOTING

060-0209 W. Approach		
Point/ Location	Top	Bottom
A -	444.88	444.05
B -	445.32	444.49
C -	444.88	444.05
D -	444.75	443.92
E -	445.20	444.36
F -	444.75	443.92

* ½"Preformed Expansion Joint Filler according to Article 1051.09 of the Standard Specifications; full depth of slab, full length of parapet. Typ. each parapet.

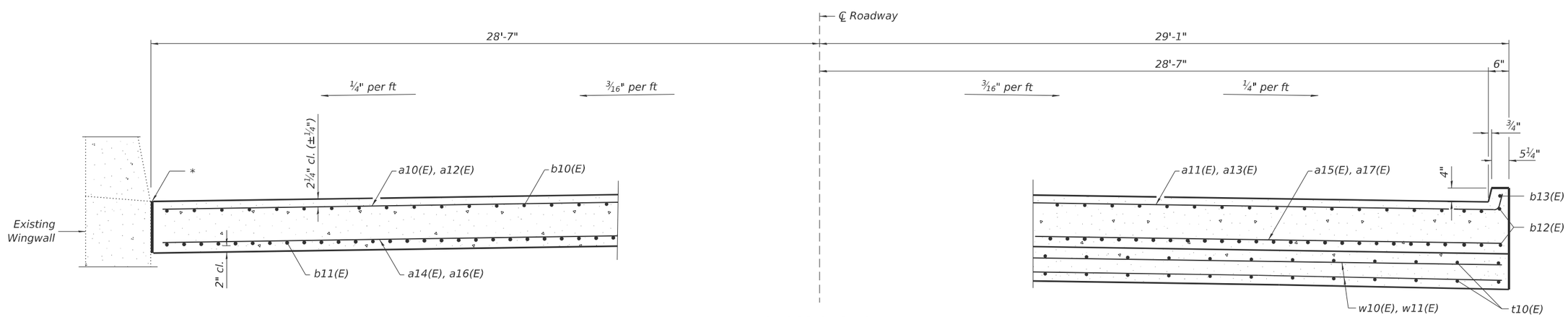

NEAR ABUTMENT

CROSS SECTION

(Looking East)

AT APPROACH FOOTING

MODEL: 0600209 APPROACH SLAB 1 OF 2
FILE NAME: pw://jacobs-us-co-pw.bentley.com:jacobs-us-pw-04/Documents/D3152206.02 - ILDOT - I-55 I-70 Rehabilitation/30 Project Data/PHD/ST/Collins/Sht/060-0208 & 060-0209/D676E45-SHT-060020808060020 9-009-0600209 APPROACH SLAB 1 OF 2

COLLINS ENGINEERS INC.

USER NAME = credzlc	DESIGNED - C. MORROW	REVISED -	
	CHECKED - L. BENITEZ	REVISED -	
PLOT SCALE = $SCALE$	DRAWN - C. MORROW	REVISED -	
PLOT DATE = 11/24/2025	CHECKED - 2025/10/03	REVISED -	

STATE OF ILLINOIS
DEPARTMENT OF TRANSPORTATION

BRIDGE APPROACH SLAB DEATAILS (1 OF 2)
STRUCTURE NO. 060–0208 & 060–0209

SHEET 8 OF 18 SHEETS

F.A.I. RTE.	SECTION	COUNTY	TOTAL SHEETS	SHEET NO.
70	82-(5,6)RS-2, 60-6RS-2	MADISON & ST. CLAIR	678	529
		CONTRACT NO. 76E84		
	ILLINOIS	FED. AID PROJECT		

11/24/2025 8:24:36 AM

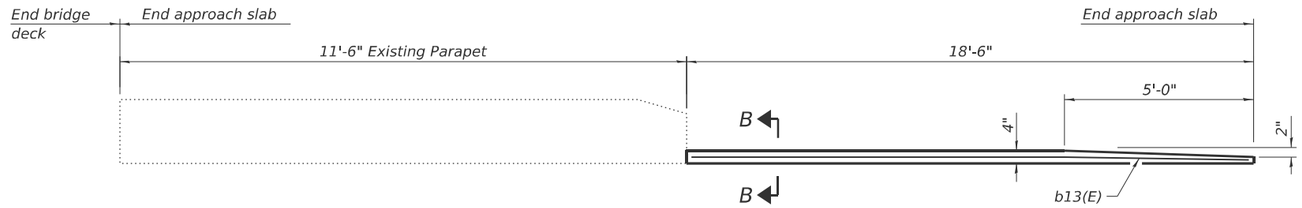

INSIDE ELEVATION OF PARAPET AND CURB

Notes:
Approach slab shall be paid for as Concrete Superstructure (Approach).
Approach footing concrete shall be paid for as Concrete Structure.
The approach footing maximum applied service bearing pressure (Qmax) = 2.0 ksf.
Cost of excavation for approach footing included with Concrete Superstructure (Approach).
Cost of removal of the existing Approach and Footing shall be paid as Concrete Removal.
Cost of additional granular backfill or subbase material that is needed due to disturbing sub base or getting the new Approach and Footing to grade shall be incidental to Concrete Superstructure (Approach).

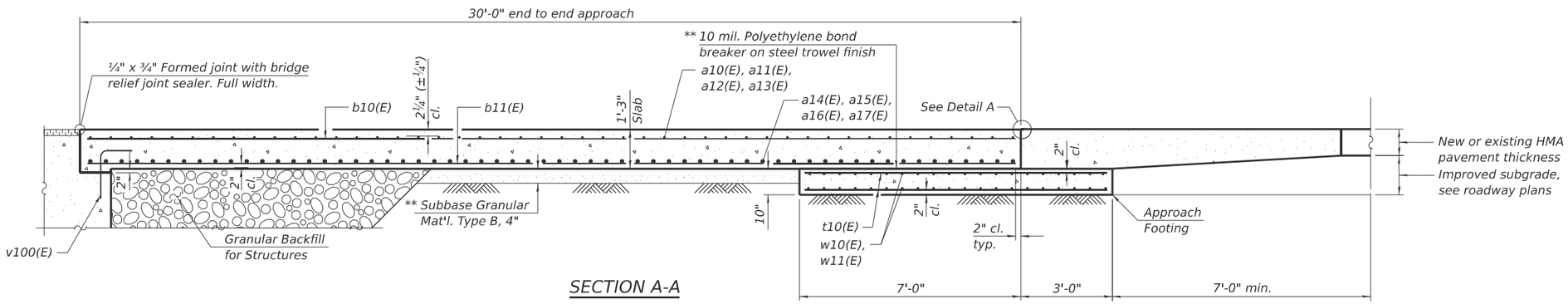

SECTION A-A

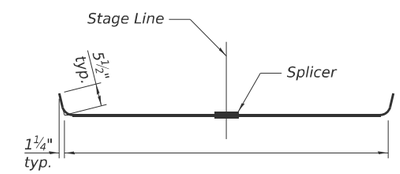

BAR a11(E), a13(E)

ONE APPROACH
BILL OF MATERIAL

Bar	No.	Size	Length	Shape
a10(E)	18	#5	29'-5"	
a11(E)	28	#5	30'-4½"	
a12(E)	18	#5	27'-5"	
a13(E)	28	#5	28'-4½"	
a14(E)	24	#8	29'-5"	
a15(E)	38	#8	29'-11"	
a16(E)	24	#8	27'-5"	
a17(E)	38	#8	27'-11"	
b10(E)	86	#5	29'-8"	
b11(E)	138	#9	29'-8"	
b12(E)	8	#5	18'-4"	
b13(E)	4	#4	18'-4"	
t10(E)	118	#4	9'-8"	
w10(E)	40	#5	29'-11"	
w11(E)	40	#5	27'-11"	
Bar Splicers			Each	148
Concrete Superstructure (Approach)			Cu. Yd.	81.8
Reinforcement Bars, Epoxy Coated			Pound	32,250
Concrete Removal			Cu. Yd.	97.1
Concrete Structure			Cu. Yd.	17.7

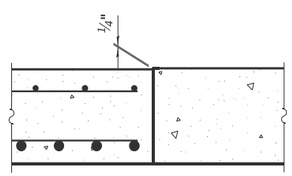

DETAIL A

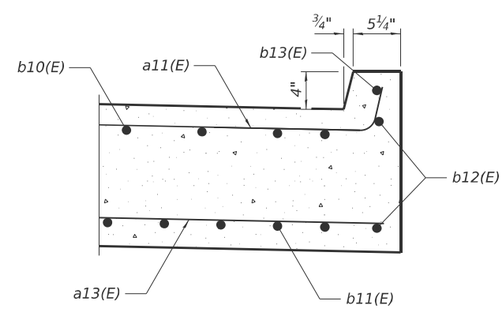

SECTION B-B

** Cost included with Concrete Superstructure.

*** Per manufacturer recommendations

MODEL: BRIDGE APPROACH SLAB DETAILS 2 OF 2
FILE NAME: pw://jacobs-us-pw.bentley.com:jacobs-us-pw-04/Documents/D3152208.02 - ILDOT - I-55 I-70 Rehabilitation/30 Project Data/PID/DST/Collins/Sht/060-0208 & 060-0209/D676E45-SHT-060020808060020 9-009-0600209-APPROACH SLAB 2 OF 2
11/24/2025 8:32:29 AM

COLLINS ENGINEERS INC.

USER NAME = dredzlc	DESIGNED - C. MORROW	REVISED -	
	CHECKED - L. BENITEZ	REVISED -	
PLOT SCALE = $SCALE$	DRAWN - C. MORROW	REVISED -	
PLOT DATE = 11/24/2025	CHECKED - 2025/10/03	REVISED -	

STATE OF ILLINOIS
DEPARTMENT OF TRANSPORTATION

BRIDGE APPROACH SLAB DETAILS (2 OF 2)
STRUCTURE NO. 060–0208 & 060–0209

SHEET 9 OF 18 SHEETS

F.A.I. RTE.	SECTION	COUNTY	TOTAL SHEETS	SHEET NO.
70	82-(5,6)RS-2, 60-6RS-2	MADISON & ST. CLAIR	678	530
		CONTRACT NO. 76E84		
		ILLINOIS	FED. AID PROJECT	

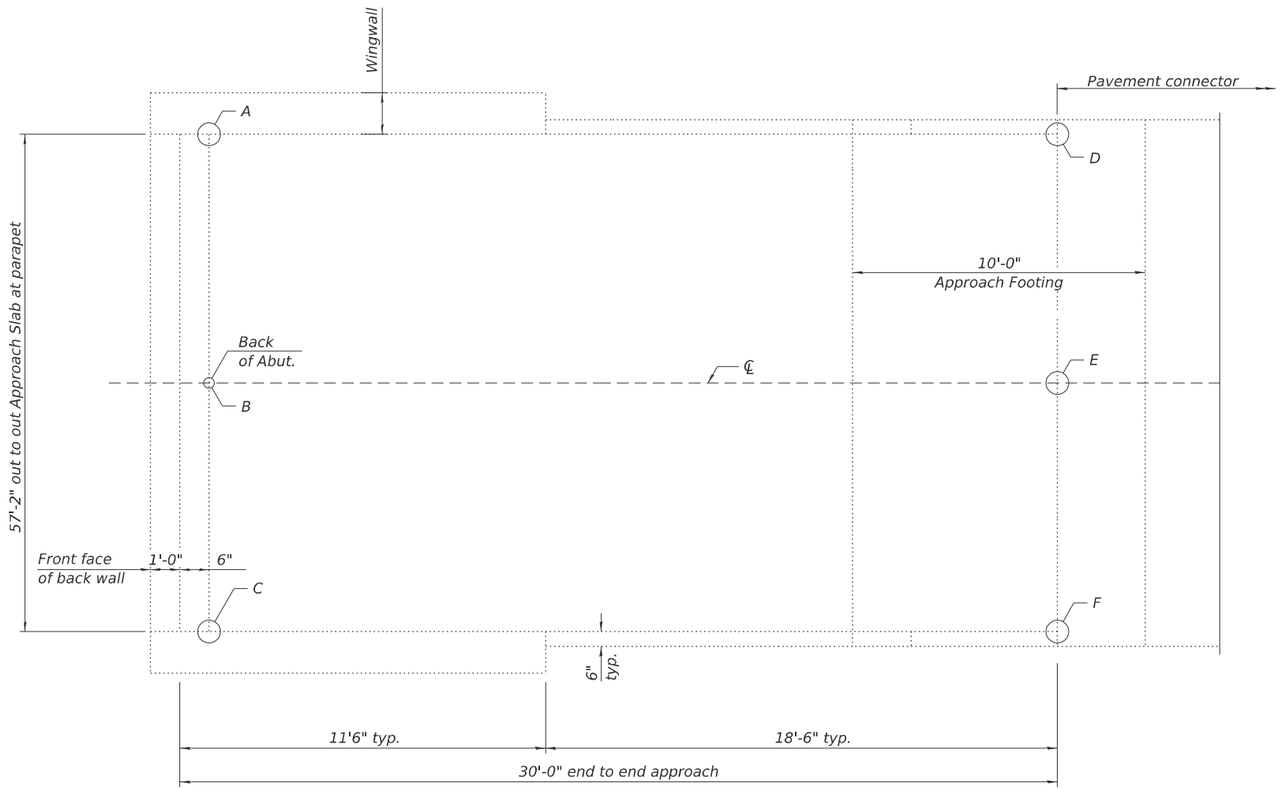

APPROACH SLAB ELEVATION PLAN VIEW

TOP OF SLAB ELEVATIONS FOR APPROACHES

060-0208 & 0209 West Approach		060-0208 & 0209 East Approach	
Point/ Location	T/Slab	Point/ Location	T/Slab
A -	446.39	A -	445.55
B -	446.83	B -	445.99
C -	446.39	C -	445.55
D -	446.04	D -	445.08
E -	446.49	E -	445.53
F -	446.04	F -	445.08

Notes:
This sheet is for reference only, see civil sheets for overlay installation details at the appraoch slabs excluding the West Approach of SN 060-0209.

MODEL: APPROACH SLAB ELEVATIONS
FILE NAME: pw://jacobs-us-vp-pw.bentley.com:jacobs-us-vp-pw-04/Documents/D3152206.02 - ILDOT - I-55 I-70 Rehabilitation\30 Project Data\PID\ST\Collins\Sht\060-0208 & 060-0209\D676E45-SHT-060020806002090-010-APPROACH SLAB ELEVATIONS

COLLINS ENGINEERS INC.

USER NAME = credzic	DESIGNED - C. MORROW	REVISED -	
	CHECKED - L. BENITEZ	REVISED -	
PLOT SCALE = $SCALE$	DRAWN - C. MORROW	REVISED -	
PLOT DATE = 11/24/2025	CHECKED - 2025/10/03	REVISED -	

STATE OF ILLINOIS
DEPARTMENT OF TRANSPORTATION

APPROACH SLAB ELEVATIONS
STRUCTURE NO. 060–0208 & 060–0209

SHEET 10 OF 18 SHEETS

F.A.I. RTE.	SECTION	COUNTY	TOTAL SHEETS	SHEET NO.
70	82-(5,6)RS-2, 60-6RS-2	MADISON & ST. CLAIR	678	531
		CONTRACT NO. 76E84		
		ILLINOIS	FED. AID PROJECT	

11/24/2025 8:46:01 AM

HALF ELEVATION VIEW - NORTH PARAPET

(Looking North)

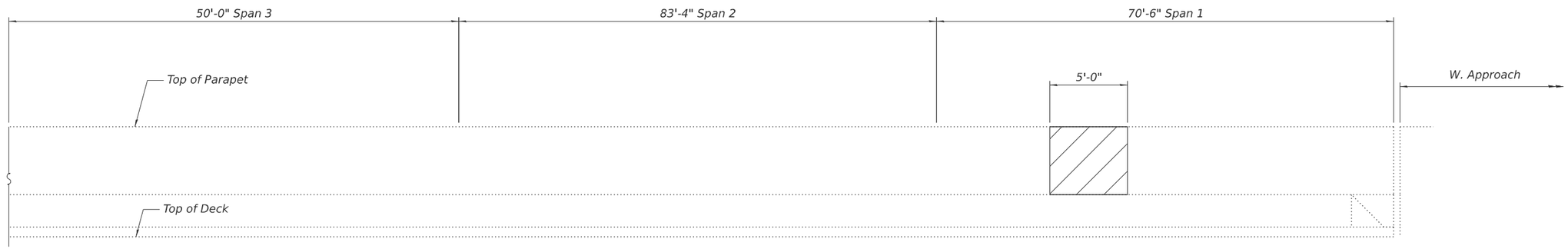

HALF ELEVATION VIEW - SOUTH PARAPET

(Looking South)

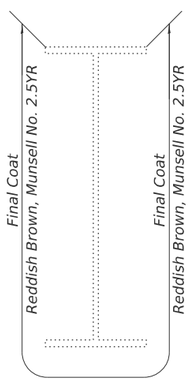

GIRDER PAINTING

Typical All Girders

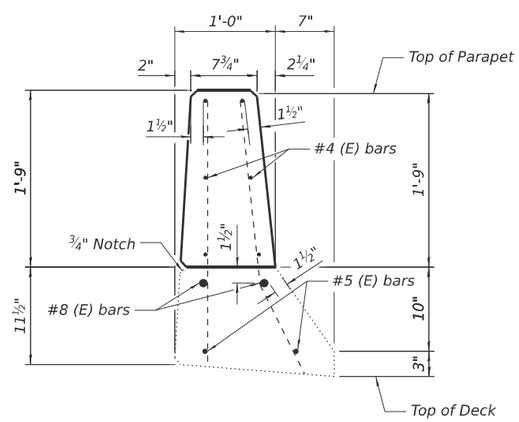

SECTION A-A

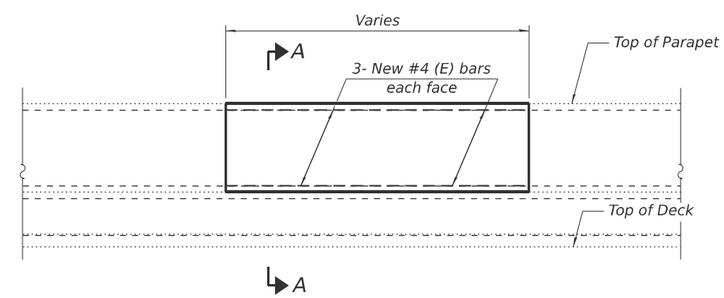

BILL OF MATERIAL

ITEM	UNIT	QUANTITY
Reinforcement Bars, Epoxy Coated	Pound	60
Concrete Superstructure	Cu. Yd.	1.4
Concrete Removal	Cu. Yd.	1.4

Notes:

All measurements and locations of the deteriorated concrete are approximate and shall be verified in the field by the contractor.

The areas of deteriorated concrete in the areas shown are to be chipped only to sound concrete prior to installing repairs.

All existing reinforcement bars extending into the removal area shall be cleaned, straightened, and incorporated into new construction.

All new horizontal reinforcing steel shall be tied to existing reinforcing prior to concrete installation.

Prior to concrete removal, a ¾" deep saw cut shall be made along all boundaries of removal areas adjacent to areas to remain in place.

LEGEND

Concrete Structures

MODEL: 0600209 PARAPET REPAIRS
FILE NAME: pw://jacobs-us-w-pw.bentley.com:jacobs-us-w-pw-04/Documents/D3152206.02 - ILDOT - I-55 I-70 Rehabilitation\30 Project Data\PHD\ST/Collins\Sht\060-0208 & 060-0209\D676E45-SHT-060020806060209-011-PARAPET REPAIRS
11/24/2025 10:55:03 AM

COLLINS ENGINEERS INC.

USER NAME = credzlc	DESIGNED - C. MORROW	REVISED -	
	CHECKED - L. BENITEZ	REVISED -	
PLOT SCALE = $SCALE$	DRAWN - C. MORROW	REVISED -	
PLOT DATE = 11/24/2025	CHECKED - 2025/10/03	REVISED -	

STATE OF ILLINOIS
DEPARTMENT OF TRANSPORTATION

PARAPET REPAIR DETAILS (SN: 060–0209)
STRUCTURE NO. 060–0208 & 060–0209

SHEET 11 OF 18 SHEETS

F.A.I. RTE.	SECTION	COUNTY	TOTAL SHEETS	SHEET NO.
70	82-(5,6)RS-2, 60-6RS-2	MADISON & ST. CLAIR	678	532

CONTRACT NO. 76E84

ILLINOIS FED. AID PROJECT

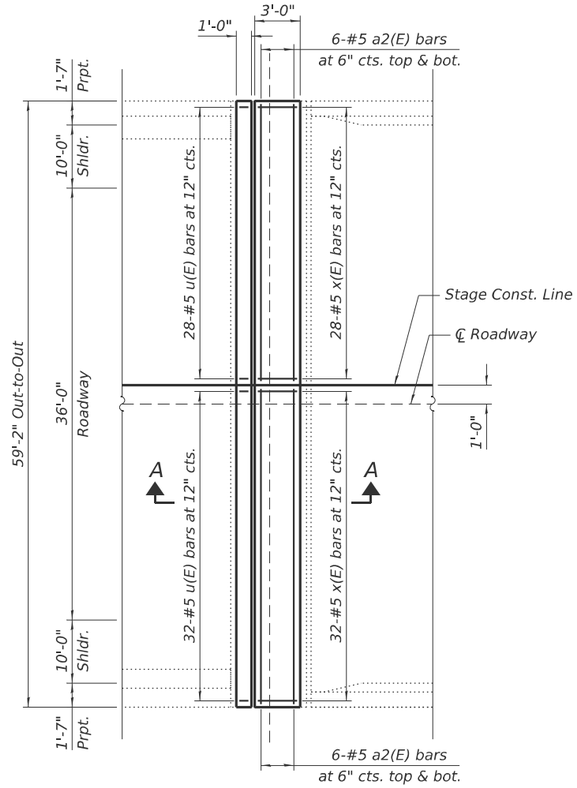

ABUTMENT JOINT RECONSTRUCTION PLAN

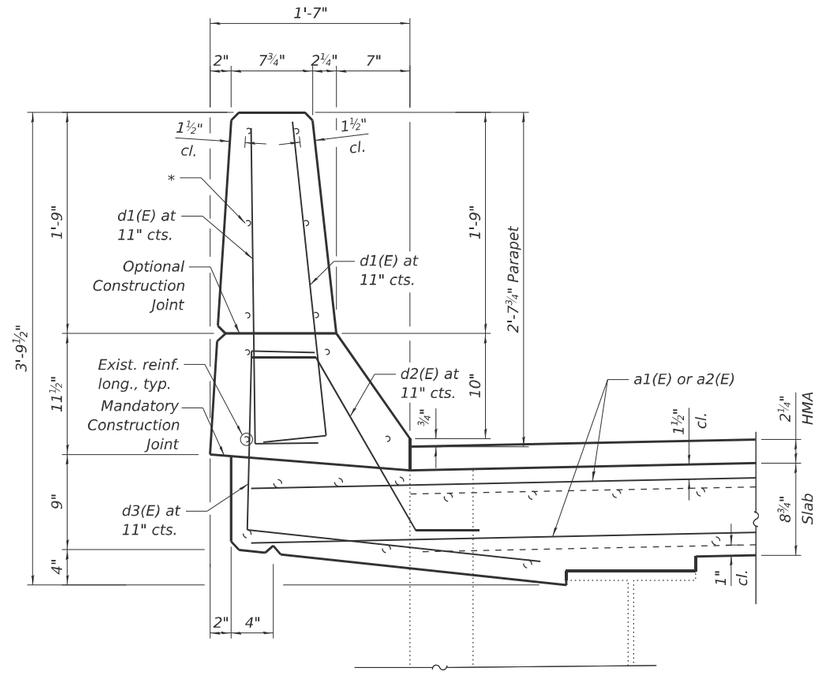

SECTION THRU PARAPET

* Existing parapet reinforcement to incorporated into new parapet, typ.

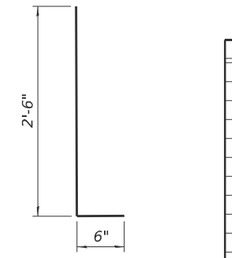

BARS d1(E)

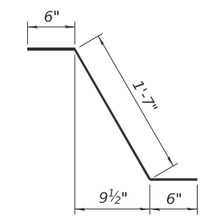

BAR d2(E)

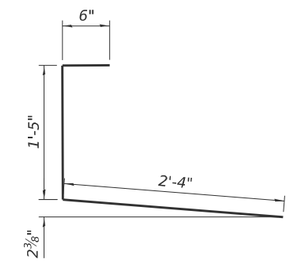

BAR d3(E)

BILL OF MATERIAL

Bar	No.	Size	Length	Shape
a1(E)	48	#5	30'-5"	
a2(E)	48	#5	28'-5"	
d1(E)	32	#5	3'-0"	
d2(E)	32	#5	4'-3"	
d3(E)	32	#5	2'-7"	
h1(E)	24	#6	30'-5"	
h2(E)	24	#6	28'-5"	
u(E)	240	#5	1'-11"	
x(E)	240	#5	3'-4"	
Concrete Removal			Cu. Yd.	35.6
Concrete Superstructure			Cu. Yd.	41.0
Reinforcement Bars, Epoxy Coated			Pound	6780
Bar Splicers			Each	72

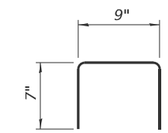

u(E) BAR

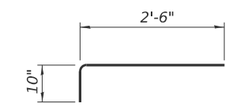

x(E) BAR

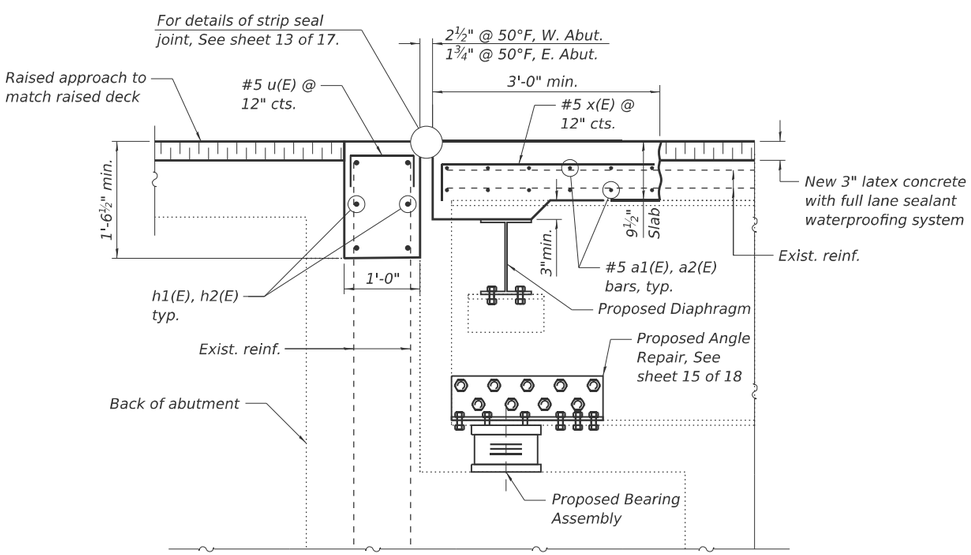

PROPOSED E. & W. ABUTMENT JOINT

(060-0208 & 060-0209 @ Deck End Treatments)

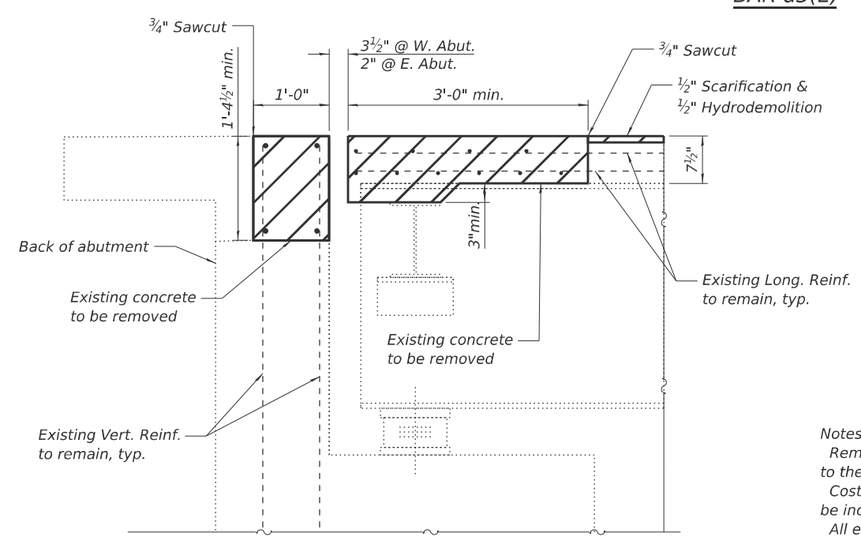

EXISTING GENERAL E. & W. ABUTMENT JOINT

(060-0208 & 060-0209 @ Deck End Treatments)

Notes:

Removal of existing expansion joint devices shall be incidental to the "Concrete Removal" Pay item.

Cost of removal and disposal of existing expansion joints shall be included in the cost of Concrete Removal.

All existing reinforcement in the parapets to remain in place.

See Sheet 18 of 18 for Bar Splicers.

MODEL: EXPANSION JOINT REPAIRS
FILE NAME: pw://jacobs-us-vip-pw.bentley.com:jacobs-us-vip-pw-04/Documents/D315220602 - ILDOT - I-55 I-70 Rehabilitation\30 Project Data\PID\ST\Collins\Sht\060-0208 & 060-0209\D676E45-SHT-060020806020920-012-EXPANSION JOINT REPAIRS AND PAINTING DETAILS

11/24/2025 1:40:23 PM

COLLINS ENGINEERS INC.

USER NAME = ciredzic	DESIGNED - C. MORROW	REVISED -	
	CHECKED - L. BENITEZ	REVISED -	
PLOT SCALE = $SCALE$	DRAWN - C. MORROW	REVISED -	
PLOT DATE = 11/24/2025	CHECKED - 2025/10/03	REVISED -	

STATE OF ILLINOIS
DEPARTMENT OF TRANSPORTATION

EXPANSION JOINT REPLACEMENT AND PAINTING DETAILS
STRUCTURE NO. 060–0208 & 060–0209

SHEET 12 OF 18 SHEETS

F.A.I. RTE.	SECTION	COUNTY	TOTAL SHEETS	SHEET NO.
70	82-(5,6)RS-2, 60-6RS-2	MADISON & ST. CLAIR	678	533

CONTRACT NO. 76E84

ILLINOIS FED. AID PROJECT

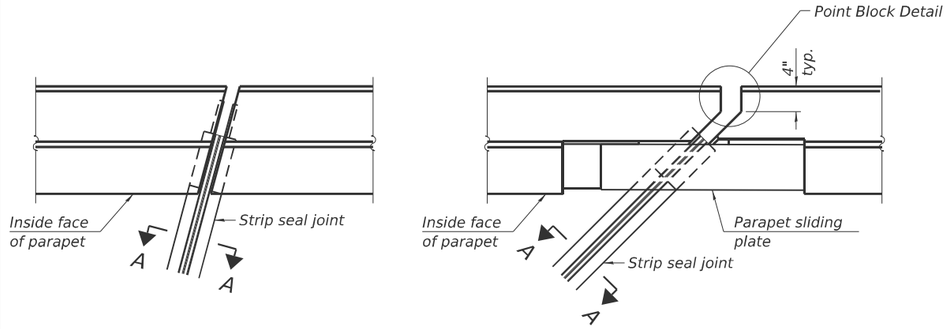

FOR SKEWS ≤ 30°

FOR SKEWS > 30°

PLAN AT PARAPET

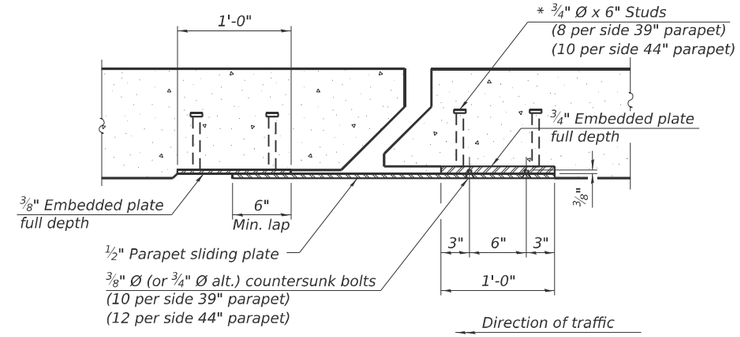

SECTION B-B

(¾" Ø countersunk bolts extending into concrete shall have hex nuts tack welded to the back of the embedded plates with end caps provided.)

Notes:

The strip seal shall be made continuous and shall have a minimum thickness of ¼". The configuration of the strip seal shall match the configuration of the locking edge rails. Open or "webbed" strip seal gland configurations are not permitted. The gland shall be sized for a maximum rated movement of 4 inches.

The locking edge rails depicted are configured for typical applications and are conceptual only. The actual configuration of the locking edge rails and matching strip seal may vary from manufacturer to manufacturer provided they fit the application and meet the minimum anchorage shown. Flanged edge rails, however, will not be allowed. Locking edge rails may exceed the 4½" maximum depth provided the anchorage system is revised according to the manufacturer's recommendation.

The manufacturer's recommended installation methods shall be followed.

All steel components shall be galvanized after fabrication according to Article 520.03 of the Standard Specifications.

The Maximum space between locking edge rail segments shall be 3/16" and sealed with a suitable sealant; however, any rail joint within 10' measured perpendicular to the face of the curb or parapet shall be welded as shown in the locking edge rail splice detail.

Cost of parapet sliding plates, embedded plates, and anchorage studs included with Preformed Joint Strip Seal.

39" constant slope barrier shown, 44" constant slope barrier similar as noted.

The concrete opening below the strip seal will vary based on the locking edge rail chosen by the Contractor. Deck and parapet lengths shown elsewhere in the plans are dimensioned to the concrete opening, not the joint opening, and are based on the rolled locking edge rail. If the Contractor elects to use a different locking edge rail, dimensional adjustments may be required. One exception to this would be the strip seal joint at the end of the precast bridge approach slab. For these cases the pavement connector length shall be adjusted, not the length of the bridge approach slab.

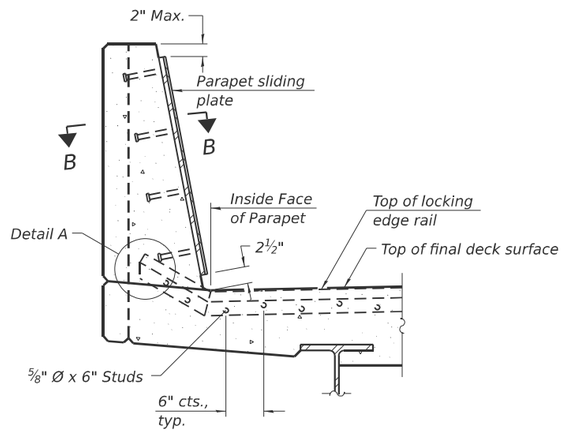

SECTION AT PARAPET

(Skews > 30° shown. Skews ≤ 30° similar except as shown in plan view.)

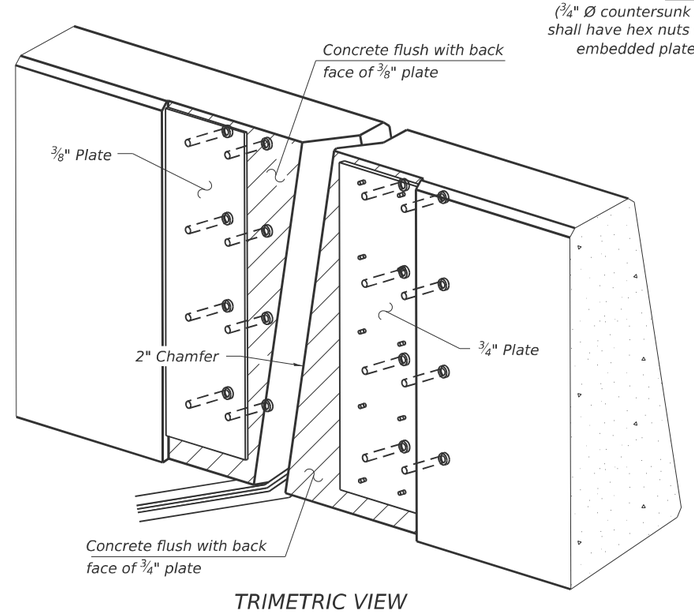

TRIMETRIC VIEW

(Showing embedded plates only)

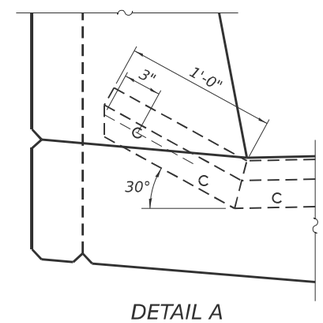

DETAIL A

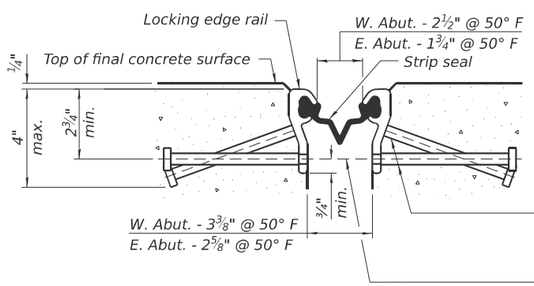

SHOWING ROLLED RAIL JOINT

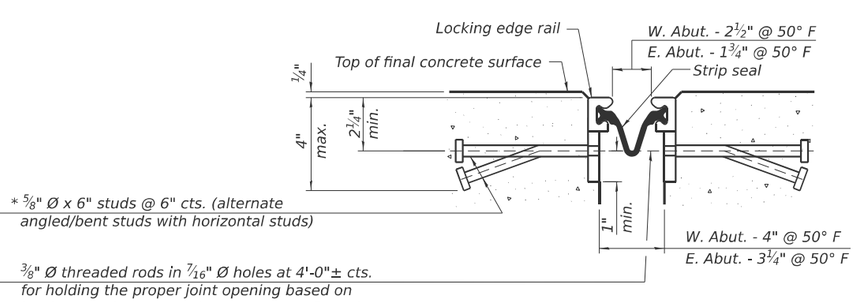

SHOWING WELDED RAIL JOINT

* ⅝" Ø x 6" studs @ 6" cts. (alternate angled/bent studs with horizontal studs)

⅜" Ø threaded rods in 7/16" Ø holes at 4'-0"± cts. for holding the proper joint opening based on the temperature during the deck pour. Place to miss studs. All rods shall be burned, or sawed off flush with the plates after concrete is set.

SECTION A-A

* Granular or solid flux filled headed studs conforming to Article 1006.32 of the Std. Specs., automatically end welded.

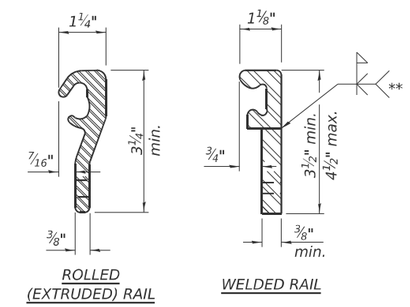

ROLLED (EXTRUDED) RAIL

WELDED RAIL

LOCKING EDGE RAILS

** Back gouge not required if complete joint penetration is verified by mock-up.

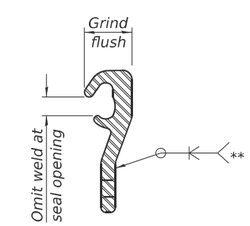

LOCKING EDGE RAIL SPLICE

The inside of the locking edge rail groove shall be free of weld residue. Rolled rail shown, welded rail similar.

BILL OF MATERIAL

Item	Unit	Total
Preformed Joint Strip Seal	Foot	236.8

EJ-SS 4-4-2025

COLLINS ENGINEERS INC.

USER NAME = credzlc	DESIGNED - C. MORROW	REVISED -	STATE OF ILLINOIS DEPARTMENT OF TRANSPORTATION	PREFORMED JOINT STRIP SEAL STRUCTURE NO. 060–0208 & 060–0209	
	CHECKED - L. BENITEZ	REVISED -			
PLOT SCALE = $SCALE$	DRAWN - C. MORROW	REVISED -			
PLOT DATE = 11/24/2025	CHECKED - 2025/10/03	REVISED -		SHEET 13 OF 18 SHEETS	

F.A.I. RTE.	SECTION	COUNTY	TOTAL SHEETS	SHEET NO.
70	82-(5,6)RS-2, 60-6RS-2	MADISON & ST. CLAIR	678	534
		CONTRACT NO. 76E84		
		ILLINOIS	FED. AID PROJECT	

MODEL: Preformed Strip Seal Joint
FILE NAME: pw://jacobs-us-cs-pw.bentley.com:jacobs-us-cs-pw-04/Documents/D315Z206.02 - ILDOT - I-55 I-70 Rehabilitation\30 Project Data\PID\ST\Collins\Sht\060-0208 & 060-0209\D676E45-SHT-060020806002090-013-PREFORMED STRIP SEAL JOINT DETAILS
11/24/2025 10:57:06 AM

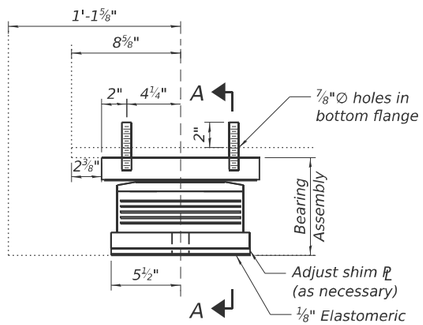

ELEVATION

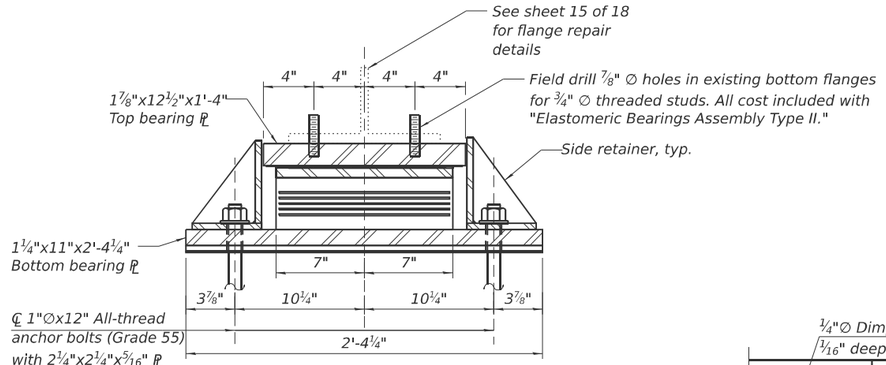

SECTION A-A

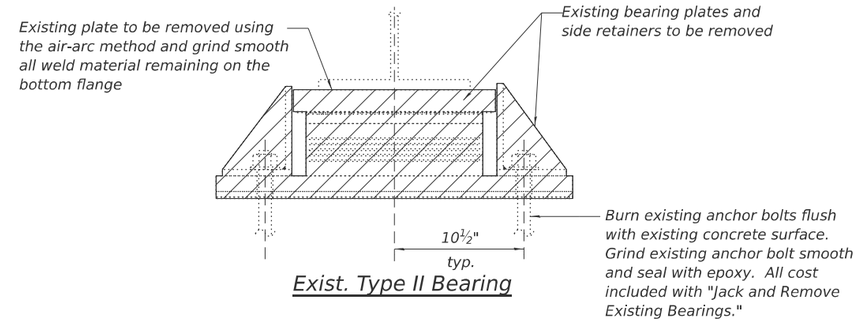

Exist. Type II Bearing

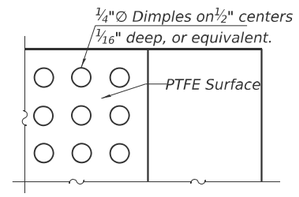

PLAN-TFE SURFACE

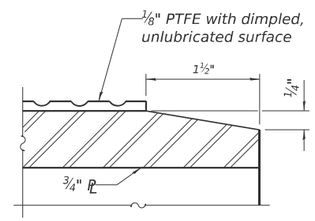

SECTION THRU TFE

Notes:

Field measure all existing bearing heights and adjust proposed system as required.

Side retainers and leveling pad required for the elastomeric bearing assembly shall be included in the cost of Elastomeric Bearing Assembly, Type II.

The ⅛" PTFE sheet shall be bonded directly to the top steel plate with a two-component, medium viscosity epoxy resin, conforming to the requirements of the Federal Specification MMM-A-134, Type I. The bond agent shall be applied on the full area of the contact surfaces.

Bonding of ⅛" PTFE sheet during vulcanizing process will be permitted provided the process and method of adjusting assembly height is approved by the Engineer.

Anchor bolts and side retainers at all supports shall be installed as each member is erected unless an equivalent temporary means of lateral restraint is used.

Cost of removing and disposal of existing elastomeric bearings shall be included under "Jack and Remove Existing Bearings", pay item.

Anchor bolts shall be ASTM F1554 all-thread of the diameter specified.

Two 1/16" adjusting shim plates shall be provided for each bearing in addition to all other plates or shims and placed on bearings as required.

The existing bearings contain lead plates. The Contractor shall take precautions to deal with the presence of lead on this project.

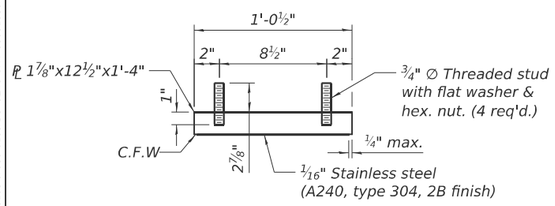

TOP BEARING ASSEMBLY
(28 UNITS)

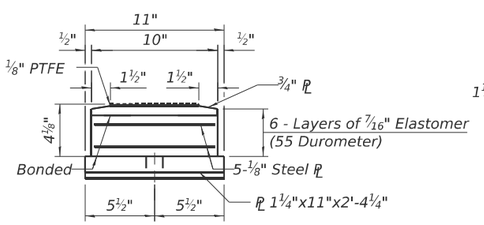

BOTTOM BEARING ASSEMBLY
(28 UNITS)

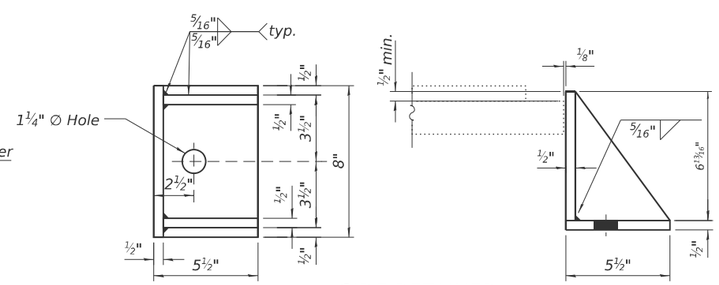

SIDE RETAINER
(56 UNITS)

Equivalent rolled angle with stiffeners will be allowed in lieu of welded plates.

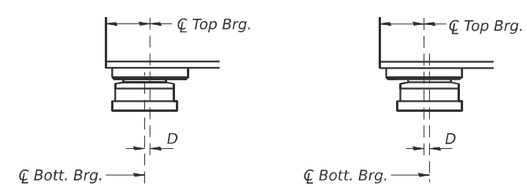

BELOW 50°F. ABOVE 50°F.

D=⅛" per each 100' of expansion for every 15° temp. change from the normal temp. of 50°F.

EXPANSION BEARING ORIENTATION

The above diagrams are for informational purposes only to show the amount of expected offset "D" for the current temperature in the field.

INTERIOR GIRDER REACTION TABLE		
		Abut.
R_P	(k)	38.4
R_L	(k)	49.2
R_I	(k)	12.6
R_{Total}	(k)	100.2

50 Ton min. jacks shall be used.

BILL OF MATERIAL

ITEM	UNIT	QUANTITY
Elastomeric Bearing Assembly, Type II	Each	28
Jack and Remove Existing Bearings	Each	28
Anchor Bolts, 1"	Each	56

MODEL: ELASTOMERIC BEARINGS TYPE II
FILE NAME: pw://jacobs-us-vp-pw.bentley.com:jacobs-us-vp-pw-04/Documents/D3152206.02 - ILDOT - I-55 I-70 Rehabilitation/30 Project Data/PID/STC/Collins/Sht/060-0208 & 060-0209/D676E45-SHT-060020806020903-014-BEARING ASSEMBLY DETAILS

COLLINS ENGINEERS INC.

USER NAME = dredzic	DESIGNED - C. MORROW	REVISED -	
	CHECKED - L. BENITEZ	REVISED -	
PLOT SCALE = $SCALE$	DRAWN - C. MORROW	REVISED -	
PLOT DATE = 11/24/2025	CHECKED - 2025/10/03	REVISED -	

STATE OF ILLINOIS
DEPARTMENT OF TRANSPORTATION

ELASTOMERIC BEARING, TYPE II REPAIRS
STRUCTURE NO. 060–0208 & 060–0209

SHEET 14 OF 18 SHEETS

F.A.I. RTE.	SECTION	COUNTY	TOTAL SHEETS	SHEET NO.
70	82-(5,6)RS-2, 60-6RS-2	MADISON & ST. CLAIR	678	535

CONTRACT NO. 76E84

ILLINOIS FED. AID PROJECT

11/24/2025 2:14:33 PM

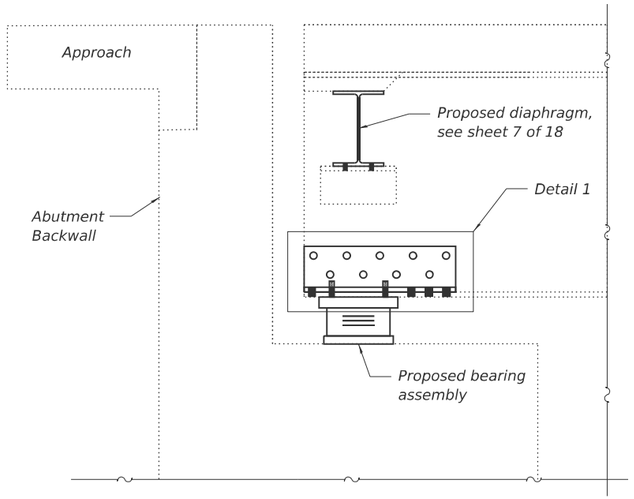

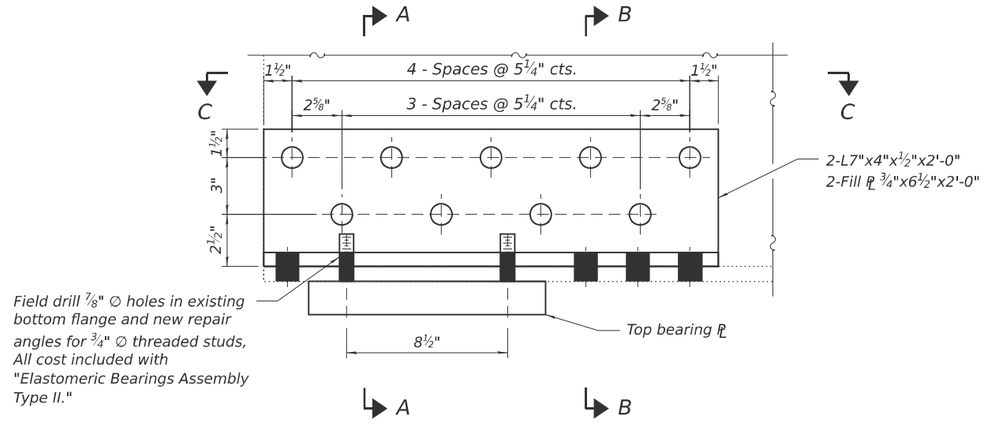

DETAIL 1
(28 - Units)

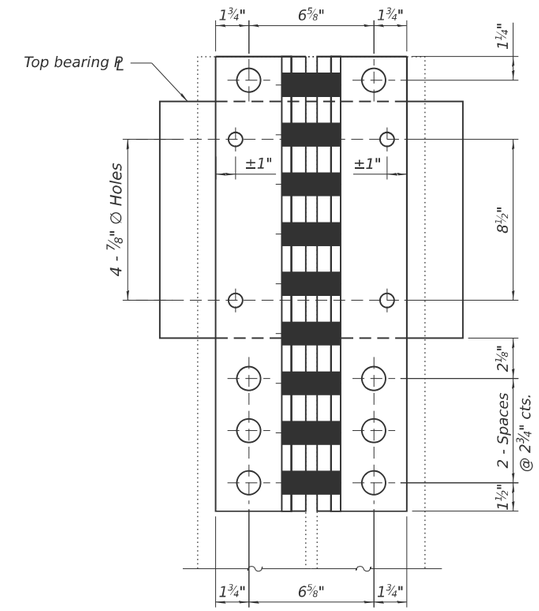

SECTION C-C

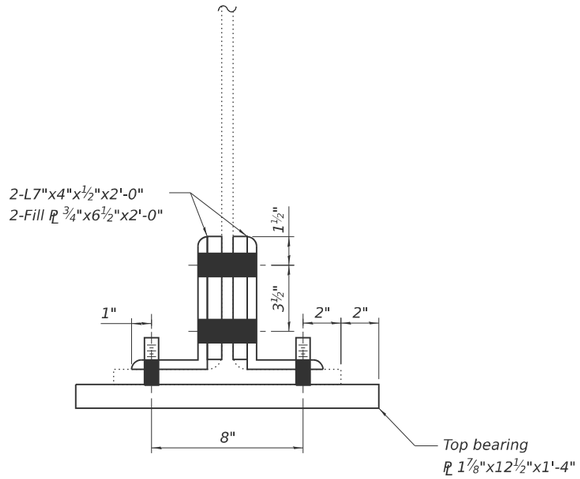

SECTION A-A

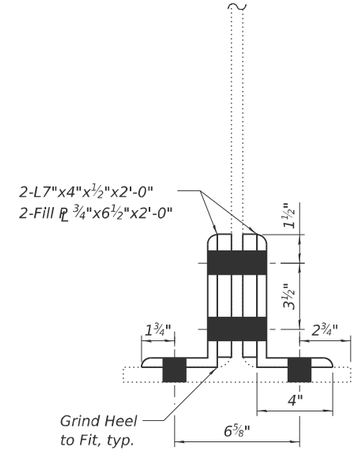

SECTION B-B

Notes:

All new structural steel shall be painted.

All bolts shall be 1" ∅ A325 steel bolts in 1⅛" ∅ holes unless shown otherwise.

All holes shall be shop drilled unless shown otherwise.

Use proposed plates as templates to field drill holes in the existing beams.

Field drill 1⅛" ∅ holes for 1" ∅ high-strength bolts in existing member. All cost included under "Furnishing and Erecting Structural Steel" pay item.

Surface preparation of existing steel in contact with new steel members shall be done according to GBSP 21 cleaning and painting contact surface areas of existing steel structures.

Contractor can submit for approval equivalent bent plates in lieu of the proposed angles.

BILL OF MATERIAL

ITEM	UNIT	QUANTITY
Furnishing and Erecting Structural Steel	Pounds	4442

MODEL: BEAM END ANGLE REPAIR DETAILS
FILE NAME: pw://jacobs-us-a-pw.bentley.com:jacobs-us-a-pw-04/Documents/D3152208.02 - ILDOT - I-55 I-70 Rehabilitation\30 Project Data\PID\ST\Collins\SH\060-0208 & 060-0209\D676E45-SHT-060020806060209-015-BEAM END ANGLE REPAIR DETAILS

COLLINS ENGINEERS INC.

USER NAME = dredzlc	DESIGNED - C. MORROW	REVISED -	
	CHECKED - L. BENITEZ	REVISED -	
PLOT SCALE = $SCALE$	DRAWN - C. MORROW	REVISED -	
PLOT DATE = 11/24/2025	CHECKED - 2025/10/03	REVISED -	

STATE OF ILLINOIS
DEPARTMENT OF TRANSPORTATION

BEAM END ANGLE REPAIRS
STRUCTURE NO. 060–0208 & 060–0209

SHEET 15 OF 18 SHEETS

F.A.I. RTE.	SECTION	COUNTY	TOTAL SHEETS	SHEET NO.
70	82-(5,6)RS-2, 60-6RS-2	MADISON & ST. CLAIR	678	536
		CONTRACT NO. 76E84		
		ILLINOIS	FED. AID PROJECT	

11/24/2025 11:42:37 AM

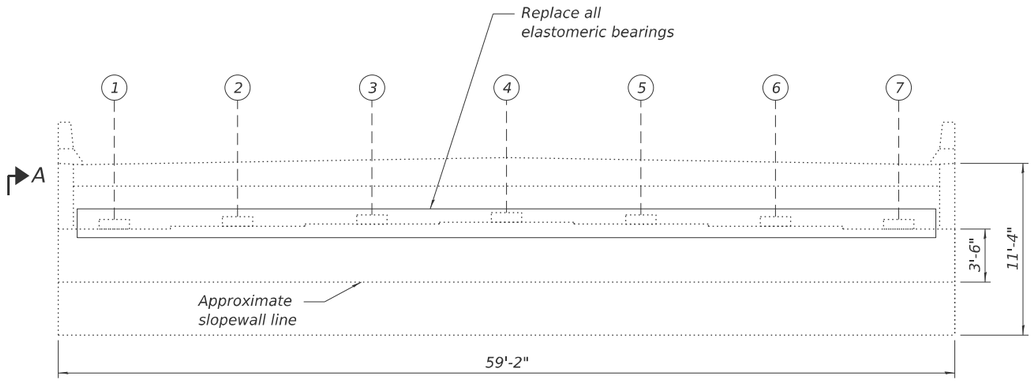

WEST ABUTMENT ELEVATION SN 060-0208
(LOOKING WEST)

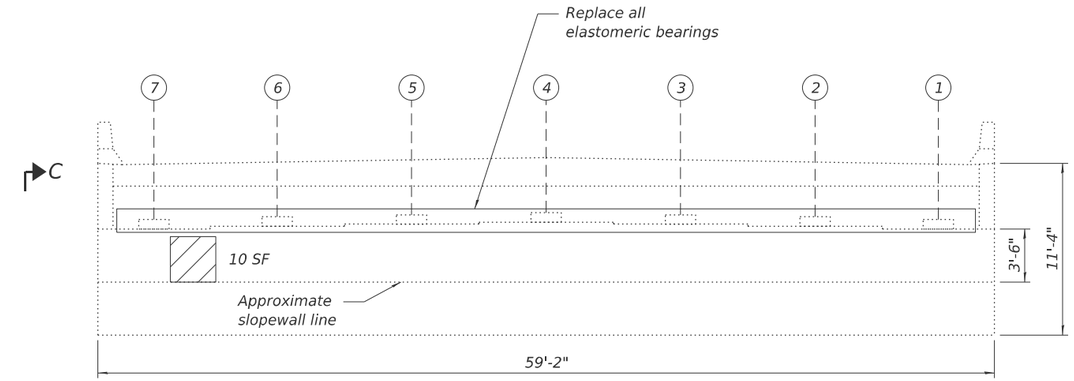

EAST ABUTMENT ELEVATION SN 060-0208
(LOOKING EAST)

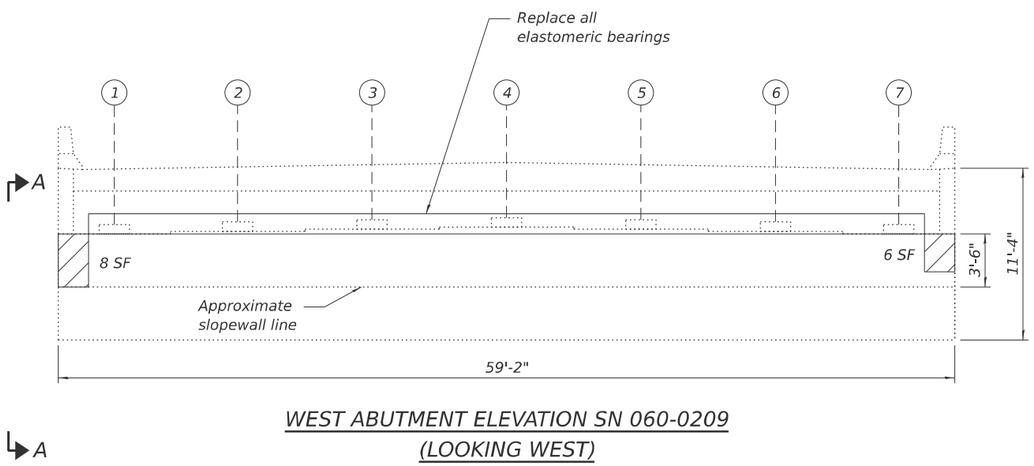

WEST ABUTMENT ELEVATION SN 060-0209
(LOOKING WEST)

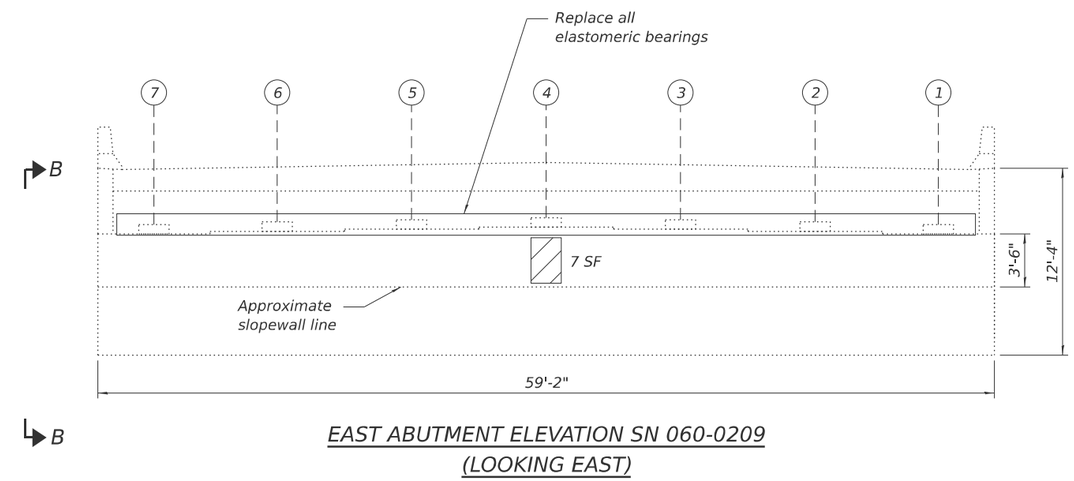

EAST ABUTMENT ELEVATION SN 060-0209
(LOOKING EAST)

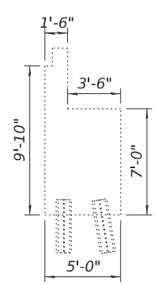

SECTION A-A

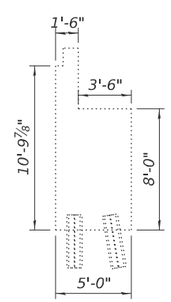

SECTION B-B

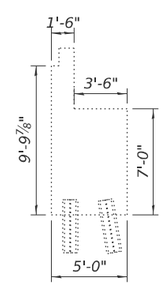

SECTION C-C

LEGEND

SF Square Feet

Structural repair of concrete
(depth equal to or less than 5 inches)

BILL OF MATERIAL

ITEM	UNIT	QUANTITY
Structural Repair of Concrete (Depth Equal to or Less Than 5 Inches)	SQ FT	31
Concrete Sealer	SQ FT	2834

Notes:

All measurements and locations of concrete repairs are approximate and shall be verified in the field by the contractor.

See sheet 14 of 17 for elastomeric bearing and bearing anchor rod replacement details.

Structural repair of concrete (depth equal to or less than 5 in.) quantity is estimated based on the inspection report dated March 2023. The engineer shall mark removal areas.

Concrete Sealer shall be applied to the vertical and horizontal faces of the exposed abutment cap below the strip seal joints.

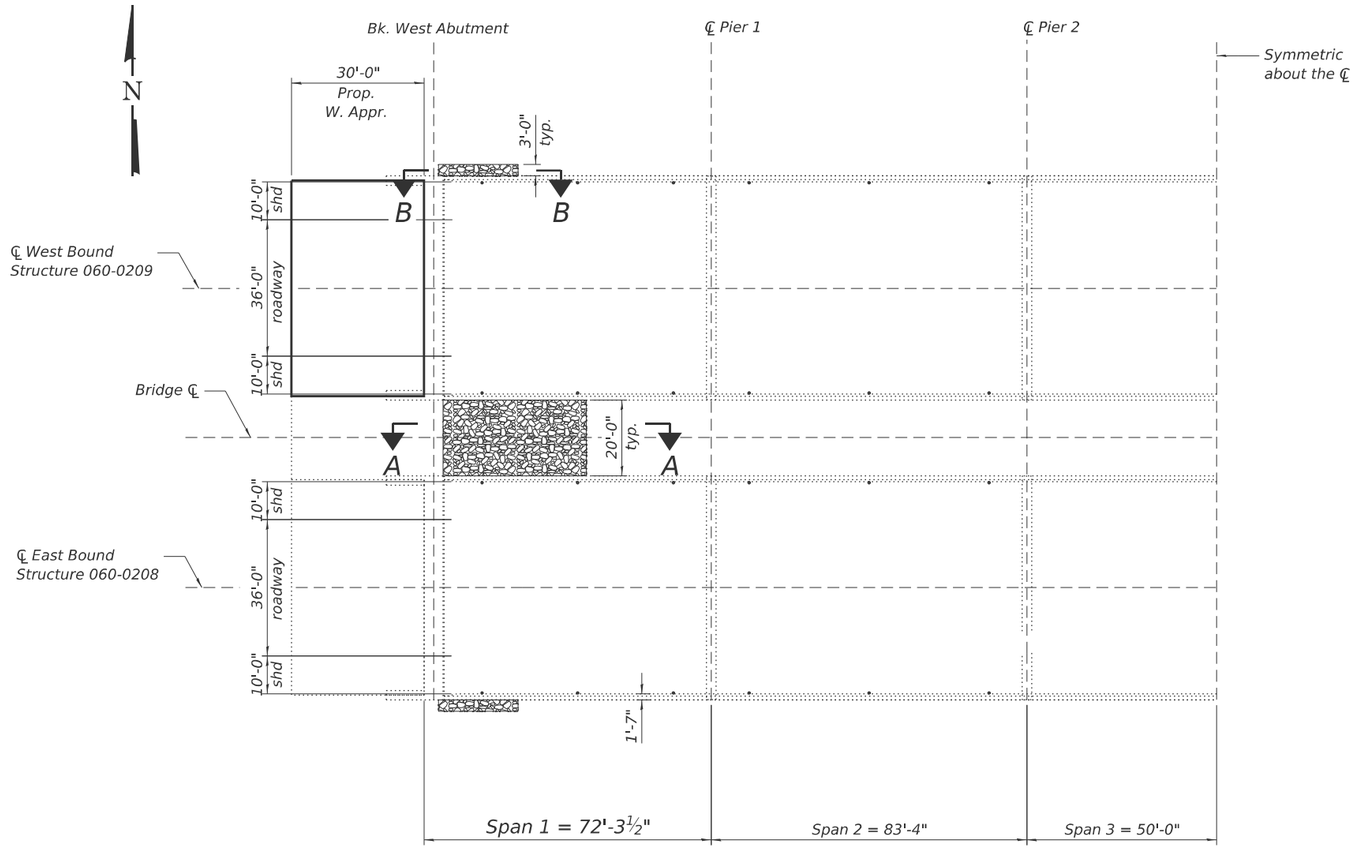

HALF PLAN VIEW

SN 060-0208 & 060-0209
West Abutment shown E. Abutment similar

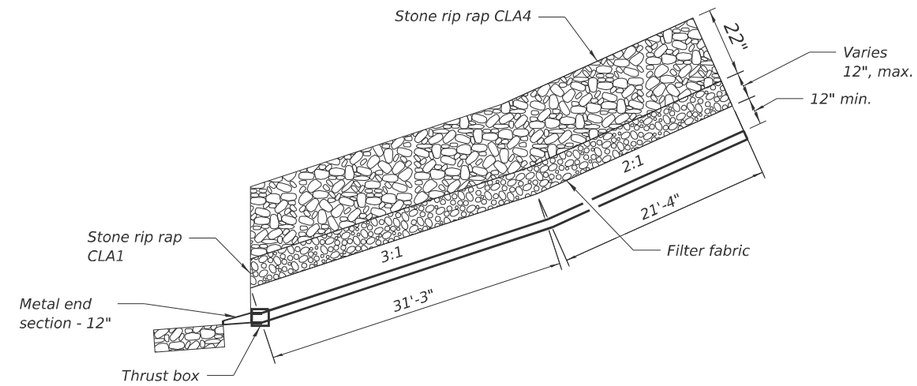

SECTION A-A

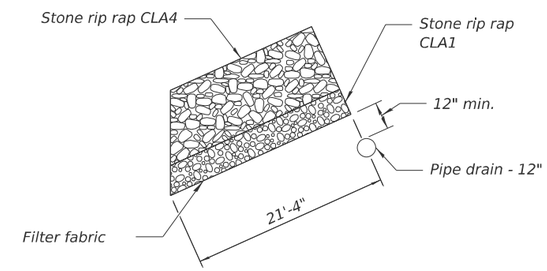

SECTION B-B

BILL OF MATERIAL

ITEM	UNIT	QUANTITY
Stone Rip Rap, Class A1	TONS	48
Stone Rip Rap, Class A4	SQ. YD.	248.4
Filter Fabric	SQ. YD.	248.4

MODEL: RIP RAP INSTALLATION
FILE NAME: pw://jacobs-us-a-pw.bentley.com:jacobs-us-a-pw-04/Documents/D3152206.02 - ILDOT - I-55 I-70 Rehabilitation/30 Project Data/PID/ST/Collins/Sht/060-0208 & 060-0209/D676E45-SHT-060020806060209-017-RIPRAP INSTALLATION

11/24/2025 11:46:09 AM

COLLINS ENGINEERS INC.

USER NAME = dredzlc	DESIGNED - C. MORROW	REVISED -	STATE OF ILLINOIS DEPARTMENT OF TRANSPORTATION	RIPRAP INSTALLATION STRUCTURE NO. 060–0208 & 060–0209
	CHECKED - L. BENITEZ	REVISED -		
PLOT SCALE = $SCALE$	DRAWN - C. MORROW	REVISED -		
PLOT DATE = 11/24/2025	CHECKED - 2025/10/03	REVISED -		SHEET 17 OF 18 SHEETS

F.A.I. RTE.	SECTION	COUNTY	TOTAL SHEETS	SHEET NO.
70	82-(5,6)RS-2, 60-6RS-2	MADISON & ST. CLAIR	678	538
		CONTRACT NO. 76E84		
	ILLINOIS	FED. AID PROJECT		

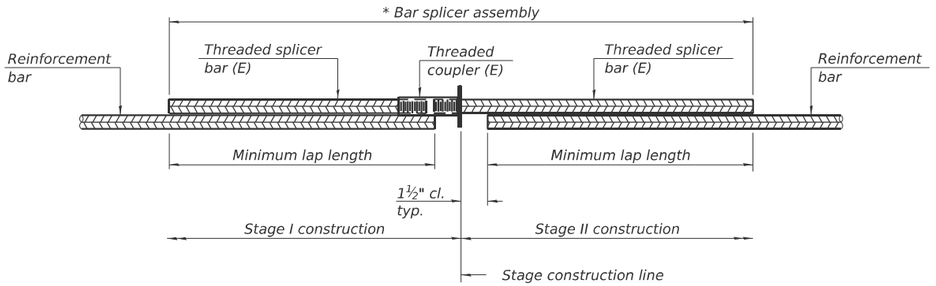

STANDARD BAR SPLICER ASSEMBLY PLAN

Only bar splicer assemblies as presented on the approved QPL list may be used.

Threaded splicer bar length = min. lap length + 1½" + thread length

* Epoxy not required on Bar Splicer Assembly components used in conjunction with black bars.

Standard Bar Splicer Assembly Locations	Bar size	No. assemblies required	Minimum lap length
Abutment Back Wall	#6	24	3'-11"
Approach Slab	#5	82	2'-0"
Deck Bars	#5	48	2'-10"
Approach Slab	#8	66	5'-2"

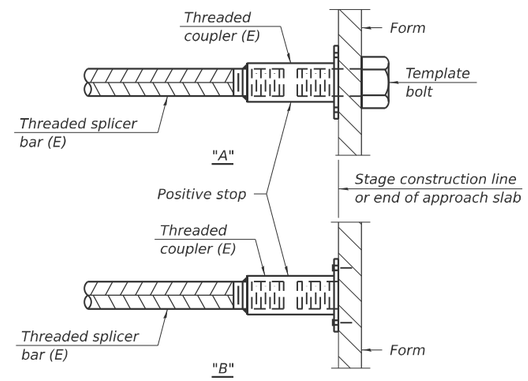

INSTALLATION AND SETTING METHODS

"A" : Set bar splicer assembly by means of a template bolt.
"B" : Set bar splicer assembly by nailing to wood forms or cementing to steel forms.
(E) : Indicates epoxy coating.

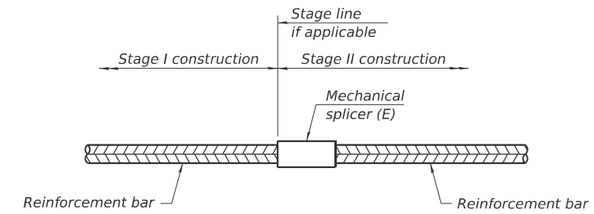

STANDARD MECHANICAL SPLICER

Notes:
Splicer bars shall be deformed with threaded ends and have a minimum 60 ksi yield strength.
All reinforcement shall be lapped and tied to the splicer bars.
Bar splicer assemblies shall be epoxy coated according to the requirements for reinforcement bars. See Section 508 of the Standard Specifications.
See approved list of bar splicer assemblies and mechanical splicers for alternatives.

Benchmark: BM 202 - Cut square on top of a highway sign concrete base of the south leg. "For Attractions" EXIT 6, just East of the San Prairie Lane Bridge over I-55/70. ELEV. = 413.32

Existing Structure: Structure Number 060-2541 originally built in 1959. The Structure is Cast-in-Place 5 feet by 6 feet reinforced concrete box culvert.

Traffic Control: Traffic is to be maintained with day time lane closure..

Salvage: None

HIGHWAY CLASSIFICATION

FAI I-55/70
Functional Class: Interstate
ADTT: 51700 (2021)
Design Speed: 70 m.p.h.
Posted Speed: 70 m.p.h.

SCOPE OF WORK

1) Clear and grub foreslope and area adjacent to box culvert end section.
2) Excavate behind wingwall and headwall.
3) Place filter fabric.
4) Install gabion baskets.
5) Shape and grade foreslope.

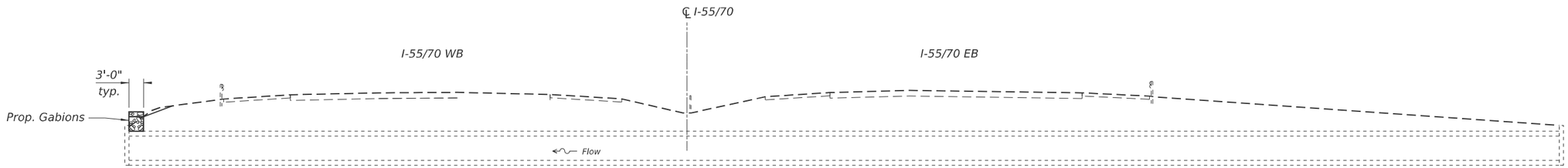

STEPHEN E. ALSBURY 081-5261 LICENSED STRUCTURAL ENGINEER STATE OF ILLINOIS

Signed: _____
Stephen E. Alsbury, S.E. IL. Lic. No. 081-5261
Expires: 11/30/2026

Date: September 26, 2025

ELEVATION

(Looking East)

INDEX OF SHEETS

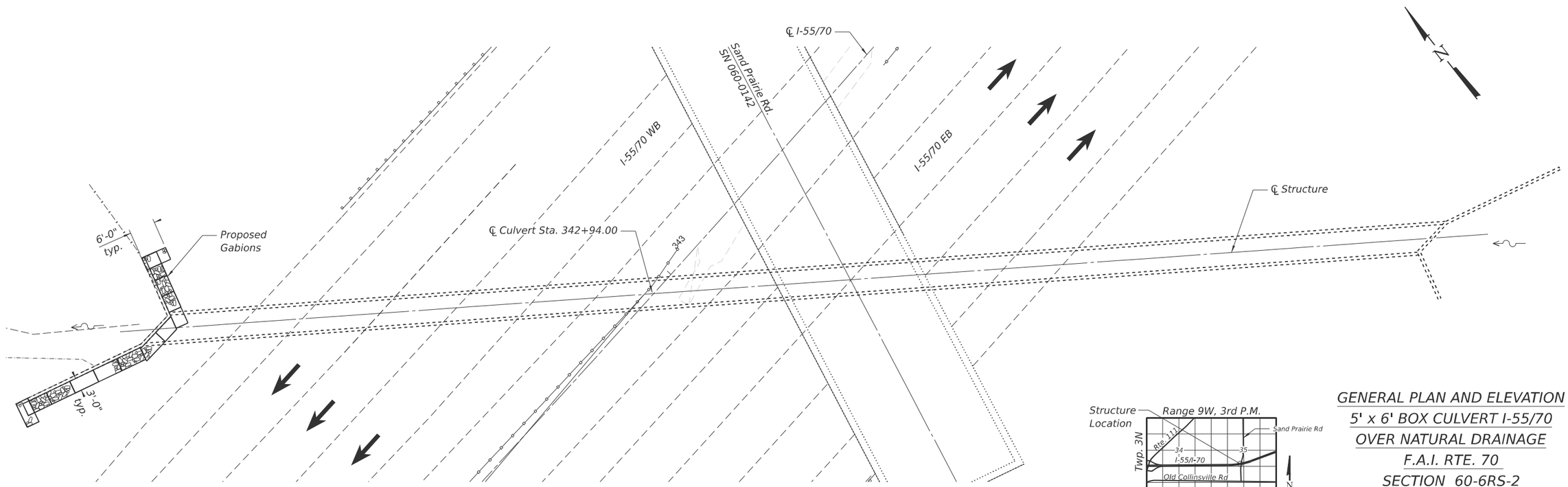

PLAN

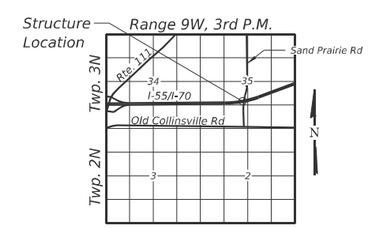

LOCATION SKETCH

GENERAL PLAN AND ELEVATION
5' x 6' BOX CULVERT I-55/70
OVER NATURAL DRAINAGE
F.A.I. RTE. 70
SECTION 60-6RS-2
MADISON COUNTY
STATION 342+94.00
STRUCTURE NO. 060-2541

MODEL: $MODELNAME$
FILE NAME: pw://jacobs-us-va-pw.bentley.com:jacobs-us-va-pw-04/Documents/D315220602 - ILDOT - I-55 I-70 Rehabilitation/30 Project Data/PID/ST/ABNA/Sht/0602541-001-GPE.dgn

ABNA DESIGN FIRM REG. 184.002117

USER NAME = mjones	DESIGNED - SEA	REVISED -	
	DRAWN - MBJ	REVISED -	
PLOT SCALE = $SCALE$	CHECKED - SEA	REVISED -	
PLOT DATE = 11/26/2025	DATE - 2025/10/03	REVISED -	

STATE OF ILLINOIS
DEPARTMENT OF TRANSPORTATION

GENERAL PLAN AND ELEVATION
STRUCTURE NO. 060–2541

SCALE: NTS | SHEET 1 OF 2 SHEETS | STA. | TO STA.

F.A.I. RTE.	SECTION	COUNTY	TOTAL SHEETS	SHEET NO.
70	Section82-(5,6)RS-2, 60-6RS-2	MADISON & ST. CLAIR	678	540
		CONTRACT NO. 76E84		
		ILLINOIS FED. AID PROJECT		

GENERAL NOTES

1. Plan dimensions and details relative to existing structure have been taken from existing plans are subject to nominal construction variations. The Contractor shall field verify existing dimensions and details affecting new construction and make necessary approved adjustments prior to construction or ordering of materials. Such variations shall not be cause for additional compensation for a change in scope of the work, however, the Contractor will be paid for the quantity actually furnished at the unit price bid for the work.
2. Trees 3" or greater in diameter or breast height will not be cleared from April 1 through September 30.

TOTAL BILL OF MATERIAL

Item	Unit	Total
Tree Removal (6 to 15 Units Diameter)	Unit	20
Filter Fabric	Sq. Yd.	66
Gabions	Cu. Yd.	29
Structure Excavation	Cu. Yd.	42

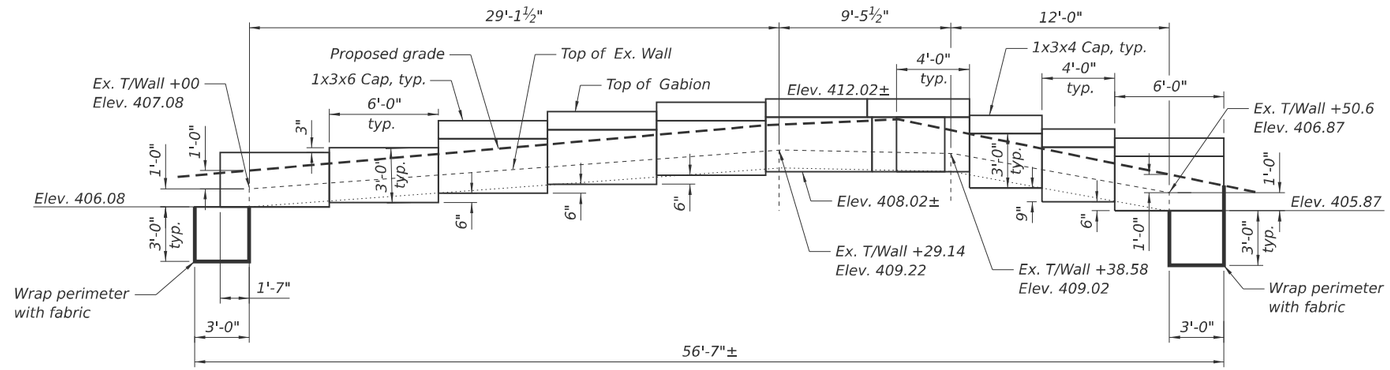

ELEVATION

(Unfolded view along back of wall)

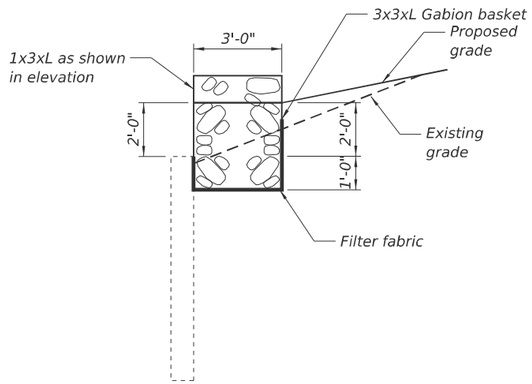

GABIONS

3'X3'X6' Long = 9 Each (1 Modified)
3'X3'X4' Long = 4 Each
1'X3'X6' Long = 5 Each (1 Modified)
1'X3'X4' Long = 4 Each

SECTION B-B

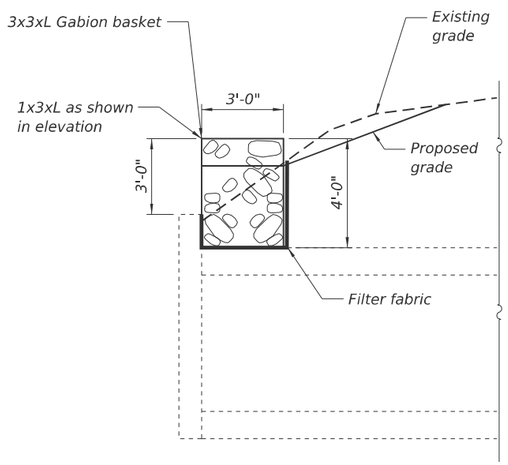

SECTION A-A

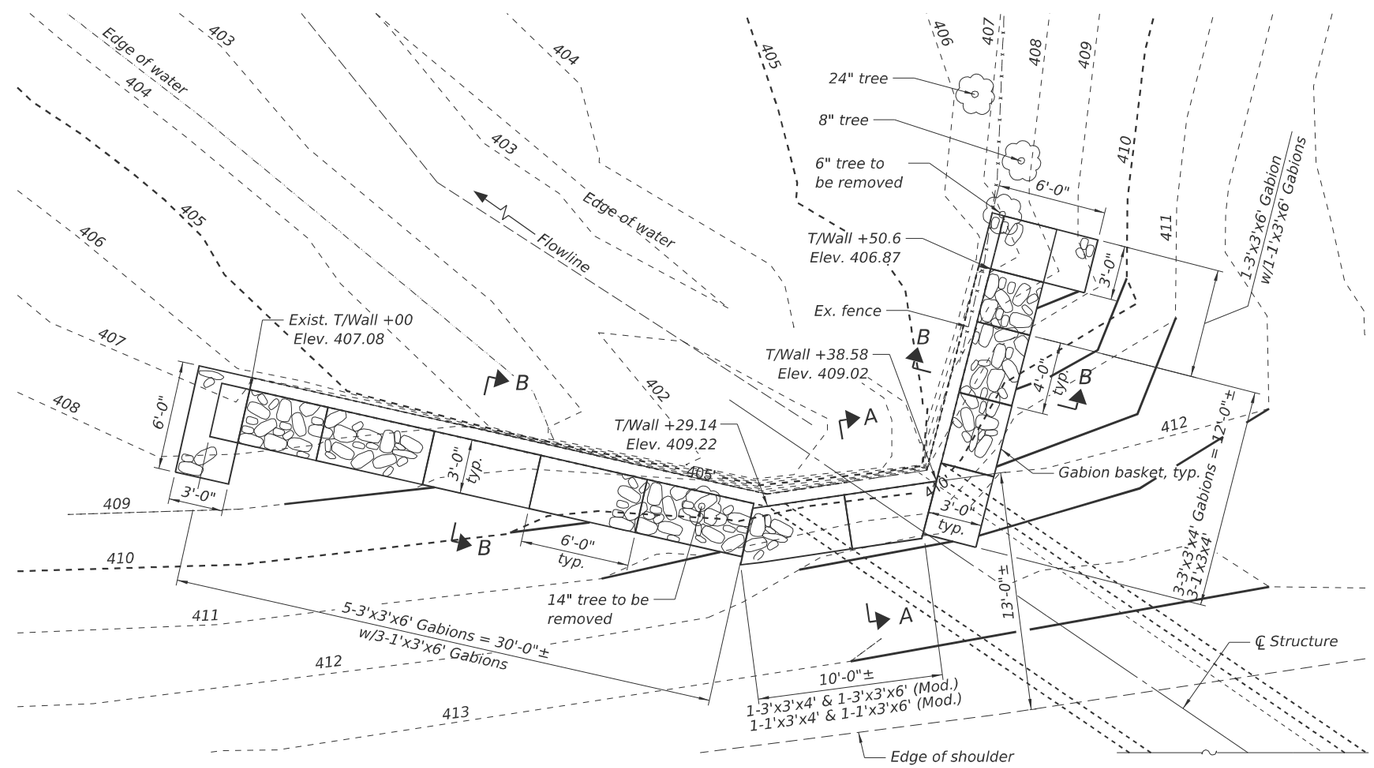

PLAN

N

MODEL: $MODELNAME$
FILE NAME: pw://jacobs-us-xg-pw.bentley.com:jacobs-us-xg-pw-04/Documents/D315220602 - ILDOT - I-55 I-70 Rehabilitation:30 Project Data/PID/ST/ABNA/Sht/0602541-002-GENOTES.dgn

ABNA DESIGN FIRM REG. 184.002117

USER NAME = mjones	DESIGNED - SEA	REVISED -	
	DRAWN - MBJ	REVISED -	
PLOT SCALE = $SCALE$	CHECKED - SEA	REVISED -	
PLOT DATE = 12/3/2025	DATE - 2025/10/03	REVISED -	

STATE OF ILLINOIS
DEPARTMENT OF TRANSPORTATION

GENERAL NOTES, TOTAL B.O.M. AND GABION DETAILS
STRUCTURE NO. 060–2541

SCALE: NTS | SHEET 2 OF 2 SHEETS | STA. | TO STA.

F.A.I. RTE.	SECTION	COUNTY	TOTAL SHEETS	SHEET NO.
70	Section82-(5,6)RS-2, 60-6RS-2	MADISON & ST. CLAIR	678	541
		CONTRACT NO. 76E84		
		ILLINOIS FED. AID PROJECT		

Benchmark: Aluminum Disk in concrete swale (top of paved ditch) in median of Ramp from I-55/70 NB to IL 203 SB. ELEV. = 424.5'

Existing Structure: Structure Number 082-0024 originally built in 1960 under IDOT Contract I-70-1(24)2. The Structure is 457'-8¼" long and consist of a 6-Span, WF beam superstructure supported by concrete piers on creosote timber piles and concrete pile bent abutments. In 1999 the bridge was rehabilitated under contract ACBHI-70-1 and the scope of work included removing and replacing the existing superstructure, widening abutments and modifying wingwall and backwall, minor repairs to piers and raising pier caps, removing and replacing bearings with seismic isolation bearings, and removing and replacing north concrete slopewall and a portion of the south concrete slopewall above pier 1. In 2000 the superstructure was repaired under contract 82-5HBR-HDF-2 and the scope of work included removing and replacing damaged sections of parapets. The structure is 461'-7⅜" from back-to-back abutments with the substructure units on variable skew. The clear width is 35'-5" between curbs and the overall width of the bridge is 38'-8".

Traffic Control: Traffic is to be maintained using stage construction.

Salvage: No salvage of bridge components.

SCOPE OF WORK

1) Remove and replace joints at abutments..
2) Substructure concrete repairs. Pier 3, 4 & 5 Columns.
3) Replace north approach slab.
4) Clean deck drains.

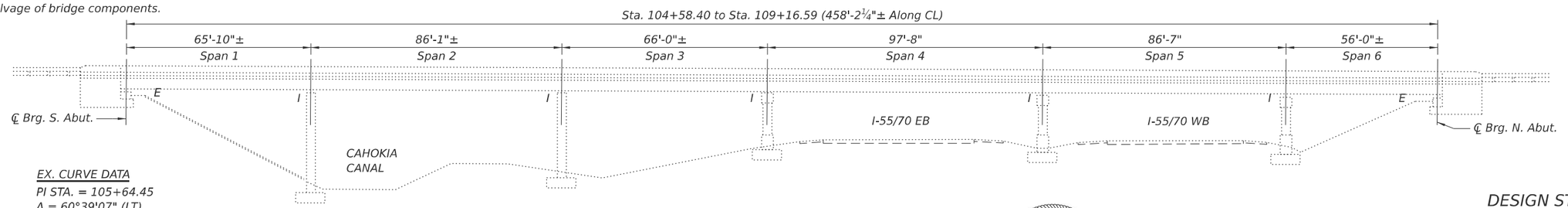

EX. CURVE DATA
PI STA. = 105+64.45
Δ = 60°39'07" (LT)
D = 07°09'43"
R = 800.00'
T = 467.95'
L = 846.86'
E = 126.82'
SE = 7.1%

Note: I = Existing Isolation Bearings

ELEVATION

Signed: Stephen E. Alsbury, S.E. IL. Lic. No. 081-5261
Expires: 11/30/2026

Date: October 31, 2025

DESIGN STRESSES

FIELD UNITS (New Const.)
f'c = 3,500 psi
f'c = 4,000 psi (Superstructure)
fy=60,000 psi (Reinforcement)

FIELD UNITS (Exist. Const.)
f'c = 3,500 psi (Superstructure)
f'c = 3,500 psi (Substructure)
fy = 60,000 psi (Reinforcement)
fy = 50,000 psi (Structural Steel)

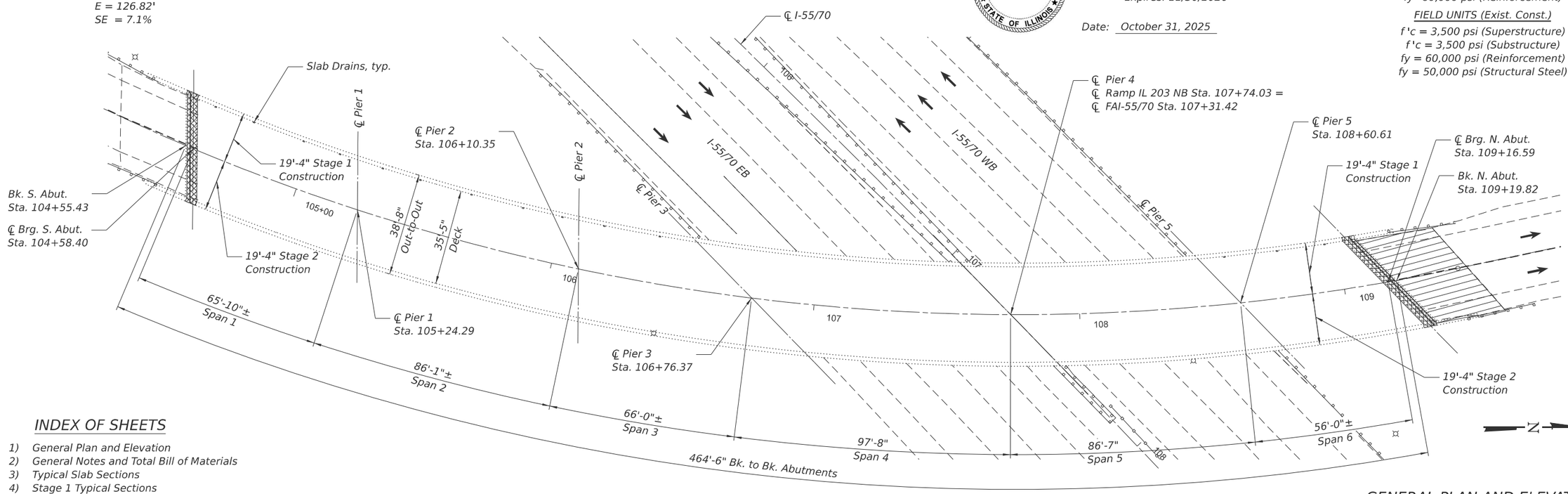

INDEX OF SHEETS

LEGEND

Joint Replacement

Approach Slab Replacement

PLAN

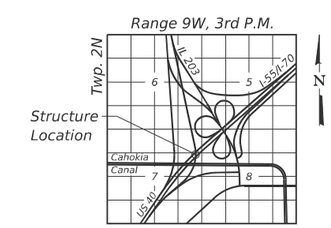

LOCATION SKETCH

GENERAL PLAN AND ELEVATION
RAMP TO IL 203 NB OVER DRAINAGE CANAL & I-55 / I-70
F.A.I. RTE. 70
SECTION 82-(5,6)RS-2
ST. CLAIR COUNTY
STATION 107+74.03
STRUCTURE NO. 082-0024

MODEL: $MODELNAME$
FILE NAME: pw://jacobs-us-va-pw.bentley.com:jacobs-us-va-pw-04/Documents/D3152206.02 - ILDOT - I-55 I-70 Rehabilitation/30 Project Data/PID/ST/ABNA/Sht/0820024-001-GPE.dgn

ABNA DESIGN FIRM REG. 184.002117

USER NAME = mjones	DESIGNED - SEA	REVISED -	
	DRAWN - MBJ	REVISED -	
PLOT SCALE = $SCALE$	CHECKED - SEA	REVISED -	
PLOT DATE = 11/26/2025	DATE - 2025/10/03	REVISED -	

STATE OF ILLINOIS
DEPARTMENT OF TRANSPORTATION

GENERAL PLAN AND ELEVATION
STRUCTURE NO. 082–0024

SCALE: NTS | SHEET 1 OF 16 SHEETS | STA. | TO STA.

F.A.I. RTE.	SECTION	COUNTY	TOTAL SHEETS	SHEET NO.
70	Section82-(5,6)RS-2, 60-6RS-2	MADISON & ST. CLAIR	678	542
		CONTRACT NO. 76E84		
		ILLINOIS FED. AID PROJECT		

GENERAL NOTES

Reinforcement bars designated (E) shall be epoxy coated.

Prior to pouring the new concrete deck, all heavy or loose rust, loose mill scale, and other loose detrimental foreign material shall be removed from the surfaces in contact with concrete(SSPC – SP3 standards). Tightly adhered paint may remain unless otherwise noted. Removal shall be accomplished by methods that will not damage the steel and the cost will be paid for according to Article 109.04 of the Standard Specifications.

Plan dimensions and details relative to existing structure have been taken from existing plans are subject to nominal construction variations.
The Contractor shall field verify existing dimensions and details affecting new construction and make necessary approved adjustments prior to construction or ordering of materials. Such variations shall not be cause for additional compensation for a change in scope of the work, however, the Contractor will be paid for the quantity actually furnished at the unit price bid for the work.

Existing reinforcement bars extending into the removal area shall be cleaned, straighened and incorporated into the new construction. Cost included with Concrete Removal.
Any reinforcement bars that are damaged during concrete removal shall replaced with an approved bar splicer or anchorage system at the contractors expense..

Joint openings shall be adjusted according to Article 520.04 of the Standard specifications, when the deck is poured at ambient temperature other than 50°.

Concrete sealer shall be applied to the designated areas of the South and North abutments. The concrete sealer shall be a "Film Forming" type for horizontal surfaces.

No field welding is permittted except as specified in the contract documents.

The deck surface shall have its final finish tined accordingto Article 420.09(e)(1) of the Standard Specifications.
Cost included with Concrete Structures.

All Structural Steel shall conform to AASHTO Classificatin M-270 Gr 36 unless otherwise noted.

TOTAL BILL OF MATERIAL

	Item	Unit	Total
	Concrete Removal	Cu. Yd.	13.3
	Concrete Structures	Cu. Yd.	13.4
	Concrete Superstructure	Cu. Yd.	13.3
*	Protective Coat	Sq. Yd.	2360
	Concrete Superstructure (Approach Slab)	Cu. Yd.	50.9
	Reinforcement Bars, Epoxy Coated	Pound	23560
	Bar Splicers	Each	173
	Preformed Joint Strip Seal	Foot	89
	Concrete Sealer	Sq. Ft.	550
	Floor Drains to be Cleaned	Each	14
	Approach Slab Removal	Sq. Yd.	120
	Structural Repair of Concrete (Depth equal to or less than 5 inches)	Sq. Ft.	189

* Protective Coat shall be applied to top and front face of all parapets and the deck.

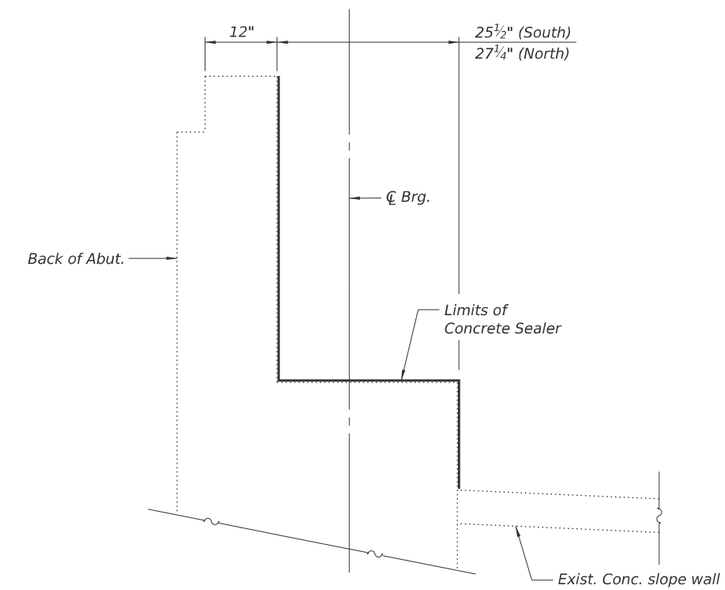

CONCRETE SEALER TYPICAL

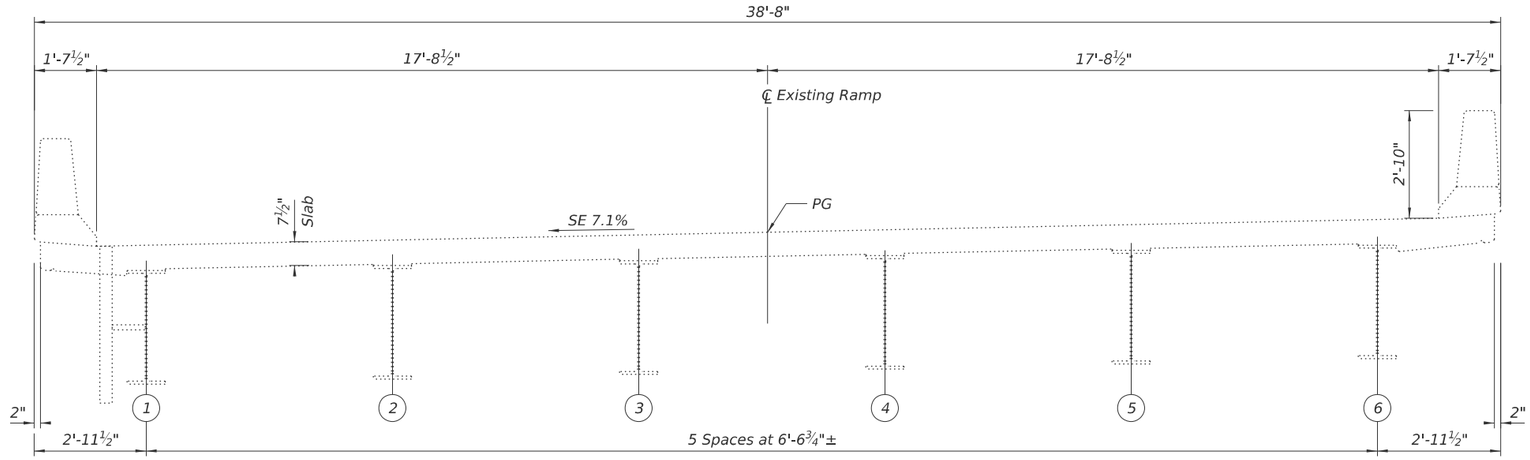

EXISTING TYPICAL SLAB SECTION

(Looking North - Upstation)

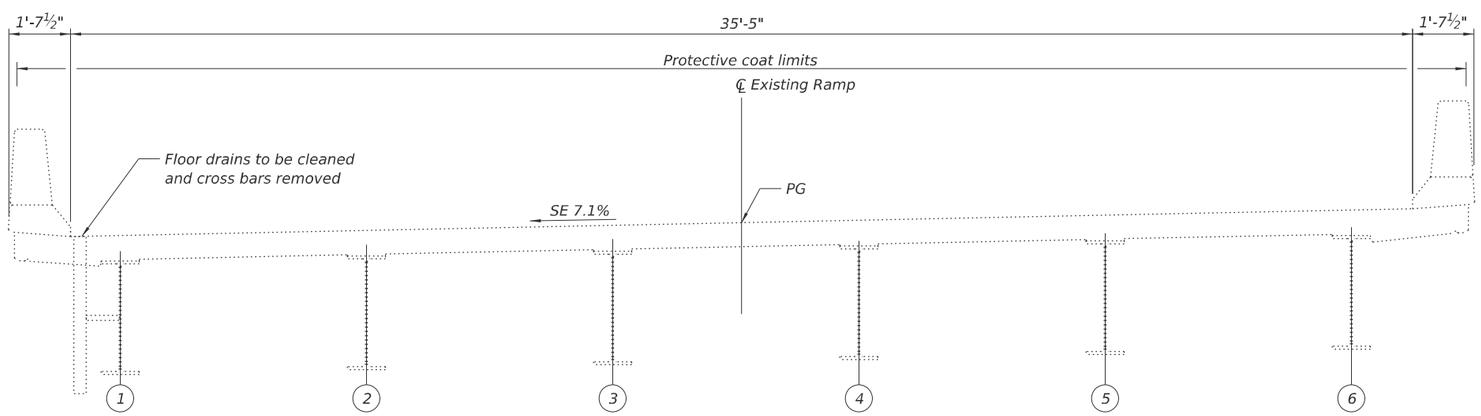

PROPOSED TYPICAL SLAB SECTION

(Looking North - Upstation)

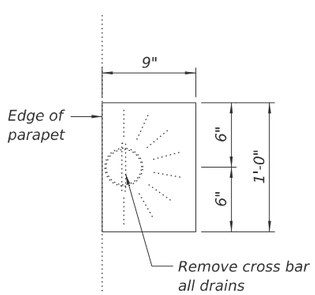

DRAIN TOP PLAN

MODEL: $MODELNAME$
FILE NAME: pw://jacobs-us-a-pw.bentley.com:jacobs-us-va-pw-04/Documents/D3152206.02 - ILDOT - I-55 I-70 Rehabilitation/30 Project Data/PID/STA/BNA/Sht082024-003-TYPSECTION.dgn

ABNA DESIGN FIRM REG. 184.002117	USER NAME = mjones	DESIGNED - SEA	REVISED -	STATE OF ILLINOIS DEPARTMENT OF TRANSPORTATION	TYPICAL SLAB SECTIONS STRUCTURE NO. 082-0024
		DRAWN - MBJ	REVISED -		
	PLOT SCALE = $SCALE$	CHECKED - SEA	REVISED -		SCALE: NTS SHEET 3 OF 16 SHEETS STA. TO STA.
	PLOT DATE = 11/26/2025	DATE - 2025/10/03	REVISED -		

F.A.I. RTE.	SECTION	COUNTY	TOTAL SHEETS	SHEET NO.
70	Section82-(5,6)RS-2, 60-6RS-2	MADISON & ST. CLAIR	678	544
		CONTRACT NO. 76E84		
		ILLINOIS FED. AID PROJECT		

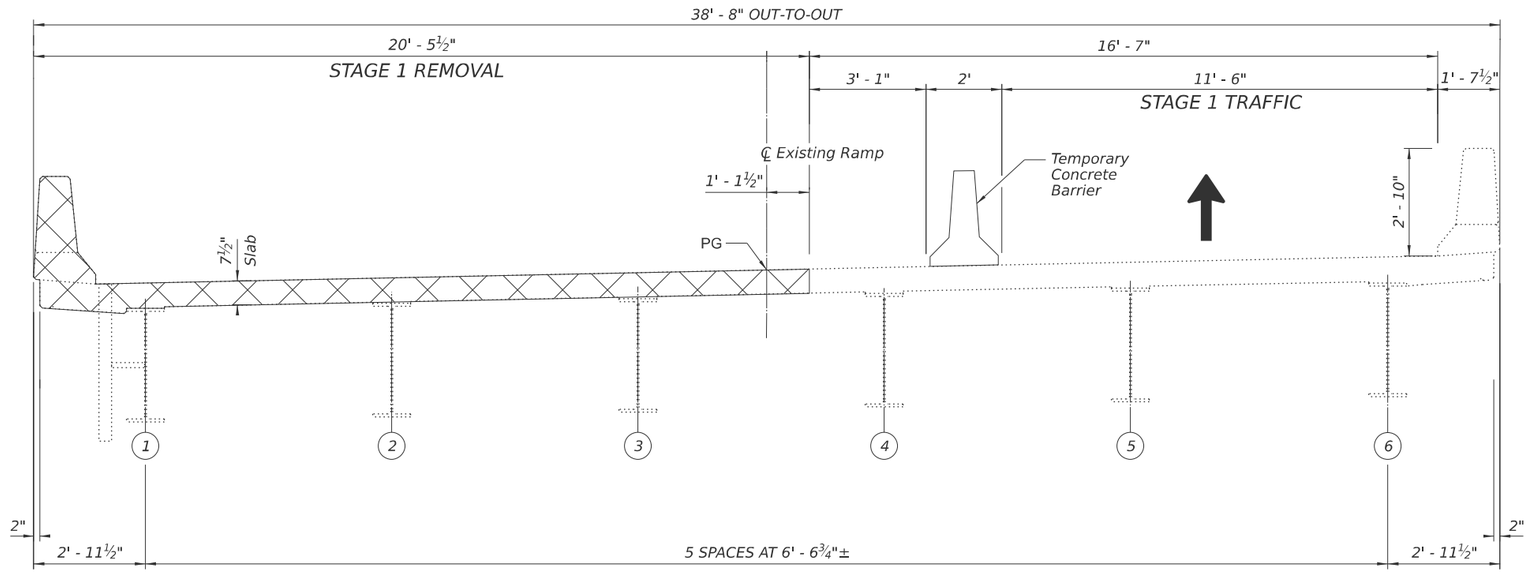

STAGE 1 REMOVAL
(Looking North - Upstation)

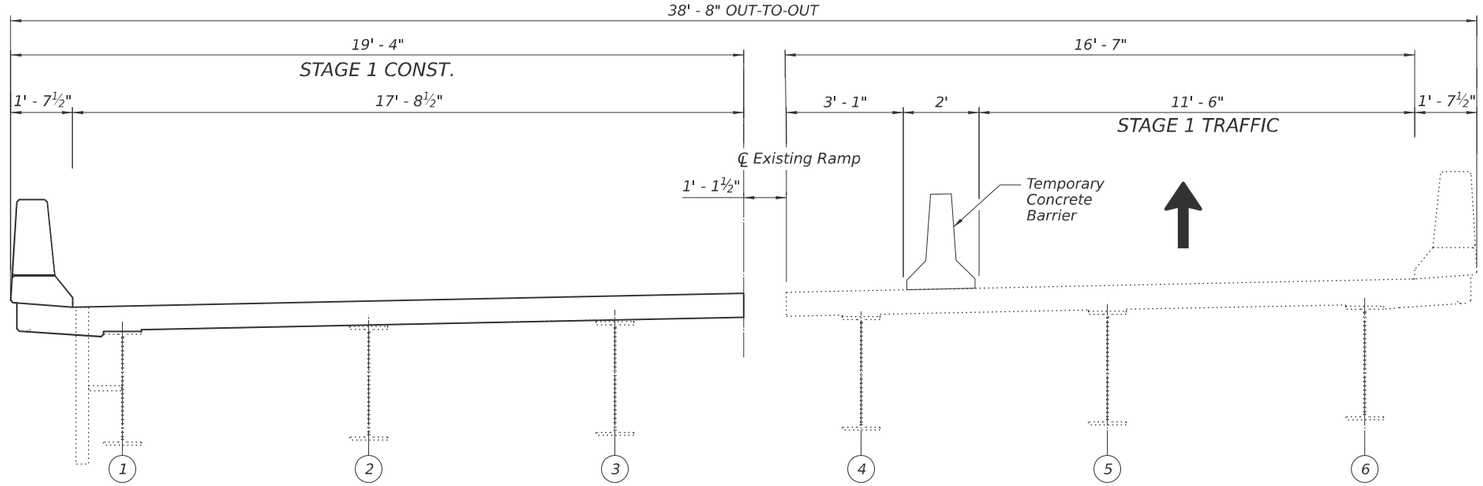

STAGE 1 CONSTRUCTION
(Looking North - Upstation)

MODEL: $MODELNAME$
FILE NAME: pw://jacobs-us-va-pw.bentley.com:jacobs-us-va-pw-04/Documents/D315220602 - ILDOT - I-55 I-70 Rehabilitation/30 Project Data/PID/ST/ABNA/Sht/0820024-094-STAGE 1-TYPSECTION.dgn

ABNA DESIGN FIRM REG. 184.002117	USER NAME = mjones	DESIGNED - ---	REVISED -	STATE OF ILLINOIS DEPARTMENT OF TRANSPORTATION
		DRAWN - ---	REVISED -	
	PLOT SCALE = $SCALE$	CHECKED - ---	REVISED -	
	PLOT DATE = 11/26/2025	DATE -	REVISED - PRELOAD - SELECT REVISION TO ADVANCE	

STAGE 1 - TYPICAL SECTION
STRUCTURE NO. 082-0024

SCALE: NTS | SHEET 4 OF 16 SHEETS | STA. | TO STA.

F.A.I. RTE.	SECTION	COUNTY	TOTAL SHEETS	SHEET NO.
70	Section82-(5,6)RS-2, 60-6RS-2	MADISON & ST. CLAIR	678	544A
		CONTRACT NO. 76E84		
		ILLINOIS	FED. AID PROJECT	

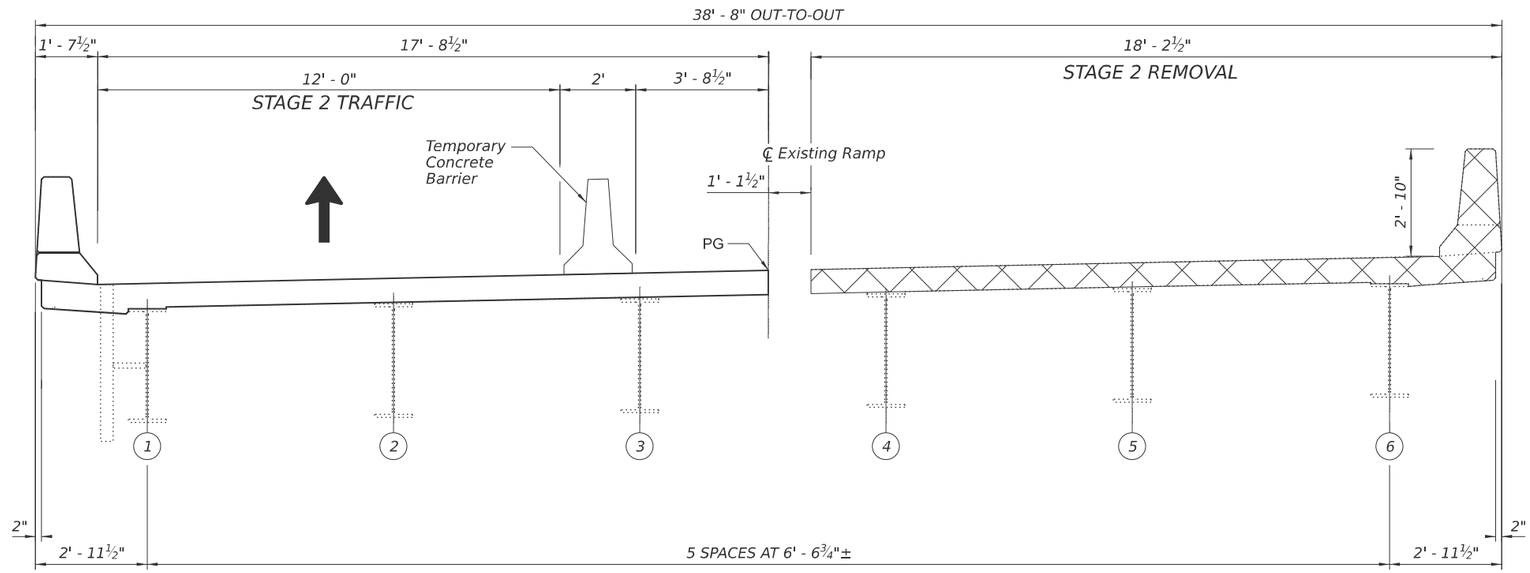

STAGE 2 REMOVAL

(Looking North - Upstation)

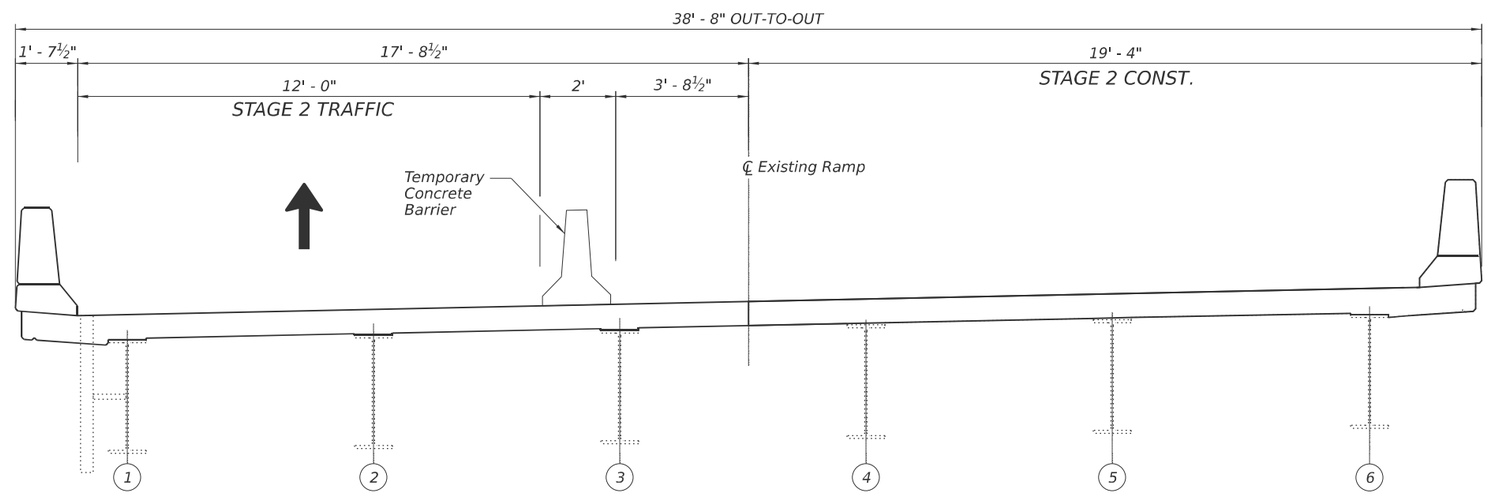

STAGE 2 CONSTRUCTION

(Looking North - Upstation)

MODEL: $MODELNAME$
FILE NAME: pw://jacobs-us-va-pw.bentley.com:jacobs-us-va-pw-04/Documents/D315220602 - ILDOT - I-55 I-70 Rehabilitation 30 Project Data/PID/ST/ABNA/Sht/0820024-005-STAGE 2-TYPSECTION.dgn

ABNA DESIGN FIRM REG. 184.002117	USER NAME = mjones	DESIGNED - ---	REVISED -	STATE OF ILLINOIS DEPARTMENT OF TRANSPORTATION	STAGE 2 - TYPICAL SECTION STRUCTURE NO. 082-0024
		DRAWN - ---	REVISED -		
	PLOT SCALE = $SCALE$	CHECKED - ---	REVISED -		
	PLOT DATE = 11/26/2025	DATE -	REVISED - PRELOAD - SELECT REVISION TO ADVANCE		SCALE: NTS SHEET 5 OF 16 SHEETS STA. TO STA.

F.A.I. RTE.	SECTION	COUNTY	TOTAL SHEETS	SHEET NO.
70	Section82-(5,6)RS-2, 60-6RS-2	MADISON & ST. CLAIR	678	544B
		CONTRACT NO. 76E84		
		ILLINOIS	FED. AID PROJECT	

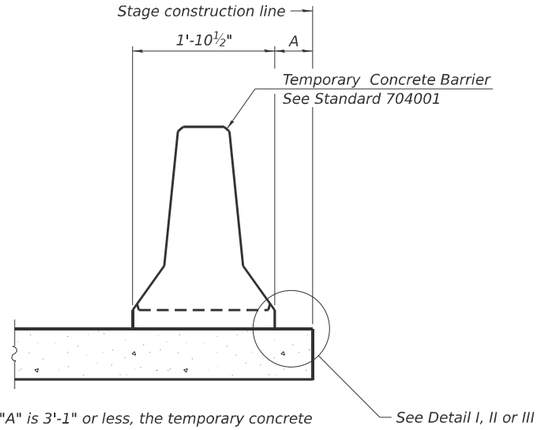

When "A" is 3'-1" or less, the temporary concrete barrier shall be restrained to the new slab according to Detail I, II or III. No restraint is required when "A" is greater than 3'-1".

NEW SLAB OR NEW DECK BEAM

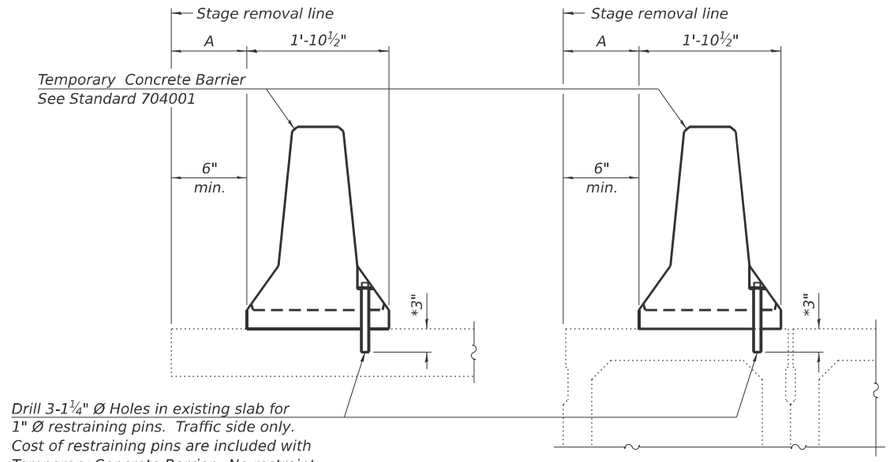

EXISTING SLAB

EXISTING DECK BEAM

SECTIONS THRU SLAB OR DECK BEAM

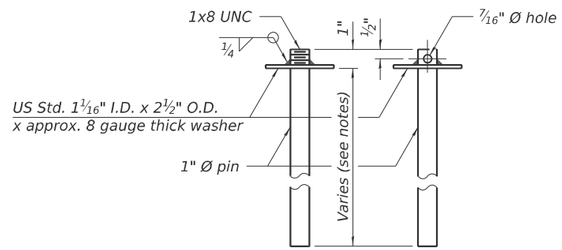

RESTRAINING PIN

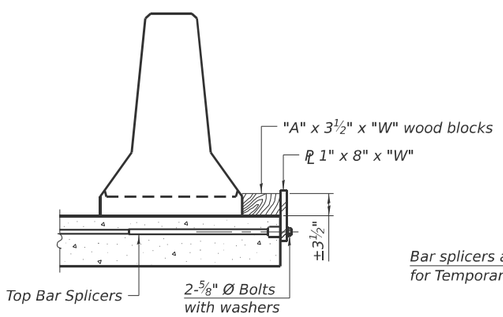

DETAIL I

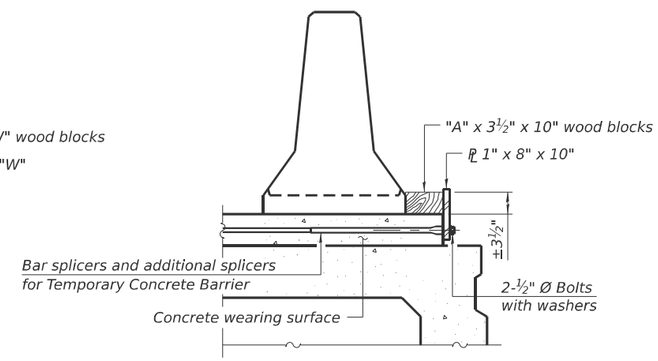

DETAIL II

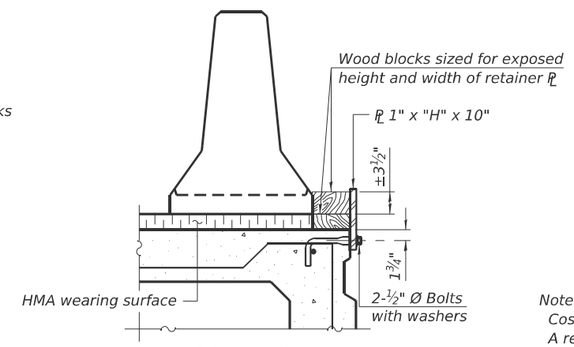

DETAIL III

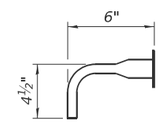

BAR SPLICER FOR #4 BAR - DETAIL III

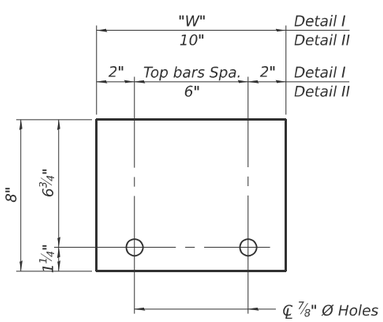

STEEL RETAINER PL 1" x 8" x "W"

(Detail I and II)

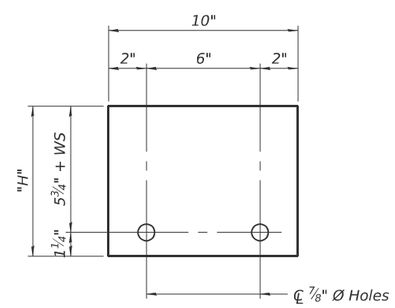

STEEL RETAINER PL 1" x "H" x 10"

(Detail III)

RAILING CRITERIA

NCHRP 350 Test Level	3
Railing Weight (plf)	440

R-27

5-15-2023

Notes:

Cost of retainer assembly is included with Temporary Concrete Barrier.

A retainer assembly shall be located at the approximate ℄ of each temporary concrete barrier.

The retainer plate shall not be removed until the concrete on the adjacent stage is ready to be poured. For Detail III applications the retainer plate shall not be removed until just prior to placing the adjacent beam.

When the 'A' dimension is less than 1½", the wood block shall be omitted and the barrier shall be placed in direct contact with the steel retainer plate. For deck beam applications the minimum required 'A' distance is 6" to accommodate the shear key clamping device.

Detail I - Installation for a new bridge deck or bridge slab.

Detail II - Installation for a new deck beam with an initial concrete wearing surface. Additional bar splicers shall be provided at 6'-0" centers and paired with the bar splicers of the concrete wearing surface reinforcement to accommodate the installation of the retainer assemblies. The cost of the additional bar splicers is included with the concrete wearing surface.

Detail III - Installation for a new deck beam with no initial wearing surface or with an initial hot-mix asphalt (HMA) wearing surface present. The deck beam directly beneath the temporary concrete barrier shall be fabricated with bar splicer inserts in the side of the beam, as detailed, to accommodate the installation of the retainer assemblies. A pair of bar splicers, 6" apart, shall be placed at 6'-0" centers along the length of the beam. The cost of the bar splicers is included with the deck beam.

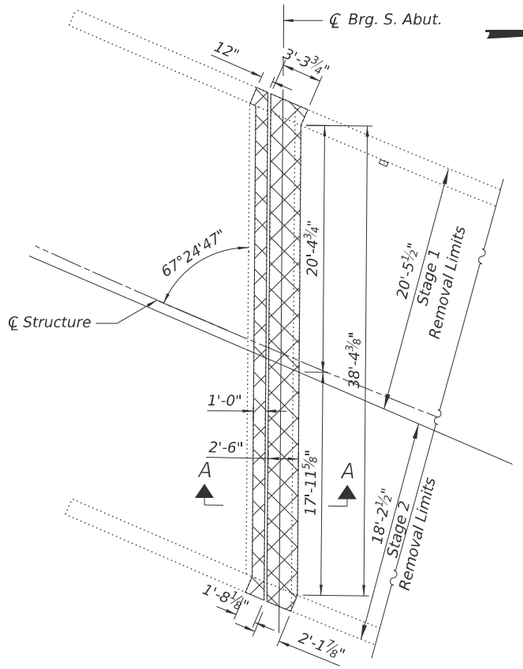

S. ABUTMENT

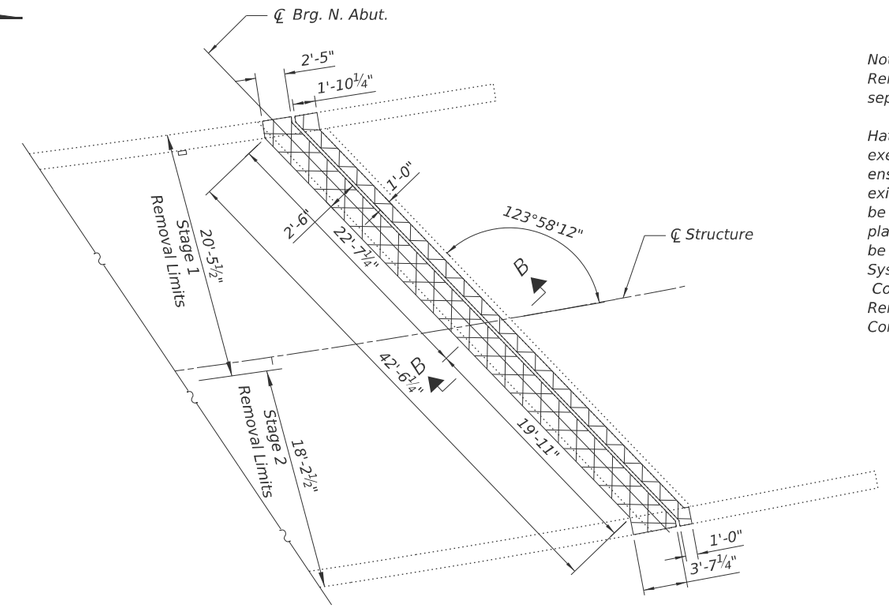

N. ABUTMENT

REMOVAL PLAN

Notes:
Removal of the existing expansion joints will not be paid for separately but shall be included in the cost for Concrete Removal.

Hatched areas indicate concrete sections to be removed. Care shall be exercised by the contractor during and following concrete removal to ensure the existing reinforcement remaining in place is not damaged. All existing reinforcing to be incorporated into new construction shall be blast-cleaned, straightened and properly positioned prior to concrete placement. Any reinforcement damaged during concrete removal shall be repaired or replaced using an approved Mechanical Bar Splicer System at the Contractors expense.
Cost of removal shall be included with pay item for Concrete Removal. Cost of replacement shall be included with pay item for Concrete Superstructure.

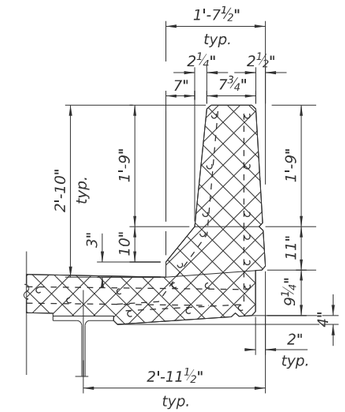

EXISTING PARAPET SECTION

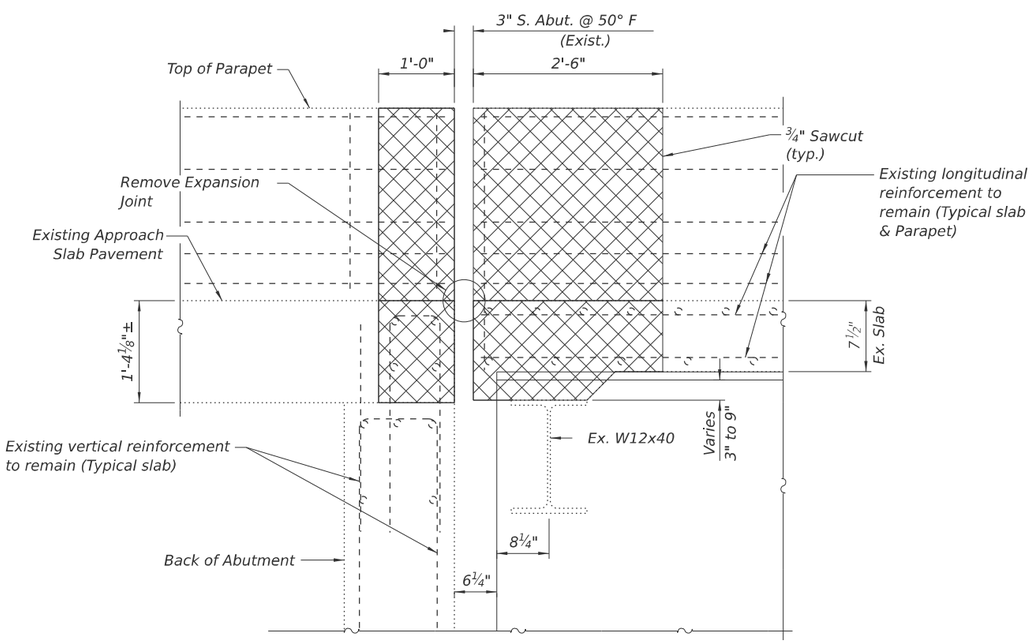

SECTION A-A
(South Abutment)

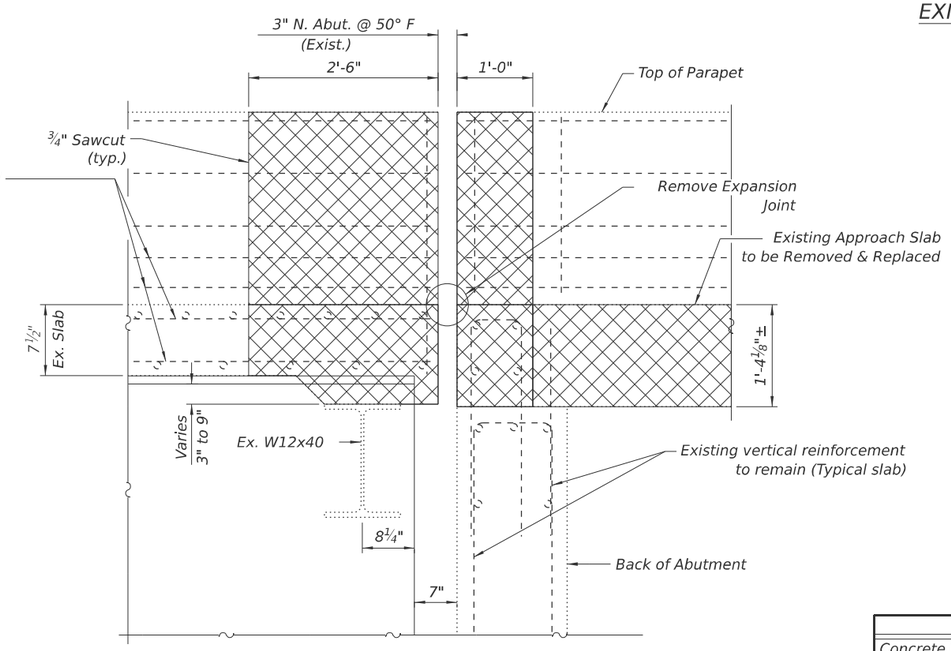

SECTION B-B
(North Abutment)

LEGEND

Concrete Removal

BILL OF MATERIAL

Item	Unit	Total
Concrete Removal	Cu. Yd.	13.3

MODEL: $MODELNAME$
FILE NAME: pw://jacobs-us-va-pw.bentley.com:jacobs-us-va-pw-04/Documents/D3152206.02 - ILDOT - I-55 I-70 Rehabilitation/30 Project Data/PHD/ST/ABNA/Sht0820024-007-JOINT DETLS01.dgn

ABNA DESIGN FIRM REG. 184.002117

USER NAME = mjones	DESIGNED - SEA	REVISED -	
	DRAWN - MBJ	REVISED -	
PLOT SCALE = $SCALE$	CHECKED - SEA	REVISED -	
PLOT DATE = 11/26/2025	DATE - 2025/10/03	REVISED -	

STATE OF ILLINOIS
DEPARTMENT OF TRANSPORTATION

EXPANSION JOINT REMOVAL
STRUCTURE NO. 082-0024

SCALE: NTS | SHEET 7 OF 16 SHEETS | STA. | TO STA.

F.A.I. RTE.	SECTION	COUNTY	TOTAL SHEETS	SHEET NO.
70	Section82-(5,6)RS-2, 60-6RS-2	MADISON & ST. CLAIR	678	545
		CONTRACT NO. 76E84		
		ILLINOIS FED. AID PROJECT		

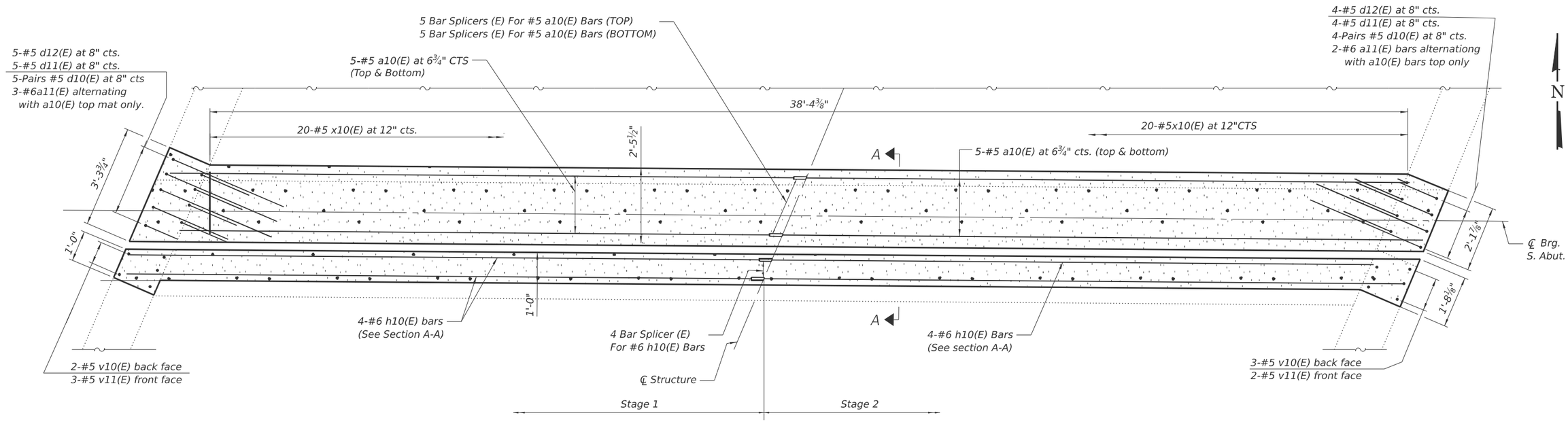

SOUTH ABUTMENT REPAIR PLAN

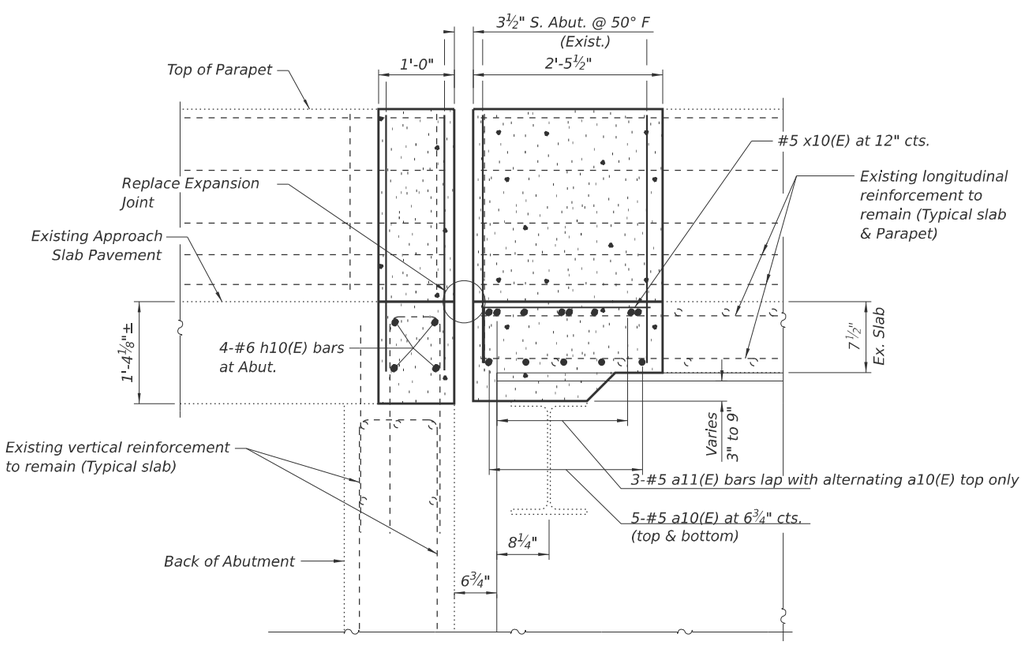

SECTION A-A
(South Abutment)

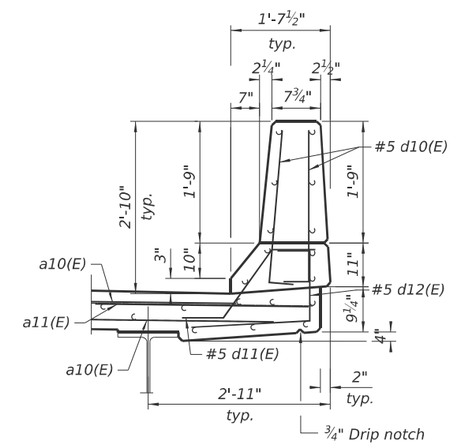

PARAPET REPAIR SECTION

Minimum Bar Lap

#5 Bars = 3'-10"
#6 Bars = 5'-3"

BILL OF MATERIAL

Item	Unit	Total
Concrete Superstructure	Cu. Yd.	6.3

MODEL: $MODELNAME$
FILE NAME: pw://jacobs-us-a-pw.bentley.com:jacobs-us-a-pw-04/Documents/D315220602 - ILDOT - I-55 I-70 Rehabilitation:30 Project Data/PID/ST/ABNA/Sht/0820024-008-JOINT DETLS02.dgn

ABNA DESIGN FIRM REG. 184.002117

USER NAME = mjones	DESIGNED - SEA	REVISED -	
	DRAWN - MBJ	REVISED -	
PLOT SCALE = $SCALE$	CHECKED - SEA	REVISED -	
PLOT DATE = 11/26/2025	DATE - 2025/10/03	REVISED -	

STATE OF ILLINOIS
DEPARTMENT OF TRANSPORTATION

EXPANSION JOINT REPAIR – SOUTH ABUTMENT
STRUCTURE NO. 082–0024

SCALE: NTS | SHEET 8 OF 16 SHEETS | STA. | TO STA.

F.A.I. RTE.	SECTION	COUNTY	TOTAL SHEETS	SHEET NO.
70	Section82-(5,6)RS-2, 60-6RS-2	MADISON & ST. CLAIR	678	546
		CONTRACT NO. 76E84		
	ILLINOIS	FED. AID PROJECT		

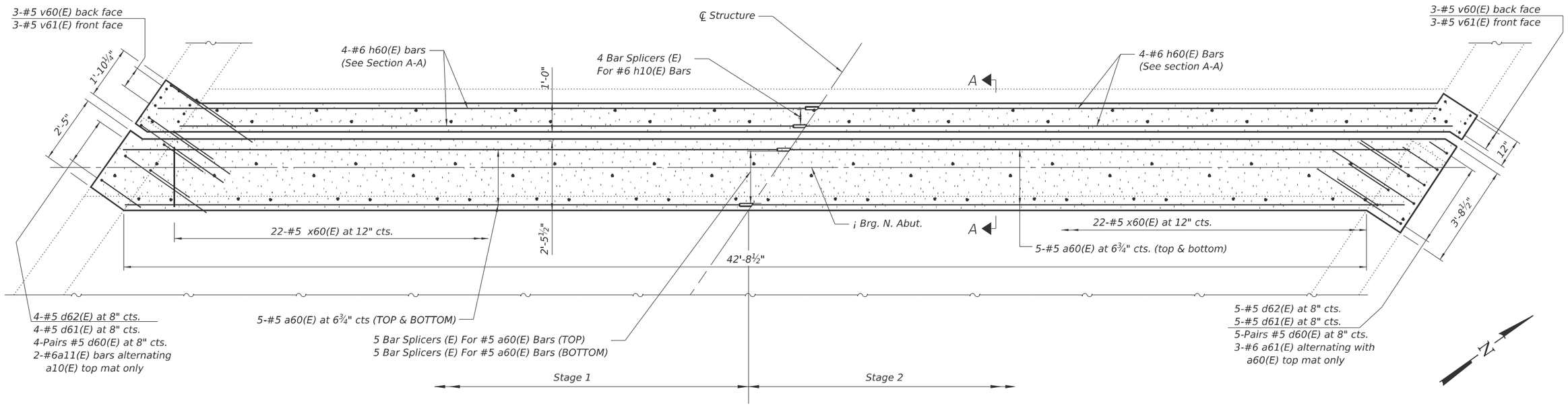

NORTH ABUTMENT REPAIR PLAN

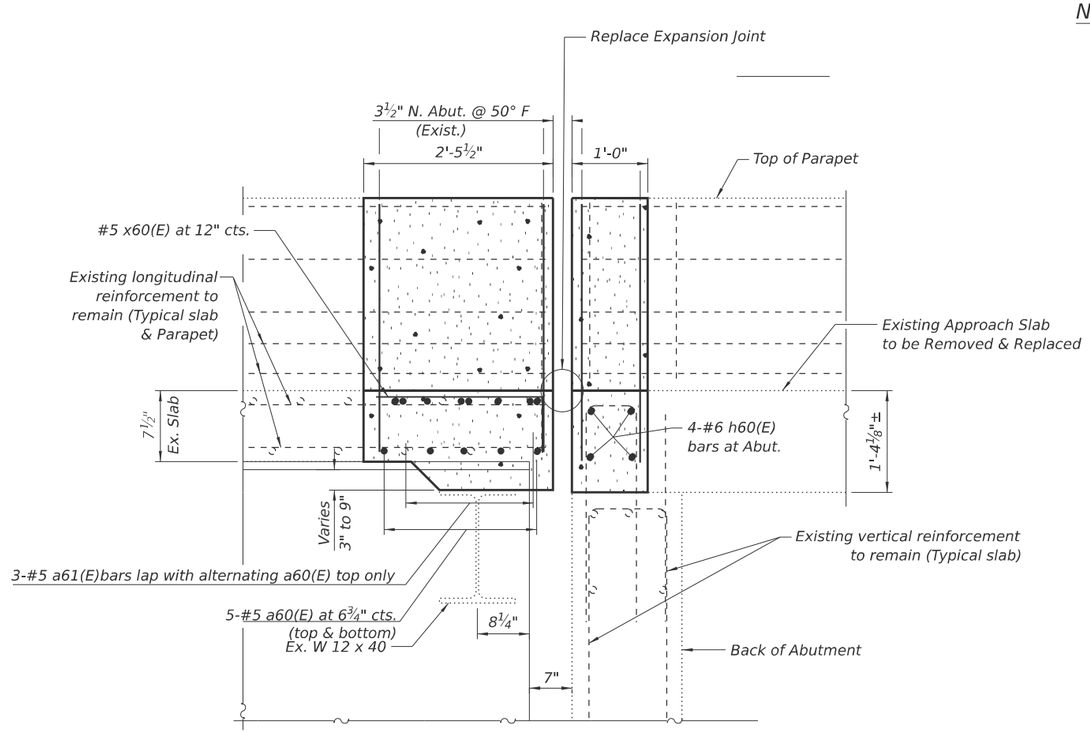

SECTION A-A

(North Abutment)

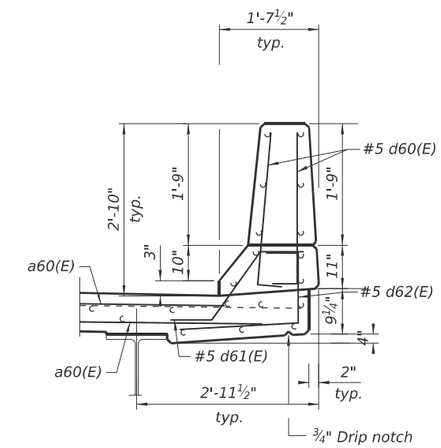

PARAPET REPAIR SECTION

Minimum Bar Lap

#5 Bars = 3'-10"
#6 Bars = 4'-5"

BILL OF MATERIAL

Item	Unit	Total
Concrete Superstructure	Cu. Yd.	7.0

MODEL: $MODELNAME$
FILE NAME: pw://jacobs-us-a-pw.bentley.com:jacobs-us-a-pw-04/Documents/D3152206.02 - ILDOT - I-55 I-70 Rehabilitation/30 Project Data/PID/ST/ABNA/Sht/0820024-009-JOINT DETLS03.dgn

ABNA DESIGN FIRM REG. 184.002117

USER NAME = mjones	DESIGNED - SEA	REVISED -	
	DRAWN - MBJ	REVISED -	
PLOT SCALE = $SCALE$	CHECKED - SEA	REVISED -	
PLOT DATE = 11/26/2025	DATE - 2025/10/03	REVISED -	

STATE OF ILLINOIS
DEPARTMENT OF TRANSPORTATION

EXPANSION JOINT REPAIR – NORTH ABUTMENT
STRUCTURE NO. 082–0024

SCALE: NTS | SHEET 9 OF 16 SHEETS | STA. | TO STA.

F.A.I. RTE.	SECTION	COUNTY	TOTAL SHEETS	SHEET NO.
70	Section82-(5,6)RS-2, 60-6RS-2	MADISON & ST. CLAIR	678	547
		CONTRACT NO. 76E84		
		ILLINOIS	FED. AID PROJECT	

SOUTH ABUTMENT BILL OF MATERIAL

a10(E)	16	#5	20'-4"	
a11(E)	5	#6	6'-0"	
d10(E)	20	#5	3'-0"	
d11(E)	10	#5	2'-5"	
d12(E)	10	#5	3'-10"	
h10(E)	8	#6	20'-4"	
x10(E)	40	#5	2'-8"	
v10(E)	6	#5	3'10"	
v11(E)	6	#5	4'-0"	
Reinforcement Bars, Epoxy Coated			Pound	900
Bar Splicers			Each	14

NORTH ABUTMENT BILL OF MATERIAL

a60(E)	20	#5	23'-9"	
a61(E)	5	#6	6'-0"	
d60(E)	18	#5	3'-0"	
d61(E)	9	#5	2'-5"	
d62(E)	9	#5	3'-10"	
h60(E)	8	#6	23'-9"	
x60(E)	44	#5	2'-8"	
v60(E)	5	#5	3'10"	
v61(E)	5	#5	4'-0"	
Reinforcement Bars, Epoxy Coated			Pound	1110
Bar Splicers			Each	14

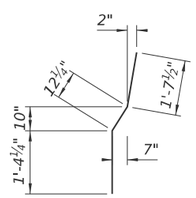

BAR v11(E) or v61(E)

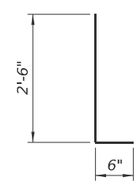

BAR d10(E) or d60(E)

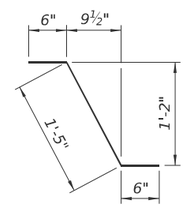

BAR d11(E) or d61(E)

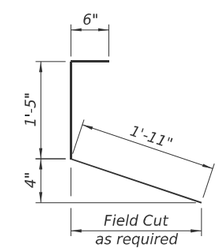

BAR d12(E) or d62(E)

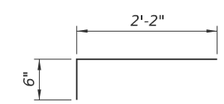

BAR x10(E) or x60(E)

Notes:

For details of Preformed Joint Strip Seal Expansion Joints, see Sheet No. 11.

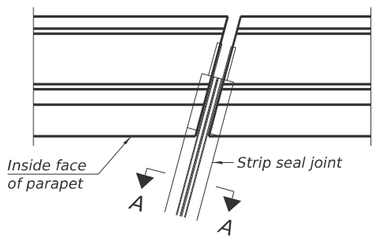

FOR SKEWS ≤ 30°

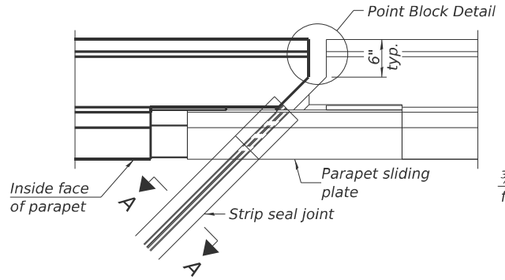

FOR SKEWS > 30°

PLAN AT PARAPET

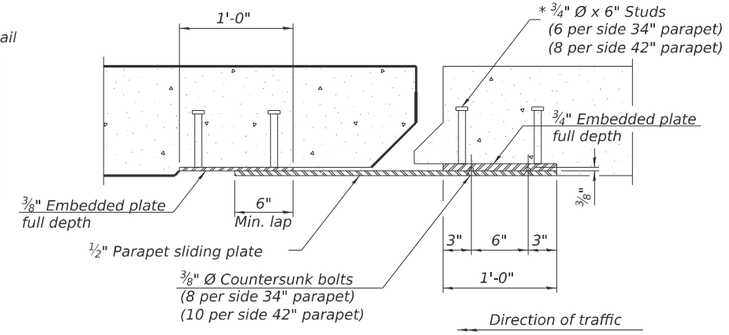

SECTION B-B

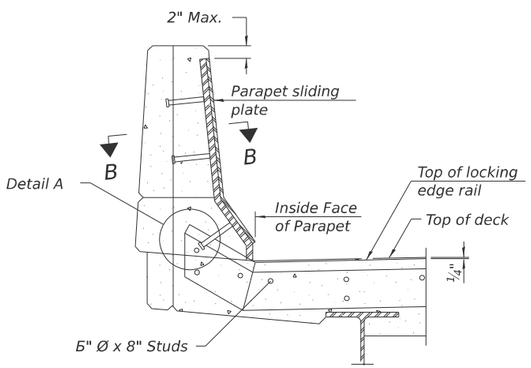

ELEVATION AT PARAPET

(Skews > 30° shown. Skews ≤ 30° similar except as shown in plan view.)

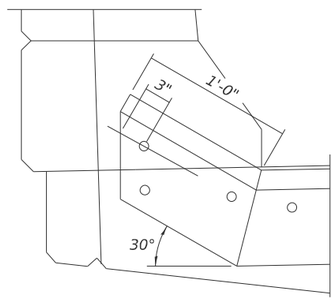

DETAIL A

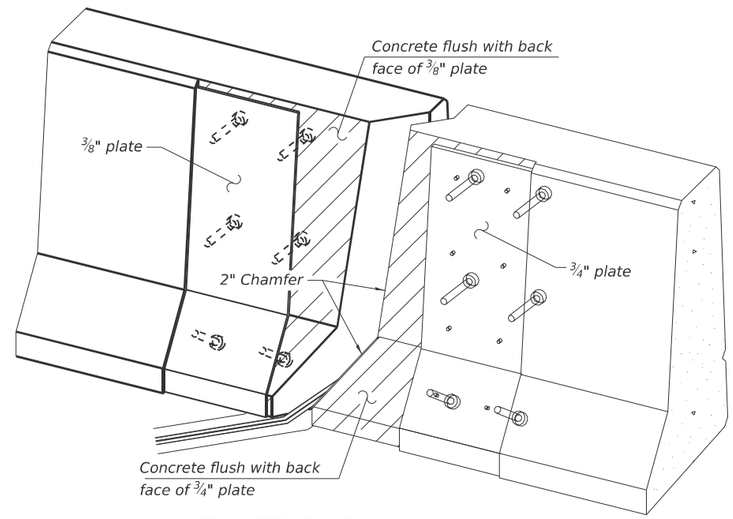

TRIMETRIC VIEW

(Showing embedded plates only)

Notes:

The strip seal shall be made continuous and shall have a minimum thickness of ¼". The configuration of the strip seal shall match the configuration of the locking edge rails. Open or "webbed" strip seal gland configurations are not permitted. The gland shall be sized for a maximum rated movement of 4 inches.

The locking edge rails depicted are configured for typical applications and are conceptual only. The actual configuration of the locking edge rails and matching strip seal may vary from manufacturer to manufacturer provided they fit the application and meet the minimum anchorage shown. Flanged edge rails, however, will not be allowed.

The manufacturer's recommended installation methods shall be followed.

All steel components shall be galvanized after fabrication according to Article 520.03 of the Standard Specifications.

The Maximum space between locking edge rail segments shall be 3/16" and sealed with a suitable sealant; however, any rail joint within 10' measured perpendicular to the face of the curb or parapet shall be welded as shown in the locking edge rail splice detail.

Cost of parapet sliding plates, embedded plates, and anchorage studs included with Preformed Joint Strip Seal.

34" F-shape barrier shown, 42" F-shape similar as noted.

The concrete opening below the strip seal will vary based on the locking edge rail chosen by the Contractor. Deck and parapet lengths shown elsewhere in the plans are dimensioned to the concrete opening, not the joint opening, and are based on the rolled locking edge rail. If the Contractor elects to use a different locking edge rail, dimensional adjustments may be required. One exception to this would be the strip seal joint at the end of the precast bridge approach slab. For these cases the pavement connector length shall be adjusted, not the length of the bridge approach slab.

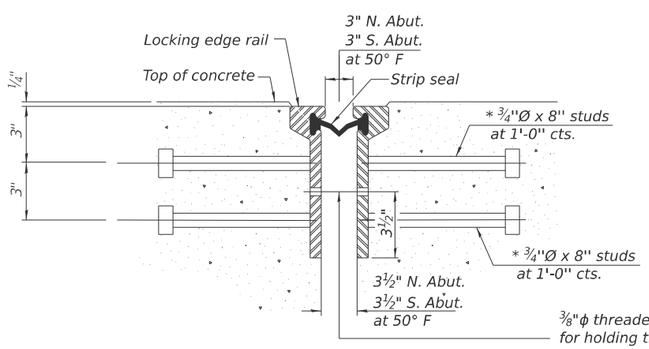

SHOWING ROLLED RAIL JOINT

⅜"ϕ threaded rods in 7/16" ϕ holes at ±4'-0" cts. for holding the proper joint opening based on the temperature during the deck pour. Place to miss studs. All rods shall be burned, or sawed off flush with the plates after concrete is set.

SECTION A-A

* Granular or solid flux filled headed studs conforming to Article 1006.32 of the Std. Specs., automatically end welded.

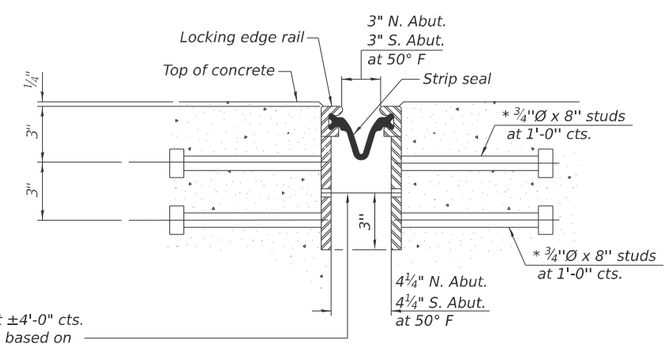

SHOWING WELDED RAIL JOINT

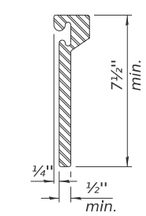

ROLLED
(EXTRUDED) RAIL

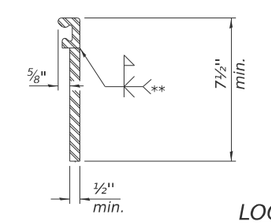

WELDED RAIL

LOCKING EDGE RAILS

** Back gouge not required if complete joint penetration is verifed by mock-up.

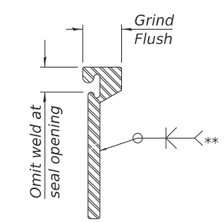

LOCKING EDGE RAIL SPLICE

The inside of the locking edge rail groove shall be free of weld residue. Rolled rail shown, welded rail similar.

BILL OF MATERIAL

Item	Unit	Total
Preformed Joint Strip Seal	Foot	89.0

EJ-SS (TALL WITH GUTTER)

10-1-19

MODEL: $MODELNAME$
FILE NAME: pw://jacobs-us-a-pw.bentley.com:jacobs-us-a-pw-04/Documents/D3152206.02 - ILDOT - I-55 I-70 Rehabilitation/30 Project Data/PID/ST/ABNA/Sht/0820024-011-JOINT DETLS05.dgn

ABNA DESIGN FIRM REG. 184.002117

USER NAME = mjones	DESIGNED - SEA	REVISED -	
	DRAWN - MBJ	REVISED -	
PLOT SCALE = $SCALE$	CHECKED - SEA	REVISED -	
PLOT DATE = 11/26/2025	DATE - 2025/10/03	REVISED -	

STATE OF ILLINOIS
DEPARTMENT OF TRANSPORTATION

PREFORMED JOINT STRIP SEAL
STRUCTURE NO. 082–0024

SCALE: NTS | SHEET 11 OF 16 SHEETS | STA. | TO STA.

F.A.I. RTE.	SECTION	COUNTY	TOTAL SHEETS	SHEET NO.
70	Section82-(5,6)RS-2, 60-6RS-2	MADISON & ST. CLAIR	678	549
		CONTRACT NO. 76E84		
		ILLINOIS	FED. AID PROJECT	

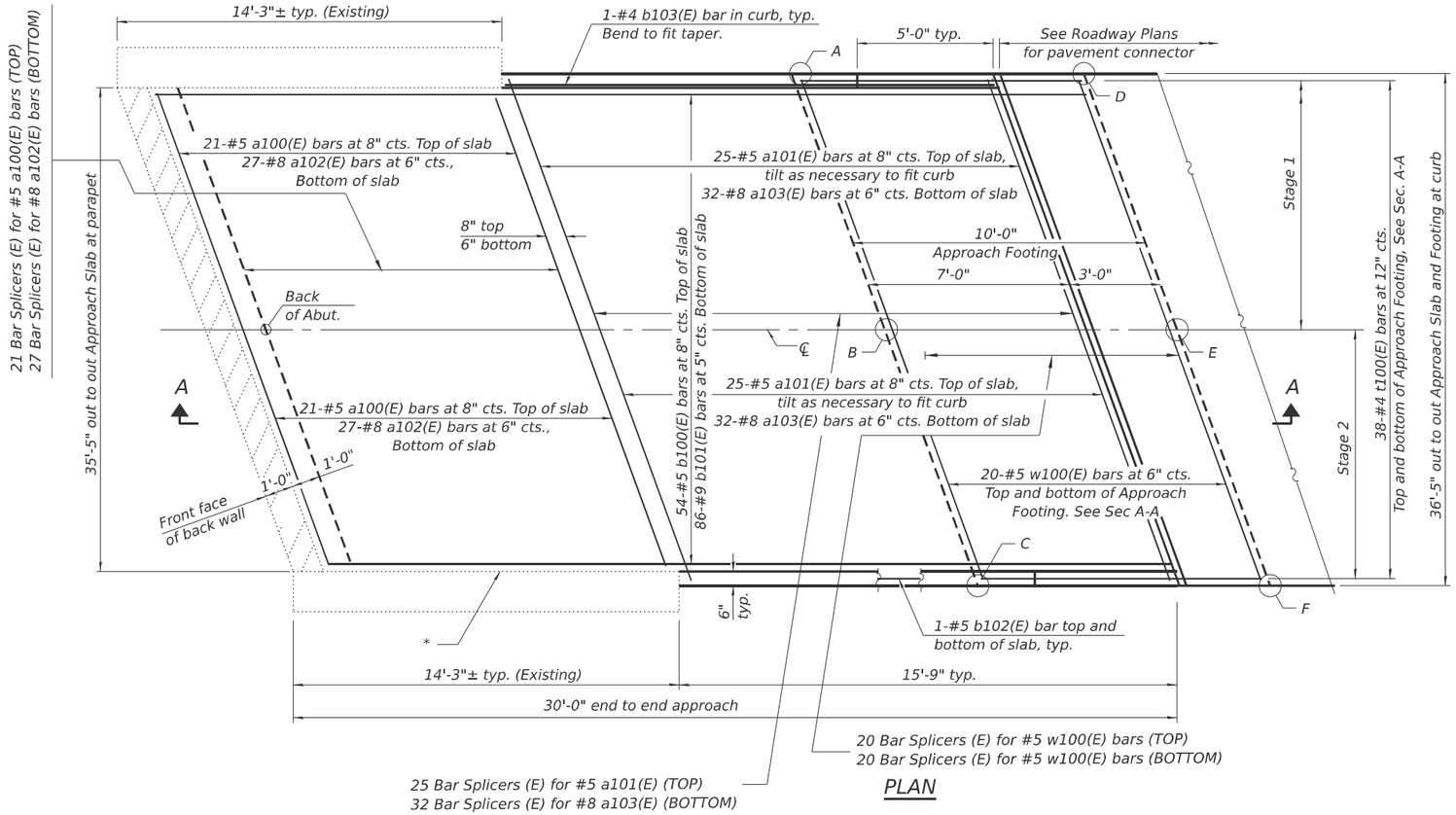

PLAN

N

TOP AND BOTTOM ELEVATIONS FOR APPROACH FOOTING

Approach		
Point/ Location	Top	Bottom
A -	433.16	432.33
B -	433.65	432.82
C -	434.08	433.25
D -	433.08	432.25
E -	433.59	432.76
F -	434.05	433.22

* ½"Preformed Expansion Joint Filler according to Article 1051.09 of the Standard Specifications; full depth of slab, full length of parapet. Typ. each parapet.

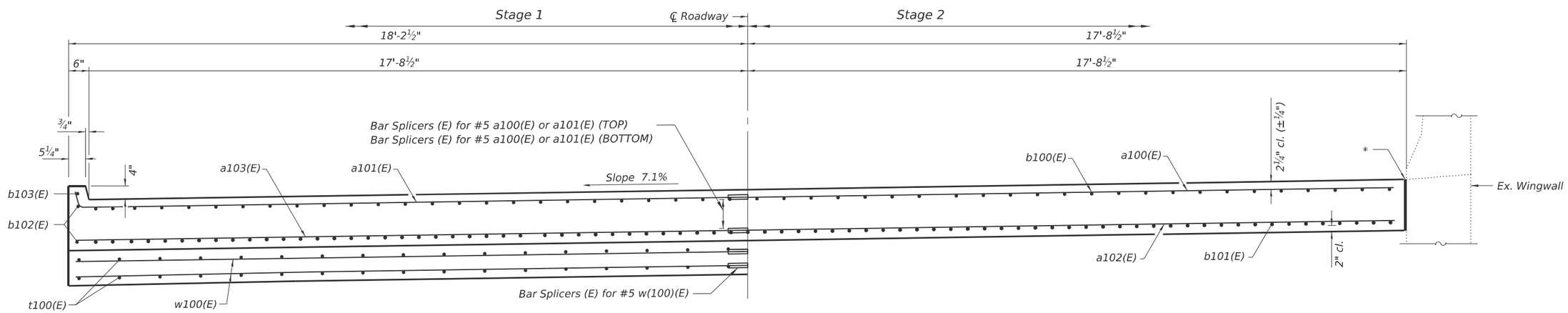

AT APPROACH FOOTING

NEAR ABUTMENT

CROSS SECTION
(Looking North)

(Sheet 1 of 2)

MODEL: $MODELNAME$
FILE NAME: pw://jacobs-us-va-pw.bentley.com:jacobs-us-va-pw-04/Documents/D3152206.02 - ILDOT - I-55 I-70 Rehabilitation/30 Project Data/PID/STATABNA/Sht/0820024-012-APPR SLAB01.dgn

ABNA DESIGN FIRM REG. 184.002117

USER NAME = mjones	DESIGNED - SEA	REVISED -	
	DRAWN - MBJ	REVISED -	
PLOT SCALE = $SCALE$	CHECKED - SEA	REVISED -	
PLOT DATE = 12/3/2025	DATE - 2025/10/03	REVISED -	

STATE OF ILLINOIS
DEPARTMENT OF TRANSPORTATION

BRIDGE APPROACH SLAB DETAILS 01
STRUCTURE NO. 082-0024

SCALE: NTS | SHEET 12 OF 16 SHEETS | STA. | TO STA.

F.A.I. RTE.	SECTION	COUNTY	TOTAL SHEETS	SHEET NO.
70	Section82-(5,6)RS-2, 60-6RS-2	MADISON & ST. CLAIR	678	550
		CONTRACT NO. 76E84		
		ILLINOIS FED. AID PROJECT		

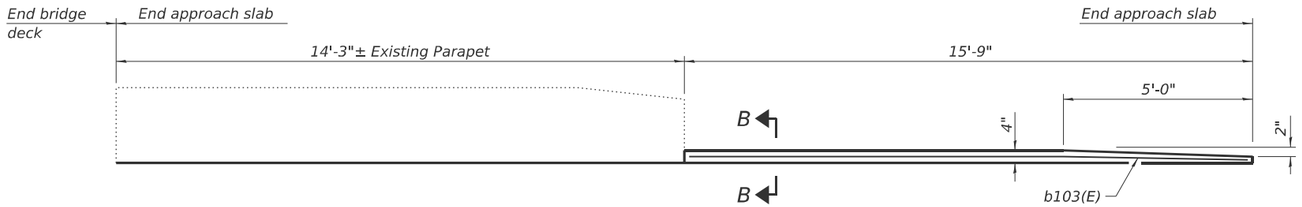

INSIDE ELEVATION OF PARAPET AND CURB

Notes:
Approach slab shall be paid for as Concrete Superstructure (Approach Slab).
Approach footing concrete shall be paid for as Concrete Structures.
The approach footing maximum applied service bearing pressure (Qmax) = 2.0 ksf.
Cost of excavation for approach footing included with Concrete Structures.

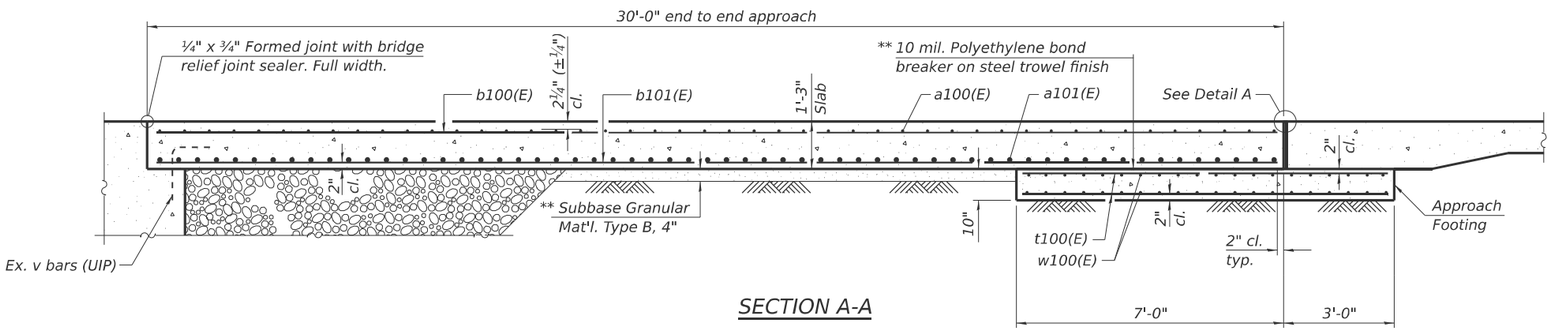

SECTION A-A

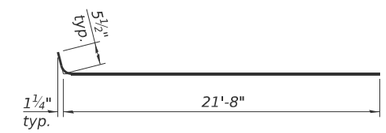

BAR a101(E)

NORTH APPROACH
BILL OF MATERIAL

Bar	No.	Size	Length	Shape
a100(E)	42	#5	21'-1"	
a101(E)	50	#5	22'-0"	
a102(E)	54	#8	21'-1"	
a103(E)	64	#8	21'-8"	
b100(E)	54	#5	29'-8"	
b101(E)	86	#9	29'-8"	
b102(E)	4	#5	15'-5"	
b103(E)	2	#4	15'-5"	
t100(E)	76	#4	9'-8"	
w100(E)	80	#5	21'-8"	
Concrete Superstructure (Approach Slab)			Cu. Yd.	50.9
Concrete Structures			Cu. Yd.	13.4
Reinforcement Bars, Epoxy Coated			Pound	21550
Bar Splicers			Each	145

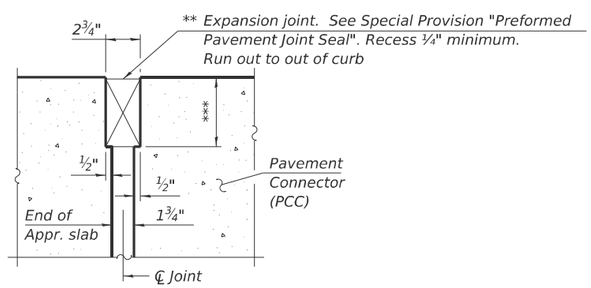

DETAIL A

(Detail A shown, applies to Highway Standard 420401 only. Detail A for pavement connector (HMA) may be found on Highway Standard 420406.)

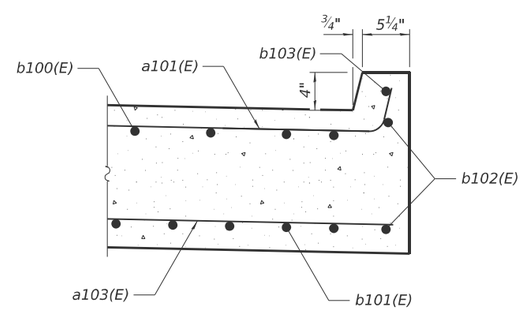

SECTION B-B

Minimum Bar Lap

#5 Bar = 2'-6"
#8 Bar = 5'-2"

** Cost included with Concrete Superstructure (Approach Slab).

*** Per manufacturer recommendations

(Sheet 2 of 2)

MODEL: $MODELNAME$
FILE NAME: pw://jacobs-us-a-pw.bentley.com:jacobs-us-va-pw-04/Documents/D3152206.02 - ILDOT - I-55 I-70 Rehabilitation/30 Project Data/PID/ST/ABNA/Sht/0820024-013-APPR SLAB02.dgn

ABNA DESIGN FIRM REG. 184.002117

USER NAME = mjones	DESIGNED - SEA	REVISED -	
	DRAWN - MBJ	REVISED -	
PLOT SCALE = $SCALE$	CHECKED - SEA	REVISED -	
PLOT DATE = 11/26/2025	DATE - 2025/10/03	REVISED -	

STATE OF ILLINOIS
DEPARTMENT OF TRANSPORTATION

BRIDGE APPROACH SLAB DETAILS 02
STRUCTURE NO. 082-0024

SCALE: NTS | SHEET 13 OF 16 SHEETS | STA. | TO STA.

F.A.I. RTE.	SECTION	COUNTY	TOTAL SHEETS	SHEET NO.
70	Section82-(5,6)RS-2, 60-6RS-2	MADISON & ST. CLAIR	678	551

CONTRACT NO. 76E84

ILLINOIS | FED. AID PROJECT

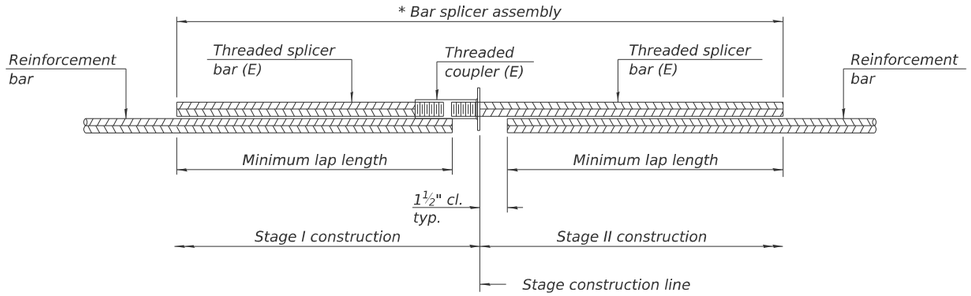

STANDARD BAR SPLICER ASSEMBLY PLAN

Only bar splicer assemblies as presented on the approved QPL list may be used.

Threaded splicer bar length = min. lap length + 1½" + thread length

* Epoxy not required on Bar Splicer Assembly components used in conjunction with black bars.

Location	Bar size	No. assemblies required	Minimum lap length
S. Abut.	5	10	3'-10"
S. Abut.	6	4	4'-5"
N. Abut.	5	10	3'-10"
N. Abut.	6	4	4'-5"
N. Appr. Slab	5	86	2'-6"
N. Appr. Slab	8	59	5'-2"

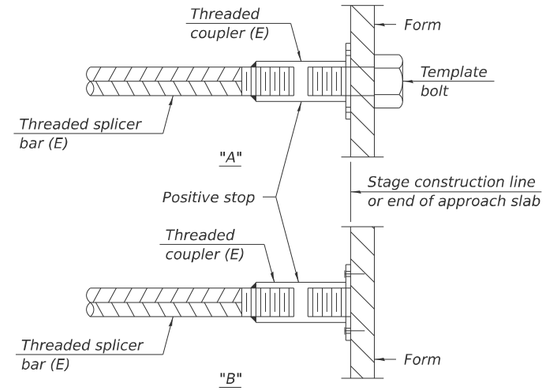

INSTALLATION AND SETTING METHODS

"A" : Set bar splicer assembly by means of a template bolt.
"B" : Set bar splicer assembly by nailing to wood forms or cementing to steel forms.
(E) : Indicates epoxy coating.

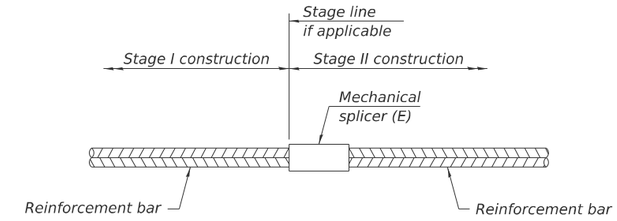

STANDARD MECHANICAL SPLICER

Location	Bar size	No. assemblies required

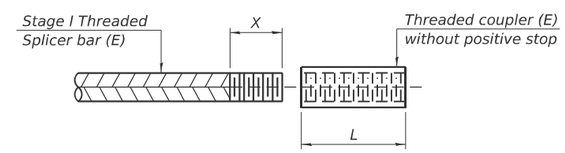

THREADING OF ASSEMBLIES

The threaded length "X" shall be no more than L/2. The bar should be tightened until 0-1 thread(s) is/are exposed.

Notes:
Splicer bars shall be deformed with threaded ends and have a minimum 60 ksi yield strength.
All reinforcement shall be lapped and tied to the splicer bars.
Bar splicer assemblies shall be epoxy coated according to the requirements for reinforcement bars. See Section 508 of the Standard Specifications.
See approved list of bar splicer assemblies and mechanical splicers for alternatives.

BSD-1 4-4-2025

ABNA DESIGN FIRM REG. 184.002117

USER NAME = mjones	DESIGNED - ---	REVISED -
	DRAWN - ---	REVISED -
PLOT SCALE = $SCALE$	CHECKED - ---	REVISED -
PLOT DATE = 12/3/2025	DATE -	REVISED -

STATE OF ILLINOIS
DEPARTMENT OF TRANSPORTATION

BAR SPLICERS
STRUCTURE NO. 082-0024

SCALE: NTS | SHEET 14 OF 16 SHEETS | STA. | TO STA.

F.A.I. RTE.	SECTION	COUNTY	TOTAL SHEETS	SHEET NO.
70	Section82-(5,6)RS-2, 60-6RS-2	MADISON & ST. CLAIR	678	551A

CONTRACT NO. 76E84
ILLINOIS FED. AID PROJECT

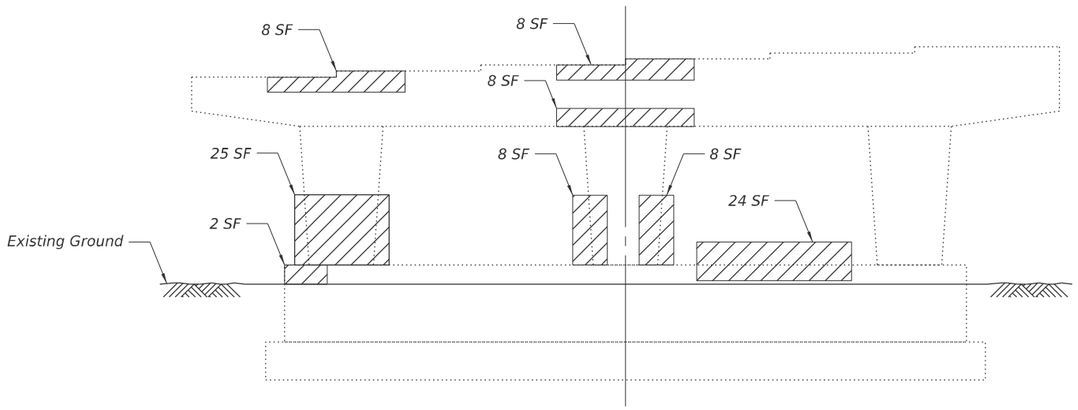

PIER 3 - SOUTH ELEVATION

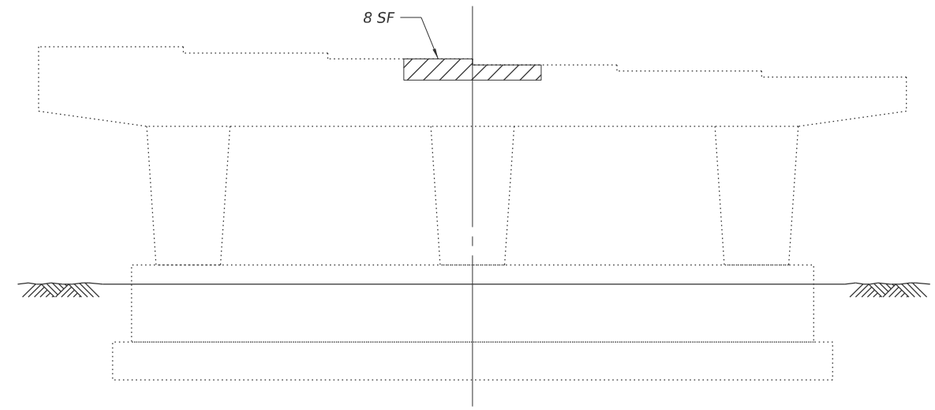

PIER 3 - NORTH ELEVATION

LEGEND

Structural Repair of Concrete
(Depth equal to or less than 5 inches)

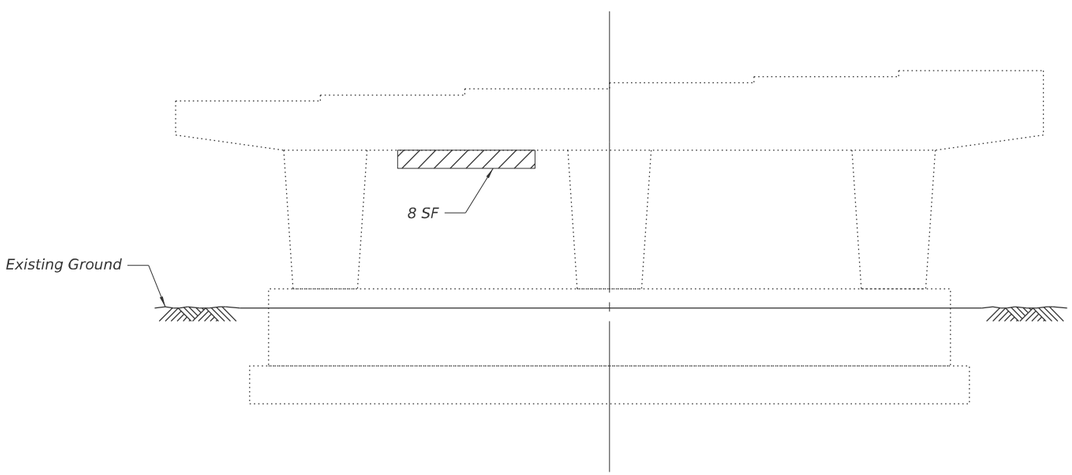

PIER 4 - SOUTH ELEVATION

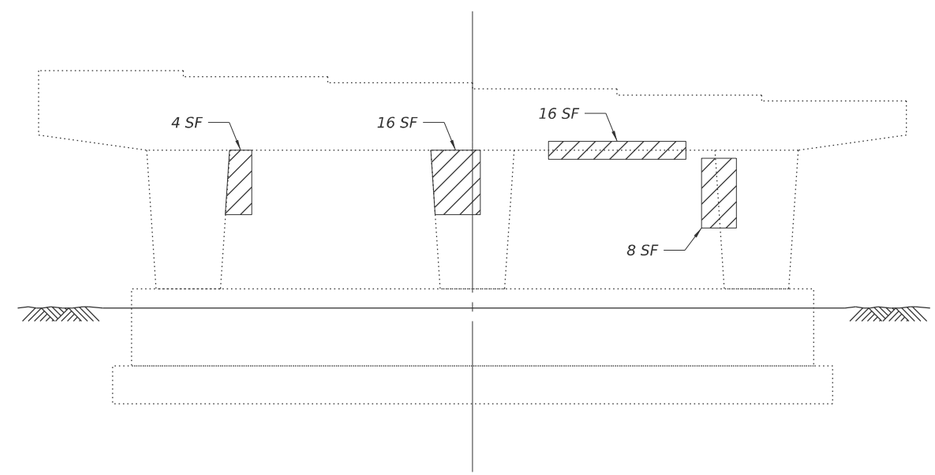

PIER 4 - NORTH ELEVATION

SUBSTRUCTURE REPAIR ELEVATIONS

Note: Repairs are estimates. Actual size and locatin of repairs will be decided upon by the Engineer.

BILL OF MATERIAL

ITEM	UNIT	TOTAL
Structural Repair of Concrete (Depth equal to or less than 5 inches)	Sq. Ft.	189

MODEL: $MODELNAME$
FILE NAME: pw://jacobs-us-a-pw.bentley.com:jacobs-us-a-pw-04/Documents/D3152206.02 - ILDOT - I-55 I-70 Rehabilitation/30 Project Data/PID/ST/ABNA/Sht/0820024-015-SUBSTR01.dgn

ABNA DESIGN FIRM REG. 184.002117

USER NAME = mjones	DESIGNED - SEA	REVISED -	
	DRAWN - MBJ	REVISED -	
PLOT SCALE = $SCALE$	CHECKED - SEA	REVISED -	
PLOT DATE = 11/26/2025	DATE - 2025/10/03	REVISED -	

STATE OF ILLINOIS
DEPARTMENT OF TRANSPORTATION

SUBSTRUCTURE REPAIR 01
STRUCTURE NO. 082-0024

SCALE: NTS | SHEET 15 OF 16 SHEETS | STA. | TO STA.

F.A.I. RTE.	SECTION	COUNTY	TOTAL SHEETS	SHEET NO.
70	Section82-(5,6)RS-2, 60-6RS-2	MADISON & ST. CLAIR	678	552

CONTRACT NO. 76E84

ILLINOIS | FED. AID PROJECT

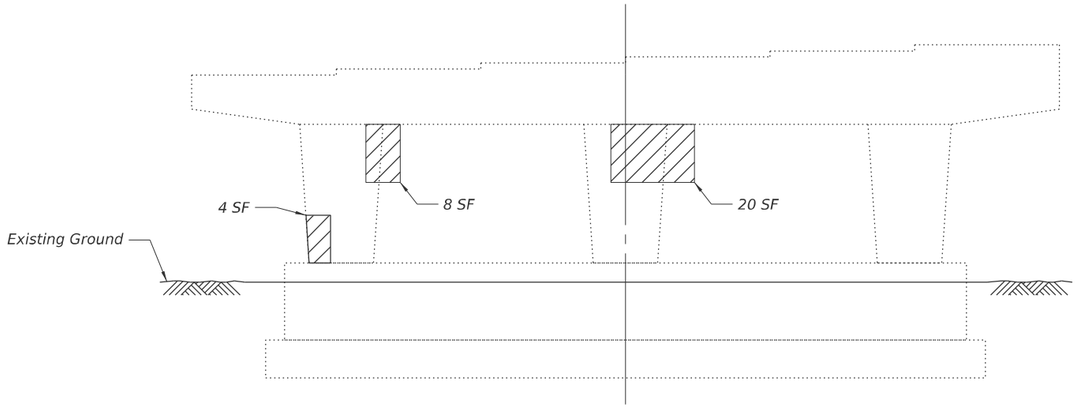

PIER 5 - SOUTH ELEVATION

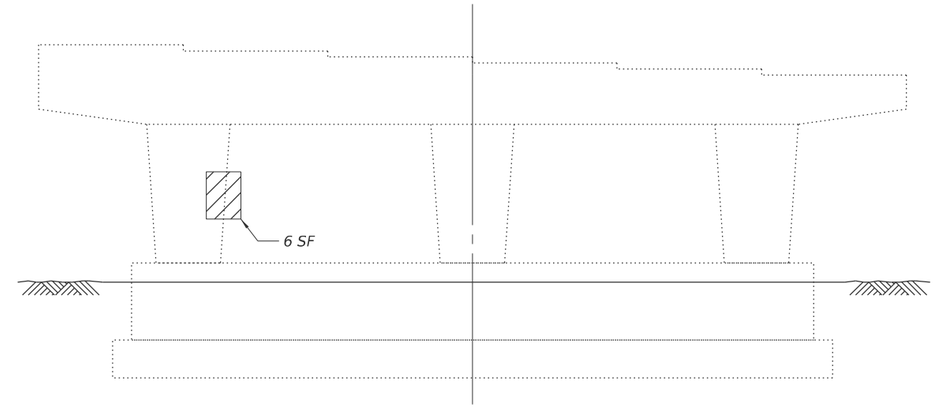

PIER 5 - NORTH ELEVATION

LEGEND

Structural Repair of Concrete
(Depth equal to or less than 5 inches)

SUBSTRUCTURE REPAIR ELEVATIONS

Note: Repairs are estimates. Actual size and locatin of repairs will be decided upon by the Engineer.

MODEL: $MODELNAME$
FILE NAME: pw://jacobs-us-va-pw.bentley.com:jacobs-us-va-pw-04/Documents/D315220602 - ILDOT - I-55 I-70 Rehabilitation 30 Project Data/PID/ST/ABNA/Sht/0820024-016-SUBSTR02.dgn

ABNA DESIGN FIRM REG. 184.002117

USER NAME = mjones	DESIGNED - SEA	REVISED -	
	DRAWN - MBJ	REVISED -	
PLOT SCALE = $SCALE$	CHECKED - SEA	REVISED -	
PLOT DATE = 11/26/2025	DATE - 2025/10/03	REVISED -	

STATE OF ILLINOIS
DEPARTMENT OF TRANSPORTATION

SUBSTRUCTURE REPAIR 02
STRUCTURE NO. 082-0024

SCALE: NTS | SHEET 16 OF 16 SHEETS | STA. | TO STA.

F.A.I. RTE.	SECTION	COUNTY	TOTAL SHEETS	SHEET NO.
70	Section82-(5,6)RS-2, 60-6RS-2	MADISON & ST. CLAIR	678	553

CONTRACT NO. 76E84

ILLINOIS | FED. AID PROJECT

Benchmark: Aluminum Disk in concrete swale (top of paved ditch) in median of Ramp from I-55/70 NB to IL 203 SB. ELEV. = 424.55'

Existing Structure: Structure Number 082-0025 originally built in 1960 under IDOT Contract I-70-1(25)2. The Structure is 217'-5" long and consist of a 3-Span, WF beam superstructure supported by concrete piers on creosoted timber piles and concrete pile abutments. In 1999 the bridge was rehabilitated under contract ACBHI-70-1(174)3 and the scope of work included removing and replacing the existing superstructure, widening abutments and modifying wingwall and backwall, minor repairs to piers, removing and replacing bearings with low profile fixed and elastomeric expansion bearings, and removing and replacing concrete slopewalls. The structure is 217'-5" from back-to-back abutments on a 57 degree skew. The overall width of the bridge is 38'-8".

Traffic Control: Traffic is to be maintained using stage construction.
Salvage: No salvage of bridge components

DESIGN STRESSES

FIELD UNITS (New Const.)

f'c = 4,000 psi (Superstructure)
fy=60,000 psi (Reinforcement)

FIELD UNITS (Exist. Const.)

f'c = 3,500 psi (Superstructure)
f'c = 3,500 psi (Substructure)
fy = 60,000 psi (Reinforcement)
fy = 50,000 psi (Structural Steel)

SCOPE OF WORK

1) Remove and replace joints at abutments.
2) Repair deck slab.
3) Replace north approach slab West curb.
4) Clean deck drains and approach slab inlets.
5) Full lane sealant waterproofing and HMA overlay.
6) Place concrete sealer under expansion joints.
7) Apply protective coat to barriers and new conrete.
8) Asphalt curb repair.

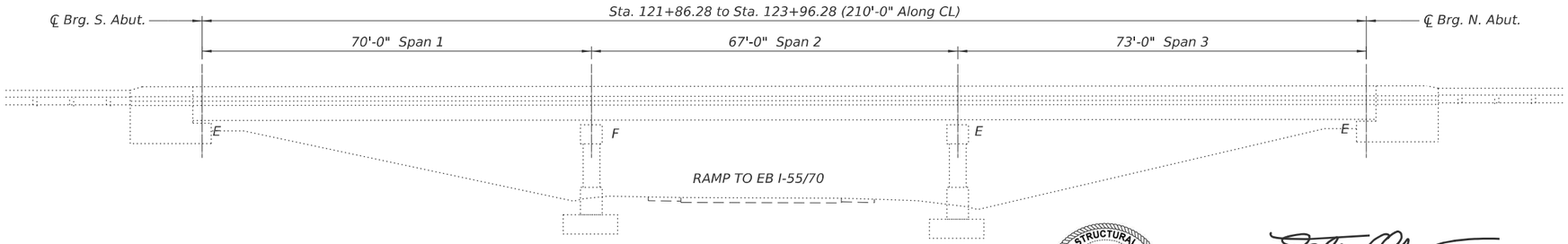

ELEVATION

STEPHEN E. ALSBURY 081-5261 LICENSED STRUCTURAL ENGINEER STATE OF ILLINOIS

Signed: _____
Stephen E. Alsbury, S.E. IL. Lic. No. 081-5261
Expires: 11/30/2026

Date: September 26, 2025

LEGEND

Joint Replacement

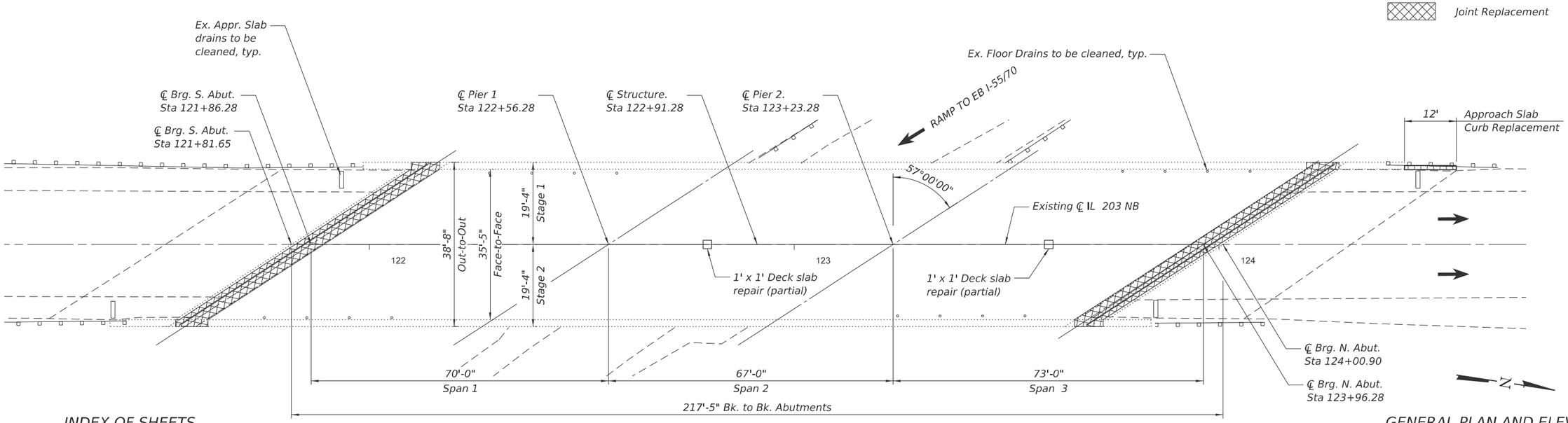

PLAN

INDEX OF SHEETS

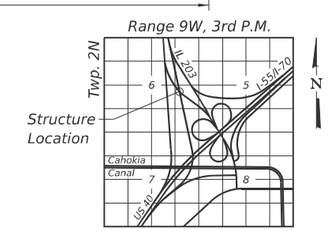

LOCATION SKETCH

GENERAL PLAN AND ELEVATION
IL 203 NB OVER
SB RAMP TO EB I-55/70
F.A.I. RTE. 70
SECTION 82-(5,6)RS-2
ST. CLAIR COUNTY
STATION 122+91.28
STRUCTURE NO. 082-0025

MODEL: $MODELNAME$
FILE NAME: pw://jacobs-us-va-pw.bentley.com:jacobs-us-va-pw-04/Documents/D315220 6.02 - ILDOT - I-55 I-70 Rehabilitation\30 Project Data\PID\STI\ABNA\Shs\0820025-001-GPE.dgn

ABNA DESIGN FIRM REG. 184.002117	USER NAME = mjones	DESIGNED - SEA	REVISED -
		DRAWN - MBJ	REVISED -
	PLOT SCALE = $SCALE$	CHECKED - SEA	REVISED -
	PLOT DATE = 11/26/2025	DATE - 2025/10/03	REVISED -

STATE OF ILLINOIS
DEPARTMENT OF TRANSPORTATION

GENERAL PLAN AND ELEVATION
STRUCTURE NO. 082--0025

SCALE: NTS | SHEET 1 OF 12 SHEETS | STA. | TO STA.

F.A.I. RTE.	SECTION	COUNTY	TOTAL SHEETS	SHEET NO.
70	Section82-(5,6)RS-2, 60-6RS-2	MADISON & ST. CLAIR	678	554
		CONTRACT NO. 76E84		
		ILLINOIS FED. AID PROJECT		

GENERAL NOTES

Reinforcement bars designated (E) shall be epoxy coated.

Prior to pouring the new concrete deck, all heavy or loose rust, loose mill scale, and other loose detrimental foreign material shall be removed from the surfaces in contact with concrete(SSPC – SP3 standards). Tightly adhered paint may remain unless otherwise noted. Removal shall be accomplished by methods that will not damage the steel and the cost will be paid for according to Article 109.04 of the Standard Specifications.

Plan dimensions and details relative to existing structure have been taken from existing plans are subject to nominal construction variations. The Contractor shall field verify existing dimensions and details affecting new construction and make necessary approved adjustments prior to construction or ordering of materials. Such variations shall not be cause for additional compensation for a change in scope of the work, however, the Contractor will be paid for the quantity actually furnished at the unit price bid for the work.

Existing reinforcement bars extending into the removal area shall be cleaned, straightened, and incorporated into the new construction. Cost included with Concrete Removal. Any reinforcement bars that are damaged during concrete removal shall replaced with an approved bar splicer or anchorage system at the contractors expense..

Joint openings shall be adjusted according to Article 520.04 of the Standard specifications, when the deck is poured at ambient temperature other than 50°.

Concrete sealer shall be applied to the designated areas of the South and North abutments. The concrete sealer shall be a "Film Forming" type for horizontal surfaces.

All structural steel shall conform to AASHTO classification M-270 Gr, 36 unless otherwise noted.

No field welding is permitted except as specified in the contract documents.

Areas of deck repairs shown are estimates. The engineer shall show actual deck repairs on As-build plans.

TOTAL BILL OF MATERIAL

	Item	Unit	Total
	Polymerized Hot-Mix Asphalt Surface Course, Stone Matrix Asphalt, 9.5, Mix "E", N80	Ton	70
	Concrete Removal	Cu. Yd.	19.6
	Concrete Superstructure	Cu. Yd.	22.2
*	Protective Coat	Sq. Yd.	56
	Reinforcement Bars, Epoxy Coated	Pound	3080
	Bar Splicer	Each	28
	Preformed Joint Strip Seal	Foot	134
	Concrete Sealer	Sq. Ft.	1124
	Full Lane Sealant Waterproofing System	Sq. Yd.	836
	Floor Drains to be Cleaned	Each	16
	Deck Slab Repair (Partial)	Sq. Yd.	1.0
	Clean Approach Slab Drain	Each	4
	Hot-Mix Asphalt Curb Repair	Foot	12

* Protective coat shall be applied to the top and front face of new parapet concrete and new deck at joints.

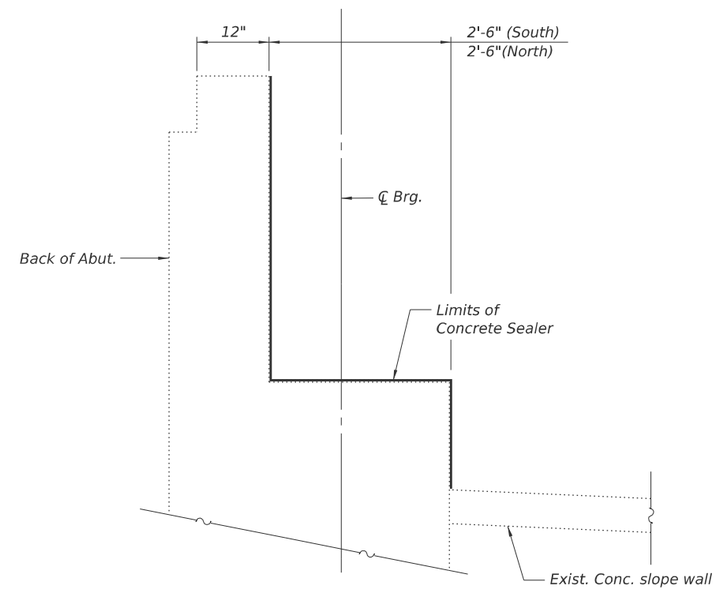

CONCRETE SEALER TYPICAL

MODEL: $MODELNAME$
FILE NAME: pw://jacobs-us-a-pw.bentley.com:jacobs-us-a-pw-04/Documents/D3152206.02 - ILDOT - I-55 I-70 Rehabilitation/30 Project Data/PID/ST/ABNA/Sht/08820025-002-GENOTES.dgn

ABNA DESIGN FIRM REG. 184.002117	USER NAME = mjones	DESIGNED - SEA	REVISED -	STATE OF ILLINOIS DEPARTMENT OF TRANSPORTATION	GENERAL NOTES AND TOTAL BILL OF MATERIALS STRUCTURE NO. 082-0025
		DRAWN - MBJ	REVISED -		
	PLOT SCALE = $SCALE$	CHECKED - SEA	REVISED -		
	PLOT DATE = 11/26/2025	DATE - 2025/10/03	REVISED -		SCALE: NTS SHEET 2 OF 12 SHEETS STA. TO STA.

F.A.I. RTE.	SECTION	COUNTY	TOTAL SHEETS	SHEET NO.
70	Section82-(5,6)RS-2, 60-6RS-2	MADISON & ST. CLAIR	678	555
		CONTRACT NO. 76E84		
		ILLINOIS FED. AID PROJECT		

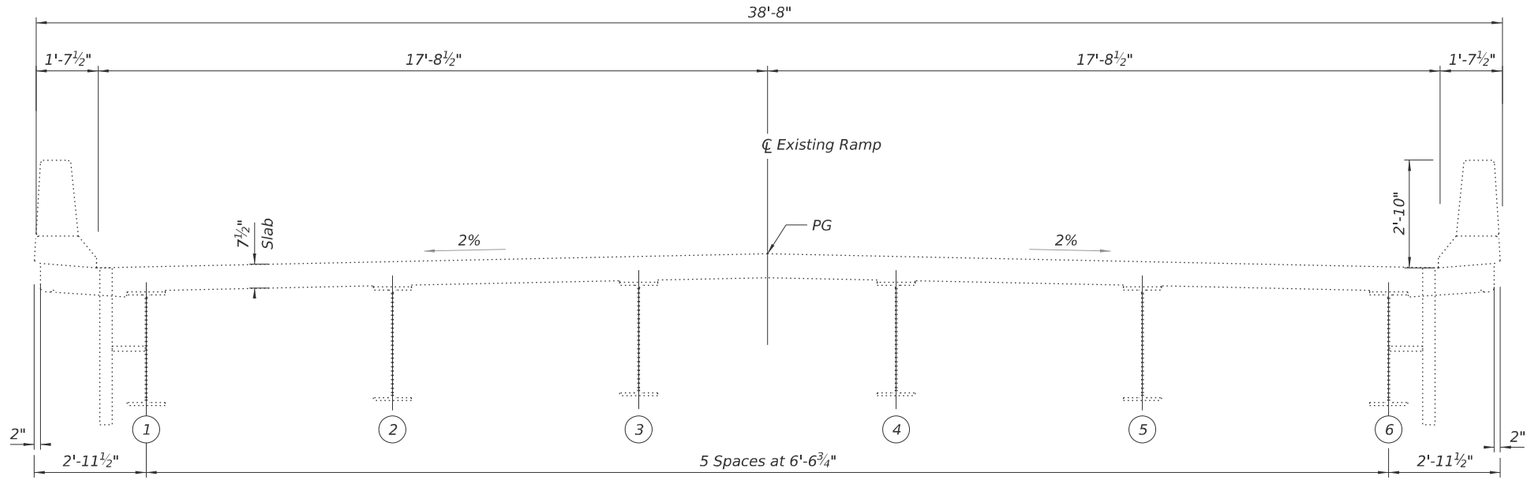

EXISTING TYPICAL SLAB SECTION

(Looking North - Upstation)

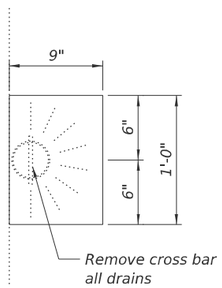

DRAIN TOP PLAN

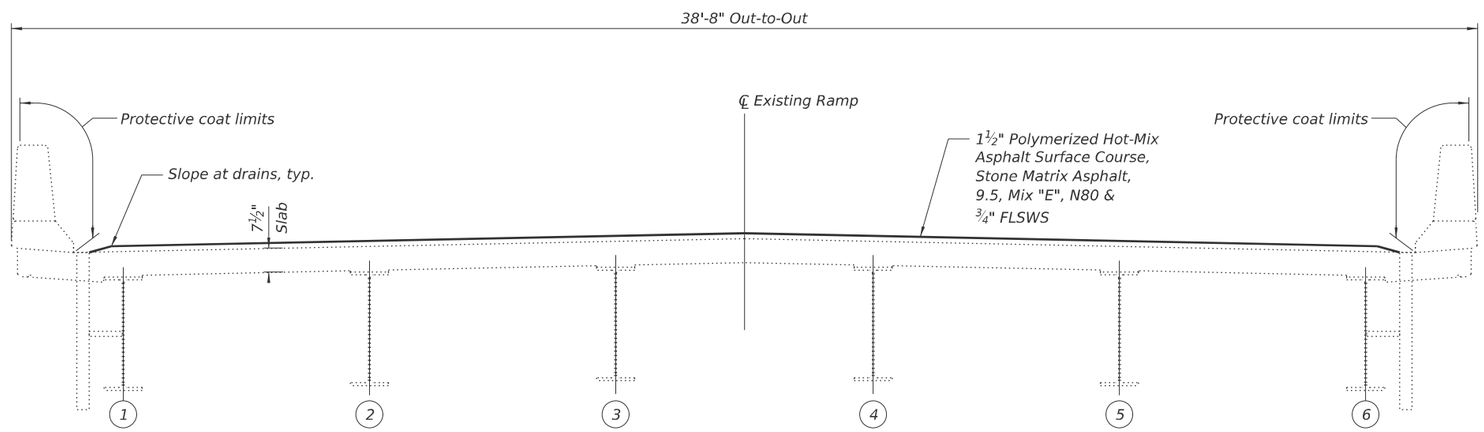

PROPOSED TYPICAL SLAB SECTION

(Looking North - Upstation)

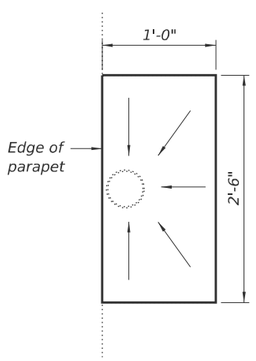

DRAIN SLOPE

MODEL: $MODELNAME$
FILE NAME: pw://jacobs-us-va-pw.bentley.com:jacobs-us-va-pw-04/Documents/D3152206.02 - ILDOT - I-55 I-70 Rehabilitation\30 Project Data\PID\STA\BNA\Sht\08200025-003-TYPSECTION.dgn

ABNA DESIGN FIRM REG. 184.002117	USER NAME = mjones	DESIGNED - SEA	REVISED -	STATE OF ILLINOIS DEPARTMENT OF TRANSPORTATION	TYPICAL SLAB SECTIONS STRUCTURE NO. 082–0025	F.A.I. RTE.	SECTION	COUNTY	TOTAL SHEETS	SHEET NO.
		DRAWN - MBJ	REVISED -			70	Section82-(5,6)RS-2, 60-6RS-2	MADISON & ST. CLAIR	678	556
	PLOT SCALE = $SCALE$	CHECKED - SEA	REVISED -					CONTRACT NO. 76E84		
	PLOT DATE = 11/26/2025	DATE - 2025/10/03	REVISED -		SCALE: NTS SHEET 3 OF 12 SHEETS STA. TO STA.			ILLINOIS FED. AID PROJECT		

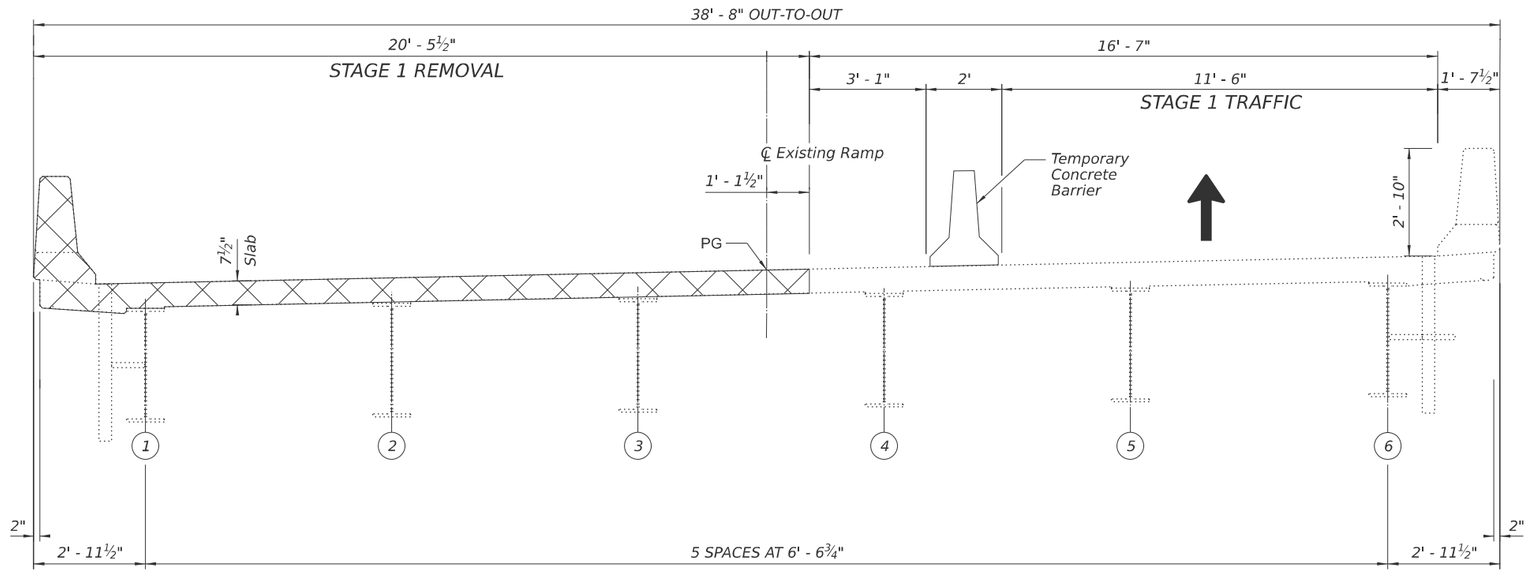

STAGE 1 REMOVAL

(Looking North - Upstation)

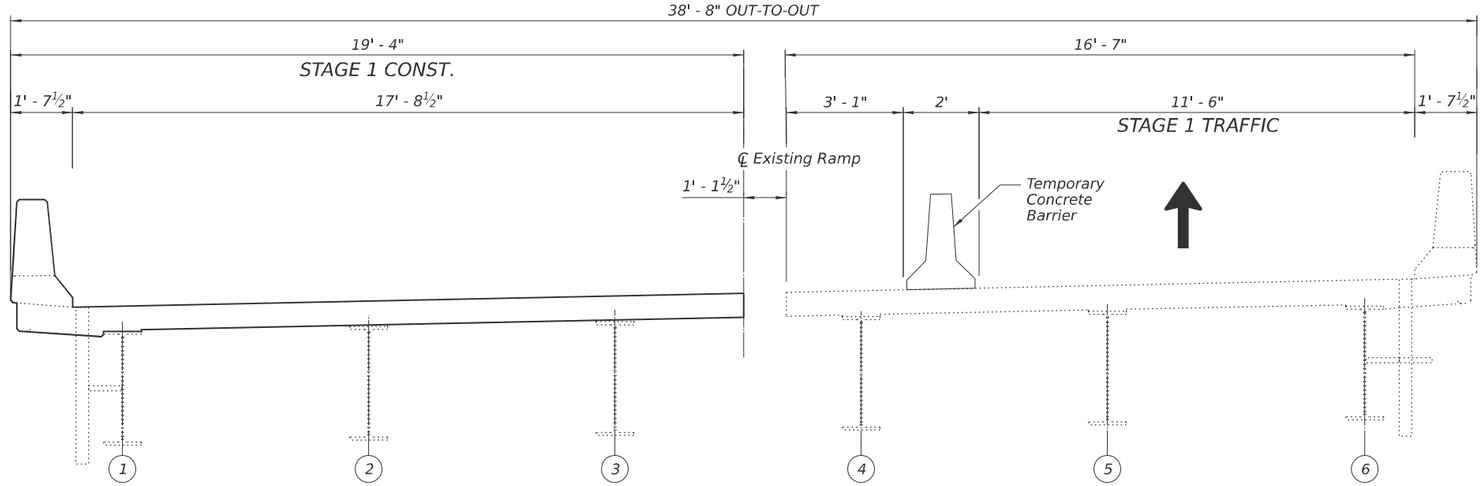

STAGE 1 CONSTRUCTION

(Looking North - Upstation)

MODEL: $MODELNAME$
FILE NAME: pw://jacobs-us-va-pw.bentley.com:jacobs-us-va-pw-04/Documents/D315220602 - ILDOT - I-55 I-70 Rehabilitation/30 Project Data/PID/ST/ABNA/Sht/0820025-094-STAGE 1-TYPSECTION.dgn

ABNA DESIGN FIRM REG. 184.002117	USER NAME = mjones	DESIGNED - ---	REVISED -	STATE OF ILLINOIS DEPARTMENT OF TRANSPORTATION	STAGE 1 - TYPICAL SECTION STRUCTURE NO. 082-0025	F.A.I. RTE.	SECTION	COUNTY	TOTAL SHEETS	SHEET NO.
		DRAWN - ---	REVISED -			70	Section82-(5,6)RS-2, 60-6RS-2	MADISON & ST. CLAIR	678	556A
	PLOT SCALE = $SCALE$	CHECKED - ---	REVISED -					CONTRACT NO. 76E84		
	PLOT DATE = 11/26/2025	DATE -	REVISED -		SCALE: NTS / SHEET 4 OF 12 SHEETS / STA. / TO STA.		ILLINOIS	FED. AID PROJECT		

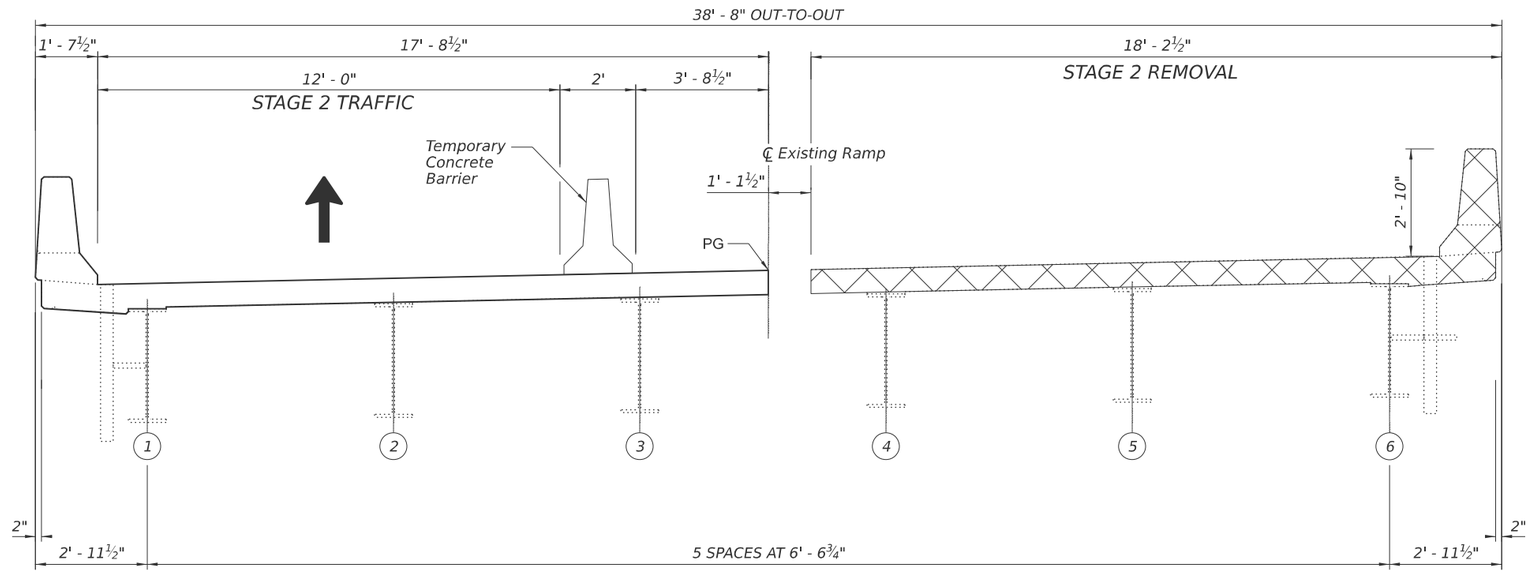

STAGE 2 REMOVAL

(Looking North - Upstation)

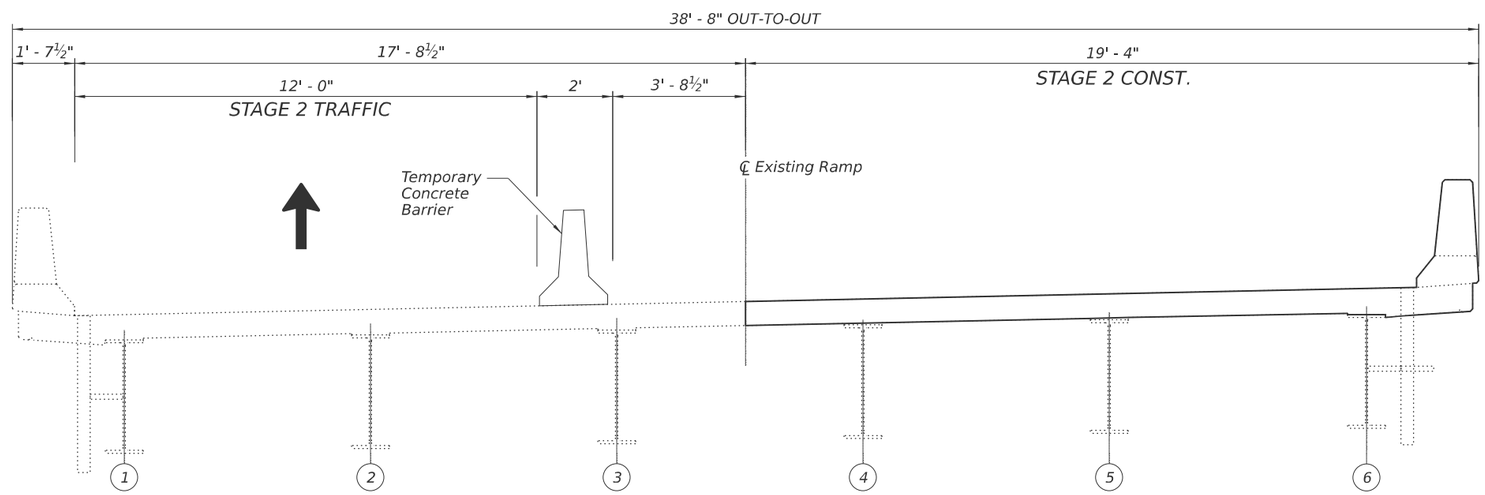

STAGE 2 CONSTRUCTION

(Looking North - Upstation)

MODEL: $MODELNAME$
FILE NAME: pw://jacobs-us-va-pw.bentley.com:jacobs-us-va-pw-04/Documents/D315220602 - ILDOT - I-55 I-70 Rehabilitation 30 Project Data/PID/ST/ABNA/Sht/0820025-005-STAGE 2-TYPSECTION.dgn

ABNA DESIGN FIRM REG. 184.002117	USER NAME = mjones	DESIGNED - ---	REVISED -	STATE OF ILLINOIS DEPARTMENT OF TRANSPORTATION	STAGE 2 - TYPICAL SECTION STRUCTURE NO. 082-0025
		DRAWN - ---	REVISED -		
	PLOT SCALE = $SCALE$	CHECKED - ---	REVISED -		
	PLOT DATE = 11/26/2025	DATE -	REVISED -		SCALE: NTS SHEET 5 OF 12 SHEETS STA. TO STA.

F.A.I. RTE.	SECTION	COUNTY	TOTAL SHEETS	SHEET NO.
70	Section82-(5,6)RS-2, 60-6RS-2	MADISON & ST. CLAIR	678	556B
		CONTRACT NO. 76E84		
		ILLINOIS	FED. AID PROJECT	

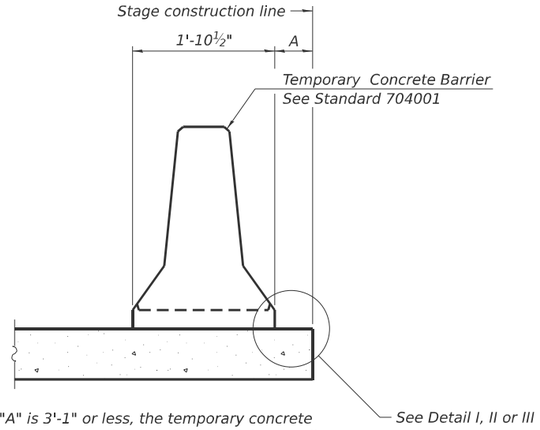

When "A" is 3'-1" or less, the temporary concrete barrier shall be restrained to the new slab according to Detail I, II or III. No restraint is required when "A" is greater than 3'-1".

NEW SLAB OR NEW DECK BEAM

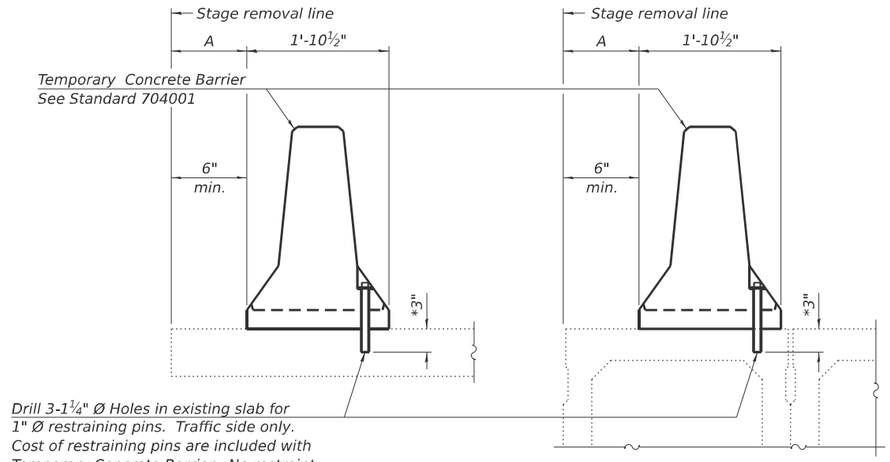

EXISTING SLAB

* When hot-mix asphalt wearing surface is present, embedment shall be 3" plus the wearing surface depth.

EXISTING DECK BEAM

SECTIONS THRU SLAB OR DECK BEAM

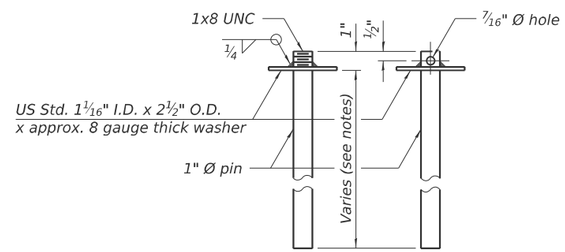

RESTRAINING PIN

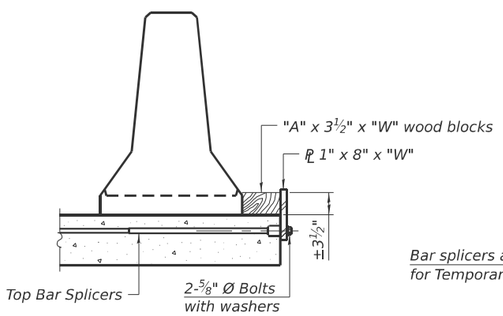

DETAIL I

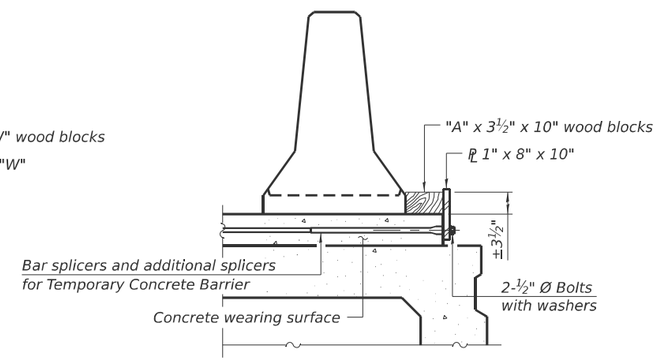

DETAIL II

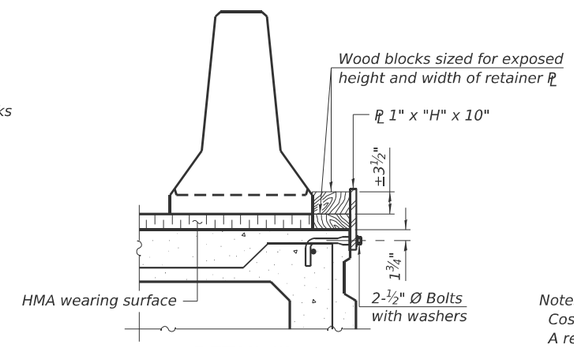

DETAIL III

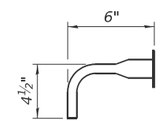

BAR SPLICER FOR #4 BAR - DETAIL III

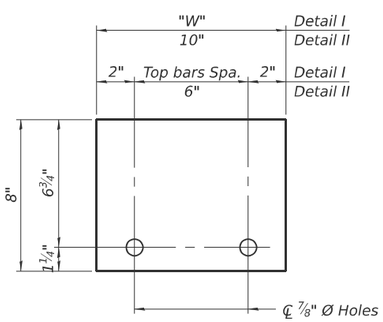

STEEL RETAINER PL 1" x 8" x "W"

(Detail I and II)

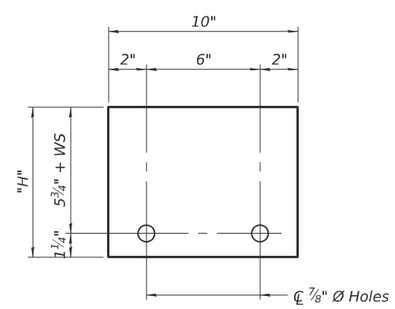

STEEL RETAINER PL 1" x "H" x 10"

(Detail III)

Notes:

Cost of retainer assembly is included with Temporary Concrete Barrier.

A retainer assembly shall be located at the approximate ℄ of each temporary concrete barrier.

The retainer plate shall not be removed until the concrete on the adjacent stage is ready to be poured. For Detail III applications the retainer plate shall not be removed until just prior to placing the adjacent beam.

When the 'A' dimension is less than 1½", the wood block shall be omitted and the barrier shall be placed in direct contact with the steel retainer plate. For deck beam applications the minimum required 'A' distance is 6" to accommodate the shear key clamping device.

Detail I - Installation for a new bridge deck or bridge slab.

Detail II - Installation for a new deck beam with an initial concrete wearing surface. Additional bar splicers shall be provided at 6'-0" centers and paired with the bar splicers of the concrete wearing surface reinforcement to accommodate the installation of the retainer assemblies. The cost of the additional bar splicers is included with the concrete wearing surface.

Detail III - Installation for a new deck beam with no initial wearing surface or with an initial hot-mix asphalt (HMA) wearing surface present. The deck beam directly beneath the temporary concrete barrier shall be fabricated with bar splicer inserts in the side of the beam, as detailed, to accommodate the installation of the retainer assemblies. A pair of bar splicers, 6" apart, shall be placed at 6'-0" centers along the length of the beam. The cost of the bar splicers is included with the deck beam.

RAILING CRITERIA

NCHRP 350 Test Level	3
Railing Weight (plf)	440

R-27

5-15-2023

MODEL: $MODELNAME$
FILE NAME: pw://jacobs-us-va-pw.bentley.com:jacobs-us-va-pw-04/Documents/D3152206.02 - ILDOT - I-55 I-70 Rehabilitation/30 Project Data/PID/ST/ABNA/Sht/0820025-006-TEMP CONC BAR.dgn

ABNA DESIGN FIRM REG. 184.002117

USER NAME = mjones	DESIGNED - ---	REVISED -
	DRAWN - ---	REVISED -
PLOT SCALE = $SCALE$	CHECKED - ---	REVISED -
PLOT DATE = 11/28/2025	DATE -	REVISED -

STATE OF ILLINOIS
DEPARTMENT OF TRANSPORTATION

TEMPORARY CONCRETE BARRIER
STRUCTURE NO. 082-0025

SCALE: NTS | SHEET 6 OF 12 SHEETS | STA. | TO STA.

F.A.I. RTE.	SECTION	COUNTY	TOTAL SHEETS	SHEET NO.
70	Section82-(5,6)RS-2, 60-6RS-2	MADISON & ST. CLAIR	678	556C

CONTRACT NO. 76E84

ILLINOIS | FED. AID PROJECT

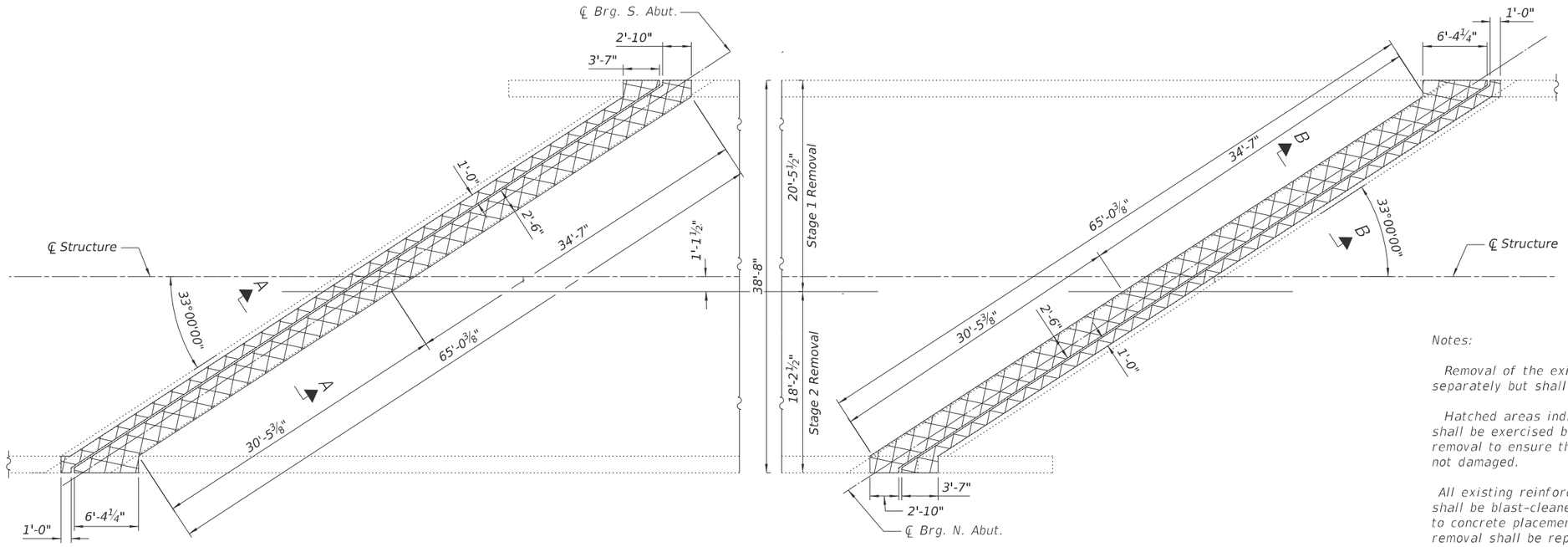

S. ABUTMENT

N. ABUTMENT

REMOVAL PLAN

Notes:

Removal of the existing expansion joints will not be paid for separately but shall be included in the cost for Concrete Removal.

Hatched areas indicate concrete sections to be removed. Care shall be exercised by the contractor during and following concrete removal to ensure the existing reinforcement remaining in place is not damaged.

All existing reinforcing to be incorporated into new construction shall be blast-cleaned, straightened and properly positioned prior to concrete placement. Any reinforcement damaged during concrete removal shall be repaired or replaced using an approved Mechanical Bar Splicer System at the Contractors expense.

Cost of removal shall be included with pay item for Concrete Removal. Cost of replacement shall be included with pay item for Concrete Superstructure.

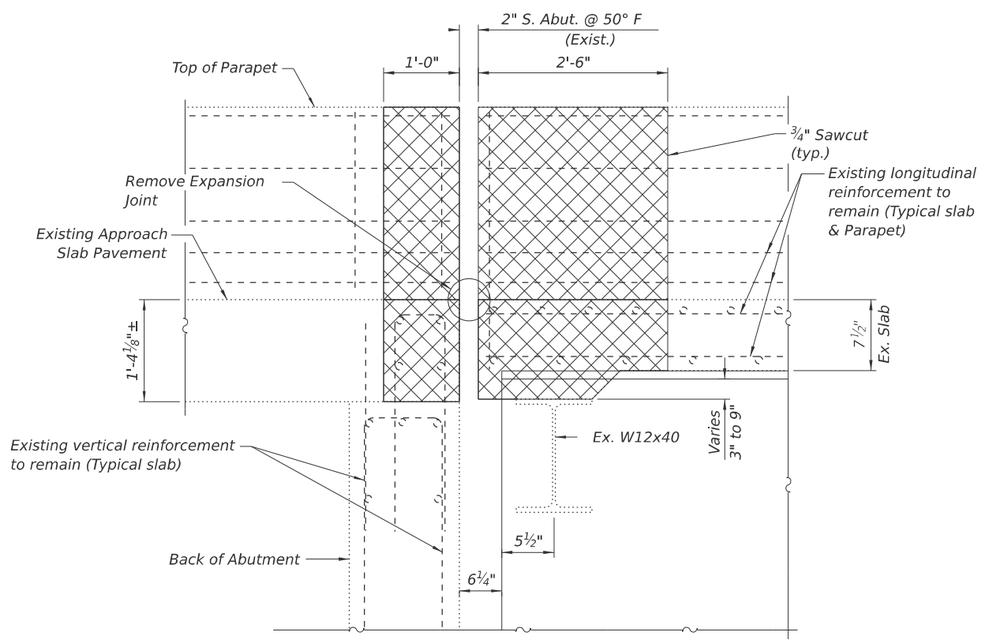

SECTION A-A
(South Abutment)

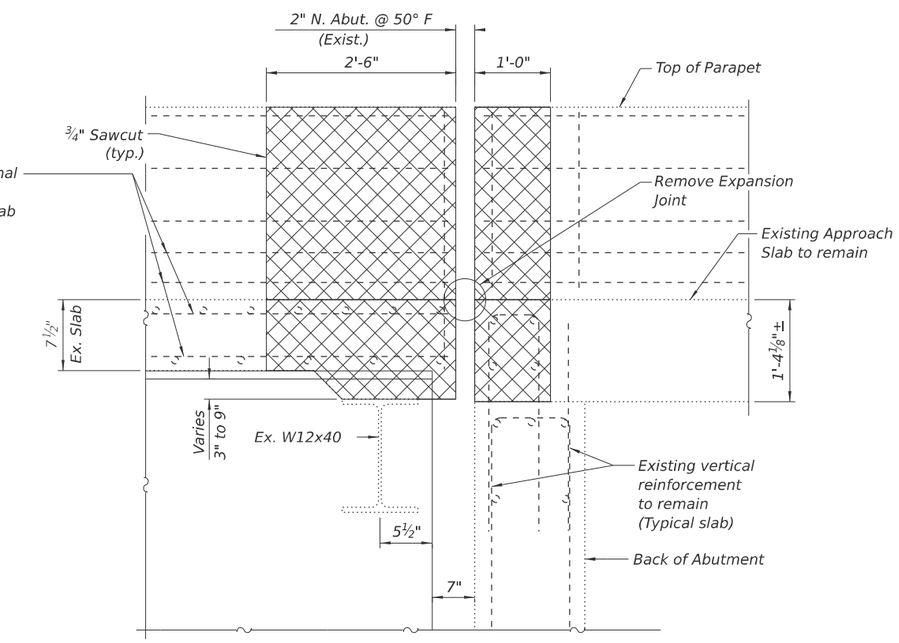

SECTION B-B
(North Abutment)

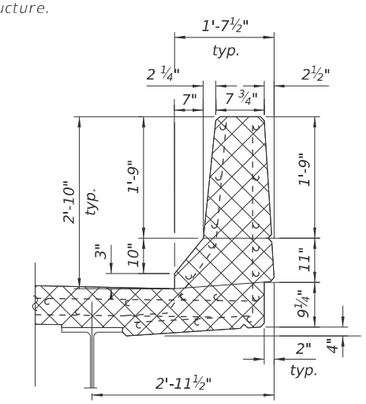

EXISTING PARAPET SECTION

LEGEND

Concrete Removal

BILL OF MATERIAL

Item	Unit	Total
Concrete Removal	Cu. Yd.	19.6

MODEL: $MODELNAME$
FILE NAME: pw://jacobs-us-va-pw.bentley.com:jacobs-us-va-pw-04/Documents/D3152206.02 - ILDOT - I-55 I-70 Rehabilitation/30 Project Data/PID/STA/BNA/Sht/082002S-007-JOINT DETLS01.dgn

ABNA DESIGN FIRM REG. 184.002117

USER NAME = mjones	DESIGNED - SEA	REVISED -	
	DRAWN - MBJ	REVISED -	
PLOT SCALE = $SCALE$	CHECKED - SEA	REVISED -	
PLOT DATE = 11/26/2025	DATE - 2025/10/03	REVISED -	

STATE OF ILLINOIS
DEPARTMENT OF TRANSPORTATION

EXPANSION JOINT REMOVAL
STRUCTURE NO. 082-0025

SCALE: NTS | SHEET 7 OF 12 SHEETS | STA. | TO STA.

F.A.I. RTE.	SECTION	COUNTY	TOTAL SHEETS	SHEET NO.
70	Section82-(5,6)RS-2, 60-6RS-2	MADISON & ST. CLAIR	678	557

CONTRACT NO. 76E84

ILLINOIS | FED. AID PROJECT

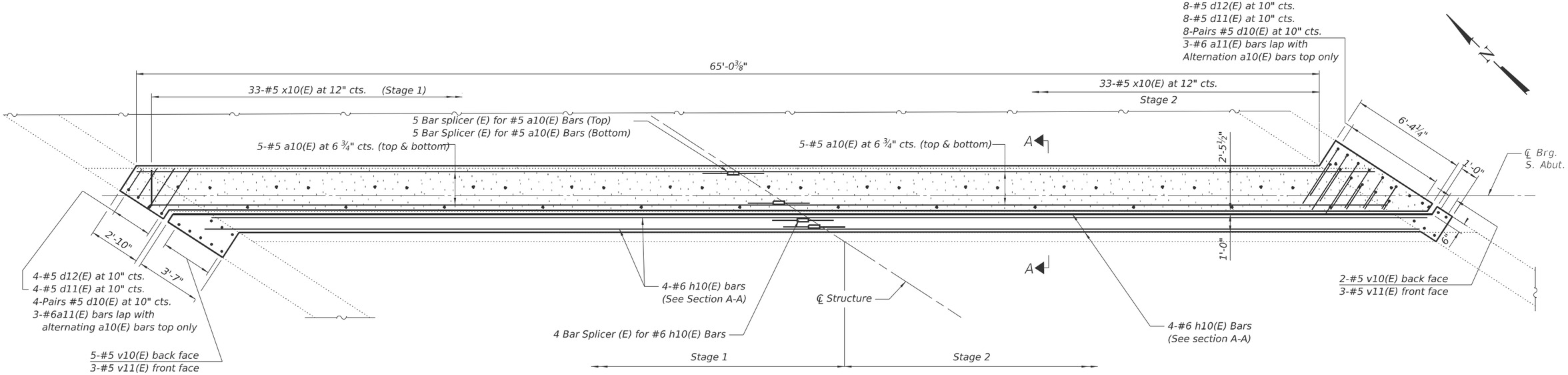

SOUTH ABUTMENT REPAIR PLAN

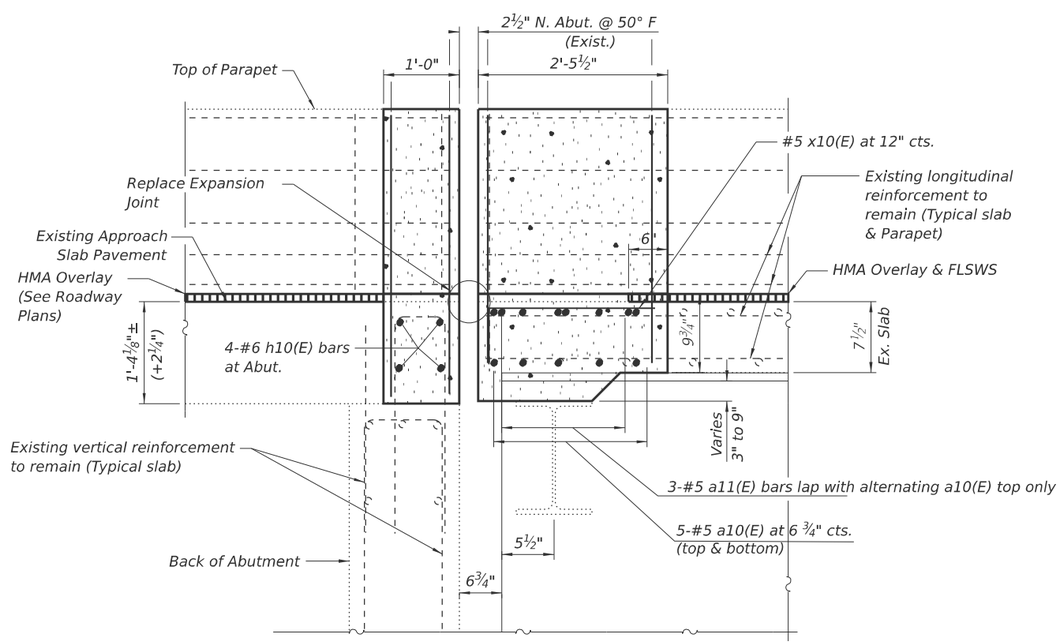

SECTION A-A

(South Abutment)

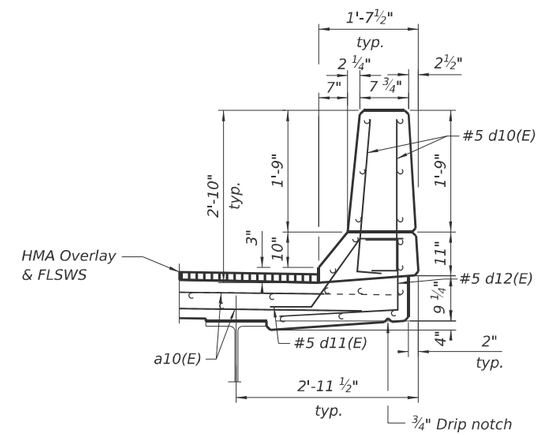

PARAPET REPAIR SECTION

Minimum Bar Lap

#5 Bars = 3'-10"
#6 Bars = 5'-3"

BILL OF MATERIAL

Item	Unit	Total
Concrete Superstructure	Cu. Yd.	11.1

MODEL: $MODELNAME$
FILE NAME: pw://jacobs-us-va-pw.bentley.com:jacobs-us-va-pw-04/Documents/D3152206.02 - ILDOT - I-55 I-70 Rehabilitation:30 Project Data/PID/ST/ABNA/Sht/0820025-008-JOINT DETLS02.dgn

ABNA DESIGN FIRM REG. 184.002117

USER NAME = mjones	DESIGNED - SEA	REVISED -	
	DRAWN - MBJ	REVISED -	
PLOT SCALE = $SCALE$	CHECKED - SEA	REVISED -	
PLOT DATE = 11/26/2025	DATE - 2025/10/03	REVISED -	

STATE OF ILLINOIS
DEPARTMENT OF TRANSPORTATION

EXPANSION JOINT REPAIR – SOUTH ABUTMENT
STRUCTURE NO. 082–0025

SCALE: NTS | SHEET 8 OF 12 SHEETS | STA. | TO STA.

F.A.I. RTE.	SECTION	COUNTY	TOTAL SHEETS	SHEET NO.
70	Section82-(5,6)RS-2, 60-6RS-2	MADISON & ST. CLAIR	678	558
		CONTRACT NO. 76E84		
		ILLINOIS FED. AID PROJECT		

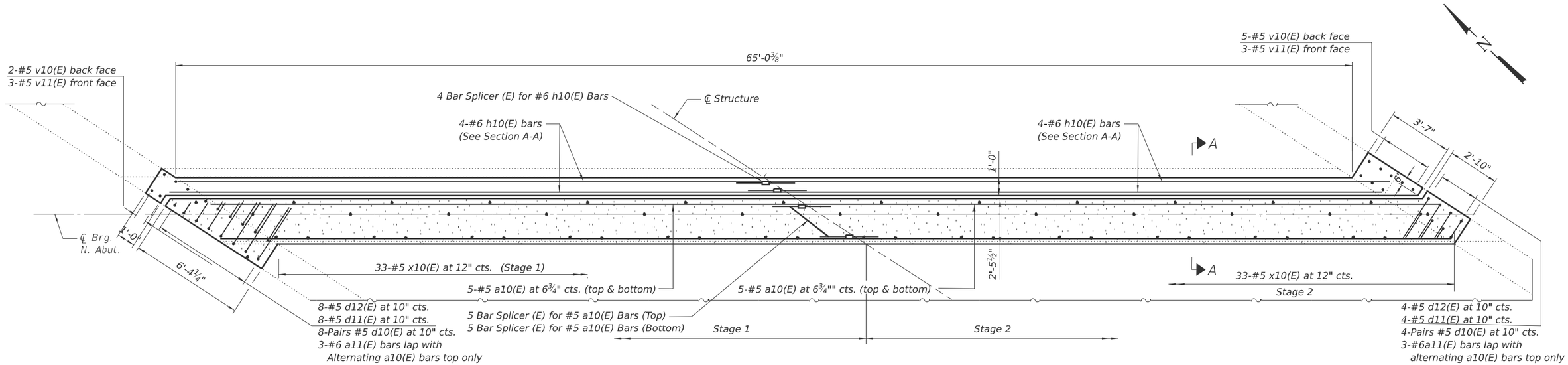

NORTH ABUTMENT REPAIR PLAN

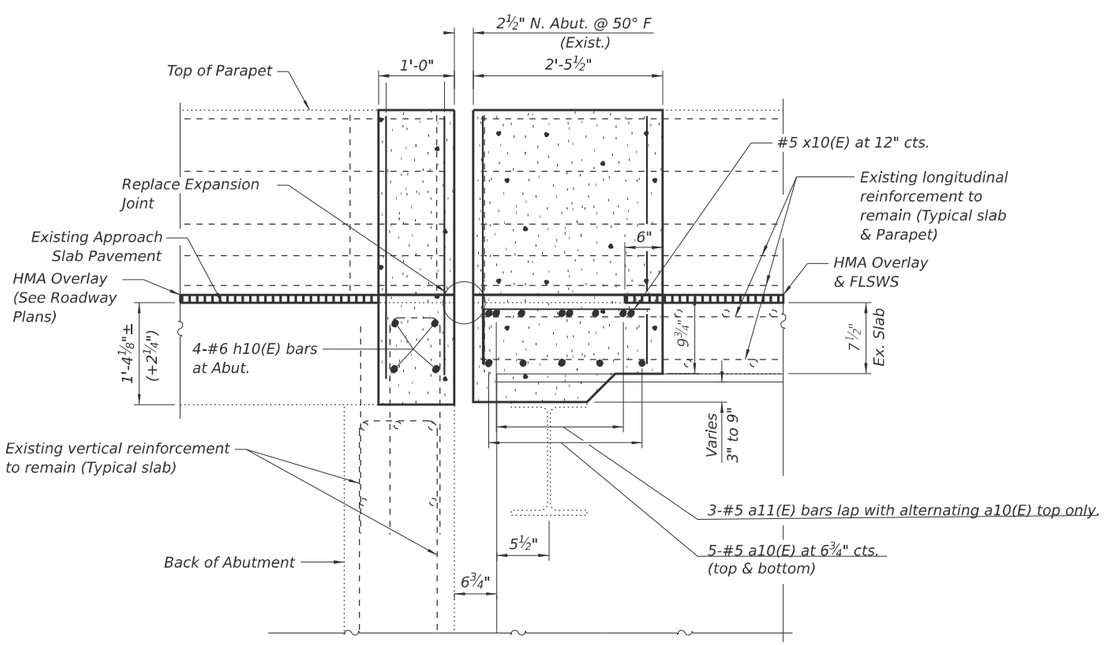

SECTION A-A

(North Abutment)

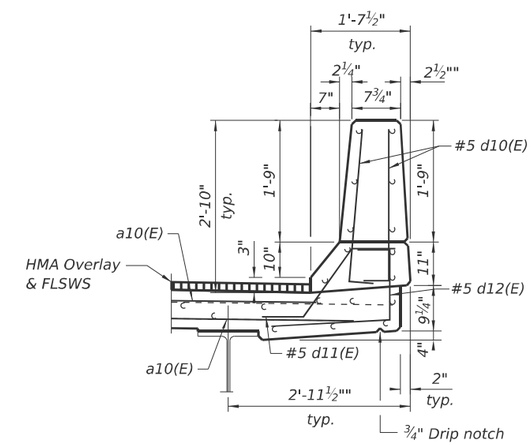

PARAPET REPAIR SECTION

Minimum Bar Lap

#5 Bars = 3'-10"
#6 Bars = 5'-3"

BILL OF MATERIAL

Item	Unit	Total
Concrete Superstructure	Cu. Yd.	11.1

MODEL: $MODELNAME$
FILE NAME: pw://jacobs-us-a-pw.bentley.com:jacobs-us-a-pw-04/Documents/D315220602 - ILDOT - I-55 I-70 Rehabilitation 30 Project Data/PID/ST/ABNA/Sht0820025-009-JOINT DETLS03.dgn

ABNA DESIGN FIRM REG. 184.002117

USER NAME = mjones	DESIGNED - SEA	REVISED -	
	DRAWN - MBJ	REVISED -	
PLOT SCALE = $SCALE$	CHECKED - SEA	REVISED -	
PLOT DATE = 11/26/2025	DATE - 2025/10/03	REVISED -	

STATE OF ILLINOIS
DEPARTMENT OF TRANSPORTATION

EXPANSION JOINT REPAIR – NORTH ABUTMENT
STRUCTURE NO. 082–0025

SCALE: NTS | SHEET 9 OF 12 SHEETS | STA. | TO STA.

F.A.I. RTE.	SECTION	COUNTY	TOTAL SHEETS	SHEET NO.
70	Section82-(5,6)RS-2, 60-6RS-2	MADISON & ST. CLAIR	678	559

CONTRACT NO. 76E84

ILLINOIS | FED. AID PROJECT

SOUTH & NORTH ABUTMENTS
BILL OF MATERIAL

a10(E)	40	#5	32'-3"	
a11(E)	12	#6	6'-0"	
d10(E)	48	#5	3'-0"	
d11(E)	24	#5	2'-5"	
d12(E)	24	#5	3'-10"	
h10(E)	16	#6	32'-3	
x10(E)	132	#5	2'-8"	
v10(E)	14	#5	3'-10"	
v11(E)	12	#5	4'-0"	
Reinforcement Bars, Epoxy Coated			Pound	3080
Bar Splicer			Each	28

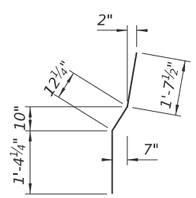

BAR v11(E)

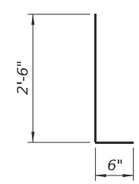

BAR d10(E)

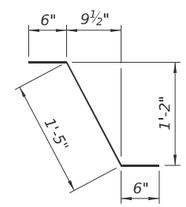

BAR d11(E)

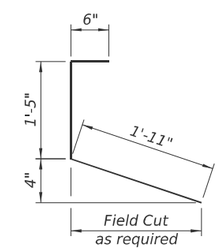

BAR d12(E)

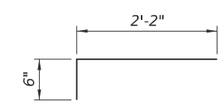

BAR x10(E)

Notes:

For details of Preformed Joint Strip Seal Expansion Joints, see Sheet No. 11.

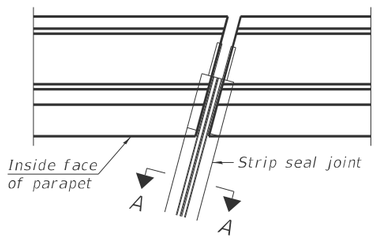

FOR SKEWS ≤ 30°

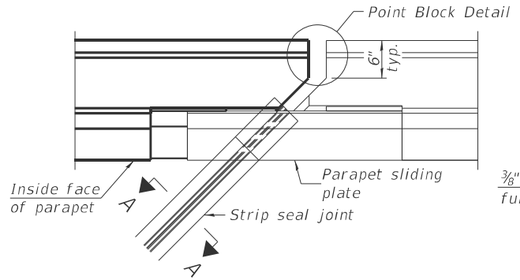

FOR SKEWS > 30°

PLAN AT PARAPET

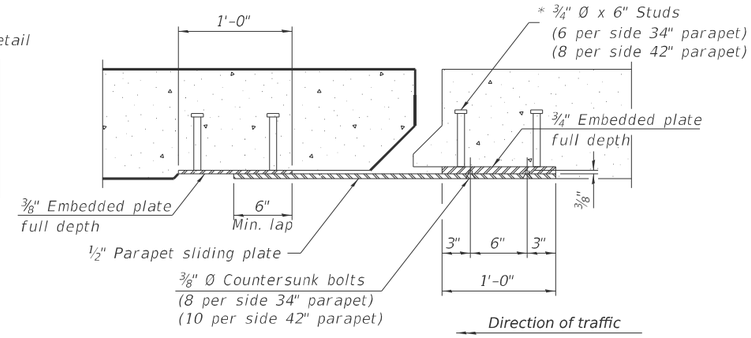

SECTION B-B

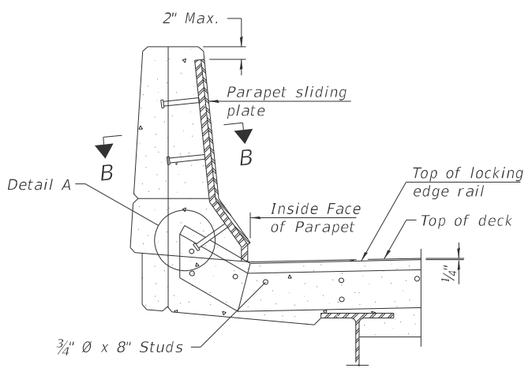

ELEVATION AT PARAPET

(Skews > 30° shown. Skews ≤ 30° similar except as shown in plan view.)

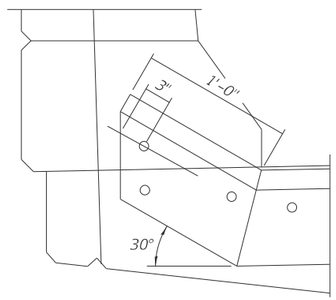

DETAIL A

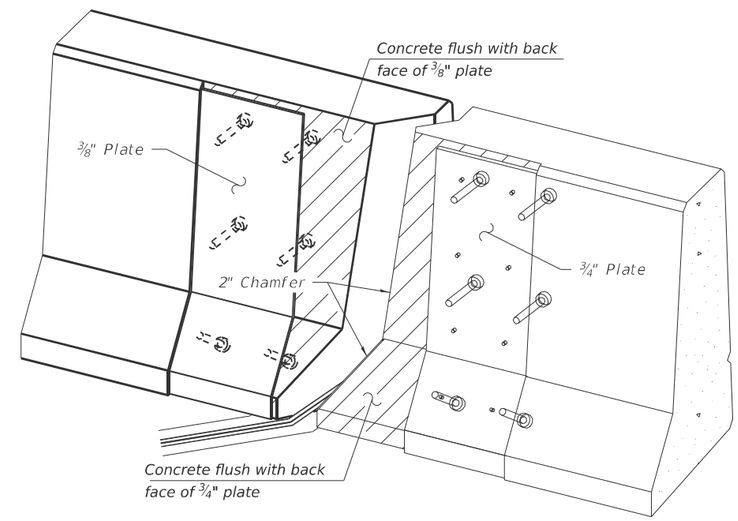

TRIMETRIC VIEW

(Showing embedded plates only)

Notes:

The strip seal shall be made continuous and shall have a minimum thickness of ¼". The configuration of the strip seal shall match the configuration of the locking edge rails. Open or "webbed" strip seal gland configurations are not permitted. The gland shall be sized for a maximum rated movement of 4 inches.

The locking edge rails depicted are configured for typical applications and are conceptual only. The actual configuration of the locking edge rails and matching strip seal may vary from manufacturer to manufacturer provided they fit the application and meet the minimum anchorage shown. Flanged edge rails, however, will not be allowed.

The manufacturer's recommended installation methods shall be followed.

All steel components shall be galvanized after fabrication according to Article 520.03 of the Standard Specifications.

The Maximum space between locking edge rail segments shall be 3/16" and sealed with a suitable sealant; however, any rail joint within 10' measured perpendicular to the face of the curb or parapet shall be welded as shown in the locking edge rail splice detail.

Cost of parapet sliding plates, embedded plates, and anchorage studs included with Preformed Joint Strip Seal.

34" F-shape barrier shown, 42" F-shape similar as noted.

The concrete opening below the strip seal will vary based on the locking edge rail chosen by the Contractor. Deck and parapet lengths shown elsewhere in the plans are dimensioned to the concrete opening, not the joint opening, and are based on the rolled locking edge rail. If the Contractor elects to use a different locking edge rail, dimensional adjustments may be required. One exception to this would be the strip seal joint at the end of the precast bridge approach slab. For these cases the pavement connector length shall be adjusted, not the length of the bridge approach slab.

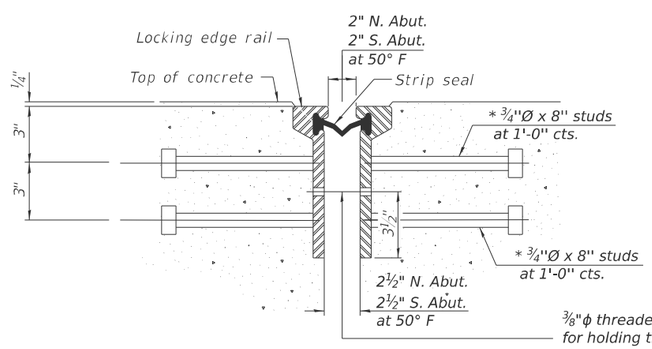

SHOWING ROLLED RAIL JOINT

⅜"ϕ threaded rods in 7/16" ϕ holes at ±4'-0" cts. for holding the proper joint opening based on the temperature during the deck pour. Place to miss studs. All rods shall be burned, or sawed off flush with the plates after concrete is set.

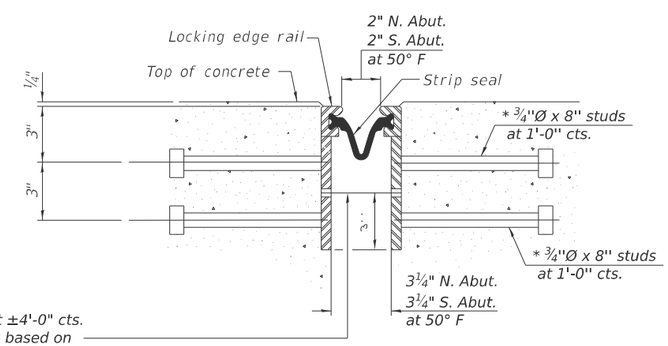

SHOWING WELDED RAIL JOINT

SECTION A-A

* Granular or solid flux filled headed studs conforming to Article 1006.32 of the Std. Specs., automatically end welded.

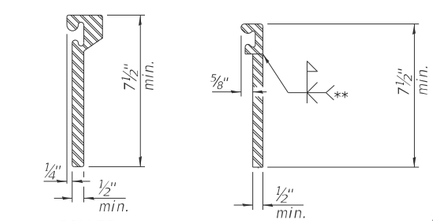

ROLLED (EXTRUDED) RAIL

WELDED RAIL

LOCKING EDGE RAILS

** Back gouge not required if complete joint penetration is verifed by mock-up.

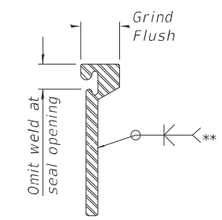

LOCKING EDGE RAIL SPLICE

The inside of the locking edge rail groove shall be free of weld residue. Rolled rail shown, welded rail similar.

BILL OF MATERIAL

Item	Unit	Total
Preformed Joint Strip Seal	Foot	134.0

EJ-SS (TALL WITH GUTTER) 10-1-19

MODEL: $MODELNAME$
FILE NAME: pw://jacobs-us-a-pw.bentley.com:jacobs-us-a-pw-04/Documents/D3152206.02 - ILDOT - I-55 I-70 Rehabilitation/30 Project Data/PID/ST/ABNA/Sht/0820025-011-JOINT DETLS05.dgn

ABNA DESIGN FIRM REG. 184.002117

USER NAME = mjones	DESIGNED - SEA	REVISED -	
	DRAWN - MBJ	REVISED -	
PLOT SCALE = $SCALE$	CHECKED - SEA	REVISED -	
PLOT DATE = 11/26/2025	DATE - 2025/10/03	REVISED -	

STATE OF ILLINOIS
DEPARTMENT OF TRANSPORTATION

PREFORMED JOINT STRIP SEAL
STRUCTURE NO. 082-0025

SCALE: NTS | SHEET 11 OF 12 SHEETS | STA. | TO STA.

F.A.I. RTE.	SECTION	COUNTY	TOTAL SHEETS	SHEET NO.
70	Section82-(5,6)RS-2, 60-6RS-2	MADISON & ST. CLAIR	678	561

CONTRACT NO. 76E84

ILLINOIS | FED. AID PROJECT

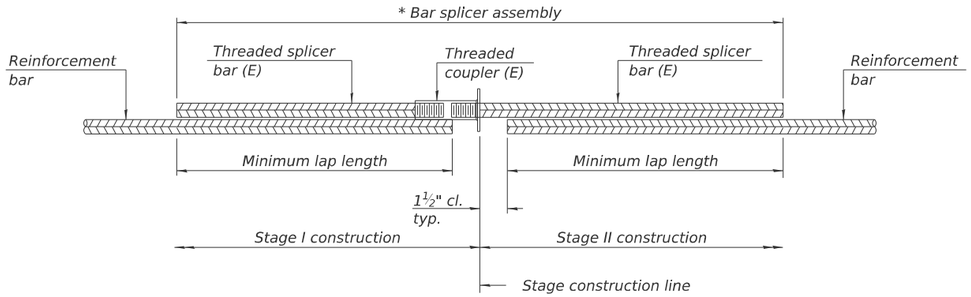

STANDARD BAR SPLICER ASSEMBLY PLAN

Only bar splicer assemblies as presented on the approved QPL list may be used.

Threaded splicer bar length = min. lap length + 1½" + thread length

* Epoxy not required on Bar Splicer Assembly components used in conjunction with black bars.

Location	Bar size	No. assemblies required	Minimum lap length
S. Abut.	5	10	3'-10"
S. Abut.	6	4	4'-5"
N. Abut.	5	10	3'-10"
N. Abut.	6	4	4'-5"

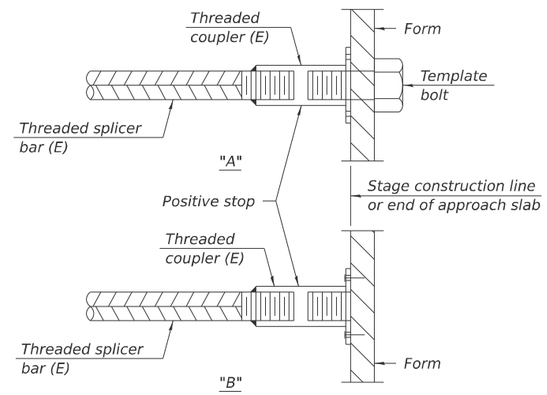

INSTALLATION AND SETTING METHODS

"A" : Set bar splicer assembly by means of a template bolt.
"B" : Set bar splicer assembly by nailing to wood forms or cementing to steel forms.
(E) : Indicates epoxy coating.

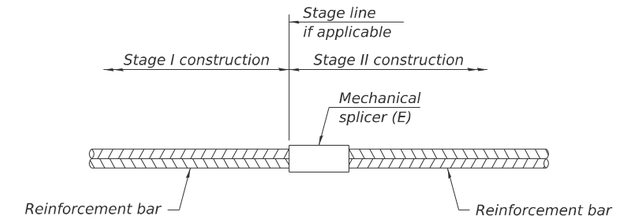

STANDARD MECHANICAL SPLICER

Location	Bar size	No. assemblies required

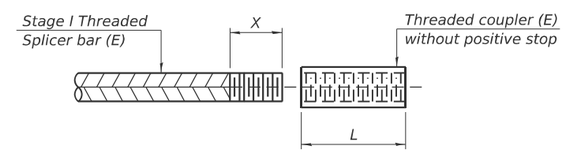

THREADING OF ASSEMBLIES

The threaded length "X" shall be no more than L/2. The bar should be tightened until 0-1 thread(s) is/are exposed.

Notes:
Splicer bars shall be deformed with threaded ends and have a minimum 60 ksi yield strength.
All reinforcement shall be lapped and tied to the splicer bars.
Bar splicer assemblies shall be epoxy coated according to the requirements for reinforcement bars. See Section 508 of the Standard Specifications.
See approved list of bar splicer assemblies and mechanical splicers for alternatives.

BSD-1 4-4-2025

ABNA DESIGN FIRM REG. 184.002117

USER NAME = mjones	DESIGNED - ---	REVISED -	
	DRAWN - ---	REVISED -	
PLOT SCALE = $SCALE$	CHECKED - ---	REVISED -	
PLOT DATE = 12/3/2025	DATE -	REVISED -	

STATE OF ILLINOIS
DEPARTMENT OF TRANSPORTATION

BAR SPLICERS
STRUCTURE NO. 082-0025

SCALE: NTS | SHEET 12 OF 12 SHEETS | STA. | TO STA.

F.A.I. RTE.	SECTION	COUNTY	TOTAL SHEETS	SHEET NO.
70	Section82-(5,6)RS-2, 60-6RS-2	MADISON & ST. CLAIR	678	561A

CONTRACT NO. 76E84
ILLINOIS | FED. AID PROJECT

Benchmark: BM 206: Cut "X" on top of northeast bolt for overhead sign truss foundation in the I-55/70 median for Exit 4A and 4B exit, IL 203. Near the I-55/70 SB to IL 203 NB ramp. ELEV. =409.928'

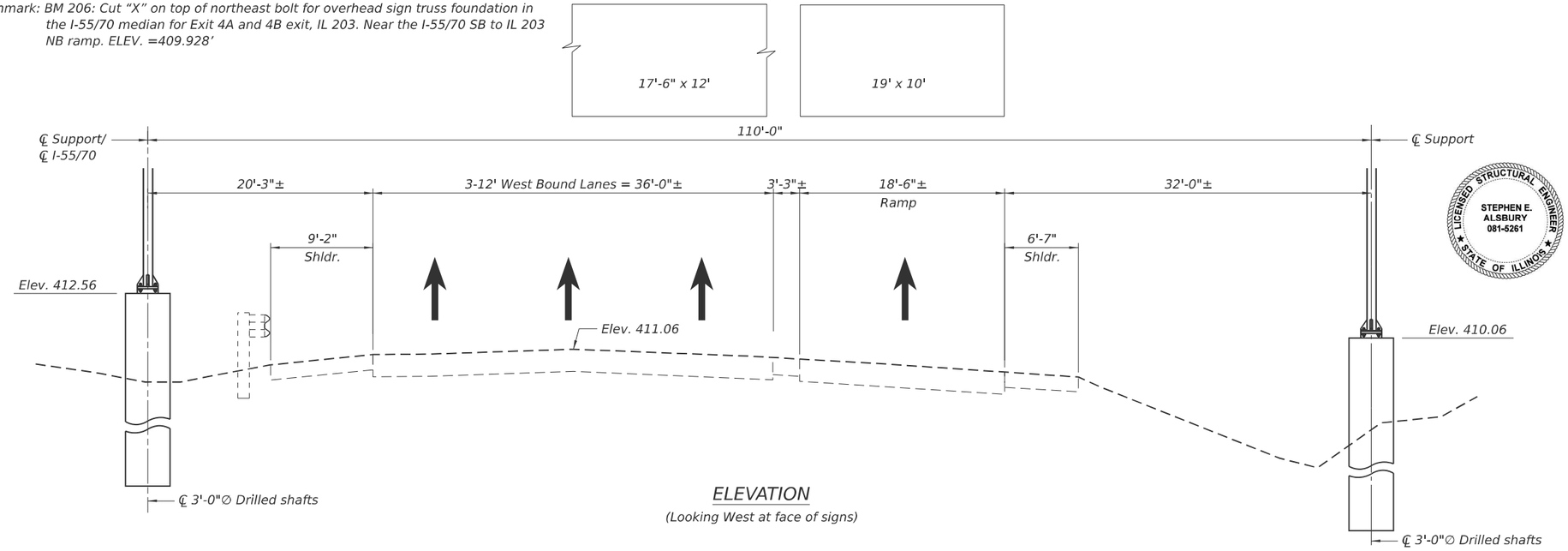

ELEVATION

(Looking West at face of signs)

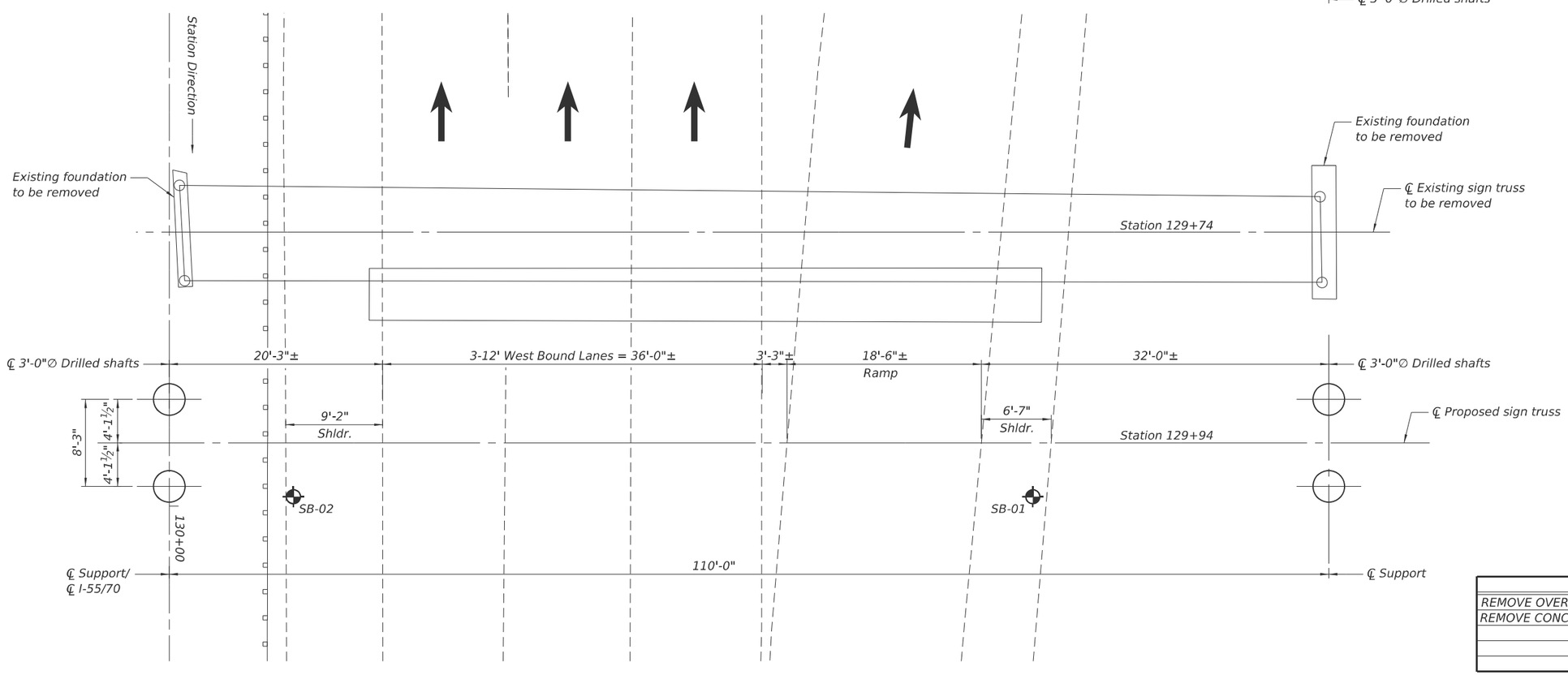

PLAN

LEGEND

Boring Location

N

STEPHEN E. ALSBURY 081-5261 LICENSED STRUCTURAL ENGINEER STATE OF ILLINOIS

Signed:

Stephen E. Alsbury, S.E. IL. Lic. No. 081-5261
Expires: 11/30/2026

Date: September 26, 2025

BILL OF MATERIAL

ITEM	UNIT	TOTAL
REMOVE OVERHEAD SIGN STRUCTURE - SPAN	Each	1
REMOVE CONCRETE FOUNDATION - OVERHEAD	Each	2

MODEL: $MODELNAME$
FILE NAME: pw://jacobs-us-a-pw.bentley.com:jacobs-us-a-pw-04/Documents/D315220602 - ILDOT - I-55 I-70 Rehabilitation 30 Project Data/PID/ST/ABNA/Sht/8S082I055L0043-001-GPE.dgn

ABNA DESIGN FIRM REG. 184.002117

USER NAME = mjones	DESIGNED - SEA	REVISED -	
	DRAWN - MBJ	REVISED -	
PLOT SCALE = $SCALE$	CHECKED - SEA	REVISED -	
PLOT DATE = 12/3/2025	DATE - 2025/10/03	REVISED -	

STATE OF ILLINOIS
DEPARTMENT OF TRANSPORTATION

GENERAL PLAN AND ELEVATION
STRUCTURE NO. 8S082I055L004.3

SCALE: NTS | SHEET 1 OF 14 SHEETS | STA. | TO STA.

F.A.I. RTE.	SECTION	COUNTY	TOTAL SHEETS	SHEET NO.
70	Section82-(5,6)RS-2, 60-6RS-2	MADISON & ST. CLAIR	678	562
		CONTRACT NO. 76E84		
		ILLINOIS	FED. AID PROJECT	

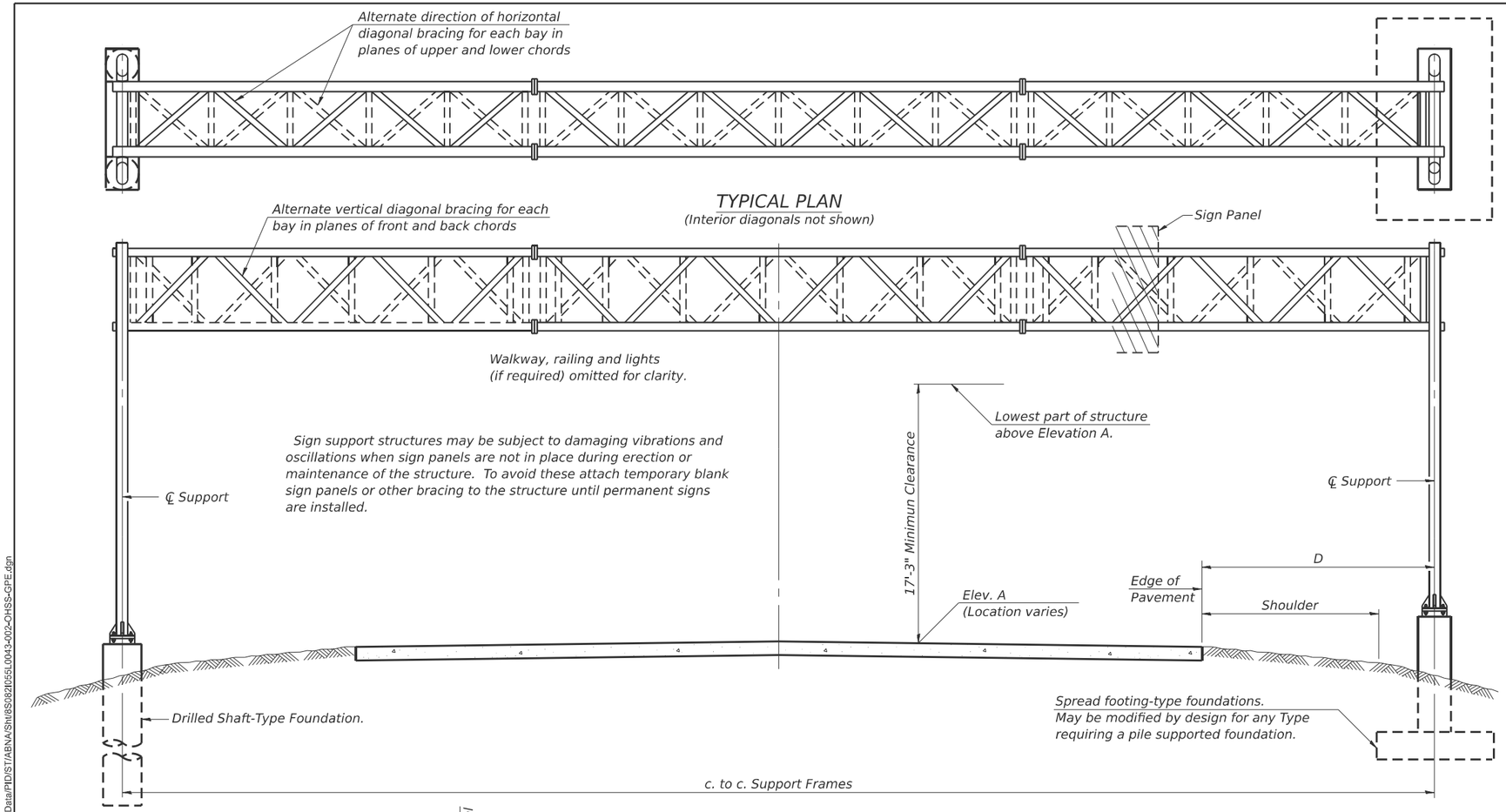

TYPICAL PLAN

(Interior diagonals not shown)

TYPICAL ELEVATION

(Looking at Face of Signs**)

Elev. A = Elevation at point of minimum clearance to sign, walkway support or truss.

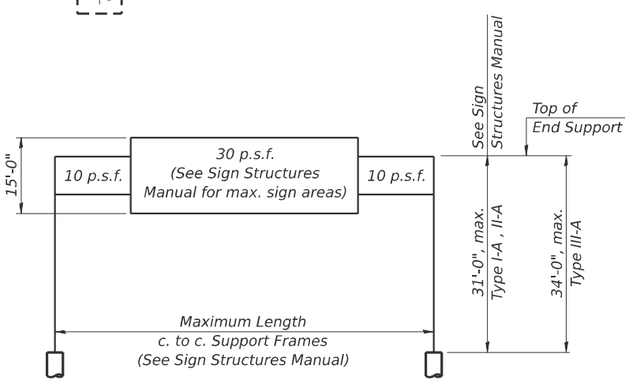

DESIGN WIND LOADING DIAGRAM

Parameters shown are basis for I.D.O.T. Standards and Sign Manual Tables. Installations not within dimensional limits shown require special analysis for all components.

Structure Number	Station	Design Truss Type	c. to c. Supports	Elev. A	Dim. D	Height of Tallest Sign	Total Sign Area
8S082I055L004.3	129+94.00	II-A	110'-0"	411.06	32'-0"	12'-0"	440

** Looking upstation for structures with signs both sides.

* If M270 Gr. 50W (M222) steel is proposed, chemistry for plate to be used shall first be approved by the Engineer as suitable for galvanizing and welding.

*** Granular soil is present. Temporary casing may be required to maintain shaft stability, Cost of temporary casing shall be included with pay item for Drilled Shaft Concrete Foundations.

GENERAL NOTES

DESIGN: AASHTO Standard Specifications for Structural Supports for Highway Signs, Luminaires and Traffic Signals. ("AASHTO Specifications")

CONSTRUCTION: Current (at time of letting) Illinois Department of Transportation Standard Specifications for Road and Bridge Construction, Supplemental Specifications and Special Provisions. ("Standard Specifications")

LOADING: 90 M.P.H. WIND VELOCITY

WALKWAY LOADING: Dead load plus 500 lbs. concentrated live load.

DESIGN STRESSES:
Field Units
f'c = 3,500 p.s.i.
fy = 60,000 p.s.i. (reinforcement)

WELDING: All welds to be continuous unless otherwise shown. All welding to be done in accordance with current AWS D1.1 and D1.2 Structural Welding Codes (Steel and Aluminum) and the Standard Specificiations.

MATERIALS: Aluminum Alloys as shown throughout plans. All Structural Steel Pipe shall be ASTM A53 Grade B or A500 Grade B or C. If A500 pipe is substituted for A53, then the outside diameter shall be as detailed and wall thickness greater than or equal to A53. All Structural Steel Plates and Shapes shall conform to AASHTO M270 Gr. 36, Gr. 50 or Gr. 50W*. Stainless steel for shims, sleeves and handhole covers shall be ASTM A240, Type 302 or 304, or another alloy suitable for exterior exposure and acceptable to the Engineer.
The steel pipe and stiffening ribs at the base plate for the column shall have a minimum longitudinal Charpy V-Notch (CVN) energy of 15 lb.-ft. at 40° F. (Zone 2) before galvanizing.

FASTENERS FOR ALUMINUM TRUSSES: All bolts noted as "high strength" must satisfy the requirements of AASHTO M164 (ASTM A325), or approved alternate, and must have matching lock nuts. Threaded studs for splices (if Members interfere) must satisfy the requirements of ASTM A449, ASTM A193, Grade B7, or approved alternate, and must have matching lock nuts. Bolts and lock nuts not required to be high strength must satisfy the requirements of ASTM A307. All bolts and lock nuts must be hot dip galvanized per AASHTO M232. The lock nuts must have nylon or steel inserts. A stainless steel flat washer conforming to ASTM A240 Type 302 or 304, is required under both head and nut or under both nuts where threaded studs are used. High strength bolt installation shall conform to Article 505.04 (f) (2)d of the IDOT Standard Specifications for Road and Bridge Construction. Rotational capacity ("ROCAP") testing of bolts will not be required.

U-BOLTS AND EYEBOLTS: U-Bolts and Eyebolts must be produced from ASTM A276 Type 304, 304L, 316 or 316L, Condition A, cold finished stainless steel, or an equivalent material acceptable to the Engineer. All nuts for U-Bolts and Eyebolts must be lock nuts equivalent to ASTM A307 with nylon or steel inserts and hot dip galvanized per AASHTO M232. A stainless steel flat washer conforming to ASTM A240, Type 302 or 304, is required under each U-Bolt and Eyebolt lock nut.

GALVANIZING: All Steel Grating, Plates, Shapes and Pipe shall be Hot Dip Galvanized after fabrication in accordance with AASHTO M111. Painting is not permitted.

ANCHOR RODS: Shall conform to ASTM F1554 Gr. 105.

CONCRETE SURFACES: All concrete surfaces above an elevation 6" below the lowest final ground line at each foundation shall be cleaned and coated with Concrete Sealer in accordance with the Standard Specifications.

REINFORCEMENT BARS: Reinforcement Bars designated (E) shall be epoxy coated in accordance with the Standard Specifications.

FOUNDATIONS: The contract unit price for Concrete Foundations and Drilled Shaft Concrete Foundations shall include reinforcement bars complete in place.

TOTAL BILL OF MATERIAL

	ITEM	UNIT	TOTAL
	OVERHEAD SIGN STRUCTURE SPAN TYPE I-A	Foot	
	OVERHEAD SIGN STRUCTURE SPAN TYPE II-A	Foot	110
	OVERHEAD SIGN STRUCTURE SPAN TYPE III-A	Foot	
	OVERHEAD SIGN STRUCTURE WALKWAY TYPE A	Foot	44
	CONCRETE FOUNDATIONS	Cu. Yds.	
***	DRILLED SHAFT CONCRETE FOUNDATIONS	Cu. Yds.	24.6

OS-A-1 5-15-2023

ABNA DESIGN FIRM REG. 184.002117

USER NAME = mjones	DESIGNED - SEA	REVISED -	
	DRAWN - MBJ	REVISED -	
PLOT SCALE = $SCALE$	CHECKED - SEA	REVISED -	
PLOT DATE = 12/4/2025	DATE - 2025/10/03	REVISED -	

STATE OF ILLINOIS
DEPARTMENT OF TRANSPORTATION

ALUMINUM TRUSS SUPPORTS
STRUCTURE NO. 8S082I055L004.3

SCALE: NTS | SHEET 2 OF 14 SHEETS | STA. TO STA.

F.A.I. RTE.	SECTION	COUNTY	TOTAL SHEETS	SHEET NO.
70	Section82-(5,6)RS-2, 60-6RS-2	MADISON & ST. CLAIR	678	563

CONTRACT NO. 76E84
ILLINOIS | FED. AID PROJECT

MODEL: $MODELNAME$
FILE NAME: pw://jacobs-us-a-pw.bentley.com:jacobs-us-a-pw-04/Documents/D3152206.02 - ILDOT - I-55 I-70 Rehabilitation/30 Project Data/PID/ST/ABNA/Sht/8S082I055L0043-002-OHSS-GPE.dgn

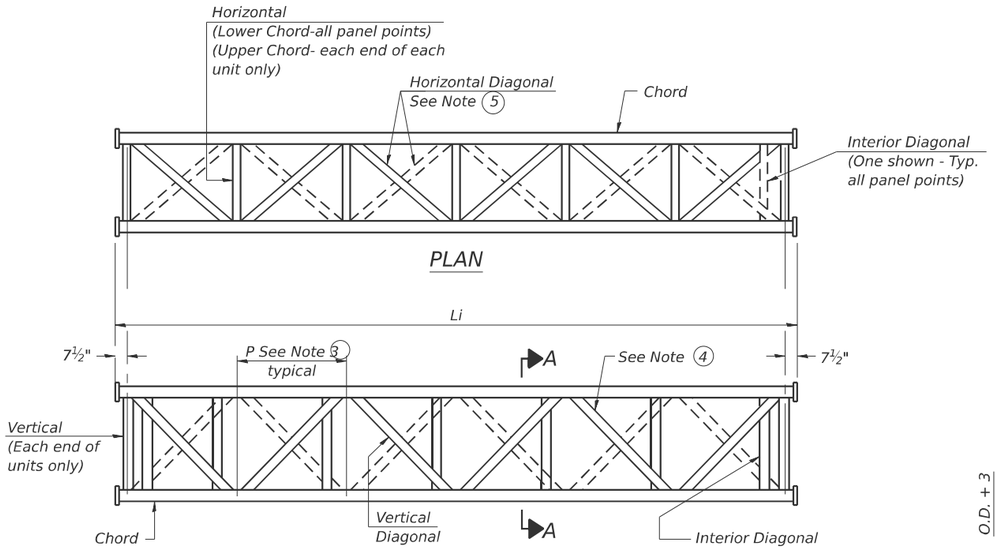

ELEVATION
TYPICAL INTERIOR UNIT

Even number of panels/interior unit required.

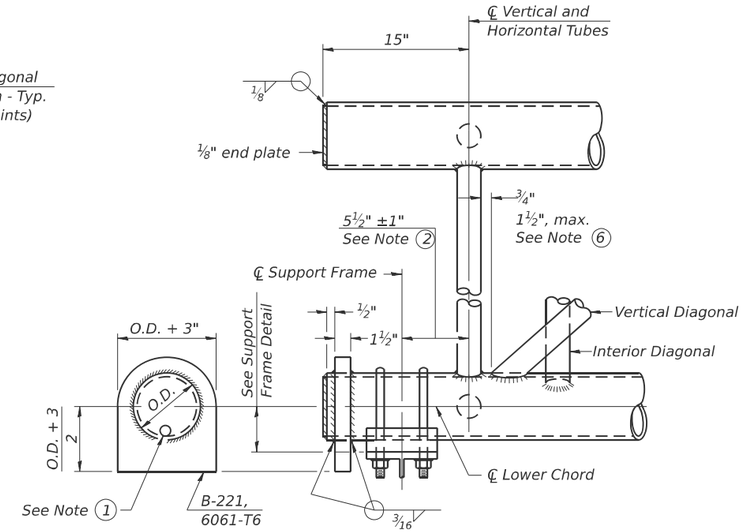

SUPPORT END DETAIL FOR EXTERIOR UNIT

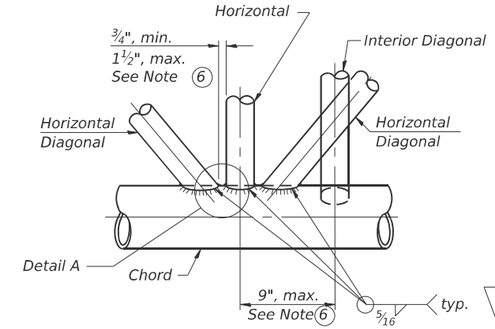

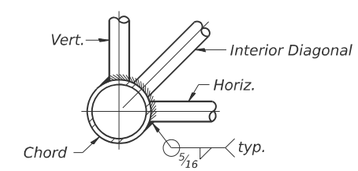

TYPICAL JOINT DETAILS

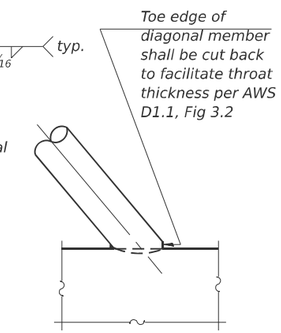

DETAIL A

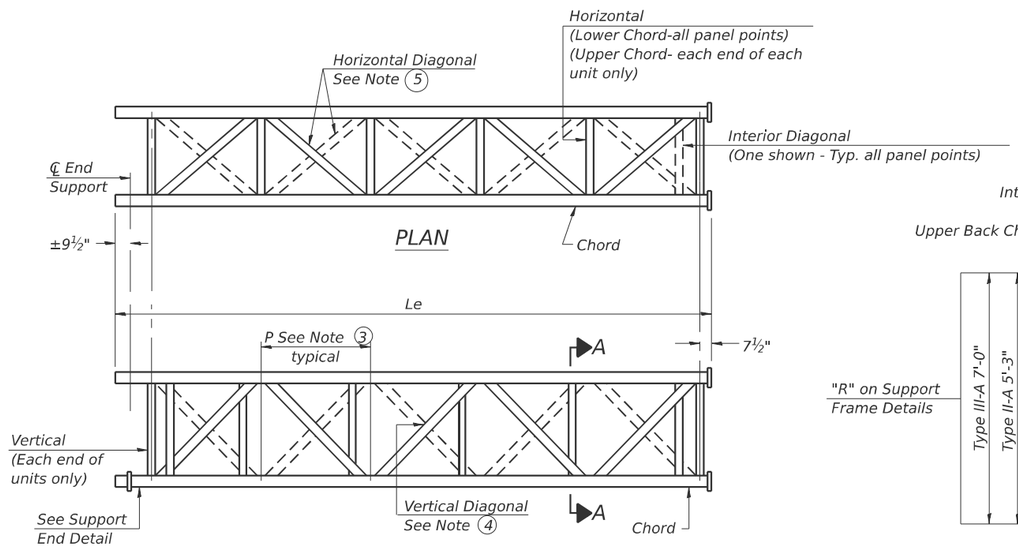

ELEVATION
TYPICAL EXTERIOR UNIT

Even or odd number of panels/exterior units allowed.

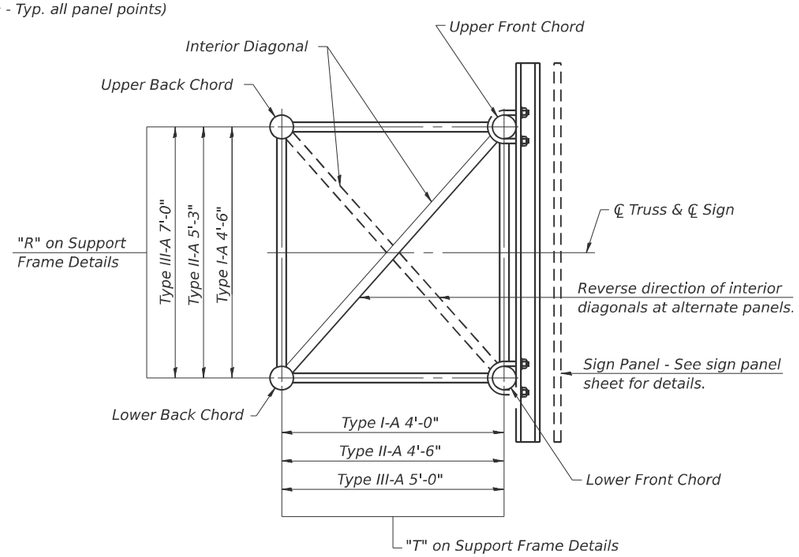

SECTION A-A

1. Contractor may alternatively use standard aluminum drive-fit cap to close end. ½" Ø drain hole in end plate/drive-fit cap. (Typ. at ends of all chords)
2. 5½" end dimension may vary by ±1" to provide uniform panel spacing (P).
3. Panel spacing (P) shall be uniform for entire truss and between 4'-0" and 5'-0" for Type I-A or 4'-0" and 5'-6" for Types II-A and III-A.
4. Vertical Diagonals in front and back face shall alternate.
5. Hidden lines show wind bracing alternates direction between planes of top and bottom chords.
6. All diagonals shall be detailed for minimum offset from the panel point based on the following: Offset shall be such as to provide a ¾" minimum to 1½" maximum clearance between any diagonal and any horizontal or vertical member, and to provide clearance for U-bolt connections of signs or walkway brackets.

OS-A-2 5-15-2023

MODEL: $MODELNAME$
FILE NAME: pw://jacobs-us-a-pw.bentley.com:jacobs-us-a-pw-04/Documents/D315220602 - ILDOT - I-55 I-70 Rehabilitation/30 Project Data/PID/ST/ABNA/Sht/8S082I055L0043-003-OHSS-DETLS01.dgn

ABNA DESIGN FIRM REG. 184.002117

USER NAME = mjones	DESIGNED - SEA	REVISED -	
	DRAWN - MBJ	REVISED -	
PLOT SCALE = $SCALE$	CHECKED - SEA	REVISED -	
PLOT DATE = 12/3/2025	DATE - 2025/10/03	REVISED -	

STATE OF ILLINOIS
DEPARTMENT OF TRANSPORTATION

ALUMINUM TRUSS DETAILS
STRUCTURE NO. 8S082I055L004.3

SCALE: NTS | SHEET 3 OF 14 SHEETS | STA. TO STA.

F.A.I. RTE.	SECTION	COUNTY	TOTAL SHEETS	SHEET NO.
70	Section82-(5,6)RS-2, 60-6RS-2	MADISON & ST. CLAIR	678	564

CONTRACT NO. 76E84

ILLINOIS | FED. AID PROJECT

TRUSS UNIT TABLE

Structure Number	Station	Design Truss Type	Exterior Units (2)			Interior Unit				Upper & Lower Chord		Verticals; Horizontals; Vertical, Horizontal, and Interior Diagonals		Camber at Midspan	Splicing Flange					
			No. Panels per Unit	Unit Lgth.(Le)	Panel Lgth.(P)	No. Req'd.	No. Panels per Unit	Unit Lgth.(Li)	Panel Lgth.(P)	O.D.	Wall	O.D.	Wall		Bolts		Weld Sizes		A	B
															No./Splice	Dia.	W	W1		
8S082I055L004.3	129+94.00	II-A	7	39'-2½"	5'-4"	1	6	33'-3"	5'-4"	6½"	5/16"	3"	5/16"	3⅝"	6	1"	⅜"	¼"	11"	14½"

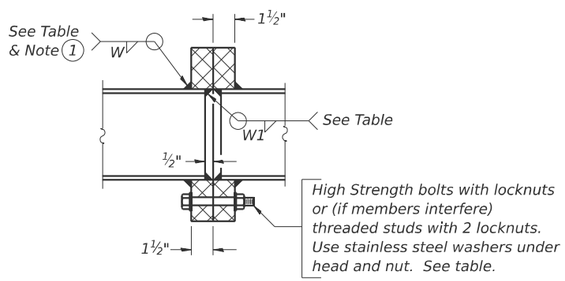

SECTION B-B

1 Splicing Flanges shall be attached to each truss unit with the truss shop assembled to camber shown. Truss units shall be in proper alignment and flange surfaces shall be shop bolted into full contact before welding. Sufficient external welds or tacks shall be made to secure flanges until remaining welds are made after disassembly. Adjacent flanges shall be "match marked" to insure proper field assembly.

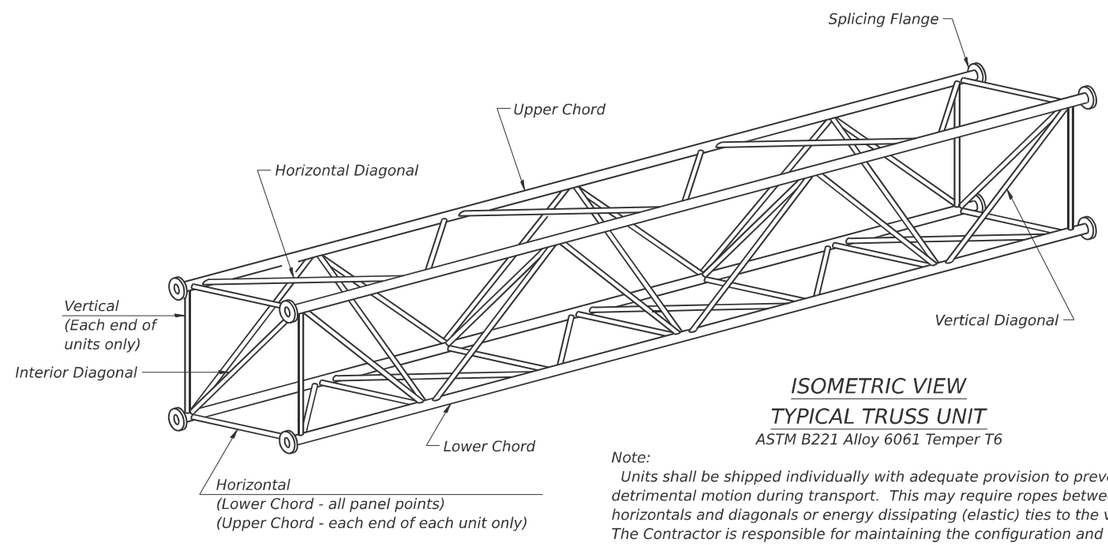

ISOMETRIC VIEW
TYPICAL TRUSS UNIT
ASTM B221 Alloy 6061 Temper T6

Note:
Units shall be shipped individually with adequate provision to prevent detrimental motion during transport. This may require ropes between horizontals and diagonals or energy dissipating (elastic) ties to the vehicle. The Contractor is responsible for maintaining the configuration and protection of the units.

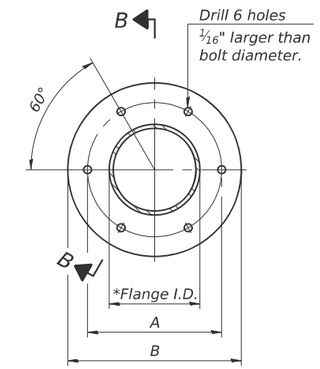

TRUSS TYPES I-A, II-A, & III-A

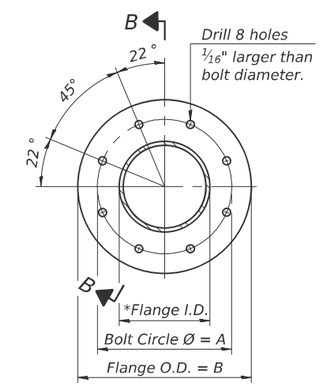

TRUSS TYPES II-A & III-A

SPLICING FLANGES
ASTM B221, Alloy 6061-T6
or ASTM B209, Alloy 6061-T651
*To fit O.D. of Chord with maximum gap of 1/16".

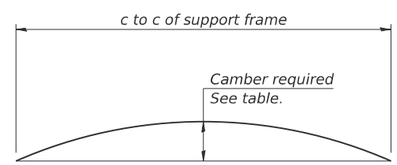

CAMBER DIAGRAM
Camber curve shown is theoretical. Actual camber attained by slope changes at splices between units.

CAMBER ATTAINMENT EXAMPLES:

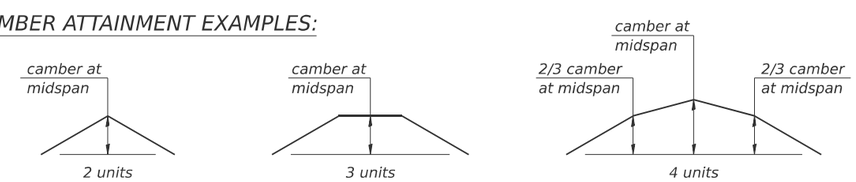

Camber shown is for fabrication only, measured with truss fully supported. (No-load condition)

OS4-A-2 5-15-2023

MODEL: $MODELNAME$
FILE NAME: pw://jacobs-us-pw.bentley.com:jacobs-us-pw-04:Documents/D315220 6.02 - ILDOT - I-55 I-70 Rehabilitation:30 Project Data/PID/ST/ABNA/Sht/8S082I055L0043-004-OHSS-DETLS02.dgn

ABNA DESIGN FIRM REG. 184.002117	USER NAME = mjones	DESIGNED - SEA	REVISED -	STATE OF ILLINOIS DEPARTMENT OF TRANSPORTATION
		DRAWN - MBJ	REVISED -	
	PLOT SCALE = $SCALE$	CHECKED - SEA	REVISED -	
	PLOT DATE = 12/3/2025	DATE - 2025/10/03	REVISED -	

ALUMINUM TRUSS DETAILS
STRUCTURE NO. 8S082I055L004.3

SCALE: NTS | SHEET 4 OF 14 SHEETS | STA. | TO STA.

F.A.I. RTE.	SECTION	COUNTY	TOTAL SHEETS	SHEET NO.
70	Section82-(5,6)RS-2, 60-6RS-2	MADISON & ST. CLAIR	678	565
		CONTRACT NO. 76E84		
		ILLINOIS FED. AID PROJECT		

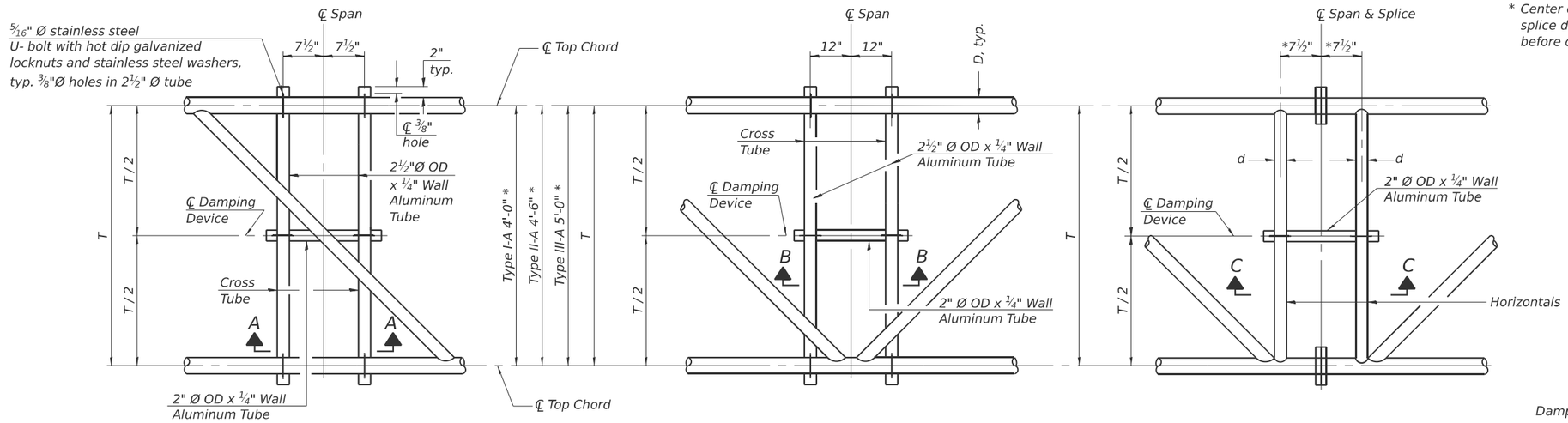

* Center of horizontal to center of splice dimension may vary. Verify before drilling holes in mounting tube.

PLAN DETAIL "A"
℄ Span between Panel Points

PLAN DETAIL "B"
℄ Span at Panel Point

PLAN DETAIL "C"
℄ Span at ℄ Chord Splice

NOTES

Damper: One damper per truss. (31 lbs. minimum Stockbridge-Type Aluminum - 29" minimum between ends of weights) Cost included in Overhead Sign Structure...

Materials: Aluminum tubes shall be ASTM B221 alloy 6061 temper T6. Cost included in Overhead Sign Structure...

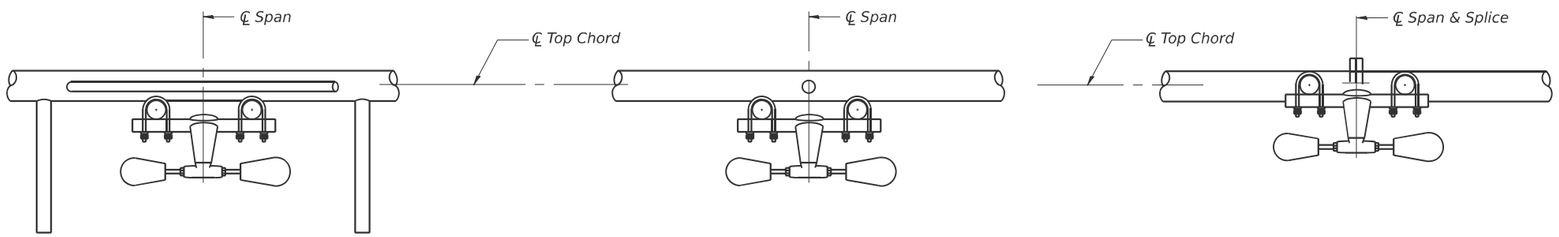

SECTION A-A

SECTION B-B

SECTION C-C

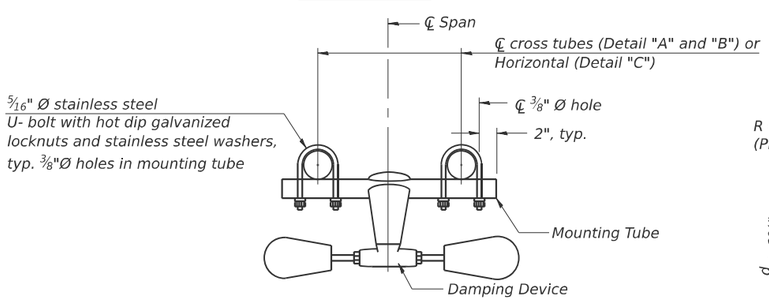

TRUSS DAMPING
DEVICE CONNECTION DETAIL
(Typical)

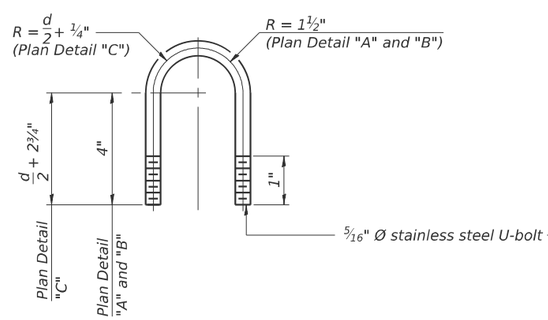

DAMPING DEVICE MOUNTING
TUBE U-BOLT DETAIL
(Typical)

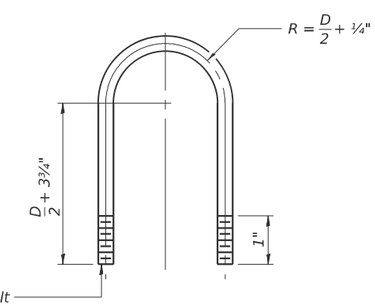

TOP CHORD TO CROSS TUBE
U-BOLT DETAIL
(Typical - Detail "A" and "B")

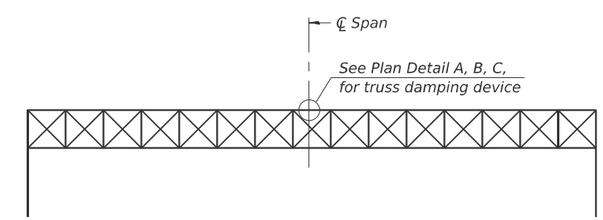

ELEVATION
Aluminum Overhead
Sign Truss

OS-A-D 5-15-2023

MODEL: $MODELNAME$
FILE NAME: pw://jacobs-us-va-pw.bentley.com:jacobs-us-va-pw-04/Documents/D3152206.02 - ILDOT - I-55 I-70 Rehabilitation/30 Project Data/PID/ST/ABNA/Sht/8S082I055L0043-005-OHSS-DETLS03.dgn

ABNA DESIGN FIRM REG. 184.002117	USER NAME = mjones	DESIGNED - SEA	REVISED -	STATE OF ILLINOIS DEPARTMENT OF TRANSPORTATION	OVERHEAD SIGN STRUCTURE DAMPING DEVICE STRUCTURE NO. 8S082I055L0043
		DRAWN - MBJ	REVISED -		
	PLOT SCALE = $SCALE$	CHECKED - SEA	REVISED -		
	PLOT DATE = 12/3/2025	DATE - 2025/10/03	REVISED -		SCALE: NTS SHEET 5 OF 14 SHEETS STA. TO STA.

F.A.I. RTE.	SECTION	COUNTY	TOTAL SHEETS	SHEET NO.
70	Section82-(5,6)RS-2, 60-6RS-2	MADISON & ST. CLAIR	678	566
		CONTRACT NO. 76E84		
		ILLINOIS	FED. AID PROJECT	

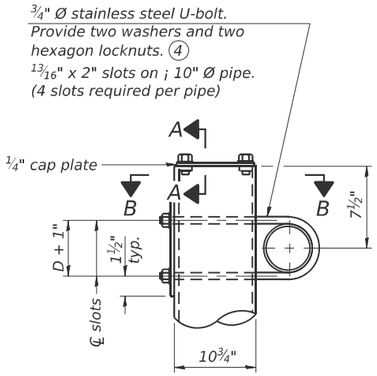

DETAIL A

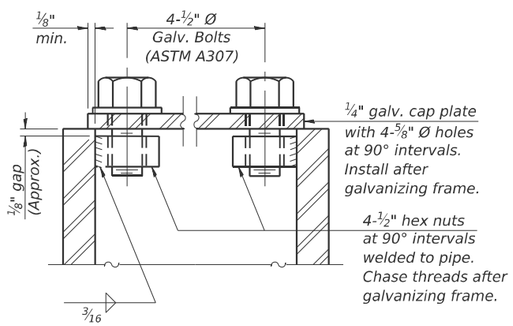

SECTION A-A

As an alternate to bolts, may use galvanized drive-fit caps installed after galvanizing frame.

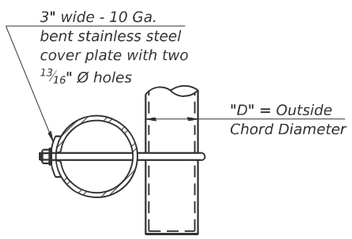

SECTION B-B

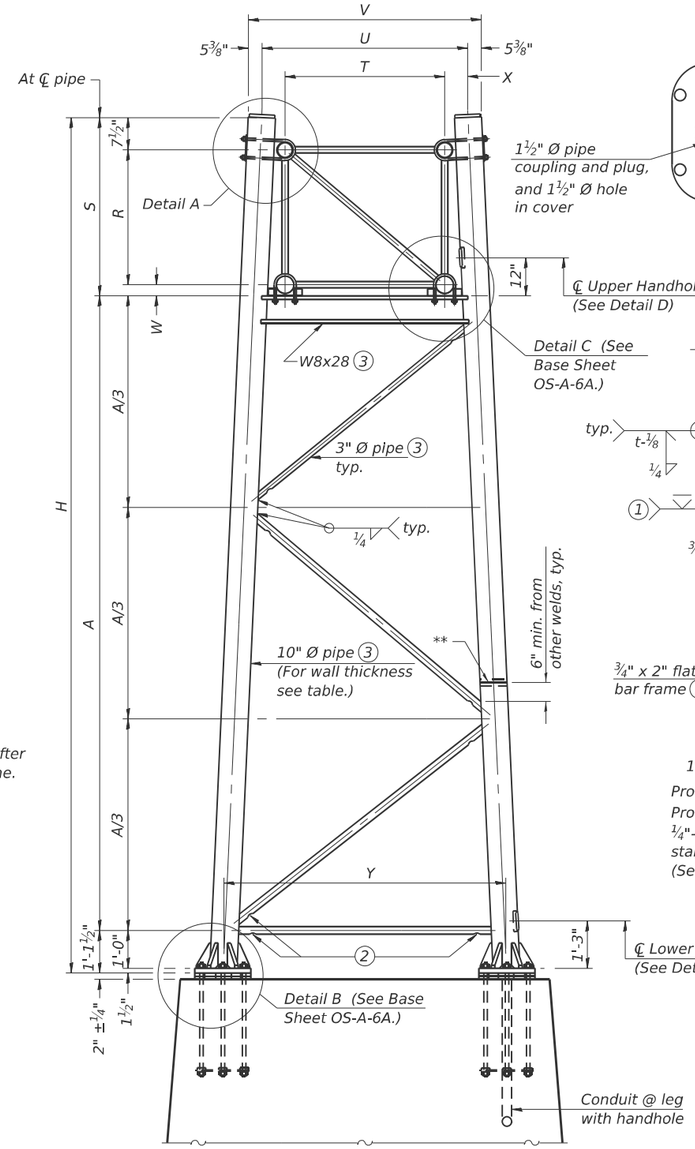

For Foundation Details, see base sheet OS-F3 (Spread Footing) or OS4-F3 (Drilled Shaft).

SIDE ELEVATION

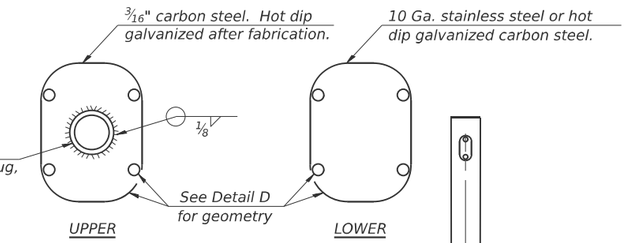

HANDHOLE COVERS

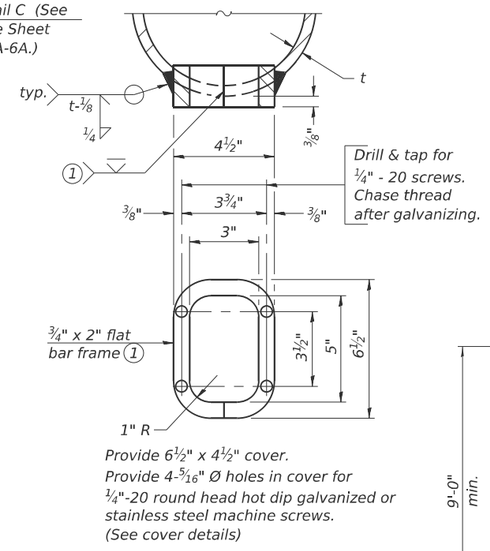

Provide 6 1/2" x 4 1/2" cover.
Provide 4-5/16" Ø holes in cover for 1/4"-20 round head hot dip galvanized or stainless steel machine screws.
(See cover details)

DETAIL D

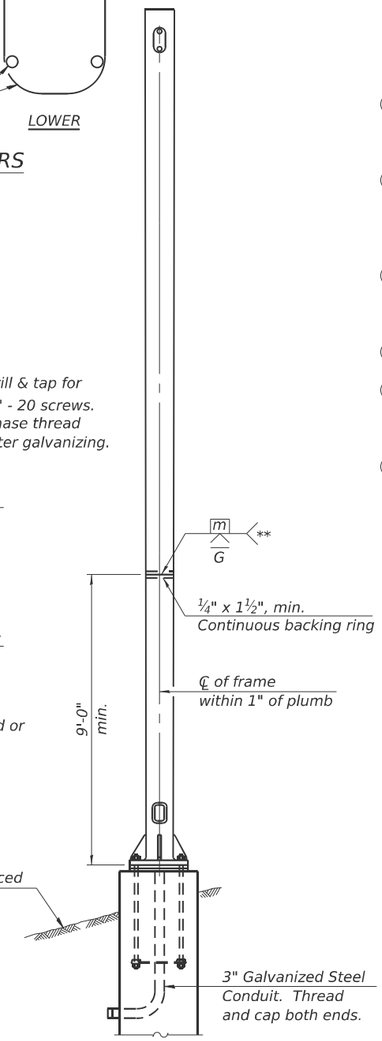

END ELEVATION

Support Design Loads: See Base Sheet OS-A-1 for design and loading criteria.
Load combinations checked include deadload plus:
a) 100% wind normal to sign, 20% parallel to sign
b) 60% wind normal to sign, 30% parallel to sign

1. In lieu of fabricated handhole frame as shown, may cut from 2" plate (rolling direction vertical). All cut faces to be ground to ANSI Roughness of 500µ in or less.
2. Galvanizing vent holes of adequate size shall be provided on underside at each end of bracing pipes. Alternately, holes may be provided in wall of pipe column. All vent holes shall be drilled and de-burred, typ.
3. Steel pipe, plate, carbon steel handhole covers and rolled sections shall be hot dip galvanized after fabrication. Painting is not permitted. See Base Sheet OS-A-1.
4. See General Notes for fasteners.
5. Dimensions shown are based on selection criteria in the Sign Structures Manual. Nonstandard applications must have dimensions verified or amended as appropriate.
6. "H" based on 15'-0" or actual sign height, whichever is greater.

Truss Type	Dimensions							
	R	S	T	U	V	W	X	Y
I-A	4'-6"	5'-5 1/2"	4'-0"	5'-6"	6'-4 3/4"	4"	9"	8'-3"
II-A (5)	5'-3"	6'-3 1/4"	4'-6"	6'-1"	6'-11 3/4"	4 3/4"	9 1/2"	8'-3"

10" Ø PIPE TRUSS SUPPORT FRAME

** One butt welded joint is allowed only on one post per support frame. If used, weld procedure must be pre-approved by Engineer and joint shall receive 100% RT or UT (tension criteria) at Contractor's expense.

Structure Number	Station	Support Left	Support Right	Truss Type	Pipe Wall Thickness	H (6)	A
8S082I055L004.3	129+94.00	X		II-A	0.365	28'-0"	20'-7"
8S082I055L004.3	129+94.00		X	II-A	0.365	30'-6"	23'-1"

OS-A-6 5-15-2023

MODEL: $MODELNAME$
FILE NAME: pw://jacobs-us-va-pw.bentley.com:jacobs-us-va-pw-04/Documents/D315220602 - ILDOT - I-55 I-70 Rehabilitation/30 Project Data/PID/STI/ABNA/Sht/8S082I055L0043-006-OHSS-DETLS04.dgn

ABNA DESIGN FIRM REG. 184.002117

USER NAME = mjones	DESIGNED - SEA	REVISED -	
	DRAWN - MBJ	REVISED -	
PLOT SCALE = $SCALE$	CHECKED - SEA	REVISED -	
PLOT DATE = 12/3/2025	DATE - 2025/10/03	REVISED -	

STATE OF ILLINOIS
DEPARTMENT OF TRANSPORTATION

SUPPORT FRAME DETAILS FOR ALUMINUM TRUSS
STRUCTURE NO. 8S082I055L004.3

SCALE: NTS | SHEET 6 OF 14 SHEETS | STA. | TO STA.

F.A.I. RTE.	SECTION	COUNTY	TOTAL SHEETS	SHEET NO.
70	Section82-(5,6)RS-2, 60-6RS-2	MADISON & ST. CLAIR	678	567

CONTRACT NO. 76E84
ILLINOIS FED. AID PROJECT

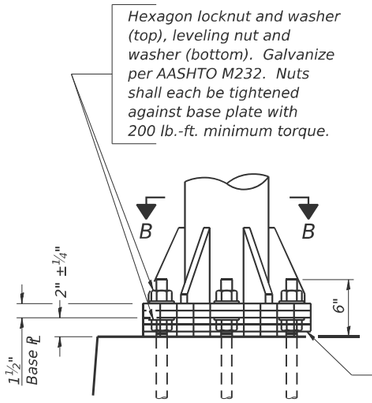

DETAIL B

Ribs shall be cut to fit slope of pipe.

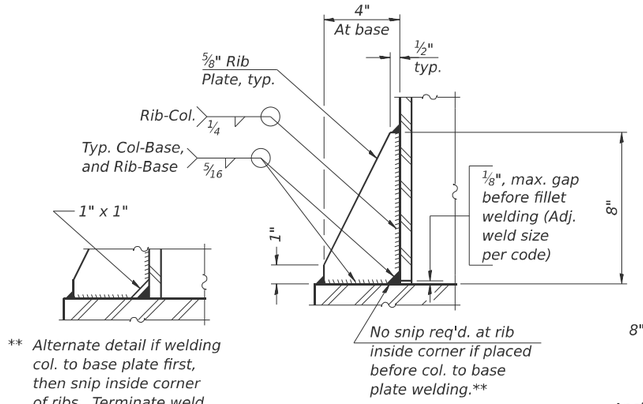

SECTION D-D

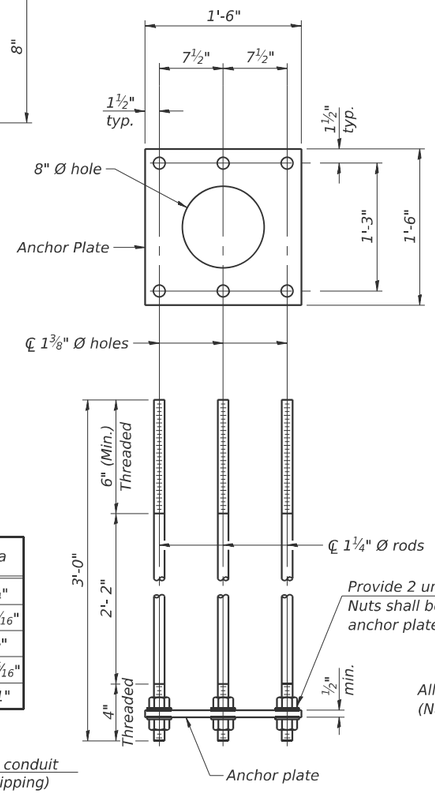

ANCHOR ROD DETAIL

Spread Footing Foundation

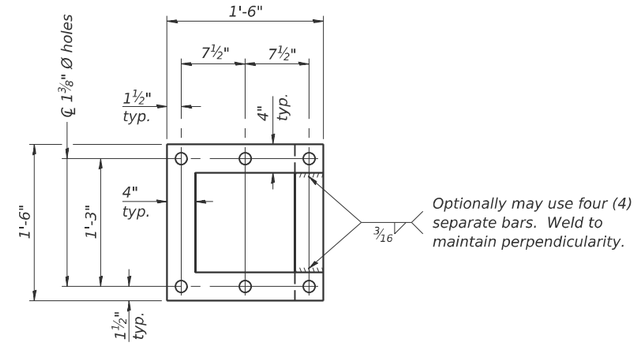

POSITIONING PLATE(S)

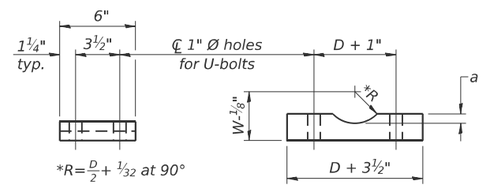

D = Outside Diameter of Chord.
For W, see Base Sheet OS-A-6.

SADDLE SHIM DETAIL

ASTM B26 Alloy 356-F
or
ASTM B209 Alloy 6061-T651
(4 required per sign truss)

Truss Chord Nominal Dia.	a
5"	¾"
5½"	13/16"
6"	⅞"
6½"	15/16"
7"	1"

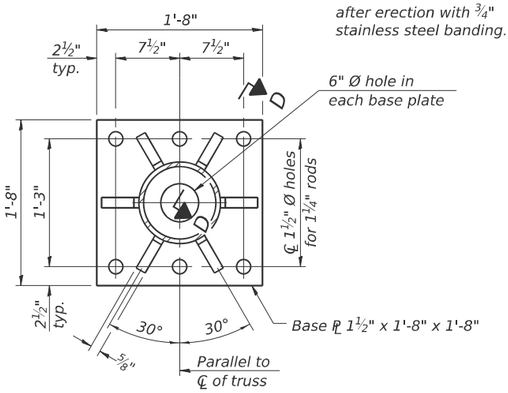

SECTION B-B

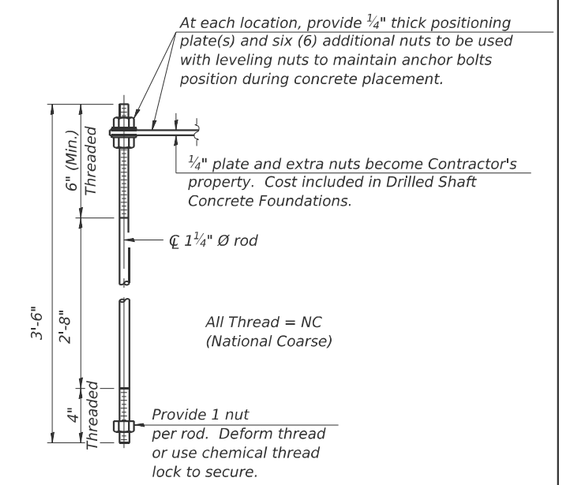

ANCHOR ROD DETAIL

Drilled Shaft Foundation

Anchor rods shall conform to ASTM F1554 Grade 105. Galvanize upper 12" minimum per AASHTO M232. No welding shall be permitted on rods.

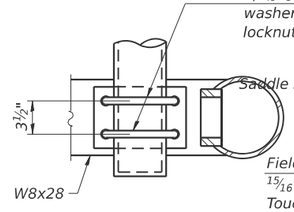

SECTION C-C

(Handhole cover not shown)

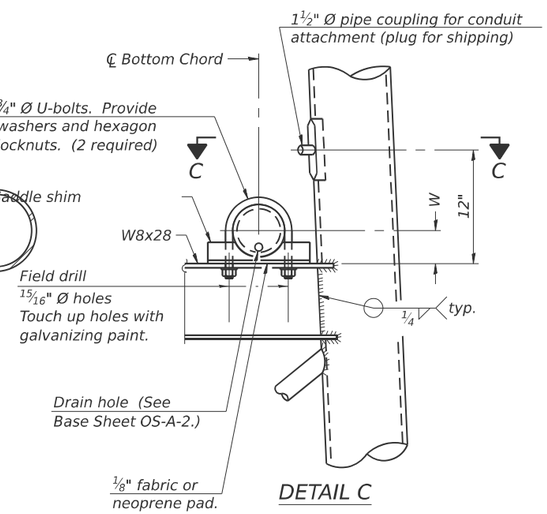

DETAIL C

10" Ø PIPE SUPPORT FRAME DETAILS

OS-A-6A 5-15-2023

MODEL: $MODELNAME$
FILE NAME: pw://jacobs-us-pw.bentley.com:jacobs-us-v8-pw-04/Documents/D3152206.02 - ILDOT - I-55 I-70 Rehabilitation/30 Project Data/PID/ST/ABNA/Sht/0S082I055L0043-007-OHSS-DETLS05.dgn

ABNA DESIGN FIRM REG. 184.002117

USER NAME = mjones	DESIGNED - SEA	REVISED -	
	DRAWN - MBJ	REVISED -	
PLOT SCALE = $SCALE$	CHECKED - SEA	REVISED -	
PLOT DATE = 12/3/2025	DATE - 2025/10/03	REVISED -	

STATE OF ILLINOIS
DEPARTMENT OF TRANSPORTATION

SUPPORT FRAME DETAILS FOR ALUMINUM TRUSS
STRUCTURE NO. 8S082I055L004.3

SCALE: NTS | SHEET 7 OF 14 SHEETS | STA. | TO STA.

F.A.I. RTE.	SECTION	COUNTY	TOTAL SHEETS	SHEET NO.
70	Section82-(5,6)RS-2, 60-6RS-2	MADISON & ST. CLAIR	678	568
		CONTRACT NO. 76E84		
		ILLINOIS FED. AID PROJECT		

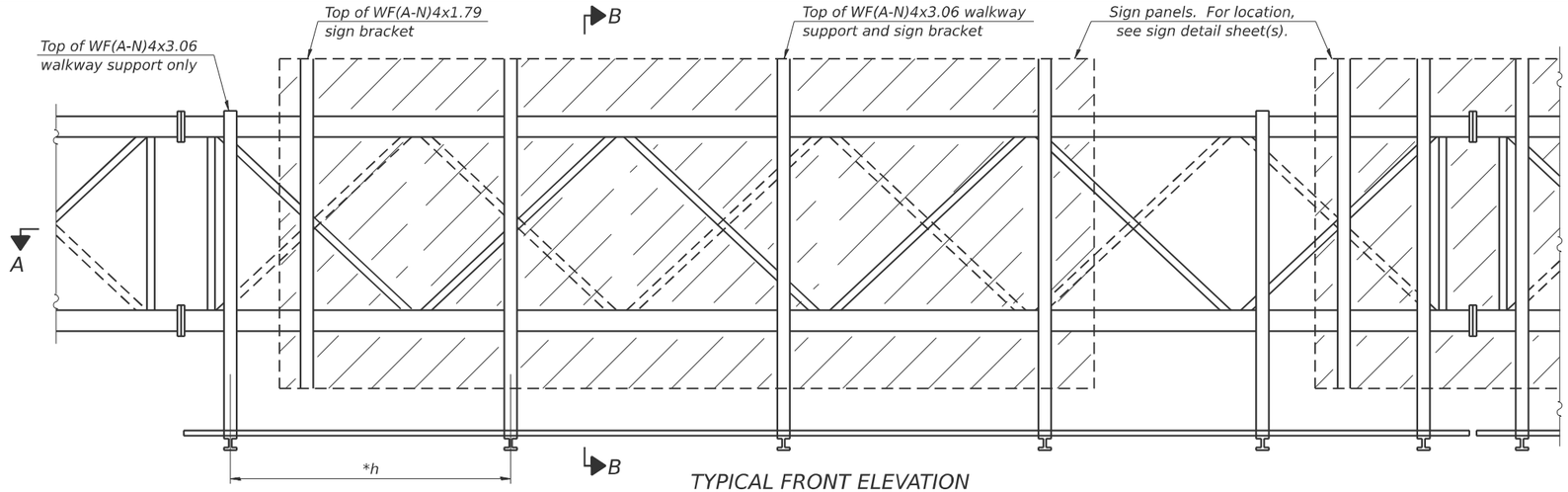

TYPICAL FRONT ELEVATION

With lights and handrail omitted for clarity.
For Section B-B, see Base Sheet OS-A-10.

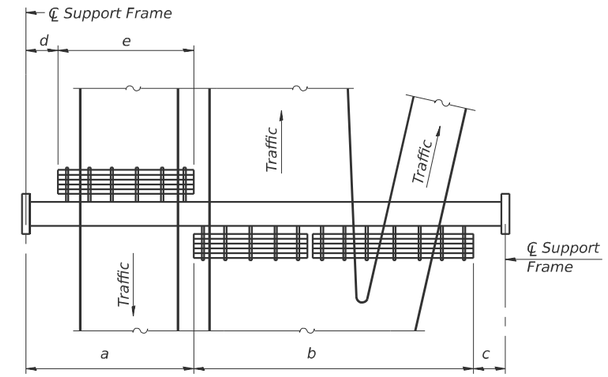

PLAN
WALKWAY AND HANDRAIL SKETCH

(Road plan beneath truss varies)

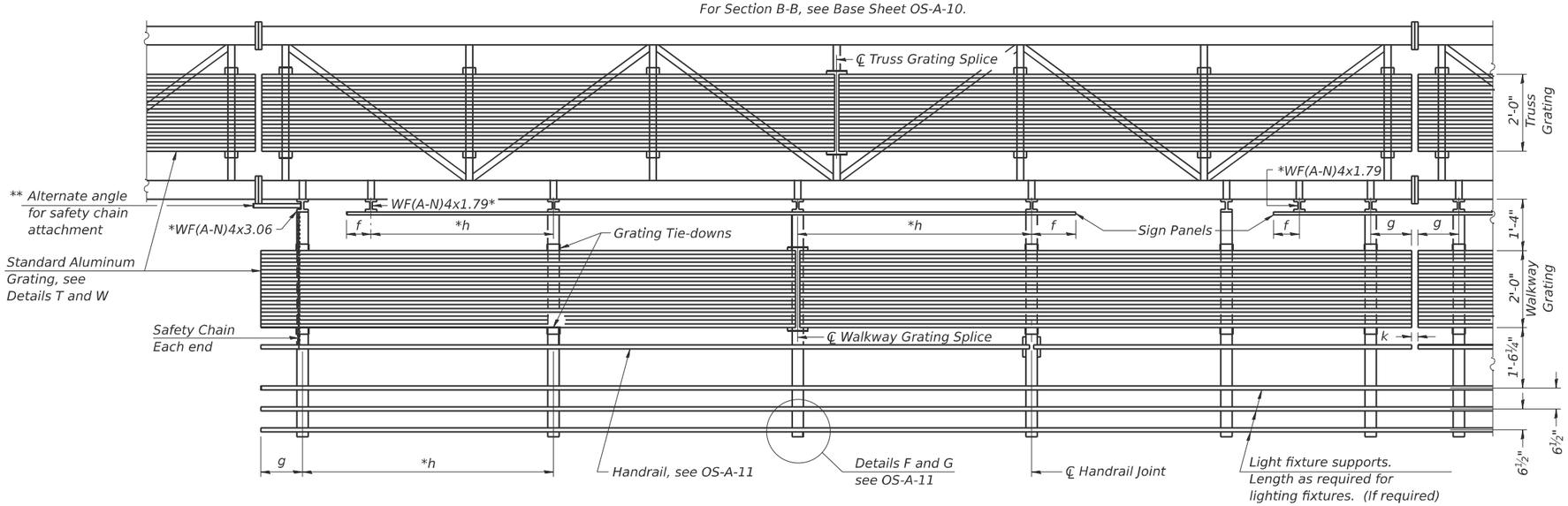

SECTION A-A

Handrail and walkway shall span a minimum of three brackets between splices and/or gap joints.
Place all sign and walkway brackets as close to panel points as practical.
Handrail joints, grating, and light support splices placed as needed.

BRACKET TABLE

WF(A-N)4x1.79 or WF(A-N)4x3.06 ASTM B308, Alloy 6061-T6		
Sign Width		Number Brackets Required
Greater Than	Less Than or Equal To	
	8'-0"	2
8'-0"	14'-0"	3
14'-0"	20'-0"	4
20'-0"	26'-0"	5
26'-0"	32'-0"	6

Notes:
* Space walkway brackets WF(A-N)4x3.06 and sign brackets WF(A-N)4x1.79 for efficiency and within limits shown:

f = 12" maximum, 4" minimum (End of sign to ℄ of nearest bracket)
g = 12" maximum, 4" minimum (End of walkway grating to ℄ of nearest support bracket)
h = 6'-0" maximum (℄ to ℄ sign and/or walkway support brackets, WF(A-N)4x1.79 or WF(A-N)4x3.06)
k = 2" maximum gap between adjacent walkway grating sections and handrail ends

** If walkway bracket at safety chain location is behind sign, add angle to bracket, see Alternate Safety Chain Attachment on Base Sheet OS-A-11.

For Details T and W, Section B-B and Grating Splice Details see Base Sheet OS-A-10.
For Handrail Details see Base Sheet OS-A-11.

Structure Number	Station	a	b	c	d	e	Walkway Grating and Handrail Lengths
8S082I055L004.3	129+94.00	38'-0"	44'-0"	28'-0"	-	-	44'-0"

Truss grating to facilitate inspection shall run full length (center to center of support frames) ±12" on overhead trusses. Cost of truss grating is included in "Overhead Sign Structure".

Walkway and Truss Grating width dimensions are nominal and may vary ±½" based on available standard widths.

OS-A-9 5-15-2023

MODEL: $MODELNAME$
FILE NAME: pw://jacobs-us-a-pw.bentley.com:jacobs-us-va-pw-04/Documents/D315Z206.02 - ILDOT - I-55 I-70 Rehabilitation\30 Project Data\PID\STI\ABNA\Sht\8S082I055L0043-009-OHSS-DETLS06.dgn

ABNA DESIGN FIRM REG. 184.002117

USER NAME = mjones	DESIGNED - SEA	REVISED -	
	DRAWN - MBJ	REVISED -	
PLOT SCALE = $SCALE$	CHECKED - SEA	REVISED -	
PLOT DATE = 12/3/2025	DATE - 2025/10/03	REVISED -	

STATE OF ILLINOIS
DEPARTMENT OF TRANSPORTATION

ALUMINUM WALKWAY DETAILS
STRUCTURE NO. 8S082I055L004.3

SCALE: NTS | SHEET 8 OF 14 SHEETS | STA. TO STA.

F.A.I. RTE.	SECTION	COUNTY	TOTAL SHEETS	SHEET NO.
70	Section82-(5,6)RS-2, 60-6RS-2	MADISON & ST. CLAIR	678	569

CONTRACT NO. 76E84
ILLINOIS | FED. AID PROJECT

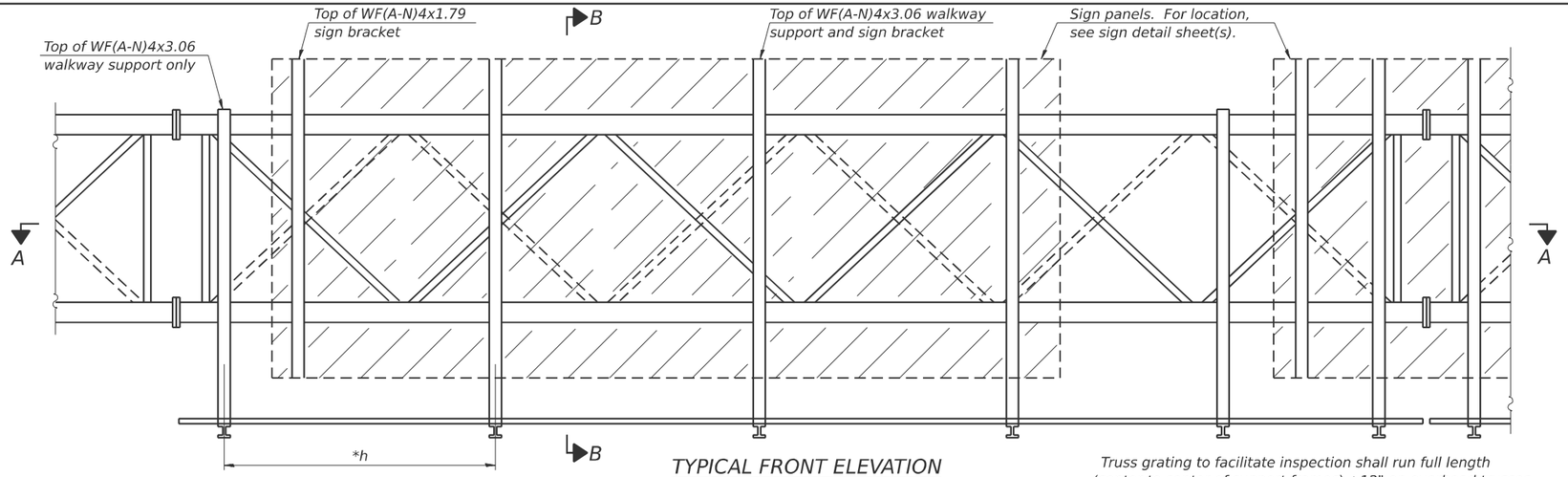

TYPICAL FRONT ELEVATION

With lights and handrail omitted for clarity.
For Section B-B, see Base Sheet OS-A-10.

Truss grating to facilitate inspection shall run full length (center to center of support frames) ±12" on overhead trusses. Cost of truss grating is included in "Overhead Sign Structure".

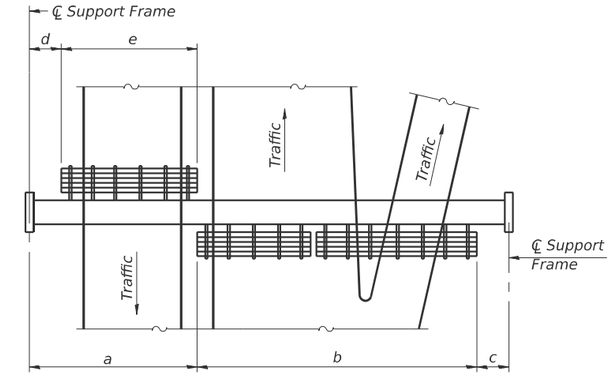

PLAN
WALKWAY AND HANDRAIL SKETCH

(Road plan beneath truss varies)

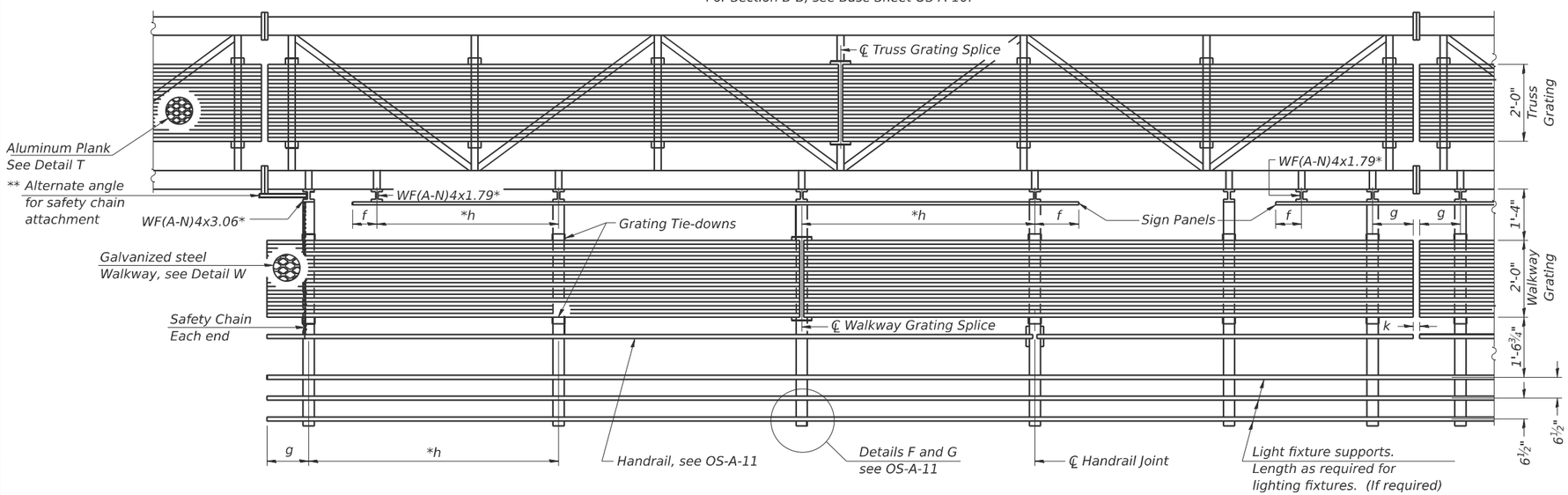

SECTION A-A

Handrail and walkway shall span a minimum of three brackets between splices and/or gap joints.
Place all sign and walkway brackets as close to panel points as practical.
Handrail joints, grating, and light support splices placed as needed.

BRACKET TABLE

WF(A-N)4x1.79 or WF(A-N)4x3.06 ASTM B308, Alloy 6061-T6		
Sign Width		Number Brackets Required
Greater Than	Less Than or Equal To	
	8'-0"	2
8'-0"	14'-0"	3
14'-0"	20'-0"	4
20'-0"	26'-0"	5
26'-0"	32'-0"	6

Note:
Details shown are considered equal alternatives to the Aluminum Walkway on Base Sheet OS-A-9, and may be substituted by Contractor at no change in contract cost.

Walkway and Truss Grating width dimensions are nominal and may vary ±½" based on available standard widths.

Structure Number	Station	a	b	c	d	e	Walkway Grating and Handrail Lengths
8S082I055L004.3	129+94.00	38'-0"	44'-0"	28'-0"	-	-	44'-0"

Notes:
* Space walkway brackets WF(A-N)4x3.06 and sign brackets WF(A-N)4x1.79 for efficiency and within limits shown:

f = 12" maximum, 4" minimum (End of sign to ℄ of nearest bracket)
g = 12" maximum, 4" minimum (End of walkway grating to ¡ of nearest support bracket)
h = 6'-0" maximum (℄ to ℄ sign and/or walkway support brackets, WF(A-N)4x1.79 or WF(A-N)4x3.06)
k = 2" maximum gap between adjacent walkway grating sections and handrail ends

** If walkway bracket at safety chain location is behind sign, add angle to bracket, see Alternate Safety Chain Attachment on Base Sheet OS-A-11.

For Details T and W, Section B-B and Grating Splice Details see Base Sheet OS-A-10.
For handrail details see base sheet OS-A-11.

OS-A-9S 5-15-2023

MODEL: $MODELNAME$
FILE NAME: pw://jacobs-us-a-pw.bentley.com:jacobs-us-a-pw-04/Documents/D315220602 - ILLDOT - I-55 I-70 Rehabilitation\30 Project Data\PID\ST\ABNA\Sht\8S082I055L0043-009-OHSS-DETLS07.dgn

ABNA DESIGN FIRM REG. 184.002117

USER NAME = mjones	DESIGNED - SEA	REVISED -	
	DRAWN - MBJ	REVISED -	
PLOT SCALE = $SCALE$	CHECKED - SEA	REVISED -	
PLOT DATE = 12/3/2025	DATE - 2025/10/03	REVISED -	

STATE OF ILLINOIS
DEPARTMENT OF TRANSPORTATION

ALTERNATE WALKWAY DETAILS
STRUCTURE NO. 8S082I055L004.3

SCALE: NTS | SHEET 9 OF 14 SHEETS | STA. TO STA.

F.A.I. RTE.	SECTION	COUNTY	TOTAL SHEETS	SHEET NO.
70	Section82-(5,6)RS-2, 60-6RS-2	MADISON & ST. CLAIR	678	570

CONTRACT NO. 76E84
ILLINOIS | FED. AID PROJECT

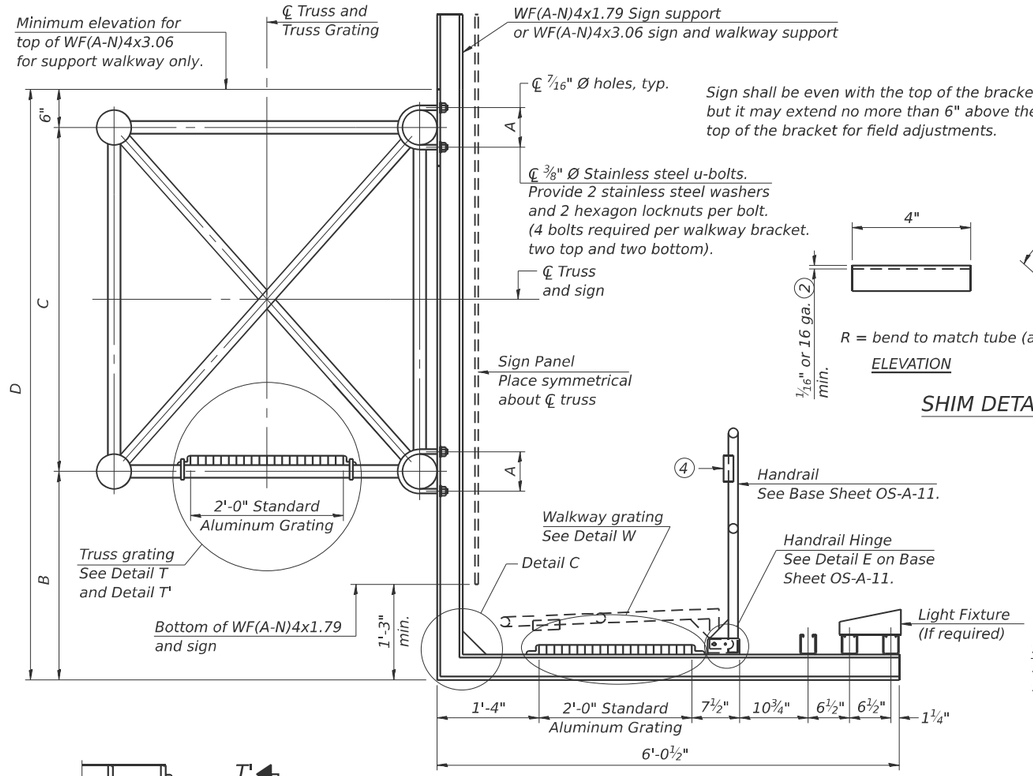

SECTION B-B

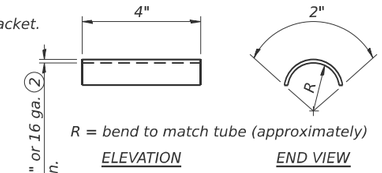

SHIM DETAIL

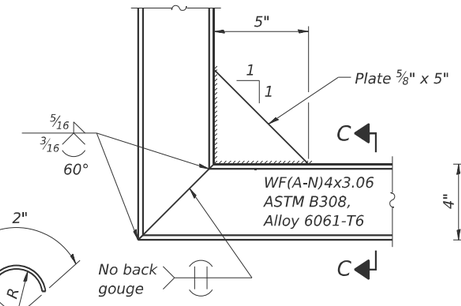

DETAIL C

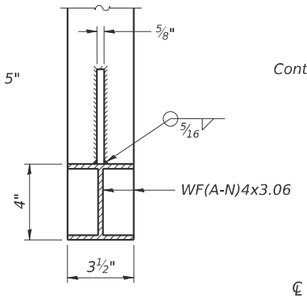

SECTION C-C

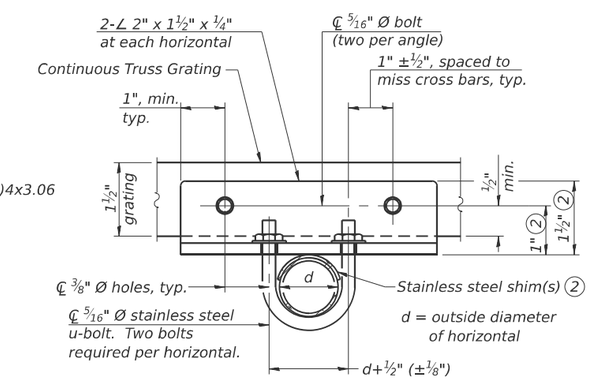

SECTION T-T

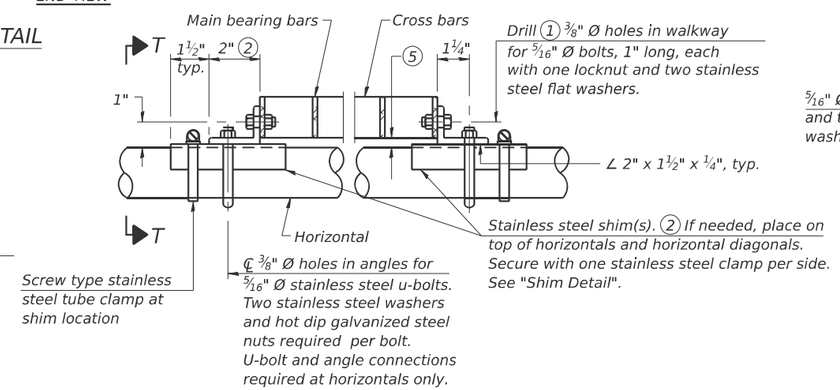

DETAIL T
(Continuous Truss grating)

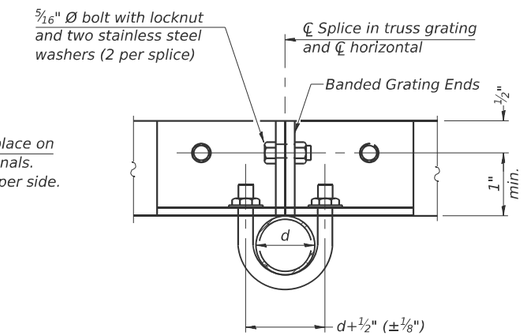

SECTION T'-T'

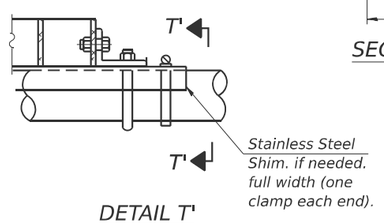

DETAIL T'
(Truss grating splice)
Details not shown same as Detail T.
Alternate materials may be used subject to the Engineer's review and approval.

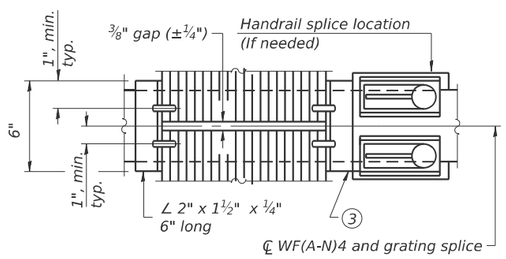

(AT WALKWAY GRATING SPLICE)

SPECIFICATIONS FOR STANDARD ALUMINUM GRATING

Main Bearing Bars shall be 3/16" x 1½" on 1 3/16" centers and conform to ASTM B221 Alloy 6061-T6.

Cross bars shall be 3/16" x 1½" on 4" centers and conform to ASTM B221 Alloy 6063-T5 or 6061-T6.

OR

Aluminum Grating with modified "t" sections for main bearing bars shall meet the following requirements:

Main bars shall conform to ASTM B221 Alloy 6061-T6 and have a minimum section modulus equal to 0.0705 in.³ per bar, a depth of 1½", spaced on 1 3/16" centers.

Cross bars shall conform to ASTM B221 Alloy 6063-T5 or T-42 and spaced on 4" centers.

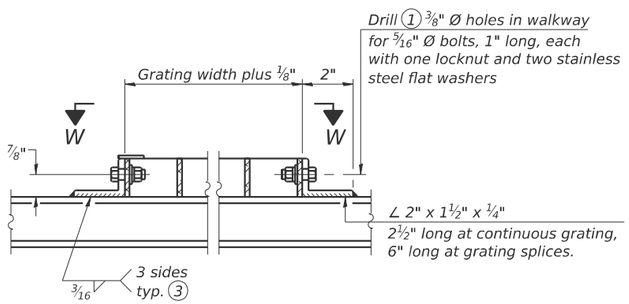

DETAIL W
(Walkway grating)

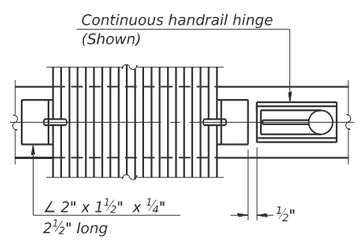

(CONTINUOUS WALKWAY GRATING)

SECTION W-W

Structure Number	Station	A	6 B	C	6 D
8S082I055L004.3	129+94.00	7"	6'-1½"	5'-3"	11'-10½"

1. Drilling holes in grating may be done in shop or field, based on Contractor's preference and subject to accurate alignment.
2. Stainless steel shims shall be placed as shown in Detail T if needed to compensate for alignment variations between horizontal and diagonal pipes beyond adjustment provided by angles. Thicker shims may be used subject to shims performing properly.
3. If Handrail Joint present, weld angle to WF(A-N)4 and ¼" extension bars. (See Base Sheet OS-A-11.)
4. ℄ ⅛" x ½" x 2" welded to handrail posts to protect locations that contact grating.
5. Tube to grating gap may vary from 0 to ½", max. to align walkway, allow for camber, etc.
6. Based on actual height of tallest sign given on OS-A-1.

OS-A-10 5-15-2023

MODEL: $MODELNAME$
FILE NAME: pw://jacobs-us-a-pw.bentley.com:jacobs-us-a-pw-04/Documents/D3152206.02 - ILLDOT - I-55 I-70 Rehabilitation\30 Project Data\PID\ST\ABNA\Sht\8S082I055L0043-010-OHSS-DETLS08.dgn

ABNA DESIGN FIRM REG. 184.002117

USER NAME = mjones	DESIGNED - SEA	REVISED -	
	DRAWN - MBJ	REVISED -	
PLOT SCALE = $SCALE$	CHECKED - SEA	REVISED -	
PLOT DATE = 12/3/2025	DATE - 2025/10/03	REVISED -	

STATE OF ILLINOIS
DEPARTMENT OF TRANSPORTATION

ALUMINUM WALKWAY DETAILS
STRUCTURE NO. 8S082I055L004.3

SCALE: NTS | SHEET 10 OF 14 SHEETS | STA. | TO STA.

F.A.I. RTE.	SECTION	COUNTY	TOTAL SHEETS	SHEET NO.
70	Section82-(5,6)RS-2, 60-6RS-2	MADISON & ST. CLAIR	678	571
		CONTRACT NO. 76E84		
		ILLINOIS FED. AID PROJECT		

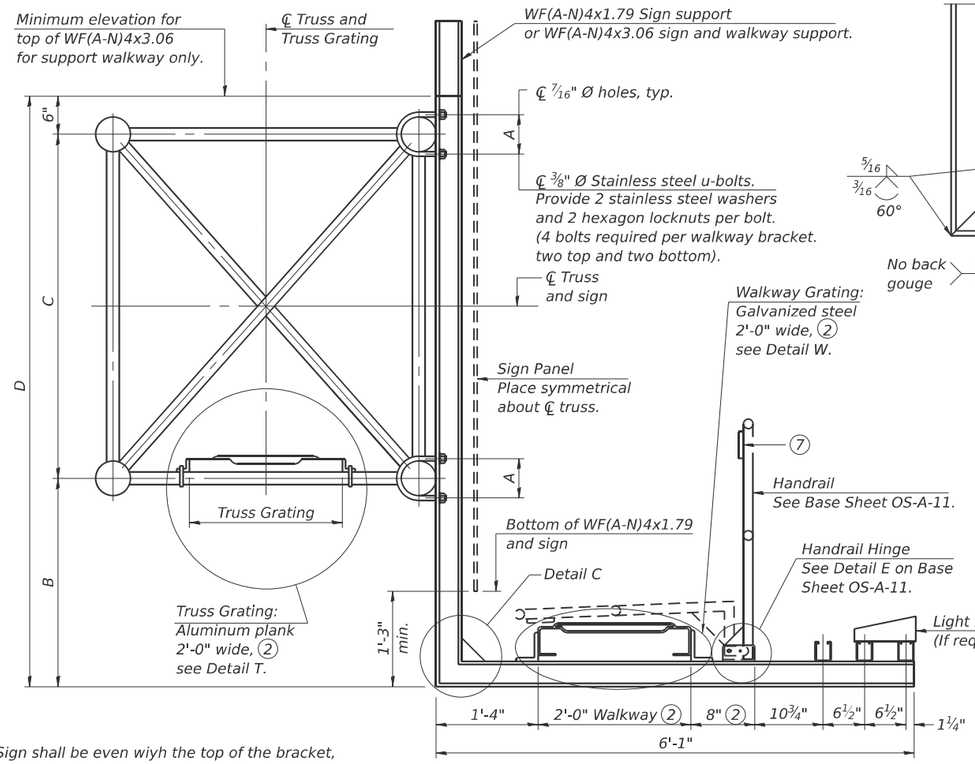

Sign shall be even wiyh the top of the bracket, but it may extend no more than 6" above the top of the bracket for field adjustments.

SECTION B-B

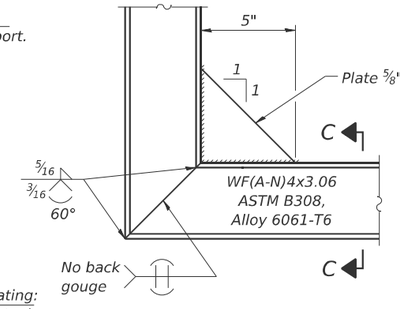

DETAIL C

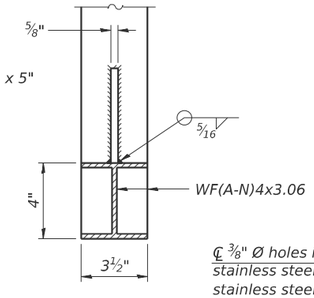

SECTION C-C

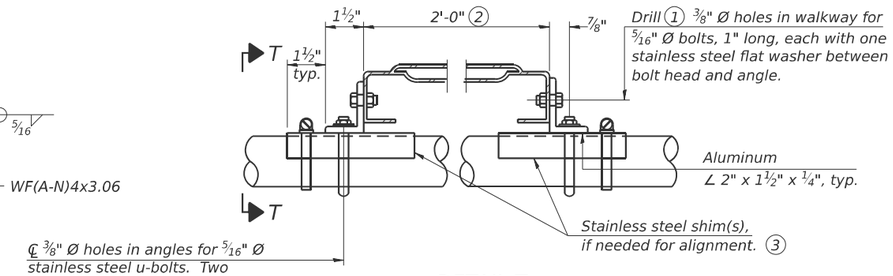

℄ 3/8" Ø holes in angles for 5/16" Ø stainless steel u-bolts. Two stainless steel washers and hot dip galvanized steel nuts required per bolt. U-bolt and angle connections required at horizontals only.

DETAIL T
(Truss grating at horizontal)

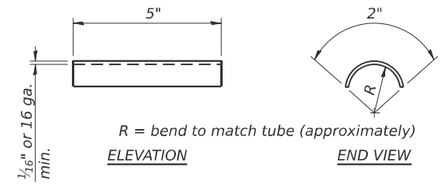

SHIM DETAIL

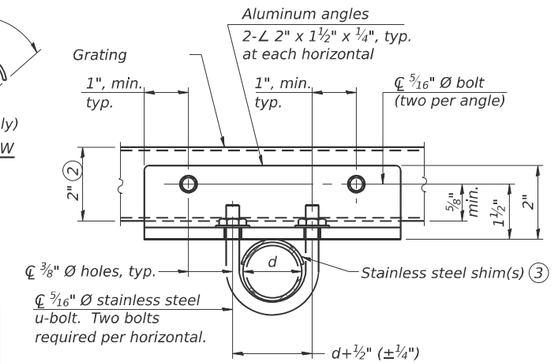

SECTION T-T
(Truss Grating Continuous)

d = outside diameter of horizontal

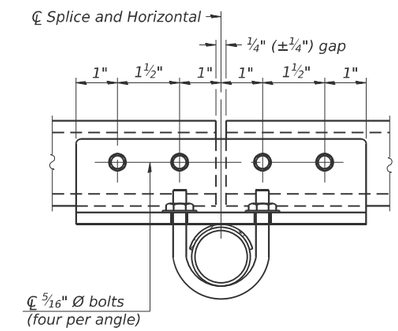

SECTION T-T
(Truss Grating Splice)

Alternate splice details and locations may be used subject to the Engineer's review and approval.

ALUMINUM TRUSS GRATING

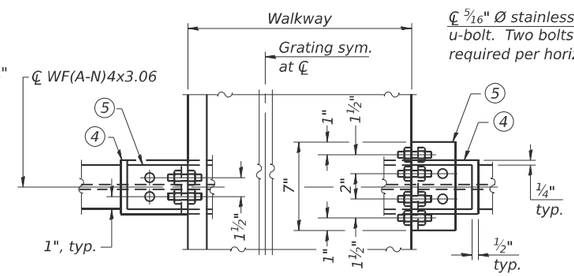

WALKWAY GRATING CONTINUOUS
AT WALKWAY GRATING SPLICE

SECTION W-W

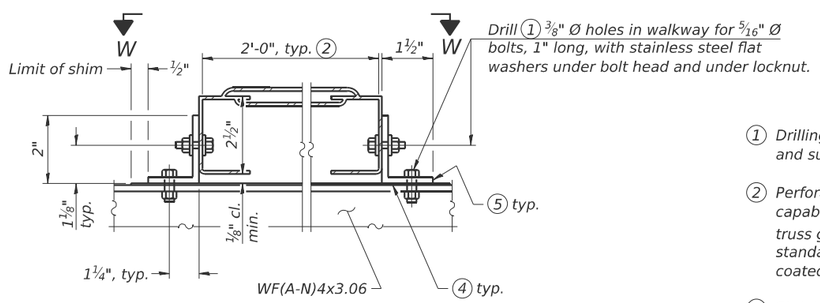

DETAIL W
GALVANIZED STEEL WALKWAY GRATING

(1) Drilling holes in grating may be done in shop or field, based on Contractor's preference and subject to accurate alignment.

(2) Perforated or expanded metal grating providing a skid resistant (non-serrated) surface and capable of supporting a 500 pound concentrated load with a 6'-0" clear span. Walkway and truss grating dimensions are nominal and may vary (width ±½", depth ±½") based on available standard sizes. Cut ends of grating shall be free of burrs or hazardous projections and coated with zinc-rich primer or equivalent.

(3) Stainless steel shims shall be placed under angles at horizontals and horizontal diagonals if needed to compensate for alignment variations and differences in horizontal diagonal pipe sizes beyond adjustment provided by angles. Secure with one stainless steel clamp per location, see "Shim Detail". Thicker shim plates may be used when needed subject to shims performing properly.

(4) 1/16" (or 16 ga.) x 2½" x 4" stainless steel shim adhered to top of WF(A-N)4x3.06 beneath each galvanized angle. Adhesives for shims shall be suitable for materials joined and full exposure conditions.

(5) Galvanized steel ∠ 2" x 2" x ¼", 3½" long with continuous grating, 7" long at grating splice.

(6) Details shown are considered equal alternatives to the Aluminum Walkway on Base Sheet OS-A-10 and may be substituted by Contractor at no change in contract cost.

(7) ℙ ⅛" x ½" x 2" welded to handrail posts to protect locations that contact grating.

(8) Based on actual height of tallest sign given on OS-A-1.

Structure Number	Station	A	(8) B	C	(8) D
8S082I055L004.3	129+94.00	7"	6'-1½"	5'-3"	11'-10½"

OS-A-10S 5-15-2023

MODEL: $MODELNAME$
FILE NAME: pw://jacobs-usa-pw.bentley.com:jacobs-usa-pw-04/Documents/D3152206.02 - ILDOT - I-55 I-70 Rehabilitation\30 Project Data\PID\ST\ABNA\Sht\8S082I055L0043-011-OHSS-DETL S09.dgn

ABNA DESIGN FIRM REG. 184.002117	USER NAME = mjones	DESIGNED - SEA	REVISED -
		DRAWN - MBJ	REVISED -
	PLOT SCALE = $SCALE$	CHECKED - SEA	REVISED -
	PLOT DATE = 12/3/2025	DATE - 2025/10/03	REVISED -

STATE OF ILLINOIS
DEPARTMENT OF TRANSPORTATION

ALTERNATE WALKWAY DETAILS
STRUCTURE NO. 8S082I055L004.3

SCALE: NTS | SHEET 11 OF 14 SHEETS | STA. | TO STA.

F.A.I. RTE.	SECTION	COUNTY	TOTAL SHEETS	SHEET NO.
70	Section82-(5,6)RS-2, 60-6RS-2	MADISON & ST. CLAIR	678	572
		CONTRACT NO. 76E84		
		ILLINOIS FED. AID PROJECT		

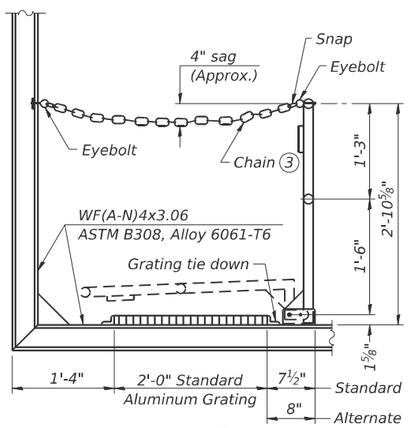

SIDE ELEVATION

(Showing safety chain w/o sign)

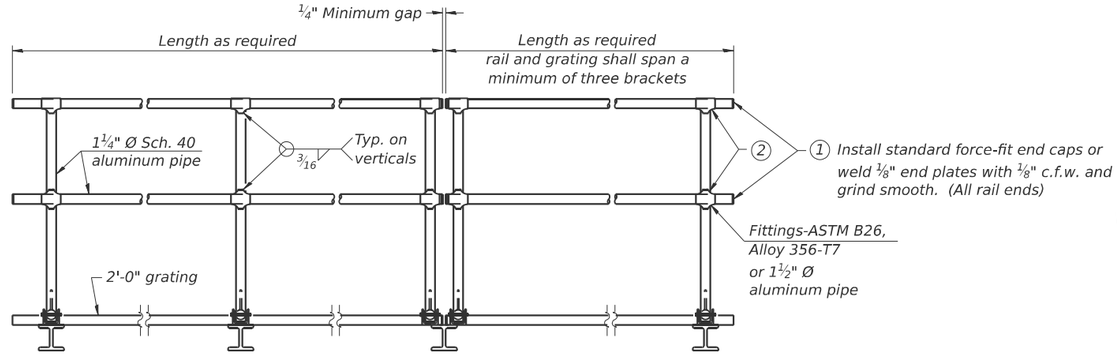

FRONT ELEVATION

(2) Horizontal handrail member shall be continuous thru fitting. Provide 7/16" Ø hole in fitting for 3/8" Ø bolt. Field drill 7/16" Ø hole in horizontal rail member. Provide locknut and two stainless steel washers for bolt. (Use 5/16" eyebolts in 7/16"Ø holes on top rail at ends only.)

HANDRAIL DETAILS

Handrail pipe shall be ASTM B241 or B429, Alloy 6063-T6 or Alloy 6061-T6.

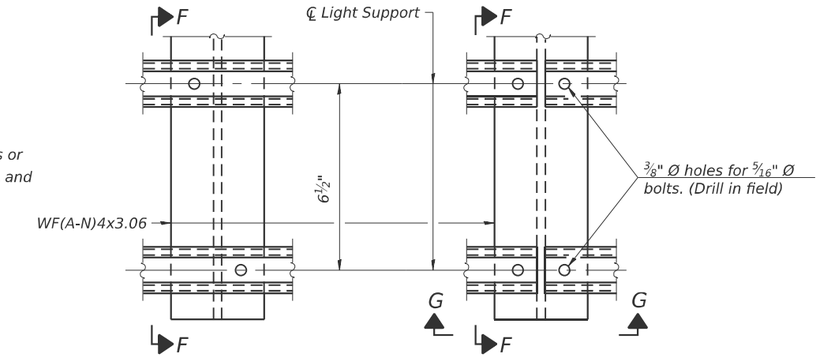

DETAIL F

DETAIL G

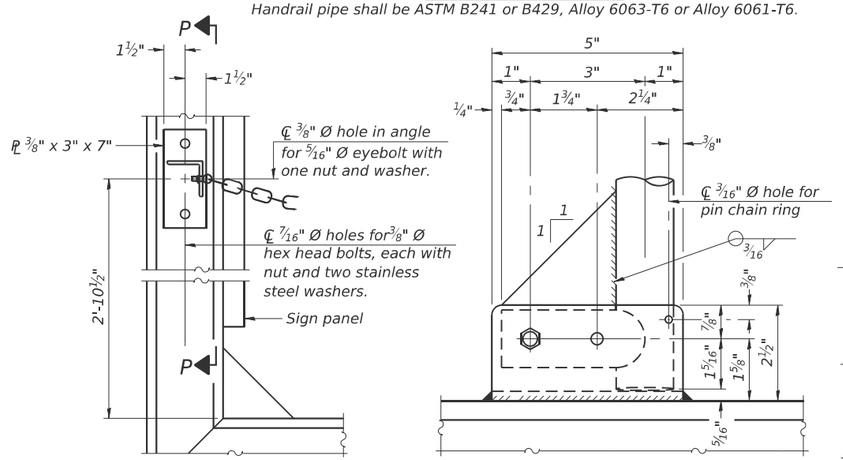

ALTERNATE SAFETY CHAIN ATTACHMENT

(With Sign Present)

Items not shown same as "Side Elevation" of "Handrail Details"

SIDE ELEVATION

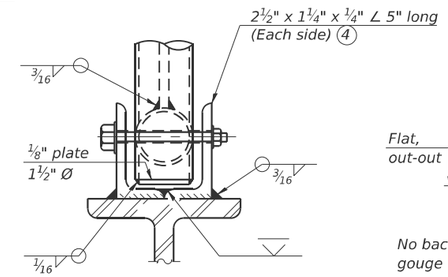

FRONT ELEVATION

See "Elevation" at right for dimensions.

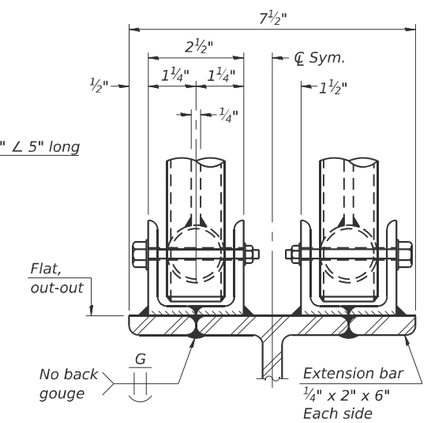

ELEVATION AT HANDRAIL JOINT (4)

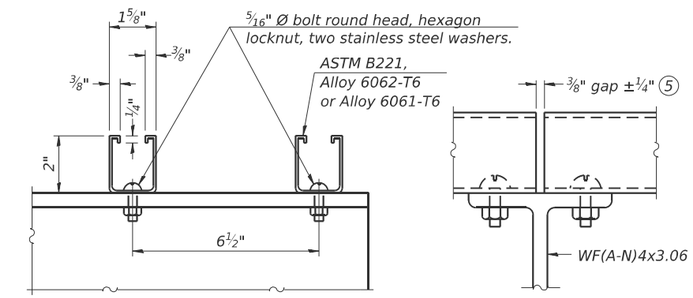

SECTION F-F

SECTION G-G

LIGHTING FIXTURE MOUNTS (IF REQUIRED)

(5) Field cut ends of light support channels shall be free of burrs or hazardous projections and coated with zinc-rich primer or equivalent.

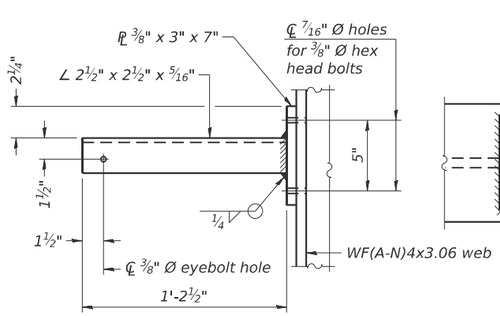

SECTION P-P

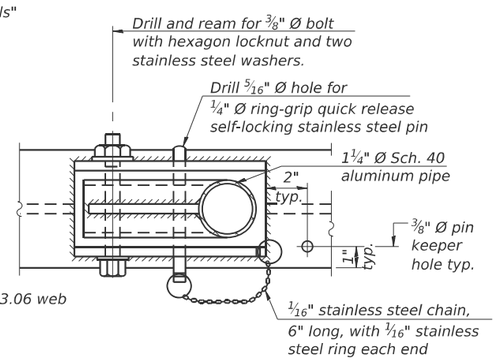

PLAN

DETAIL E HANDRAIL HINGE

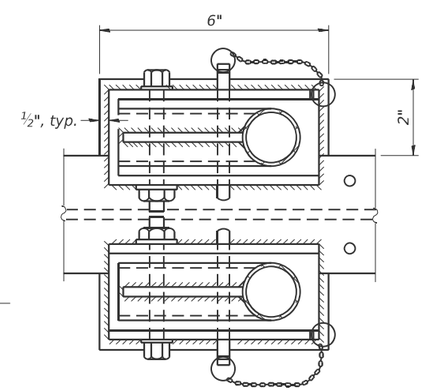

PLAN AT HANDRAIL JOINT

Details not shown same as "PLAN"

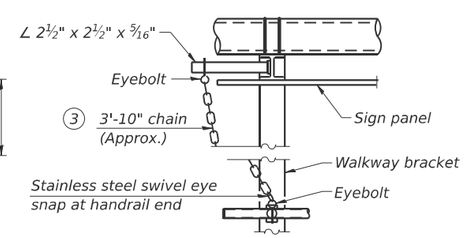

ALTERNATE SAFETY CHAIN ATTACHMENT

Details not shown similar to "Safety Chain" Details
(Walkway omitted for clarity)

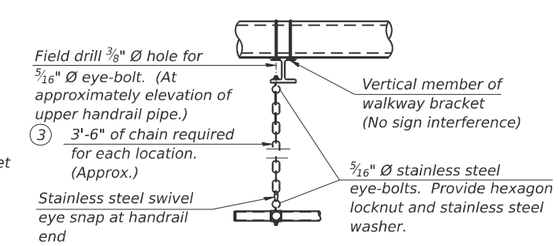

SAFETY CHAIN

One required for each end of each walkway.

(3) 3/16" Type 304L stainless steel chain, approximately 12 links per foot.

(4) Extrusions may be used in lieu of the details shown, with approval of the Engineer.

OS-A-11 5-15-2023

MODEL: $MODELNAME$
FILE NAME: pw://jacobs-us-va-pw.bentley.com:jacobs-us-va-pw-04/Documents/D3152206.02 - ILDOT - I-55 I-70 Rehabilitation/30 Project Data/PID/STATABNA/Sht/8S082I055L0043-012-OHSS-DETLS10.dgn

ABNA DESIGN FIRM REG. 184.002117	USER NAME = mjones	DESIGNED - SEA	REVISED -	STATE OF ILLINOIS DEPARTMENT OF TRANSPORTATION	ALUMINUM HANDRAIL DETAILS STRUCTURE NO. 8S082I055L004.3
		DRAWN - MBJ	REVISED -		
	PLOT SCALE = $SCALE$	CHECKED - SEA	REVISED -		
	PLOT DATE = 12/3/2025	DATE - 2025/10/03	REVISED -		SCALE: NTS SHEET 12 OF 14 SHEETS STA. TO STA.

F.A.I. RTE.	SECTION	COUNTY	TOTAL SHEETS	SHEET NO.
70	Section82-(5,6)RS-2, 60-6RS-2	MADISON & ST. CLAIR	678	573
		CONTRACT NO. 76E84		
		ILLINOIS	FED. AID PROJECT	

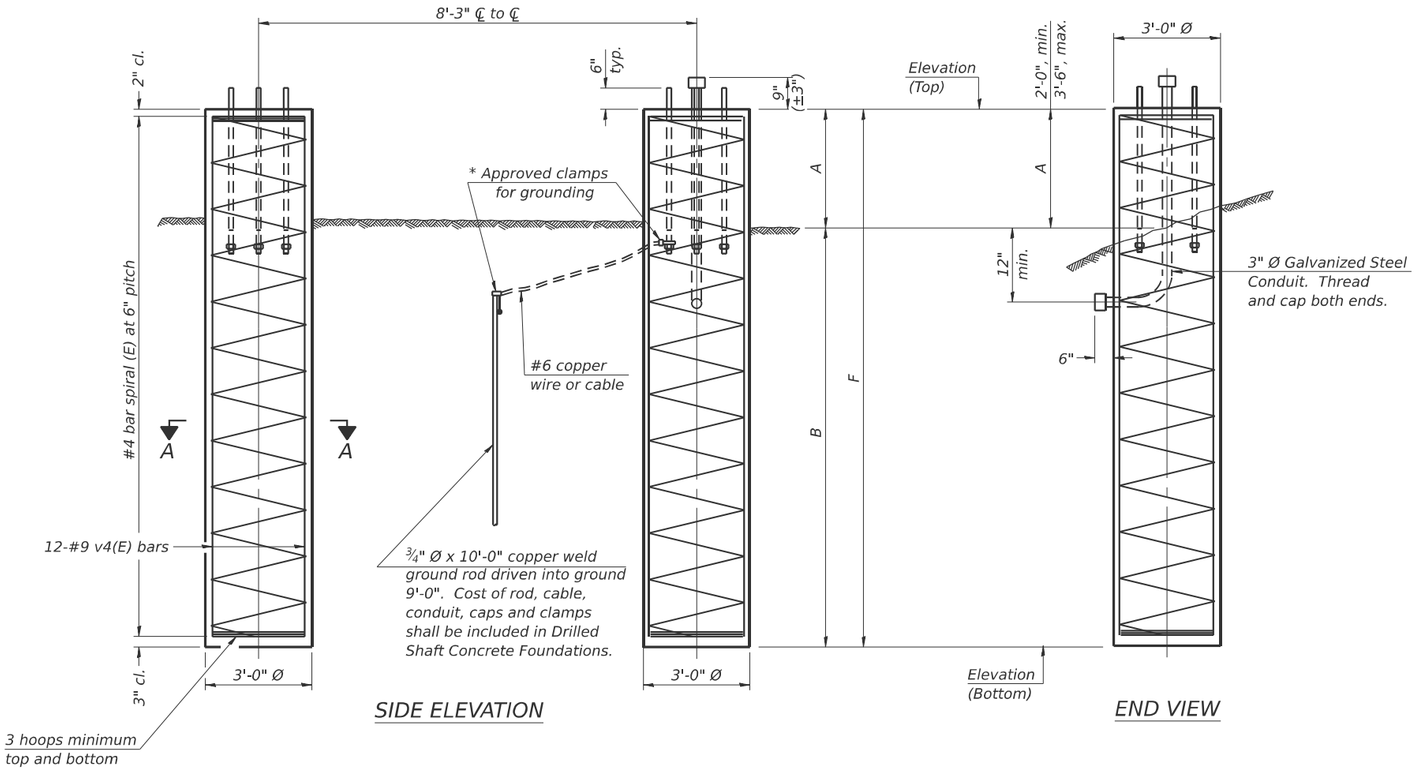

SIDE ELEVATION

END VIEW

BAR LIST - EACH FOUNDATION

Bar	Number	Size	Length	Shape
v4(E)	16	#9	F less 5"	———
#4 bar spiral (E) - see Side Elevation				

NOTES:

The foundation dimensions shown are based on site specific design for granular soils. Temporary casing may be required to maintain shaft stability. Cost included in Drilled Shaft Concrete Foundation.

The boring data is included in the plans and the foundation dimensions shown are the result of site specific design.

If the conditions encountered are different than those indicated, the Contractor shall notify the Engineer to determine if the foundation dimensions need to be modified. If dimensions "B" or "F" are revised by more than 12" by the Contractor, "as-built" plans shall be prepared and submitted to the District Bureau of Operations for future reference.

No sonotubes or decomposable forms shall be used below the lower conduit entrance.

Permanent metal forms or other shielding may not be left in place below that elevation without the Engineer's written permission.

Concrete shall be placed monolithically, without construction joints.

Backfill shall be placed per Article 502 of Standard Specification and prior to erection of support column.

A normal surface finish followed by a Concrete Sealer application will be required on concrete surfaces above the lowest elevation 6" below finished ground line. Cost included in Drilled Shaft Concrete Foundation.

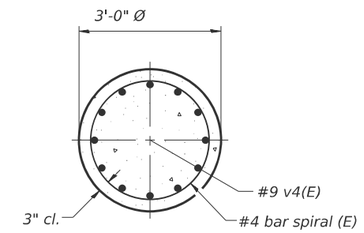

SECTION A-A

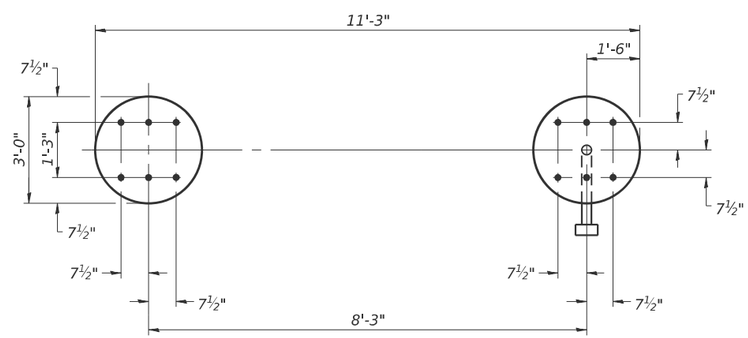

PLAN

For anchor rod size and placement, see Support Frame Detail Sheet.

* Anchor rod shall be ground or filed to bright metal at clamp and cable connection location.

DETAILS FOR 10" Ø SUPPORT FRAME TYPE I-A or II-A TRUSS

Structure Number	Station		Left Foundation				Right Foundation					Class DS Concrete (Cu. Yds.)
		Elevation Top	Elevation Bottom	A	B	F	Elevation Top	Elevation Bottom	A	B	F	
8S082I055L004.3	129+94.00	412.56	389.31	2'-9"	20'-6"	23'-3"	410.06	386.23	3'-4"	20'-6"	23'-10"	24.6

MODEL: $MODELNAME$
FILE NAME: pw://jacobs-us-pw.bentley.com:jacobs-us-pw-04:Documents/D31522206.02 - ILDOT - I-55 I-70 Rehabilitation:30 Project Data/PID/ST/ABNA/Shr/8S082I055L0043-013-OHSS-DETLS11.dgn

ABNA DESIGN FIRM REG. 184.002117

USER NAME = mjones	DESIGNED - SEA	REVISED -	
	DRAWN - MBJ	REVISED -	
PLOT SCALE = $SCALE$	CHECKED - SEA	REVISED -	
PLOT DATE = 12/3/2025	DATE - 2025/10/03	REVISED -	

STATE OF ILLINOIS
DEPARTMENT OF TRANSPORTATION

DRILLED SHAFT DETAILS
STRUCTURE NO. 8S082I055L004.3

SCALE: NTS | SHEET 13 OF 14 SHEETS | STA. | TO STA.

F.A.I. RTE.	SECTION	COUNTY	TOTAL SHEETS	SHEET NO.
70	Section82-(5,6)RS-2, 60-6RS-2	MADISON & ST. CLAIR	678	574
		CONTRACT NO. 76E84		
		ILLINOIS FED. AID PROJECT		

Illinois Department of Transportation
Division of Highways

SOIL BORING LOG

Page 1 of 1

Date 2/27/23

ROUTE FAI Route 70 (I-55/70) DESCRIPTION I-55 / I-70 from I-64 Interchange to Fairmount Ln LOGGED BY KEG

SECTION 82-(5,6)RS-2, 60-6RS-2 LOCATION Fairmont City, IL, Latitude 38.6480917°, Longitude -090.1248083°

COUNTY St. Clair DRILLING METHOD HSA / Mud Rotary Wash at 16 ' HAMMER TYPE AUTO

STRUCT. NO.
Station

BORING NO. SB-01
Station
Offset
Ground Surface Elev. 408.66 ft

Surface Water Elev. ft
Stream Bed Elev. ft

Groundwater Elev.:
First Encounter 396.7 ft ▼
Upon Completion ft
After Hrs. ft

Description	Elev.	DEPTH (ft)	BLOWS (/6")	UCS Qu (tsf)	MOIST (%)
ASHPALT - 5"	408.2				
SILTY CLAY FILL - Brown, Medium Stiff, w/ Some Gravel + Asphalt Debris			5		
			10	3.0	18
			8	P	
	405.2				
SILTY CLAY - Brown, Medium Stiff, Moist LL=45%, PL=19%, PI=26%			5		
			4	0.2	25
		-5	4	S	
	402.7				
SAND - Gray, Poorly Graded, Fine, Medium Dense			5		
			2	-	8
			4		
No Recovery			3		
			2	-	
		-10	2		
Becomes Wet, Loose, w/ Silt + Gravel Cc=1.33, Cu=2.81; 6% Gravel, 81.7% Sand, 12.3%Silt/Clay			3		
		▼	4	-	17
			1		
			2		
			3	-	23
Becomes Brown + Gray, Coarse, Medium Dense, Poorly Graded		-15	5		
Changes to Mud Wash, Gray + Brown Sand, Well Graded, Loose			WH		
			2	-	22
			2		
			9		
			11	-	19
		-20	11		

Description	Elev.	DEPTH (ft)	BLOWS (/6")	UCS Qu (tsf)	MOIST (%)
SAND - Gray, Poorly Graded, Fine, Medium Dense *(continued)*					
Becomes Medium Coarse, Poorly Graded Sand, Gray with Black Stains, Medium Dense			14		
			12	-	20
			11		
No Black Stains			9		
			10	-	23
		-25	9		
Becomes Gray, Poorly Graded, Fine, Dense 0.0% Gravel, 84.1% Sand, 15.9 Silt/Clay			8		
			8	-	28
			8		
			6		
			12	-	22
	378.7	-30	8		
End of Boring					
		-35			
		-40			

The Unconfined Compressive Strength (UCS) Failure Mode is indicated by (B-Bulge, S-Shear, P-Penetrometer)
The SPT (N value) is the sum of the last two blow values in each sampling zone (AASHTO T206)

BBS, form 137 (Rev. 8-99)

Illinois Department of Transportation
Division of Highways

SOIL BORING LOG

Page 1 of 1

Date 2/28/23

ROUTE FAI Route 70 (I-55/70) DESCRIPTION I-55 / I-70 from I-64 Interchange to Fairmount Ln LOGGED BY KEG

SECTION 82-(5,6)RS-2, 60-6RS-2 LOCATION Fairmont City, IL, Latitude 38.6479417°, Longitude -090.1246583°

COUNTY St. Clair DRILLING METHOD HSA HAMMER TYPE AUTO

STRUCT. NO.
Station

BORING NO. SB-02
Station
Offset
Ground Surface Elev. 404.46 ft

Surface Water Elev. ft
Stream Bed Elev. ft

Groundwater Elev.:
First Encounter 390.0 ft ▼
Upon Completion ft
After Hrs. ft

Description	Elev.	DEPTH (ft)	BLOWS (/6")	UCS Qu (tsf)	MOIST (%)
ASPHALT - 5"	404.0				
SILT FILL- Brown, Medium Stiff, w/ Gravel + Asphalt Debris Poor Recovery			7		
			12	1.0	15
			11	P	
	401.0				
CLAYEY SILT - Brown, Stiff, Moist			1		
			1	0.8	33
		-5	2	P	
LL=25%, PL=19%, PI=6%			1		
			1	0.1	31
			2	B	
	396.0				
SAND - Brown, Very Fine, Poorly Graded, Medium Dense			2		
			4	-	24
		-10	3		
	393.5				
CLAY - Gray + Brown, Medium Stiff, w/ Some Sand LL=58%, PL=26%, PI=32%;	392.5		WH		
			1	0.2	43
			3	B	
SAND - Brown, Fine, Poorly Graded, Moist					
			1		
		▼	5	-	25
		-15	3		
Becomes Gray + Brown, Coarse, Poorly Graded,			2		
			4	-	14
			10		
			10		
			10	-	12
		-20	14		

Description	Elev.	DEPTH (ft)	BLOWS (/6")	UCS Qu (tsf)	MOIST (%)
SAND - Brown, Fine, Poorly Graded, Moist *(continued)*					
Becomes Well Graded, Medium Coarse to Coarse			11		
			13	-	17
			16		
Becomes Medium Grained to Fine, Dense Cc=1.08, Cu=2.58; 0.9% Gravel, 93.6% Sand, 5.5% Silt/Clay			8		
			10	-	21
		-25	15		
			6		
			9	-	19
			15		
			9		
			10	-	20
	374.5	-30	10		
End of Boring					
		-35			
		-40			

The Unconfined Compressive Strength (UCS) Failure Mode is indicated by (B-Bulge, S-Shear, P-Penetrometer)
The SPT (N value) is the sum of the last two blow values in each sampling zone (AASHTO T206)

BBS, form 137 (Rev. 8-99)

MODEL: $MODELNAME$
FILE NAME: pw://jacobs-us-a-pw.bentley.com:jacobs-us-a-pw-04/Documents/D3152206.02 - ILDOT - I-55 I-70 Rehabilitation 30 Project Data/PID/ST/ABNA/Shr/8S082I055L0043-014-BORING.dgn

ABNA DESIGN FIRM REG. 184.002117

USER NAME = mjones	DESIGNED - SEA	REVISED -	
	DRAWN - MBJ	REVISED -	
PLOT SCALE = $SCALE$	CHECKED - SEA	REVISED -	
PLOT DATE = 12/3/2025	DATE - 2025/10/03	REVISED -	

STATE OF ILLINOIS
DEPARTMENT OF TRANSPORTATION

SOIL BORING LOGS
STRUCTURE NO. 8S082I055L004.3

SCALE: NTS | SHEET 14 OF 14 SHEETS | STA. | TO STA.

F.A.I. RTE.	SECTION	COUNTY	TOTAL SHEETS	SHEET NO.
70	Section82-(5,6)RS-2, 60-6RS-2	MADISON & ST. CLAIR	678	575
		CONTRACT NO. 76E84		
		ILLINOIS	FED. AID PROJECT	

SIGN TRUSS REPAIR SCHEDULE

Structure Number	Type	Locking Pin Repair A	Tighten Anchor Bolts (Span) Repair B	Repair / Replace Rodent Screen Repair C	Handhole or Utility Cover Adjusted Repair D	Replace Safety Chain Repair E	Replace / Tighten U-Bolt Repair F	Removal of Sign Lighting No Salvage Repair G	Remove Electric Service Repair H	Comments
8C082I055L002.7	Cantilever	1	2	-	1	-	-	-	-	
8S082I055L003.0	Span	-	1	-	-	-	-	-	-	
8S082I055R003.0	Span	-	3	2	1	1	2	-	-	
8S082I055R003.6	Span	-	2	1	4	-	-	2	1	
8S082I055L003.6	Span	-	1	-	-	-	-	-	-	
8S082I055R003.7	Span	3	-	-	-	2	-	1	1	
8F082I055L005.2	Butterfly	-	-	-	-	-	1	-	-	
Totals		4	9	3	6	3	3	3	2	

Repair A: Repair Handhole Locking Pin Connections - OS-A-11
Repair B: Tighten Support Anchor Bolt - Span OS-A-6A
Repair C: Repair / Replace Rodent Screen - OS-A-6A
Repair D: Handhole to be Adjusted - OS-A-6
Repair E: Safety Chain - OS-A-11
Repair F: Replace / Tighten U-Bolt - OS-A-6 (Detail A)
Repair G: Removal of Sign Lighting No Salvage
Repair H: Remove Electric Service

Notes:
Removal of Existing Sign Lighting Units and Terminate Electrical Service to Truss on all Sign Structures Noted.

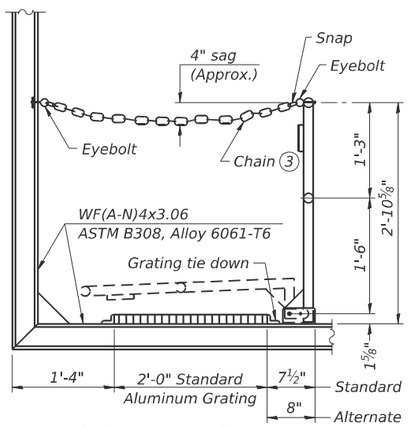

SIDE ELEVATION

(Showing safety chain w/o sign)

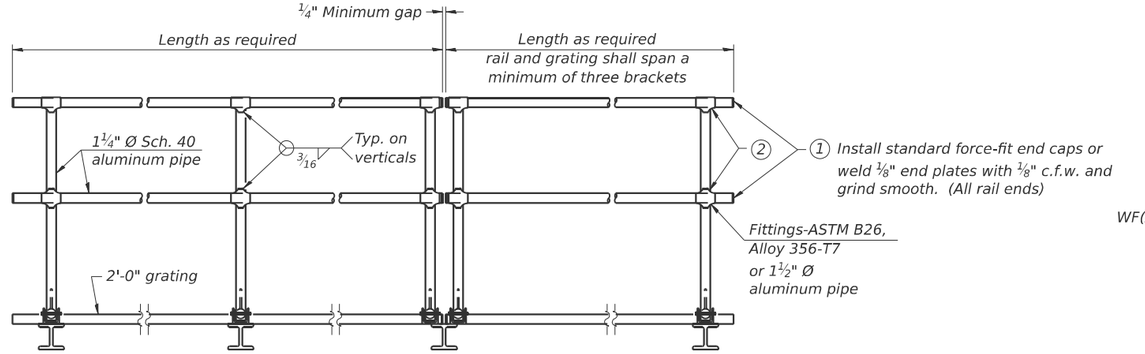

FRONT ELEVATION

(2) Horizontal handrail member shall be continuous thru fitting. Provide 7/16" Ø hole in fitting for 3/8" Ø bolt. Field drill 7/16" Ø hole in horizontal rail member. Provide locknut and two stainless steel washers for bolt. (Use 5/16" eyebolts in 7/16"Ø holes on top rail at ends only.)

HANDRAIL DETAILS

Handrail pipe shall be ASTM B241 or B429, Alloy 6063-T6 or Alloy 6061-T6.

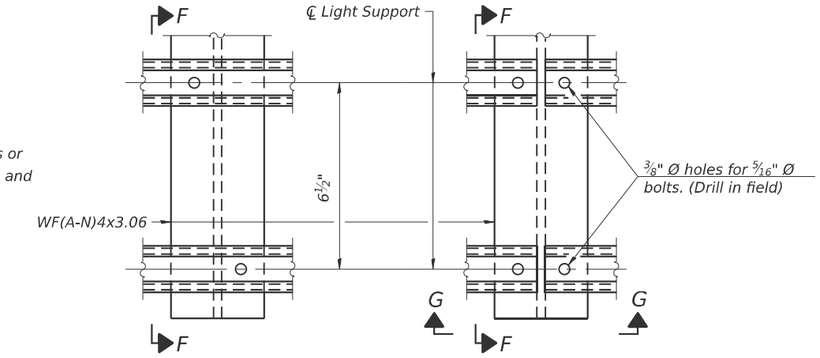

DETAIL F

DETAIL G

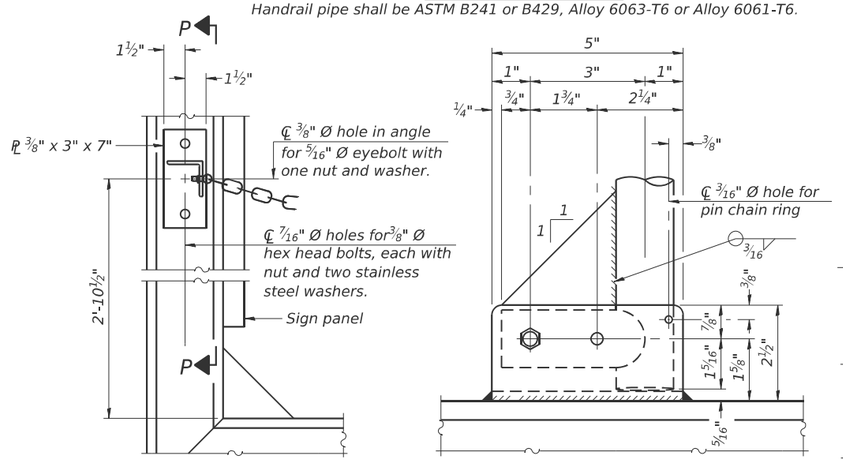

ALTERNATE SAFETY CHAIN ATTACHMENT

(With Sign Present)

Items not shown same as "Side Elevation" of "Handrail Details"

SIDE ELEVATION

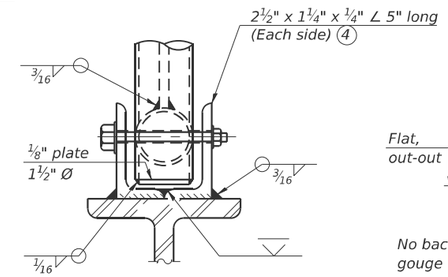

FRONT ELEVATION

See "Elevation" at right for dimensions.

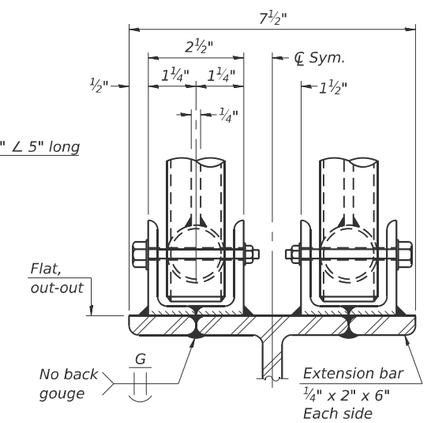

ELEVATION AT HANDRAIL JOINT (4)

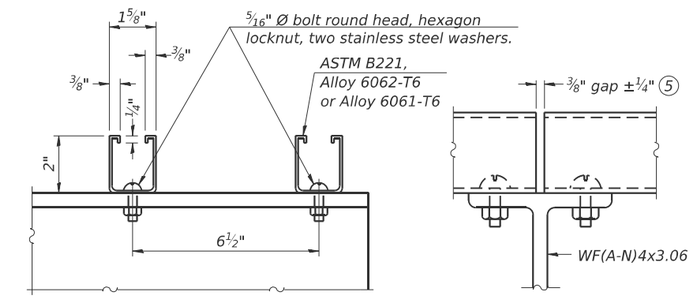

SECTION F-F

SECTION G-G

LIGHTING FIXTURE MOUNTS (IF REQUIRED)

(5) Field cut ends of light support channels shall be free of burrs or hazardous projections and coated with zinc-rich primer or equivalent.

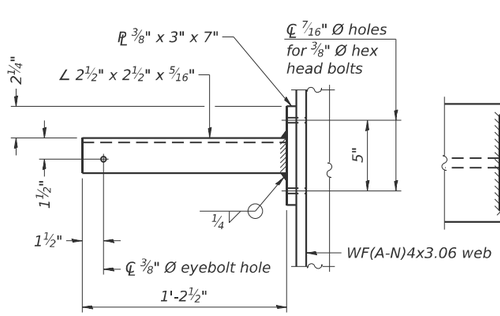

SECTION P-P

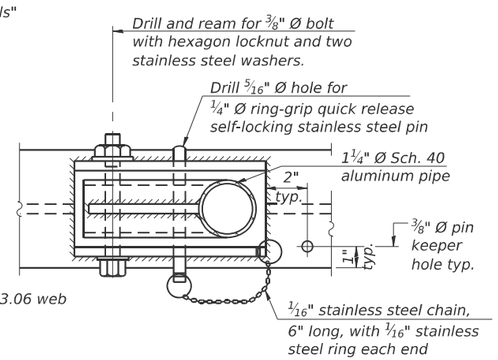

PLAN

DETAIL E HANDRAIL HINGE

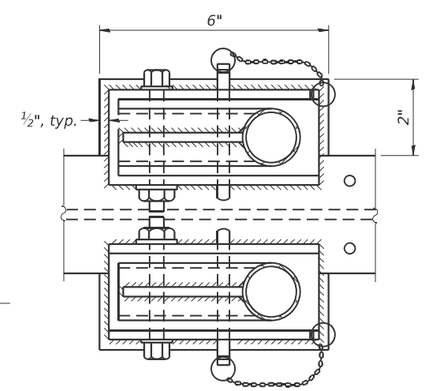

PLAN AT HANDRAIL JOINT

Details not shown same as "PLAN"

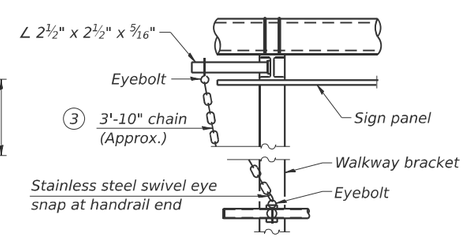

ALTERNATE SAFETY CHAIN ATTACHMENT

Details not shown similar to "Safety Chain" Details
(Walkway omitted for clarity)

(3) 3/16" Type 304L stainless steel chain, approximately 12 links per foot.

(4) Extrusions may be used in lieu of the details shown, with approval of the Engineer.

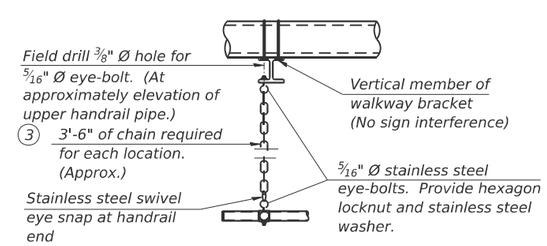

SAFETY CHAIN

One required for each end of each walkway.

OS-A-11 5-15-2023

MODEL: $MODELNAME$
FILE NAME: pw://jacobs-us-va-pw.bentley.com:jacobs-us-va-pw-04/Documents/D3152206.02 - ILDOT - I-55 I-70 Rehabilitation/30 Project Data/PID/STATABNA/Sht/8S082I055L0043-016-OHSS-REPAIR01.dgn

ABNA DESIGN FIRM REG. 184.002117	USER NAME = mjones	DESIGNED - SEA	REVISED -	STATE OF ILLINOIS DEPARTMENT OF TRANSPORTATION	OVERHEAD SIGN STRUCTURES REPAIR A: LOCKING PINS & REPAIR E: SAFETY CHAIN
		DRAWN - MBJ	REVISED -		
	PLOT SCALE = $SCALE$	CHECKED - SEA	REVISED -		
	PLOT DATE = 12/3/2025	DATE - 2025/10/03	REVISED -		SCALE: NTS SHEET 2 OF 4 SHEETS STA. TO STA.

F.A.I. RTE.	SECTION	COUNTY	TOTAL SHEETS	SHEET NO.
70	Section82-(5,6)RS-2, 60-6RS-2	MADISON & ST. CLAIR	678	577
		CONTRACT NO. 76E84		
		ILLINOIS	FED. AID PROJECT	

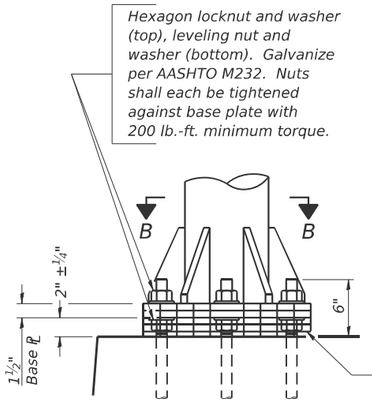

DETAIL B

Ribs shall be cut to fit slope of pipe.

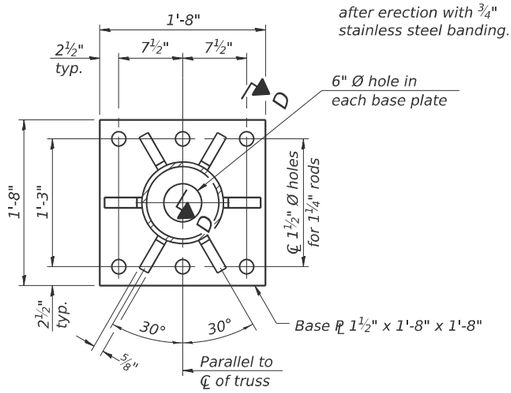

SECTION B-B

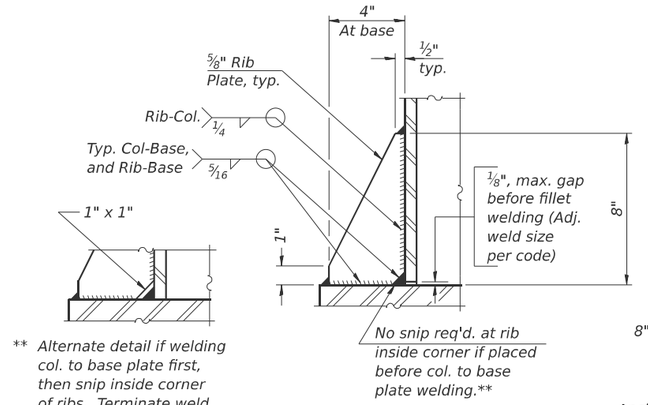

SECTION D-D

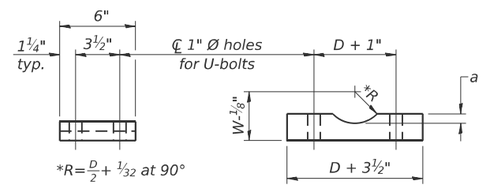

D = Outside Diameter of Chord.
For W, see Base Sheet OS-A-6.

SADDLE SHIM DETAIL

ASTM B26 Alloy 356-F
or
ASTM B209 Alloy 6061-T651
(4 required per sign truss)

Truss Chord Nominal Dia.	a
5"	¾"
5½"	13/16"
6"	⅞"
6½"	15/16"
7"	1"

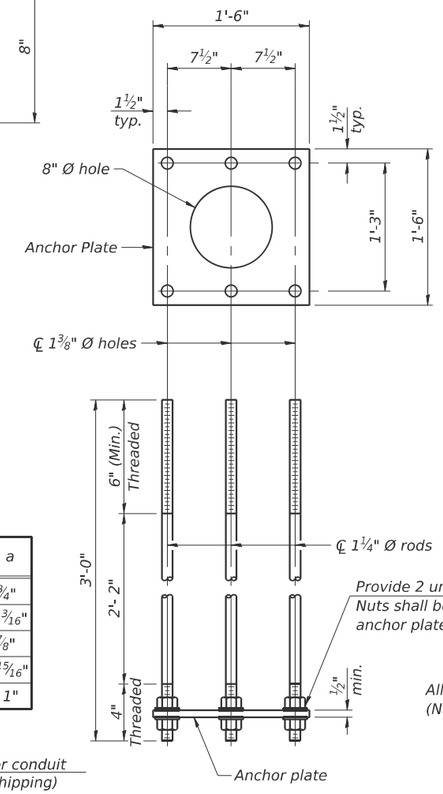

ANCHOR ROD DETAIL

Spread Footing Foundation

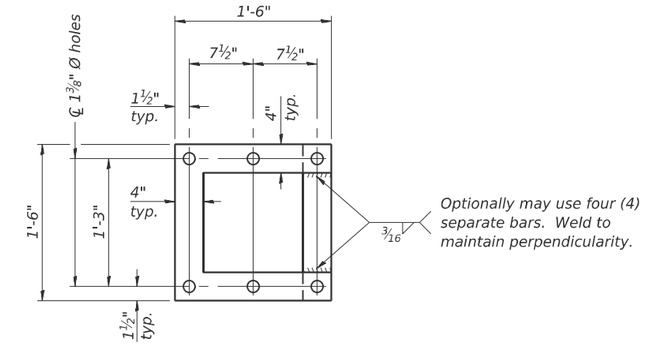

POSITIONING PLATE(S)

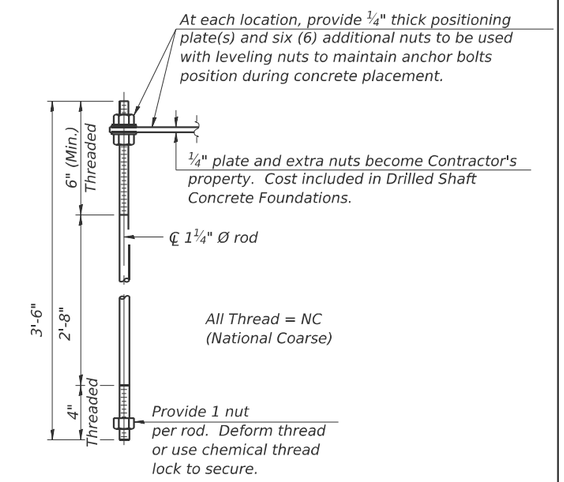

ANCHOR ROD DETAIL

Drilled Shaft Foundation

Anchor rods shall conform to ASTM F1554 Grade 105. Galvanize upper 12" minimum per AASHTO M232. No welding shall be permitted on rods.

10" Ø PIPE SUPPORT FRAME DETAILS

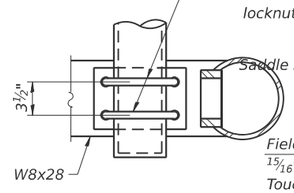

SECTION C-C

(Handhole cover not shown)

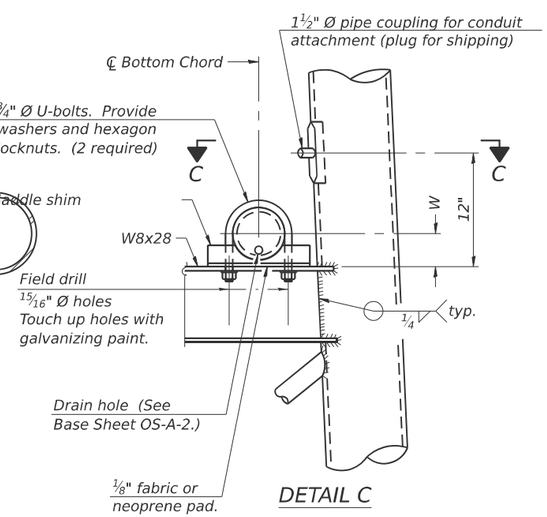

DETAIL C

OS-A-6A 5-15-2023

MODEL: $MODELNAME$
FILE NAME: pw://jacobs-us-va-pw.bentley.com:jacobs-us-va-pw-04/Documents/D3152206.02 - ILDOT - I-55 I-70 Rehabilitation:30 Project Data/PID/ST/ABNA/Sht/0S0820205L0043-017-OHSS-REPAIR02.dgn

ABNA DESIGN FIRM REG. 184.002117

USER NAME = mjones	DESIGNED - SEA	REVISED -	
	DRAWN - MBJ	REVISED -	
PLOT SCALE = $SCALE$	CHECKED - SEA	REVISED -	
PLOT DATE = 12/3/2025	DATE - 2025/10/03	REVISED -	

STATE OF ILLINOIS
DEPARTMENT OF TRANSPORTATION

OVERHEAD SIGN STRUCTURES
REPAIR B: TIGHTEN ANCHOR BOLTS & REPAIR C

SCALE: NTS | SHEET 3 OF 4 SHEETS | STA. TO STA.

F.A.I. RTE.	SECTION	COUNTY	TOTAL SHEETS	SHEET NO.
70	Section82-(5,6)RS-2, 60-6RS-2	MADISON & ST. CLAIR	678	578

CONTRACT NO. 76E84

ILLINOIS | FED. AID PROJECT

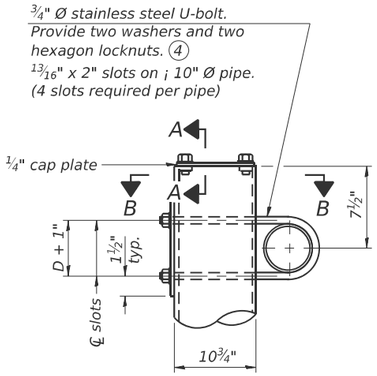

DETAIL A

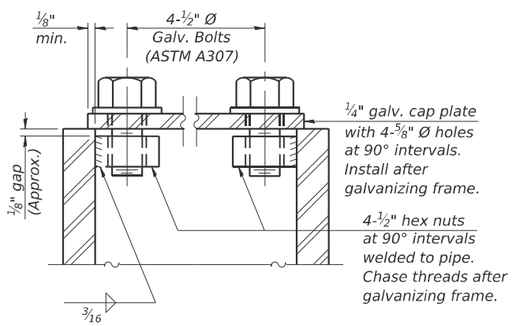

SECTION A-A

As an alternate to bolts, may use galvanized drive-fit caps installed after galvanizing frame.

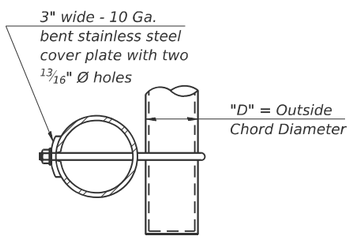

SECTION B-B

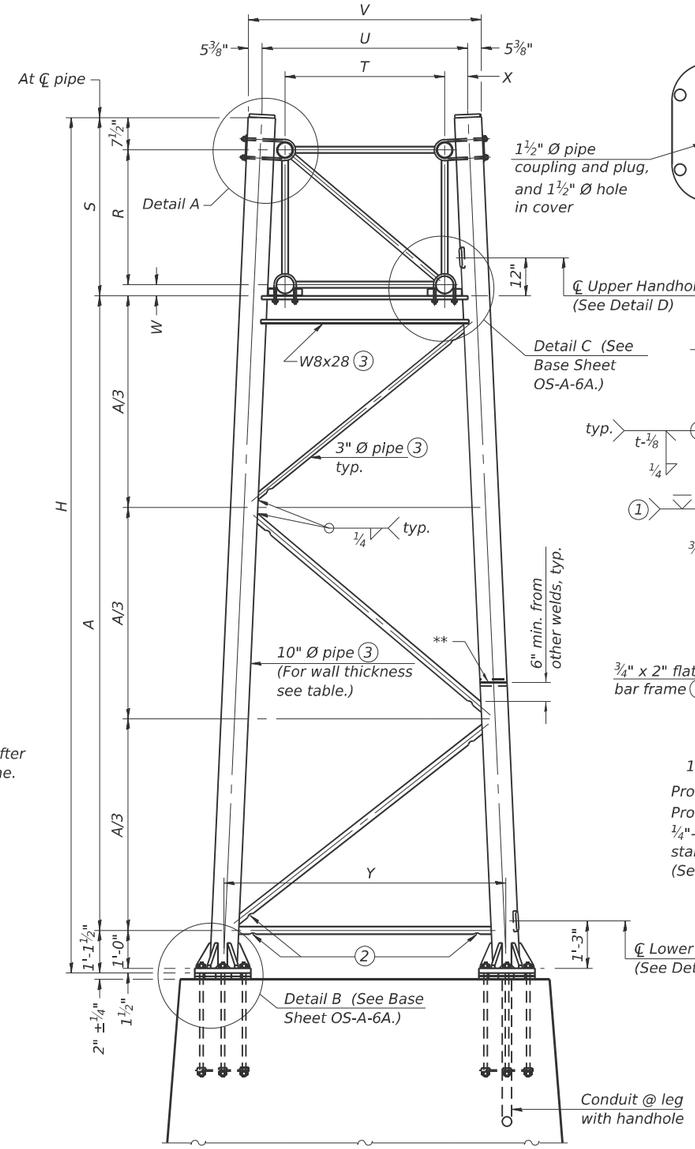

For Foundation Details, see base sheet OS-F3 (Spread Footing) or OS4-F3 (Drilled Shaft).

SIDE ELEVATION

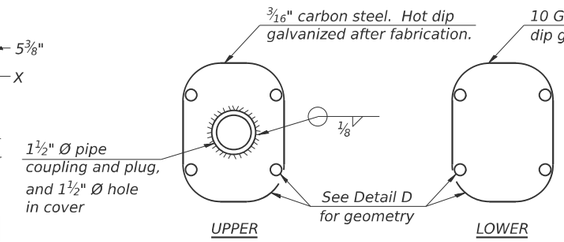

HANDHOLE COVERS

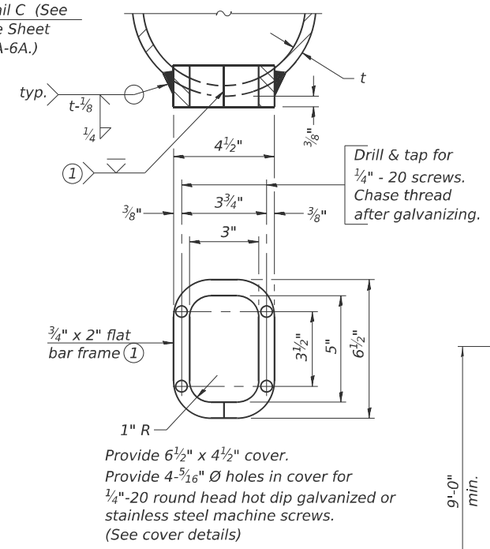

Provide 6 1/2" x 4 1/2" cover.
Provide 4-5/16" Ø holes in cover for 1/4"-20 round head hot dip galvanized or stainless steel machine screws.
(See cover details)

DETAIL D

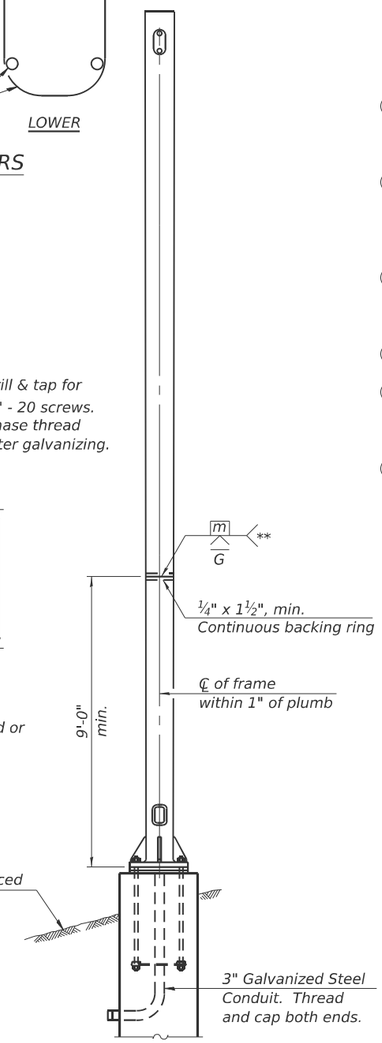

END ELEVATION

Support Design Loads: See Base Sheet OS-A-1 for design and loading criteria.
Load combinations checked include deadload plus:
a) 100% wind normal to sign, 20% parallel to sign
b) 60% wind normal to sign, 30% parallel to sign

1. In lieu of fabricated handhole frame as shown, may cut from 2" plate (rolling direction vertical). All cut faces to be ground to ANSI Roughness of 500µ in or less.
2. Galvanizing vent holes of adequate size shall be provided on underside at each end of bracing pipes. Alternately, holes may be provided in wall of pipe column. All vent holes shall be drilled and de-burred, typ.
3. Steel pipe, plate, carbon steel handhole covers and rolled sections shall be hot dip galvanized after fabrication. Painting is not permitted. See Base Sheet OS-A-1.
4. See General Notes for fasteners.
5. Dimensions shown are based on selection criteria in the Sign Structures Manual. Nonstandard applications must have dimensions verified or amended as appropriate.
6. "H" based on 15'-0" or actual sign height, whichever is greater.

Truss Type	Dimensions							
	R	S	T	U	V	W	X	Y
I-A	4'-6"	5'-5 1/2"	4'-0"	5'-6"	6'-4 3/4"	4"	9"	8'-3"
II-A (5)	5'-3"	6'-3 1/4"	4'-6"	6'-1"	6'-11 3/4"	4 3/4"	9 1/2"	8'-3"

10" Ø PIPE TRUSS SUPPORT FRAME

** One butt welded joint is allowed only on one post per support frame. If used, weld procedure must be pre-approved by Engineer and joint shall receive 100% RT or UT (tension criteria) at Contractor's expense.

OS-A-6 5-15-2023

MODEL: $MODELNAME$
FILE NAME: pw://jacobs-us-va-pw.bentley.com:jacobs-us-va-pw-04/Documents/D315220 6.02 - ILDOT - I-55 I-70 Rehabilitation/30 Project Data/PID/STI/ABNA/Sht/8S082/055L0043-018-OHSS-REPAIR03.dgn

ABNA DESIGN FIRM REG. 184.002117

USER NAME = mjones	DESIGNED - SEA	REVISED -	
	DRAWN - MBJ	REVISED -	
PLOT SCALE = $SCALE$	CHECKED - SEA	REVISED -	
PLOT DATE = 12/3/2025	DATE - 2025/10/03	REVISED -	

STATE OF ILLINOIS
DEPARTMENT OF TRANSPORTATION

OVERHEAD SIGN STRUCTURES
REPAIR D: HAND HOLE COVER & REPAIR F

SCALE: NTS | SHEET 4 OF 4 SHEETS | STA. TO STA.

F.A.I. RTE.	SECTION	COUNTY	TOTAL SHEETS	SHEET NO.
70	Section82-(5,6)RS-2, 60-6RS-2	MADISON & ST. CLAIR	678	579

CONTRACT NO. 76E84
ILLINOIS FED. AID PROJECT

FINAL SURVEY		BY	DATE
NOTE BOOK	SURVEYED		
	PLOTTED		
	TEMPLATE		
	AREAS		
NO.	AREAS CHECKED		

ORIGINAL SURVEY		BY	DATE
NOTE BOOK	SURVEYED		
	PLOTTED		
	TEMPLATE		
	AREAS		
NO.	AREAS CHECKED		

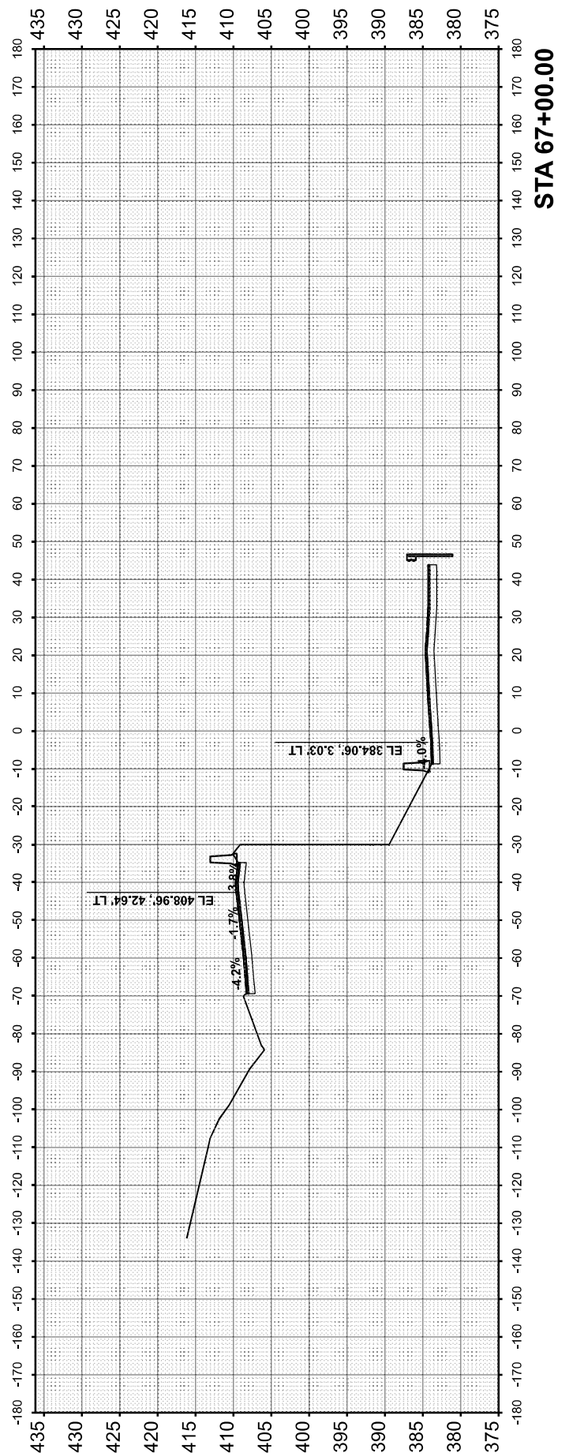

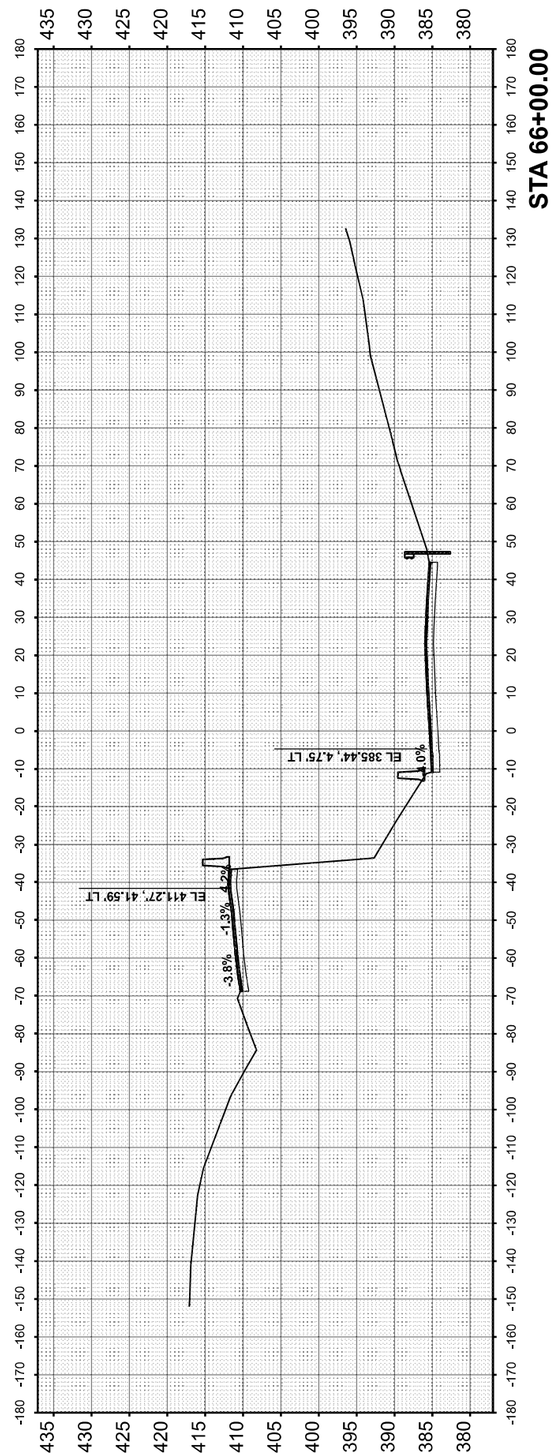

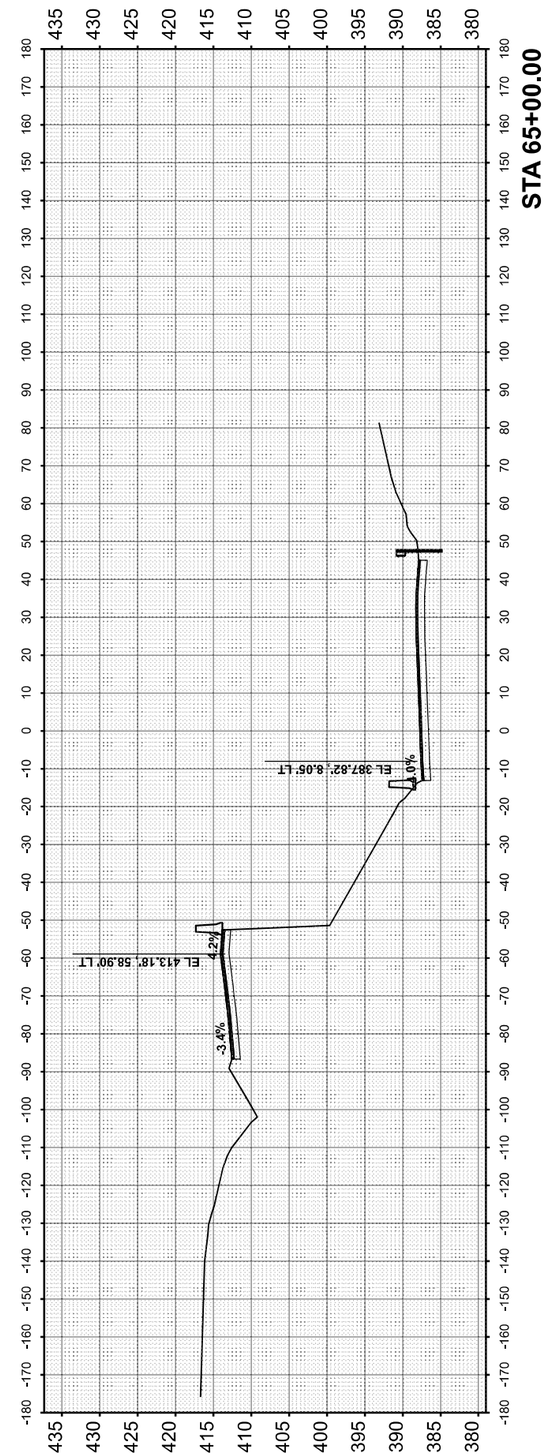

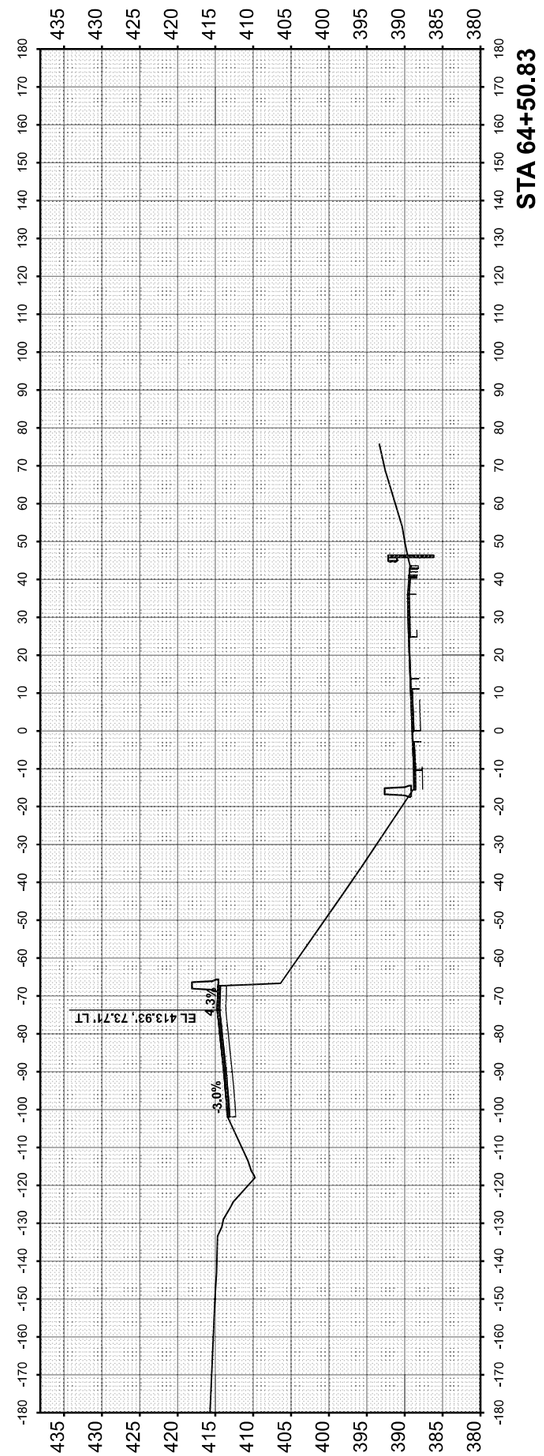

MODEL: $MODELNAMES
FILE NAME: D876E84-I55T0-sht-XS-01.dgn

Jacobs
525 West Monroe
Suite 1600
Chicago, IL 60661
(312) 251-3000

USER NAME = jacobspw18ics01$	DESIGNED - MS	REVISED -	
	DRAWN - MS	REVISED -	
PLOT SCALE = 0.16666633 ' / in.	CHECKED - MS	REVISED -	
PLOT DATE = 10/2/2025	DATE - 2025/10/03	REVISED -	

STATE OF ILLINOIS
DEPARTMENT OF TRANSPORTATION

CROSS SECTION
I-55 NORTHBOUND SOUTHBOUND

SCALE: 1"=20' | SHEET 1 OF 7 SHEETS | STA. | TO STA.

F.A.I. RTE.	SECTION	COUNTY	TOTAL SHEETS	SHEET NO.
70	Section82-(5,6)RS-2, 60-6RS-2	MADISON & ST. CLAIR	678	580
		CONTRACT NO. 76E84		
		ILLINOIS	FED. AID PROJECT	

FINAL SURVEY		BY	DATE
NOTE BOOK	SURVEYED		
	PLOTTED		
	TEMPLATE		
	AREAS		
NO.	AREAS CHECKED		

ORIGINAL SURVEY		BY	DATE
NOTE BOOK	SURVEYED		
	PLOTTED		
	TEMPLATE		
	AREAS		
NO.	AREAS CHECKED		

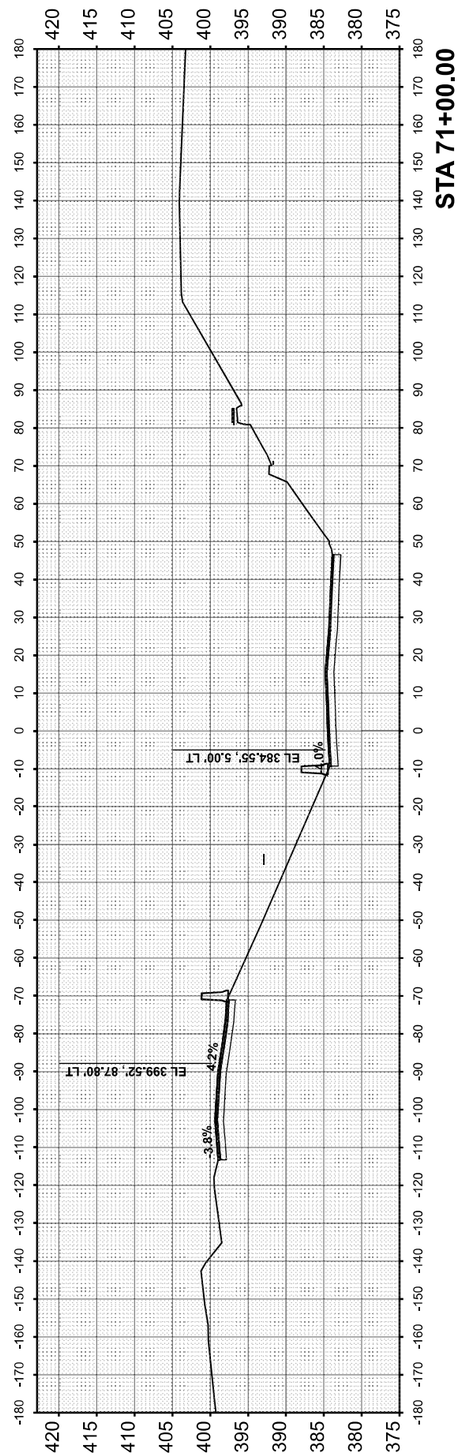

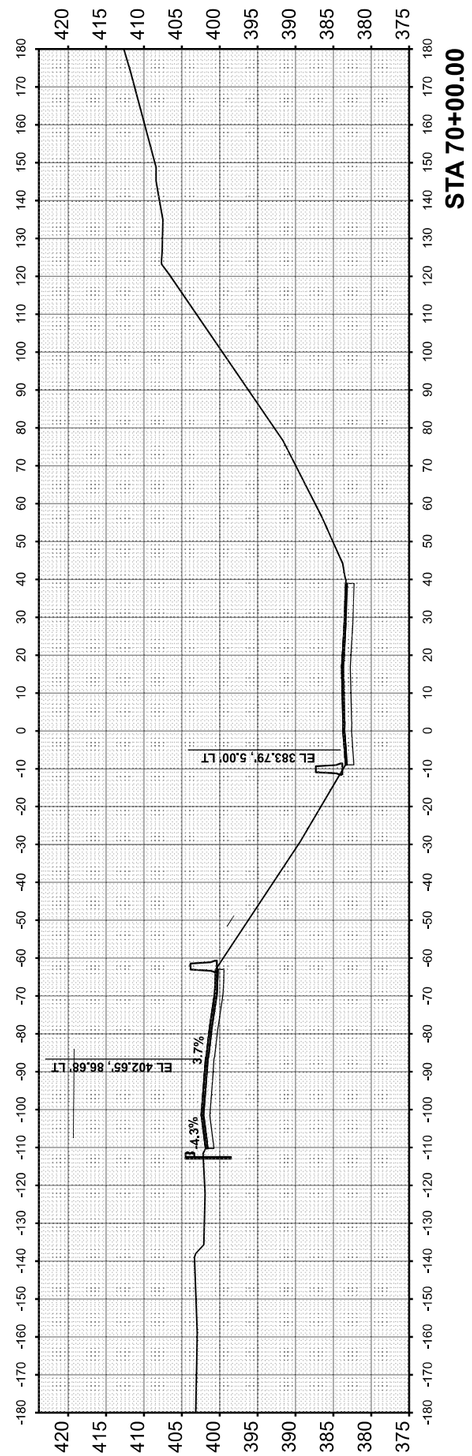

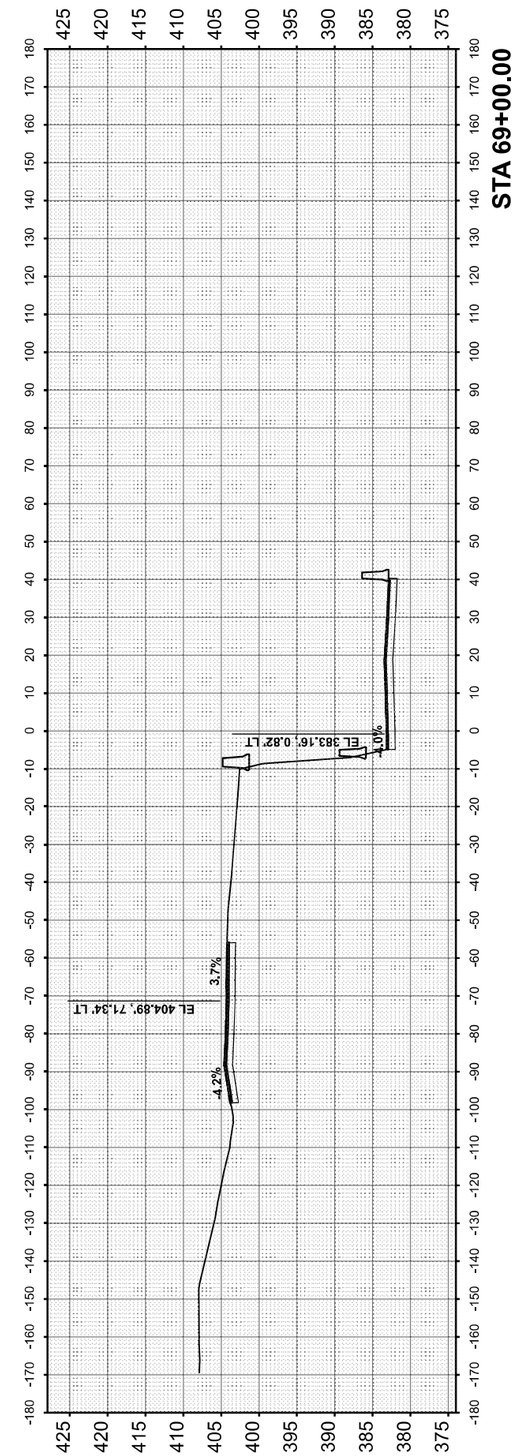

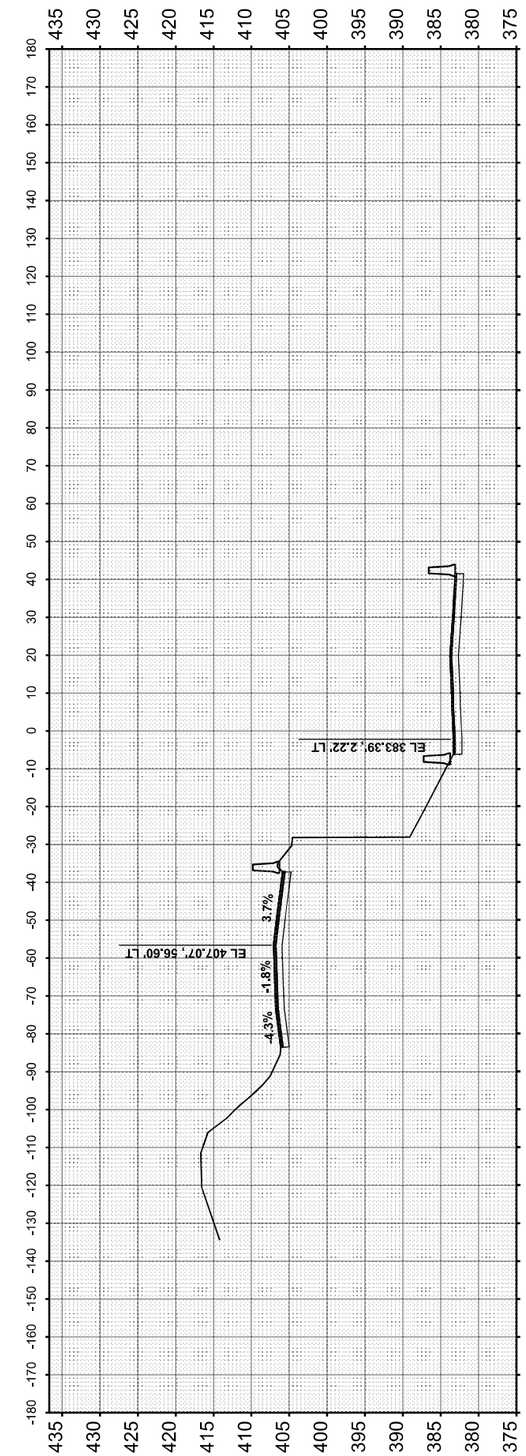

MODEL: $MODEL$NAMES
FILE NAME: D876E84-I5570-sht-XS-02.dgn

Jacobs
525 West Monroe
Suite 1600
Chicago, IL 60661
(312) 251-3000

USER NAME = jacobspw18ics04$	DESIGNED - MS	REVISED -	
	DRAWN - MS	REVISED -	
PLOT SCALE = 0.16666633 ' / in.	CHECKED - MS	REVISED -	
PLOT DATE = 10/2/2025	DATE - 2025/10/03	REVISED -	

STATE OF ILLINOIS
DEPARTMENT OF TRANSPORTATION

CROSS SECTION
I-55 NORTHBOUND SOUTHBOUND

SCALE: 1"=20' | SHEET 2 OF 7 SHEETS | STA. TO STA.

F.A.I. RTE.	SECTION	COUNTY	TOTAL SHEETS	SHEET NO.
70	Section82-(5,6)RS-2, 60-6RS-2	MADISON & ST. CLAIR	678	581
		CONTRACT NO. 76E84		
		ILLINOIS FED. AID PROJECT		

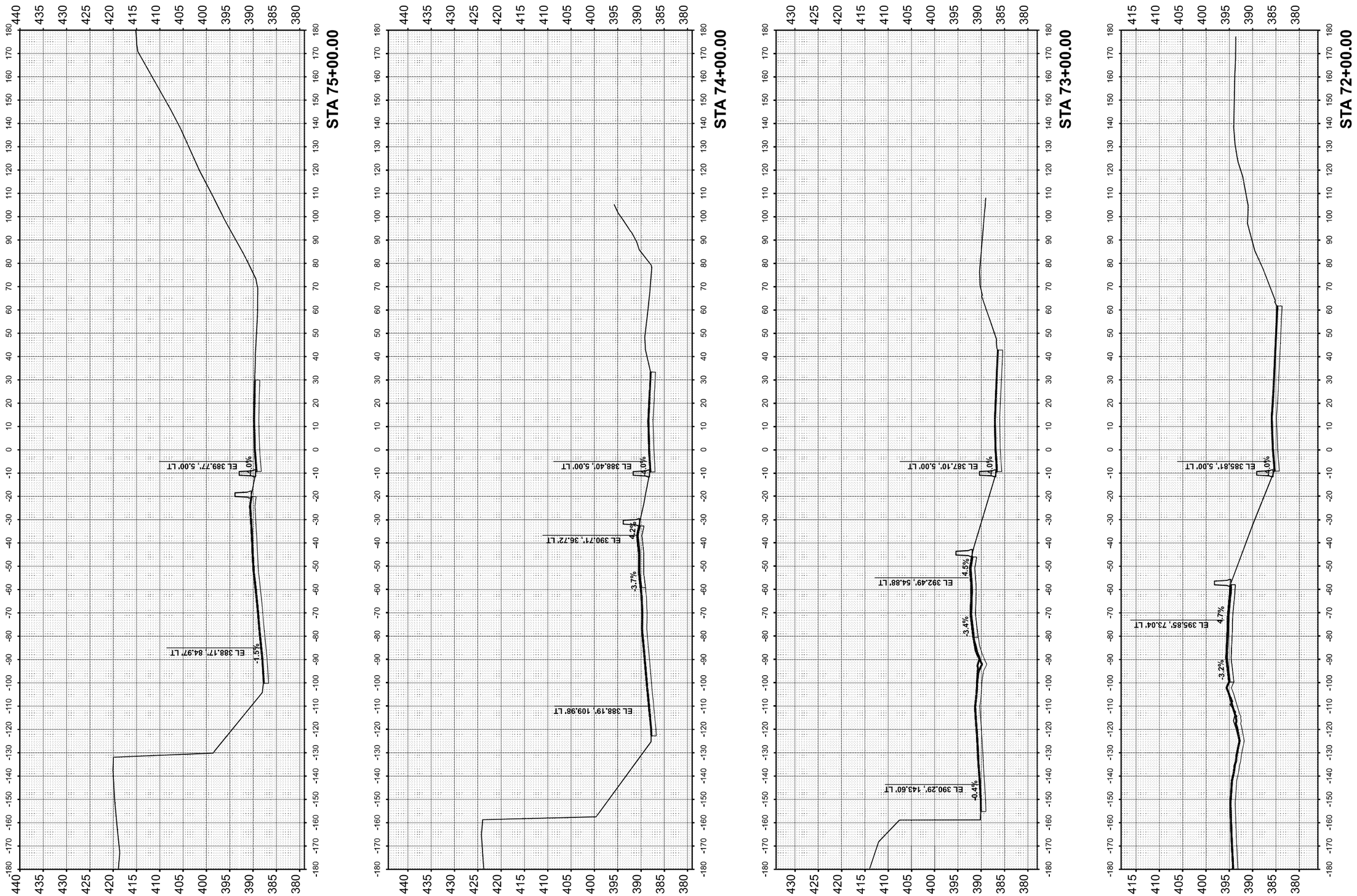

FINAL SURVEY		BY	DATE
NOTE BOOK	SURVEYED		
	PLOTTED		
	TEMPLATE		
	AREAS		
NO.	AREAS CHECKED		

ORIGINAL SURVEY		BY	DATE
NOTE BOOK	SURVEYED		
	PLOTTED		
	TEMPLATE		
	AREAS		
NO.	AREAS CHECKED		

MODEL: $MODEL NAMES
FILE NAME: D876E84-I5570-sht-XS-03.dgn

Jacobs
525 West Monroe
Suite 1600
Chicago, IL 60661
(312) 251-3000

USER NAME = jacobspw18ics01$	DESIGNED - MS	REVISED -
	DRAWN - MS	REVISED -
PLOT SCALE = 0.16666633 ' / in.	CHECKED - MS	REVISED -
PLOT DATE = 10/2/2025	DATE - 2025/10/03	REVISED -

STATE OF ILLINOIS
DEPARTMENT OF TRANSPORTATION

CROSS SECTION
I-55 NORTHBOUND SOUTHBOUND

SCALE: 1"=20' | SHEET 3 OF 7 SHEETS | STA. TO STA.

F.A.I. RTE.	SECTION	COUNTY	TOTAL SHEETS	SHEET NO.
70	Section82-(5,6)RS-2, 60-6RS-2	MADISON & ST. CLAIR	678	582
		CONTRACT NO. 76E84		
		ILLINOIS FED. AID PROJECT		

FINAL SURVEY		BY	DATE
NOTE BOOK NO.	SURVEYED		
	PLOTTED		
	TEMPLATE		
	AREAS		
	AREAS CHECKED		

ORIGINAL SURVEY		BY	DATE
NOTE BOOK NO.	SURVEYED		
	PLOTTED		
	TEMPLATE		
	AREAS		
	AREAS CHECKED		

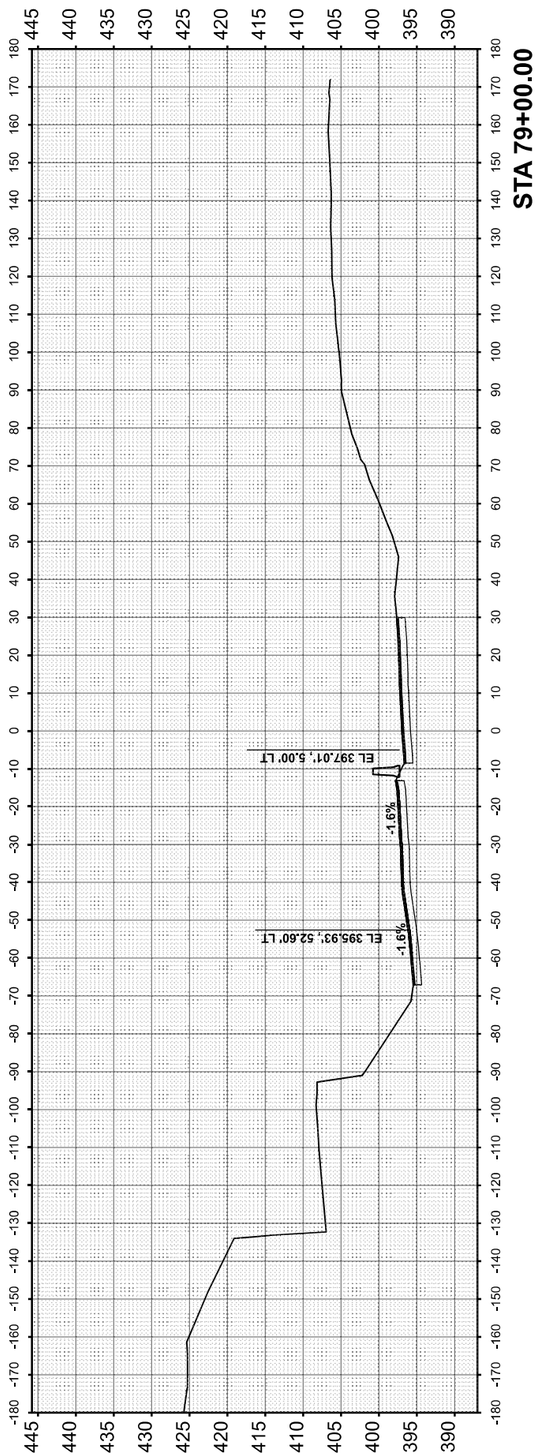

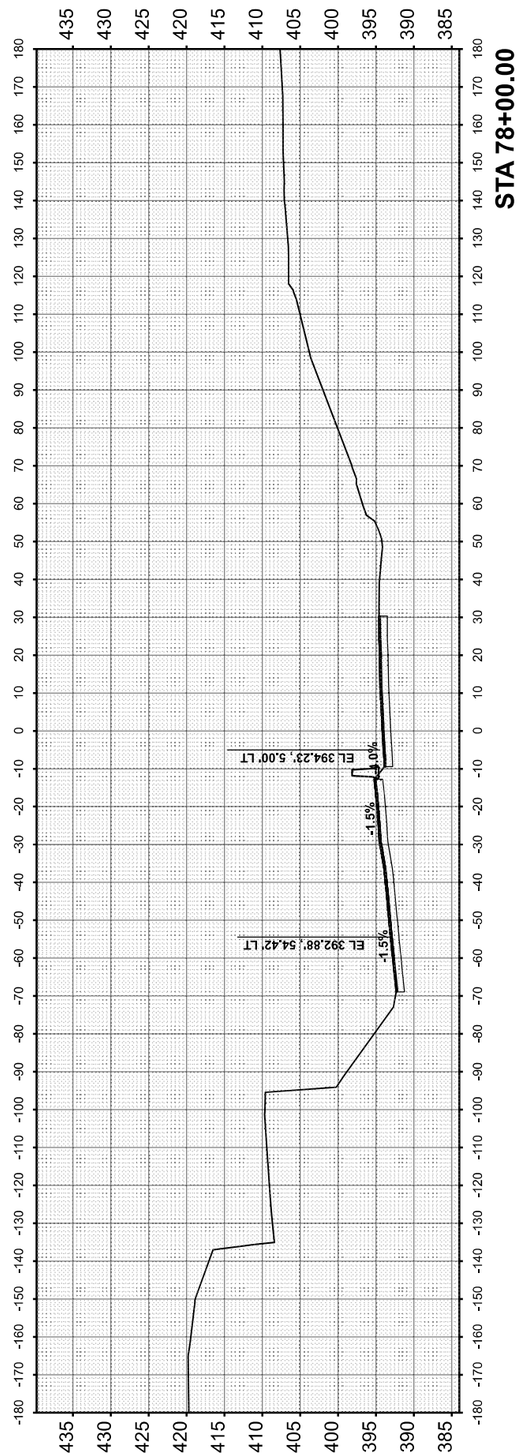

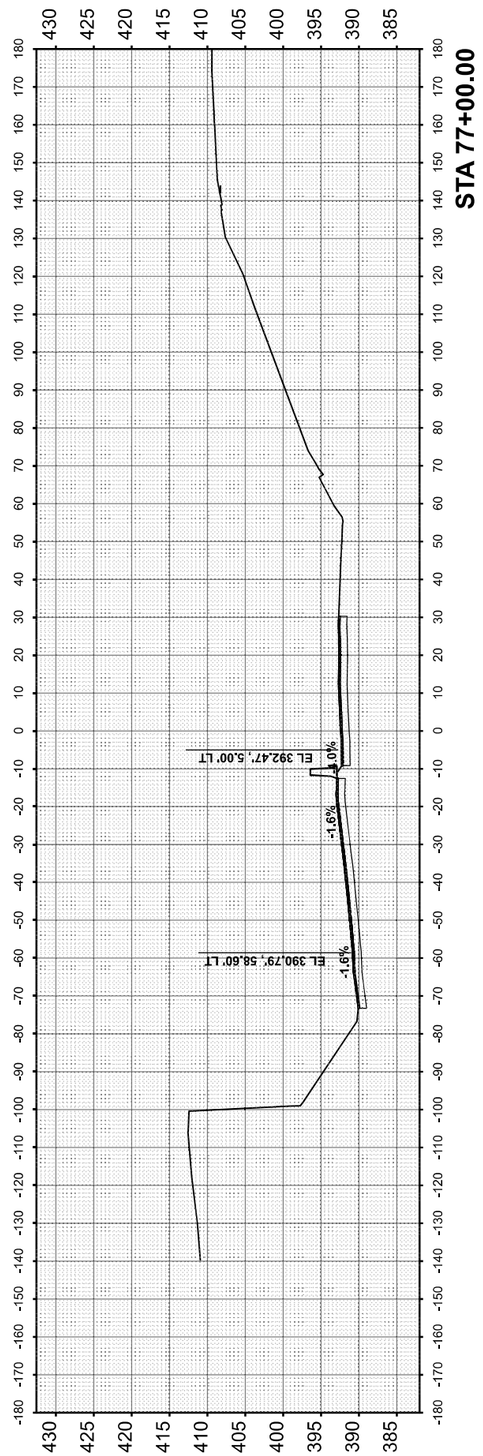

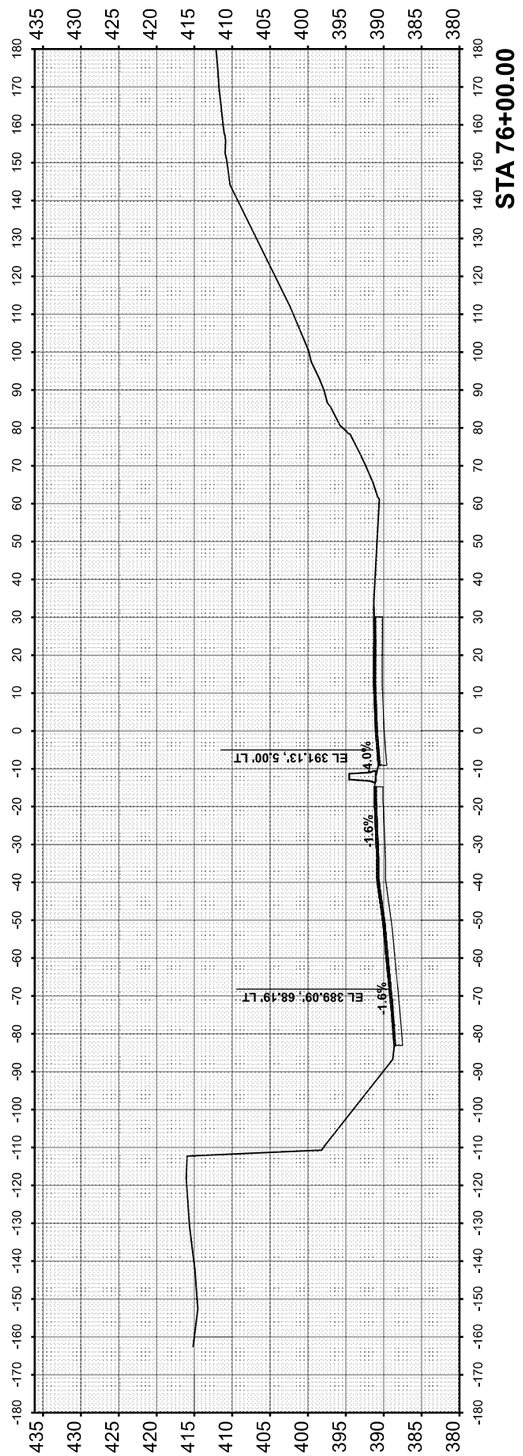

MODEL: $MODELNAMES
FILE NAME: D876E84-I5570-sht-XS-04.dgn

Jacobs
525 West Monroe
Suite 1600
Chicago, IL 60661
(312) 251-3000

USER NAME = jacobspw18ics03$	DESIGNED - MS	REVISED -	
	DRAWN - MS	REVISED -	
PLOT SCALE = 0.16666633 ' / in.	CHECKED - MS	REVISED -	
PLOT DATE = 10/2/2025	DATE - 2025/10/03	REVISED -	

STATE OF ILLINOIS
DEPARTMENT OF TRANSPORTATION

CROSS SECTION
I-55 NORTHBOUND SOUTHBOUND

SCALE: 1"=20' | SHEET 4 OF 7 SHEETS | STA. TO STA.

F.A.I. RTE.	SECTION	COUNTY	TOTAL SHEETS	SHEET NO.
70	Section82-(5,6)RS-2, 60-6RS-2	MADISON & ST. CLAIR	678	583

CONTRACT NO. 76E84

ILLINOIS | FED. AID PROJECT

FINAL SURVEY		BY	DATE
NOTE BOOK NO.	SURVEYED		
	PLOTTED		
	TEMPLATE		
	AREAS		
	AREAS CHECKED		

ORIGINAL SURVEY		BY	DATE
NOTE BOOK NO.	SURVEYED		
	PLOTTED		
	TEMPLATE		
	AREAS		
	AREAS CHECKED		

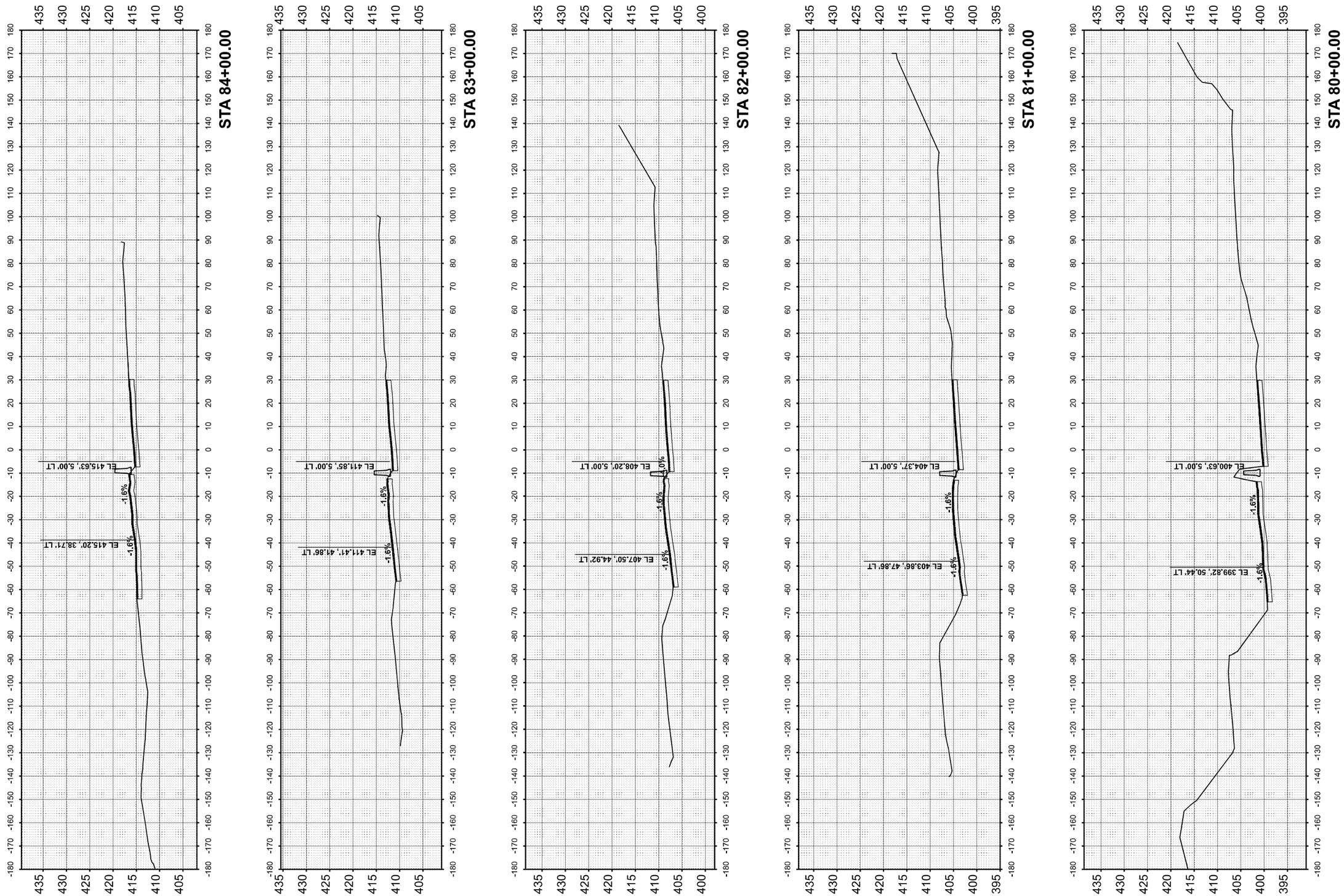

MODEL: $MODELNAME$
FILE NAME: D876E84-I5570-sht-XS-05.dgn

Jacobs
525 West Monroe
Suite 1600
Chicago, IL 60661
(312) 251-3000

USER NAME = jacobspw18ics01$	DESIGNED - MS	REVISED -	
	DRAWN - MS	REVISED -	
PLOT SCALE = 0.16666633 ' / in.	CHECKED - MS	REVISED -	
PLOT DATE = 10/2/2025	DATE - 2025/10/03	REVISED -	

STATE OF ILLINOIS
DEPARTMENT OF TRANSPORTATION

CROSS SECTION
I-55 NORTHBOUND SOUTHBOUND

SCALE: 1"=20' | SHEET 5 OF 7 SHEETS | STA. TO STA.

F.A.I. RTE.	SECTION	COUNTY	TOTAL SHEETS	SHEET NO.
70	Section82-(5,6)RS-2, 60-6RS-2	MADISON & ST. CLAIR	678	584
		CONTRACT NO. 76E84		
		ILLINOIS FED. AID PROJECT		

FINAL SURVEY		BY	DATE
NOTE BOOK	SURVEYED		
	PLOTTED		
	TEMPLATE		
	AREAS		
NO.	AREAS CHECKED		

ORIGINAL SURVEY		BY	DATE
NOTE BOOK	SURVEYED		
	PLOTTED		
	TEMPLATE		
	AREAS		
NO.	AREAS CHECKED		

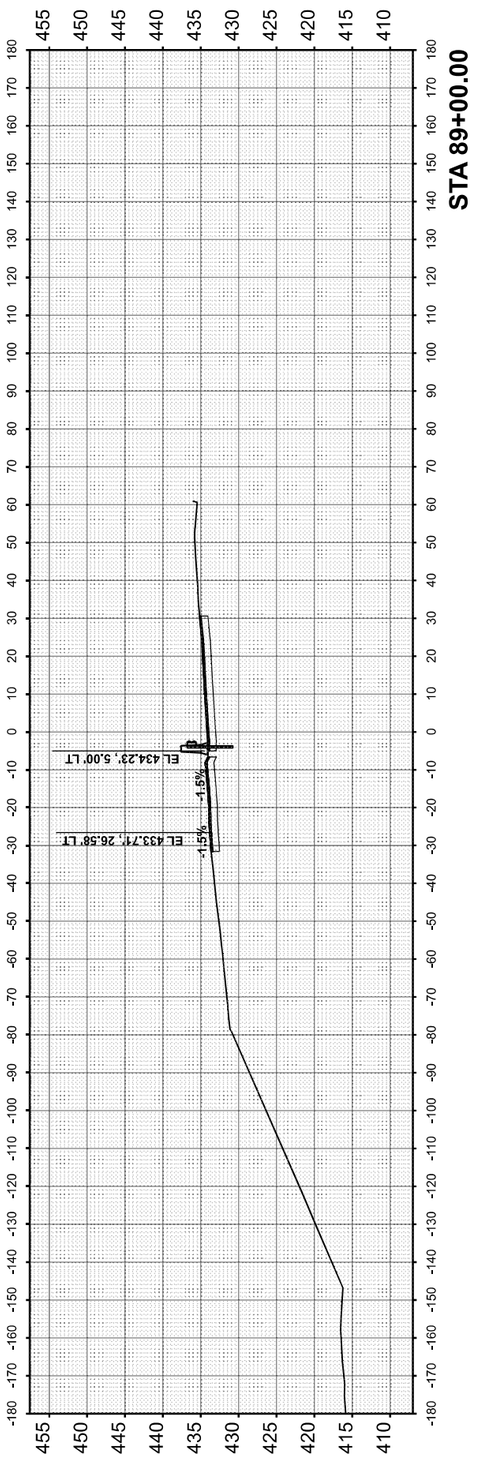

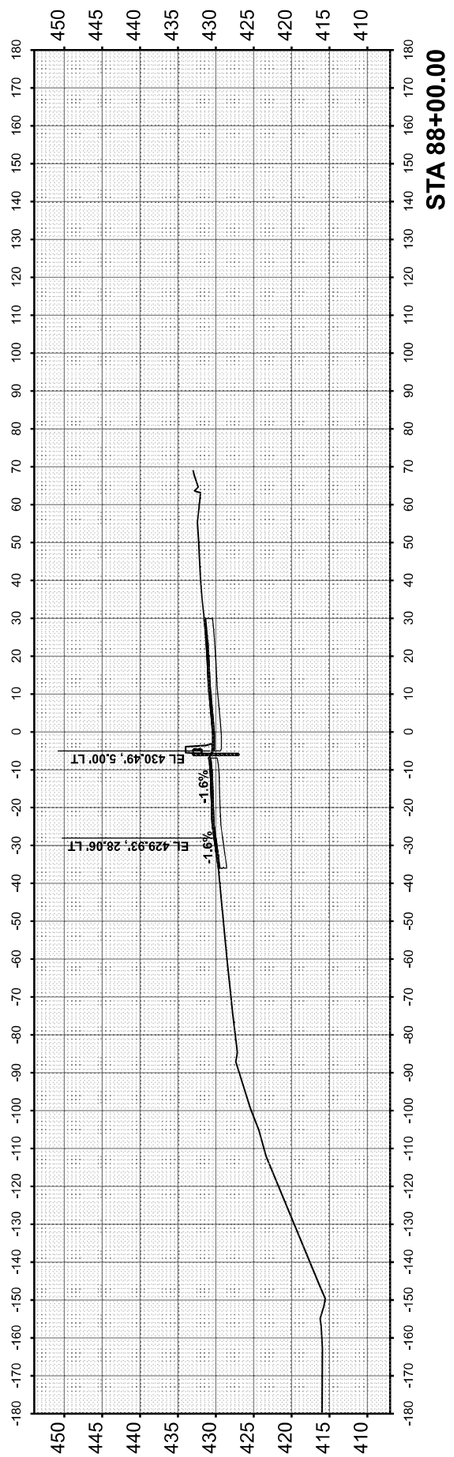

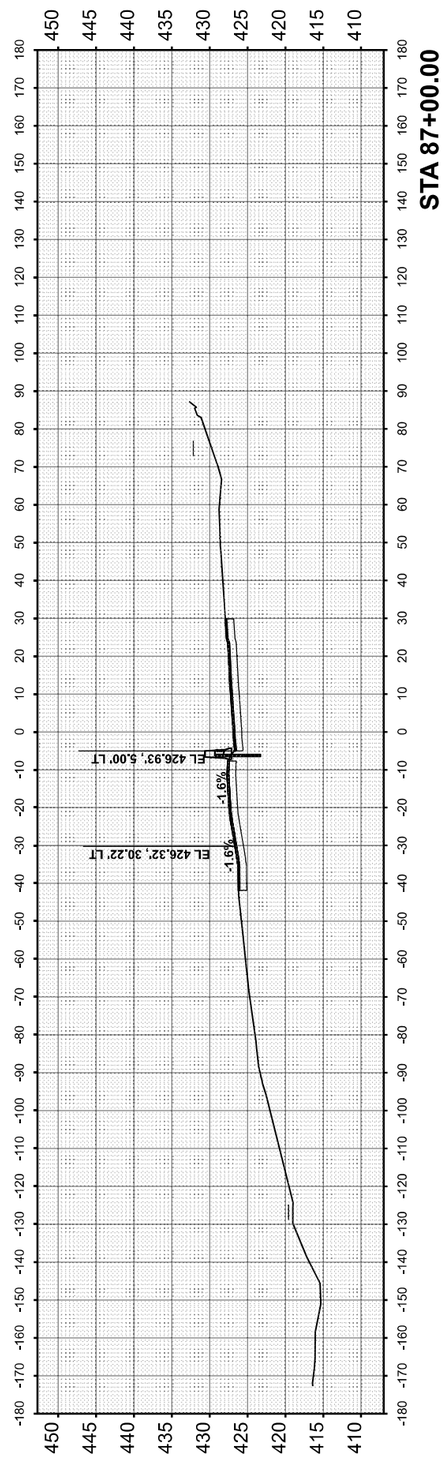

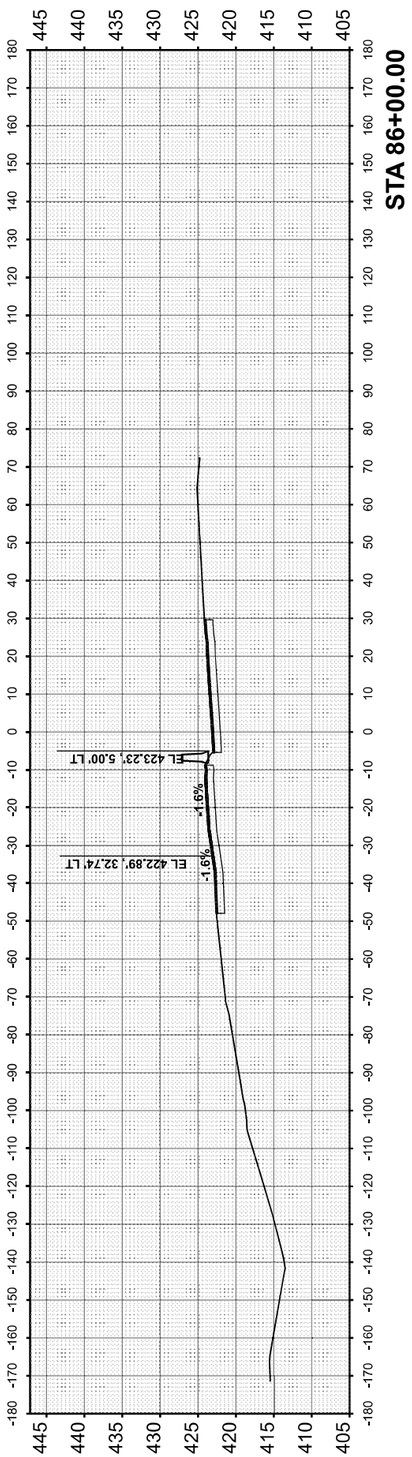

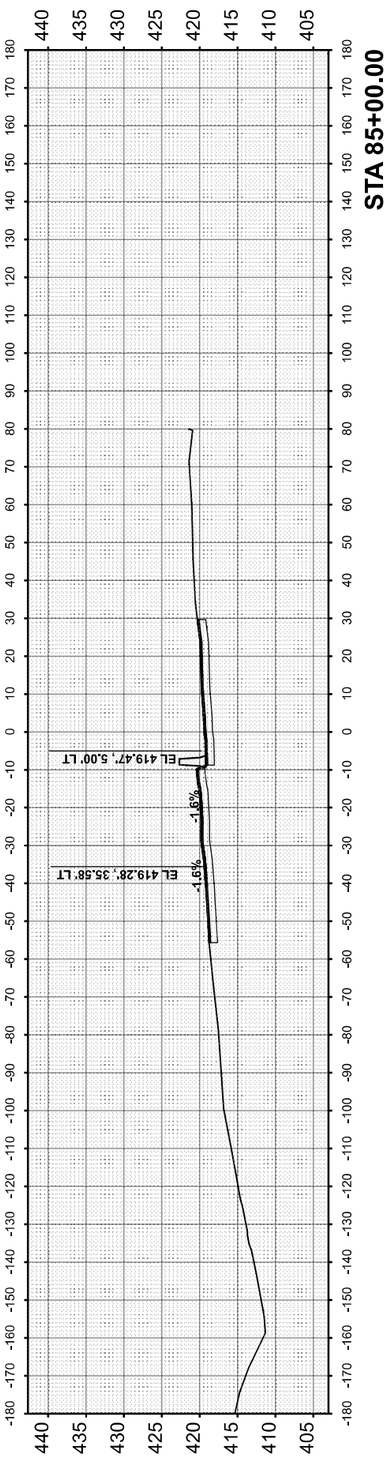

MODEL: SMODELNAMES
FILE NAME: D876E84-I5570-sht-XS-06.dgn

Jacobs
525 West Monroe
Suite 1600
Chicago, IL 60661
(312) 251-3000

USER NAME = jacobspw18ics01$	DESIGNED - MS	REVISED -	
	DRAWN - MS	REVISED -	
PLOT SCALE = 0.16666633 ' / in.	CHECKED - MS	REVISED -	
PLOT DATE = 10/2/2025	DATE - 2025/10/03	REVISED -	

STATE OF ILLINOIS
DEPARTMENT OF TRANSPORTATION

CROSS SECTION
I-55 NORTHBOUND SOUTHBOUND

SCALE: 1"=20' | SHEET 6 OF 7 SHEETS | STA. | TO STA.

F.A.I. RTE.	SECTION	COUNTY	TOTAL SHEETS	SHEET NO.
70	Section82-(5,6)RS-2, 60-6RS-2	MADISON & ST. CLAIR	678	585
		CONTRACT NO. 76E84		
		ILLINOIS FED. AID PROJECT		

FINAL SURVEY		BY	DATE
NOTE BOOK	SURVEYED		
	PLOTTED		
	TEMPLATE		
	AREAS		
NO.	AREAS CHECKED		

ORIGINAL SURVEY		BY	DATE
NOTE BOOK	SURVEYED		
	PLOTTED		
	TEMPLATE		
	AREAS		
NO.	AREAS CHECKED		

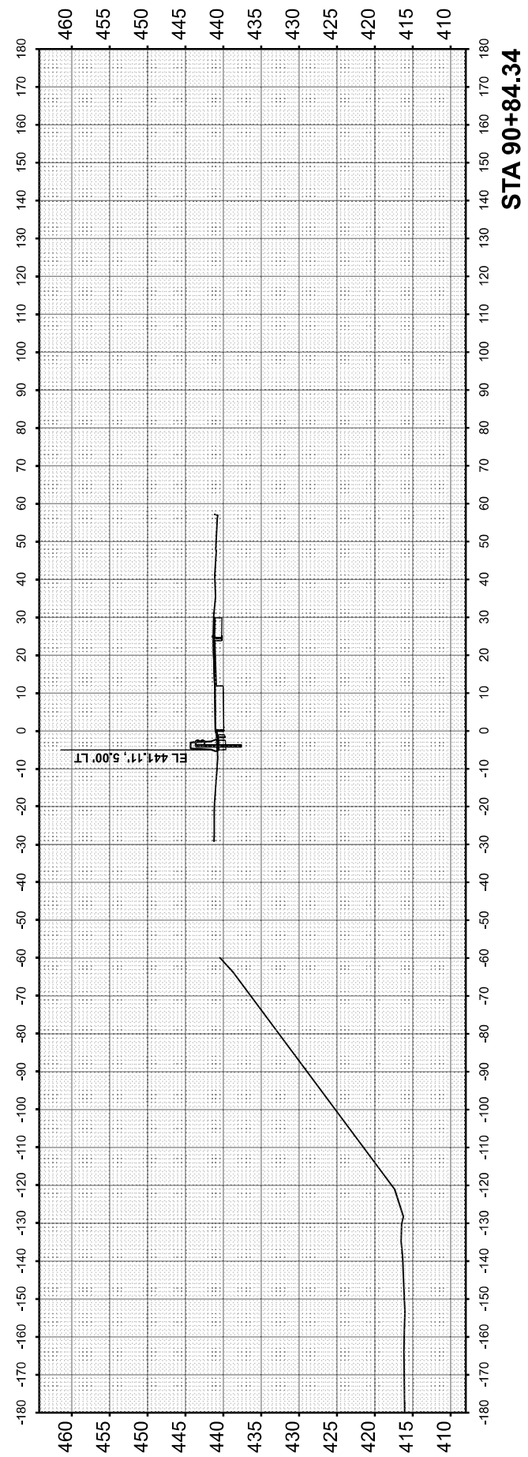

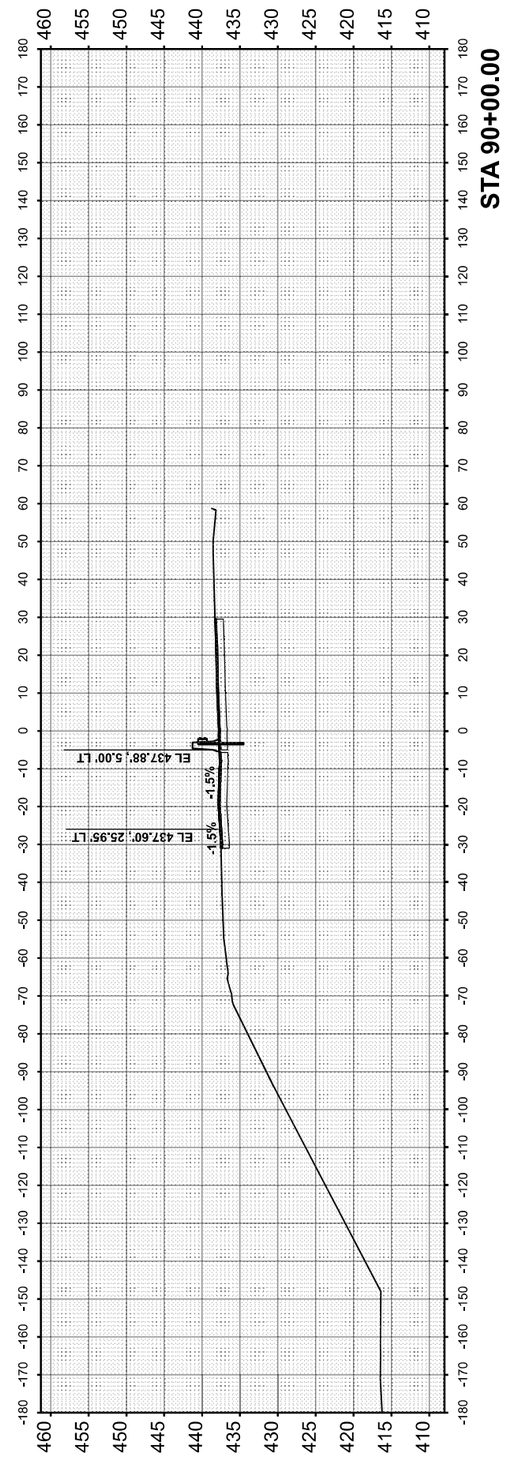

MODEL: $MODELNAME$
FILE NAME: D876E84-I5570-sht-XS-07.dgn

Jacobs
525 West Monroe
Suite 1600
Chicago, IL 60661
(312) 251-3000

USER NAME = jacobspw18ics01$	DESIGNED - MS	REVISED -	
	DRAWN - MS	REVISED -	
PLOT SCALE = 0.16666633 ' / in.	CHECKED - MS	REVISED -	
PLOT DATE = 10/2/2025	DATE - 2025/10/03	REVISED -	

STATE OF ILLINOIS
DEPARTMENT OF TRANSPORTATION

CROSS SECTION
I-55 NORTHBOUND SOUTHBOUND

SCALE: 1"=20' | SHEET 7 OF 7 SHEETS | STA. | TO STA.

F.A.I. RTE.	SECTION	COUNTY	TOTAL SHEETS	SHEET NO.
70	Section82-(5,6)RS-2, 60-6RS-2	MADISON & ST. CLAIR	678	586
		CONTRACT NO. 76E84		
		ILLINOIS FED. AID PROJECT		

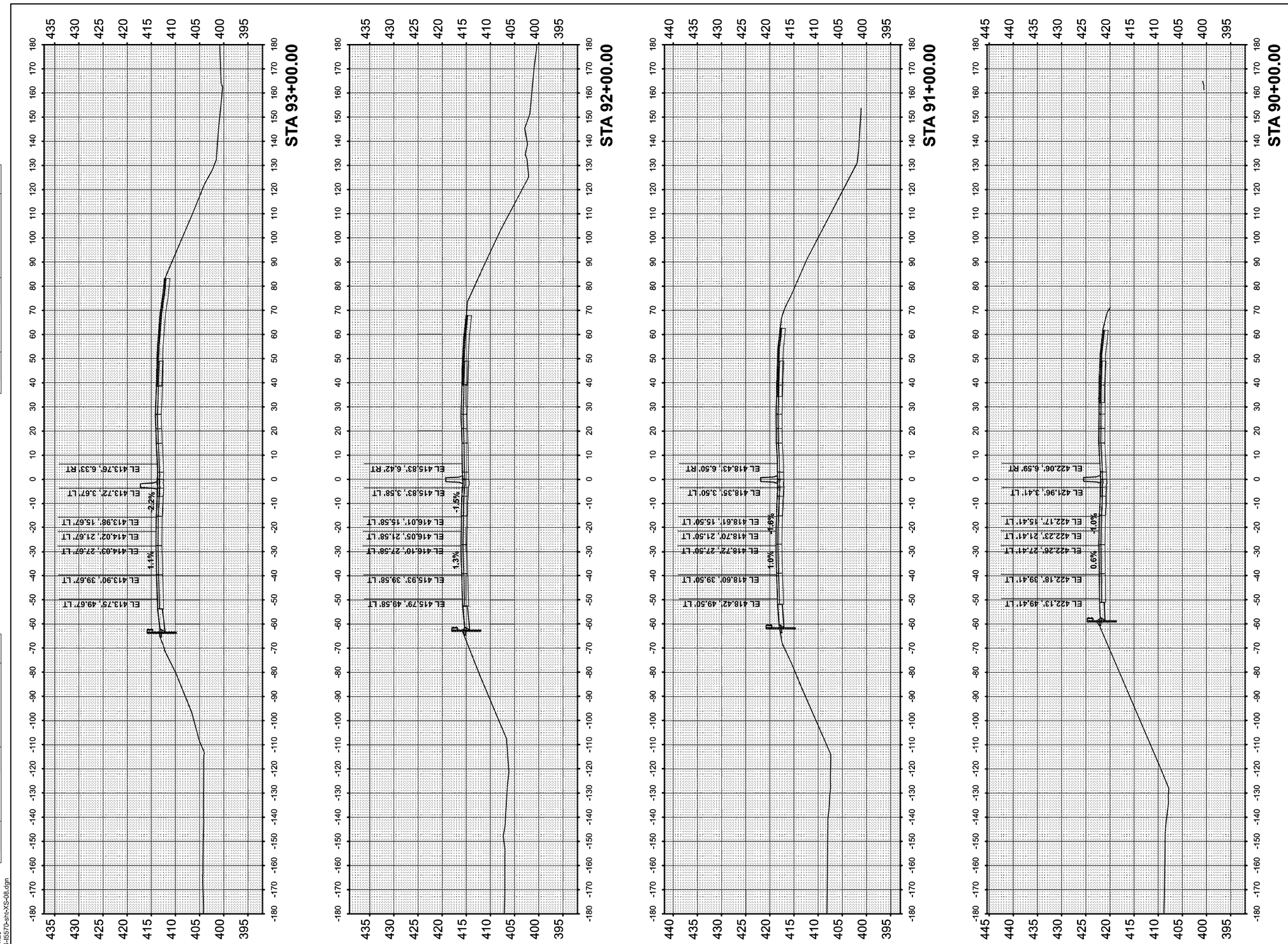

BRIDGE OMISSION
SEE SN 082-0017

FINAL SURVEY		BY	DATE
	SURVEYED		
	PLOTTED		
NOTE BOOK	TEMPLATE		
	AREAS		
NO.	AREAS CHECKED		

ORIGINAL SURVEY		BY	DATE
	SURVEYED		
	PLOTTED		
NOTE BOOK	TEMPLATE		
	AREAS		
NO.	AREAS CHECKED		

MODEL: $MODELNAME$
FILE NAME: D876E84-I-557/b-sht-XS-08.dgn

Jacobs
525 West Monroe
Suite 1600
Chicago, IL 60661
(312) 251-3000

USER NAME = jacobspw18ics03$	DESIGNED - MS	REVISED -	
	DRAWN - MS	REVISED -	
PLOT SCALE = 0.16666633 ' / in.	CHECKED - MS	REVISED -	
PLOT DATE = 10/2/2025	DATE - 2025/10/03	REVISED -	

STATE OF ILLINOIS
DEPARTMENT OF TRANSPORTATION

CROSS SECTION
I-55 / I-70

SCALE: 1"=20' | SHEET 1 OF 46 SHEETS | STA. | TO STA.

F.A.I. RTE.	SECTION	COUNTY	TOTAL SHEETS	SHEET NO.
70	Section82-(5,6)RS-2, 60-6RS-2	MADISON & ST. CLAIR	678	587

CONTRACT NO. 76E84

ILLINOIS | FED. AID PROJECT

FINAL SURVEY		BY	DATE
NOTE BOOK	SURVEYED		
	PLOTTED		
	TEMPLATE		
	AREAS		
NO.	AREAS CHECKED		

ORIGINAL SURVEY		BY	DATE
NOTE BOOK	SURVEYED		
	PLOTTED		
	TEMPLATE		
	AREAS		
NO.	AREAS CHECKED		

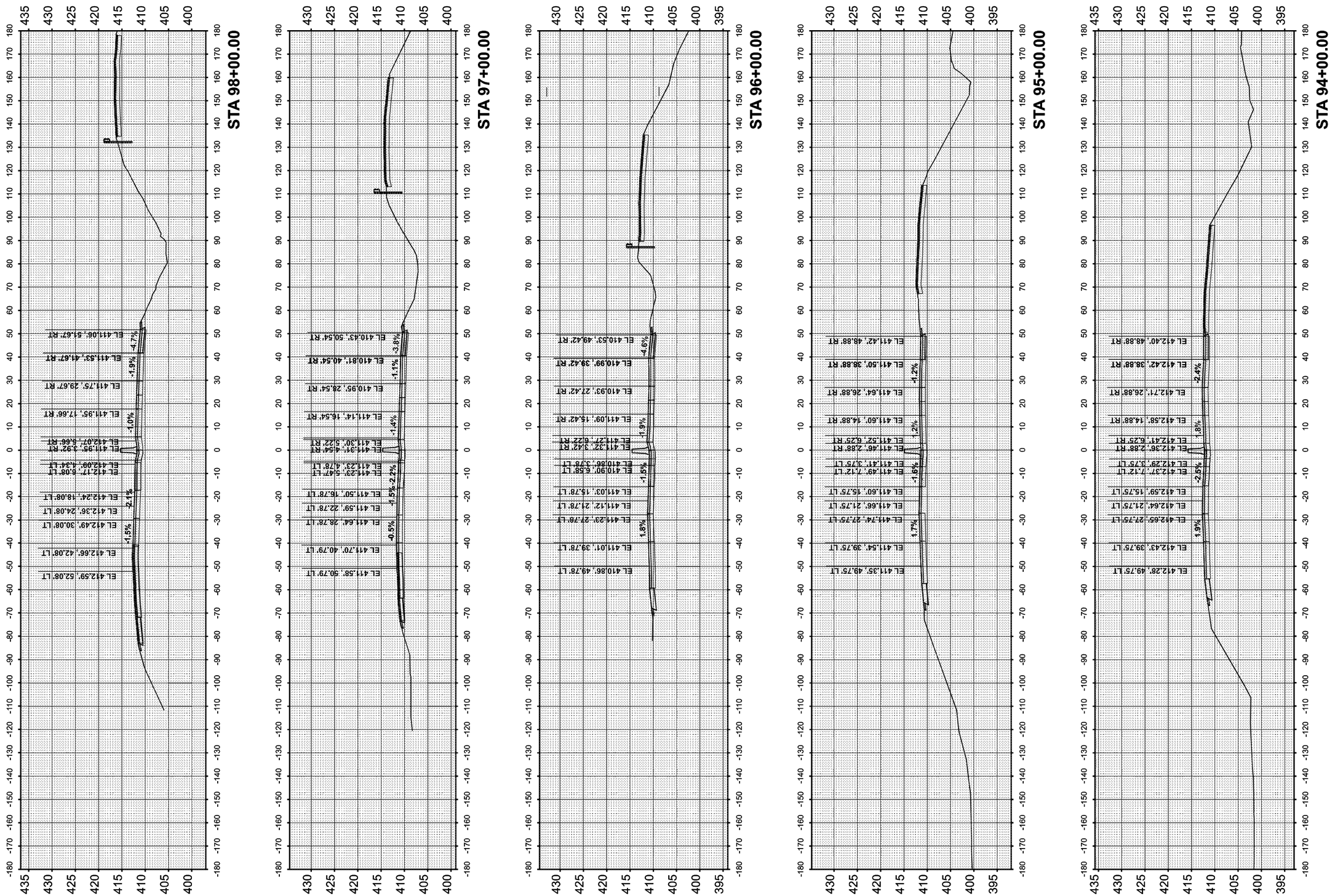

MODEL: SMODELNAMES
FILE NAME: D876E84-I5570-ahi-XS-09.dgn

Jacobs
525 West Monroe
Suite 1600
Chicago, IL 60661
(312) 251-3000

USER NAME = jacobspw18ics03S	DESIGNED - MS	REVISED -	
	DRAWN - MS	REVISED -	
PLOT SCALE = 0.16666633 ' / in.	CHECKED - MS	REVISED -	
PLOT DATE = 10/2/2025	DATE - 2025/10/03	REVISED -	

STATE OF ILLINOIS
DEPARTMENT OF TRANSPORTATION

CROSS SECTION
I-55 / I-70

SCALE: 1"=20' | SHEET 2 OF 46 SHEETS | STA. | TO STA.

F.A.I. RTE.	SECTION	COUNTY	TOTAL SHEETS	SHEET NO.
70	Section82-(5,6)RS-2, 60-6RS-2	MADISON & ST. CLAIR	678	588

CONTRACT NO. 76E84

ILLINOIS | FED. AID PROJECT

FINAL SURVEY	BY	DATE
SURVEYED		
PLOTTED		
TEMPLATE		
AREAS		
AREAS CHECKED		

NOTE BOOK NO.

ORIGINAL SURVEY	BY	DATE
SURVEYED		
PLOTTED		
TEMPLATE		
AREAS		
AREAS CHECKED		

NOTE BOOK NO.

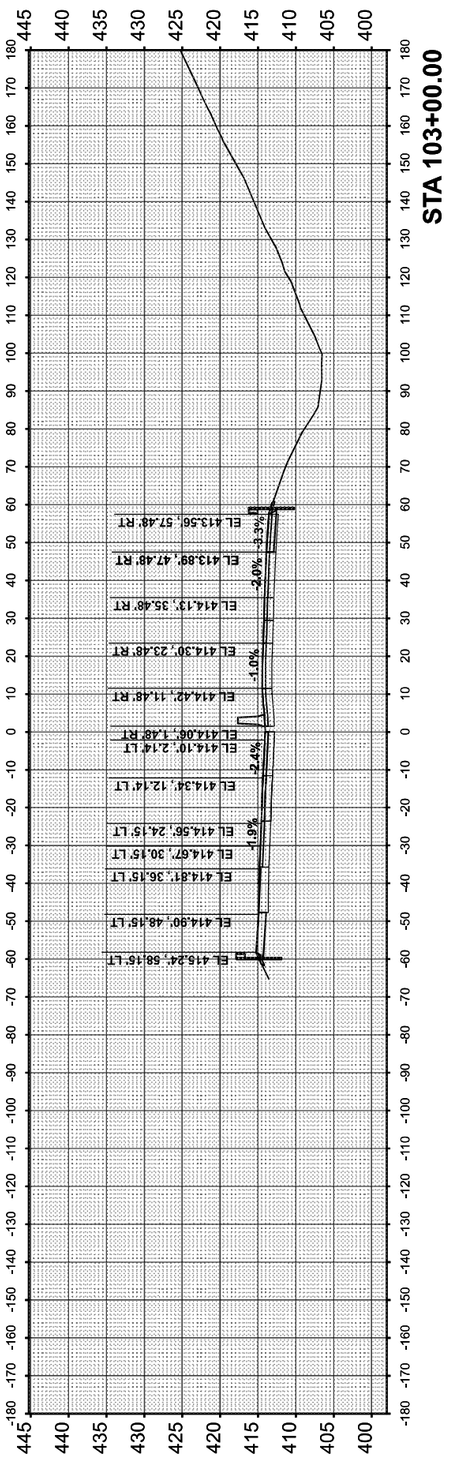

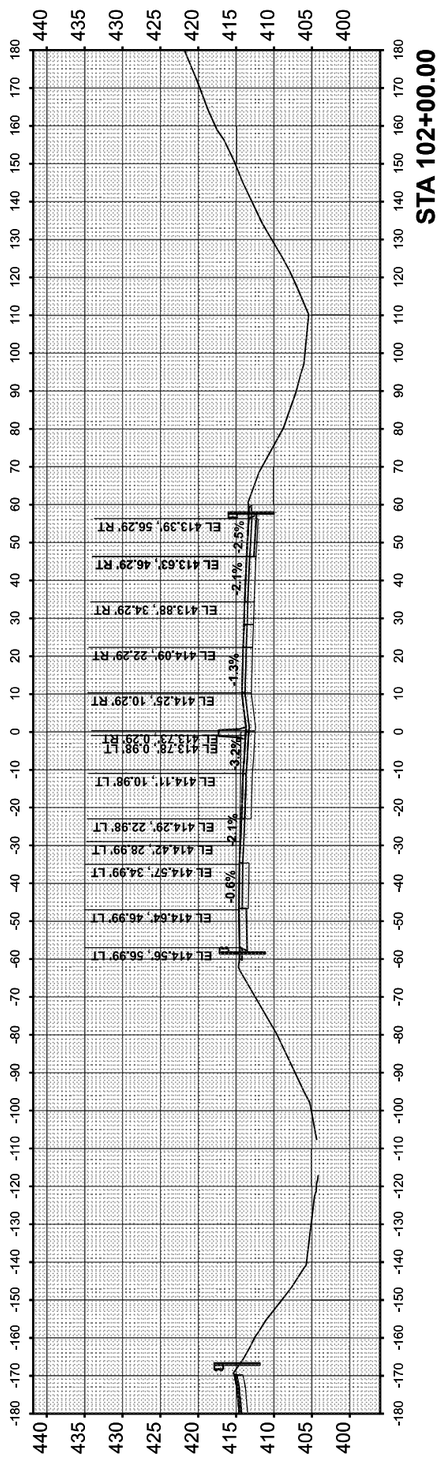

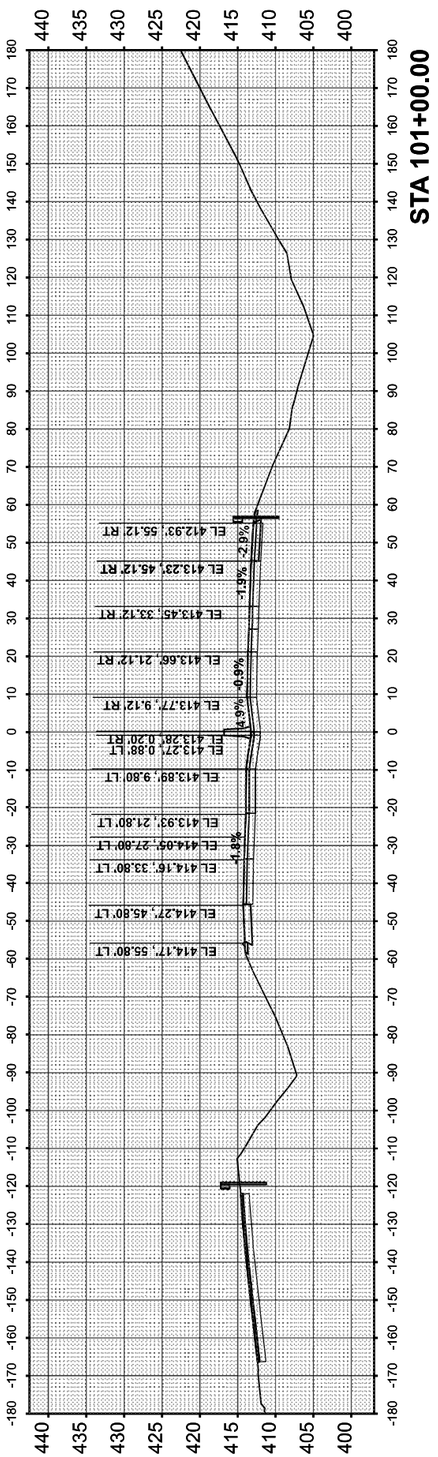

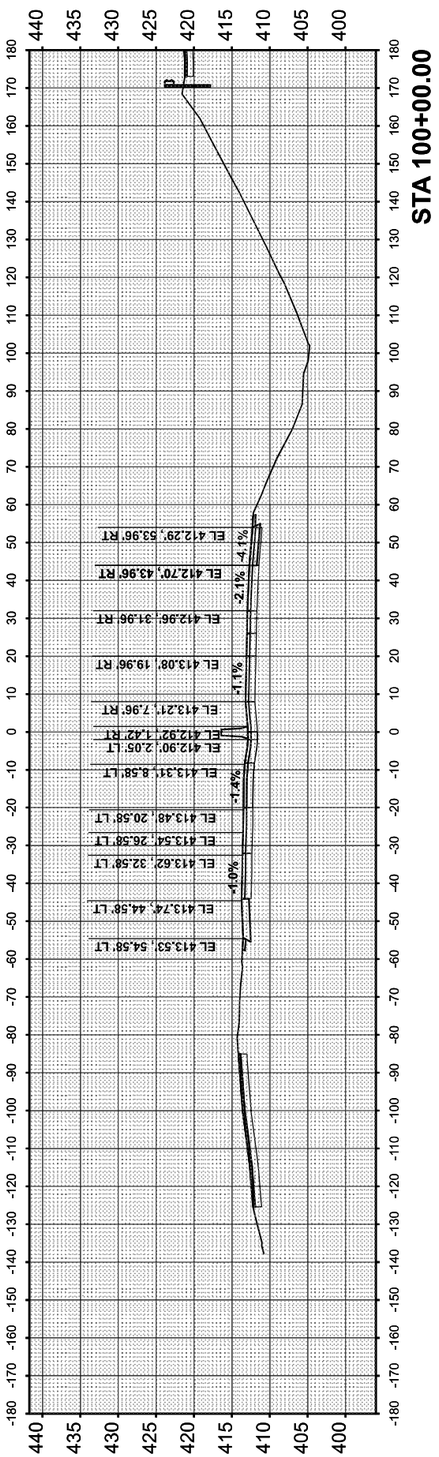

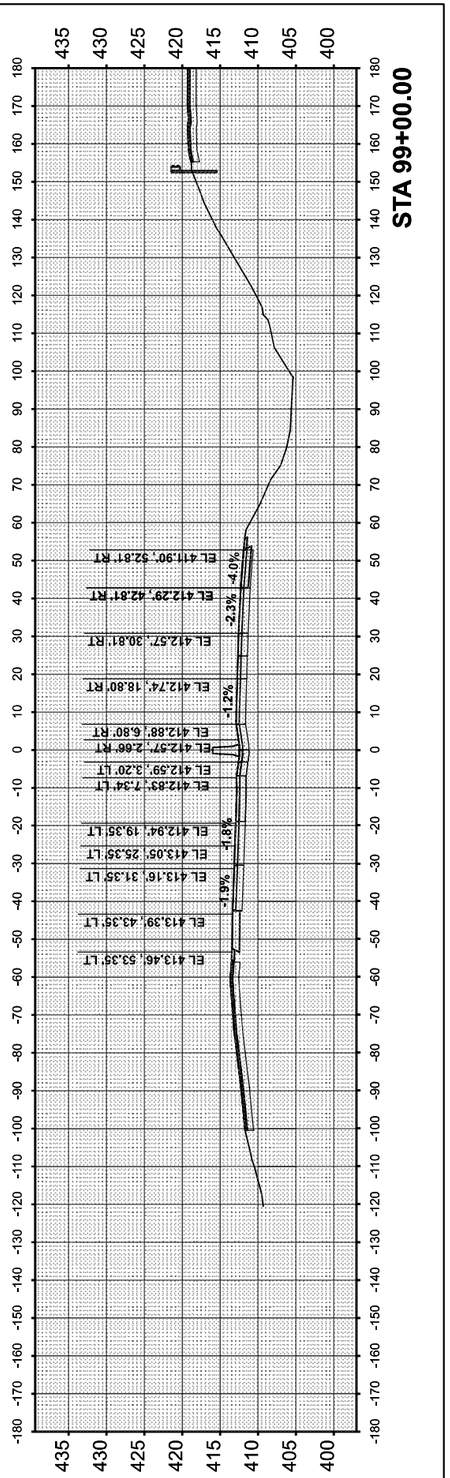

MODEL: SMODELNAMES
FILE NAME: D876E84-1557b-sht-XS-10.dgn

Jacobs
525 West Monroe
Suite 1600
Chicago, IL 60661
(312) 251-3000

USER NAME = jacobspw18ics04$	DESIGNED - MS	REVISED -	
	DRAWN - MS	REVISED -	
PLOT SCALE = 0.16666633 ' / in.	CHECKED - MS	REVISED -	
PLOT DATE = 10/2/2025	DATE - 2025/10/03	REVISED -	

STATE OF ILLINOIS
DEPARTMENT OF TRANSPORTATION

CROSS SECTION
I-55 / I-70

SCALE: 1"=20' | SHEET 3 OF 46 SHEETS | STA. | TO STA.

F.A.I. RTE.	SECTION	COUNTY	TOTAL SHEETS	SHEET NO.
70	Section82-(5,6)RS-2, 60-6RS-2	MADISON & ST. CLAIR	678	589

CONTRACT NO. 76E84

ILLINOIS | FED. AID PROJECT

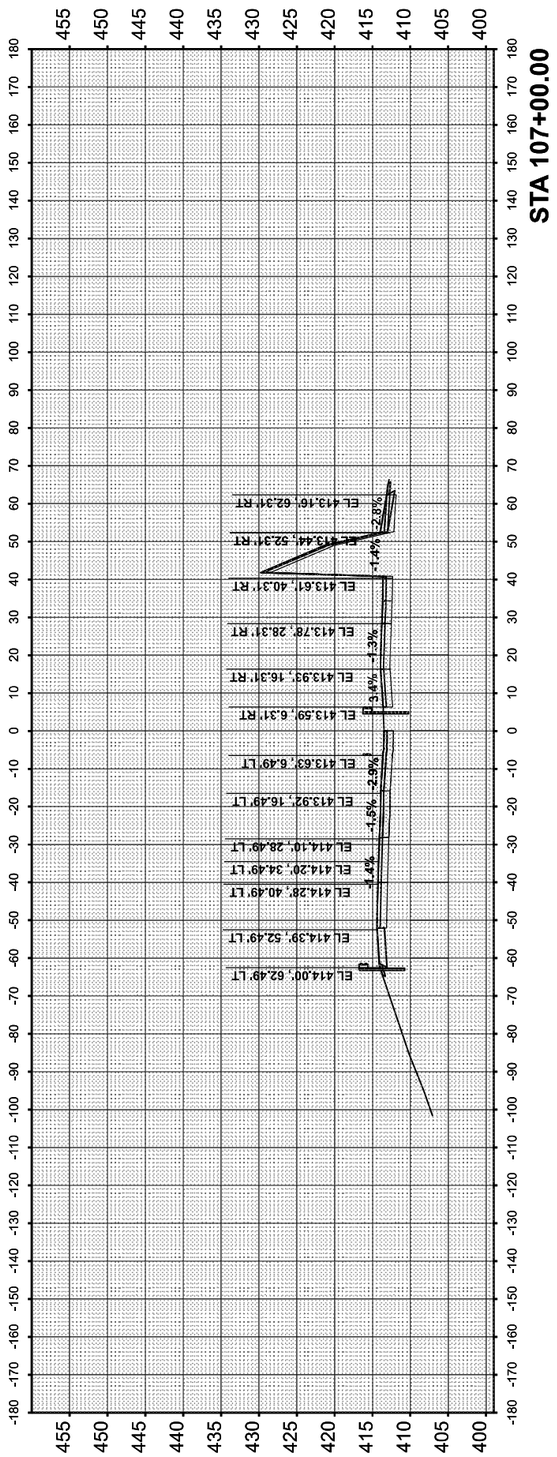

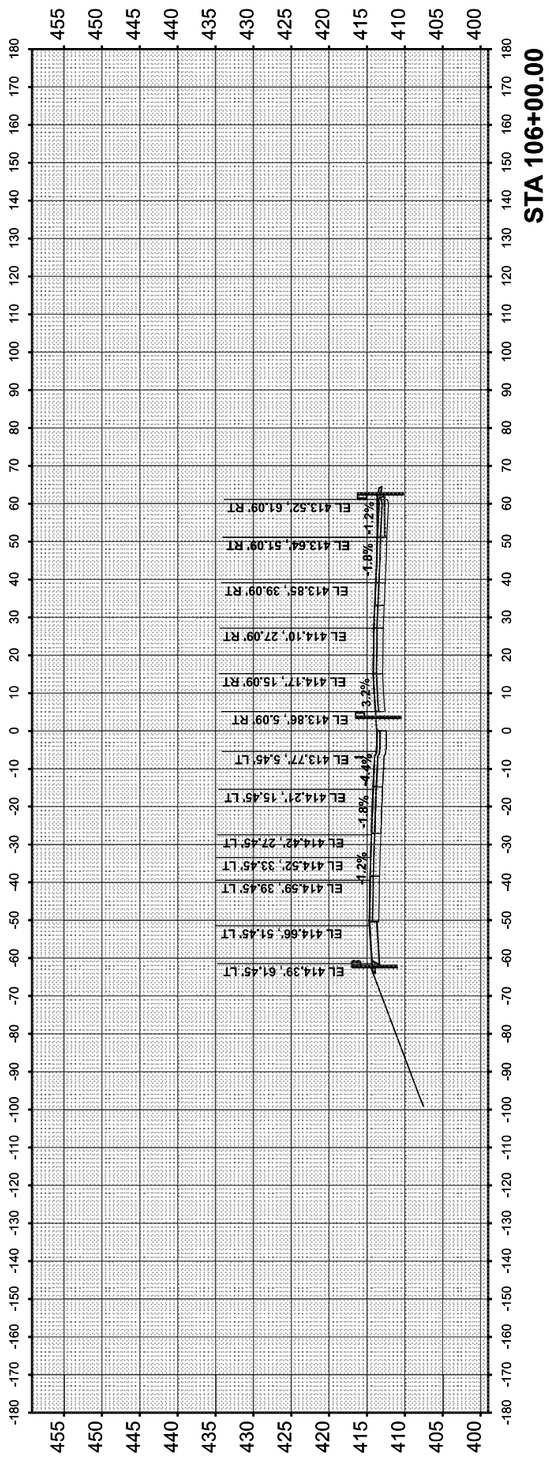

STA 105+00.00

BRIDGE OMISSION
SEE SN 082-0018 AND 082-0019

BRIDGE OMISSION
SEE SN 082-0018 AND 082-0019

STA 104+00.00

FINAL SURVEY		BY	DATE
NOTE BOOK	SURVEYED		
	PLOTTED		
	TEMPLATE		
	AREAS		
NO.	AREAS CHECKED		

ORIGINAL SURVEY		BY	DATE
NOTE BOOK	SURVEYED		
	PLOTTED		
	TEMPLATE		
	AREAS		
NO.	AREAS CHECKED		

MODEL: SMODELNAMES
FILE NAME: D876E84-I5570-sht-XS-11.dgn

Jacobs
525 West Monroe
Suite 1600
Chicago, IL 60661
(312) 251-3000

USER NAME = jacobspw18ics01$	DESIGNED - MS	REVISED -
	DRAWN - MS	REVISED -
PLOT SCALE = 0.16666633 ' / in.	CHECKED - MS	REVISED -
PLOT DATE = 10/2/2025	DATE - 2025/10/03	REVISED -

STATE OF ILLINOIS
DEPARTMENT OF TRANSPORTATION

CROSS SECTION
I–55 / I–70

SCALE: 1"=20' | SHEET 4 OF 46 SHEETS | STA. TO STA.

F.A.I. RTE.	SECTION	COUNTY	TOTAL SHEETS	SHEET NO.
70	Section82-(5,6)RS-2, 60-6RS-2	MADISON & ST. CLAIR	678	590
		CONTRACT NO. 76E84		
		ILLINOIS FED. AID PROJECT		

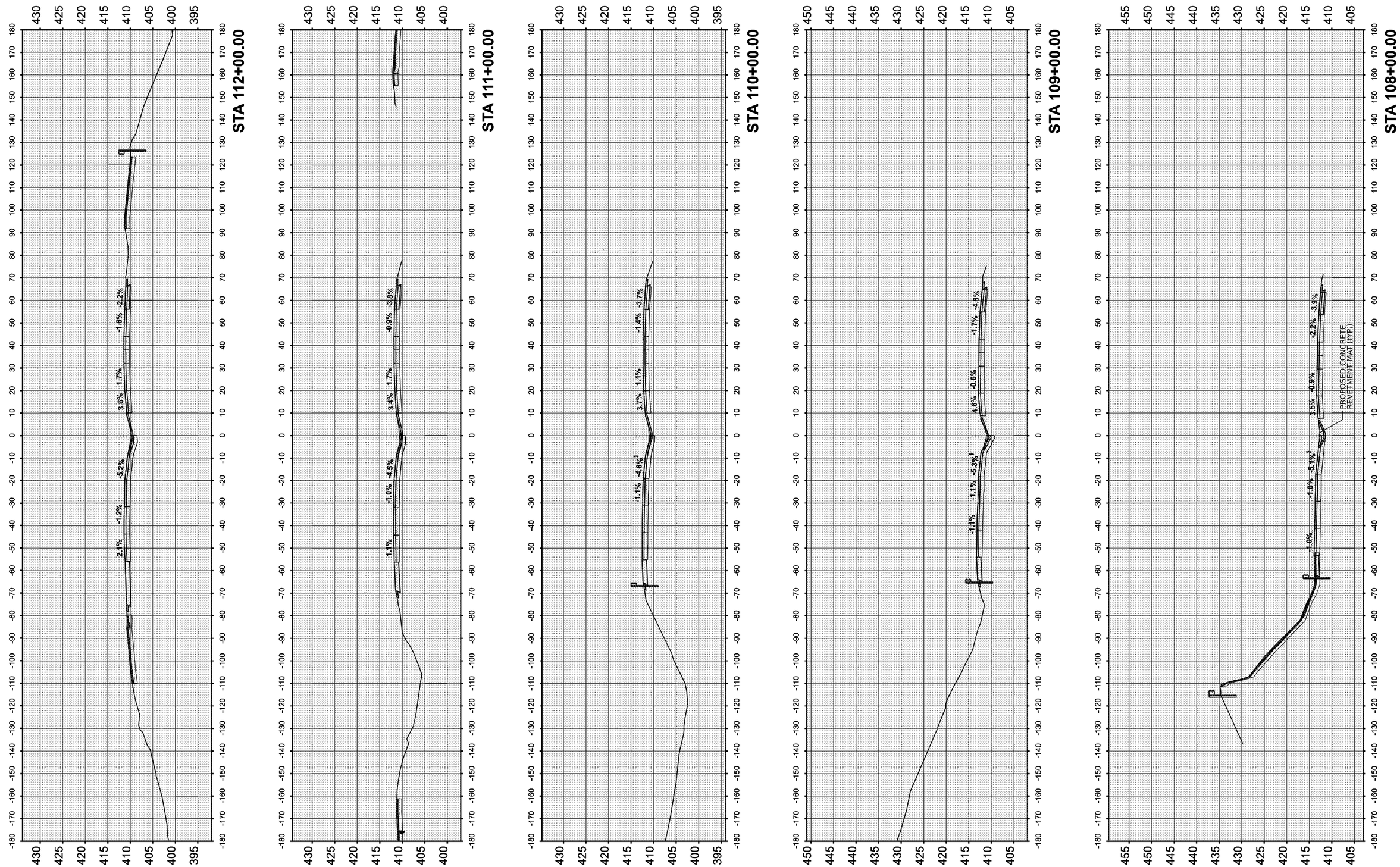

FINAL SURVEY		BY	DATE
	SURVEYED		
	PLOTTED		
NOTE BOOK	TEMPLATE		
	AREAS		
NO.	AREAS CHECKED		

ORIGINAL SURVEY		BY	DATE
	SURVEYED		
	PLOTTED		
NOTE BOOK	TEMPLATE		
	AREAS		
NO.	AREAS CHECKED		

MODEL: $MODELNAMES
FILE NAME: D876E84-I557/b-sht-XS-12.dgn

Jacobs
525 West Monroe
Suite 1600
Chicago, IL 60661
(312) 251-3000

USER NAME = Jacobspw18ics01$	DESIGNED - MS	REVISED -	
	DRAWN - MS	REVISED -	
PLOT SCALE = 0.16666633 ' / in.	CHECKED - MS	REVISED -	
PLOT DATE = 10/2/2025	DATE - 2025/10/03	REVISED -	

STATE OF ILLINOIS
DEPARTMENT OF TRANSPORTATION

CROSS SECTION
I–55 / I–70

SCALE: 1"=20' | SHEET 5 OF 46 SHEETS | STA. | TO STA.

F.A.I. RTE.	SECTION	COUNTY	TOTAL SHEETS	SHEET NO.
70	Section82-(5,6)RS-2, 60-6RS-2	MADISON & ST. CLAIR	678	591
		CONTRACT NO. 76E84		
		ILLINOIS FED. AID PROJECT		

FINAL SURVEY		BY	DATE
	SURVEYED		
	PLOTTED		
NOTE BOOK	TEMPLATE		
	AREAS		
NO.	AREAS CHECKED		

ORIGINAL SURVEY		BY	DATE
	SURVEYED		
	PLOTTED		
NOTE BOOK	TEMPLATE		
	AREAS		
NO.	AREAS CHECKED		

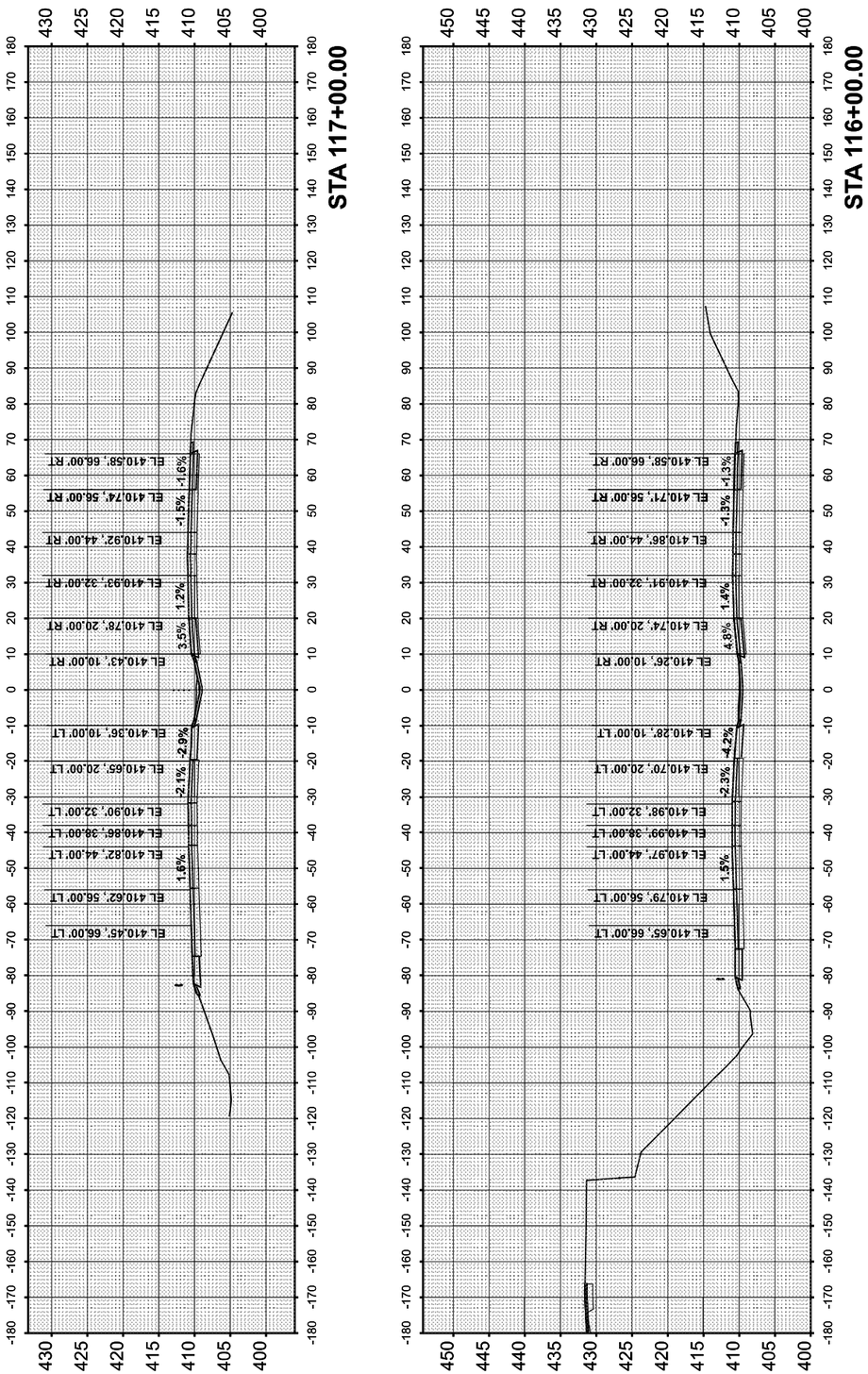

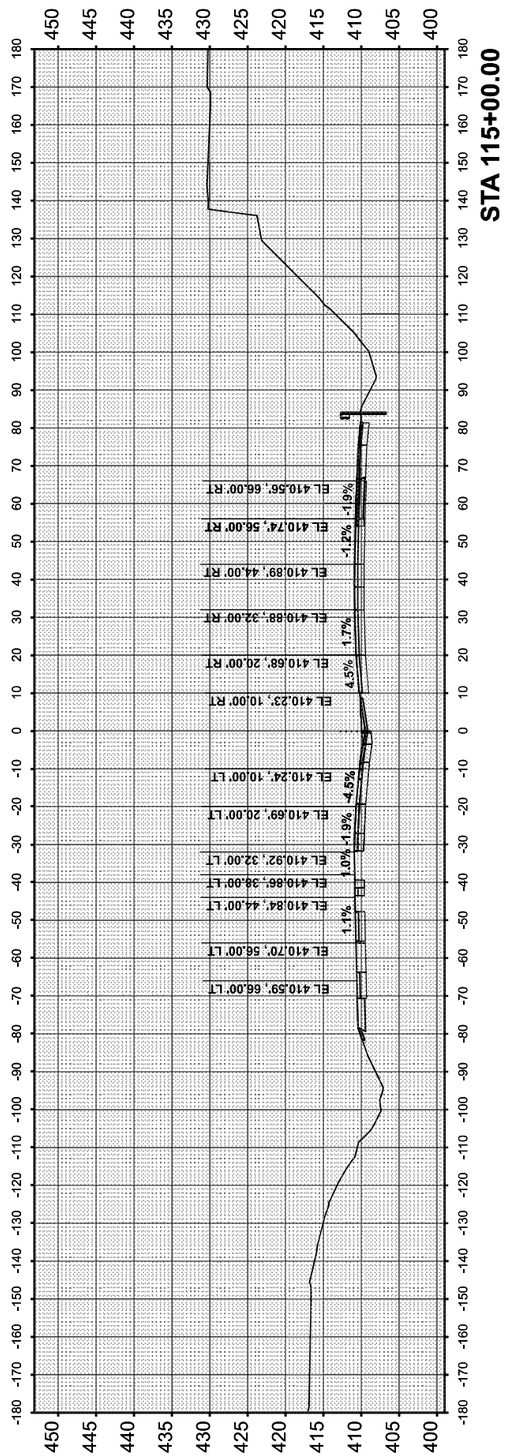

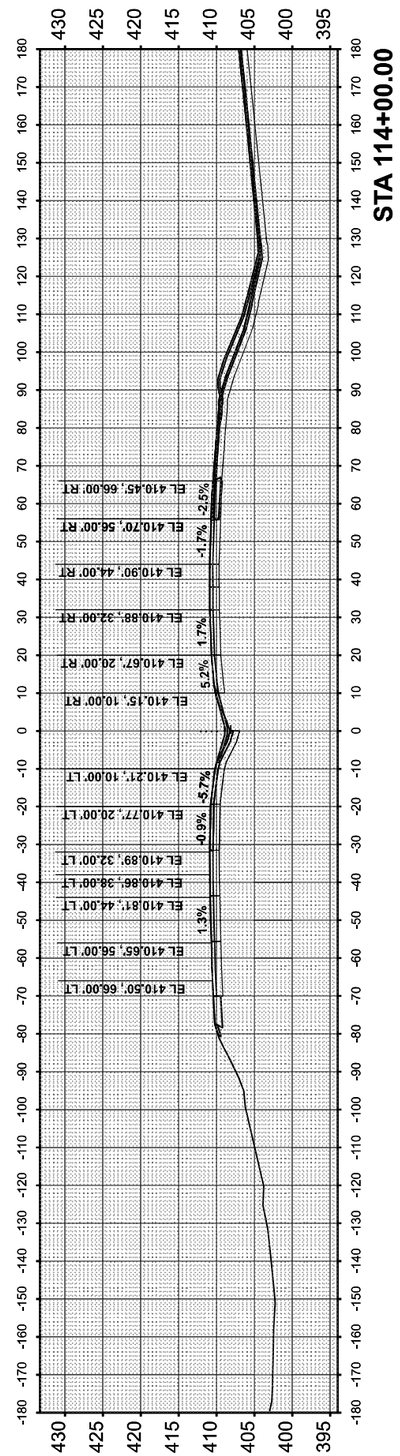

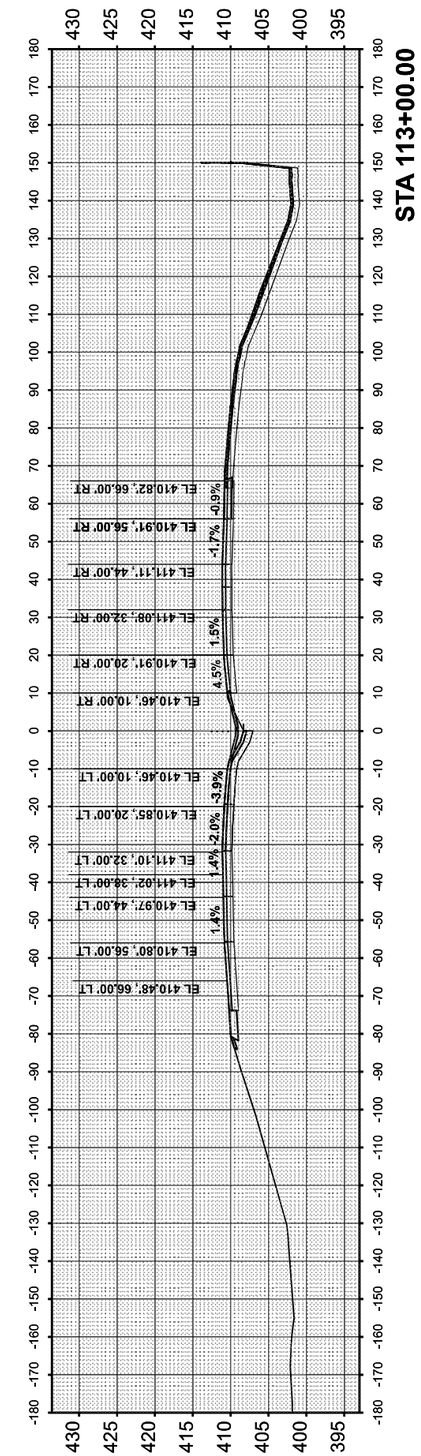

MODEL: SMODELNAMES
FILE NAME: D876E84-I557O-sht-XS-13.dgn

Jacobs
525 West Monroe
Suite 1600
Chicago, IL 60661
(312) 251-3000

USER NAME = jacobspw18ics03S	DESIGNED - MS	REVISED -	
	DRAWN - MS	REVISED -	
PLOT SCALE = 0.16666633 ' / in.	CHECKED - MS	REVISED -	
PLOT DATE = 10/2/2025	DATE - 2025/10/03	REVISED -	

STATE OF ILLINOIS
DEPARTMENT OF TRANSPORTATION

CROSS SECTION
I-55 / I-70

SCALE: 1"=20' | SHEET 6 OF 46 SHEETS | STA. | TO STA.

F.A.I. RTE.	SECTION	COUNTY	TOTAL SHEETS	SHEET NO.
70	Section82-(5,6)RS-2, 60-6RS-2	MADISON & ST. CLAIR	678	592

CONTRACT NO. 76E84

ILLINOIS | FED. AID PROJECT

FINAL SURVEY		BY	DATE
NOTE BOOK NO.	SURVEYED		
	PLOTTED		
	TEMPLATE		
	AREAS		
	AREAS CHECKED		

ORIGINAL SURVEY		BY	DATE
NOTE BOOK NO.	SURVEYED		
	PLOTTED		
	TEMPLATE		
	AREAS		
	AREAS CHECKED		

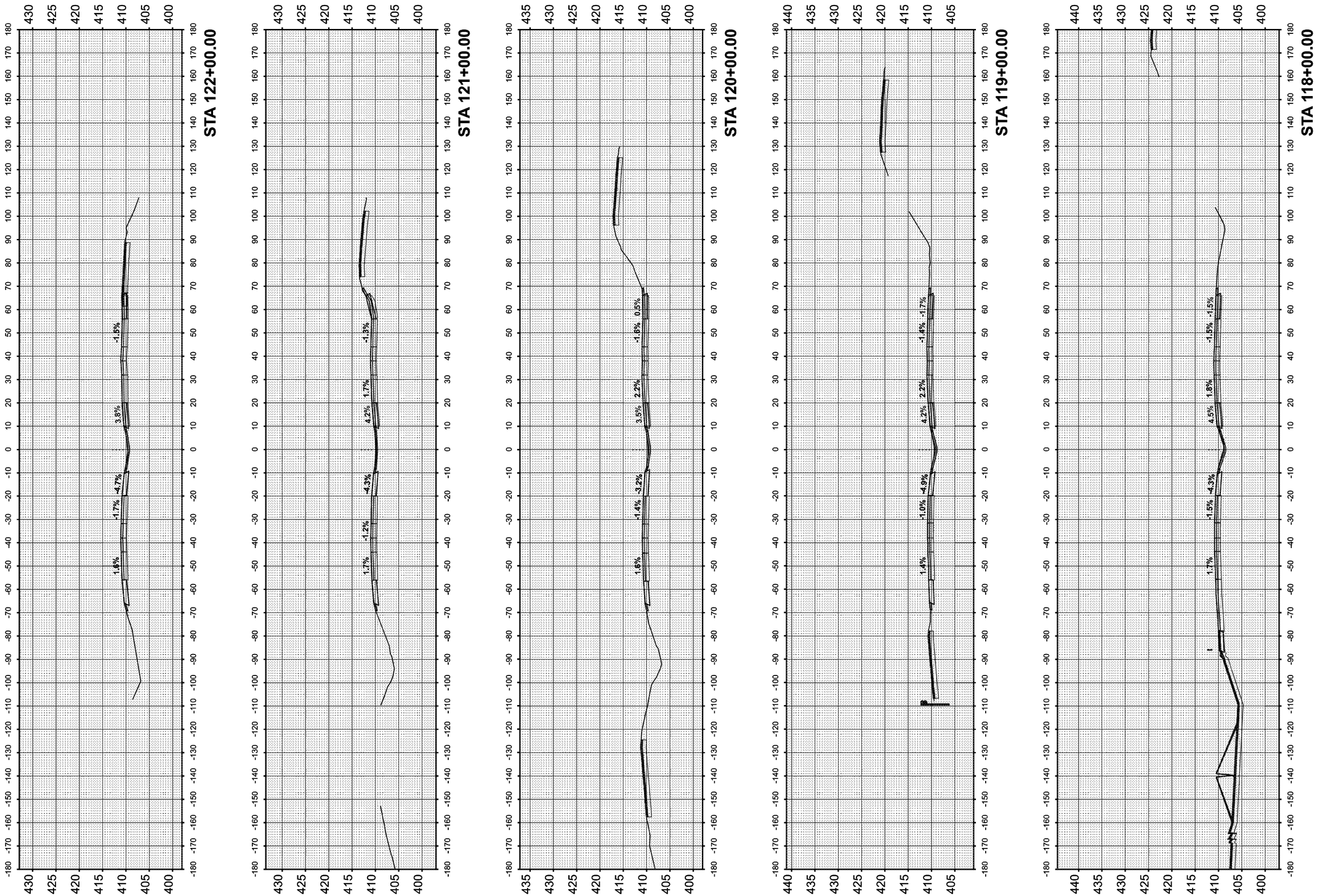

MODEL: SMODELNAMES
FILE NAME: D876E84-t5570-sht-XS-14.dgn

Jacobs
525 West Monroe
Suite 1600
Chicago, IL 60661
(312) 251-3000

USER NAME = jacobspw18ics03$	DESIGNED - MS	REVISED -	
	DRAWN - MS	REVISED -	
PLOT SCALE = 0.16666633 ' / in.	CHECKED - MS	REVISED -	
PLOT DATE = 10/2/2025	DATE - 2025/10/03	REVISED -	

STATE OF ILLINOIS
DEPARTMENT OF TRANSPORTATION

CROSS SECTION
I-55 / I-70

SCALE: 1"=20' | SHEET 7 OF 46 SHEETS | STA. | TO STA.

F.A.I. RTE.	SECTION	COUNTY	TOTAL SHEETS	SHEET NO.
70	Section82-(5,6)RS-2, 60-6RS-2	MADISON & ST. CLAIR	678	593
		CONTRACT NO. 76E84		
		ILLINOIS	FED. AID PROJECT	

FINAL SURVEY		BY	DATE
	SURVEYED		
	PLOTTED		
NOTE BOOK	TEMPLATE		
	AREAS		
NO.	AREAS CHECKED		

ORIGINAL SURVEY		BY	DATE
	SURVEYED		
	PLOTTED		
NOTE BOOK	TEMPLATE		
	AREAS		
NO.	AREAS CHECKED		

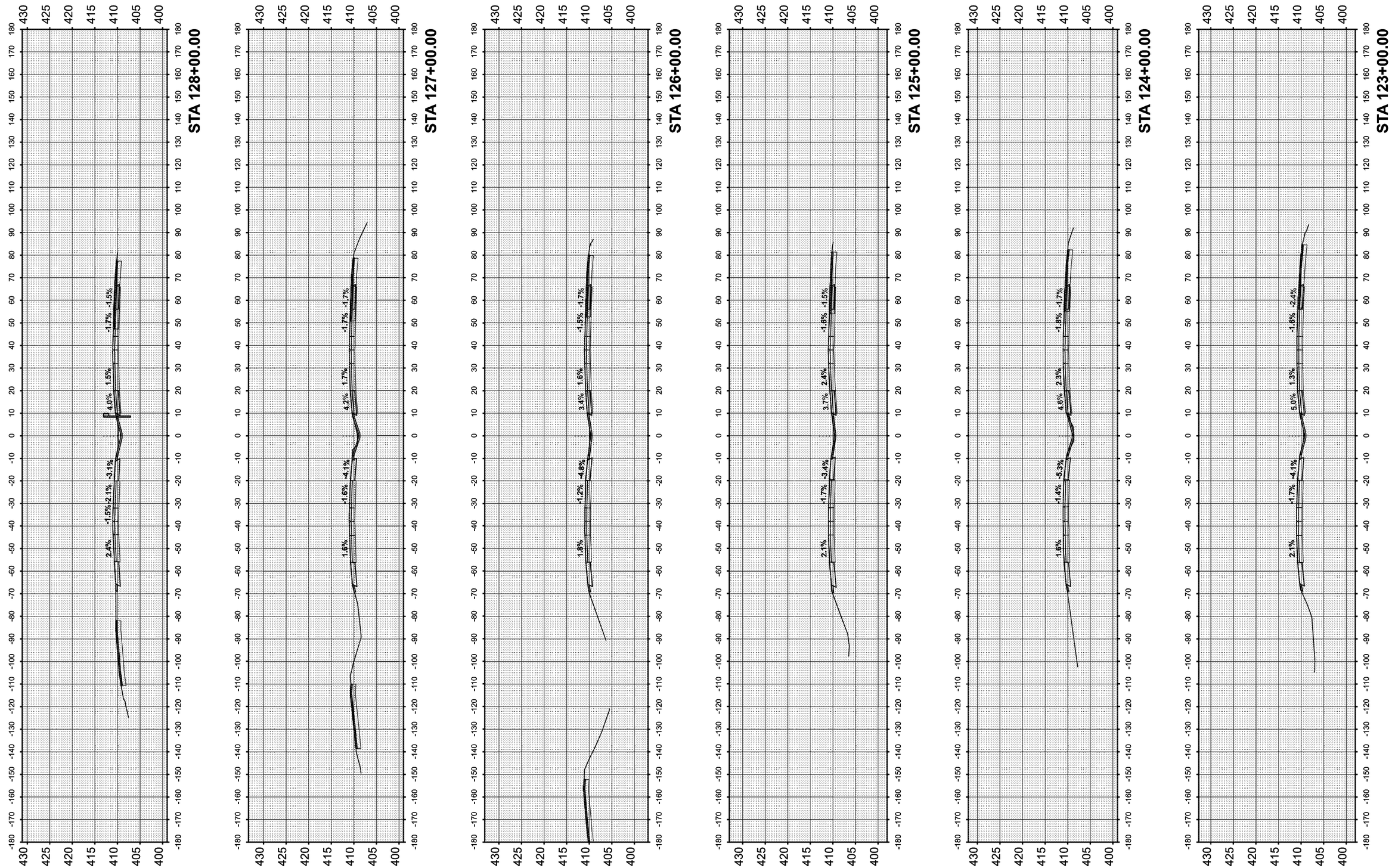

MODEL: $MODELNAME$
FILE NAME: D876E84-I5570-sht-XS-15.dgn

Jacobs
525 West Monroe
Suite 1600
Chicago, IL 60661
(312) 251-3000

USER NAME = jacobspw18ics03$	DESIGNED - MS	REVISED -
	DRAWN - MS	REVISED -
PLOT SCALE = 0.16666633 ' / in.	CHECKED - MS	REVISED -
PLOT DATE = 10/2/2025	DATE - 2025/10/03	REVISED -

STATE OF ILLINOIS
DEPARTMENT OF TRANSPORTATION

CROSS SECTION
I-55 / I-70

SCALE: 1"=20' | SHEET 8 OF 46 SHEETS | STA. | TO STA.

F.A.I. RTE.	SECTION	COUNTY	TOTAL SHEETS	SHEET NO.
70	Section82-(5,6)RS-2, 60-6RS-2	MADISON & ST. CLAIR	678	594

CONTRACT NO. 76E84

ILLINOIS | FED. AID PROJECT

FINAL SURVEY		BY	DATE
	SURVEYED		
	PLOTTED		
NOTE BOOK	TEMPLATE		
	AREAS		
NO.	AREAS CHECKED		

ORIGINAL SURVEY		BY	DATE
	SURVEYED		
	PLOTTED		
NOTE BOOK	TEMPLATE		
	AREAS		
NO.	AREAS CHECKED		

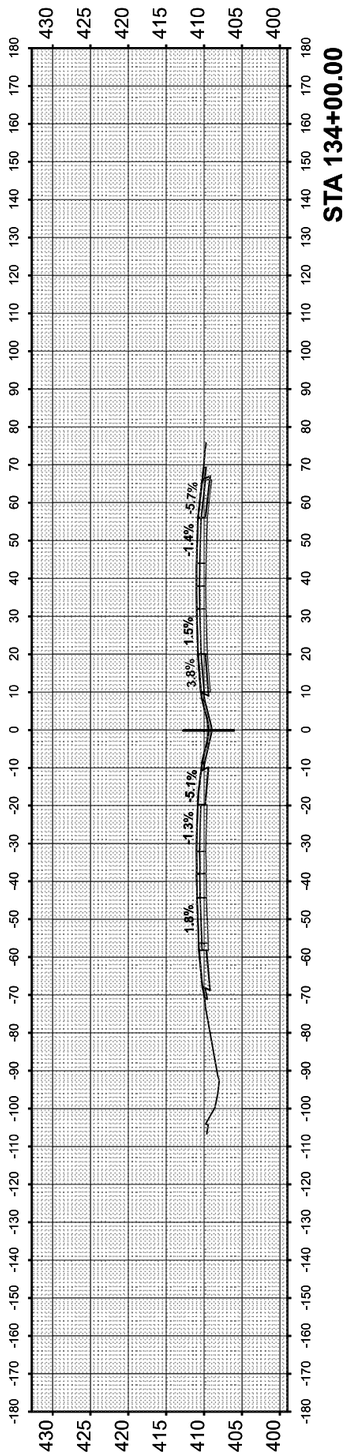

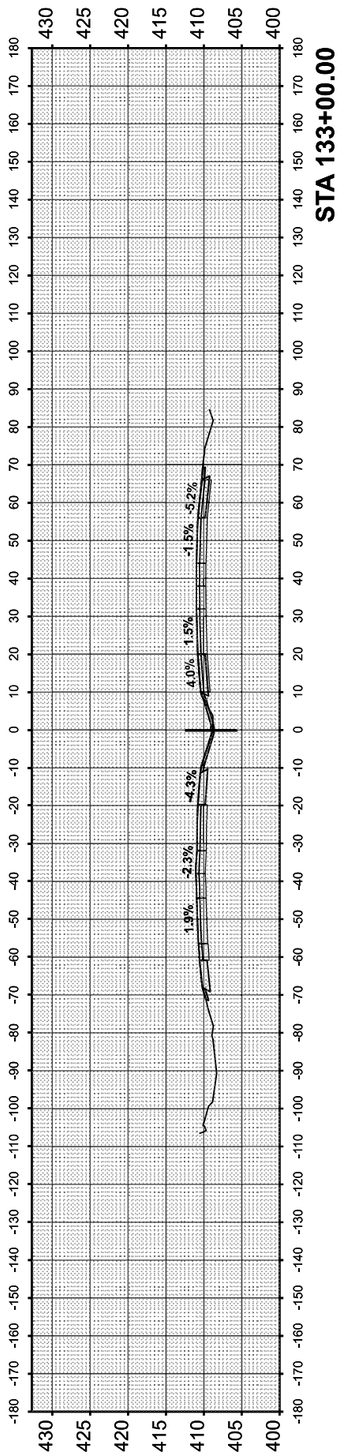

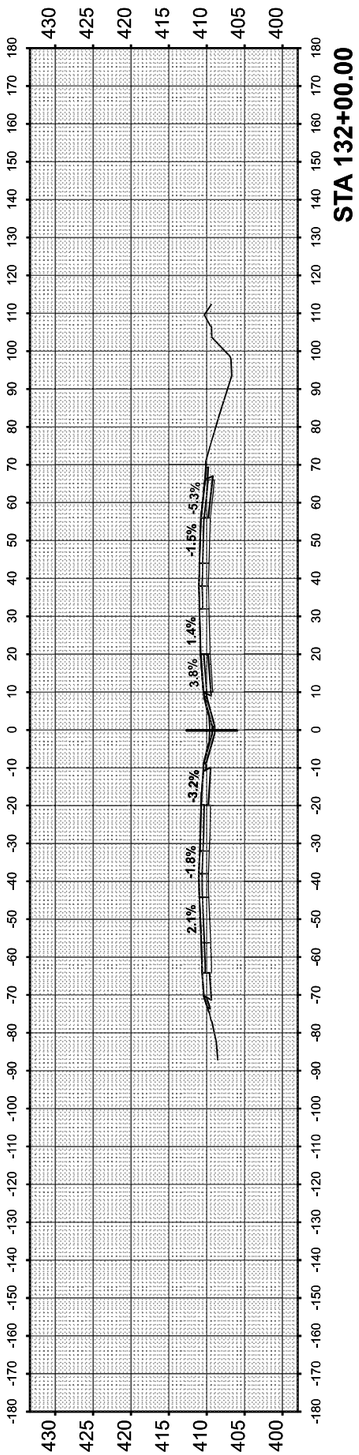

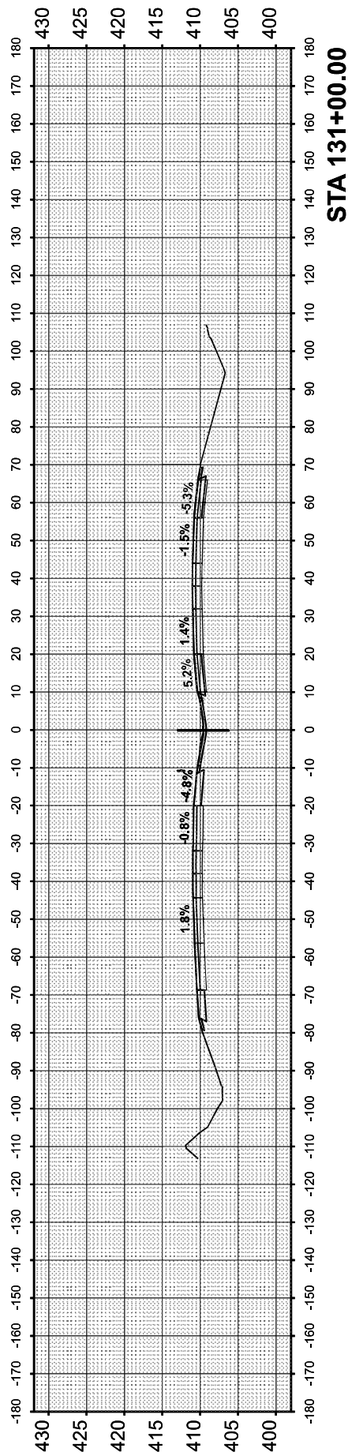

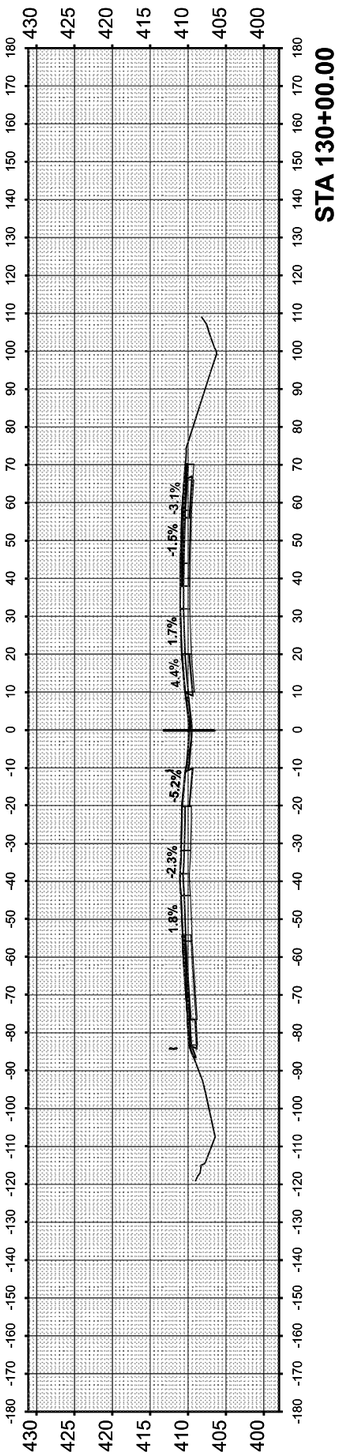

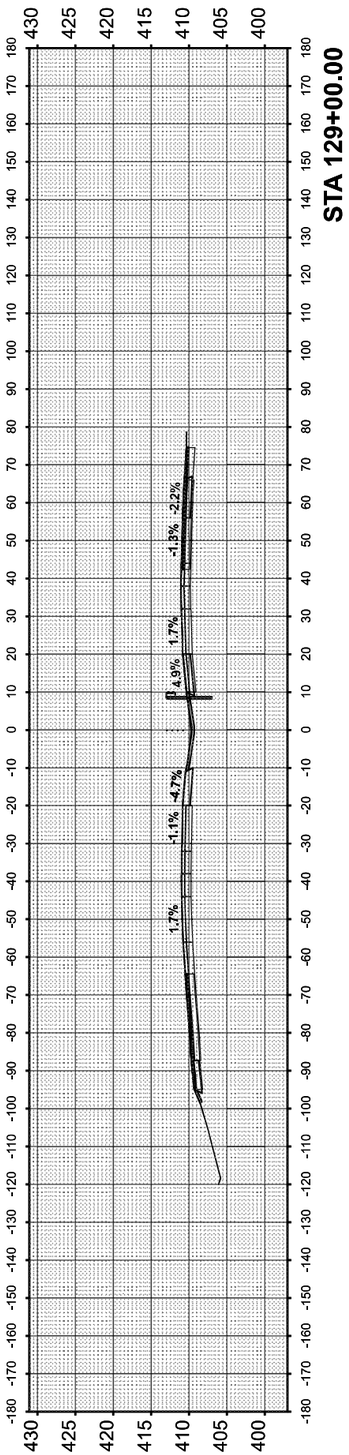

MODEL: SMODELNAMES
FILE NAME: D876E84-I557D-sht-XS-16.dgn

Jacobs
525 West Monroe
Suite 1600
Chicago, IL 60661
(312) 251-3000

USER NAME = jacobspw18ics03S	DESIGNED - MS	REVISED -	
	DRAWN - MS	REVISED -	
PLOT SCALE = 0.16666633 ' / in.	CHECKED - MS	REVISED -	
PLOT DATE = 10/2/2025	DATE - 2025/10/03	REVISED -	

STATE OF ILLINOIS
DEPARTMENT OF TRANSPORTATION

CROSS SECTION
I-55 / I-70

SCALE: 1"=20' | SHEET 9 OF 46 SHEETS | STA. | TO STA.

F.A.I. RTE.	SECTION	COUNTY	TOTAL SHEETS	SHEET NO.
70	Section82-(5,6)RS-2, 60-6RS-2	MADISON & ST. CLAIR	678	595

CONTRACT NO. 76E84

ILLINOIS | FED. AID PROJECT

FINAL SURVEY		BY	DATE
NOTE BOOK	SURVEYED		
	PLOTTED		
	TEMPLATE		
	AREAS		
NO.	AREAS CHECKED		

ORIGINAL SURVEY		BY	DATE
NOTE BOOK	SURVEYED		
	PLOTTED		
	TEMPLATE		
	AREAS		
NO.	AREAS CHECKED		

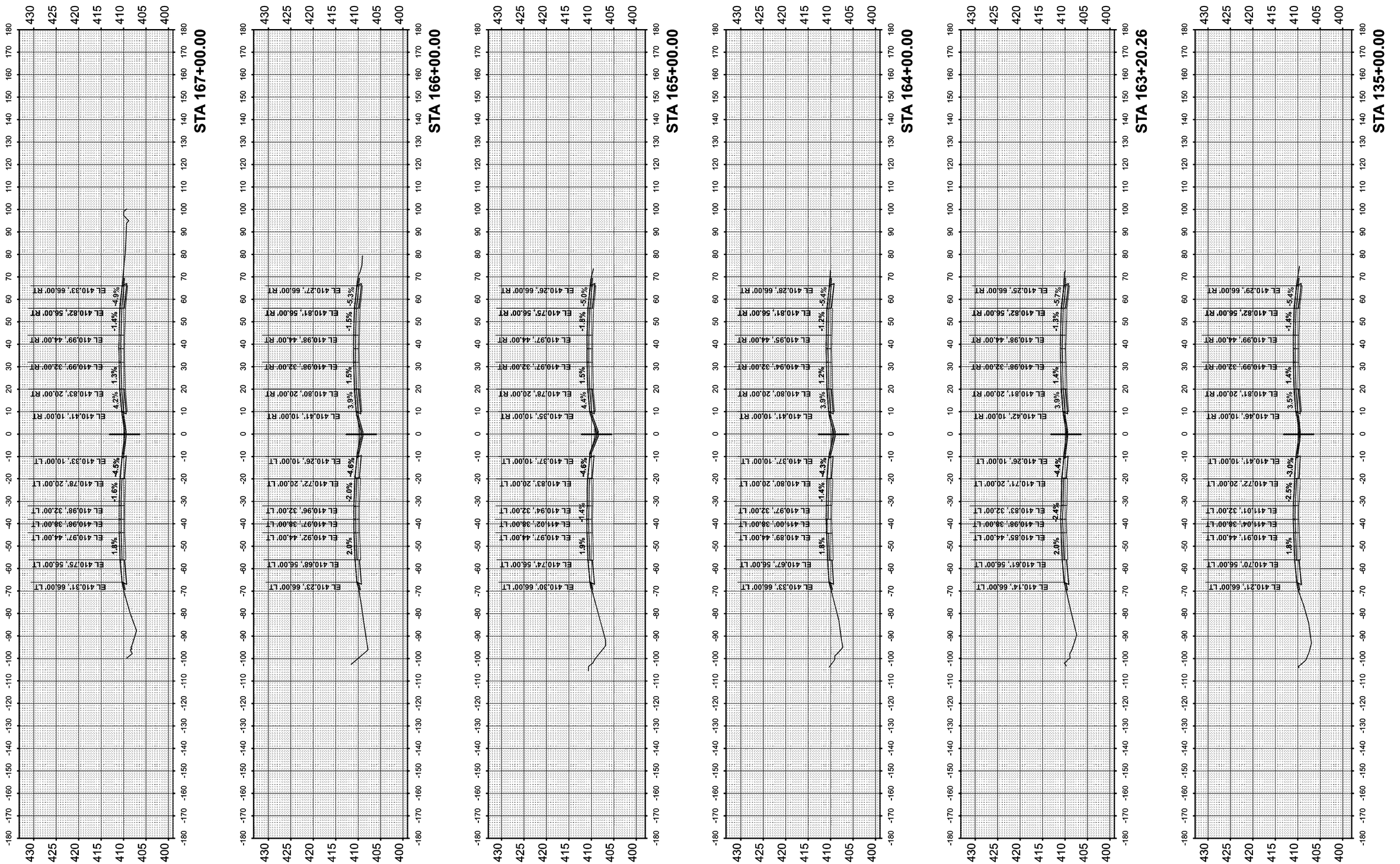

MODEL: $MODEL$NAME$
FILE NAME: D876E84-I5570-sht-XS-17.dgn

Jacobs
525 West Monroe
Suite 1600
Chicago, IL 60661
(312) 251-3000

USER NAME = jacobspw18ics01$	DESIGNED - MS	REVISED -
	DRAWN - MS	REVISED -
PLOT SCALE = 0.16666633 ' / in.	CHECKED - MS	REVISED -
PLOT DATE = 10/2/2025	DATE - 2025/10/03	REVISED -

STATE OF ILLINOIS
DEPARTMENT OF TRANSPORTATION

CROSS SECTION
I-55 / I-70

SCALE: 1"=20' | SHEET 10 OF 46 SHEETS | STA. | TO STA.

F.A.I. RTE.	SECTION	COUNTY	TOTAL SHEETS	SHEET NO.
70	Section82-(5,6)RS-2, 60-6RS-2	MADISON & ST. CLAIR	678	596
		CONTRACT NO. 76E84		
		ILLINOIS	FED. AID PROJECT	

FINAL SURVEY		BY	DATE
NOTE BOOK	SURVEYED		
	PLOTTED		
	TEMPLATE		
	AREAS		
NO.	AREAS CHECKED		

ORIGINAL SURVEY		BY	DATE
NOTE BOOK	SURVEYED		
	PLOTTED		
	TEMPLATE		
	AREAS		
NO.	AREAS CHECKED		

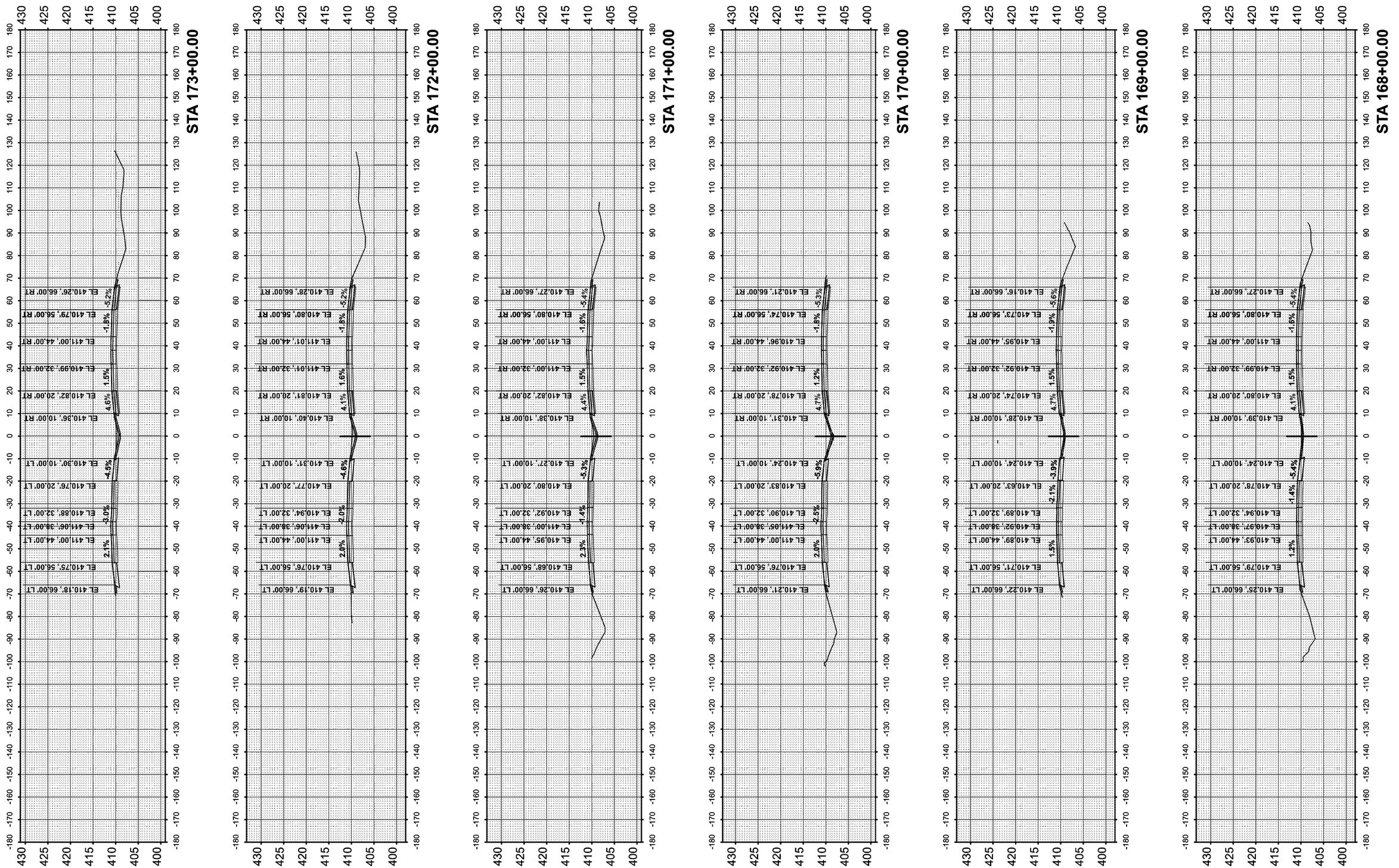

MODEL: $MODELNAME$
FILE NAME: D876E84-I557O-sht-XS-18.dgn

Jacobs
525 West Monroe
Suite 1600
Chicago, IL 60661
(312) 251-3000

USER NAME = jacobspw18ics04$	DESIGNED - MS	REVISED -	**STATE OF ILLINOIS DEPARTMENT OF TRANSPORTATION**	**CROSS SECTION I–55 / I–70**	
	DRAWN - MS	REVISED -			
PLOT SCALE = 0.16666633 ' / in.	CHECKED - MS	REVISED -			
PLOT DATE = 10/2/2025	DATE - 2025/10/03	REVISED -		SCALE: 1"=20'	SHEET 11 OF 46 SHEETS STA. TO STA.

F.A.I. RTE.	SECTION	COUNTY	TOTAL SHEETS	SHEET NO.
70	Section82-(5,6)RS-2, 60-6RS-2	MADISON & ST. CLAIR	678	597
		CONTRACT NO. 76E84		
		ILLINOIS	FED. AID PROJECT	

FINAL SURVEY		BY	DATE
NOTE BOOK	SURVEYED		
	PLOTTED		
	TEMPLATE		
	AREAS		
NO.	AREAS CHECKED		

ORIGINAL SURVEY		BY	DATE
NOTE BOOK	SURVEYED		
	PLOTTED		
	TEMPLATE		
	AREAS		
NO.	AREAS CHECKED		

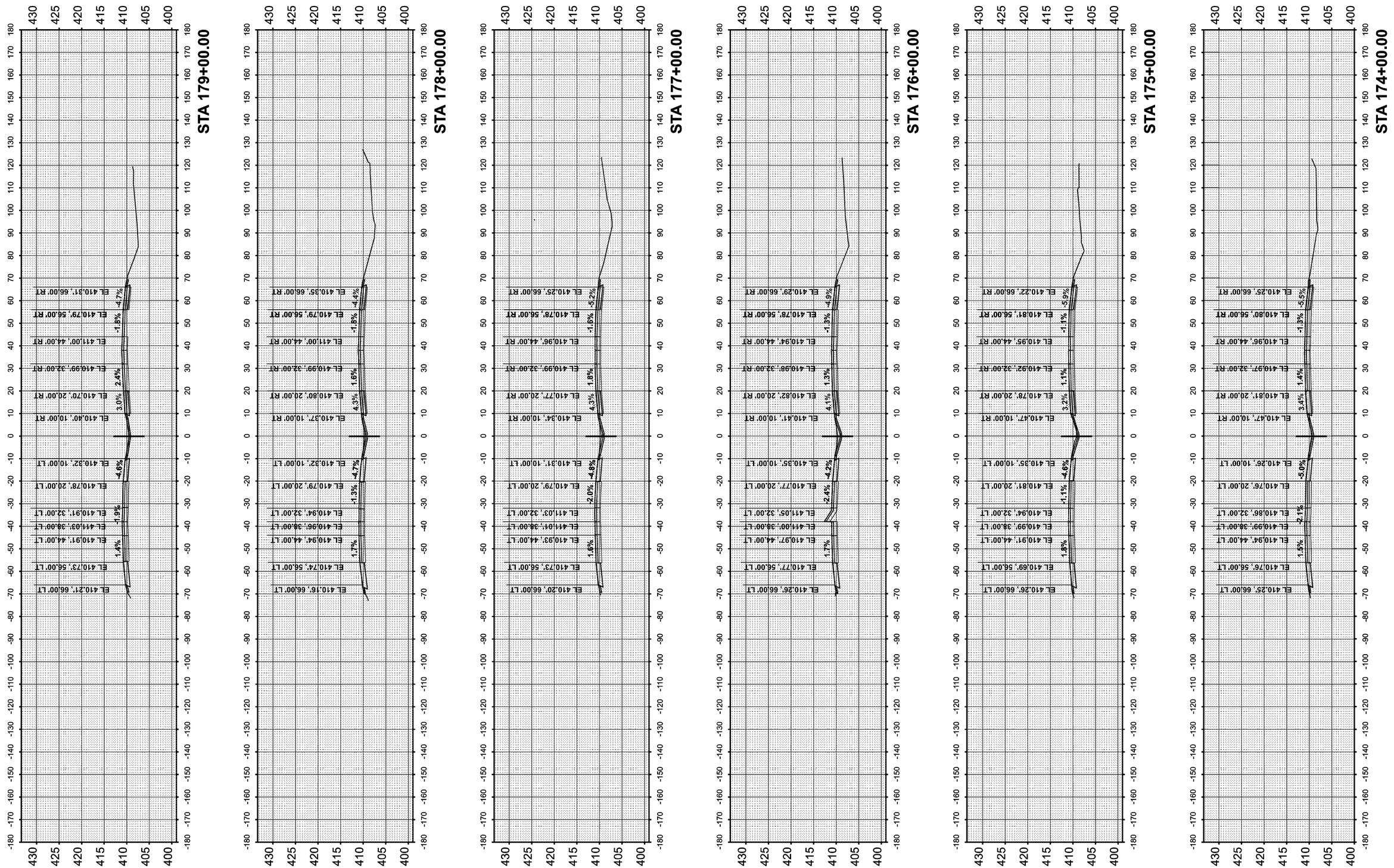

MODEL: SMODELNAMES
FILE NAME: D876E84-I5570-sht-XS-19.dgn

Jacobs
525 West Monroe
Suite 1600
Chicago, IL 60661
(312) 251-3000

USER NAME = jacobspw18ics03$	DESIGNED - MS	REVISED -	
	DRAWN - MS	REVISED -	
PLOT SCALE = 0.16666633 ' / in.	CHECKED - MS	REVISED -	
PLOT DATE = 10/2/2025	DATE - 2025/10/03	REVISED -	

STATE OF ILLINOIS
DEPARTMENT OF TRANSPORTATION

CROSS SECTION
I-55 / I-70

SCALE: 1"=20' | SHEET 12 OF 46 SHEETS | STA. | TO STA.

F.A.I. RTE.	SECTION	COUNTY	TOTAL SHEETS	SHEET NO.
70	Section82-(5,6)RS-2, 60-6RS-2	MADISON & ST. CLAIR	678	598

CONTRACT NO. 76E84

ILLINOIS | FED. AID PROJECT

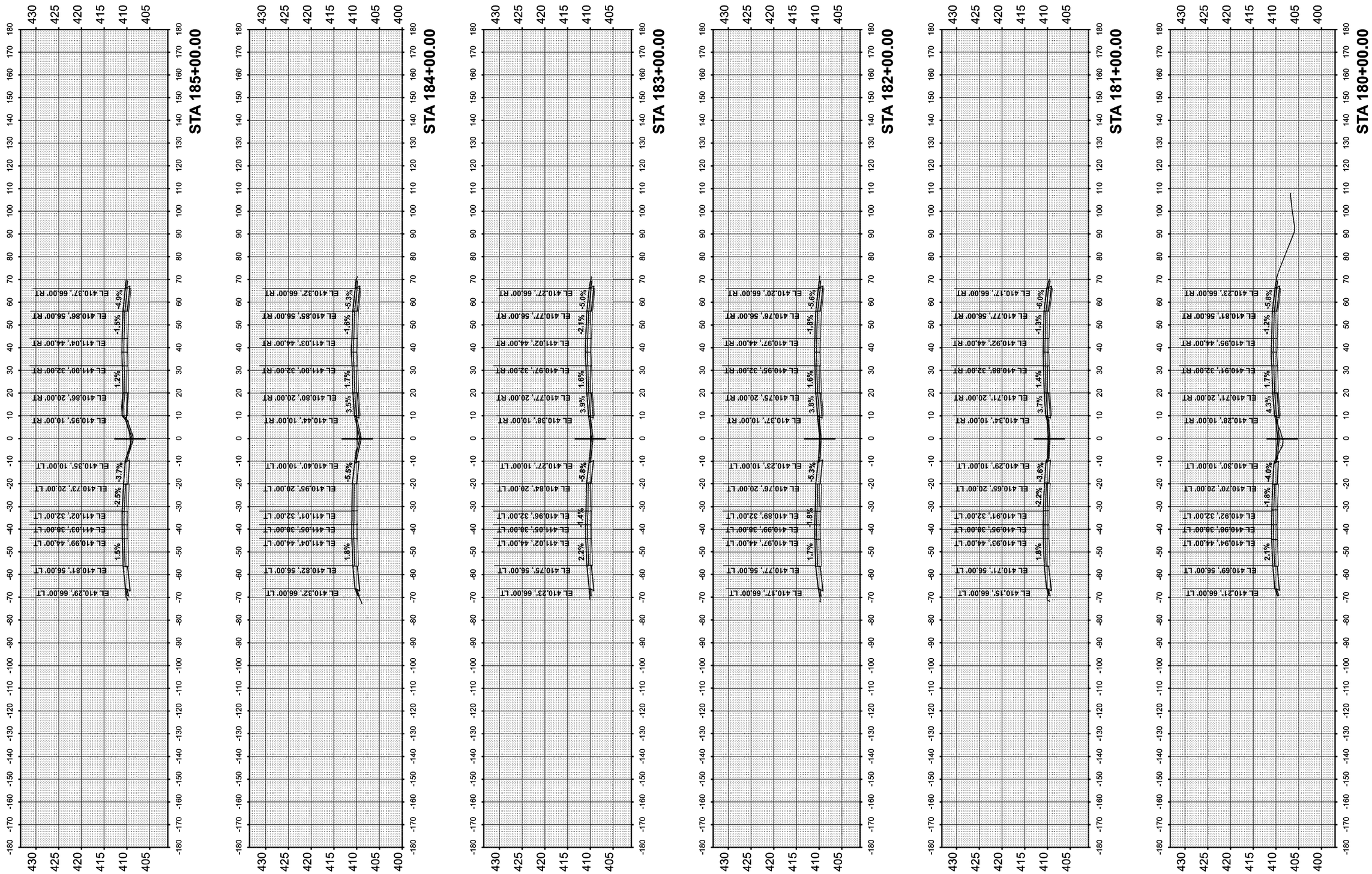

FINAL SURVEY		BY	DATE
NOTE BOOK	SURVEYED		
	PLOTTED		
	TEMPLATE		
	AREAS		
NO.	AREAS CHECKED		

ORIGINAL SURVEY		BY	DATE
NOTE BOOK	SURVEYED		
	PLOTTED		
	TEMPLATE		
	AREAS		
NO.	AREAS CHECKED		

MODEL: $MODELNAMES
FILE NAME: D876E84-I557o-sht-XS-20.dgn

Jacobs
525 West Monroe
Suite 1600
Chicago, IL 60661
(312) 251-3000

USER NAME = jacobspw18ics04$	DESIGNED - MS	REVISED -	
	DRAWN - MS	REVISED -	
PLOT SCALE = 0.16666633 ' / in.	CHECKED - MS	REVISED -	
PLOT DATE = 10/2/2025	DATE - 2025/10/03	REVISED -	

STATE OF ILLINOIS
DEPARTMENT OF TRANSPORTATION

CROSS SECTION
I-55 / I-70

SCALE: 1"=20' | SHEET 13 OF 46 SHEETS | STA. TO STA.

F.A.I. RTE.	SECTION	COUNTY	TOTAL SHEETS	SHEET NO.
70	Section82-(5,6)RS-2, 60-6RS-2	MADISON & ST. CLAIR	678	599

CONTRACT NO. 76E84

ILLINOIS | FED. AID PROJECT

FINAL SURVEY		BY	DATE
NOTE BOOK NO.	SURVEYED		
	PLOTTED		
	TEMPLATE		
	AREAS		
	AREAS CHECKED		

ORIGINAL SURVEY		BY	DATE
NOTE BOOK NO.	SURVEYED		
	PLOTTED		
	TEMPLATE		
	AREAS		
	AREAS CHECKED		

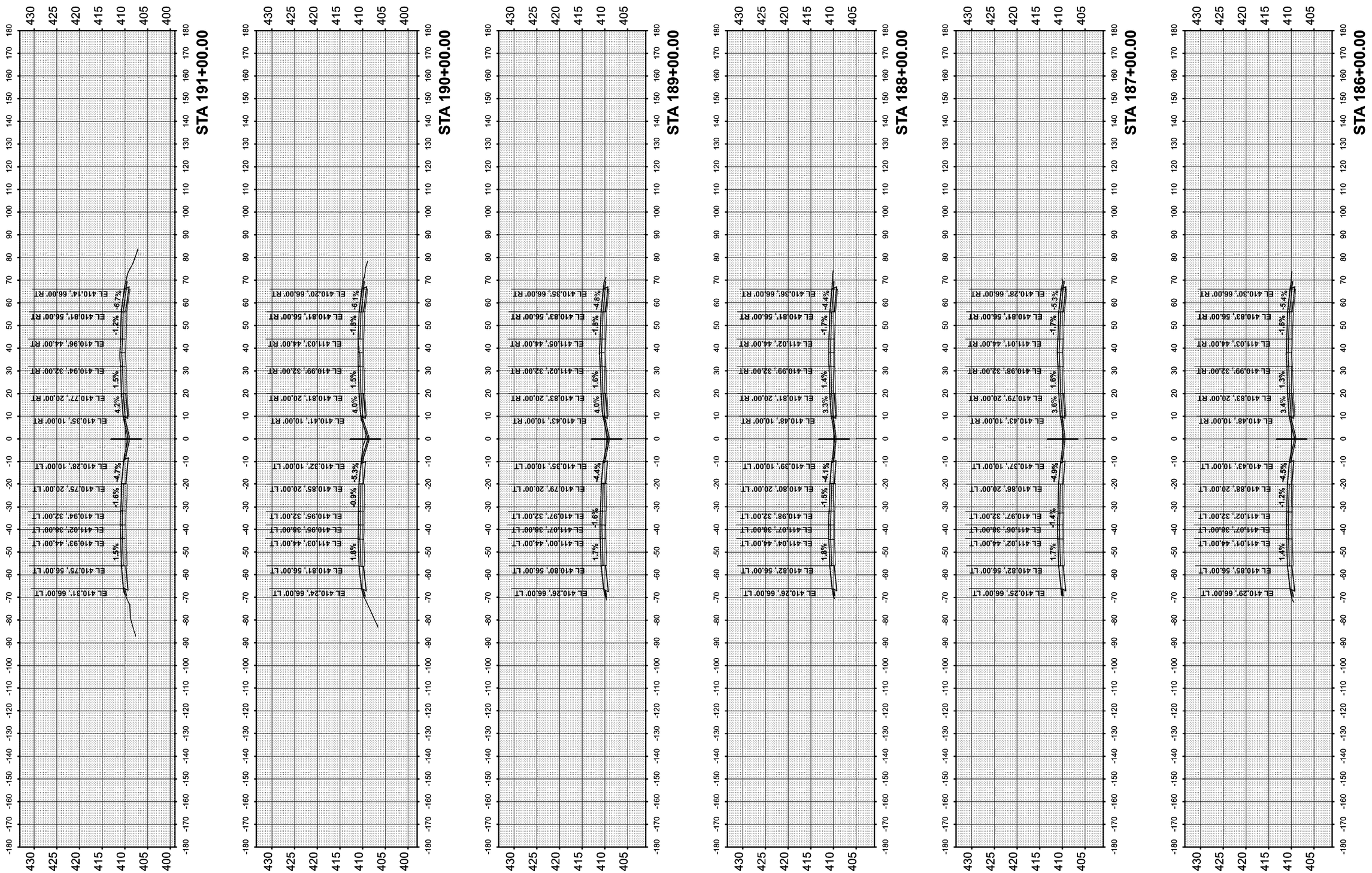

MODEL: SMODELNAMES
FILE NAME: D876E84-I5570-sht-XS-21.dgn

Jacobs
525 West Monroe
Suite 1600
Chicago, IL 60661
(312) 251-3000

USER NAME = jacobspw18ics04S	DESIGNED - MS	REVISED -	
	DRAWN - MS	REVISED -	
PLOT SCALE = 0.16666633 ' / in.	CHECKED - MS	REVISED -	
PLOT DATE = 10/2/2025	DATE - 2025/10/03	REVISED -	

STATE OF ILLINOIS
DEPARTMENT OF TRANSPORTATION

CROSS SECTION
I-55 / I-70

SCALE: 1"=20' | SHEET 14 OF 46 SHEETS | STA. | TO STA.

F.A.I. RTE.	SECTION	COUNTY	TOTAL SHEETS	SHEET NO.
70	Section82-(5,6)RS-2, 60-6RS-2	MADISON & ST. CLAIR	678	600

CONTRACT NO. 76E84

ILLINOIS | FED. AID PROJECT