SEE LEGENDS, TOPOGRAPHIC STATEMENT, SURVEYORS NOTE(S) AND BASIS OF COORDINATES & BEARINGS STATEMENT ON SHEET 2

COORDINATE TABLE - IL 162

STATION	OFFSET	NORTH	EAST	DESCRIPTION
19+53.53	39.54' RT	755,267.0312	2,343,857.7739	EX ROW CORNER
19+95.29	175.23' LT	755,484.0097	2,343,885.8893	NE COR, BK 216, PG 551
20+01.58	147.43' LT	755,456.6679	2,343,893.9255	PR ROW CORNER
20+19.12	70.00' LT	755,380.4972	2,343,916.3131	PR ROW CORNER
20+25.48	182.04' LT	755,492.7137	2,343,915.5955	PR ROW CORNER
20+30.00	65.52' LT	755,376.7174	2,343,927.4585	PR ROW CORNER
20+80.00	65.57' LT	755,379.9167	2,343,977.3561	PR TE CORNER
20+80.00	70.57' LT	755,384.9085	2,343,977.0403	PR TE CORNER
21+20.00	65.60' LT	755,382.4793	2,344,017.2739	PR ROW/PR TE CORNER
21+20.00	70.60' LT	755,387.4693	2,344,016.9583	PR TE CORNER
21+15.00	69.40' RT	755,247.4284	2,344,020.8062	PR TE CORNER
21+15.00	89.40' RT	755,227.4682	2,344,022.0687	PR TE CORNER
21+75.00	69.35' RT	755,251.2696	2,344,080.6831	PR ROW/PR TE CORNER
21+75.00	89.35' RT	755,231.3095	2,344,081.9456	PR TE CORNER
22+05.00	39.32' RT	755,283.1304	2,344,108.7278	PR ROW CORNER
21+97.00	60.54' LT	755,382.2877	2,344,094.4399	PR PE CORNER
22+02.00	75.25' LT	755,397.2777	2,344,098.5018	PR PE CORNER
22+10.42	100.00' LT	755,422.5134	2,344,105.3399	PR TE CORNER
22+34.68	100.00' LT	755,424.0452	2,344,129.5569	PR TE CORNER
22+49.00	72.16' LT	755,397.1607	2,344,145.6031	PR PE CORNER
22+57.00	56.60' LT	755,382.1384	2,344,154.5693	PR PE CORNER
23+29.51	39.21' RT	755,291.1017	2,344,232.9853	EX ROW
23+29.52	44.21' RT	755,286.1120	2,344,233.3054	PR TE CORNER
23+82.58	39.16' RT	755,294.4991	2,344,285.9438	EX ROW CORNER
25+50.00	40.26' RT	755,296.1187	2,344,449.2144	EX ROW
25+50.00	45.26' RT	755,291.1224	2,344,449.0193	PR TE CORNER
24+94.70	44.06' LT	755,381.5400	2,344,395.5929	PR ROW

COORDINATE TABLE - IL 162

STATION	OFFSET	NORTH	EAST	DESCRIPTION
26+15.03	43.46' LT	755,375.7118	2,344,519.2664	PR TE CORNER
26+20.91	66.02' LT	755,397.6800	2,344,527.2446	PR TE CORNER
26+25.58	43.42' LT	755,374.7418	2,344,530.0897	PR ROW CORNER
26+26.43	39.42' LT	755,370.6773	2,344,530.5939	EX ROW
26+40.00	66.00' LT	755,395.8112	2,344,547.0951	PR TE CORNER
26+54.95	39.33' LT	755,367.6801	2,344,559.7140	EX ROW
26+59.09	40.68' RT	755,287.7015	2,344,554.9948	EX ROW CORNER
27+09.15	50.77' RT	755,271.4600	2,344,601.8225	EX ROW CORNER
27+51.10	39.19' LT	755,353.6361	2,344,657.3668	EX ROW
29+27.23	50.51' RT	755,226.1021	2,344,807.3883	EX ROW
29+00.95	39.40' LT	755,319.7447	2,344,807.3064	EX ROW

COORDINATE TABLE - ℄ & CONTROL

18+54.89	11.72' LT	755,311.9690	2,343,756.0900	CP 10; IR w/ IDOT CAP
20+85.94	19.48' LT	755,334.2990	2,343,986.1910	CP 111; IR w/ IDOT CAP
21+36.00	180.36' RT	755,138.0120	2,344,048.7670	CP 107; IR w/ IDOT CAP
26+80.11	17.48' LT	755,342.9730	2,344,582.6070	CP 11; IRON ROD
581+34.46	0.11' LT	755,122.0780	2,343,829.0130	CP 105; IR w/ IDOT CAP
23+97.24	0.00' RT	755,334.5064	2,344,298.1064	PC ℄ - IL 162
31+56.52	0.00' RT	755,192.0705	2,345,035.6243	PT ℄ - IL 162
10+00.00	0.00' RT	755,111.1124	2,343,830.5981	POT ℄ - CARROLL END
582+99.10	0.00' LT	755,282.5202	2,343,792.9245	PT ℄ - IL 157
583+19.69	0.00' LT	755,302.1626	2,343,786.7576	PR ℄-℄ IL 157 & IL 162

COORDINATE TABLE - IL 157

STATION	OFFSET	NORTH	EAST	DESCRIPTION
579+88.23	16.98' RT	754,976.2030	2,343,855.7960	EX ROW
580+40.00	80.00' RT	755,031.6833	2,343,917.7424	PR TE CORNER
580+40.00	130.06' RT	755,033.9407	2,343,967.7479	PR TE CORNER
580+50.00	80.00' RT	755,042.4668	2,343,917.2016	PR ROW CORNER
580+81.20	80.53' RT	755,076.1183	2,343,915.3452	PR TE CORNER
580+79.82	130.50' RT	755,078.8723	2,343,965.2693	PR TE CORNER
581+86.52	90.14' RT	755,190.6036	2,343,909.0296	PR ROW CORNER
581+90.13	171.50' RT	755,210.2574	2,343,988.0873	PR TE CORNER
581+99.44	94.37' RT	755,205.2733	2,343,910.3943	PR TE CORNER
582+19.63	176.63' RT	755,245.1876	2,343,985.8779	PR TE CORNER
582+23.84	146.84' RT	755,243.2551	2,343,955.7527	PR ROW CORNER
582+51.86	40.10' RT	755,247.3237	2,343,844.7903	EX ROW CORNER
583+21.03	3.80' LT	755,302.2992	2,343,782.7297	EX ℄-℄ IL 157 & IL 162
583+49.53	47.96' RT	755,345.0015	2,343,823.5710	EX ROW CORNER
584+65.41	49.04' RT	755,455.8838	2,343,789.8971	EX ROW
584+66.37	0.96' LT	755,441.8224	2,343,741.9063	EX ℄/S. LINE US SVY 510

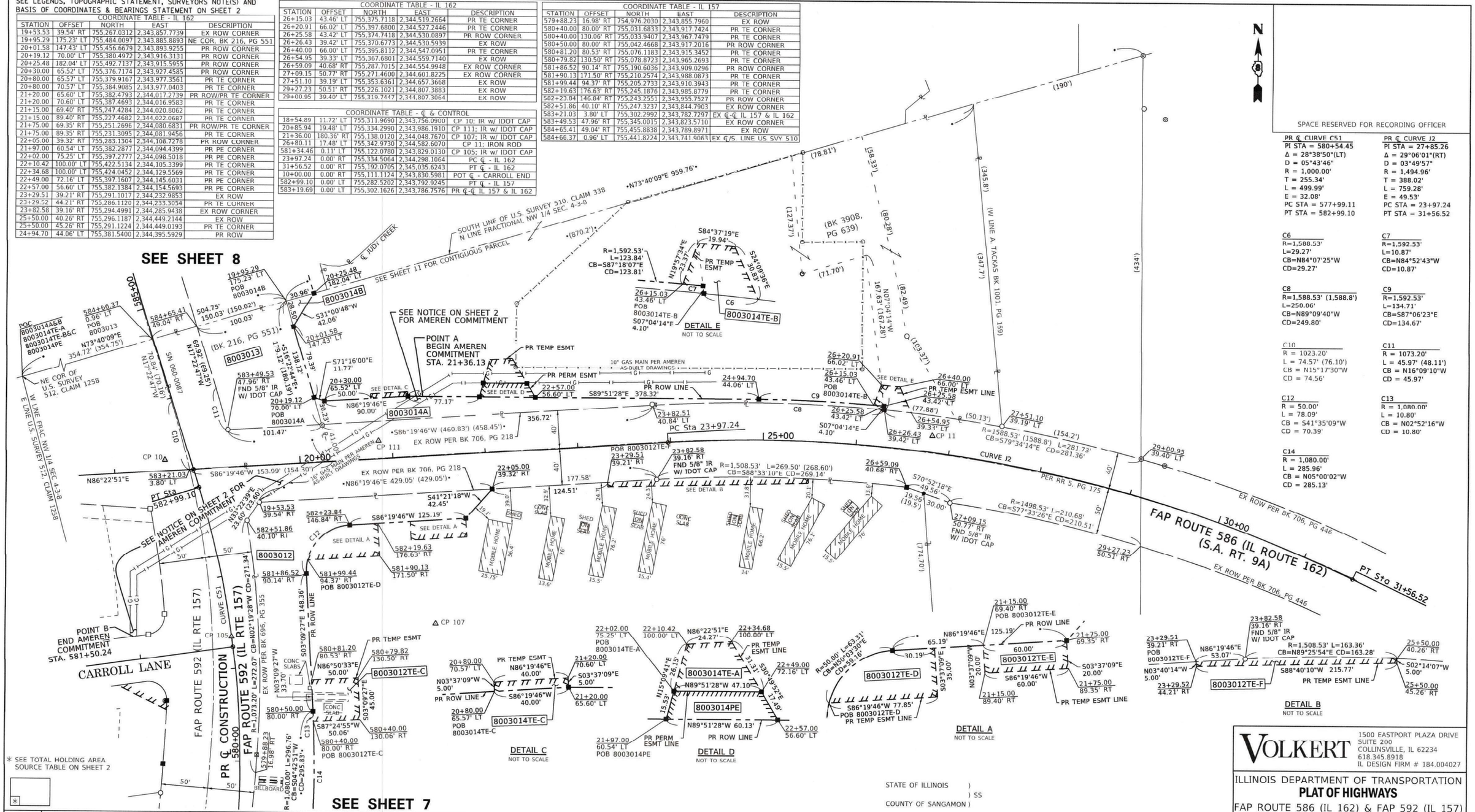

PR ℄ CURVE C51
PI STA = 580+54.45
Δ = 28°38'50"(LT)
D = 05°43'46"
R = 1,000.00'
T = 255.34'
L = 499.99'
E = 32.08'
PC STA = 577+99.11
PT STA = 582+99.10

PR ℄ CURVE J2
PI STA = 27+85.26
Δ = 29°06'01"(RT)
D = 03°49'57"
R = 1,494.96'
T = 388.02'
L = 759.28'
E = 49.53'
PC STA = 23+97.24
PT STA = 31+56.52

C6
R=1,588.53'
L=29.27'
CB=N84°07'25"W
CD=29.27'

C7
R=1,592.53'
L=10.87'
CB=N84°52'43"W
CD=10.87'

C8
R=1,588.53' (1,588.8')
L=250.06'
CB=N89°09'40"W
CD=249.80'

C9
R=1,592.53'
L=134.71'
CB=S87°06'23"E
CD=134.67'

C10
R = 1023.20'
L = 74.57' (76.10')
CB = N15°17'30"W
CD = 74.56'

C11
R = 1073.20'
L = 45.97' (48.11')
CB = N16°09'10"W
CD = 45.97'

C12
R = 50.00'
L = 78.09'
CB = S41°35'09"W
CD = 70.39'

C13
R = 1,080.00'
L = 10.80'
CB = N02°52'16"W
CD = 10.80'

C14
R = 1,080.00'
L = 285.96'
CB = N05°00'02"W
CD = 285.13'

VOLKERT
1500 EASTPORT PLAZA DRIVE
SUITE 200
COLLINSVILLE, IL 62234
618.345.8918
IL DESIGN FIRM # 184.004027

ILLINOIS DEPARTMENT OF TRANSPORTATION
PLAT OF HIGHWAYS
FAP ROUTE 586 (IL 162) & FAP 592 (IL 157)
SECTION 51-1R
MADISON COUNTY
JOB NO. R-98-003-10
STATION 18+00 TO STATION 31+00 (IL 162)
50' 0 50' 100'
SCALE: 1" = 50'
SHEET 6 OF 13

ILLINOIS DEPARTMENT OF TRANSPORTATION
OFFICE OF HIGHWAYS PROJECT IMPLEMENTATION/REGION 5/DISTRICT 8
1102 EASTPORT PLAZA DRIVE
COLLINSVILLE, ILLINOIS 62234-6198

F.A.P. RTE.	SECTION	COUNTY	TOTAL SHEETS	SHEET NO.
586/592	51-1R	MADISON	101	296
		CONTRACT NO. 76A46		
FED. ROAD DIST. NO.	ILLINOIS	FED. AID PROJECT		

PARCEL NO.	OWNER	TOTAL HOLDING	FEE SIMPLE ACQUISITION						REMAINDER	EASEMENTS			PERMANENT TAX NUMBER	PROPERTY ACQUIRED BY
			GROSS		PREVIOUSLY DEDICATED AND/OR USED		NET			PE = PERMANENT TE = TEMPORARY		EASEMENT PURPOSE		
		ACRES	ACRES	SQ. FT.	ACRES	SQ. FT.	ACRES	SQ. FT.	ACRES	ACRES	SQ. FT.			
8003012	RICHARD G. IBERG AS TRUSTEE UNDER DECLARATION OF TRUST OF RICHARD G. IBERG, DATED APRIL 19, 1999 AS TO AN UNDIVIDED ½ INTEREST & JUNE M. IBERG AS TRUSTEE UNDER DECLARATION OF TRUST OF JUNE M. IBERG, DATED APRIL 16, 1999 AS TO AN UNDIVIDED ½ INTEREST 18-2009MA-4258.0	19.1642 5	1.1357	49,471	N/A	N/A	1.1357	49,471	18.0285	TE-A = 0.0465 TE-B = 0.0184 TE-C = 0.0514 TE-D = 0.0524 TE-E = 0.0275 TE-F = 0.0357	TE-A = 2.027 TE-B = 803 TE-C = 2,238 TE-D = 2,281 TE-E = 1,200 TE-F = 1,554	TE-A: ENTRANCE CONSTRUCTION & GRADING TE-B: REMOVAL OF TRAILERS TE-C/D: DEMOLITION & GRADING TE-E: ENTRANCE CONSTRUCTION & GRADING TE-F: CONSTRUCTION & GRADING	13-1-21-04-00-000-024.001 13-1-21-04-00-000-024	
8003013	AMEREN ILLINOIS COMPANY D/B/A AMEREN ILLINOIS, AN ILLINOIS CORPORATION, SUCCESSOR BY MERGER TO ILLINOIS POWER COMPANY 18-2009MA-4264.0	0.5562 1	0.5562	24,229	0.2672	11,639	0.2890	12,590	0.0000	N/A	N/A	N/A	13-1-21-04-09-101-004	
8003014	AMEREN ILLINOIS COMPANY D/B/A AMEREN ILLINOIS, AN ILLINOIS CORPORATION 18-2009MA-4261.0, 18-2014MA-4781.0	5.7980 5	A = 0.1799 B = 0.0101	A = 7,836 B = 441	N/A	N/A	0.1900	8,277	5.6080	TE-A = 0.0214 TE-B = 0.0178 TE-C = 0.0046 PE = 0.0185	TE-A = 933 TE-B = 777 TE-C = 200 PE = 804	TE-A: CONSTRUCTION & GRADING TE-B/C: DRIVEWAY CONSTRUCTION & GRADING PE: CONSTRUCTION, GRADING & MAINTENANCE	13-1-21-04-00-000-024.002 13-1-21-04-00-000-024.003 13-1-21-04-00-000-002.012	

STATE OF ILLINOIS)
) SS
COUNTY OF SANGAMON)

I, NATHAN T. DOZIER, AN ILLINOIS PROFESSIONAL LAND SURVEYOR, STATE THAT I HAVE SURVEYED THE PLAT OF HIGHWAY SHOWN HEREON AND THAT THIS PROFESSIONAL SERVICE CONFORMS TO THE CURRENT ILLINOIS MINIMUM STANDARDS FOR A BOUNDARY SURVEY FOR THE PROPOSED PARCEL(S) TO BE ACQUIRED BY THE STATE OF ILLINOIS, DEPARTMENT OF TRANSPORTATION, SHOWN HEREON.

DATED 4/18/24

NATHAN T. DOZIER, PLS NO. 3723
LICENSE EXPIRATION DATE: 11/30/2024

PROFESSIONAL LAND SURVEYOR
NATHAN T. DOZIER
035-003723
SPRINGFIELD, ILLINOIS
STATE OF ILLINOIS

COMPLETION DATE OF FIELD WORK PERFORMED		
LAND SURVEY: 3/14/2022	ROW STAKING: 2/28/2024	

SEE LEGENDS, TOPOGRAPHIC STATEMENT, SURVEYORS NOTE(S) AND BASIS OF COORDINATES & BEARINGS STATEMENT ON SHEET 2

COORDINATE TABLE

STATION	OFFSET	NORTH	EAST	DESCRIPTION
572+19.34	49.15' RT	754,209.9862	2,343,789.5945	PR TE CORNER
572+33.84	49.09' RT	754,224.4324	2,343,790.8426	EX ROW
572+39.48	95.00' RT	754,225.9116	2,343,837.0718	PR TE CORNER
572+48.19	43.16' LT	754,247.0470	2,343,700.2593	SW COR FR NW 1/4 SEC 4
572+59.52	48.99' RT	754,250.0162	2,343,793.0531	PR ROW CORNER
572+65.17	95.00' RT	754,251.4988	2,343,839.3879	PR TE CORNER
572+69.38	51.05' LT	754,268.8585	2,343,694.3085	EX ROW
573+75.00	52.00' RT	754,363.7371	2,343,807.1747	PR ROW CORNER
573+89.95	53.63' RT	754,378.2522	2,343,810.4154	PR TE CORNER
574+09.98	105.00' RT	754,392.0088	2,343,863.6920	PR TE CORNER
574+30.02	105.00' RT	754,411.4814	2,343,865.9960	PR TE CORNER
574+55.21	60.19' RT	754,441.5293	2,343,824.5432	PR TE CORNER
577+72.89	79.62' RT	754,747.6425	2,343,892.8889	PR ROW CORNER
578+69.68	85.54' LT	754,868.7800	2,343,746.1420	EX ROW
578+90.00	80.00' RT	754,869.9045	2,343,912.9055	PR TE CORNER
578+90.00	95.00' RT	754,668.3341	2,343,927.8230	PR TE CORNER
579+40.00	95.00' RT	754,922.9037	2,343,932.1919	PR TE CORNER
579+40.00	80.00' RT	754,923.7267	2,343,917.2145	PR TE CORNER
579+63.21	84.88' LT	754,953.9925	2,343,753.5044	EX ROW
579+88.23	16.98' RT	754,976.2030	2,343,855.7960	EX ROW
579+96.89	82.67' LT	754,984.8110	2,343,756.1671	EX ROW
571+96.92	0.00' LT	754,192.0945	2,343,738.6224	POT ℄ - IL157
572+86.35	0.00' RT	754,281.1604	2,343,746.6844	PC ℄ - IL 157
577+99.11	0.00' LT	754,788.4499	2,343,819.7379	PRC ℄ - IL 157
579+33.50	265.42' RT	754905.3480	2344101.8810	CP108; PK NAIL

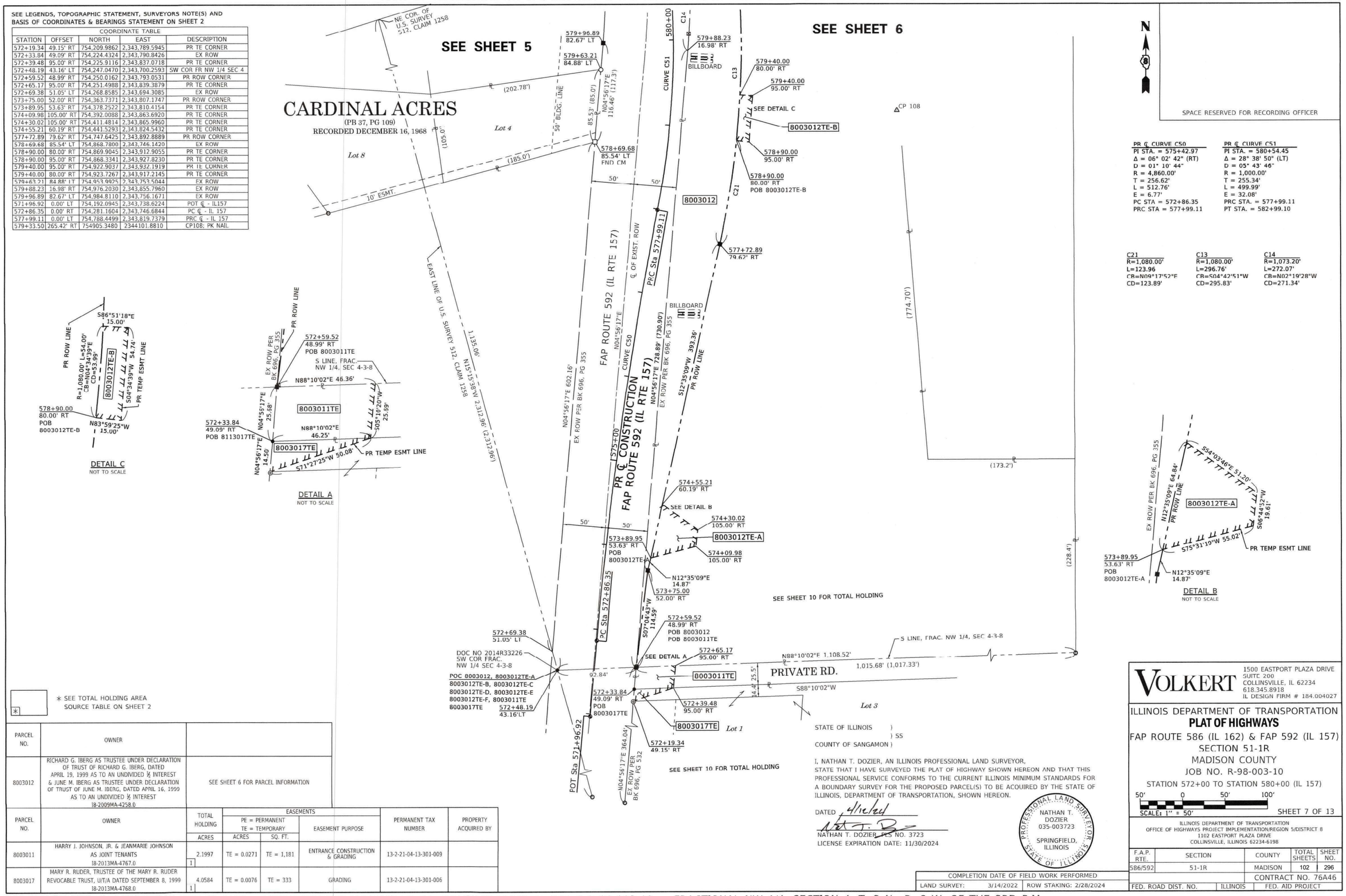

* SEE TOTAL HOLDING AREA SOURCE TABLE ON SHEET 2

PARCEL NO.	OWNER	
8003012	RICHARD G. IBERG AS TRUSTEE UNDER DECLARATION OF TRUST OF RICHARD G. IBERG, DATED APRIL 19, 1999 AS TO AN UNDIVIDED ½ INTEREST & JUNE M. IBERG AS TRUSTEE UNDER DECLARATION OF TRUST OF JUNE M. IBERG, DATED APRIL 16, 1999 AS TO AN UNDIVIDED ½ INTEREST 18-2009MA-4258.0	SEE SHEET 6 FOR PARCEL INFORMATION

PARCEL NO.	OWNER	TOTAL HOLDING	EASEMENTS			PERMANENT TAX NUMBER	PROPERTY ACQUIRED BY
			PE = PERMANENT TE = TEMPORARY		EASEMENT PURPOSE		
		ACRES	ACRES	SQ. FT.			
8003011	HARRY J. JOHNSON, JR. & JEANMARIE JOHNSON AS JOINT TENANTS 18-2013MA-4767.0	2.1997 [1]	TE = 0.0271	TE = 1,181	ENTRANCE CONSTRUCTION & GRADING	13-2-21-04-13-301-009	
8003017	MARY R. RUDER, TRUSTEE OF THE MARY R. RUDER REVOCABLE TRUST, U/T/A DATED SEPTEMBER 8, 1999 18-2013MA-4768.0	4.0584 [1]	TE = 0.0076	TE = 333	GRADING	13-2-21-04-13-301-006	

STATE OF ILLINOIS)
) SS
COUNTY OF SANGAMON)

I, NATHAN T. DOZIER, AN ILLINOIS PROFESSIONAL LAND SURVEYOR, STATE THAT I HAVE SURVEYED THE PLAT OF HIGHWAY SHOWN HEREON AND THAT THIS PROFESSIONAL SERVICE CONFORMS TO THE CURRENT ILLINOIS MINIMUM STANDARDS FOR A BOUNDARY SURVEY FOR THE PROPOSED PARCEL(S) TO BE ACQUIRED BY THE STATE OF ILLINOIS, DEPARTMENT OF TRANSPORTATION, SHOWN HEREON.

DATED 4/12/22

NATHAN T. DOZIER, PLS NO. 3723
LICENSE EXPIRATION DATE: 11/30/2024

PROFESSIONAL LAND SURVEYOR NATHAN T. DOZIER 035-003723 SPRINGFIELD, ILLINOIS STATE OF ILLINOIS

COMPLETION DATE OF FIELD WORK PERFORMED	
LAND SURVEY: 3/14/2022	ROW STAKING: 2/28/2024

VOLKERT
1500 EASTPORT PLAZA DRIVE
SUITE 200
COLLINSVILLE, IL 62234
618.345.8918
IL DESIGN FIRM # 184.004027

ILLINOIS DEPARTMENT OF TRANSPORTATION
PLAT OF HIGHWAYS
FAP ROUTE 586 (IL 162) & FAP 592 (IL 157)
SECTION 51-1R
MADISON COUNTY
JOB NO. R-98-003-10
STATION 572+00 TO STATION 580+00 (IL 157)

50' 0 50' 100'
SCALE: 1" = 50'

SHEET 7 OF 13

ILLINOIS DEPARTMENT OF TRANSPORTATION
OFFICE OF HIGHWAYS PROJECT IMPLEMENTATION/REGION 5/DISTRICT 8
1102 EASTPORT PLAZA DRIVE
COLLINSVILLE, ILLINOIS 62234-6198

F.A.P. RTE.	SECTION	COUNTY	TOTAL SHEETS	SHEET NO.
586/592	51-1R	MADISON	102	296
		CONTRACT NO. 76A46		
FED. ROAD DIST. NO.	ILLINOIS	FED. AID PROJECT		

SEE LEGENDS, TOPOGRAPHIC STATEMENT, SURVEYORS NOTE(S) AND BASIS OF COORDINATES & BEARINGS STATEMENT ON SHEET 2

COORDINATE TABLE

STATION	OFFSET	NORTH	EAST	DESCRIPTION
584+62.90	180.00' RT	755,492.7137	2,343,915.5955	PR ROW CORNER
584+65.41	49.04' RT	755,455.8838	2,343,789.8971	EX ROW
585+15.00	180.00' RT	755,542.4218	2,343,899.9893	PR ROW CORNER
585+15.00	160.00' RT	755,536.4310	2,343,880.9076	PR TE CORNER
585+15.00	105.00' RT	755,519.9562	2,343,828.4330	PR ROW CORNER
585+60.00	70.00' RT	755,552.4068	2,343,781.5617	PR ROW CORNER
585+90.00	59.59' RT	755,577.9100	2,343,762.6416	PR TE CORNER
586+20.00	49.18' RT	755,603.4136	2,343,743.7213	PR ROW CORNER
586+30.09	80.00' RT	755,622.2769	2,343,770.1069	PR TE CORNER
586+41.91	50.80' LT	755,594.3679	2,343,641.7687	EX ROW
586+55.00	80.00' RT	755,646.0368	2,343,762.6473	PR TE CORNER
586+55.00	75.00' RT	755,644.5391	2,343,757.8769	PR TE CORNER
586+74.75	49.22' RT	755,655.6684	2,343,727.3659	EX ROW
586+99.83	63.73' RT	755,683.9384	2,343,733.6926	PR TE CORNER
587+00.25	71.85' RT	755,686.7728	2,343,741.3169	PR TE CORNER
587+08.40	310.00' LT	755,580.1697	2,343,374.5561	PR TE CORNER
587+34.11	62.02' RT	755,716.1277	2,343,721.7957	PR TE CORNER
587+34.19	75.00' LT	755,675.1640	2,343,591.0417	PR TE CORNER
587+35.26	81.46' RT	755,723.0534	2,343,739.9925	PR TE CORNER
587+35.75	49.28' RT	755,713.8835	2,343,709.1450	EX ROW
587+36.85	50.72' LT	755,684.9785	2,343,613.4082	PR PE CORNER
587+39.05	30.72' LT	755,693.0639	2,343,631.8343	PR PE CORNER
587+44.16	305.00' LT	755,615.7842	2,343,368.6153	PR TE CORNER
587+45.63	29.29' RT	755,717.3201	2,343,687.1126	PR PE CORNER
587+47.83	49.29' RT	755,725.4055	2,343,705.5386	PR PE CORNER
587+50.68	245.62' LT	755,639.7872	2,343,423.3166	PR TE CORNER
587+51.16	149.51' LT	755,669.0401	2,343,514.8725	PR TE CORNER
587+51.25	80.51' RT	755,738.0275	2,343,734.3033	PR TE CORNER
587+60.00	80.00' RT	755,746.2175	2,343,731.1915	PR TE CORNER
587+75.00	55.00' RT	755,753.0408	2,343,702.8481	PR TE CORNER
587+75.00	75.00' LT	755,714.0976	2,343,578.8182	PR TE CORNER
587+75.00	80.00' LT	755,712.5999	2,343,574.0478	PR TE CORNER
587+84.63	103.76' LT	755,714.6748	2,343,548.4946	PR TE CORNER
587+92.49	93.75' LT	755,725.1764	2,343,555.6906	PR TE CORNER
587+94.00	80.00' LT	755,730.7334	2,343,568.3547	PR TE CORNER
587+97.36	80.00' LT	755,733.9222	2,343,567.3516	PR TE CORNER
587+97.22	50.67' LT	755,742.5905	2,343,595.3761	PR PE CORNER
587+99.42	30.67' LT	755,750.6759	2,343,613.8021	PR PE CORNER
588+25.00	55.00' RT	755,800.7450	2,343,687.8711	PR TE CORNER
588+25.00	49.36' RT	755,799.0546	2,343,682.4870	PR TE CORNER
588+40.00	80.00' LT	755,774.6153	2,343,554.5776	PR TE CORNER
588+40.00	75.00' LT	755,776.1131	2,343,559.3480	PR TE CORNER
588+65.00	75.00' LT	755,799.9686	2,343,551.8584	PR TE CORNER
588+65.00	50.61' LT	755,807.2750	2,343,575.1303	PR TE CORNER
589+15.66	29.44' RT	755,879.5883	2,343,636.3238	PR PE CORNER
589+17.86	49.44' RT	755,887.6737	2,343,654.7498	PR PE CORNER
589+40.00	50.54' LT	755,878.8503	2,343,552.7277	PR TE CORNER
589+40.00	60.00' LT	755,876.0173	2,343,543.7043	PR TE CORNER
589+50.00	49.47' RT	755,910.3486	2,343,645.1480	PR PE CORNER
589+50.00	59.47' RT	755,921.3440	2,343,654.6897	PR PE CORNER
589+50.00	74.47' RT	755,925.8371	2,343,669.0009	PR TE CORNER
589+82.06	29.49' RT	755942.9554	2343616.4903	PR PE CORNER
589+84.17	49.50' RT	755950.9579	2343634.9423	PR PE CORNER
589+84.75	60.00' LT	755918.7170	2343530.2984	PR TE CORNER
589+85.22	59.50' RT	755954.9591	2343644.1684	PR PE CORNER
589+85.61	50.50' LT	755922.3820	2343539.1026	PR PE CORNER
589+86.80	74.50' RT	755960.9610	2343658.0074	PR TE CORNER
589+87.42	30.50' LT	755930.1002	2343557.6436	PR PE CORNER
587+97.85	34.95' RT	755,768.8300	2,343,676.8710	CP 103; IR w/ IDOT CAP

STATE OF ILLINOIS)
) SS
COUNTY OF SANGAMON)

I, NATHAN T. DOZIER, AN ILLINOIS PROFESSIONAL LAND SURVEYOR, STATE THAT I HAVE SURVEYED THE PLAT OF HIGHWAY SHOWN HEREON AND THAT THIS PROFESSIONAL SERVICE CONFORMS TO THE CURRENT ILLINOIS MINIMUM STANDARDS FOR A BOUNDARY SURVEY OF THE EXISTING RIGHT OF WAY, SHOWN HEREON.

DATED 4/12/24

NATHAN T. DOZIER , PLS NO. 3723
LICENSE EXPIRATION DATE: 11/30/2024

PROFESSIONAL LAND SURVEYOR NATHAN T. DOZIER 035-003723 SPRINGFIELD, ILLINOIS STATE OF ILLINOIS

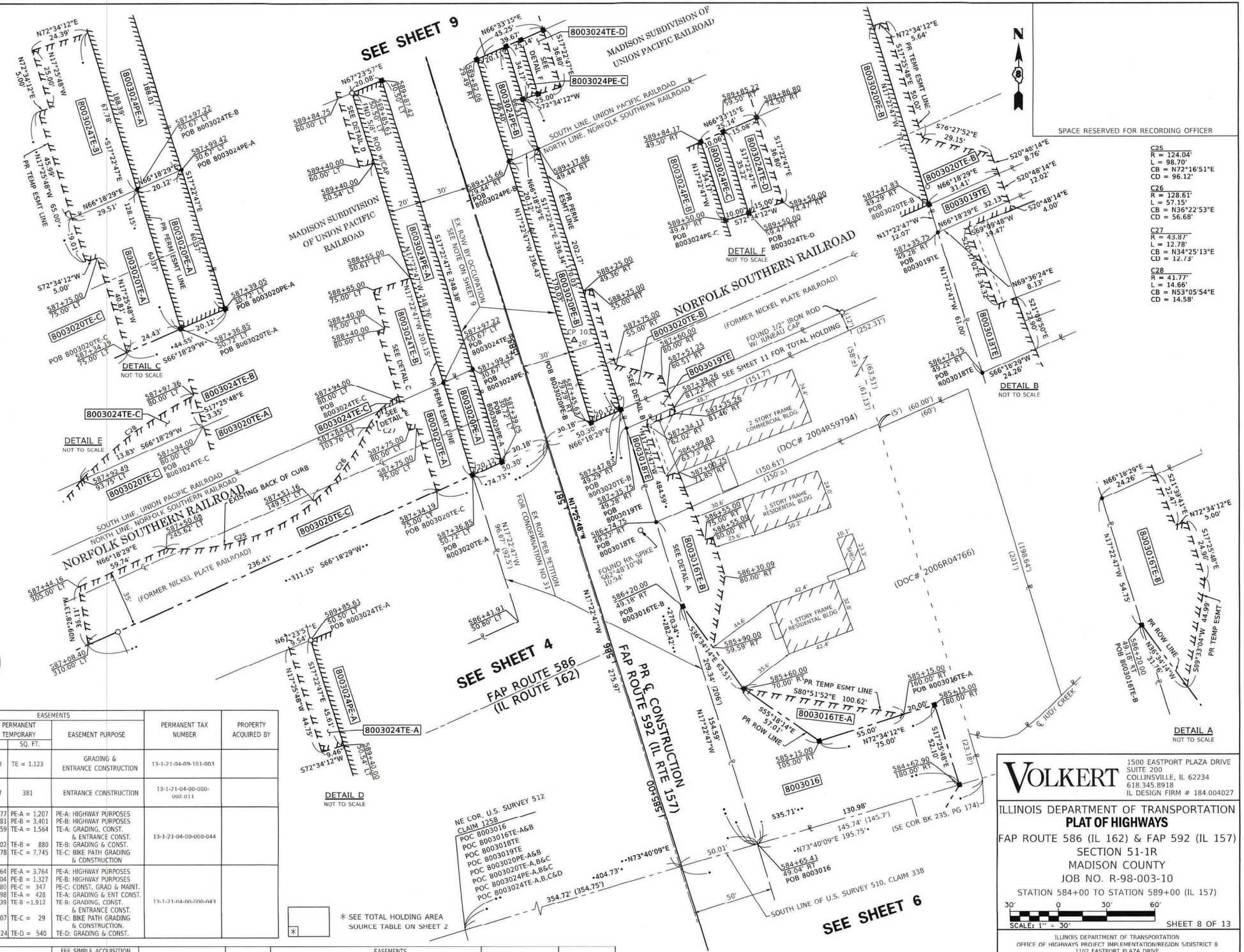

C25
R = 124.04'
L = 98.70'
CB = N72°16'51"E
CD = 96.12'

C26
R = 128.61'
L = 57.15'
CB = N36°22'53"E
CD = 56.68'

C27
R = 43.87'
L = 12.78'
CB = N34°25'13"E
CD = 12.73'

C28
R = 41.77'
L = 14.66'
CB = N53°05'54"E
CD = 14.58'

PARCEL NO.	OWNER	TOTAL HOLDING (ACRES)	EASEMENTS PE = PERMANENT TE = TEMPORARY ACRES	EASEMENTS SQ. FT.	EASEMENT PURPOSE	PERMANENT TAX NUMBER	PROPERTY ACQUIRED BY
8003018	JAN GITCHO I8-2009MA-4262.0	1.4345 1	TE = 0.0258	TE = 1,123	GRADING & ENTRANCE CONSTRUCTION	13-1-21-04-09-101-003	
8003019	ROGER MEIER & REBECCA MEIER, HUSBAND AND WIFE, AS JOINT TENANTS I8-2010MA-4352.0	16.4993 1	TE = 0.0087	381	ENTRANCE CONSTRUCTION	13-1-21-04-00-000-002.011	
8003020	MADISON COUNTY MASS TRANSIT DISTRICT I8-2010MA-4353.0 (SCH. A, PARCEL I)	N/A 1	PE-A = 0.0277 PE-B = 0.0781 TE-A = 0.0359 TE-B = 0.0202 TE-C = 0.1778	PE-A = 1,207 PE-B = 3,401 TE-A = 1,564 TE-B = 880 TE-C = 7,745	PE-A: HIGHWAY PURPOSES PE-B: HIGHWAY PURPOSES TE-A: GRADING, CONST. & ENTRANCE CONST. TE-B: GRADING & CONST. TE-C: BIKE PATH GRADING & CONSTRUCTION	13-1-21-04-00-000-044	
8003024	MADISON COUNTY MASS TRANSIT DISTRICT I8-2010MA-4353.0 (SCH. A, PARCEL II)	N/A 1	PE-A = 0.0864 PE-B = 0.0304 PE-C = 0.0080 TE-A = 0.0098 TE-B = 0.0439 TE-C = 0.0007 TE-D = 0.0124	PE-A = 3,764 PE-B = 1,327 PE-C = 347 TE-A = 428 TE-B = 1,912 TE-C = 29 TE-D = 540	PE-A: HIGHWAY PURPOSES PE-B: HIGHWAY PURPOSES PE-C: CONST, GRAD & MAINT. TE-A: GRADING & ENT CONST. TE-B: GRADING, CONST. & ENTRANCE CONST. TE-C: BIKE PATH GRADING & CONSTRUCTION. TE-D: GRADING & CONST.	13-1-21-04-00-000-043	

* SEE TOTAL HOLDING AREA SOURCE TABLE ON SHEET 2

PARCEL NO.	OWNER	TOTAL HOLDING (ACRES)	FEE SIMPLE ACQUISITION GROSS ACRES	GROSS SQ. FT.	PREVIOUSLY DEDICATED AND/OR USED ACRES	PREVIOUSLY DEDICATED AND/OR USED SQ. FT.	NET ACRES	NET SQ. FT.	REMAINDER (ACRES)	EASEMENTS PE = PERMANENT TE = TEMPORARY ACRES	EASEMENTS SQ. FT.	EASEMENT PURPOSE	PERMANENT TAX NUMBER	PROPERTY ACQUIRED BY
8003016	A LIFE ESTATE IN ELWOOD J. FOEHRKOLB, REMAINDER INTEREST IN KEVIN J. FOEHRKOLB I8-2009MA-4263.0	1.0284 1	0.2069	9,012	N/A	N/A	0.2069	9,012	0.8215	TE-A = 0.0284 TE-B = 0.0451	TE-A = 1,238 TE-B = 1,965	TE-A: GRADING TE-B: GRADING/ENT. CONST.	13-1-21-04-09-101-003.001	

COMPLETION DATE OF FIELD WORK PERFORMED	
LAND SURVEY: 3/14/2022	ROW STAKING: 2/28/2024

VOLKERT
1500 EASTPORT PLAZA DRIVE
SUITE 200
COLLINSVILLE, IL 62234
618.345.8918
IL DESIGN FIRM # 184.004027

ILLINOIS DEPARTMENT OF TRANSPORTATION
PLAT OF HIGHWAYS
FAP ROUTE 586 (IL 162) & FAP 592 (IL 157)
SECTION 51-1R
MADISON COUNTY
JOB NO. R-98-003-10
STATION 584+00 TO STATION 589+00 (IL 157)
30' 0 30' 60'
SCALE: 1" = 30'
SHEET 8 OF 13

ILLINOIS DEPARTMENT OF TRANSPORTATION
OFFICE OF HIGHWAYS PROJECT IMPLEMENTATION/REGION 5/DISTRICT 8
1102 EASTPORT PLAZA DRIVE
COLLINSVILLE, ILLINOIS 62234-6198

F.A.P. RTE.	SECTION	COUNTY	TOTAL SHEETS	SHEET NO.
586/592	51-1R	MADISON	103	296
		CONTRACT NO. 76A46		
FED. ROAD DIST. NO.	ILLINOIS	FED. AID PROJECT		

SEE LEGENDS, TOPOGRAPHIC STATEMENT, SURVEYORS NOTE(S) AND BASIS OF COORDINATES & BEARINGS STATEMENT ON SHEET 2

COORDINATE TABLE

STATION	OFFSET	NORTH	EAST	DESCRIPTION
589+82.65	35.05' RT	755,945.1780	2,343,621.6151	EX ROW
589+84.17	49.50' RT	755,950.9579	2,343,634.9423	PR PE CORNER
589+86.80	74.50' RT	755,960.9610	2,343,658.0074	PR ROW CORNER
589+84.75	60.00' LT	755,918.7170	2,343,530.2984	PR TE CORNER
589+85.61	50.50' LT	755,922.3820	2,343,539.1026	EX ROW
590+04.07	60.00' LT	755,937.1464	2,343,524.5124	PR TE CORNER
590+04.46	56.18' LT	755,938.6603	2,343,528.0415	PR TE CORNER
590+42.47	60.00' LT	755,973.7868	2,343,513.0088	PR TE CORNER
590+76.50	74.58' RT	756,046.5585	2,343,631.2160	PR ROW
590+83.88	60.00' LT	756,013.2883	2,343,500.6070	PR TE CORNER
590+84.73	50.42' LT	756,016.9709	2,343,509.4969	EX ROW
590+90.00	60.00' LT	756,019.1345	2,343,498.7716	PR TE CORNER
590+90.00	55.00' LT	756,020.6322	2,343,503.5420	PR TE CORNER
591+60.00	55.00' LT	756,087.4133	2,343,482.5756	PR TE CORNER
591+60.00	50.35' LT	756,088.8065	2,343,487.0129	PR TE CORNER
591+68.32	74.66' RT	756,134.1877	2,343,603.7886	PR ROW
592+12.69	74.70' RT	756,176.5301	2,343,590.5358	PR ROW CORNER
592+36.16	50.28' LT	756,161.4862	2,343,464.2646	EX ROW CORNER
592+58.52	43.31' RT	756,210.8625	2,343,546.8639	EX ROW CORNER
592+66.87	101.18' LT	756,175.5431	2,343,406.5022	EX ROW CORNER
594+71.11	0.00' RT	756,400.7117	2,343,441.8603	POT ℄ - IL 157 END
11+20.99	39.36' RT	756238.3374	2343620.8461	PR ROW CORNER
11+35.82	39.05' RT	756243.5006	2343634.7491	PR TE CORNER
11+35.93	44.05' RT	756238.8134	2343636.4898	PR TE CORNER
11+75.81	38.20' RT	756257.4262	2343672.2468	PR TE CORNER
11+75.92	43.20' RT	756252.7390	2343673.9875	PR TE CORNER
10+00.00	0.00' RT	756235.8034	2343493.6358	POT ℄ - MAIN BEGNI
12+03.11	0.00' RT	756302.4737	2343685.4883	POT ℄ - MAIN END

NOTE:
RIGHT OF WAY FOR S.B.I. ROUTE 157 LOCATED IN THE FORMER RAILROAD RIGHT OF WAY WAS ESTABLISHED PURSUANT TO THE AUTHORITY PROVIDED IN FORMER CHAPTER 121, SECTION 297 OF THE ILLINOIS REVISED STATUTES.

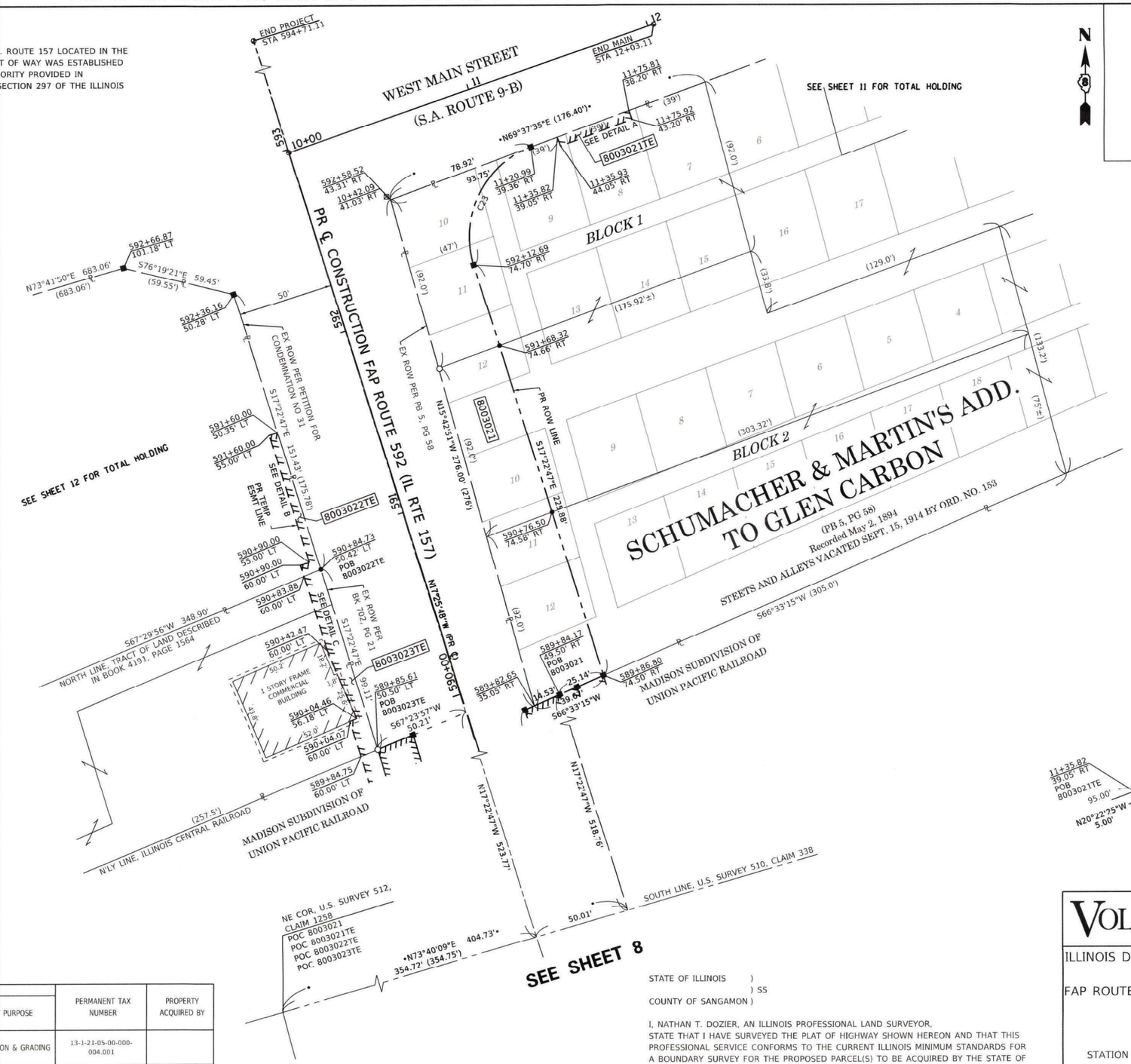

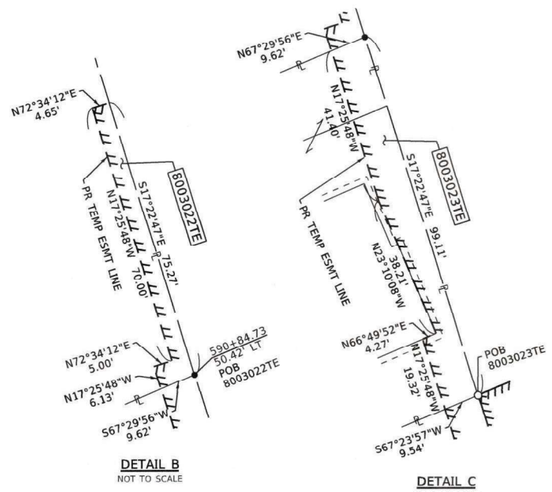

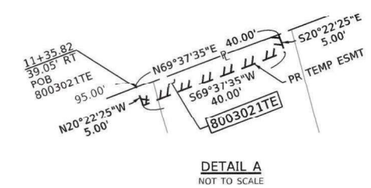

SPACE RESERVED FOR RECORDING OFFICER

C23
R = 50.00'
L = 75.93'
CB = S26°07'24"W
CD = 68.84'

* SEE TOTAL HOLDING AREA SOURCE TABLE ON SHEET 2

PARCEL NO.	OWNER	TOTAL HOLDING	EASEMENTS PE = PERMANENT TE = TEMPORARY		EASEMENT PURPOSE	PERMANENT TAX NUMBER	PROPERTY ACQUIRED BY
		ACRES	ACRES	SQ. FT.			
8003022	KENNETH G. & MICHELLE A. NOLL, HUSBAND AND WIFE AS JOINT TENANTS I8-2009MA-4273.0	5.0010 [1]	TE = 0.0087	TE = 378	CONSTRUCTION & GRADING	13-1-21-05-00-000-004.001	
8003023	KENNETH G. NOLL I8-2009MA-4254.0	0.7965 [1]	TE = 0.0200	TE = 872	GRADING & ENTRANCE CONST.	13-1-21-04-05-101-019	

PARCEL NO.	OWNER	TOTAL HOLDING	FEE SIMPLE ACQUISITION GROSS		PREVIOUSLY DEDICATED AND/OR USED		NET		REMAINDER	EASEMENTS PE = PERMANENT TE = TEMPORARY		EASEMENT PURPOSE	PERMANENT TAX NUMBER	PROPERTY ACQUIRED BY
		ACRES	ACRES	SQ. FT.	ACRES	SQ. FT.	ACRES	SQ. FT.	ACRES	ACRES	SQ. FT.			
8003021	FIRST COLLINSVILLE BANK I8-2009MA-4257.0, 4253.0, 4255.0	1.4937 [1]	0.2340	10,193	N/A	N/A	0.2340	10,193	1.2597	TE = 0.0046	TE = 200	GRADING & ENTRANCE CONSTRUCTION	13-2-21-04-05-101-017 13-2-21-04-05-101-016 13-2-21-04-05-101-018	

STATE OF ILLINOIS)
) SS
COUNTY OF SANGAMON)

I, NATHAN T. DOZIER, AN ILLINOIS PROFESSIONAL LAND SURVEYOR, STATE THAT I HAVE SURVEYED THE PLAT OF HIGHWAY SHOWN HEREON AND THAT THIS PROFESSIONAL SERVICE CONFORMS TO THE CURRENT ILLINOIS MINIMUM STANDARDS FOR A BOUNDARY SURVEY FOR THE PROPOSED PARCEL(S) TO BE ACQUIRED BY THE STATE OF ILLINOIS, DEPARTMENT OF TRANSPORTATION, SHOWN HEREON.

DATED 4/12/24

NATHAN T. DOZIER, PLS NO. 3723
LICENSE EXPIRATION DATE: 11/30/2024

PROFESSIONAL LAND SURVEYOR
NATHAN T. DOZIER
035-003723
SPRINGFIELD, ILLINOIS
STATE OF ILLINOIS

COMPLETION DATE OF FIELD WORK PERFORMED	
LAND SURVEY: 3/14/2022	ROW STAKING: 2/28/2024

VOLKERT
1500 EASTPORT PLAZA DRIVE
SUITE 200
COLLINSVILLE, IL 62234
618.345.8918
IL DESIGN FIRM # 184.004027

ILLINOIS DEPARTMENT OF TRANSPORTATION
PLAT OF HIGHWAYS
FAP ROUTE 586 (IL 162) & FAP 592 (IL 157)
SECTION 51-1R
MADISON COUNTY
JOB NO. R-98-003-10
STATION 589+00 TO STATION 593+00 (IL 157)

30' 0 30' 60'
SCALE: 1" = 30'

ILLINOIS DEPARTMENT OF TRANSPORTATION
OFFICE OF HIGHWAYS PROJECT IMPLEMENTATION/REGION 5/DISTRICT 8
1102 EASTPORT PLAZA DRIVE
COLLINSVILLE, ILLINOIS 62234-6198

F.A.P. RTE.	SECTION	COUNTY	TOTAL SHEETS	SHEET NO.
586/592	51-1R	MADISON	104	296
		CONTRACT NO. 76A46		
FED. ROAD DIST. NO.	ILLINOIS	FED. AID PROJECT		

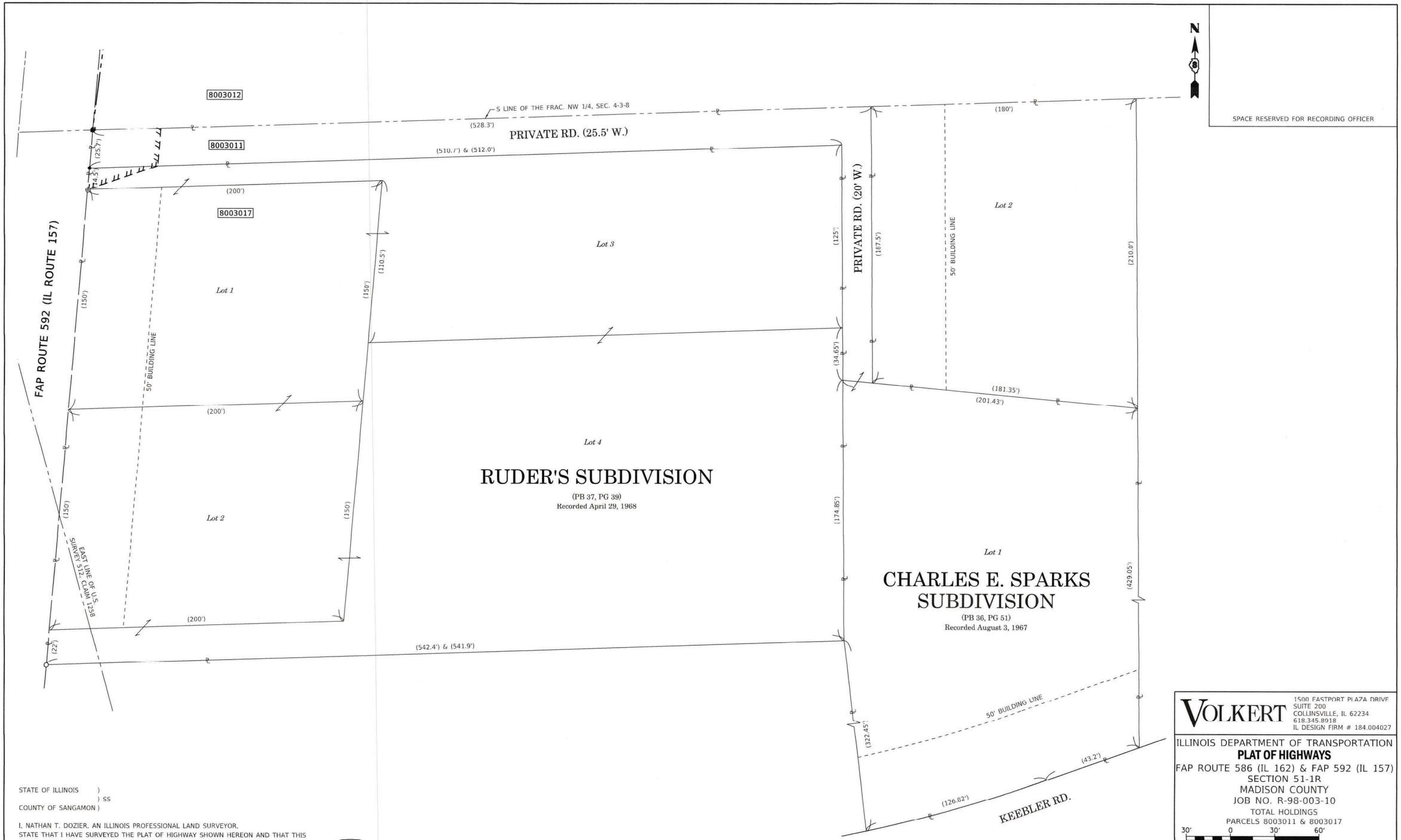

STATE OF ILLINOIS)
) SS
COUNTY OF SANGAMON)

I, NATHAN T. DOZIER, AN ILLINOIS PROFESSIONAL LAND SURVEYOR, STATE THAT I HAVE SURVEYED THE PLAT OF HIGHWAY SHOWN HEREON AND THAT THIS PROFESSIONAL SERVICE CONFORMS TO THE CURRENT ILLINOIS MINIMUM STANDARDS FOR A BOUNDARY SURVEY FOR THE PROPOSED PARCEL(S) TO BE ACQUIRED BY THE STATE OF ILLINOIS, DEPARTMENT OF TRANSPORTATION, SHOWN HEREON.

DATED 4/12/24

NATHAN T. DOZIER - PLS NO. 3723
LICENSE EXPIRATION DATE: 11/30/2024

PROFESSIONAL LAND SURVEYOR
NATHAN T. DOZIER
035-003723
SPRINGFIELD, ILLINOIS
STATE OF ILLINOIS

COMPLETION DATE OF FIELD WORK PERFORMED	
LAND SURVEY: 3/14/2022	ROW STAKING: 2/28/2024

VOLKERT
1500 EASTPORT PLAZA DRIVE
SUITE 200
COLLINSVILLE, IL 62234
618.345.8918
IL DESIGN FIRM # 184.004027

ILLINOIS DEPARTMENT OF TRANSPORTATION
PLAT OF HIGHWAYS
FAP ROUTE 586 (IL 162) & FAP 592 (IL 157)
SECTION 51-1R
MADISON COUNTY
JOB NO. R-98-003-10
TOTAL HOLDINGS
PARCELS 8003011 & 8003017

30' 0 30' 60'
SCALE: 1" = 30'

SHEET 10 OF 13

ILLINOIS DEPARTMENT OF TRANSPORTATION
OFFICE OF HIGHWAYS PROJECT IMPLEMENTATION/REGION 5/DISTRICT 8
1102 EASTPORT PLAZA DRIVE
COLLINSVILLE, ILLINOIS 62234-6198

F.A.P. RTE.	SECTION	COUNTY	TOTAL SHEETS	SHEET NO.
586/592	51-1R	MADISON	105	296
		CONTRACT NO. 76A46		
FED. ROAD DIST. NO.	ILLINOIS	FED. AID PROJECT		

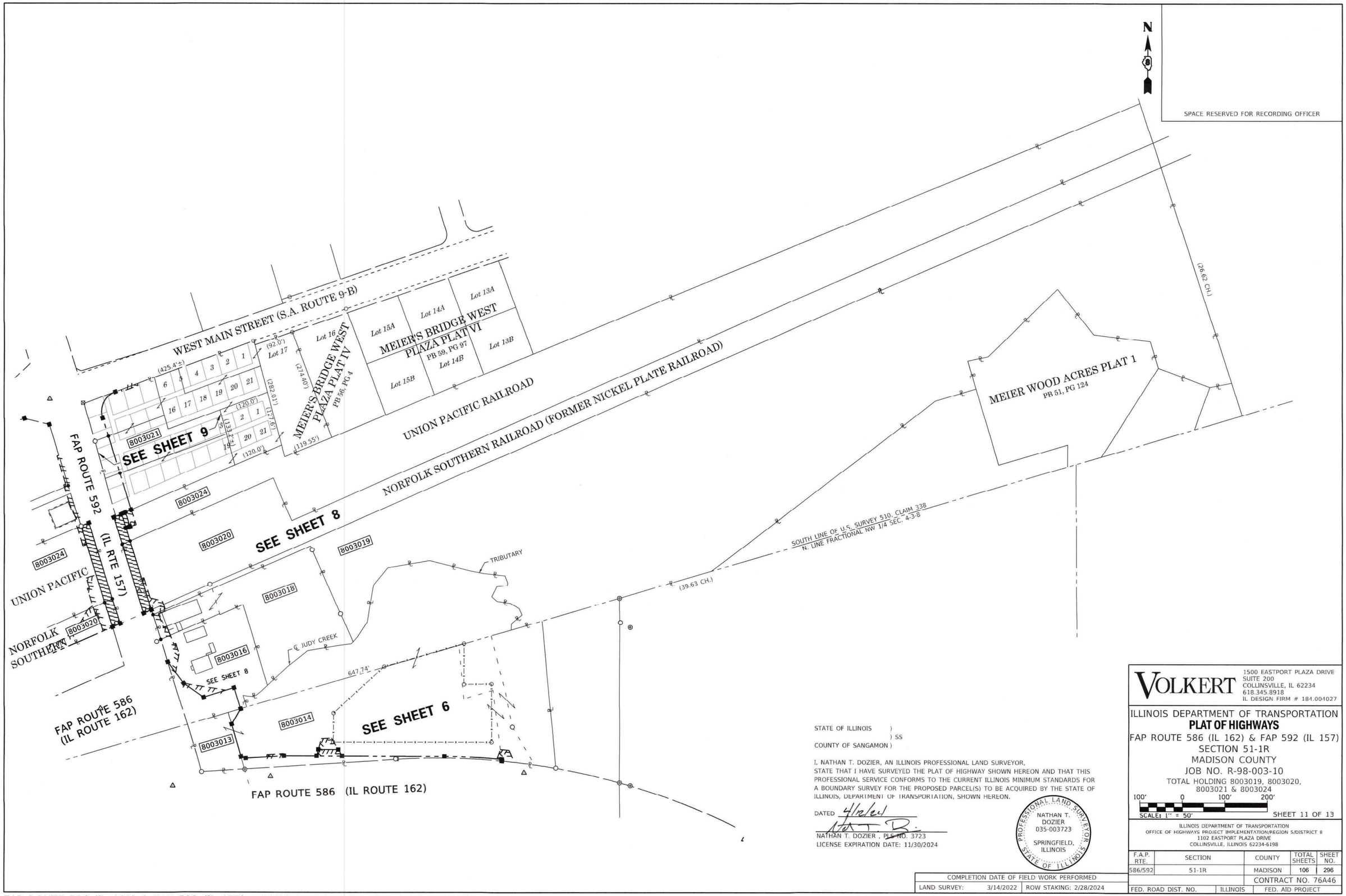

STATE OF ILLINOIS)
) SS
COUNTY OF SANGAMON)

I, NATHAN T. DOZIER, AN ILLINOIS PROFESSIONAL LAND SURVEYOR, STATE THAT I HAVE SURVEYED THE PLAT OF HIGHWAY SHOWN HEREON AND THAT THIS PROFESSIONAL SERVICE CONFORMS TO THE CURRENT ILLINOIS MINIMUM STANDARDS FOR A BOUNDARY SURVEY FOR THE PROPOSED PARCEL(S) TO BE ACQUIRED BY THE STATE OF ILLINOIS, DEPARTMENT OF TRANSPORTATION, SHOWN HEREON.

DATED 4/12/24

NATHAN T. DOZIER , PLS NO. 3723
LICENSE EXPIRATION DATE: 11/30/2024

PROFESSIONAL LAND SURVEYOR
NATHAN T. DOZIER
035-003723
SPRINGFIELD, ILLINOIS
STATE OF ILLINOIS

COMPLETION DATE OF FIELD WORK PERFORMED	
LAND SURVEY: 3/14/2022	ROW STAKING: 2/28/2024

VOLKERT
1500 EASTPORT PLAZA DRIVE
SUITE 200
COLLINSVILLE, IL 62234
618.345.8918
IL DESIGN FIRM # 184.001027

ILLINOIS DEPARTMENT OF TRANSPORTATION
PLAT OF HIGHWAYS
FAP ROUTE 586 (IL 162) & FAP 592 (IL 157)
SECTION 51-1R
MADISON COUNTY
JOB NO. R-98-003-10
TOTAL HOLDING 8003019, 8003020, 8003021 & 8003024

100' 0 100' 200'
SCALE: 1" = 50'
SHEET 11 OF 13

ILLINOIS DEPARTMENT OF TRANSPORTATION
OFFICE OF HIGHWAYS PROJECT IMPLEMENTATION/REGION 5/DISTRICT 8
1102 EASTPORT PLAZA DRIVE
COLLINSVILLE, ILLINOIS 62234-6198

F.A.P. RTE.	SECTION	COUNTY	TOTAL SHEETS	SHEET NO.
586/592	51-1R	MADISON	106	296
		CONTRACT NO. 76A46		
FED. ROAD DIST. NO.	ILLINOIS	FED. AID PROJECT		

SPACE RESERVED FOR RECORDING OFFICER

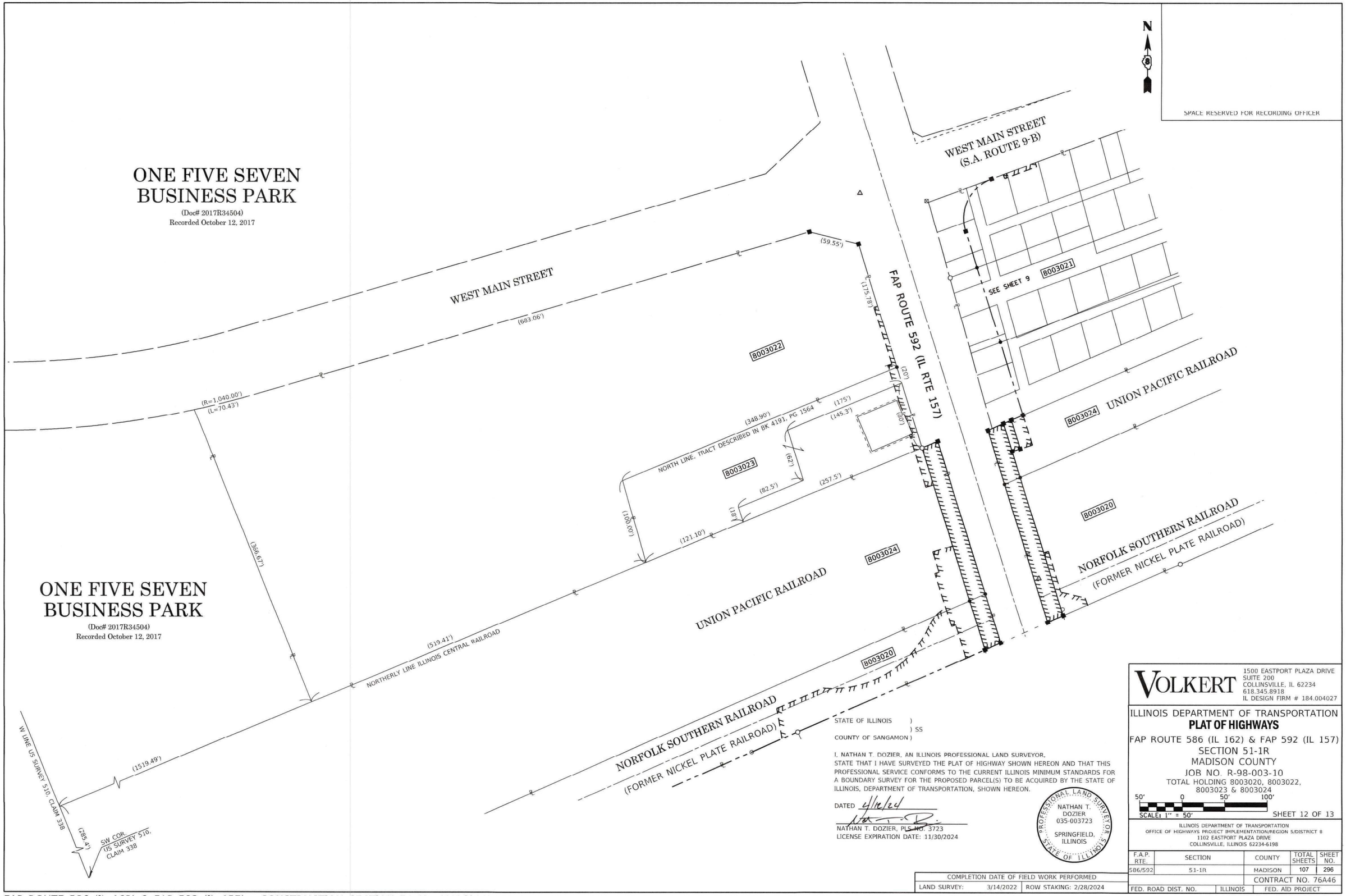

STATE OF ILLINOIS)
) SS
COUNTY OF SANGAMON)

I, NATHAN T. DOZIER, AN ILLINOIS PROFESSIONAL LAND SURVEYOR, STATE THAT I HAVE SURVEYED THE PLAT OF HIGHWAY SHOWN HEREON AND THAT THIS PROFESSIONAL SERVICE CONFORMS TO THE CURRENT ILLINOIS MINIMUM STANDARDS FOR A BOUNDARY SURVEY FOR THE PROPOSED PARCEL(S) TO BE ACQUIRED BY THE STATE OF ILLINOIS, DEPARTMENT OF TRANSPORTATION, SHOWN HEREON.

DATED 4/18/24

NATHAN T. DOZIER, PLS NO. 3723
LICENSE EXPIRATION DATE: 11/30/2024

PROFESSIONAL LAND SURVEYOR
NATHAN T. DOZIER
035-003723
SPRINGFIELD, ILLINOIS
STATE OF ILLINOIS

COMPLETION DATE OF FIELD WORK PERFORMED	
LAND SURVEY: 3/14/2022	ROW STAKING: 2/28/2024

VOLKERT
1500 EASTPORT PLAZA DRIVE
SUITE 200
COLLINSVILLE, IL 62234
618.345.8918
IL DESIGN FIRM # 184.004027

ILLINOIS DEPARTMENT OF TRANSPORTATION
PLAT OF HIGHWAYS

FAP ROUTE 586 (IL 162) & FAP 592 (IL 157)
SECTION 51-1R
MADISON COUNTY
JOB NO. R-98-003-10
TOTAL HOLDING 8003020, 8003022, 8003023 & 8003024

50' 0 50' 100'
SCALE: 1" = 50'

SHEET 12 OF 13

ILLINOIS DEPARTMENT OF TRANSPORTATION
OFFICE OF HIGHWAYS PROJECT IMPLEMENTATION/REGION 5/DISTRICT 8
1102 EASTPORT PLAZA DRIVE
COLLINSVILLE, ILLINOIS 62234-6198

F.A.P. RTE.	SECTION	COUNTY	TOTAL SHEETS	SHEET NO.
586/592	51-1R	MADISON	107	296
		CONTRACT NO. 76A46		
FED. ROAD DIST. NO.	ILLINOIS	FED. AID PROJECT		

SECTION CORNER AND CENTERLINE TIE SHEET

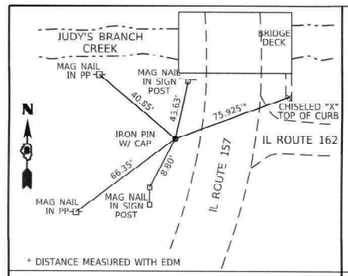

CONTROL POINT NUMBER 10
N = 755,311.9690, E = 2,343,756.0900

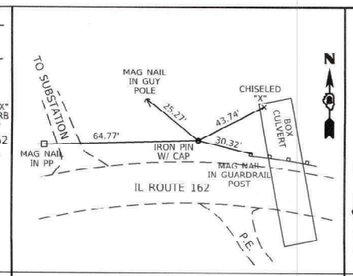

CONTROL POINT NUMBER 11
N = 755,342.9730, E = 2,344,582.6070

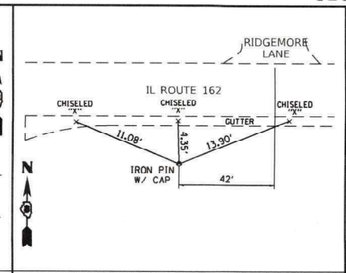

CONTROL POINT NUMBER 14
N = 754,778.9450, E = 2,345,941.0230

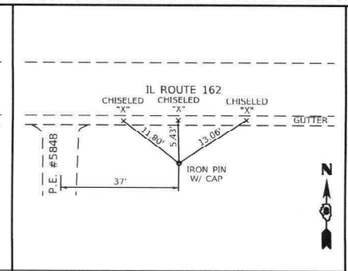

CONTROL POINT NUMBER 15
DESTROYED

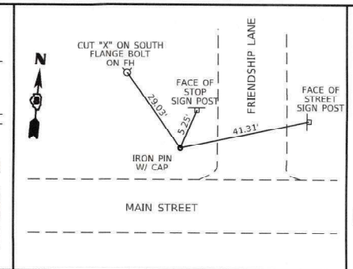

CONTROL POINT NUMBER 101
N = 756,596.2030, E = 2,344,409.6360

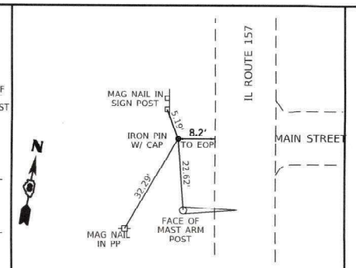

CONTROL POINT NUMBER 102
N = 756,221.4930, E = 2,343,466.2320

SPACE RESERVED FOR RECORDING OFFICER

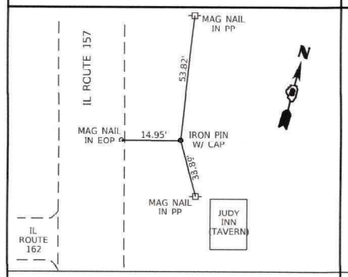

CONTROL POINT NUMBER 103R
N = 755,768.8300, E = 2,343,676.8710

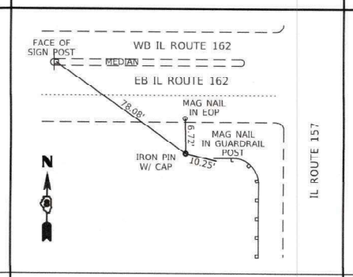

CONTROL POINT NUMBER 104
N = 755,492.8010, E = 2,343,585.5330

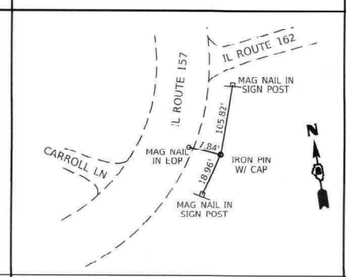

CONTROL POINT NUMBER 105
N = 755,122.0780, E = 2,343,829.0130

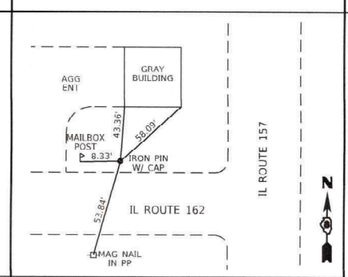

CONTROL POINT NUMBER 106
N = 755,350.5390, E = 2,343,137.7040

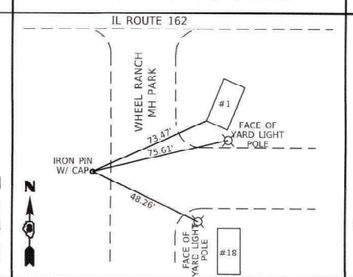

CONTROL POINT NUMBER 107
N = 755,138.0120, E = 2,344,048.7670

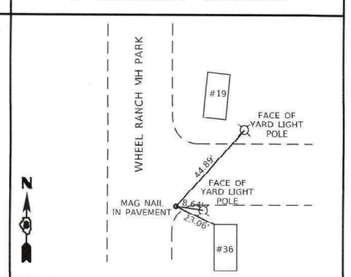

CONTROL POINT NUMBER 108
N = 754,905.3480, E = 2,344,101.8810

STATE OF ILLINOIS)
) SS
COUNTY OF SANGAMON)

I, NATHAN T. DOZIER, AN ILLINOIS PROFESSIONAL LAND SURVEYOR, STATE THAT I HAVE SURVEYED THE PLAT OF HIGHWAY SHOWN HEREON AND THAT THIS PROFESSIONAL SERVICE CONFORMS TO THE CURRENT ILLINOIS MINIMUM STANDARDS FOR A BOUNDARY SURVEY OF THE EXISTING RIGHT OF WAY, SHOWN HEREON.

DATED 4/12/24

NATHAN T. DOZIER , PLS NO. 3723
LICENSE EXPIRATION DATE: 11/30/2024

PROFESSIONAL LAND SURVEYOR
NATHAN T. DOZIER
035-003723
SPRINGFIELD, ILLINOIS
STATE OF ILLINOIS

NOTE:
ALL TIES MEASURED DIRECT UNLESS OTHERWISE NOTED

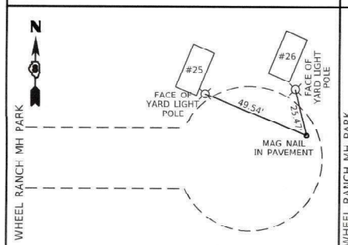

CONTROL POINT NUMBER 109
N = 754,951.9310, E = 2,344,488.4680

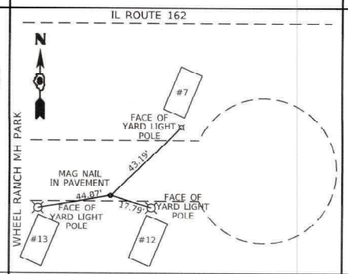

CONTROL POINT NUMBER 110
N = 755,158.5530, E = 2,344,411.8960

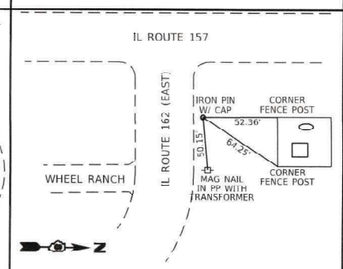

CONTROL POINT NUMBER 111
N = 755,334.2990, E = 2,343,986.1910

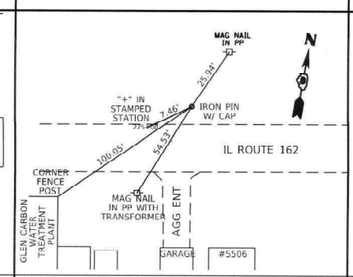

CONTROL POINT NUMBER 112
N = 755,132.0170, E = 2,342,517.1970

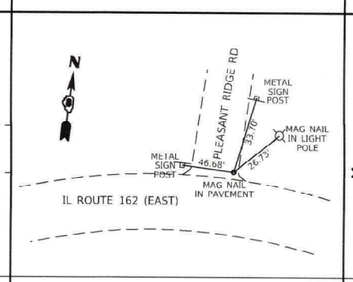

CONTROL POINT NUMBER 113
N = 755,186.7390, E = 2,345,099.9360

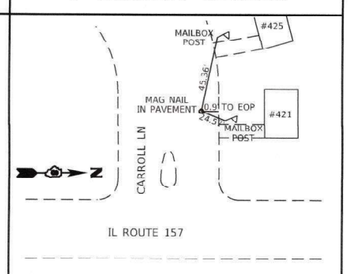

CONTROL POINT NUMBER 114
N = 755,055.0160, E = 2,343,421.8110

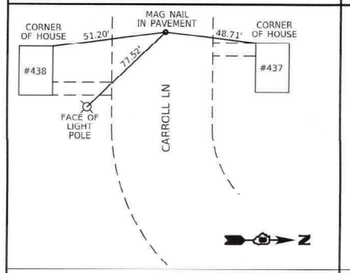

CONTROL POINT NUMBER 115
N = 754,883.9490, E = 2,343,169.0480

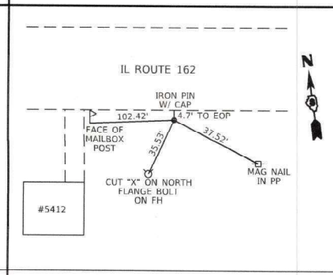

CONTROL POINT NUMBER 116
N = 754,856.4530, E = 2,341,760.6110

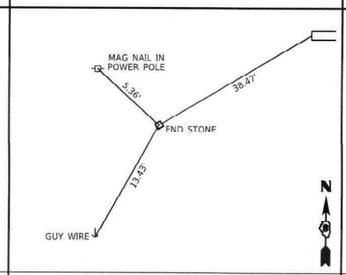

SW COR. US SURVEY 510, CLAIM 338
N = 754,735.0700, E = 2,341,411.4800
2/29/2024 MON. RECORD DOC# 2024R05358

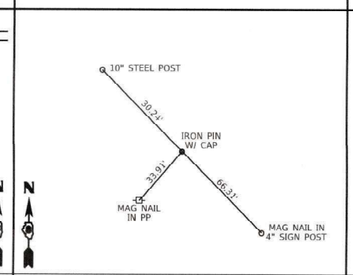

SW COR. FRAC. NW 1/4, SEC. 4–3–8
N = 754,247.0470, E = 2,343,700.2593
10/17/14 MON. RECORD 2014R33226

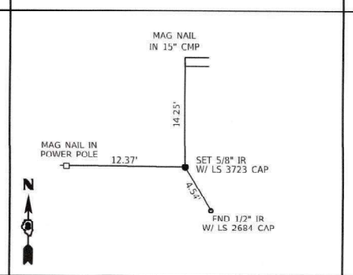

NW COR. US SURVEY 512, CLAIM 1258
N = 754,773.7799, E = 2,341,538.3860
2/29/2024 MON. RECORD DOC# 2024R05359

VOLKERT
1500 EASTPORT PLAZA DRIVE
SUITE 200
COLLINSVILLE, IL 62234
618.345.8918
IL DESIGN FIRM # 184.004027

COMPLETION DATE OF FIELD WORK PERFORMED
LAND SURVEY: ROW STAKING:

ILLINOIS DEPARTMENT OF TRANSPORTATION
PLAT OF HIGHWAYS
FAP ROUTE 586 (IL 162) & FAP 592 (IL 157)
SECTION 51-1R
MADISON COUNTY
JOB NO. R-98-003-10
STATION 00+00 TO STATION 00+00

NOT TO SCALE SHEET 13 OF 13

ILLINOIS DEPARTMENT OF TRANSPORTATION
OFFICE OF HIGHWAYS PROJECT IMPLEMENTATION/REGION 5/DISTRICT 8
1102 EASTPORT PLAZA DRIVE
COLLINSVILLE, ILLINOIS 62234-6198

F.A.P. RTE.	SECTION	COUNTY	TOTAL SHEETS	SHEET NO.
586/592	51-1R	MADISON	108	296
		CONTRACT NO. 76A46		
FED. ROAD DIST. NO.	ILLINOIS	FED. AID PROJECT		

584+87.90
20.00' RT

℄ IL ROUTE 157

584+43.42
32.00' LT

PROPOSED WEST SHARED USE PATH

TWO-CENTERED CURVE
65' - 400'
12' OFFSET

PROPOSED BRIDGE APPROACH SLAB

TWO-CENTERED CURVE
65' - 400'
13' OFFSET

583+77.55
35.52' RT

PROPOSED COMBINATION CONCRETE CURB AND GUTTER, TYPE B-6.24

PROPOSED GUARDRAIL

PROPOSED 3' AGGREGATE SHOULDER

PROPOSED 4' PAVED SHOULDER

17+78.38
34.33' LT

PROPOSED GUARDRAIL

16+72.28
20.00' LT

PROPOSED 4' PAVED SHOULDER

19+61.95
32.00' LT

PROPOSED 3' AGGREGATE SHOULDER

+00.00 CE
24' ASPHALT

℄ IL ROUTE 162

76°11'21"

583

17+00

20+00

17+53.25
32.00' RT

17+78.95
34.57' RT

PROPOSED 3' AGGREGATE SHOULDER

PROPOSED 7' PAVED SHOULDER

19+92.04
35.79' RT

20+88.08
20.00' RT

+50.68 SR
26' ASPHALT

PROPOSED 4' PAVED SHOULDER

PROPOSED 4' PAVED SHOULDER

PROPOSED 3' AGGREGATE SHOULDER

PROPOSED EAST SHARED USE PATH

STA 583+19.69 (IL ROUTE 157)
STA 18+84.87 (IL ROUTE 162)

PROPOSED COMBINATION CONCRETE CURB AND GUTTER, TYPE B-6.24

582

TWO-CENTERED CURVE
76' - 300'
11' OFFSET

BACK OFFSET 0'
BACK TAPER OFFSET 2'
RATIO 10'
INTERMEDIATE CURVE RADIUS 115'
AHEAD TAPER OFFSET 10'
RATIO 5'
AHEAD OFFSET 0'

PROPOSED SOUTHWEST SHARED USE PATH

582+04.58
30.30' LT

581+94.69
32.00' RT

PROPOSED COMBINATION CONCRETE CURB AND GUTTER, TYPE B-6.18

581+41.46
20.00' RT

0 20 40 60
SCALE IN FEET

FILE NAME: \\loch.loc\root\Productions\Files\2020\20-0018\CAD\CADD Sheets\D876A46-sht-Intersection Details.dgn

LOCHMUELLER GROUP
1928 S-A Bradley R. Smith Drive
Troy, IL 62294
PHONE: 618.667.1400

USER NAME = alex.huelskamp	DESIGNED - ESW	REVISED -	STATE OF ILLINOIS DEPARTMENT OF TRANSPORTATION	INTERSECTION DETAILS IL ROUTE 157 AND IL ROUTE 162	
MODEL NAME = INT DET 01	DRAWN - LEC	REVISED -			
PLOT SCALE = 40.0000 ' / in.	CHECKED - BRM	REVISED -			
PLOT DATE = 3/5/2024	DATE - 10/8/2021	REVISED -		SCALE: 1"=20' SHEET 1 OF 2 SHEETS INT DET 157/162	

F.A.P. RTE.	SECTION	COUNTY	TOTAL SHEETS	SHEET NO.
*	51-1R	MADISON	296	109
		CONTRACT NO. 76A46		
	ILLINOIS	FED. AID PROJECT		

*586/592

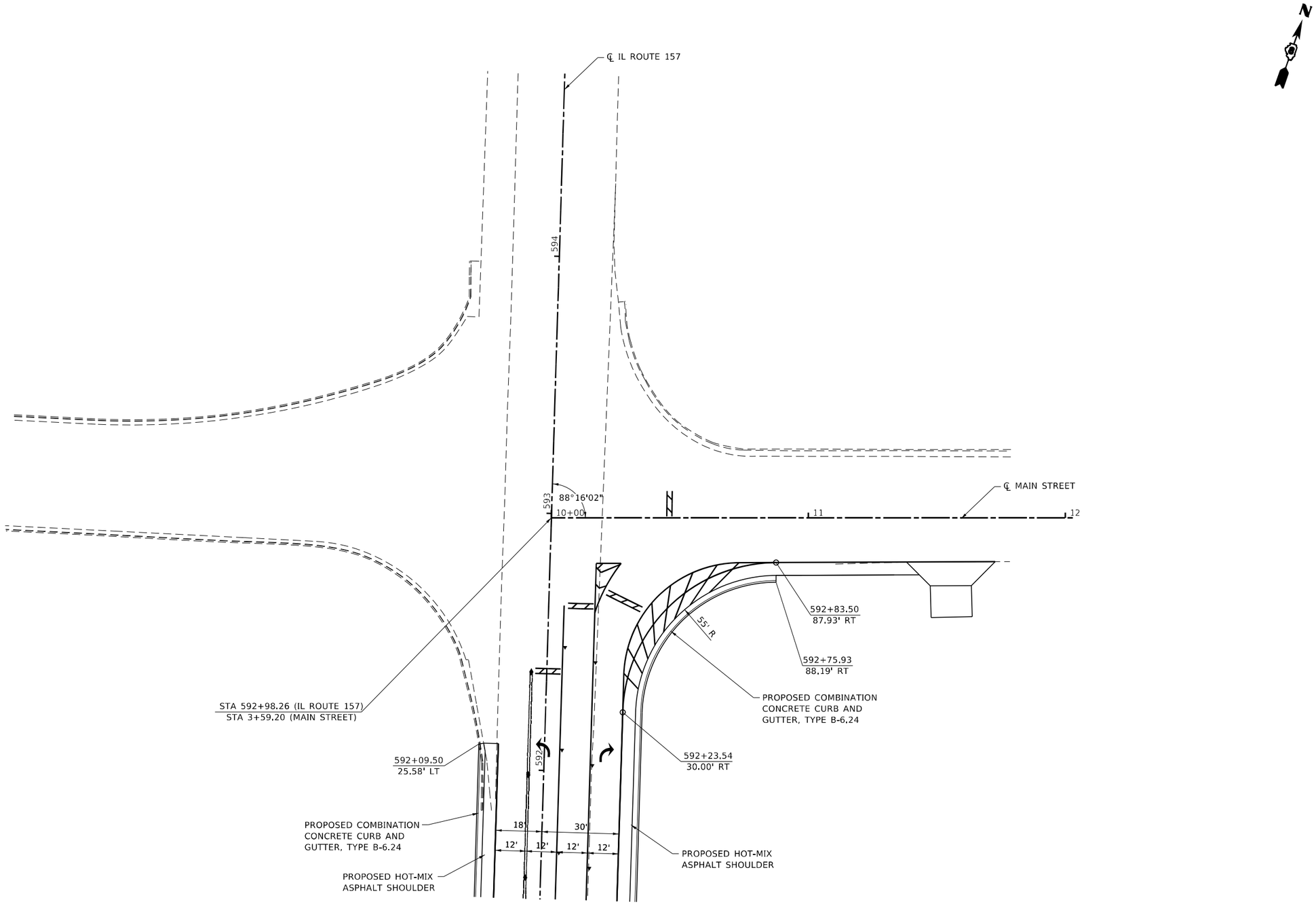

0 20 40 60
SCALE IN FEET

FILE NAME: \\loch.loc\root\Production\Files\2020\220-0018\CAD\CADD Sheets\D876A46-sht-Intersection Details.dgn

LOCHMUELLER GROUP
1928 S.N. Bradley R. Smith Drive
Troy, IL 62294
PHONE: 618.667.1400

USER NAME = alex.huelskamp	DESIGNED - ESW	REVISED -	
MODEL NAME = INT DET 02	DRAWN - LEC	REVISED -	
PLOT SCALE = 40.0000 ' / in.	CHECKED - BRM	REVISED -	
PLOT DATE = 3/5/2024	DATE - 10/8/2021	REVISED -	

STATE OF ILLINOIS
DEPARTMENT OF TRANSPORTATION

INTERSECTION DETAILS
MAIN STREET

SCALE: 1"=20' | SHEET 2 OF 2 SHEETS | INT DET 157/MAIN

F.A.P. RTE.	SECTION	COUNTY	TOTAL SHEETS	SHEET NO.
*	51-1R	MADISON	296	110
		CONTRACT NO. 76A46		
		ILLINOIS	FED. AID PROJECT	

*586/592

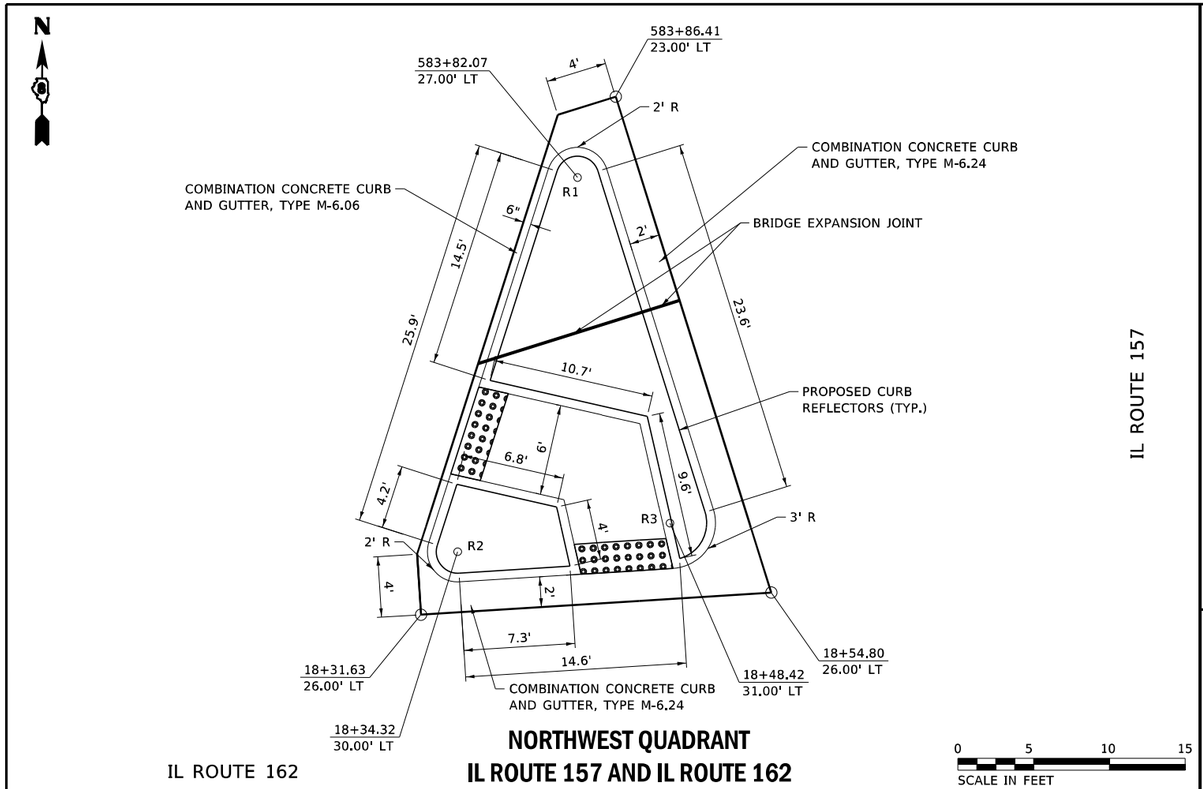

NORTHWEST QUADRANT
IL ROUTE 157 AND IL ROUTE 162

GROUND COORDINATES FOR ISLAND RADII

DESCRIPTION	COORDINATE	
	NORTH	EAST
CC R 1	755353.60	2343742.31
CC R 2	755328.91	2343734.41
CC R 3	755330.80	2343748.42
CC R 4	755269.83	2343734.94
CC R 5	755270.67	2343764.15
CC R 6	755257.53	2343769.18
CC R 7	755246.54	2343833.52
CC R 8	755273.65	2343826.98
CC R 9	755275.60	2343842.03

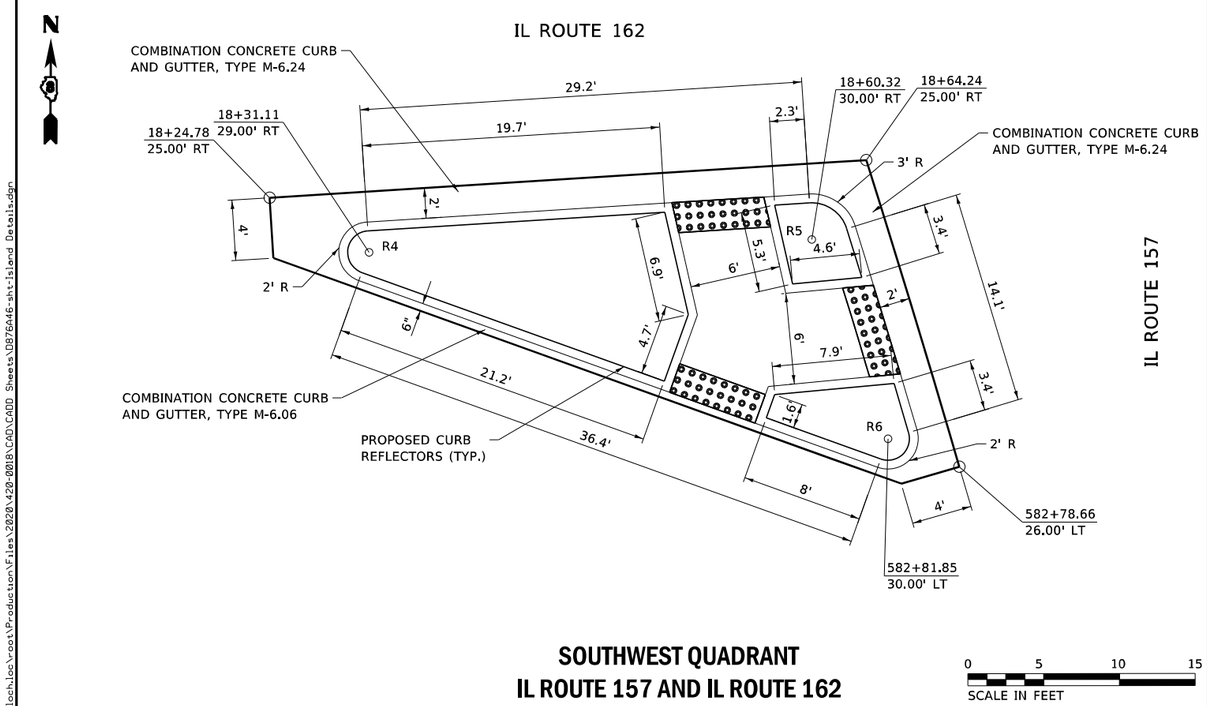

SOUTHWEST QUADRANT
IL ROUTE 157 AND IL ROUTE 162

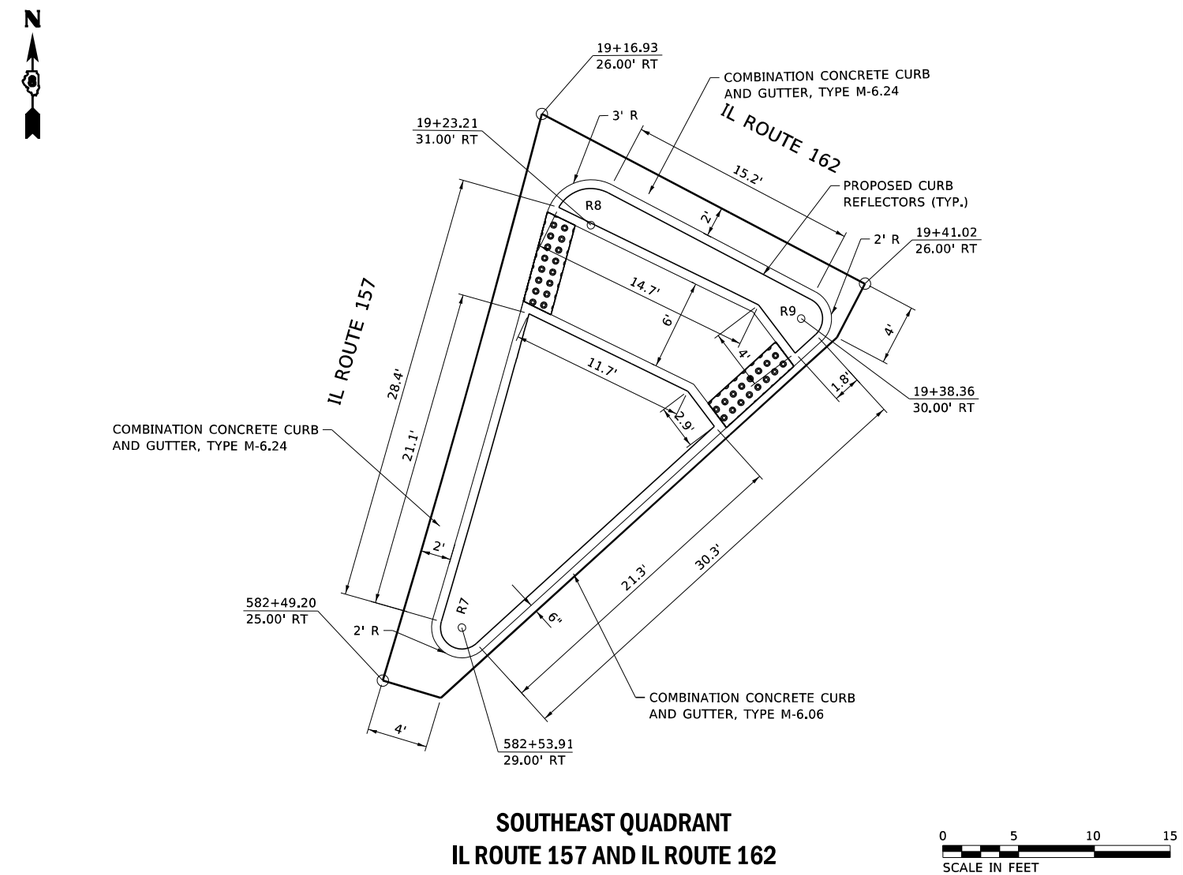

SOUTHEAST QUADRANT
IL ROUTE 157 AND IL ROUTE 162

FILE NAME: \\loch.loc\root\Production\Files\2020\420-0018\CAD\CADD Sheets\D876A46-sht-Island Details.dgn

LOCHMUELLER GROUP
1928 SrA Bradley R. Smith Drive
Troy, IL 62294
PHONE: 618.667.1400

USER NAME = alexhuelskamp	DESIGNED - ESW	REVISED -	
MODEL NAME = ISLAND DETAILS	DRAWN - LEC	REVISED -	
PLOT SCALE = 40.0000' / in.	CHECKED - BRM	REVISED -	
PLOT DATE = 3/5/2024	DATE - 10/8/2021	REVISED -	

STATE OF ILLINOIS
DEPARTMENT OF TRANSPORTATION

ISLAND DETAILS
IL ROUTE 157 AND IL ROUTE 162

SCALE: | SHEET 1 OF 1 SHEETS

F.A.P. RTE.	SECTION	COUNTY	TOTAL SHEETS	SHEET NO.
*	51-1R	MADISON	296	111
		CONTRACT NO. 76A46		
	ILLINOIS	FED. AID PROJECT		

*586/592

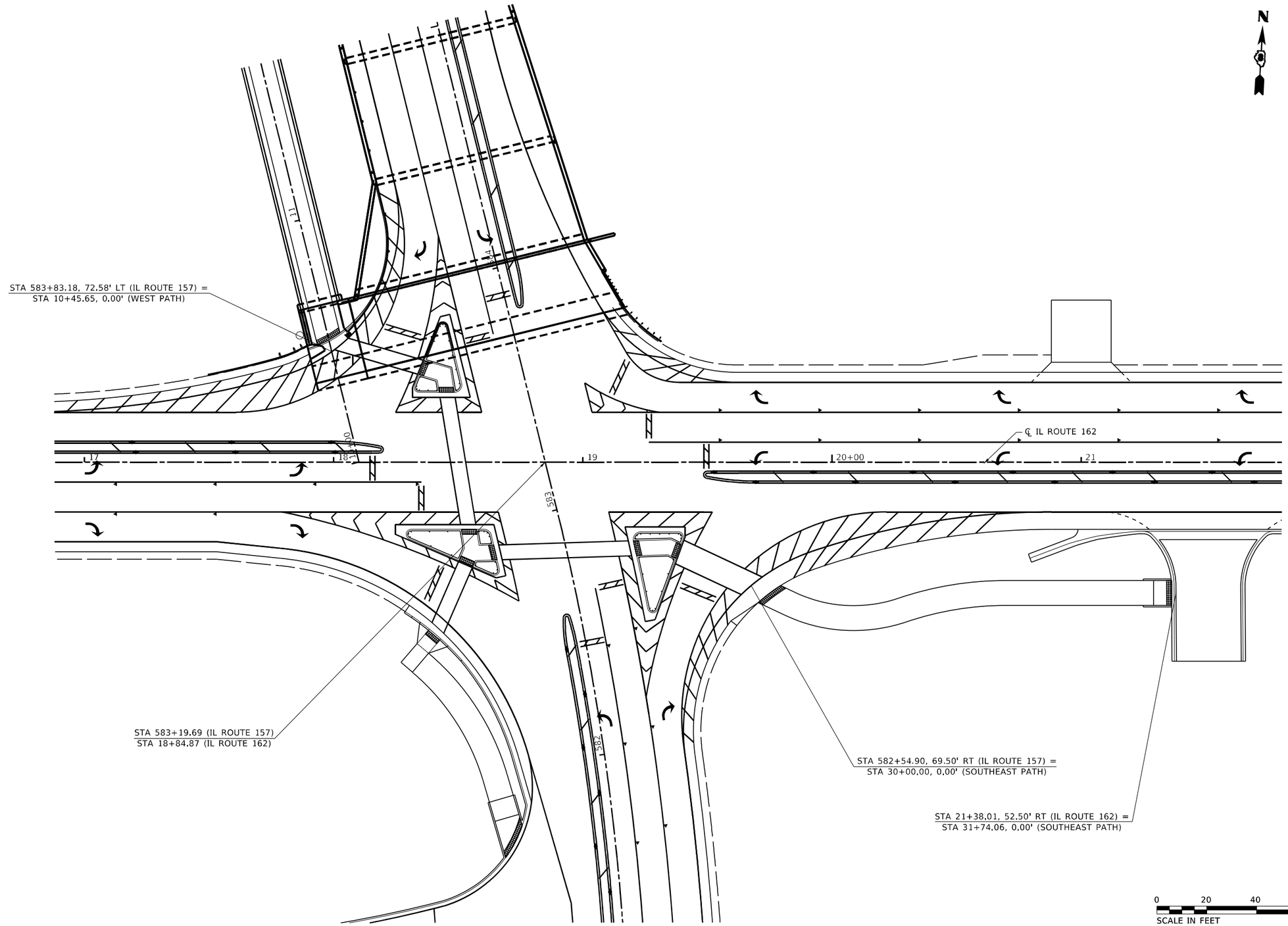

FILE NAME: \\lochlocvrost\Production\Files\2020\20-001B\CAD\CADD Sheets\0876A46-sht-Curb Ramp Details.dgn

LOCHMUELLER GROUP
1928 S.W. Bradley R. Smith Drive
Troy, IL 62294
PHONE: 618.667.1400

USER NAME = alex.huelskamp	DESIGNED - ESW	REVISED -	
MODEL NAME = RAMP DET 01	DRAWN - LEC	REVISED -	
PLOT SCALE = 40.0000 ' / in.	CHECKED - BRM	REVISED -	
PLOT DATE = 3/5/2024	DATE - 10/8/2021	REVISED -	

STATE OF ILLINOIS
DEPARTMENT OF TRANSPORTATION

CURB RAMP DETAILS
IL ROUTE 157 AND IL ROUTE 162

SCALE: 1"=20' | SHEET 1 OF 4 SHEETS | RAMP PLAN

F.A.P. RTE.	SECTION	COUNTY	TOTAL SHEETS	SHEET NO.
*	51-1R	MADISON	296	112
		CONTRACT NO. 76A46		
	ILLINOIS	FED. AID PROJECT		

*586/592

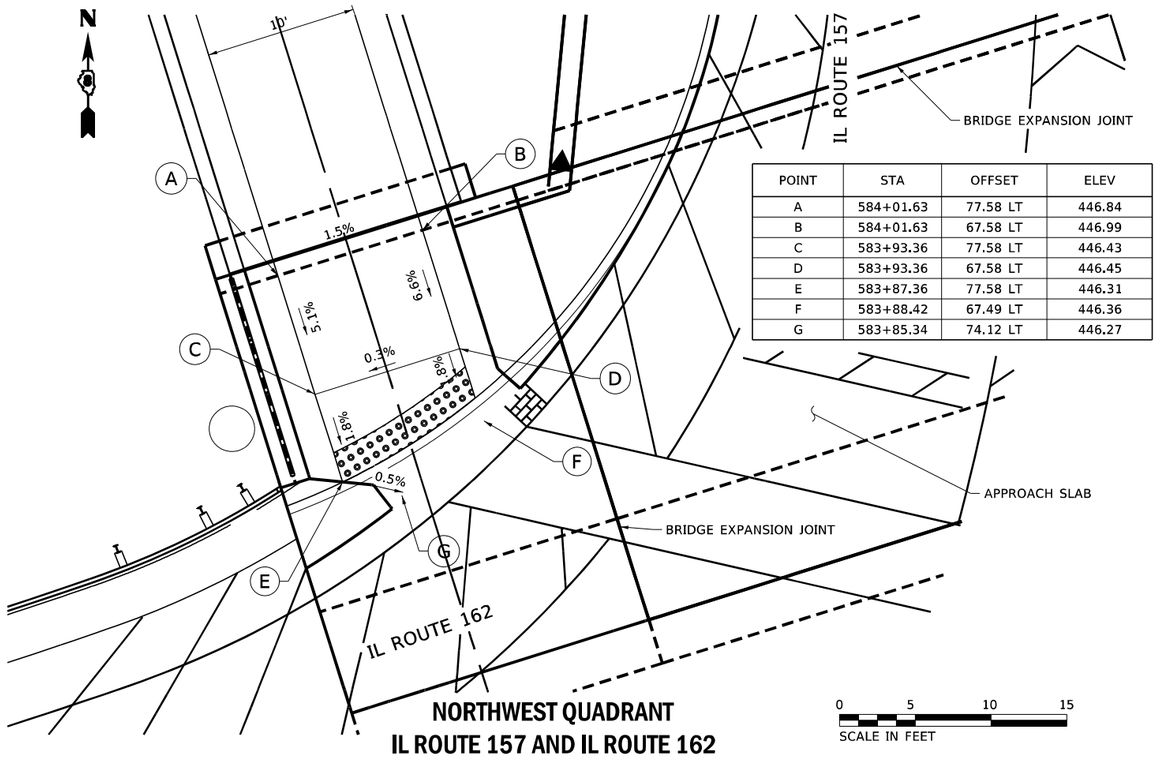

POINT	STA	OFFSET	ELEV
A	584+01.63	77.58 LT	446.84
B	584+01.63	67.58 LT	446.99
C	583+93.36	77.58 LT	446.43
D	583+93.36	67.58 LT	446.45
E	583+87.36	77.58 LT	446.31
F	583+88.42	67.49 LT	446.36
G	583+85.34	74.12 LT	446.27

NORTHWEST QUADRANT
IL ROUTE 157 AND IL ROUTE 162

0 5 10 15
SCALE IN FEET

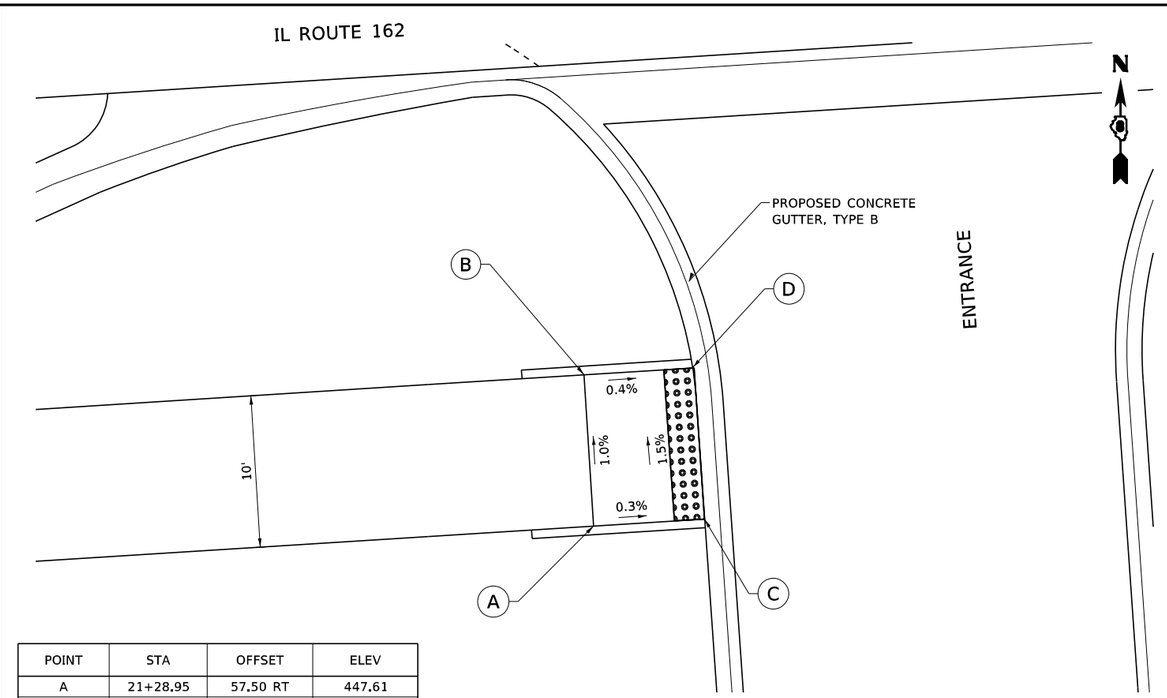

POINT	STA	OFFSET	ELEV
A	21+28.95	57.50 RT	447.61
B	21+28.98	47.50 RT	447.51
C	21+36.29	57.50 RT	447.63
D	21+36.13	47.50 RT	447.48

SOUTHEAST MULTI-USE PATH
IL ROUTE 162

0 5 10 15
SCALE IN FEET

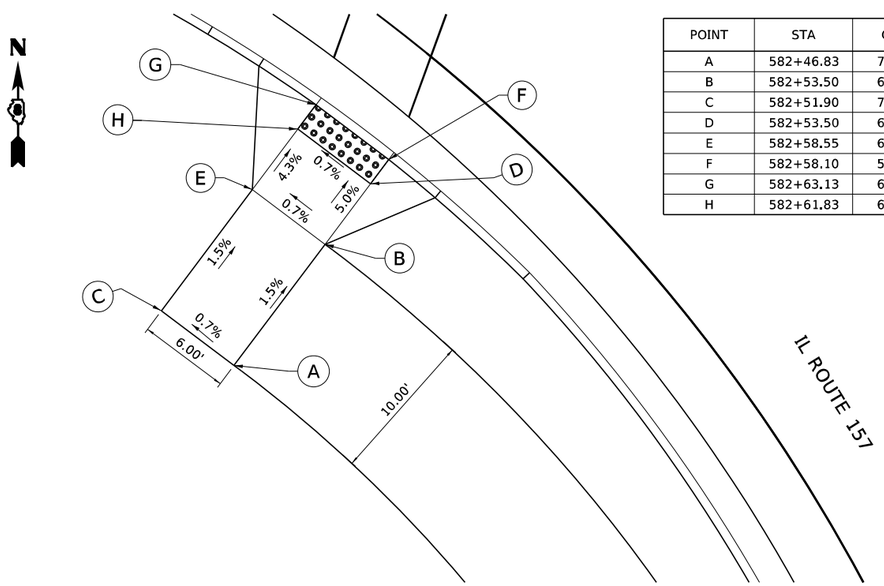

POINT	STA	OFFSET	ELEV
A	582+46.83	70.62 LT	445.85
B	582+53.50	62.79 LT	445.70
C	582+51.90	74.36 LT	445.81
D	582+53.50	62.79 LT	445.45
E	582+58.55	66.50 LT	445.66
F	582+58.10	57.29 LT	445.44
G	582+63.13	60.97 LT	445.40
H	582+61.83	62.55 LT	445.53

SOUTHWEST QUADRANT
IL ROUTE 157 AND IL ROUTE 162

0 5 10 15
SCALE IN FEET

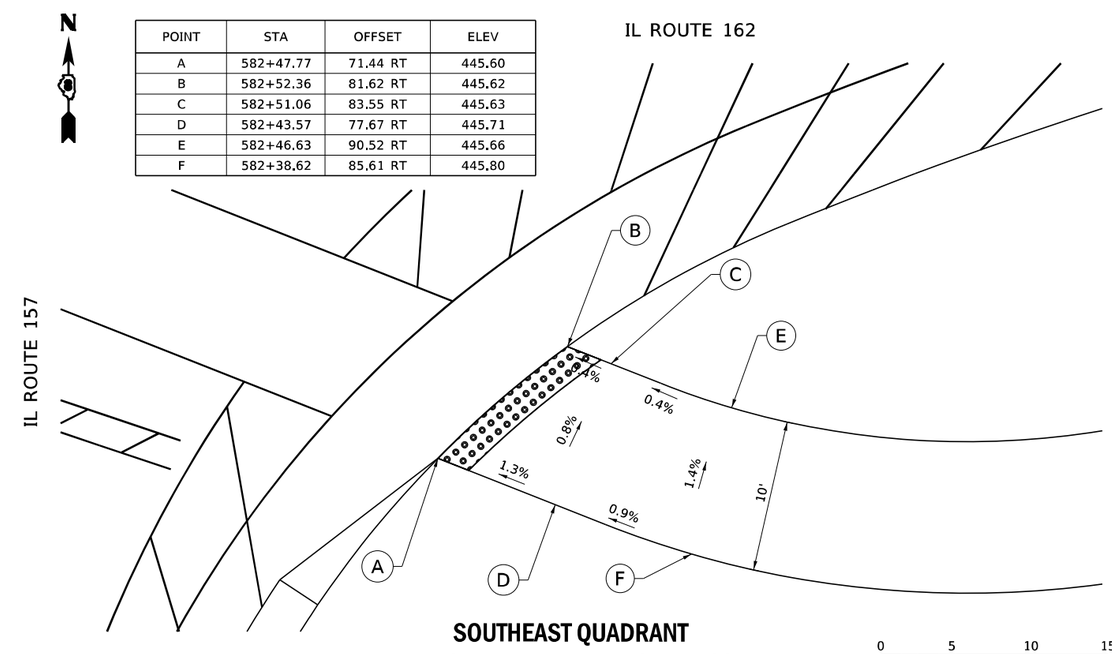

POINT	STA	OFFSET	ELEV
A	582+47.77	71.44 RT	445.60
B	582+52.36	81.62 RT	445.62
C	582+51.06	83.55 RT	445.63
D	582+43.57	77.67 RT	445.71
E	582+46.63	90.52 RT	445.66
F	582+38.62	85.61 RT	445.80

SOUTHEAST QUADRANT
IL ROUTE 157 AND IL ROUTE 162

0 5 10 15
SCALE IN FEET

FILE NAME: \\loch.loc\root\Production\Files\2020\420-0018\CAD\CADD Sheets\0B76A46-sht-Curb Ramp Details.dgn

LOCHMUELLER GROUP
1928 SrA Bradley R. Smith Drive
Troy, IL 62294
PHONE: 618.667.1400

USER NAME = alex.huelskamp	DESIGNED - ESW	REVISED -	
MODEL NAME = RAMP DET 02	DRAWN - LEC	REVISED -	
PLOT SCALE = 40.0000 ' / in.	CHECKED - BRM	REVISED -	
PLOT DATE = 3/5/2024	DATE - 10/8/2021	REVISED -	

STATE OF ILLINOIS
DEPARTMENT OF TRANSPORTATION

CURB RAMP DETAILS
IL ROUTE 157 AND IL ROUTE 162

SCALE: 1"=20' | SHEET 2 OF 4 SHEETS | RAMP DETAILS 2

F.A.P. RTE.	SECTION	COUNTY	TOTAL SHEETS	SHEET NO.
*	51-1R	MADISON	296	113
		CONTRACT NO. 76A46		
	ILLINOIS	FED. AID PROJECT		

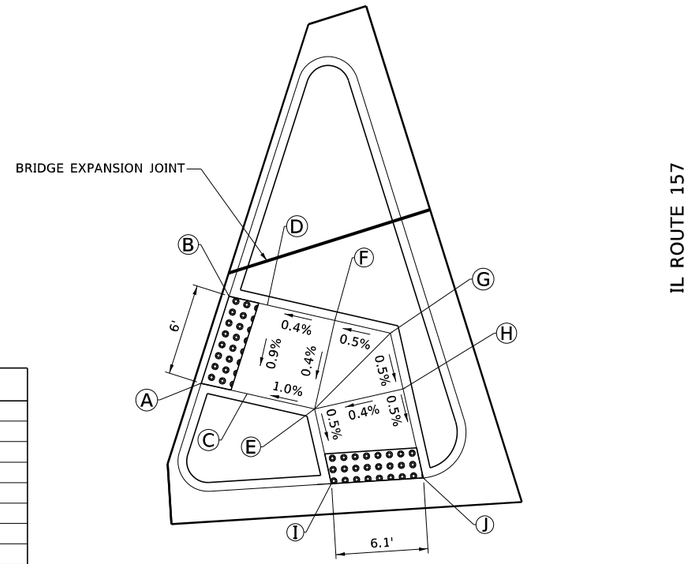

POINT	STA	OFFSET	ELEV
A	583+65.92	40.33 LT	446.55
B	583+70.85	36.36 LT	446.61
C	583+64.36	38.15 LT	446.56
D	583+69.54	35.13 LT	446.62
E	583+62.06	34.21 LT	446.61
F	583+67.25	31.19 LT	446.63
G	583+65.34	27.93 LT	446.65
H	583+61.58	28.23 LT	446.63
I	583+57.00	34.62 LT	446.58
J	583+55.58	27.72 LT	446.60

NORTHWEST QUADRANT
IL ROUTE 157 AND IL ROUTE 162

0 5 10 15
SCALE IN FEET

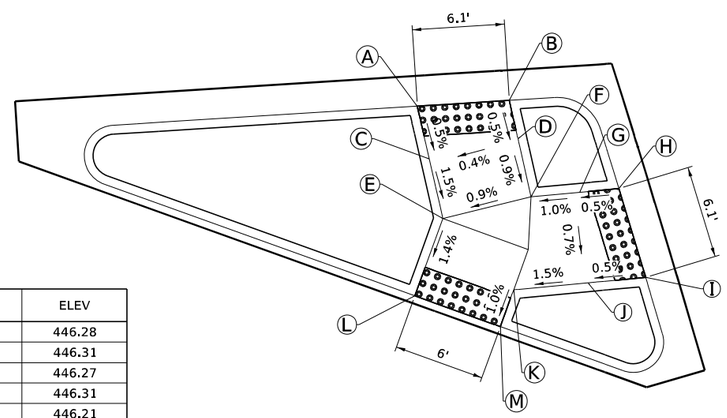

POINT	STA	OFFSET	ELEV
A	583+01.49	39.09 LT	446.28
B	583+00.04	33.18 LT	446.31
C	582+97.89	39.37 LT	446.27
D	582+97.40	33.39 LT	446.31
E	582+93.70	39.68 LT	446.21
F	582+93.34	33.69 LT	446.26
G	582+92.66	30.54 LT	446.29
H	582+92.12	28.00 LT	446.30
I	582+85.82	28.00 LT	446.27
J	582+86.60	31.74 LT	446.25
K	582+87.60	36.58 LT	446.17
L	582+89.17	42.94 LT	446.13
M	582+85.45	38.11 LT	446.14

SOUTHWEST QUADRANT
IL ROUTE 157 AND IL ROUTE 162

0 5 10 15
SCALE IN FEET

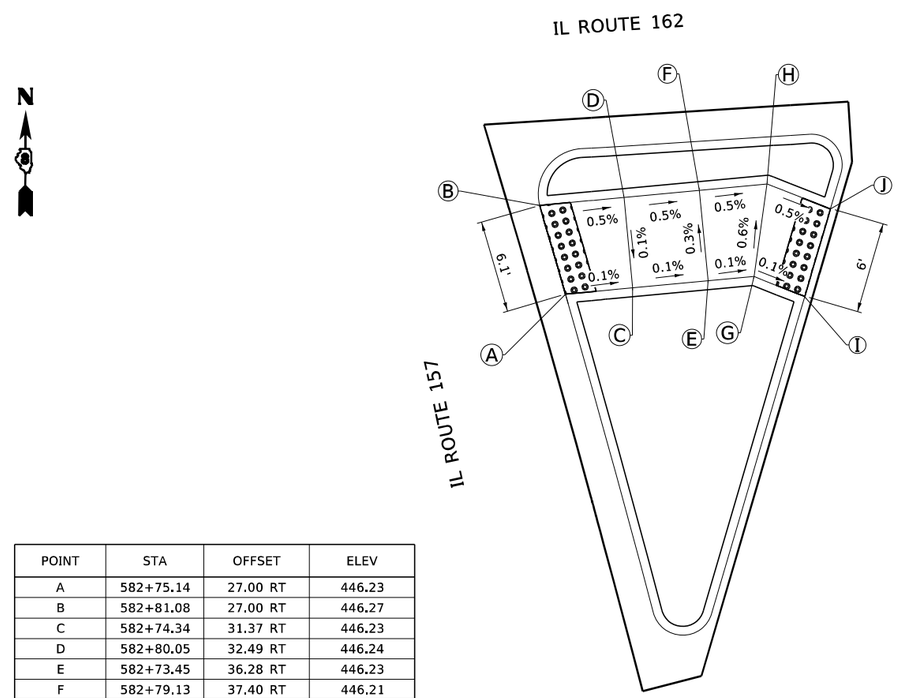

POINT	STA	OFFSET	ELEV
A	582+75.14	27.00 RT	446.23
B	582+81.08	27.00 RT	446.27
C	582+74.34	31.37 RT	446.23
D	582+80.05	32.49 RT	446.24
E	582+73.45	36.28 RT	446.23
F	582+79.13	37.40 RT	446.21
G	582+72.91	39.29 RT	446.23
H	582+78.32	41.81 RT	446.19
I	582+70.81	42.14 RT	446.23
J	582+75.69	45.36 RT	446.17

SOUTHEAST QUADRANT
IL ROUTE 157 AND IL ROUTE 162

0 5 10 15
SCALE IN FEET

FILE NAME: X:\Production\Files\2020\20-0018\CAD\CADD Sheets\0876A46-sht-Curb Ramp Details.dgn

LOCHMUELLER GROUP
1928 Sok Bradley R. Smith Drive
Troy, IL 62294
PHONE: 618.667.1400

USER NAME = linda	DESIGNED - ESW	REVISED -	
MODEL NAME = RAMP DET 03	DRAWN - LEC	REVISED -	
PLOT SCALE = 40.0000' / in.	CHECKED - BRM	REVISED -	
PLOT DATE = 3/7/2024	DATE - 10/8/2021	REVISED -	

STATE OF ILLINOIS
DEPARTMENT OF TRANSPORTATION

CURB RAMP DETAILS
IL ROUTE 157 AND IL ROUTE 162

SCALE: 1"=5' | SHEET 3 OF 4 SHEETS

F.A.P. RTE.	SECTION	COUNTY	TOTAL SHEETS	SHEET NO.
*	51-1R	MADISON	296	114

CONTRACT NO. 76A46

ILLINOIS | FED. AID PROJECT

*586/592

POINT	STA	OFFSET	ELEV
A	581+88.45	38.47' LT	445.72
B	581+86.83	48.35' LT	445.57
C	581+80.24	37.21' LT	445.30
D	581+78.54	47.07' LT	445.20
E	581+76.41	36.59' LT	445.24
F	581+63.60	44.59' LT	444.96

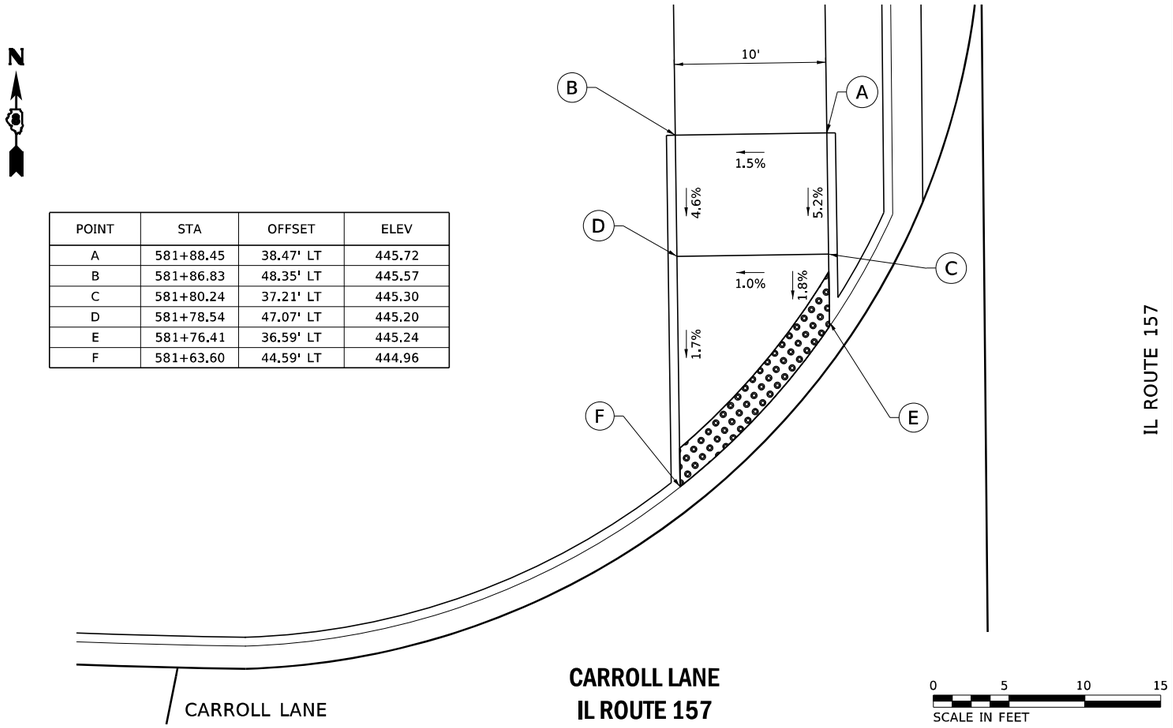

FILE NAME: \\loch.loc\root\Production\Files\2020\220-0018\CAD\CADD Sheets\D876A46-sht-Curb Ramp Details.dgn

LOCHMUELLER GROUP
1928 Sgt Bradley R. Smith Drive
Troy, IL 62294
PHONE: 618.607.1400

USER NAME = alexhuelskamp	DESIGNED - ESW	REVISED -	
MODEL NAME = RAMP DET 04	DRAWN - LEC	REVISED -	
PLOT SCALE = 40.0000 ' / in.	CHECKED - BRM	REVISED -	
PLOT DATE = 3/5/2024	DATE - 10/8/2021	REVISED -	

STATE OF ILLINOIS
DEPARTMENT OF TRANSPORTATION

CURB RAMP DETAILS
IL ROUTE 157

SCALE: 1"=20' | SHEET 4 OF 4 SHEETS | RAMP DETAILS 4

F.A.P. RTE.	SECTION	COUNTY	TOTAL SHEETS	SHEET NO.
*	51-1R	MADISON	296	115
		CONTRACT NO. 76A46		
	ILLINOIS	FED. AID PROJECT		

*586/592

NORTHWEST QUARDRANT

POINT	ELEVATION	ROADWAY STATION	ROADWAY OFFSET	NORTHING	EASTING
IL ROUTE 162					
100	454.64	16+52.28	-20.00	755,307.44	2,343,553.37
101	445.65	16+62.28	-20.00	755,308.07	2,343,563.35
102	445.66	16+72.28	-20.00	755,308.70	2,343,573.33
103	445.67	16+82.28	-20.13	755,309.46	2,343,583.30
104	445.68	16+92.27	-20.50	755,310.46	2,343,593.25
105	445.69	17+02.25	-21.12	755,311.72	2,343,603.17
106	445.70	17+12.22	-22.00	755,313.22	2,343,613.06
107	445.71	17+22.15	-23.12	755,314.97	2,343,622.90
108	445.77	17+32.06	-24.49	755,316.96	2,343,632.70
109	445.84	17+41.93	-26.11	755,319.20	2,343,642.45
110	445.90	17+51.75	-27.97	755,321.68	2,343,652.13
111	445.97	17+61.52	-30.08	755,324.40	2,343,661.76
112	446.03	17+71.24	-32.44	755,327.36	2,343,671.31
113	446.17	17+80.89	-35.07	755,330.60	2,343,680.77
114	446.31	17+90.15	-38.83	755,334.94	2,343,689.77

NORTHEAST QUARDRANT

POINT	ELEVATION	ROADWAY STATION	ROADWAY OFFSET	NORTHING	EASTING
IL ROUTE 162					
200	445.89	20+31.95	-32.00	755,343.38	2,343,931.52
201	445.87	20+21.95	-32.00	755,342.75	2,343,921.54
202	445.85	20+11.95	-32.00	755,342.12	2,343,911.56
203	445.85	20+10.00	-32.00	755,342.00	2,343,909.61
204	445.90	20+01.95	-32.00	755,341.49	2,343,901.58
205	445.97	19+91.95	-32.00	755,340.86	2,343,891.60
206	446.04	19+81.95	-32.00	755,340.23	2,343,881.62
207	446.11	19+71.95	-32.00	755,339.60	2,343,871.64
208	446.18	19+61.95	-32.00	755,338.96	2,343,861.66
209	446.25	19+51.99	-32.77	755,339.10	2,343,851.67
210	446.32	19+42.26	-35.05	755,340.77	2,343,841.82
211	446.40	19+33.00	-38.80	755,343.92	2,343,832.34
212	446.47	19+24.42	-43.92	755,348.50	2,343,823.46
213	446.54	19+16.74	-50.30	755,354.37	2,343,815.38

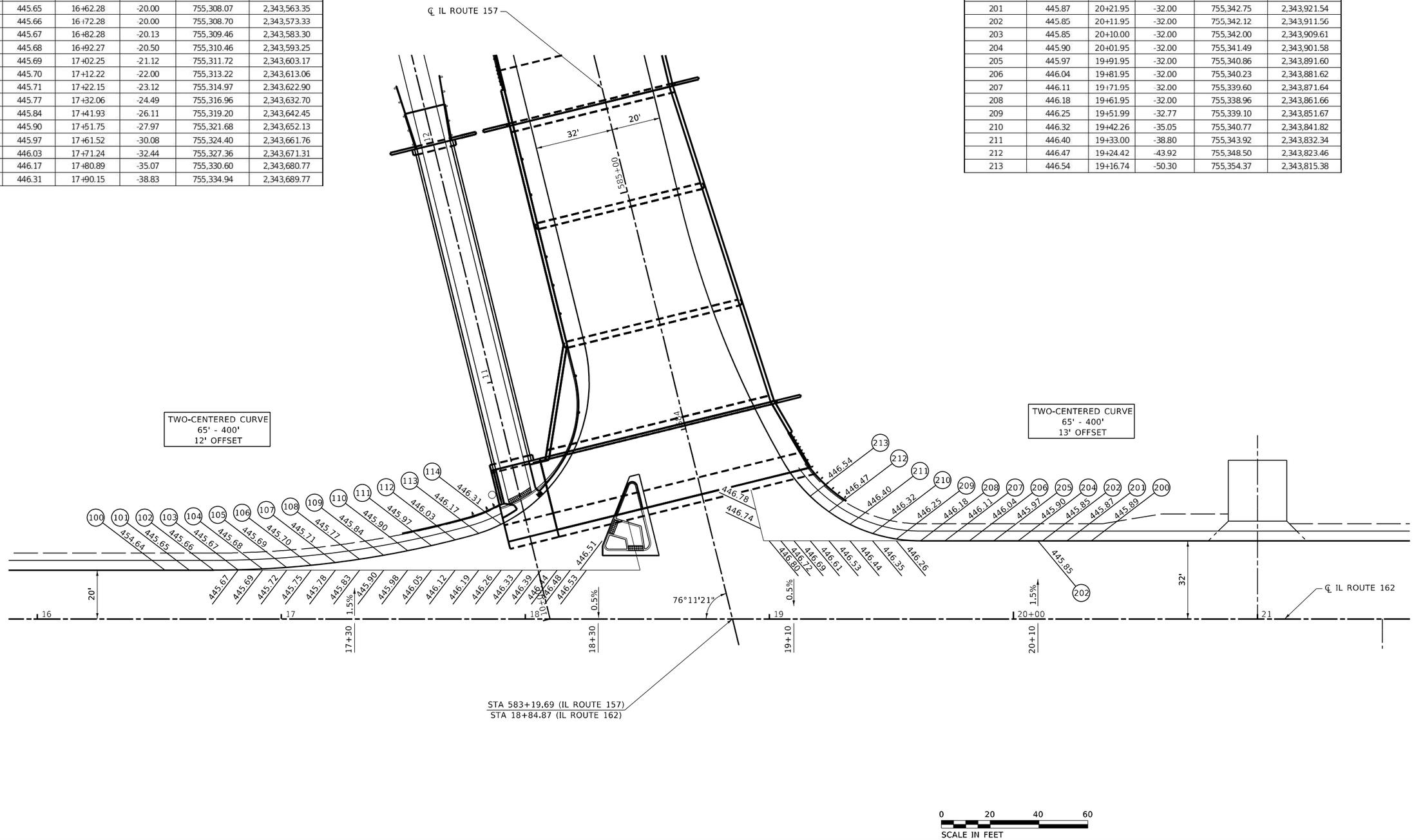

FILE NAME: \\loch.loc\root\Production\Files\2020\20-0018\CAD\CADD Sheets\D876A46-sht-Pavt Warp Elevs.dgn

LOCHMUELLER GROUP
1928 S-A Bradley R. Smith Drive
Troy, IL 62294
PHONE: 618.667.1400

USER NAME = alex.huelskamp	DESIGNED - ESW	REVISED -	STATE OF ILLINOIS DEPARTMENT OF TRANSPORTATION	PAVEMENT ELEVATION DETAILS IL ROUTE 157 AND IL ROUTE 162	
MODEL NAME = WARP 01	DRAWN - LEC	REVISED -			
PLOT SCALE = 40.0000 ' / in.	CHECKED - BRM	REVISED -			
PLOT DATE = 3/5/2024	DATE - 10/8/2021	REVISED -		SCALE: 1"=20' SHEET 1 OF 5 SHEETS WARP 157/162	

F.A.P. RTE.	SECTION	COUNTY	TOTAL SHEETS	SHEET NO.
*	51-1R	MADISON	296	116
		CONTRACT NO. 76A46		
	ILLINOIS	FED. AID PROJECT		

*586/592

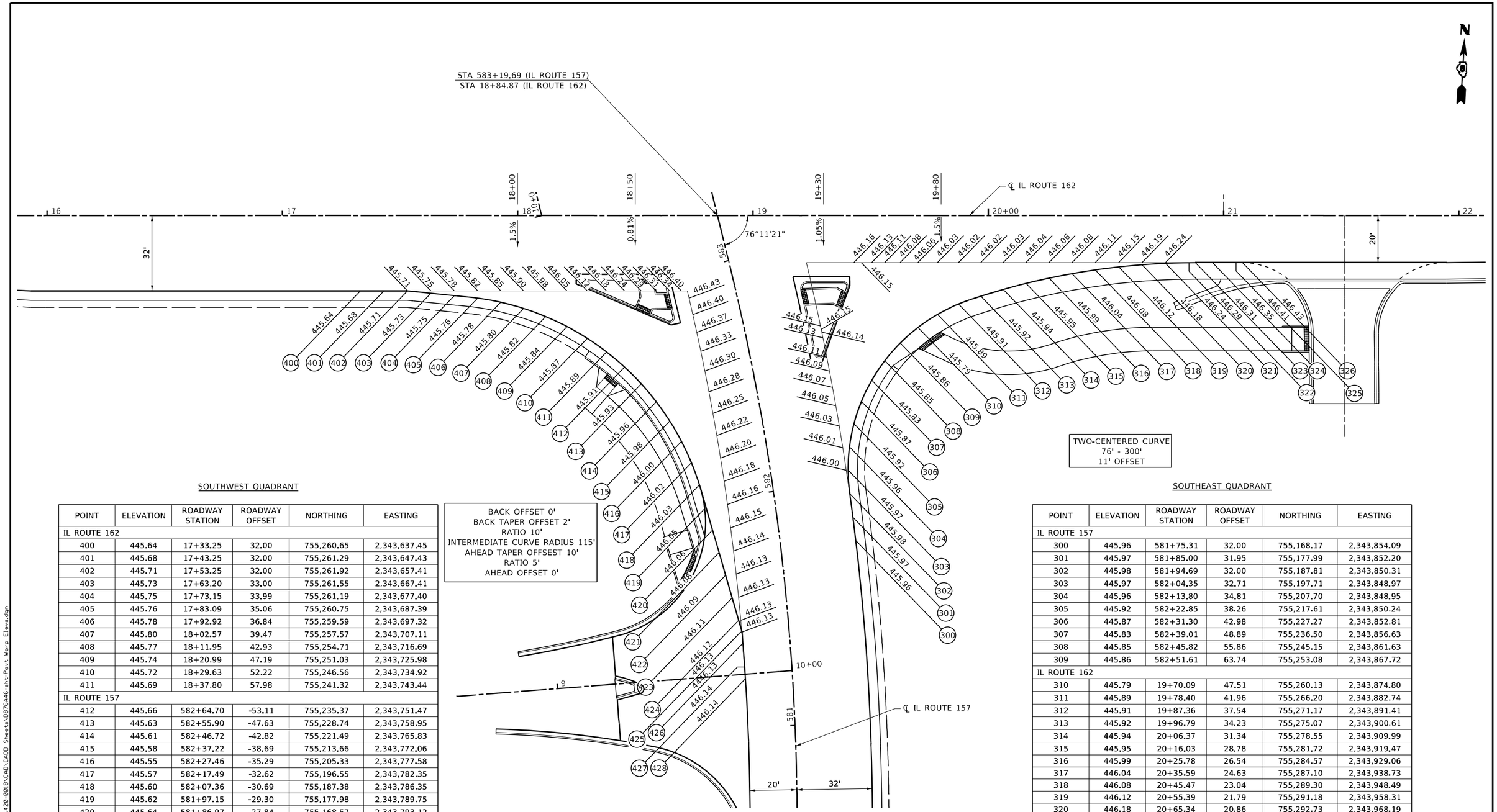

SOUTHWEST QUADRANT

POINT	ELEVATION	ROADWAY STATION	ROADWAY OFFSET	NORTHING	EASTING
IL ROUTE 162					
400	445.64	17+33.25	32.00	755,260.65	2,343,637.45
401	445.68	17+43.25	32.00	755,261.29	2,343,647.43
402	445.71	17+53.25	32.00	755,261.92	2,343,657.41
403	445.73	17+63.20	33.00	755,261.55	2,343,667.41
404	445.75	17+73.15	33.99	755,261.19	2,343,677.40
405	445.76	17+83.09	35.06	755,260.75	2,343,687.39
406	445.78	17+92.92	36.84	755,259.59	2,343,697.32
407	445.80	18+02.57	39.47	755,257.57	2,343,707.11
408	445.77	18+11.95	42.93	755,254.71	2,343,716.69
409	445.74	18+20.99	47.19	755,251.03	2,343,725.98
410	445.72	18+29.63	52.22	755,246.56	2,343,734.92
411	445.69	18+37.80	57.98	755,241.32	2,343,743.44
IL ROUTE 157					
412	445.66	582+64.70	-53.11	755,235.37	2,343,751.47
413	445.63	582+55.90	-47.63	755,228.74	2,343,758.95
414	445.61	582+46.72	-42.82	755,221.49	2,343,765.83
415	445.58	582+37.22	-38.69	755,213.66	2,343,772.06
416	445.55	582+27.46	-35.29	755,205.33	2,343,777.58
417	445.57	582+17.49	-32.62	755,196.55	2,343,782.35
418	445.60	582+07.36	-30.69	755,187.38	2,343,786.35
419	445.62	581+97.15	-29.30	755,177.98	2,343,789.75
420	445.64	581+86.97	-27.84	755,168.57	2,343,793.12
421	445.75	581+76.82	-26.28	755,159.15	2,343,796.50
422	445.86	581+66.70	-24.61	755,149.74	2,343,799.87
423	445.97	581+56.62	-22.85	755,140.32	2,343,803.24
424	446.07	581+46.57	-20.99	755,130.91	2,343,806.61
425	446.13	581+41.46	-20.00	755,126.11	2,343,808.33
426	446.13	581+36.46	-20.00	755,121.26	2,343,809.04
427	446.14	581+26.26	-20.00	755,111.35	2,343,810.40
428	446.14	581+21.05	-20.00	755,106.29	2,343,811.05

SOUTHEAST QUADRANT

POINT	ELEVATION	ROADWAY STATION	ROADWAY OFFSET	NORTHING	EASTING
IL ROUTE 157					
300	445.96	581+75.31	32.00	755,168.17	2,343,854.09
301	445.97	581+85.00	31.95	755,177.99	2,343,852.20
302	445.98	581+94.69	32.00	755,187.81	2,343,850.31
303	445.97	582+04.35	32.71	755,197.71	2,343,848.97
304	445.96	582+13.80	34.81	755,207.70	2,343,848.95
305	445.92	582+22.85	38.26	755,217.61	2,343,850.24
306	445.87	582+31.30	42.98	755,227.27	2,343,852.81
307	445.83	582+39.01	48.89	755,236.50	2,343,856.63
308	445.85	582+45.82	55.86	755,245.15	2,343,861.63
309	445.86	582+51.61	63.74	755,253.08	2,343,867.72
IL ROUTE 162					
310	445.79	19+70.09	47.51	755,260.13	2,343,874.80
311	445.89	19+78.40	41.96	755,266.20	2,343,882.74
312	445.91	19+87.36	37.54	755,271.17	2,343,891.41
313	445.92	19+96.79	34.23	755,275.07	2,343,900.61
314	445.94	20+06.37	31.34	755,278.55	2,343,909.99
315	445.95	20+16.03	28.78	755,281.72	2,343,919.47
316	445.99	20+25.78	26.54	755,284.57	2,343,929.06
317	446.04	20+35.59	24.63	755,287.10	2,343,938.73
318	446.08	20+45.47	23.04	755,289.30	2,343,948.49
319	446.12	20+55.39	21.79	755,291.18	2,343,958.31
320	446.18	20+65.34	20.86	755,292.73	2,343,968.19
321	446.24	20+75.33	20.27	755,293.95	2,343,978.11
322	446.29	20+85.32	20.01	755,294.84	2,343,988.07
323	446.31	20+88.08	20.00	755,295.03	2,343,990.82
324	446.35	20+95.32	20.00	755,295.49	2,343,998.05
325	446.41	21+05.32	20.00	755,296.12	2,344,008.03
326	446.43	21+08.08	20.00	755,296.29	2,344,010.78

0 20 40 60
SCALE IN FEET

FILE NAME: \\loch.loc\root\Production\Files\2020\420-0018\CAD\CADD Sheets\D876A46-sht-Pave Warp Elevs.dgn

LOCHMUELLER GROUP
3928 Sth Bradley R. Smith Drive
Troy, IL 62294
PHONE: 618.667.1400

USER NAME = alex.huelskamp	DESIGNED - ESW	REVISED -	
MODEL NAME = WARP 02	DRAWN - LEC	REVISED -	
PLOT SCALE = 40.0000 ' / in.	CHECKED - BRM	REVISED -	
PLOT DATE = 3/5/2024	DATE - 10/8/2021	REVISED -	

STATE OF ILLINOIS
DEPARTMENT OF TRANSPORTATION

PAVEMENT ELEVATION DETAILS
IL ROUTE 157 AND IL ROUTE 162

SCALE: 1"=20' | SHEET 2 OF 5 SHEETS | WARP 157/162

F.A.P. RTE.	SECTION	COUNTY	TOTAL SHEETS	SHEET NO.
*	51-1R	MADISON	296	117
		CONTRACT NO. 76A46		
		ILLINOIS	FED. AID PROJECT	

*586/592

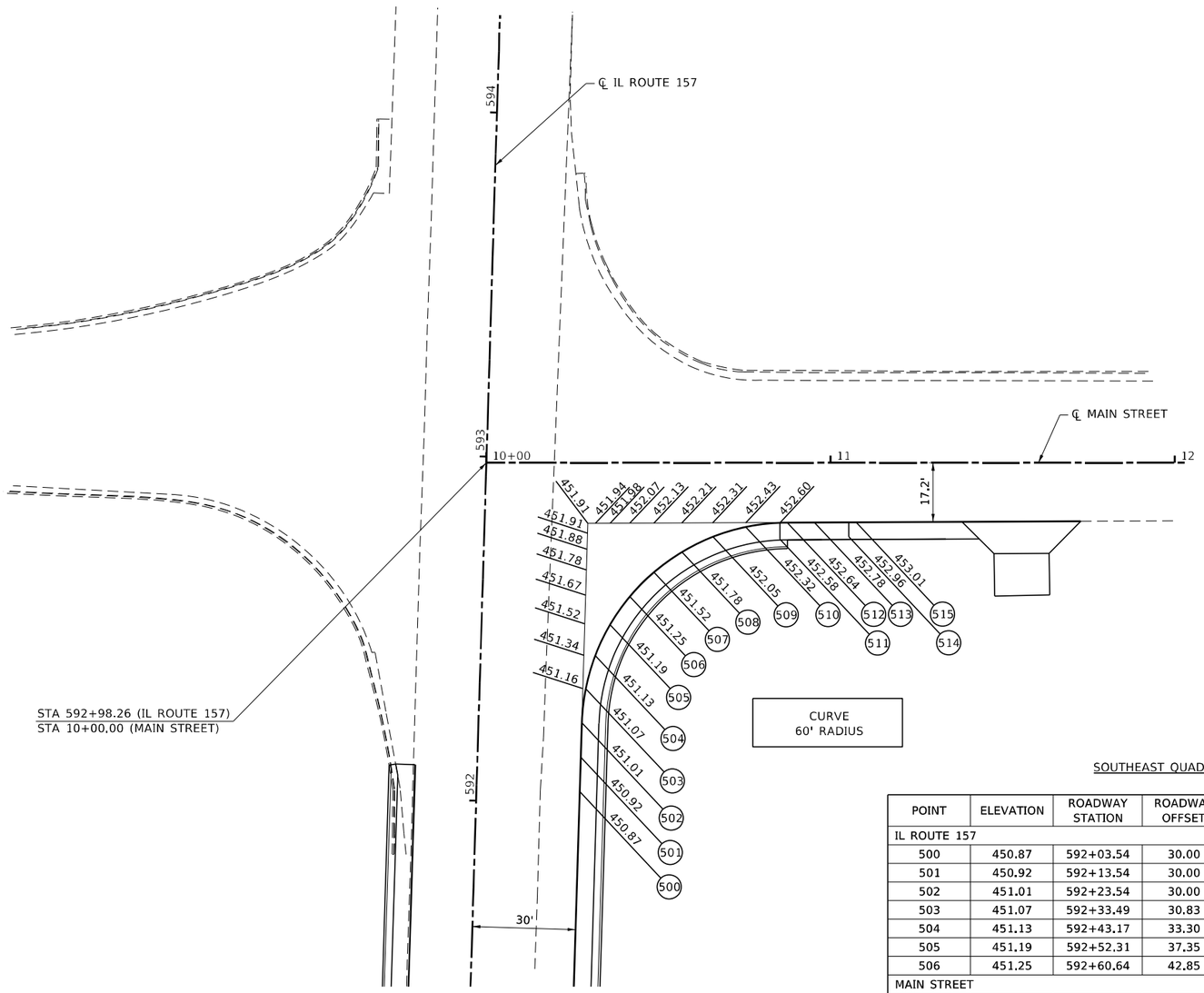

SOUTHEAST QUADRANT

POINT	ELEVATION	ROADWAY STATION	ROADWAY OFFSET	NORTHING	EASTING
IL ROUTE 157					
500	450.87	592+03.54	30.00	756,154.42	2,343,550.63
501	450.92	592+13.54	30.00	756,163.96	2,343,547.64
502	451.01	592+23.54	30.00	756,173.50	2,343,544.64
503	451.07	592+33.49	30.83	756,183.25	2,343,542.45
504	451.13	592+43.17	33.30	756,193.22	2,343,541.91
505	451.19	592+52.31	37.35	756,203.15	2,343,543.03
506	451.25	592+60.64	42.85	756,212.75	2,343,545.78
MAIN STREET					
507	451.52	10+48.72	31.80	756,221.76	2,343,550.09
508	451.78	10+56.82	25.96	756,229.93	2,343,555.83
509	452.05	10+65.78	21.55	756,237.04	2,343,562.85
510	452.32	10+75.35	18.69	756,242.88	2,343,570.95
511	452.58	10+85.27	17.46	756,247.30	2,343,579.91
512	452.64	10+87.44	17.41	756,248.06	2,343,581.94
513	452.78	10+95.27	17.37	756,250.66	2,343,589.33
514	452.96	11+05.27	17.33	756,253.99	2,343,598.76
515	453.01	11+07.44	17.32	756,254.71	2,343,600.81

0 20 40 60
SCALE IN FEET

FILE NAME: \\loch.loc\root\Production\Files\2020\420-0018\CAD\CADD Sheets\D876A46-sht-Pavt Warp Elevs.dgn

LOCHMUELLER GROUP
1928 S-A Bradley R. Smith Drive
Troy, IL 62294
PHONE: 618.667.1400

USER NAME = alexhuelskamp	DESIGNED - ESW	REVISED -	
MODEL NAME = WARP 03	DRAWN - LEC	REVISED -	
PLOT SCALE = 40.0000 ' / in.	CHECKED - BRM	REVISED -	
PLOT DATE = 3/5/2024	DATE - 10/8/2021	REVISED -	

STATE OF ILLINOIS
DEPARTMENT OF TRANSPORTATION

PAVEMENT ELEVATION DETAILS
IL ROUTE 157 AND MAIN STREET

SCALE: 1"=20' | SHEET 3 OF 5 SHEETS | WARP 157/MAIN

F.A.P. RTE.	SECTION	COUNTY	TOTAL SHEETS	SHEET NO.
*	51-1R	MADISON	296	118
		CONTRACT NO. 76A46		
		ILLINOIS	FED. AID PROJECT	

*586/592

NORTHWEST QUADRANT

POINT	ELEVATION	ROADWAY STATION	ROADWAY OFFSET	NORTHING	EASTING
CARROLL LANE					
700	442.69	9+05.23	-17.09	755,114.83	2,343,734.37
701	442.87	9+15.13	-18.49	755,117.59	2,343,743.98
702	442.98	9+25.00	-20.09	755,120.55	2,343,753.53
703	443.64	9+34.71	-22.39	755,124.19	2,343,762.83
704	444.30	9+43.77	-26.60	755,129.62	2,343,771.21
705	444.88	9+51.80	-32.52	755,136.60	2,343,778.34
IL ROUTE 157					
706	445.08	581+64.53	-41.13	755,144.86	2,343,783.95
707	445.28	581+73.27	-35.74	755,154.07	2,343,787.80
708	445.43	581+82.87	-32.05	755,163.86	2,343,789.74
709	445.51	581+92.99	-30.17	755,173.85	2,343,789.70
710	445.58	582+03.28	-30.18	755,183.62	2,343,787.68
711	445.60	582+05.94	-30.49	755,186.08	2,343,786.84
712	445.58	582+13.47	-31.76	755,192.93	2,343,784.04
713	445.56	582+23.51	-34.13	755,201.88	2,343,779.57
714	445.55	582+26.09	-34.87	755,204.13	2,343,778.29

SOUTHWEST QUADRANT

POINT	ELEVATION	ROADWAY STATION	ROADWAY OFFSET	NORTHING	EASTING
IL ROUTE 157					
600	446.37	580+20.23	-20.00	755,007.81	2,343,818.53
601	446.34	580+30.44	-20.00	755,017.81	2,343,818.22
602	446.30	580+40.64	-20.00	755,027.80	2,343,817.82
603	446.22	580+50.79	-20.95	755,037.68	2,343,816.37
604	446.13	580+60.59	-23.75	755,047.07	2,343,812.98
605	446.05	580+69.70	-28.32	755,055.60	2,343,807.80
606	445.79	580+77.80	-34.50	755,062.94	2,343,801.03
607	445.52	580+84.57	-42.06	755,068.78	2,343,792.93
CARROLL LANE					
608	444.80	9+48.37	31.33	755,072.90	2,343,783.84
609	444.18	9+39.05	27.77	755,075.12	2,343,774.10
610	443.57	9+29.38	25.20	755,076.32	2,343,764.18
611	443.29	9+25.00	24.12	755,076.78	2,343,759.69
612	443.09	9+19.65	22.87	755,077.27	2,343,754.22
613	442.78	9+09.87	20.79	755,077.97	2,343,744.25
614	442.67	9+05.44	19.93	755,078.20	2,343,739.74

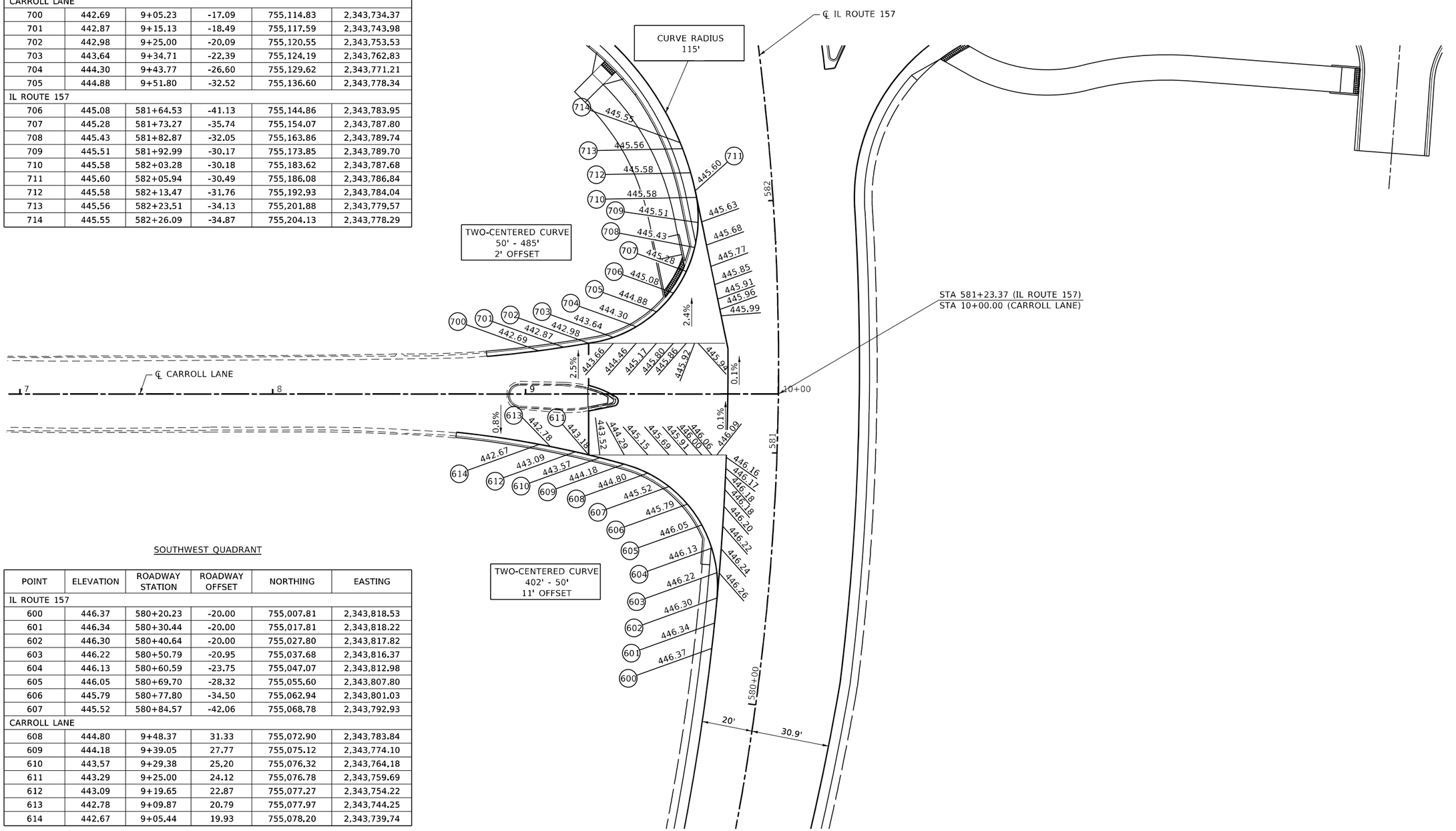

FILE NAME: \\loch.loc\root\Production\Files\2020\420-0018\CADD\CADD Sheets\D876A46-sht-Pavt Warp Elevs.dgn

LOCHMUELLER GROUP
1928 SrA Bradley R. Smalts Drive
Troy, IL 62294
PHONE: 618.667.1400

USER NAME = Joe.Kovarik	DESIGNED - ESW	REVISED -	
MODEL NAME = WARP 04	DRAWN - LEC	REVISED -	
PLOT SCALE = 40.0000 ' / in.	CHECKED - BRM	REVISED -	
PLOT DATE = 3/6/2024	DATE - 10/8/2021	REVISED -	

STATE OF ILLINOIS
DEPARTMENT OF TRANSPORTATION

PAVEMENT ELEVATION DETAILS
IL ROUTE 157 AND CARROLL LANE

SCALE: 1"=20' | SHEET 4 OF 5 SHEETS | WARP CAROLL

F.A.P. RTE.	SECTION	COUNTY	TOTAL SHEETS	SHEET NO.
*	51-1R	MADISON	296	119
		CONTRACT NO. 76A46		
		ILLINOIS	FED. AID PROJECT	

*586/592

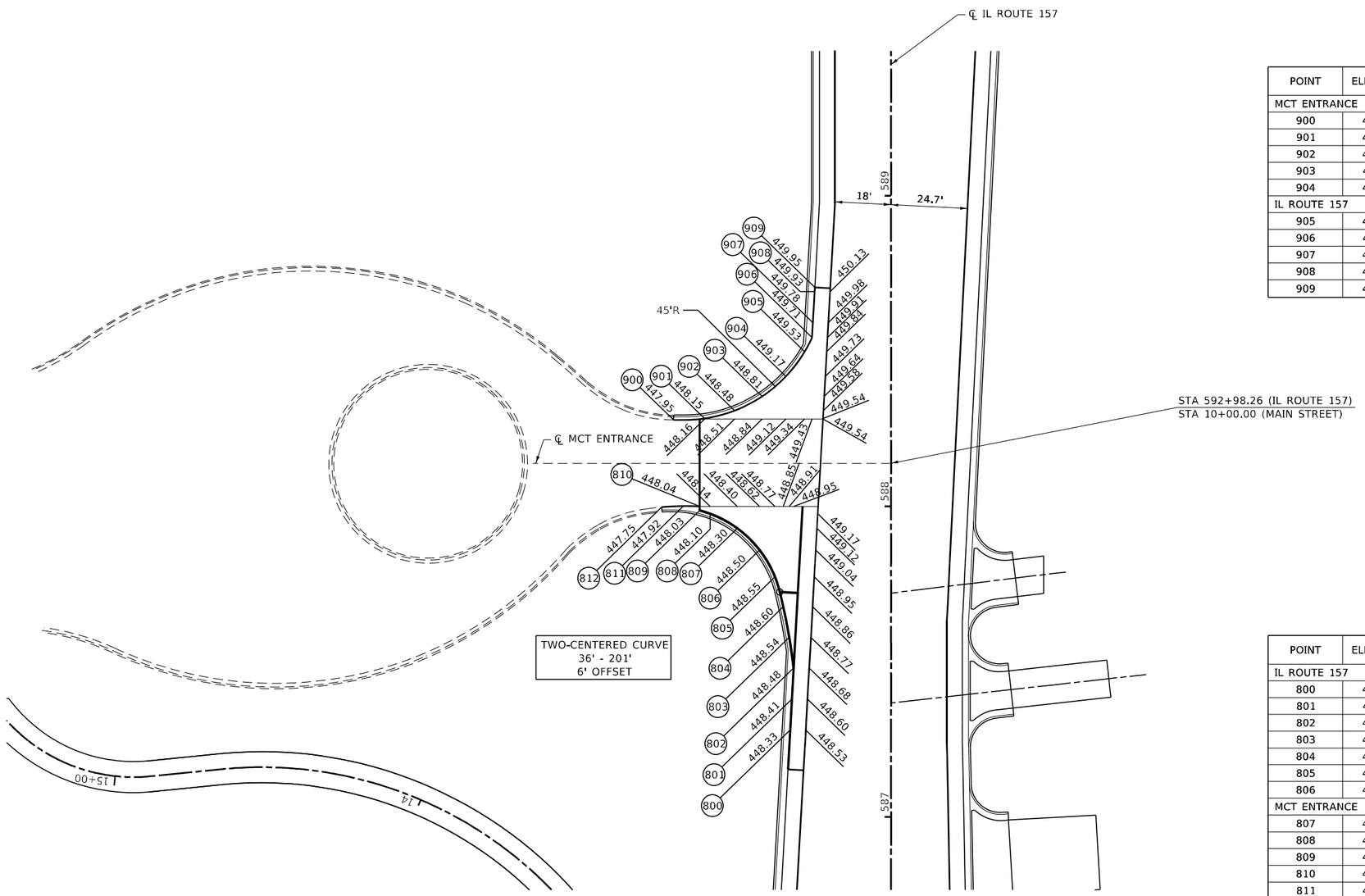

NORTHWEST QUADRANT

POINT	ELEVATION	ROADWAY STATION	ROADWAY OFFSET	NORTHING	EASTING
MCT ENTRANCE					
900	447.95	29+30.04	-13.93	755,765.95	2,343,567.82
901	448.15	29+40.02	-14.42	755,769.41	2,343,577.19
902	448.48	29+49.68	-16.94	755,774.71	2,343,585.65
903	448.81	29+58.54	-21.53	755,781.74	2,343,592.73
904	449.17	29+66.17	-27.96	755,790.16	2,343,598.09
IL ROUTE 157					
905	449.53	588+49.74	-27.80	755,799.55	2,343,601.46
906	449.71	588+54.33	-25.41	755,804.64	2,343,602.37
907	449.78	588+59.15	-25.14	755,809.32	2,343,601.18
908	449.93	588+69.13	-24.59	755,819.01	2,343,598.72
909	449.95	588+70.46	-24.51	755,820.30	2,343,598.39

SOUTHWEST QUADRANT

POINT	ELEVATION	ROADWAY STATION	ROADWAY OFFSET	NORTHING	EASTING
IL ROUTE 157					
800	448.33	587+27.96	-32.43	755,681.97	2,343,633.52
801	448.41	587+37.94	-31.87	755,691.67	2,343,631.06
802	448.48	587+47.93	-31.32	755,701.36	2,343,628.60
803	448.54	587+57.82	-32.74	755,710.37	2,343,624.28
804	448.60	587+67.64	-34.65	755,719.17	2,343,619.52
805	448.55	587+77.26	-37.33	755,727.54	2,343,614.08
806	448.50	587+85.91	-42.29	755,734.31	2,343,606.76
MCT ENTRANCE					
807	448.30	29+50.57	20.97	755,738.80	2,343,597.86
808	448.10	29+41.80	16.24	755,740.68	2,343,588.07
809	448.03	29+38.46	15.19	755,740.69	2,343,584.58
810	448.04	29+38.46	13.93	755,741.89	2,343,584.20
811	447.92	29+33.22	13.81	755,740.44	2,343,579.16
812	447.75	29+26.19	14.13	755,738.03	2,343,572.55

0 20 40 60
SCALE IN FEET

FILE NAME: \\loch.loc\root\Production\Files\2020\20-0018\CAD\CADD Sheets\D876A46-sht-Pavt Warp Elevs.dgn

LOCHMUELLER GROUP
1928 S-A Bradley R. Smith Drive
Troy, IL 62294
PHONE: 618.667.1400

USER NAME = alex.huelskamp	DESIGNED - ESW	REVISED -	STATE OF ILLINOIS DEPARTMENT OF TRANSPORTATION	PAVEMENT ELEVATION DETAILS IL ROUTE 157 AND MCT ENTRANCE	
MODEL NAME = WARP 05	DRAWN - LEC	REVISED -			
PLOT SCALE = 40.0000 ' / in.	CHECKED - BRM	REVISED -			
PLOT DATE = 3/5/2024	DATE - 10/8/2021	REVISED -		SCALE: 1"=20' SHEET 5 OF 5 SHEETS WARP MCT ENT	

F.A.P. RTE.	SECTION	COUNTY	TOTAL SHEETS	SHEET NO.
*	51-1R	MADISON	296	120
		CONTRACT NO. 76A46		
	ILLINOIS	FED. AID PROJECT		

*586/592

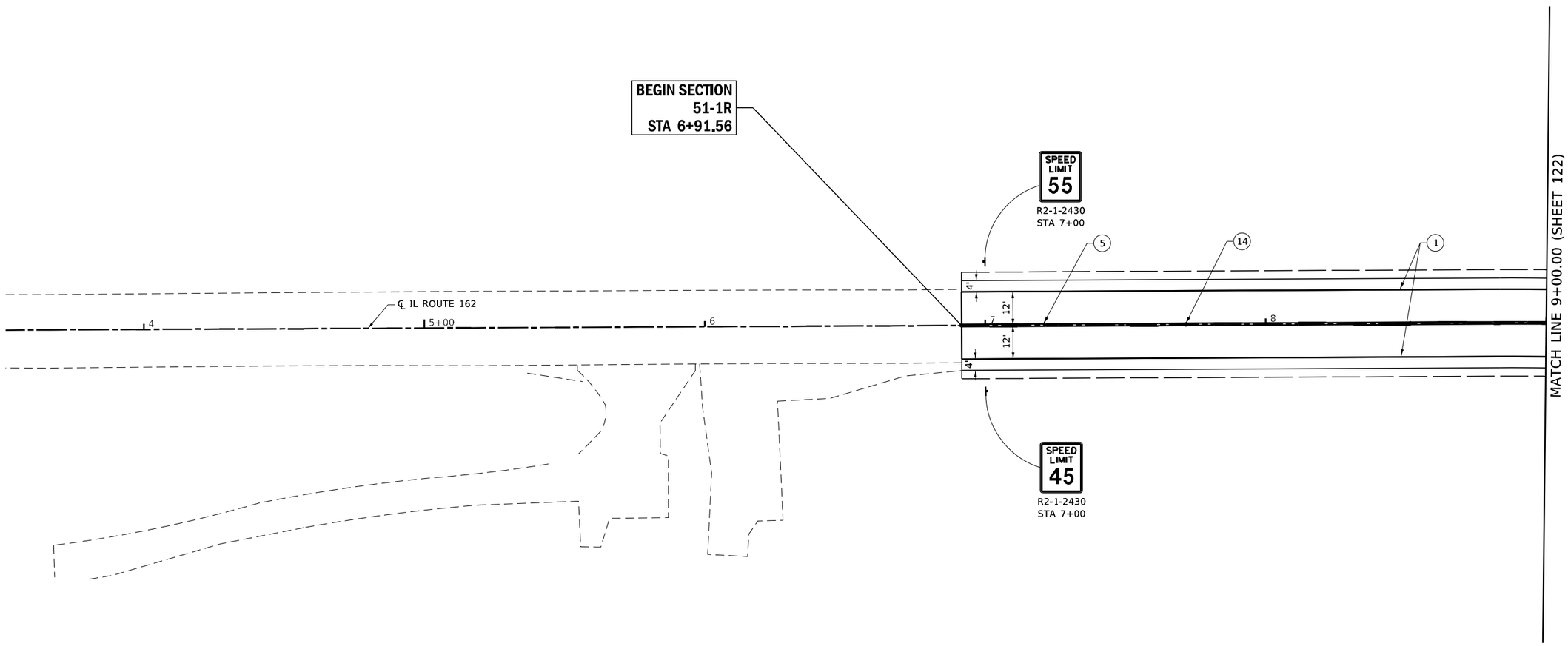

LEGEND

1. PROPOSED THERMOPLASTIC PAVEMENT MARKING LINE, 6", SOLID WHITE
2. PROPOSED THERMOPLASTIC PAVEMENT MARKING LINE, 6", SKIP-DASH, 2'-6' SPACING
3. PROPOSED THERMOPLASTIC PAVEMENT MARKING LINE, 6", SOLID YELLOW
4. PROPOSED THERMOPLASTIC PAVEMENT MARKING LINE, 6", SKIP-DASH YELLOW, 3'-9' SPACING
5. PROPOSED THERMOPLASTIC PAVEMENT MARKING LINE, 6", DOUBLE YELLOW
6. PROPOSED THERMOPLASTIC PAVEMENT MARKING LINE, 8", SOLID WHITE
7. PROPOSED THERMOPLASTIC PAVEMENT MARKING LINE, 12", SOLID WHITE
8. PROPOSED THERMOPLASTIC PAVEMENT MARKING LINE, 12", SOLID YELLOW
9. PROPOSED THERMOPLASTIC PAVEMENT MARKING LINE, 24", SOLID WHITE
10. PROPOSED THERMOPLASTIC PAVEMENT LETTERS AND SYMBOLS
11. PROPOSED ONE-WAY CRYSTAL RAISED REFLECTIVE PAVEMENT MARKERS, 40' CENTERS
12. PROPOSED ONE-WAY AMBER RAISED REFLECTIVE PAVEMENT MARKERS, 40' CENTERS
13. PROPOSED TWO-WAY AMBER RAISED REFLECTIVE PAVEMENT MARKERS, 40' CENTERS
14. PROPOSED TWO-WAY AMBER RAISED REFLECTIVE PAVEMENT MARKERS, 80' CENTERS
15. PROPOSED CURB REFLECTORS, 10' CENTERS (3 PER SIDE MIN.)
16. PROPOSED CURB REFLECTORS, 2' CENTERS
17. PROPOSED PAINT PAVEMENT MARKING CURB, WHITE
18. PROPOSED PREFORMED PLASTIC PAVEMENT MARKING, TYPE D - STANDARD - 6", SOLID WHITE
19. PROPOSED PREFORMED PLASTIC PAVEMENT MARKING, TYPE D - STANDARD - 6", SKIP-DASH, 2'-6' SPACING
20. PROPOSED PREFORMED PLASTIC PAVEMENT MARKING, TYPE D - STANDARD - 4", DOUBLE YELLOW
21. PROPOSED PREFORMED PLASTIC PAVEMENT MARKING, TYPE D - STANDARD - 8", SOLID WHITE
22. PROPOSED PREFORMED PLASTIC PAVEMENT MARKING, TYPE D - STANDARD -12", SOLID WHITE
23. PROPOSED PREFORMED PLASTIC PAVEMENT MARKING, TYPE D - STANDARD - 12", SOLID YELLOW
24. PROPOSED PREFORMED PLASTIC PAVEMENT MARKING, TYPE D - STANDARD - 24", SOLID WHITE
25. PROPOSED PREFORMED PLASTIC PAVEMENT MARKING, TYPE D - STANDARD - LETTERS AND SYMBOLS
26. PROPOSED WALL REFLECTORS, TYPE B
27. PROPOSED WALL REFLECTORS, TYPE C

0 20 40 60
SCALE IN FEET

FILE NAME: \\loch.local\root\Production\Files\2020\120-001B\CAD\CADD Sheets\0876A46-sht-Pavement Marking.dgn

LOCHMUELLER GROUP
1928 S.W. Bradley R. Smith Drive
Troy, IL 62294
PHONE: 618.667.1400

USER NAME = Jordan.Pettibone	DESIGNED – ESW	REVISED –	
MODEL NAME = MKG PLAN 01	DRAWN – LEC	REVISED –	
PLOT SCALE = 40.0000 ' / in.	CHECKED – BRM	REVISED –	
PLOT DATE = 3/6/2024	DATE – 10/8/2021	REVISED –	

STATE OF ILLINOIS
DEPARTMENT OF TRANSPORTATION

PAVEMENT MARKING AND SIGNING PLANS
IL ROUTE 162

SCALE: 1"=20' | SHEET 1 OF 9 SHEETS | STA 4+00.00 TO STA 9+00.00

F.A.P. RTE.	SECTION	COUNTY	TOTAL SHEETS	SHEET NO.
*	51-1R	MADISON	296	121
		CONTRACT NO. 76A46		
	ILLINOIS	FED. AID PROJECT		

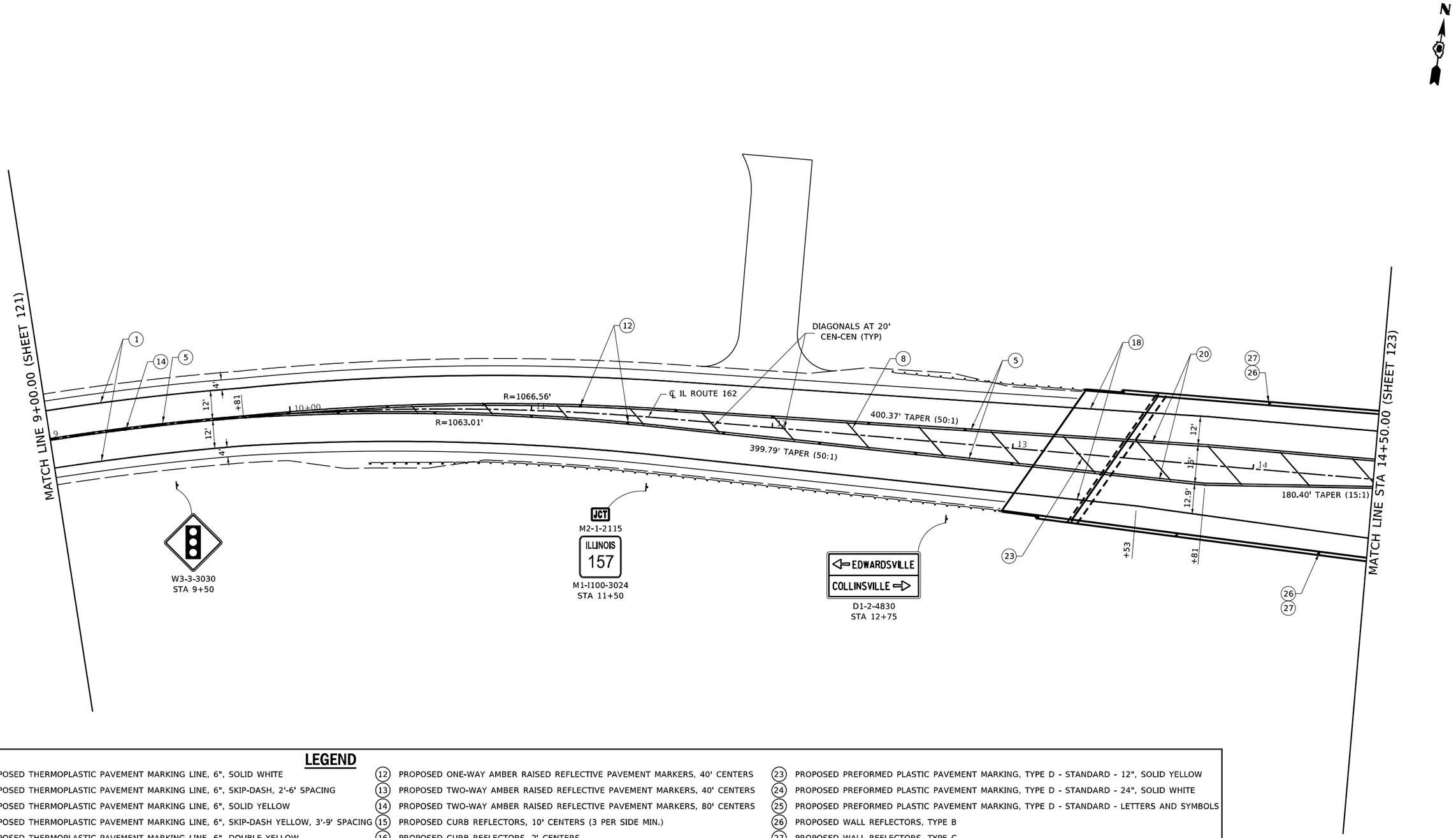

LEGEND

1. PROPOSED THERMOPLASTIC PAVEMENT MARKING LINE, 6", SOLID WHITE
2. PROPOSED THERMOPLASTIC PAVEMENT MARKING LINE, 6", SKIP-DASH, 2'-6' SPACING
3. PROPOSED THERMOPLASTIC PAVEMENT MARKING LINE, 6", SOLID YELLOW
4. PROPOSED THERMOPLASTIC PAVEMENT MARKING LINE, 6", SKIP-DASH YELLOW, 3'-9' SPACING
5. PROPOSED THERMOPLASTIC PAVEMENT MARKING LINE, 6", DOUBLE YELLOW
6. PROPOSED THERMOPLASTIC PAVEMENT MARKING LINE, 8", SOLID WHITE
7. PROPOSED THERMOPLASTIC PAVEMENT MARKING LINE, 12", SOLID WHITE
8. PROPOSED THERMOPLASTIC PAVEMENT MARKING LINE, 12", SOLID YELLOW
9. PROPOSED THERMOPLASTIC PAVEMENT MARKING LINE, 24", SOLID WHITE
10. PROPOSED THERMOPLASTIC PAVEMENT LETTERS AND SYMBOLS
11. PROPOSED ONE-WAY CRYSTAL RAISED REFLECTIVE PAVEMENT MARKERS, 40' CENTERS
12. PROPOSED ONE-WAY AMBER RAISED REFLECTIVE PAVEMENT MARKERS, 40' CENTERS
13. PROPOSED TWO-WAY AMBER RAISED REFLECTIVE PAVEMENT MARKERS, 40' CENTERS
14. PROPOSED TWO-WAY AMBER RAISED REFLECTIVE PAVEMENT MARKERS, 80' CENTERS
15. PROPOSED CURB REFLECTORS, 10' CENTERS (3 PER SIDE MIN.)
16. PROPOSED CURB REFLECTORS, 2' CENTERS
17. PROPOSED PAINT PAVEMENT MARKING CURB, WHITE
18. PROPOSED PREFORMED PLASTIC PAVEMENT MARKING, TYPE D - STANDARD - 6", SOLID WHITE
19. PROPOSED PREFORMED PLASTIC PAVEMENT MARKING, TYPE D - STANDARD - 6", SKIP-DASH, 2'-6' SPACING
20. PROPOSED PREFORMED PLASTIC PAVEMENT MARKING, TYPE D - STANDARD - 4", DOUBLE YELLOW
21. PROPOSED PREFORMED PLASTIC PAVEMENT MARKING, TYPE D - STANDARD - 8", SOLID WHITE
22. PROPOSED PREFORMED PLASTIC PAVEMENT MARKING, TYPE D - STANDARD -12", SOLID WHITE
23. PROPOSED PREFORMED PLASTIC PAVEMENT MARKING, TYPE D - STANDARD - 12", SOLID YELLOW
24. PROPOSED PREFORMED PLASTIC PAVEMENT MARKING, TYPE D - STANDARD - 24", SOLID WHITE
25. PROPOSED PREFORMED PLASTIC PAVEMENT MARKING, TYPE D - STANDARD - LETTERS AND SYMBOLS
26. PROPOSED WALL REFLECTORS, TYPE B
27. PROPOSED WALL REFLECTORS, TYPE C

0 20 40 60
SCALE IN FEET

FILE NAME: \\loch.loc\root\Production\Files\2020\420-0018\CAD\CADD Sheets\DB76A46-sht-Pavement Marking.dgn

LOCHMUELLER GROUP
1928 S.W. Bradley Rd. Smith Drive
Troy, IL 62294
PHONE: 618.667.1400

USER NAME = JordanPettibone	DESIGNED - ESW	REVISED -	
MODEL NAME = MKG PLAN 02	DRAWN - LEC	REVISED -	
PLOT SCALE = 40.0000 ' / in.	CHECKED - BRM	REVISED -	
PLOT DATE = 3/6/2024	DATE - 10/8/2021	REVISED -	

STATE OF ILLINOIS
DEPARTMENT OF TRANSPORTATION

PAVEMENT MARKING AND SIGNING PLANS
IL ROUTE 162

SCALE: 1"=20' | SHEET 2 OF 9 SHEETS | STA 9+00.00 TO STA 14+50.00

F.A.P. RTE.	SECTION	COUNTY	TOTAL SHEETS	SHEET NO.
*	51-1R	MADISON	296	122
		CONTRACT NO. 76A46		
	ILLINOIS	FED. AID PROJECT		

*586/592

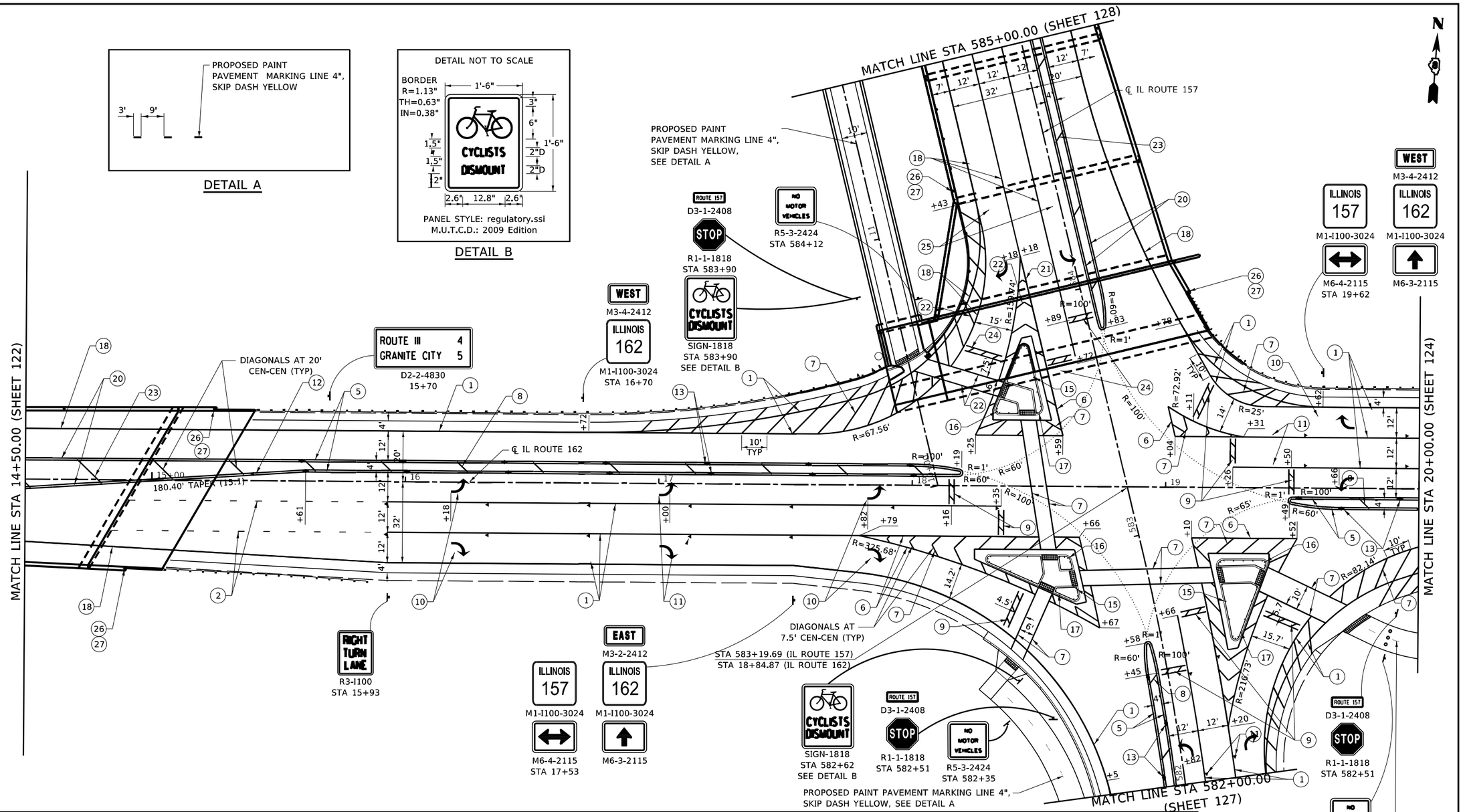

LEGEND

1. PROPOSED THERMOPLASTIC PAVEMENT MARKING LINE, 6", SOLID WHITE
2. PROPOSED THERMOPLASTIC PAVEMENT MARKING LINE, 6", SKIP-DASH, 2'-6' SPACING
3. PROPOSED THERMOPLASTIC PAVEMENT MARKING LINE, 6", SOLID YELLOW
4. PROPOSED THERMOPLASTIC PAVEMENT MARKING LINE, 6", SKIP-DASH YELLOW, 3'-9' SPACING
5. PROPOSED THERMOPLASTIC PAVEMENT MARKING LINE, 6", DOUBLE YELLOW
6. PROPOSED THERMOPLASTIC PAVEMENT MARKING LINE, 8", SOLID WHITE
7. PROPOSED THERMOPLASTIC PAVEMENT MARKING LINE, 12", SOLID WHITE
8. PROPOSED THERMOPLASTIC PAVEMENT MARKING LINE, 12", SOLID YELLOW
9. PROPOSED THERMOPLASTIC PAVEMENT MARKING LINE, 24", SOLID WHITE
10. PROPOSED THERMOPLASTIC PAVEMENT LETTERS AND SYMBOLS
11. PROPOSED ONE-WAY CRYSTAL RAISED REFLECTIVE PAVEMENT MARKERS, 40' CENTERS
12. PROPOSED ONE-WAY AMBER RAISED REFLECTIVE PAVEMENT MARKERS, 40' CENTERS
13. PROPOSED TWO-WAY AMBER RAISED REFLECTIVE PAVEMENT MARKERS, 40' CENTERS
14. PROPOSED TWO-WAY AMBER RAISED REFLECTIVE PAVEMENT MARKERS, 80' CENTERS
15. PROPOSED CURB REFLECTORS, 10' CENTERS (3 PER SIDE MIN.)
16. PROPOSED CURB REFLECTORS, 2' CENTERS
17. PROPOSED PAINT PAVEMENT MARKING CURB, WHITE
18. PROPOSED PREFORMED PLASTIC PAVEMENT MARKING, TYPE D - STANDARD - 6", SOLID WHITE
19. PROPOSED PREFORMED PLASTIC PAVEMENT MARKING, TYPE D - STANDARD - 6", SKIP-DASH, 2'-6' SPACING
20. PROPOSED PREFORMED PLASTIC PAVEMENT MARKING, TYPE D - STANDARD - 4", DOUBLE YELLOW
21. PROPOSED PREFORMED PLASTIC PAVEMENT MARKING, TYPE D - STANDARD - 8", SOLID WHITE
22. PROPOSED PREFORMED PLASTIC PAVEMENT MARKING, TYPE D - STANDARD -12", SOLID WHITE
23. PROPOSED PREFORMED PLASTIC PAVEMENT MARKING, TYPE D - STANDARD - 12", SOLID YELLOW
24. PROPOSED PREFORMED PLASTIC PAVEMENT MARKING, TYPE D - STANDARD - 24", SOLID WHITE
25. PROPOSED PREFORMED PLASTIC PAVEMENT MARKING, TYPE D - STANDARD - LETTERS AND SYMBOLS
26. PROPOSED WALL REFLECTORS, TYPE B
27. PROPOSED WALL REFLECTORS, TYPE C

0 20 40 60
SCALE IN FEET

FILE NAME: \\loch.loc\root\Production\Files\2020\20-0018\CAD\CADD Sheets\D876A46-sht-Pavement Markings.dgn

LOCHMUELLER GROUP
3928 S.N. Bradley R. S.m.th Drive
Troy, IL 62294
PHONE: 618.667.1400

USER NAME = Jordan.Pettibone	DESIGNED - ESW	REVISED -	
MODEL NAME = MKG PLAN 03	DRAWN - LEC	REVISED -	
PLOT SCALE = 40.0000 ' / in.	CHECKED - BRM	REVISED -	
PLOT DATE = 3/6/2024	DATE - 10/8/2021	REVISED -	

STATE OF ILLINOIS
DEPARTMENT OF TRANSPORTATION

PAVEMENT MARKING AND SIGNING PLANS
IL ROUTE 162

SCALE: 1"=20' | SHEET 3 OF 9 SHEETS | STA 14+50.00 TO STA 20+00.00

F.A.P. RTE.	SECTION	COUNTY	TOTAL SHEETS	SHEET NO.
*	51-1R	MADISON	296	123
		CONTRACT NO. 76A46		
		ILLINOIS	FED. AID PROJECT	

*586/592

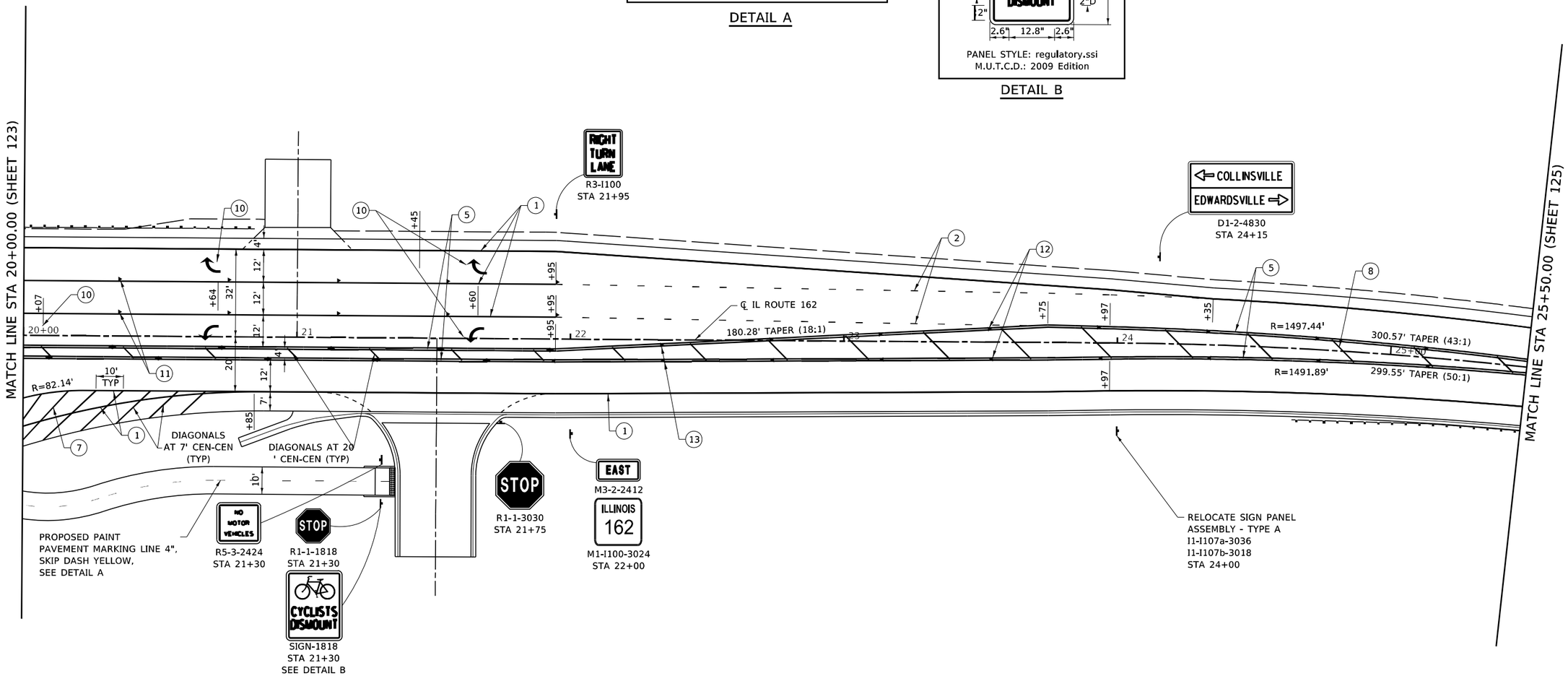

LEGEND

1. PROPOSED THERMOPLASTIC PAVEMENT MARKING LINE, 6", SOLID WHITE
2. PROPOSED THERMOPLASTIC PAVEMENT MARKING LINE, 6", SKIP-DASH, 2'-6' SPACING
3. PROPOSED THERMOPLASTIC PAVEMENT MARKING LINE, 6", SOLID YELLOW
4. PROPOSED THERMOPLASTIC PAVEMENT MARKING LINE, 6", SKIP-DASH YELLOW, 3'-9' SPACING
5. PROPOSED THERMOPLASTIC PAVEMENT MARKING LINE, 6", DOUBLE YELLOW
6. PROPOSED THERMOPLASTIC PAVEMENT MARKING LINE, 8", SOLID WHITE
7. PROPOSED THERMOPLASTIC PAVEMENT MARKING LINE, 12", SOLID WHITE
8. PROPOSED THERMOPLASTIC PAVEMENT MARKING LINE, 12", SOLID YELLOW
9. PROPOSED THERMOPLASTIC PAVEMENT MARKING LINE, 24", SOLID WHITE
10. PROPOSED THERMOPLASTIC PAVEMENT LETTERS AND SYMBOLS
11. PROPOSED ONE-WAY CRYSTAL RAISED REFLECTIVE PAVEMENT MARKERS, 40' CENTERS
12. PROPOSED ONE-WAY AMBER RAISED REFLECTIVE PAVEMENT MARKERS, 40' CENTERS
13. PROPOSED TWO-WAY AMBER RAISED REFLECTIVE PAVEMENT MARKERS, 40' CENTERS
14. PROPOSED TWO-WAY AMBER RAISED REFLECTIVE PAVEMENT MARKERS, 80' CENTERS
15. PROPOSED CURB REFLECTORS, 10' CENTERS (3 PER SIDE MIN.)
16. PROPOSED CURB REFLECTORS, 2' CENTERS
17. PROPOSED PAINT PAVEMENT MARKING CURB, WHITE
18. PROPOSED PREFORMED PLASTIC PAVEMENT MARKING, TYPE D - STANDARD - 6", SOLID WHITE
19. PROPOSED PREFORMED PLASTIC PAVEMENT MARKING, TYPE D - STANDARD - 6", SKIP-DASH, 2'-6' SPACING
20. PROPOSED PREFORMED PLASTIC PAVEMENT MARKING, TYPE D - STANDARD - 4", DOUBLE YELLOW
21. PROPOSED PREFORMED PLASTIC PAVEMENT MARKING, TYPE D - STANDARD - 8", SOLID WHITE
22. PROPOSED PREFORMED PLASTIC PAVEMENT MARKING, TYPE D - STANDARD -12", SOLID WHITE
23. PROPOSED PREFORMED PLASTIC PAVEMENT MARKING, TYPE D - STANDARD - 12", SOLID YELLOW
24. PROPOSED PREFORMED PLASTIC PAVEMENT MARKING, TYPE D - STANDARD - 24", SOLID WHITE
25. PROPOSED PREFORMED PLASTIC PAVEMENT MARKING, TYPE D - STANDARD - LETTERS AND SYMBOLS
26. PROPOSED WALL REFLECTORS, TYPE B
27. PROPOSED WALL REFLECTORS, TYPE C

0 20 40 60
SCALE IN FEET

FILE NAME: \\lochlocvaot\Production\Files\2020\420-0018\CAD\CADD Sheets\DB76A46-sht-Pavement Marking.dgn

LOCHMUELLER GROUP
1928 S.N. Bradley R. Smith Drive
Troy, IL 62294
PHONE: 618.667.1400

USER NAME = JordanPettibone	DESIGNED - ESW	REVISED -	
MODEL NAME = MKG PLAN 04	DRAWN - LEC	REVISED -	
PLOT SCALE = 40.0000 ' / in.	CHECKED - BRM	REVISED -	
PLOT DATE = 3/6/2024	DATE - 10/8/2021	REVISED -	

STATE OF ILLINOIS
DEPARTMENT OF TRANSPORTATION

PAVEMENT MARKING AND SIGNING PLANS
IL ROUTE 162

SCALE: 1"=20' | SHEET 4 OF 9 SHEETS | STA 20+00.00 TO STA 25+50.00

F.A.P. RTE.	SECTION	COUNTY	TOTAL SHEETS	SHEET NO.
*	51-1R	MADISON	296	124

CONTRACT NO. 76A46

ILLINOIS | FED. AID PROJECT

*586/592

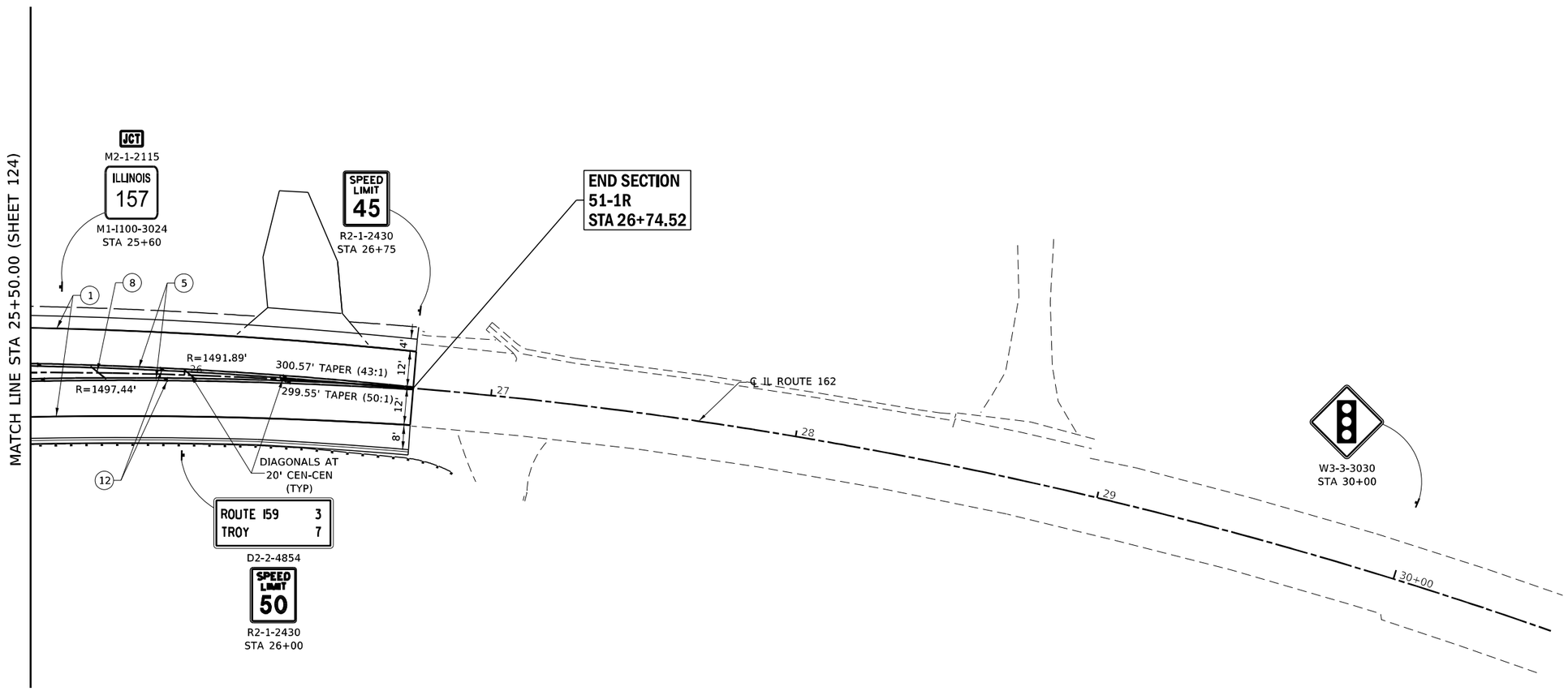

LEGEND

1. PROPOSED THERMOPLASTIC PAVEMENT MARKING LINE, 6", SOLID WHITE
2. PROPOSED THERMOPLASTIC PAVEMENT MARKING LINE, 6", SKIP-DASH, 2'-6' SPACING
3. PROPOSED THERMOPLASTIC PAVEMENT MARKING LINE, 6", SOLID YELLOW
4. PROPOSED THERMOPLASTIC PAVEMENT MARKING LINE, 6", SKIP-DASH YELLOW, 3'-9' SPACING
5. PROPOSED THERMOPLASTIC PAVEMENT MARKING LINE, 6", DOUBLE YELLOW
6. PROPOSED THERMOPLASTIC PAVEMENT MARKING LINE, 8", SOLID WHITE
7. PROPOSED THERMOPLASTIC PAVEMENT MARKING LINE, 12", SOLID WHITE
8. PROPOSED THERMOPLASTIC PAVEMENT MARKING LINE, 12", SOLID YELLOW
9. PROPOSED THERMOPLASTIC PAVEMENT MARKING LINE, 24", SOLID WHITE
10. PROPOSED THERMOPLASTIC PAVEMENT LETTERS AND SYMBOLS
11. PROPOSED ONE-WAY CRYSTAL RAISED REFLECTIVE PAVEMENT MARKERS, 40' CENTERS
12. PROPOSED ONE-WAY AMBER RAISED REFLECTIVE PAVEMENT MARKERS, 40' CENTERS
13. PROPOSED TWO-WAY AMBER RAISED REFLECTIVE PAVEMENT MARKERS, 40' CENTERS
14. PROPOSED TWO-WAY AMBER RAISED REFLECTIVE PAVEMENT MARKERS, 80' CENTERS
15. PROPOSED CURB REFLECTORS, 10' CENTERS (3 PER SIDE MIN.)
16. PROPOSED CURB REFLECTORS, 2' CENTERS
17. PROPOSED PAINT PAVEMENT MARKING CURB, WHITE
18. PROPOSED PREFORMED PLASTIC PAVEMENT MARKING, TYPE D - STANDARD - 6", SOLID WHITE
19. PROPOSED PREFORMED PLASTIC PAVEMENT MARKING, TYPE D - STANDARD - 6", SKIP-DASH, 2'-6' SPACING
20. PROPOSED PREFORMED PLASTIC PAVEMENT MARKING, TYPE D - STANDARD - 4", DOUBLE YELLOW
21. PROPOSED PREFORMED PLASTIC PAVEMENT MARKING, TYPE D - STANDARD - 8", SOLID WHITE
22. PROPOSED PREFORMED PLASTIC PAVEMENT MARKING, TYPE D - STANDARD -12", SOLID WHITE
23. PROPOSED PREFORMED PLASTIC PAVEMENT MARKING, TYPE D - STANDARD - 12", SOLID YELLOW
24. PROPOSED PREFORMED PLASTIC PAVEMENT MARKING, TYPE D - STANDARD - 24", SOLID WHITE
25. PROPOSED PREFORMED PLASTIC PAVEMENT MARKING, TYPE D - STANDARD - LETTERS AND SYMBOLS
26. PROPOSED WALL REFLECTORS, TYPE B
27. PROPOSED WALL REFLECTORS, TYPE C

0 20 40 60
SCALE IN FEET

FILE NAME: \\loch.loc\root\Production\Files\2020\420-8018\CAD\CADD Sheets\D876A46-sht-Pavement Marking.dgn

LOCHMUELLER GROUP
1928 S-A Bradley R. Smith Drive
Troy, IL 62294
PHONE: 618.667.1400

USER NAME	= Jordan.Pettibone	DESIGNED	- ESW	REVISED	-
MODEL NAME	= MKG PLAN 05	DRAWN	- LEC	REVISED	-
PLOT SCALE	= 40.0000 ' / in.	CHECKED	- BRM	REVISED	-
PLOT DATE	= 3/6/2024	DATE	- 10/8/2021	REVISED	-

STATE OF ILLINOIS
DEPARTMENT OF TRANSPORTATION

PAVEMENT MARKING AND SIGNING PLANS
IL ROUTE 162

SCALE: 1"=20' | SHEET 5 OF 9 SHEETS | STA 25+50.00 TO STA 30+00.00

F.A.P. RTE.	SECTION	COUNTY	TOTAL SHEETS	SHEET NO.
*	51-1R	MADISON	296	125
		CONTRACT NO. 76A46		
		ILLINOIS	FED. AID PROJECT	

*586/592

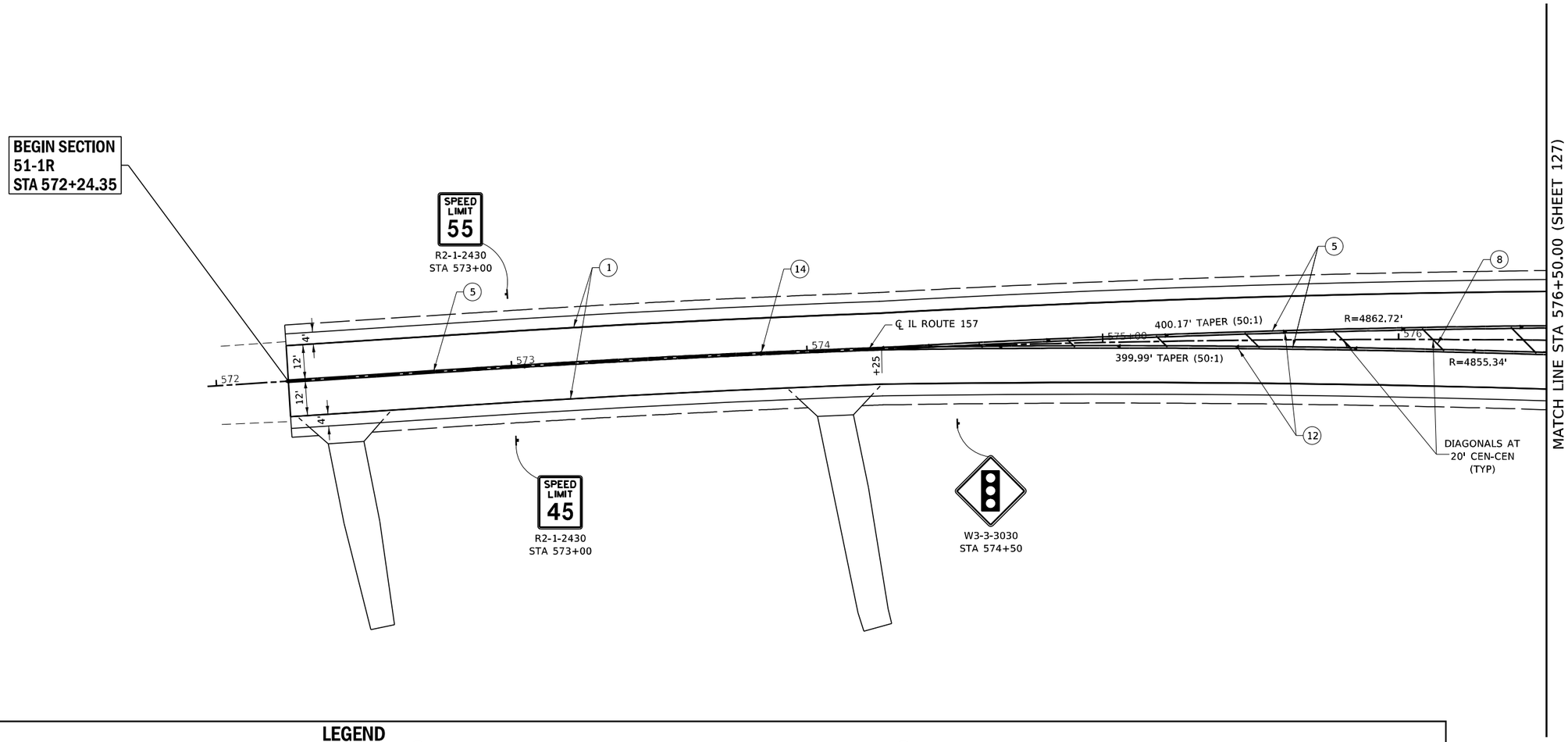

LEGEND

1. PROPOSED THERMOPLASTIC PAVEMENT MARKING LINE, 6", SOLID WHITE
2. PROPOSED THERMOPLASTIC PAVEMENT MARKING LINE, 6", SKIP-DASH, 2'-6' SPACING
3. PROPOSED THERMOPLASTIC PAVEMENT MARKING LINE, 6", SOLID YELLOW
4. PROPOSED THERMOPLASTIC PAVEMENT MARKING LINE, 6", SKIP-DASH YELLOW, 3'-9' SPACING
5. PROPOSED THERMOPLASTIC PAVEMENT MARKING LINE, 6", DOUBLE YELLOW
6. PROPOSED THERMOPLASTIC PAVEMENT MARKING LINE, 8", SOLID WHITE
7. PROPOSED THERMOPLASTIC PAVEMENT MARKING LINE, 12", SOLID WHITE
8. PROPOSED THERMOPLASTIC PAVEMENT MARKING LINE, 12", SOLID YELLOW
9. PROPOSED THERMOPLASTIC PAVEMENT MARKING LINE, 24", SOLID WHITE
10. PROPOSED THERMOPLASTIC PAVEMENT LETTERS AND SYMBOLS
11. PROPOSED ONE-WAY CRYSTAL RAISED REFLECTIVE PAVEMENT MARKERS, 40' CENTERS
12. PROPOSED ONE-WAY AMBER RAISED REFLECTIVE PAVEMENT MARKERS, 40' CENTERS
13. PROPOSED TWO-WAY AMBER RAISED REFLECTIVE PAVEMENT MARKERS, 40' CENTERS
14. PROPOSED TWO-WAY AMBER RAISED REFLECTIVE PAVEMENT MARKERS, 80' CENTERS
15. PROPOSED CURB REFLECTORS, 10' CENTERS (3 PER SIDE MIN.)
16. PROPOSED CURB REFLECTORS, 2' CENTERS
17. PROPOSED PAINT PAVEMENT MARKING CURB, WHITE
18. PROPOSED PREFORMED PLASTIC PAVEMENT MARKING, TYPE D - STANDARD - 6", SOLID WHITE
19. PROPOSED PREFORMED PLASTIC PAVEMENT MARKING, TYPE D - STANDARD - 6", SKIP-DASH, 2'-6' SPACING
20. PROPOSED PREFORMED PLASTIC PAVEMENT MARKING, TYPE D - STANDARD - 4", DOUBLE YELLOW
21. PROPOSED PREFORMED PLASTIC PAVEMENT MARKING, TYPE D - STANDARD - 8", SOLID WHITE
22. PROPOSED PREFORMED PLASTIC PAVEMENT MARKING, TYPE D - STANDARD -12", SOLID WHITE
23. PROPOSED PREFORMED PLASTIC PAVEMENT MARKING, TYPE D - STANDARD - 12", SOLID YELLOW
24. PROPOSED PREFORMED PLASTIC PAVEMENT MARKING, TYPE D - STANDARD - 24", SOLID WHITE
25. PROPOSED PREFORMED PLASTIC PAVEMENT MARKING, TYPE D - STANDARD - LETTERS AND SYMBOLS
26. PROPOSED WALL REFLECTORS, TYPE B
27. PROPOSED WALL REFLECTORS, TYPE C

0 20 40 60
SCALE IN FEET

FILE NAME: \\loch.loc\root\Production\Files\2020\420-0018\CAD\CADD Sheets\0876A46-sht-Pavement Marking.dgn

LOCHMUELLER GROUP
1928 S.R. Bradley R. Smith Drive
Troy, IL 62294
PHONE: 618.667.1400

USER NAME = Jordan.Pettibone	DESIGNED - ESW	REVISED -	
MODEL NAME = MKG PLAN 06	DRAWN - LEC	REVISED -	
PLOT SCALE = 40.0000 ' / in.	CHECKED - BRM	REVISED -	
PLOT DATE = 3/6/2024	DATE - 10/8/2021	REVISED -	

STATE OF ILLINOIS
DEPARTMENT OF TRANSPORTATION

PAVEMENT MARKING AND SIGNING PLANS
IL ROUTE 157

SCALE: 1"=20' | SHEET 6 OF 9 SHEETS | STA 572+00.00 TO STA 576+50.00

F.A.P. RTE.	SECTION	COUNTY	TOTAL SHEETS	SHEET NO.
*	51-1R	MADISON	296	126
		CONTRACT NO. 76A46		
		ILLINOIS	FED. AID PROJECT	

DETAIL A

DETAIL B

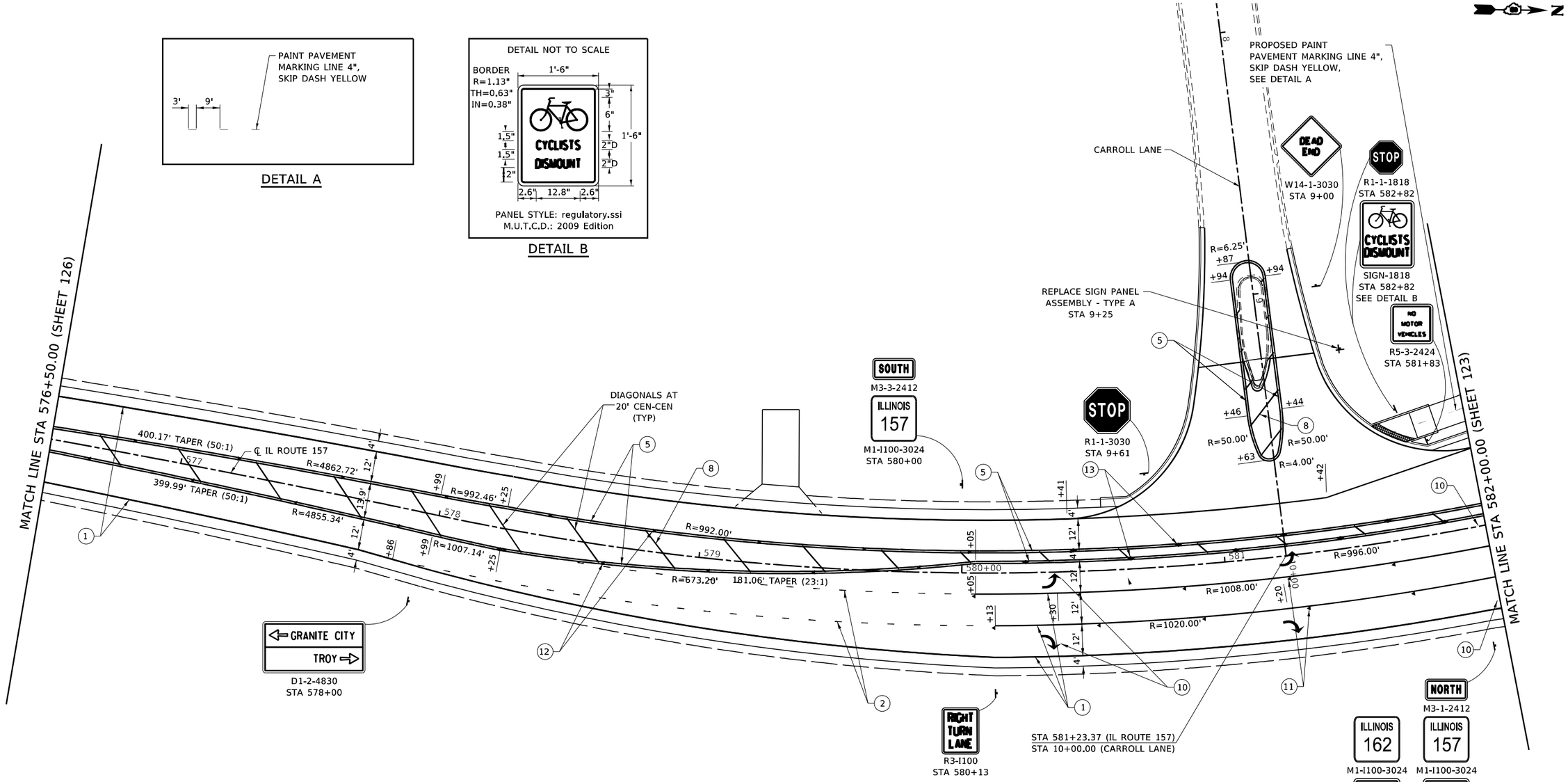

LEGEND

1. PROPOSED THERMOPLASTIC PAVEMENT MARKING LINE, 6", SOLID WHITE
2. PROPOSED THERMOPLASTIC PAVEMENT MARKING LINE, 6", SKIP-DASH, 2'-6' SPACING
3. PROPOSED THERMOPLASTIC PAVEMENT MARKING LINE, 6", SOLID YELLOW
4. PROPOSED THERMOPLASTIC PAVEMENT MARKING LINE, 6", SKIP-DASH YELLOW, 3'-9' SPACING
5. PROPOSED THERMOPLASTIC PAVEMENT MARKING LINE, 6", DOUBLE YELLOW
6. PROPOSED THERMOPLASTIC PAVEMENT MARKING LINE, 8", SOLID WHITE
7. PROPOSED THERMOPLASTIC PAVEMENT MARKING LINE, 12", SOLID WHITE
8. PROPOSED THERMOPLASTIC PAVEMENT MARKING LINE, 12", SOLID YELLOW
9. PROPOSED THERMOPLASTIC PAVEMENT MARKING LINE, 24", SOLID WHITE
10. PROPOSED THERMOPLASTIC PAVEMENT LETTERS AND SYMBOLS
11. PROPOSED ONE-WAY CRYSTAL RAISED REFLECTIVE PAVEMENT MARKERS, 40' CENTERS
12. PROPOSED ONE-WAY AMBER RAISED REFLECTIVE PAVEMENT MARKERS, 40' CENTERS
13. PROPOSED TWO-WAY AMBER RAISED REFLECTIVE PAVEMENT MARKERS, 40' CENTERS
14. PROPOSED TWO-WAY AMBER RAISED REFLECTIVE PAVEMENT MARKERS, 80' CENTERS
15. PROPOSED CURB REFLECTORS, 10' CENTERS (3 PER SIDE MIN.)
16. PROPOSED CURB REFLECTORS, 2' CENTERS
17. PROPOSED PAINT PAVEMENT MARKING CURB, WHITE
18. PROPOSED PREFORMED PLASTIC PAVEMENT MARKING, TYPE D - STANDARD - 6", SOLID WHITE
19. PROPOSED PREFORMED PLASTIC PAVEMENT MARKING, TYPE D - STANDARD - 6", SKIP-DASH, 2'-6' SPACING
20. PROPOSED PREFORMED PLASTIC PAVEMENT MARKING, TYPE D - STANDARD - 4", DOUBLE YELLOW
21. PROPOSED PREFORMED PLASTIC PAVEMENT MARKING, TYPE D - STANDARD - 8", SOLID WHITE
22. PROPOSED PREFORMED PLASTIC PAVEMENT MARKING, TYPE D - STANDARD -12", SOLID WHITE
23. PROPOSED PREFORMED PLASTIC PAVEMENT MARKING, TYPE D - STANDARD - 12", SOLID YELLOW
24. PROPOSED PREFORMED PLASTIC PAVEMENT MARKING, TYPE D - STANDARD - 24", SOLID WHITE
25. PROPOSED PREFORMED PLASTIC PAVEMENT MARKING, TYPE D - STANDARD - LETTERS AND SYMBOLS
26. PROPOSED WALL REFLECTORS, TYPE B
27. PROPOSED WALL REFLECTORS, TYPE C

0 20 40 60
SCALE IN FEET

FILE NAME: \\loch.loc\root\Production\Files\2020\420-0018\CAD\CADD Sheets\UB76A46-sht-Pavement Marking.dgn

LOCHMUELLER GROUP
1928 SrA Bradley R. Smith Drive
Troy, IL 62294
PHONE: 618.667.1400

USER NAME = JordanPettibone	DESIGNED - ESW	REVISED -	
MODEL NAME = MKG PLAN 07	DRAWN - LEC	REVISED -	
PLOT SCALE = 40.0000 ' / in.	CHECKED - BRM	REVISED -	
PLOT DATE = 3/6/2024	DATE - 10/8/2021	REVISED -	

STATE OF ILLINOIS
DEPARTMENT OF TRANSPORTATION

PAVEMENT MARKING AND SIGNING PLANS
IL ROUTE 157

SCALE: 1"=20' | SHEET 7 OF 9 SHEETS | STA 576+50.00 TO STA 582+00.00

F.A.P. RTE.	SECTION	COUNTY	TOTAL SHEETS	SHEET NO.
*	51-1R	MADISON	296	127
		CONTRACT NO. 76A46		
	ILLINOIS	FED. AID PROJECT		

*586/592

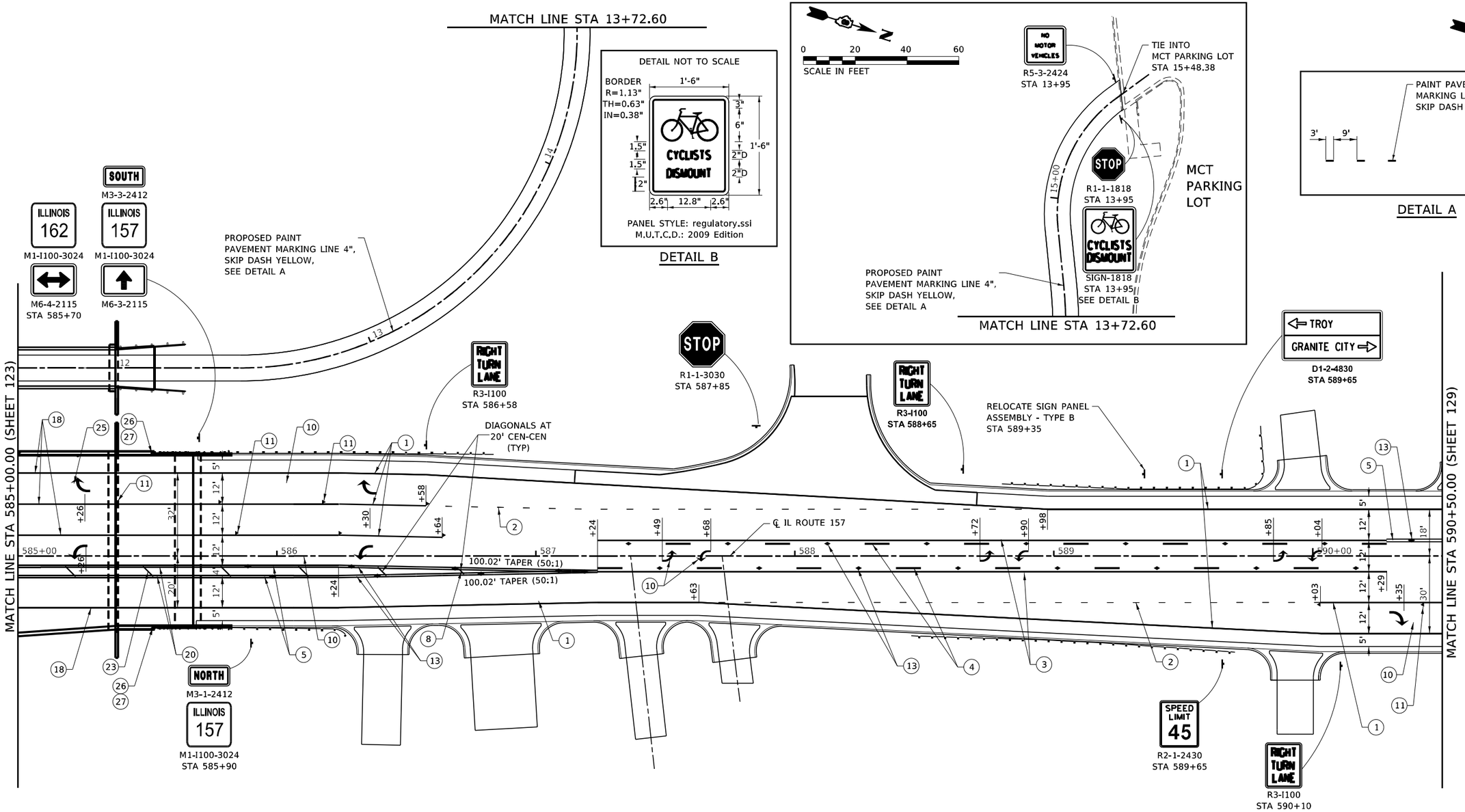

LEGEND

1. PROPOSED THERMOPLASTIC PAVEMENT MARKING LINE, 6", SOLID WHITE
2. PROPOSED THERMOPLASTIC PAVEMENT MARKING LINE, 6", SKIP-DASH, 2'-6' SPACING
3. PROPOSED THERMOPLASTIC PAVEMENT MARKING LINE, 6", SOLID YELLOW
4. PROPOSED THERMOPLASTIC PAVEMENT MARKING LINE, 6", SKIP-DASH YELLOW, 3'-9' SPACING
5. PROPOSED THERMOPLASTIC PAVEMENT MARKING LINE, 6", DOUBLE YELLOW
6. PROPOSED THERMOPLASTIC PAVEMENT MARKING LINE, 8", SOLID WHITE
7. PROPOSED THERMOPLASTIC PAVEMENT MARKING LINE, 12", SOLID WHITE
8. PROPOSED THERMOPLASTIC PAVEMENT MARKING LINE, 12", SOLID YELLOW
9. PROPOSED THERMOPLASTIC PAVEMENT MARKING LINE, 24", SOLID WHITE
10. PROPOSED THERMOPLASTIC PAVEMENT LETTERS AND SYMBOLS
11. PROPOSED ONE-WAY CRYSTAL RAISED REFLECTIVE PAVEMENT MARKERS, 40' CENTERS
12. PROPOSED ONE-WAY AMBER RAISED REFLECTIVE PAVEMENT MARKERS, 40' CENTERS
13. PROPOSED TWO-WAY AMBER RAISED REFLECTIVE PAVEMENT MARKERS, 40' CENTERS
14. PROPOSED TWO-WAY AMBER RAISED REFLECTIVE PAVEMENT MARKERS, 80' CENTERS
15. PROPOSED CURB REFLECTORS, 10' CENTERS (3 PER SIDE MIN.)
16. PROPOSED CURB REFLECTORS, 2' CENTERS
17. PROPOSED PAINT PAVEMENT MARKING CURB, WHITE
18. PROPOSED PREFORMED PLASTIC PAVEMENT MARKING, TYPE D - STANDARD - 6", SOLID WHITE
19. PROPOSED PREFORMED PLASTIC PAVEMENT MARKING, TYPE D - STANDARD - 6", SKIP-DASH, 2'-6' SPACING
20. PROPOSED PREFORMED PLASTIC PAVEMENT MARKING, TYPE D - STANDARD - 4", DOUBLE YELLOW
21. PROPOSED PREFORMED PLASTIC PAVEMENT MARKING, TYPE D - STANDARD - 8", SOLID WHITE
22. PROPOSED PREFORMED PLASTIC PAVEMENT MARKING, TYPE D - STANDARD -12", SOLID WHITE
23. PROPOSED PREFORMED PLASTIC PAVEMENT MARKING, TYPE D - STANDARD - 12", SOLID YELLOW
24. PROPOSED PREFORMED PLASTIC PAVEMENT MARKING, TYPE D - STANDARD - 24", SOLID WHITE
25. PROPOSED PREFORMED PLASTIC PAVEMENT MARKING, TYPE D - STANDARD - LETTERS AND SYMBOLS
26. PROPOSED WALL REFLECTORS, TYPE B
27. PROPOSED WALL REFLECTORS, TYPE C

0 20 40 60
SCALE IN FEET

FILE NAME: \\lochlocvaot\Production\Files\2020\420-0018\CAD\CADD Sheets\DB76A46-sht-Pavement Marking.dgn

LOCHMUELLER GROUP
1928 S.N. Bradley R. Smith Drive
Troy, IL 62294
PHONE: 618.667.1400

USER NAME = Jordan.Pettibone	DESIGNED - ESW	REVISED -	
MODEL NAME = MKG PLAN 08	DRAWN - LEC	REVISED -	
PLOT SCALE = 40.0000 ' / in.	CHECKED - BRM	REVISED -	
PLOT DATE = 3/6/2024	DATE - 10/8/2021	REVISED -	

STATE OF ILLINOIS
DEPARTMENT OF TRANSPORTATION

PAVEMENT MARKING AND SIGNING PLANS
IL ROUTE 157

SCALE: 1"=20' | SHEET 8 OF 9 SHEETS | STA 582+00.00 TO STA 590+50.00

F.A.P. RTE.	SECTION	COUNTY	TOTAL SHEETS	SHEET NO.
*	51-1R	MADISON	296	128
		CONTRACT NO. 76A46		
	ILLINOIS	FED. AID PROJECT		

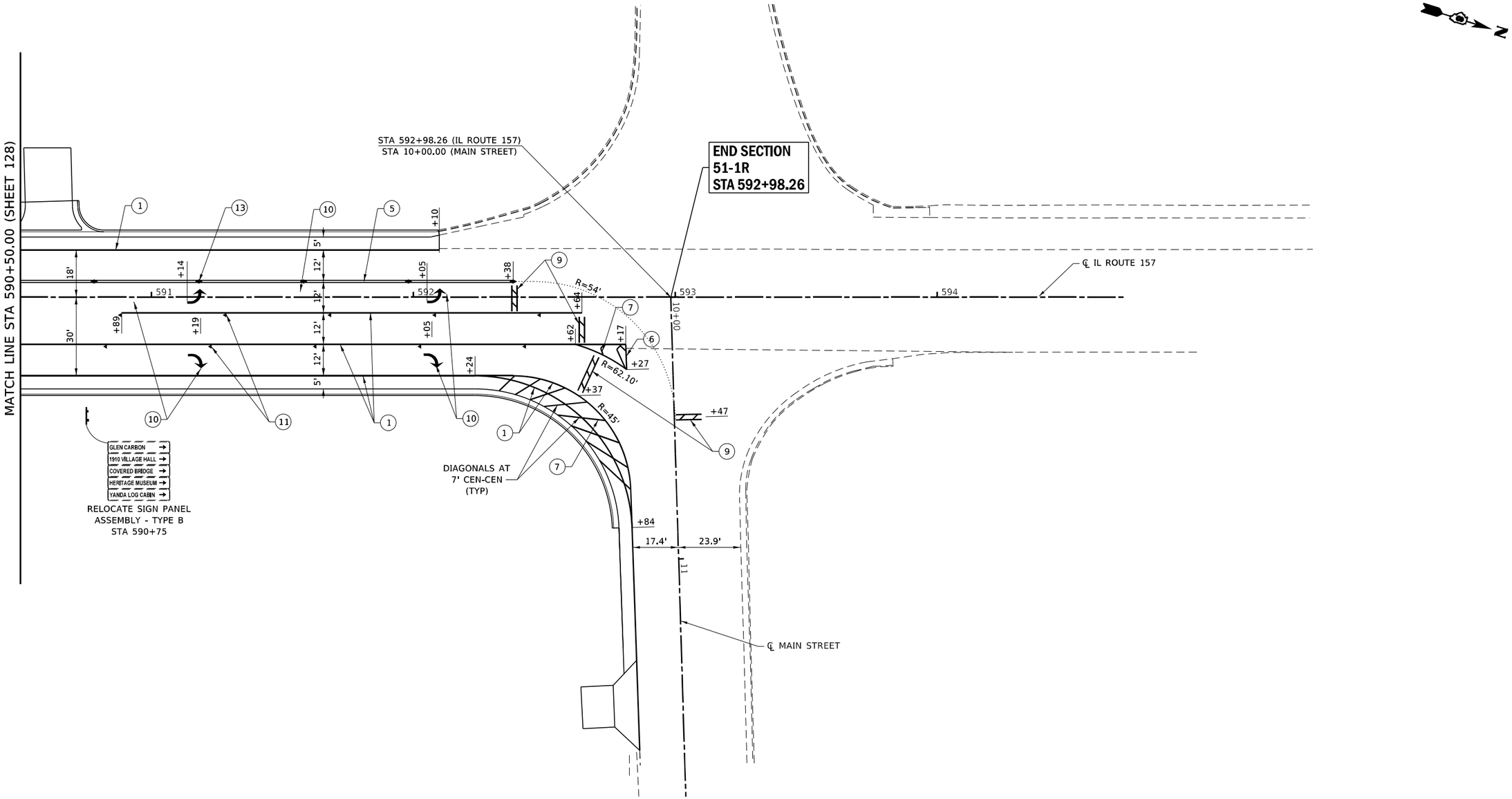

LEGEND

1. PROPOSED THERMOPLASTIC PAVEMENT MARKING LINE, 6", SOLID WHITE
2. PROPOSED THERMOPLASTIC PAVEMENT MARKING LINE, 6", SKIP-DASH, 2'-6' SPACING
3. PROPOSED THERMOPLASTIC PAVEMENT MARKING LINE, 6", SOLID YELLOW
4. PROPOSED THERMOPLASTIC PAVEMENT MARKING LINE, 6", SKIP-DASH YELLOW, 3'-9' SPACING
5. PROPOSED THERMOPLASTIC PAVEMENT MARKING LINE, 6", DOUBLE YELLOW
6. PROPOSED THERMOPLASTIC PAVEMENT MARKING LINE, 8", SOLID WHITE
7. PROPOSED THERMOPLASTIC PAVEMENT MARKING LINE, 12", SOLID WHITE
8. PROPOSED THERMOPLASTIC PAVEMENT MARKING LINE, 12", SOLID YELLOW
9. PROPOSED THERMOPLASTIC PAVEMENT MARKING LINE, 24", SOLID WHITE
10. PROPOSED THERMOPLASTIC PAVEMENT LETTERS AND SYMBOLS
11. PROPOSED ONE-WAY CRYSTAL RAISED REFLECTIVE PAVEMENT MARKERS, 40' CENTERS
12. PROPOSED ONE-WAY AMBER RAISED REFLECTIVE PAVEMENT MARKERS, 40' CENTERS
13. PROPOSED TWO-WAY AMBER RAISED REFLECTIVE PAVEMENT MARKERS, 40' CENTERS
14. PROPOSED TWO-WAY AMBER RAISED REFLECTIVE PAVEMENT MARKERS, 80' CENTERS
15. PROPOSED CURB REFLECTORS, 10' CENTERS (3 PER SIDE MIN.)
16. PROPOSED CURB REFLECTORS, 2' CENTERS
17. PROPOSED PAINT PAVEMENT MARKING CURB, WHITE
18. PROPOSED PREFORMED PLASTIC PAVEMENT MARKING, TYPE D - STANDARD - 6", SOLID WHITE
19. PROPOSED PREFORMED PLASTIC PAVEMENT MARKING, TYPE D - STANDARD - 6", SKIP-DASH, 2'-6' SPACING
20. PROPOSED PREFORMED PLASTIC PAVEMENT MARKING, TYPE D - STANDARD - 4", DOUBLE YELLOW
21. PROPOSED PREFORMED PLASTIC PAVEMENT MARKING, TYPE D - STANDARD - 8", SOLID WHITE
22. PROPOSED PREFORMED PLASTIC PAVEMENT MARKING, TYPE D - STANDARD -12", SOLID WHITE
23. PROPOSED PREFORMED PLASTIC PAVEMENT MARKING, TYPE D - STANDARD - 12", SOLID YELLOW
24. PROPOSED PREFORMED PLASTIC PAVEMENT MARKING, TYPE D - STANDARD - 24", SOLID WHITE
25. PROPOSED PREFORMED PLASTIC PAVEMENT MARKING, TYPE D - STANDARD - LETTERS AND SYMBOLS
26. PROPOSED WALL REFLECTORS, TYPE B
27. PROPOSED WALL REFLECTORS, TYPE C

0 20 40 60
SCALE IN FEET

FILE NAME: \\loch.loc\vaos\Production\Files\2020\420-0018\CAD\CADD Sheets\0876A46-sht-Pavement Marking.dgn

LOCHMUELLER GROUP
1928 S/A Bradley R. Smith Drive
Troy, IL 62294
PHONE: 618.667.1400

USER NAME = Jordan.Pettibone	DESIGNED - ESW	REVISED -	
MODEL NAME = MKG PLAN 09	DRAWN - LEC	REVISED -	
PLOT SCALE = 40.0000 ' / in.	CHECKED - BRM	REVISED -	
PLOT DATE = 3/6/2024	DATE - 10/8/2021	REVISED -	

STATE OF ILLINOIS
DEPARTMENT OF TRANSPORTATION

PAVEMENT MARKING AND SIGNING PLANS
IL ROUTE 157

SCALE: 1"=20' | SHEET 9 OF 9 SHEETS | STA 590+50.00 TO STA 595+00.00

F.A.P. RTE.	SECTION	COUNTY	TOTAL SHEETS	SHEET NO.
*	51-1R	MADISON	296	129

CONTRACT NO. 76A46

ILLINOIS | FED. AID PROJECT

*586/592

SCHEDULE OF QUANTITIES			TOTAL QUANTITIES	IL 157 @ IL 162
CODE NO.	ITEM	UNIT		
72000100	SIGN PANEL - TYPE 1	SQ FT	55	25
80500100	SERVICE INSTALLATION, TYPE A	EACH	1	1
81028350	UNDERGROUND CONDUIT, PVC, 2" DIA.	FOOT	988	621
81028370	UNDERGROUND CONDUIT, PVC, 3" DIA.	FOOT	640	627
81028390	UNDERGROUND CONDUIT, PVC, 4" DIA.	FOOT	116	116
81028400	UNDERGROUND CONDUIT, PVC, 5" DIA.	FOOT	48	48
81100600	CONDUIT ATTACHED TO STRUCTURE, 2" DIA., GALVANIZED STEEL	FOOT	135	135
81400100	HANDHOLE	EACH	15	12
81400300	DOUBLE HANDHOLE	EACH	1	1
85700200	FULL-ACTUATED CONTROLLER AND TYPE IV CABINET	EACH	1	1
87100160	FIBER OPTIC CABLE IN CONDUIT, NO. 62.5/125, 24F	FOOT	1130	1130
87301215	ELECTRIC CABLE IN CONDUIT, SIGNAL NO. 14 2C	FOOT	1375	1375
87301235	ELECTRIC CABLE IN CONDUIT, SIGNAL NO. 14 4C	FOOT	1410	1410
87301245	ELECTRIC CABLE IN CONDUIT, SIGNAL NO. 14 5C	FOOT	5207	4237
87301255	ELECTRIC CABLE IN CONDUIT, SIGNAL NO. 14 7C	FOOT	2028	1061
87301815	ELECTRIC CABLE IN CONDUIT, SERVICE, NO. 6 3 C	FOOT	34	34
87301900	ELECTRIC CABLE IN CONDUIT, EQUIPMENT GROUNDING CONDUCTOR, NO. 6 1C	FOOT	1400	1310
87500800	TRAFFIC SIGNAL POST, 12 FT.	EACH	3	3
87702970	STEEL COMBINATION MAST ARM ASSEMBLY AND POLE 48 FT.	EACH	1	1
87702980	STEEL COMBINATION MAST ARM ASSEMBLY AND POLE 50 FT.	EACH	1	1
87703030	STEEL COMBINATION MAST ARM ASSEMBLY AND POLE 60 FT.	EACH	1	1
87703080	STEEL COMBINATION MAST ARM ASSEMBLY AND POLE 68 FT.	EACH	1	1
87800100	CONCRETE FOUNDATION, TYPE A	FOOT	9	9
87800200	CONCRETE FOUNDATION, TYPE D	FOOT	3	3
87800415	CONCRETE FOUNDATION, TYPE E 36-INCH DIAMETER	FOOT	43	28
87800420	CONCRETE FOUNDATION, TYPE E 42-INCH DIAMETER	FOOT	46	46
88040070	SIGNAL HEAD, POLYCARBONATE, LED, 1-FACE, 3-SECTION, BRACKET MOUNTED	EACH	7	6
88040090	SIGNAL HEAD, POLYCARBONATE, LED, 1-FACE, 3-SECTION, MAST ARM MOUNTED	EACH	12	10
88040110	SIGNAL HEAD, POLYCARBONATE, LED, 1-FACE, 4-SECTION, BRACKET MOUNTED	EACH	6	2
88040120	SIGNAL HEAD, POLYCARBONATE, LED, 1-FACE, 4-SECTION, MAST ARM MOUNTED	EACH	6	2
88102845	PEDESTRIAN SIGNAL HEAD, POLYCARBONATE, LED, 2-FACE, BRACKET MOUNTED WITH COUNT DOWN TIMER	EACH	4	4
88200510	TRAFFIC SIGNAL BACKPLATE, RETROREFLECTIVE	EACH	18	12
X8710103	ETHERNET SWITCH	EACH	1	1
X8760200	ACCESSIBLE PEDESTRIAN SIGNALS	EACH	4	4
Z0033072	VIDEO VEHICLE DETECTION SYSTEM	EACH	1	1

FILE NAME: \\loch.loc\root\Production\Files\2020\20-0018\CAD\CADD Sheets\D876A46-sht-Traffic Signals.dgn

LOCHMUELLER GROUP
1928 S-A Bradley R. Smith Drive
Troy, IL 62294
PHONE: 618.667.1400

USER NAME = alex.huelskamp	DESIGNED - ESW	REVISED -	
MODEL NAME = TS 01	DRAWN - LEC	REVISED -	
PLOT SCALE = 40.0000 ' / in.	CHECKED - BRM	REVISED -	
PLOT DATE = 3/5/2024	DATE - 10/8/2021	REVISED -	

STATE OF ILLINOIS
DEPARTMENT OF TRANSPORTATION

TRAFFIC SIGNAL PLANS
QUANTITIES - IL ROUTE 157 AND IL ROUTE 162

SCALE: 1"=20' | SHEET 1 OF 13 SHEETS | SUMMARY OF QUANTITIES 157/162

F.A.P. RTE.	SECTION	COUNTY	TOTAL SHEETS	SHEET NO.
*	51-1R	MADISON	296	130
		CONTRACT NO. 76A46		
		ILLINOIS	FED. AID PROJECT	

*586/592

GENERAL NOTES

TRAFFIC CONTROL SHALL BE THE RESPONSIBILITY OF THE CONTRACTOR AND SHALL CONFORM TO THE ILLINOIS MANUAL ON UNIFORM TRAFFIC CONTROL DEVICES (ILMUTCD), HIGHWAY STANDARDS AND STANDARD SPECIFICATIONS.

ALL VEHICLE AND PEDESTRIAN SIGNAL HEADS SHALL HAVE ALL 12" SECTIONS. MOUNTING HARDWARE SHALL BE UNPAINTED ALUMINUM.

BACKPLATES SHALL BE ABS PLASTIC.

CONTROLLER CABINET, SIGNAL POSTS AND BASES SHALL BE UNPAINTED ALUMINUM.

THE LOCATION OF MAST ARM SUPPORTS SHALL BE APPROVED BY THE ENGINEER BEFORE FOUNDATIONS ARE CONSTRUCTED. MAST ARM POLES SHALL BE LOCATED A MINIMUM OF 10 FEET FROM THE EDGE OF PAVEMENT OR 2 FEET FROM THE EDGE OF SHOULDER, WHICHEVER DISTANCE IS GREATER. IN CURBED SECTIONS, THE MAST ARM POLES SHALL BE LOCATED A MINIMUM OF 5 FEET FROM THE FACE OF THE CURB. THESE DISTANCES ARE TO THE NEAR FACE OF THE MAST ARM POLE.

ALL TRAFFIC SIGNAL CABLE SHALL BE #14 AWG STRANDED COPPER UNLESS OTHERWISE SPECIFIED.

DEPTHS OF CONCRETE FOUNDATIONS FOR MAST ARM SUPPORTS (DETERMINED BY TABLE ON IDOT HIGHWAY STANDARD 878001) ARE:

N.W. QUADRANT	15'-0"	(36" DIA.)
N.E. QUADRANT	13'-0"	(36" DIA.)
S.E. QUADRANT	21'-0"	(42" DIA.)
S.W. QUADRANT	25'-0"	(42" DIA.)

ALL ACCESSIBLE PEDESTRIAN SIGNAL (APS) UNITS SHALL INCLUDE A 6-INCH EXTENSION BRACKET, TO ENSURE THE NEW PUSH BUTTON IS LOCATED WITHIN A 10-INCH UNOBSTRUCTED SIDE-REACH OF A LEVEL LANDING AREA.

ALL IMPROVED PEDESTRIAN RELATED FACILITIES MUST COMPLY WITH CURRENT PUBLIC RIGHTS-OF-WAY ACCESSIBILITY GUIDELINES (PROWAG). REFER TO CURB RAMP DETAIL SHEETS AND IDOT STANDARDS FOR INFORMATION PERTAINING TO THE CONSTRUCTION OF THE PROPOSED CURB RAMPS. THE CONTRACTOR SHALL COORDINATE CONSTRUCTION OF PEDESTRIAN SIGNAL EQUIPMENT WITH SIDEWALK AND CURB RAMP CONSTRUCTION TO ENSURE FINAL LOCATIONS ARE COMPLIANT WITH ADA STANDARDS.

DIRECTIONAL BORING OR PUSHING OF CONDUIT MAY BE USED INSTEAD OF TRENCHING CONDUIT; HOWEVER, NO ADDITIONAL PAYMENT WILL BE MADE.

CONDUIT SPLICES WILL NOT BE PAID FOR SEPARATELY, AND SHALL BE INCLUDED AS PART OF THE WORK ASSOCIATED WITH INSTALLING RESPECTIVE CONDUIT PAY ITEMS.

CALL DELAY SHALL NOT FUNCTION WHEN THE RELATED PHASE IS IN THE GREEN MODE. "CALL CARRY-OVER" SHALL FUNCTION ONLY WHEN RELATED PHASES ARE IN THE GREEN MODE.

SEE "JOINT UTILITY LOCATION INFORMATION FOR EXCAVATORS" (J.U.L.I.E.) IN SPECIAL PROVISIONS. CALL (800) 892-0123 ONE WEEK BEFORE YOU PLAN TO DIG.

PRIOR TO CONSTRUCTION ACTIVITIES TAKING PLACE, THE CONTRACTOR SHALL COORDINATE WITH THE LOCAL POWER COMPANY TO VERIFY RECOMMENDED POWER SOURCE LOCATION TO ACCOMMODATE THE PROPOSED TRAFFIC SIGNAL IMPROVEMENTS.

TRAFFIC SIGNAL LEGEND

	PROPOSED SERVICE INSTALLATION
	PROPOSED CONTROLLER
	PROPOSED DOUBLE HANDHOLE
	PROPOSED DOUBLE HANDHOLE
	PROPOSED SIGNAL POST
	PROPOSED SIGNAL HEAD
	PROPOSED SIGNAL HEAD WITH BACKPLATE
	PROPOSED STEEL MAST ARM ASSEMBLY
	PROPOSED UNDERGROUND CONDUIT
	PROPOSED SIGNAL HEAD
	PROPOSED APS PEDESTRIAN PUSH BUTTON UNIT W/ 6" EXTENSION BRACKET
PVCC	POLYVINYL CHLORIDE CONDUIT
GSC	GALVANIZED STEEL CONDUIT

STANDARDS

720016-04
805001-01
814001-03
814006-02
857001-01
873001-02
877011-10
877012-07
878001-11
880006-01

FILE NAME: \\loch.loc\root\Production\Files\2020\420-0018\CAD\CADD Sheets\D876A46-sht-Traffic Signals.dgn

LOCHMUELLER GROUP
3928 S.W. Bradley R. Smith Drive
Troy, IL 62294
PHONE: 618.667.1400

USER NAME	= alex.huelskamp	DESIGNED	-	ESW	REVISED	-	
MODEL NAME	= TS 02	DRAWN	-	LEC	REVISED	-	
PLOT SCALE	= 40.0000 ' / in.	CHECKED	-	BRM	REVISED	-	
PLOT DATE	= 3/5/2024	DATE	-	10/8/2021	REVISED	-	

STATE OF ILLINOIS
DEPARTMENT OF TRANSPORTATION

TRAFFIC SIGNAL PLANS
GENERAL NOTES - IL ROUTE 157 AND IL ROUTE 162

SCALE: 1"=20' | SHEET 2 OF 13 SHEETS | GENERAL NOTES 157/162

F.A.P. RTE.	SECTION	COUNTY	TOTAL SHEETS	SHEET NO.
*	51-1R	MADISON	296	131
		CONTRACT NO. 76A46		
		ILLINOIS	FED. AID PROJECT	

*586/592

CONTROLLER PHASING

PHASE	1	2	3	4	5	6	7	8
MOVEMENT	SBLT	NB	WBLT	EB	NBLT	SB	EBLT	WB
CONCURRENT MOVEMENT PERMITTED	5 OR 6	5 OR 6	8 OR 7	7 OR 8	1 OR 2	1 OR 2	3 OR 4	8 OR 3

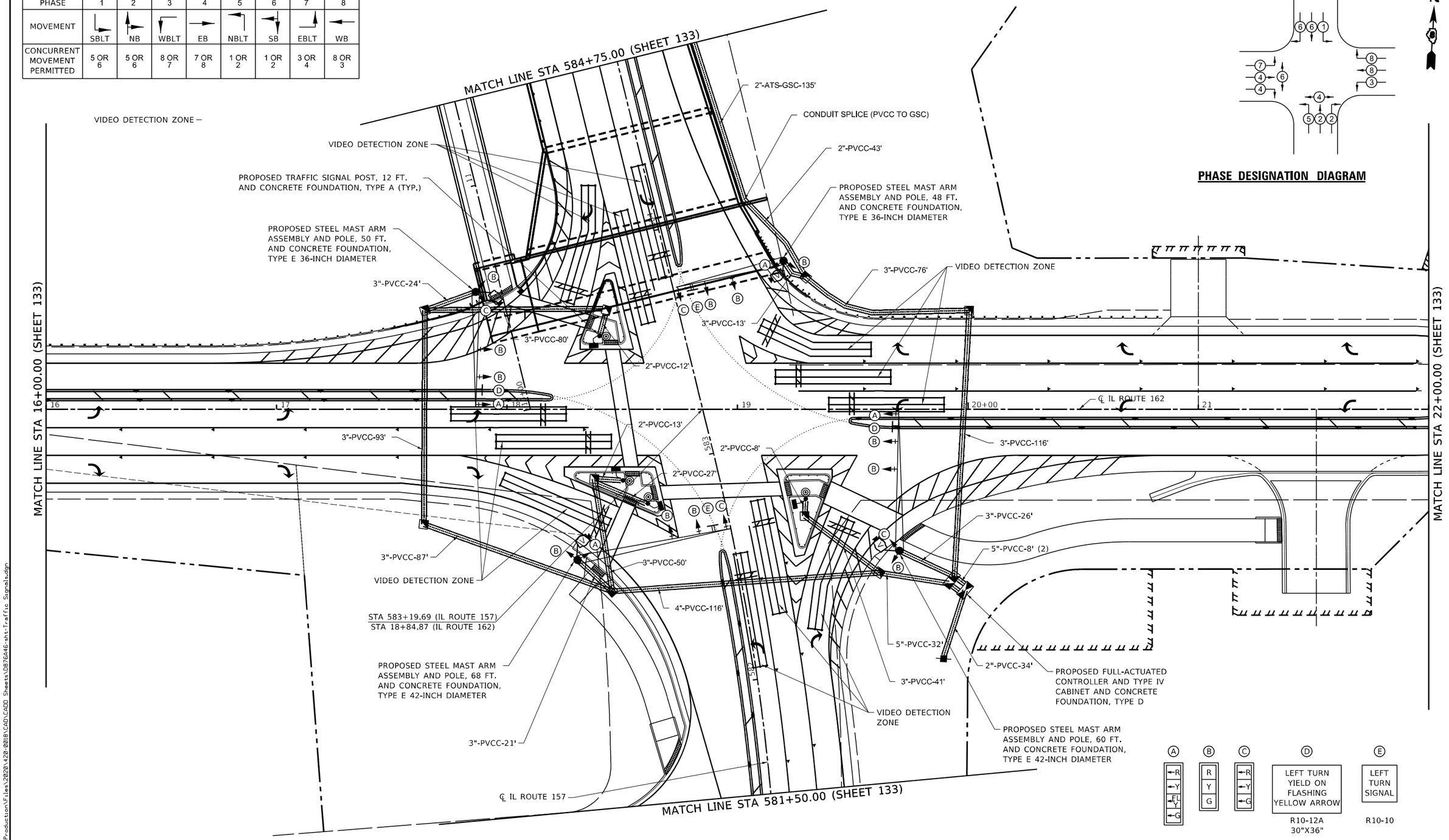

FILE NAME: \\loch.loc\root\Production\Files\2020\420-0018\CAD\CADD Sheets\D876A46-sht-Traffic Signals.dgn

LOCHMUELLER GROUP
3928 S-A Bradley R. Smith Drive
Troy, IL 62294
PHONE: 618.667.1400

USER NAME = alex.huelskamp	DESIGNED - ESW	REVISED -	STATE OF ILLINOIS DEPARTMENT OF TRANSPORTATION	TRAFFIC SIGNAL PLANS IL ROUTE 157 AND IL ROUTE 162	
MODEL NAME = TS 03	DRAWN - LEC	REVISED -			
PLOT SCALE = 40.0000' / in.	CHECKED - BRM	REVISED -			
PLOT DATE = 3/5/2024	DATE - 10/8/2021	REVISED -		SCALE: 1"=20' SHEET 3 OF 13 SHEETS TS PLANS 157/162	

F.A.P. RTE.	SECTION	COUNTY	TOTAL SHEETS	SHEET NO.
*	51-1R	MADISON	296	132
		CONTRACT NO. 76A46		
	ILLINOIS	FED. AID PROJECT		

*586/592

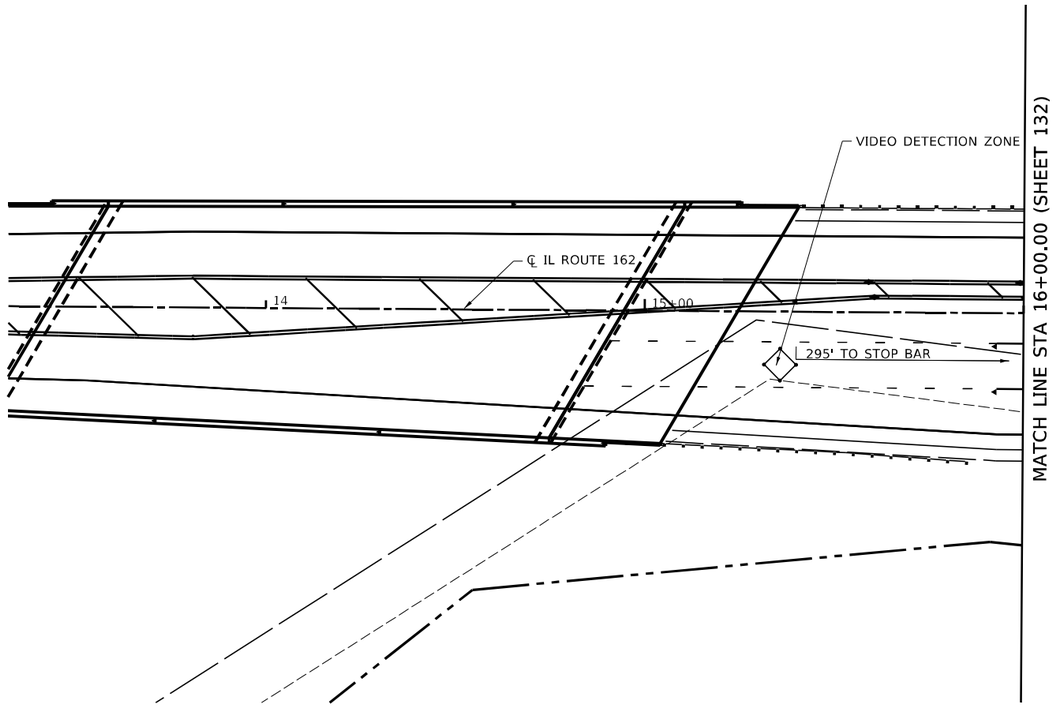

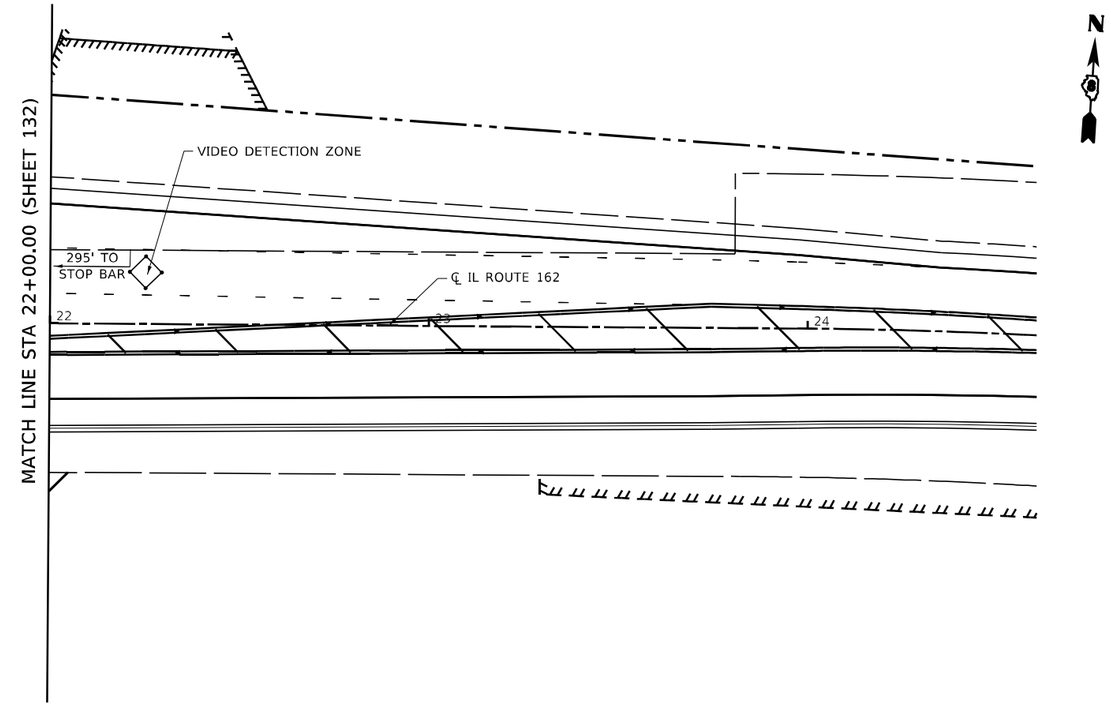

0 20 40 60
SCALE IN FEET

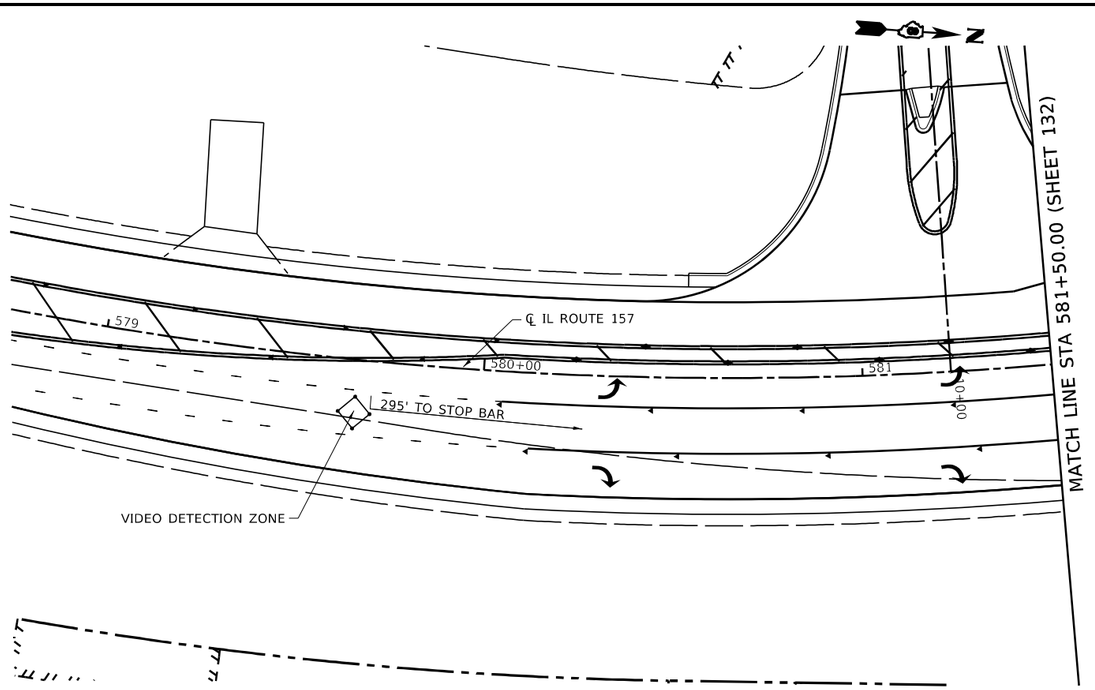

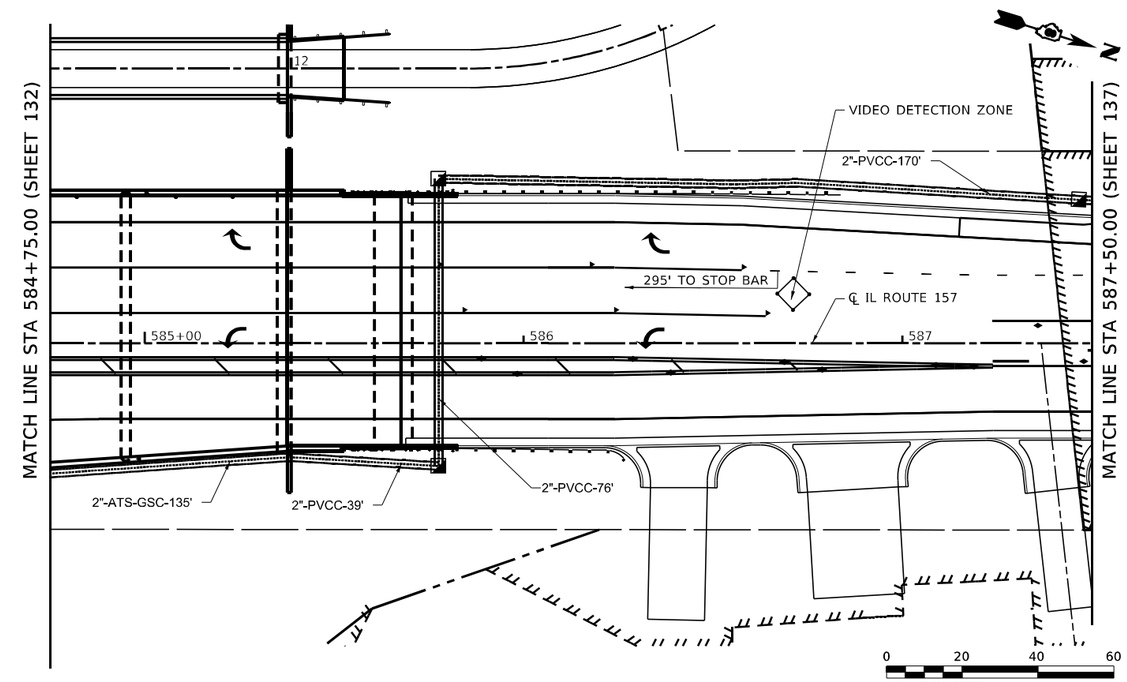

0 20 40 60
SCALE IN FEET

FILE NAME: \\loch.loc\root\Production\Files\2020\20-0018\CAD\CADD Sheets\D876A46-sht-Traffic Signals.dgn

LOCHMUELLER GROUP
3928 S.N. Bradley R. Smith Drive
Troy, IL 62294
PHONE: 618.667.1400

USER NAME = alex.huelskamp	DESIGNED – ESW	REVISED –	
MODEL NAME = TS 04	DRAWN – LEC	REVISED –	
PLOT SCALE = 40.0000 ' / in.	CHECKED – BRM	REVISED –	
PLOT DATE = 3/5/2024	DATE – 10/8/2021	REVISED –	

STATE OF ILLINOIS
DEPARTMENT OF TRANSPORTATION

TRAFFIC SIGNAL PLANS
IL ROUTE 157 AND IL ROUTE 162

SCALE: 1"=20' | SHEET 4 OF 13 SHEETS | TS PLANS 157/167

F.A.P. RTE.	SECTION	COUNTY	TOTAL SHEETS	SHEET NO.
*	51-1R	MADISON	296	133
		CONTRACT NO. 76A46		
		ILLINOIS	FED. AID PROJECT	

*586/592

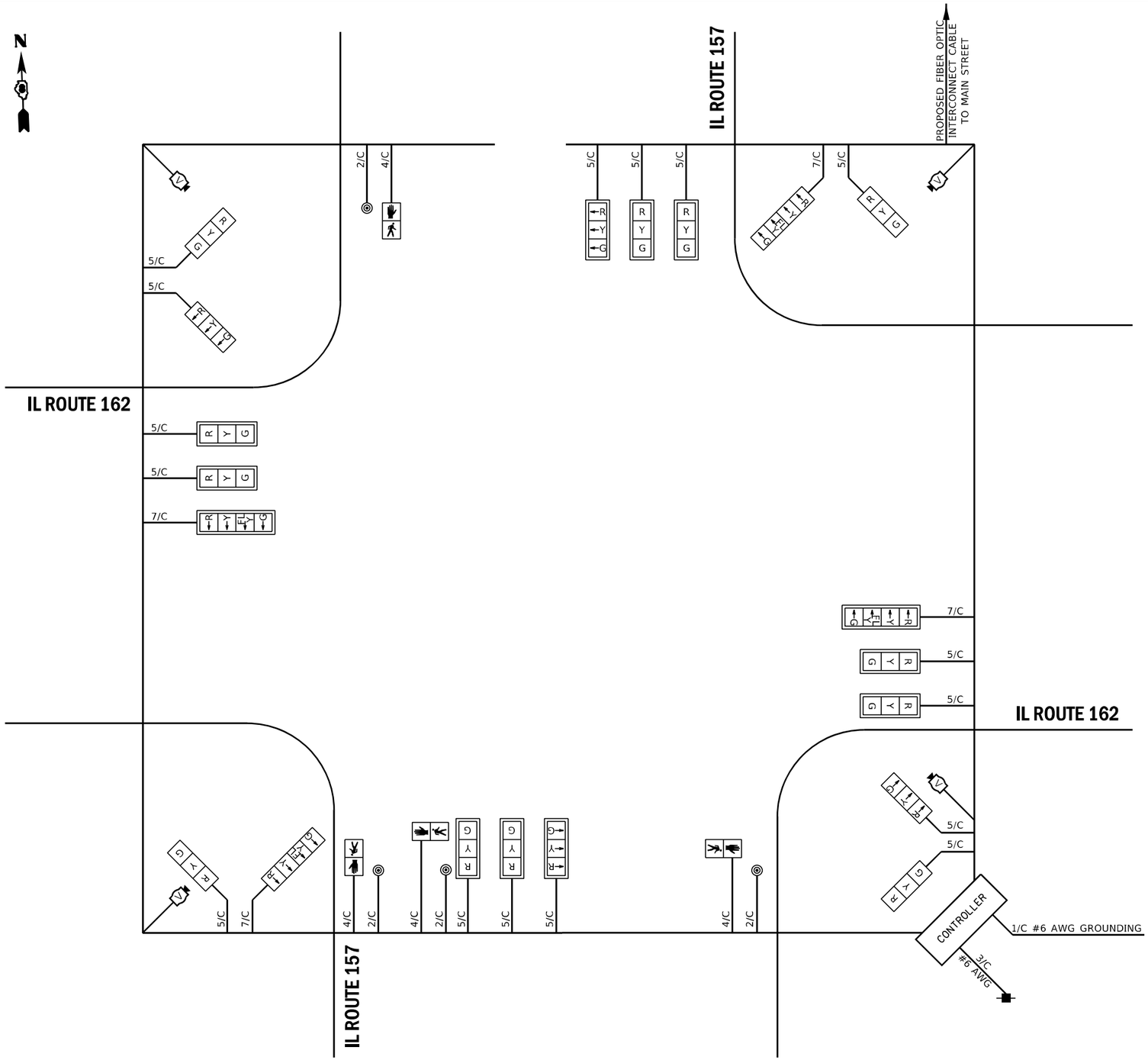

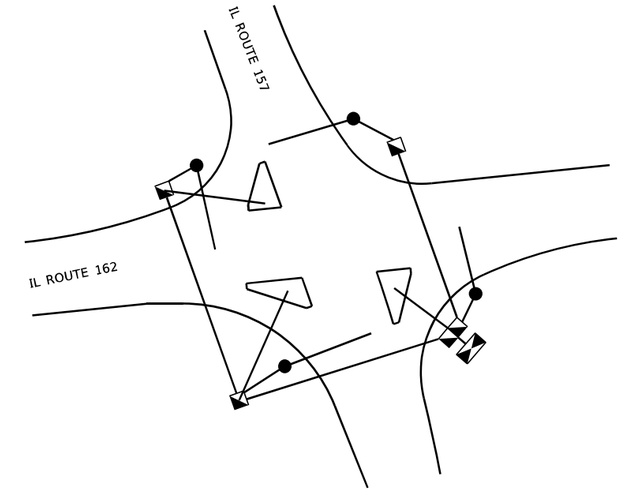

GROUNDING SCHEMATIC

CABLE DIAGRAM LEGEND

———	PROPOSED ELECTRIC CABLE IN CONDUIT
-□-	SERVICE INSTALLATION
2/C	INDICATES NUMBER OF CONDUCTORS IN CABLE
#6	INDICATES AMERICAN WIRE GAUGE (AWG) SIZE 6 CONDUCTOR
◎	PROPOSED APS PUSH BUTTON WITH 6-INCH EXTENSION BRACKET
V	PROPOSED VIDEO DETECTION CAMERA
	PROPOSED PEDESTRIAN SIGNAL HEAD WITH COUNTDOWN TIMER

FILE NAME: \\loch.loc\root\Production\Files\2020\420-0018\CAD\CADD Sheets\DB76A46-sht-Traffic Signals.dgn

LOCHMUELLER GROUP
1928 S.R. Bradley R. Smith Drive
Troy, IL 62294
PHONE: 618.667.1400

USER NAME = alex.huelskamp	DESIGNED - ESW	REVISED -	
MODEL NAME = TS 05	DRAWN - LEC	REVISED -	
PLOT SCALE = 40.0000 ' / in.	CHECKED - BRM	REVISED -	
PLOT DATE = 3/5/2024	DATE - 10/8/2021	REVISED -	

STATE OF ILLINOIS
DEPARTMENT OF TRANSPORTATION

TRAFFIC SIGNAL PLANS
CABLE DIAGRAM - IL ROUTE 157 AND IL ROUTE 162

SCALE: 1"=20' | SHEET 5 OF 13 SHEETS | CABLE DIAGRAM 157/162

F.A.P. RTE.	SECTION	COUNTY	TOTAL SHEETS	SHEET NO.
*	51-1R	MADISON	296	134
		CONTRACT NO. 76A46		
	ILLINOIS	FED. AID PROJECT		

*586/592

SCHEDULE OF QUANTITIES			TOTAL QUANTITIES	IL 157 @ N MAIN
CODE NO.	ITEM	UNIT		
72000100	SIGN PANEL - TYPE 1	SQ FT	55	30
72400310	REMOVE SIGN PANEL - TYPE 1	SQ FT	30	30
81028240	UNDERGROUND CONDUIT, GALVANIZED STEEL, 4" DIA.	FOOT	194	194
81028320	UNDERGROUND CONDUIT, PVC, 1" DIA.	FOOT	97	97
81028350	UNDERGROUND CONDUIT, PVC, 2" DIA.	FOOT	988	367
81028370	UNDERGROUND CONDUIT, PVC, 3" DIA.	FOOT	640	13
81400100	HANDHOLE	EACH	15	3
85000200	MAINTENANCE OF EXISTING TRAFFIC SIGNAL INSTALLATION	EACH	1	1
87301245	ELECTRIC CABLE IN CONDUIT, SIGNAL NO. 14 5C	FOOT	5207	970
87301255	ELECTRIC CABLE IN CONDUIT, SIGNAL NO. 14 7C	FOOT	2028	967
87301305	ELECTRIC CABLE IN CONDUIT, LEAD-IN, NO. 14 1 PAIR	FOOT	1867	1867
87301900	ELECTRIC CABLE IN CONDUIT, EQUIPMENT GROUNDING CONDUCTOR, NO. 6 1C	FOOT	1400	90
87700320	STEEL MAST ARM ASSEMBLY AND POLE, 55 FT.	EACH	1	1
87800415	CONCRETE FOUNDATION, TYPE E 36-INCH DIAMETER	FOOT	43	15
87900200	DRILL EXISTING HANDHOLE	EACH	2	2
88040070	SIGNAL HEAD, POLYCARBONATE, LED, 1-FACE, 3-SECTION, BRACKET MOUNTED	EACH	7	1
88040090	SIGNAL HEAD, POLYCARBONATE, LED, 1-FACE, 3-SECTION, MAST ARM MOUNTED	EACH	12	2
88040110	SIGNAL HEAD, POLYCARBONATE, LED, 1-FACE, 4-SECTION, BRACKET MOUNTED	EACH	6	4
88040120	SIGNAL HEAD, POLYCARBONATE, LED, 1-FACE, 4-SECTION, MAST ARM MOUNTED	EACH	6	4
88200510	TRAFFIC SIGNAL BACKPLATE, RETROREFLECTIVE	EACH	18	6
88500100	INDUCTIVE LOOP DETECTOR	EACH	1	1
88600100	DETECTOR LOOP, TYPE I	FOOT	688	688
89500100	RELOCATE EXISTING SIGNAL HEAD	EACH	2	2
89502210	MODIFY EXISTING CONTROLLER CABINET	EACH	1	1
89502300	REMOVE ELECTRIC CABLE FROM CONDUIT	FOOT	3338	3338
89502375	REMOVE EXISTING TRAFFIC SIGNAL EQUIPMENT	EACH	1	1
89502380	REMOVE EXISTING HANDHOLE	EACH	3	3
89502385	REMOVE EXISTING CONCRETE FOUNDATION	EACH	1	1
Z0073510	TEMPORARY TRAFFIC SIGNAL TIMING	EACH	1	1

FILE NAME: \\loch.loc\root\Production\Files\2020\420-0018\CAD\CADD Sheets\0876A46-sht-Traffic Signals.dgn

LOCHMUELLER GROUP
3928 S.N. Bradley R. Smith Drive
Troy, IL 62294
PHONE: 618.667.1400

USER NAME = alex.huelskamp	DESIGNED - ESW	REVISED -	
MODEL NAME = TS 06	DRAWN - LEC	REVISED -	
PLOT SCALE = 40.0000 ' / in.	CHECKED - BRM	REVISED -	
PLOT DATE = 3/5/2024	DATE - 10/8/2021	REVISED -	

STATE OF ILLINOIS
DEPARTMENT OF TRANSPORTATION

TRAFFIC SIGNAL PLANS
QUANTITIES - IL ROUTE 157 AND MAIN STREET

SCALE: 1"=20' | SHEET 6 OF 13 SHEETS | SUMMARY OF QUANTITIES MAIN ST

F.A.P. RTE.	SECTION	COUNTY	TOTAL SHEETS	SHEET NO.
*	51-1R	MADISON	296	135
		CONTRACT NO. 76A46		
	ILLINOIS	FED. AID PROJECT		

GENERAL NOTES

TRAFFIC CONTROL SHALL BE THE RESPONSIBILITY OF THE CONTRACTOR AND SHALL CONFORM TO THE ILLINOIS MANUAL ON UNIFORM TRAFFIC CONTROL DEVICES (ILMUTCD), HIGHWAY STANDARDS AND STANDARD SPECIFICATIONS.

ALL VEHICLE AND PEDESTRIAN SIGNAL HEADS SHALL HAVE ALL 12" SECTIONS. MOUNTING HARDWARE SHALL BE UNPAINTED ALUMINUM.

THE CONTRACTOR SHALL VERIFY ALL NEW SIGNAL HEAD LOCATIONS PRIOR TO INSTALLATION. A MINIMUM SPACING OF 8 FT. SHALL BE MAINTAINED BETWEEN ALL EXISTING AND PROPOSED MAST ARM MOUNTED SIGNAL HEADS. ANY UNUSED OPENINGS REMAINING IN THE SIGNAL MAST ARMS OR POLES SHALL BE FILLED OR COVERED, TO THE SATISFACTION OF THE ENGINEER.

BACKPLATES SHALL BE ABS PLASTIC.

CONTROLLER CABINET, SIGNAL POSTS AND BASES SHALL BE UNPAINTED ALUMINUM.

THE LOCATION OF MAST ARM SUPPORTS SHALL BE APPROVED BY THE ENGINEER BEFORE FOUNDATIONS ARE CONSTRUCTED. MAST ARM POLES SHALL BE LOCATED A MINIMUM OF 10 FEET FROM THE EDGE OF PAVEMENT OR 2 FEET FROM THE EDGE OF SHOULDER, WHICHEVER DISTANCE IS GREATER. IN CURBED SECTIONS, THE MAST ARM POLES SHALL BE LOCATED A MINIMUM OF 5 FEET FROM THE FACE OF THE CURB. THESE DISTANCES ARE TO THE NEAR FACE OF THE MAST ARM POLE.

ALL TRAFFIC SIGNAL CABLE SHALL BE #14 AWG STRANDED COPPER UNLESS OTHERWISE SPECIFIED.

DEPTHS OF CONCRETE FOUNDATIONS FOR MAST ARM SUPPORTS (DETERMINED BY TABLE ON IDOT HIGHWAY STANDARD 787001) ARE:
S.E. QUADRANT 15'-0" (36" DIA.)

CONDUIT SPLICES WILL NOT BE PAID FOR SEPARATELY, AND SHALL BE INCLUDED AS PART OF THE WORK ASSOCIATED WITH INSTALLING RESPECTIVE CONDUIT PAY ITEMS.

ALL UNUSED AND/OR UNNECESSARY TRAFFIC SIGNAL CABLES SHALL BE COMPLETELY REMOVED FROM THE EXISTING CONDUIT SYSTEM, IF POSSIBLE, TO ENSURE ADEQUATE CONDUIT CAPACITY. ALL UNUSED CONDUITS SHALL BE REMOVED OR ABANDONED.

DETECTOR LOOP LEAD-IN SPLICES SHALL BE MADE IN A HANDHOLE PER SECTION 873.03 OF THE "STANDARD SPECIFICATIONS FOR TRAFFIC CONTROL ITEMS". CONDUCTORS SHALL BE SPLICED IN A RIGID MOLD. ROSIN CORE SOLDER SHALL BE USED.

CALL DELAY SHALL NOT FUNCTION WHEN THE RELATED PHASE IS IN THE GREEN MODE. "CALL CARRY-OVER" SHALL FUNCTION ONLY WHEN RELATED PHASES ARE IN THE GREEN MODE.

SEE "JOINT UTILITY LOCATION INFORMATION FOR EXCAVATORS" (J.U.L.I.E.) IN SPECIAL PROVISIONS. CALL (800) 892-0123 ONE WEEK BEFORE YOU PLAN TO DIG.

PRIOR TO CONSTRUCTION ACTIVITIES TAKING PLACE, THE CONTRACTOR SHALL COORDINATE WITH THE LOCAL POWER COMPANY TO VERIFY THAT NO MODIFICATIONS TO THE EXISTING POWER SOURCE LOCATIONS WILL BE REQUIRED TO ACCOMMODATE THE PROPOSED TRAFFIC SIGNAL IMPROVEMENTS.

IT SHALL BE THE CONTRACTOR'S RESPONSIBILITY TO REPAIR ANY FACILITIES DAMAGED DURING CONSTRUCTION. ALL EXISTING FACILITIES NOT EXPLICITLY IDENTIFIED AS BEING REMOVED OR RELOCATED IN THE PLANS THAT ARE DISTURBED OR OTHERWISE DAMAGED BY THE CONTRACTOR SHALL BE REPLACED IN KIND BY THE CONTRACTOR WITH NO ADDITIONAL COMPENSATION.

ANY EQUIPMENT REMOVED FROM THE PROJECT INTERSECTION AND NOT UTILIZED IN THE FINAL INSTALLATION SHALL REMAIN THE PROPERTY OF THE CONTRACTOR.

DETECTOR LOOP REQUIREMENTS AND CALCULATIONS

NO.	LOOP	PHASE	LOOP SIZE (FT)	REQ'D NO OF TURNS	CALCULATED INDUCTANCE (uH)	CALCULATED RESISTANCE (OHMS)
1	NB CCO	2	6 X 6	6	350.6	2.54
2	NB LT CD	5	50 X 6	3-6-3	830.9	2.61
3	NB THRU CD	2	50 X 6	3-6-3	825.8	2.50
4	NB THRU CD	2	50 X 6	3-6-3	823.8	2.45

TRAFFIC SIGNAL LEGEND

EXISTING SERVICE INSTALLATION
EXISTING CONTROLLER
EXISTING HANDHOLE
EXISTING DOUBLE HANDHOLE
EXISTING SIGNAL HEAD
EXISTING SIGNAL HEAD WITH BACKPLATE
EXISTING LOOP DETECTOR
EXISTING STEEL MAST ARM ASSEMBLY
EXISTING UNDERGROUND CONDUIT
PROPOSED HANDHOLE
PROPOSED SIGNAL HEAD
PROPOSED SIGNAL HEAD WITH BACKPLATE
PROPOSED LOOP DETECTOR
PROPOSED STEEL MAST ARM ASSEMBLY
PROPOSED UNDERGROUND CONDUIT
PVCC POLYVINYL CHLORIDE CONDUIT
GSC GALVANIZED STEEL CONDUIT

STANDARDS

720016-04
805001-01
812001-01
814001-03
814006-02
857001-01
862001-01
873001-02
877001-08
877002-04
878001-11
880006-01
886001-01
886006-01

FILE NAME: \\loch.loc\root\Production\Files\2020\220-0018\CAD\CADD Sheets\D876A46-sht-Traffic Signals.dgn

LOCHMUELLER GROUP
1928 Sth Bradley R. Smith Drive
Troy, IL 62294
PHONE: 618.667.1400

USER NAME = alex.huelskamp	DESIGNED - ESW	REVISED -	
MODEL NAME = TS 07	DRAWN - LEC	REVISED -	
PLOT SCALE = 40.0000 ' / in.	CHECKED - BRM	REVISED -	
PLOT DATE = 3/5/2024	DATE - 10/8/2021	REVISED -	

STATE OF ILLINOIS
DEPARTMENT OF TRANSPORTATION

TRAFFIC SIGNAL PLANS
GENERAL NOTES - IL ROUTE 157 AND MAIN STREET

SCALE: 1"=20' | SHEET 7 OF 13 SHEETS | GENERAL NOTES MAIN ST

F.A.P. RTE.	SECTION	COUNTY	TOTAL SHEETS	SHEET NO.
*	51-1R	MADISON	296	136
		CONTRACT NO. 76A46		
	ILLINOIS	FED. AID PROJECT		

*586/592

CONTROLLER PHASING

PHASE	1	2	3	4	5	6	7	8
MOVEMENT	EBLT	WB	NBLT	SB	WBLT	EB	SBLT	NB
CONCURRENT MOVEMENT PERMITTED	5 OR 6	2 OR 5	7 OR 8	7 OR 8	2 OR 1	1 OR 2	3 OR 4	3 OR 4

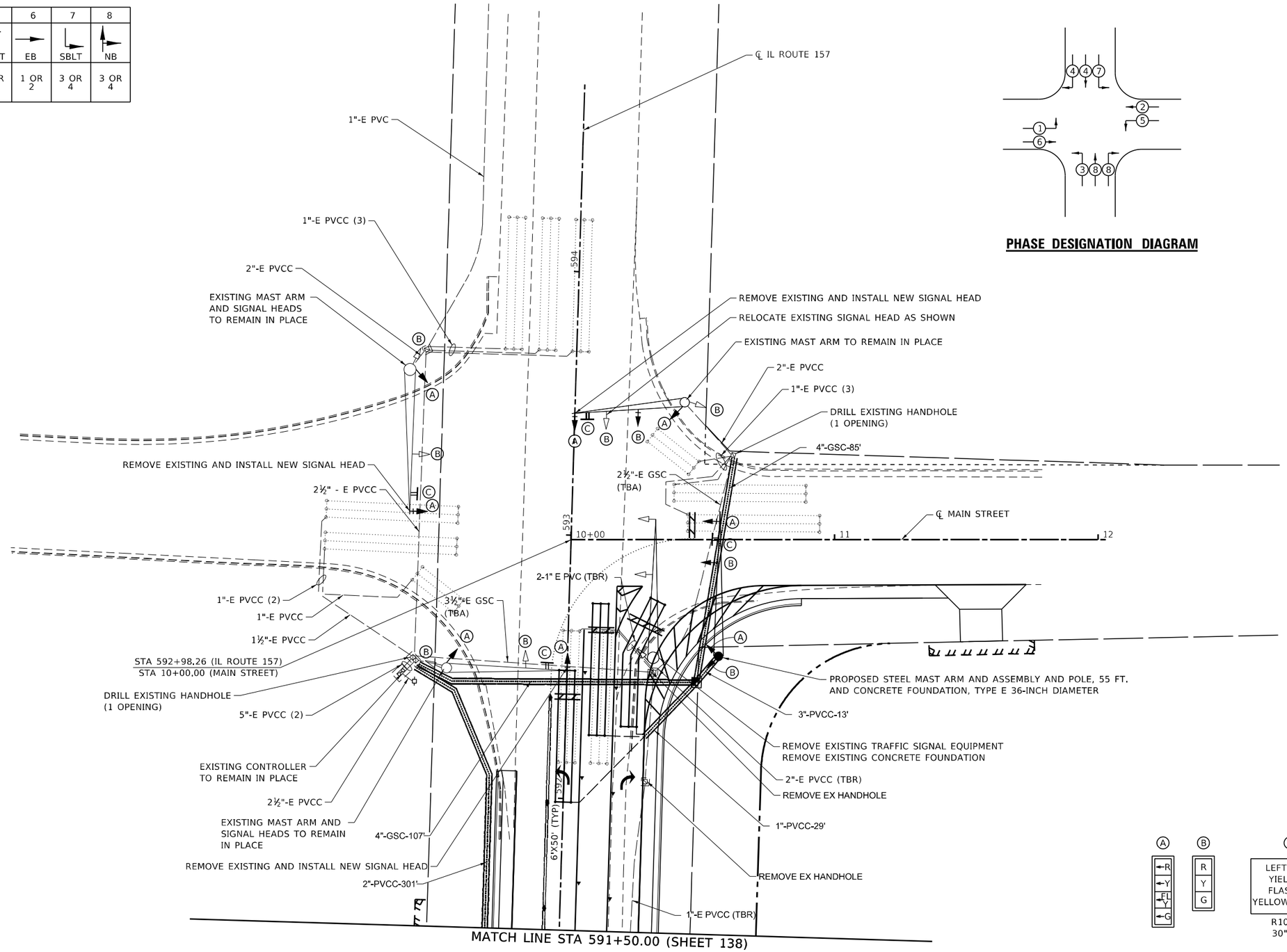

PHASE DESIGNATION DIAGRAM

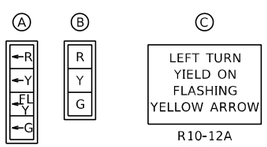

0 20 40 60
SCALE IN FEET

FILE NAME: \\loch.local\root\Production\Files\2020\20-001B\CAD\CADD Sheets\0876A46-sht-Traffic Signals.dgn

LOCHMUELLER GROUP
1928 S-A Bradley R. Smith Drive
Troy, IL 62294
PHONE: 618.667.1400

USER NAME = alex.huelskamp	DESIGNED - ESW	REVISED -	
MODEL NAME = TS 08	DRAWN - LEC	REVISED -	
PLOT SCALE = 40.0000 ' / in.	CHECKED - BRM	REVISED -	
PLOT DATE = 3/5/2024	DATE - 10/8/2021	REVISED -	

STATE OF ILLINOIS
DEPARTMENT OF TRANSPORTATION

TRAFFIC SIGNAL PLANS
IL ROUTE 157 AND MAIN STREET

SCALE: 1"=20' | SHEET 8 OF 13 SHEETS | TS PLANS MAIN ST

F.A.P. RTE.	SECTION	COUNTY	TOTAL SHEETS	SHEET NO.
*	51-1R	MADISON	296	137
		CONTRACT NO. 76A46		
	ILLINOIS	FED. AID PROJECT		

*586/592

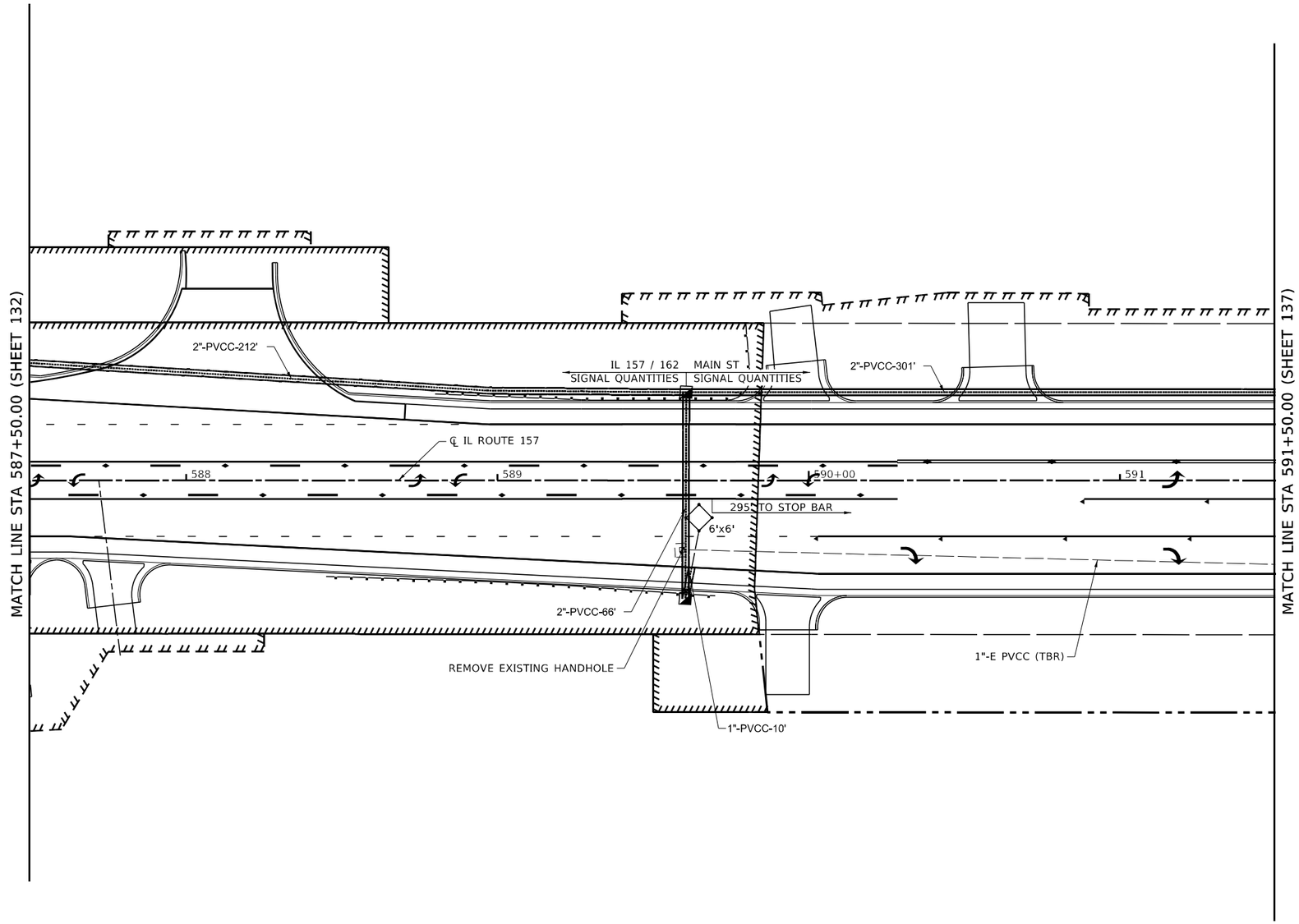

0 20 40 60
SCALE IN FEET

FILE NAME: \\loch.loc\root\Production\Files\20220\20-0018\CAD\CADD Sheets\0876A46-sht-Traffic Signals.dgn

LOCHMUELLER GROUP
1928 S-A Bradley R. Smith Drive
Troy, IL 62294
PHONE: 618.667.1400

USER NAME	alex.huelskamp	DESIGNED	ESW	REVISED	–
MODEL NAME	TS 09	DRAWN	LEC	REVISED	–
PLOT SCALE	40.0000 ' / in.	CHECKED	BRM	REVISED	–
PLOT DATE	3/5/2024	DATE	10/8/2021	REVISED	–

STATE OF ILLINOIS
DEPARTMENT OF TRANSPORTATION

TRAFFIC SIGNAL PLANS
IL ROUTE 157 AND MAIN STREET

SCALE: 1"=20' | SHEET 9 OF 13 SHEETS | TS PLANS MAIN ST

F.A.P. RTE.	SECTION	COUNTY	TOTAL SHEETS	SHEET NO.
*	51-1R	MADISON	296	138
		CONTRACT NO. 76A46		
	ILLINOIS	FED. AID PROJECT		

*586/592

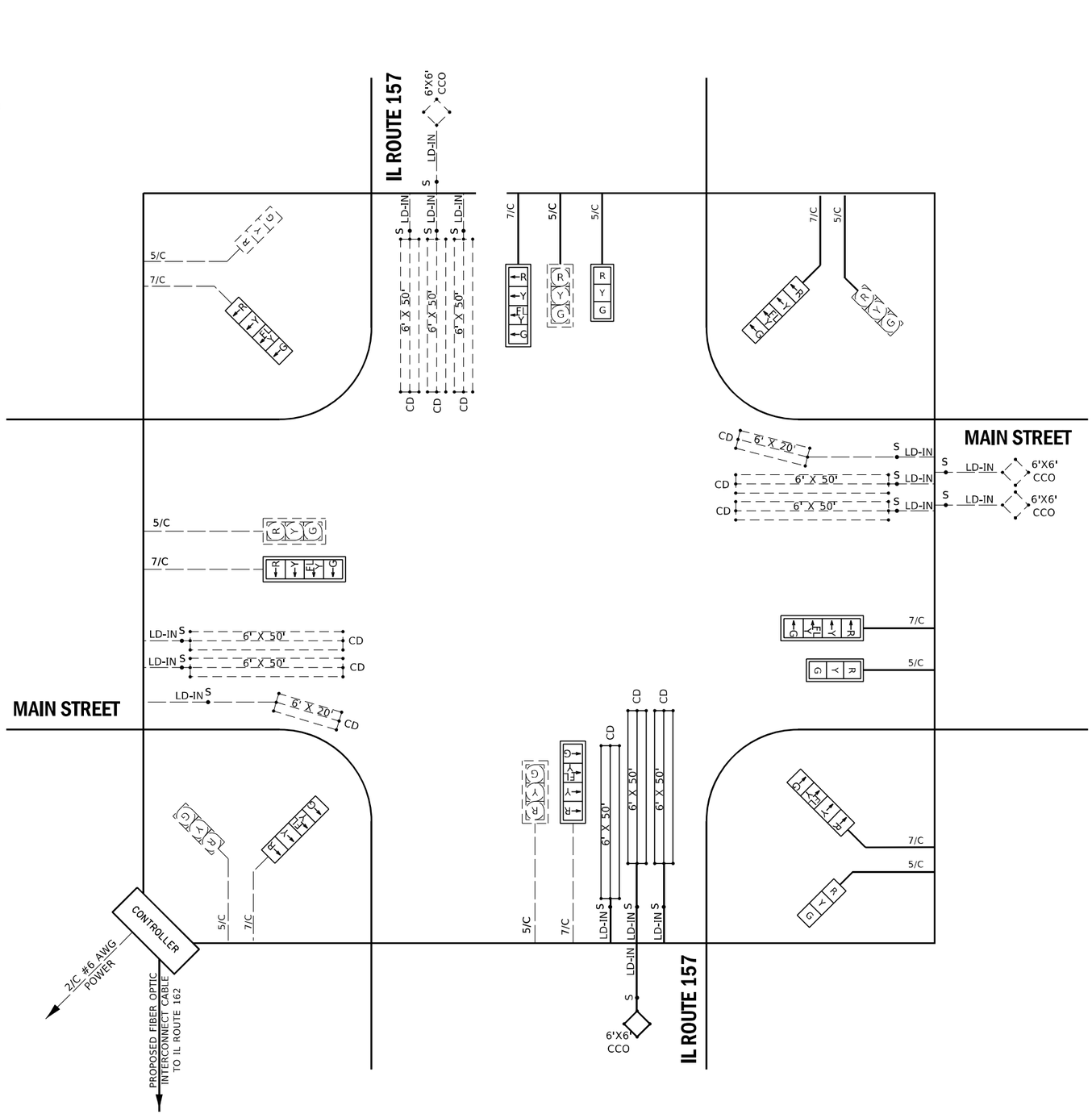

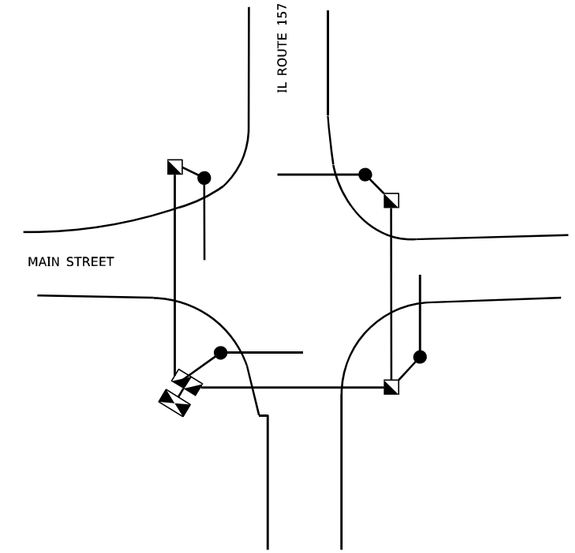

GROUNDING SCHEMATIC

CABLE DIAGRAM LEGEND

———	PROPOSED ELECTRIC CABLE IN CONDUIT
— — -	EXISTING ELECTRIC CABLE IN CONDUIT
- —●S—	PROPOSED CABLE SPLICE
- —○S—	EXISTING CABLE SPLICE
-□-	SERVICE INSTALLATION
2/C	INDICATES NUMBER OF CONDUCTORS IN CABLE
TW SH	TWISTED AND SHIELDED CABLE
#6	INDICATES AMERICAN WIRE GAUGE (AWG) SIZE 6 CONDUCTOR
LD-IN	ELECTRIC CABLE LEAD-IN, I-PAIR
CD	CALL DELAY (SEE GENERAL NOTES)
C.C.O.	CALL CARRY OVER (SEE GENERAL NOTES)
—⊙—	COIL CABLE FOR FUTURE PED. PUSH-BUTTON USE

FILE NAME: \\lochlocvrost\Production\Files\2020\20-0018\CAD\CADD Sheets\D876A46-sht-Traffic Signals.dgn

LOCHMUELLER GROUP
1928 S.R. Bradley R. Smith Drive
Troy, IL 62294
PHONE: 618.667.1400

USER NAME = alex.huelskamp	DESIGNED - ESW	REVISED -	
MODEL NAME = TS 10	DRAWN - LEC	REVISED -	
PLOT SCALE = 40.0000 ' / in.	CHECKED - BRM	REVISED -	
PLOT DATE = 3/5/2024	DATE - 10/8/2021	REVISED -	

STATE OF ILLINOIS
DEPARTMENT OF TRANSPORTATION

TRAFFIC SIGNAL PLANS
CABLE DIAGRAM - IL ROUTE 157 AND MAIN STREET

SCALE: 1"=20' | SHEET 10 OF 13 SHEETS | CABLE DIAGRAM MAIN ST

F.A.P. RTE.	SECTION	COUNTY	TOTAL SHEETS	SHEET NO.
*	51-1R	MADISON	296	139
		CONTRACT NO. 76A46		
		ILLINOIS	FED. AID PROJECT	

*586/592

DocuSign Envelope ID: 2EE9EBB6-BA2F-49CA-9363-EFCA72D5A97C

SCI Engineering, Inc.
650 Pierce Boulevard, O'Fallon, Illinois 62269
Geotechnical Services
www.sciengineering.com

IL 162 @ IL 157: NW CORNER
CPT: B-6
Total depth: 25.10 ft, Date: 1/17/2022
Surface Elevation: 438.00 ft
Coords: lat 38.740839 lon -90.002131
STA: 17+81 Offset: 50' LT
SEC: 4 TWP: 3N RNG: 8W

Project: PTB 195, Item 57 Realignment of IL-162 at IL-157 : SCI No. 2020-0531.10
Location: Madison County, IL

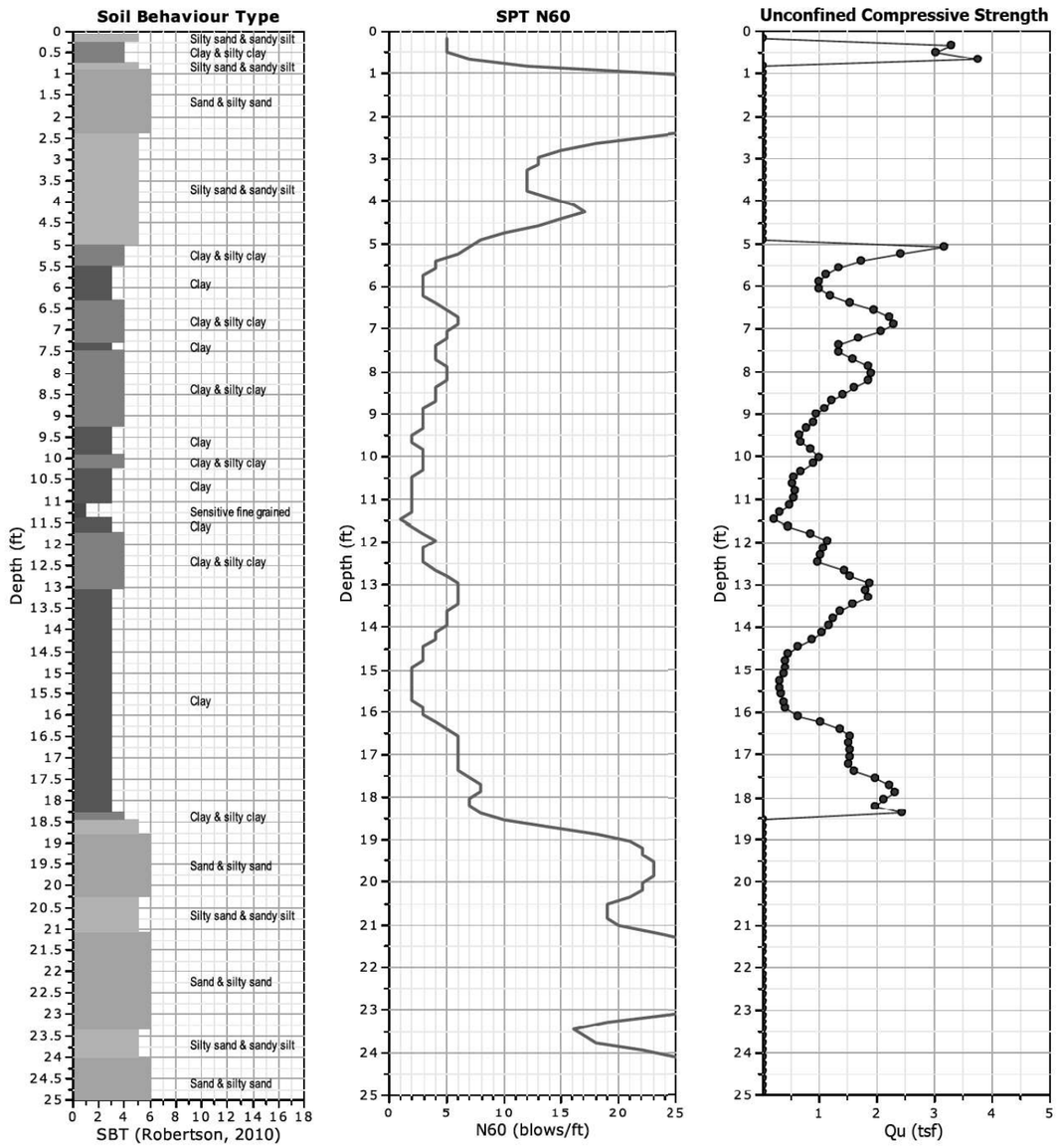

CPeT-IT v.2.1.1.8 - CPTU data presentation & interpretation software - Report created on: 4/12/2022, 11:54:54 PM 1
Project file: N:\Projects\2020\2020-0531 PTB 195, Item 57 Realignment of IL 162 at 157\drilling coordination162 @ 157\CPT\CPT ALL\2020-0531.10 PTB 195-Realignment of IL-162 at 157.c

DocuSign Envelope ID: 2EE9EBB6-BA2F-49CA-9363-EFCA72D5A97C

SCI Engineering, Inc.
650 Pierce Boulevard, O'Fallon, Illinois 62269
Geotechnical Services
www.sciengineering.com

IL 162 @ IL 157: NE CORNER
CPT: B-8
Total depth: 25.10 ft, Date: 1/17/2022
Surface Elevation: 443.00 ft
Coords: lat 38.740894 lon -90.001649
STA: 19+25 Offset: 61' LT
SEC: 4 TWP: 3N RNG: 8W

Project: PTB 195, Item 57 Realignment of IL-162 at IL-157 : SCI No. 2020-0531.10
Location: Madison County, IL

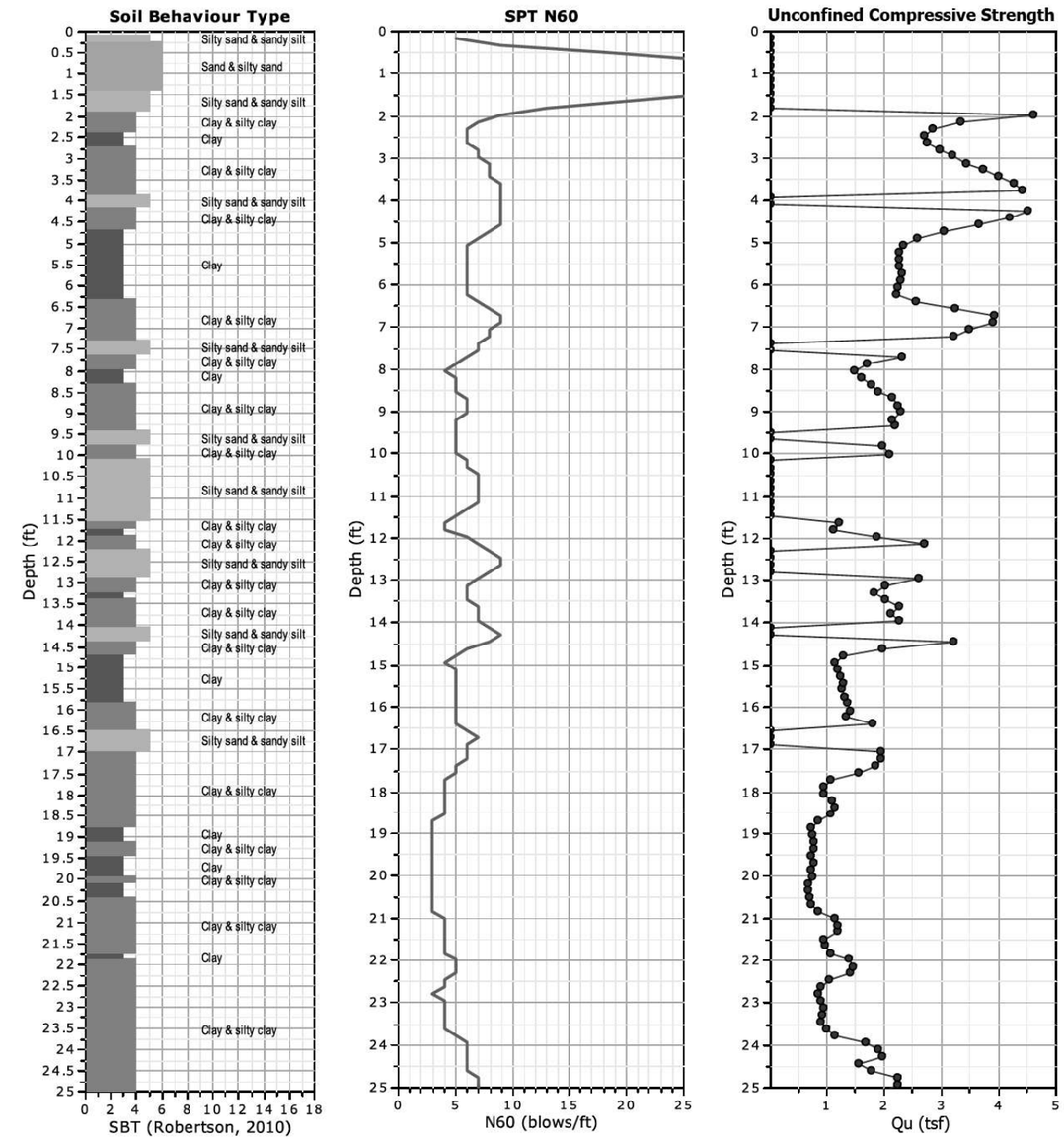

CPeT-IT v.2.1.1.8 - CPTU data presentation & interpretation software - Report created on: 4/12/2022, 11:54:55 PM 2
Project file: N:\Projects\2020\2020-0531 PTB 195, Item 57 Realignment of IL 162 at 157\drilling coordination162 @ 157\CPT\CPT ALL\2020-0531.10 PTB 195-Realignment of IL-162 at 157.c

FILE NAME: \\loch.loc\root\Production\Files\2020\420-0018\CAD\CADD Sheets\D876A46-sht-Traffic Signals.dgn

LOCHMUELLER GROUP
1928 SrA Bradley R. Smith Drive
Troy, IL 62294
PHONE: 618.667.1400

USER NAME = alex.huelskamp	DESIGNED - ESW	REVISED -	
MODEL NAME = TS 11	DRAWN - LEC	REVISED -	
PLOT SCALE = 40.0000 ' / in.	CHECKED - BRM	REVISED -	
PLOT DATE = 3/5/2024	DATE - 10/8/2021	REVISED -	

STATE OF ILLINOIS
DEPARTMENT OF TRANSPORTATION

SOIL BORING LOGS

SCALE: 1"=20' | SHEET 11 OF 13 SHEETS | SOIL BORINGS B-6 & B-8

F.A.P. RTE.	SECTION	COUNTY	TOTAL SHEETS	SHEET NO.
*	51-1R	MADISON	296	140
		CONTRACT NO. 76A46		
		ILLINOIS	FED. AID PROJECT	

*586/592

SCI Engineering, Inc.
650 Pierce Boulevard, O'Fallon, Illinois 62269
Geotechnical Services
www.sciengineering.com

IL 162 @ IL 157: SW CORNER
CPT: B-10
Total depth: 25.10 ft, Date: 1/17/2022
Surface Elevation: 443.00 ft
Coords: lat 38.740516 lon -90.001865
STA: 18+53 Offset: 72' RT
SEC: 4 TWP: 3N RNG: 8W

Project: PTB 195, Item 57 Realignment of IL-162 at IL-157 : SCI No. 2020-0531.10
Location: Madison County, IL

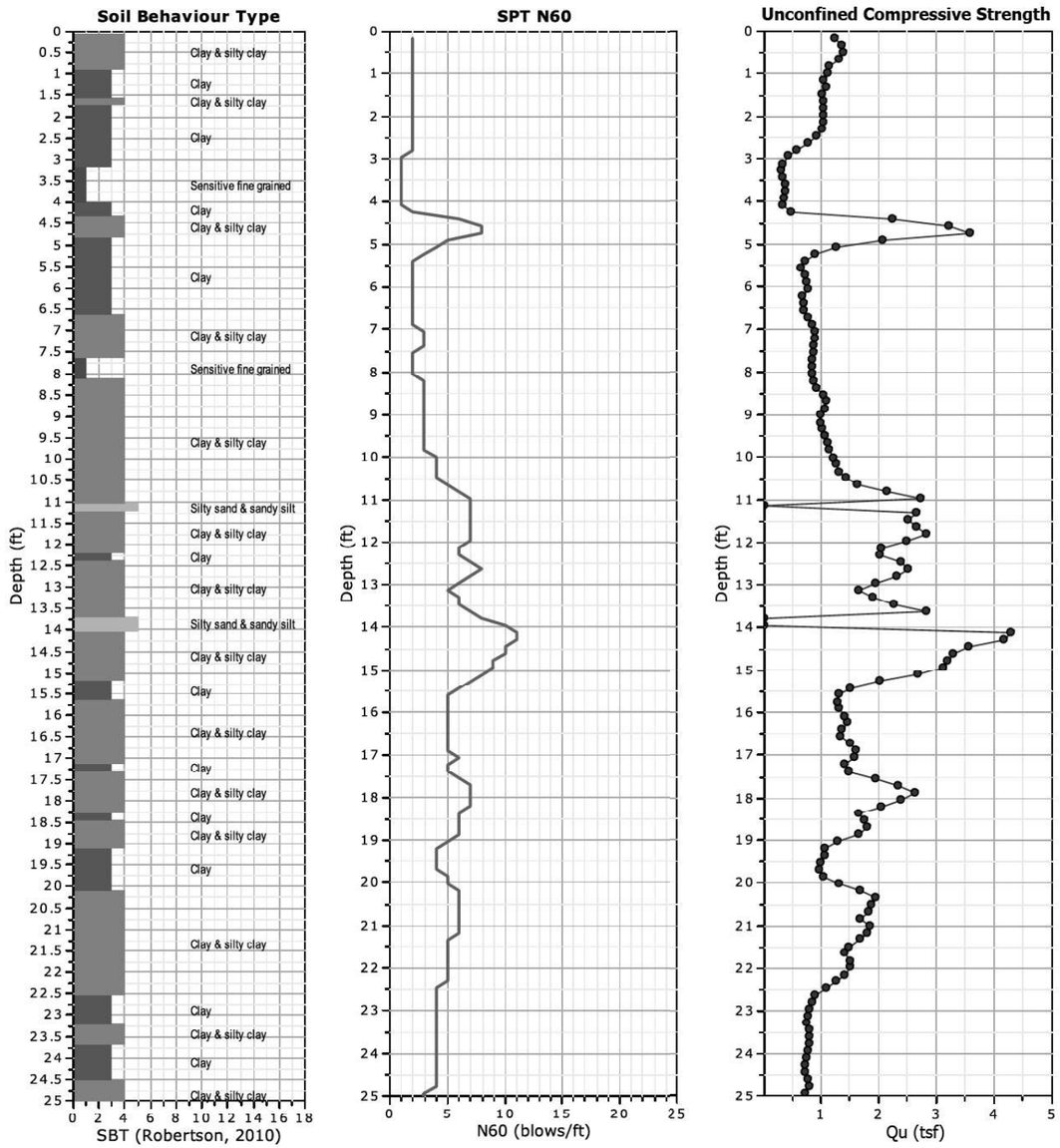

SCI Engineering, Inc.
650 Pierce Boulevard, O'Fallon, Illinois 62269
Geotechnical Services
www.sciengineering.com

IL 162 @ IL 157: SE CORNER
CPT: B-11
Total depth: 25.10 ft, Date: 1/17/2022
Surface Elevation: 445.00 ft
Coords: lat 38.740578 lon -90.001460
STA: 19+72 Offset: 57' RT
SEC: 4 TWP: 3N RNG: 8W

Project: PTB 195, Item 57 Realignment of IL-162 at IL-157 : SCI No. 2020-0531.10
Location: Madison County, IL

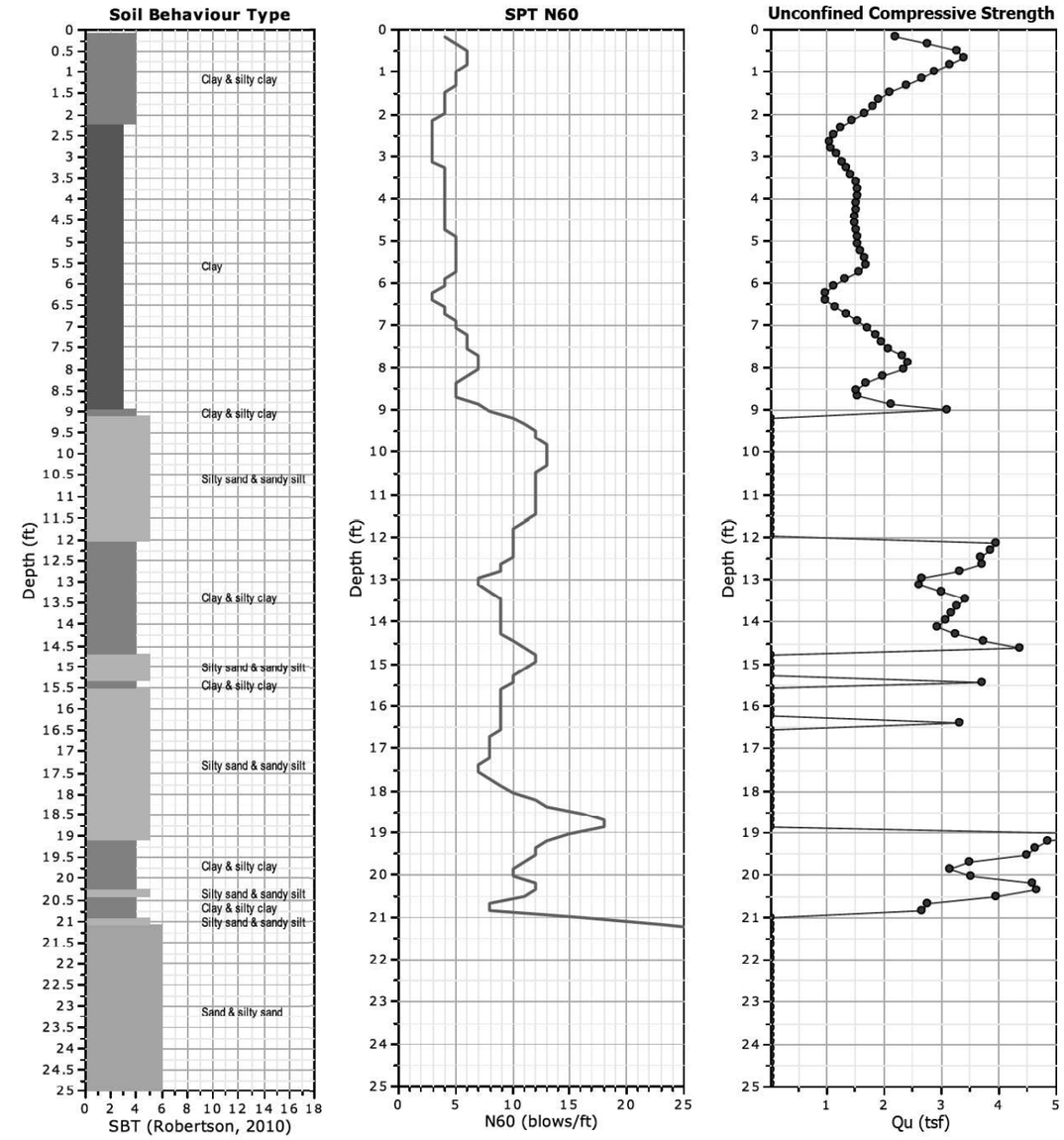

FILE NAME: \\loch.local\Production\Files\2020\120-0018\CAD\CADD Sheets\0876A46-sht-Traffic Signals.dgn

LOCHMUELLER GROUP
1928 S.N. Bradley R. Smith Drive
Troy, IL 62294
PHONE: 618.667.1400

USER NAME = alex.huelskamp	DESIGNED – ESW	REVISED –	
MODEL NAME = TS 12	DRAWN – LEC	REVISED –	
PLOT SCALE = 40.0000 ' / in.	CHECKED – BRM	REVISED –	
PLOT DATE = 3/5/2024	DATE – 10/8/2021	REVISED –	

STATE OF ILLINOIS
DEPARTMENT OF TRANSPORTATION

SOIL BORING LOGS

SCALE: 1"=20' | SHEET 12 OF 13 SHEETS | SOIL BORINGS B-10 & B-11

F.A.P. RTE.	SECTION	COUNTY	TOTAL SHEETS	SHEET NO.
*	51-1R	MADISON	296	141

CONTRACT NO. 76A46
ILLINOIS | FED. AID PROJECT

*586/592

SCI Engineering, Inc.
650 Pierce Boulevard, O'Fallon, Illinois 62269
Geotechnical Services
www.sciengineering.com

IL 157 @ W. MAIN ST: SW CORNER
CPT: B-22
Total depth: 25.10 ft, Date: 1/17/2022
Surface Elevation: 450.00 ft
Coords: lat 38.743075 lon -90.003060
STA: 592+47 Offset: 91' LT
SEC: 4 TWP: 3N RNG: 8W

Project: PTB 195, Item 57 Realignment of IL-162 at IL-157 : SCI No. 2020-0531.10
Location: Madison County, IL

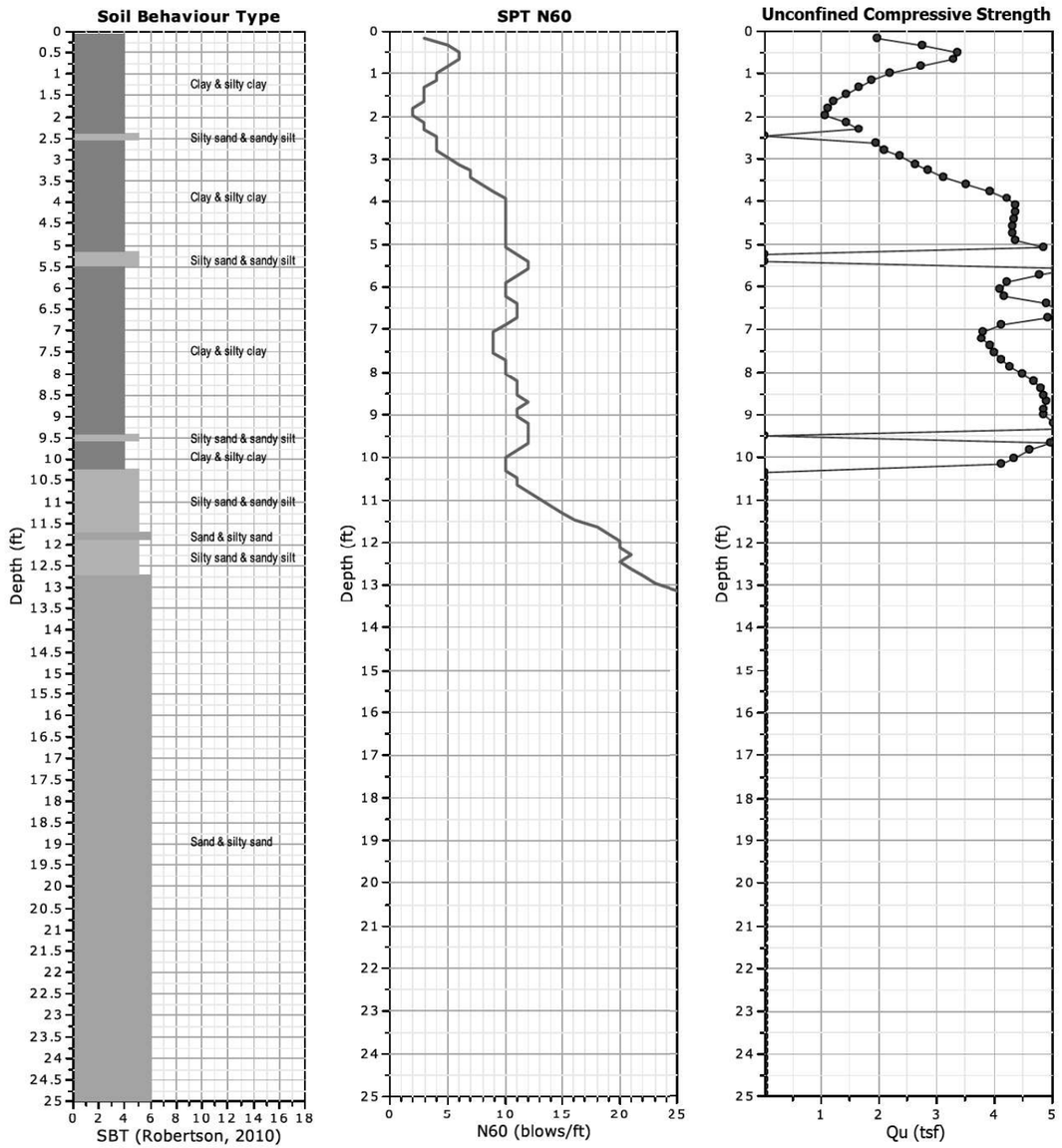

CPeT-IT v.2.1.1.8 - CPTU data presentation & interpretation software - Report created on: 4/12/2022, 11:54:58 PM 5
Project file: N:\Projects\2020\2020-0531 PTB 195, Item 57 Realignment of IL 162 at 157\drilling coordination162 @ 157\CPT\CPT ALL\2020-0531.10 PTB 195-Realignment of IL-162 at 157.c

SCI Engineering, Inc.
650 Pierce Boulevard, O'Fallon, Illinois 62269
Geotechnical Services
www.sciengineering.com

IL 157 @ W. MAIN ST: NE CORNER
CPT: B-23
Total depth: 25.10 ft, Date: 1/17/2022
Surface Elevation: 453.00 ft
Coords: lat 38.743498 lon -90.002774
STA: 593+72 Offset: 30' RT
SEC: 4 TWP: 3N RNG: 8W

Project: PTB 195, Item 57 Realignment of IL-162 at IL-157 : SCI No. 2020-0531.10
Location: Madison County, IL

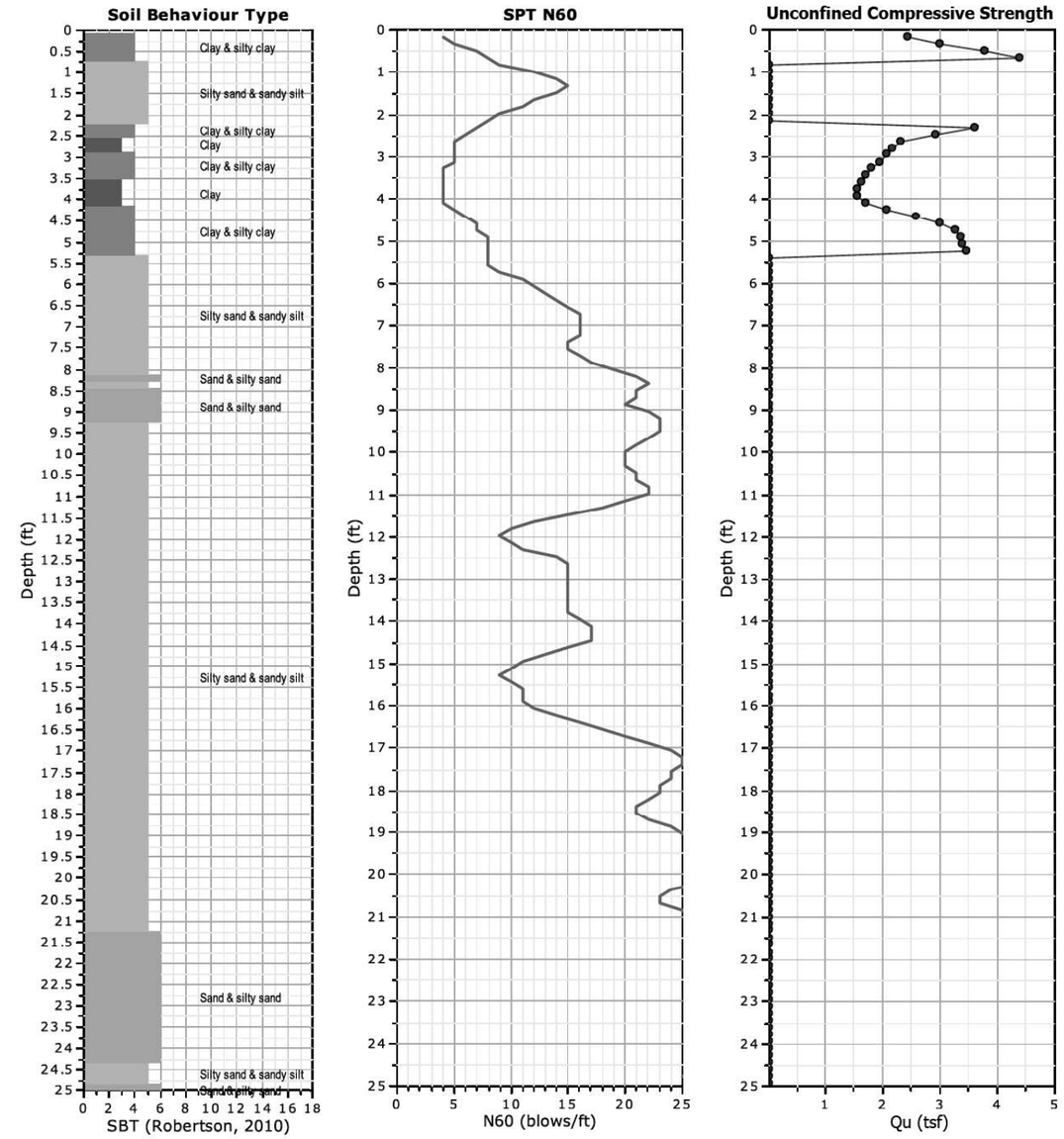

CPeT-IT v.2.1.1.8 - CPTU data presentation & interpretation software - Report created on: 4/12/2022, 11:54:59 PM 6
Project file: N:\Projects\2020\2020-0531 PTB 195, Item 57 Realignment of IL 162 at 157\drilling coordination162 @ 157\CPT\CPT ALL\2020-0531.10 PTB 195-Realignment of IL-162 at 157.c

FILE NAME: \\loch.loc\root\Production\Files\2020\420-0018\CAD\CADD Sheets\DB76A46-sht-Traffic Signals.dgn

LOCHMUELLER GROUP 1928 SrA Bradley R. Smith Drive Troy, IL 62294 PHONE: 618.667.1400	USER NAME = alex.huelskamp	DESIGNED - ESW	REVISED -	STATE OF ILLINOIS DEPARTMENT OF TRANSPORTATION	SOIL BORING LOGS	F.A.P. RTE.	SECTION	COUNTY	TOTAL SHEETS / SHEET NO.
	MODEL NAME = TS 13	DRAWN - LEC	REVISED -			*	51-1R	MADISON	296 / 142
	PLOT SCALE = 40.0000 ' / in.	CHECKED - BRM	REVISED -		SCALE: 1"=20' SHEET 13 OF 13 SHEETS SOIL BORINGS B-22 & B-23			CONTRACT NO. 76A46	
	PLOT DATE = 3/5/2024	DATE - 10/8/2021	REVISED -					ILLINOIS FED. AID PROJECT	

*586/592

Benchmark: Cut "□", with +, on top of parapet wall at Northwest corner of IL-157 Bridge over Judys Branch (S.N. 060-0087). Elev. 449.226.

Existing Structure: S.N. 060-0087 was originally built in 1933 under Section 117-B to carry F.A.P. Rte. 592 over Judys Branch. A deck replacement was completed in 1982 under Section 117BR-2 to replace the original deck, in addition to also replacing the expansion joints and deck drains. The existing superstructure consists of a 7½" thick composite reinforced concrete deck supported by steel W-shape beams. The substructure consists of reinforced concrete abutments supported by concrete piles and reinforced concrete pier bents, supported by concrete piles. Fixed bearings are located at the abutments and expansion bearings are located at the piers. The existing slopewalls consist of bare earth. The existing structure has a total length of 121'-2⅜" bk. to bk. of abutments and a total width of 47'-6" out to out of deck. The bridge will be closed during construction.

No Salvage

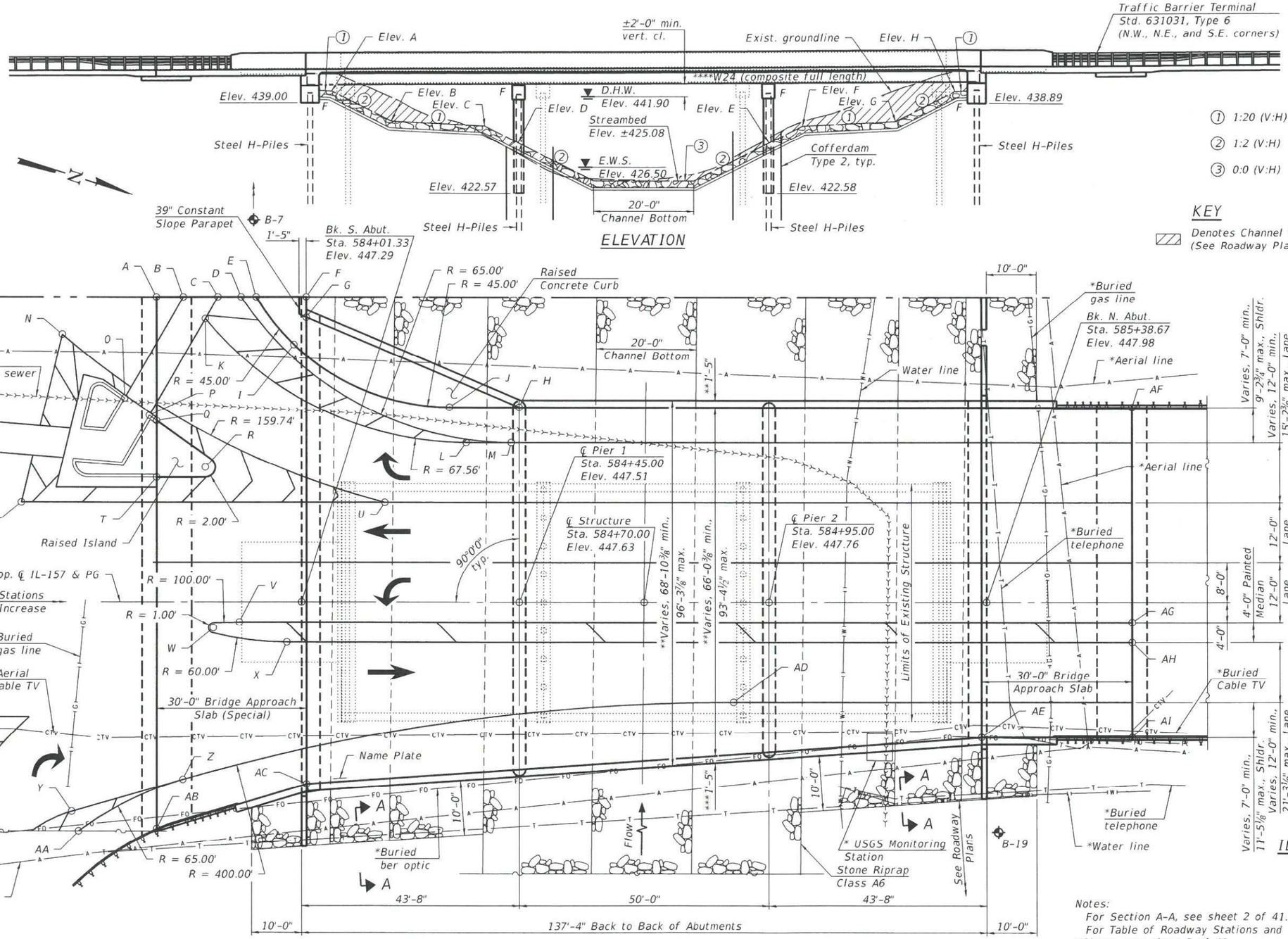

① 1:20 (V:H)

② 1:2 (V:H)

③ 0:0 (V:H)

KEY

Denotes Channel Excavation (See Roadway Plans)

TABLE OF ELEVATIONS

Elev. A	±440.77
Elev. B	±436.67
Elev. C	±436.00
Elev. D	±432.58
Elev. E	±432.58
Elev. F	±436.00
Elev. G	±436.67
Elev. H	±441.42

* To be relocated
** Perpendicular to ℄ IL-157
*** Perpendicular to E. Edge of Deck
**** Beams 1c thru 10
W18 x 130 for Beams 1a and 1b

APPROVED
For Structural Adequacy Only
Engineer of Bridges & Structures

STATE OF ILLINOIS
ERIC M. LAGEMANN
LICENSE NO. 081-006124
STRUCTURAL ENGINEER

Eric Lagemann 4/17/24
License Expires 11/30/24 Date

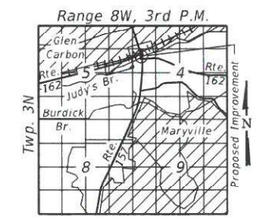

LOCATION SKETCH

Notes:
For Section A-A, see sheet 2 of 41.
For Table of Roadway Stations and Offsets, see sheet 2 of 41.

GENERAL PLAN & ELEVATION
IL RTE. 157 OVER JUDYS BRANCH
F.A.P. ROUTE 586
SECTION 51-1R
MADISON COUNTY
STATION 584+70.00
STRUCTURE NO. 060-0229

FUHRMANN ENGINEERING
WWW.FUHRMANN-ENG.COM

USER NAME =	DESIGNED - T.S. Friederich	REVISED -
	CHECKED - E.M. Lagemann	REVISED -
PLOT SCALE =	DRAWN - T.S. Friederich	REVISED -
PLOT DATE =	CHECKED - E.M. Lagemann	REVISED -

STATE OF ILLINOIS
DEPARTMENT OF TRANSPORTATION

SHEET 1 OF 41 SHEETS

F.A.P. RTE.	SECTION	COUNTY	TOTAL SHEETS	SHEET NO.
*	51-1R	MADISON	296	143
		CONTRACT NO. 76A46		
		ILLINOIS	FED. AID PROJECT	

MODEL: Default
FILE NAME: G:\FEIjobs_2020\20-1581 PTB 195-57 REALIGNMENT IL 162 AT IL 157 PH II D-98-009-04 - FEI PRIME\CADD\CADD Sheets\0600229-76A46-001-GPE.dgn
3/5/2024 8:18:27 AM

*586/592

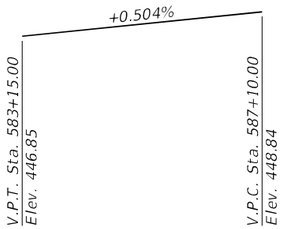

PROFILE GRADE

(℄ Rte. 157)

GENERAL NOTES

Except as otherwise specified, fasteners shall be ASTM F 3125 Grade A325 Type 1, mechanically galvanized bolts in painted areas. Bolts ¾ in. diameter, holes 15/16 in. diameter, unless otherwise noted.

Calculated weight of Structural Steel = 570 lbs. AASHTO M 270 Grade 70W.
Calculated weight of Structural Steel = 230,370 lbs. AASHTO M 270 Grade 50.
Calculated weight of Structural Steel = 20,310 lbs. AASHTO M 270 Grade 36.

No field welding is permitted except as specified in the contract documents.

Reinforcement bars designated (E) shall be epoxy coated.

The finishing machine rails shall be placed on the top of the top flange of the exterior beams within the deck pour. Beam blocks shall be placed between beams at all tie locations in each bay for the full width of the deck pour.

Slipforming of the parapets is not allowed.

Bearing seat surfaces shall be constructed or adjusted to the designated elevations within a tolerance of ⅛ in. (0.01 ft.). Adjustment shall be made either by grinding the surface or by shimming the bearings.

Granular Backfill behind the abutments shall be compacted according to Article 205.06 of the Standard Specifications.

Layout of the slope protection system may be varied to suit ground conditions in the field as directed by the Engineer.

The existing structural steel coating contains lead. The Contractor shall take appropriate precautions to address the presence of lead on this project.

The Inorganic Zinc Rich Primer / Acrylic / Acrylic Paint System shall be used for shop and field painting of new structural steel except where otherwise noted. The color of the final finish coat shall be gray, Munsell No 5B 7/1.

TOTAL BILL OF MATERIAL

ITEM	UNIT	SUPER	SUB	TOTAL
Stone Riprap, Class A6	Sq. Yd.		1,635	1,635
Filter Fabric	Sq. Yd.		1,688	1,688
Removal of Existing Structures	Each			1
Structure Excavation	Cu. Yd.		405	405
Cofferdam Excavation	Cu. Yd.		844	844
Cofferdam (Type 2)(Location-1)	Each		1	1
Cofferdam (Type 2)(Location-2)	Each		1	1
Concrete Structures	Cu. Yd.		533.5	533.5
Concrete Superstructure	Cu. Yd.	373.7		373.7
Bridge Deck Grooving	Sq. Yd.	1,572		1,572
Protective Coat	Sq. Yd.	1,828		1,828
Concrete Superstructure (Approach Slab)	Cu. Yd.	237.5		237.5
Furnishing and Erecting Structural Steel	L. Sum	0.54		0.54
Stud Shear Connectors	Each	8,691		8,691
Reinforcement Bars, Epoxy Coated	Pound	205,690	57,920	263,610
Bar Splicers	Each	11		11
Furnishing Steel Piles HP14X117	Foot		5,397	5,397
Driving Piles	Foot		5,397	5,397
Test Pile Steel HP14X117	Each		2	2
Name Plates	Each			1
Anchor Bolts, 1"	Each	84		84
Granular Backfill For Structures	Cu. Yd.		332	332
Geocomposite Wall Drain	Sq. Yd.		153	153
Pipe Underdrains For Structures, 4"	Foot		202	202

INDEX OF SHEETS

1. General Plan and Elevation
2. General Data
3. Cofferdam Details
4. – 7. Top of Slab Elevations
8. Top of South Bridge Approach Slab Elevations
9. Top of North Bridge Approach Slab Elevations
10. – 15. Superstructure Details
16. – 17. South Abutment Diaphragm Details
18. North Abutment Diaphragm Details
19. – 23. South Bridge Approach Slab
24. – 25. North Bridge Approach Slab
26. Framing Plan
27. – 30. Beam Details
31. – 32. South Abutment Details
33. North Abutment Details
34. Pier 1
35. Pier 2
36. Pier Details
37. Steel H-Pile Details
38. Bar Splicer Assembly
39. – 41. Boring Logs

TABLE OF ROADWAY STATIONS AND OFFSETS

Point	Station	O set
A	583+72.33	61.03' Lt.
B	583+77.70	61.03' Lt.
C	583+84.65	61.03' Lt.
D	583+89.28	61.03' Lt.
E	583+92.29	61.03' Lt.
F	584+02.33	61.03' Lt.
G	584+02.33	56.94' Lt.
H	584+45.00	39.00' Lt.
I	583+99.90	51.44' Lt.
J	584+30.97	39.00' Lt.
K	583+82.12	56.69' Lt.
L	584+34.33	32.00' Lt.
M	584+43.42	32.00' Lt.
N	583+53.44	53.52' Lt.
O	583+65.92	40.83' Lt.
P	583+70.85	37.36' Lt.
Q	583+72.33	36.32' Lt.
R	583+82.07	27.00' Lt.
S	583+45.20	20.00' Lt.
T	583+72.33	25.00' Lt.
U	584+18.02	20.00' Lt.
V	583+88.86	4.00' Rt.
W	583+83.66	5.14' Rt.
X	583+98.38	8.00' Rt.
Y	583+55.28	41.92' Rt.
Z	583+77.55	35.52' Rt.
AA	583+56.66	45.87' Rt.
AB	583+72.33	45.37' Rt.
AC	584+02.33	36.43' Rt.
AD	584+87.90	20.00' Rt.
AE	585+37.67	27.03' Rt.
AF	585+67.67	39.00' Lt.
AG	585+67.67	4.00' Rt.
AH	585+67.67	8.00' Rt.
AI	585+67.67	27.00' Rt.

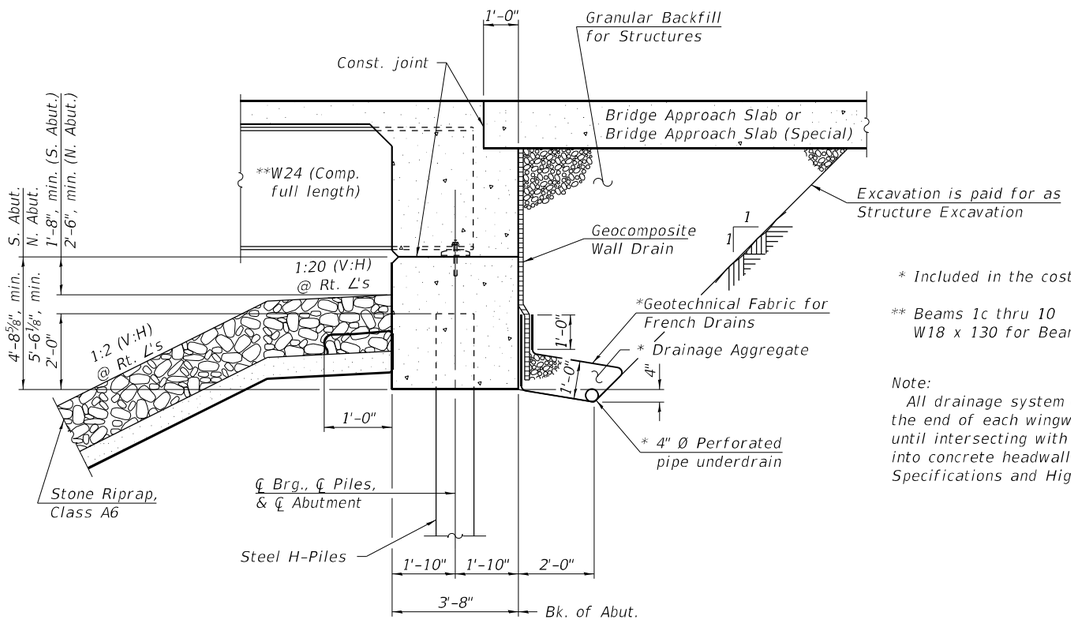

SECTION THRU INTEGRAL ABUTMENT

* Included in the cost of Pipe Underdrains for Structures.

** Beams 1c thru 10
W18 x 130 for Beams 1a and 1b

Note:
All drainage system components shall extend to 2'-0" from the end of each wingwall except an outlet pipe shall extend until intersecting with the side slopes. The pipes shall drain into concrete headwalls. (See Article 601.05 of the Standard Specifications and Highway Standard 601101).

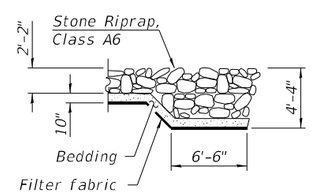

SECTION A-A

LOADING HL-93

Allow 50#/sq. ft. for future wearing surface.

DESIGN SPECIFICATIONS

2020 AASHTO LRFD Bridge
Design Specifications, 9th Edition

DESIGN STRESSES

FIELD UNITS

f'c = 3,500 psi
f'c = 4,000 psi (Superstructure)
fy = 60,000 psi (Reinforcement)
fy = 50,000 psi (M270 Grade 50)
fy = 70,000 psi (M270 Grade 70W)
All structural steel shall be painted.

SEISMIC DATA

Seismic Performance Zone (SPZ) = 2
Design Spectral Acceleration at 1.0 sec. (SD1) = 0.23g
Design Spectral Acceleration at 0.2 sec. (SDS) = 0.53g
Soil Site Class = D

WATERWAY INFORMATION

Drainage Area = 8.6 sq. mi.

Existing Overtopping Elev. = 445.83 at Sta. 582+50.00
Proposed Overtopping Elev. = 446.42 at Sta. 581+42.36

Flood Event	Freq. Yr.	Discharge, Q C.F.S.	Waterway Opening - Ft² Existing	Waterway Opening - Ft² Proposed	Natural H.W.E. - Ft.	Head - Ft. Existing	Head - Ft. Proposed	Headwater Elevation - Ft. Existing	Headwater Elevation - Ft. Proposed
Design	50	5750	883	1146	441.9	0.5	0.3	442.4	442.2
Base	100	6590	941	1214	442.4	1.5	0.4	443.9	442.8
Scour Design Check	200	7600	987	1287	443.0	1.3	0.6	444.3	443.7
Overtop Existing	N/A	---	---	---	---	---	---	---	---
Overtop Proposed	N/A	---	---	---	---	---	---	---	---
Max. Calc.	500	8920	998	1367	443.7	1.3	1.6	445.0	445.3

10 Year Velocity Through Existing Bridge = 5.43 ft/s
10 Year Velocity Through Proposed Bridge = 4.46 ft/s

DESIGN SCOUR ELEVATION TABLE

Event / Limit State	Design Scour Elevations (ft.) S. Abut.	Pier 1	Pier 2	N. Abut.	Item 113
Q100	439.00	414.80	414.80	438.89	5
Q200	439.00	413.93	413.93	438.89	
Design	439.00	414.80	414.80	438.89	
Check	439.00	413.93	413.93	438.89	

STA. 584+70.00
BUILT 202X BY
STATE OF ILLINOIS
F.A.P. Rt. 586 Sec. 51-1R
LOADING HL-93
STR. NO. 060-0229

NAME PLATE

See Std. 515001

Note:
For Location of Section A-A, see sheet 1 of 41.

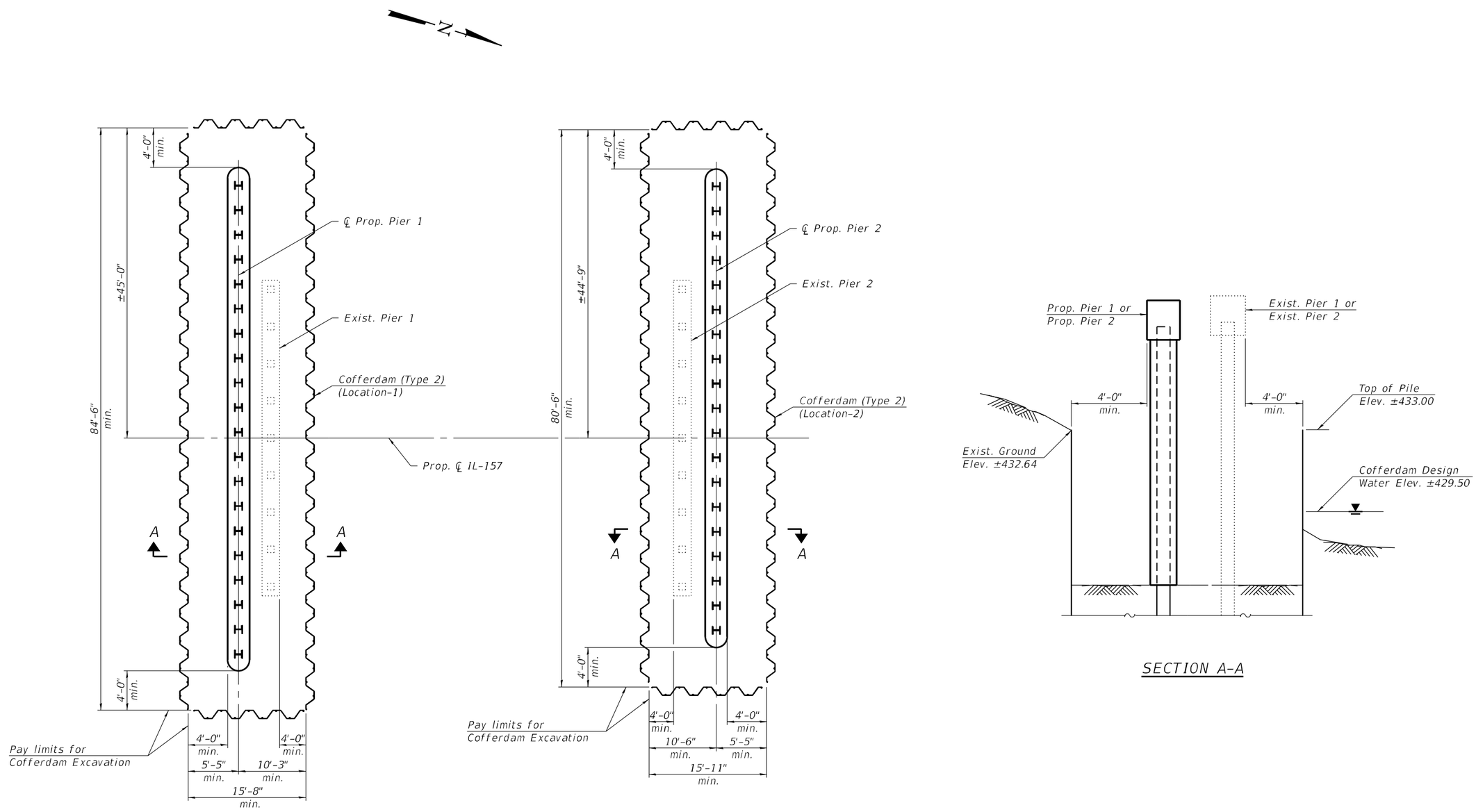

MODEL: Default
FILE NAME: G:\FEI\Jobs_2020\20-1581 PTB 195-57 REALIGNMENT IL 162 AT IL 157 PH II D-98-009-04 - FEI PRIME\CADD\CADD Sheets\0600229-76A46-003-Co erdamDetails.dgn

FUHRMANN ENGINEERING
WWW. FUHRMANN-ENG .COM

USER NAME =	DESIGNED - T.S. Friederich	REVISED -	
	CHECKED - E.M. Lagemann	REVISED -	
PLOT SCALE =	DRAWN - A.H. Morinaga Mansilla	REVISED -	
PLOT DATE =	CHECKED - T.S. Friederich	REVISED -	

STATE OF ILLINOIS
DEPARTMENT OF TRANSPORTATION

COFFERDAM DETAILS
STRUCTURE NO. 060-0229

SHEET 3 OF 41 SHEETS

F.A.P RTE.	SECTION	COUNTY	TOTAL SHEETS	SHEET NO.
*	51-1R	MADISON	296	145
		CONTRACT NO. 76A46		
		ILLINOIS	FED. AID PROJECT	

3/5/2024 8:22:52 AM

*586/592

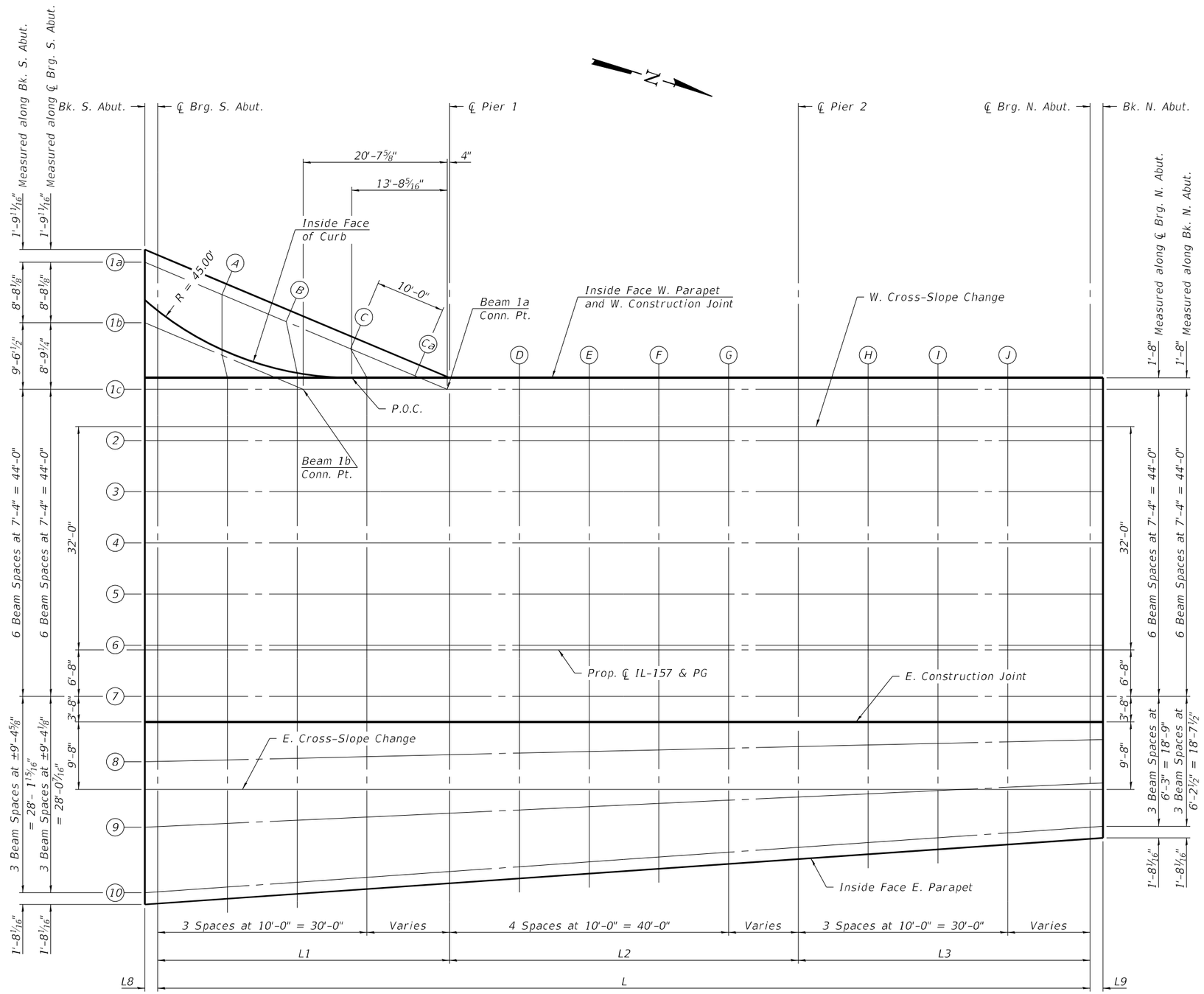

PLAN

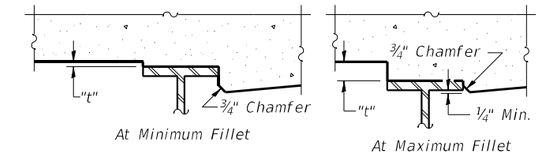

To determine "t": After all structural steel has been erected, elevations of the top flanges of the beams shall be taken at intervals shown below. These elevations subtracted from the "Theoretical Grade Elevations Adjusted for Dead Load Deflection" shown on sheets 5 thru 7 of 41, minus slab thickness, equals the fillet heights "t" above top flange of beams.

FILLET HEIGHTS

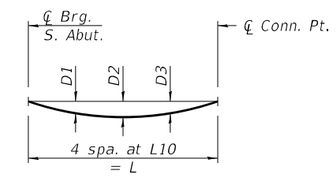

DEAD LOAD DEFLECTION DIAGRAM BEAMS 1a AND 1b

(Includes weight of concrete only.)

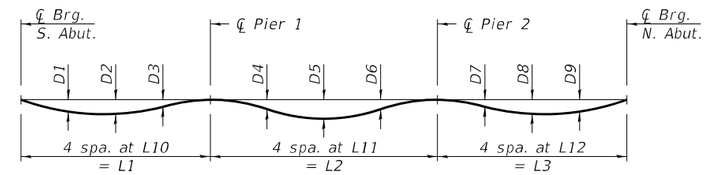

DEAD LOAD DEFLECTION DIAGRAM BEAMS 1c THRU 10

(Includes weight of concrete only.)

Note:
The above deflections are not to be used in the field if the engineer is working from the grade elevations adjusted for dead load deflections as shown on sheets 5 thru 7 of 41.

TABLE OF "D" DIMENSIONS

Beam No.	D1	D2	D3	D4	D5	D6	D7	D8	D9
1a	1¼"	1¾"	1¼"						
1b	0"	⅛"	0"						
1c	⅛"	¼"	⅛"	⅛"	¼"	⅛"	⅛"	⅜"	¼"
2	¼"	¼"	⅛"	⅛"	¼"	⅛"	⅛"	¼"	⅛"
3	⅛"	¼"	⅛"	⅛"	¼"	⅛"	⅛"	¼"	¼"
4 thru 7	¼"	¼"	⅛"	⅛"	¼"	⅛"	⅛"	¼"	⅛"
8	¼"	¼"	⅛"	⅛"	¼"	⅛"	⅛"	⅛"	⅛"
9	¼"	¼"	⅛"	⅛"	¼"	⅛"	⅛"	¼"	⅛"
10	¼"	¼"	⅛"	⅛"	¼"	⅛"	⅛"	¼"	¼"

Notes:
Horizontal dimensions are given along ℄ individual beams.
For Table "L" Dimensions, see sheet 27 of 41.

INSIDE FACE W. PARAPET - SPAN 1

Location	Station	Offset	Theoretical Grade Elevations	Theoretical Grade Elevations Adjusted For Dead Load Deflection
Bk. S. Abut.	584+01.33	-57.36	446.94	446.94
℄ Brg. S. Abut.	584+03.16	-56.59	446.94	446.94
A	584+12.38	-52.72	446.92	447.02
B	584+21.60	-48.84	446.91	447.06
C	584+30.82	-44.96	446.90	447.03
Ca	584+40.04	-41.09	446.89	446.95
℄ Pier 1	584+45.00	-39.00	446.89	446.89

BEAM 1a

Location	Station	Offset	Theoretical Grade Elevations	Theoretical Grade Elevations Adjusted For Dead Load Deflection
Bk. S. Abut.	584+01.33	-55.56	446.85	446.85
℄ Brg. S. Abut.	584+03.16	-54.78	446.86	446.86
A	584+12.38	-50.91	446.87	446.97
B	584+21.60	-47.03	446.88	447.03
C	584+30.82	-43.15	446.90	447.03
Ca	584+40.04	-39.28	446.91	446.96
Beam 1a Conn. Pt.	584+44.66	-37.33	446.92	446.92

INSIDE FACE OF CURB

Location	Station	Offset	Theoretical Grade Elevations	Theoretical Grade Elevations Adjusted For Dead Load Deflection
Bk. S. Abut.	584+01.33	-50.14	446.60	446.60
℄ Brg. S. Abut.	584+03.16	-48.62	446.62	446.62
A	584+11.64	-43.36	446.66	446.68
B	584+21.08	-40.10	446.72	446.77
P.O.C.	584+30.97	-39.00	446.81	446.83
℄ Pier 1	584+45.00	-39.00	446.89	446.89

BEAM 1b

Location	Station	Offset	Theoretical Grade Elevations	Theoretical Grade Elevations Adjusted For Dead Load Deflection
Bk. S. Abut.	584+01.33	-46.88	446.63	446.63
℄ Brg. S. Abut.	584+03.16	-46.11	446.64	446.64
A	584+12.38	-42.23	446.67	446.69
Beam 1b Conn. Pt.	584+24.02	-37.33	446.80	446.82

INSIDE FACE W. PARAPET - SPANS 2 & 3 & WEST CONSTRUCTION JOINT

Location	Station	Offset	Theoretical Grade Elevations	Theoretical Grade Elevations Adjusted For Dead Load Deflection
Bk. S. Abut.	584+01.33	-39.00	446.71	446.71
℄ Brg. S. Abut.	584+03.16	-39.00	446.72	446.72
A	584+13.16	-39.00	446.73	446.74
B	584+23.16	-39.00	446.76	446.78
C	584+33.16	-39.00	446.83	446.84
℄ Pier 1	584+45.00	-39.00	446.89	446.89
D	584+55.00	-39.00	446.94	446.95
E	584+65.00	-39.00	446.99	447.01
F	584+75.00	-39.00	447.04	447.06
G	584+85.00	-39.00	447.09	447.10
℄ Pier 2	584+95.00	-39.00	447.14	447.14
H	585+05.00	-39.00	447.19	447.20
I	585+15.00	-39.00	447.24	447.26
J	585+25.00	-39.00	447.29	447.31
℄ Brg. N. Abut.	585+36.84	-39.00	447.35	447.35
Bk. N. Abut.	585+38.67	-39.00	447.36	447.36

WEST CROSS-SLOPE CHANGE

Location	Station	Offset	Theoretical Grade Elevations	Theoretical Grade Elevations Adjusted For Dead Load Deflection
Bk. S. Abut.	584+01.33	-32.00	446.81	446.81
℄ Brg. S. Abut.	584+03.16	-32.00	446.81	446.81
A	584+13.16	-32.00	446.86	446.88
B	584+23.16	-32.00	446.92	446.93
C	584+33.16	-32.00	446.97	446.98
℄ Pier 1	584+45.00	-32.00	447.03	447.03
D	584+55.00	-32.00	447.08	447.08
E	584+65.00	-32.00	447.13	447.14
F	584+75.00	-32.00	447.18	447.19
G	584+85.00	-32.00	447.23	447.23
℄ Pier 2	584+95.00	-32.00	447.28	447.28
H	585+05.00	-32.00	447.33	447.34
I	585+15.00	-32.00	447.38	447.40
J	585+25.00	-32.00	447.43	447.45
℄ Brg. N. Abut.	585+36.84	-32.00	447.49	447.49
Bk. N. Abut.	585+38.67	-32.00	447.50	447.50

BEAM 1c

Location	Station	Offset	Theoretical Grade Elevations	Theoretical Grade Elevations Adjusted For Dead Load Deflection
Bk. S. Abut.	584+01.33	-37.33	446.73	446.73
℄ Brg. S. Abut.	584+03.16	-37.33	446.74	446.74
A	584+13.16	-37.33	446.76	446.77
B	584+23.16	-37.33	446.80	446.82
Beam 1b Conn. Pt.	584+24.02	-37.33	446.80	446.82
C	584+33.16	-37.33	446.86	446.87
Beam 1a Conn. Pt.	584+44.66	-37.33	446.92	446.92
℄ Pier 1	584+45.00	-37.33	446.92	446.92
D	584+55.00	-37.33	446.97	446.98
E	584+65.00	-37.33	447.02	447.04
F	584+75.00	-37.33	447.07	447.09
G	584+85.00	-37.33	447.12	447.13
℄ Pier 2	584+95.00	-37.33	447.17	447.17
H	585+05.00	-37.33	447.22	447.23
I	585+15.00	-37.33	447.27	447.30
J	585+25.00	-37.33	447.32	447.35
℄ Brg. N. Abut.	585+36.84	-37.33	447.38	447.38
Bk. N. Abut.	585+38.67	-37.33	447.39	447.39

BEAM 2

Location	Station	Offset	Theoretical Grade Elevations	Theoretical Grade Elevations Adjusted For Dead Load Deflection
Bk. S. Abut.	584+01.33	-30.00	446.84	446.84
℄ Brg. S. Abut.	584+03.16	-30.00	446.84	446.84
A	584+13.16	-30.00	446.89	446.91
B	584+23.16	-30.00	446.95	446.96
C	584+33.16	-30.00	447.00	447.01
℄ Pier 1	584+45.00	-30.00	447.06	447.06
D	584+55.00	-30.00	447.11	447.11
E	584+65.00	-30.00	447.16	447.17
F	584+75.00	-30.00	447.21	447.22
G	584+85.00	-30.00	447.26	447.26
℄ Pier 2	584+95.00	-30.00	447.31	447.31
H	585+05.00	-30.00	447.36	447.37
I	585+15.00	-30.00	447.41	447.43
J	585+25.00	-30.00	447.46	447.48
℄ Brg. N. Abut.	585+36.84	-30.00	447.52	447.52
Bk. N. Abut.	585+38.67	-30.00	447.53	447.53

BEAM 3

Location	Station	Offset	Theoretical Grade Elevations	Theoretical Grade Elevations Adjusted For Dead Load Deflection
Bk. S. Abut.	584+01.33	-22.67	446.95	446.95
℄ Brg. S. Abut.	584+03.16	-22.67	446.95	446.95
A	584+13.16	-22.67	447.00	447.02
B	584+23.16	-22.67	447.06	447.07
C	584+33.16	-22.67	447.11	447.12
℄ Pier 1	584+45.00	-22.67	447.17	447.17
D	584+55.00	-22.67	447.22	447.22
E	584+65.00	-22.67	447.27	447.29
F	584+75.00	-22.67	447.32	447.34
G	584+85.00	-22.67	447.37	447.38
℄ Pier 2	584+95.00	-22.67	447.42	447.42
H	585+05.00	-22.67	447.47	447.48
I	585+15.00	-22.67	447.52	447.54
J	585+25.00	-22.67	447.57	447.59
℄ Brg. N. Abut.	585+36.84	-22.67	447.63	447.63
Bk. N. Abut.	585+38.67	-22.67	447.64	447.64

BEAM 4

Location	Station	Offset	Theoretical Grade Elevations	Theoretical Grade Elevations Adjusted For Dead Load Deflection
Bk. S. Abut.	584+01.33	-15.33	447.06	447.06
℄ Brg. S. Abut.	584+03.16	-15.33	447.06	447.06
A	584+13.16	-15.33	447.11	447.13
B	584+23.16	-15.33	447.17	447.18
C	584+33.16	-15.33	447.22	447.23
℄ Pier 1	584+45.00	-15.33	447.28	447.28
D	584+55.00	-15.33	447.33	447.33
E	584+65.00	-15.33	447.38	447.39
F	584+75.00	-15.33	447.43	447.44
G	584+85.00	-15.33	447.48	447.48
℄ Pier 2	584+95.00	-15.33	447.53	447.53
H	585+05.00	-15.33	447.58	447.59
I	585+15.00	-15.33	447.63	447.65
J	585+25.00	-15.33	447.68	447.70
℄ Brg. N. Abut.	585+36.84	-15.33	447.74	447.74
Bk. N. Abut.	585+38.67	-15.33	447.75	447.75

BEAM 5

Location	Station	Offset	Theoretical Grade Elevations	Theoretical Grade Elevations Adjusted For Dead Load Deflection
Bk. S. Abut.	584+01.33	-8.00	447.17	447.17
℄ Brg. S. Abut.	584+03.16	-8.00	447.17	447.17
A	584+13.16	-8.00	447.22	447.24
B	584+23.16	-8.00	447.28	447.29
C	584+33.16	-8.00	447.33	447.34
℄ Pier 1	584+45.00	-8.00	447.39	447.39
D	584+55.00	-8.00	447.44	447.44
E	584+65.00	-8.00	447.49	447.50
F	584+75.00	-8.00	447.54	447.55
G	584+85.00	-8.00	447.59	447.59
℄ Pier 2	584+95.00	-8.00	447.64	447.64
H	585+05.00	-8.00	447.69	447.70
I	585+15.00	-8.00	447.74	447.76
J	585+25.00	-8.00	447.79	447.81
℄ Brg. N. Abut.	585+36.84	-8.00	447.85	447.85
Bk. N. Abut.	585+38.67	-8.00	447.86	447.86

BEAM 6

Location	Station	Offset	Theoretical Grade Elevations	Theoretical Grade Elevations Adjusted For Dead Load Deflection
Bk. S. Abut.	584+01.33	-0.67	447.28	447.28
℄ Brg. S. Abut.	584+03.16	-0.67	447.28	447.28
A	584+13.16	-0.67	447.33	447.35
B	584+23.16	-0.67	447.39	447.40
C	584+33.16	-0.67	447.44	447.45
℄ Pier 1	584+45.00	-0.67	447.50	447.50
D	584+55.00	-0.67	447.55	447.55
E	584+65.00	-0.67	447.60	447.61
F	584+75.00	-0.67	447.65	447.66
G	584+85.00	-0.67	447.70	447.70
℄ Pier 2	584+95.00	-0.67	447.75	447.75
H	585+05.00	-0.67	447.80	447.81
I	585+15.00	-0.67	447.85	447.87
J	585+25.00	-0.67	447.90	447.92
℄ Brg. N. Abut.	585+36.84	-0.67	447.96	447.96
Bk. N. Abut.	585+38.67	-0.67	447.97	447.97

PROP. ℄ IL-157 & PROFILE GRADE

Location	Station	Offset	Theoretical Grade Elevations	Theoretical Grade Elevations Adjusted For Dead Load Deflection
Bk. S. Abut.	584+01.33	0.00	447.29	447.29
℄ Brg. S. Abut.	584+03.16	0.00	447.29	447.29
A	584+13.16	0.00	447.34	447.36
B	584+23.16	0.00	447.40	447.41
C	584+33.16	0.00	447.45	447.46
℄ Pier 1	584+45.00	0.00	447.51	447.51
D	584+55.00	0.00	447.56	447.56
E	584+65.00	0.00	447.61	447.62
F	584+75.00	0.00	447.66	447.67
G	584+85.00	0.00	447.71	447.71
℄ Pier 2	584+95.00	0.00	447.76	447.76
H	585+05.00	0.00	447.81	447.82
I	585+15.00	0.00	447.86	447.88
J	585+25.00	0.00	447.91	447.93
℄ Brg. N. Abut.	585+36.84	0.00	447.97	447.97
Bk. N. Abut.	585+38.67	0.00	447.98	447.98

BEAM 7

Location	Station	Offset	Theoretical Grade Elevations	Theoretical Grade Elevations Adjusted For Dead Load Deflection
Bk. S. Abut.	584+01.33	6.67	447.19	447.19
℄ Brg. S. Abut.	584+03.16	6.67	447.19	447.19
A	584+13.16	6.67	447.24	447.26
B	584+23.16	6.67	447.30	447.31
C	584+33.16	6.67	447.35	447.36
℄ Pier 1	584+45.00	6.67	447.41	447.41
D	584+55.00	6.67	447.46	447.46
E	584+65.00	6.67	447.51	447.52
F	584+75.00	6.67	447.56	447.57
G	584+85.00	6.67	447.61	447.61
℄ Pier 2	584+95.00	6.67	447.66	447.66
H	585+05.00	6.67	447.71	447.72
I	585+15.00	6.67	447.76	447.78
J	585+25.00	6.67	447.81	447.83
℄ Brg. N. Abut.	585+36.84	6.67	447.87	447.87
Bk. N. Abut.	585+38.67	6.67	447.88	447.88

EAST CONSTRUCTION JOINT

Location	Station	Offset	Theoretical Grade Elevations	Theoretical Grade Elevations Adjusted For Dead Load Deflection
Bk. S. Abut.	584+01.33	10.33	447.13	447.13
℄ Brg. S. Abut.	584+03.16	10.33	447.14	447.14
A	584+13.16	10.33	447.19	447.21
B	584+23.16	10.33	447.24	447.26
C	584+33.16	10.33	447.29	447.30
℄ Pier 1	584+45.00	10.33	447.35	447.35
D	584+55.00	10.33	447.40	447.41
E	584+65.00	10.33	447.45	447.47
F	584+75.00	10.33	447.50	447.52
G	584+85.00	10.33	447.55	447.56
℄ Pier 2	584+95.00	10.33	447.60	447.60
H	585+05.00	10.33	447.65	447.66
I	585+15.00	10.33	447.70	447.72
J	585+25.00	10.33	447.75	447.77
℄ Brg. N. Abut.	585+36.84	10.33	447.81	447.81
Bk. N. Abut.	585+38.67	10.33	447.82	447.82

BEAM 8

Location	Station	Offset	Theoretical Grade Elevations	Theoretical Grade Elevations Adjusted For Dead Load Deflection
Bk. S. Abut.	584+01.33	16.05	447.04	447.04
℄ Brg. S. Abut.	584+03.16	16.01	447.05	447.05
A	584+13.16	15.78	447.11	447.13
B	584+23.16	15.55	447.16	447.19
C	584+33.16	15.32	447.22	447.23
℄ Pier 1	584+45.00	15.04	447.28	447.28
D	584+55.00	14.81	447.33	447.34
E	584+64.99	14.58	447.39	447.40
F	584+74.99	14.35	447.44	447.46
G	584+84.99	14.12	447.49	447.50
℄ Pier 2	584+95.00	13.89	447.55	447.55
H	585+05.00	13.65	447.60	447.61
I	585+14.99	13.42	447.66	447.67
J	585+24.99	13.19	447.71	447.72
℄ Brg. N. Abut.	585+36.84	12.92	447.77	447.77
Bk. N. Abut.	585+38.67	12.88	447.78	447.78

EAST CROSS-SLOPE CHANGE

Location	Station	Offset	Theoretical Grade Elevations	Theoretical Grade Elevations Adjusted For Dead Load Deflection
Bk. S. Abut.	584+01.33	20.00	446.99	446.99
℄ Brg. S. Abut.	584+03.16	20.00	446.99	446.99
A	584+13.16	20.00	447.04	447.06
B	584+23.16	20.00	447.10	447.12
C	584+33.16	20.00	447.15	447.16
℄ Pier 1	584+45.00	20.00	447.21	447.21
D	584+55.00	20.00	447.26	447.26
E	584+65.00	20.00	447.31	447.32
F	584+75.00	20.00	447.36	447.37
G	584+85.00	20.00	447.41	447.42
℄ Pier 2	584+95.00	20.00	447.46	447.46
H	585+05.00	20.00	447.51	447.52
I	585+15.00	20.00	447.56	447.57
J	585+25.00	20.00	447.61	447.62
℄ Brg. N. Abut.	585+36.84	20.00	447.67	447.67
Bk. N. Abut.	585+38.67	20.00	447.68	447.68

BEAM 9

Location	Station	Offset	Theoretical Grade Elevations	Theoretical Grade Elevations Adjusted For Dead Load Deflection
Bk. S. Abut.	584+01.33	25.44	446.88	446.88
℄ Brg. S. Abut.	584+03.16	25.35	446.89	446.89
A	584+13.15	24.89	446.95	446.97
B	584+23.14	24.43	447.01	447.03
C	584+33.13	23.97	447.07	447.08
℄ Pier 1	584+45.00	23.42	447.14	447.14
D	584+54.99	22.96	447.20	447.20
E	584+64.98	22.49	447.26	447.27
F	584+74.97	22.03	447.32	447.33
G	584+84.96	21.57	447.38	447.38
℄ Pier 2	584+95.00	21.10	447.44	447.44
H	585+04.99	20.64	447.49	447.50
I	585+14.98	20.18	447.55	447.57
J	585+24.97	19.72	447.61	447.63
℄ Brg. N. Abut.	585+36.84	19.17	447.68	447.68
Bk. N. Abut.	585+38.67	19.08	447.69	447.69

BEAM 10

Location	Station	Offset	Theoretical Grade Elevations	Theoretical Grade Elevations Adjusted For Dead Load Deflection
Bk. S. Abut.	584+01.33	34.83	446.69	446.69
℄ Brg. S. Abut.	584+03.16	34.70	446.70	446.70
A	584+13.14	34.01	446.76	446.78
B	584+23.12	33.32	446.83	446.85
C	584+33.09	32.62	446.89	446.91
℄ Pier 1	584+45.00	31.80	446.97	446.97
D	584+54.98	31.10	447.03	447.04
E	584+64.95	30.41	447.10	447.12
F	584+74.93	29.72	447.16	447.18
G	584+84.90	29.02	447.23	447.24
℄ Pier 2	584+95.00	28.32	447.29	447.29
H	585+04.98	27.63	447.35	447.36
I	585+14.95	26.94	447.42	447.44
J	585+24.93	26.24	447.48	447.50
℄ Brg. N. Abut.	585+36.84	25.42	447.56	447.56
Bk. N. Abut.	585+38.67	25.29	447.57	447.57

INSIDE FACE EAST PARAPET

Location	Station	Offset	Theoretical Grade Elevations	Theoretical Grade Elevations Adjusted For Dead Load Deflection
Bk. S. Abut.	584+01.33	36.73	446.65	446.65
℄ Brg. S. Abut.	584+03.16	36.37	446.67	446.67
A	584+13.14	35.68	446.73	446.75
B	584+23.12	34.99	446.80	446.82
C	584+33.09	34.29	446.86	446.87
℄ Pier 1	584+45.00	33.47	446.94	446.94
D	584+54.98	32.77	447.00	447.01
E	584+64.95	32.08	447.06	447.08
F	584+74.93	31.39	447.13	447.15
G	584+84.90	30.69	447.19	447.20
℄ Pier 2	584+95.00	29.99	447.26	447.26
H	585+04.98	29.30	447.32	447.33
I	585+14.95	28.61	447.39	447.41
J	585+24.93	27.91	447.45	447.47
℄ Brg. N. Abut.	585+36.84	27.09	447.53	447.53
Bk. N. Abut.	585+38.67	27.03	447.54	447.54

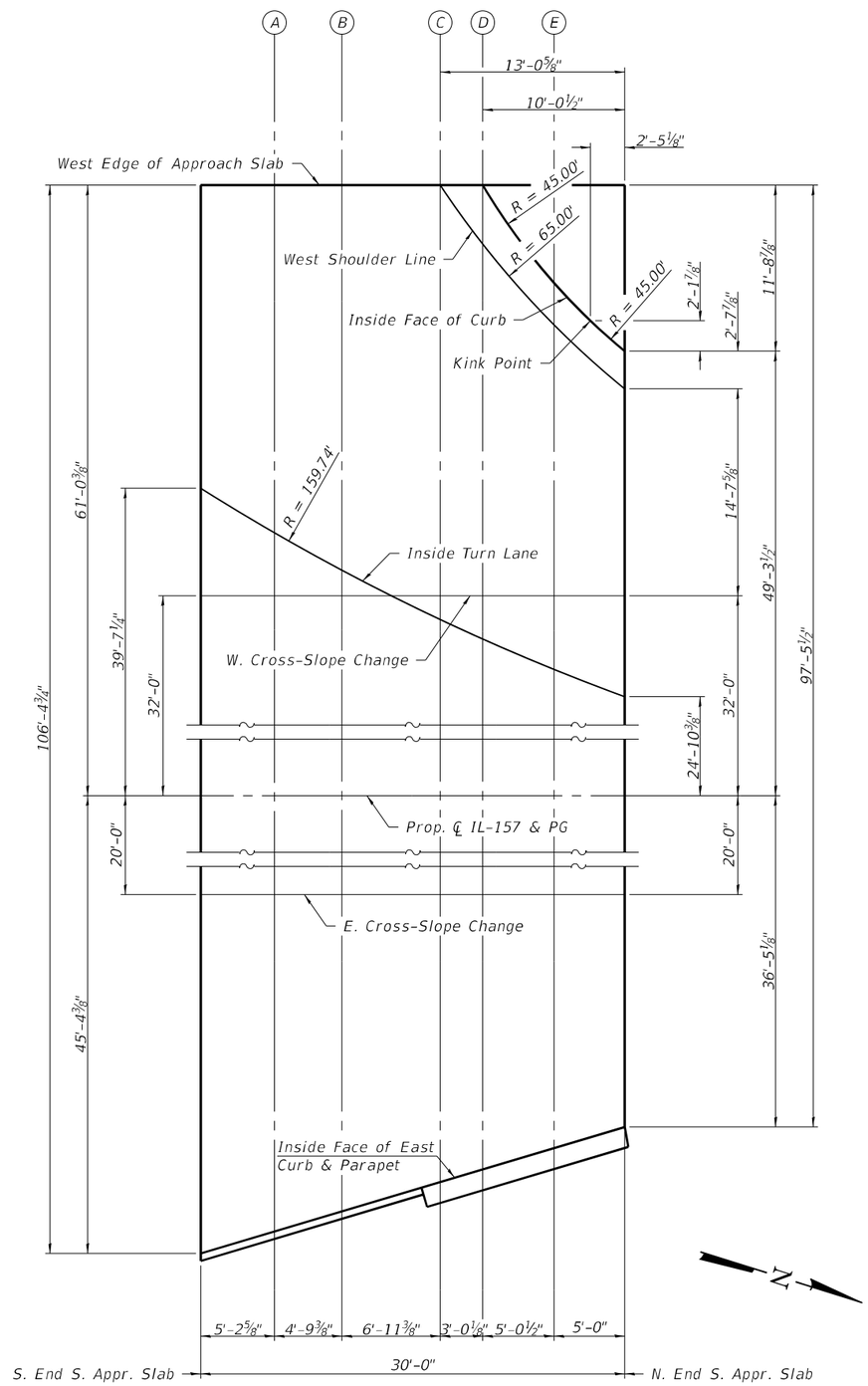

PLAN

WEST EDGE OF APPROACH SLAB

Location	Station	Offset	Theoretical Grade Elevations
S. End S. Appr. Slab	583+72.33	-61.03	446.53
A	583+77.55	-61.03	446.55
B	583+82.33	-61.03	446.57
C	583+89.28	-61.03	446.59
D	583+92.29	-61.03	446.55
E	583+97.33	-61.03	446.85
N. End S. Appr. Slab	584+02.33	-61.03	447.14

INSIDE FACE OF CURB

Location	Station	Offset	Theoretical Grade Elevations
D	583+92.29	-61.03	446.55
E	583+97.33	-54.12	446.57
N. End S. Appr. Slab	584+02.33	-49.29	446.61

WEST SHOULDER LINE

Location	Station	Offset	Theoretical Grade Elevations
C	583+89.28	-61.03	446.59
D	583+92.29	-56.87	446.60
E	583+97.33	-51.17	446.61
N. End S. Appr. Slab	584+02.33	-46.63	446.63

INSIDE TURN LANE

Location	Station	Offset	Theoretical Grade Elevations
S. End S. Appr. Slab	583+72.33	-39.60	446.59
A	583+77.55	-36.46	446.66
B	583+82.33	-33.81	446.70
C	583+89.28	-30.32	446.77
D	583+92.29	-28.94	446.81
E	583+97.33	-26.79	446.86
N. End S. Appr. Slab	584+02.33	-24.86	446.92

WEST CROSS-SLOPE CHANGE

Location	Station	Offset	Theoretical Grade Elevations
S. End S. Appr. Slab	583+72.33	-32.00	446.66
A	583+77.55	-32.00	446.69
B	583+82.33	-32.00	446.71
C	583+89.28	-32.00	446.74
D	583+92.29	-32.00	446.76
E	583+97.33	-32.00	446.78
N. End S. Appr. Slab	584+02.33	-32.00	446.81

PROPOSED ℄ IL-157 & PROFILE GRADE

Location	Station	Offset	Theoretical Grade Elevations
S. End S. Appr. Slab	583+72.33	0.00	447.14
A	583+77.55	0.00	447.17
B	583+82.33	0.00	447.19
C	583+89.28	0.00	447.22
D	583+92.29	0.00	447.24
E	583+97.33	0.00	447.26
N. End S. Appr. Slab	584+02.33	0.00	447.29

EAST CROSS-SLOPE CHANGE

Location	Station	Offset	Theoretical Grade Elevations
S. End S. Appr. Slab	583+72.33	20.00	446.84
A	583+77.55	20.00	446.87
B	583+82.33	20.00	446.89
C	583+89.28	20.00	446.92
D	583+92.29	20.00	446.94
E	583+97.33	20.00	446.96
N. End S. Appr. Slab	584+02.33	20.00	446.99

INSIDE FACE OF EAST CURB & PARAPET

Location	Station	Offset	Theoretical Grade Elevations
S. End S. Appr. Slab	583+72.33	45.37	446.33
A	583+77.55	43.81	446.39
B	583+82.33	42.39	446.44
C	583+89.28	40.32	446.52
D	583+92.29	39.42	446.55
E	583+97.33	37.92	446.61
N. End S. Appr. Slab	584+02.33	36.43	446.66

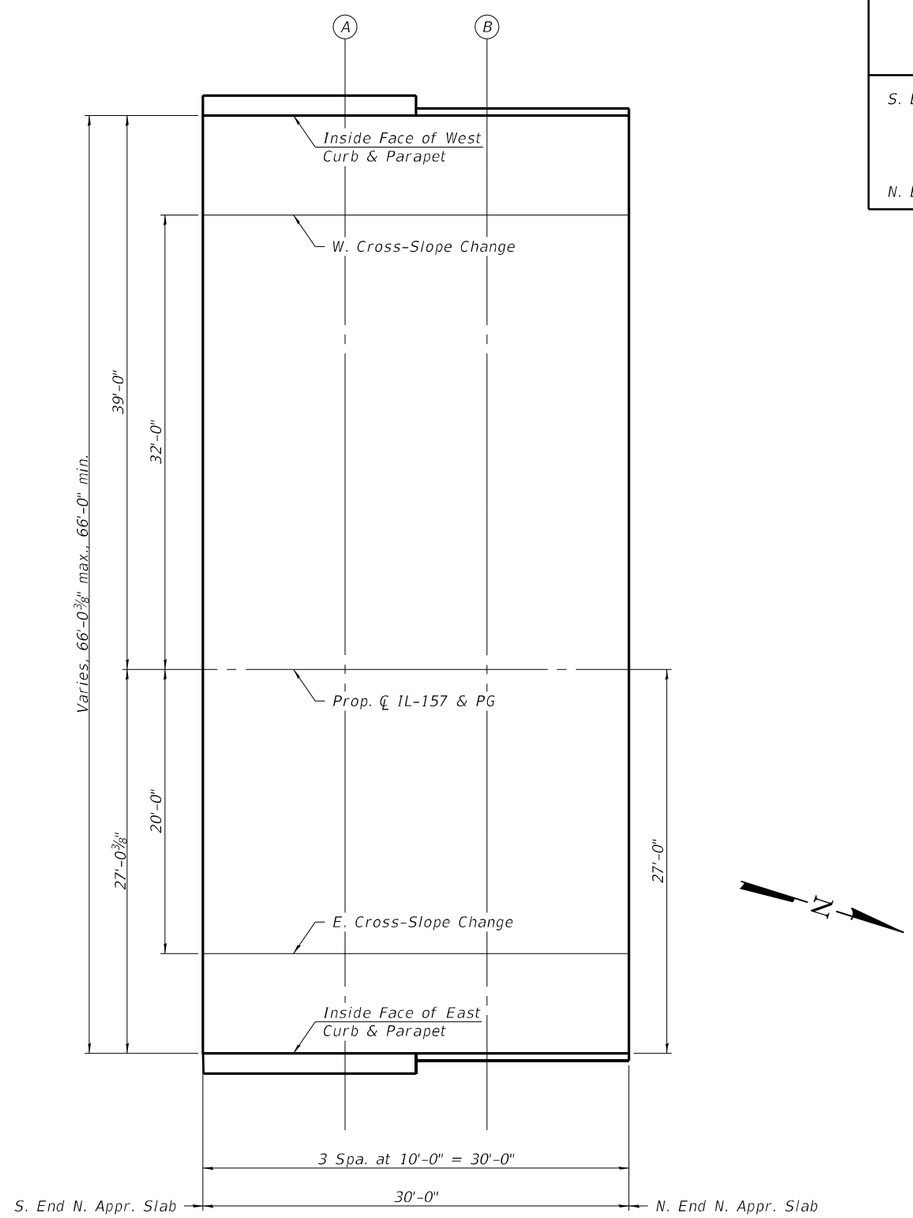

PLAN

INSIDE FACE OF WEST CURB & PARAPET

Location	Station	Offset	Theoretical Grade Elevations
S. End N. Appr. Slab	585+37.67	-39.00	447.35
A	585+47.67	-39.00	447.40
B	585+57.67	-39.00	447.45
N. End N. Appr. Slab	585+67.67	-39.00	447.50

WEST CROSS-SLOPE CHANGE

Location	Station	Offset	Theoretical Grade Elevations
S. End N. Appr. Slab	585+37.67	-32.00	447.49
A	585+47.67	-32.00	447.54
B	585+57.67	-32.00	447.59
N. End N. Appr. Slab	585+67.67	-32.00	447.64

PROPOSED ℄ IL-157 & PROFILE GRADE

Location	Station	Offset	Theoretical Grade Elevations
S. End N. Appr. Slab	585+37.67	0.00	447.97
A	585+47.67	0.00	448.02
B	585+57.67	0.00	448.07
N. End N. Appr. Slab	585+67.67	0.00	448.12

EAST CROSS-SLOPE CHANGE

Location	Station	Offset	Theoretical Grade Elevations
S. End N. Appr. Slab	585+37.67	20.00	447.67
A	585+47.67	20.00	447.72
B	585+57.67	20.00	447.77
N. End N. Appr. Slab	585+67.67	20.00	447.82

INSIDE FACE OF EAST CURB & PARAPET

Location	Station	Offset	Theoretical Grade Elevations
S. End N. Appr. Slab	585+37.67	27.03	447.53
A	585+47.67	27.02	447.58
B	585+57.67	27.01	447.63
N. End N. Appr. Slab	585+67.67	27.00	447.68

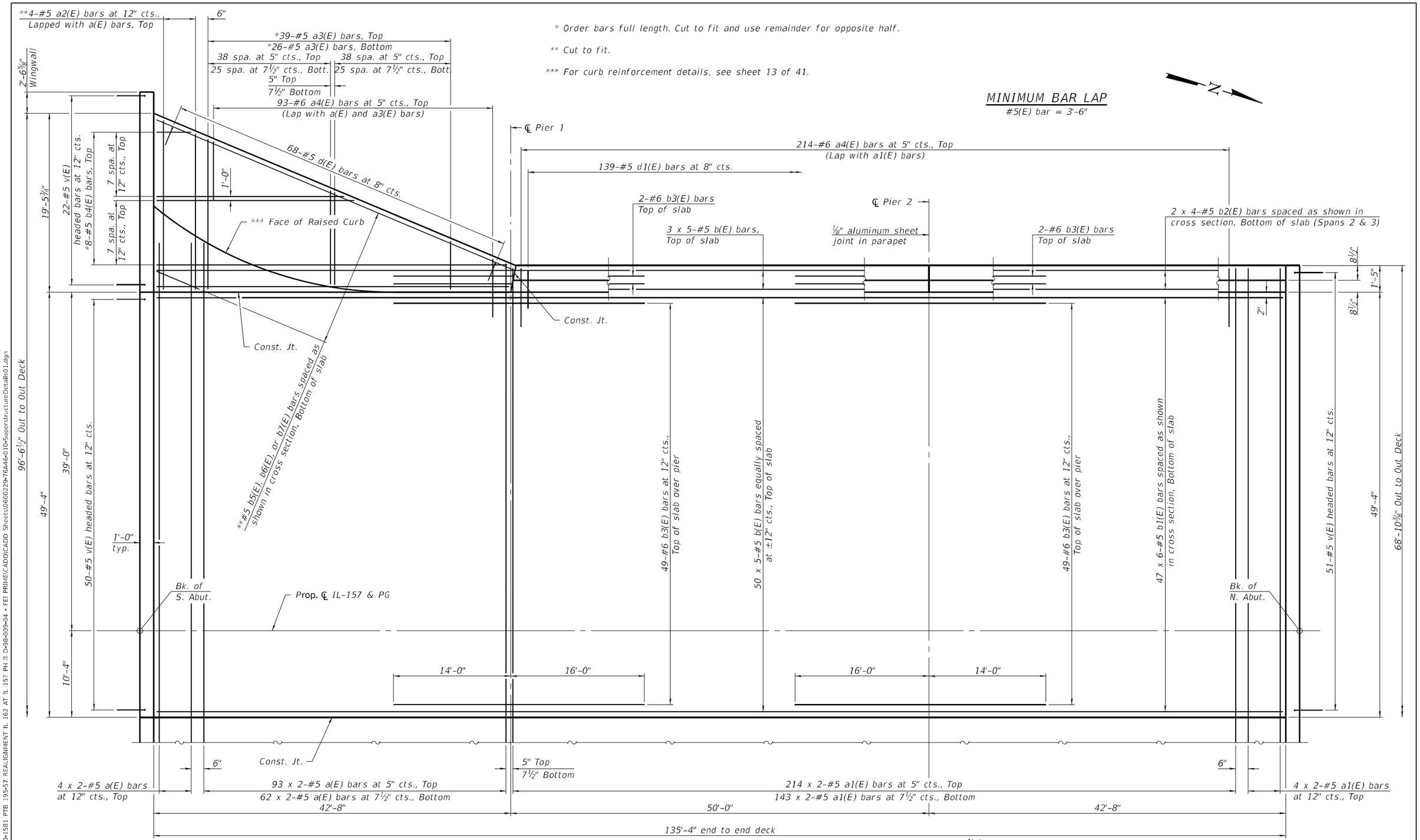

* Order bars full length. Cut to fit and use remainder for opposite half.

** Cut to fit.

*** For curb reinforcement details, see sheet 13 of 41.

MINIMUM BAR LAP

#5(E) bar = 3'-6"

PART PLAN

Notes:

For east portion of deck plan, see sheet 11 of 41.
For Cross Sections, see sheet 12 of 41.
For superstructure details and Bill of Material, see sheets 13 thru 15 of 41.
Bars indicated thus 50 x 5-#5 etc. indicates 50 lines of bars with 5 lengths per line.

MODEL: Default
FILE NAME: G:\FEI\jobs_2020\20-1581 PTB 195-57 REALIGNMENT IL 162 AT IL 157 PH II D-98-009-04 - FEI PRIME\CADD\CADD Sheets\0600229-76A46-010-SuperstructureDetails01.dgn

FUHRMANN ENGINEERING
WWW. FUHRMANN-ENG .COM

USER NAME =	DESIGNED - T.S. Friederich	REVISED -	
	CHECKED - E.M. Lagemann	REVISED -	
PLOT SCALE =	DRAWN - T.S. Friederich	REVISED -	
PLOT DATE =	CHECKED - A.H. Morinaga Mansilla	REVISED -	

STATE OF ILLINOIS
DEPARTMENT OF TRANSPORTATION

SUPERSTRUCTURE DETAILS I
STRUCTURE NO. 060-0229

SHEET 10 OF 41 SHEETS

F.A.P RTE.	SECTION	COUNTY	TOTAL SHEETS	SHEET NO.
*	51-1R	MADISON	296	152
		CONTRACT NO. 76A46		
		ILLINOIS	FED. AID PROJECT	

3/5/2024 8:44:31 AM

*586/592

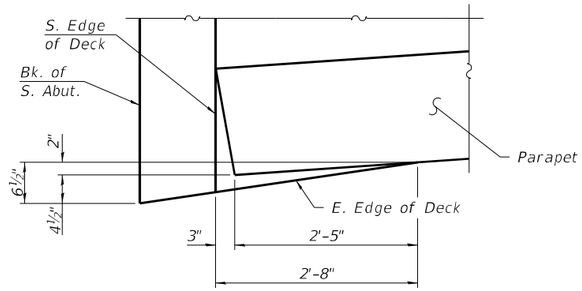

DETAIL A

MINIMUM BAR LAP

#5(E) bar = 3'-6"

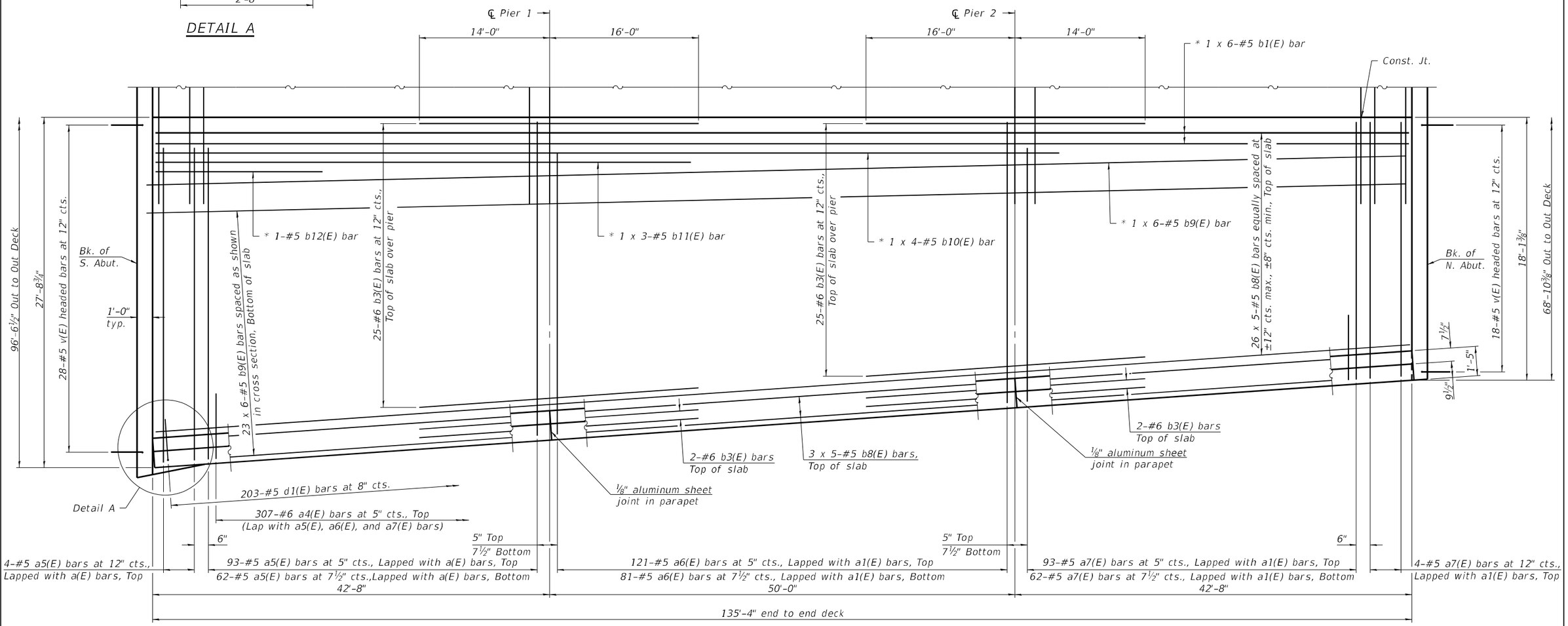

PART PLAN

* Spaced as shown in cross section, Bottom of Slab

Notes:
For west portion of deck plan, see sheet 10 of 41.
For Cross Sections, see sheet 12 of 41.
For superstructure details and Bill of Material, see sheets 13 thru 15 of 41.
Bars indicated thus 27 x 5-#5 etc. indicates 27 lines of bars with 5 lengths per line.

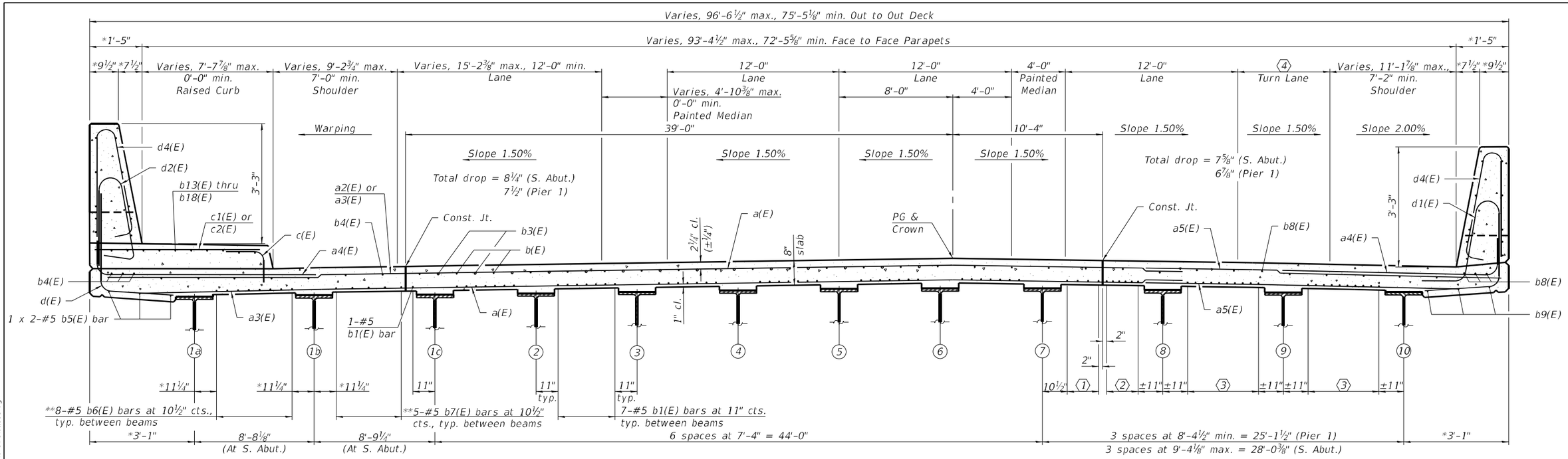

NEAR PIER

NEAR MIDSPAN

CROSS SECTION - SPAN 1

(Looking North)

1. 4-#5 b1(E) bars at 10½" cts.
2. 5 spaces at 11" cts. at S. Abut.: Includes bars b1(E), b10(E), b11(E), b12(E), and b9(E)
   4 spaces at 11" cts. at Pier 1: Includes bars b1(E), b10(E), b11(E), and b9(E)
   3 spaces at 11" cts. at Pier 2: Includes bars b1(E), b10(E), and b9(E)
   2 spaces at 11" cts. at N. Abut.: Includes b1(E) and b9(E)
3. 10-#5 b9(E) bars equally spaced at 10" cts., max.
4. Varies, 9'-3⅛" max., 2'-3¾" min.
5. Varies, 2'-3¾" max., 0'-0" min.

* Perpendicular to Beam
** Cut to fit

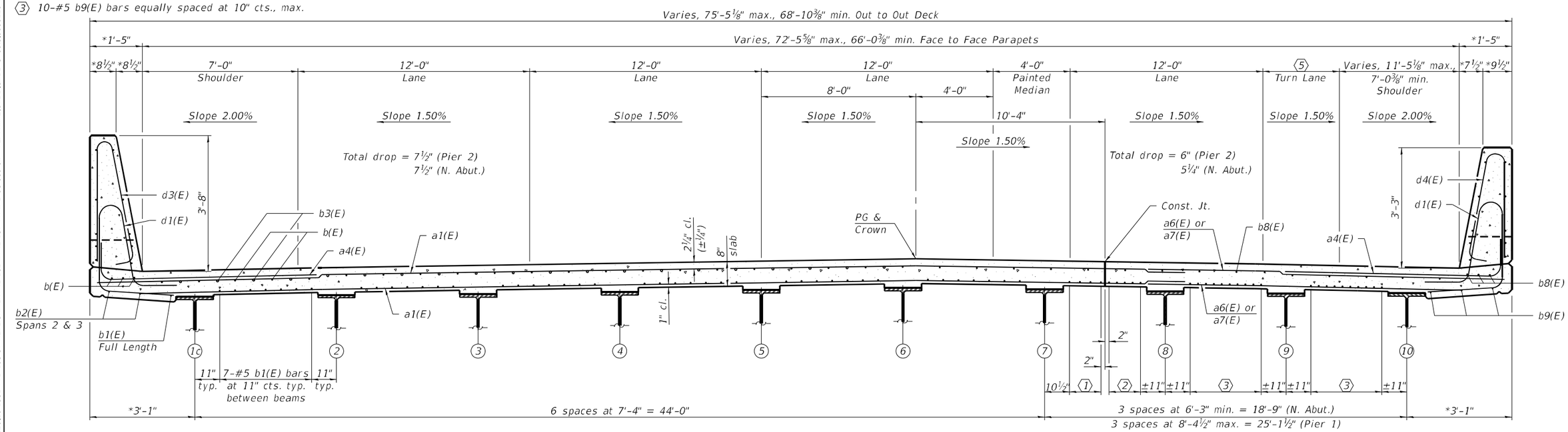

NEAR PIER

NEAR MIDSPAN

CROSS SECTION - SPANS 2 AND 3

(Looking North)

FUHRMANN ENGINEERING WWW. FUHRMANN-ENG .COM	USER NAME =	DESIGNED - T.S. Friederich	REVISED -	STATE OF ILLINOIS DEPARTMENT OF TRANSPORTATION	SUPERSTRUCTURE DETAILS III STRUCTURE NO. 060-0229
		CHECKED - E.M. Lagemann	REVISED -		
	PLOT SCALE =	DRAWN - T.S. Friederich	REVISED -		
	PLOT DATE =	CHECKED - A.H. Morinaga Mansilla	REVISED -		SHEET 12 OF 41 SHEETS

F.A.P RTE.	SECTION	COUNTY	TOTAL SHEETS	SHEET NO.
*	51-1R	MADISON	296	154
		CONTRACT NO. 76A46		
		ILLINOIS	FED. AID PROJECT	

*586/592

MODEL: Default
FILE NAME: G:\FEI\Jobs_2020\20-1581 PTB 195-57 REALIGNMENT IL 162 AT IL 157 PH II D-98-009-04 - FEI PRIME\CADD\CADD Sheets\0600229-76A46-012-SuperstructureDetails03.dgn

3/5/2024 8:49:22 AM

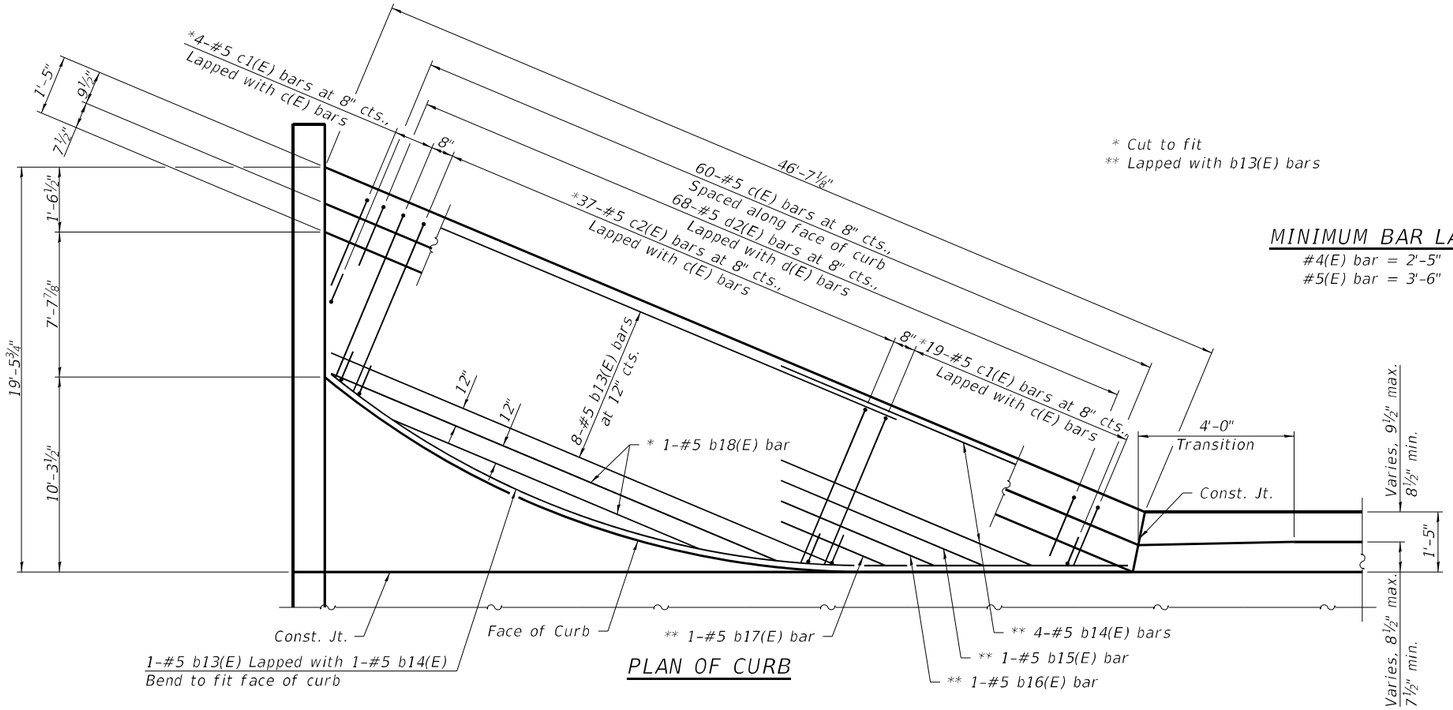

* Cut to fit
** Lapped with b13(E) bars

MINIMUM BAR LAP

#4(E) bar = 2'-5"
#5(E) bar = 3'-6"

PLAN OF CURB

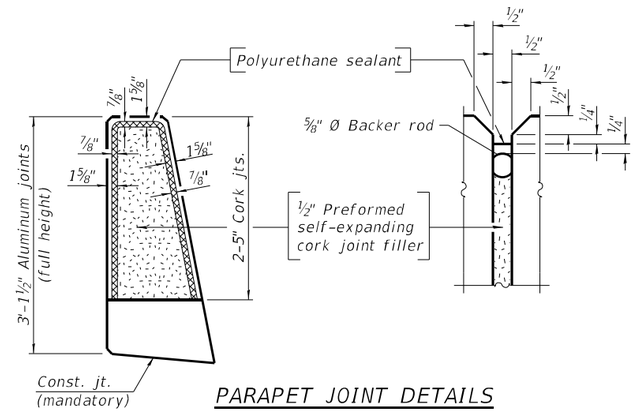

PARAPET JOINT DETAILS

Notes:

The ⅛" aluminum sheet shall be ASTM B 209 alloy 3003-H14 and coated to minimize reaction with wet concrete. Cost included with Concrete Superstructure.

The polyurethane sealant shall be according to Article 1050.04 of the Std. Spec. and the color shall be gray.

Headed bars shall conform to ASTM A970 with threaded attachment; Class HA; and reinforcement bars conforming to ASTM A706. Cost included with Reinforcement Bars, Epoxy Coated.

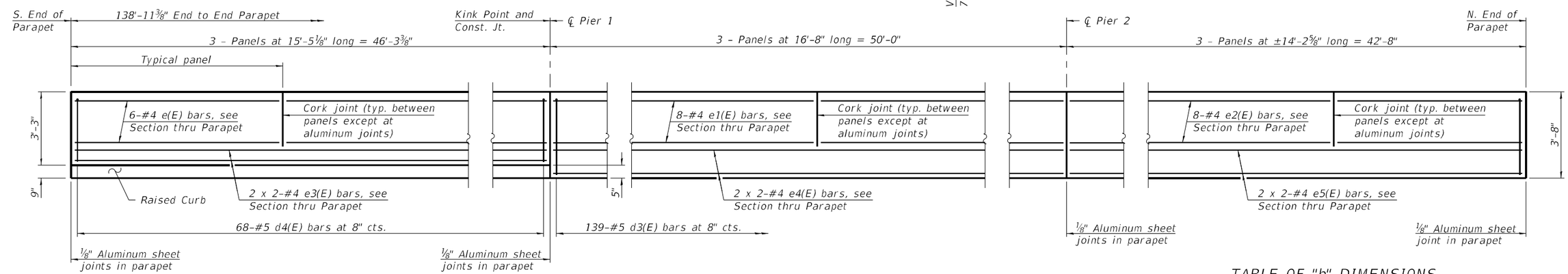

INSIDE ELEVATION OF WEST PARAPET

TABLE OF "h" DIMENSIONS

Location	h1	h2	h3	h4	h5	h6	h7	h8	h9	h10	h11
Face of Curb	9"	8⅝"	8¼"	7¾"	7⅜"	7"	6⅝"	6¼"	5¾"	5⅜"	5"
Face of Parapet	8"	7¾"	7⅜"	7⅛"	6¾"	6½"	6¼"	5⅞"	5⅝"	5¼"	5"
Edge of Deck	7¾"	7⅜"	6⅞"	6½"	6"	5⅝"	5¼"	4¾"	4⅜"	3⅞"	3½"

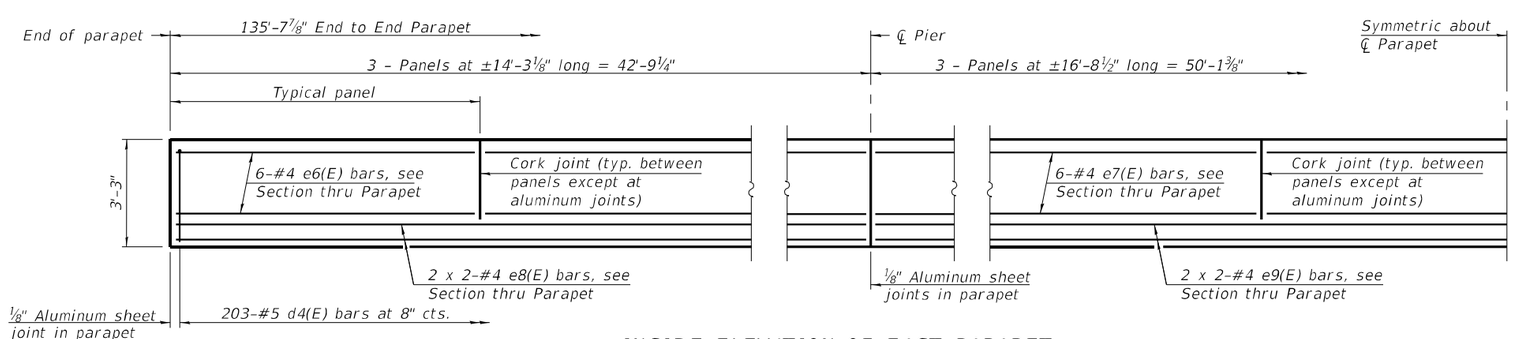

INSIDE ELEVATION OF EAST PARAPET

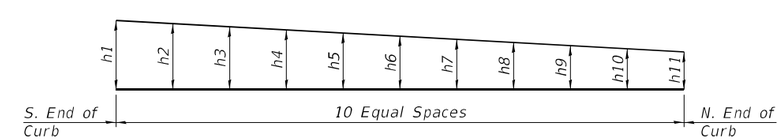

RAISED CURB HEIGHT DIAGRAM

Notes:

For superstructure details and Bill of Material, see sheets 14 and 15 of 41.

Bars indicated thus 2 x 2-#4 etc. indicates 2 lines of bars with 2 lengths per line.

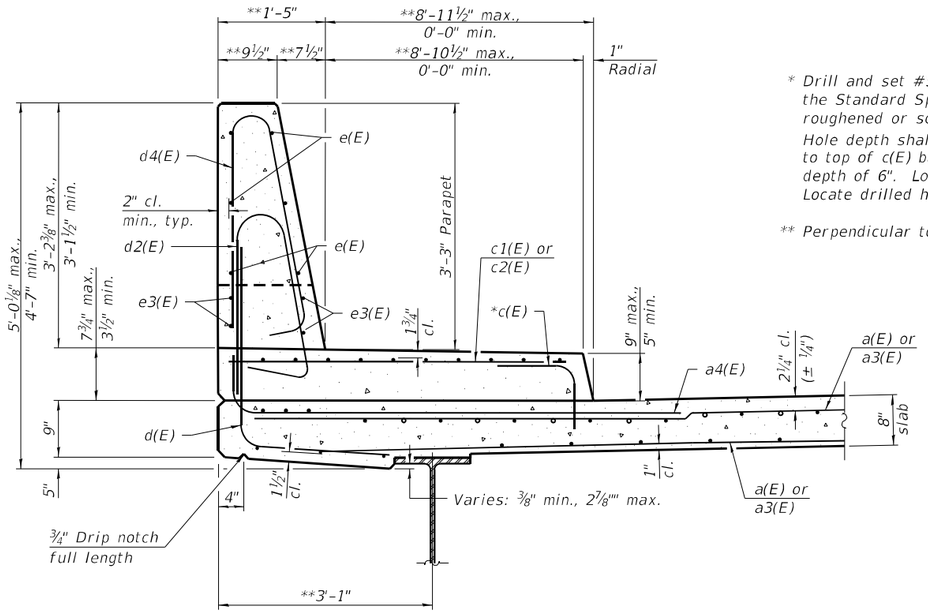

SECTION THRU WEST PARAPET - SPAN 1

(Looking North)

* Drill and set #5 c(E) bar according to Article 509.06 of the Standard Specifications. Drilled holes shall be roughened or scored per manufacturer's recommendation. Hole depth shall be deep enough to provide 1¾" clearance to top of c(E) bar and top of curb, with a maximum hole depth of 6". Locate Longitudinal bars to miss drilled holes. Locate drilled holes to miss Transverse bars in appr. slab.

** Perpendicular to Beam.

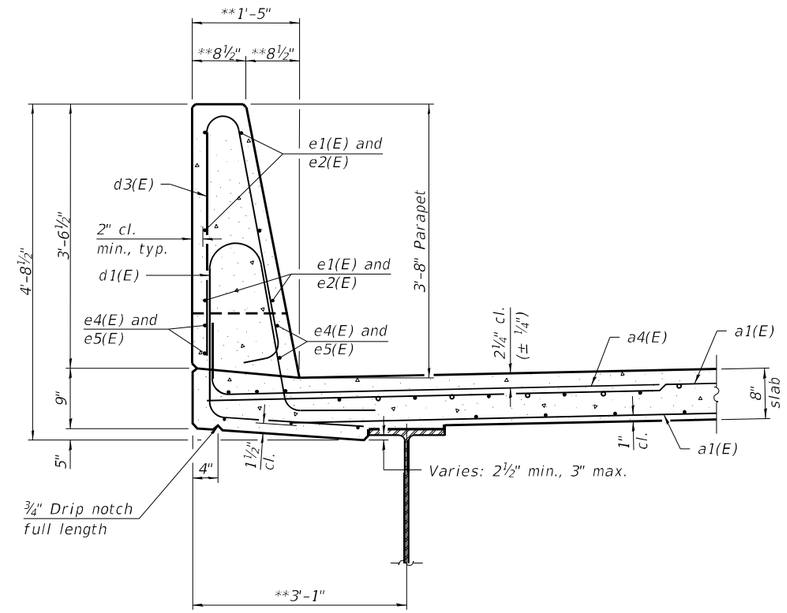

SECTION THRU WEST PARAPET - SPANS 2 & 3

(Looking North)

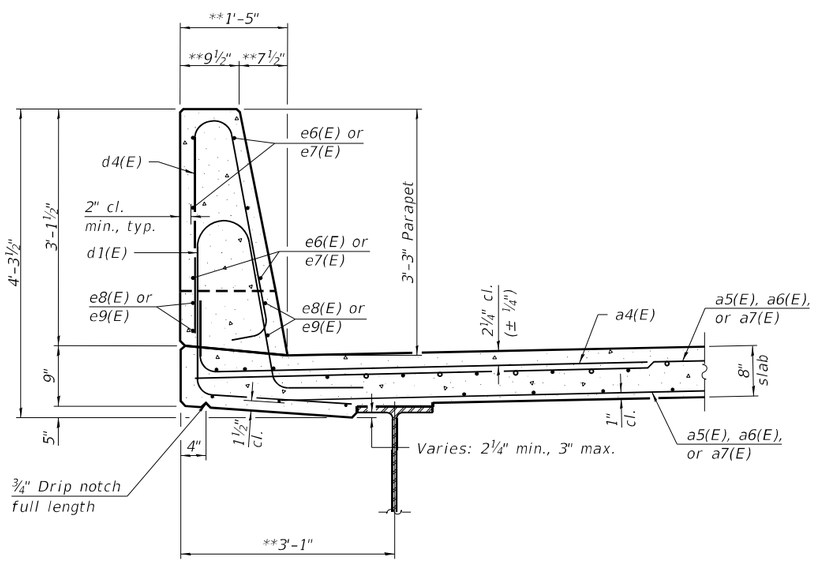

SECTION THRU EAST PARAPET

(Looking South)

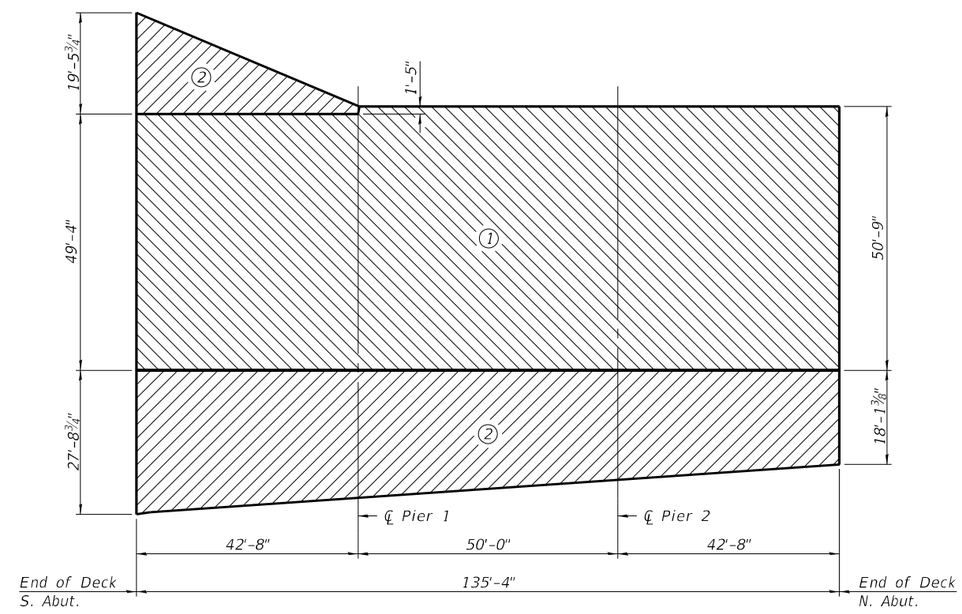

DECK POURING SEQUENCE

Note:

When the deck pour is stopped for the day at the longitudinal bonded construction joint in the deck pouring sequence as shown, the next pour shall not be made until both of the following are met:

a. At least 72 hours shall have elapsed from the end of the previous pour.
b. The concrete strength shall have attained a minimum flexural strength of 675 psi or a minimum compressive strength of 4,000 psi.

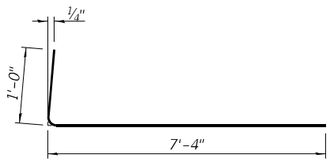

BAR a4(E)

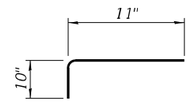

BAR c(E)

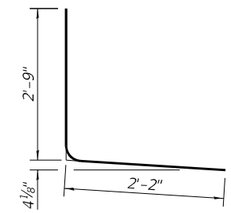

BAR d(E)

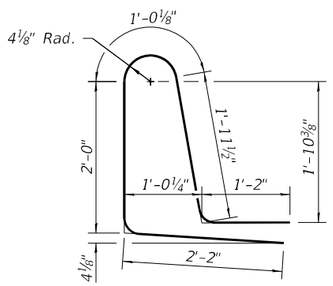

BAR d1(E)

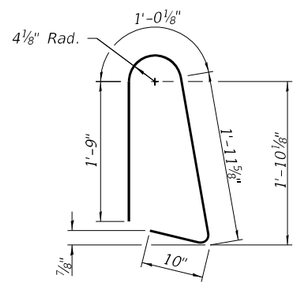

BAR d2(E)

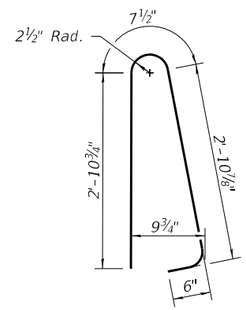

BAR d3(E)

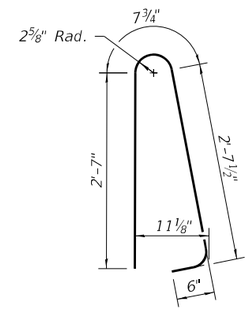

BAR d4(E)

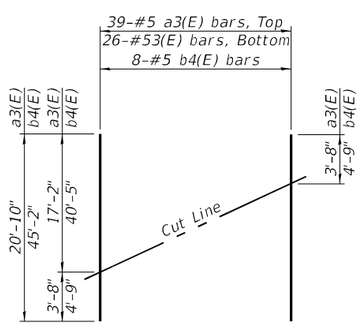

FIELD CUTTING DIAGRAM

Order a3(E) and b4(E) bars full length.
Cut as shown and use remainder of
bars in opposite end of deck.

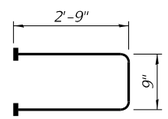

BAR s(E)
(Headed)

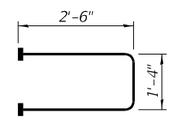

BAR s2(E)
(Headed)

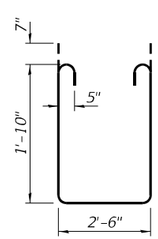

BAR s1(E)

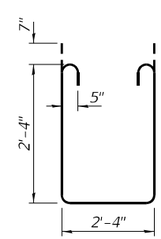

BAR s3(E)

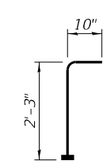

BAR v(E)
(Headed)

BILL OF MATERIAL

Bar	No.	Size	Length	Shape
a(E)	318	#5	32'-2"	
a1(E)	722	#5	30'-10"	
a2(E)	4	#5	18'-8"	
a3(E)	65	#5	20'-10"	
a4(E)	614	#6	8'-4"	
a5(E)	159	#5	23'-11"	
a6(E)	202	#5	20'-5"	
a7(E)	159	#5	17'-6"	
b(E)	265	#5	29'-10"	
b1(E)	294	#5	25'-5"	
b2(E)	8	#5	25'-9"	
b3(E)	156	#6	30'-0"	
b4(E)	8	#5	45'-2"	
b5(E)	6	#5	24'-11"	
b6(E)	8	#5	38'-5"	
b7(E)	5	#5	16'-0"	
b8(E)	145	#5	29'-11"	
b9(E)	144	#5	25'-6"	
b10(E)	4	#5	27'-2"	
b11(E)	3	#5	21'-10"	
b12(E)	1	#5	18'-9"	
b13(E)	9	#5	29'-0"	
b14(E)	5	#5	20'-8"	
b15(E)	1	#5	13'-0"	
b16(E)	1	#5	10'-2"	
b17(E)	1	#5	7'-5"	
b18(E)	2	#5	25'-7"	
c(E)	60	#5	1'-9"	
c1(E)	23	#5	8'-3"	
c2(E)	37	#5	10'-1"	
d(E)	68	#5	4'-11"	
d1(E)	342	#5	8'-4"	
d2(E)	68	#5	5'-7"	
d3(E)	139	#5	7'-0"	
d4(E)	271	#5	6'-5"	
e(E)	18	#4	15'-1"	
e1(E)	24	#4	16'-4"	
e2(E)	24	#4	13'-10"	
e3(E)	8	#4	24'-3"	
e4(E)	8	#4	26'-1"	
e5(E)	8	#4	22'-5"	
e6(E)	36	#4	14'-0"	
e7(E)	18	#4	16'-5"	
e8(E)	16	#4	22'-6"	
e9(E)	8	#4	26'-2"	

BILL OF MATERIAL (CONT.)

Bar	No.	Size	Length	Shape
h(E)	6	#5	6'-0"	
m(E)	2	#6	2'-11"	
m1(E)	2	#6	8'-2"	
m2(E)	2	#6	6'-0"	
m3(E)	2	#6	1'-4"	
m4(E)	36	#6	7'-0"	
m5(E)	6	#6	3'-4"	
m6(E)	3	#6	5'-3"	
m7(E)	6	#6	8'-10"	
m8(E)	9	#6	2'-9"	
m9(E)	3	#6	19'-5"	
m10(E)	8	#6	26'-11"	
m11(E)	4	#6	27'-6"	
m12(E)	3	#6	2'-4"	
m13(E)	6	#6	5'-11"	
m14(E)	8	#6	27'-8"	
m15(E)	4	#6	17'-9"	
sE)	18	#5	6'-3"	
s1(E)	18	#5	7'-4"	
s2(E)	140	#5	6'-4"	
s3(E)	140	#5	8'-2"	
v(E)	169	#5	3'-1"	
Bridge Deck Grooving			Sq. Yd.	1,044
Concrete Superstructure			Cu. Yd.	363.8
Reinforcement Bars, Epoxy Coated			Pound	101,330

MODEL: Default
FILE NAME: G:\FED\Jobs_2020\20-1581 PTB 195-57 REALIGNMENT IL 162 AT IL 157 PH II D-98-009-04 - FEI PRIME\CADD\CADD Sheets\0600229-76A46-015-SuperstructureDetails06.dgn

FUHRMANN ENGINEERING
WWW. FUHRMANN-ENG .COM

USER NAME =	DESIGNED - T.S. Friederich	REVISED -
	CHECKED - E.M. Lagemann	REVISED -
PLOT SCALE =	DRAWN - T.S. Friederich	REVISED -
PLOT DATE =	CHECKED - A.H. Morinaga Mansilla	REVISED -

STATE OF ILLINOIS
DEPARTMENT OF TRANSPORTATION

SUPERSTRUCTURE DETAILS VI
STRUCTURE NO. 060-0229

SHEET 15 OF 41 SHEETS

F.A.P RTE.	SECTION	COUNTY	TOTAL SHEETS	SHEET NO.
*	51-1R	MADISON	296	157
		CONTRACT NO. 76A46		
		ILLINOIS	FED. AID PROJECT	

3/5/2024 9:04:31 AM

*586/592

* typ. between beams 1c thru 7
** typ. between beams 8 thru 10
*** 3-#6 Bar Splicers (E) for m9(E) and m10(E) bars
**** 4-#6 Bar Splicers (E) for m10(E) and m11(E) bars

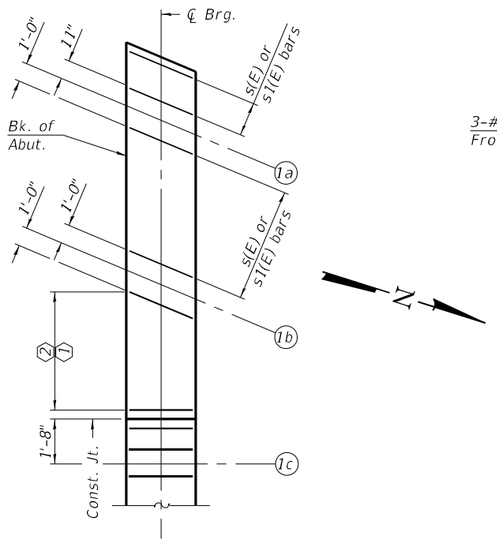

PART DIAPHRAGM PLAN

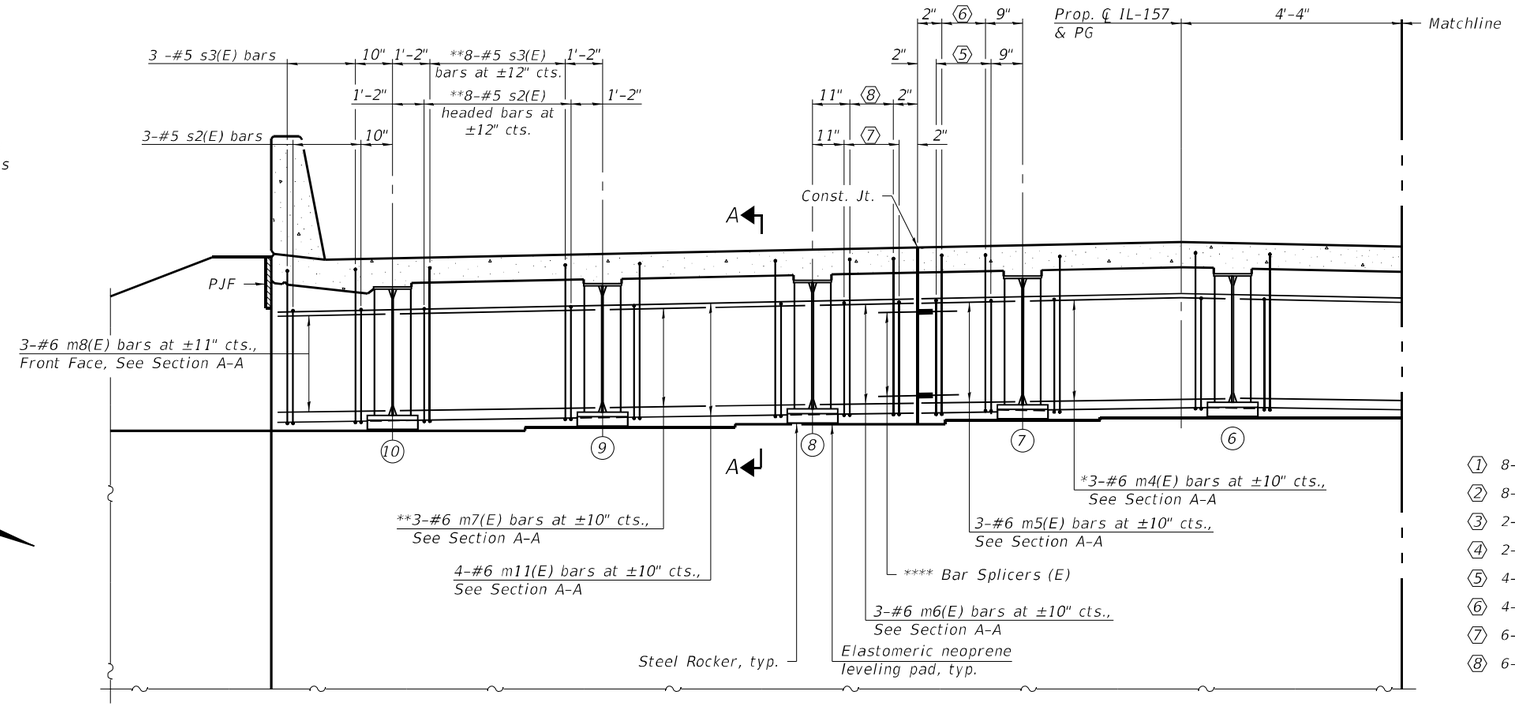

PART DIAPHRAGM AT ABUTMENT
(Looking South)

MINIMUM BAR LAP
#6(E) bar = 4'-10"

1. 8-#5 s(E) headed bars flared at ±12" cts., max.
2. 8-#5 s1(E) bars flared at ±12" cts., max.
3. 2-#5 s2(E) headed bars at ±9" cts.
4. 2-#5 s3(E) bars at ±9" cts.
5. 4-#5 s2(E) headed bars at ±11" cts.
6. 4-#5 s3(E) bars at ±11" cts.
7. 6-#5 s2(E) headed bars at ±11" cts.
8. 6-#5 s3(E) bars at ±11" cts.

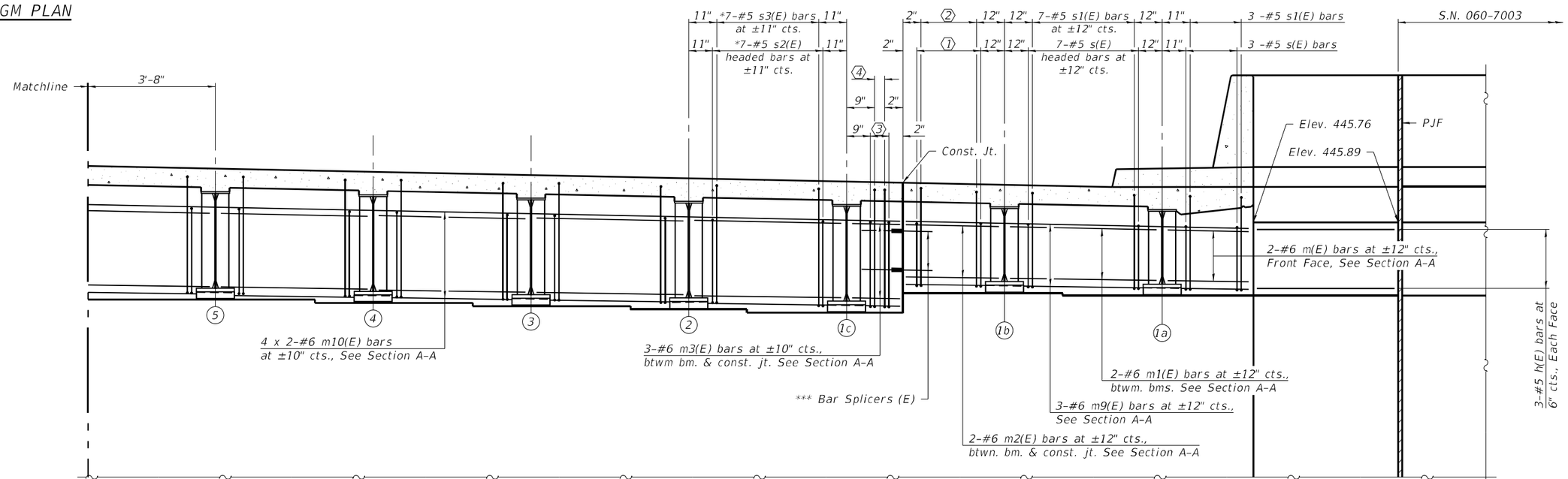

PART DIAPHRAGM AT ABUTMENT
(Looking South)

Notes:
For superstructure details and Bill of Material, see sheets 10 thru 15 of 41.
For Section A-A, see sheet 17 of 41.
Bars indicated thus 4 x 2-#6 etc. indicates 4 lines of bars with 2 lengths per line.

MODEL: Default
FILE NAME: G:\FEIJobs_2020\20-1581 PTB 195-57 REALIGNMENT IL 162 AT IL 157 PH II D-98-009-04 - FEI PRIME\CADD\CADD Sheets\0600229-76A46-016-SAbutDiaph01.dgn
3/8/2024 8:35:22 AM

FUHRMANN ENGINEERING
WWW. FUHRMANN-ENG .COM

USER NAME =	DESIGNED - T.S. Friederich	REVISED -	
	CHECKED - E.M. Lagemann	REVISED -	
PLOT SCALE =	DRAWN - T.S. Friederich	REVISED -	
PLOT DATE =	CHECKED - A.H. Moringa Mansilla	REVISED -	

STATE OF ILLINOIS
DEPARTMENT OF TRANSPORTATION

SOUTH ABUTMENT DIAPHRAGM DETAILS I
STRUCTURE NO. 060-0229

SHEET 16 OF 41 SHEETS

F.A.P RTE.	SECTION	COUNTY	TOTAL SHEETS	SHEET NO.
*	51-1R	MADISON	296	158
		CONTRACT NO. 76A46		
		ILLINOIS	FED. AID PROJECT	

*586/592

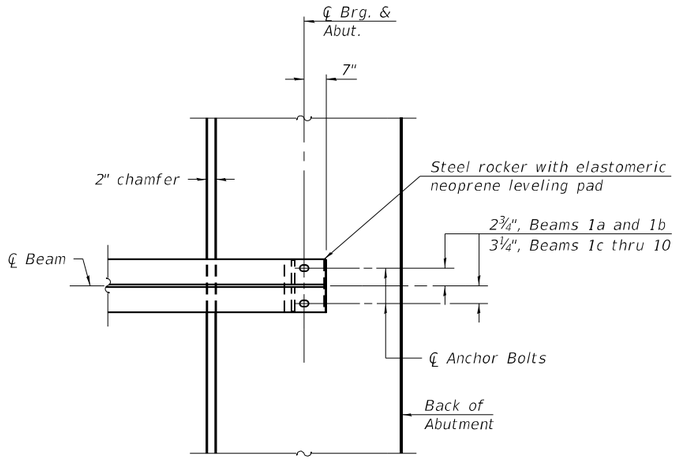

PLAN AT ABUTMENT
(Showing bottom flange of beam)

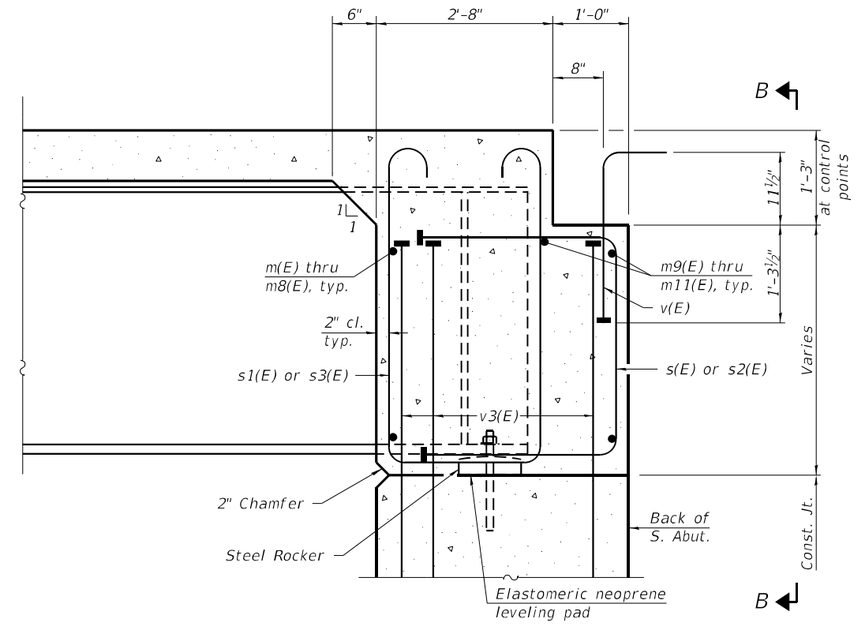

SECTION A-A

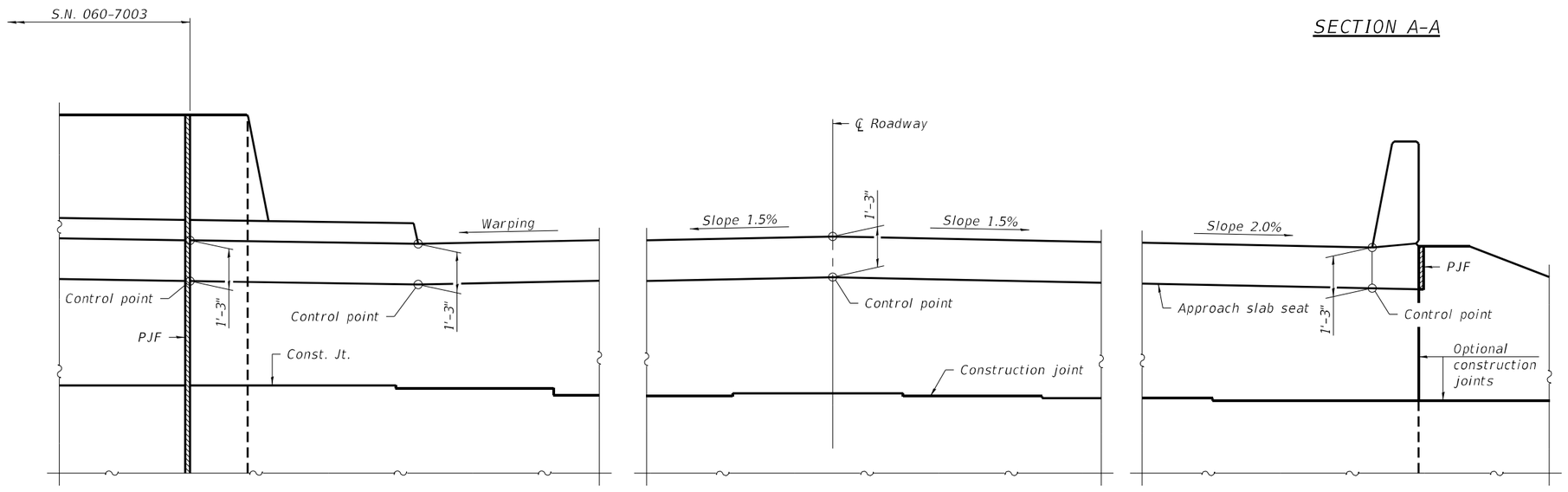

VIEW B-B

Notes:
For location of Section A-A, see sheet 16 of 41.
For PJF details, see sheet 21 of 41.

MODEL: Default
FILE NAME: G:\FEI\Jobs_2020\20-1581 PTB 195-57 REALIGNMENT IL 162 AT IL 157 PH II D-98-009-04 - FEI PRIME\CADD\CADD Sheets\0660229-76A46-017-SAbut\Diaph\02.dgn

FUHRMANN ENGINEERING WWW. FUHRMANN-ENG .COM	USER NAME =	DESIGNED - T.S. Friederich	REVISED -	STATE OF ILLINOIS DEPARTMENT OF TRANSPORTATION	SOUTH ABUTMENT DIAPHRAGM DETAILS II STRUCTURE NO. 060-0229
		CHECKED - E.M. Lagemann	REVISED -		
	PLOT SCALE =	DRAWN - T.S. Friederich	REVISED -		
	PLOT DATE =	CHECKED - A.H. Morinaga Mansilla	REVISED -		SHEET 17 OF 41 SHEETS

F.A.P RTE.	SECTION	COUNTY	TOTAL SHEETS	SHEET NO.
*	51-1R	MADISON	296	159
		CONTRACT NO. 76A46		
		ILLINOIS	FED. AID PROJECT	

3/5/2024 9:08:04 AM

*586/592

* typ. between beams 1c thru 7
** typ. between beams 8 thru 10
*** 4-#6 Bar Splicers (E) for m14(E) and m15(E) bars

1. 4-#5 s2(E) headed bars at ±11" cts., max.
2. 4-#5 s3(E) bars at ±11" cts., max.
3. 3-#5 s2(E) headed bars flared at ±10" cts., max.
4. 3-#5 s3(E) bars flared at ±10" cts., max.

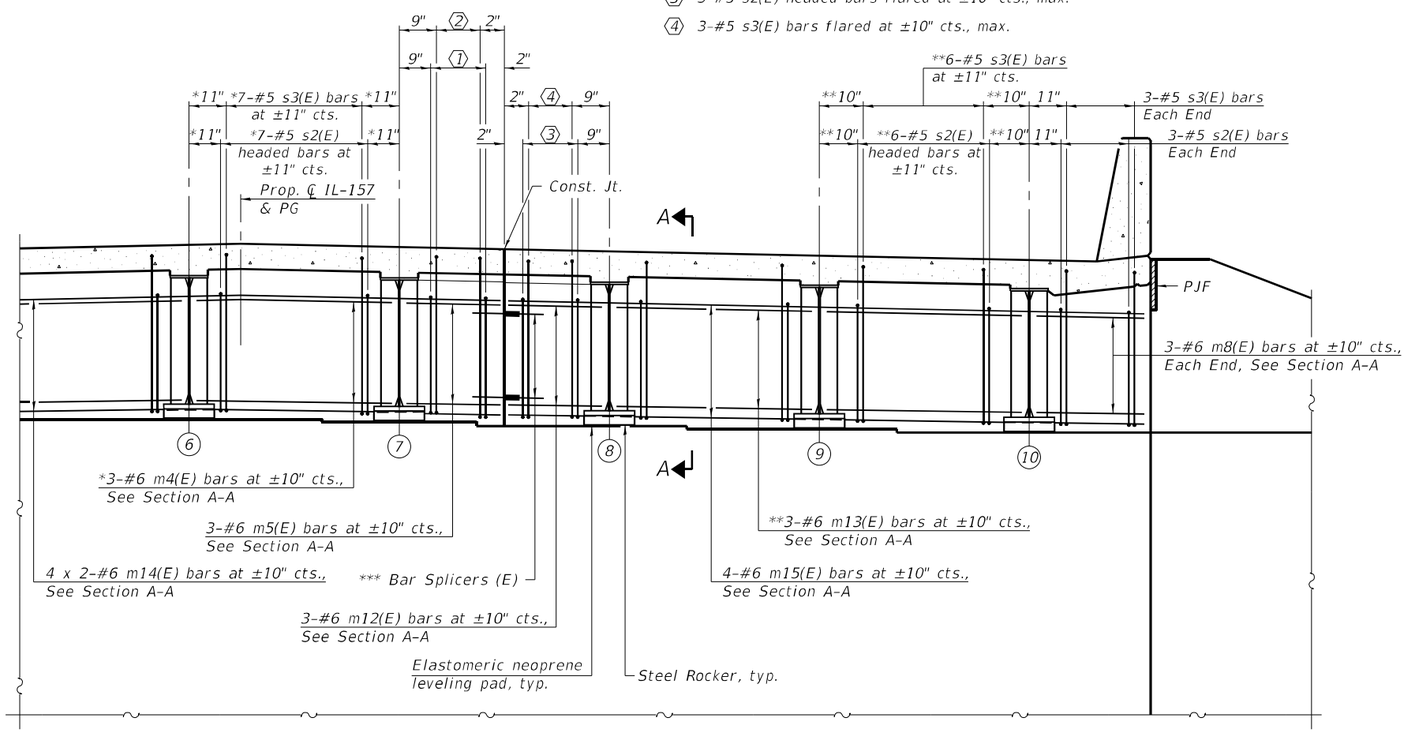

DIAPHRAGM AT ABUTMENT
(Looking North)

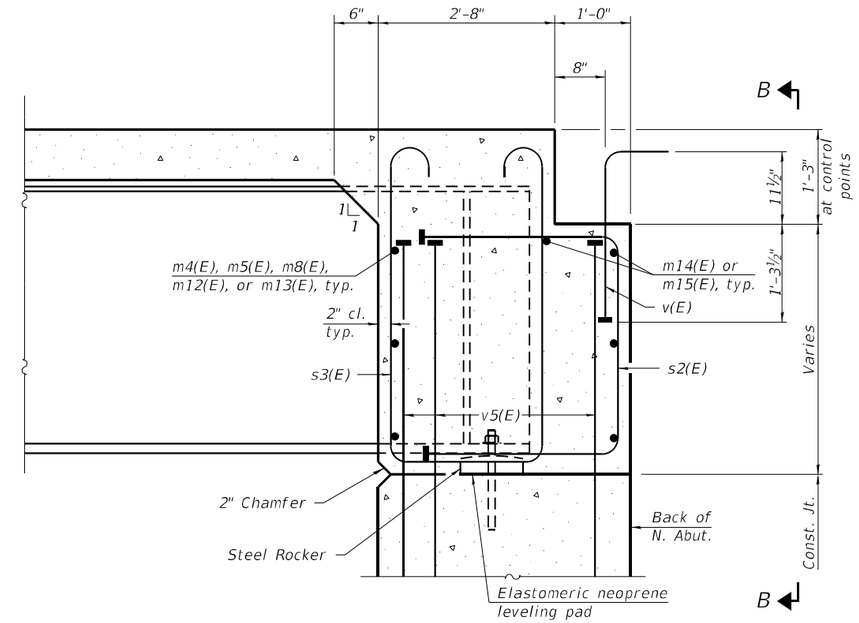

SECTION A-A

MINIMUM BAR LAP
#6(E) bar = 4'-10"

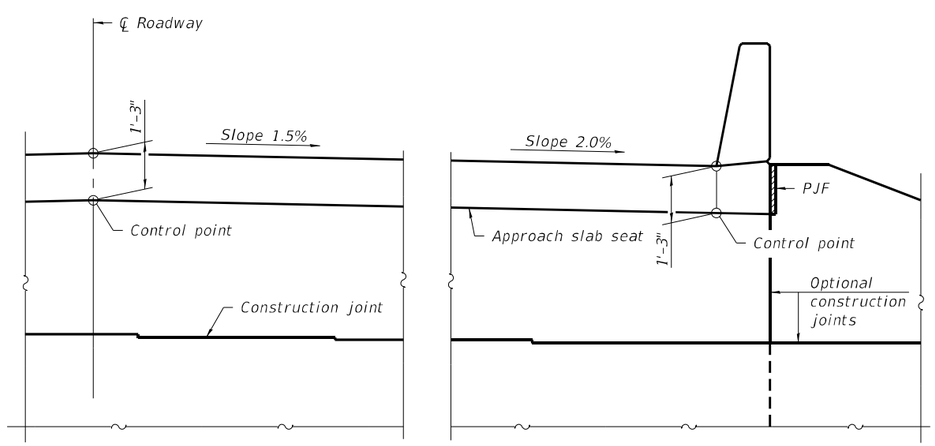

VIEW B-B

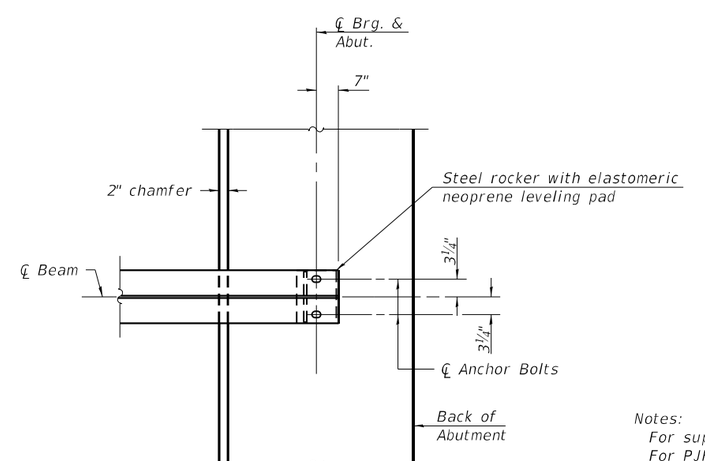

PLAN AT ABUTMENT
(Showing bottom flange of beam)

Notes:
For superstructure details and Bill of Material, see sheets 10 thru 15 of 41.
For PJF details, see sheet 24 of 41.
The approach slab seat shall have a constant slope determined from the control points shown.
Bars indicated thus 4 x 2-#5 etc. indicates 4 lines of bars with 2 lengths per line.

MODEL: Default
FILE NAME: G:\FEIjobs_2020\20-1581 PTB 195-57 REALIGNMENT IL 162 AT IL 157 PH II D-98-009-04 - FEI PRIME\CADD\CADD Sheets\0600229-76A46-018-NAbutDiaph.dgn

FUHRMANN ENGINEERING WWW. FUHRMANN-ENG .COM	USER NAME =	DESIGNED - T.S. Friederich	REVISED -	STATE OF ILLINOIS DEPARTMENT OF TRANSPORTATION	NORTH ABUTMENT DIAPHRAGM DETAILS STRUCTURE NO. 060-0229
		CHECKED - E.M. Lagemann	REVISED -		
	PLOT SCALE =	DRAWN - T.S. Friederich	REVISED -		
	PLOT DATE =	CHECKED - A.H. Morinaga Mansilla	REVISED -		SHEET 18 OF 41 SHEETS

F.A.P RTE.	SECTION	COUNTY	TOTAL SHEETS	SHEET NO.
*	51-1R	MADISON	296	160
		CONTRACT NO. 76A46		
	ILLINOIS	FED. AID PROJECT		

3/8/2024 8:36:52 AM

*586/592

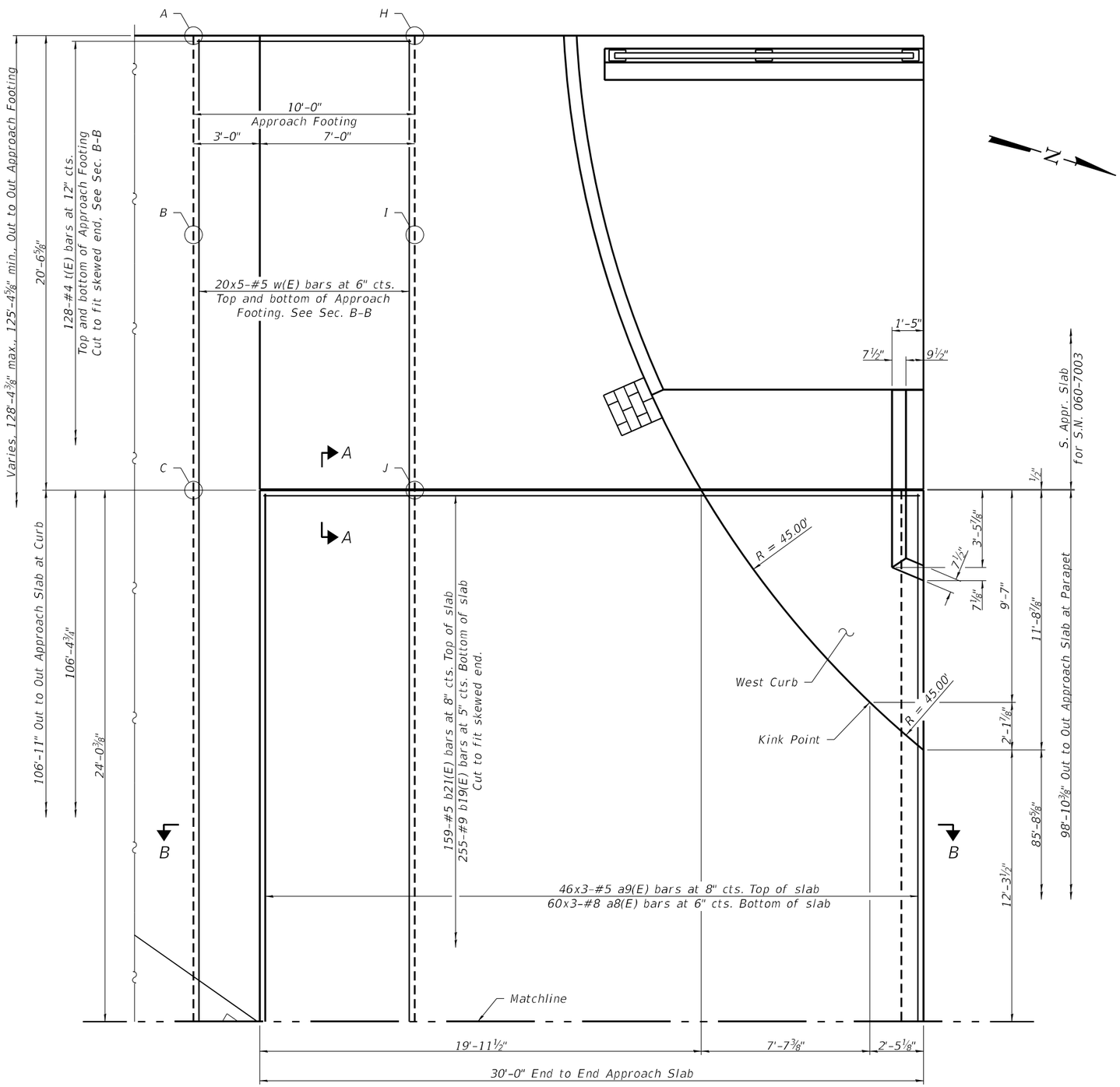

PART PLAN

TOP AND BOTTOM ELEVATIONS FOR APPROACH FOOTING

Point/ Location	Station	Offset	Top	Bottom
A	583+69.33	-81.58 ft.	445.09	444.26
B	583+69.33	-72.58 ft.	445.20	444.37
C	583+69.33	-61.03 ft.	445.27	444.44
D	583+69.33	-32.00 ft.	445.39	444.56
E	583+69.33	0.00 ft.	445.87	445.04
F	583+69.33	20.00 ft.	445.57	444.74
G	583+69.33	46.78 ft.	445.03	444.20
H	583+79.33	-81.58 ft.	445.14	444.31
I	583+79.33	-72.58 ft.	445.27	444.44
J	583+79.33	-61.03 ft.	445.30	444.47
K	583+79.33	-32.00 ft.	445.44	444.61
L	583+79.33	0.00 ft.	445.92	445.09
M	583+79.33	20.00 ft.	445.62	444.79
N	583+79.33	43.81 ft.	445.14	444.31

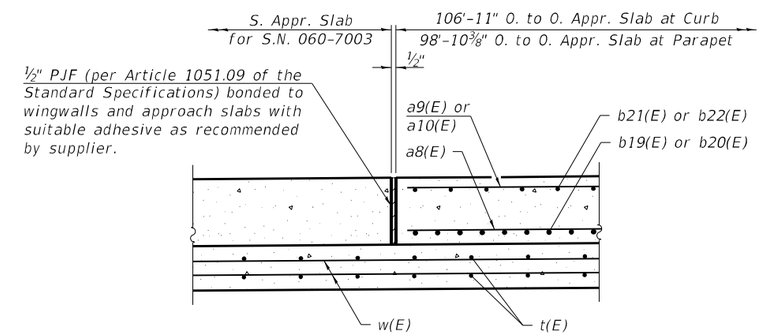

SECTION A-A

MINIMUM BAR LAP

#4(E) bar = 2'-5"
#5(E) bar = 3'-6"
#8(E) bar = 4'-9"

Notes:

The Approach Footing is a continuous footing supporting the South Approach Slabs of both this structure and S.N. 060-7003. Quantities for reinforcement and concrete are included in this structure plans.

Reinforcement details for the West Curb and Parapet not shown for clarity.

Bars indicated thus 20 x 5-#5 etc. indicates 20 lines of bars with 5 lengths per line.

For portion of South Approach Slab east of the Matchline, see sheet 20 of 41.

For Plan of West Curb and Section B-B, see sheet 22 of 41.

MODEL: Default
FILE NAME: G:\FEI\jobs_2020\20-1581 PTB 195-57 REALIGNMENT IL 162 AT IL 157 PH II D-98-009-04 - FEI PRIME\CADD\CADD Sheets\0600229-76A46-019-SApprSlab01.dgn

FUHRMANN ENGINEERING
WWW. FUHRMANN-ENG .COM

USER NAME =	DESIGNED - E.M. Lagemann	REVISED -	
	CHECKED - A.H. Morinaga-Mansilla	REVISED -	
PLOT SCALE =	DRAWN - E.M. Lagemann	REVISED -	
PLOT DATE =	CHECKED - A.H. Morinaga-Mansilla	REVISED -	

STATE OF ILLINOIS
DEPARTMENT OF TRANSPORTATION

SOUTH BRIDGE APPROACH SLAB I
STRUCTURE NO. 060-0229

SHEET 19 OF 41 SHEETS

F.A.P RTE.	SECTION	COUNTY	TOTAL SHEETS	SHEET NO.
*	51-1R	MADISON	296	161

CONTRACT NO. 76A46

ILLINOIS FED. AID PROJECT

3/5/2024 9:15:25 AM

*586/592

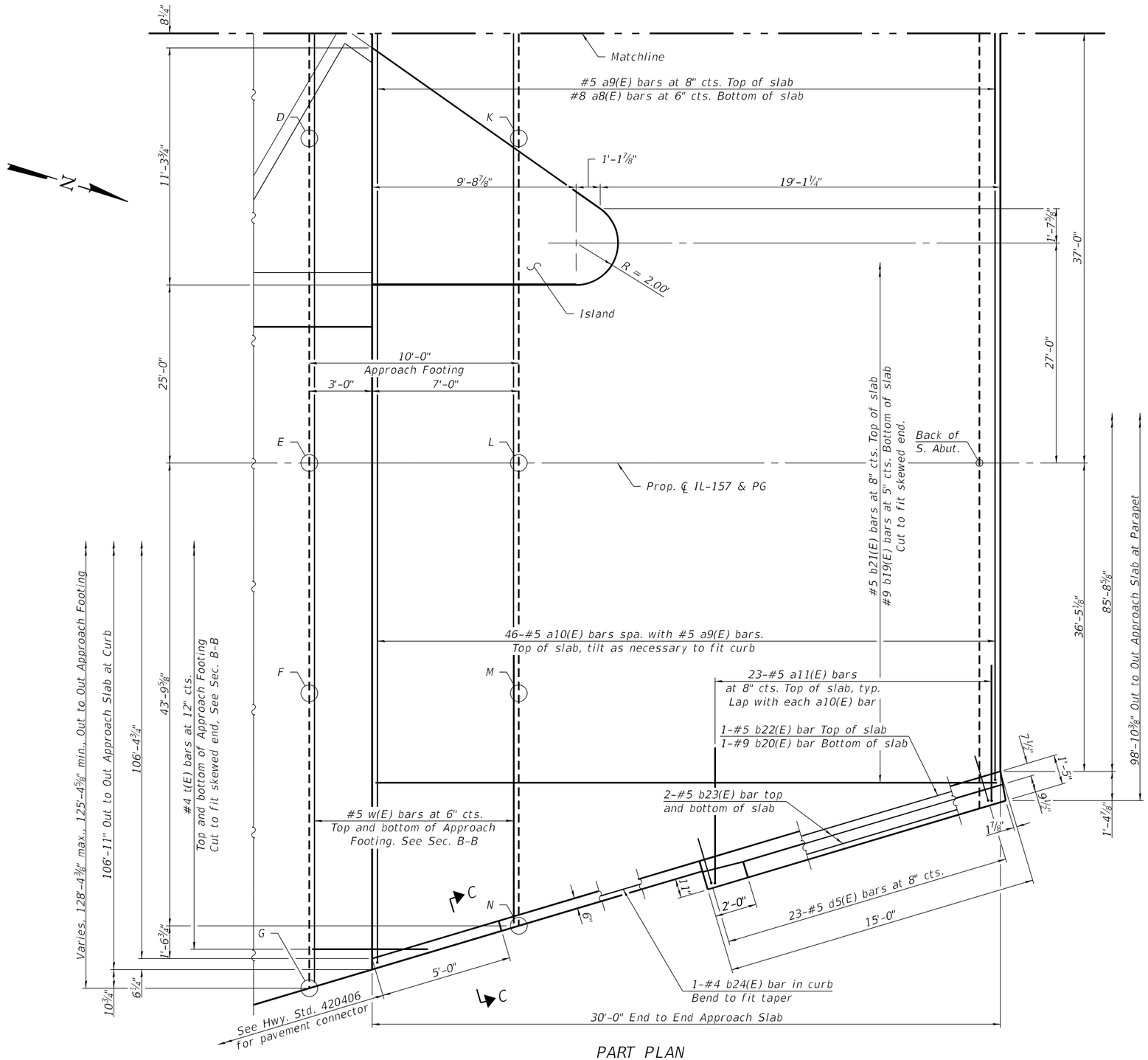

PART PLAN

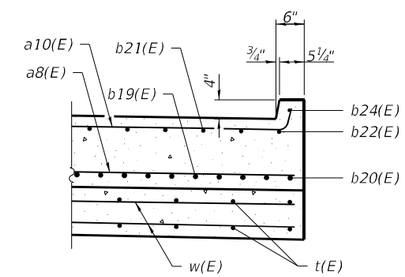

SECTION C-C

MINIMUM BAR LAP

#4(E) bar = 2'-5"
#5(E) bar = 3'-6"
#8(E) bar = 4'-9"

Notes:

The Approach Footing is a continuous footing supporting the South Approach Slabs of both this structure and S.N. 060-7003. Quantities for reinforcement and concrete are included in this structure plans.

Reinforcement details for the Island not shown for clarity.

For portion of South Approach Slab west of the Matchline, see sheet 19 of 41.

For Plan of Island, see sheet 21 of 41.

MODEL: Default
FILE NAME: G:\FEIJobs_2020\20-1581 PTB 195-57 REALIGNMENT IL 162 AT IL 157 PH II D-98-009-04 - FEI PRIME\CADD\CADD Sheets\0600229-76A46-020-SApprSlab02.dgn
3/5/2024 9:17:19 AM

FUHRMANN ENGINEERING
WWW. FUHRMANN-ENG .COM

USER NAME =	DESIGNED - E.M. Lagemann	REVISED -	
	CHECKED - A.H. Morinaga-Mansilla	REVISED -	
PLOT SCALE =	DRAWN - E.M. Lagemann	REVISED -	
PLOT DATE =	CHECKED - A.H. Morinaga-Mansilla	REVISED -	

STATE OF ILLINOIS
DEPARTMENT OF TRANSPORTATION

SOUTH BRIDGE APPROACH SLAB II
STRUCTURE NO. 060-0229

SHEET 20 OF 41 SHEETS

F.A.P RTE.	SECTION	COUNTY	TOTAL SHEETS	SHEET NO.
*	51-1R	MADISON	296	162
		CONTRACT NO. 76A46		
	ILLINOIS	FED. AID PROJECT		

*586/592

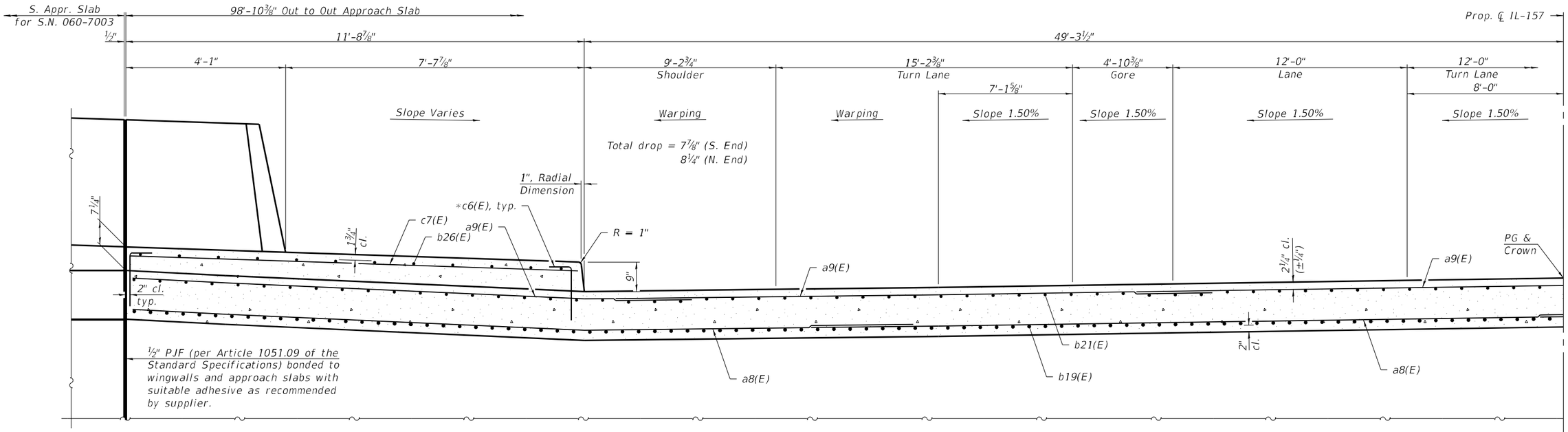

PART CROSS-SECTION - NEAR ABUTMENT

(Looking North)

* Drill and set #5 c3(E) and c6(E) bars according to Article 509.06 of the Standard Specifications. Drilled holes shall be roughened or scored per manufacturer's recommendation. Hole depth shall be deep enough to provide 1¾" clearance to top of c3(E) and c6(E) bars and top of curb, with a minimum hole depth of 6". Locate Longitudinal bars to miss drilled holes. Locate drilled holes to miss Transverse bars in appr. slab.

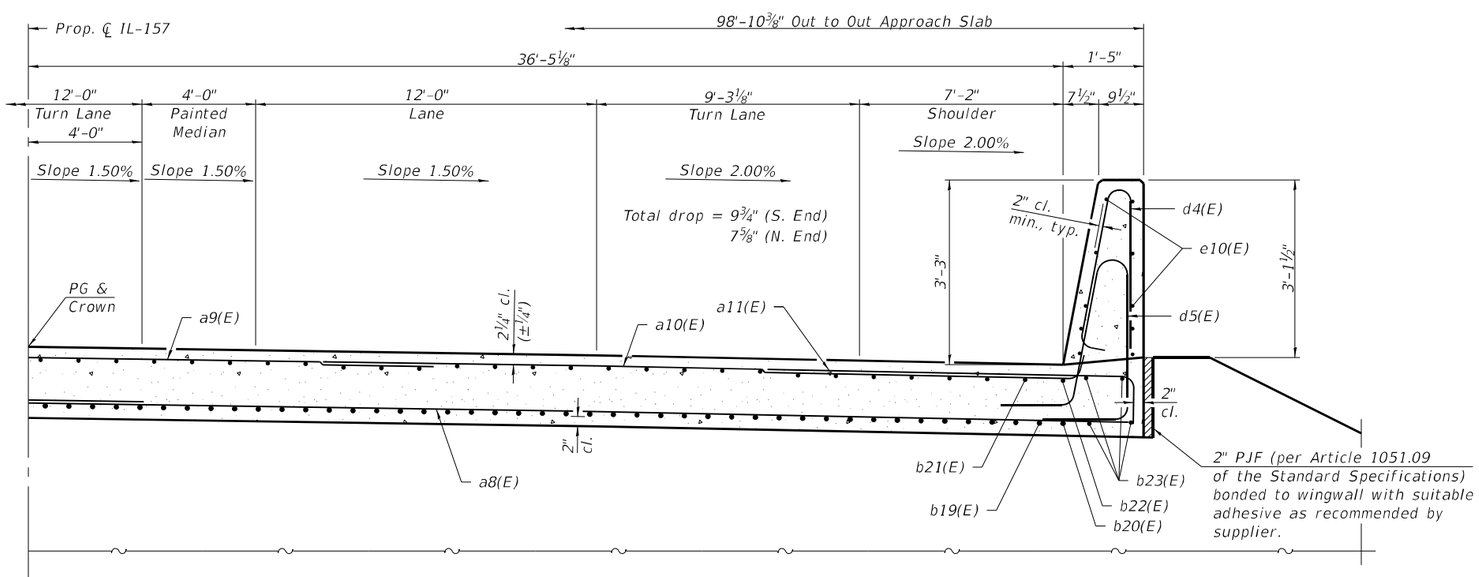

PART CROSS-SECTION - NEAR ABUTMENT

(Looking North)

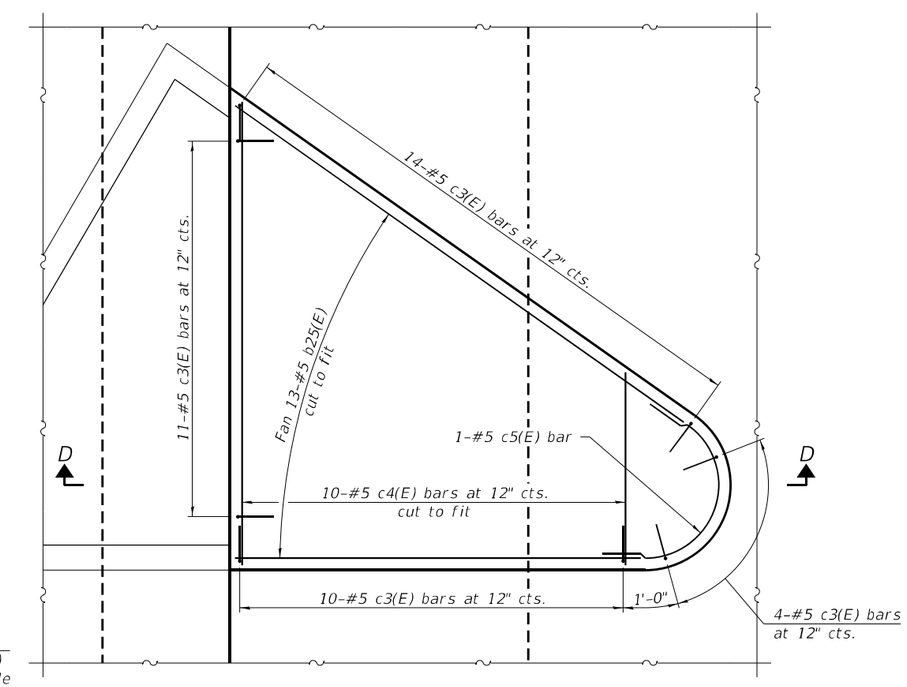

PLAN OF ISLAND

Note:
For Section D-D, see sheet 22 of 41.

MODEL: Default
FILE NAME: G:\FE\Jobs_2020\20-1581 PTB 195-57 REALIGNMENT IL 162 AT IL 157 PH II D-98-009-04 - FEI PRIME\CADD\CADD Sheets\0600229-76A46-021-SApprSlab03.dgn
3/5/2024 10:55:18 AM

FUHRMANN ENGINEERING
WWW. FUHRMANN-ENG .COM

USER NAME =	DESIGNED - E.M. Lagemann	REVISED -	
	CHECKED - A.H. Morinaga-Mansilla	REVISED -	
PLOT SCALE =	DRAWN - E.M. Lagemann	REVISED -	
PLOT DATE =	CHECKED - A.H. Morinaga-Mansilla	REVISED -	

STATE OF ILLINOIS
DEPARTMENT OF TRANSPORTATION

SOUTH BRIDGE APPROACH SLAB III
STRUCTURE NO. 060-0229

SHEET 21 OF 41 SHEETS

F.A.P RTE.	SECTION	COUNTY	TOTAL SHEETS	SHEET NO.
*	51-1R	MADISON	296	163
		CONTRACT NO. 76A46		
		ILLINOIS	FED. AID PROJECT	

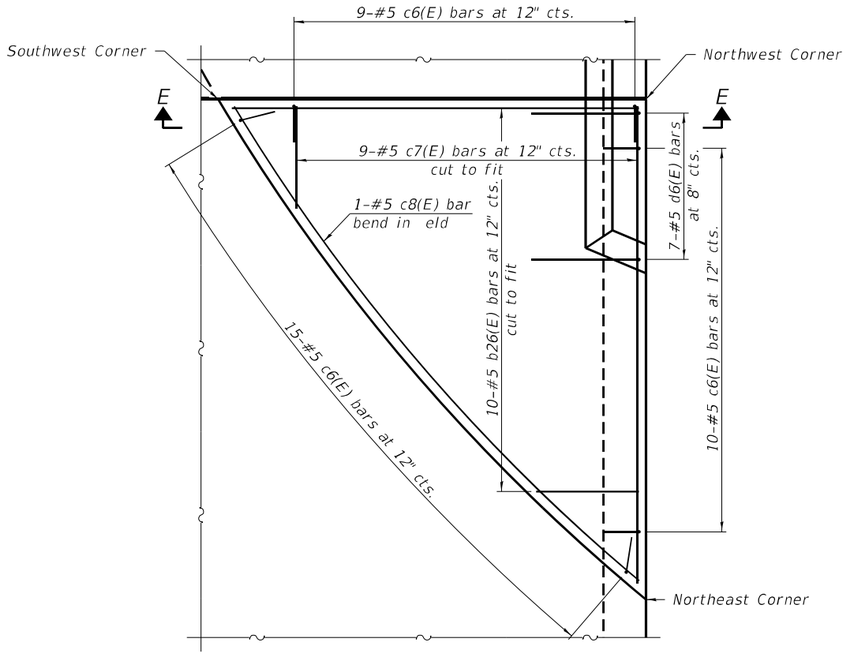

PLAN OF WEST CURB

* Drill and set #5 c3(E) and c6(E) bars according to Article 509.06 of the Standard Specifications. Drilled holes shall be roughened or scored per manufacturer's recommendation. Hole depth shall be deep enough to provide 1¾" clearance to top of c3(E) and c6(E) bars and top of curb, with a minimum hole depth of 6". Locate Longitudinal bars to miss drilled holes. Locate drilled holes to miss Transverse bars in appr. slab.

** Cost included with Concrete Superstructure (Approach Slab).

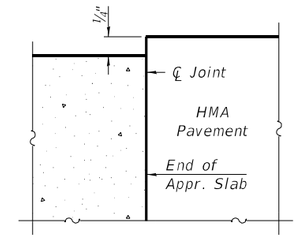

DETAIL A

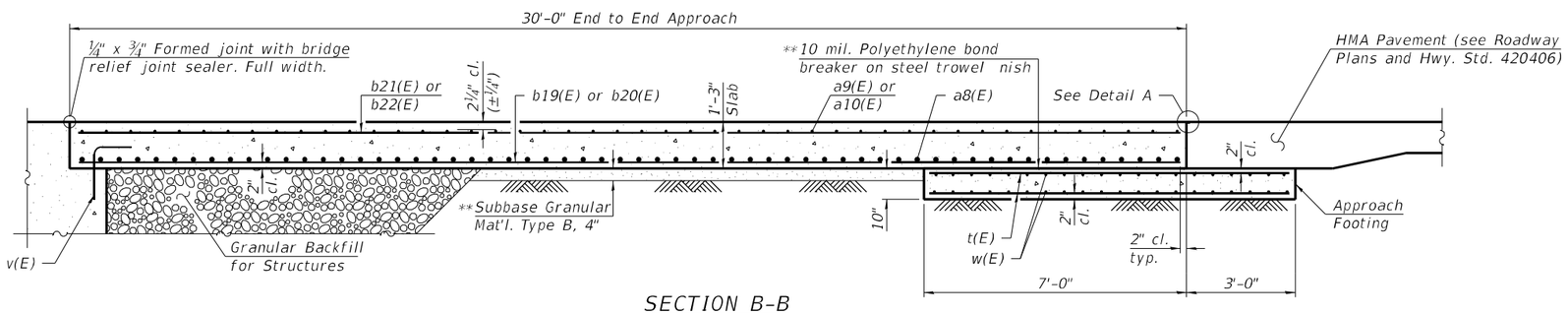

SECTION B-B

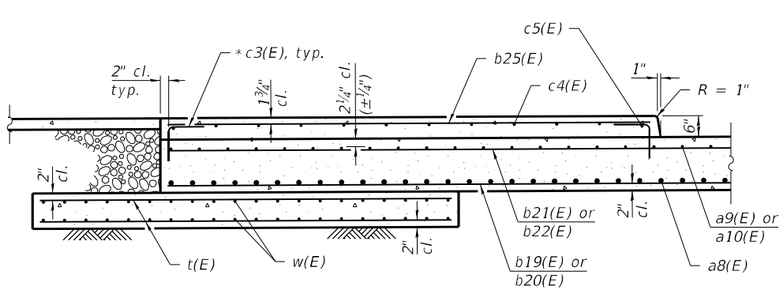

SECTION D-D

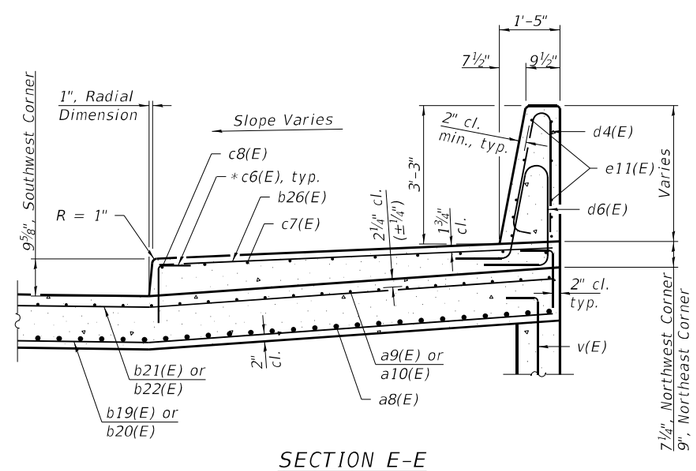

SECTION E-E

Notes:
For location of Section B-B, see sheet 19 of 41.
For location of Section D-D, see sheet 21 of 41.

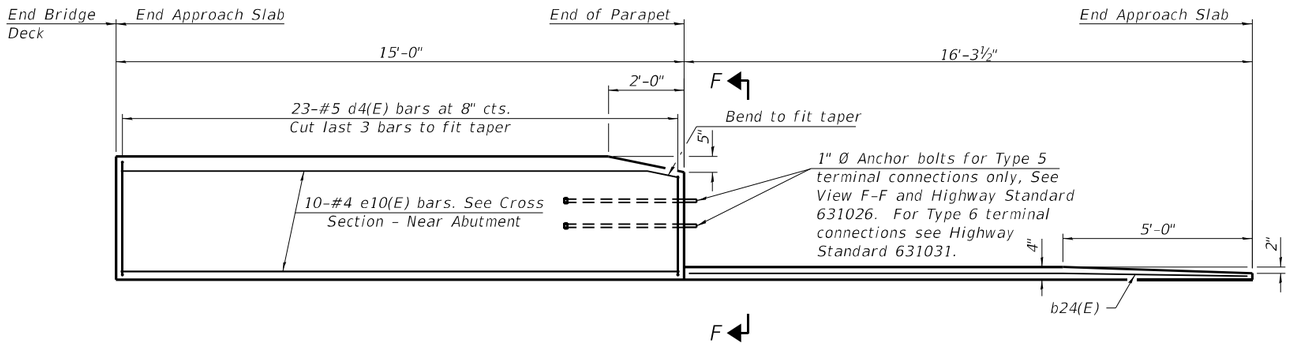

INSIDE ELEVATION OF EAST PARAPET AND CURB

Notes:

The Approach Footing is a continuous footing supporting the South Approach Slabs of both this structure and S.N. 060-7003. Quantities for reinforcement and concrete are included in this structure plans.

Parapet, west curb, and island concrete shall be paid for as Concrete Superstructure.

Approach slab shall be paid for as Concrete Superstructure (Approach Slab).

Approach footing concrete shall be paid for as Concrete Structures.

The approach footing maximum applied service bearing pressure (Qmax) = 2.0 ksf.

Cost of excavation for approach footing included with Concrete Structures.

For Granular Back II for Structures and drainage treatment details, see sheet 2 of 41.

For Section E-E, see sheet 22 of 41.

For d4(E) bar bending diagram, see sheet 15 of 41.

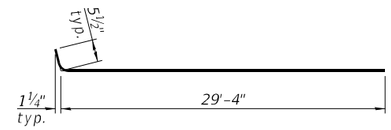

BAR a10(E)

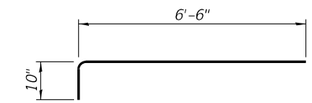

BAR a11(E)

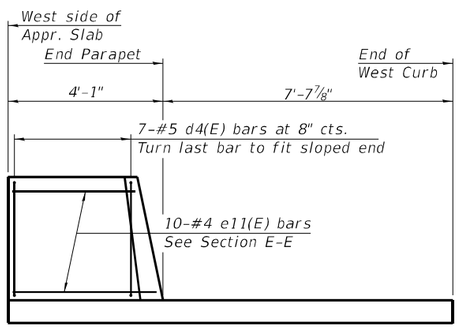

INSIDE ELEVATION OF WEST PARAPET AND CURB

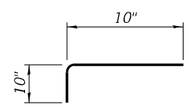

BAR c3(E)

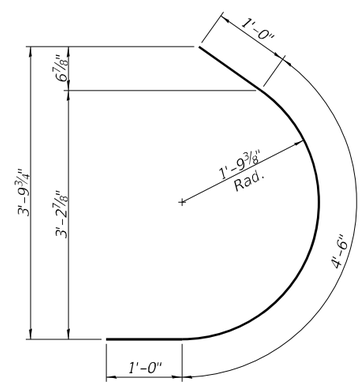

BAR c5(E)

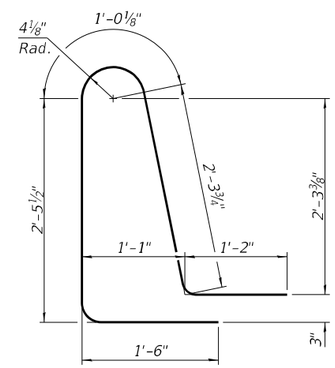

BAR d5(E)

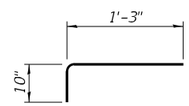

BAR c6(E)

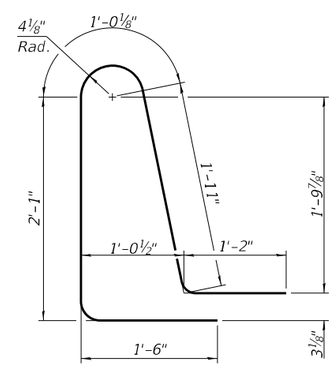

BAR d6(E)

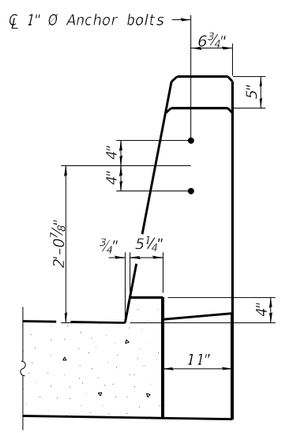

VIEW F-F

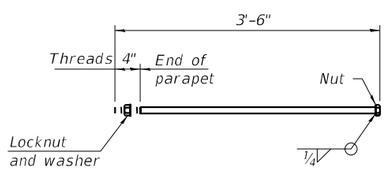

*1" Ø ANCHOR BOLT

(Anchor bolt assemblies shall be galvanized according to Article 1006.09 of the Standard Specifications)

BILL OF MATERIAL

Bar	No.	Size	Length	Shape
a8(E)	180	#8	38'-9"	
a9(E)	138	#5	29'-4"	
a10(E)	46	#5	29'-10"	
a11(E)	23	#5	7'-4"	
b19(E)	255	#9	29'-8"	
b20(E)	1	#9	30'-11"	
b21(E)	159	#5	29'-8"	
b22(E)	1	#5	30'-11"	
b23(E)	4	#5	14'-8"	
b24(E)	1	#4	16'-0"	
b25(E)	13	#5	14'-0"	
b26(E)	10	#5	9'-6"	
c3(E)	39	#5	1'-8"	
c4(E)	10	#5	11'-0"	
c5(E)	1	#5	6'-6"	
c6(E)	34	#5	2'-1"	
c7(E)	9	#5	11'-5"	
c8(E)	1	#5	14'-9"	
d4(E)	30	#5	6'-5"	
d5(E)	23	#5	8'-6"	
d6(E)	7	#5	7'-8"	
e10(E)	10	#4	14'-8"	
e11(E)	10	#4	3'-9"	
t(E)	256	#4	9'-8"	
w(E)	200	#5	28'-5"	
Concrete Structures			Cu. Yd.	39.2
Concrete Superstructure			Cu. Yd.	5.8
Bridge Deck Grooving			Sq. Yd.	315
Concrete Superstructure (Approach Slab)			Cu. Yd.	143.0
Reinforcement Bars, Epoxy Coated			Pound	64,150

* Cost included with Concrete Superstructure (Approach Slab).

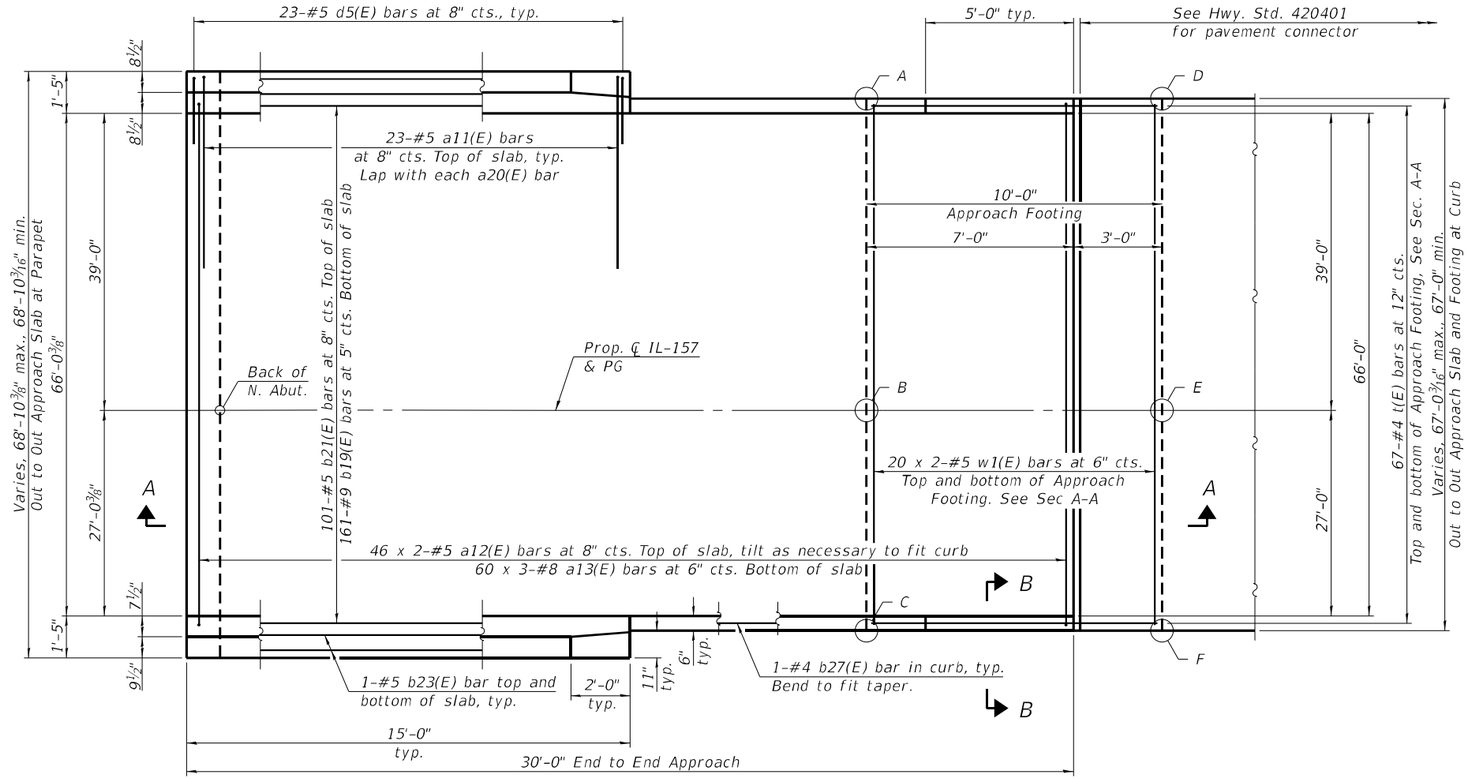

PLAN

TOP AND BOTTOM ELEVATIONS FOR APPROACH FOOTING

Point/ Location	Station	Offset	Top	Bottom
A	585+60.67	-39.50'	446.21	445.38
B	585+60.67	0.00'	446.84	446.01
C	585+60.67	27.50'	446.39	445.56
D	585+70.67	-39.50'	446.26	445.43
E	585+70.67	0.00'	446.89	446.06
F	585+70.67	27.50'	446.44	445.61

N

MINIMUM BAR LAP

#5(E) bar = 3'-6"
#8(E) bar = 4'-9"

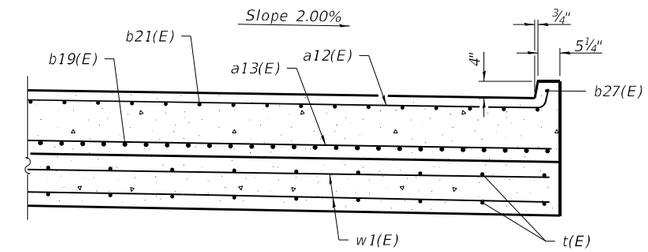

SECTION B-B

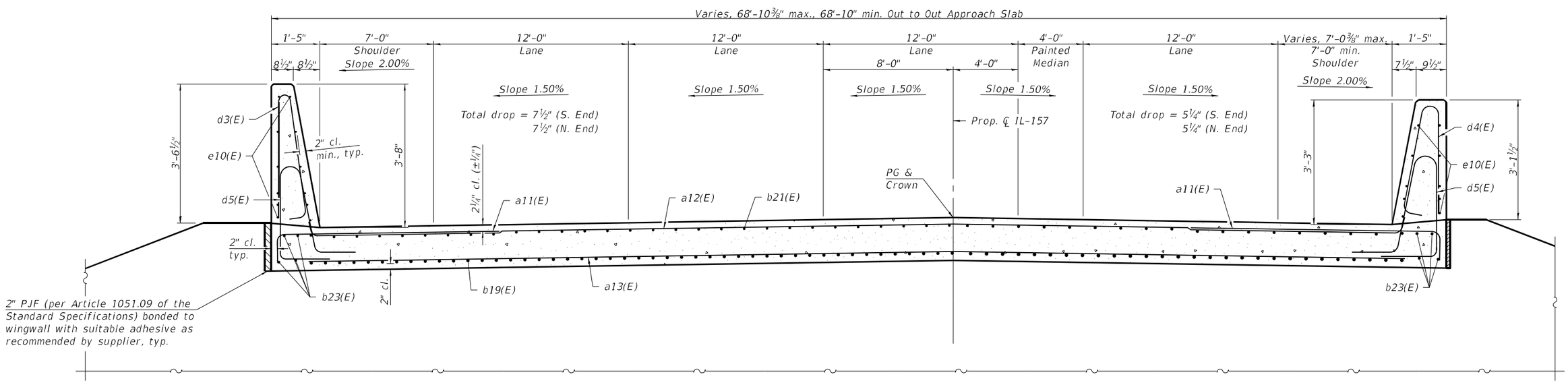

CROSS SECTION - NEAR ABUTMENT

(Looking North)

Notes:
For Section A-A, see sheet 25 of 41.
Bars indicated thus 46 x 2-#5 etc. indicates 46 lines of bars with 2 lengths per line.

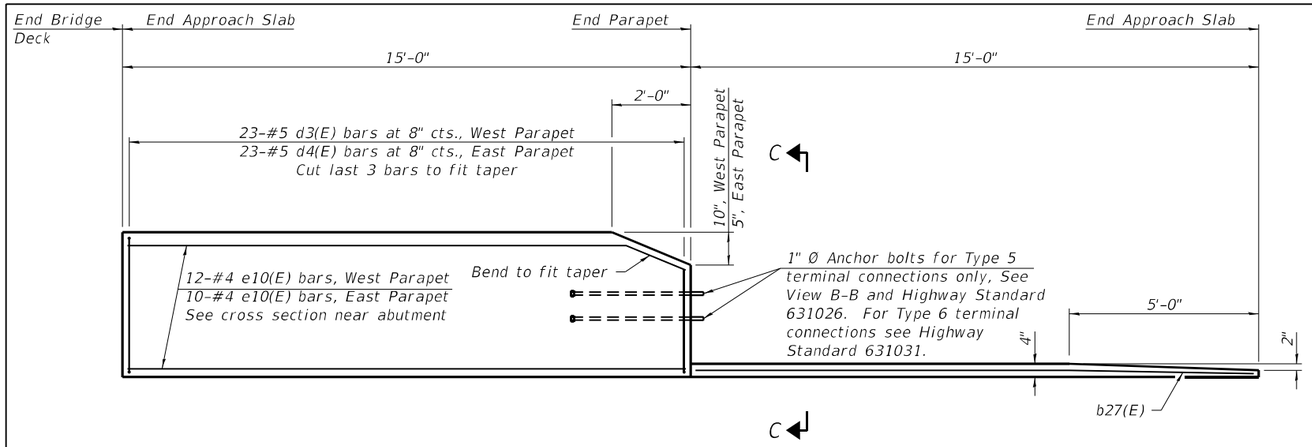

INSIDE ELEVATION OF PARAPET AND CURB

Notes:
Parapet concrete shall be paid for as Concrete Superstructure.
Approach slab shall be paid for as Concrete Superstructure (Approach Slab).
Approach footing concrete shall be paid for as Concrete Structures.
The approach footing maximum applied service bearing pressure (Qmax) = 2.0 ksf.
Cost of excavation for approach footing included with Concrete Structures.
For Granular Backfill for Structures and drainage treatment details, see sheet 2 of 41.

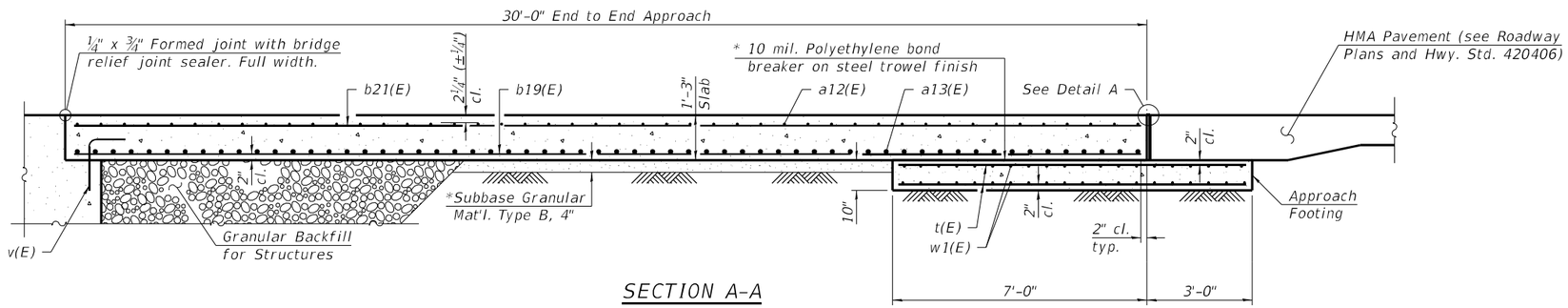

SECTION A-A

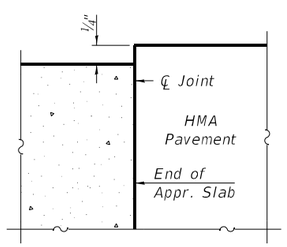

DETAIL A

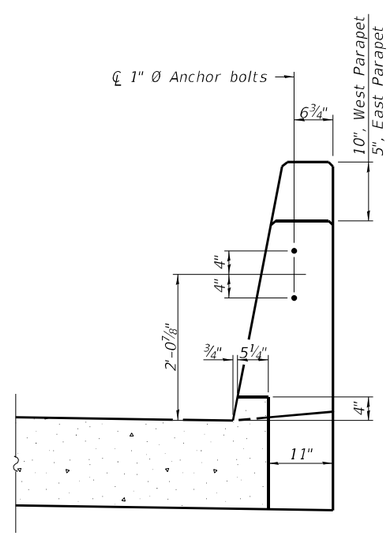

VIEW C-C

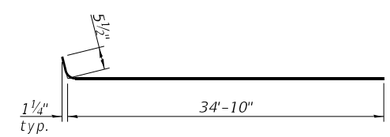

BAR a12(E)

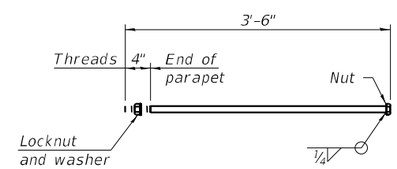

*1" Ø ANCHOR BOLT

(Anchor bolt assemblies shall be galvanized according to Article 1006.09 of the Standard Specifications)

BILL OF MATERIAL

Bar	No.	Size	Length	Shape
a11(E)	46	#5	7'-4"	
a12(E)	92	#5	35'-5"	
a13(E)	180	#8	25'-5"	
b19(E)	161	#9	29'-8"	
b21(E)	101	#5	29'-8"	
b23(E)	8	#5	14'-8"	
b27(E)	2	#4	14'-8"	
d3(E)	23	#5	7'-0"	
d4(E)	23	#5	6'-5"	
d5(E)	46	#5	8'-6"	
e10(E)	22	#4	14'-8"	
t(E)	134	#4	9'-8"	
w1(E)	80	#5	35'-0"	
Concrete Structures			Cu. Yd.	20.7
Concrete Superstructure			Cu. Yd.	4.1
Bridge Deck Grooving			Sq. Yd.	213
Concrete Superstructure (Approach Slab)			Cu. Yd.	94.5
Reinforcement Bars, Epoxy Coated			Pound	40,210

Notes:
For Location of Section A-A, see sheet 24 of 41.
For a11(E), d3(E), d4(E), and d5(E) bar bending diagrams, see sheets 15 and 23 of 41.

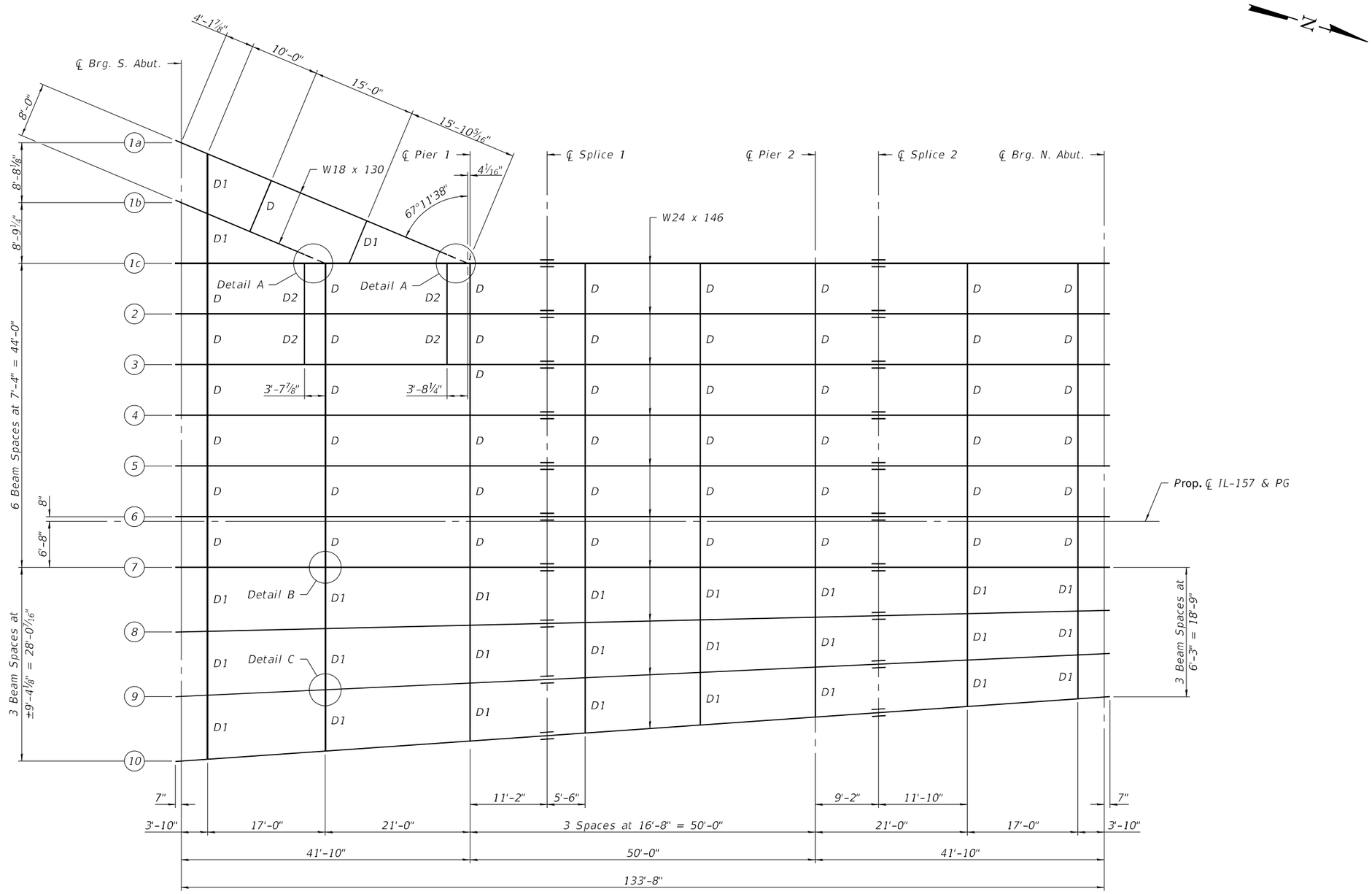

FRAMING PLAN

Notes:
All diaphragms between beams shall be installed with erection pins and bolts in accordance with the erection plan approved by the Engineer. Individual diaphragms at supports may be temporarily disconnected to install bearing anchor bolts.
For Details A thru C, see sheet 28 of 41.

MODEL: Default
FILE NAME: G:\FEIjobs_2020\20-1581 PTB 195-57 REALIGNMENT IL 162 AT IL 157 PH II D-98-009-04 - FEI PRIME\CADD\CADD Sheets\0600229-76A46-026-FramingPlan.dgn

FUHRMANN ENGINEERING
WWW. FUHRMANN-ENG .COM

USER NAME =	DESIGNED - T.S. Friederich	REVISED -	
	CHECKED - E.M. Lagemann	REVISED -	
PLOT SCALE =	DRAWN - T.S. Friederich	REVISED -	
PLOT DATE =	CHECKED - E.M. Lagemann	REVISED -	

STATE OF ILLINOIS
DEPARTMENT OF TRANSPORTATION

FRAMING PLAN
STRUCTURE NO. 060-0229
SHEET 26 OF 41 SHEETS

F.A.P RTE.	SECTION	COUNTY	TOTAL SHEETS	SHEET NO.
*	51-1R	MADISON	296	168
		CONTRACT NO. 76A46		
	ILLINOIS	FED. AID PROJECT		

3/4/2024 3:18:16 PM

*586/592

*TOP OF BEAM ELEVATIONS

Beam	℄ Brg. S. Abut.	Beam 1b Connection	Beam 1a Connection	℄ Pier 1	℄ Splice 1	℄ Pier 2	℄ Splice 2	℄ Brg. N. Abut.
1a	446.12	---	446.18	---	---	---	---	---
1b	445.84	446.08	---	---	---	---	---	---
1c	445.98	446.08	446.18	446.18	446.23	446.43	446.48	446.64
2	446.10	---	---	446.31	446.37	446.57	446.61	446.78
3	446.21	---	---	446.42	446.48	446.68	446.72	446.89
4	446.32	---	---	446.53	446.59	446.79	446.83	447.00
5	446.43	---	---	446.64	446.70	446.90	446.94	447.11
6	446.54	---	---	446.75	446.81	447.01	447.05	447.22
7	446.45	---	---	446.66	446.72	446.92	446.96	447.13
8	446.31	---	---	446.54	446.60	446.81	446.86	447.03
9	446.15	---	---	446.40	446.46	446.69	446.75	446.94
10	445.96	---	---	446.23	446.30	446.55	446.61	446.82

*For Fabrication Only

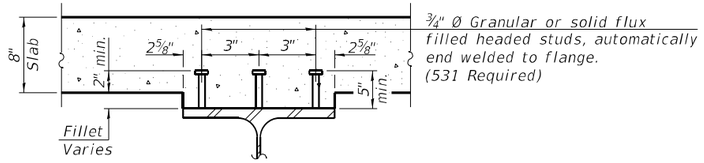

SECTION A-A

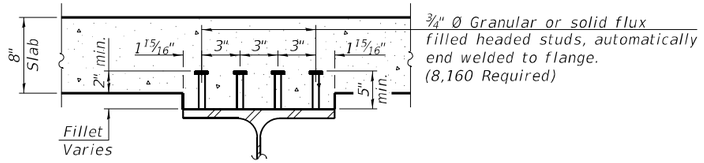

SECTION B-B

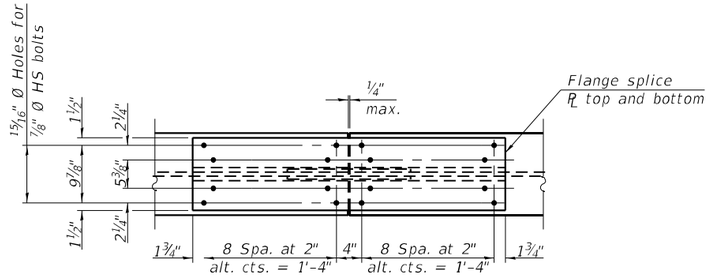

PLAN

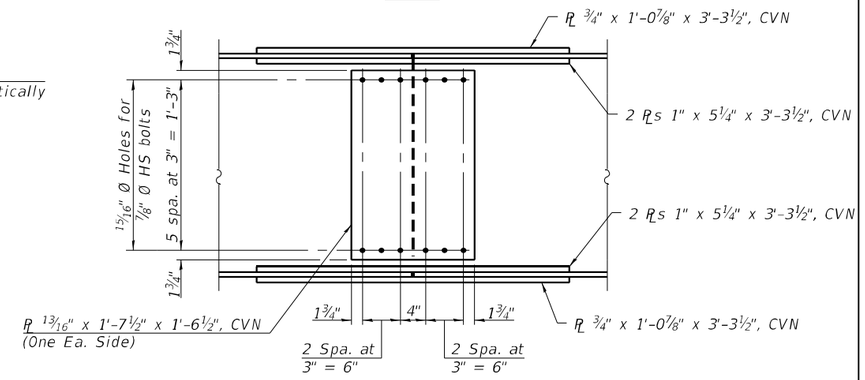

ELEVATION

SPLICE DETAIL

(20 Required)

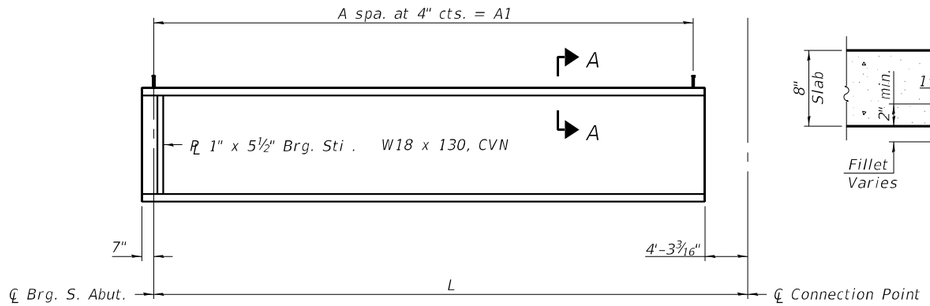

ELEVATION - BEAMS 1a AND 1b

Notes:
Structural steel for all Beams, Brg. Stiffeners, splices, and Diaphragm D2 shall be AASHTO M270, Gr. 50.
For location of dimensions L8 thru L12, see sheet 4 of 41.

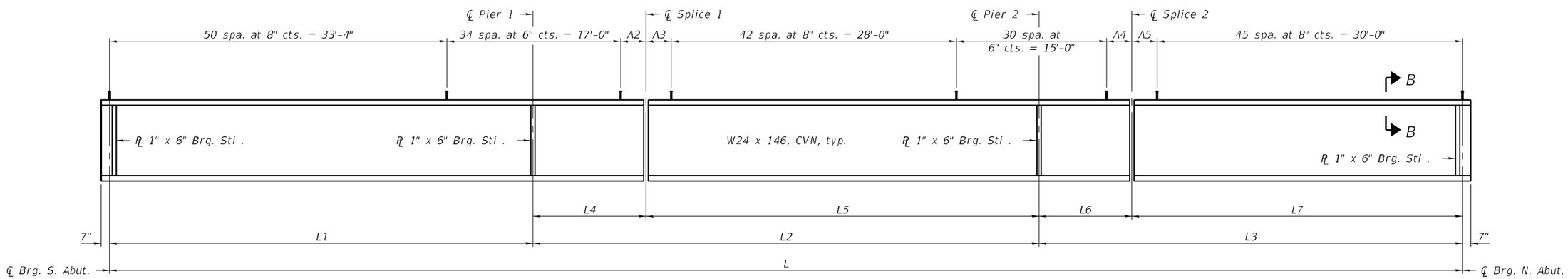

ELEVATION - BEAM 1c THRU BEAM 10

"CVN" denotes Charpy-V-Notch impact energy requirements, zone 2.

TABLE OF "L" DIMENSIONS

Beam	L	L1	L2	L3	L4	L5	L6	L7	L8	L9	L10	L11	L12
1a	45'-0 3/16"	---	---	---	---	---	---	---	1'-11 7/8"	---	±11'-3 1/16"	---	---
1b	22'-7 9/16"	---	---	---	---	---	---	---	1'-11 7/8"	---	±5'-7 7/8"	---	---
1c	133'-8"	41'-10"	50'-0"	41'-10"	11'-2"	38'-10"	9'-2"	32'-8"	1'-10"	1'-10"	10'-5 1/2"	12'-6"	10'-5 1/2"
2 thru 7	133'-8"	41'-10"	50'-0"	41'-10"	11'-2"	38'-10"	9'-2"	32'-8"	1'-10"	1'-10"	10'-5 1/2"	12'-6"	10'-5 1/2"
8	133'-8 7/16"	41'-10 1/8"	50'-0 3/16"	41'-10 1/8"	11'-2 1/16"	38'-10 1/8"	9'-2"	32'-8 1/16"	1'-10"	1'-10"	±10'-5 1/2"	±12'-6 1/16"	±10'-5 1/2"
9	133'-9 3/4"	41'-10 9/16"	50'-0 3/8"	41'-10 9/16"	11'-2 1/8"	38'-10 1/2"	9'-2 1/8"	32'-8 7/16"	1'-10"	1'-10"	±10'-5 5/8"	±12'-6 1/8"	±10'-5 5/8"
10	133'-11 13/16"	41'-11 3/16"	50'-1 7/16"	41'-11 3/16"	11'-2 5/16"	38'-11 1/8"	9'-2 1/4"	32'-8 15/16"	1'-10 1/16"	1'-10 1/16"	±10'-5 13/16"	±12'-6 3/8"	±10'-5 13/16"

TABLE OF "A" DIMENSIONS

Beam	A	A1	A2	A3	A4	A5
1a	121	40'-4"	---	---	---	---
1b	54	18'-0"	---	---	---	---
1c	---	---	2'-8"	2'-6"	2'-6"	2'-8"
2 thru 6	---	---	2'-8"	2'-6"	2'-6"	2'-8"
7	---	---	2'-8"	2'-6"	2'-6"	2'-8"
8	---	---	2'-8 1/4"	2'-6 1/16"	2'-6 1/16"	2'-8 1/16"
9	---	---	2'-8 11/16"	2'-6 5/16"	2'-6 5/16"	2'-8 7/16"
10	---	---	2'-9 1/2"	2'-6 11/16"	2'-6 11/16"	2'-8 15/16"

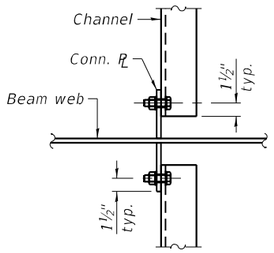

DETAIL B

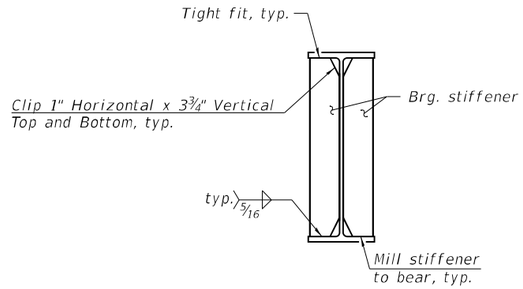

BEARING STIFFENER DETAIL

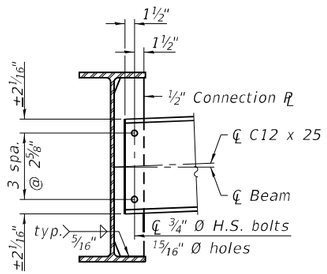

INTERIOR DIAPHRAGM

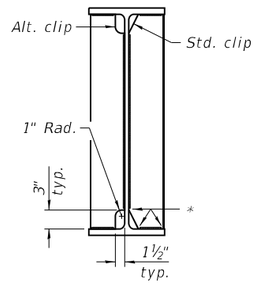

WELD LIMITS AND CLIP DETAILS

* Stop welds ¼" (±⅛") from edges as shown. Typical.

DIAPHRAGM D DETAILS

(49 required)

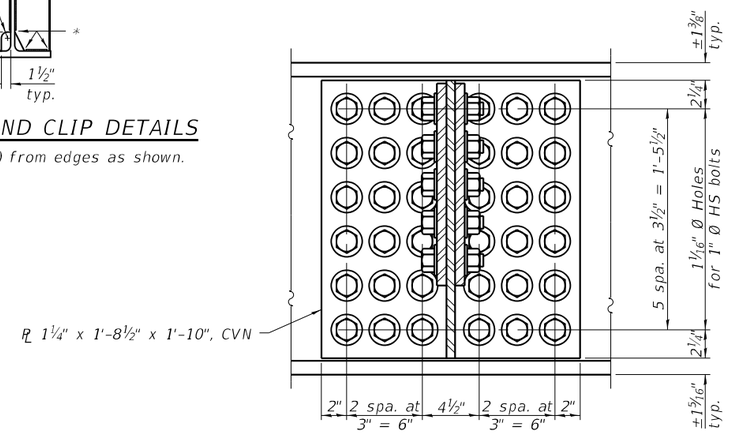

SECTION B-B

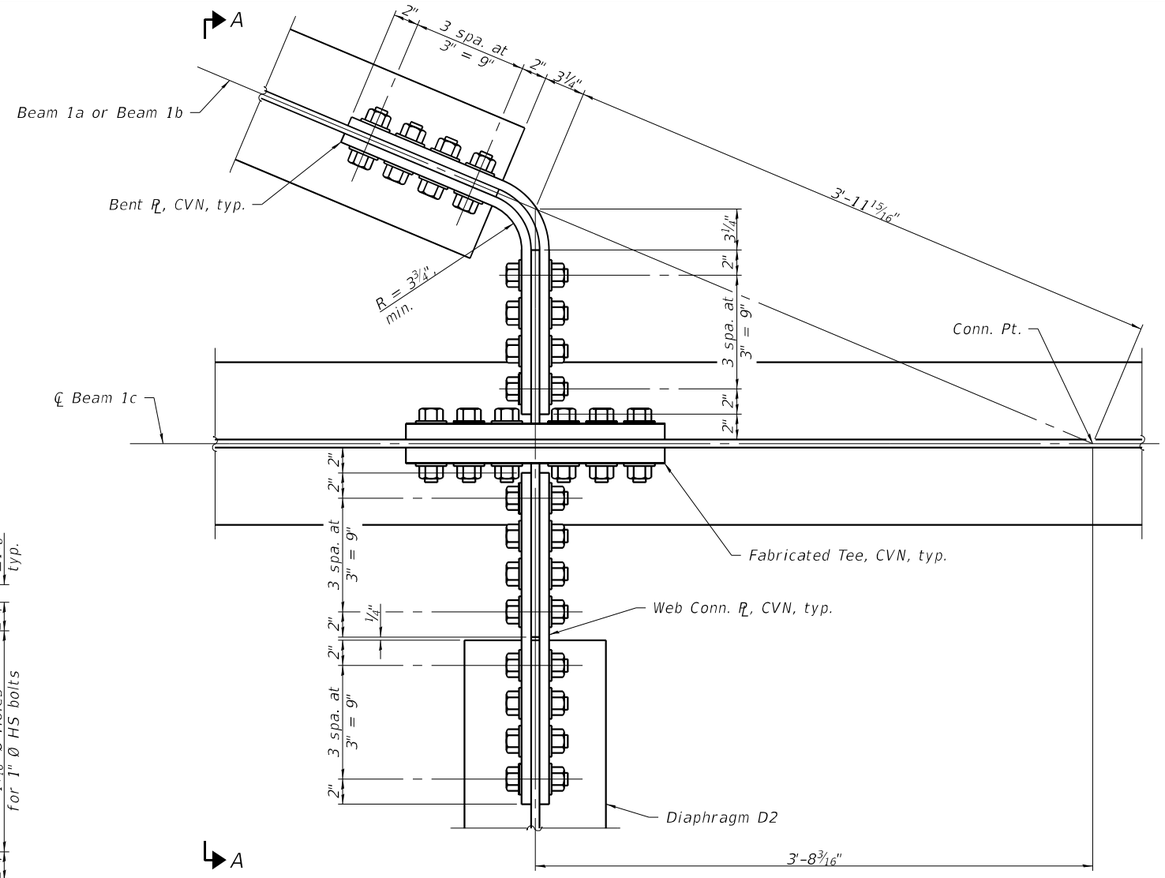

DETAIL A

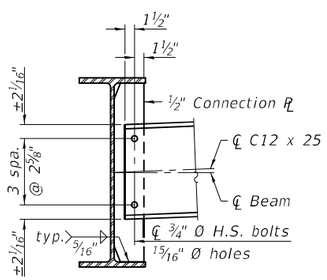

INTERIOR DIAPHRAGM

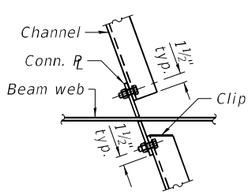

DETAIL C

DIAPHRAGM D1 DETAILS

(27 required)

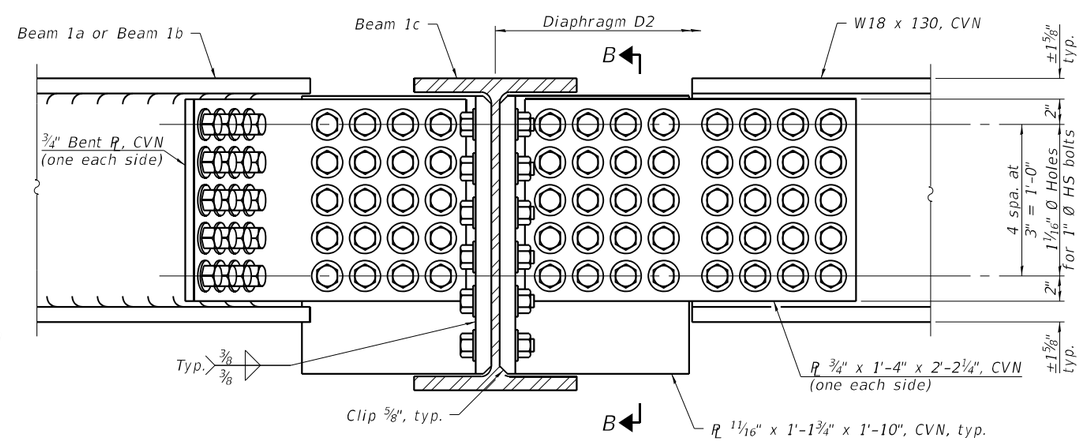

SECTION A-A AND DIAPHRAGM D2 DETAILS

(4 Diaphragm D2 required)

Notes:

The bend line of the bent plate for the Beam 1a and 1b connection shall be perpendicular to final rolling.

Fasteners for Beams 1a and 1b connection, and Diaphragm D2 connection shall be ASTM F 3125 Grade A490 Type 1, mechanically galvanized bolts in painted areas.

Structural steel for bent plates of Beams 1a and 1b connection shall be AASHTO M270 Grade 70W.

Structural steel for Diaphragms D2, fabricated tee, and web connection plates, shall be AASHTO M270 Grade 50.

"CVN" denotes Charpy-V-Notch impact energy requirements, zone 2.

All diaphragms between beams shall be installed with erection pins and bolts in accordance with the erection plan approved by the Engineer. Individual diaphragms at supports may be temporarily disconnected to install bearing anchor bolts.

For location of Details A thru C, see sheet 26 of 41.

FULL LENGTH BEAM MOMENT TABLE

		0.4 Span 1				Pier 1				0.5 Span 2				Pier 2				0.6 Span 3			
		Beam 1c	Beam 2	Beam 9	Beam 10	Beam 1c	Beam 2	Beam 9	Beam 10	Beam 1c	Beam 2	Beam 9	Beam 10	Beam 1c	Beam 2	Beam 9	Beam 10	Beam 1c	Beam 2	Beam 9	Beam 10
I_s	(in^4)	4,580	4,580	4,580	4,580	4,580	4,580	4,580	4,580	4,580	4,580	4,580	4,580	4,580	4,580	4,580	4,580	4,580	4,580	4,580	4,580
$I_c(n)$	(in^4)	12,827	13,074	13,657	13,163	12,827	13,074	13,462	13,046	12,827	13,074	13,253	12,925	12,827	13,074	13,024	12,798	12,827	13,074	12,773	12,665
$I_c(3n)$	(in^4)	9,445	9,691	10,297	9,781	9,445	9,691	10,091	9,663	9,445	9,691	9,873	9,542	9,445	9,691	9,641	9,418	9,445	9,691	9,393	9,288
$I_c(cr)$	(in^4)	——	——	——	——	6,390	——	——	——	——	——	——	——	6,390	——	——	——	——	——	——	——
S_s	(in^3)	371	371	371	371	371	371	371	371	371	371	371	371	371	371	371	371	371	371	371	371
$S_c(n)$	(in^3)	548	552	560	553	548	552	557	551	548	552	554	549	548	552	551	547	548	552	547	546
$S_c(3n)$	(in^3)	496	500	510	501	496	500	507	499	496	500	503	497	496	500	499	495	496	500	495	493
$S_c(cr)$	(in^3)	——	——	——	——	428	——	——	——	——	——	——	——	428	——	——	——	——	——	——	——
DC1	(k/')	1.028	0.906	1.069	1.101	1.028	0.906	1.011	1.071	1.028	0.906	0.973	1.043	1.028	0.906	0.895	1.014	1.028	0.906	0.837	0.984
M_{DC1}	('k)	205.7	114.2	137.7	139.8	-266.3	-196.1	-221.7	-232.4	88.6	93.6	98.6	107.2	-209.7	-197.4	-192.7	-218.6	135.4	116.0	104.9	124.3
DC2	(k/')	2.000	0.150	0.179	0.179	3.500	-0.250	0.179	0.179	0.600	0.030	0.179	0.179	0.700	-0.090	0.179	0.179	0.600	0.030	0.179	0.179
M_{DC2}	('k)	52.3	3.4	22.5	22.6	-163.5	24.7	-38.2	-38.3	52.2	-2.4	18.3	18.4	-127.3	12.1	-37.5	-37.6	84.7	1.0	22.8	22.8
DW	(k/')	0.267	0.367	0.454	0.308	0.267	0.367	0.425	0.293	0.267	0.367	0.396	0.278	0.267	0.367	0.367	0.264	0.267	0.367	0.338	0.249
M_{DW}	('k)	33.4	45.9	57.6	39.4	-56.7	-77.9	-90.1	-63.0	27.2	37.4	40.2	28.7	-55.6	-76.4	-73.8	-54.5	33.8	46.4	41.0	31.2
LLDF		0.691	0.691	0.798	0.798	0.680	0.680	0.747	0.747	0.670	0.670	0.699	0.699	0.680	0.680	0.672	0.672	0.691	0.691	0.643	0.643
M_{LL+IM}	('k)	449.4	449.8	522.0	520.7	-477.1	-477.4	-530.2	-530.3	416.5	416.6	436.3	440.1	-453.9	-453.6	-451.3	-452.5	425.2	425.1	397.1	400.1
M_u	('k)	1,159.1	1,003.0	1,200.2	1,173.3	-1,457.2	-1,166.6	-1,387.9	-1,360.9	945.7	899.2	970.0	970.2	-1,299.0	-1,140.0	-1,188.2	-1,193.9	1,069.9	959.8	916.1	930.9
$\phi_f M_n$	('k)	2,764.7	2,839.2	2,901.7	2,853.6	——	——	——	——	2,764.7	2,839.2	2,885.2	2,767.3	——	——	——	——	2,764.7	2,839.2	2,749.4	2,681.4
f_s DC1	(ksi)	6.65	3.69	4.45	4.52	-8.61	-6.34	-7.17	-7.52	2.87	3.03	3.19	3.47	-6.78	-6.38	-6.23	-7.07	4.38	3.75	3.39	4.02
f_s DC2	(ksi)	1.27	0.08	0.53	0.54	-3.96	0.59	-0.90	-0.92	-1.26	-0.06	0.44	0.44	-3.08	0.29	-0.90	-0.91	2.05	0.02	0.55	0.56
f_s DW	(ksi)	0.81	1.10	1.35	0.94	-1.37	-1.87	-2.13	-1.51	0.66	0.90	0.96	0.69	-1.35	-1.83	-1.77	-1.32	0.82	1.11	0.99	0.76
f_s ($_{LL}$+IM)	(ksi)	9.84	9.79	11.18	11.30	-13.36	-13.44	-14.54	-14.73	9.12	9.06	9.45	9.61	-12.71	-12.77	-12.39	-12.48	9.31	9.25	8.71	8.80
f_s (Service II)	(ksi)	21.52	17.60	20.87	20.70	-31.32	-25.09	-29.11	-29.09	16.65	15.65	16.87	17.10	-27.74	-24.53	-25.01	-25.53	19.36	16.91	16.26	16.78
Service II Resistance	(ksi)	47.50	47.50	47.50	47.50	47.50	47.50	47.50	47.50	47.50	47.50	47.50	47.50	47.50	47.50	47.50	47.50	47.50	47.50	47.50	47.50
f_s (Strength I)	(ksi)	——	——	——	——	-41.16	-33.51	-38.74	-38.59	——	——	——	——	-36.60	-32.71	-33.26	-33.80	——	——	——	——
$\phi_f F_n$	(ksi)	——	——	——	——	50.00	50.00	50.00	50.00	——	——	——	——	50.00	50.00	50.00	50.00	——	——	——	——
V_f	(k)	16.5	16.5	19.1	16.6	24.5	24.5	25.5	21.8	17.1	17.1	18.5	15.8	22.8	22.7	22.4	19.3	17.4	16.5	15.9	12.7

FULL LENGTH BEAM REACTION TABLE

		South Abutment				Pier 1				Pier 2				North Abutment			
		Beam 1c	Beam 2	Beam 9	Beam 10	Beam 1c	Beam 2	Beam 9	Beam 10	Beam 1c	Beam 2	Beam 9	Beam 10	Beam 1c	Beam 2	Beam 9	Beam 10
LLDF		0.655	0.767	0.907	0.695	0.655	0.767	0.840	0.644	0.655	0.767	0.759	0.581	0.655	0.767	0.689	0.528
OCF		1.00	1.00	1.00	1.00	1.00	1.00	1.00	1.00	1.00	1.00	1.00	1.00	1.00	1.00	1.00	1.00
R_{DC1}	(k)	21.1	14.6	17.7	17.8	80.3	47.4	53.2	55.8	52.0	47.6	46.7	52.6	16.8	14.7	13.3	15.7
R_{DC2}	(k)	-0.2	1.0	2.8	2.9	62.8	-9.5	9.2	9.2	32.7	-4.8	9.1	9.1	10.9	-1.3	2.9	2.9
R_{DW}	(k)	4.2	5.8	7.3	5.0	13.6	18.7	21.6	15.1	13.6	18.6	18.2	13.4	4.2	5.8	5.1	3.9
R_{LL}	(k)	40.4	47.3	59.8	45.8	77.9	91.3	100.1	76.7	76.5	89.5	88.7	68.0	42.2	49.4	44.3	34.0
R_{im}	(k)	10.7	12.5	16.0	12.2	18.1	21.2	23.3	17.8	17.9	20.9	20.7	15.9	11.4	13.3	11.9	9.1
R_{Total} (Strength I)(Impact)	(k)	121.7	132.9	169.0	134.8	367.4	272.3	326.2	269.3	291.3	274.7	288.5	244.1	134.7	135.3	126.2	104.5
R_{Total} (Strength I)(No Impact)	(k)	103.1	111.1	141.2	113.4	335.7	235.1	285.5	238.1	260.1	238.1	252.3	216.3	114.8	112.0	105.4	88.5

Note:
For definition of terms, see sheet 30 of 41.

I_s, S_s : Non-composite moment of inertia and section modulus of the steel section used for computing f_s(Total-Strength I, and Service II) due to non-composite dead loads (in.^{4} and in.^{3}).

$I_c(n)$, $S_c(n)$: Composite moment of inertia and section modulus of the steel and deck based upon the modular ratio, "n", used for computing f_s(Total-Strength I, and Service II) in uncracked sections due to short-term composite live loads (in.^{4} and in.^{3}).

$I_c(3n)$, $S_c(3n)$: Composite moment of inertia and section modulus of the steel and deck based upon 3 times the modular ratio, "3n", used for computing f_s(Total-Strength I, and Service II) in uncracked sections, due to long-term composite (superimposed) dead loads (in.^{4} and in.^{3}).

$I_c(cr)$, $S_c(cr)$: Composite moment of inertia and section modulus of the steel and longitudinal deck reinforcement, used for computing f_s (Total-Strength I and Service II) in cracked sections, due to both short-term composite live loads and long-term composite (superimposed) dead loads (in.^{4} and in.^{3}).

DC1: Un-factored non-composite dead load (kips/ft.).

M_{DC1} : Un-factored moment due to non-composite dead load (kip-ft.).

DC2: Un-factored long-term composite (superimposed excluding future wearing surface) dead load (kips/ft.).

M_{DC2} : Un-factored moment due to long-term composite (superimposed excluding future wearing surface) dead load (kip-ft.).

DW: Un-factored long-term composite (superimposed future wearing surface only) dead load (kips/ft.).

M_{DW} : Un-factored moment due to long-term composite (superimposed future wearing surface only) dead load (kip-ft.).

LLDF: Live Load Distribution Factor for moment and shear computed according to Article 4.6.2.2 and further IDOT provisions.

M_{LL+IM}: Un-factored live load moment plus dynamic load allowance (impact) (kip-ft.).

M_u : Strength I load combination of factored design moments (kip-ft.).
$1.25\ (M_{DC1} + M_{DC2}) + 1.5\ M_{DW} + 1.75\ M_{LL+IM}$

$\phi_f M_n$: Factored nominal flexural resistance of the section determined as speci ed in Article 6.10.7.1 or A6 as applicable (kip-ft.).

f_s DC1: Un-factored stress at edge of flange for controlling steel flange due to vertical non-composite dead loads as calculated below (ksi).
M_{DC1} / S_s

f_s DC2: Un-factored stress at edge of flange for controlling steel flange due to vertical composite dead loads as calculated below (ksi).
$M_{DC2} / S_c(3n)$ or $M_{DC2} / S_c(cr)$ as applicable.

f_s DW: Un-factored stress at edge of flange for controlling steel flange due to vertical composite future wearing surface loads as calculated below (ksi).
$M_{DW} / S_c(3n)$ or $M_{DW} / S_c(cr)$ as applicable.

f_s (LL + IM): Un-factored stress at edge of flange for controlling steel flange due to vertical composite live load plus impact loads as calculated below (ksi).
$M_{LL+IM} / S_c(n)$ or $M_{LL+IM} / S_c(cr)$ as applicable.

f_s (Service II): Sum of stresses as computed below (ksi).
f_s DC1 + f_s DC2 + f_s DW + 1.3 f_s (LL + IM) + f_f /2

Service II Resistance: Composite ($0.95R_hF_{yf}$) or noncomposite ($0.80R_hF_{yf}$) stress capacity according to Article 6.10.4.2 (ksi).

f_s (Strength I): Sum of stresses as computed below on non-compact sections (ksi).
1.25 (f_s DC1 + f_s DC2) + 1.5 f_s DW + 1.75 f_s (LL + IM) + f_f /3

$\phi_f F_n$: Factored nominal flexural resistance of the section as specified in Article 6.10.7.2 or 6.10.8 as applicable (ksi).

V_f : Maximum factored shear range in span computed according to Article 6.10.10.

OCF: Obtuse Correction Factor computed according to Article 4.6.2.2.3c or as further simplified by IDOT provisions.

R_{DC1} : Un-factored reaction due to non-composite dead load (kip).

R_{DC2} : Un-factored reaction due to long-term composite (superimposed excluding future wearing surface) dead load (kip).

R_{DW} : Un-factored reaction due to long-term composite (superimposed future wearing surface only) dead load (kip).

R_{LL} : Un-factored live load reaction (kip).

R_{IM} : Un-factored dynamic load allowance (impact) (kip).

R_{Total} (Strength I)(Impact): Strength I load combination of factored design reactions (kip).
$1.25\ (R_{DC1} + R_{DC2}) + 1.5R_{DW} + 1.75\ (R_{LL} + R_{IM})$

R_{Total} (Strength I)(No Impact): Strength I load combination of factored design reactions, not including dynamic load allowance (Impact) (kip).
$1.25\ (R_{DC1} + R_{DC2}) + 1.5R_{DW} + 1.75\ (R_{LL})$

PARTIAL LENGTH BEAM MOMENT TABLE			
		0.5 Span 1	
		Beam 1a	Beam 1b
I_s	(in^4)	2,460	2,460
$I_c(n)$	(in^4)	7,993	8,230
$I_c(3n)$	(in^4)	5,812	6,048
$I_c(cr)$	(in^4)	——	——
S_s	(in^3)	256	256
$S_c(n)$	(in^3)	414	419
$S_c(3n)$	(in^3)	369	374
$S_c(cr)$	(in^3)	——	——
DC1	(k/')	1.112	0.958
M_{DC1}	('k)	271.5	62.1
DC2	(k/')	0.925	0.700
M_{DC2}	('k)	180.0	69.6
DW	(k/')	0.024	0.115
M_{DW}	('k)	6.1	7.4
LLDF		0.726	0.822
M_{LL+IM}	('k)	627.4	288.5
M_u	('k)	1,671.4	680.4
$\phi_f M_n$	('k)	2,056.3	2,160.3
f_s DC1	(ksi)	12.73	2.91
f_s DC2	(ksi)	5.85	2.23
f_s DW	(ksi)	0.20	0.24
f_s (LL+IM)	(ksi)	18.18	8.26
f_s (Service II)	(ksi)	42.40	16.11
Service II Resistance	(ksi)	47.50	47.50
f_s (Strength I)	(ksi)	——	——
$\phi_f F_n$	(ksi)	——	——
V_f	(k)	38.3	34.5

PARTIAL LENGTH BEAM REACTION TABLE			
		South Abutment	
		Beam 1a	Beam 1b
LLDF		0.700	0.814
OCF		1.00	1.00
R_{DC1}	(k)	24.4	11.0
R_{DC2}	(k)	23.6	10.3
R_{DW}	(k)	0.5	1.3
R_{LL}	(k)	50.0	42.9
R_{IM}	(k)	13.2	12.2
R_{Total} (Strength I)(Impact)	(k)	171.3	125.2
R_{Total} (Strength I)(No Impact)	(k)	148.30	103.8

* A = 11¼" (Beam 1a and Beam 1b)
A = 12⅞" (Beam 1c and Beams 2 thru 10)

** B = 2¾" (Beam 1a and Beam 1b)
B = 3¼" (Beam 1c and Beams 2 thru 10)

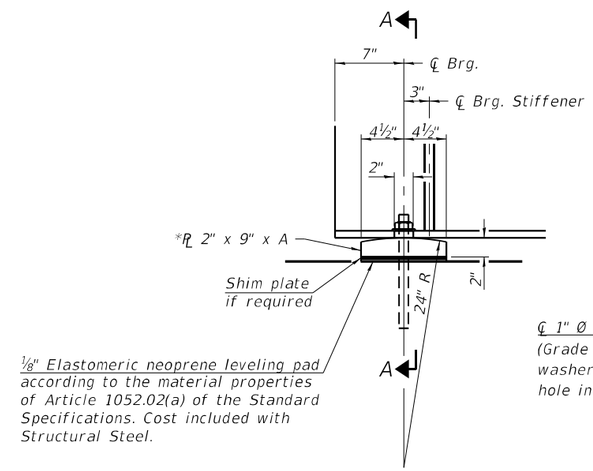

ELEVATION AT ABUTMENT

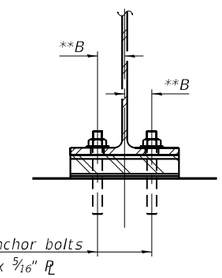

SECTION A-A

FIXED BEARING AT ABUTMENTS

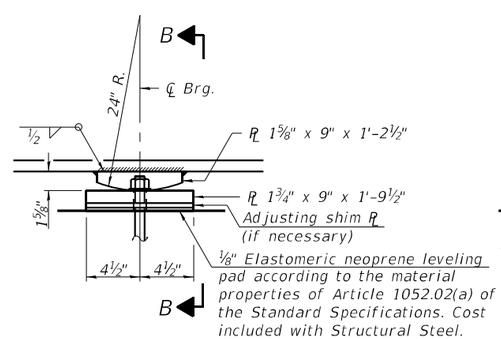

ELEVATION AT PIER

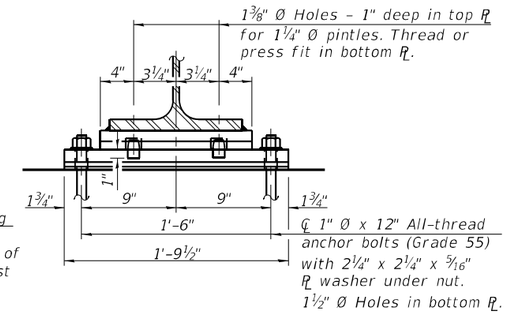

SECTION B-B

FIXED BEARING AT PIERS

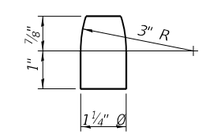

PINTLE

BILL OF MATERIAL

Item	Unit	Total
Anchor Bolts, 1"	Each	84

Notes:

Anchor bolts at all supports shall be installed as each member is erected unless an equivalent temporary means of lateral restraint is used.

Two ⅛ in. adjusting shims shall be provided for each bearing in addition to all other plates or shims, and placed as shown on bearing details.

The anchor bolt sizes and grades shown constitute a calculated seismic structural fuse. Substitution of higher diameter and/or grade anchor bolts will not be allowed.

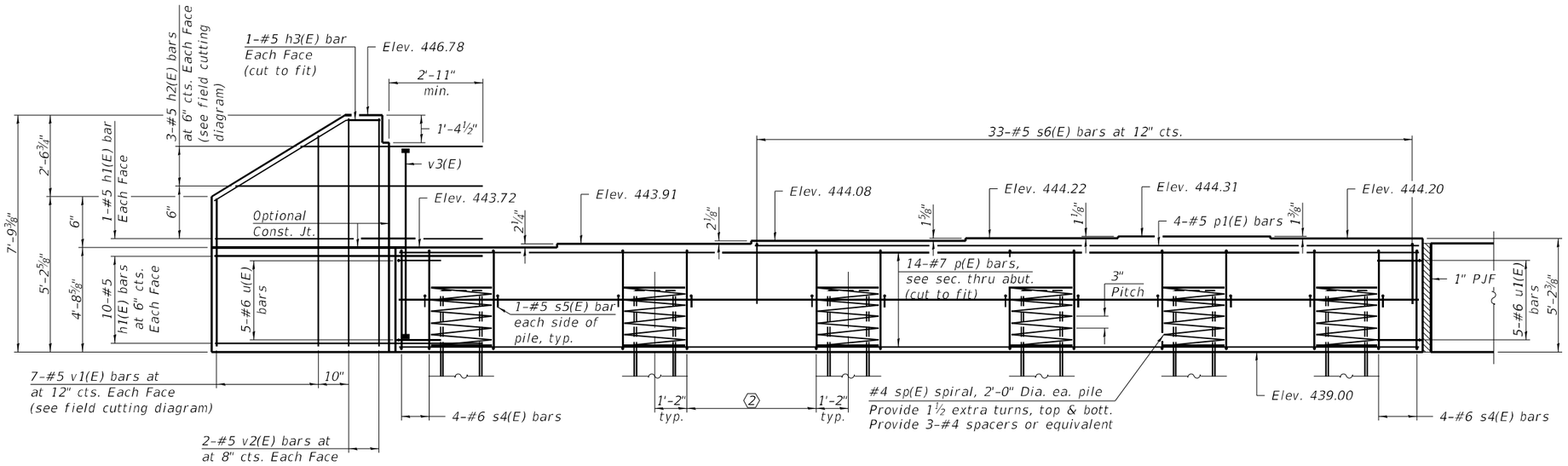

ELEVATION

① 10-#8 v3(E) headed bars at ±11" cts. typ. btwn. Beams 7 thru 10.
8-#8 v3(E) headed bars at ±11" cts. typ. btwn. Beams 5 thru 7.
② 8-#6 s4(E) bars at 12" cts. typ. btwn. 9'-4" pile spacing
6-#6 s4(E) bars at 12" cts. typ. btwn. 7'-4" pile spacing

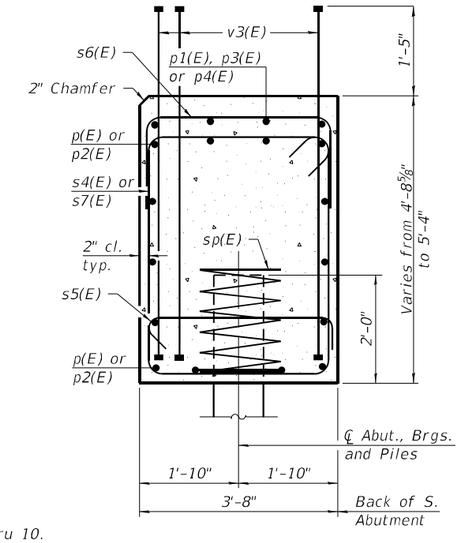

SEC. THRU ABUT.

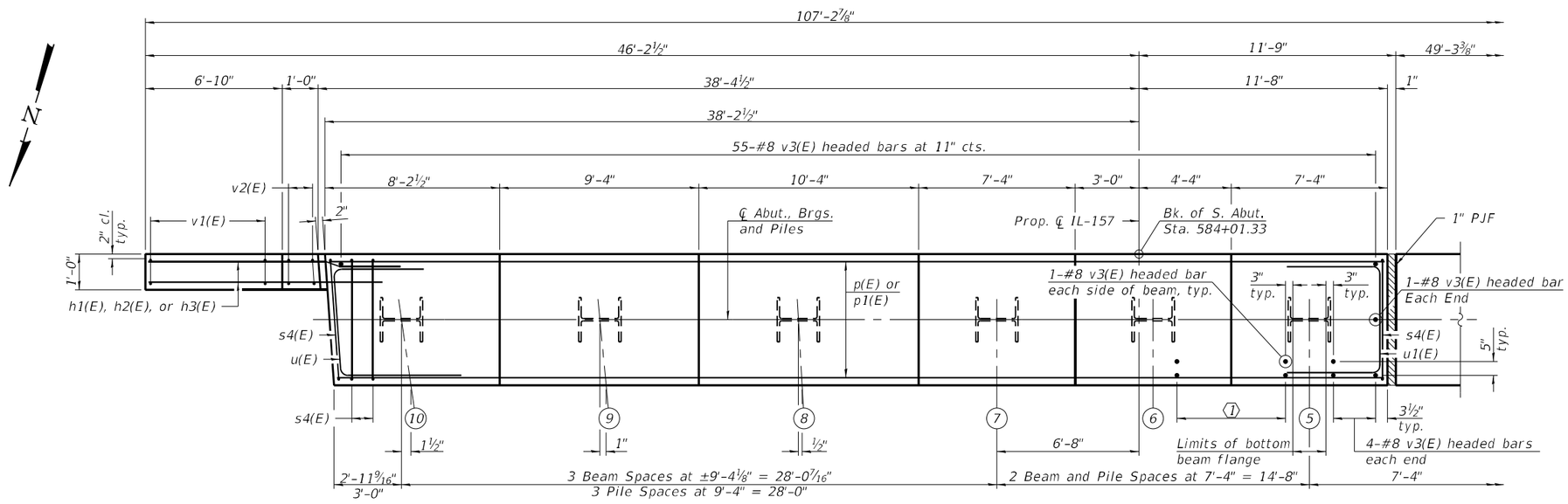

PLAN

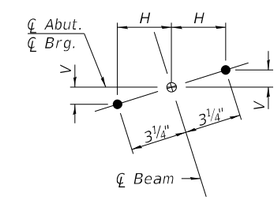

ANCHOR BOLT LAYOUT
BEAMS 5 THRU 10

TABLE OF VARIABLE DIMENSIONS

Beam	V	H
5 thru 7	0"	3¼"
8	1⁄16"	3¼"
9	⅛"	3¼"
10	¼"	3¼"

PILE DATA

Type:	HP14x117
Nominal Required Bearing:	361 kips
Factored Resistance Available:	167 kips
Est. Length:	84 ft.
No. Production Piles:	11
No. Test Piles:	1

Notes:
PJF (per Article 1051.09 of the Standard Specifications) shall be bonded between abutment caps with suitable adhesive as recommended by supplier. Cost included with Concrete Structures.
Pour steps monolithically with cap.
For west portion of South Abutment, Bill of Materials, and bar bending diagrams, see sheet 32 of 41.
For details of piles, see sheet 37 of 41.

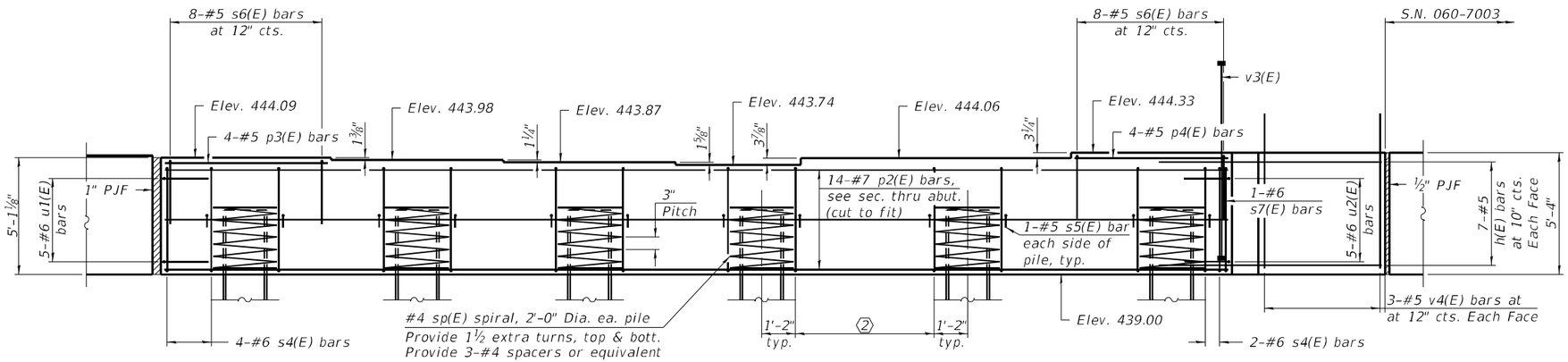

ELEVATION

1 9-#8 v3(E) headed bars at ±11" cts. typ. btwn. Beams 1a thru 1b.
8-#8 v3(E) headed bars at ±11" cts. typ. btwn. Beams 1b thru 4.
2 8-#6 s4(E) bars at ±11" cts. typ. btwn. 8'-8" and 8'-9" pile spacings
6-#6 s4(E) bars at 12" cts. typ. btwn. 7'-4" pile spacing

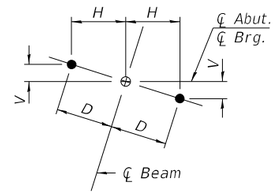

ANCHOR BOLT LAYOUT BEAMS 1a THRU 4

TABLE OF VARIABLE DIMENSIONS

Beam	D	V	H
1a & 1b	2 3/4"	1 1/16"	2 9/16"
1c thru 4	3 1/4"	0"	3 1/4"

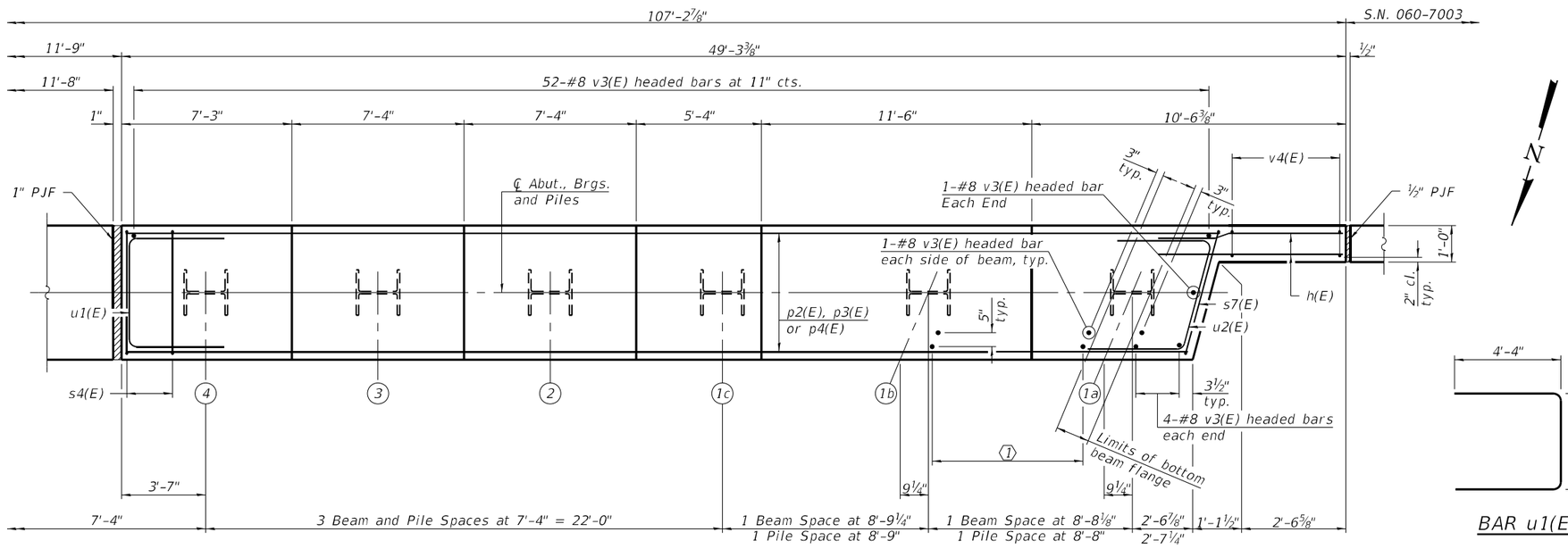

PLAN

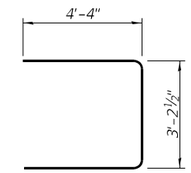

BAR u1(E)

BILL OF MATERIAL

Bar	No.	Size	Length	Shape
h(E)	14	#5	6'-0"	
h1(E)	22	#5	10'-11"	
h2(E)	3	#5	17'-8"	
h3(E)	2	#5	8'-0"	
p(E)	14	#7	49'-6"	
p1(E)	4	#5	32'-0"	
p2(E)	14	#7	46'-8"	
p3(E)	4	#5	6'-11"	
p4(E)	4	#5	7'-11"	
s4(E)	84	#6	16'-10"	
s5(E)	24	#5	4'-4"	
s6(E)	49	#5	7'-0"	
s7(E)	1	#6	18'-7"	
* sp(E)	12	#4	2'-0"	
u(E)	5	#6	11'-11"	
u1(E)	10	#6	11'-11"	
u2(E)	5	#6	12'-2"	
v1(E)	7	#5	12'-1"	
v2(E)	4	#5	7'-5"	
v3(E)	238	#8	5'-11"	
v4(E)	6	#5	6'-3"	
Structure Excavation		Cu. Yd.	218	
Concrete Structures		Cu. Yd.	68.3	
Reinforcement bars, Epoxy Coated		Pound	10,270	
Furnishing Steel Piles HP14x117		Foot	924	
Driving Piles		Foot	924	
Test Pile Steel HP14x117		Each	1	

* Length is height of spiral.

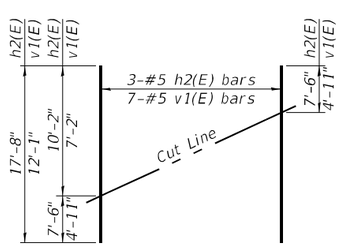

FIELD CUTTING DIAGRAM

Order h2(E) and v1(E) full length. Cut as shown and use remainder of bars in opposite face of wing.

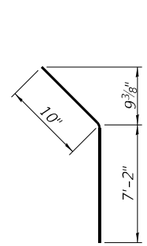

BAR h3(E)

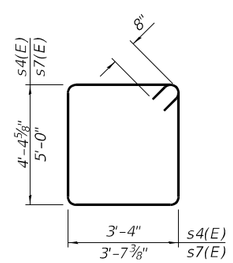

BARS s4(E) & s7(E)

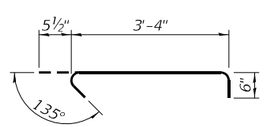

BAR s5(E)

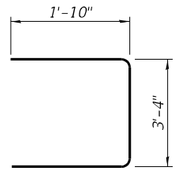

BAR s6(E)

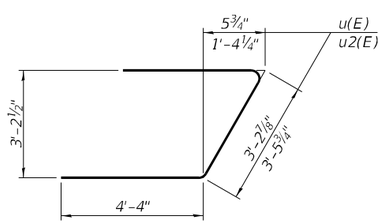

BARS u(E) & u2(E)

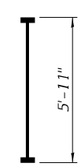

BAR v3(E)

Notes:

PJF (per Article 1051.09 of the Standard Specification) shall be bonded between abutment caps with suitable adhesive as recommended by supplier. Cost included with Concrete Structures.

Pour steps monolithically with cap.

Headed bars shall conform to ASTM A970 with threaded attachment; Class HA; and reinforcement bars conforming to ASTM A706. Cost included with Reinforcement Bars, Epoxy Coated.

For Pile Data, Section Thru Abutment, and east portion of South Abutment, see sheet 31 of 41.

For details of piles see sheet 37 of 41.

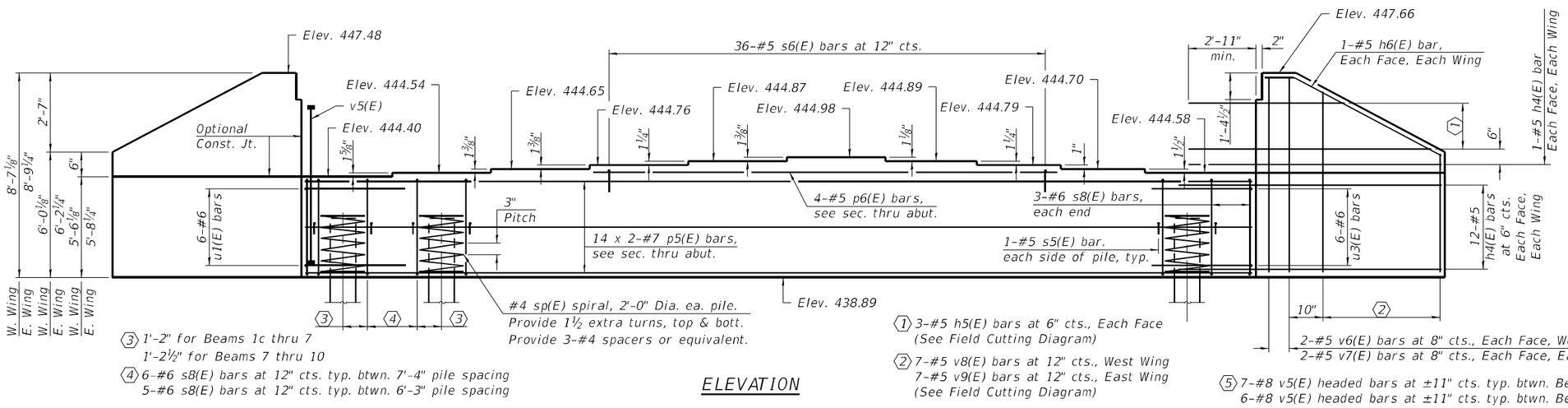

③ 1'-2" for Beams 1c thru 7
1'-2½" for Beams 7 thru 10

④ 6-#6 s8(E) bars at 12" cts. typ. btwn. 7'-4" pile spacing
5-#6 s8(E) bars at 12" cts. typ. btwn. 6'-3" pile spacing

① 3-#5 h5(E) bars at 6" cts., Each Face (See Field Cutting Diagram)

② 7-#5 v8(E) bars at 12" cts., West Wing
7-#5 v9(E) bars at 12" cts., East Wing
(See Field Cutting Diagram)

⑤ 7-#8 v5(E) headed bars at ±11" cts. typ. btwn. Beams 1c and 7
6-#8 v5(E) headed bars at ±11" cts. typ. btwn. Beams 7 and 10

ELEVATION

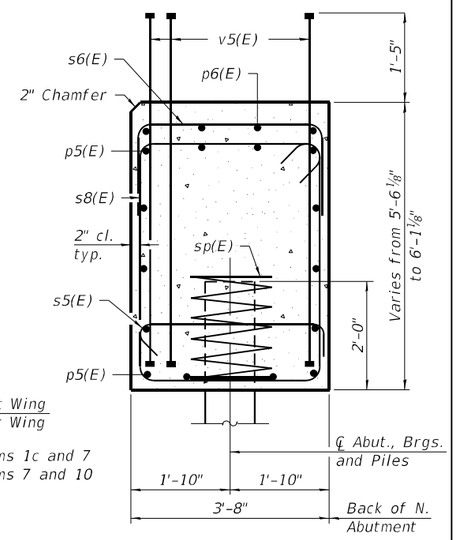

SEC. THRU ABUT.

MINIMUM BAR LAP

#7(E) bar = 5'-0"

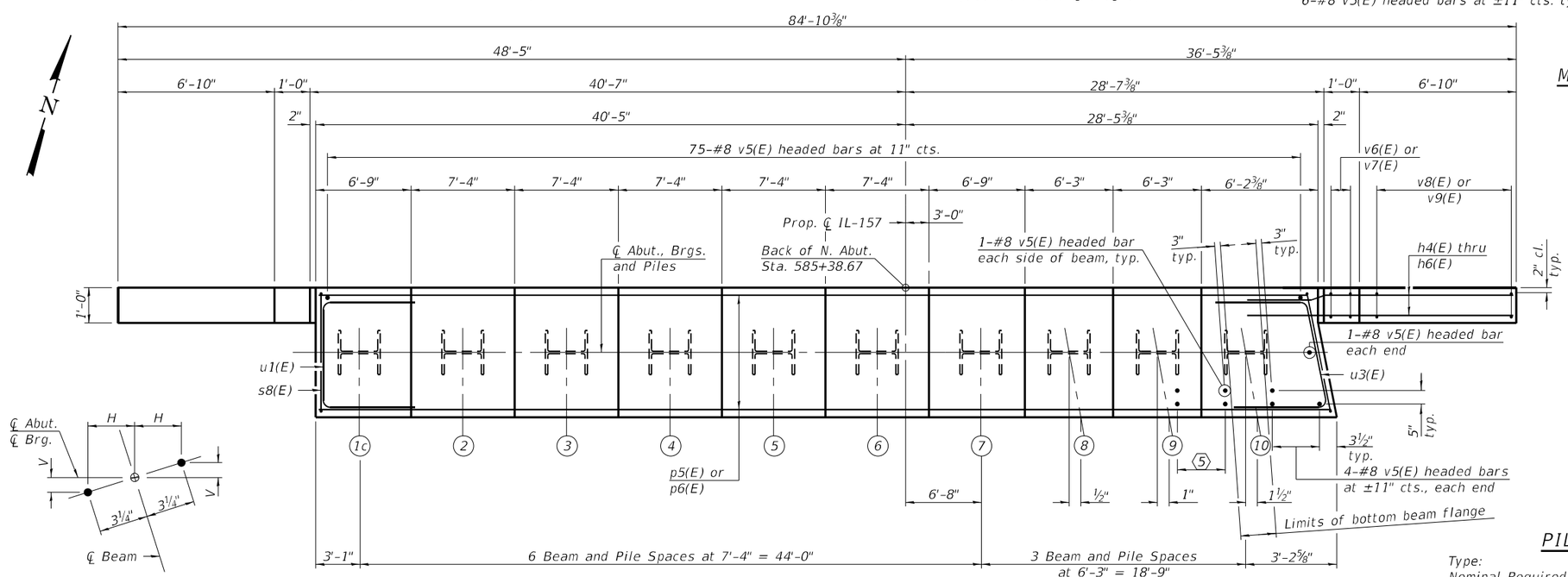

PLAN

ANCHOR BOLT LAYOUT BEAMS 1c THRU 10

TABLE OF VARIABLE DIMENSIONS

Beam	V	H
1c thru 7	0"	3¼"
8	1/16"	3¼"
9	⅛"	3¼"
10	¼"	3¼"

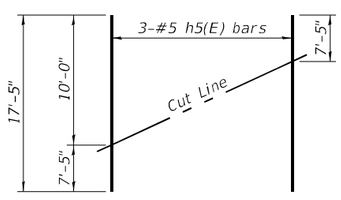

FIELD CUTTING DIAGRAM

Order h5(E) full length. Cut as shown and use remainder of bars in opposite wing.

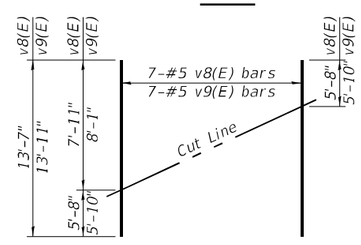

FIELD CUTTING DIAGRAM

Order v8(E) and v9(E) full length. Cut as shown and use remainder of bars in opposite face.

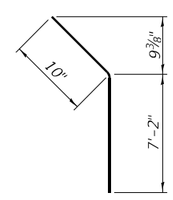

BAR h6(E)

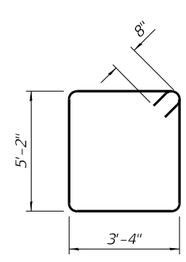

BAR s8(E)

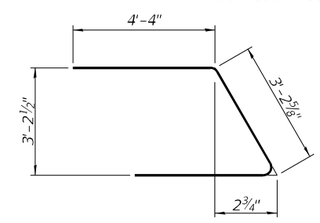

BAR u3(E)

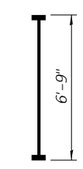

BAR v5(E)

(Headed)

PILE DATA

Type:	HP14x117
Nominal Required Bearing:	277 kips
Factored Resistance Available:	152 kips
Est. Length:	92
No. Production Piles:	9
No. Test Piles:	1

BILL OF MATERIAL

	Bar	No.	Size	Length	Shape
	h4(E)	52	#5	10'-9"	
	h5(E)	6	#5	17'-5"	
	h6(E)	4	#5	8'-0"	
	p5(E)	28	#7	36'-11"	
	p6(E)	4	#5	34'-8"	
	s5(E)	20	#5	4'-4"	
	s6(E)	36	#5	7'-0"	
	s8(E)	57	#6	18'-4"	
*	sp(E)	10	#4	2'-0"	
	u1(E)	6	#6	11'-11"	
	u3(E)	6	#6	11'-11"	
	v5(E)	165	#8	6'-9"	
	v6(E)	4	#5	8'-2"	
	v7(E)	4	#5	8'-4"	
	v8(E)	7	#5	13'-7"	
	v9(E)	7	#5	13'-11"	
	Structure Excavation			Cu. Yd.	187
	Concrete Structures			Cu. Yd.	59.1
	Reinforcement Bars, Epoxy Coated			Pound	8,380
	Furnishing Steel Piles HP14x117			Foot	828
	Driving Piles			Foot	828
	Test Pile HP14x117			Each	1

* Length is height of spiral.

Notes:

Pour steps monolithically with cap.

Headed bars shall conform to ASTM A970 with threaded attachment; Class HA; and reinforcement bars conforming to ASTM A706. Cost included with Reinforcement Bars, Epoxy Coated.

Bars indicated thus 14 x 2-#7 etc. indicates 14 lines of bars with 2 lengths per line.

For s5(E), s6(E), and u1(E) bar bending diagrams, see sheet 32 of 41.

For Pile Details, see sheet 37 of 41.

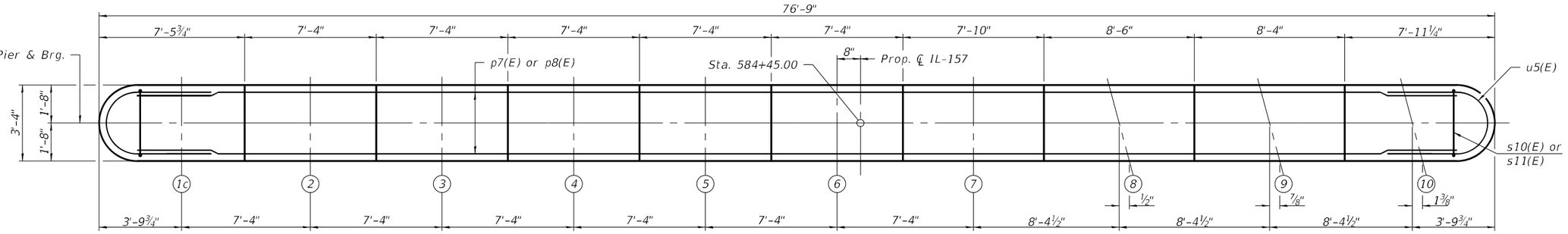

TOP PLAN

N

MINIMUM BAR LAP

#6(E) bar = 4'-4"
#7(E) bar = 5'-0"

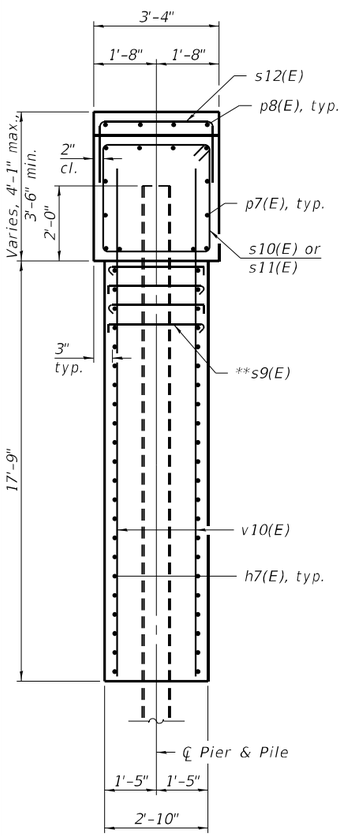

SECTION B-B

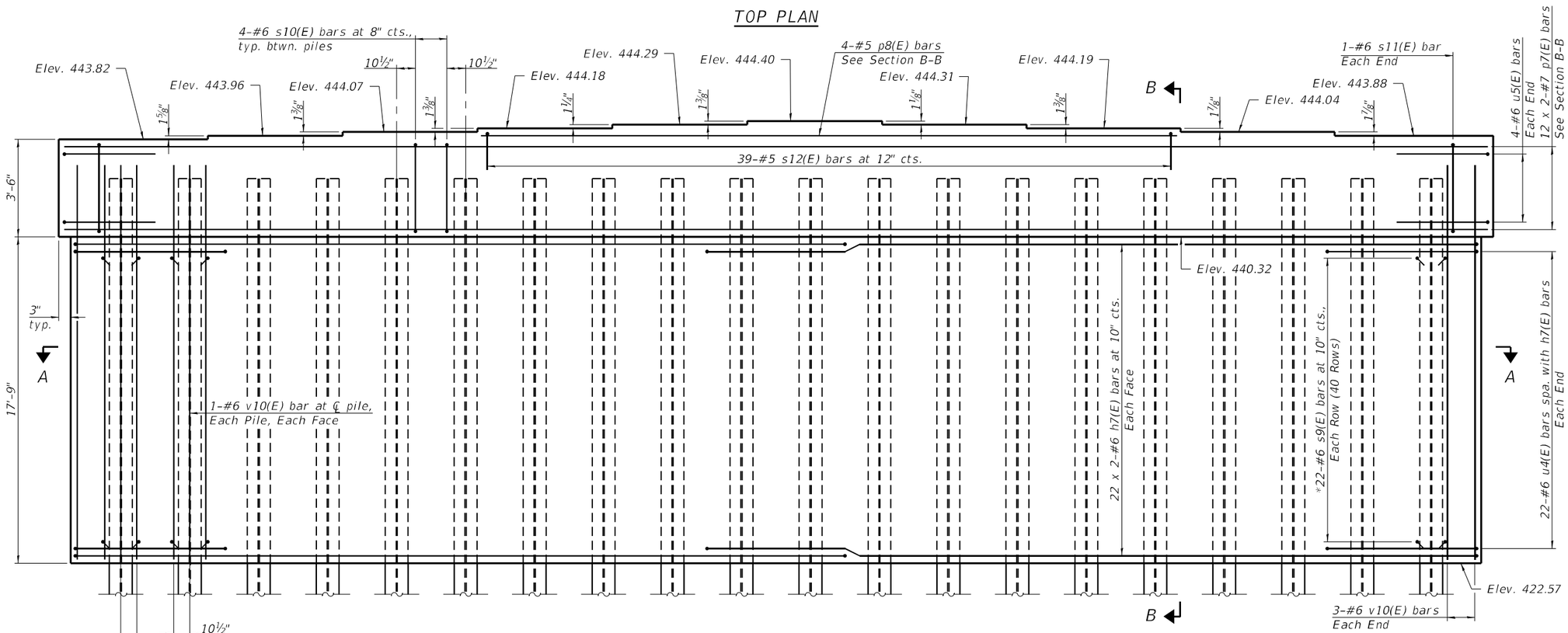

ELEVATION
(Looking North)

* Space s9(E) bars vertically with h7(E) bars and horizontally as shown in Section A-A. Alternate s9(E) bars end for end as shown in Section B-B.
** Alternate 135° end every other row. Maintain 2" cover.

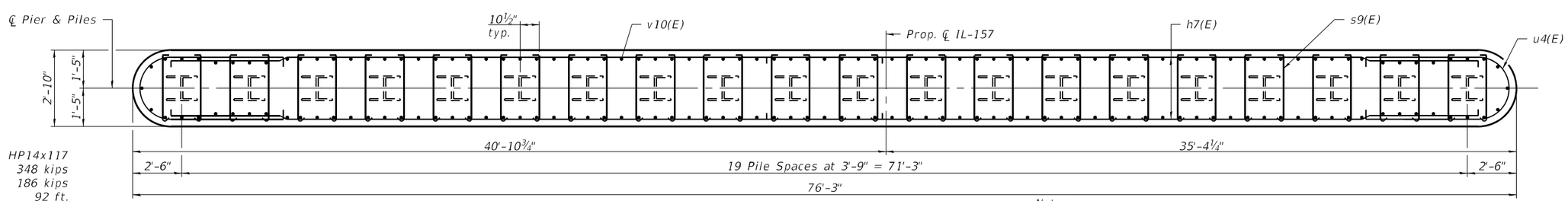

SECTION A-A

PILE DATA

Type:	HP14x117
Nominal Required Bearing:	348 kips
Factored Resistance Available:	186 kips
Est. Length:	92 ft.
No. Production Piles:	20
No. Test Piles:	0

Notes:
Bars indicated thus 22 x 2-#7 etc. indicates 22 lines of bars with 2 lengths per line.
For anchor bolt layout, bar bending diagrams and Bill of Material, see sheet 36 of 41.

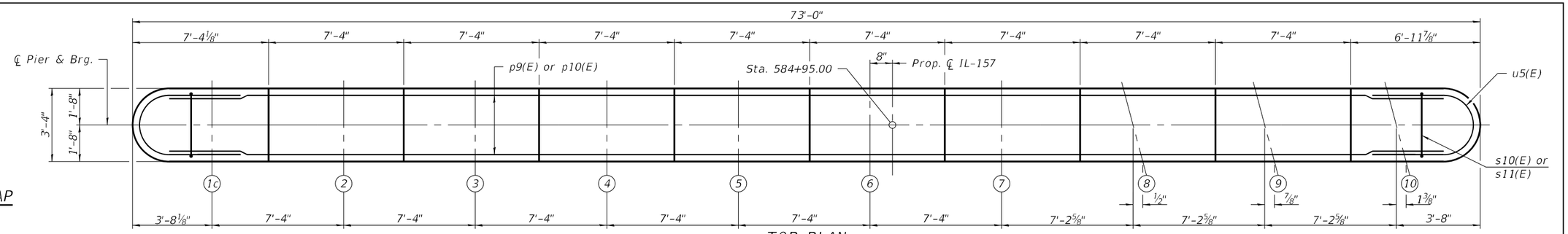

TOP PLAN

N

MINIMUM BAR LAP

#6(E) bar = 4'-4"
#7(E) bar = 5'-0"

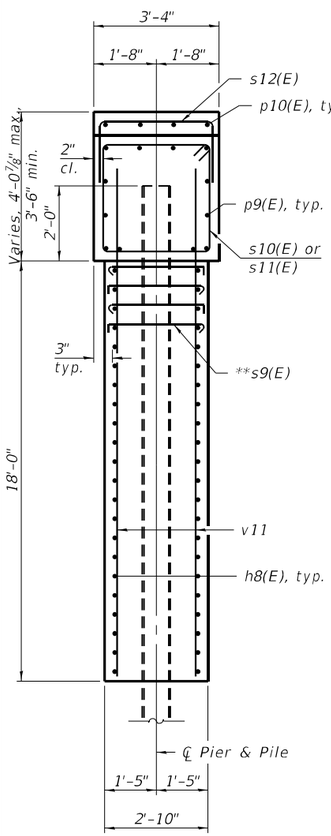

SECTION B-B

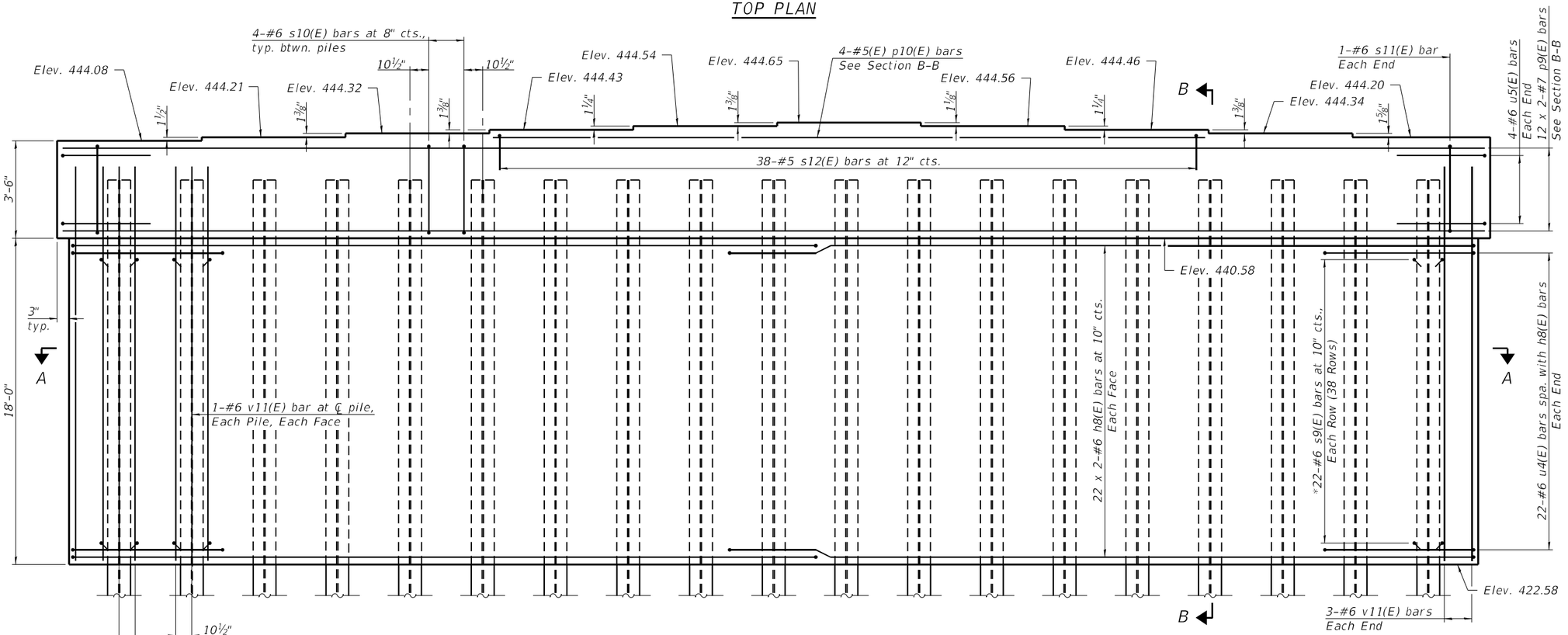

ELEVATION
(Looking North)

* Space s9(E) bars vertically with h8(E) bars and horizontally as shown in Section A-A. Alternate s9(E) bars end for end as shown in Section B-B.
** Alternate 135° end every other row. Maintain 2" cover.

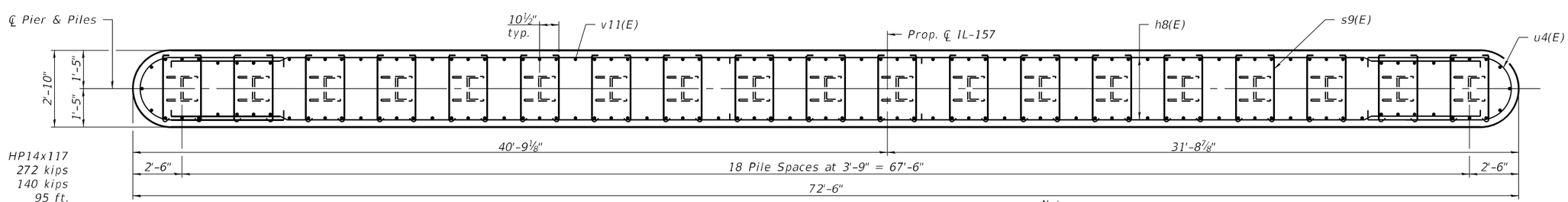

SECTION A-A

PILE DATA

Type:	HP14x117
Nominal Required Bearing:	272 kips
Factored Resistance Available:	140 kips
Est. Length:	95 ft.
No. Production Piles:	19
No. Test Piles:	0

Notes:
Bars indicated thus 22 x 2 #6 indicates 22 lines of bars with 2 lengths per line.
For anchor bolt layout, bar bending diagrams and Bill of Material, see sheet 36 of 41.

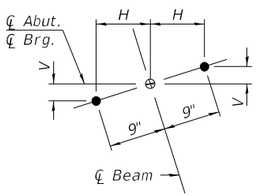

ANCHOR BOLT LAYOUT

TABLE OF VARIABLE DIMENSIONS

Beam	V	H
1c thru 7	0"	9"
8	3/16"	9"
9	7/16"	9"
10	5/8"	9"

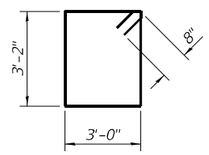

BAR s10(E)

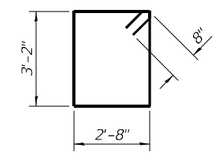

BAR s11(E)

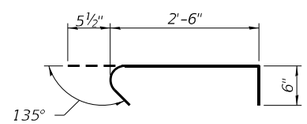

BAR s9(E)

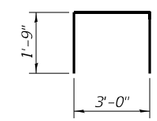

BAR s12(E)

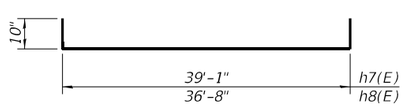

BARS h7(E) & h8(E)

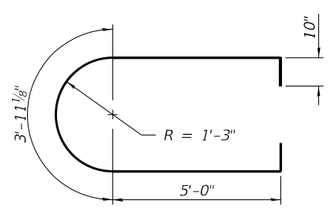

BAR u4(E)

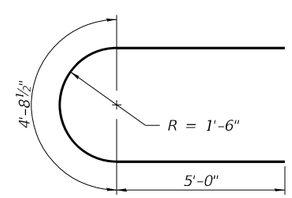

BAR u5(E)

PIER 1
BILL OF MATERIAL

Bar	No.	Size	Length	Shape
h7(E)	88	#6	40'-9"	
p7(E)	24	#7	39'-3"	
p8(E)	4	#5	38'-0"	
s9(E)	880	#6	3'-6"	
s10(E)	76	#6	13'-8"	
s11(E)	2	#6	13'-0"	
s12(E)	39	#5	6'-6"	
u4(E)	44	#6	15'-8"	
u5(E)	8	#6	14'-9"	
v10(E)	160	#6	20'-6"	
Cofferdam Excavation			Cu. Yd.	382
Cofferdam (Type 2) (Location - 1)			Each	1
Concrete Structures			Cu. Yd.	176.5
Reinforcement Bars, Epoxy Coated			Pound	20,100
Furnishing Steel Piles HP14x117			Foot	1,840
Driving Piles			Foot	1,840

PIER 2
BILL OF MATERIAL

Bar	No.	Size	Length	Shape
h8(E)	88	#6	38'-4"	
p9(E)	24	#7	37'-4"	
p10(E)	4	#5	36'-4"	
s9(E)	836	#6	3'-6"	
s10(E)	72	#6	13'-8"	
s11(E)	2	#6	13'-0"	
s12(E)	38	#5	6'-6"	
u4(E)	44	#6	15'-8"	
u5(E)	8	#6	14'-9"	
v11(E)	152	#6	20'-9"	
Cofferdam Excavation			Cu. Yd.	462
Cofferdam (Type 2) (Location - 2)			Each	1
Concrete Structures			Cu. Yd.	169.7
Reinforcement Bars, Epoxy Coated			Pound	19,170
Furnishing Steel Piles HP14x117			Foot	1,805
Driving Piles			Foot	1,805

Notes:
Space reinforcement in cap to miss anchor bolts.
Pour steps monolithically with cap.
For Pier 1 Details. see sheet 34 of 41.
For Pier 2 Details, see sheet 35 of 41.
For details of piles, see sheet 37 of 41.

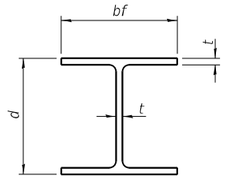

STEEL PILE TABLE

Designation	Depth d	Flange width bf	Web and Flange thickness t	Encasement diameter A
HP 14x117	14¼"	14⅞"	13/16"	30"
x102	14"	14¾"	11/16"	30"
x89	13⅞"	14¾"	⅝"	30"
x73	13⅝"	14⅝"	½"	30"
HP 12x84	12¼"	12¼"	11/16"	24"
x74	12⅛"	12¼"	⅝"	24"
x63	12"	12⅛"	½"	24"
x53	11¾"	12"	7/16"	24"
HP 10x57	10"	10¼"	9/16"	24"
x42	9¾"	10⅛"	7/16"	24"
HP 8x36	8"	8⅛"	7/16"	18"

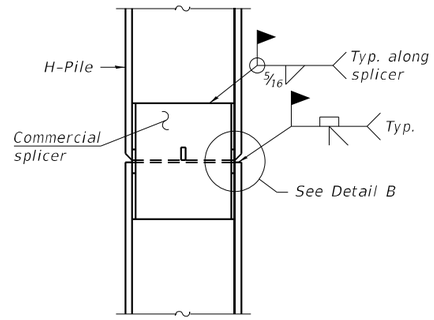

ELEVATION

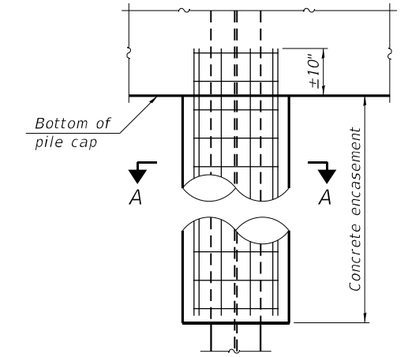

ELEVATION

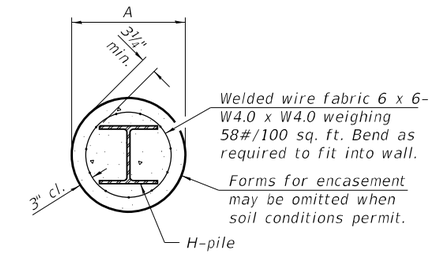

SECTION A-A

INDIVIDUAL PILE
CONCRETE ENCASEMENT
(when specified)

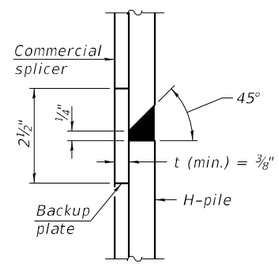

DETAIL "B"

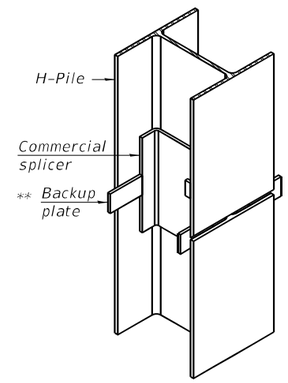

ISOMETRIC VIEW

WELDED COMMERCIAL SPLICE

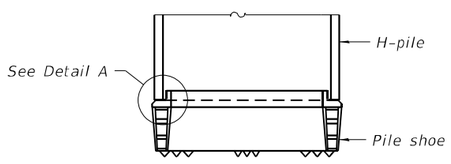

ELEVATION

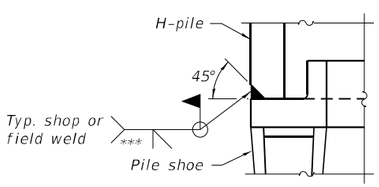

DETAIL A

SHOE ATTACHMENT

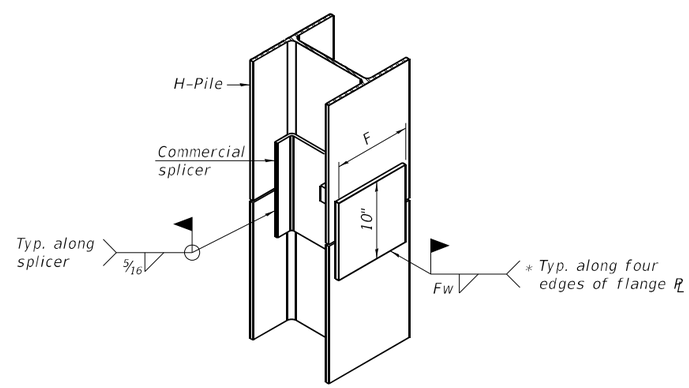

ISOMETRIC VIEW

WELDED COMMERCIAL SPLICE ALTERNATE

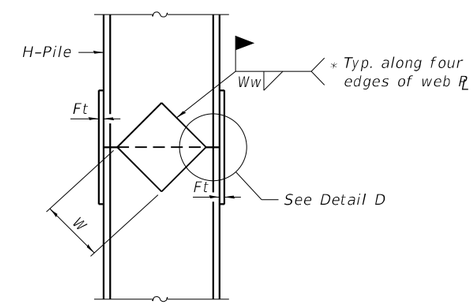

ELEVATION

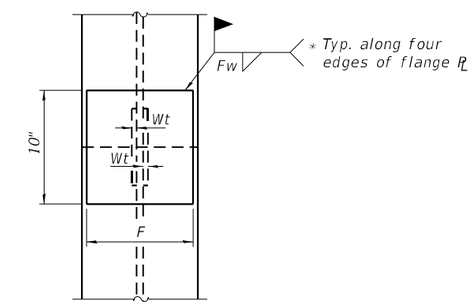

END VIEW

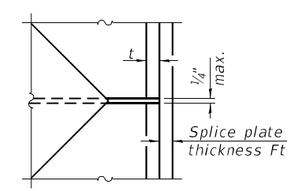

DETAIL D

Designation	F	Ft	Fw	W	Wt	Ww
HP 14x117	12½"	1"	⅞"	7¾"	⅝"	½"
x102	12½"	⅞"	¾"	7¾"	⅝"	½"
x89	12½"	¾"	11/16"	7¾"	⅝"	½"
x73	12½"	⅝"	9/16"	7¾"	⅝"	½"
HP 12x84	10"	⅞"	11/16"	6½"	⅝"	½"
x74	10"	⅞"	11/16"	6½"	⅝"	½"
x63	10"	⅝"	½"	6½"	½"	⅜"
x53	10"	⅝"	½"	6½"	½"	⅜"
HP 10x57	8"	¾"	9/16"	5¼"	½"	⅜"
x42	8"	⅝"	9/16"	5¼"	½"	⅜"
HP 8x36	7"	⅝"	7/16"	4¼"	½"	⅜"

WELDED PLATE FIELD SPLICE

Note:
The steel H-piles shall be according to AASHTO M270 Grade 50.

* Interrupt welds ¼" from end of web and/or each flange.

** Remove portions of backup plates that extend outside the flanges.

*** Weld size per pile shoe manufacturer (5/16" min.).

F-HP 2-1-2023

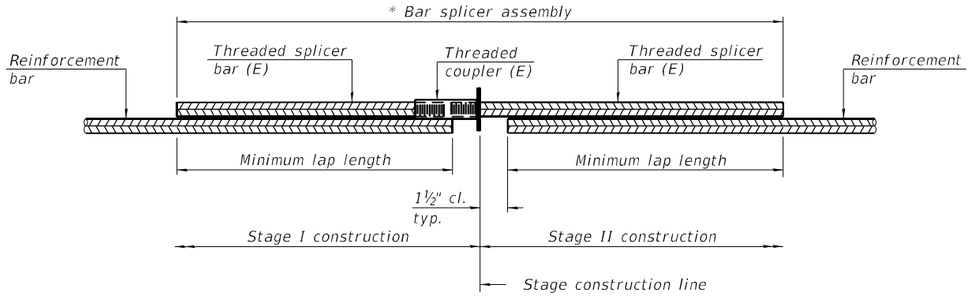

STANDARD BAR SPLICER ASSEMBLY PLAN

Only bar splicer assemblies as presented on the approved QPL list may be used.

Threaded splicer bar length = min. lap length + 1½" + thread length

* Epoxy not required on Bar Splicer Assembly components used in conjunction with black bars.

Location	Bar size	No. assemblies required	Minimum lap length
S. Abut. Diaphr.	#6	7	4'-10"
N. Abut. Diaphr.	#6	4	4'-10"

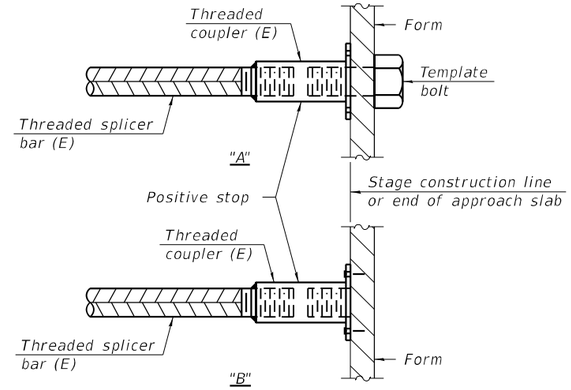

INSTALLATION AND SETTING METHODS

"A" : Set bar splicer assembly by means of a template bolt.
"B" : Set bar splicer assembly by nailing to wood forms or cementing to steel forms.
(E) : Indicates epoxy coating.

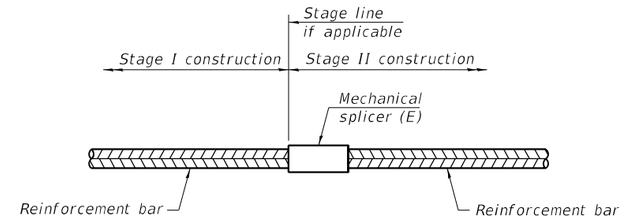

STANDARD MECHANICAL SPLICER

Location	Bar size	No. assemblies required

Notes:
Splicer bars shall be deformed with threaded ends and have a minimum 60 ksi yield strength.
All reinforcement shall be lapped and tied to the splicer bars.
Bar splicer assemblies shall be epoxy coated according to the requirements for reinforcement bars. See Section 508 of the Standard Specifications.
See approved list of bar splicer assemblies and mechanical splicers for alternatives.

BSD-1 2-1-2023

Illinois Department of Transportation
Division of Highways
SCI Engineering, Inc.

SOIL BORING LOG

Date 3/1,2/2022

ROUTE Route 157/162 DESCRIPTION IL - Route 157 over Judy's Branch LOGGED BY SCI

SECTION 51-1R LOCATION Madison County, Illinois, SEC. 4, TWP. 3N, RNG. 8W
Lat 38.740837 Long -90.002113

COUNTY Madison DRILLING METHOD CME 550 w/HSA and Mud Rotary HAMMER TYPE Automatic

STRUCT. NO. SN 060-0229/ SN 060-7003
Station 584+70.00 and 11+32.26

BORING NO. B-7
Station 17+86
Offset 50 ft LT
Ground Surface Elev. 438.0 ft

Surface Water Elev. N/A ft
Stream Bed Elev. N/A ft

Groundwater Elev.:
First Encounter 425.0 ft ▼
Upon Completion N/A ft
After N/A Hrs. N/A ft

Description	Elev.	DEPTH (ft)	BLOWS (/6")	UCS Qu (tsf)	MOIST (%)
FILL: CINDERS (A-1)					
FILL: Dark brown to brown SILTY LOAM (A-4), stiff	436.5		5 6 9	3.0 P	16
		-5	4 6 7	0.9 S/10%	18
Brown SILTY LOAM (A-4), very moist, very soft *Percentage finer than #200 test performed (21.6% passing)*	432.5		WOH WOH WOH	<0.25 P	29
Percentage finer than #200 test performed (19.9% passing)	429.0		WOH WOH	NC	26
Brown to reddish brown SANDY LOAM (A-3) w/ silt, very moist, very loose		-10	1		
Percentage finer than #200 test performed (19.2% passing)			WOH WOH 1	NC	23
Percentage finer than #200 test performed (20.3% passing)			1 1 1	<0.25 P	31
	423.0	-15			
Gray and Brown SILTY CLAY (A-6), moist, very soft			WOH 1 2	0.5 S/15%	30
	420.0				
Gray CLAY (A-7), moist, soft *Atterberg Limits test performed (LL=34, PI=18)*			1 1 2	0.6 B/20%	23
	418.0	-20			
Gray fine SAND (A-3), wet, medium dense			4 7 9	NC	23
	414.0				
Gray SILTY LOAM (A-4), moist, stiff		-25	5 5 5	1.5 P	21
	412.5				
Gray fine SAND (A-3), wet, medium dense			8 12 13	NC	NC
		-30	6 6 7	NC	24
	406.0				
Gray CLAY (A-7), moist, stiff					
		-35	5 4 6	2.0 B/20%	23
		-40	4 4 7	2.5 B/20%	21

The Unconfined Compressive Strength (UCS) Failure Mode is indicated by (B-Bulge, S-Shear, P-Penetrometer)
AASHTO Classifications are based on visual classifications unless otherwise noted BBS, form 137 (Rev. 8-99)

DocuSign Envelope ID: 41EE30FD-5812-4639-8B29-F6077C56C7AE

Illinois Department of Transportation
Division of Highways
SCI Engineering, Inc.

SOIL BORING LOG

Date 3/1,2/2022

ROUTE Route 157/162 DESCRIPTION IL - Route 157 over Judy's Bridge LOGGED BY SCI

SECTION 51-1R LOCATION Madison County, Illinois, SEC. 4, TWP. 3N, RNG. 8W
Lat 38.740837 Long -90.002113

COUNTY Madison DRILLING METHOD CME 550 w/HSA and Mud Rotary HAMMER TYPE Automatic

STRUCT. NO. SN 060-0229/ SN 060-7003
Station 584+70.00 and 11+32.26

BORING NO. B-7
Station 17+86
Offset 50 ft LT
Ground Surface Elev. 438.0 ft

Surface Water Elev. N/A ft
Stream Bed Elev. N/A ft

Groundwater Elev.:
First Encounter 425.0 ft ▼
Upon Completion N/A ft
After N/A Hrs. N/A ft

Description	Elev.	DEPTH (ft)	BLOWS (/6")	UCS Qu (tsf)	MOIST (%)
Gray CLAY (A-7), moist, stiff *(continued)*					
	396.0				
Gray SANDY CLAY LOAM (A-6), moist, stiff (fill)					
		-45	3 4 7	2.0 B/20%	18
		-50	3 4 6	1.6 B/20%	17
	384.5				
Gray CLAY LOAM (A-7), moist, stiff		-55	5 6 8	2.8 B/20%	22
Gray CLAY LOAM (A-7), moist, stiff *(continued)*					
	376.0				
Gray CLAY (A-7), moist, very stiff		-65	6 6 9	3.0 B/20%	22
Becomes brown and stiff		-70	6 4 5	2.7 B/20%	32
Becomes very stiff		-75	4 7 9	2.1 B/20%	28
Becomes gray	358.5	-80	4 5 7	1.4 B/20%	28

The Unconfined Compressive Strength (UCS) Failure Mode is indicated by (B-Bulge, S-Shear, P-Penetrometer)
AASHTO Classifications are based on visual classifications unless otherwise noted BBS, form 137 (Rev. 8-99)

MODEL: Default
FILE NAME: G:\FEI\Jobs_2020\20-1581 PTB 195-57 REALIGNMENT IL 162 AT IL 157 PH II D-98-009-04 - FEI PRIME\CADD\CADD Sheets\0600229-76A46-039-BoringLogs01.dgn

FUHRMANN ENGINEERING
WWW. FUHRMANN-ENG .COM

USER NAME =	DESIGNED - T.S. Friederich	REVISED -	
	CHECKED - E.M. Lagemann	REVISED -	
PLOT SCALE =	DRAWN - E.M. Lagemann	REVISED -	
PLOT DATE =	CHECKED - T.S. Friederich	REVISED -	

STATE OF ILLINOIS
DEPARTMENT OF TRANSPORTATION

BORING LOGS I
STRUCTURE NO. 060-0229

SHEET 39 OF 41 SHEETS

F.A.P RTE.	SECTION	COUNTY	TOTAL SHEETS	SHEET NO.
*	51-1R	MADISON	296	181
		CONTRACT NO. 76A46		
		ILLINOIS	FED. AID PROJECT	

3/4/2024 3:28:30 PM

Illinois Department of Transportation
Division of Highways
SCI Engineering, Inc.

SOIL BORING LOG

Date 3/1,2/2022

ROUTE Route 157/162 DESCRIPTION IL - Route 157 over Judy's Branch LOGGED BY SCI

SECTION 51-1R LOCATION Madison County, Illinois, SEC. 4, TWP. 3N, RNG. 8W
Lat 38.740837 Long -90.002113

COUNTY Madison DRILLING METHOD CME 550 w/HSA and Mud Rotary HAMMER TYPE Automatic

STRUCT. NO. SN 060-0229/ SN 060-7003
Station 584+70.00 and 11+32.26

BORING NO. B-7
Station 17+86
Offset 50 ft LT
Ground Surface Elev. 438.0 ft

Surface Water Elev. N/A ft
Stream Bed Elev. N/A ft

Groundwater Elev.:
First Encounter 425.0 ft ▼
Upon Completion N/A ft
After N/A Hrs. N/A ft

Description	Elev.	DEPTH (ft)	BLOWS (/6")	UCS Qu (tsf)	MOIST (%)
Gray weathered CLAYEY SHALE, hard *(continued)*					
		-85	6 11 20	1.7 S/10%	21
			50/5.5" 50/2"		11
	350.5		50/5" 50/1"		11
Sampler Refusal at 87.5 feet. Borehole grouted upon completion.					
		-90			
		-95			
		-100			

The Unconfined Compressive Strength (UCS) Failure Mode is indicated by (B-Bulge, S-Shear, P-Penetrometer)
AASHTO Classifications are based on visual classifications unless otherwise noted BBS, form 137 (Rev. 8-99)

DocuSign Envelope ID: 41EE30FD-5812-4639-8B29-F6077C56C7AE

Illinois Department of Transportation
Division of Highways
SCI Engineering, Inc.

SOIL BORING LOG

Date 3/14,15/2022

ROUTE Route 157/162 DESCRIPTION IL - Route 157 over Judy's Branch LOGGED BY SCI

SECTION 51-1R LOCATION Madison County, Illinois, SEC. 4, TWP. 3N, RNG. 8W
Lat 38.741338 Long -90.001838

COUNTY Madison DRILLING METHOD CME 550 w/HSA and Mud Rotary HAMMER TYPE Automatic

STRUCT. NO. SN 060-0229
Station 584+70.00

BORING NO. B-19
Station 585+41
Offset 46 ft RT
Ground Surface Elev. 438.0 ft

Surface Water Elev. N/A ft
Stream Bed Elev. N/A ft

Groundwater Elev.:
First Encounter 422.0 ft ▼
Upon Completion N/A ft
After N/A Hrs. N/A ft

Description	Elev.	DEPTH (ft)	BLOWS (/6")	UCS Qu (tsf)	MOIST (%)
Brown SILTY CLAY (A-6), very soft			WOH 1 1	0.3 S/20%	26
	435.5				
Gray CLAY (A-7), some fine to medium sand, clay is loose to medium stiff			1 1 2	0.5 P	24
		-5			
			2 2 2	0.5 P	28
	430.0				
Tan and gray CLAY (A-7), soft			2 2 2	0.3 S/20%	50
		-10			
			WOH 2 3	0.3 S/5%	51
	425.0				
CLAYEY SAND (A-2), sand is fine to coarse, very loose			1 1 2	NC	25
		-15			
	422.0 ▼				
Gray CLAY (A-6), soft			2 2 2	0.2 S/5%	36
			WOH 2 2	0.1 S/5%	34
		-20			
Gray CLAY (A-6), soft *(continued)*					
Becomes silty			1 2 3	2.0 P	28
	415.0				
Gray SAND and CLAY (A-3, A-6), sand is loose to medium dense, clay is medium stiff			2 2 2	1.0 P	20
		-25			
			2 3 8	0.5 P	24
			4 14 13	0.5 P	23
		-30			
	408.0				
Light brown CLAY (A-7), medium stiff			3 2 3	0.3 P	26
		-35			
			3 4 4	0.6 B/20%	21
		-40			

The Unconfined Compressive Strength (UCS) Failure Mode is indicated by (B-Bulge, S-Shear, P-Penetrometer)
AASHTO Classifications are based on visual classifications unless otherwise noted BBS, form 137 (Rev. 8-99)

Illinois Department of Transportation
Division of Highways
SCI Engineering, Inc.

SOIL BORING LOG

Date 3/14,15/2022

ROUTE Route 157/162 DESCRIPTION IL - Route 157 over Judy's Bridge LOGGED BY SCI

SECTION 51-1R LOCATION Madison County, Illinois, SEC. 4, TWP. 3N, RNG. 8W
Lat 38.741338 Long -90.001838

COUNTY Madison DRILLING METHOD CME 550 w/HSA and Mud Rotary HAMMER TYPE Automatic

STRUCT. NO. SN 060-0229
Station 584+70.00

BORING NO. B-19
Station 585+41
Offset 46 ft RT
Ground Surface Elev. 438.0 ft

Surface Water Elev. N/A ft
Stream Bed Elev. N/A ft

Groundwater Elev.:
First Encounter 422.0 ft ▼
Upon Completion N/A ft
After N/A Hrs. N/A ft

Description	Elev.	DEPTH (ft)	BLOWS (/6")	UCS Qu (tsf)	MOIST (%)
Light brown CLAY (A-7), medium stiff *(continued)*					
Becomes gray		-45	4 3 6	0.6 B/20%	21
		-50	5 6 9	0.4 S/6%	21
Becomes light brown		-55	4 4 7	0.4 S/15%	50
Light brown and gray CLAY (A-6), medium stiff	381.0				
		-60	4 4 5	0.5 S/10%	23
Light brown and gray CLAY (A-6), medium stiff *(continued)*					
Becomes silty		-65	4 5 6	0.4 S/10%	19
Gray CLAY (A-7), medium stiff	371.0				
		-70	4 4 8	0.8 B/20%	22
Gray SILTY CLAY (A-6), medium stiff	366.0				
		-75	4 3 5	0.6 B/20%	26
Gray CLAY (A-7), medium stiff	361.0				
		-80	5 5 8	0.6 B/20%	25

The Unconfined Compressive Strength (UCS) Failure Mode is indicated by (B-Bulge, S-Shear, P-Penetrometer)
AASHTO Classifications are based on visual classifications unless otherwise noted BBS, form 137 (Rev. 8-99)

Illinois Department of Transportation
Division of Highways
SCI Engineering, Inc.

SOIL BORING LOG

Date 3/14,15/2022

ROUTE Route 157/162 DESCRIPTION IL - Route 157 over Judy's Branch LOGGED BY SCI

SECTION 51-1R LOCATION Madison County, Illinois, SEC. 4, TWP. 3N, RNG. 8W
Lat 38.741338 Long -90.001838

COUNTY Madison DRILLING METHOD CME 550 w/HSA and Mud Rotary HAMMER TYPE Automatic

STRUCT. NO. SN 060-0229
Station 584+70.00

BORING NO. B-19
Station 585+41
Offset 46 ft RT
Ground Surface Elev. 438.0 ft

Surface Water Elev. N/A ft
Stream Bed Elev. N/A ft

Groundwater Elev.:
First Encounter 422.0 ft ▼
Upon Completion N/A ft
After N/A Hrs. N/A ft

Description	Elev.	DEPTH (ft)	BLOWS (/6")	UCS Qu (tsf)	MOIST (%)
Gray CLAY (A-7), medium stiff *(continued)*					
some weathered limestone		-85	6 8 16	2.0 P	22
Gray SHALE, hard	349.5		50/5"		
Sampler Refusal at 89 feet. Borehole grouted upon completion.	349.0	-90			12
		-95			
		-100			

The Unconfined Compressive Strength (UCS) Failure Mode is indicated by (B-Bulge, S-Shear, P-Penetrometer)
AASHTO Classifications are based on visual classifications unless otherwise noted BBS, form 137 (Rev. 8-99)

MODEL: Default
FILE NAME: G:\FEI\jobs_2020\20-1581 PTB 195-57 REALIGNMENT IL 162 AT IL 157 PH II D-98-009-04 - FEI PRIME\CADD\CADD Sheets\06002 29-76A46-041-BoringLogs03.dgn

FUHRMANN ENGINEERING
WWW. FUHRMANN-ENG .COM

USER NAME =	DESIGNED - T.S. Friederich	REVISED -	
	CHECKED - E.M. Lagemann	REVISED -	
PLOT SCALE =	DRAWN - E.M. Lagemann	REVISED -	
PLOT DATE =	CHECKED - T.S. Friederich	REVISED -	

STATE OF ILLINOIS
DEPARTMENT OF TRANSPORTATION

BORING LOGS III
STRUCTURE NO. 060-0229

SHEET 41 OF 41 SHEETS

F.A.P RTE.	SECTION	COUNTY	TOTAL SHEETS	SHEET NO.
*	51-1R	MADISON	296	183
		CONTRACT NO. 76A46		
		ILLINOIS	FED. AID PROJECT	

3/4/2024 3:31:10 PM

Benchmark: Found cut square (with +) on top parapet wall northwest corner of SN 060-0087. Elev. 449.226
Existing Structure: None

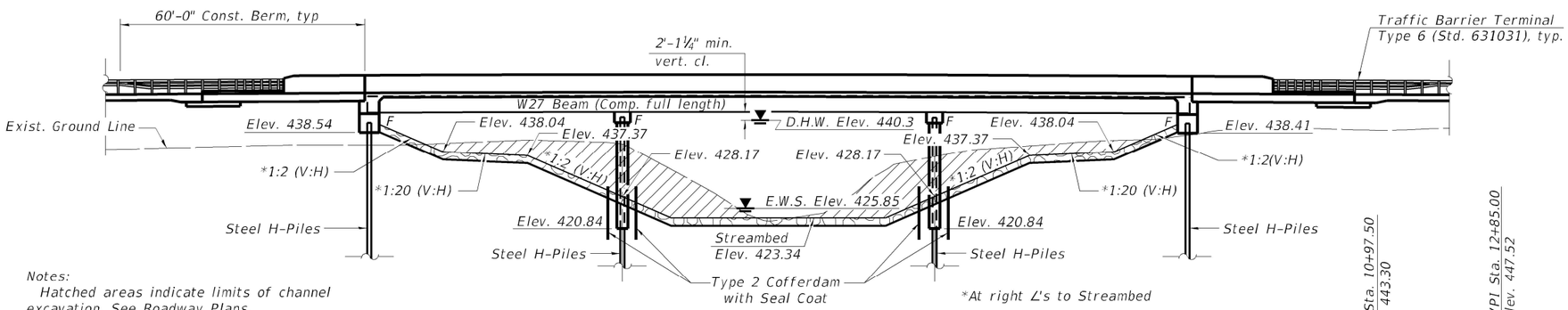

Notes:
Hatched areas indicate limits of channel excavation. See Roadway Plans.
For Section A-A and View B-B, see sheet 3 of 31.

ELEVATION

LOADING HL-93

Allow 50#/sq. ft. for future wearing surface.

SEISMIC DATA

Seismic Performance Zone (SPZ) = 2
Design Spectral Acceleration at 1.0 sec. (SD1) = 0.23g
Design Spectral Acceleration at 0.2 sec. (SDS) = 0.53g
Soil Site Class = D

DESIGN STRESSES

All structural steel shall be painted

FIELD UNITS

f'c = 3,500 psi
f'c = 4,000 psi (Superstructure)
fy = 60,000 psi (Reinforcement)
fy = 50,000 psi (M270 Grade 50)
fy = 36,000 psi (A709 Grade 36)

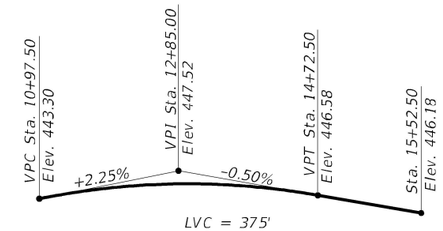

PROFILE GRADE

Along ℄ Prop. IL Rte. 162

DESIGN SPECIFICATIONS

2020 AASHTO LRFD Bridge Design Specifications, 9th Edition

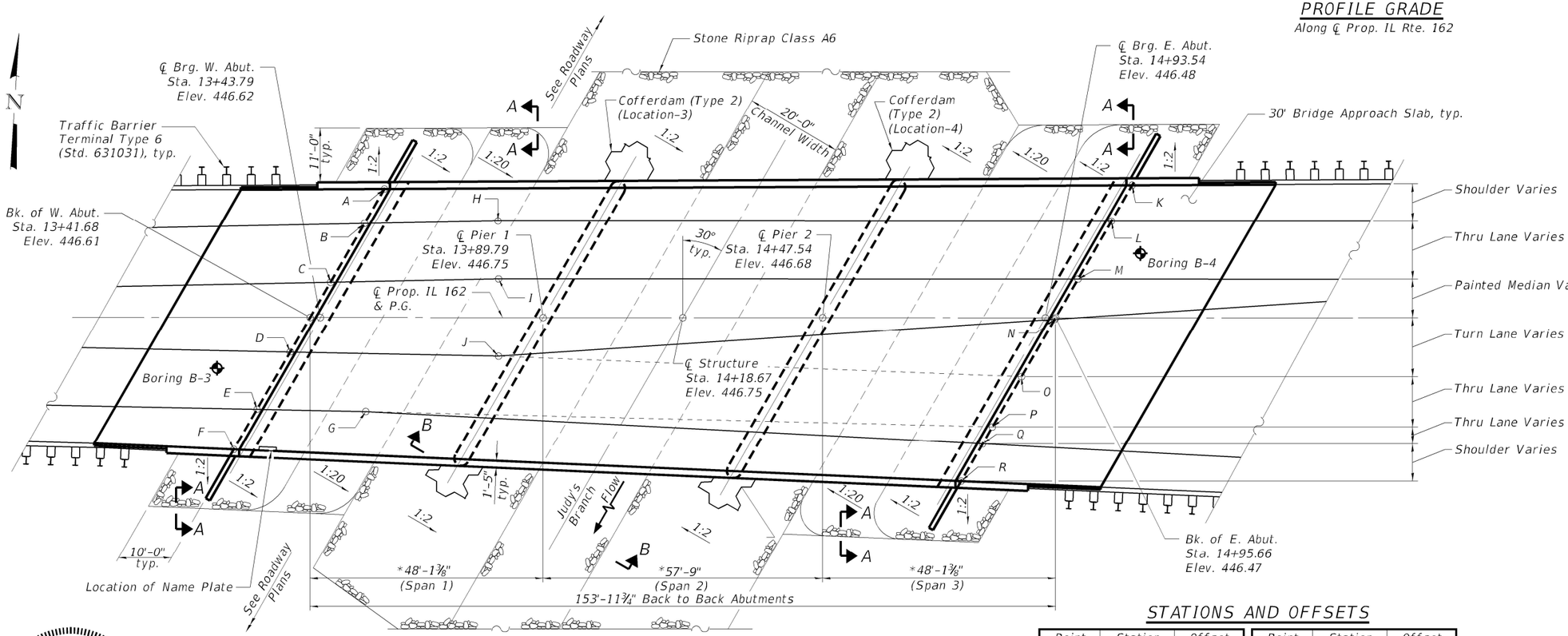

PLAN

* Measured along ℄ Prop. IL 162

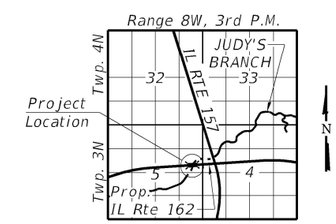

LOCATION SKETCH

STATIONS AND OFFSETS

Point	Station	Offset
A	13+57.02	26.58' Lt.
B	13+52.90	19.45' Lt.
C	13+45.89	7.31' Lt.
D	13+37.55	7.14' Rt.
E	13+30.70	19.01' Rt.
F	13+25.92	27.30' Rt.
G	13+53.16	19.45' Rt.
H	13+80.47	20.00' Lt.
I	13+80.59	8.00' Lt.

Point	Station	Offset
J	13+80.59	8.00' Rt.
K	15+11.48	27.40' Lt.
L	15+07.21	20.00' Lt.
M	15+00.28	8.00' Lt.
N	14+95.46	0.34' Rt.
O	14+91.04	8.00' Rt.
P	14+84.11	20.00' Rt.
Q	14+80.58	26.12' Rt.
R	14+76.15	33.78' Rt.

ADAM C. STEURY
081-007821
LICENSED STRUCTURAL ENGINEER
STATE OF ILLINOIS

SIGNED: Adam C Steury Date: 04/09/2024
ILLINOIS STRUCTURAL ENGINEER NO. 081-007821
LICENSE EXPIRES: 11-30-2024

APPROVED
For Structural Adequacy Only
Engineer of Bridges & Structures

GENERAL PLAN & ELEVATION
PROP. IL RTE. 162 OVER JUDY'S BRANCH
F.A.P. RTE. 586 - SEC. 51-1R
MADISON COUNTY
STATION 14+18.67
STRUCTURE NO. 060-0241

LOCHMUELLER GROUP
1928 SrA Bradley R. Smith Drive
Troy, IL 62294
PHONE: 618.667.2480

USER NAME =	DESIGNED - ACS	REVISED	
	CHECKED - LDG	REVISED	
PLOT SCALE =	DRAWN - WJS	REVISED	
PLOT DATE = 4/9/2024	CHECKED - LDG	REVISED	

STATE OF ILLINOIS
DEPARTMENT OF TRANSPORTATION

SHEET NO. 1 OF 31 SHEETS

F.A.P. RTE.	SECTION	COUNTY	TOTAL SHEETS	SHEET NO.
586	51-1R	MADISON	296	184
	SN 060-0241	CONTRACT NO. 76A46		
		ILLINOIS FED. AID PROJECT		

\\lochsbr\cad\Production\Files\2020\420-0018\CAD\Bridge\Final Design\0600241-76A46-001-GPE.dgn

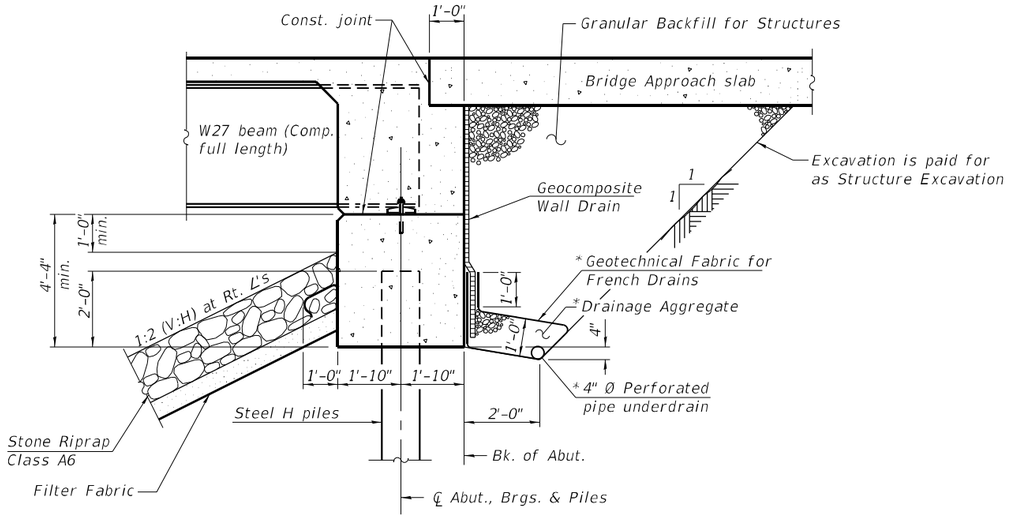

SECTION THRU INTEGRAL ABUTMENT

(Horiz. dim. at Rt. L's)

* Included in the cost of Pipe Underdrains for Structures

Note:
All drainage system components shall extend to 2'-0" from the end of each wingwall except an outlet pipe shall extend until intersecting with the side slopes. The pipes shall drain into concrete headwalls. (See Article 601.05 of the Standard Specifications and Highway Standard 601101).

GENERAL NOTES

Fasteners shall be ASTM F 3125 Grade A325 Type 1, mechanically galvanized bolts in painted areas. Bolts 7/8 in. diameter, holes 15/16 in. diameter, unless otherwise noted.

Calculated weight of Structural Steel = 184,746 pounds (Grade 50) and 27,343 pounds (Grade 36).

No field welding is permitted except as specified in the contract documents.

Reinforcement bars designated (E) shall be epoxy coated.

The finishing machine rails shall be placed on the top of the top flange of the exterior beams within the deck pour. Beam blocks shall be placed between beams at all tie locations in each bay for the full width of the deck pour.

Slipforming of the parapets is not allowed.

Bearing seat surfaces shall be constructed or adjusted to the designated elevations within a tolerance of 1/8 in. (0.01 ft.). Adjustment shall be made either by grinding the surface or by shimming the bearings.

The Seal coat design thickness is based on the Cofferdam Design Water Elevation (CDWE) shown. Final cofferdam design, details and seal coat thickness shall be submitted to the Engineer for approval. The CDWE is equal to the Estimated Water Surface Elevation (EWSE) plus 3 feet.

Layout of the slope protection system may be varied to suit ground conditions in the field as directed by the Engineer.

The embankment configuration shown shall be the minimum that must be placed and compacted prior to construction of the abutments.

The Inorganic Zinc Rich Primer / Acrylic / Acrylic Paint System shall be used for shop and field painting of new structural steel except where otherwise noted. The color of the final finish coat shall be Gray, Munsell No 5B 7/1.

INDEX OF SHEETS

1. General Plan & Elevation
2. General Data
3. Footing Layout and Construction Details
4.–9. Top of Slab Elevations
10. Top of West Approach Slab Elevations
11. Top of East Approach Slab Elevations
12. Superstructure
13.–14. Superstructure Details
15. West Diaphragm Details
16. East Diaphragm Details
17.–18. West Bridge Approach Slab Details
19.–20. East Bridge Approach Slab Details
21. Framing Plan
22.–24. Structural Steel
25. West Abutment Details
26. East Abutment Details
27. Pier 1 Details
28. Pier 2 Details
29. HP Pile Details
30.–31. Soil Borings

STA. 14+18.67
BUILT 20__ BY
STATE OF ILLINOIS
F.A.P. RT. 586 SEC. 51-1R
LOADING HL-93
STR. NO. 060-0241

NAME PLATE

See Std. 515001

(Location of Name Plate on S.W. corner of bridge)

TOTAL BILL OF MATERIAL

ITEM	UNIT	SUPER	SUB	TOTAL
Stone Riprap, Class A6	Sq. Yd.		1,223	1,223
Filter Fabric	Sq. Yd.		1,223	1,223
Structure Excavation	Cu. Yd.		441	441
Cofferdam Excavation	Cu. Yd.		920	920
Cofferdam (Type 2) (Location-3)	Each		1	1
Cofferdam (Type 2) (Location-4)	Each		1	1
Concrete Structures	Cu. Yd.		431.6	431.6
Concrete Superstructure	Cu. Yd.	326.9		326.9
Bridge Deck Grooving	Sq. Yd.	1,308		1,308
Seal Coat Concrete	Cu. Yd.		186.2	186.2
Protective Coat	Sq. Yd.	1,449		1,449
Concrete Superstructure (Approach Slab)	Cu. Yd.	165.6		165.6
Furnishing and Erecting Structural Steel	L Sum	0.46		0.46
Stud Shear Connectors	Each	7,863		7,863
Reinforcement Bars, Epoxy Coated	Pound	165,520	38,000	203,520
Furnishing Steel Piles HP14x117	Foot		5,418	5,418
Driving Piles	Foot		5,418	5,418
Test Pile Steel HP14x117	Each		1	1
Name Plates	Each	1		1
Anchor Bolts, 3/4"	Each	32		32
Anchor Bolts, 1"	Each	32		32
Granular Backfill for Structures	Cu. Yd.		196	196
Geocomposite Wall Drain	Sq. Yd.		104	104
Pipe Underdrains for Structures 4"	Foot		191	191

DESIGN SCOUR ELEVATION TABLE

Event / Limit State	Design Scour Elevations (ft.)				
	W. Abut.	Pier 1	Pier 2	E. Abut.	Item 113
Q100	439.38	415.46	415.46	439.25	5
Q200	439.38	415.16	415.16	439.25	
Design	439.38	415.46	415.46	439.25	
Check	439.38	415.16	415.16	439.25	

WATERWAY INFORMATION

Drainage Area = 8.6 sq. mi.

Existing Overtopping Elev. = N/A at Sta.
Proposed Overtopping Elev. - 438.54* at Sta. 7+45.00

Flood Event	Freq. Yr.	Discharge Ft^3/S	Waterway Opening - Ft^2		Natural H.W.E. - Ft.	Head - Ft.		Headwater Elevation - Ft.	
			Existing	Proposed		Existing	Proposed	Existing	Proposed
Overtop Existing	<10	<3880	603	772					438.2*
Design	50	5750	783	885	440.3	-	0.3	-	440.6
Base	100	6590	866	927	440.7	-	0.5	-	441.2
Scour Design Check	200	7600	959	972	441.1	-	0.6	-	441.7
Overtop Proposed	N/A	-	-	-	-	-	-	-	-
Max. Calc.	500	8920	1067	1019	441.6	-	2.0	-	443.6

10 Year Velocity Through Existing Bridge = N/A ft/s
10 Year Velocity Through Proposed Bridge = 4.99 ft/s

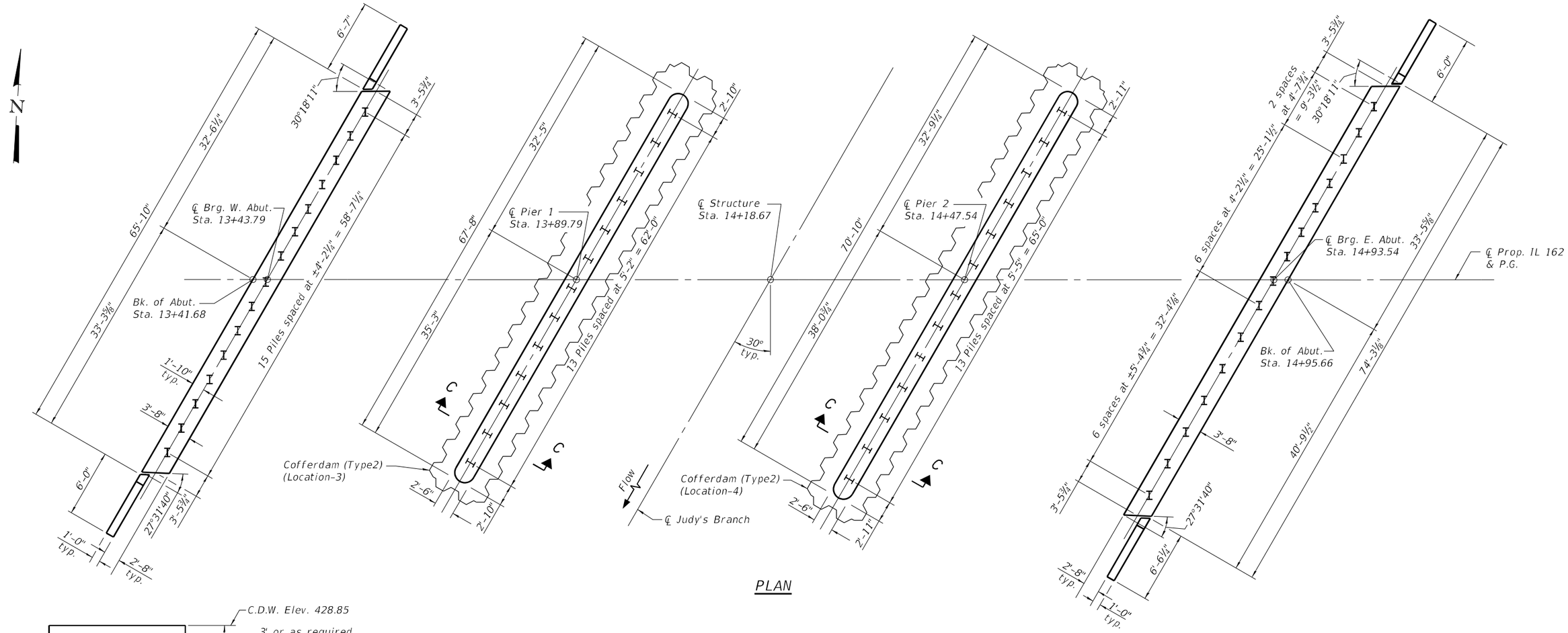

PLAN

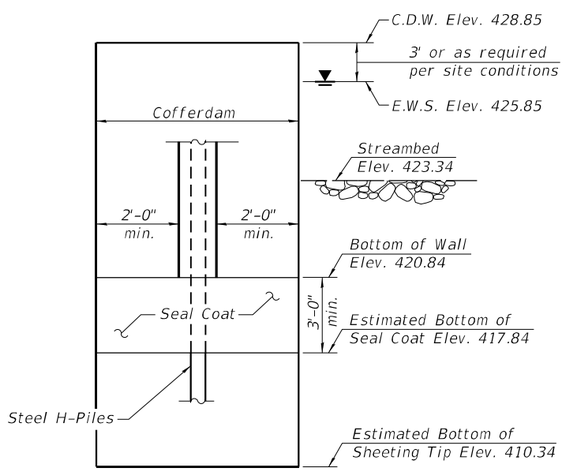

SECTION C-C

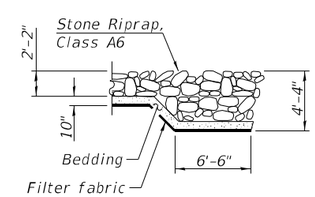

SECTION A-A

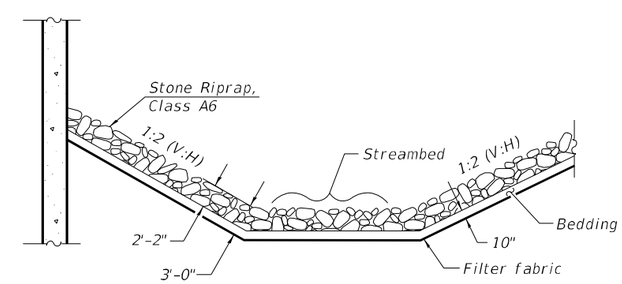

VIEW B-B

(All slopes taken at Rt. ∠'s to Creek)

\\loch\Root\Production\Files\2020\420-008\CAD\Bridge\Final Design\0600241-76A46-003-Footing_Layout.dgn

LOCHMUELLER GROUP 1928 S/N Bradley R. Smith Drive Troy, IL 62294 PHONE: 618.667.1400	USER NAME =	DESIGNED - ACS	REVISED
		CHECKED - LDG	REVISED
	PLOT SCALE =	DRAWN - WJS	REVISED
	PLOT DATE = 3/4/2024	CHECKED - LDG	REVISED

STATE OF ILLINOIS
DEPARTMENT OF TRANSPORTATION

FOOTING PLAN AND CONSTRUCTION DETAILS
STRUCTURE NO. 060-0241

SHEET NO. 3 OF 31 SHEETS

F.A.P. RTE.	SECTION	COUNTY	TOTAL SHEETS	SHEET NO.
586	51-1R	MADISON	296	186
	SN 060-0241	CONTRACT NO. 76A46		
	ILLINOIS FED. AID PROJECT			

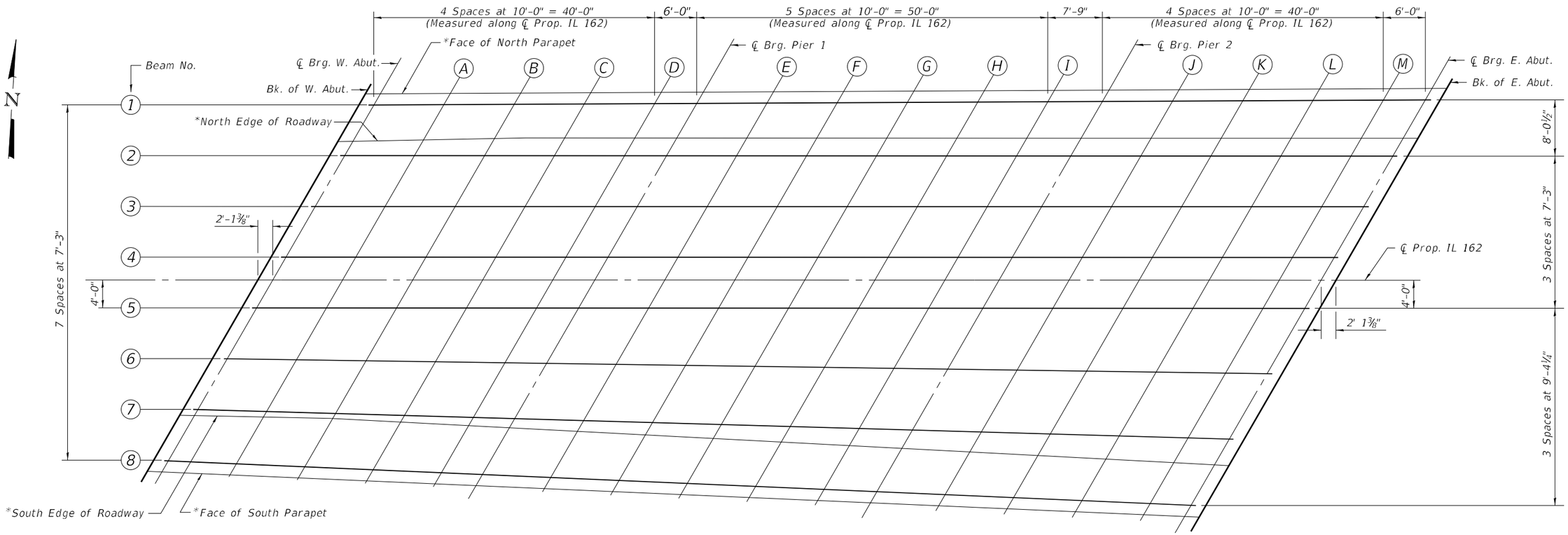

LAYOUT PLAN FOR DECK ELEVATIONS

* For Stations and Offsets see sheet 1 of 31.

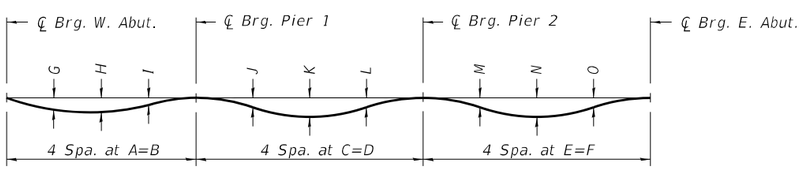

DEAD LOAD DEFLECTION DIAGRAM

(Includes weight of concrete only.)

DEAD LOAD DEFLECTION TABLE

	A	B	C	D	E	F	G	H	I	J	K	L	M	N	O
Beam 1	11'-6 7/16"	46'-1¾"	14'-5¾"	57'-11⅛"	11'-6 7/16"	46'-1¾"	⅛"	¼"	⅛"	⅛"	¼"	⅛"	⅛"	¼"	⅛"
Beam 2 -5	11'-6"	46'-0"	14'-5¼"	57'-9"	11'-6"	46'-0"	⅛"	¼"	⅛"	⅛"	¼"	⅛"	⅛"	¼"	⅛"
Beam 6	11'-4⅞"	45'-7⅝"	14'-3⅞"	57'-3½"	11'-4⅞"	45'-7⅝"	⅛"	¼"	⅛"	⅛"	¼"	⅛"	⅛"	¼"	⅛"
Beam 7	11'-3 13/16"	45'-3¼"	14'-2½"	56'-10"	11'-3 13/16"	45'-3¼"	⅛"	¼"	⅛"	⅛"	¼"	⅛"	⅛"	¼"	⅛"
Beam 8	11'-2¾"	44'-11⅛"	14'-1 3/16"	56'-4¾"	11'-2¾"	44'-11⅛"	⅛"	¼"	⅛"	⅛"	¼"	⅛"	⅛"	¼"	⅛"

Note:
The above deflections are not to be used in the field if the Engineer is working from the grade elevations adjusted for dead load deflections as shown on sheets 5 thru 9 of 31.

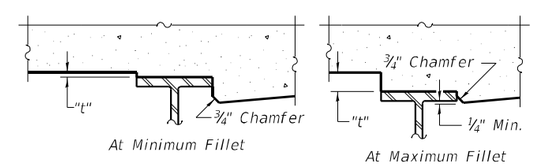

To determine "t": After all structural steel has been erected, elevations of the top flanges of the beams shall be taken at intervals shown above. These elevations subtracted from the "Theoretical Grade Elevations Adjusted for Dead Load Deflection" shown on sheets 5 thru 9 of 31, minus slab thickness, equals the fillet heights "t" above top flange of beams.

FILLET HEIGHTS

FACE OF NORTH PARAPET

Location	Station	Offset	Theoretical Grade Elevations	Theoretical Grade Elevations Adjusted For Dead Load Deflection
Bk. of W. Abut.	13+57.01	-26.58	446.24	446.24
℄ Brg. W. Abut.	13+59.14	-26.59	446.24	446.24
A	13+69.17	-26.64	446.27	446.29
B	13+79.20	-26.69	446.30	446.31
C	13+89.24	-26.74	446.31	446.32
D	13+99.27	-26.80	446.32	446.32
℄ Brg. Pier 1	14+05.29	-26.83	446.32	446.32
E	14+15.32	-26.88	446.31	446.32
F	14+25.35	-26.94	446.30	446.32
G	14+35.38	-26.99	446.28	446.30
H	14+45.41	-27.04	446.25	446.27
I	14+55.43	-27.09	446.22	446.22
℄ Brg. Pier 2	14+63.21	-27.13	446.18	446.18
J	14+73.24	-27.19	446.14	446.14
K	14+83.27	-27.24	446.08	446.10
L	14+93.30	-27.29	446.03	446.05
M	15+03.33	-27.35	445.98	445.99
℄ Brg. E. Abut.	15+09.35	-27.38	445.95	445.95
Bk. of East Abut.	15+11.48	-27.39	445.94	445.94

BEAM 1

Location	Station	Offset	Theoretical Grade Elevations	Theoretical Grade Elevations Adjusted For Dead Load Deflection
Bk. of W. Abut.	13+56.09	-24.99	446.27	446.27
℄ Brg. W. Abut.	13+58.22	-25.00	446.27	446.27
A	13+68.25	-25.05	446.30	446.32
B	13+78.28	-25.11	446.33	446.34
C	13+88.31	-25.16	446.34	446.35
D	13+98.34	-25.21	446.35	446.35
℄ Brg. Pier 1	14+04.36	-25.24	446.35	446.35
E	14+14.39	-25.30	446.34	446.35
F	14+24.42	-25.35	446.33	446.35
G	14+34.45	-25.40	446.31	446.34
H	14+44.48	-25.45	446.28	446.30
I	14+54.51	-25.51	446.25	446.25
℄ Brg. Pier 2	14+62.29	-25.55	446.22	446.22
J	14+72.32	-25.60	446.17	446.18
K	14+82.35	-25.65	446.12	446.14
L	14+92.38	-25.71	446.07	446.09
M	15+02.41	-25.76	446.02	446.03
℄ Brg. E. Abut.	15+08.43	-25.79	445.99	445.99
Bk. of East Abut.	15+10.55	-25.80	445.98	445.98

NORTH EDGE OF ROADWAY

Location	Station	Offset	Theoretical Grade Elevations	Theoretical Grade Elevations Adjusted For Dead Load Deflection
Bk. of W. Abut.	13+52.91	-19.47	446.36	446.36
℄ Brg. W. Abut.	13+55.05	-19.49	446.37	446.37
A	13+65.17	-19.60	446.40	446.42
B	13+75.29	-19.71	446.43	446.44
C	13+85.34	-19.82	446.44	446.45
D	13+95.34	-19.93	446.45	446.45
℄ Brg. Pier 1	14+01.34	-20.00	446.45	446.45
E	14+11.34	-20.00	446.45	446.46
F	14+21.34	-20.00	446.44	446.46
G	14+31.34	-20.00	446.43	446.45
H	14+41.34	-20.00	446.40	446.42
I	14+51.34	-20.00	446.37	446.38
℄ Brg. Pier 2	14+59.09	-20.00	446.34	446.34
J	14+69.09	-20.00	446.30	446.31
K	14+79.09	-20.00	446.25	446.27
L	14+89.09	-20.00	446.20	446.22
M	14+99.09	-20.00	446.15	446.16
℄ Brg. E. Abut.	15+05.09	-20.00	446.12	446.12
Bk. of East Abut.	15+07.21	-20.00	446.11	446.11

BEAM 2

Location	Station	Offset	Theoretical Grade Elevations	Theoretical Grade Elevations Adjusted For Dead Load Deflection
Bk. of W. Abut.	13+51.93	-17.75	446.39	446.39
℄ Brg. W. Abut.	13+54.04	-17.75	446.39	446.39
A	13+64.07	-17.75	446.43	446.44
B	13+74.10	-17.75	446.45	446.47
C	13+84.13	-17.75	446.47	446.48
D	13+94.16	-17.75	446.48	446.49
℄ Brg. Pier 1	14+00.04	-17.75	446.49	446.49
E	14+10.04	-17.75	446.49	446.49
F	14+20.04	-17.75	446.48	446.50
G	14+30.04	-17.75	446.46	446.49
H	14+40.04	-17.75	446.44	446.46
I	14+50.04	-17.75	446.41	446.42
℄ Brg. Pier 2	14+57.79	-17.75	446.38	446.38
J	14+67.79	-17.75	446.34	446.35
K	14+77.79	-17.75	446.29	446.31
L	14+87.79	-17.75	446.24	446.26
M	14+97.79	-17.75	446.19	446.20
℄ Brg. E. Abut.	15+03.79	-17.75	446.16	446.16
Bk. of E. Abut.	15+05.90	-17.75	446.15	446.15

BEAM 3

Location	Station	Offset	Theoretical Grade Elevations	Theoretical Grade Elevations Adjusted For Dead Load Deflection
Bk. of W. Abut.	13+47.74	-10.50	446.48	446.48
℄ Brg. W. Abut.	13+49.85	-10.50	446.49	446.49
A	13+59.85	-10.50	446.52	446.54
B	13+69.85	-10.50	446.55	446.57
C	13+79.85	-10.50	446.57	446.59
D	13+89.85	-10.50	446.59	446.59
℄ Brg. Pier 1	13+95.85	-10.50	446.59	446.59
E	14+05.85	-10.50	446.60	446.60
F	14+15.85	-10.50	446.59	446.61
G	14+25.85	-10.50	446.58	446.60
H	14+35.85	-10.50	446.56	446.58
I	14+45.85	-10.50	446.53	446.54
℄ Brg. Pier 2	14+53.60	-10.50	446.51	446.51
J	14+63.60	-10.50	446.47	446.47
K	14+73.60	-10.50	446.42	446.43
L	14+83.60	-10.50	446.37	446.39
M	14+93.60	-10.50	446.32	446.33
℄ Brg. E. Abut.	14+99.60	-10.50	446.29	446.29
Bk. of E. Abut.	15+01.71	-10.50	446.28	446.28

BEAM 4

Location	Station	Offset	Theoretical Grade Elevations	Theoretical Grade Elevations Adjusted For Dead Load Deflection
Bk. of W. Abut.	13+43.56	-3.25	446.57	446.57
℄ Brg. W. Abut.	13+45.67	-3.25	446.58	446.58
A	13+55.67	-3.25	446.62	446.63
B	13+65.67	-3.25	446.65	446.67
C	13+75.67	-3.25	446.67	446.69
D	13+85.67	-3.25	446.69	446.69
℄ Brg. Pier 1	13+91.67	-3.25	446.70	446.70
E	14+01.67	-3.25	446.70	446.71
F	14+11.67	-3.25	446.70	446.72
G	14+21.67	-3.25	446.69	446.72
H	14+31.67	-3.25	446.68	446.70
I	14+41.67	-3.25	446.65	446.66
℄ Brg. Pier 2	14+49.42	-3.25	446.63	446.63
J	14+59.42	-3.25	446.59	446.60
K	14+69.42	-3.25	446.55	446.57
L	14+79.42	-3.25	446.50	446.52
M	14+89.42	-3.25	446.45	446.46
℄ Brg. E. Abut.	14+95.42	-3.25	446.42	446.42
Bk. of E. Abut.	14+97.53	-3.25	446.41	446.41

℄ ROADWAY & P.G

Location	Station	Offset	Theoretical Grade Elevations	Theoretical Grade Elevations Adjusted For Dead Load Deflection
Bk. of W. Abut.	13+41.68	0.00	446.61	446.61
℄ Brg. W. Abut.	13+43.79	0.00	446.62	446.62
A	13+53.79	0.00	446.66	446.67
B	13+63.79	0.00	446.69	446.71
C	13+73.79	0.00	446.72	446.73
D	13+83.79	0.00	446.74	446.74
℄ Brg. Pier 1	13+89.79	0.00	446.75	446.75
E	13+99.79	0.00	446.75	446.76
F	14+09.79	0.00	446.75	446.77
G	14+19.79	0.00	446.74	446.77
H	14+29.79	0.00	446.73	446.75
I	14+39.79	0.00	446.71	446.71
℄ Brg. Pier 2	14+47.54	0.00	446.68	446.68
J	14+57.54	0.00	446.65	446.66
K	14+67.54	0.00	446.61	446.62
L	14+77.54	0.00	446.56	446.58
M	14+87.54	0.00	445.51	445.52
℄ Brg. E. Abut.	14+93.54	0.00	446.48	446.48
Bk. of E. Abut.	14+95.65	0.00	446.47	446.47

BEAM 5

Location	Station	Offset	Theoretical Grade Elevations	Theoretical Grade Elevations Adjusted For Dead Load Deflection
Bk. of W. Abut.	13+39.37	4.00	446.54	446.54
℄ Brg. W. Abut.	13+41.48	4.00	446.55	446.55
A	13+51.48	4.00	446.59	446.60
B	13+61.48	4.00	446.63	446.64
C	13+71.48	4.00	446.65	446.66
D	13+81.48	4.00	446.67	446.68
℄ Brg. Pier 1	13+87.48	4.00	446.68	446.68
E	13+97.48	4.00	446.69	446.70
F	14+07.48	4.00	446.69	446.71
G	14+17.48	4.00	446.69	446.71
H	14+27.48	4.00	446.67	446.69
I	14+37.48	4.00	446.65	446.66
℄ Brg. Pier 2	14+45.23	4.00	446.63	446.63
J	14+55.23	4.00	446.60	446.61
K	14+65.23	4.00	446.56	446.58
L	14+75.23	4.00	446.51	446.53
M	14+85.23	4.00	446.46	446.47
℄ Brg. E. Abut.	14+91.23	4.00	446.43	446.43
Bk. of E. Abut.	14+93.35	4.00	446.42	446.42

BEAM 6

Location	Station	Offset	Theoretical Grade Elevations	Theoretical Grade Elevations Adjusted For Dead Load Deflection
Bk. of W. Abut.	13+35.19	11.22	446.41	446.41
℄ Brg. W. Abut.	13+37.29	11.25	446.42	446.42
A	13+47.21	11.39	446.46	446.48
B	13+57.13	11.53	446.50	446.52
C	13+67.05	11.67	446.53	446.54
D	13+76.97	11.81	446.55	446.55
℄ Brg. Pier 1	13+82.92	11.90	446.56	446.56
E	13+92.84	12.04	446.57	446.58
F	14+02.76	12.18	446.57	446.59
G	14+12.68	12.32	446.57	446.59
H	14+22.59	12.46	446.55	446.57
I	14+32.51	12.60	446.53	446.54
℄ Brg. Pier 2	14+40.20	12.71	446.52	446.52
J	14+50.12	12.85	446.48	446.49
K	14+60.04	12.99	446.44	446.46
L	14+69.96	13.13	446.40	446.42
M	14+79.88	13.27	446.35	446.36
℄ Brg. E. Abut.	14+85.83	13.35	446.32	446.32
Bk. of E. Abut.	14+87.93	13.38	446.30	446.30

BEAM 7

Location	Station	Offset	Theoretical Grade Elevations	Theoretical Grade Elevations Adjusted For Dead Load Deflection
Bk. of W. Abut.	13+31.02	18.44	446.28	446.28
℄ Brg. W. Abut.	13+33.11	18.50	446.29	446.29
A	13+42.95	18.78	446.33	446.35
B	13+52.78	19.06	446.37	446.39
C	13+62.62	19.34	446.40	446.41
D	13+72.45	19.62	446.42	446.42
℄ Brg. Pier 1	13+78.36	19.79	446.43	446.43
E	13+88.20	20.07	446.44	446.45
F	13+98.03	20.35	446.45	446.47
G	14+07.87	20.64	446.44	446.47
H	14+17.71	20.92	446.43	446.45
I	14+27.55	21.20	446.42	446.42
℄ Brg. Pier 2	14+35.18	21.42	446.40	446.40
J	14+45.02	21.70	446.37	446.37
K	14+54.85	21.98	446.33	446.35
L	14+64.69	22.26	446.29	446.31
M	14+74.52	22.54	446.23	446.24
℄ Brg. E. Abut.	14+80.43	22.71	446.20	446.20
Bk. of E. Abut.	14+82.51	22.77	446.19	446.19

SOUTH EDGE OF ROADWAY

Location	Station	Offset	Theoretical Grade Elevations	Theoretical Grade Elevations Adjusted For Dead Load Deflection
Bk. of W. Abut.	13+30.71	18.97	446.27	446.27
℄ Brg. W. Abut.	13+32.80	19.05	446.28	446.28
A	13+42.68	19.42	446.33	446.34
B	13+52.56	19.79	446.36	446.37
C	13+62.28	20.16	446.38	446.40
D	13+72.00	20.52	446.41	446.41
℄ Brg. Pier 1	13+77.82	20.74	446.42	446.42
E	13+87.53	21.25	446.42	446.43
F	13+97.23	21.76	446.42	446.44
G	14+06.94	22.27	446.42	446.44
H	14+16.64	22.77	446.41	446.42
I	14+24.16	23.17	446.39	446.40
℄ Brg. Pier 2	14+33.87	23.67	446.37	446.37
J	14+43.58	24.18	446.33	446.34
K	14+53.28	24.69	446.29	446.31
L	14+62.99	25.20	446.25	446.27
M	14+68.81	25.50	446.20	446.21
℄ Brg. E. Abut.	14+78.53	26.01	446.16	446.16
Bk. of E. Abut.	14+80.59	26.12	446.15	446.15

BEAM 8

Location	Station	Offset	Theoretical Grade Elevations	Theoretical Grade Elevations Adjusted For Dead Load Deflection
Bk. of W. Abut.	13+26.85	25.66	446.11	446.11
℄ Brg. W. Abut.	13+28.92	25.75	446.12	446.12
A	13+38.68	26.17	446.17	446.18
B	13+48.44	26.59	446.20	446.22
C	13+58.20	27.02	446.23	446.24
D	13+67.96	27.44	446.26	446.26
℄ Brg. Pier 1	13+73.80	27.69	446.27	446.27
E	13+83.56	28.11	446.28	446.29
F	13+93.32	28.53	446.29	446.30
G	14+03.09	28.95	446.28	446.31
H	14+12.85	29.38	446.28	446.29
I	14+22.61	29.80	446.26	446.27
℄ Brg. Pier 2	14+30.15	30.12	446.24	446.24
J	14+39.91	30.55	446.22	446.22
K	14+49.67	30.97	446.18	446.20
L	14+59.43	31.39	446.14	446.16
M	14+69.19	31.81	446.09	446.10
℄ Brg. E. Abut.	14+75.03	32.06	446.06	446.06
Bk. of E. Abut.	14+77.09	32.15	446.05	446.05

FACE OF SOUTH PARAPET

Location	Station	Offset	Theoretical Grade Elevations	Theoretical Grade Elevations Adjusted For Dead Load Deflection
Bk. of W. Abut	13+25.91	27.30	446.08	446.08
℄ Brg. W. Abut.	13+27.98	27.39	446.09	446.09
A	13+37.74	27.81	446.13	446.14
B	13+47.50	28.23	446.17	446.18
C	13+57.26	28.65	446.20	446.21
D	13+67.02	29.07	446.22	446.22
℄ Brg. Pier 1	13+72.86	29.32	446.23	446.23
E	13+82.62	29.74	446.25	446.25
F	13+92.38	30.17	446.25	446.27
G	14+02.15	30.59	446.25	446.27
H	14+11.91	31.01	446.24	446.26
I	14+21.67	31.43	446.23	446.23
℄ Brg. Pier 2	14+29.21	31.76	446.21	446.21
J	14+38.97	32.18	446.19	446.19
K	14+48.73	32.60	446.15	446.17
L	14+58.49	33.02	446.11	446.13
M	14+68.25	33.44	446.06	446.07
℄ Brg. E. Abut.	14+74.09	33.69	446.03	446.03
Bk. of E. Abut.	14+76.15	33.78	446.02	446.02

NORTH CURB LINE

Location	Station	Offset	Theoretical Grade Elevations
W. End of W. Appr. Slab	13+28.09	-26.43	446.11
A1	13+38.12	-26.48	446.16
A2	13+48.15	-26.53	446.20
E. End of W. Appr. Slab	13+58.18	-26.58	446.24

NORTH EDGE OF ROADWAY

Location	Station	Offset	Theoretical Grade Elevations
W. End of W. Appr. Slab	13+23.72	-18.87	446.23
A1	13+33.84	-19.07	446.28
A2	13+43.96	-19.27	446.33
E. End of W. Appr. Slab	13+54.07	-19.47	446.37

℄ PROP. IL 162 & P.G.

Location	Station	Offset	Theoretical Grade Elevations
W. End of W. Appr. Slab	13+12.83	0.00	446.45
A1	13+22.83	0.00	446.51
A2	13+32.83	0.00	446.57
E. End of W. Appr. Slab	13+42.83	0.00	446.61

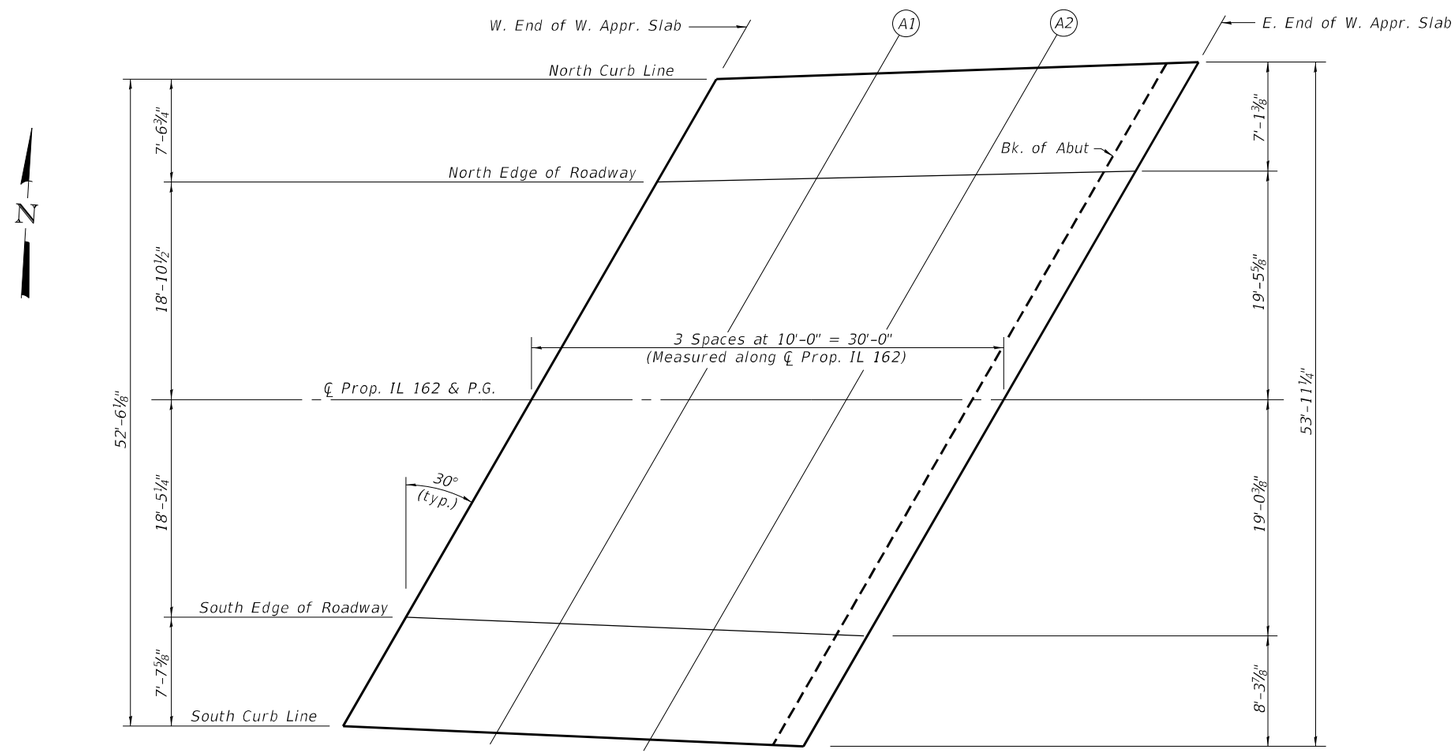

PLAN

SOUTH EDGE OF ROADWAY

Location	Station	Offset	Theoretical Grade Elevations
W. End of W. Appr. Slab	13+02.19	18.44	446.09
A1	13+12.07	18.63	446.16
A2	13+21.96	18.83	446.22
E. End of W. Appr. Slab	13+31.84	19.03	446.27

SOUTH CURB LINE

Location	Station	Offset	Theoretical Grade Elevations
W. End of W. Appr. Slab	12+97.77	26.08	445.91
A1	13+07.53	26.50	445.97
A2	13+17.29	26.92	446.03
E. End of W. Appr. Slab	13+27.04	27.35	446.08

NORTH CURB LINE

Location	Station	Offset	Theoretical Grade Elevations
W. End of E. Appr. Slab	15+10.32	-27.39	445.95
A3	15+20.35	-27.44	445.89
A4	15+30.38	-27.50	445.84
E. End of E. Appr. Slab	15+40.41	-27.55	445.79

NORTH EDGE OF ROADWAY

Location	Station	Offset	Theoretical Grade Elevations
W. End of E. Appr. Slab	15+06.05	-20	446.11
A3	15+16.05	-20	446.06
A4	15+26.05	-20	446.01
E. End of E. Appr. Slab	15+36.05	-20	445.96

℄ PROP. IL 162 & P.G.

Location	Station	Offset	Theoretical Grade Elevations
W. End of E. Appr. Slab	14+94.51	0.00	446.47
A3	15+04.51	0.00	446.42
A4	15+14.51	0.00	446.37
E. End of E. Appr. Slab	15+24.51	0.00	446.32

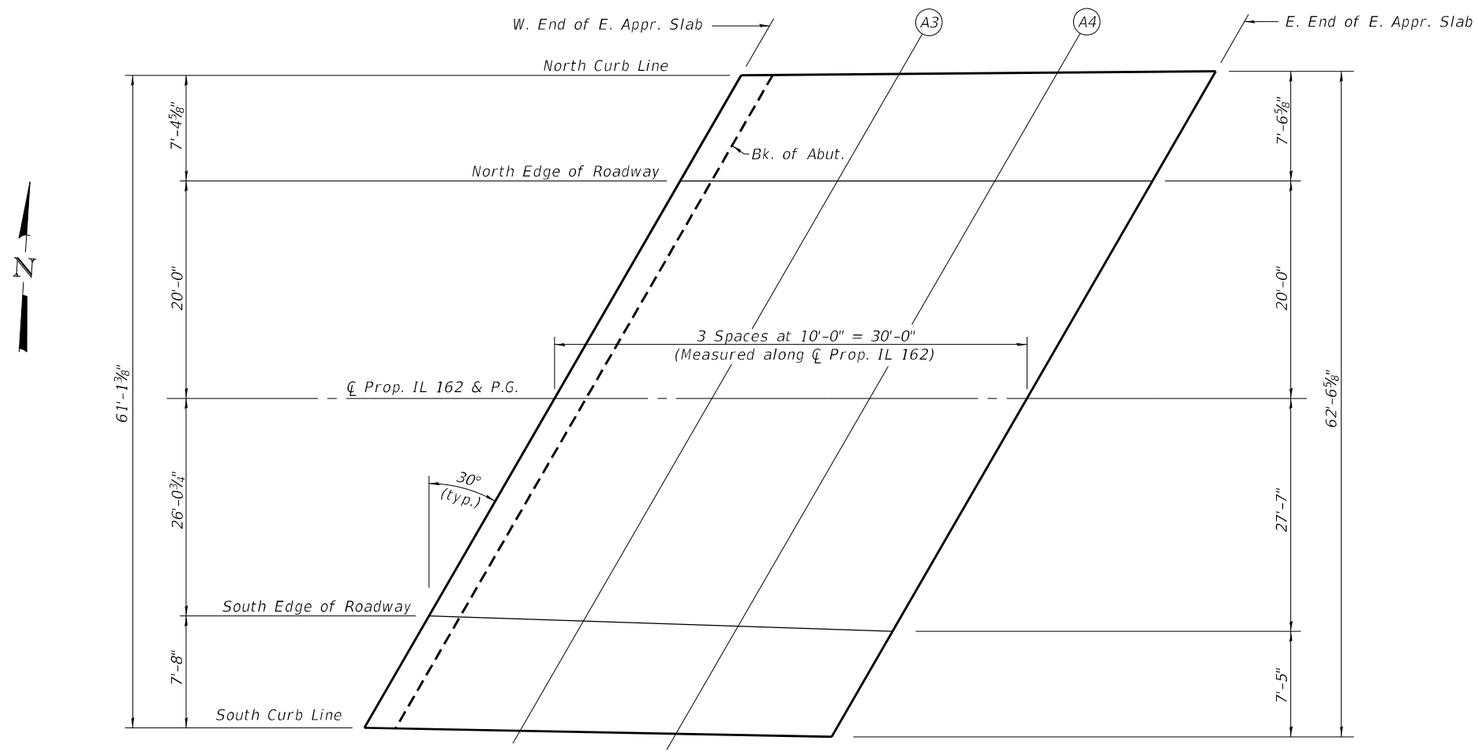

PLAN

SOUTH EDGE OF ROADWAY

Location	Station	Offset	Theoretical Grade Elevations
W. End of E. Appr. Slab	14+79.46	26.06	446.16
A3	14+89.17	26.56	446.10
A4	14+98.88	27.07	446.04
E. End of E. Appr. Slab	15+08.58	27.58	445.99

SOUTH CURB LINE

Location	Station	Offset	Theoretical Grade Elevations
W. End of E. Appr. Slab	14+75.03	33.73	446.02
A3	14+84.79	34.16	445.97
A4	14+94.54	34.58	445.91
E. End of E. Appr. Slab	15+04.30	35.00	445.86

\\loch-fs01\Production\Files\2020\420-0018\CAD\Bridge\Final Design\0600241-76A46-01\Top_of_East_Approach_Slab_Elevations.dgn

LOCHMUELLER GROUP
1928 S/A Bradley B. Smith Drive
Troy, IL 62294
PHONE: 618.667.1400

USER NAME =	DESIGNED - ACS	REVISED
	CHECKED - LDG	REVISED
PLOT SCALE =	DRAWN - WJS	REVISED
PLOT DATE = 3/4/2024	CHECKED - LDG	REVISED

STATE OF ILLINOIS
DEPARTMENT OF TRANSPORTATION

TOP OF EAST APPROACH SLAB ELEVATIONS
STRUCTURE NO. 060-0241

SHEET NO. 11 OF 31 SHEETS

F.A.P. RTE.	SECTION	COUNTY	TOTAL SHEETS	SHEET NO.
586	51-1R	MADISON	296	194
	SN 060-0241	CONTRACT NO. 76A46		
	ILLINOIS	FED. AID PROJECT		

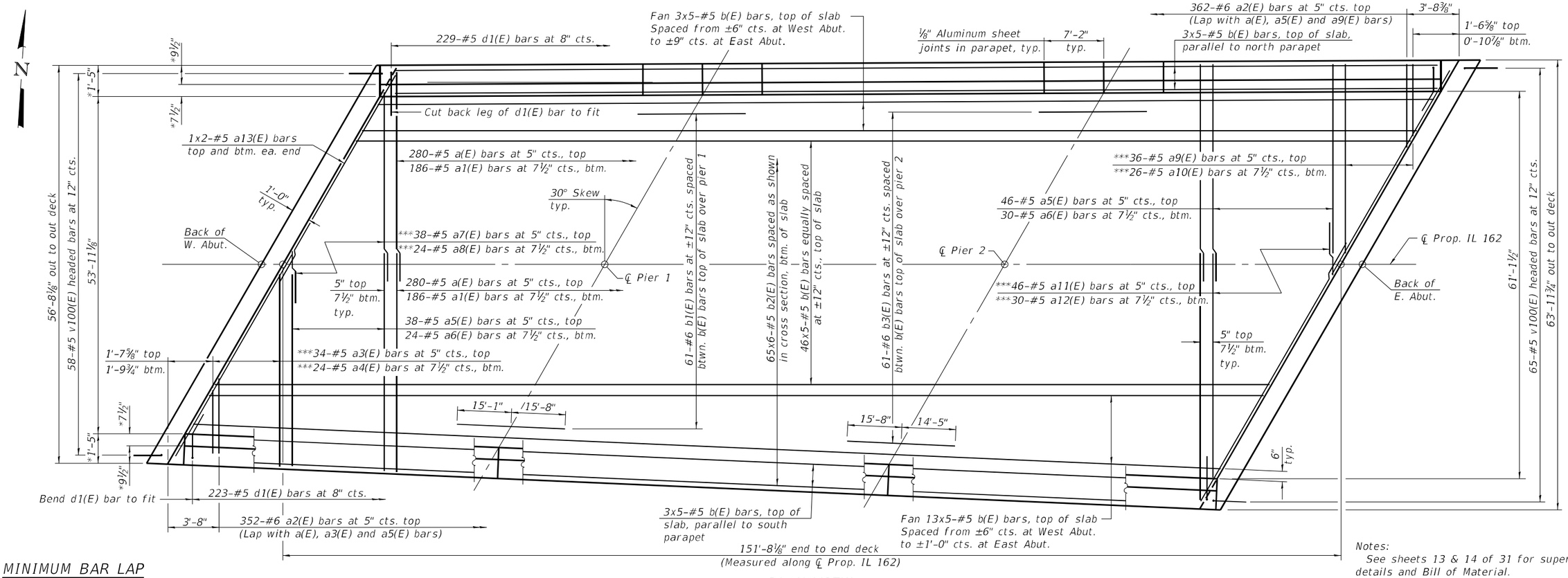

PLAN VIEW

Notes:
See sheets 13 & 14 of 31 for superstructure details and Bill of Material.
Bars indicated thus 20x3-#5 etc. indicates 20 lines of bars with 3 lengths per line.

MINIMUM BAR LAP

#5 bar = 3'-6"

***See Field Cutting Diagram on sheet 14 of 31.

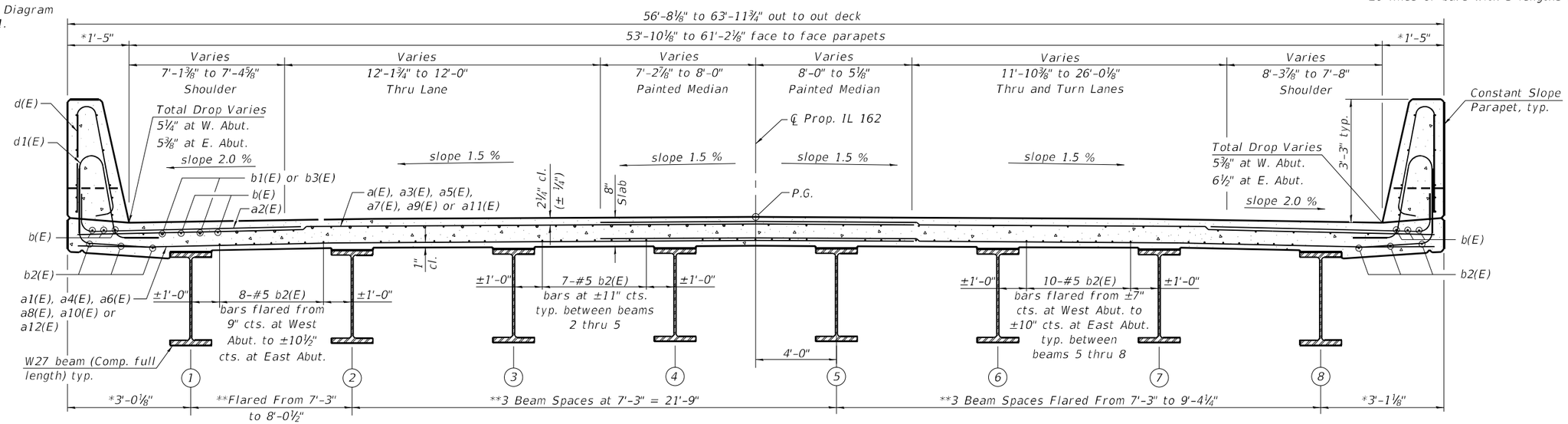

AT PIER

CROSS SECTION
(Looking East)
All dimensions taken at right angles to ℄ Roadway. (Except as noted)

NEAR MIDSPAN

* Perpendicular to Fascia Beam.
** Perpendicular to ℄ Roadway.

\\Loch\Root\Production\Files\2020\420-0018\CAD\Bridge\Final Design\0600241-76A46-012-Superstructure.dgn

LOCHMUELLER GROUP 1928 SrA Bradley R. Smith Drive Troy, IL 62294 PHONE: 618.667.1400	USER NAME =	DESIGNED - ACS	REVISED
		CHECKED - LDG	REVISED
	PLOT SCALE =	DRAWN - WJS	REVISED
	PLOT DATE = 3/4/2024	CHECKED - LDG	REVISED

STATE OF ILLINOIS
DEPARTMENT OF TRANSPORTATION

SUPERSTRUCTURE
STRUCTURE NO. 060-0241

SHEET NO. 12 OF 31 SHEETS

F.A.P. RTE.	SECTION	COUNTY	TOTAL SHEETS	SHEET NO.
586	51-1R	MADISON	296	195
	SN 060-0241	CONTRACT NO. 76A46		
	ILLINOIS FED. AID PROJECT			

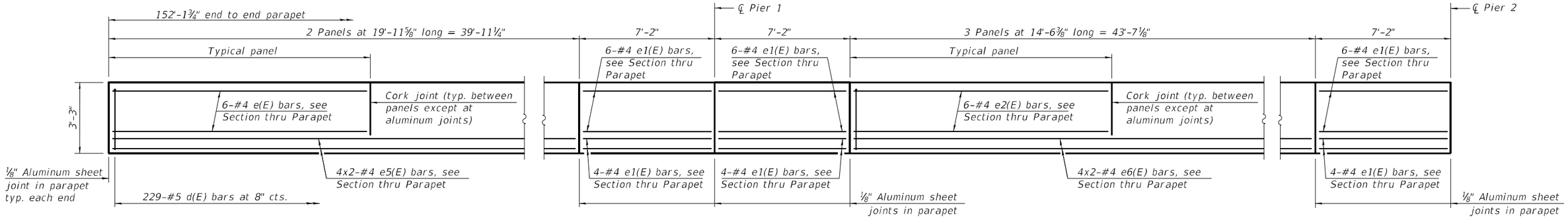

SPAN 1 OR SPAN 3 (MIRRORED)

SPAN 2

INSIDE ELEVATION OF PARAPET

(NORTH PARAPET)

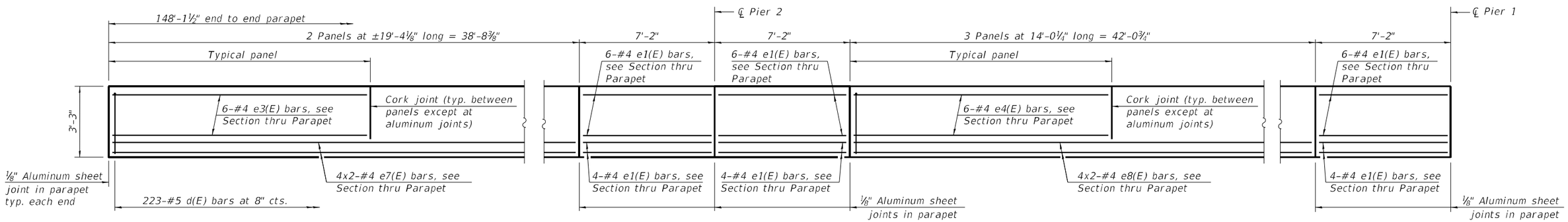

SPAN 3 OR SPAN 1 (MIRRORED)

SPAN 2

INSIDE ELEVATION OF PARAPET

(SOUTH PARAPET)

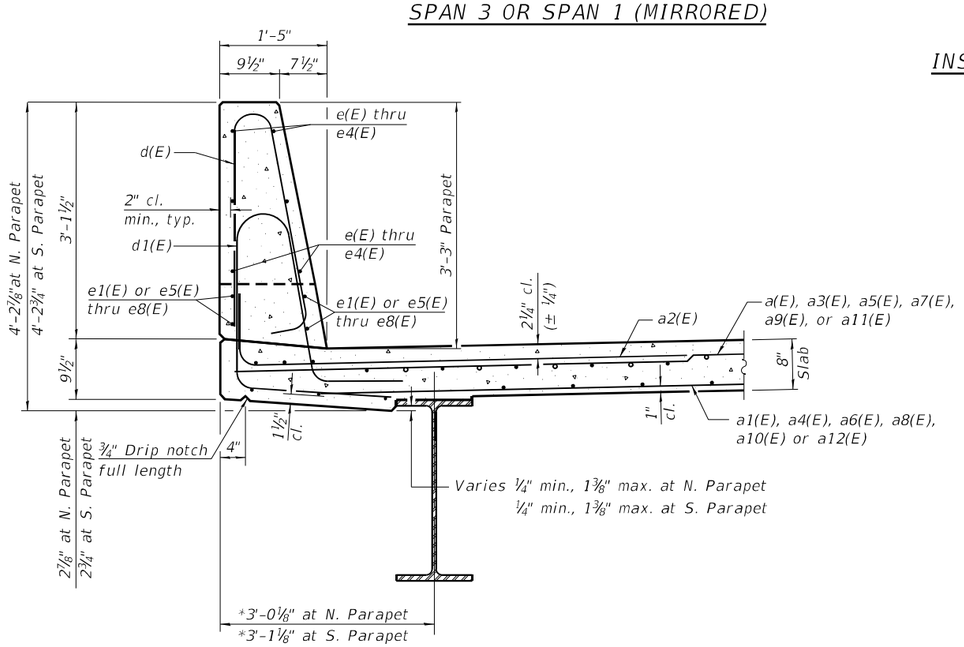

SECTION THRU PARAPET

* Perpendicular to Fascia Beam

MINIMUM BAR LAP

#4 bar = 2'-5"

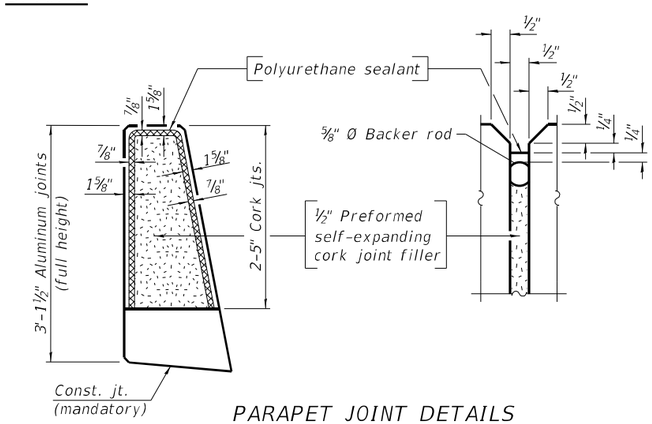

PARAPET JOINT DETAILS

Notes:

The ⅛" aluminum sheet shall be ASTM B 209 alloy 3003-H14 and coated to minimize reaction with wet concrete. Cost included with Concrete Superstructure.

The polyurethane sealant shall be according to Article 1050.04 of the Std. Spec. and the color shall be gray.

Headed bars shall conform to ASTM A970 with threaded attachment; Class HA; and reinforcement bars conforming to ASTM A706. Cost included with Reinforcement Bars, Epoxy Coated.

Bars indicated thus 4x2-#4 etc. indicates 4 lines of bars with 2 lengths per line.

\\loch\Root\Production\Files\2020\420-0018\CAD\Bridge\Final Design\0600241-76A46-013-Superstructure_Details.dgn

LOCHMUELLER GROUP
1928 S/A Bradley R. Smith Drive
Troy, IL 62294
PHONE: 618.667.1400

USER NAME =	DESIGNED - ACS	REVISED
	CHECKED - LDG	REVISED
PLOT SCALE =	DRAWN - WJS	REVISED
PLOT DATE = 3/4/2024	CHECKED - LDG	REVISED

STATE OF ILLINOIS
DEPARTMENT OF TRANSPORTATION

SUPERSTRUCTURE DETAILS
STRUCTURE NO. 060-0241

SHEET NO. 13 OF 31 SHEETS

F.A.P. RTE.	SECTION	COUNTY	TOTAL SHEETS	SHEET NO.
586	51-1R	MADISON	296	196
	SN 060-0241	CONTRACT NO. 76A46		
	ILLINOIS FED. AID PROJECT			

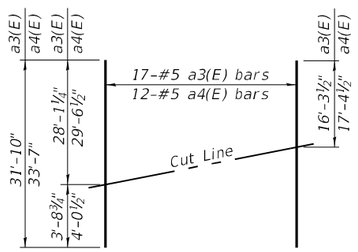

FIELD CUTTING DIAGRAM

Order a3(E) and a4(E) bars full length.
Cut as shown and use remainder of bars within specified range as shown on superstructure plan view.

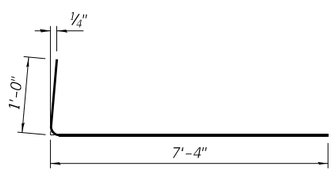

BAR a2(E)

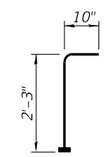

BAR v100(E)

(Headed)

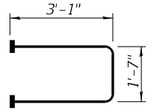

BAR s10(E)

(Headed)

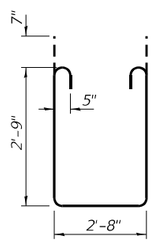

BAR s11(E)

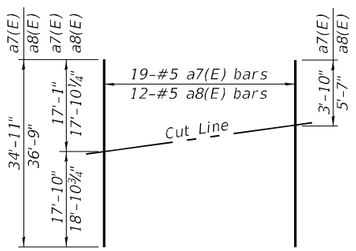

FIELD CUTTING DIAGRAM

Order a7(E) and a8(E) bars full length.
Cut as shown and use remainder of bars within specified range as shown on superstructure plan view.

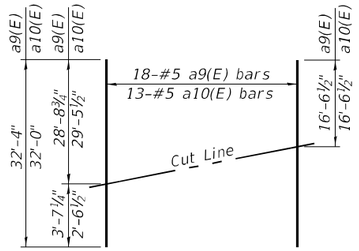

FIELD CUTTING DIAGRAM

Order a9(E) and a10(E) bars full length.
Cut as shown and use remainder of bars within specified range as shown on superstructure plan view.

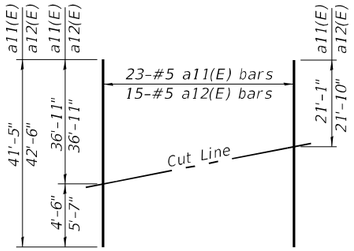

FIELD CUTTING DIAGRAM

Order a11(E) and a12(E) bars full length.
Cut as shown and use remainder of bars within specified range as shown on superstructure plan view.

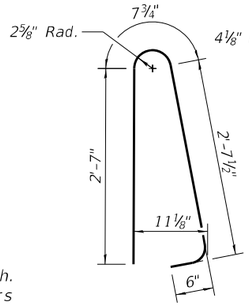

BAR d(E)

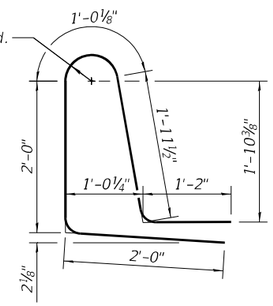

BAR d1(E)

SUPERSTRUCTURE BILL OF MATERIAL

Bar	No.	Size	Length	Shape
a(E)	560	#5	33'-6"	
a1(E)	372	#5	33'-6"	
a2(E)	714	#6	8'-4"	
a3(E)	17	#5	31'-10"	
a4(E)	12	#5	33'-7"	
a5(E)	84	#5	28'-7"	
a6(E)	54	#5	28'-7"	
a7(E)	19	#5	34'-11"	
a8(E)	12	#5	36'-9"	
a9(E)	18	#5	32'-4"	
a10(E)	13	#5	32'-0"	
a11(E)	23	#5	41'-5"	
a12(E)	15	#5	42'-6"	
a13(E)	8	#5	33'-9"	
b(E)	340	#5	33'-2"	
b1(E)	61	#6	30'-9"	
b2(E)	390	#5	28'-3"	
b3(E)	61	#6	30'-1"	
d(E)	452	#5	6'-5"	
d1(E)	452	#5	8'-2"	
e(E)	24	#4	19'-7"	
e1(E)	80	#4	6'-10"	
e2(E)	18	#4	14'-2"	
e3(E)	24	#4	19'-0"	
e4(E)	18	#4	13'-8"	
e5(E)	16	#4	21'-1"	
e6(E)	8	#4	23'-0"	
e7(E)	16	#4	20'-5"	
e8(E)	8	#4	22'-3"	
m10(E)	8	#6	34'-7"	
m11(E)	30	#6	7'-10"	
m12(E)	12	#6	3'-0"	
m13(E)	9	#6	10'-3"	
m14(E)	3	#6	8'-9"	
m15(E)	8	#6	38'-11"	
s10(E)	117	#5	7'-9"	
s11(E)	117	#5	9'-4"	
v100(E)	123	#5	3'-1"	
Concrete Superstructure			Cu. Yds.	319.3
Reinforcement Bars, Epoxy Coated			Pound	92,410

LOCHMUELLER GROUP
1928 SrA Bradley R. Smith Drive
Troy, IL 62294
PHONE: 618.667.1900

USER NAME =	DESIGNED - ACS	REVISED	
	CHECKED - LDG	REVISED	
PLOT SCALE =	DRAWN - WJS	REVISED	
PLOT DATE = 3/4/2024	CHECKED - LDG	REVISED	

STATE OF ILLINOIS
DEPARTMENT OF TRANSPORTATION

SUPERSTRUCTURE DETAILS
STRUCTURE NO. 060-0241

SHEET NO. 14 OF 31 SHEETS

F.A.P. RTE.	SECTION	COUNTY	TOTAL SHEETS	SHEET NO.
586	51-1R	MADISON	296	197
SN 060-0241		CONTRACT NO. 76A46		
		ILLINOIS FED. AID PROJECT		

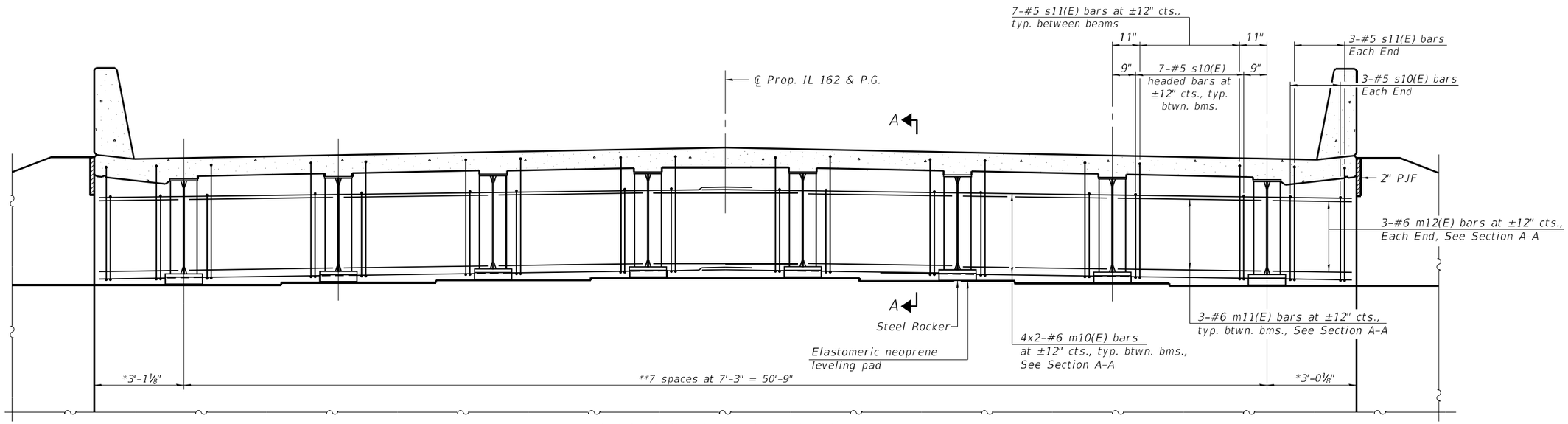

DIAPHRAGM AT WEST ABUTMENT

* Perpendicular to Fascia Beam.
** Perpendicular to ℄ Prop. IL 162.

MINIMUM BAR LAP

#6 bar = 4'-0"

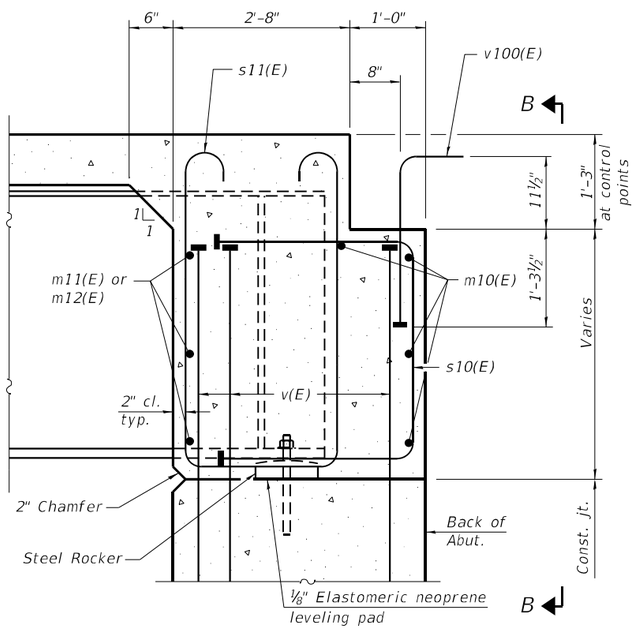

SECTION A-A

(at Rt. L's)

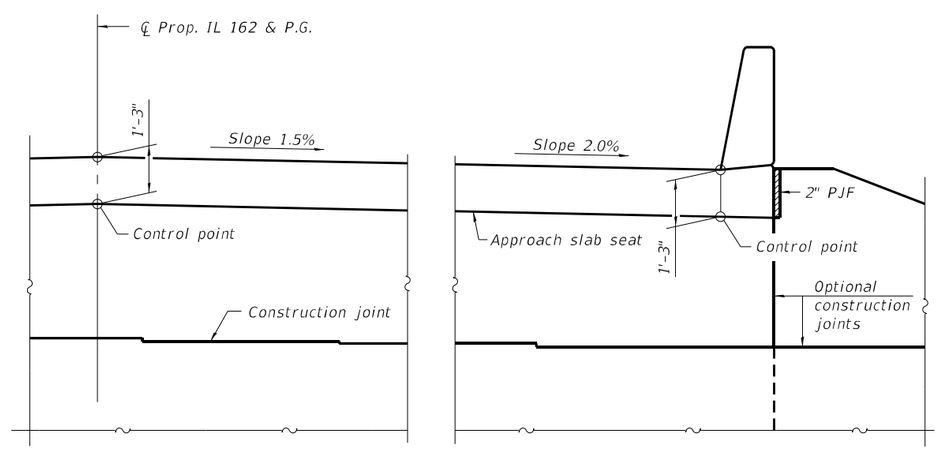

VIEW B-B

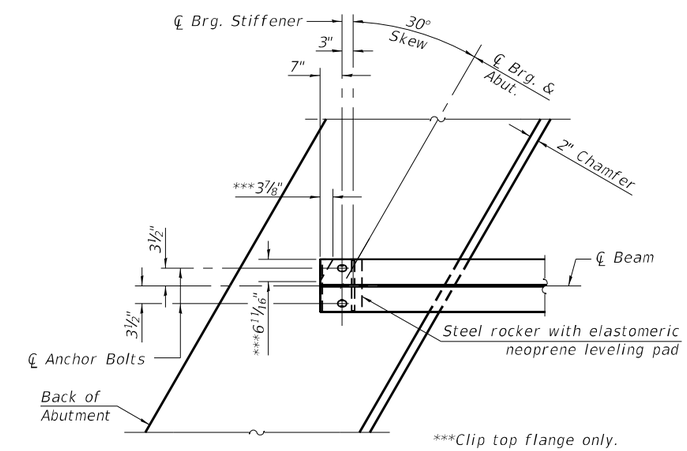

PLAN AT WEST ABUTMENT

(Showing bottom flange of beam and top flange clip)

Notes:
See sheet 14 of 31 for superstructure details and Bill of Material.
See sheet 17 of 31 for PJF details.
The s10(E) and s11(E) bars shall be placed parallel to the beams. Spacing for these bars shall be at right angles to the beams.
The approach slab seat shall have a constant slope determined from the control points shown.
Bars indicated thus 4x2-#6 etc. indicates 4 lines of bars with 2 lengths per linees.

\\Loch\Root\Production\Files\2020\420-008\C\ADBridge\Final Design\0600241-76A46-05-West Integral_Abutment_Diaphragm_Details.dgn

LOCHMUELLER GROUP 1928 Sirk Bradley R. Smith's Drive Troy, IL 62294 PHONE: 618.667.1900	USER NAME =	DESIGNED - ACS	REVISED
		CHECKED - LDG	REVISED
	PLOT SCALE =	DRAWN - WJS	REVISED
	PLOT DATE = 3/4/2024	CHECKED - LDG	REVISED

STATE OF ILLINOIS
DEPARTMENT OF TRANSPORTATION

WEST DIAPHRAGM DETAILS
STRUCTURE NO. 060-0241

SHEET NO. 15 OF 31 SHEETS

F.A.P. RTE.	SECTION	COUNTY	TOTAL SHEETS	SHEET NO.
586	51-1R	MADISON	296	198
SN 060-0241		CONTRACT NO. 76A46		
		ILLINOIS FED. AID PROJECT		

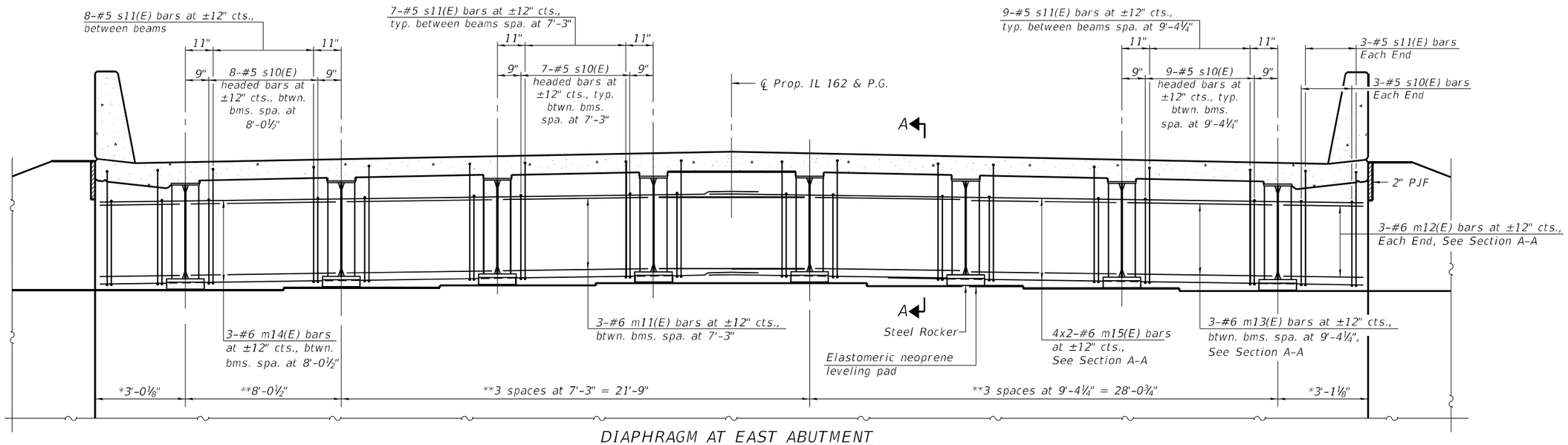

DIAPHRAGM AT EAST ABUTMENT

*Perpendicular to Fascia Beam.
**Perpendicular to ℄ Prop. IL 162.

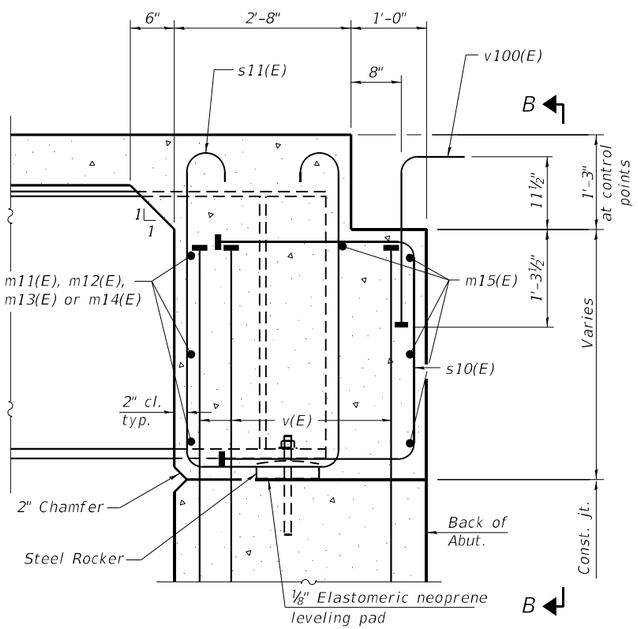

SECTION A-A

(at Rt. L's)

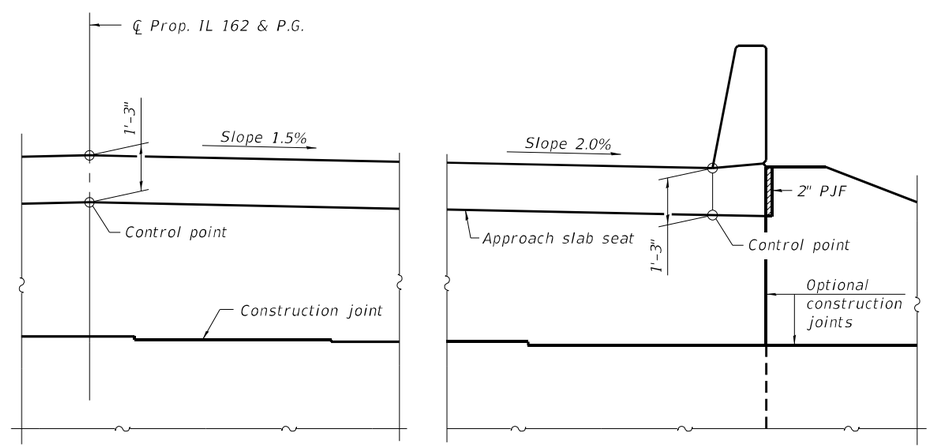

VIEW B-B

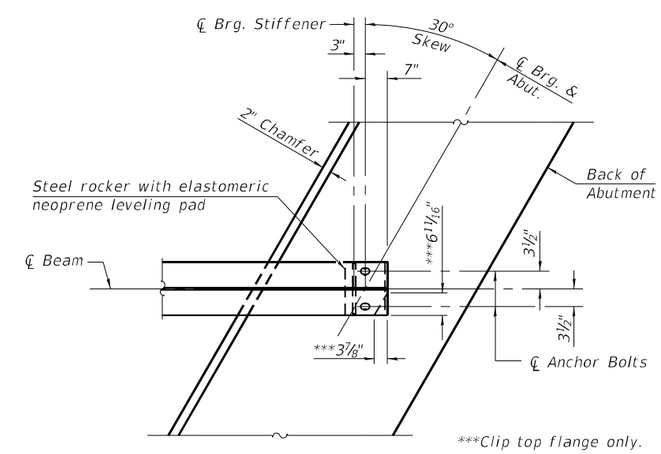

PLAN AT EAST ABUTMENT

(Showing bottom flange of beam and top flange clip)

Notes:
See sheet 14 of 31 for superstructure details and Bill of Material.
See sheet 19 of 31 for PJF details.
The s10(E) and s11(E) bars shall be placed parallel to the beams. Spacing for these bars shall be at right angles to the beams.
The approach slab seat shall have a constant slope determined from the control points shown.
Bars indicated thus 4x2-#6 etc. indicates 4 lines of bars with 2 lengths per line.

Notes:
Flare b10(E), b11(E) & t10(E) bars as required.
Bars indicated thus 20x2-#5 etc. indicates 20 lines of bars with 2 length per line.
For additional stations and offsets, see sheet 10 of 31.

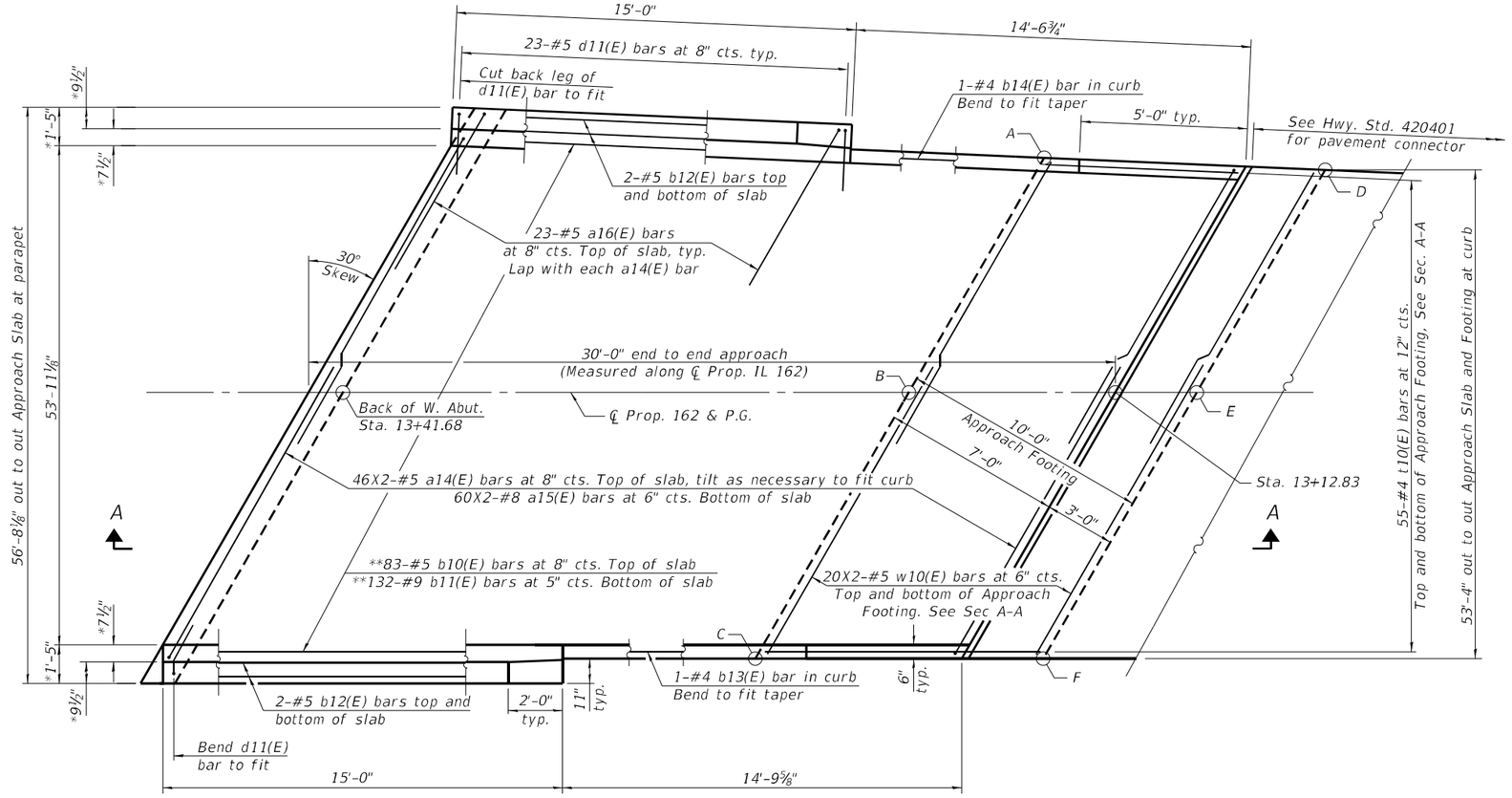

* Perpendicular to face of parapet.
** Cut to fit.

PLAN

TOP AND BOTTOM ELEVATIONS FOR APPROACH FOOTING

Approach		
Point/Location	Top	Bottom
A - South Edge of Slab	444.69	443.86
B - ℄ Prop. IL 162	445.25	444.42
C - North Edge of Slab	444.89	444.05
D - South Edge of Slab	444.62	443.79
E - ℄ Prop, IL 162	445.17	444.34
F - North Edge of Slab	444.83	443.99

MINIMUM BAR LAP

#5 bar = 3'-4"
#8 bar = 4'-9"

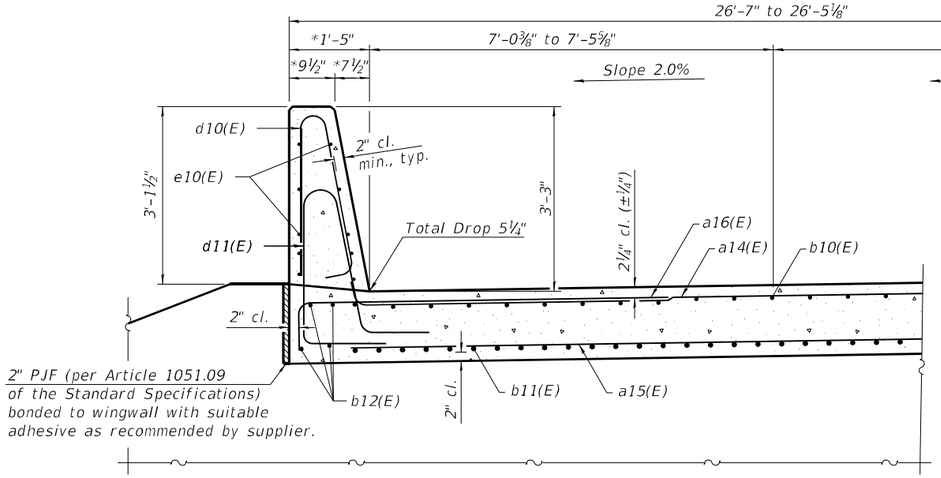

NEAR ABUTMENT

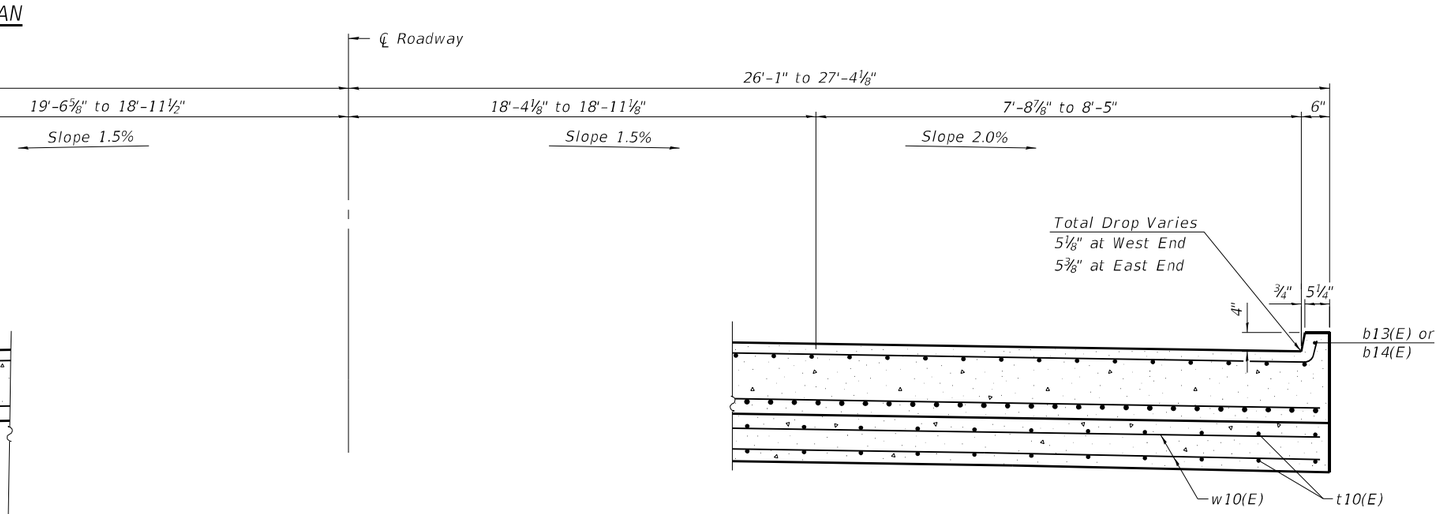

CROSS SECTION

(Looking East)

AT APPROACH FOOTING