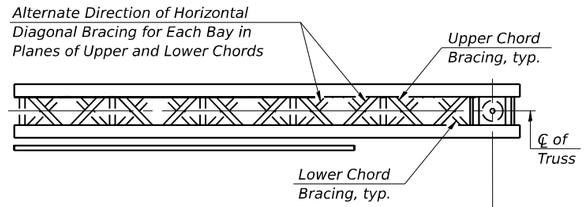

TYPICAL PLAN

(Walkway not shown)

Structure Number	Station	Design Truss Type	Cantilever Length (L)	Elev. A	Dim. D	Ds	Total Sign Area
7C025I070R082.0	1533+37.36	I-C-A	25'-0"	633.73	6'-0"	10'-6"	137

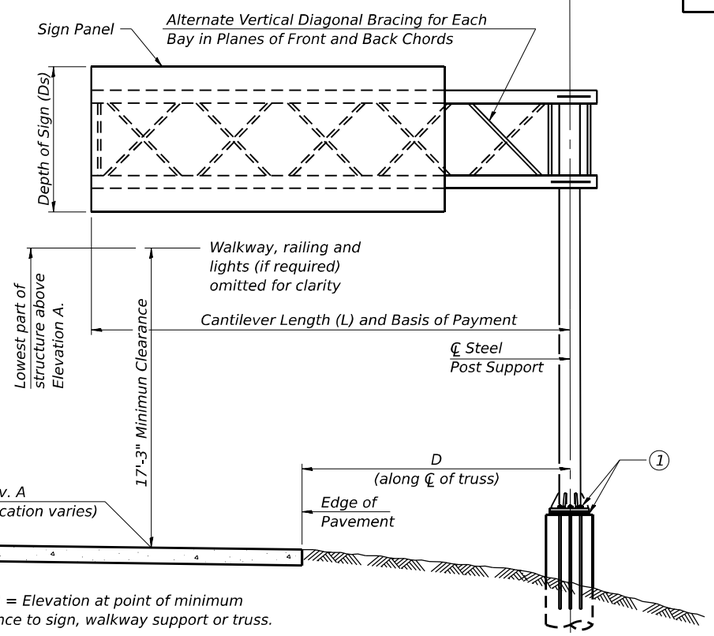

Elev. A = Elevation at point of minimum clearance to sign, walkway support or truss.

TYPICAL ELEVATION

Looking in Direction of Traffic

Sign support structures may be subject to damaging vibrations and oscillations when sign panels are not in place during erection or maintenance of the structure. To avoid these vibrations and oscillations, consideration should be given to attaching temporary blank sign panels to the structure.

Truss Type	Maximum Sign Area	Maximum Length
I-C-A	170 Sq. Ft.	25 Ft.
II-C-A	340 Sq. Ft.	30 Ft.
III-C-A	400 Sq. Ft.	40 Ft.

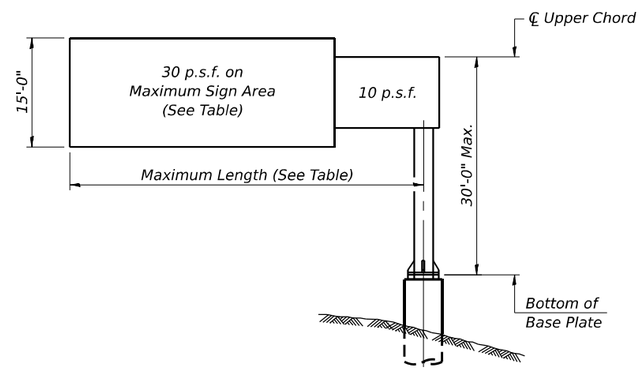

DESIGN WIND LOADING DIAGRAM

Parameters shown are basis for I.D.O.T. Standards Installations not within dimensional limits shown require special analysis for all components.

Note:
Trusses shall be shipped individually with adequate provision to prevent detrimental motion during transport. This may require ropes between horizontals and diagonals or energy dissipating (elastic) ties to the vehicle. The contractor is responsible for maintaining the configuration and protection of the trusses.

(1) After adjustments to level truss and insure adequate vertical clearance, all top and leveling nuts shall be tightened against the base plate with a minimum torque of 200 lb.-ft. Stainless steel mesh shall then be placed around the perimeter of the base plate. Secure to base plate with stainless steel banding.

* If M270 Gr. 50W (M222) steel is proposed, chemistry for plate to be used shall first be approved by the Engineer as suitable for galvanizing and welding.

GENERAL NOTES

DESIGN: AASHTO Standard Specifications for Structural Supports for Highway Signs, Luminaires and Traffic Signals. ("AASHTO Specifications")

CONSTRUCTION: Current (at time of letting) Illinois Department of Transportation Standard Specifications for Road and Bridge Construction, Supplemental Specifications and Special Provisions. ("Standard Specifications")

LOADING: 90 M.P.H. WIND VELOCITY

WALKWAY LOADING: Dead load plus 500 lbs. concentrated live load.

DESIGN STRESSES:
Field Units
f'c = 3,500 p.s.i.
fy = 60,000 p.s.i. (reinforcement)

WELDING: All welds to be continuous unless otherwise shown. All welding to be done in accordance with current AWS D1.1 and D1.2 Structural Welding Codes (Steel and Aluminum) and the Standard Specificiations.

MATERIALS: Aluminum Alloys as shown throughout plans. All Structural Steel Pipe shall be ASTM A53 Grade B or A500 Grade B or C. If A500 pipe is substituted for A53, then the outside diameter shall be as detailed and wall thickness greater than or equal to A53.
All Structural Steel Plates and Shapes shall conform to AASHTO M270 Gr. 36, Gr. 50 or Gr. 50W*. Stainless steel for shims, sleeves and handhole covers shall be ASTM A240, Type 302 or 304, or another alloy suitable for exterior exposure and acceptable to the Engineer.
The steel pipe and stiffening ribs at the base plate for the column shall have a minimum longitudinal Charpy V-Notch (CVN) energy of 15 lb.-ft. at 40° F. (Zone 2) before galvanizing.

FASTENERS FOR ALUMINUM TRUSSES: All bolts noted as "high strength" must satisfy the requirements of AASHTO M164 (ASTM A325), or approved alternate, and must have matching lock nuts. Threaded studs for splices (if Members interfere) must satisfy the requirements of ASTM A449, ASTM A193, Grade B7, or approved alternate, and must have matching lock nuts. Bolts and lock nuts not required to be high strength must satisfy the requirements of ASTM A307. All bolts and lock nuts must be hot dip galvanized per AASHTO M232. The lock nuts must have nylon or steel inserts. A stainless steel flat washer conforming to ASTM A240 Type 302 or 304, is required under both head and nut or under both nuts where threaded studs are used. High strength bolt installation shall conform to Article 505.04 (f) (2)d of the IDOT Standard Specifications for Road and Bridge Construction. Rotational capacity ("ROCAP") testing of bolts will not be required.

U-BOLTS AND EYEBOLTS: U-Bolts and Eyebolts must be produced from ASTM A276 Type 304, 304L, 316 or 316L, Condition A, cold finished stainless steel, or an equivalent material acceptable to the Engineer. All nuts for U-Bolts and Eyebolts must be lock nuts equivalent to ASTM A307 with nylon or steel inserts and hot dip galvanized per AASHTO M232. A stainless steel flat washer conforming to ASTM A240, Type 302 or 304, is required under each U-Bolt and Eyebolt lock nut.

GALVANIZING: All Steel Grating, Plates, Shapes and Pipe shall be Hot Dip Galvanized after fabrication in accordance with AASHTO M111. Painting is not permitted.

ANCHOR RODS: Shall conform to ASTM F1554 Gr. 105.

CONCRETE SURFACES: All concrete surfaces above an elevation 6" below the lowest final ground line at each foundation shall be cleaned and coated with Concrete Sealer in accordance with the Standard Specifications.

REINFORCEMENT BARS: Reinforcement Bars designated (E) shall be epoxy coated in accordance with the Standard Specifications.

FOUNDATIONS: The contract unit price for Drilled Shaft Concrete Foundations shall include reinforcement bars complete in place.

TOTAL BILL OF MATERIAL

ITEM	UNIT	TOTAL
OVERHEAD SIGN STRUCTURE CANTILEVER TYPE I-C-A	Foot	25
OVERHEAD SIGN STRUCTURE WALKWAY, TYPE A	Foot	25
DRILLED SHAFT CONCRETE FOUNDATIONS	Cu. Yds.	4.7

OSC-A-1 5-15-2023

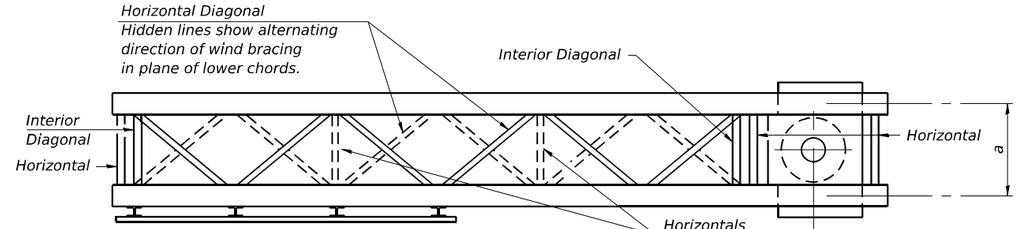

PLAN
(Walkway not shown)

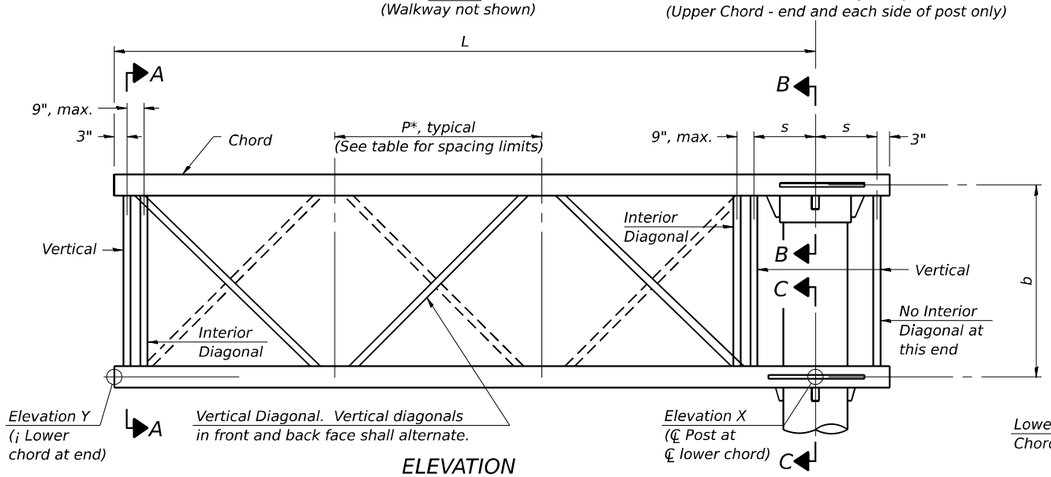

ELEVATION
(Sign and walkway omitted for clarity)

TYPICAL TRUSS UNIT

For Section B-B and Section C-C, see Base Sheet OSC-A-3.

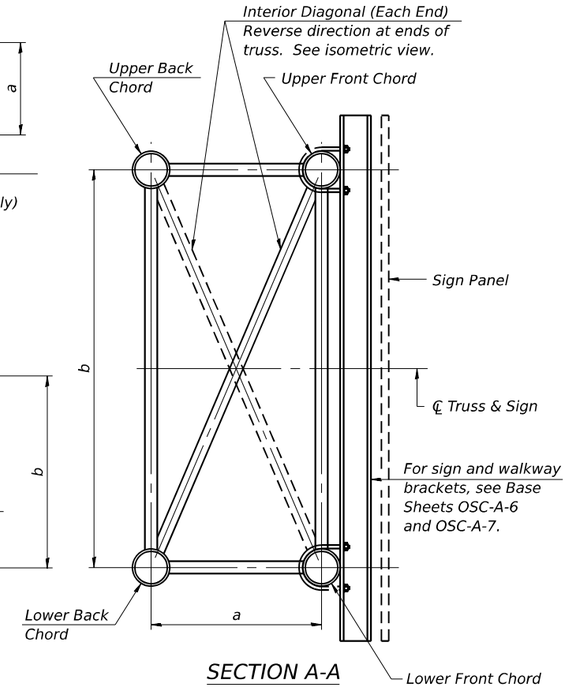

SECTION A-A

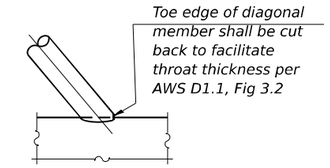

DETAIL A

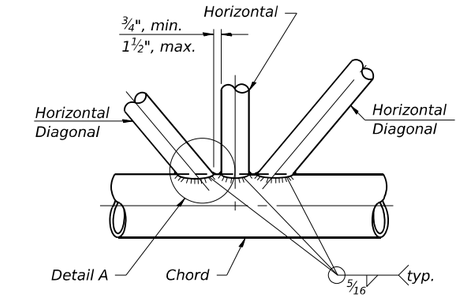

TRUSS INTERIOR JOINT DETAIL

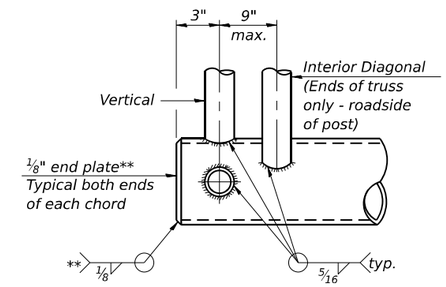

CANTILEVER END JOINT DETAIL

** Contractor may alternatively use standard aluminum drive-fit cap to close ends.
½" Ø Drain hole in end plate / drive-fit cap.

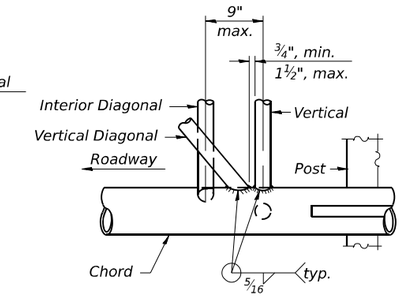

POST END JOINT DETAIL

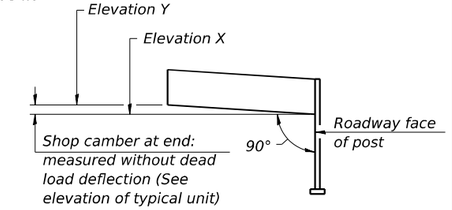

CAMBER DIAMGRAM
(For Fabrication Only)

Note:
There are twice as many horizontal diagonals as there are vertical diagonals.

TRUSS UNIT TABLE

Truss Type	Dimension "a"	Dimension "b"	Dimension "s"	Limits for Panel Spacing (P)*	Up. & Low. Chord		Verticals; Horizontals; Vertical, Horizontal, and Interior Diagonals	
					O.D.	Wall	O.D.	Wall
I-C-A	24"	54"	16"	36" min. to 48" max.	5"	5/16"	2½"	5/16"
II-C-A	36"	66"	21"	42" min. to 54" max.	6½"	5/16"	3¼"	5/16"
III-C-A (35' Max.)	36"	84"	21"	48" min. to 66" max.	7"	⅜"	3½"	⅜"
III-C-A (>35' to 40')	36"	84"	21"	48" min. to 66" max.	8"	⅜"	3½"	⅜"

$$*P = \frac{L-s-3"}{\#\ Panels}$$

Structure Number	Station	Truss Type	Design Length (L)	Number of Panels Per Unit	Panel Length (P)*
7C025I070R082.0	1533+37.36	I-C-A	25'-0"	7	3'-4⅛"

SHOP CAMBER TABLE

Unit Length (L)	Shop Camber at End
15'	1½"
16'-17'	1¾"
18'-20'	2"
21'-22'	2¼"
23'-25'	2½"
26'-27'	2¾"
28'-30'	3"
31'-32'	3¼"
33'-35'	3½"
36'-37'	4"
38'-40'	4½"

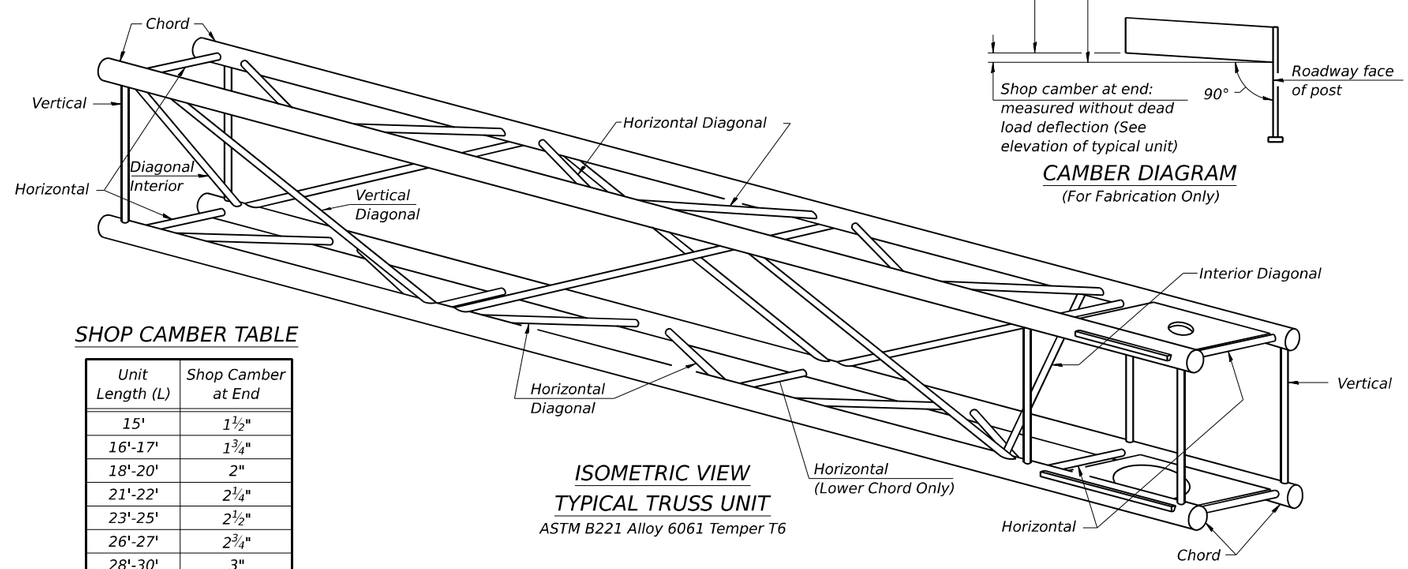

ISOMETRIC VIEW
TYPICAL TRUSS UNIT
ASTM B221 Alloy 6061 Temper T6

OSC-A-2 5-15-2023

MODEL: 002 - Sign Structure [Sheet]
FILE NAME: pw://centerpiv.bentley.com:cmt-connect-projects/Documents/IDOT/2004197-00/74893/CADD Data/Sheets/Sht_02_Sign Structure.dgn

CMT
License No. 184-000613 © Copyright CMT, Inc.

USER NAME = moverbey	DESIGNED - DAC	REVISED -	
	DRAWN - DAC	REVISED -	
PLOT SCALE = N/A	CHECKED - MJO	REVISED -	
PLOT DATE = 10/17/2025	DATE -	REVISED -	

STATE OF ILLINOIS
DEPARTMENT OF TRANSPORTATION

CANTILEVER SIGN STRUCTURES - TRUSS DETAILS
ALUMINUM TRUSS & STEEL POST

SCALE: SHEET 02 OF 09 SHEETS STA. TO STA.

F.A.I. RTE.	SECTION	COUNTY	TOTAL SHEETS	SHEET NO.
70	25-1HB-3	EFFINGHAM	747	202
		CONTRACT NO. 74893		
	ILLINOIS	FED. AID PROJECT		

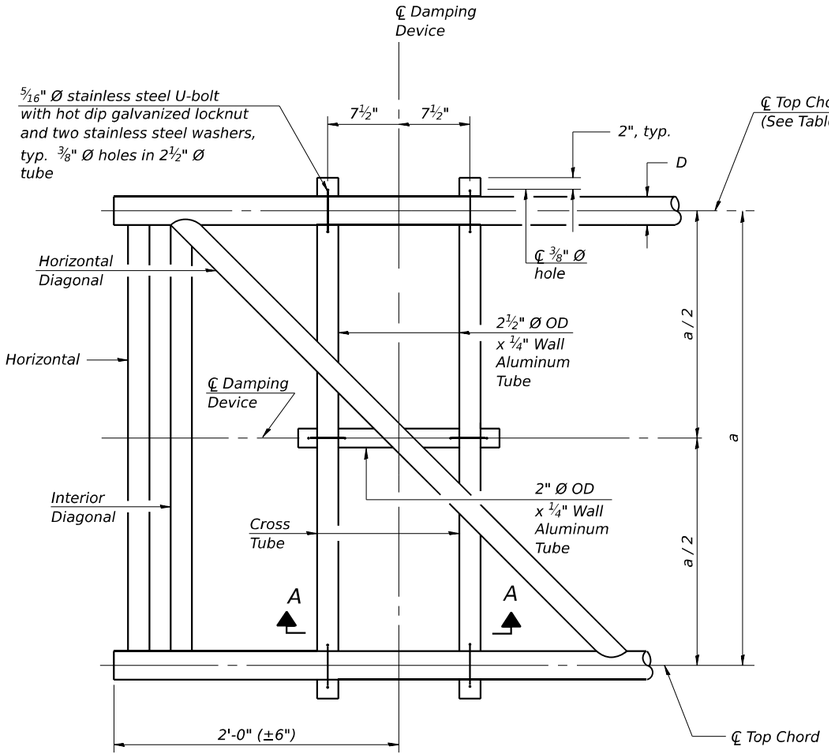

PLAN DETAIL

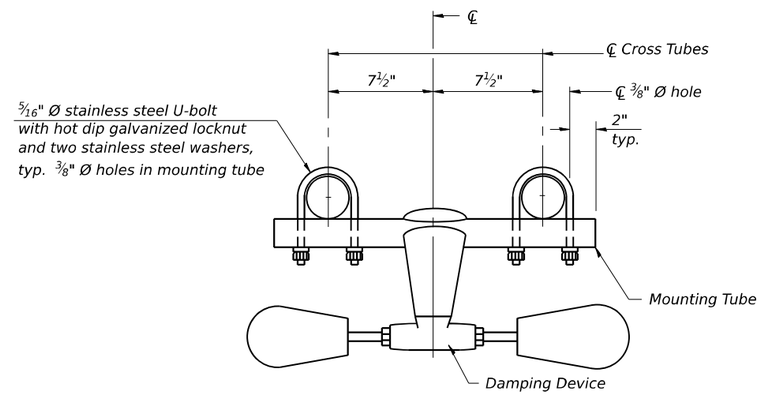

TRUSS DAMPING DEVICE CONNECTION DETAIL

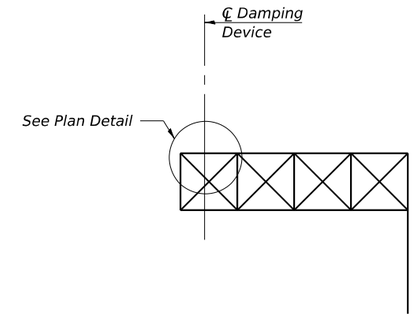

ELEVATION

Aluminum Cantilever Sign Structure

GENERAL NOTES

Damper: One damper per truss. (31 lbs. Stockbridge-Type Aluminum-29" minimum between ends of weights)

Materials: Aluminum tubes shall be ASTM B221 alloy 6061 temper T6

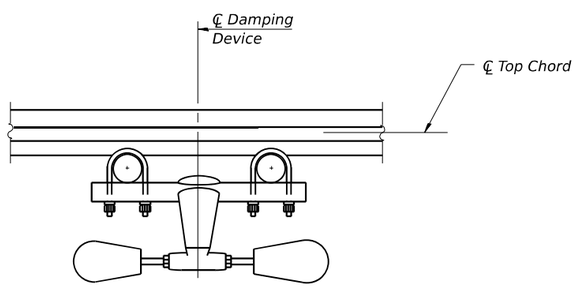

SECTION A-A

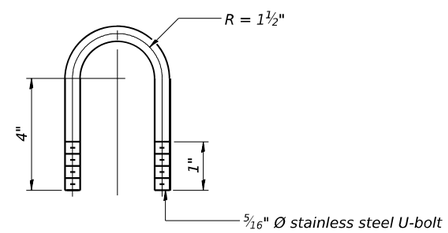

DAMPING DEVICE MOUNTING TUBE U-BOLT DETAIL

(Typical)

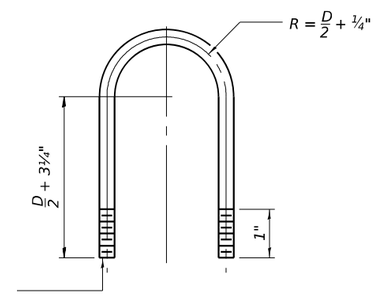

TOP CHORD TO CROSS TUBE U-BOLT DETAIL

(Typical)

OSC-A-D 5-15-2023

MODEL: 003 - Sign Structure [Sheet]
FILE NAME: pw://cmtengp-pw.bentley.com:cmt-connect-projects/Documents/IDOT22004197-00/74893/CADD Data/Sheets/Sht_03_Sign Structure.dgn

CMT License No. 184-000613 © Copyright CMT, Inc.	USER NAME = moverbey	DESIGNED - DAC	REVISED -	STATE OF ILLINOIS DEPARTMENT OF TRANSPORTATION	CANTILEVER SIGN STRUCTURE DAMPING DEVICE	F.A.I. RTE.	SECTION	COUNTY	TOTAL SHEETS / SHEET NO.
		DRAWN - DAC	REVISED -			70	25-1HB-3	EFFINGHAM	747 / 203
	PLOT SCALE = N/A	CHECKED - MJO	REVISED -					CONTRACT NO. 74893	
	PLOT DATE = 10/17/2025	DATE -	REVISED -		SCALE: SHEET 03 OF 09 SHEETS STA. TO STA.		ILLINOIS	FED. AID PROJECT	

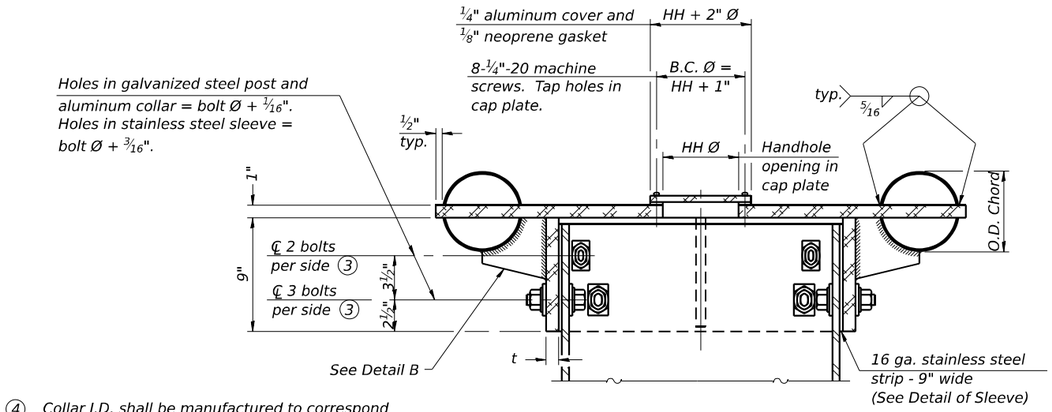

SECTION B-B

Bolts, washers (including contoured washers), and locknuts shall be stainless steel.

④ Collar I.D. shall be manufactured to correspond to O.D. of actual galvanized post and stainless steel sleeve plus ⅛" (±1/16"). Maximum gap between post and collar at any location equals ⅛" before tightening bolts.

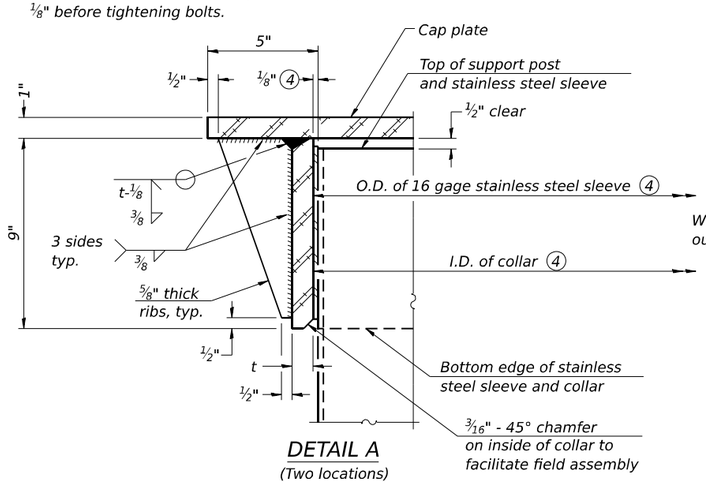

DETAIL A

(Two locations)

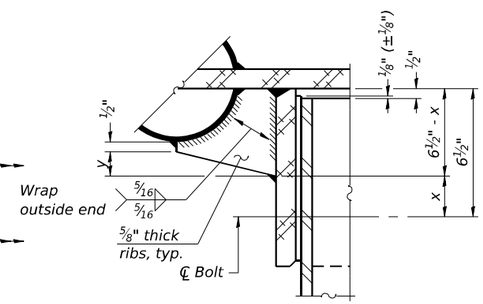

DETAIL B

Two locations
(For details not shown, see Detail C)

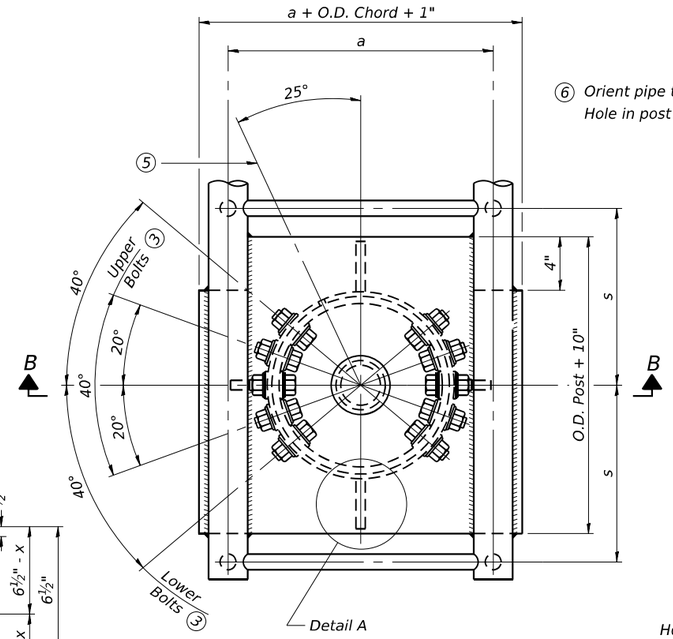

PLAN VIEW - TOP OF COLUMN

⑤ Optional full penetration weld in collar.
(Two locations maximum....(180° apart)....X-ray or UT 100%)

⑥ Orient pipe toward walkway side.
Hole in post = O.D. pipe + ⅛".

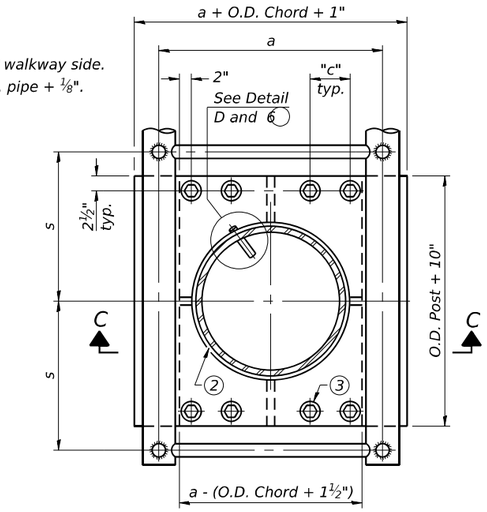

SECTION THRU POST ABOVE LOWER CHORDS

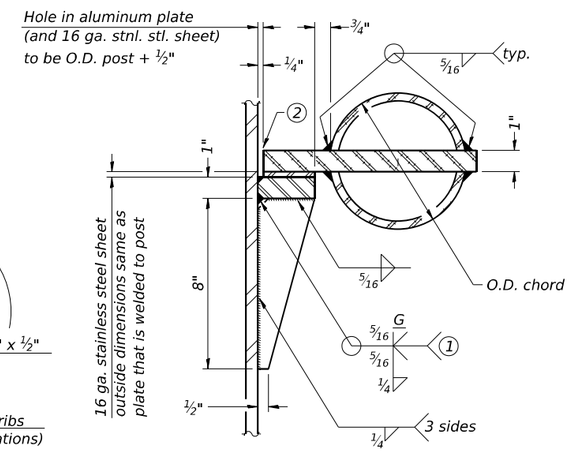

DETAIL C

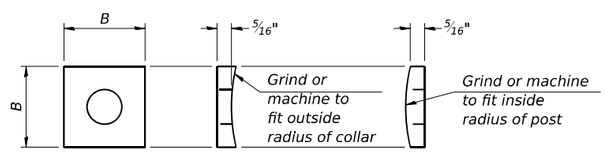

CONTOURED WASHERS

Bolt Size	Contoured Washers	
	Hole Dia.	B
⅞"	1"	2½"
1"	1⅛"	3"
1¼"	1⅜"	3¼"

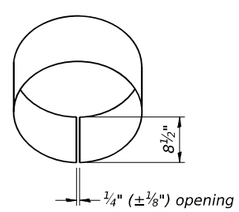

DETAIL OF STAINLESS STEEL SLEEVE

Weld to post after galvanizing.
(Prepare post surface to insure tight, uniform fit and allow welding.)
Welds to be 1½" long at 6" cts. along top edge and at ¼" opening.

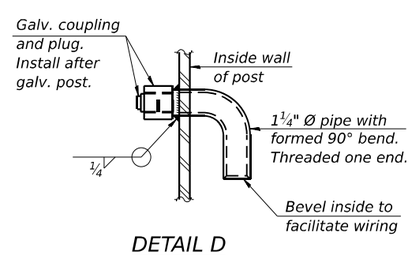

DETAIL D

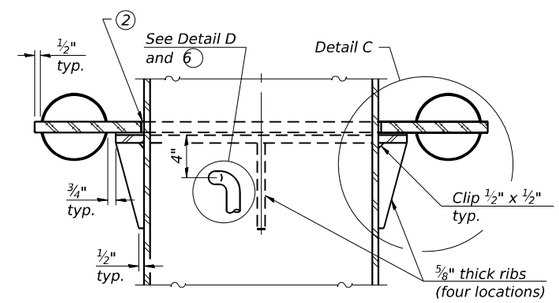

SECTION C-C

Truss Type	Post Size	Upper & Lower Connection Bolt Diameter ③	Lower Juncture Bolt Spacing Dimension "c" ③	Opening in Cap Plate "HH"	Collar Thickness (t)	Side Ribs	
						x	y
I-C-A	16" Ø (83#/ ')	⅞"	3¼"	8"	⅝"	1¾"	2¼"
II-C-A	24" Ø (125#/ ')	1"	3½"	12"	⅞"	2"	1¼"
III-C-A (35' max.)	24" Ø (125#/ ')	1¼"	3½"	12"	⅞"	2"	1"
III-C-A (>35' to 40')	24" Ø (171#/ ')	1¼"	3½"	12"	⅞"	2"	1"

① Grind top if required to fully seat aluminum plate and stainless steel sheet.

② After tightening lower connection bolts, fill gap with non-hardening, silicone caulk suitable for exterior exposure and acceptable to the Engineer. Cost is included in Overhead Sign Structure Cantilever.

③ Upper and lower connection bolts in collar and bolts at lower chord connection shall be high strength with matching locknuts. Connection bolts shall have 2 stainless steel flat washers each.

OSC-A-3 5-15-2023

MODEL: 004 - Sign Structure [Sheet]
FILE NAME: pw://contengs-pw.bentley.com:cmt-connect-projects/Documents/IDOT/22004197-00/74893/CADD Data/Sheets/Slt_04_Sign Structure.dgn

CMT
License No. 184-000613
© Copyright CMT, Inc.

USER NAME = moverbey	DESIGNED - DAC	REVISED -	
	DRAWN - DAC	REVISED -	
PLOT SCALE = N/A	CHECKED - MJO	REVISED -	
PLOT DATE = 10/17/2025	DATE -	REVISED -	

STATE OF ILLINOIS
DEPARTMENT OF TRANSPORTATION

CANTILEVER SIGN STRUCTURES - JUNCTURE DETAILS
ALUMINUM TRUSS & STEEL POST

SCALE: | SHEET 04 OF 09 SHEETS | STA. TO STA.

F.A.I. RTE.	SECTION	COUNTY	TOTAL SHEETS	SHEET NO.
70	25-1HB-3	EFFINGHAM	747	204
		CONTRACT NO. 74893		
	ILLINOIS	FED. AID PROJECT		

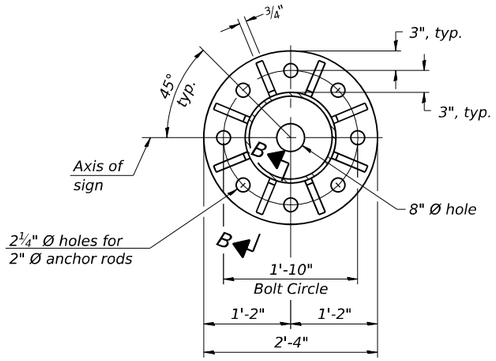

SECTION A-A

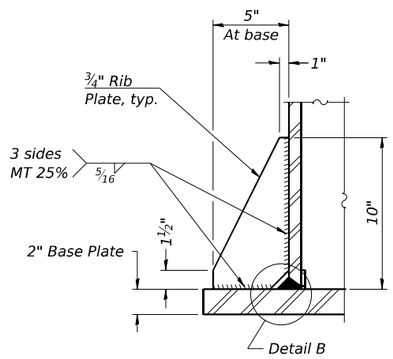

SECTION B-B

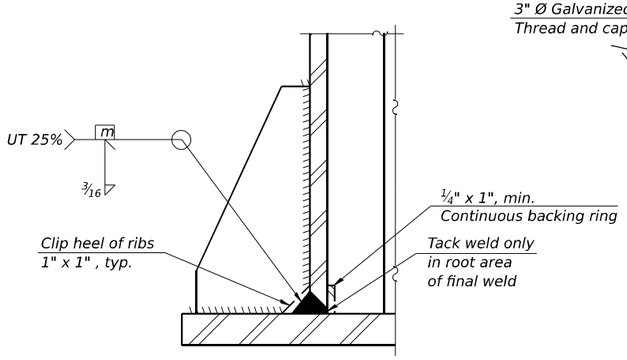

DETAIL B

(Typical rib)

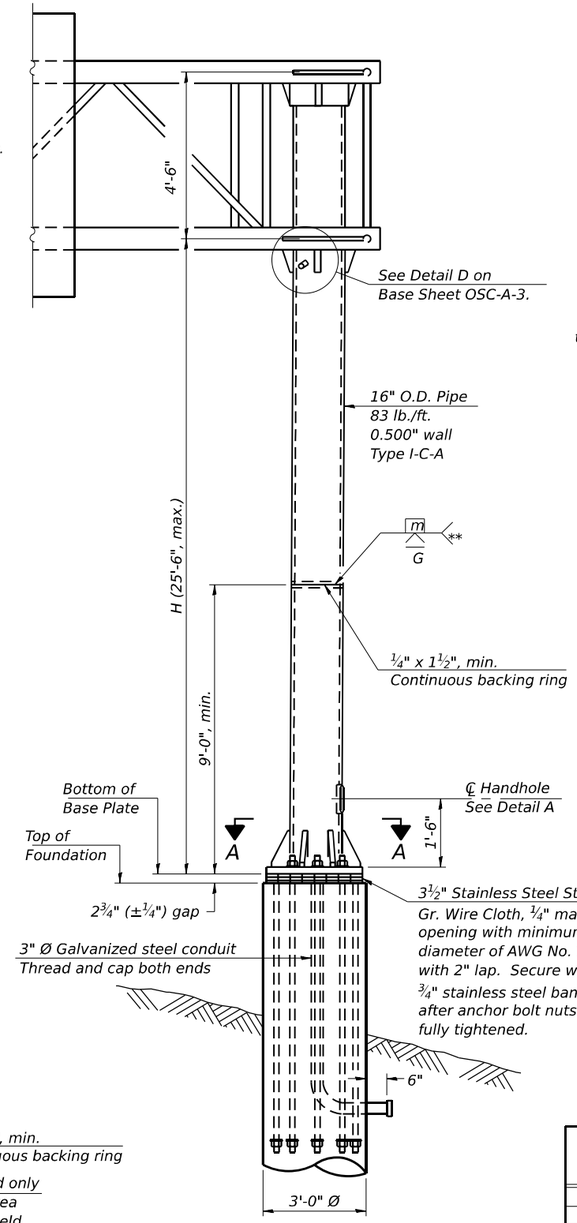

FRONT ELEVATION

For Foundation Details
see Base Sheet OSC-A-9.

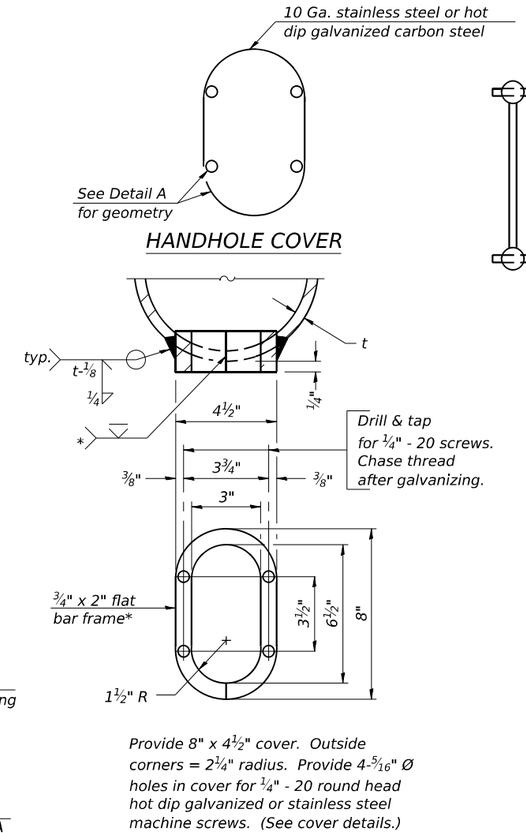

Provide 8" x 4½" cover. Outside corners = 2¼" radius. Provide 4-5/16" Ø holes in cover for ¼" - 20 round head hot dip galvanized or stainless steel machine screws. (See cover details.)

DETAIL A

* Bent bars may be butt welded top and bottom or bottom only. In lieu of fabricated handhole frame as shown, may cut from 2" plate (rolling direction vertical). All cut faces to be ground to ANSI Roughness of 500μ in or less.

** Butt welded joint in post is only allowed for post heights (H) over 20 ft. in length. If used, weld procedure must be preapproved by Engineer and joint shall receive 100% RT or UT (tension criteria) at Contractor's expense.

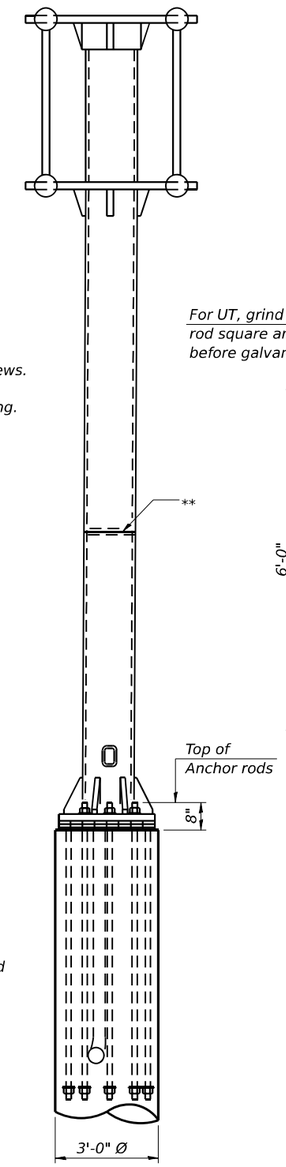

SIDE ELEVATION

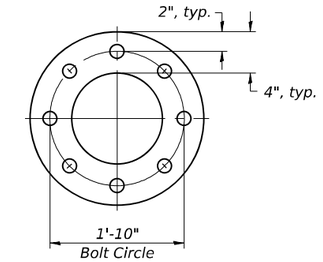

SUGGESTED POSITIONING PLATE

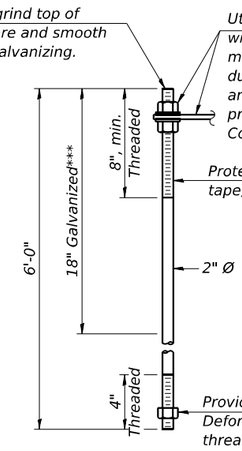

*** 18" is minimum to be galvanized. Entire rod may be galvanized at Contractor's option.

All Thread = NC (National Coarse)

ANCHOR ROD DETAIL

Anchor rods shall conform to ASTM F1554 Grade 105. Galvanize the upper 18" (minimum***) and associated AASHTO M291, Grade A, C or DH heavy hex nuts and hardened washers per AASHTO M232. No welding shall be permitted on rods. Provide a nut at bottom, a hexagon locknut and washer above base plate and a leveling nut and washer below base plate. Nuts shall each be tightened with 200 lb.-ft. minimum torque against base plate. Before or after threading, but before galvanizing, each anchor rod shall be ultrasonically tested (UT) by a Level II or III inspector, qualified in accord with ANSI guidelines, to insure no rejectable flaws exist in the upper 18" (tension criteria). Cost of testing Included in Drilled Shaft Concrete Foundations.

Structure Number	Station	H
7C025I070R082.0	1533+37.36	24'-1"

Note: "H" based on 15'-0" or actual sign height, whichever is greater.

OSC-A-4 5-15-2023

MODEL: 005 - Sign Structure [Sheet]
FILE NAME: pw://centerpiq.bentley.com:cmt-connect-projects/Documents/IDOT/72004197-00/74893/CADD Data/Sheets/Sht_05_Sign Structure.dgn

CMT
License No. 184-000613 © Copyright CMT, Inc.

USER NAME = moverbey	DESIGNED - DAC	REVISED -	
	DRAWN - DAC	REVISED -	
PLOT SCALE = N/A	CHECKED - MJO	REVISED -	
PLOT DATE = 10/17/2025	DATE -	REVISED -	

STATE OF ILLINOIS
DEPARTMENT OF TRANSPORTATION

CANTILEVER SIGN STRUCTURES - TYPE I-C-A TRUSS
SUPPORT POST - ALUMINUM TRUSS & STEEL POST

SCALE: SHEET 05 OF 09 SHEETS STA. TO STA.

F.A.I. RTE.	SECTION	COUNTY	TOTAL SHEETS	SHEET NO.
70	25-1HB-3	EFFINGHAM	747	205
		CONTRACT NO. 74893		
	ILLINOIS	FED. AID PROJECT		

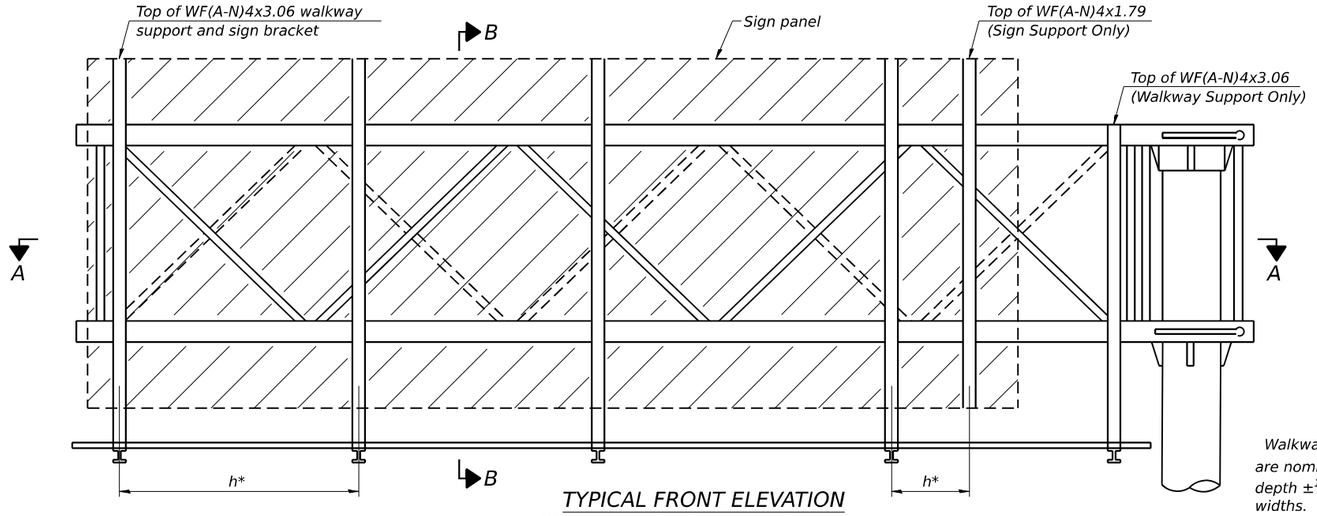

TYPICAL FRONT ELEVATION

With lights and handrail omitted for clarity.

Walkway and truss grating dimensions are nominal and may vary (width ±½", depth ±½") based on available standard widths.

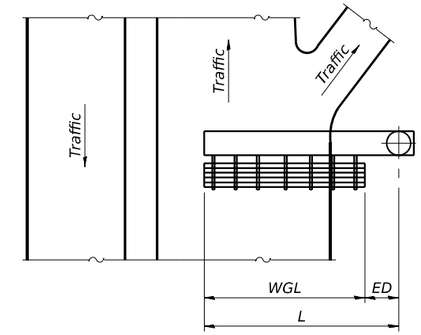

PLAN
WALKWAY AND HANDRAIL SKETCH

(Road plan beneath truss varies)

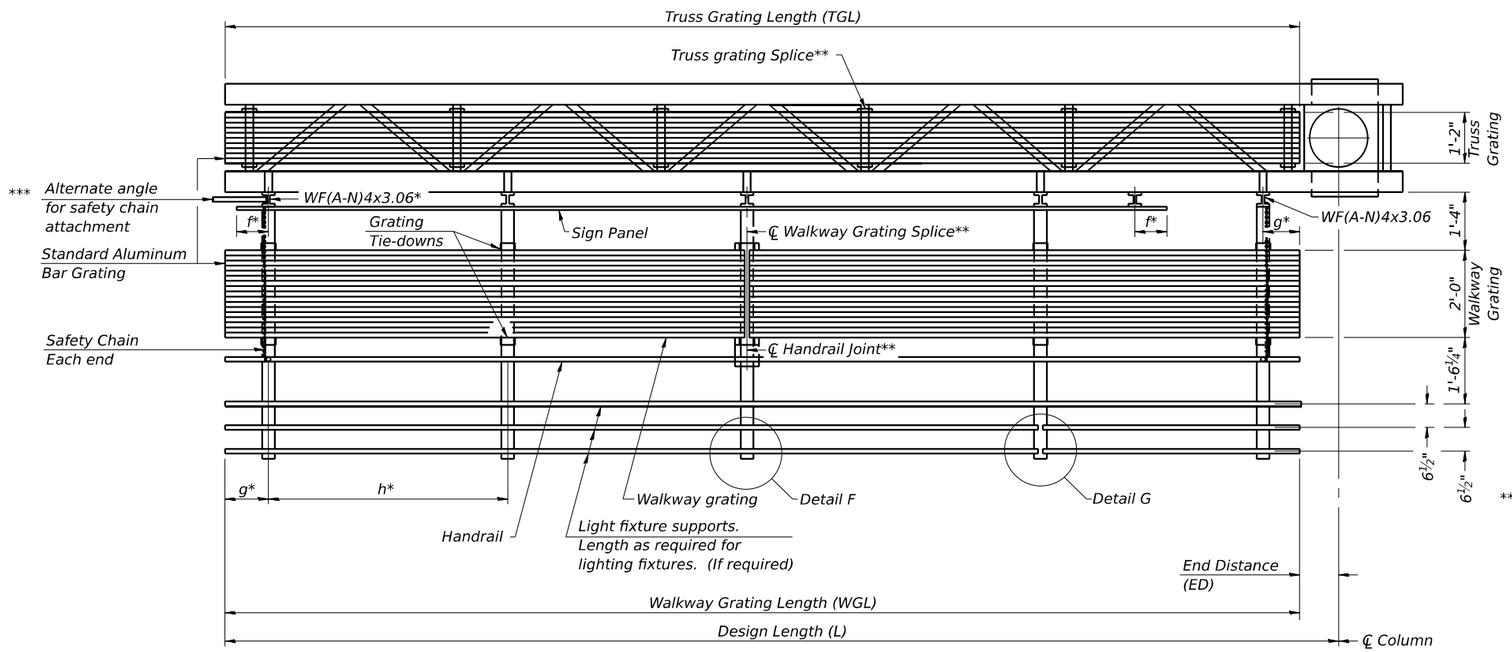

SECTION A-A

Truss grating to facilitate inspection shall run full length of cantilevers. Cost of truss grating is included in Overhead Sign Structure Cantilever.

** Handrail and walkway grating shall span a minimum of three brackets between splices.
Use and location of handrail joints or grating splices are optional, based on lengths needed and material availability.

$$TGL = L - \left(\frac{\text{Post O.D.}}{2} + 6''\right)$$

Structure Number	Station	WGL	ED	TGL
7C025I070R082.0	1533+37.36	14'-10"	10'-8"	23'-10"

Notes:

* Space walkway brackets WF(A-N)4x3.06 and sign brackets WF(A-N)4x1.79 for efficiency and within limits shown:

f = 12" maximum, 4" minimum (End of sign to ¡ of nearest bracket)
g = 12" maximum, 4" minimum (End of walkway to ¡ of nearest bracket)
h = 6'-0" maximum (¡ to ¡ sign and/or walkway support brackets, WF(A-N)4x1.79 or WF(A-N)4x3.06)

*** If walkway bracket at safety chain location is behind sign, add angle to bracket. See alternate safety chain attachment on base sheet OSC-A-8

For details of sign placement, sign/walkway brackets, truss and walkway gratings, grating splices and Section B-B, see Base Sheet OSC-A-7.
For details of handrail, handrail joint, safety chain and Details F and G, see Base Sheet OSC-A-8.

BRACKET TABLE

WF(A-N)4x1.79 or WF(A-N)4x3.06
ASTM B308, Alloy 6061-T6

Sign Width		Number Brackets Required
Greater Than	Less Than or Equal To	
	8'-0"	2
8'-0"	14'-0"	3
14'-0"	20'-0"	4
20'-0"	26'-0"	5
26'-0"	32'-0"	6

OSC-A-6 5-15-2023

CMT
License No. 184-000613
© Copyright CMT, Inc.

USER NAME = bholland	DESIGNED - DAC	REVISED -	
	DRAWN - DAC	REVISED -	
PLOT SCALE = N/A	CHECKED - MJO	REVISED -	
PLOT DATE = 12/2/2025	DATE -	REVISED -	

STATE OF ILLINOIS
DEPARTMENT OF TRANSPORTATION

CANTILEVER SIGN STRUCTURES - ALUMINUM WALKWAY
DETAILS - ALUMINUM TRUSS & STEEL POST

SCALE: SHEET 06 OF 09 SHEETS STA. TO STA.

F.A.I. RTE.	SECTION	COUNTY	TOTAL SHEETS	SHEET NO.
70	25-1HB-3	EFFINGHAM	747	206
		CONTRACT NO. 74893		
	ILLINOIS	FED. AID PROJECT		

MODEL: 006 - Sign Structure [Sheet]
FILE NAME: pw://centerpiw.bentley.com:cmt-connect-projects/Documents/IDOT/2004197-00/74893/CADD Data/Sheets/Sht_06_Sign Structure.dgn

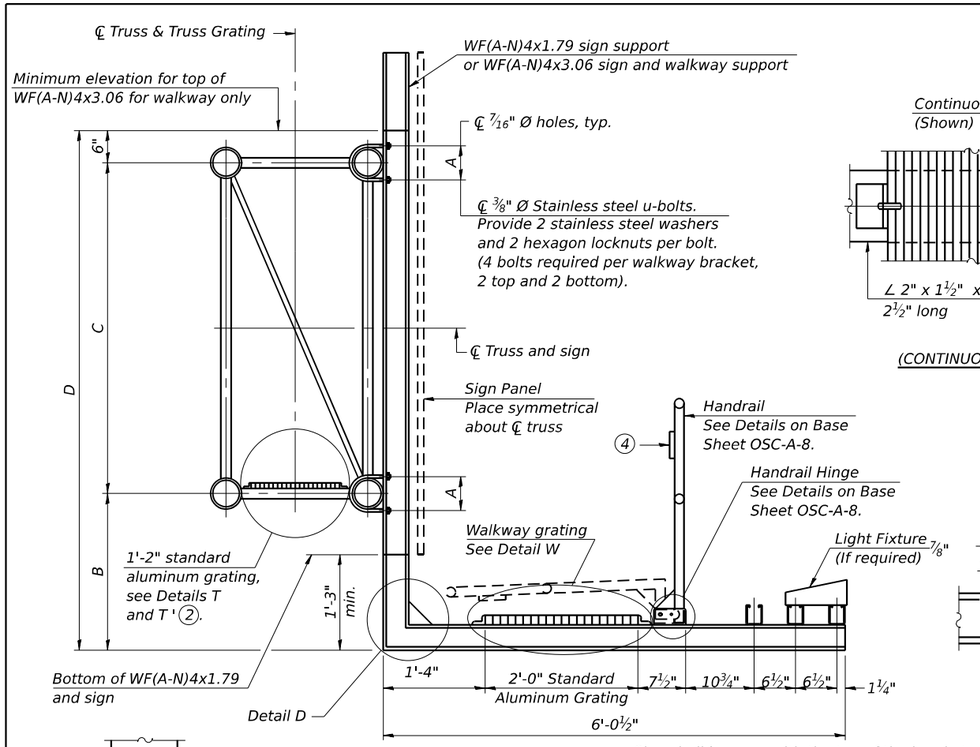

SECTION B-B

Sign shall be even with the top of the bracket, but it may extend no more than 6" above the top of the bracket for field adjustments.

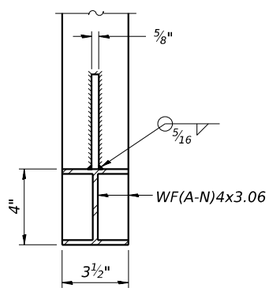

SECTION D-D

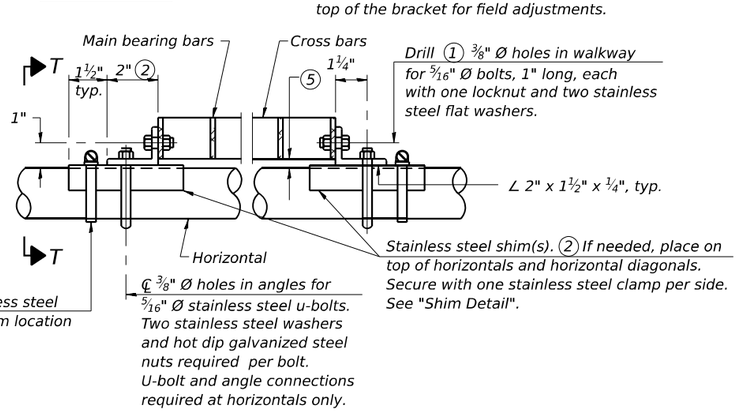

DETAIL T

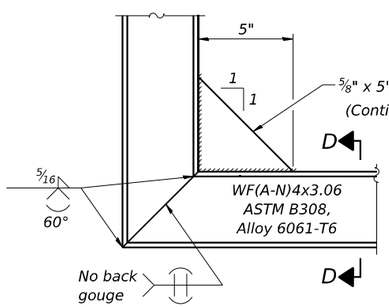

DETAIL D

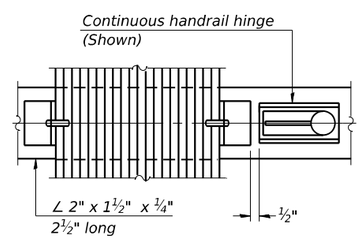

(CONTINUOUS WALKWAY GRATING)

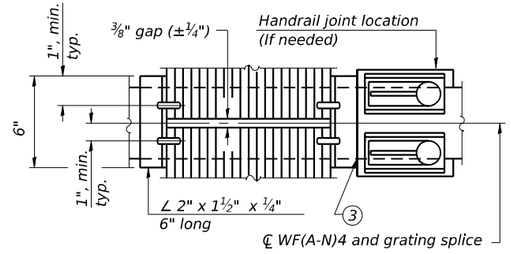

(AT WALKWAY GRATING SPLICE)

SECTION W-W

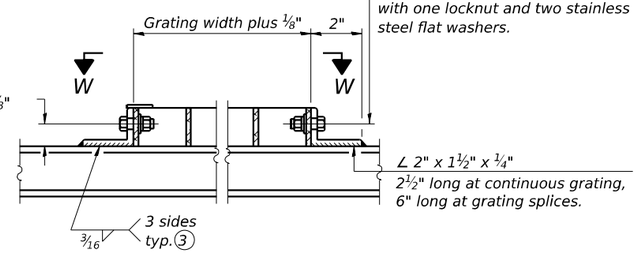

DETAIL W

(Walkway grating)

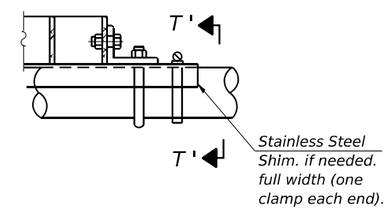

DETAIL T '

(Truss grating splice)
Details not shown same as Detail T.
Alternate materials may be used subject to the Engineer's review and approval.

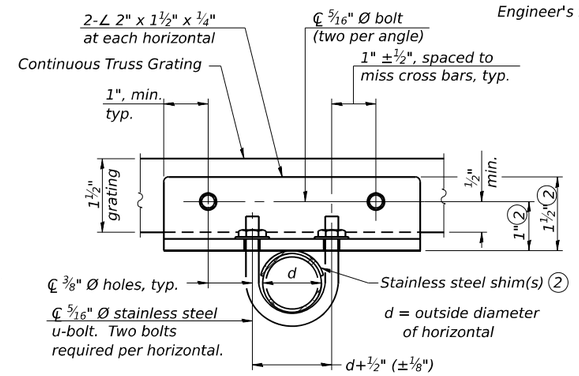

SECTION T-T

SPECIFICATIONS FOR STANDARD ALUMINUM GRATING

Main Bearing Bars (MBB) shall be 3/16" x 1½" on 1 3/16" centers and conform to ASTM B211 Alloy 6061-T6.

Cross bars (CB) shall be 3/16" x 1½" on 4" centers and conform to ASTM B221 Alloy 6063-T5 or 6061-T6.

OR

Aluminum Grating with modified "t" sections for main bearing bars shall meet the following requirements:

Main bars shall conform to ASTM B221 Alloy 6061-T6 and have a minimum section modulus equal to 0.0705 in.³ per bar, a depth of 1½", spaced on 1 3/16" centers.

Cross bars shall conform to ASTM B221 Alloy 6063-T5 or T-42 and spaced on 4" centers.

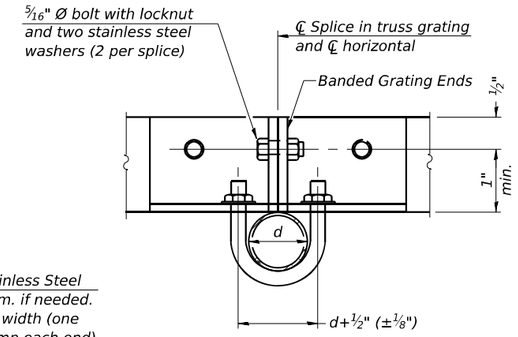

SECTION T '-T '

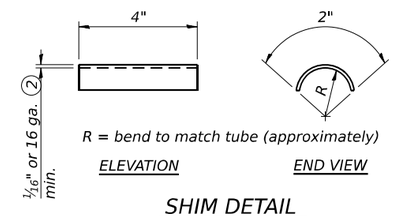

SHIM DETAIL

1. Drilling holes in grating may be done in shop or field, based on Contractor's preference and subject to accurate alignment.
2. Stainless steel shims shall be placed as shown in Detail T if needed to compensate for alignment variations between horizontal and diagonal pipes beyond adjustment provided by angles. Thicker shims may be used subject to shims performing properly.
3. If Handrail Joint present, weld angle to WF(A-N)4 and ¼" extension bars. (See Base Sheet OSC-A-8.)
4. ℄ ⅛" x ½" x 2" welded to handrail posts to protect locations that contact grating.
5. Tube to grating gap may vary from 0 to ½", max. to align walkway, allow for camber, etc.
6. Based on actual sign height, Ds, given on OSC-A-1.

Structure Number	Station	A	6 B	C	6 D
7C025I070R082.0	1533+37.36	5½"	4'-3"	4'-6"	9'-3"

OSC-A-7 5-15-2023

MODEL: 007 - Sign Structure [Sheet]
FILE NAME: pw://cmtengg-pw.bentley.com:cmt-connect-projects/Documents/IDOT/22004197-0074893/CADD Data/Sheets/Sht_07_Sign Structure.dgn

CMT License No. 184-000613 © Copyright CMT, Inc.

USER NAME = bholland	DESIGNED - DAC	REVISED -	
	DRAWN - DAC	REVISED -	
PLOT SCALE = N/A	CHECKED - MJO	REVISED -	
PLOT DATE = 12/2/2025	DATE -	REVISED -	

STATE OF ILLINOIS
DEPARTMENT OF TRANSPORTATION

CANTILEVER SIGN STRUCTURES - WALKWAY DETAILS
ALUMINUM TRUSS & STEEL POST

SCALE: SHEET 07 OF 09 SHEETS STA. TO STA.

F.A.I. RTE.	SECTION	COUNTY	TOTAL SHEETS	SHEET NO.
70	25-1HB-3	EFFINGHAM	747	207
		CONTRACT NO. 74893		
		ILLINOIS	FED. AID PROJECT	

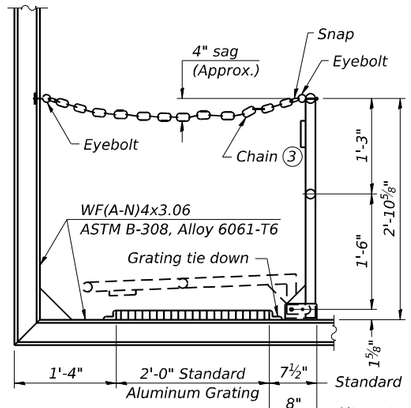

SIDE ELEVATION

(Showing Safety Chain W/O Sign)

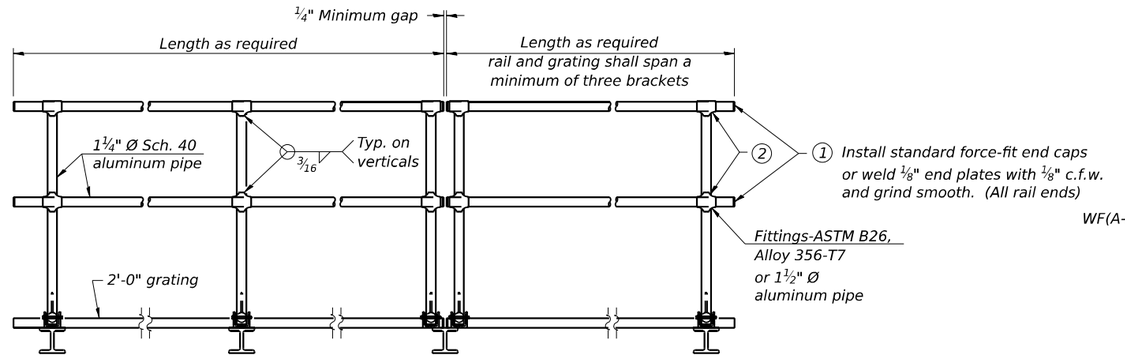

FRONT ELEVATION

(2) Horizontal handrail member shall be continuous thru fitting. Provide 7/16" Ø hole in fitting for 3/8" Ø bolt. Field drill 7/16" Ø hole in horizontal rail member. Provide locknut and two stainless steel washers for bolt. (Use 5/16" eyebolts in 7/16" Ø holes on top rail at ends only.)

HANDRAIL DETAILS

Handrail pipe shall be ASTM B241 or B429, Alloy 6063-T6 or Alloy 6061-T6.

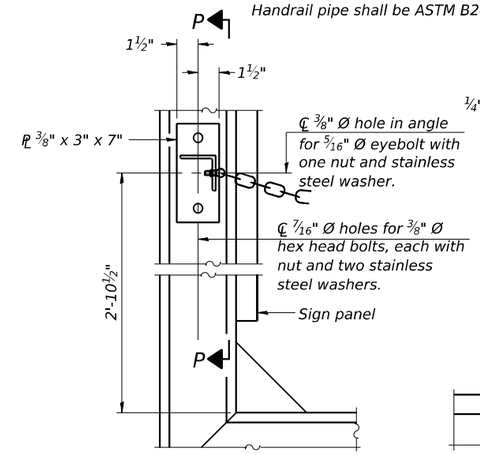

ALTERNATE SAFETY CHAIN ATTACHMENT

(With Sign Present)

Items not shown same as "Side Elevation" of "Handrail Details"

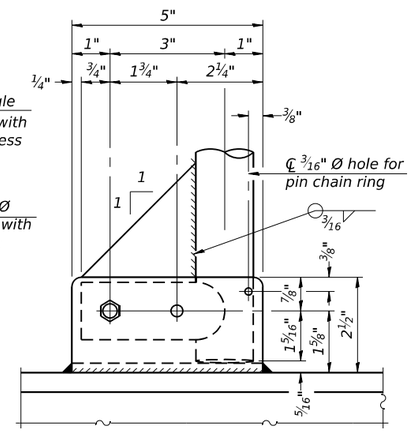

SIDE ELEVATION

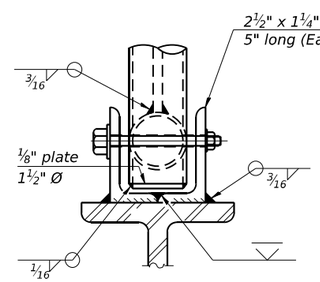

FRONT ELEVATION

Details not shown same as "ELEVATION" at right.

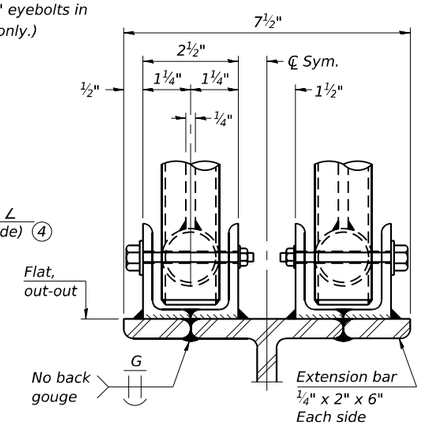

ELEVATION AT HANDRAIL JOINT (4)

Details not shown same as "FRONT ELEVATION"

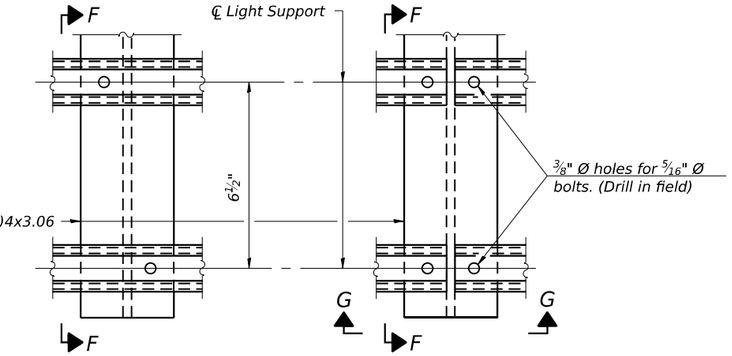

DETAIL F

DETAIL G

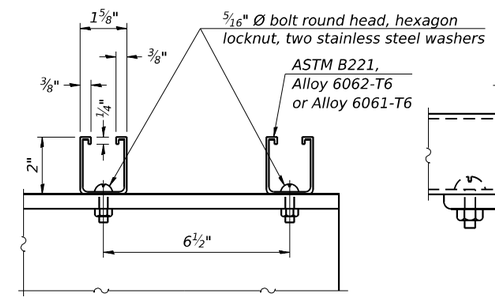

SECTION F-F

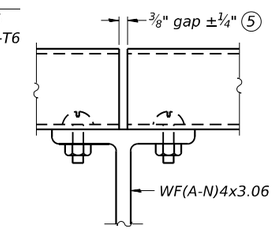

SECTION G-G

LIGHTING FIXTURE MOUNTS (IF REQUIRED)

(5) Field cut ends of light support channels shall be free of burrs or hazardous projections and coated with zinc-rich primer or equivalent.

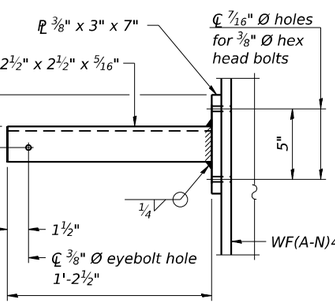

SECTION P-P

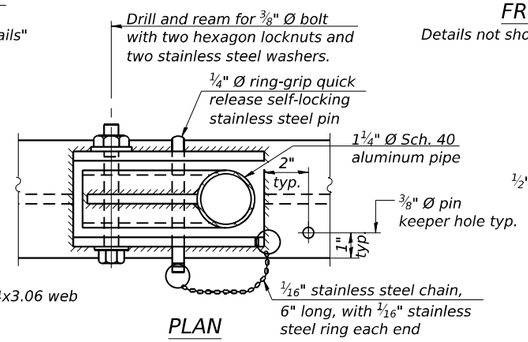

PLAN

DETAIL E HANDRAIL HINGE

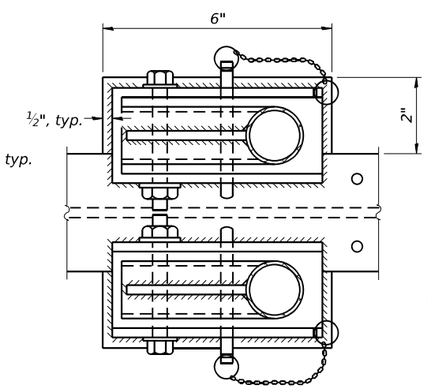

PLAN AT HANDRAIL JOINT

Details not shown same as "PLAN"

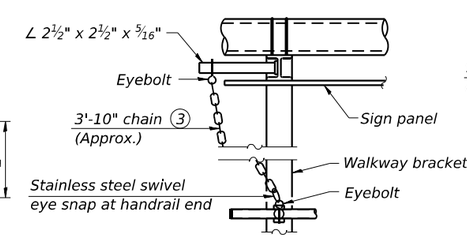

ALTERNATE SAFETY CHAIN ATTACHMENT

Details not shown similar to "Safety Chain" Details

(Walkway omitted for clarity)

(3) 3/16" Type 304L stainless steel chain, approximately 12 links per foot.

(4) Extrusions may be used in lieu of the details shown, with approval of the Engineer.

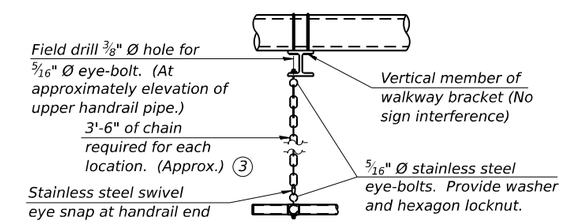

SAFETY CHAIN

One required for each end of each walkway.

OSC-A-8 5-15-2023

MODEL: 008 - Sign Structure [Sheet]
FILE NAME: pw://cmtengp-pw.bentley.com:cmt-connect-projects/Documents/IDOT/23004197-20/74893/CADD Data/Sheets/Sht_08_Sign Structure.dgn

CMT
License No. 184-000613
© Copyright CMT, Inc.

USER NAME = moverbey	DESIGNED - DAC	REVISED -	
	DRAWN - DAC	REVISED -	
PLOT SCALE = N/A	CHECKED - MJO	REVISED -	
PLOT DATE = 10/17/2025	DATE -	REVISED -	

STATE OF ILLINOIS
DEPARTMENT OF TRANSPORTATION

CANTILEVER SIGN STRUCTURES - HANDRAIL DETAILS
ALUMINUM TRUSS & STEEL POST

SCALE: | SHEET 08 OF 09 SHEETS | STA. | TO STA.

F.A.I. RTE.	SECTION	COUNTY	TOTAL SHEETS	SHEET NO.
70	25-1HB-3	EFFINGHAM	747	208
		CONTRACT NO. 74893		
	ILLINOIS	FED. AID PROJECT		

∗ Grind anchor rod to bright finish at ground clamp location before installing clamp.

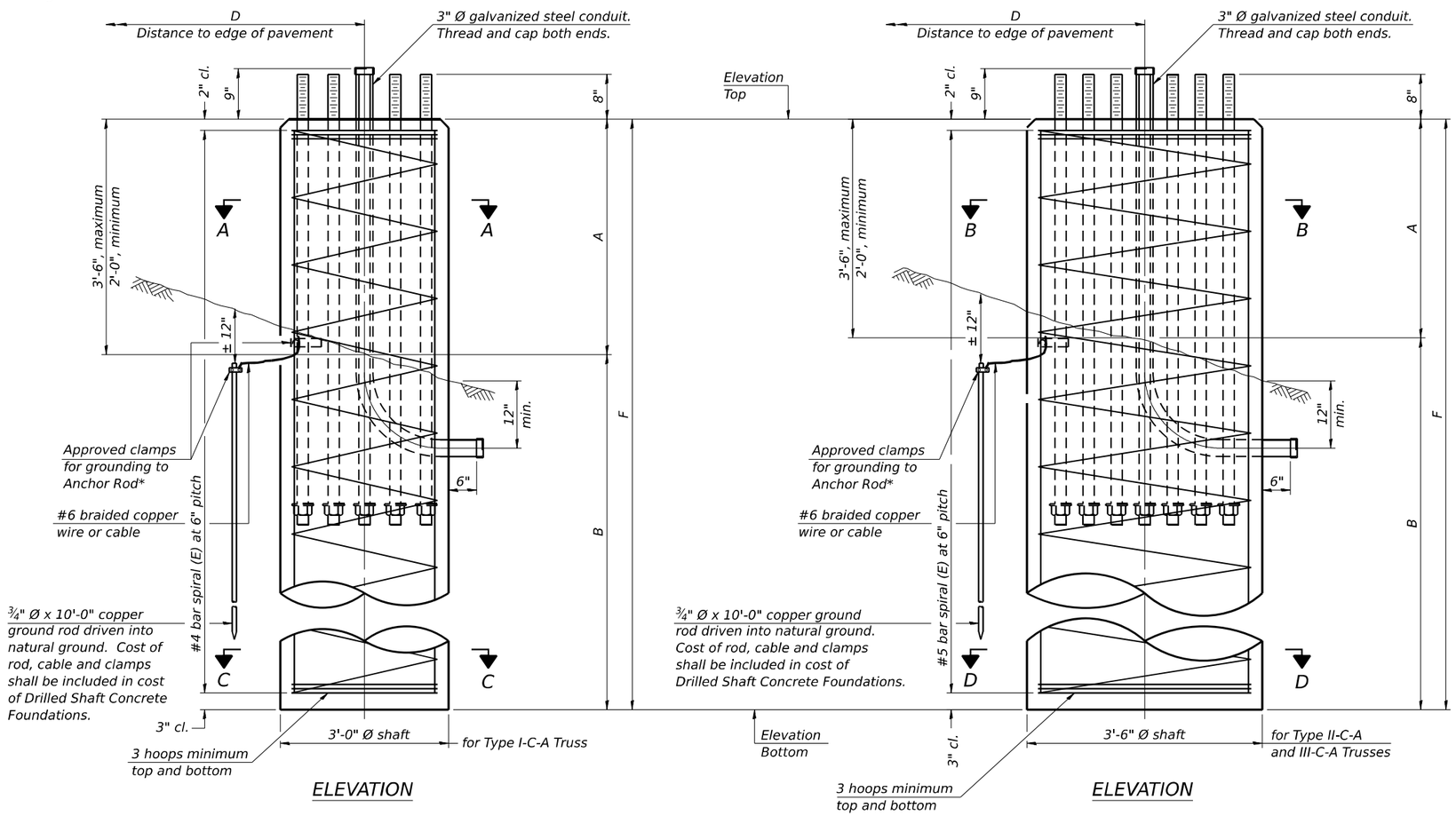

ELEVATION

ELEVATION

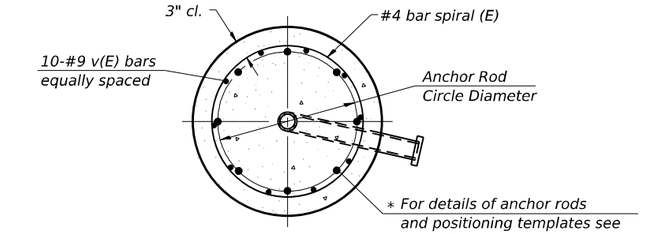

∗ For details of anchor rods and positioning templates see Truss Support Post Base Sheets OSC-A-4 and OSC-A-5.

SECTION A-A
3'-0" Ø shaft

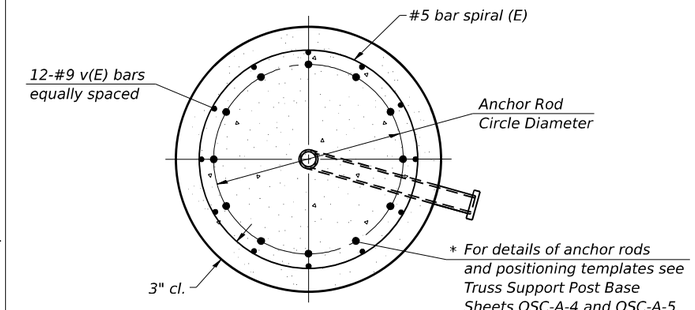

∗ For details of anchor rods and positioning templates see Truss Support Post Base Sheets OSC-A-4 and OSC-A-5.

SECTION B-B
3'-6" Ø shaft

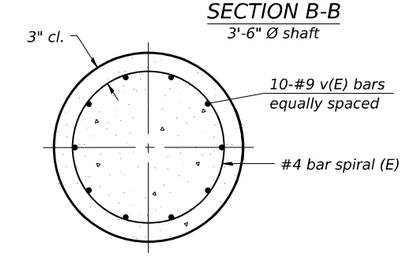

SECTION C-C
3'-0" Ø shaft

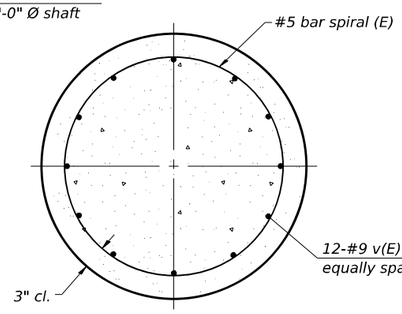

SECTION D-D
3'-6" Ø shaft

NOTES:

The foundation dimensions shown in the Foundation Design Table are based on the presence of mostly cohesive soils with an average Unconfined Compressive Strength (Qu) of at least 1.25 tsf, which must be determined by previous soil investigations at the jobsite. When other conditions are indicated, the boring data will be included in the plans and the foundation dimensions shown in the Foundation Data Table will be the result of site specific designs.

If the conditions encountered are different than those indicated, the Contractor shall notify the Engineer to determine if the foundation dimensions need to be modified. If dimensions "B" or "F" are revised by more than 12" by the Contractor, "as-built" plans shall be prepared and submitted to the District Bureau of Operations for future reference.

No sonotubes or decomposable forms shall be used below the lower conduit entrance. Permanent metal forms or other shielding may not be left in place below that elevation without the Engineer's written permission.

Concrete shall be placed monolithically, without construction joints.

Backfill shall be placed per Article 502 of Standard Specification and prior to erection of support column.

A normal surface finish followed by a Concrete Sealer application will be required on concrete surfaces above the lowest elevation 6" below finished ground line. Cost included in "Drilled Shaft Concrete Foundation".

FOUNDATION DESIGN TABLE

Truss Type	Post Base Sheet	Maximum Cantilever Length (ft)	Maximum Total Sign Area (sq ft)	Shaft Diameter (in)	"B" Depth (ft)	Anchor Rods		Anchor Rod Circle Diameter (in)
						No.	Diameter (in)	
I-C-A	OSC-A-4	25	170	3.0	16.0	8	2	22
II-C-A	OSC-A-5	30	170	3.5	17.0	12	2	30
II-C-A	OSC-A-5	30	340	3.5	21.5	12	2	30
III-C-A	OSC-A-5	35	170	3.5	19.0	12	2	30
III-C-A	OSC-A-5	35	250	3.5	22.5	12	2	30
III-C-A	OSC-A-5	35	400	3.5	26.5	12	2	30
III-C-A	OSC-A-5	40	400	3.5	32.0	12	2	30

FOUNDATION DATA TABLE

Structure Number	Station	Truss Type	Shaft Diameter	Elevation Top	Elevation Bottom	Qu	A	B	F	Class DS Concrete Cubic Yards
7C025I070R082.0	1533+37.36	I-C-A	3'-0"	633.18	615.18	1.9 tsf	2'-0"	16'-0"	18'-0'	4.7

OSC-A-9 5-15-2023

MODEL: 009 - Sign Structure [Sheet]
FILE NAME: pw://cmtengp-pw.bentley.com:cmt-connect-projects/Documents/IDOT22004197-00/74893/CADD Data/Sheets/Sht_09_Sign Structure.dgn

CMT
License No. 184-000613
© Copyright CMT, Inc.

USER NAME = moverbey	DESIGNED - DAC	REVISED -	
	DRAWN - DAC	REVISED -	
PLOT SCALE = N/A	CHECKED - MJO	REVISED -	
PLOT DATE = 10/17/2025	DATE -	REVISED -	

STATE OF ILLINOIS
DEPARTMENT OF TRANSPORTATION

CANTILEVER SIGN STRUCTURES - DRILLED SHAFT
ALUMINUM TRUSS & STEEL POST

SCALE: SHEET 09 OF 09 SHEETS STA. TO STA.

F.A.I. RTE.	SECTION	COUNTY	TOTAL SHEETS	SHEET NO.
70	25-1HB-3	EFFINGHAM	747	209
		CONTRACT NO. 74893		
	ILLINOIS	FED. AID PROJECT		

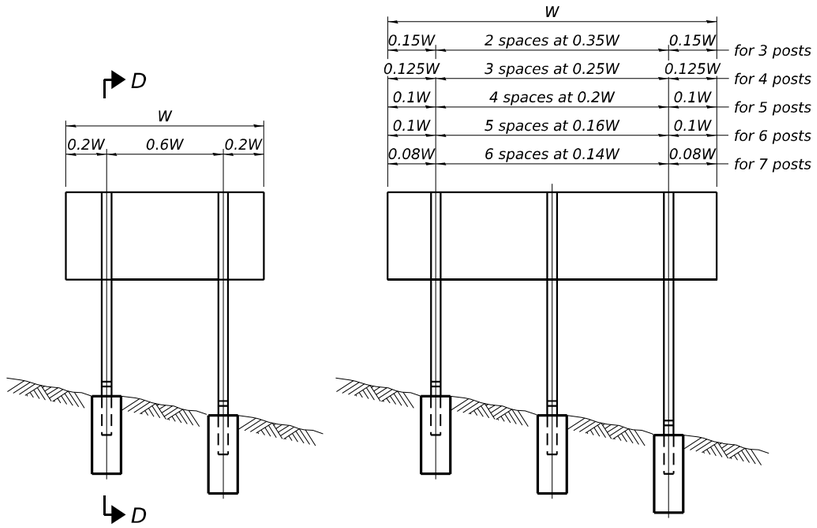

ELEVATION

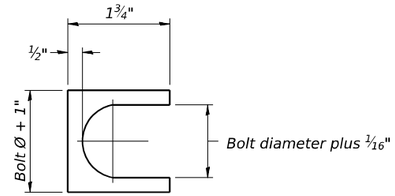

SHIM DETAIL

Furnish two 0.01" thick and two 0.03" thick stainless steel or brass (ASTM B36) shims per post.

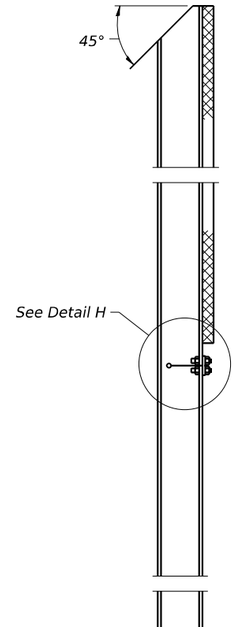

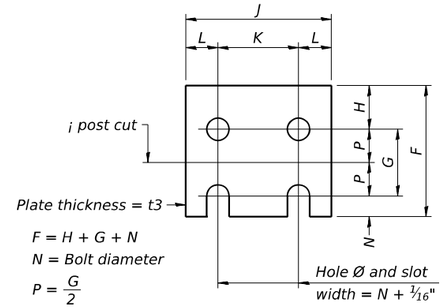

FUSE PLATE DATA		
N = Bolt Diameter	G	H
½"	2"	1⅛"
⅝"	2¼"	1¼"
¾"	2½"	1⅜"
⅞"	2¾"	1½"
1"	3"	1⅝"
1⅛"	3¼"	1¾"
1¼"	3½"	1⅞"

FUSE PLATE DETAIL

(Install with notches down.)

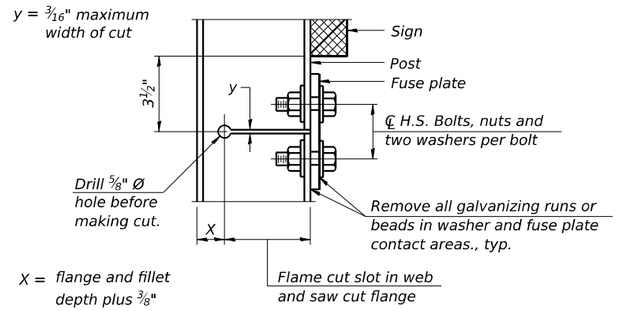

DETAIL H

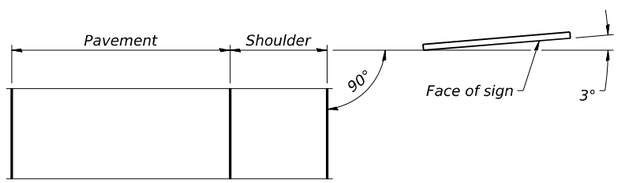

LOCATION SKETCH

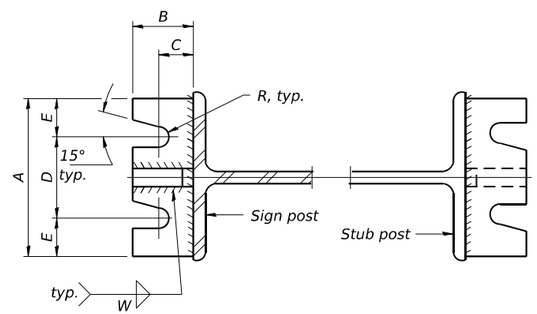

SECTION A-A

SECTION B-B

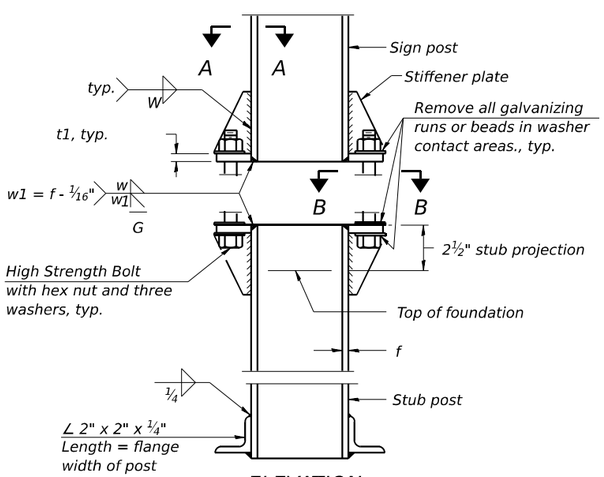

ELEVATION

SIGN POST & STUB POST

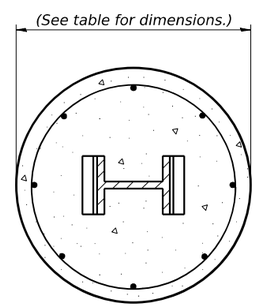

SECTION C-C

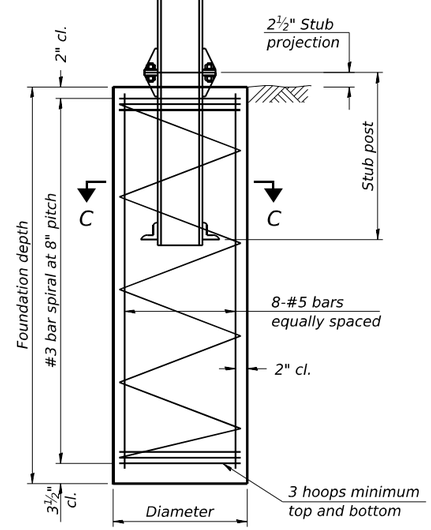

SECTION D-D

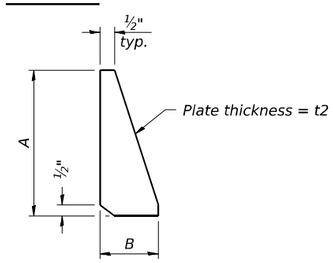

STIFFENER PLATE DETAIL

Diameter

GENERAL NOTES

Posts shall be plumbed by using shims with post-to-stub post connection bolts snug tight only. Final tightening of all High Strength Bolts shall be in accordance with Article 727.05 and threads at the junction of the bolt and nut shall be burred or center punched to prevent the nut from loosening.

LOADING: 80 m.p.h. wind with 30% gust factor, normal to sign.

DESIGN STRESSES:
Structural steel - 20,000 p.s.i.
Reinforcing steel - 20,000 p.s.i.
Concrete - 1,400 p.s.i.
Footing soil pressure - 2,000 p.s.f.

After fabrication, the post, fuse plate and upper 6", min. of the stub post shall be hot-dip galvanized in accordance with AASHTO M111. All bolts, nuts and washers shall be hot-dip galvanized in accordance with AASHTO M232.

Work this sheet with Base Sheet BAW-A-2.

BAW-A-1 5-15-2023

(Sheet 1 of 2)

MODEL: Breakaway_Sign_Support [Sheet]
FILE NAME: pw://mineingrw.bentley.com:mcnet-connect-projects/Documents/DOT/220041/74893/CAD2 Data/Sheets/0774893-sht-bdgn_Breakaway_Sign_Support.dgn

CMT License No. 184-000613 © Copyright CMT, Inc.

USER NAME = moverbey	DESIGNED - MC	REVISED -	
	DRAWN - MC	REVISED -	
PLOT SCALE = 0.16666667 ' / in.	CHECKED - MJO	REVISED -	
PLOT DATE = 10/17/2025	DATE - 10/16/2025	REVISED -	

STATE OF ILLINOIS
DEPARTMENT OF TRANSPORTATION

FAI ROUTE 70 - INTERSTATE 70
SIGNING PLAN - BREAKAWAY SIGN SUPPORT

SCALE: 1"=20' | SHEET 33 OF 37 SHEETS | STA. TO STA.

F.A.I. RTE.	SECTION	COUNTY	TOTAL SHEETS	SHEET NO.
70	(25-1)R-BR	EFFINGHAM	747	210
		CONTRACT NO. 74893		
		ILLINOIS	FED. AID PROJECT	

POST	CONCRETE FOUNDATION TABLE							POST TO STUB POST CONNECTION DATA										FUSE PLATE DATA			
	Foundation			Reinforcement				Stub Post													
	Diameter	*Minimum Depth	Concrete (1) cu. yds.)	Vertical Bars Length	Bar Spirals Diameter	Bar Spirals Length	lbs. (2)	Length	Bolt Size	A	B	C	D	E	t1	t2	R	W	J	K	L	t3
W6x9	2'-0"	6'-0"	0.70	5'-9"	1'-8½"	79'-0"	78	2'-3"	⅝" x 3¼"	6"	2¼"	1¼"	3½"	1¼"	¾"	½"	11/32"	¼"	4"	2¼"	⅞"	¼"
W6x15	2'-0"	6'-0"	0.70	5'-9"	1'-8½"	79'-0"	78	2'-6"	⅝" x 3¼"	6"	2¼"	1¼"	3½"	1¼"	¾"	½"	11/32"	¼"	6"	3½"	1¼"	⅜"
W8x18	2'-0"	6'-0"	0.70	5'-9"	1'-8½"	79'-0"	78	2'-6"	¾" x 3¾"	6"	2½"	1⅜"	3¼"	1⅜"	1"	½"	13/32"	5/16"	5¼"	2¾"	1¼"	⅜"
W10x22	2'-6"	6'-6"	1.18	6'-3"	2'-2½"	105'-0"	92	3'-0"	¾" x 3¾"	6"	2½"	1⅜"	3¼"	1⅜"	1"	½"	13/32"	5/16"	5¾"	2¾"	1½"	½"
W10x26	2'-6"	7'-0"	1.27	6'-9"	2'-2½"	112'-0"	98	3'-0"	⅞" x 4"	7"	2¾"	1½"	4"	1½"	1"	¾"	15/32"	⅜"	5¾"	2¾"	1½"	⅝"
W12x26	2'-6"	7'-9"	1.41	7'-6"	2'-2½"	119'-0"	107	3'-0"	⅞" x 4"	7"	2¾"	1½"	4"	1½"	1"	¾"	15/32"	⅜"	6½"	3½"	1½"	⅝"
W14x30	3'-0"	7'-3"	1.90	7'-0"	2'-8½"	145'-0"	113	3'-0"	⅞" x 4"	7"	2¾"	1½"	4"	1½"	1"	¾"	15/32"	⅜"	6¾"	3½"	1⅝"	½"
W14x38	3'-0"	8'-0"	2.09	7'-9"	2'-8½"	153'-0"	122	3'-6"	1" x 4½"	7½"	3"	1¾"	4"	1¾"	1¼"	¾"	17/32"	⅜"	6¾"	3½"	1⅝"	½"
W16x45	3'-0"	8'-6"	2.23	8'-3"	2'-8½"	162'-0"	130	3'-6"	1" x 4½"	7½"	3"	1¾"	4"	1¾"	1¼"	¾"	17/32"	⅜"	7"	3½"	1¾"	½"

*Dimensional changes required for varying site conditions shall be approved by the Engineer.

POST	FUSE PLATE BOLT SIZE																				
	Sign Height																				
	4'-0"	5'-0"	6'-0"	7'-0"	8'-0"	9'-0"	10'-0"	11'-0"	12'-0"	13'-0"	14'-0"	15'-0"	16'-0"	17'-0"	18'-0"	19'-0"	20'-0"	21'-0"	22'-0"	23'-0"	24'-0"
W6x9	½" x 1½"	½" x 1½"	½" x 1½"	½" x 1½"	——	——	——	——	——	——	——	——	——	——	——	——	——	——	——	——	——
W6x15	½" x 1¾"	½" x 1¾"	½" x 1¾"	⅝" x 2"	⅝" x 2"	¾" x 2"	¾" x 2"	¾" x 2"	¾" x 2"	——	——	——	——	——	——	——	——	——	——	——	——
W8x18	½" x 1¾"	½" x 1¾"	½" x 1¾"	½" x 1¾"	⅝" x 2"	⅝" x 2"	¾" x 2"	¾" x 2"	¾" x 2"	¾" x 2"	——	——	——	——	——	——	——	——	——	——	——
W10x22	½" x 2"	½" x 2"	½" x 2"	½" x 2"	½" x 2"	⅝" x 2"	⅝" x 2"	¾" x 2¼"	¾" x 2¼"	¾" x 2¼"	¾" x 2¼"	¾" x 2¼"	¾" x 2¼"	——	——	——	——	——	——	——	——
W10x26	½" x 2"	½" x 2"	½" x 2"	½" x 2"	½" x 2"	⅝" x 2¼"	⅝" x 2¼"	¾" x 2½"	¾" x 2½"	¾" x 2½"	¾" x 2½"	¾" x 2½"	¾" x 2½"	¾" x 2½"	——	——	——	——	——	——	——
W12x26	½" x 2"	½" x 2"	½" x 2"	½" x 2"	½" x 2"	⅝" x 2¼"	⅝" x 2¼"	¾" x 2½"	¾" x 2½"	¾" x 2½"	¾" x 2½"	¾" x 2½"	¾" x 2½"	¾" x 2½"	¾" x 2½"	——	——	——	——	——	——
W14x30	½" x 2"	½" x 2"	½" x 2"	½" x 2"	½" x 2"	⅝" x 2"	⅝" x 2"	¾" x 2¼"	¾" x 2¼"	¾" x 2¼"	¾" x 2¼"	¾" x 2¼"	¾" x 2¼"	¾" x 2¼"	¾" x 2¼"	¾" x 2¼"	¾" x 2¼"	——	——	——	——
W14x38	½" x 2"	½" x 2"	½" x 2"	½" x 2"	½" x 2"	⅝" x 2¼"	⅝" x 2¼"	¾" x 2½"	¾" x 2½"	¾" x 2½"	¾" x 2½"	⅞" x 2½"	⅞" x 2½"	1" x 2¾"	1" x 2¾"	1" x 2¾"	1" x 2¾"	1" x 2¾"	1" x 2¾"	1" x 2¾"	1" x 2¾"
W16x45	——	½" x 2"	½" x 2"	½" x 2"	½" x 2"	½" x 2"	½" x 2"	⅝" x 2¼"	⅝" x 2¼"	⅝" x 2¼"	¾" x 2½"	¾" x 2½"	⅞" x 2½"	⅞" x 2½"	⅞" x 2½"	1" x 2¾"	1" x 2¾"	1" x 2¾"	1" x 2¾"	1" x 2¾"	1" x 2¾"

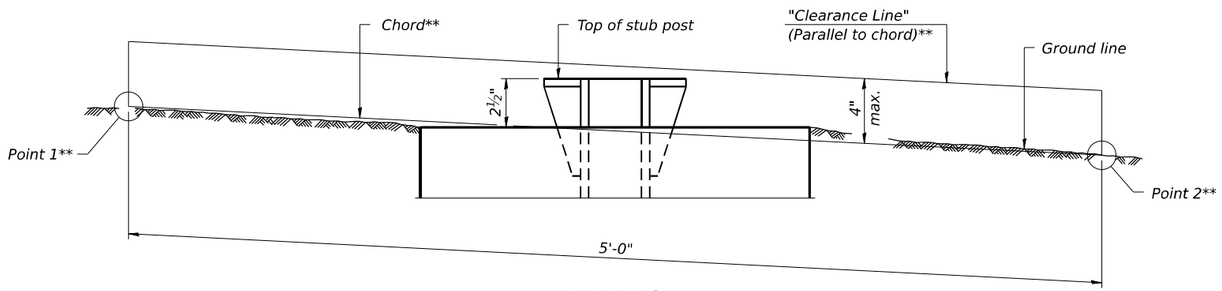

ELEVATION
GROUND LINE & STUB POST

** For all "Point 1" and "Point 2" locations, "Clearance Line" must be at or above top of stub post.

(1) Quantity includes all concrete necessary for one foundation.

(2) Includes reinforcement bars and spiral hooping for one foundation.

BAW-A-2 5-15-2023

(Sheet 2 of 2)

MODEL: Breakaway_Sign_Support (Sheet)
FILE NAME: pw://cmtengrpw.bentley.com:cmt-connect-projects/Documents/IDOT/20041970-D074893/CADD Data/Sheets/D774893-sht-sign_Breakaway_Sign_Support.dgn

CMT
License No. 184-000613 © Copyright CMT, Inc.

USER NAME = moverbey	DESIGNED - MC	REVISED -	
	DRAWN - MC	REVISED -	
PLOT SCALE = 0.16666667 ' / in.	CHECKED - MJO	REVISED -	
PLOT DATE = 10/17/2025	DATE - 10/16/2025	REVISED -	

STATE OF ILLINOIS
DEPARTMENT OF TRANSPORTATION

FAI ROUTE 70 - INTERSTATE 70
SIGNING PLAN - BREAKAWAY SIGN SUPPORT

SCALE: 1"=20' | SHEET 34 OF 37 SHEETS | STA. TO STA.

F.A.I. RTE.	SECTION	COUNTY	TOTAL SHEETS	SHEET NO.
70	(25-1)R-BR	EFFINGHAM	747	211
		CONTRACT NO. 74893		
	ILLINOIS	FED. AID PROJECT		

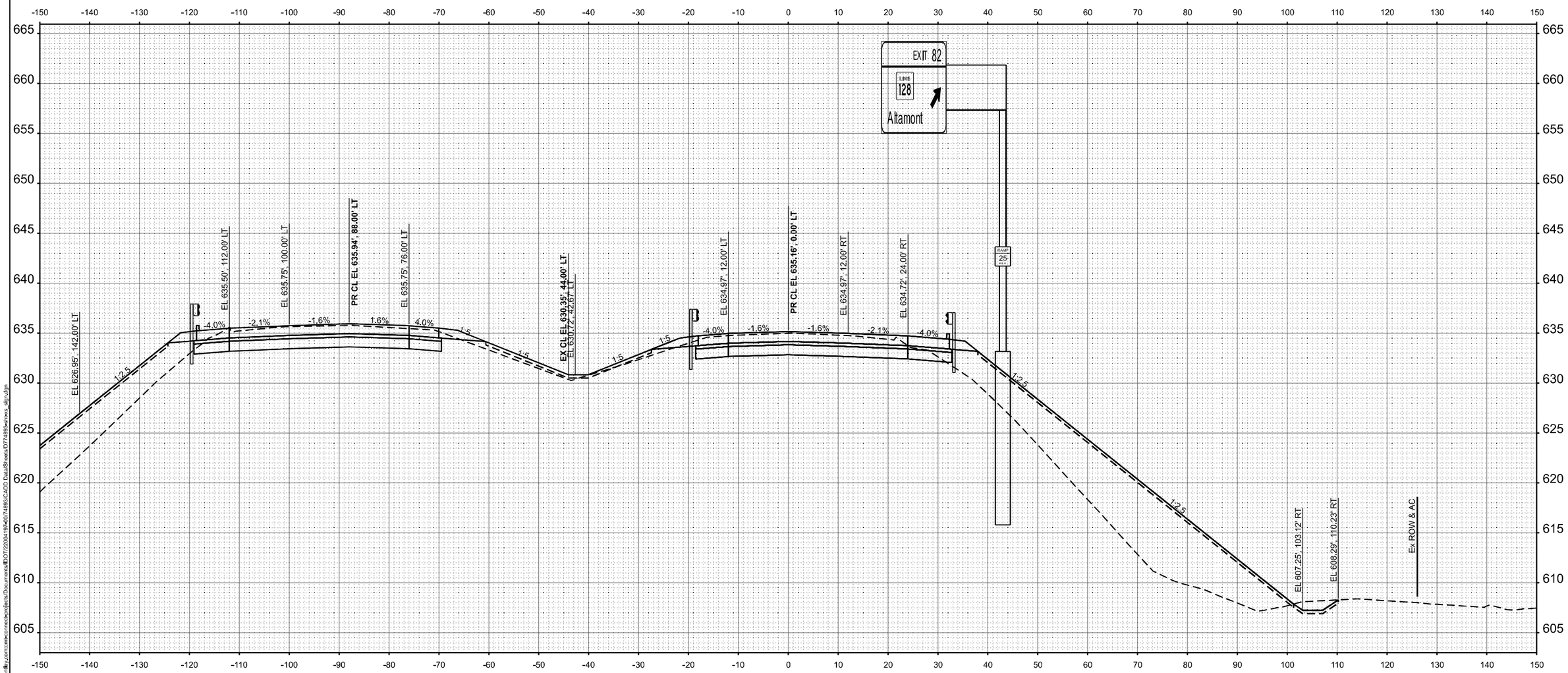

MODEL: SH - Sign - 14444+20.23
FILE NAME: pw:\\centerpw.bentley.com:centerpw\projects\Documents\IDOT\20041974\74893\CADD Data\Sheets\0774893-sht\ws_sign.dgn

CMT
License No. 184-000613
© Copyright CMT, Inc.

USER NAME = moverbey	DESIGNED - AJ	REVISED -	
	DRAWN - AJ	REVISED -	
PLOT SCALE = 0.16666667 ' / in.	CHECKED - MJO	REVISED -	
PLOT DATE = 10/17/2025	DATE - 10/16/2025	REVISED -	

STATE OF ILLINOIS
DEPARTMENT OF TRANSPORTATION

FAI ROUTE 70 - INTERSTATE 70
CROSS SECTIONS - SIGN

SCALE: 1"=10' | SHEET 35 OF 37 SHEETS | STA. | TO STA.

F.A.I. RTE.	SECTION	COUNTY	TOTAL SHEETS	SHEET NO.
70	(25-1)R-BR	EFFINGHAM	747	212
		CONTRACT NO. 74893		
	ILLINOIS	FED. AID PROJECT		

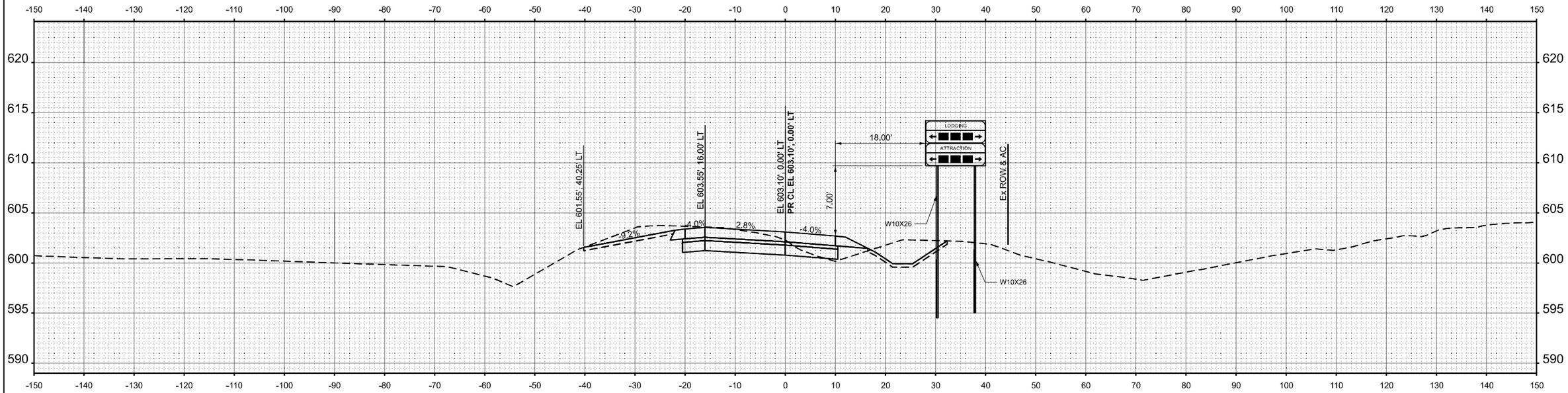

STA 113+60.95

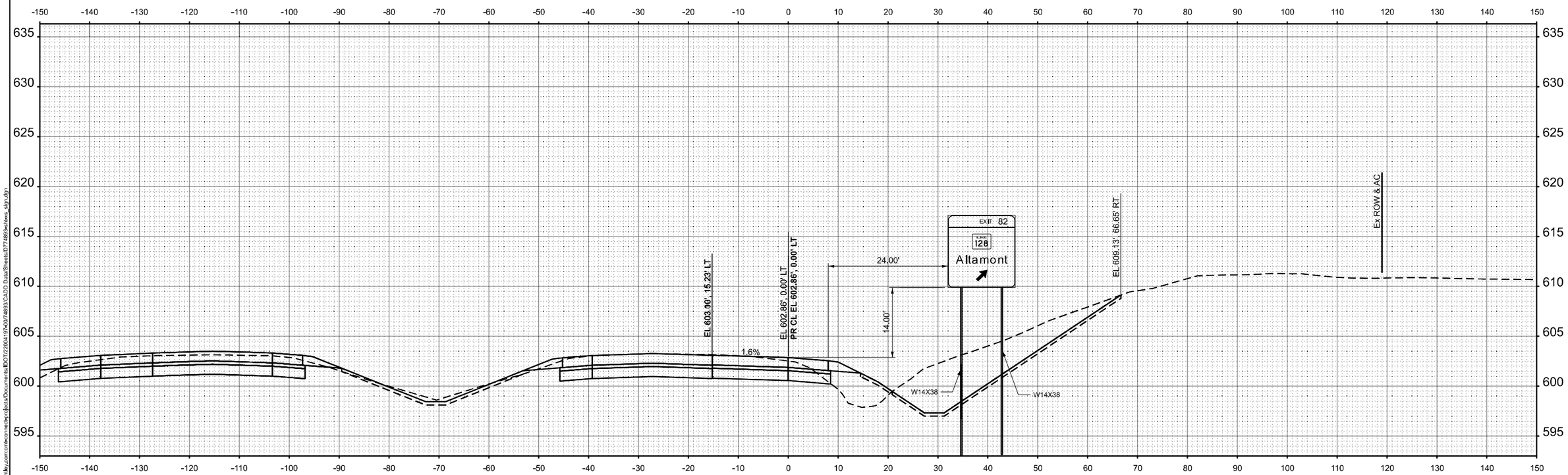

STA 102+66.36

MODEL: SH - Sign - 113+60.95
FILE NAME: pw://cmtengpw.bentley.com:cmtc-connect-projects/Documents/IDOT/72004197-00/74893/CADD Data/Sheets/D774893-sht-xs_sign.dgn

CMT
License No. 184-000613 © Copyright CMT, Inc.

USER NAME = moverbey	DESIGNED - AJ	REVISED -	
	DRAWN - AJ	REVISED -	
PLOT SCALE = 0.16666667 ' / in.	CHECKED - MJO	REVISED -	
PLOT DATE = 10/17/2025	DATE - 10/16/2025	REVISED -	

STATE OF ILLINOIS
DEPARTMENT OF TRANSPORTATION

FAI ROUTE 70 - INTERSTATE 70
CROSS SECTIONS - SIGN

SCALE: 1"=10' | SHEET 36 OF 37 SHEETS | STA. TO STA.

F.A.I. RTE.	SECTION	COUNTY	TOTAL SHEETS	SHEET NO.
70	(25-1)R-BR	EFFINGHAM	747	213

CONTRACT NO. 74893

ILLINOIS | FED. AID PROJECT

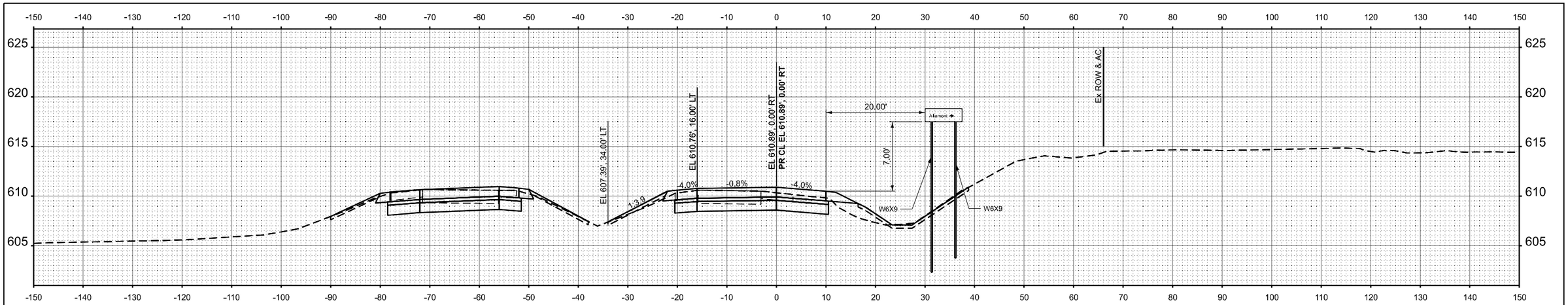

STA 119+60.00

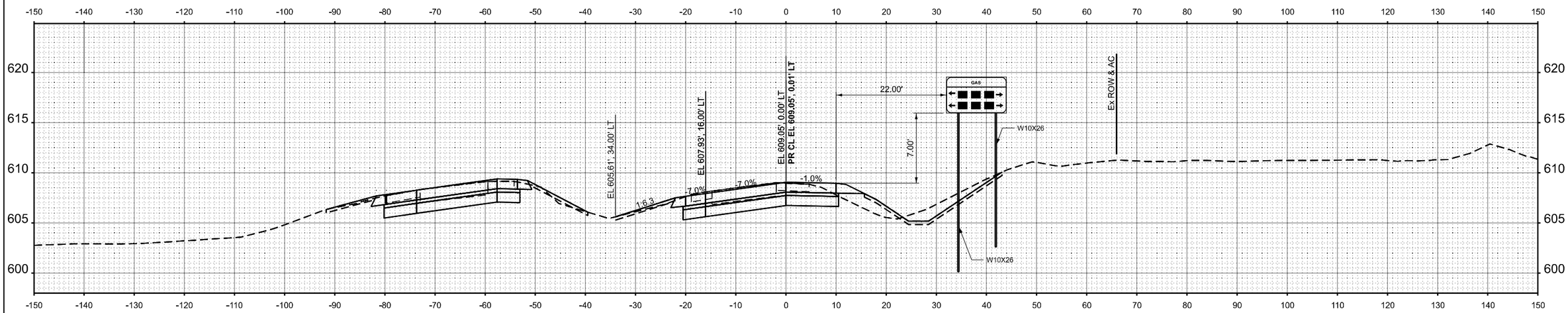

STA 117+61.00

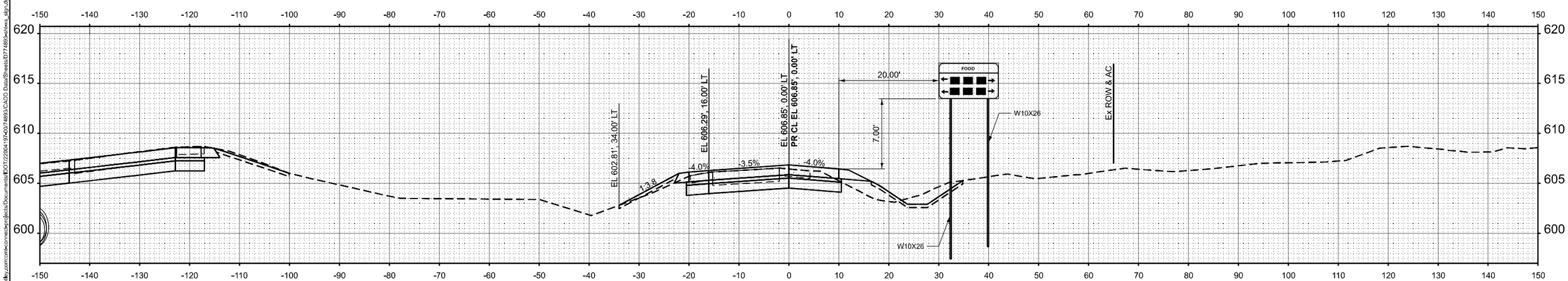

STA 115+61.00

MODEL: SHT - XS - 115+61.00
FILE NAME: pw://mwangpw.bentley.com:mwangpw-connect-eu-pw-cloud-01/mwangpw-connect-eu-pw-cloud-01/Projects/Documents/EOT72/20041974/00/74893/CADD Data/Sheets/074893-xhwa_sign.dgn

CMT
License No. 184-000613
© Copyright CMT, Inc.

USER NAME = moverbey	DESIGNED - AJ	REVISED -	
	DRAWN - AJ	REVISED -	
PLOT SCALE = 0.16666667 ' / in.	CHECKED - MJO	REVISED -	
PLOT DATE = 10/17/2025	DATE - 10/16/2025	REVISED -	

STATE OF ILLINOIS
DEPARTMENT OF TRANSPORTATION

FAI ROUTE 70 - INTERSTATE 70
CROSS SECTIONS - SIGN

SCALE: 1"=10' | SHEET 37 OF 37 SHEETS | STA. 115+61.00 TO STA. 119+60.00

F.A.I. RTE.	SECTION	COUNTY	TOTAL SHEETS	SHEET NO.
70	(25-1)R-BR	EFFINGHAM	747	214
		CONTRACT NO. 74893		
		ILLINOIS	FED. AID PROJECT	

LIGHTING GENERAL NOTES

1. ELECTRICAL WORK SHALL CONFORM TO NATIONAL, STATE, AND LOCAL CODES.
2. THE CONTRACTOR SHALL SET LIGHT POLES 18' BEHIND EDGE OF TRAVELED PAVEMENT.
3. THE CONTRACTOR SHALL BE RESPONSIBLE FOR LOCATING EXISTING IDOT ELECTRICAL FACILITIES AT HIS/HER OWN EXPENSE IF REQUIRED. THE CONTRACTOR SHALL ALSO BE LIABLE FOR ANY DAMAGE TO IDOT FACILITIES RESULTING FROM INACCURATE LOCATING.

INDEX OF SHEETS

DWG NO.	TITLE
1	LIGHTING GENERAL NOTES, SOQ, LEGEND, AND INDEX OF SHEETS
2-4	PROPOSED LIGHTING PLAN
5	WIRING DIAGRAM AND LUMINAIRE PERFORMANCE TABLE

HIGHWAY STANDARDS

NUMBER	TITLE
814001-03	HANDHOLES
821101-03	LUMINAIRE WIRING IN POLE
825011-04	LIGHTING CONTROLLER PEDESTAL MOUNTED, 240V
830006-05	LIGHT POLE ALUMINUM DAVIT ARM
836001-05	LIGHT POLE FOUNDATION
838001-01	BREAKAWAY DEVICES

LEGEND

- R — EXISTING ELECTRIC SERVICE TO BE REMOVED
- PROPOSED ELECTRIC SERVICE INSTALLATION, 120/240V, 60 AMP, SINGLE PHASE, 3-WIRE
- R — EXISTING LIGHTING TOWER TO BE REMOVED
- PROPOSED LIGHTING UNIT, LUMINAIRE, LED, ROADWAY OUTPUT DESIGNATION G, 45' ALUMINUM POLE, 15' DAVIT ARM, METAL FOUNDATION, BREAKAWAY COUPLINGS WITH SS SCREEN.
- R — EXISTING LIGHTING CONTROLLER TO BE REMOVED
- PROPOSED PEDESTAL MOUNTED LIGHTING CONTROLLER, 240V, 60A
- UNIT DUCT, SIZE AND TYPE AS NOTED
- UNDERGROUND CONDUIT, TYPE AND SIZE AS INDICATED
- (A) UNIT DUCT, 600V, 2-C NO.6, 1/C NO. 6 GROUND, (XLP-TYPE USE), $\frac{3}{4}$" DIA. POLYETHYLENE
- (2) UNDERGROUND CONDUIT, COILABLE NONMETALLIC CONDUIT, 2" DIA.
- (3) UNDERGROUND CONDUIT, COILABLE NONMETALLIC CONDUIT, 3" DIA.
- (4) INTERCEPT 240 VAC LIGHTING CIRCUIT SPLICE AND CONNECT TO 500 WATT 240 VAC PRIM 120 VAC SEC. THEN PROVIDE 5 AMP SINGLE POLE FUSE THEN TO LIGHTED FLASHING BEASON SIGN.
- (5) UNIT DUCT, 600V, 2-C NO.10, 1/C NO. 10 GROUND, (XLP-TYPE USE), $\frac{3}{4}$" DIA. POLYETHYLENE
- HANDHOLE COMPOSITE CONCRETE 81400730

SCHEDULE OF QUANTITIES

	UNIT	TOTAL QUANTITY
ELECTRIC SERVICE INSTALLATION	EACH	1
UNDERGROUND CONDUIT, COILABLE NONMETALLIC CONDUIT, 2" DIA.	FOOT	544
UNDERGROUND CONDUIT, COILABLE NONMETALLIC CONDUIT, 3" DIA.	FOOT	274
UNIT DUCT, 600V, 2-1C NO.6, 1/C NO.6 GROUND, (XLP-TYPE USE), 3/4" DIA. POLYETHYLENE	FOOT	7602
LUMINAIRE, LED, ROADWAY, OUTPUT DESIGNATION G	EACH	24
LIGHTING CONTROLLER, PEDESTAL MOUNTED, 240VOLT, 60AMP	EACH	1
LIGHT POLE, ALUMINUM, 45 FT. M.H., 15 FT. DAVIT ARM	EACH	24
LIGHT POLE FOUNDATION, METAL, 15" BOLT CIRCLE, 8 5/8" X 6'	EACH	24
BREAKAWAY DEVICE, COUPLING WITH STAINLESS STEEL SCREEN	EACH	96
REMOVAL OF LIGHTING TOWER, NO SALVAGE	EACH	4
REMOVAL OF LIGHTING CONTROLLER	EACH	1
REMOVAL OF ELECTRIC SERVICE INSTALLATION	EACH	1
REMOVAL OF LIGHTING CONTROLLER FOUNDATION	EACH	1
REMOVAL OF TOWER FOUNDATION	EACH	4
UNIT DUCT, 600V, 2-1C NO.10, 1/C NO.10 GROUND, (XLP-TYPE USE), 3/4" DIA. POLYETHYLENE	FOOT	978
ILLUMINATED SIGN, LED	EACH	12
TRANSFORMER, GENERAL PURPOSE	EACH	3
HANDHOLE, COMPOSITE CONCRETE	EACH	3
CONDUIT ATTACHED TO STRUCTURE, 1" GALVANIZED STEEL	FOOT	84
ELECTRIC CABLE IN CONDUIT, 600V (XLP-TYPE USE) 1/C NO. 12	FOOT	378
FLASHING BEACON INSTALLATION	EACH	2
SIGNAL HEAD, POLYCARBONATE, LED, 1-FACE, 1-SECTION, POST MOUNTED	EACH	2

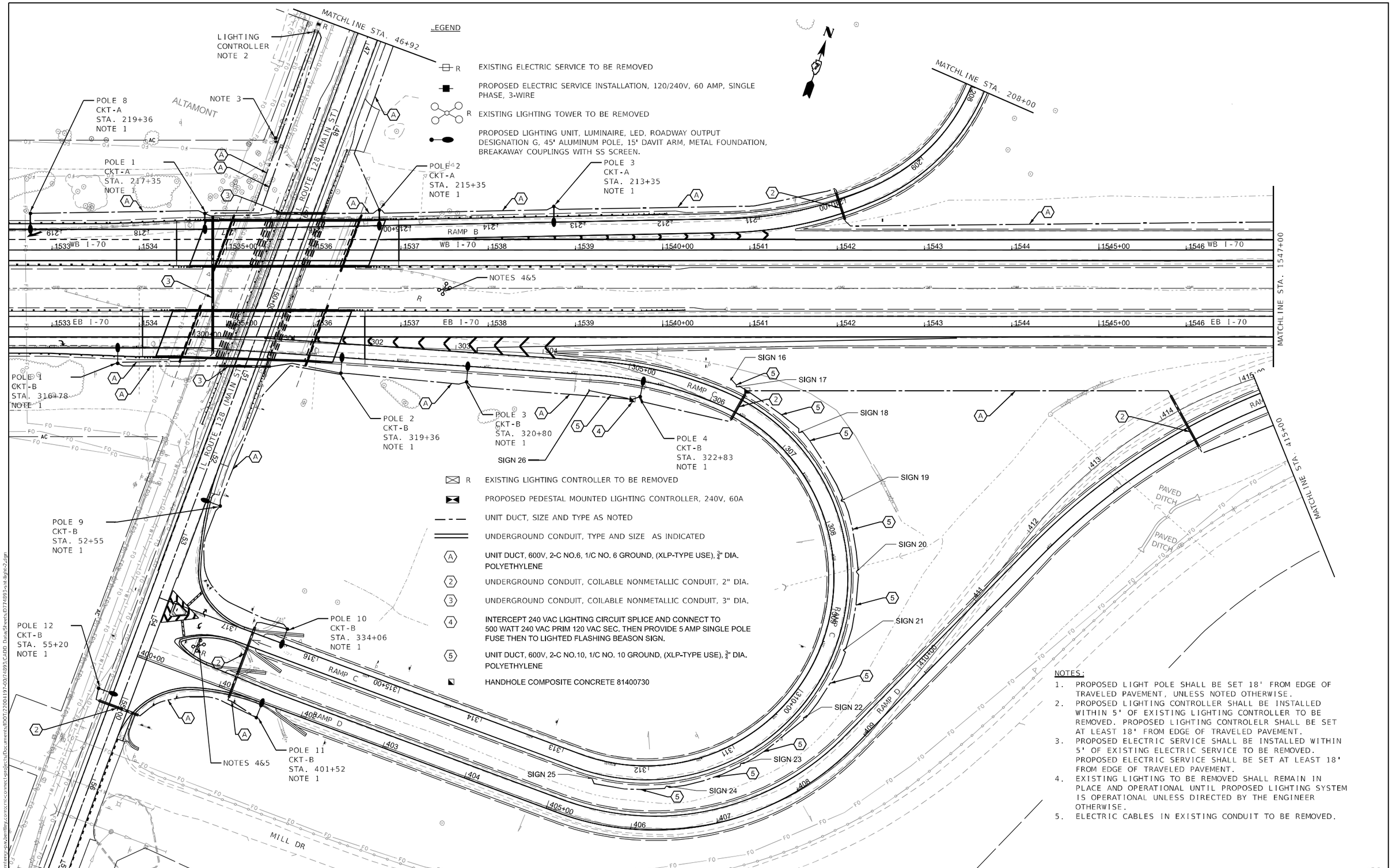

LEGEND

- R — EXISTING ELECTRIC SERVICE TO BE REMOVED
- PROPOSED ELECTRIC SERVICE INSTALLATION, 120/240V, 60 AMP, SINGLE PHASE, 3-WIRE
- R — EXISTING LIGHTING TOWER TO BE REMOVED
- PROPOSED LIGHTING UNIT, LUMINAIRE, LED, ROADWAY OUTPUT DESIGNATION G, 45' ALUMINUM POLE, 15' DAVIT ARM, METAL FOUNDATION, BREAKAWAY COUPLINGS WITH SS SCREEN.
- R — EXISTING LIGHTING CONTROLLER TO BE REMOVED
- PROPOSED PEDESTAL MOUNTED LIGHTING CONTROLLER, 240V, 60A
- UNIT DUCT, SIZE AND TYPE AS NOTED
- UNDERGROUND CONDUIT, TYPE AND SIZE AS INDICATED
- (A) UNIT DUCT, 600V, 2-C NO.6, 1/C NO. 6 GROUND, (XLP-TYPE USE), ¾" DIA. POLYETHYLENE
- (2) UNDERGROUND CONDUIT, COILABLE NONMETALLIC CONDUIT, 2" DIA.
- (3) UNDERGROUND CONDUIT, COILABLE NONMETALLIC CONDUIT, 3" DIA.
- (4) INTERCEPT 240 VAC LIGHTING CIRCUIT SPLICE AND CONNECT TO 500 WATT 240 VAC PRIM 120 VAC SEC. THEN PROVIDE 5 AMP SINGLE POLE FUSE THEN TO LIGHTED FLASHING BEASON SIGN.
- (5) UNIT DUCT, 600V, 2-C NO.10, 1/C NO. 10 GROUND, (XLP-TYPE USE), ¾" DIA. POLYETHYLENE
- HANDHOLE COMPOSITE CONCRETE 81400730

NOTES:

1. PROPOSED LIGHT POLE SHALL BE SET 18' FROM EDGE OF TRAVELED PAVEMENT, UNLESS NOTED OTHERWISE.
2. PROPOSED LIGHTING CONTROLLER SHALL BE INSTALLED WITHIN 5' OF EXISTING LIGHTING CONTROLLER TO BE REMOVED. PROPOSED LIGHTING CONTROLELR SHALL BE SET AT LEAST 18' FROM EDGE OF TRAVELED PAVEMENT.
3. PROPOSED ELECTRIC SERVICE SHALL BE INSTALLED WITHIN 5' OF EXISTING ELECTRIC SERVICE TO BE REMOVED. PROPOSED ELECTRIC SERVICE SHALL BE SET AT LEAST 18' FROM EDGE OF TRAVELED PAVEMENT.
4. EXISTING LIGHTING TO BE REMOVED SHALL REMAIN IN PLACE AND OPERATIONAL UNTIL PROPOSED LIGHTING SYSTEM IS OPERATIONAL UNLESS DIRECTED BY THE ENGINEER OTHERWISE.
5. ELECTRIC CABLES IN EXISTING CONDUIT TO BE REMOVED.

$E-5S

USER NAME = moverbey	DESIGNED - MAA	REVISED -	
	CHECKED -	REVISED -	
PLOT SCALE = 100.0000 sf / in.	DRAWN - MAA	REVISED -	
PLOT DATE = 10/13/2025	CHECKED -	REVISED -	

STATE OF ILLINOIS
DEPARTMENT OF TRANSPORTATION

I-70 AT IL ROUTE 128
LIGHTING PLAN

SCALE: | SHEET OF SHEETS | STA. TO STA.

F.A.I RTE.	SECTION	COUNTY	TOTAL SHEETS	SHEET NO.
70	(25-1)R-BR	EFFINGHAM	747	216
		CONTRACT NO. 74893		
	ILLINOIS	FED. AID PROJECT		

MODEL: Default
FILE NAME: pw:/contengi-pw.bentley.com:contengi-connect-projects/Documents/D07I220041197-D074893/CADD Data/Sheets/0774893-sit-light-2.dgn

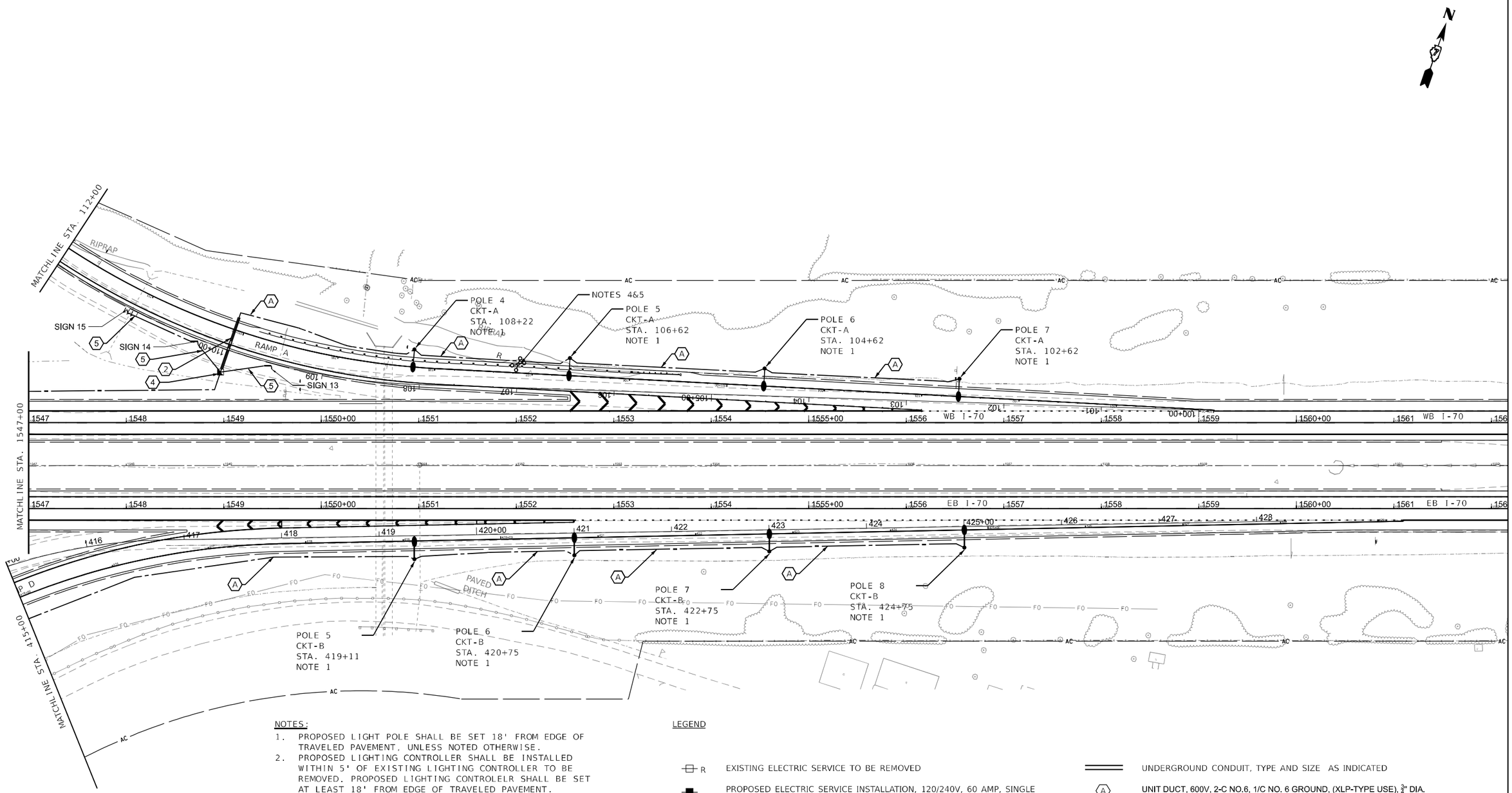

NOTES:

1. PROPOSED LIGHT POLE SHALL BE SET 18' FROM EDGE OF TRAVELED PAVEMENT, UNLESS NOTED OTHERWISE.
2. PROPOSED LIGHTING CONTROLLER SHALL BE INSTALLED WITHIN 5' OF EXISTING LIGHTING CONTROLLER TO BE REMOVED. PROPOSED LIGHTING CONTROLELR SHALL BE SET AT LEAST 18' FROM EDGE OF TRAVELED PAVEMENT.
3. PROPOSED ELECTRIC SERVICE SHALL BE INSTALLED WITHIN 5' OF EXISTING ELECTRIC SERVICE TO BE REMOVED. PROPOSED ELECTRIC SERVICE SHALL BE SET AT LEAST 18' FROM EDGE OF TRAVELED PAVEMENT.
4. EXISTING LIGHTING TO BE REMOVED SHALL REMAIN IN PLACE AND OPERATIONAL UNTIL PROPOSED LIGHTING SYSTEM IS OPERATIONAL UNLESS DIRECTED BY THE ENGINEER OTHERWISE.
5. ELECTRIC CABLES IN EXISTING CONDUIT TO BE REMOVED.

LEGEND

- R — EXISTING ELECTRIC SERVICE TO BE REMOVED
- PROPOSED ELECTRIC SERVICE INSTALLATION, 120/240V, 60 AMP, SINGLE PHASE, 3-WIRE
- R — EXISTING LIGHTING TOWER TO BE REMOVED
- PROPOSED LIGHTING UNIT, LUMINAIRE, LED, ROADWAY OUTPUT DESIGNATION G, 45' ALUMINUM POLE, 15' DAVIT ARM, METAL FOUNDATION, BREAKAWAY COUPLINGS WITH SS SCREEN.
- R — EXISTING LIGHTING CONTROLLER TO BE REMOVED
- PROPOSED PEDESTAL MOUNTED LIGHTING CONTROLLER, 240V, 60A
- UNIT DUCT, SIZE AND TYPE AS NOTED
- UNDERGROUND CONDUIT, TYPE AND SIZE AS INDICATED
- (A) UNIT DUCT, 600V, 2-C NO.6, 1/C NO. 6 GROUND, (XLP-TYPE USE), ¾" DIA. POLYETHYLENE
- (2) UNDERGROUND CONDUIT, COILABLE NONMETALLIC CONDUIT, 2" DIA.
- (3) UNDERGROUND CONDUIT, COILABLE NONMETALLIC CONDUIT, 3" DIA.
- (4) INTERCEPT 240 VAC LIGHTING CIRCUIT SPLICE AND CONNECT TO 500 WATT 240 VAC PRIM 120 VAC SEC. THEN PROVIDE 5 AMP SINGLE POLE FUSE THEN TO LIGHTED FLASHING BEASON SIGN.
- (5) UNIT DUCT, 600V, 2-C NO.10, 1/C NO. 10 GROUND, (XLP-TYPE USE), ¾" DIA. POLYETHYLENE
- HANDHOLE COMPOSITE CONCRETE 81400730

USER NAME = moverbey	DESIGNED - MAA	REVISED -
	CHECKED -	REVISED -
PLOT SCALE = 100.0000 sf / in.	DRAWN - MAA	REVISED -
PLOT DATE = 10/13/2025	CHECKED -	REVISED -

STATE OF ILLINOIS
DEPARTMENT OF TRANSPORTATION

I-70 AT IL ROUTE 128
LIGHTING PLAN

SCALE: SHEET OF SHEETS STA. TO STA.

F.A.I RTE.	SECTION	COUNTY	TOTAL SHEETS	SHEET NO.
70	(25-1)R-BR	EFFINGHAM	747	217
		CONTRACT NO. 74893		
	ILLINOIS	FED. AID PROJECT		

MODEL: Default
FILE NAME: pw://cmtenyr-pw.bentley.com:cmt-connect-projects/Documents/D07I270004197-00/74893.CADD Data/Sheets/0774893-sht-light-3.dgn

NOTES:

1. PROPOSED LIGHT POLE SHALL BE SET 18' FROM EDGE OF TRAVELED PAVEMENT, UNLESS NOTED OTHERWISE.
2. PROPOSED LIGHTING CONTROLLER SHALL BE INSTALLED WITHIN 5' OF EXISTING LIGHTING CONTROLLER TO BE REMOVED. PROPOSED LIGHTING CONTROLELR SHALL BE SET AT LEAST 18' FROM EDGE OF TRAVELED PAVEMENT.
3. PROPOSED ELECTRIC SERVICE SHALL BE INSTALLED WITHIN 5' OF EXISTING ELECTRIC SERVICE TO BE REMOVED. PROPOSED ELECTRIC SERVICE SHALL BE SET AT LEAST 18' FROM EDGE OF TRAVELED PAVEMENT.
4. EXISTING LIGHTING TO BE REMOVED SHALL REMAIN IN PLACE AND OPERATIONAL UNTIL PROPOSED LIGHTING SYSTEM IS OPERATIONAL UNLESS DIRECTED BY THE ENGINEER OTHERWISE.
5. ELECTRIC CABLES IN EXISTING CONDUIT TO BE REMOVED.

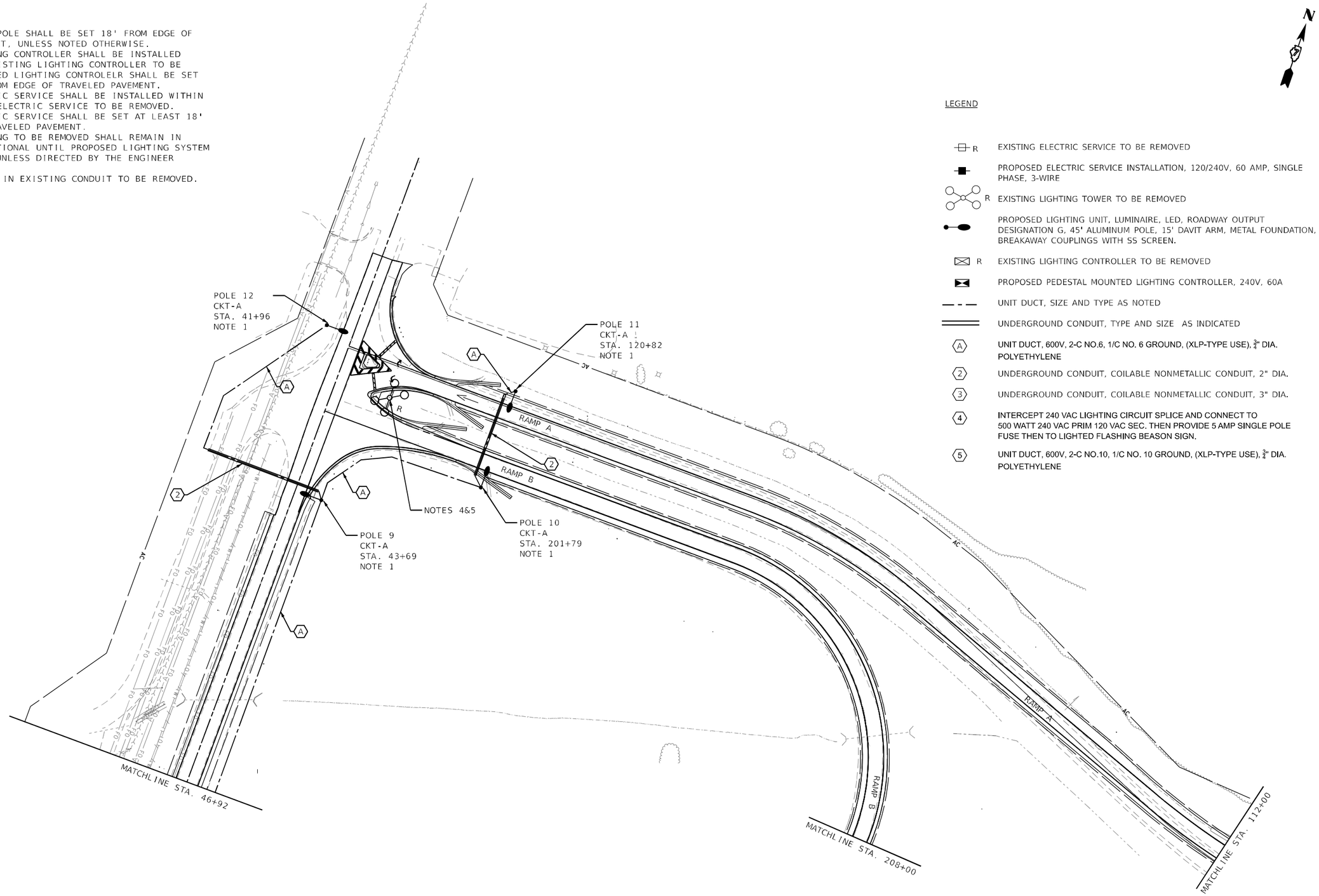

LEGEND

- R — EXISTING ELECTRIC SERVICE TO BE REMOVED
- PROPOSED ELECTRIC SERVICE INSTALLATION, 120/240V, 60 AMP, SINGLE PHASE, 3-WIRE
- R — EXISTING LIGHTING TOWER TO BE REMOVED
- PROPOSED LIGHTING UNIT, LUMINAIRE, LED, ROADWAY OUTPUT DESIGNATION G, 45' ALUMINUM POLE, 15' DAVIT ARM, METAL FOUNDATION, BREAKAWAY COUPLINGS WITH SS SCREEN.
- R — EXISTING LIGHTING CONTROLLER TO BE REMOVED
- PROPOSED PEDESTAL MOUNTED LIGHTING CONTROLLER, 240V, 60A
- UNIT DUCT, SIZE AND TYPE AS NOTED
- UNDERGROUND CONDUIT, TYPE AND SIZE AS INDICATED
- (A) UNIT DUCT, 600V, 2-C NO.6, 1/C NO. 6 GROUND, (XLP-TYPE USE), $\frac{3}{4}$" DIA. POLYETHYLENE
- (2) UNDERGROUND CONDUIT, COILABLE NONMETALLIC CONDUIT, 2" DIA.
- (3) UNDERGROUND CONDUIT, COILABLE NONMETALLIC CONDUIT, 3" DIA.
- (4) INTERCEPT 240 VAC LIGHTING CIRCUIT SPLICE AND CONNECT TO 500 WATT 240 VAC PRIM 120 VAC SEC. THEN PROVIDE 5 AMP SINGLE POLE FUSE THEN TO LIGHTED FLASHING BEASON SIGN.
- (5) UNIT DUCT, 600V, 2-C NO.10, 1/C NO. 10 GROUND, (XLP-TYPE USE), $\frac{3}{4}$" DIA. POLYETHYLENE

$E-7$

MODEL: Default
FILE NAME: pw://cmtemp-pw.bentley.com:cmt-connect-projects/Documents/IDOT/22001197-00/74893/CADD Data/Sheets/0774893-sht-light-1.dgn

USER NAME = moverbey	DESIGNED - MAA	REVISED -	
	CHECKED -	REVISED -	
PLOT SCALE = 100.0000 sf / in.	DRAWN - MAA	REVISED -	
PLOT DATE = 10/13/2025	CHECKED -	REVISED -	

STATE OF ILLINOIS
DEPARTMENT OF TRANSPORTATION

I-70 AT IL ROUTE 128
LIGHTING PLAN

SCALE: SHEET OF SHEETS STA. TO STA.

F.A.I RTE.	SECTION	COUNTY	TOTAL SHEETS	SHEET NO.
70	(25-1)R-BR	EFFINGHAM	747	218
		CONTRACT NO. 74893		

ILLINOIS FED. AID PROJECT

NOTES:

1. ALL NECESSARY REVISIONS TO THE WIRING SHOWN ON THIS SHEET SHALL BE MADE AT NO ADDITIONAL COST TO THE DEPARTMENT AND TO THE SATISFACTION OF THE ENGINEER.

LUMINAIRE LEGEND

PROPOSED ROADWAY LUMINAIRE

GROUND ROD

TRANSFORMER

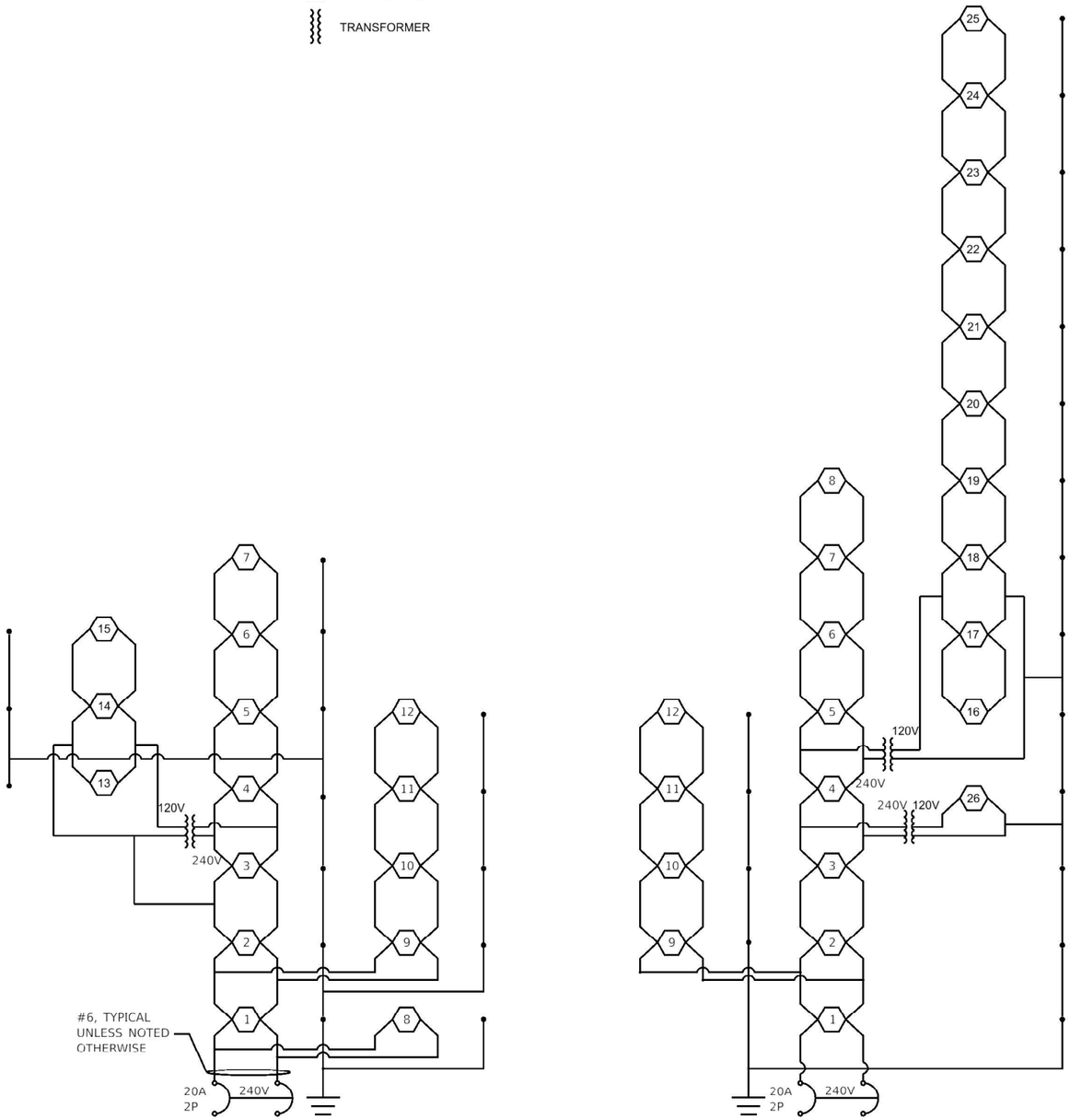

Illinois Department of Transportation

Luminaire Performance Table

LUMINAIRE, LED, ROADWAY, OUTPUT DESIGNATION G

Project

Date	Contract Number	Section Number	County
08/28/24	74893	(25-1)R-BR	Effingham

Marked Route Number	Municipality
I-70	ALTAMONT

Roadway

Lane Width	# of Lanes	Median Width	I.E.S. Surface Classification	Q-Zero Value
12	3	N/A	R3	0.07

Structure

Mounting Height	Arm Length	Set-Back	Number of Luminaires (Highmast & Sign Lighting Only)
45	15	18	N/A

Luminaire

Description	I.E.S. Lateral Distribution	I.E.S. Vertical Distribution
LUMINAIRE, LED, ROADWAY, DES. G	MEDIUM	TYPE III

Total Light Loss Factor (LLF)	B-U-G Rating	Shields	Dimming Protocol
0.7	U-0	N/A	0-10

Layout

Spacing (to Nearest 5 ft)	Configuration (Opposite, Staggered, 1 Sided, or Median)
200	1 SIDED

Performance

Average Illuminance, E_{AVE} (fc)	Uniformity Ratio, E_{AVE}/E_{MIN}
>=0.7	<=0.3

Average Luminance, L_{AVE} (cd/m²)	Uniformity Ratio, L_{AVE}/L_{MIN}	Uniformity Ratio, L_{MAX}/L_{MIN}	Veiling Luminance Ratio, L_V/L_{AVE}
>=0.6	<=0.3	<=6.0	<=0.3

Light Tresspass

Distance to ROW (behind pole)	Max. Horizontal Illuminance at ROW, E_H	Max. Vertical Illuminance at ROW, E_V
N/A	N/A	N/A

Notes

1. SET BACK IS FROM EDGE OF PAVEMENT (WHITE LINE).
2. LIGHTING CALCULATIONS SHALL BE PERFORMED WITH ALL LUMINAIRES ORIENTED TOWARD AND PERPENDICULAR TO THE ROADWAY.
3. PERFORMANCE REQUIREMENTS SHALL BE THE MINIMUM ACCEPTABLE STANDARDS OF PHOTOMETRIC PERFORMANCE FOR THE LUMINAIRE, BASED ON GIVEN CONDITIONS ABOVE.
4. LANE WIDTH IS THE WIDTH OF THE INDIVIDUAL LANE, NOT TO BE CONFUSED WITH THE TOTAL ROADWAY WIDTH.
5. COMPLIANCE WITH PERFORMANCE CRITERIA SHALL BE HELD TO ONE SIGNIFICANT DIGIT.
6. PHOTOMETRIC CALCULATIONS FOR ROADWAYS SHALL BE PERFORMED WITH A TOTAL LIGHT LOSS FACTOR OF 0.7.
7. LUMINAIRE PERFORMANCE TABLE IS INTENDED TO DEFINE THE LUMINAIRE AND DOES NOT NECESSARILY REPRESENT SPECIFIC ROADWAY GEOMETRY, ARM LENGTH, MOUNTING HEIGHT, OR SETBACK.

Printed 08/28/24

BDE 5630 (04/10/19)

SE-8s

USER NAME = moverbey	DESIGNED - MAA	REVISED -	
	CHECKED -	REVISED -	
PLOT SCALE = 100.0000 sf / in.	DRAWN - MAA	REVISED -	
PLOT DATE = 10/13/2025	CHECKED -	REVISED -	

STATE OF ILLINOIS
DEPARTMENT OF TRANSPORTATION

WIRING DIAGRAM
AND LUMINAIRE PERFORMANCE TABLE

SCALE: SHEET OF SHEETS STA. TO STA.

F.A.I RTE.	SECTION	COUNTY	TOTAL SHEETS	SHEET NO.
70	(25-1)R-BR	EFFINGHAM	747	219
		CONTRACT NO. 74893		

ILLINOIS FED. AID PROJECT

MODE: Default
FILE NAME: pw://contengr-pw.bentley.com:cmt-connect-projects/Documents/IDOT/21004197-00/74893/CAD0 Data/Sheets/D774893-sht-light-5.dgn

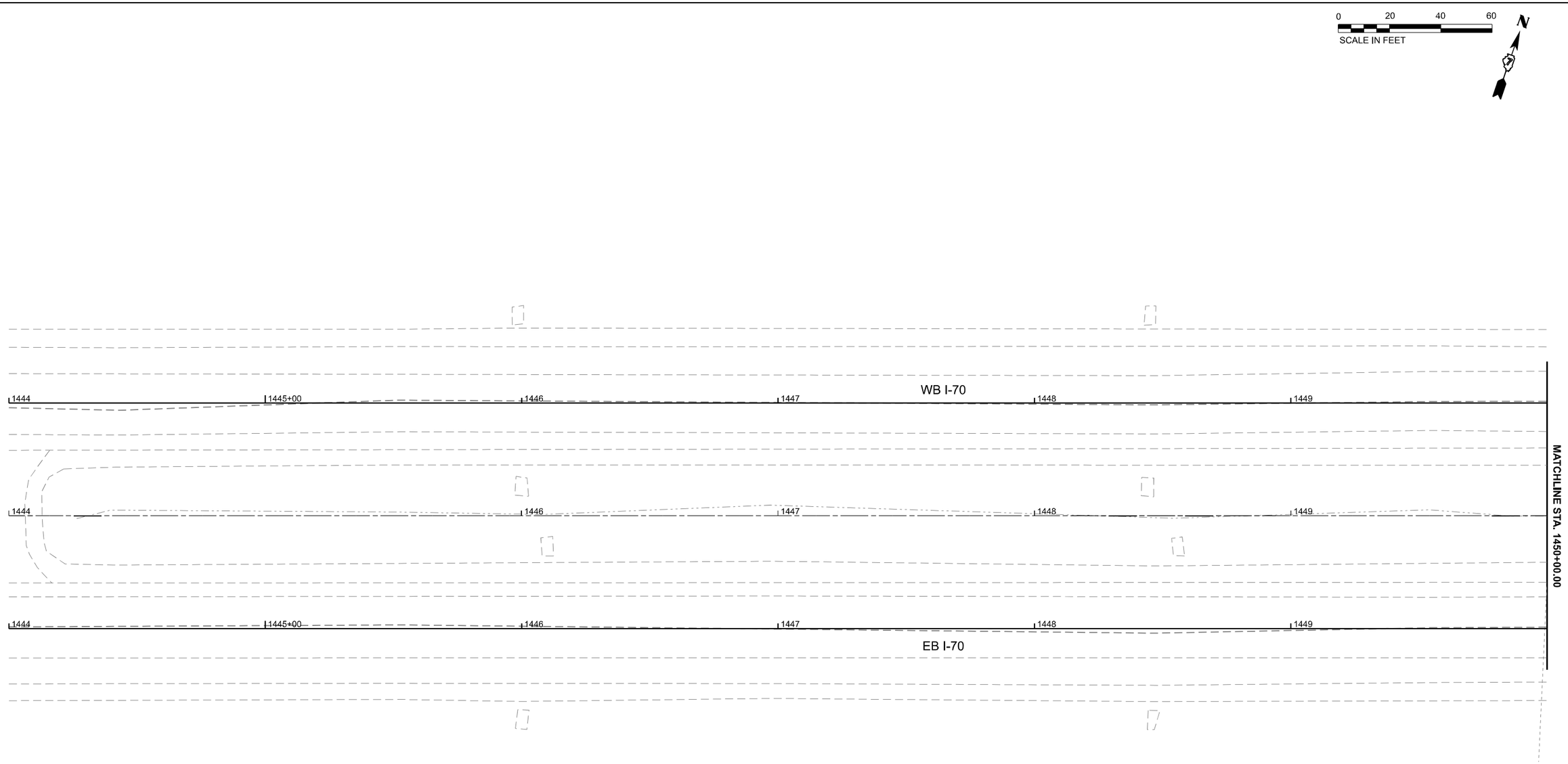

MODEL: SHT - DRN Plan I-70 - 01
FILE NAME: pw://cmtengp-pw.bentley.com:cmtengp-connect-projects/Documents/IDOT/20041970-03/74893/CADD Data/Sheets/D774893-sht-rdwy-plan_I-70.dgn

CMT
License No. 184-000613
© Copyright CMT, Inc.

USER NAME = moverbey	DESIGNED - AJ	REVISED -	
	DRAWN - AJ	REVISED -	
PLOT SCALE = 0.16666667 ' / in.	CHECKED - MJO	REVISED -	
PLOT DATE = 10/13/2025	DATE - 10/16/2025	REVISED -	

STATE OF ILLINOIS
DEPARTMENT OF TRANSPORTATION

FAI ROUTE 70 - INTERSTATE 70
DRAINAGE PLAN & PROFILE - FAI ROUTE 70

SCALE: 1"=20' | SHEET 1 OF 31 SHEETS | STA. 1444+00 TO STA. 1450+00

F.A.I. RTE.	SECTION	COUNTY	TOTAL SHEETS	SHEET NO.
70	(25-1)R-BR	EFFINGHAM	747	220
		CONTRACT NO. 74893		
	ILLINOIS	FED. AID PROJECT		

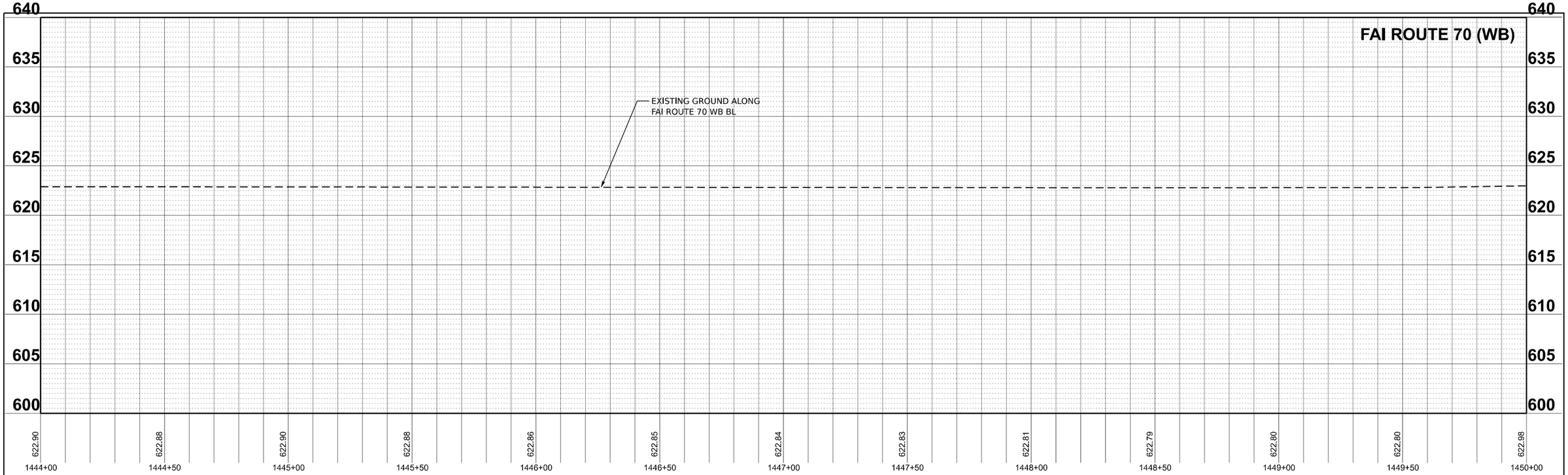

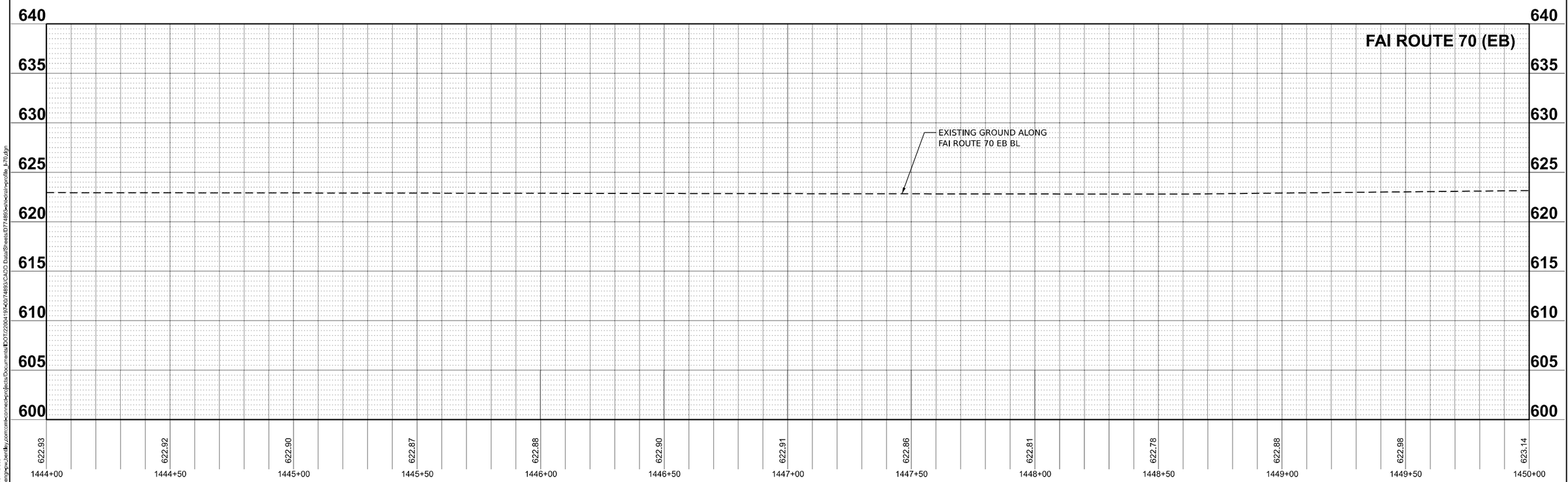

MODEL: 002 - FD - Prof - Dual
FILE NAME: pw://cmtengr-pw.bentley.com:cmt-connect-projects/Documents/IDOT/22004197-0074893/CADD Data/Sheets/0774893-sht-hwy-profile_1-70.dgn

CMT
License No. 184-000613
© Copyright CMT, Inc.

USER NAME = moverbey	DESIGNED - AJ	REVISED -	
	DRAWN - AJ	REVISED -	
PLOT SCALE = 0.16666667 ' / in.	CHECKED - MJO	REVISED -	
PLOT DATE = 10/13/2025	DATE - 10/16/2025	REVISED -	

STATE OF ILLINOIS
DEPARTMENT OF TRANSPORTATION

FAI ROUTE 70 - INTERSTATE 70
DRAINAGE PLAN & PROFILE - FAI ROUTE 70

SCALE: 1"=20' | SHEET 2 OF 31 SHEETS | STA. 1444+00 TO STA. 1450+00

F.A.I. RTE.	SECTION	COUNTY	TOTAL SHEETS	SHEET NO.
70	(25-1)R-BR	EFFINGHAM	747	221
		CONTRACT NO. 74893		
	ILLINOIS	FED. AID PROJECT		

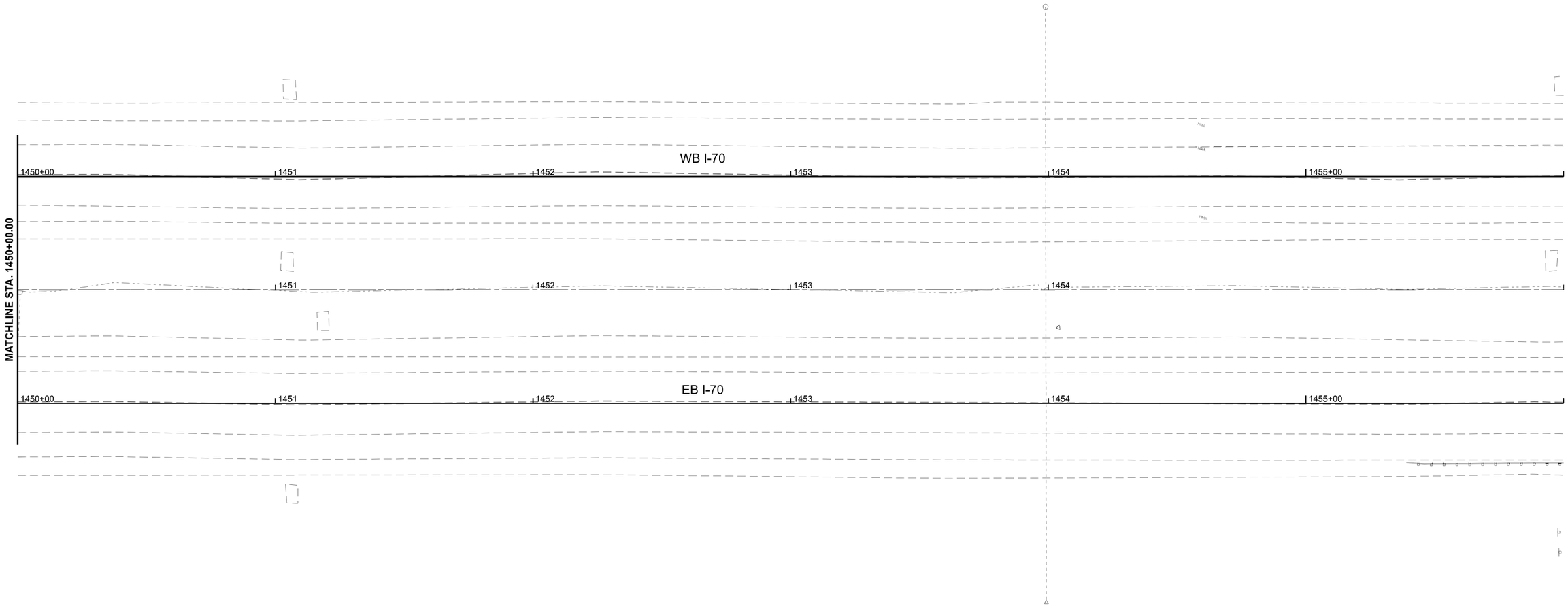

MODEL: SHT - DRN Plan I-70 - 02
FILE NAME: pw:\\cmtengpw.bentley.com:connect-projects\Documents\DOT\22004197400\74893\CADD Data\Sheets\0774893-sht-drn-plan_I-70.dgn

CMT
License No. 184-000613
© Copyright CMT, Inc.

USER NAME = moverbey	DESIGNED - AJ	REVISED -	
	DRAWN - AJ	REVISED -	
PLOT SCALE = 0.16666667 ' / in.	CHECKED - MJO	REVISED -	
PLOT DATE = 10/13/2025	DATE - 10/16/2025	REVISED -	

STATE OF ILLINOIS
DEPARTMENT OF TRANSPORTATION

FAI ROUTE 70 - INTERSTATE 70
DRAINAGE PLAN & PROFILE - FAI ROUTE 70

SCALE: 1"=20' | SHEET 3 OF 31 SHEETS | STA. 1450+00 TO STA. 1456+00

F.A.I. RTE.	SECTION	COUNTY	TOTAL SHEETS	SHEET NO.
70	(25-1)R-BR	EFFINGHAM	747	222
		CONTRACT NO. 74893		
		ILLINOIS	FED. AID PROJECT	

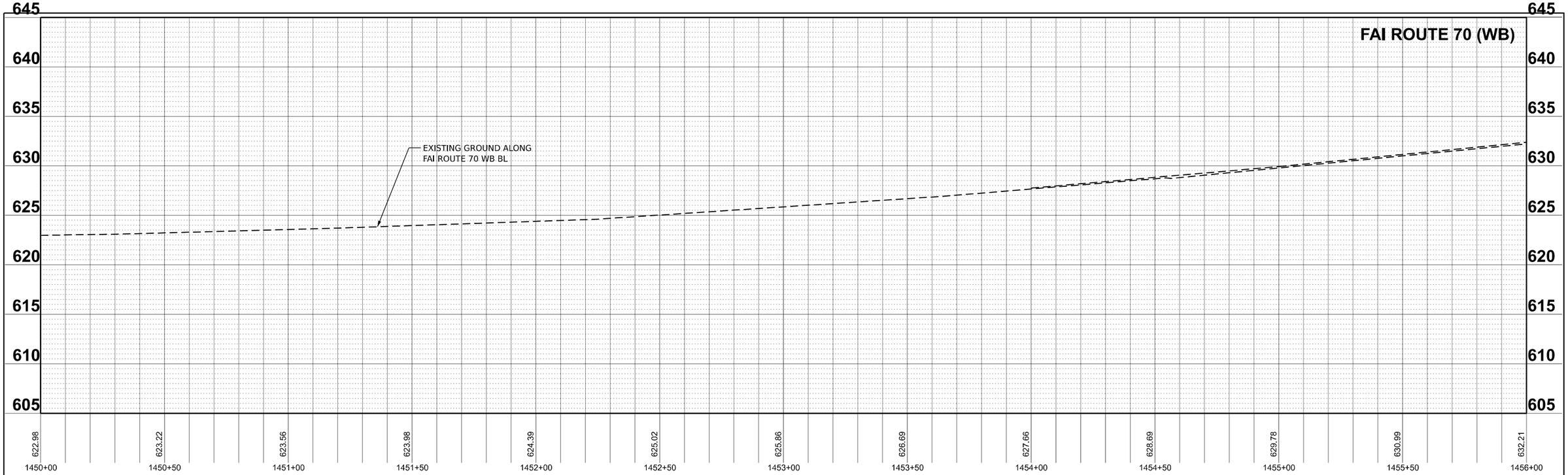

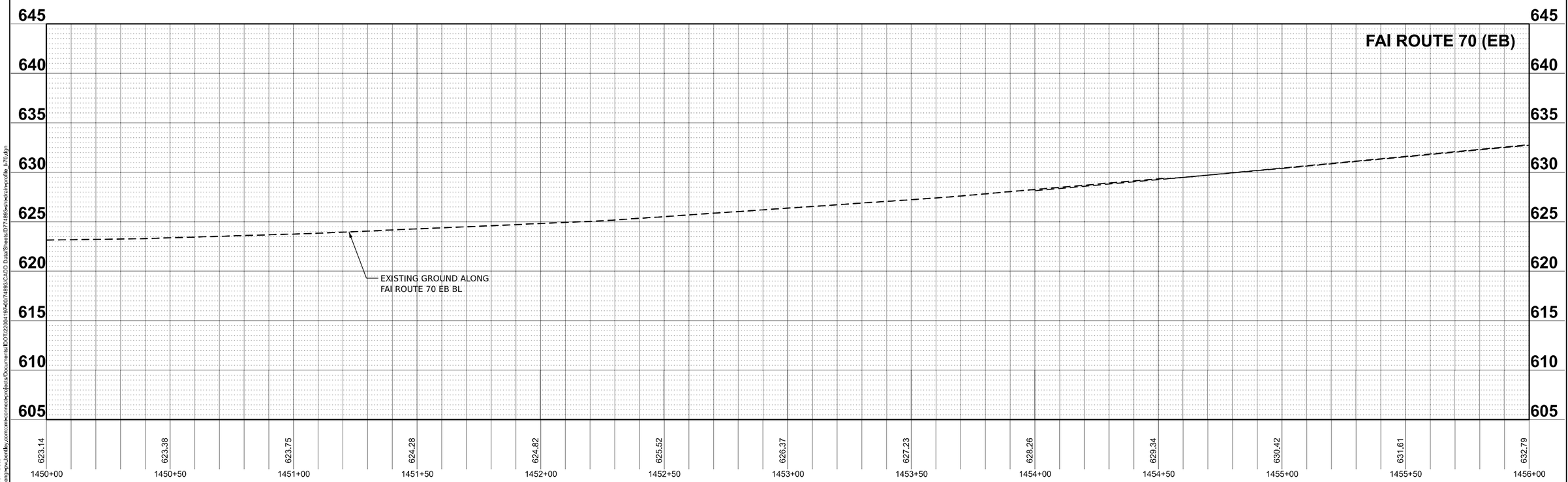

MODEL: 004 - FD - Prof - Dual
FILE NAME: pw://cmtengr-pw.bentley.com:cmt-connect-projects/Documents/IDOT/22004197-40/74893/CADD Data/Sheets/0774893-sht-hwi-profile_fr70.dgn

CMT
License No. 184-000613
© Copyright CMT, Inc.

USER NAME = moverbey	DESIGNED - AJ	REVISED -	
	DRAWN - AJ	REVISED -	
PLOT SCALE = 0.16666667 ' / in.	CHECKED - MJO	REVISED -	
PLOT DATE = 10/13/2025	DATE - 10/16/2025	REVISED -	

STATE OF ILLINOIS
DEPARTMENT OF TRANSPORTATION

FAI ROUTE 70 - INTERSTATE 70
DRAINAGE PLAN & PROFILE - FAI ROUTE 70

SCALE: 1"=20' | SHEET 4 OF 20 SHEETS | STA. 1450+00 TO STA. 1456+00

F.A.I. RTE.	SECTION	COUNTY	TOTAL SHEETS	SHEET NO.
70	(25-1)R-BR	EFFINGHAM	747	223
		CONTRACT NO. 74893		
	ILLINOIS	FED. AID PROJECT		

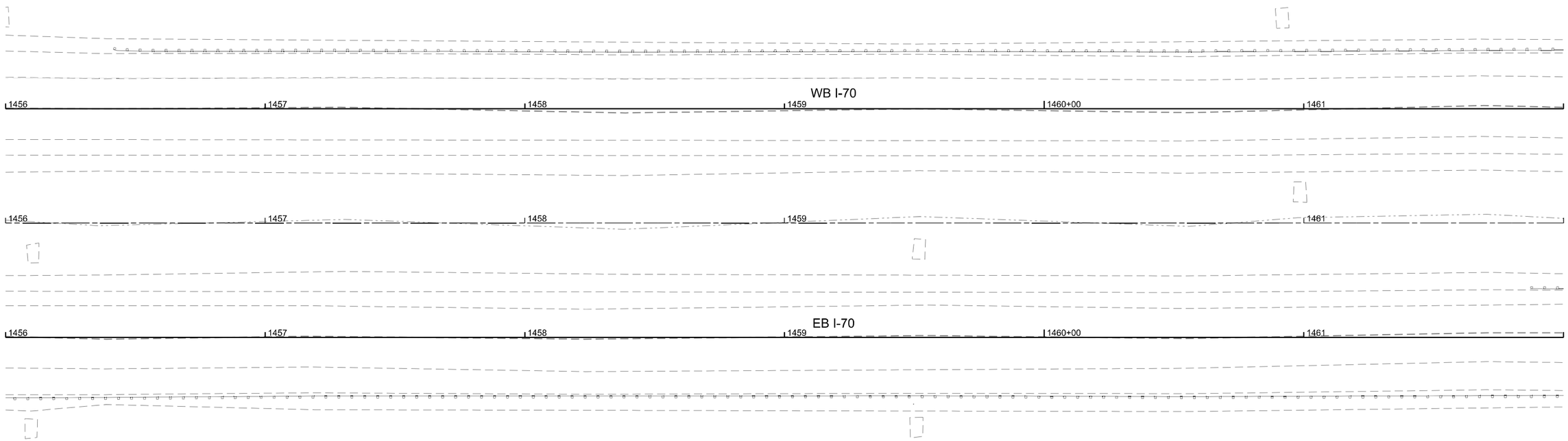

MODEL: SHT - DRN Plan I-70 - 03
FILE NAME: pw://cmtengrgroup.bentley.com:cmt-connect-projects/Documents/IDOT/22084197-40/74893/CADD Data/Sheets/0774893-sht-drn-plan_I-70.dgn

CMT
License No. 184-000613
© Copyright CMT, Inc.

USER NAME = moverbey	DESIGNED - AJ	REVISED -	
	DRAWN - AJ	REVISED -	
PLOT SCALE = 0.16666667 ' / in.	CHECKED - MJO	REVISED -	
PLOT DATE = 10/13/2025	DATE - 10/16/2025	REVISED -	

STATE OF ILLINOIS
DEPARTMENT OF TRANSPORTATION

FAI ROUTE 70 - INTERSTATE 70
DRAINAGE PLAN & PROFILE - FAI ROUTE 70

SCALE: 1"=20' | SHEET 5 OF 31 SHEETS | STA. 1456+00 TO STA. 1462+00

F.A.I. RTE.	SECTION	COUNTY	TOTAL SHEETS	SHEET NO.
70	(25-1)R-BR	EFFINGHAM	747	224
		CONTRACT NO. 74893		
	ILLINOIS	FED. AID PROJECT		

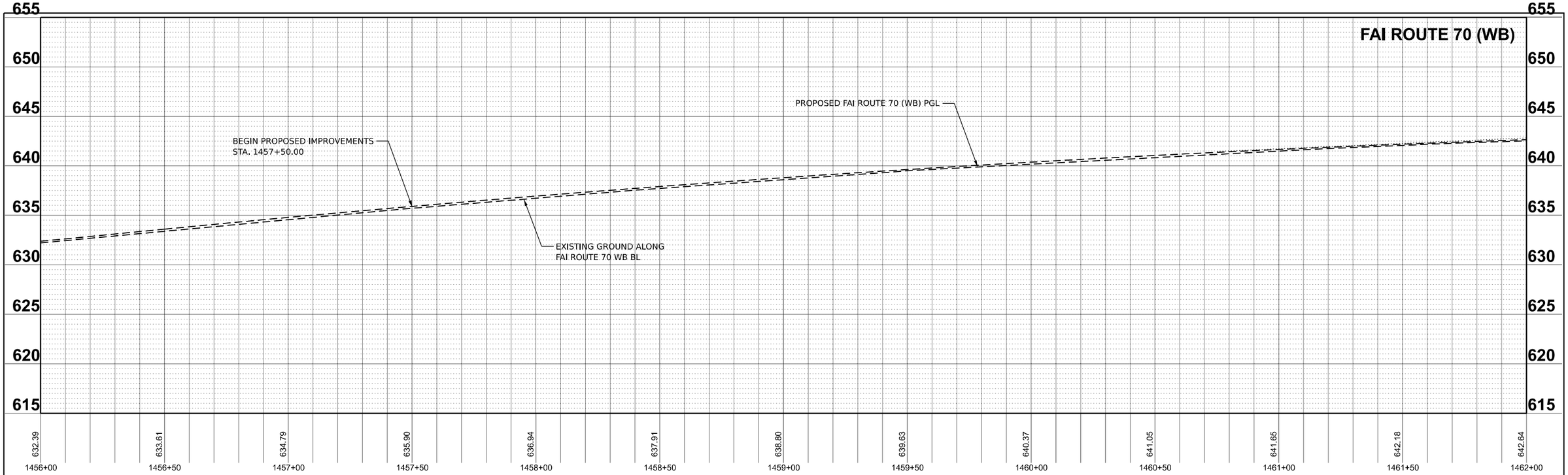

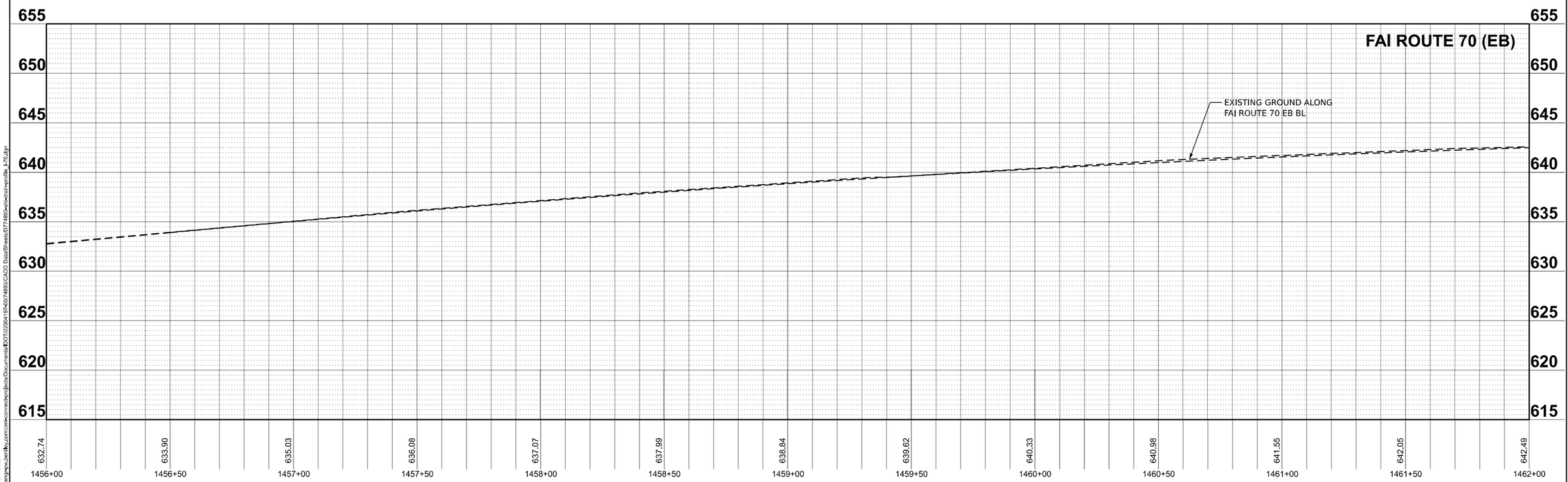

MODEL: 006 - FD - Prof - Dual
FILE NAME: pw://cmtengr-pw.bentley.com:cmt-connect-projects/Documents/IDOT/22004197-40/74893/CADD Data/Sheets/0774893-sht-hwy-profile_1-70.dgn

CMT
License No. 184-000613
© Copyright CMT, Inc.

USER NAME = moverbey	DESIGNED - AJ	REVISED -	
	DRAWN - AJ	REVISED -	
PLOT SCALE = 0.16666667 ' / in.	CHECKED - MJO	REVISED -	
PLOT DATE = 10/13/2025	DATE - 10/16/2025	REVISED -	

STATE OF ILLINOIS
DEPARTMENT OF TRANSPORTATION

FAI ROUTE 70 - INTERSTATE 70
DRAINAGE PLAN & PROFILE - FAI ROUTE 70

SCALE: 1"=20' | SHEET 6 OF 31 SHEETS | STA. 1456+00 TO STA. 1462+00

F.A.I. RTE.	SECTION	COUNTY	TOTAL SHEETS	SHEET NO.
70	(25-1)R-BR	EFFINGHAM	747	225
		CONTRACT NO. 74893		
	ILLINOIS	FED. AID PROJECT		

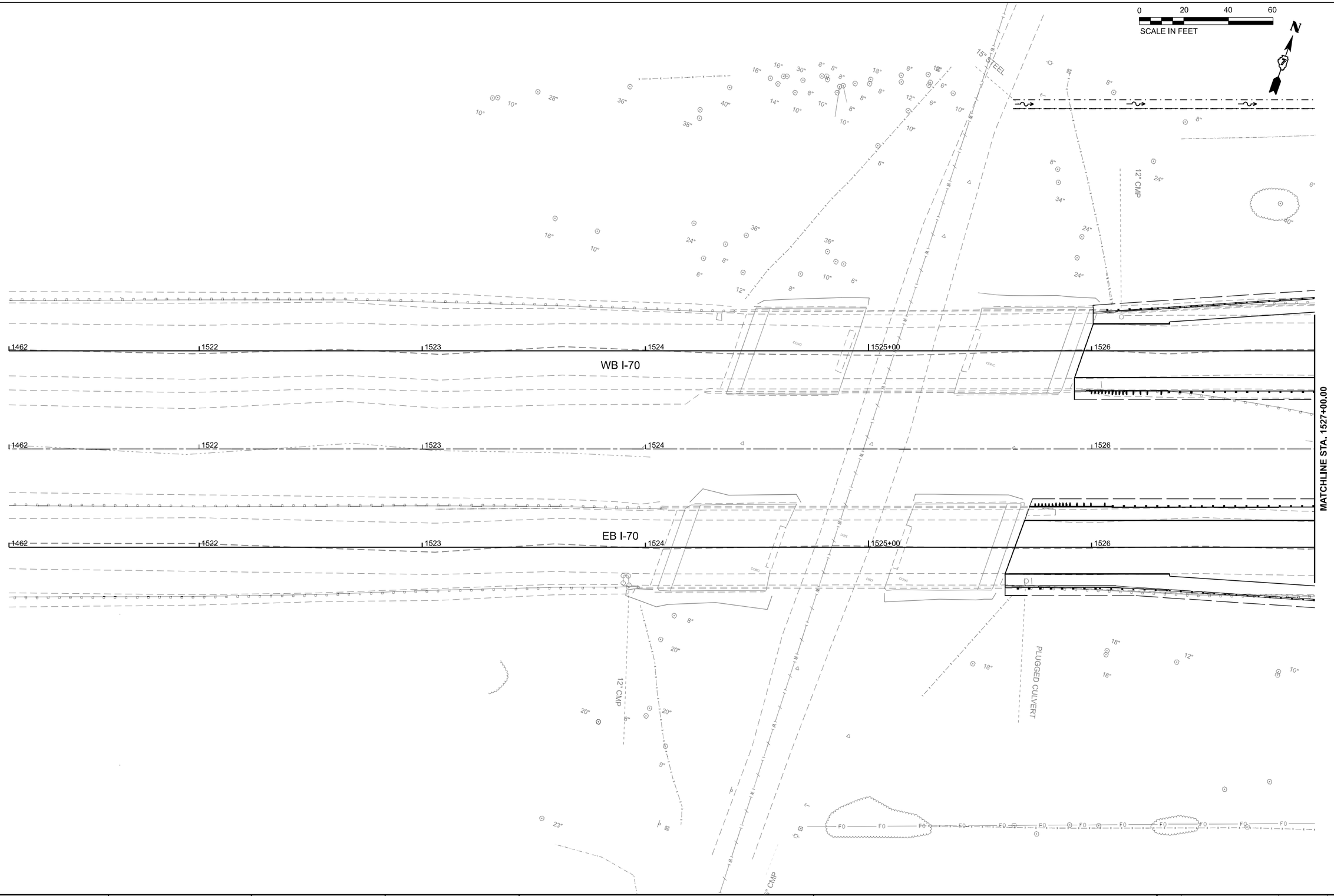

MODEL: SHT - DRN Plan I-70 - 04
FILE NAME: pw://cmtengpw.bentley.com:cmtec-projects/Documents/EDOT/220041/74893/CADD Data/Sheets/074893sht-dtail-plan_I-70.dgn

CMT
License No. 184-000613
© Copyright CMT, Inc.

USER NAME = moverbey	DESIGNED - AJ	REVISED -	
	DRAWN - AJ	REVISED -	
PLOT SCALE = 0.16666667 ' / in.	CHECKED - MJO	REVISED -	
PLOT DATE = 10/13/2025	DATE - 10/16/2025	REVISED -	

STATE OF ILLINOIS
DEPARTMENT OF TRANSPORTATION

FAI ROUTE 70 - INTERSTATE 70
DRAINAGE PLAN & PROFILE - FAI ROUTE 70

SCALE: 1"=20' | SHEET 7 OF 31 SHEETS | STA. 1462+00 TO STA. 1527+00

F.A.I. RTE.	SECTION	COUNTY	TOTAL SHEETS	SHEET NO.
70	(25-1)R-BR	EFFINGHAM	747	226
		CONTRACT NO. 74893		
	ILLINOIS	FED. AID PROJECT		

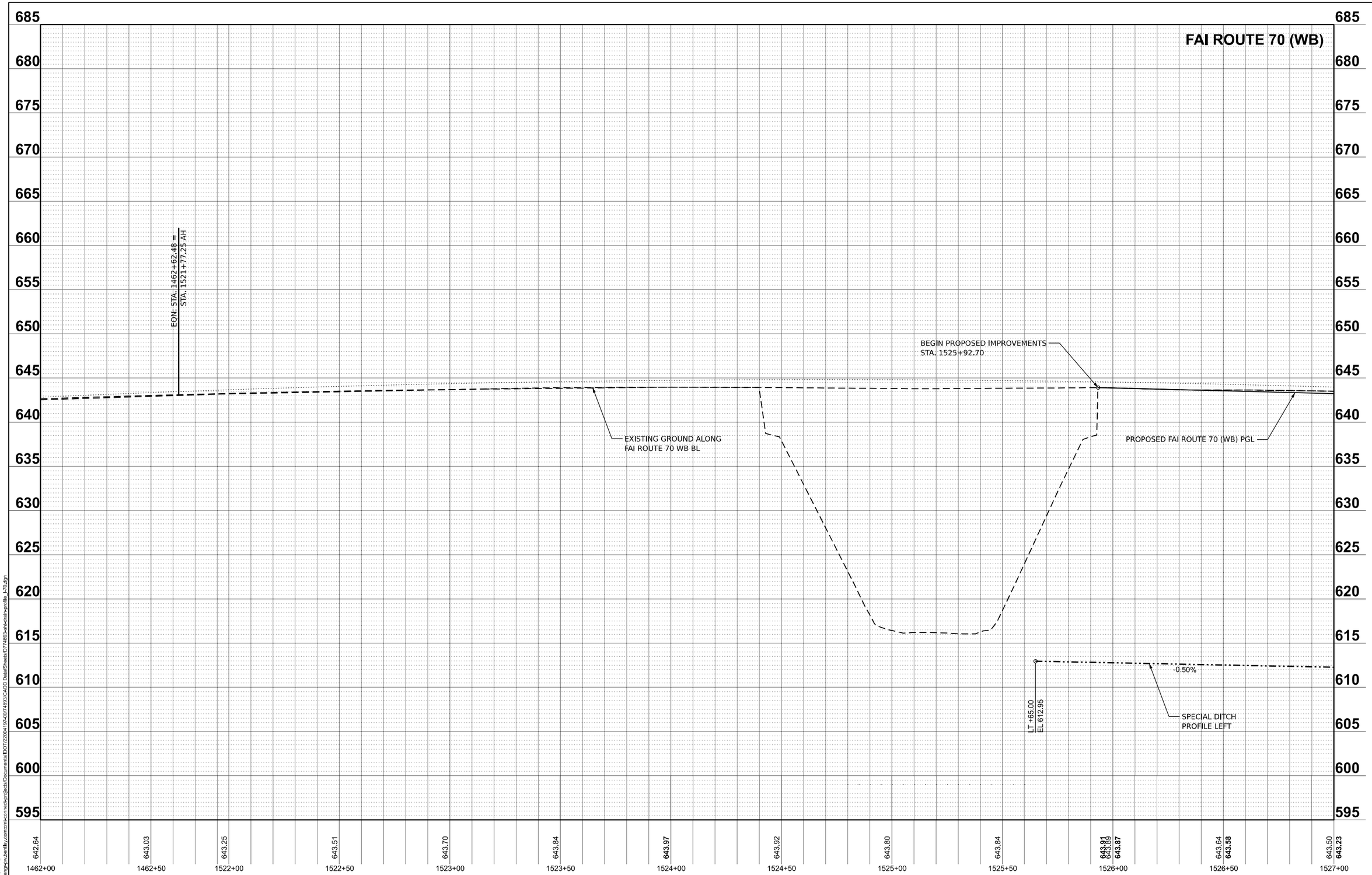

MODEL: 008 - I70 - Prof - WB
FILE NAME: pw://cmtengpw.bentley.com:cmtconnect-eng@eds/Documents/IDOT/22004197400/74893/CADD Data/Sheets/0774893-sht-crsl-profile_I-70.dgn

CMT
License No. 184-000613
© Copyright CMT, Inc.

USER NAME = moverbey	DESIGNED - AJ	REVISED -
	DRAWN - AJ	REVISED -
PLOT SCALE = 0.16666667 ' / in.	CHECKED - MJO	REVISED -
PLOT DATE = 10/13/2025	DATE - 10/16/2025	REVISED -

STATE OF ILLINOIS
DEPARTMENT OF TRANSPORTATION

FAI ROUTE 70 - INTERSTATE 70
DRAINAGE PLAN & PROFILE - FAI ROUTE 70

SCALE: 1"=20' | SHEET 8 OF 31 SHEETS | STA. 1462+00 TO STA. 1527+00

F.A.I. RTE.	SECTION	COUNTY	TOTAL SHEETS	SHEET NO.
70	(25-1)R-BR	EFFINGHAM	747	227

CONTRACT NO. 74893

ILLINOIS | FED. AID PROJECT

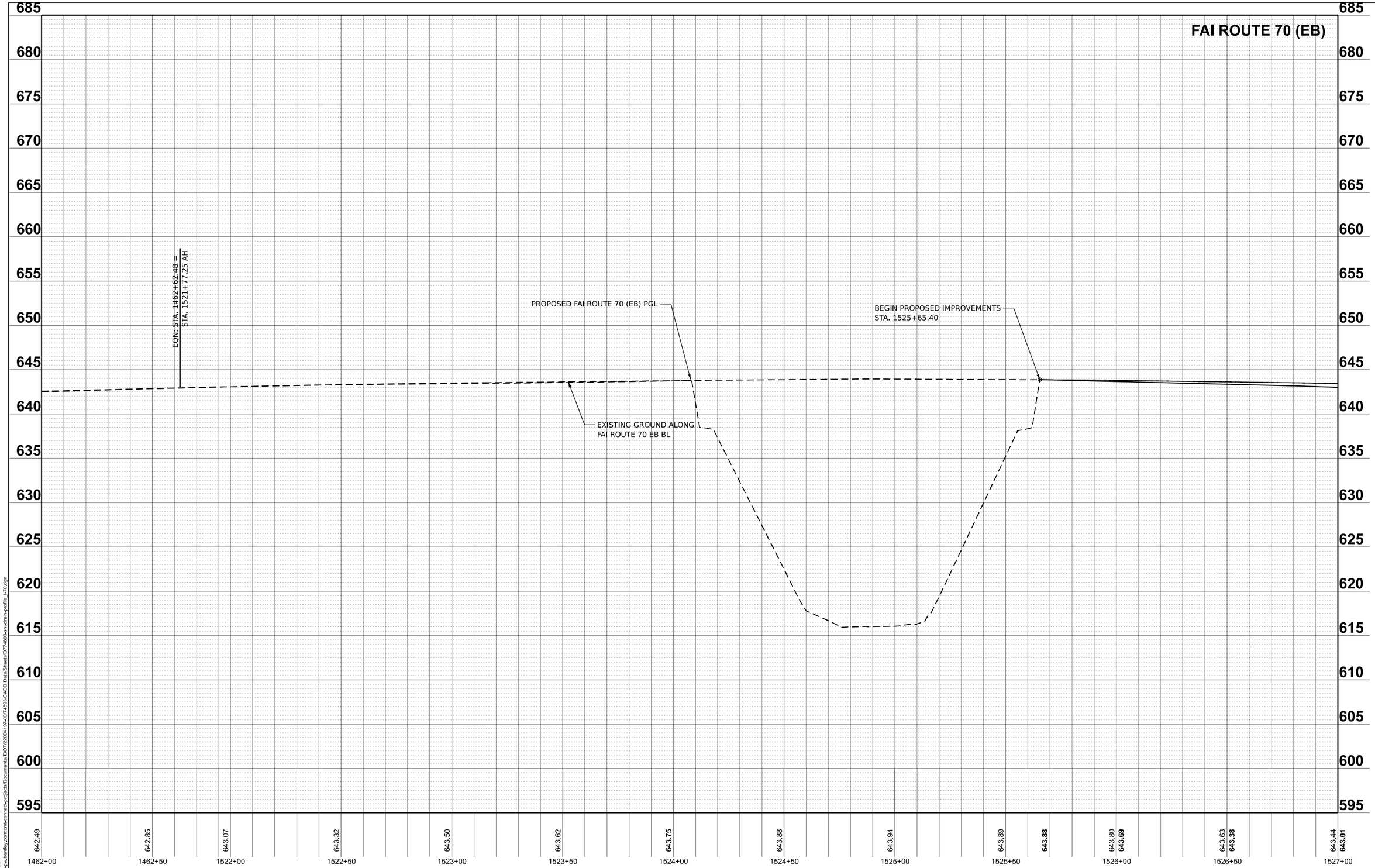

MODEL: 009 - FD - Prof - EB
FILE NAME: pw://cmeng-pw.bentley.com:cmeng-pw1/projects/Documents/IDOT/220041/74893/CADD Data/Sheets/0774893-sht-hi-drill-profile_I-70.dgn

CMT
License No. 184-000613
© Copyright CMT, Inc.

USER NAME = moverbey	DESIGNED - AJ	REVISED -	
	DRAWN - AJ	REVISED -	
PLOT SCALE = 0.16666667 ' / In.	CHECKED - MJO	REVISED -	
PLOT DATE = 10/13/2025	DATE - 10/16/2025	REVISED -	

STATE OF ILLINOIS
DEPARTMENT OF TRANSPORTATION

FAI ROUTE 70 - INTERSTATE 70
DRAINAGE PLAN & PROFILE - FAI ROUTE 70

SCALE: 1"=20' | SHEET 9 OF 31 SHEETS | STA. 1527+00 TO STA. 1533+00

F.A.I. RTE.	SECTION	COUNTY	TOTAL SHEETS	SHEET NO.
70	(25-1)R-BR	EFFINGHAM	747	228

CONTRACT NO. 74893

ILLINOIS | FED. AID PROJECT

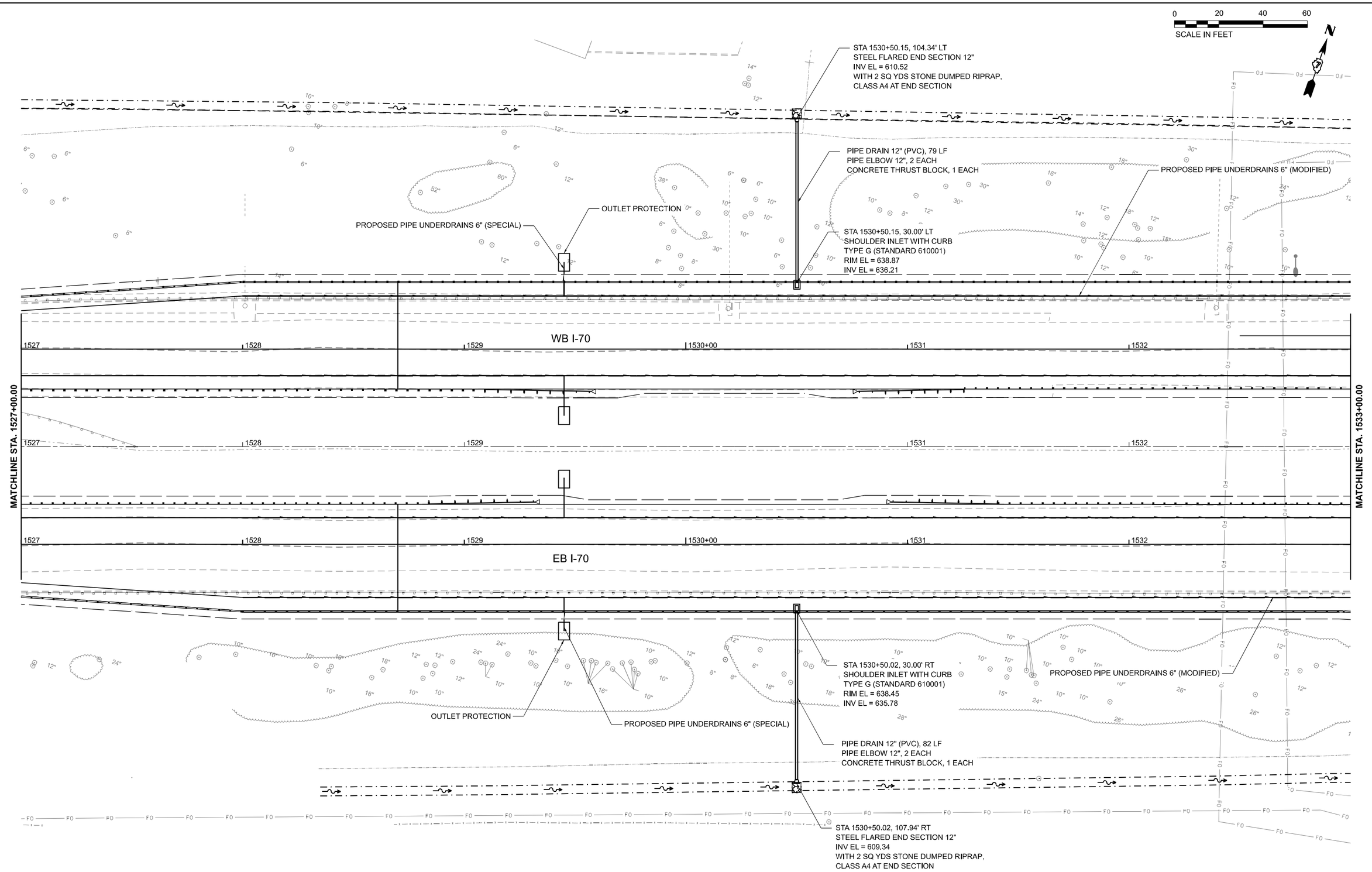

MODEL: SHT - DRN Plan I-70 - 05
FILE NAME: pw://cmengnpw.bentley.com:cmeconnect-projects/Documents/IDOT22004197-0074893-CA70 Data/Sheets/0774893-sht-drain-plan_I-70.dgn

CMT
License No. 184-000613
© Copyright CMT, Inc.

USER NAME = moverbey	DESIGNED - AJ	REVISED -	
	DRAWN - AJ	REVISED -	
PLOT SCALE = 0.16666667 ' / in.	CHECKED - MJO	REVISED -	
PLOT DATE = 10/13/2025	DATE - 10/16/2025	REVISED -	

STATE OF ILLINOIS
DEPARTMENT OF TRANSPORTATION

FAI ROUTE 70 - INTERSTATE 70
DRAINAGE PLAN & PROFILE - FAI ROUTE 70

SCALE: 1"=20' | SHEET 10 OF 31 SHEETS | STA. 1527+00 TO STA. 1533+00

F.A.I. RTE.	SECTION	COUNTY	TOTAL SHEETS	SHEET NO.
70	(25-1)R-BR	EFFINGHAM	747	229
		CONTRACT NO. 74893		
	ILLINOIS	FED. AID PROJECT		

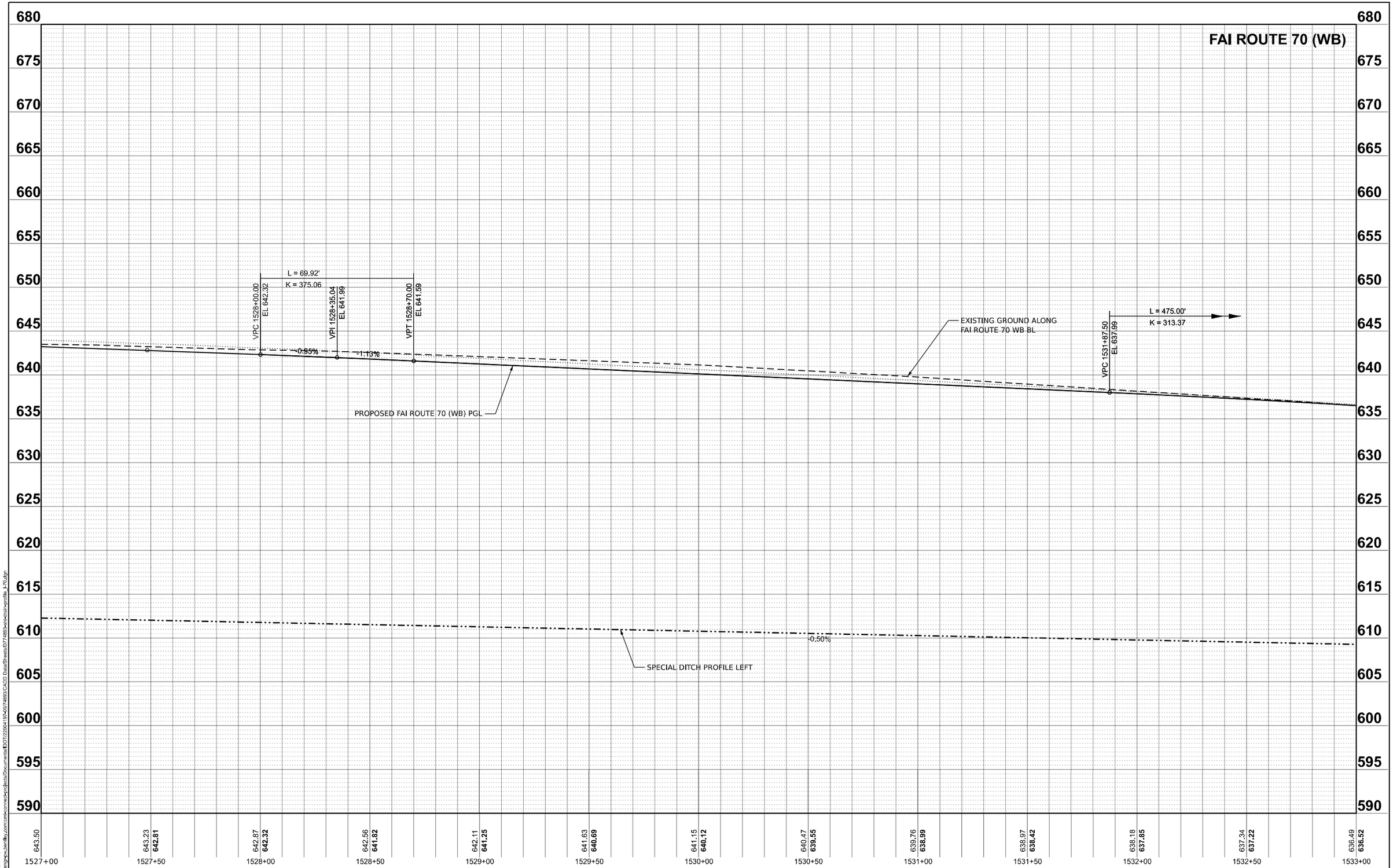

MODEL: 011 - I70 - Prof - WB
FILE NAME: pw://mmingw-wv.bentley.com:mmingw-connect-kendjecta/Documents/IDOT/22004197/40074893/CADD Data/Sheets/0774893-sht-crsl-profile_I-70.dgn

CMT
License No. 184-000613
© Copyright CMT, Inc.

USER NAME = moverbey	DESIGNED - AJ	REVISED -	
	DRAWN - AJ	REVISED -	
PLOT SCALE = 0.16666667 ' / in.	CHECKED - MJO	REVISED -	
PLOT DATE = 10/13/2025	DATE - 10/16/2025	REVISED -	

STATE OF ILLINOIS
DEPARTMENT OF TRANSPORTATION

FAI ROUTE 70 - INTERSTATE 70
DRAINAGE PLAN & PROFILE - FAI ROUTE 70

SCALE: 1"=20' | SHEET 11 OF 31 SHEETS | STA. 1527+00 TO STA. 1533+00

F.A.I. RTE.	SECTION	COUNTY	TOTAL SHEETS	SHEET NO.
70	(25-1)R-BR	EFFINGHAM	747	230

CONTRACT NO. 74893

ILLINOIS | FED. AID PROJECT

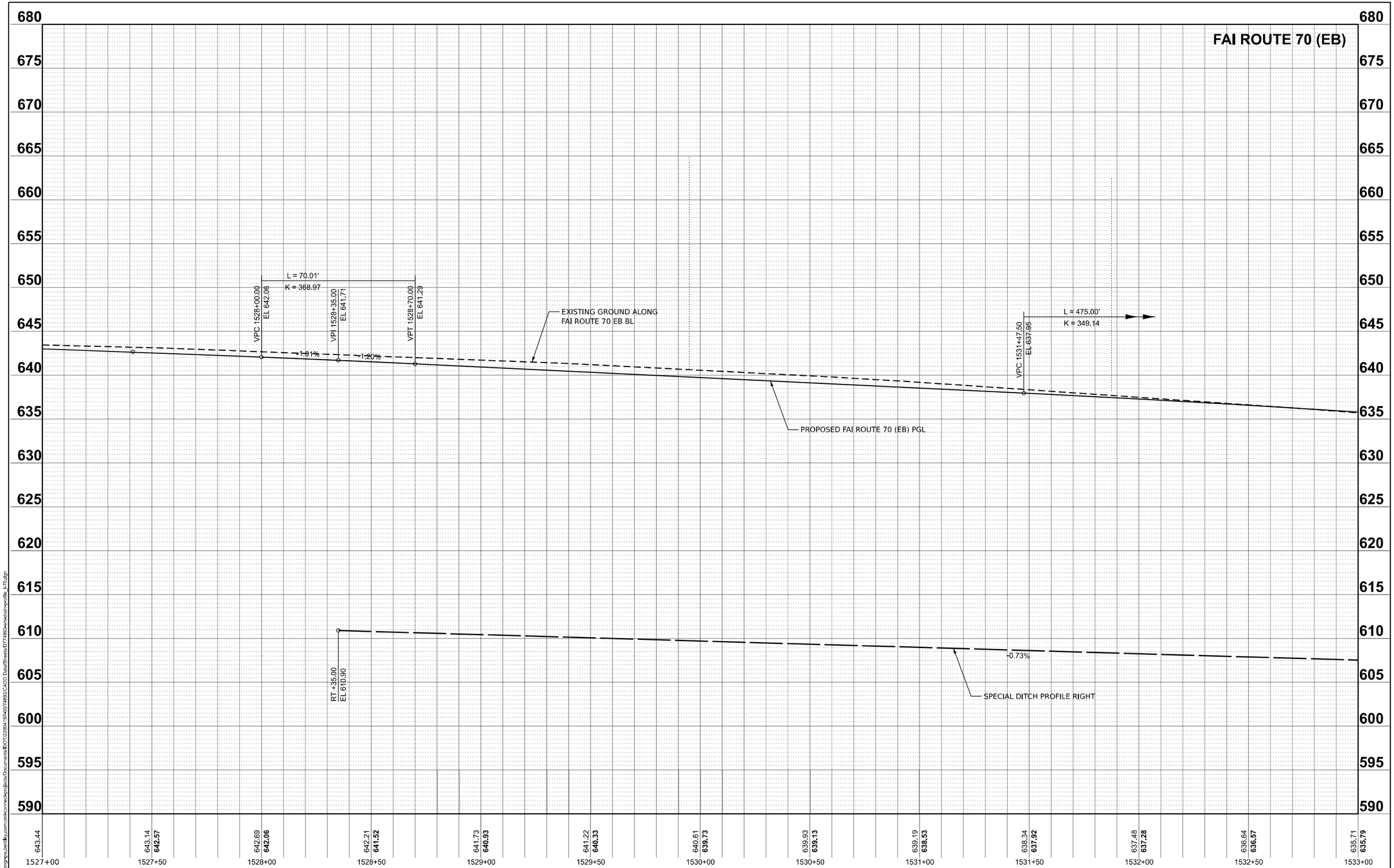

MODEL: 012 - I70 - Prof - EB
FILE NAME: pw://cmtengpw.bentley.com:cmtconnect-eng@eds/Documents/IDOT/22004197400/74893/CADD Data/Sheets/0774893-sht-trail-profile_I-70.dgn

CMT
License No. 184-000613
© Copyright CMT, Inc.

USER NAME = moverbey	DESIGNED - AJ	REVISED -	
	DRAWN - AJ	REVISED -	
PLOT SCALE = 0.16666667 ' / in.	CHECKED - MJO	REVISED -	
PLOT DATE = 10/13/2025	DATE - 10/16/2025	REVISED -	

STATE OF ILLINOIS
DEPARTMENT OF TRANSPORTATION

FAI ROUTE 70 - INTERSTATE 70
DRAINAGE PLAN & PROFILE - FAI ROUTE 70

SCALE: 1"=20' | SHEET 12 OF 31 SHEETS | STA. 1527+00 TO STA. 1533+00

F.A.I. RTE.	SECTION	COUNTY	TOTAL SHEETS	SHEET NO.
70	(25-1)R-BR	EFFINGHAM	747	231
		CONTRACT NO. 74893		
		ILLINOIS	FED. AID PROJECT	

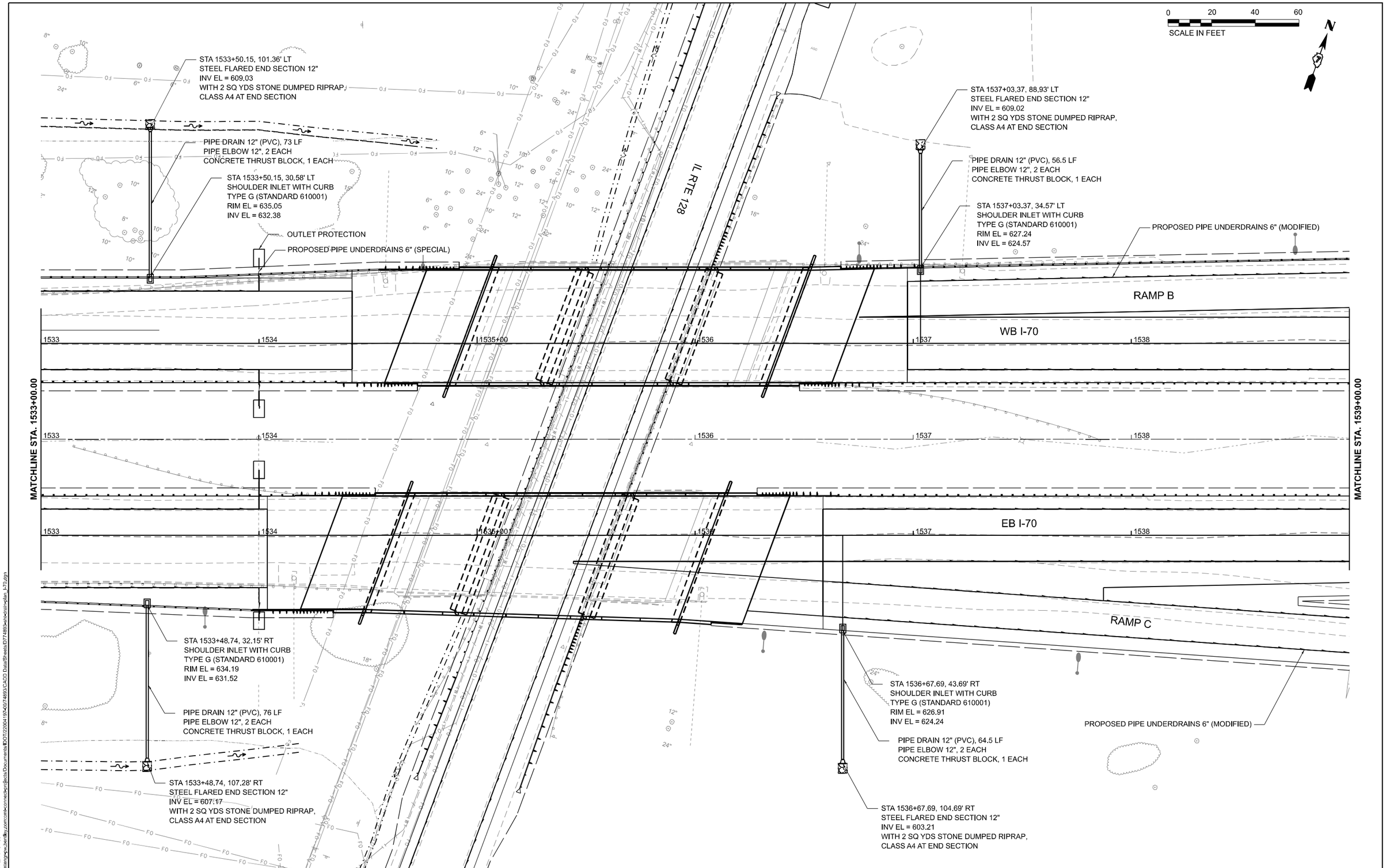

MODEL: SHT - DRN Plan I-70 - 06
FILE NAME: pw://imagenow.bentley.com:connect-eng-projects/Documents/IDOT/22004197400/74893/CADD Data/Sheets/0774893-sht-drain-plan_I-70.dgn

CMT
License No. 184-000613
© Copyright CMT, Inc.

USER NAME = moverbey	DESIGNED - AJ	REVISED -
	DRAWN - AJ	REVISED -
PLOT SCALE = 0.16666667 ' / in.	CHECKED - MJO	REVISED -
PLOT DATE = 10/13/2025	DATE - 10/16/2025	REVISED -

STATE OF ILLINOIS
DEPARTMENT OF TRANSPORTATION

FAI ROUTE 70 - INTERSTATE 70
DRAINAGE PLAN & PROFILE - FAI ROUTE 70

SCALE: 1"=20' | SHEET 13 OF 31 SHEETS | STA. 1533+00 TO STA. 1539+00

F.A.I. RTE.	SECTION	COUNTY	TOTAL SHEETS	SHEET NO.
70	(25-1)R-BR	EFFINGHAM	747	232

CONTRACT NO. 74893

ILLINOIS | FED. AID PROJECT

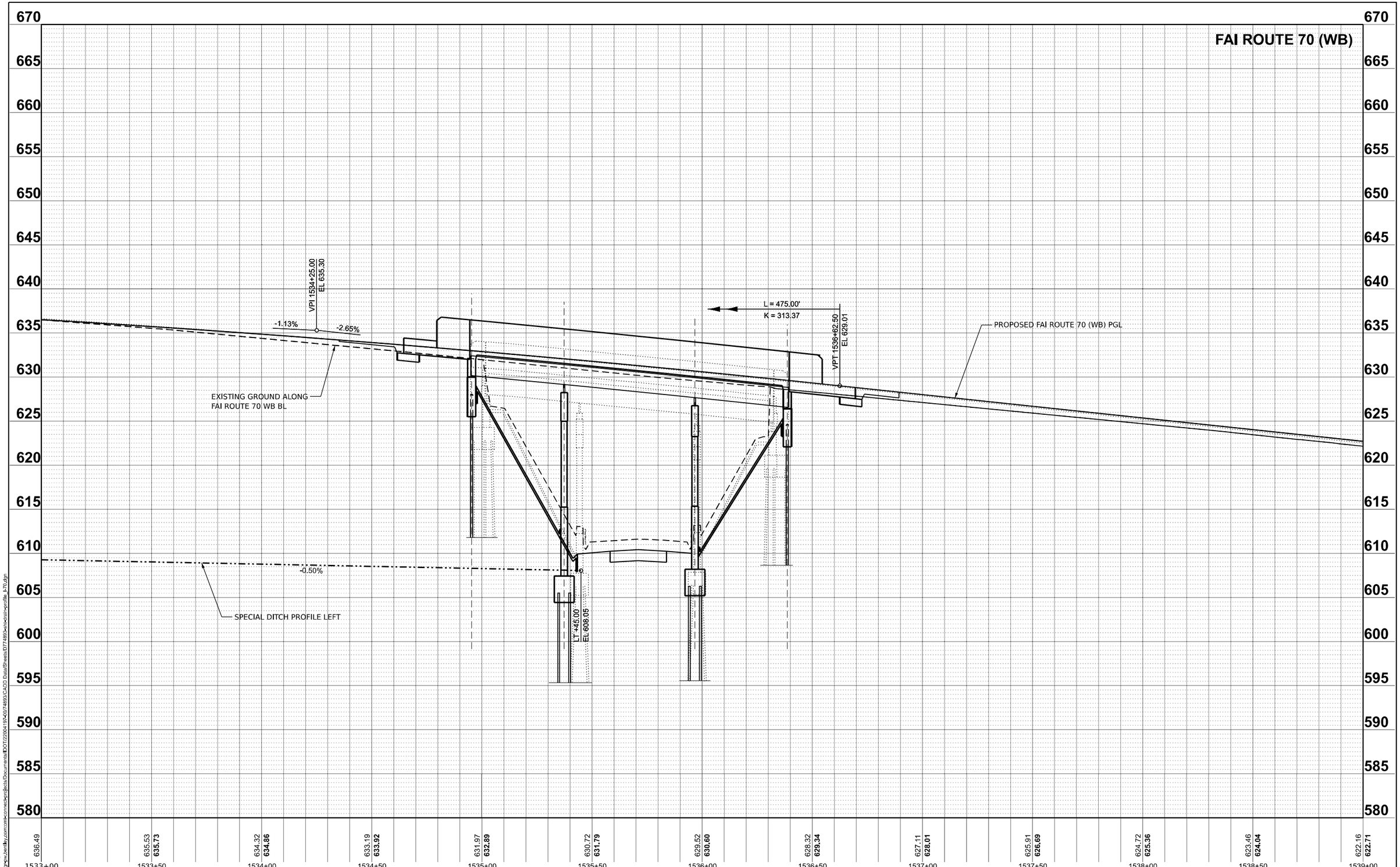

MODEL: 014 - I70 - Prof - WB
FILE NAME: pw://cmtengineering.bentley.com:connect-projects/Documents/EDOT/220041/74893/CADD Data/Sheets/0774893-sht-strtl-profile_I-70.dgn

CMT
License No. 184-000613
©Copyright CMT, Inc.

USER NAME = moverbey	DESIGNED - AJ	REVISED -	
	DRAWN - AJ	REVISED -	
PLOT SCALE = 0.16666667 ' / in.	CHECKED - MJO	REVISED -	
PLOT DATE = 10/13/2025	DATE - 10/16/2025	REVISED -	

STATE OF ILLINOIS
DEPARTMENT OF TRANSPORTATION

FAI ROUTE 70 - INTERSTATE 70
DRAINAGE PLAN & PROFILE - FAI ROUTE 70

SCALE: 1"=20' | SHEET 14 OF 31 SHEETS | STA. 1533+00 TO STA. 1539+00

F.A.I. RTE.	SECTION	COUNTY	TOTAL SHEETS	SHEET NO.
70	(25-1)R-BR	EFFINGHAM	747	233
		CONTRACT NO. 74893		
		ILLINOIS	FED. AID PROJECT	

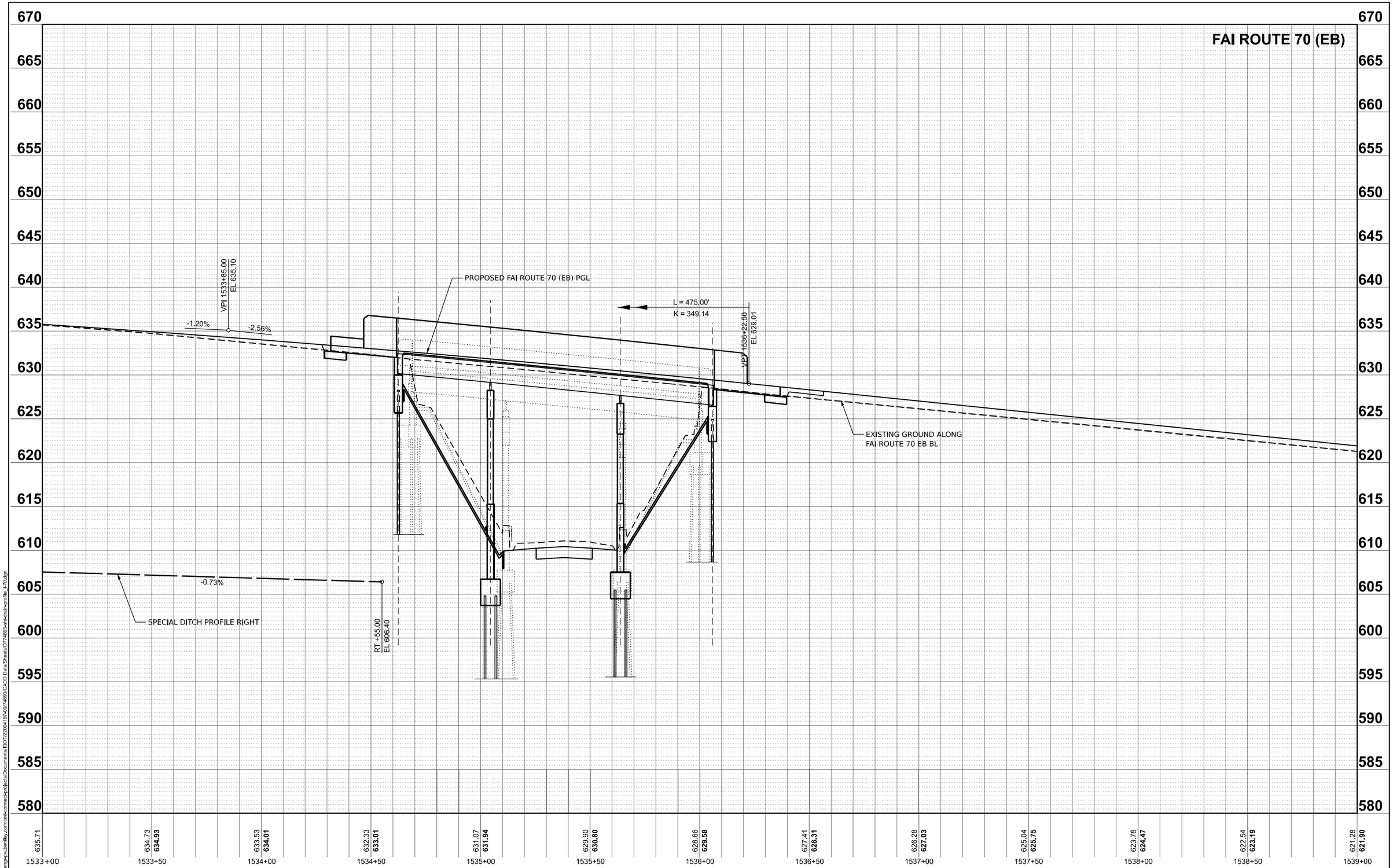

MODEL: 015 - FD - Prof - EB
FILE NAME: pw://cmtengrpw.bentley.com:cmtengrpw-connect-projects/Documents/IDOT/22004197-40/74893/CADD Data/Sheets/0774893-sht-hwy-profile_1-70.dgn

CMT
License No. 184-000613 © Copyright CMT, Inc.

USER NAME = moverbey	DESIGNED - AJ	REVISED -	
	DRAWN - AJ	REVISED -	
PLOT SCALE = 0.16666667 ' / in.	CHECKED - MJO	REVISED -	
PLOT DATE = 10/13/2025	DATE - 10/16/2025	REVISED -	

STATE OF ILLINOIS
DEPARTMENT OF TRANSPORTATION

FAI ROUTE 70 - INTERSTATE 70
DRAINAGE PLAN & PROFILE - FAI ROUTE 70

SCALE: 1"=20' | SHEET 15 OF 31 SHEETS | STA. 1533+00 TO STA. 1539+00

F.A.I. RTE.	SECTION	COUNTY	TOTAL SHEETS	SHEET NO.
70	(25-1)R-BR	EFFINGHAM	747	234
		CONTRACT NO. 74893		
		ILLINOIS	FED. AID PROJECT	

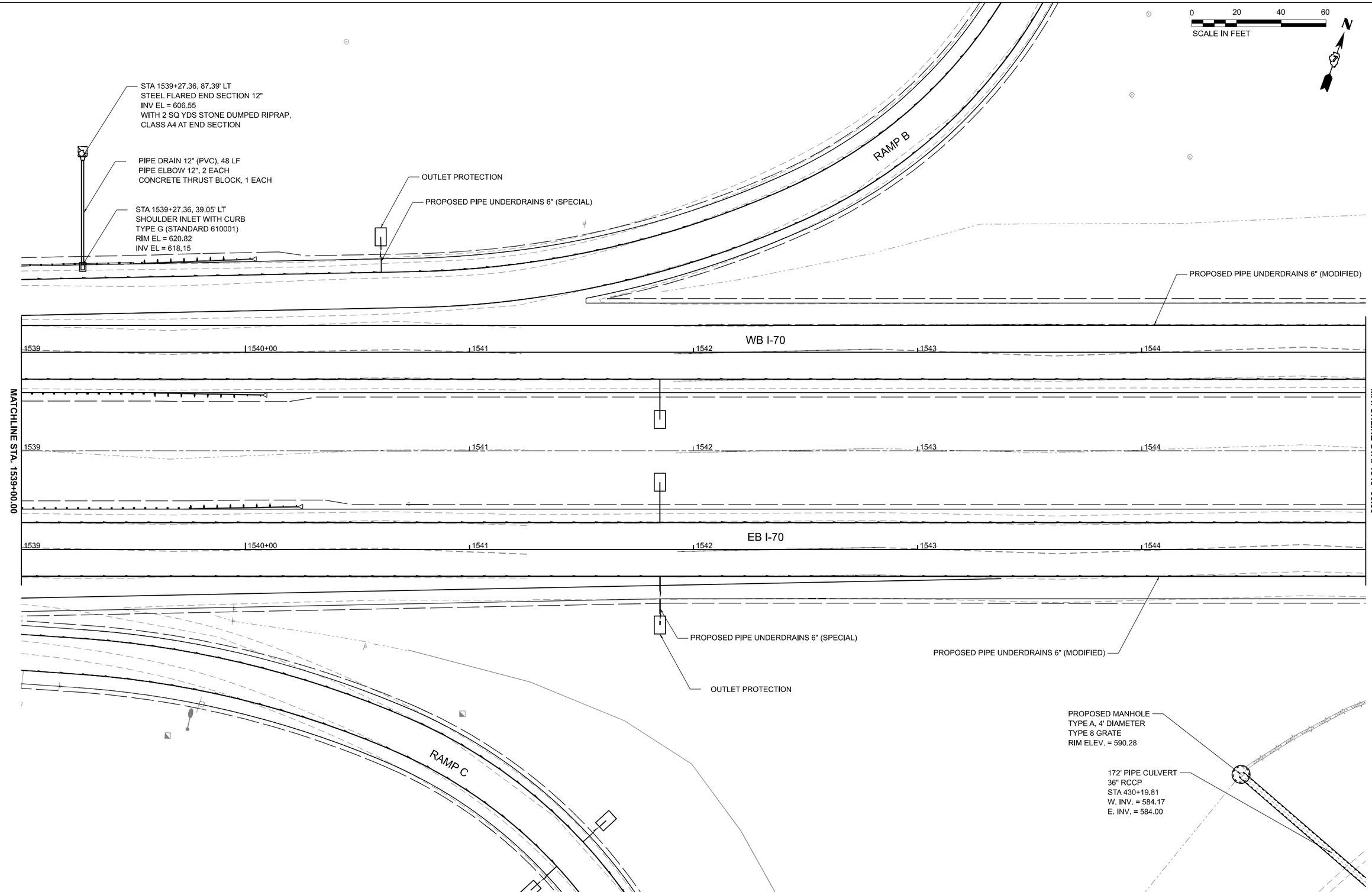

MODEL: SHT - DRN Plan I-70 - 07
FILE NAME: pw://contengpw.bentley.com:carb-connect-projects/Documents/IDOT/20041970-0074893/CADD Data/Sheets/0774893-sht-drn-plan_I-70.dgn

CMT
License No. 184-000613 © Copyright CMT, Inc.

USER NAME = moverbey	DESIGNED - AJ	REVISED -	
	DRAWN - AJ	REVISED -	
PLOT SCALE = 0.16666667 ' / in.	CHECKED - MJO	REVISED -	
PLOT DATE = 10/13/2025	DATE - 10/16/2025	REVISED -	

STATE OF ILLINOIS
DEPARTMENT OF TRANSPORTATION

FAI ROUTE 70 - INTERSTATE 70
DRAINAGE PLAN & PROFILE - FAI ROUTE 70

SCALE: 1"=20' | SHEET 16 OF 31 SHEETS | STA. 1539+00 TO STA. 1545+00

F.A.I. RTE.	SECTION	COUNTY	TOTAL SHEETS	SHEET NO.
70	(25-1)R-BR	EFFINGHAM	747	235
		CONTRACT NO. 74893		
	ILLINOIS	FED. AID PROJECT		

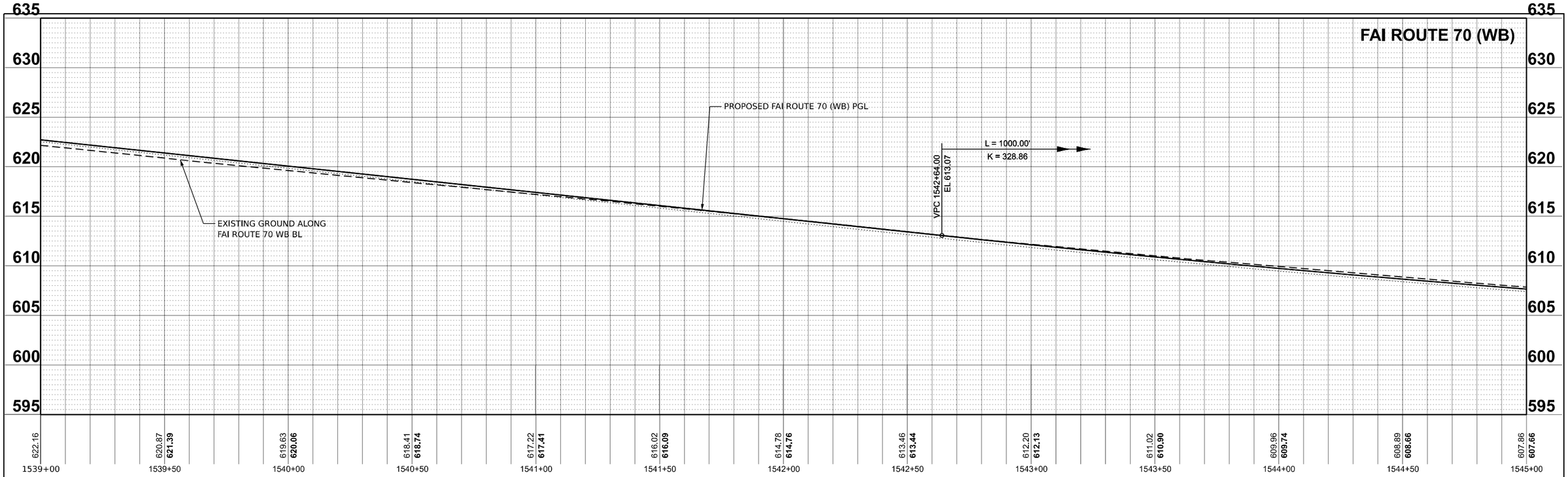

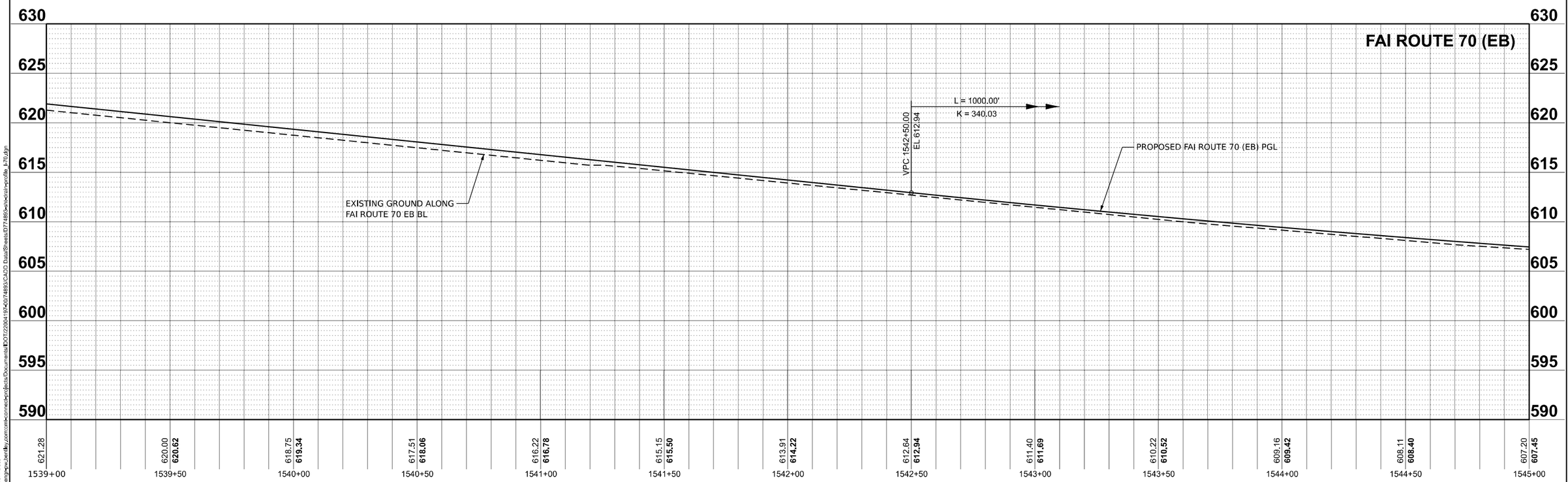

MODEL: 017 - FD - Prof - Dual
FILE NAME: pw://cmtengr-pw.bentley.com:cmtengr-connect-projects/Documents/IDOT/22004197-0074893/CADD Data/Sheets/0774893-sht-hwy-profile_1-70.dgn

CMT
License No. 184-000613
© Copyright CMT, Inc.

USER NAME = moverbey	DESIGNED - AJ	REVISED -
	DRAWN - AJ	REVISED -
PLOT SCALE = 0.16666667 ' / in.	CHECKED - MJO	REVISED -
PLOT DATE = 10/13/2025	DATE - 10/16/2025	REVISED -

STATE OF ILLINOIS
DEPARTMENT OF TRANSPORTATION

FAI ROUTE 70 - INTERSTATE 70
DRAINAGE PLAN & PROFILE - FAI ROUTE 70

SCALE: 1"=20' | SHEET 17 OF 31 SHEETS | STA. 1539+00 TO STA. 1545+00

F.A.I. RTE.	SECTION	COUNTY	TOTAL SHEETS	SHEET NO.
70	(25-1)R-BR	EFFINGHAM	747	236
		CONTRACT NO. 74893		
		ILLINOIS	FED. AID PROJECT	

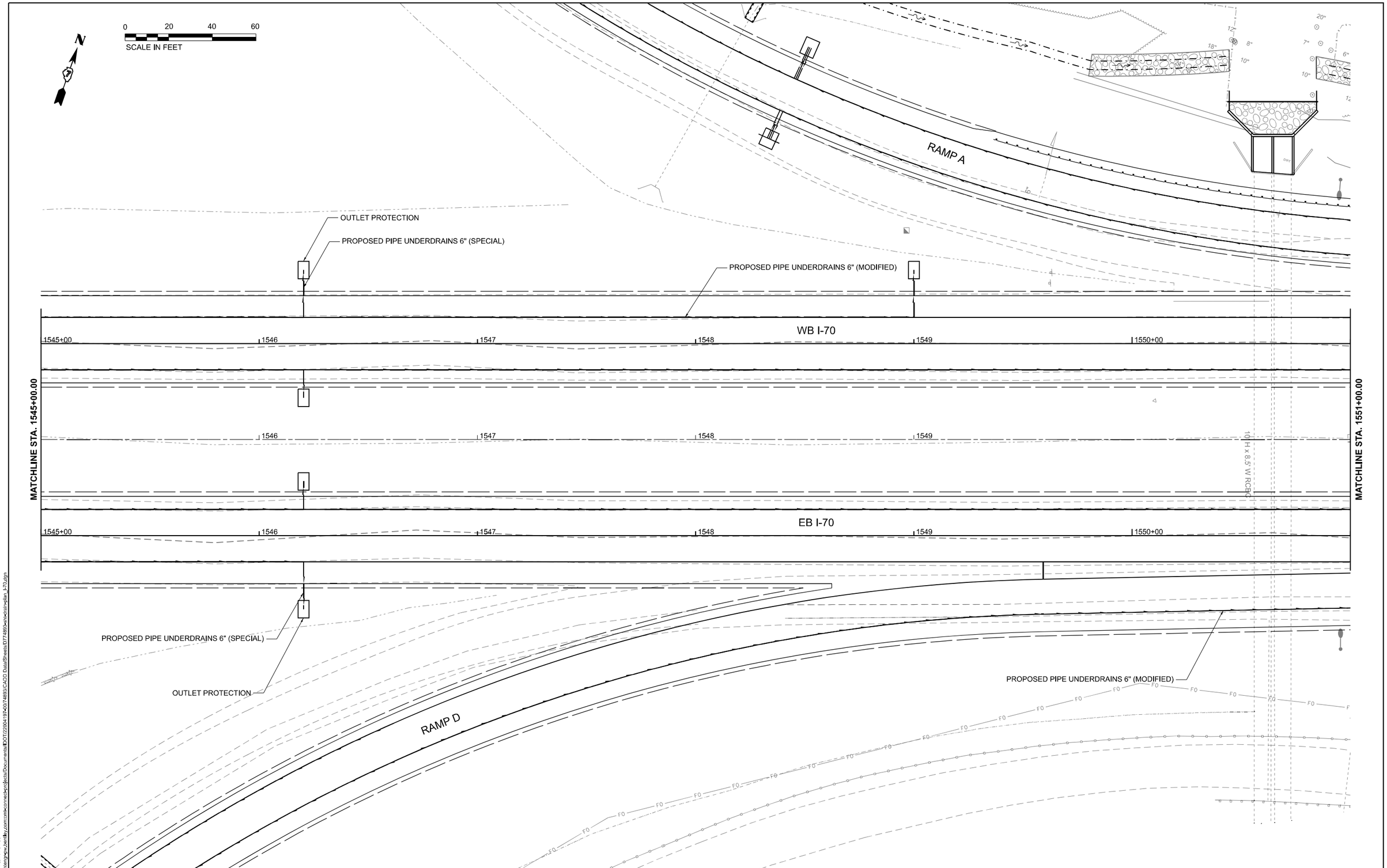

MODEL: SHT - DRN Plan I-70 - 08
FILE NAME: pw://centerpoint.bentley.com:centerpoint-projects/Documents/IDOT/22004197-00/74893/CADD Data/Sheets/D774893-sht-drn-plan_I-70.dgn

CMT
License No. 184-000613
© Copyright CMT, Inc.

USER NAME = moverbey	DESIGNED - AJ	REVISED -	
	DRAWN - AJ	REVISED -	
PLOT SCALE = 0.16666667 ' / in.	CHECKED - MJO	REVISED -	
PLOT DATE = 10/13/2025	DATE - 10/16/2025	REVISED -	

STATE OF ILLINOIS
DEPARTMENT OF TRANSPORTATION

FAI ROUTE 70 - INTERSTATE 70
DRAINAGE PLAN & PROFILE - FAI ROUTE 70

SCALE: 1"=20' | SHEET 18 OF 31 SHEETS | STA. 1545+00 TO STA. 1551+00

F.A.I. RTE.	SECTION	COUNTY	TOTAL SHEETS	SHEET NO.
70	(25-1)R-BR	EFFINGHAM	747	237
		CONTRACT NO. 74893		
	ILLINOIS	FED. AID PROJECT		

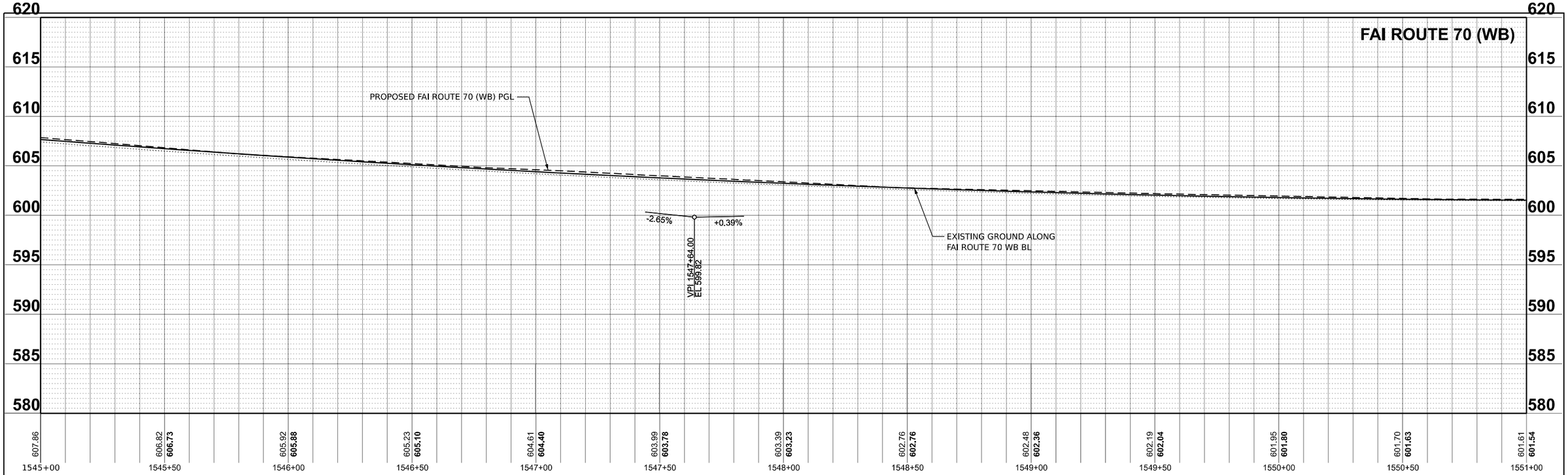

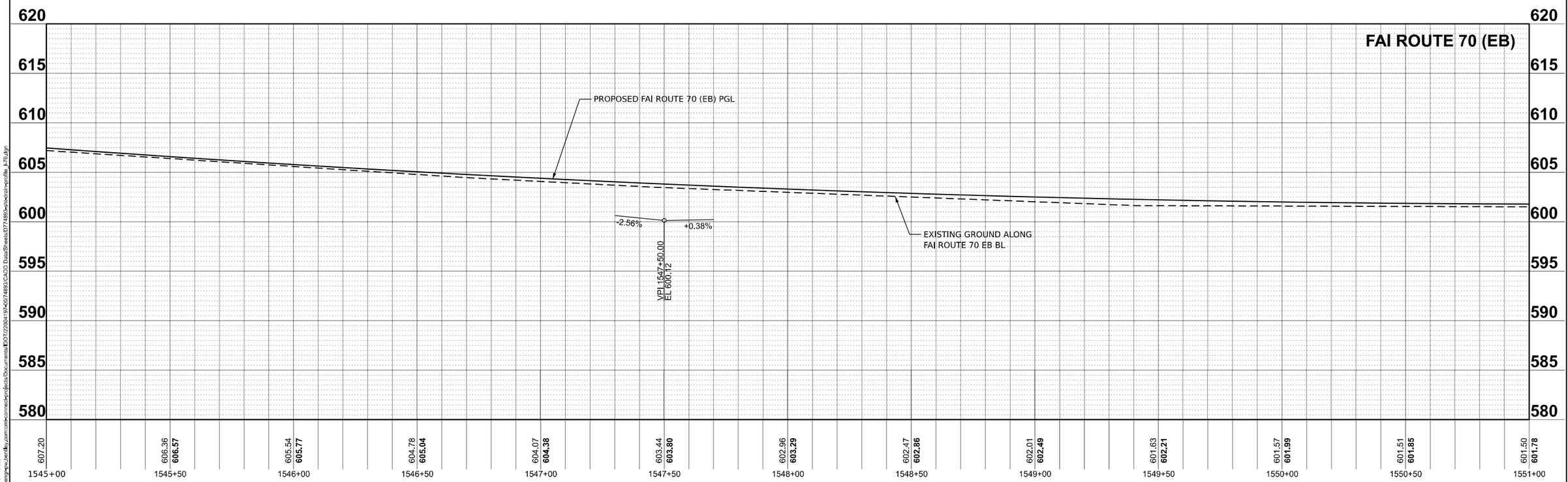

MODEL: 019 - PD - Prof - Dual
FILE NAME: pw://cmtengr-pw.bentley.com:cmtengr-connect-projects/Documents/IDOT/22004197-40/74893/CADD Data/Sheets/0774893-sht-rdwy-profile_I-70.dgn

CMT
License No. 184-000613
© Copyright CMT, Inc.

USER NAME = moverbey	DESIGNED - AJ	REVISED -	
	DRAWN - AJ	REVISED -	
PLOT SCALE = 0.16666667 ' / in.	CHECKED - MJO	REVISED -	
PLOT DATE = 10/13/2025	DATE - 10/16/2025	REVISED -	

STATE OF ILLINOIS
DEPARTMENT OF TRANSPORTATION

FAI ROUTE 70 - INTERSTATE 70
DRAINAGE PLAN & PROFILE - FAI ROUTE 70

SCALE: 1"=20' | SHEET 19 OF 31 SHEETS | STA. 1545+00 TO STA. 1551+00

F.A.I. RTE.	SECTION	COUNTY	TOTAL SHEETS	SHEET NO.
70	(25-1)R-BR	EFFINGHAM	747	238
		CONTRACT NO. 74893		
		ILLINOIS	FED. AID PROJECT	

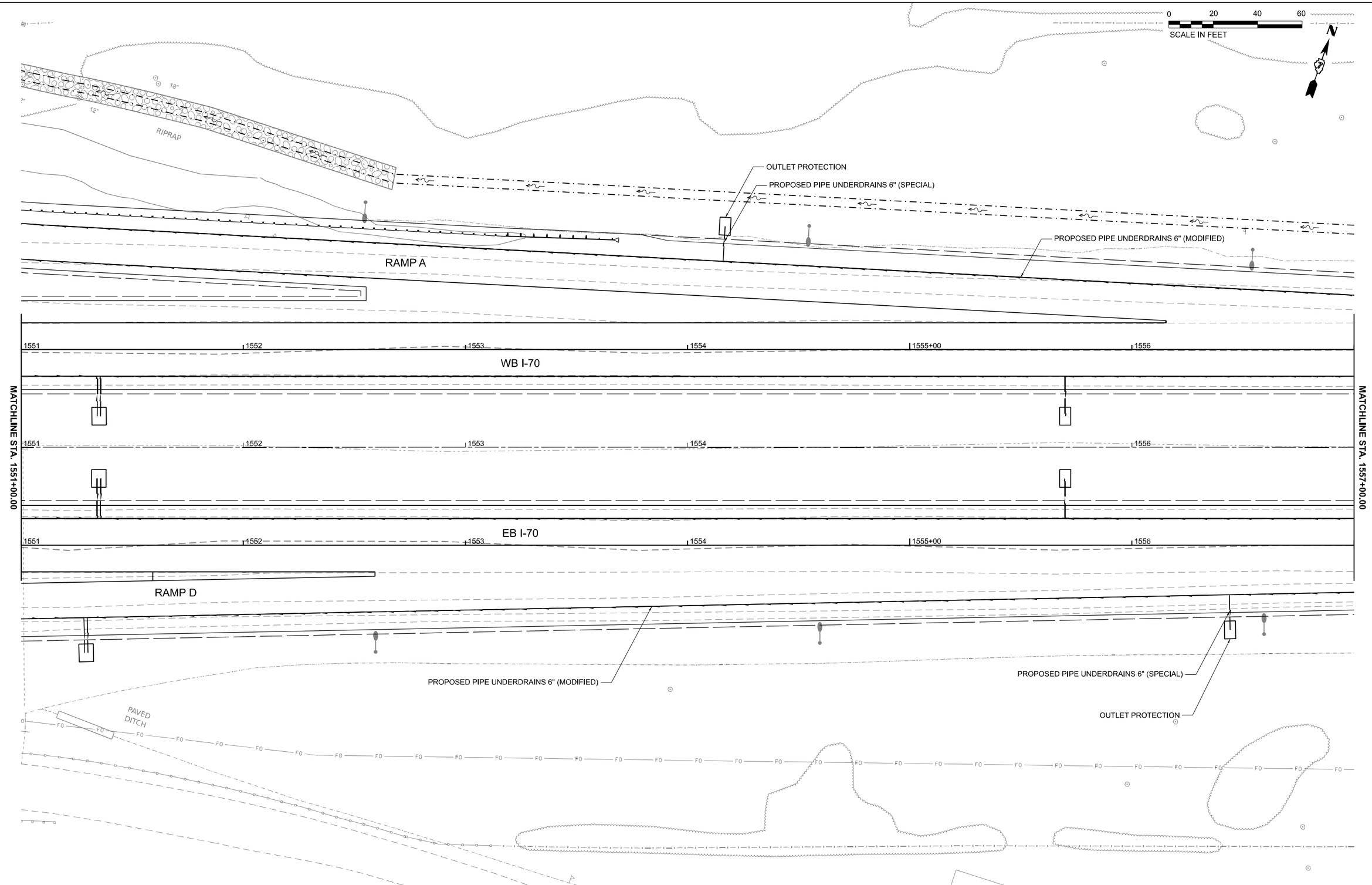

MODEL: SHT - DRN Plan I-70 - 09
FILE NAME: pw:\\cmtengp-pw.bentley.com:cmtengp\projects\Documents\IDOT\20041970\74893\CADD Data\Sheets\0774893-sht-drn-plan_I-70.dgn

CMT
License No. 184-000613 © Copyright CMT, Inc.

USER NAME = moverbey	DESIGNED - AJ	REVISED -	
	DRAWN - AJ	REVISED -	
PLOT SCALE = 0.16666667 ' / in.	CHECKED - MJO	REVISED -	
PLOT DATE = 10/13/2025	DATE - 10/16/2025	REVISED -	

STATE OF ILLINOIS
DEPARTMENT OF TRANSPORTATION

FAI ROUTE 70 - INTERSTATE 70
DRAINAGE PLAN & PROFILE - FAI ROUTE 70

SCALE: 1"=20' | SHEET 20 OF 31 SHEETS | STA. 1551+00 TO STA. 1557+00

F.A.I. RTE.	SECTION	COUNTY	TOTAL SHEETS	SHEET NO.
70	(25-1)R-BR	EFFINGHAM	747	239
		CONTRACT NO. 74893		
	ILLINOIS	FED. AID PROJECT		

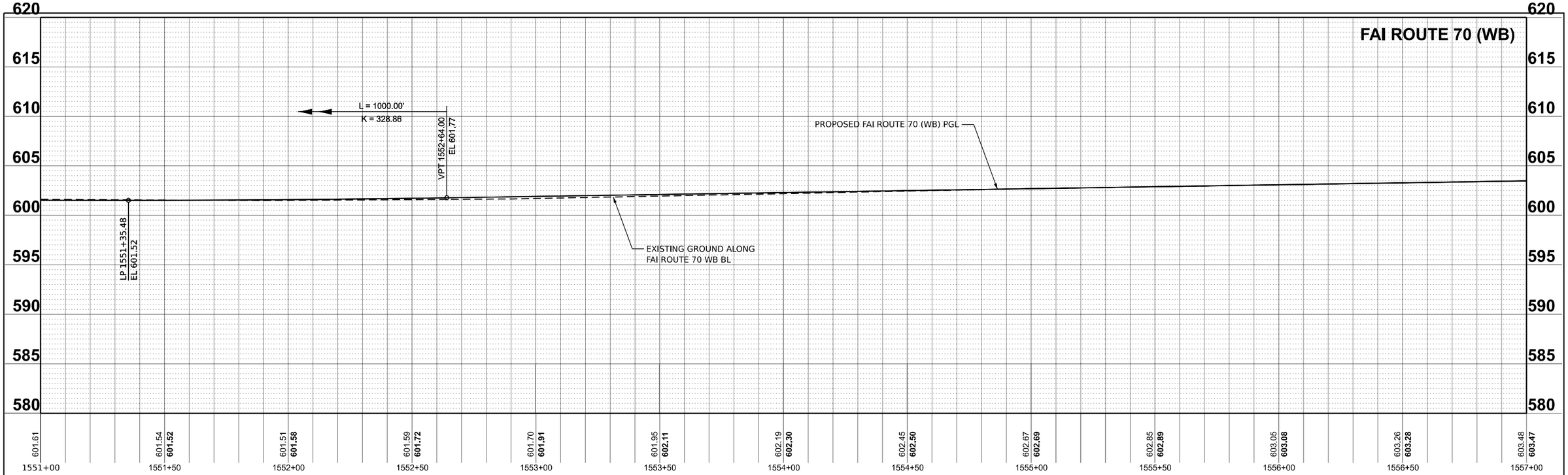

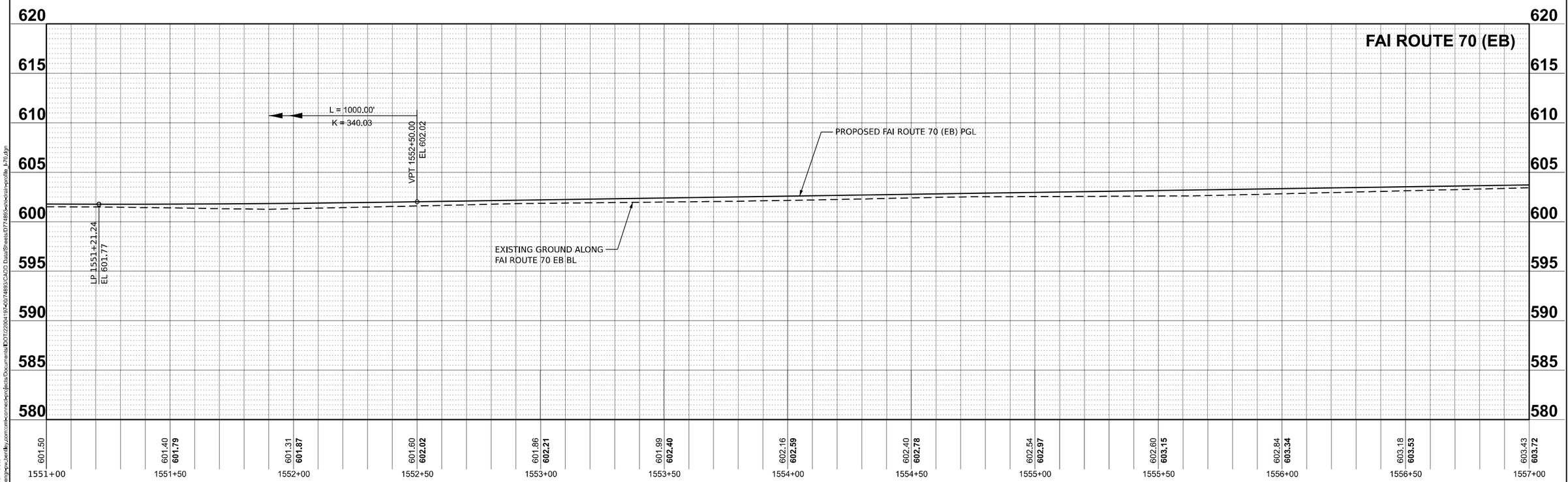

MODEL: 021 - FTO - Prof - Dual
FILE NAME: pw://cmtengrpw.bentley.com:cmt-connect-projects/Documents/IDOT/22004197-40/74893/CADD Data/Sheets/0774893-sht-plan-profile_I-70.dgn

CMT
License No. 184-000613
© Copyright CMT, Inc.

USER NAME = moverbey	DESIGNED - AJ	REVISED -	
	DRAWN - AJ	REVISED -	
PLOT SCALE = 0.16666667 ' / in.	CHECKED - MJO	REVISED -	
PLOT DATE = 10/13/2025	DATE - 10/16/2025	REVISED -	

STATE OF ILLINOIS
DEPARTMENT OF TRANSPORTATION

FAI ROUTE 70 - INTERSTATE 70
DRAINAGE PLAN & PROFILE - FAI ROUTE 70

SCALE: 1"=20' | SHEET 21 OF 31 SHEETS | STA. 1551+00 TO STA. 1557+00

F.A.I. RTE.	SECTION	COUNTY	TOTAL SHEETS	SHEET NO.
70	(25-1)R-BR	EFFINGHAM	747	240
		CONTRACT NO. 74893		
	ILLINOIS	FED. AID PROJECT		

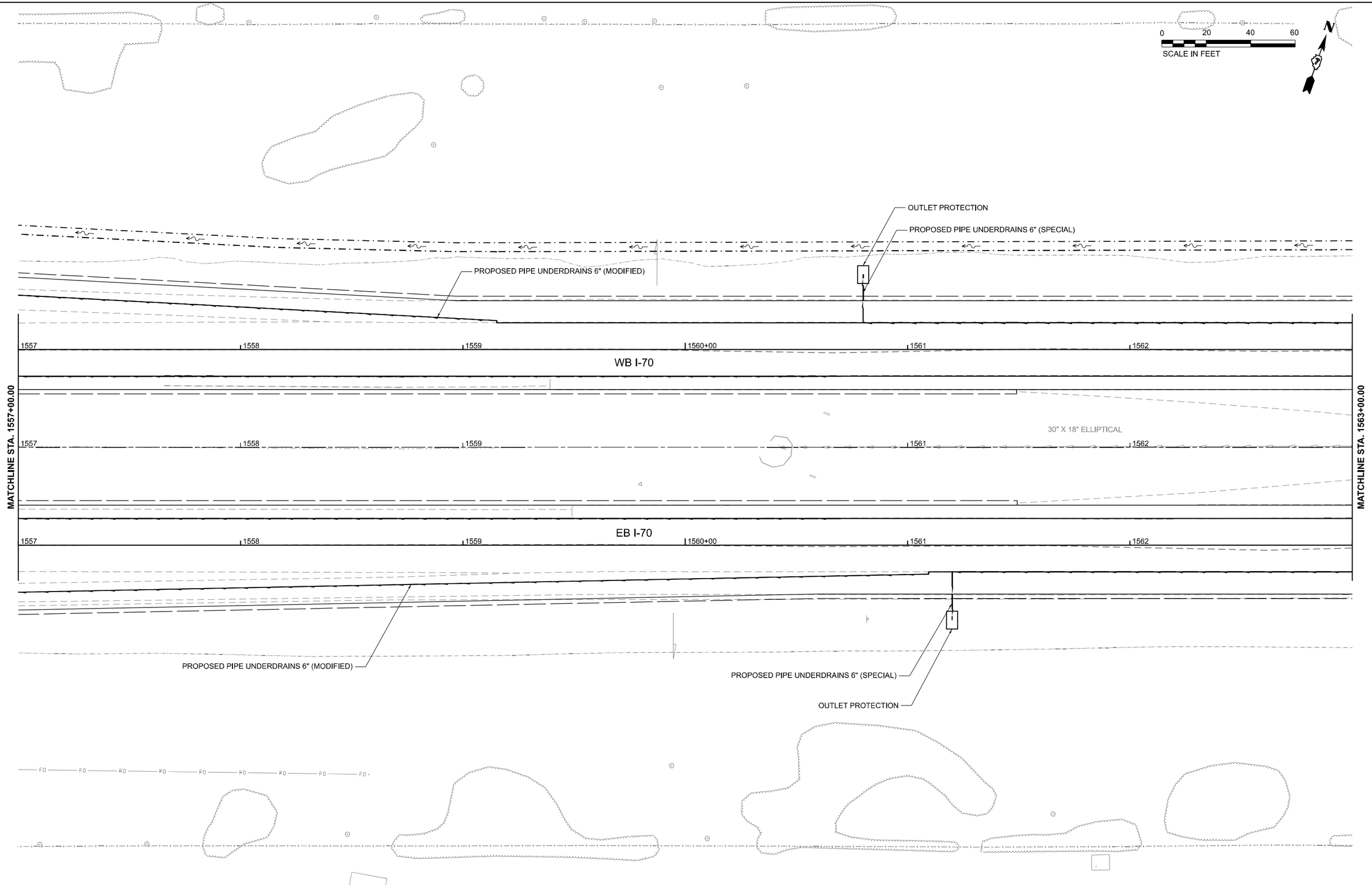

MODEL: SHT - DRN Plan I-70 - 10
FILE NAME: pw://cmengnpw.bentley.com:cmeConnect-eng-projects/Documents/IDOT/22004197-0074893-CA70 Data/Sheets/0774893-sht-drain-plan_I-70.dgn

CMT
License No. 184-000613
© Copyright CMT, Inc.

USER NAME = moverbey	DESIGNED - AJ	REVISED -	
	DRAWN - AJ	REVISED -	
PLOT SCALE = 0.16666667 ' / in.	CHECKED - MJO	REVISED -	
PLOT DATE = 10/13/2025	DATE - 10/16/2025	REVISED -	

STATE OF ILLINOIS
DEPARTMENT OF TRANSPORTATION

FAI ROUTE 70 - INTERSTATE 70
DRAINAGE PLAN & PROFILE - FAI ROUTE 70

SCALE: 1"=20' | SHEET 22 OF 31 SHEETS | STA. 1557+00 TO STA. 1563+00

F.A.I. RTE.	SECTION	COUNTY	TOTAL SHEETS	SHEET NO.
70	(25-1)R-BR	EFFINGHAM	747	241
		CONTRACT NO. 74893		
	ILLINOIS	FED. AID PROJECT		

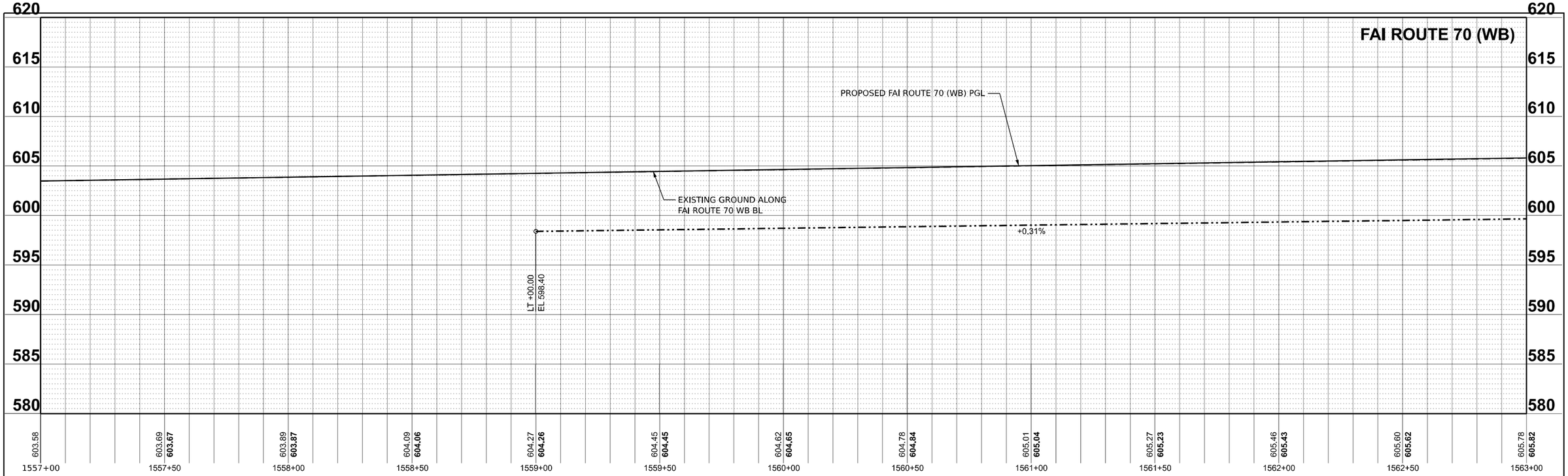

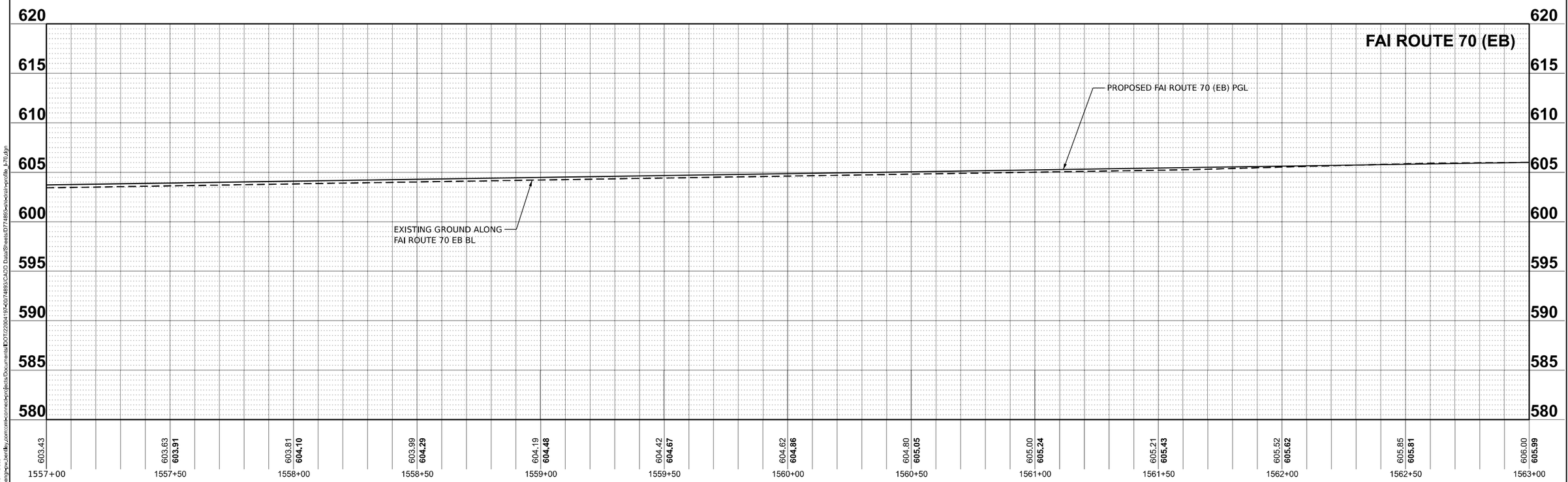

MODEL: 023 - FD - Prof - Dual
FILE NAME: pw://cmtengr-pw.bentley.com:cmt-connect-projects/Documents/IDOT/22004197-00774893/CADD Data/Sheets/0774893-sht-hwy-profile_I-70.dgn

CMT
License No. 184-000613
© Copyright CMT, Inc.

USER NAME = moverbey	DESIGNED - AJ	REVISED -	
	DRAWN - AJ	REVISED -	
PLOT SCALE = 0.16666667 ' / in.	CHECKED - MJO	REVISED -	
PLOT DATE = 10/13/2025	DATE - 10/16/2025	REVISED -	

STATE OF ILLINOIS
DEPARTMENT OF TRANSPORTATION

FAI ROUTE 70 - INTERSTATE 70
DRAINAGE PLAN & PROFILE - FAI ROUTE 70

SCALE: 1"=20' | SHEET 23 OF 31 SHEETS | STA. 1557+00 TO STA. 1563+00

F.A.I. RTE.	SECTION	COUNTY	TOTAL SHEETS	SHEET NO.
70	(25-1)R-BR	EFFINGHAM	747	242
		CONTRACT NO. 74893		
	ILLINOIS	FED. AID PROJECT		

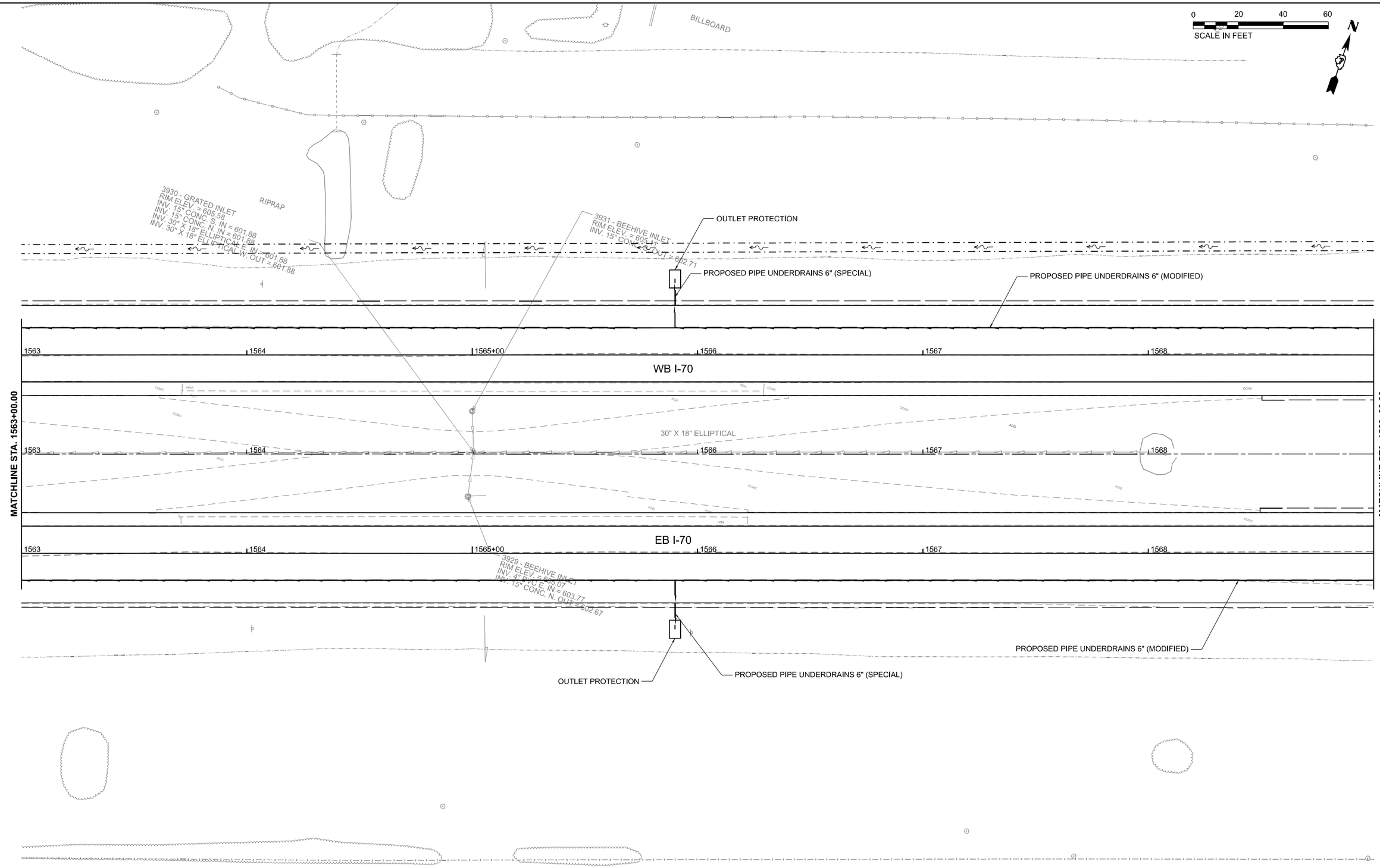

MODEL: SHT - DRN Plan I-70 - 11
FILE NAME: pw://cmtengrpw.bentley.com:cmtconnect-eng-projects/Documents/DOT/22004197/0074893/CAD/0 Data/Sheets/0774893-sht-drain-plan_I-70.dgn

CMT
License No. 184-000613
© Copyright CMT, Inc.

USER NAME = moverbey	DESIGNED - AJ	REVISED -	
	DRAWN - AJ	REVISED -	
PLOT SCALE = 0.16666667 ' / in.	CHECKED - MJO	REVISED -	
PLOT DATE = 10/13/2025	DATE - 10/16/2025	REVISED -	

STATE OF ILLINOIS
DEPARTMENT OF TRANSPORTATION

FAI ROUTE 70 - INTERSTATE 70
DRAINAGE PLAN & PROFILE - FAI ROUTE 70

SCALE: 1"=20' | SHEET 24 OF 31 SHEETS | STA. 1563+00 TO STA. 1569+00

F.A.I. RTE.	SECTION	COUNTY	TOTAL SHEETS	SHEET NO.
70	(25-1)R-BR	EFFINGHAM	747	243

CONTRACT NO. 74893

ILLINOIS | FED. AID PROJECT

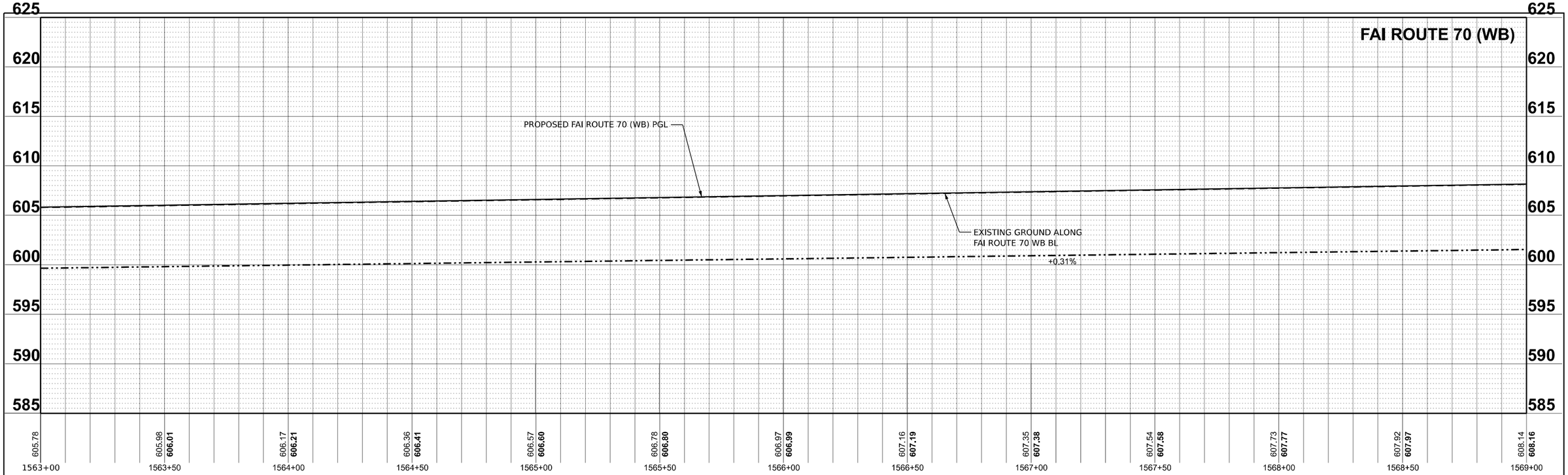

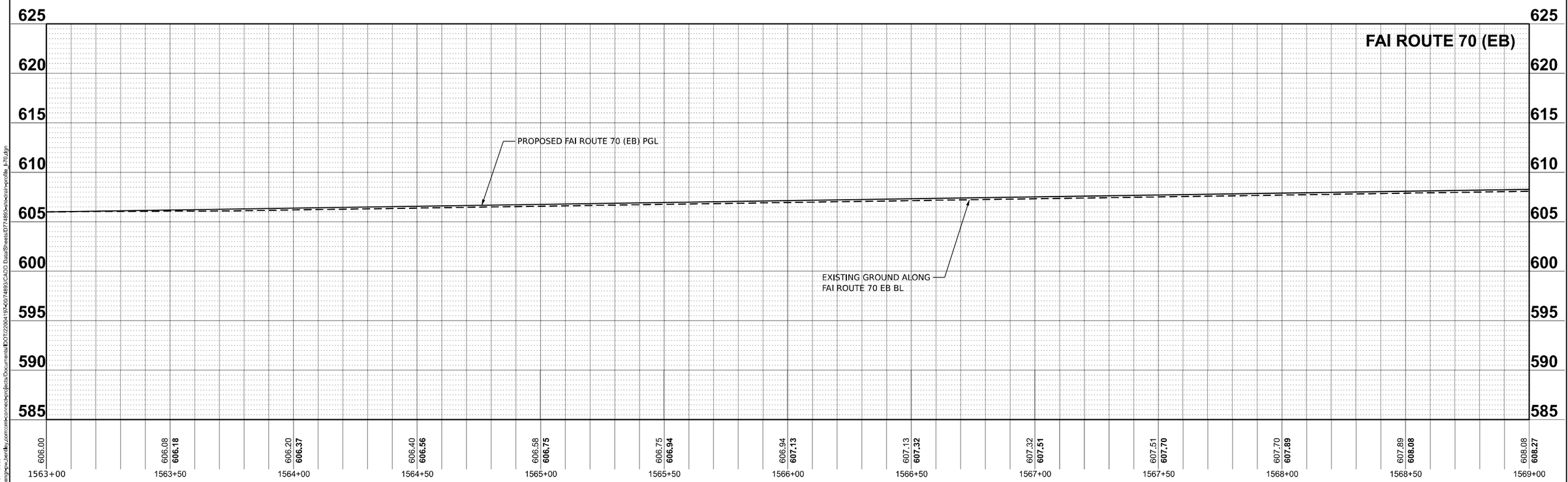

MODEL: 025 - FD - Prof - Dual
FILE NAME: pw://cmtengr-pw.bentley.com:cmtr-connect-projects/Documents/IDOT/22004197-40/74893/CADD Data/Sheets/0774893-sht-hwl-profile_I-70.dgn

CMT
License No. 184-000613
© Copyright CMT, Inc.

USER NAME = moverbey	DESIGNED - AJ	REVISED -	
	DRAWN - AJ	REVISED -	
PLOT SCALE = 0.16666667 ' / in.	CHECKED - MJO	REVISED -	
PLOT DATE = 10/13/2025	DATE - 10/16/2025	REVISED -	

STATE OF ILLINOIS
DEPARTMENT OF TRANSPORTATION

FAI ROUTE 70 - INTERSTATE 70
DRAINAGE PLAN & PROFILE - FAI ROUTE 70

SCALE: 1"=20' | SHEET 25 OF 31 SHEETS | STA. 1563+00 TO STA. 1569+00

F.A.I. RTE.	SECTION	COUNTY	TOTAL SHEETS	SHEET NO.
70	(25-1)R-BR	EFFINGHAM	747	244
		CONTRACT NO. 74893		
	ILLINOIS	FED. AID PROJECT		

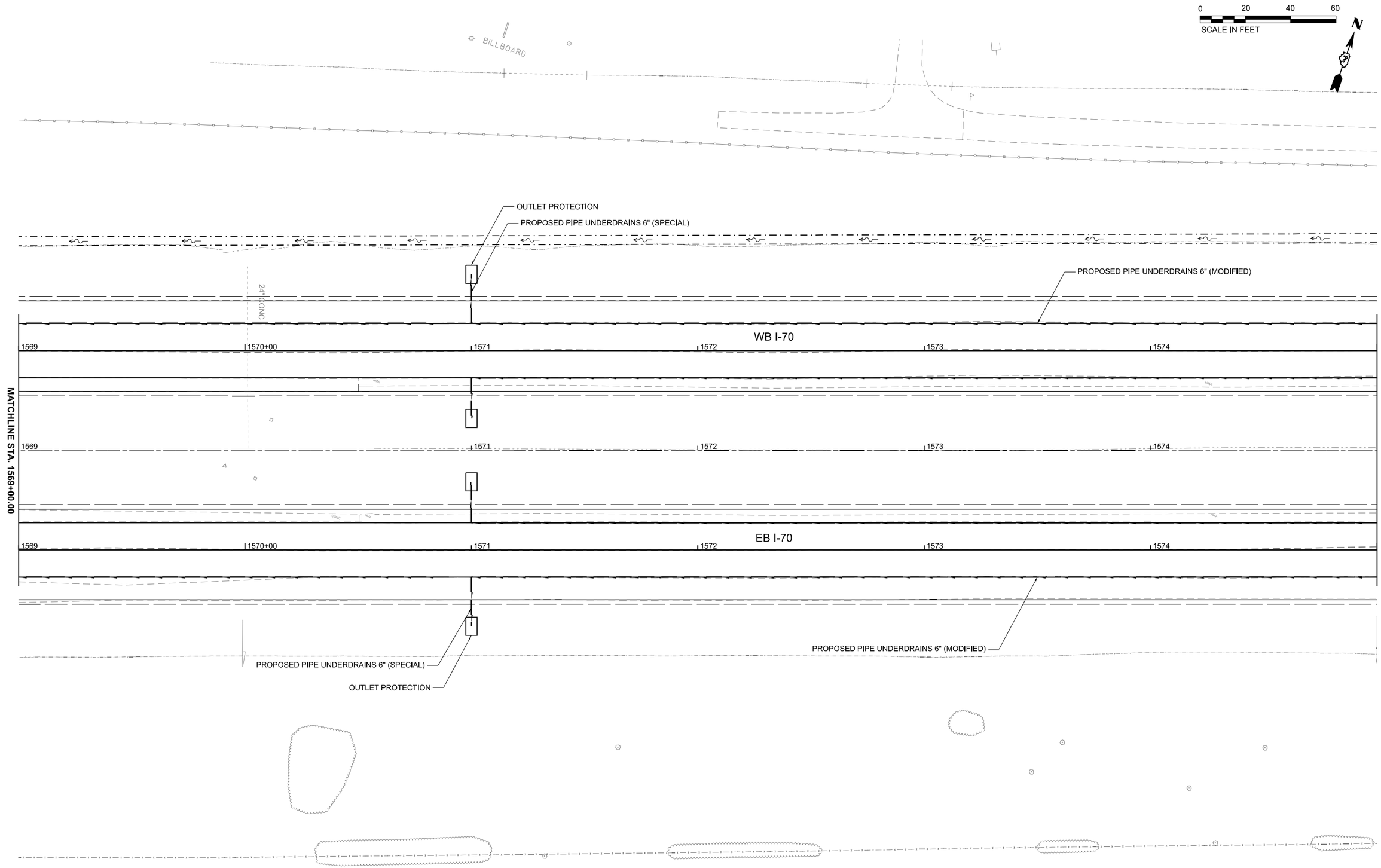

MODEL: SHT - DRN Plan I-70 - 12
FILE NAME: pw://contengo-pw.bentley.com:carte-connect-pw01/projects/Documents/IDOT/20041970-0074893/CADD Data/Sheets/0774893-sht-drn-plan_I-70.dgn

CMT
License No. 184-000613 © Copyright CMT, Inc.

USER NAME = moverbey	DESIGNED - AJ	REVISED -	
	DRAWN - AJ	REVISED -	
PLOT SCALE = 0.16666667 ' / in.	CHECKED - MJO	REVISED -	
PLOT DATE = 10/13/2025	DATE - 10/16/2025	REVISED -	

STATE OF ILLINOIS
DEPARTMENT OF TRANSPORTATION

FAI ROUTE 70 - INTERSTATE 70
DRAINAGE PLAN & PROFILE - FAI ROUTE 70

SCALE: 1"=20' | SHEET 26 OF 31 SHEETS | STA. 1569+00 TO STA. 1575+00

F.A.I. RTE.	SECTION	COUNTY	TOTAL SHEETS	SHEET NO.
70	(25-1)R-BR	EFFINGHAM	747	245
		CONTRACT NO. 74893		
	ILLINOIS	FED. AID PROJECT		

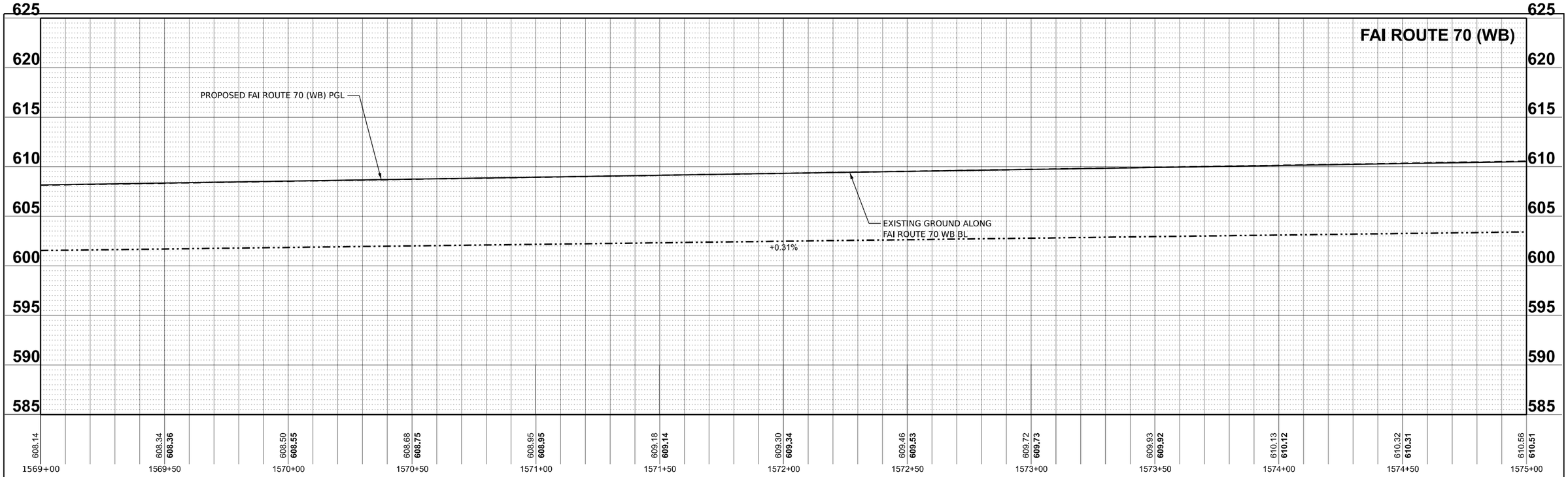

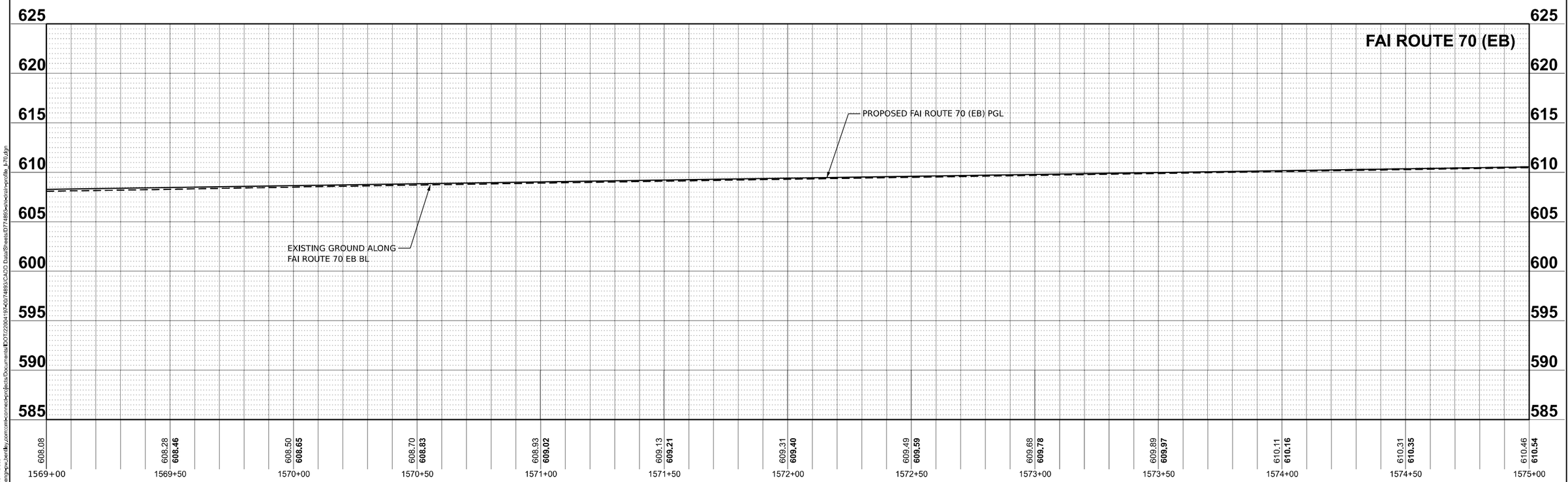

MODEL: 027 - FD - Prof - Dual
FILE NAME: pw://cmtengr-pw.bentley.com:cmtr-connect-projects/Documents/IDOT/22004197-40/74893/CADD Data/Sheets/0774893-sht-hwy-profile_I-70.dgn

CMT
License No. 184-000613 © Copyright CMT, Inc.

USER NAME = moverbey	DESIGNED - AJ	REVISED -	
	DRAWN - AJ	REVISED -	
PLOT SCALE = 0.16666667 ' / in.	CHECKED - MJO	REVISED -	
PLOT DATE = 10/13/2025	DATE - 10/16/2025	REVISED -	

STATE OF ILLINOIS
DEPARTMENT OF TRANSPORTATION

FAI ROUTE 70 - INTERSTATE 70
DRAINAGE PLAN & PROFILE - FAI ROUTE 70

SCALE: 1"=20' | SHEET 27 OF 31 SHEETS | STA. 1569+00 TO STA. 1575+00

F.A.I. RTE.	SECTION	COUNTY	TOTAL SHEETS	SHEET NO.
70	(25-1)R-BR	EFFINGHAM	747	246
		CONTRACT NO. 74893		
	ILLINOIS	FED. AID PROJECT		

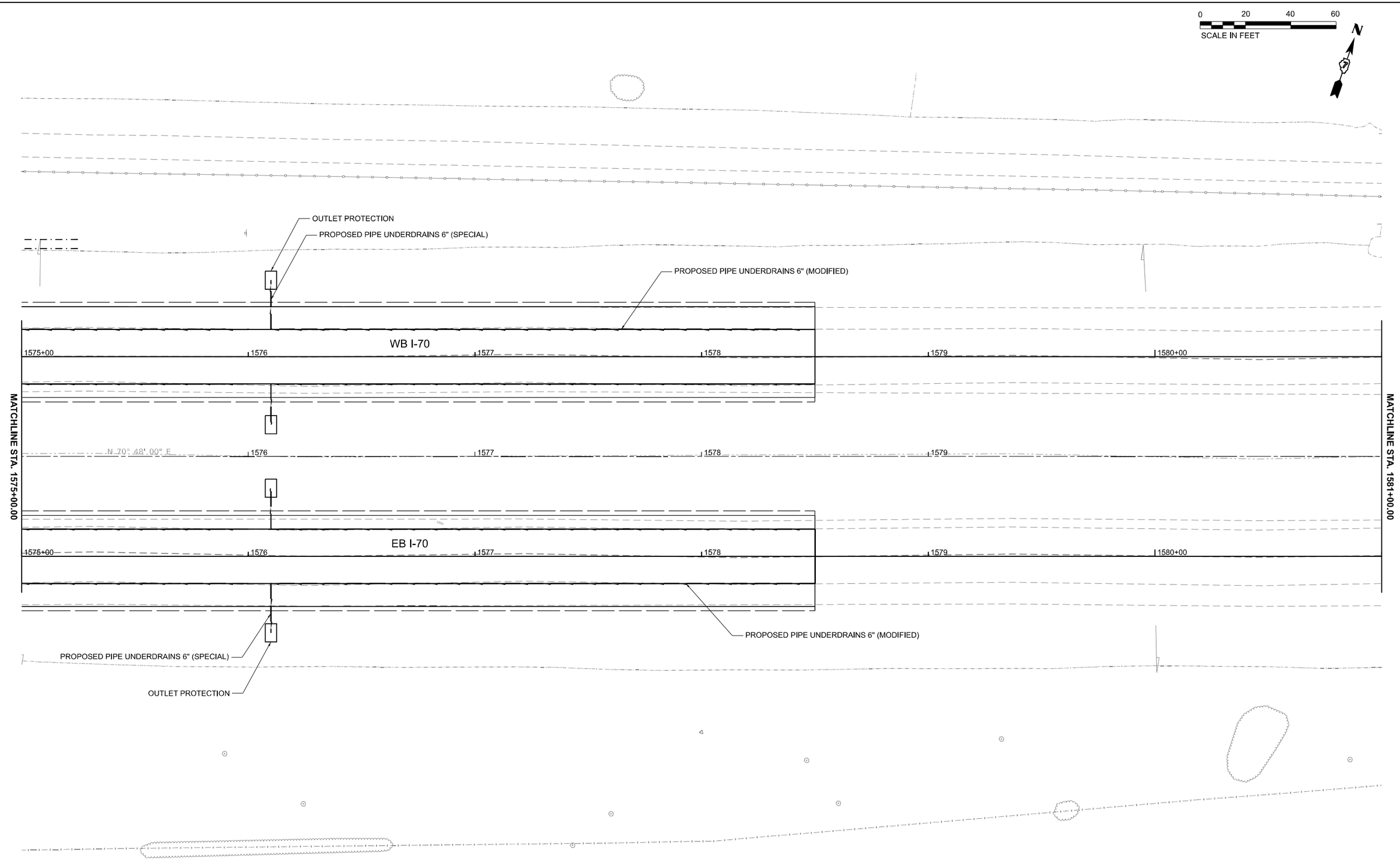

MODEL: SHT - DRN Plan I-70 - 13
FILE NAME: pw://contengo-pw.bentley.com:carte-connect-projects/Documents/IDOT/20041970-0074893/CADD Data/Sheets/0774893-sht-drn-plan_I-70.dgn

CMT
License No. 184-000613
© Copyright CMT, Inc.

USER NAME = moverbey	DESIGNED - AJ	REVISED -	
	DRAWN - AJ	REVISED -	
PLOT SCALE = 0.16666667 ' / in.	CHECKED - MJO	REVISED -	
PLOT DATE = 10/13/2025	DATE - 10/16/2025	REVISED -	

STATE OF ILLINOIS
DEPARTMENT OF TRANSPORTATION

FAI ROUTE 70 - INTERSTATE 70
DRAINAGE PLAN & PROFILE - FAI ROUTE 70

SCALE: 1"=20' | SHEET 28 OF 31 SHEETS | STA. 1575+00 TO STA. 1581+00

F.A.I. RTE.	SECTION	COUNTY	TOTAL SHEETS	SHEET NO.
70	(25-1)R-BR	EFFINGHAM	747	247
		CONTRACT NO. 74893		
	ILLINOIS	FED. AID PROJECT		

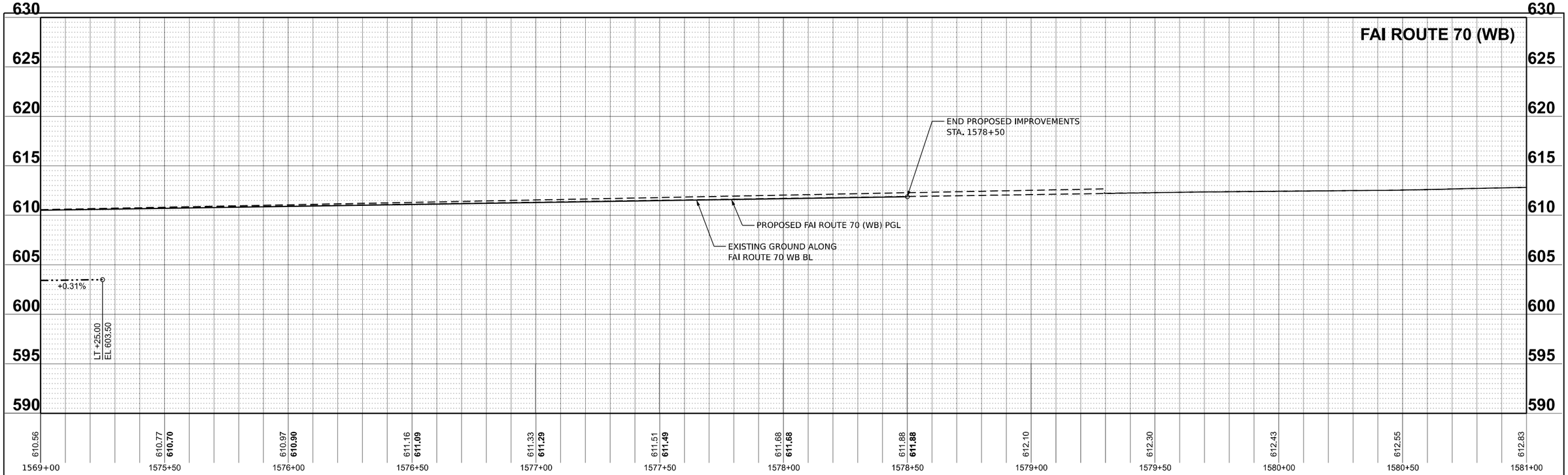

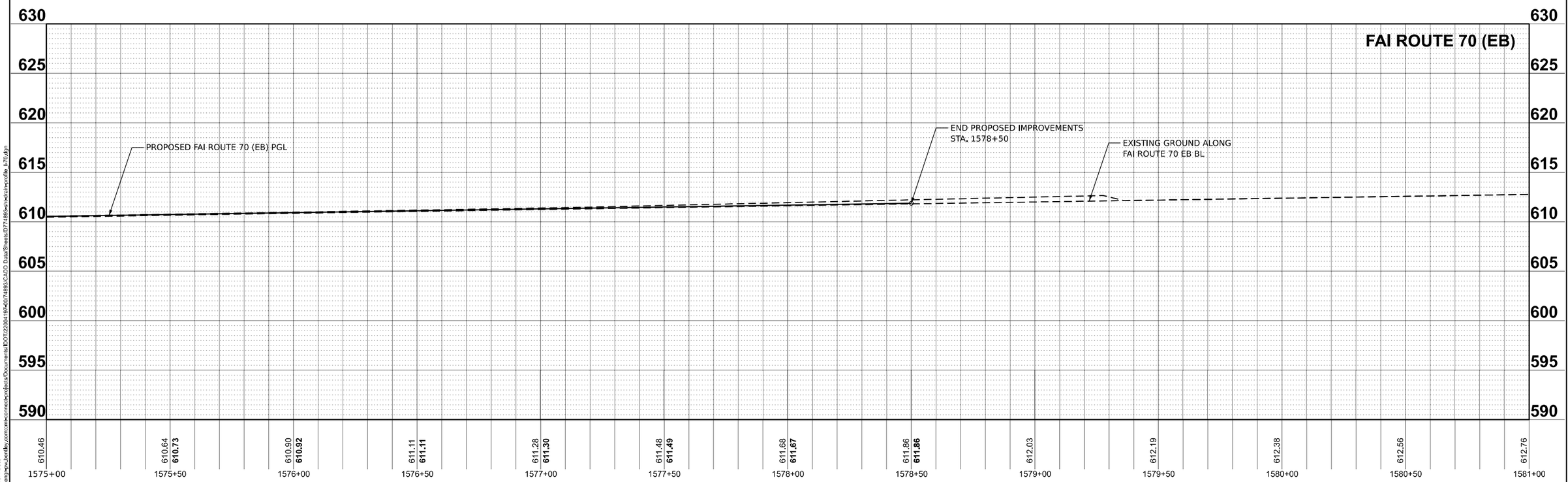

MODEL: 029 - FD - Prof - Dual
FILE NAME: pw://cmtengr-pw.bentley.com:cmtengr-connect-projects/Documents/IDOT/22004197-007/74893/CADD Data/Sheets/0774893-sht-hwy-profile_1-70.dgn

CMT
License No. 184-000613
© Copyright CMT, Inc.

USER NAME = moverbey	DESIGNED - AJ	REVISED -	
	DRAWN - AJ	REVISED -	
PLOT SCALE = 0.16666667 ' / in.	CHECKED - MJO	REVISED -	
PLOT DATE = 10/13/2025	DATE - 10/16/2025	REVISED -	

STATE OF ILLINOIS
DEPARTMENT OF TRANSPORTATION

FAI ROUTE 70 - INTERSTATE 70
DRAINAGE PLAN & PROFILE - FAI ROUTE 70

SCALE: 1"=20' | SHEET 29 OF 31 SHEETS | STA. 1575+00 TO STA. 1581+00

F.A.I. RTE.	SECTION	COUNTY	TOTAL SHEETS	SHEET NO.
70	(25-1)R-BR	EFFINGHAM	747	248
		CONTRACT NO. 74893		
		ILLINOIS	FED. AID PROJECT	

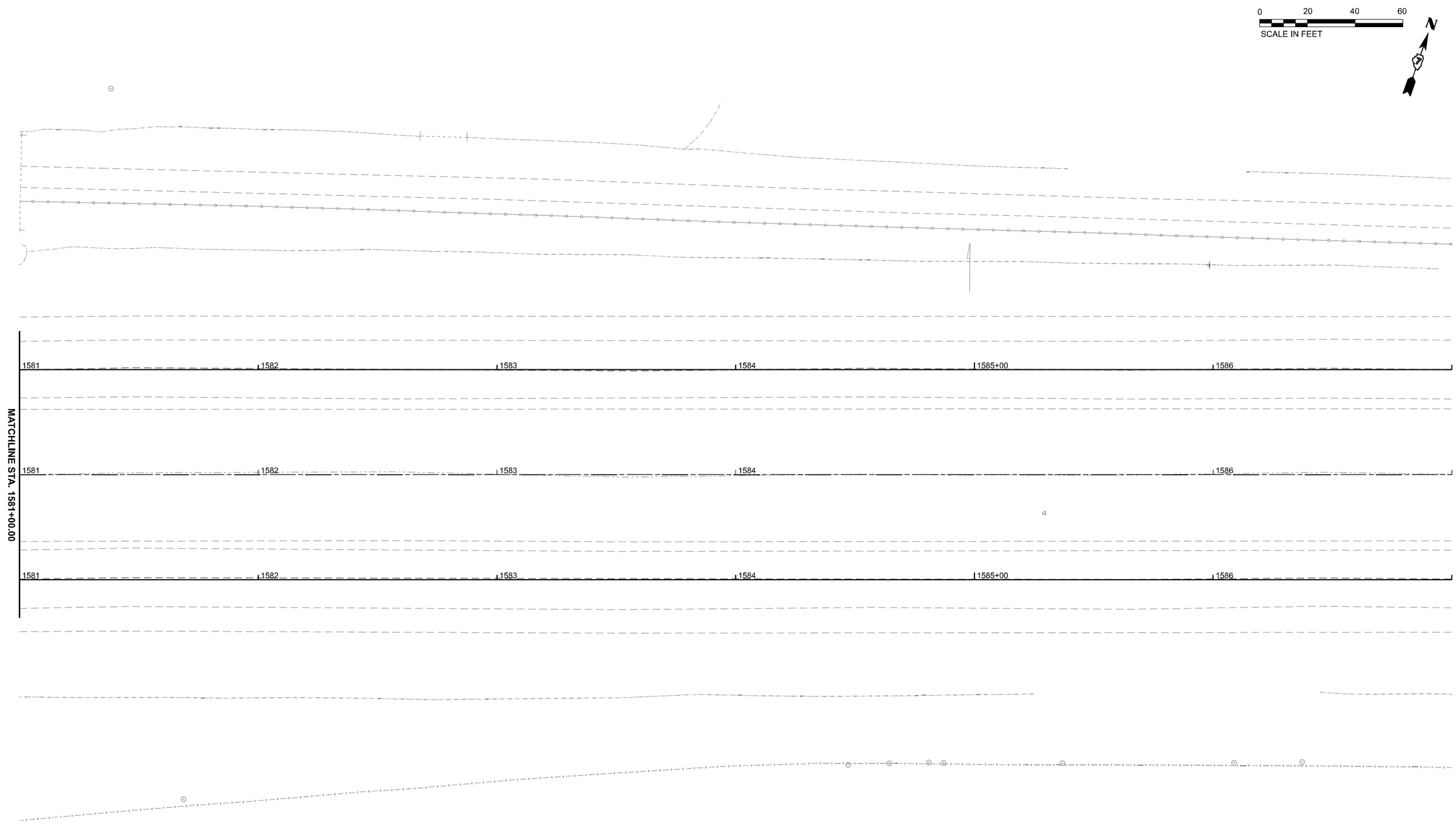

MODEL: SHT - DRN Plan I-70 - 14
FILE NAME: pw://contengpw.bentley.com:carb-connect-eprojects/Documents/IDOT/22004197-20174893/CADD Data/Sheets/D774893-sht-mstr-plan_I-70.dgn

CMT
License No. 184-000613
© Copyright CMT, Inc.

USER NAME = moverbey	DESIGNED - AJ	REVISED -	
	DRAWN - AJ	REVISED -	
PLOT SCALE = 0.16666667 ' / in.	CHECKED - MJO	REVISED -	
PLOT DATE = 10/13/2025	DATE - 10/16/2025	REVISED -	

STATE OF ILLINOIS
DEPARTMENT OF TRANSPORTATION

FAI ROUTE 70 - INTERSTATE 70
DRAINAGE PLAN & PROFILE - FAI ROUTE 70

SCALE: 1"=20' | SHEET 30 OF 31 SHEETS | STA. 1581+00 TO STA. 1587+00

F.A.I. RTE.	SECTION	COUNTY	TOTAL SHEETS	SHEET NO.
70	(25-1)R-BR	EFFINGHAM	747	249
		CONTRACT NO. 74893		
	ILLINOIS	FED. AID PROJECT		

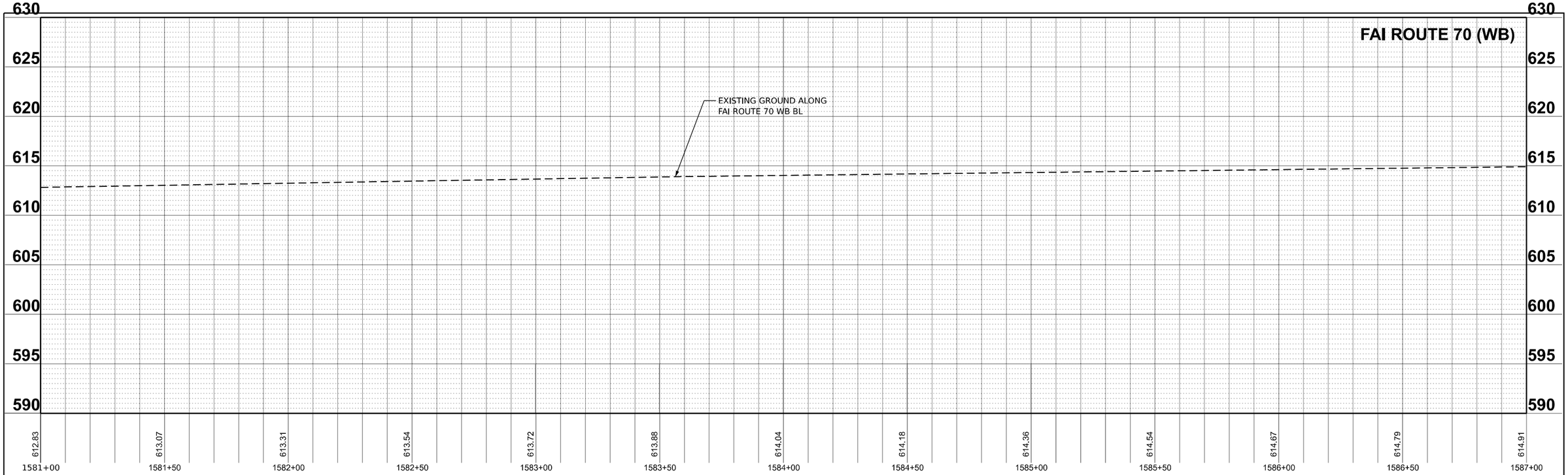

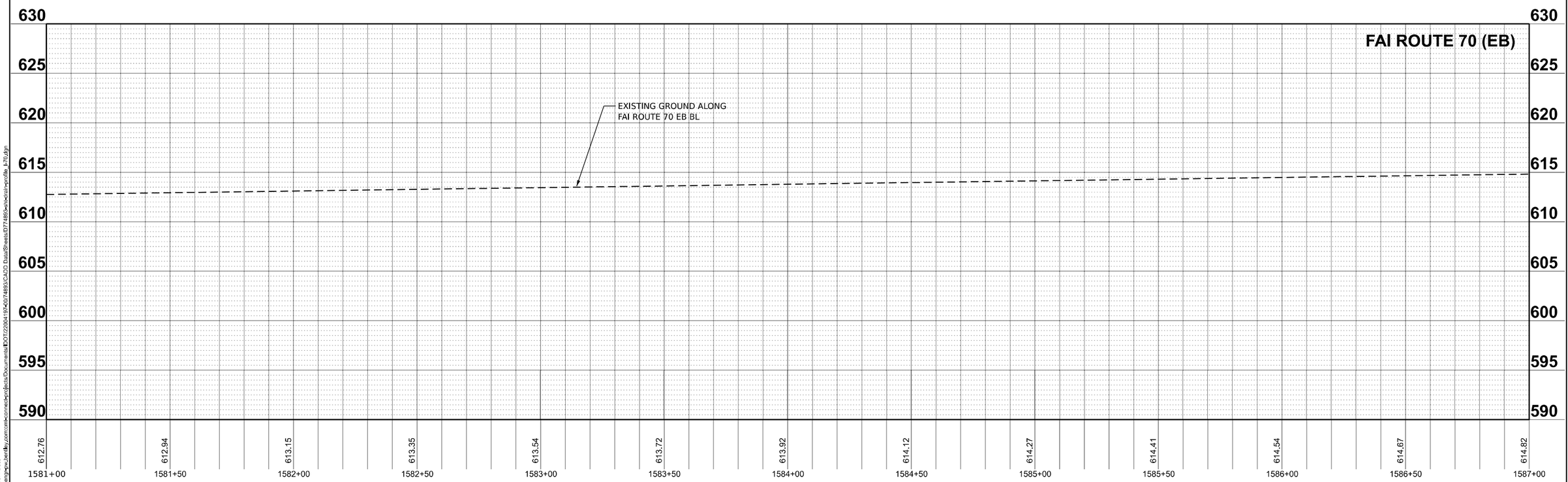

MODEL: 031 - FD - Prof - Dual
FILE NAME: pw://cmtengr-pw.bentley.com:cmt-connect-projects/Documents/IDOT/22004197-007748931/CADD Data/Sheets/0774893-sht-hwy-profile_1-70.dgn

CMT
License No. 184-000613
© Copyright CMT, Inc.

USER NAME = moverbey	DESIGNED - AJ	REVISED -	
	DRAWN - AJ	REVISED -	
PLOT SCALE = 0.16666667 ' / in.	CHECKED - MJO	REVISED -	
PLOT DATE = 10/13/2025	DATE - 10/16/2025	REVISED -	

STATE OF ILLINOIS
DEPARTMENT OF TRANSPORTATION

FAI ROUTE 70 - INTERSTATE 70
DRAINAGE PLAN & PROFILE - FAI ROUTE 70

SCALE: 1"=20' | SHEET 31 OF 31 SHEETS | STA. 1581+00 TO STA. 1587+00

F.A.I. RTE.	SECTION	COUNTY	TOTAL SHEETS	SHEET NO.
70	(25-1)R-BR	EFFINGHAM	747	250
		CONTRACT NO. 74893		
		ILLINOIS	FED. AID PROJECT	

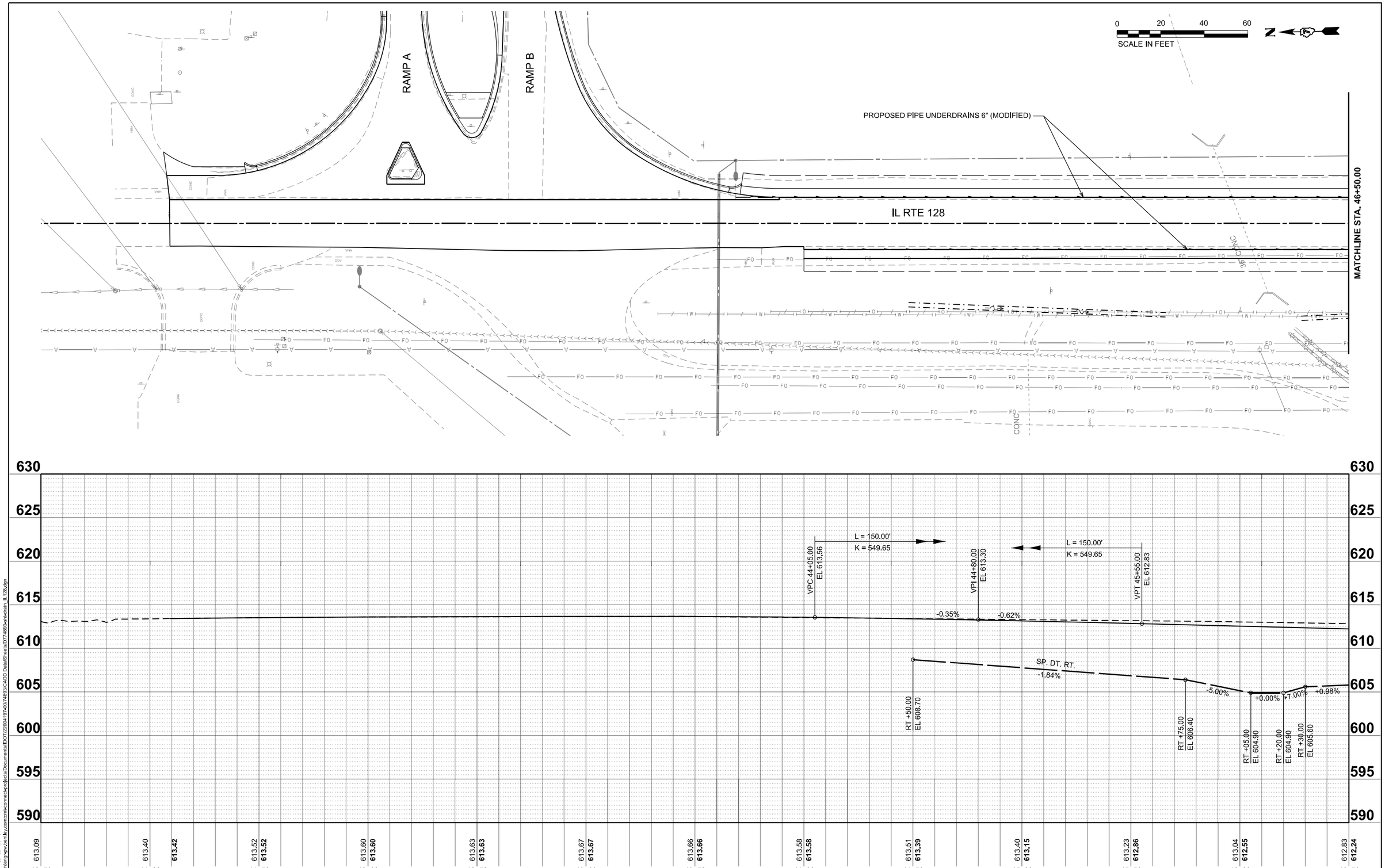

MODEL: SHT - DRN Plan II-128 - 01
FILE NAME: pw:\\centerpw.bentley.com:centerconnect-eprojects\Documents\IDOT\20041974\74893\CADD Data\Sheets\D774893-sht-drain_IL128.dgn

CMT
License No. 184-000613
© Copyright CMT, Inc.

USER NAME = moverbey	DESIGNED - AJ	REVISED -	
	DRAWN - AJ	REVISED -	
PLOT SCALE = 0.16660000 ' / in.	CHECKED - MJO	REVISED -	
PLOT DATE = 10/13/2025	DATE - 10/16/2025	REVISED -	

STATE OF ILLINOIS
DEPARTMENT OF TRANSPORTATION

FAI ROUTE 70 - INTERSTATE 70
DRAINAGE PLAN & PROFILE - IL ROUTE 128

SCALE: 1"=20' | SHEET 1 OF 3 SHEETS | STA. 40+50 TO STA. 46+50

F.A.I. RTE.	SECTION	COUNTY	TOTAL SHEETS	SHEET NO.
70	(25-1)R-BR	EFFINGHAM	747	251
		CONTRACT NO. 74893		
	ILLINOIS	FED. AID PROJECT		

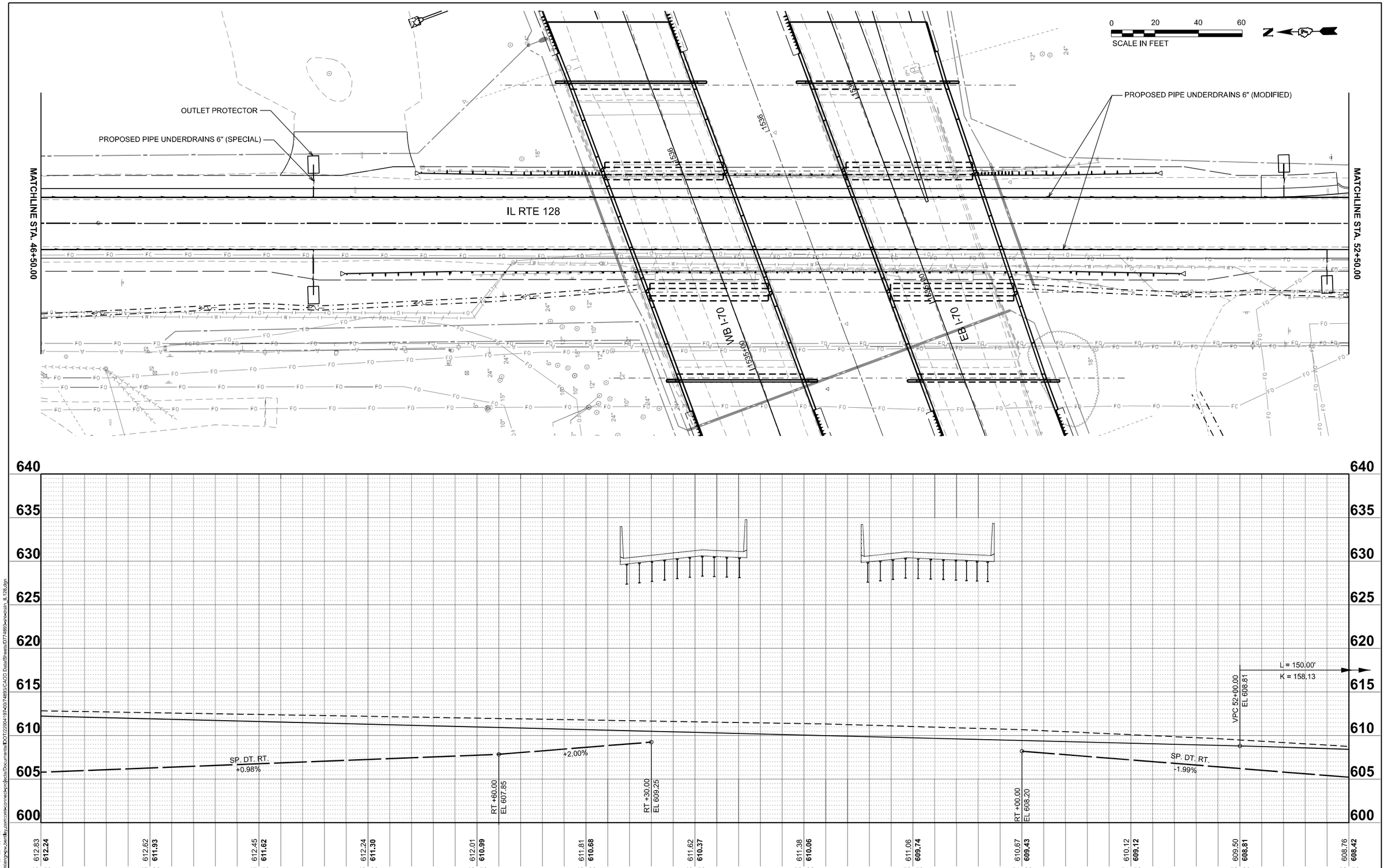

MODEL: SHT - DRN Plan IL-128 - 02
FILE NAME: pw://centerpoint-connect-eu-pw.bentley.com:ccme-centerpoint-projects/Documents/IDOT/22004197-00/74893/CADD Data/Sheets/D774893-sht-drain_IL128.dgn

CMT
License No. 184-000613
© Copyright CMT, Inc.

USER NAME = moverbey	DESIGNED - AJ	REVISED -	
	DRAWN - AJ	REVISED -	
PLOT SCALE = 0.16660000 ' / in.	CHECKED - MJO	REVISED -	
PLOT DATE = 10/13/2025	DATE - 10/16/2025	REVISED -	

STATE OF ILLINOIS
DEPARTMENT OF TRANSPORTATION

FAI ROUTE 70 - INTERSTATE 70
DRAINAGE PLAN & PROFILE - IL ROUTE 128

SCALE: 1"=20' | SHEET 2 OF 3 SHEETS | STA. 46+50 TO STA. 52+50

F.A.I. RTE.	SECTION	COUNTY	TOTAL SHEETS	SHEET NO.
70	(25-1)R-BR	EFFINGHAM	747	252
		CONTRACT NO. 74893		
	ILLINOIS	FED. AID PROJECT		

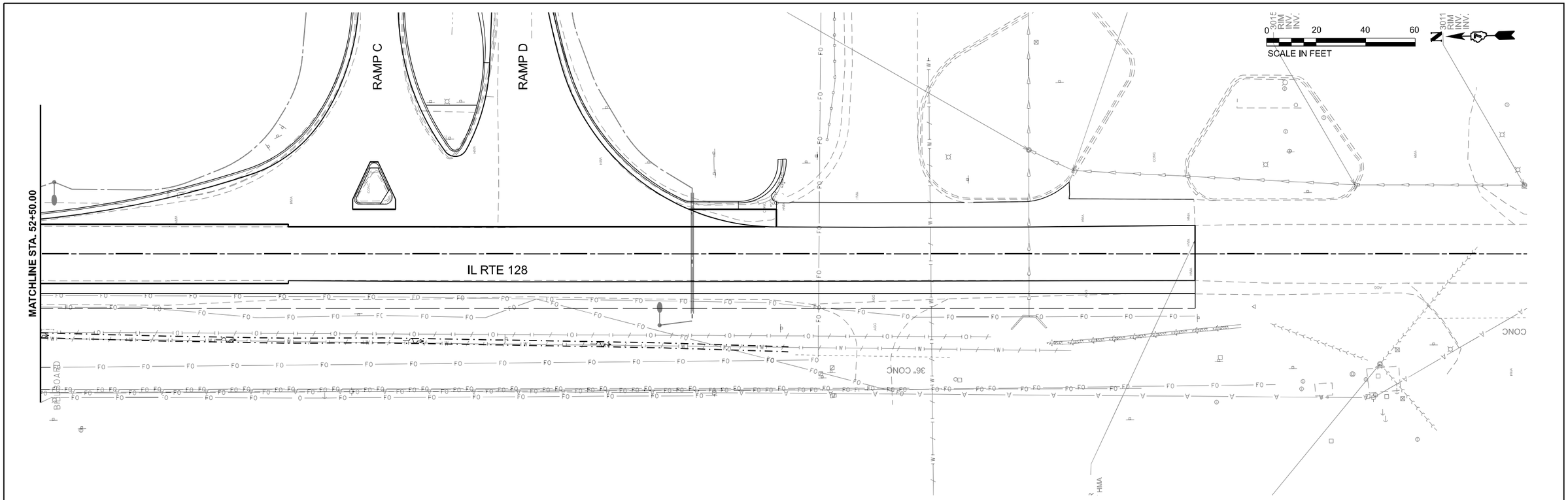

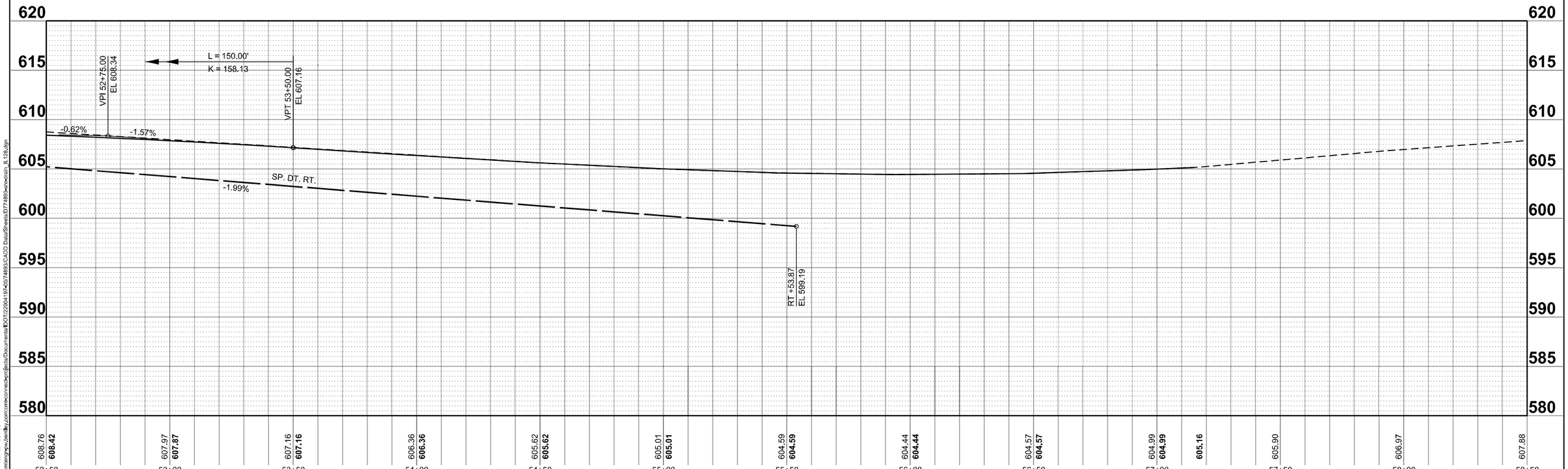

MODEL: SHT - DRN Plan IL-128 - 03
FILE NAME: pw:\\centeng-pw.bentley.com:centeng-pw\projects\Documents\D0T\22004197-00\74893\CADD Data\Sheets\D774893-sht-drain_IL128.dgn

CMT
License No. 184-000613
© Copyright CMT, Inc.

USER NAME = moverbey	DESIGNED - AJ	REVISED -	
	DRAWN - AJ	REVISED -	
PLOT SCALE = 0.16660000 ' / in.	CHECKED - MJO	REVISED -	
PLOT DATE = 10/13/2025	DATE - 10/16/2025	REVISED -	

STATE OF ILLINOIS
DEPARTMENT OF TRANSPORTATION

FAI ROUTE 70 - INTERSTATE 70
DRAINAGE PLAN & PROFILE - IL ROUTE 128

SCALE: 1"=20' | SHEET 3 OF 3 SHEETS | STA. 52+50 TO STA. 58+50

F.A.I. RTE.	SECTION	COUNTY	TOTAL SHEETS	SHEET NO.
70	(25-1)R-BR	EFFINGHAM	747	253
		CONTRACT NO. 74893		
	ILLINOIS	FED. AID PROJECT		

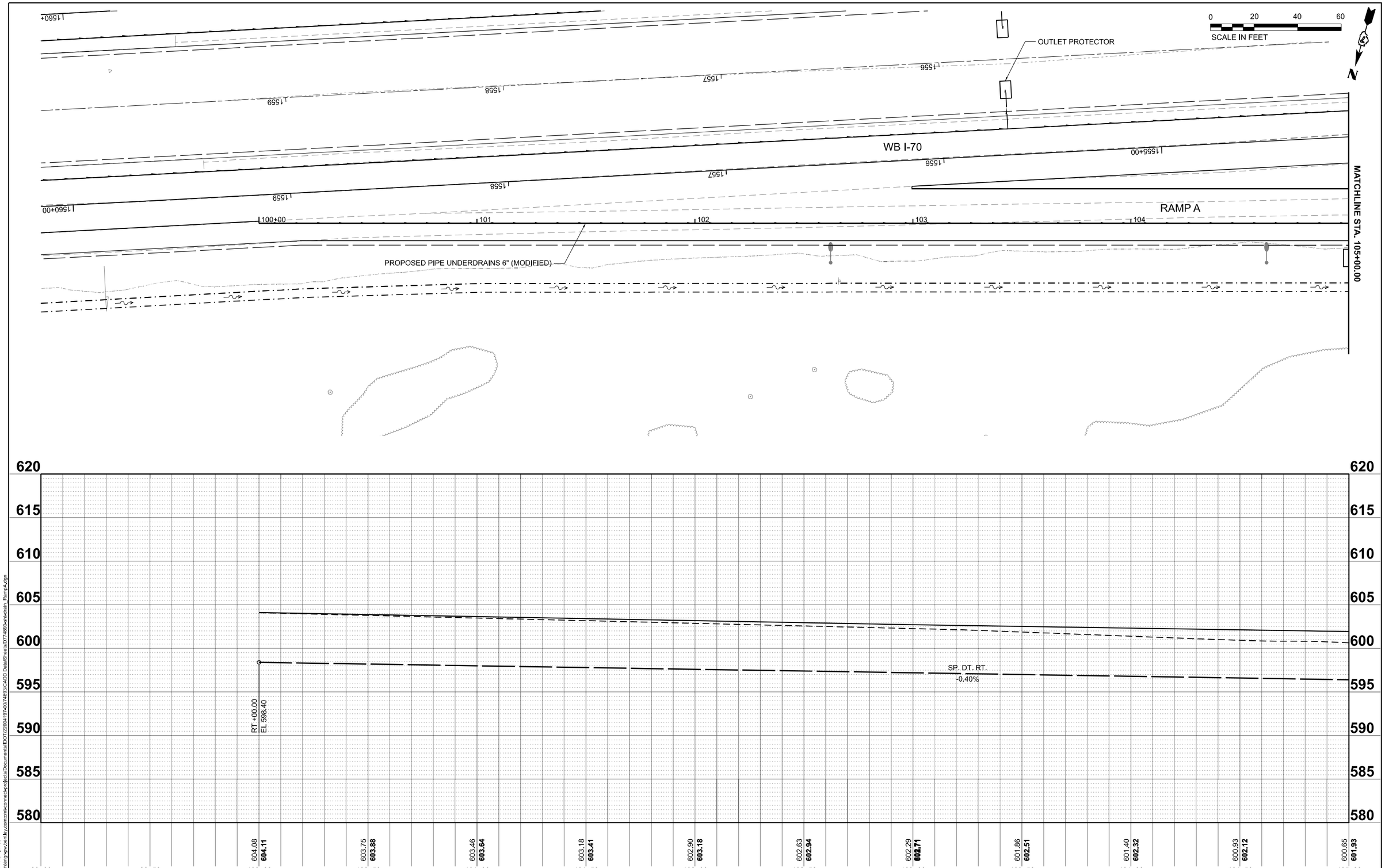

MODEL: SHT - DRN - RampA 001
FILE NAME: pw://centerpoint.bentley.com:centerpoint-projects/Documents/IDOT/22004197-00/74893/CADD Data/Sheets/D774893-sht-plan_RampA.dgn

CMT
License No. 184-000613
© Copyright CMT, Inc.

USER NAME = moverbey	DESIGNED - AJ	REVISED -
	DRAWN - AJ	REVISED -
PLOT SCALE = 0.16660000 ' / in.	CHECKED - MJO	REVISED -
PLOT DATE = 10/13/2025	DATE - 10/16/2025	REVISED -

STATE OF ILLINOIS
DEPARTMENT OF TRANSPORTATION

FAI ROUTE 70 - INTERSTATE 70
DRAINAGE PLAN & PROFILE - RAMP A

SCALE: 1"=20' | SHEET 1 OF 4 SHEETS | STA. 100+00 TO STA. 105+00

F.A.I. RTE.	SECTION	COUNTY	TOTAL SHEETS	SHEET NO.
70	(25-1)R-BR	EFFINGHAM	747	254

CONTRACT NO. 74893

ILLINOIS | FED. AID PROJECT

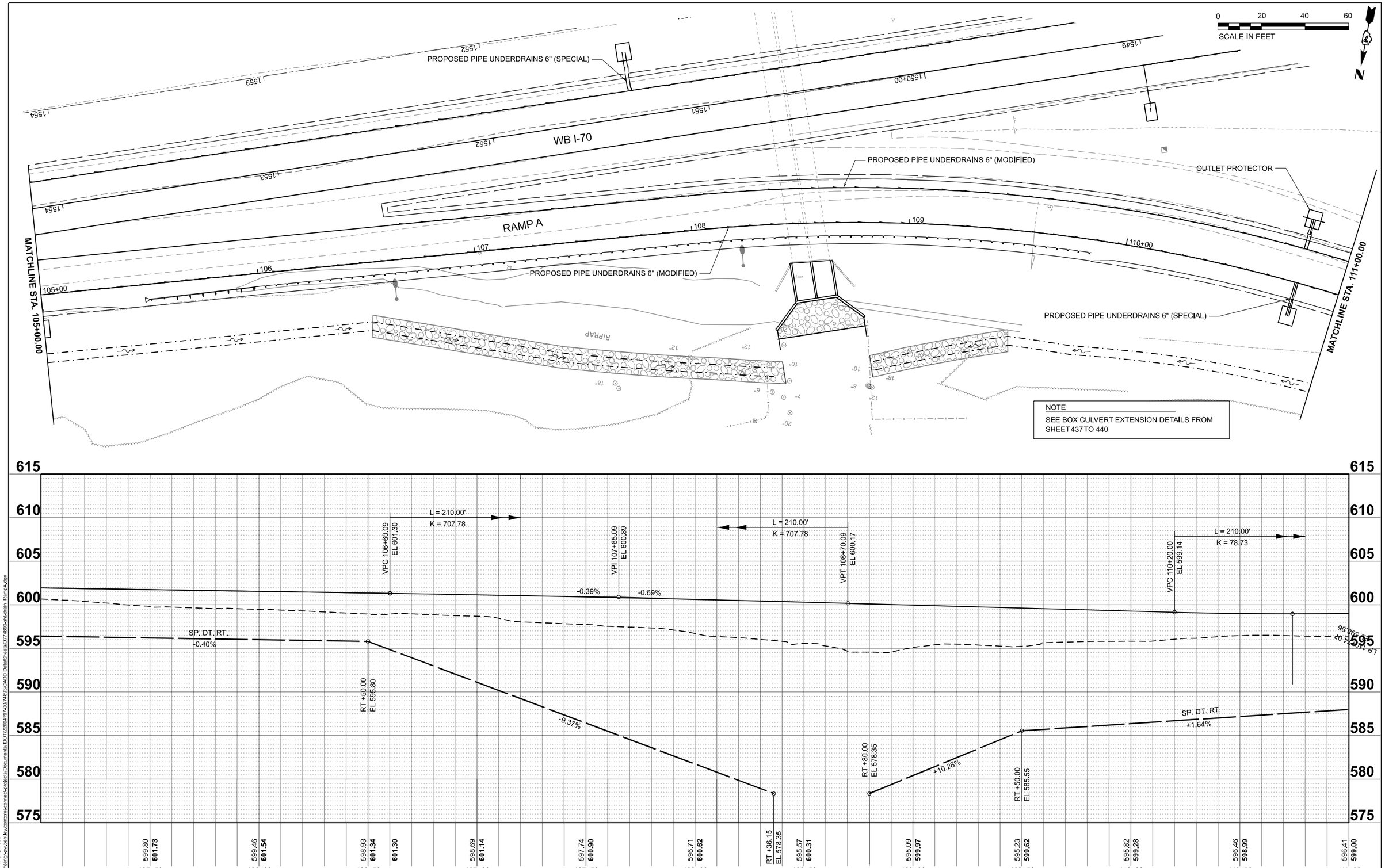

MODEL: SHT - DRN - RampA 002
FILE NAME: pw://contenge-pw.bentley.com:contengeprojects/Documents/DOT/220041974/074893/CADD Data/Sheets/0774893-sht-drain_RampA.dgn

CMT
License No. 184-000613
© Copyright CMT, Inc.

USER NAME = moverbey	DESIGNED - AJ	REVISED -	
	DRAWN - AJ	REVISED -	
PLOT SCALE = 0.16660000 ' / in.	CHECKED - MJO	REVISED -	
PLOT DATE = 10/13/2025	DATE - 10/16/2025	REVISED -	

STATE OF ILLINOIS
DEPARTMENT OF TRANSPORTATION

FAI ROUTE 70 - INTERSTATE 70
DRAINAGE PLAN & PROFILE - RAMP A

SCALE: 1"=20' | SHEET 2 OF 4 SHEETS | STA. 105+00 TO STA. 111+00

F.A.I. RTE.	SECTION	COUNTY	TOTAL SHEETS	SHEET NO.
70	(25-1)R-BR	EFFINGHAM	747	255

CONTRACT NO. 74893

ILLINOIS | FED. AID PROJECT

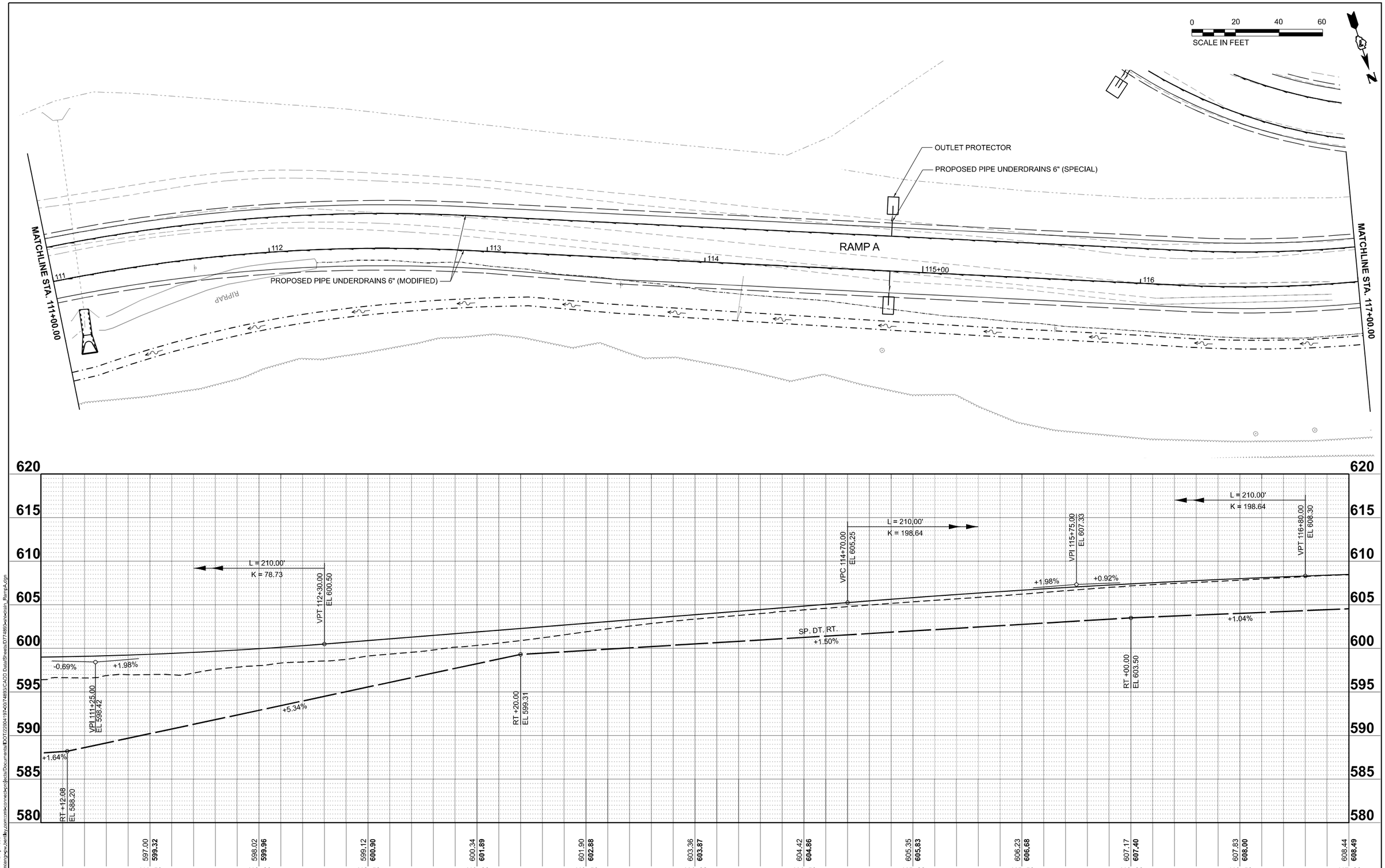

MODEL: SHT - DRN - RampA 003
FILE NAME: pw://contengpw.bentley.com:contengdms/dms/Documents/DOT/220041974/74893/CADD Data/Sheets/D774893-sht-plan_RampA.dgn

CMT
License No. 184-000613
© Copyright CMT, Inc.

USER NAME = moverbey	DESIGNED - AJ	REVISED -	
	DRAWN - AJ	REVISED -	
PLOT SCALE = 0.16660000 ' / in.	CHECKED - MJO	REVISED -	
PLOT DATE = 10/13/2025	DATE - 10/16/2025	REVISED -	

STATE OF ILLINOIS
DEPARTMENT OF TRANSPORTATION

FAI ROUTE 70 - INTERSTATE 70
DRAINAGE PLAN & PROFILE - RAMP A

SCALE: 1"=20' | SHEET 3 OF 4 SHEETS | STA. 111+00 TO STA. 117+00

F.A.I. RTE.	SECTION	COUNTY	TOTAL SHEETS	SHEET NO.
70	(25-1)R-BR	EFFINGHAM	747	256
		CONTRACT NO. 74893		
	ILLINOIS	FED. AID PROJECT		

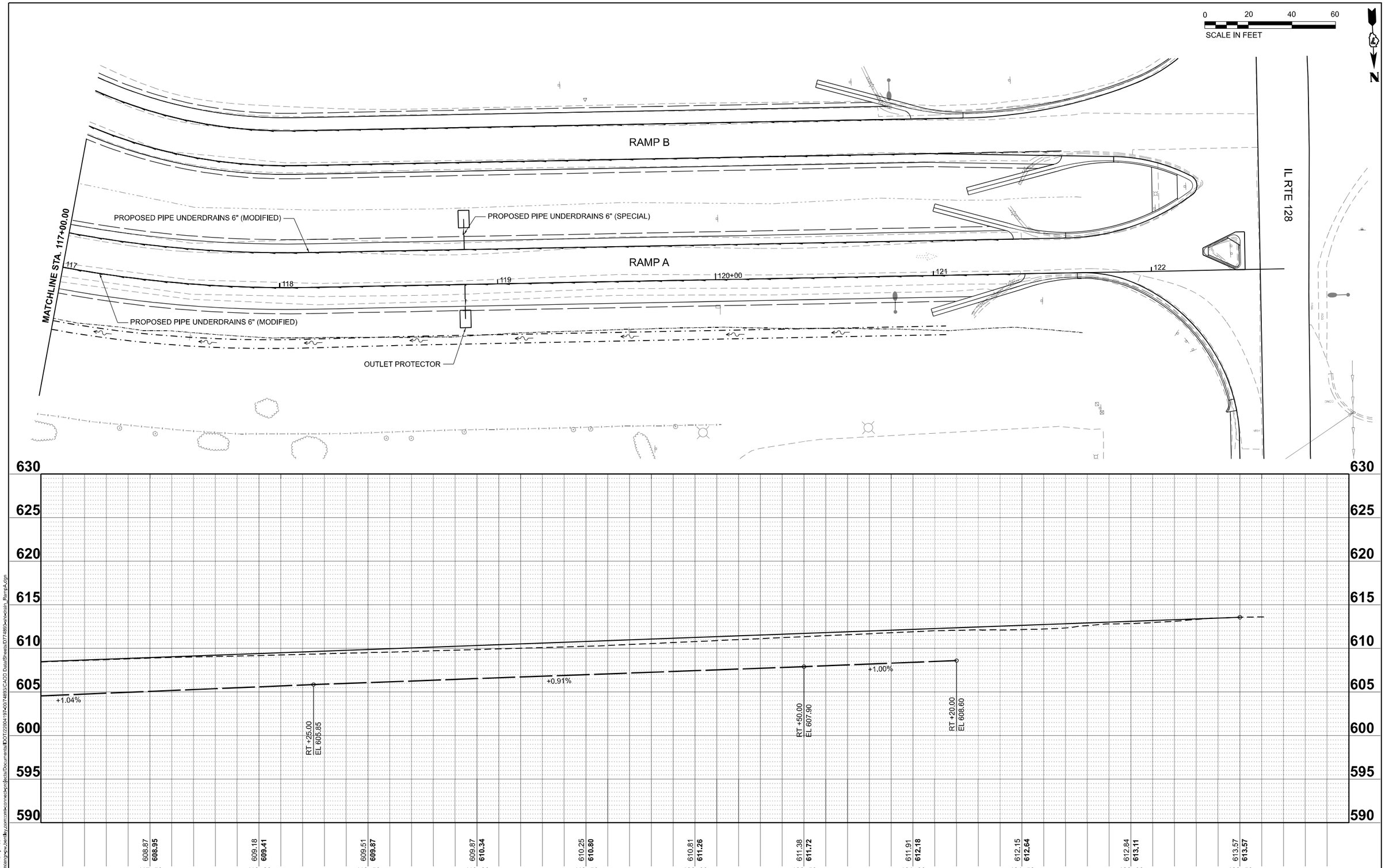

MODEL: SHT - DRN - RampA 004
FILE NAME: pw://centerpoint-pw.bentley.com:pw/contexts/connect-projects/Documents/DOT/22004197-00/74893/CADD Data/Sheets/D774893-sht-plan_RampA.dgn

CMT
License No. 184-000613
© Copyright CMT, Inc.

USER NAME = moverbey	DESIGNED - AJ	REVISED -	
	DRAWN - AJ	REVISED -	
PLOT SCALE = 0.16660000 ' / in.	CHECKED - MJO	REVISED -	
PLOT DATE = 10/13/2025	DATE - 10/16/2025	REVISED -	

STATE OF ILLINOIS
DEPARTMENT OF TRANSPORTATION

FAI ROUTE 70 - INTERSTATE 70
DRAINAGE PLAN & PROFILE - RAMP A

SCALE: 1"=20' | SHEET 4 OF 4 SHEETS | STA. 117+00 TO STA. 122+60.96

F.A.I. RTE.	SECTION	COUNTY	TOTAL SHEETS	SHEET NO.
70	(25-1)R-BR	EFFINGHAM	747	257
		CONTRACT NO. 74893		
	ILLINOIS	FED. AID PROJECT		

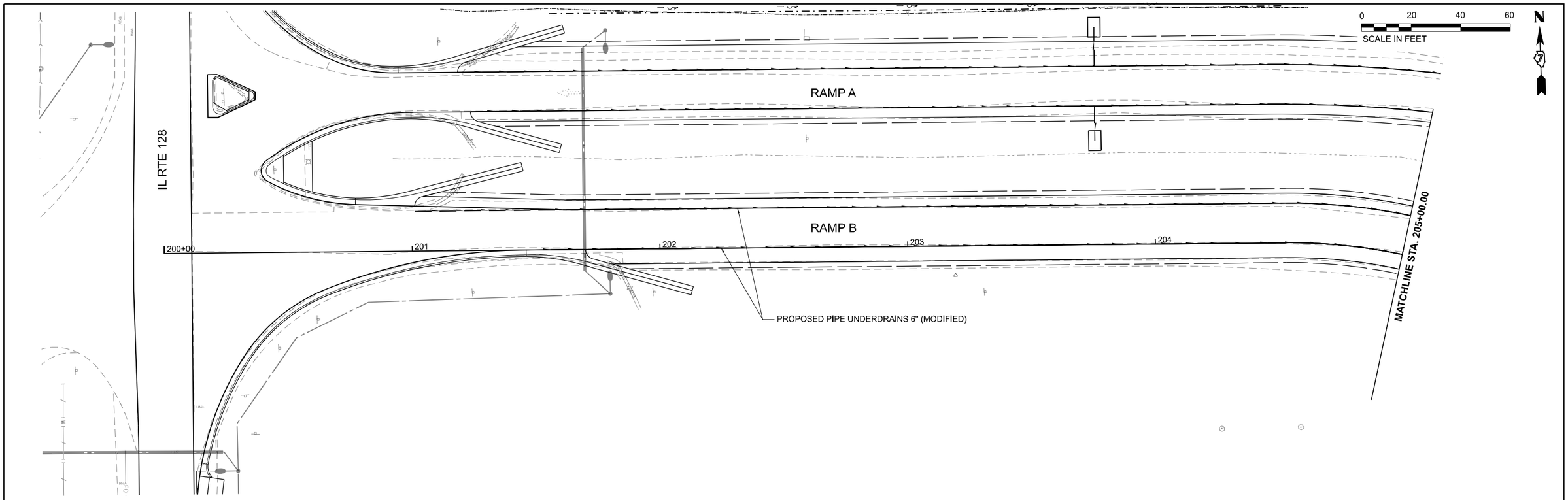

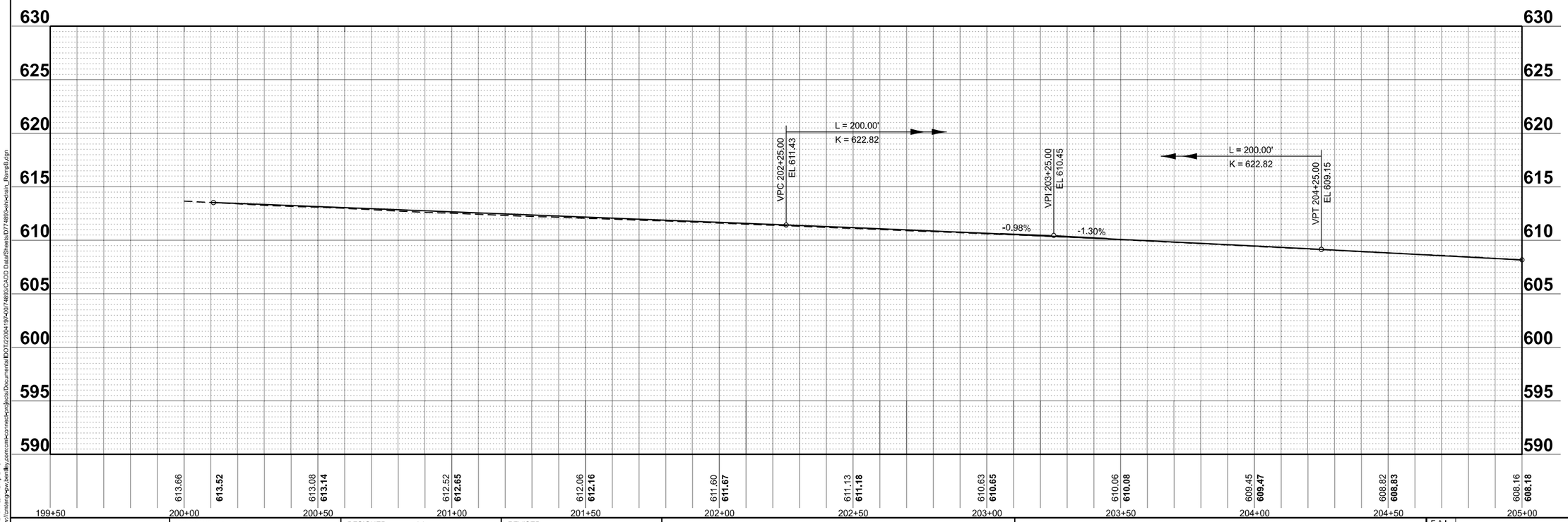

MODEL: SHT - DRN Plan Ramp B - 01
FILE NAME: pw:\\centerpw.bentley.com:centerconnect-pw\projects\Documents\IDOT\22004197-00\74893\CADD Data\Sheets\D774893-sht-drain_RampB.dgn

CMT
License No. 184-000613
© Copyright CMT, Inc.

USER NAME = moverbey	DESIGNED - AJ	REVISED -	
	DRAWN - AJ	REVISED -	
PLOT SCALE = 0.16660000 ' / in.	CHECKED - MJO	REVISED -	
PLOT DATE = 10/13/2025	DATE - 10/16/2025	REVISED -	

STATE OF ILLINOIS
DEPARTMENT OF TRANSPORTATION

FAI ROUTE 70 - INTERSTATE 70
DRAINAGE PLAN & PROFILE - RAMP B

SCALE: 1"=20' | SHEET 1 OF 6 SHEETS | STA. 200+00 TO STA. 205+00

F.A.I. RTE.	SECTION	COUNTY	TOTAL SHEETS	SHEET NO.
70	(25-1)R-BR	EFFINGHAM	747	258
		CONTRACT NO. 74893		
	ILLINOIS	FED. AID PROJECT		

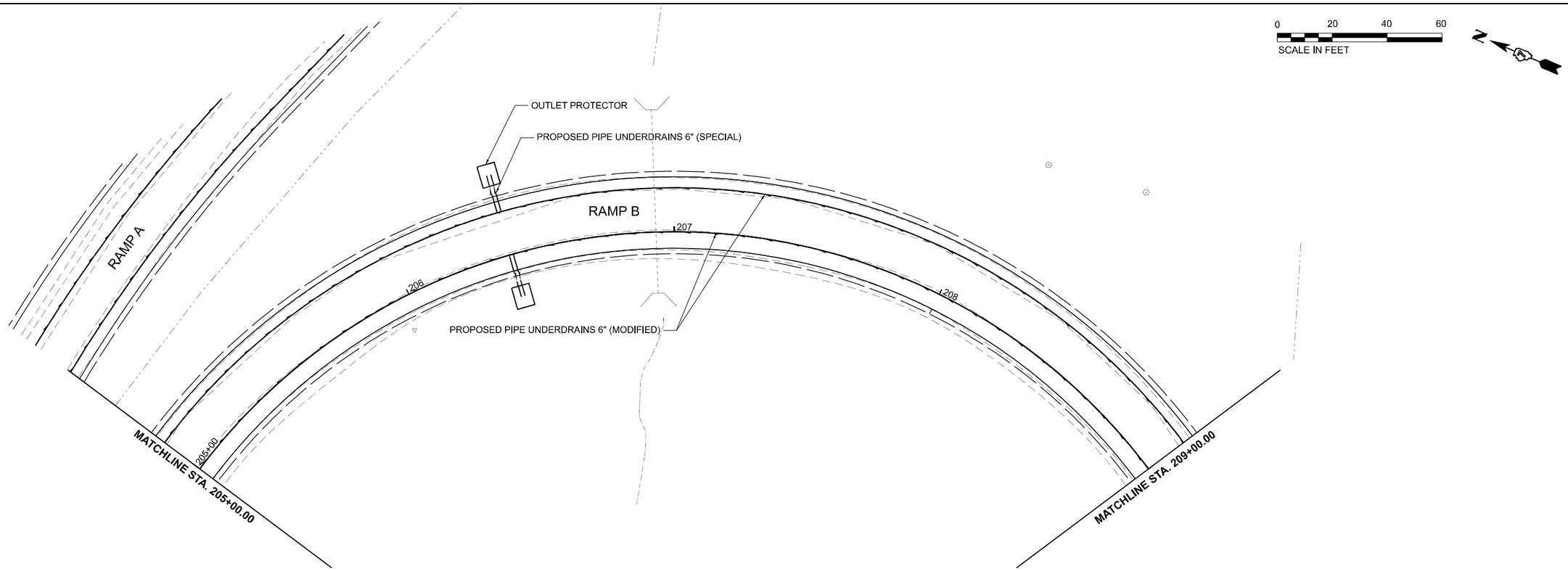

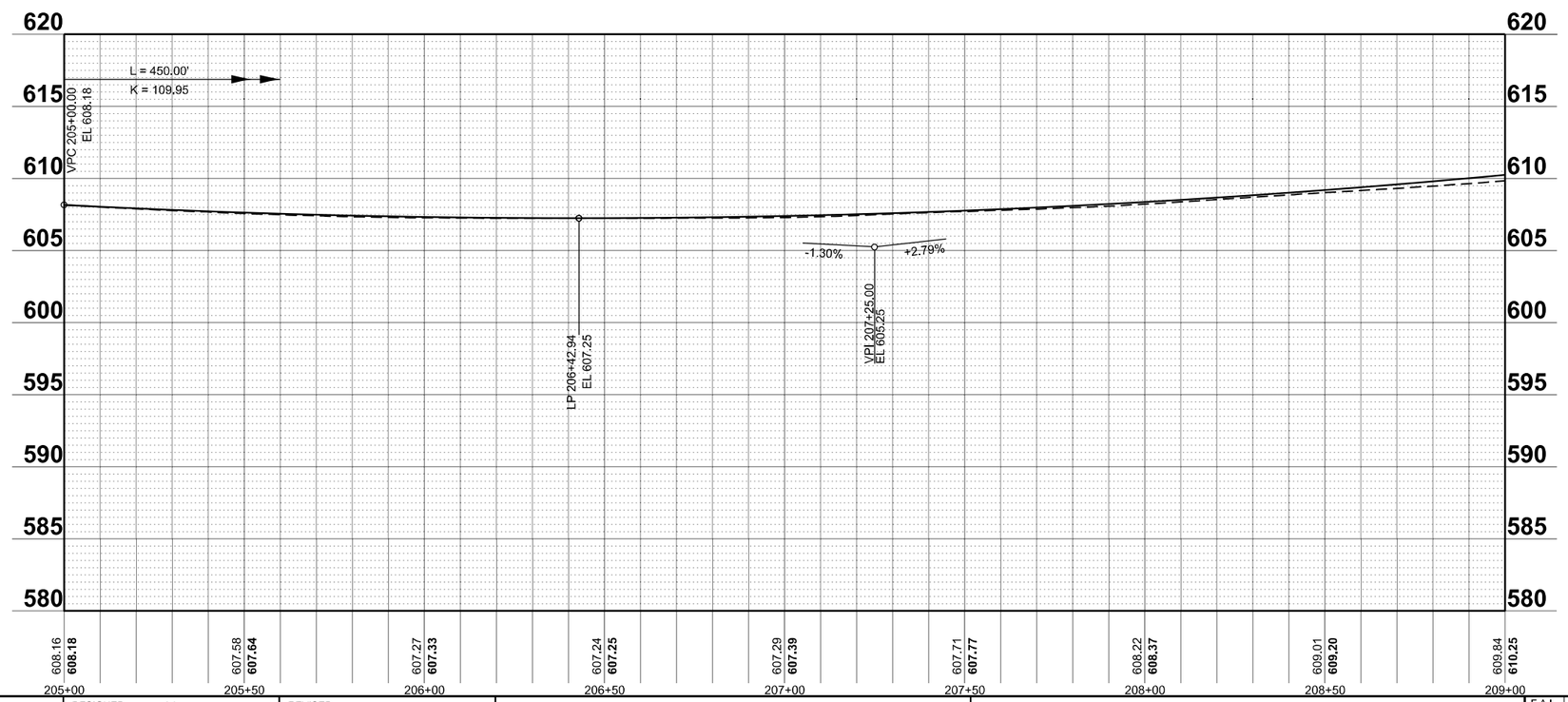

MODEL: SHT - DRN Plan Ramp B - 02
FILE NAME: pw://centerpoint-pw.bentley.com:centerpoint-projects/Documents/IDOT/220041974/74893/CADD Data/Sheets/0774893-sht-drn_RampB.dgn

CMT
License No. 184-000613
© Copyright CMT, Inc.

USER NAME = moverbey	DESIGNED - AJ	REVISED -	
	DRAWN - AJ	REVISED -	
PLOT SCALE = 0.16660000 ' / in.	CHECKED - MJO	REVISED -	
PLOT DATE = 10/13/2025	DATE - 10/16/2025	REVISED -	

STATE OF ILLINOIS
DEPARTMENT OF TRANSPORTATION

FAI ROUTE 70 - INTERSTATE 70
DRAINAGE PLAN & PROFILE - RAMP B

SCALE: 1"=20' | SHEET 2 OF 6 SHEETS | STA. 205+00 TO STA. 209+00

F.A.I. RTE.	SECTION	COUNTY	TOTAL SHEETS	SHEET NO.
70	(25-1)R-BR	EFFINGHAM	747	259
		CONTRACT NO. 74893		
	ILLINOIS	FED. AID PROJECT		

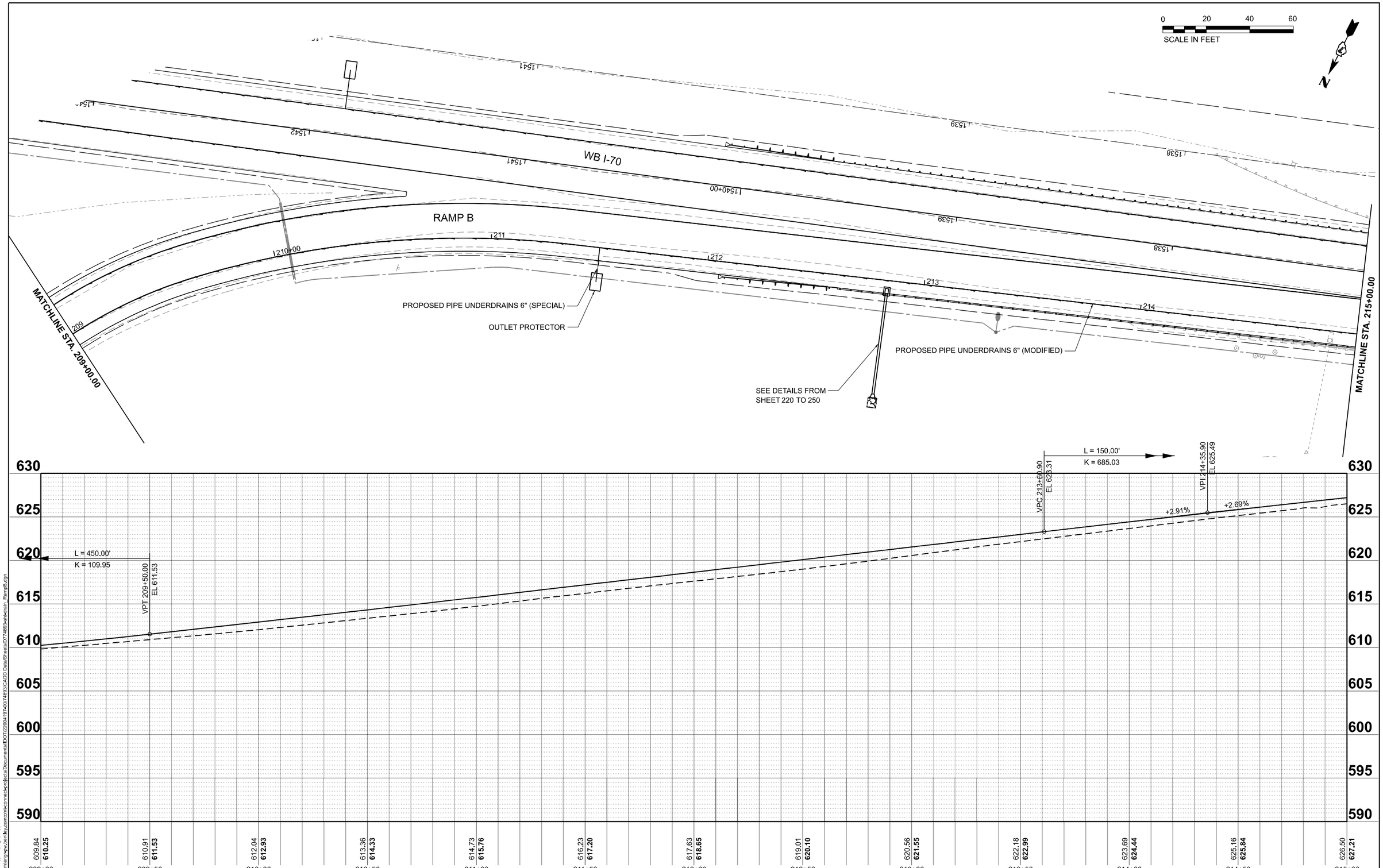

MODEL: SHT - DRN Plan Ramp B -03
FILE NAME: /pw:\\cmtengpw.bentley.com:cmtec-pw-projects\Documents\IDOT\72004197-007489\CADD Data\Sheets\D774893-sht-drain_RampB.dgn

CMT
License No. 184-000613 © Copyright CMT, Inc.

USER NAME = moverbey	DESIGNED - AJ	REVISED -	
	DRAWN - AJ	REVISED -	
PLOT SCALE = 0.16660000 ' / in.	CHECKED - MJO	REVISED -	
PLOT DATE = 10/13/2025	DATE - 10/16/2025	REVISED -	

STATE OF ILLINOIS
DEPARTMENT OF TRANSPORTATION

FAI ROUTE 70 - INTERSTATE 70
DRAINAGE PLAN & PROFILE - RAMP B

SCALE: 1"=20' | SHEET 3 OF 6 SHEETS | STA. 209+00 TO STA. 215+00

F.A.I. RTE.	SECTION	COUNTY	TOTAL SHEETS	SHEET NO.
70	(25-1)R-BR	EFFINGHAM	747	260

CONTRACT NO. 74893

ILLINOIS | FED. AID PROJECT

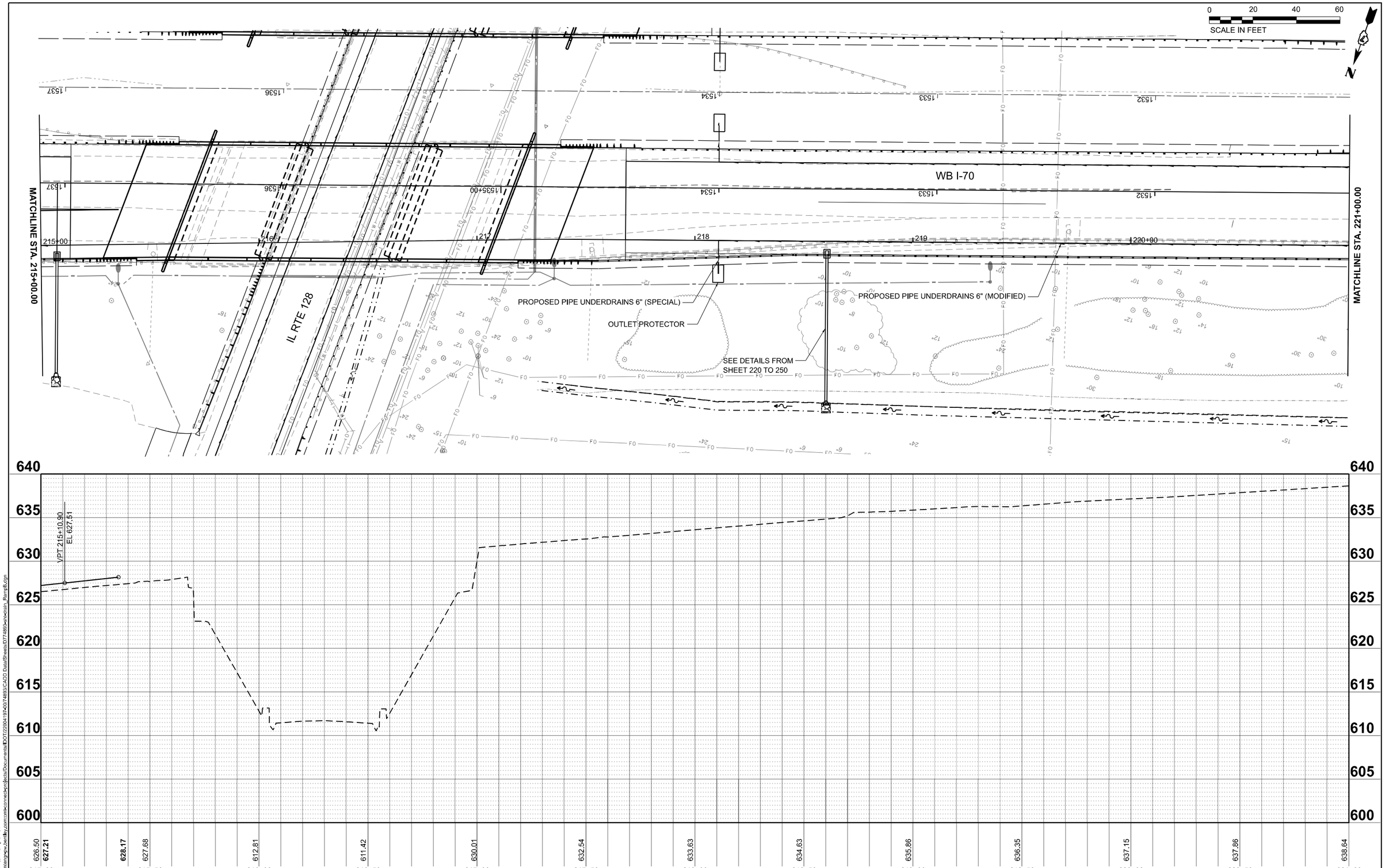

MODEL: SHT - DRN Plan Ramp B - 04
FILE NAME: pw://centerpoint.bentley.com:centerpoint-eprojects/Documents/IDOT/22004197-00/74893/CADD Data/Sheets/D774893-sht-train_RampB.dgn

CMT
License No. 184-000613
© Copyright CMT, Inc.

USER NAME = moverbey	DESIGNED - AJ	REVISED -	
	DRAWN - AJ	REVISED -	
PLOT SCALE = 0.16660000 ' / in.	CHECKED - MJO	REVISED -	
PLOT DATE = 10/13/2025	DATE - 10/16/2025	REVISED -	

STATE OF ILLINOIS
DEPARTMENT OF TRANSPORTATION

FAI ROUTE 70 - INTERSTATE 70
DRAINAGE PLAN & PROFILE - RAMP B

SCALE: 1"=20' | SHEET 4 OF 6 SHEETS | STA. 215+00 TO STA. 221+00

F.A.I. RTE.	SECTION	COUNTY	TOTAL SHEETS	SHEET NO.
70	(25-1)R-BR	EFFINGHAM	747	261
		CONTRACT NO. 74893		
	ILLINOIS	FED. AID PROJECT		

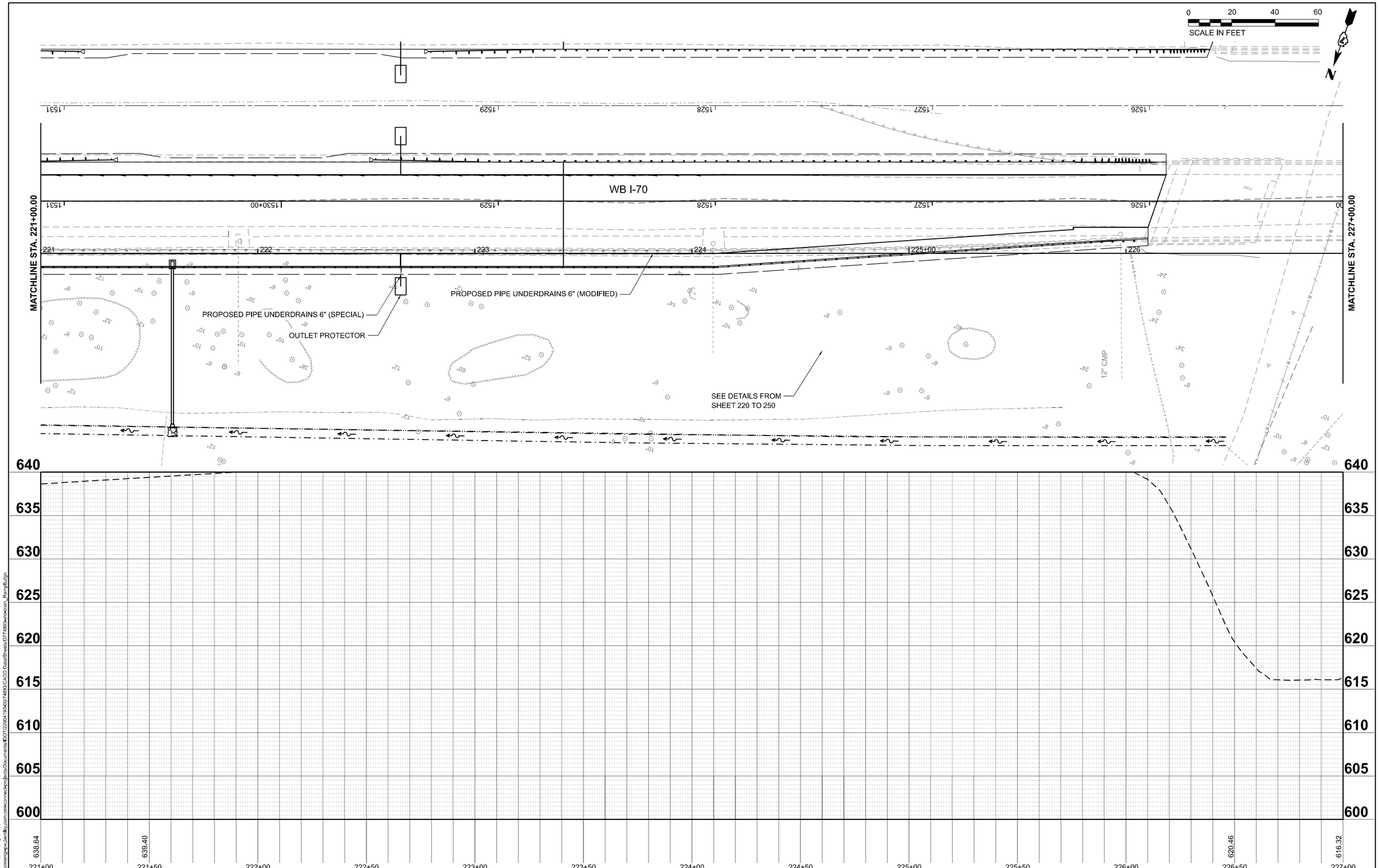

MODEL: SHT - DRN Plan Ramp B - 05
FILE NAME: pw://centerpoint-pw.bentley.com:centerpoint-projects/Documents/IDOT/22004197-00/74893/CADD Data/Sheets/D774893-sht-train_RampB.dgn

CMT
License No. 184-000613
© Copyright CMT, Inc.

USER NAME = moverbey	DESIGNED - AJ	REVISED -	
	DRAWN - AJ	REVISED -	
PLOT SCALE = 0.16660000 ' / in.	CHECKED - MJO	REVISED -	
PLOT DATE = 10/13/2025	DATE - 10/16/2025	REVISED -	

STATE OF ILLINOIS
DEPARTMENT OF TRANSPORTATION

FAI ROUTE 70 - INTERSTATE 70
DRAINAGE PLAN & PROFILE - RAMP B

SCALE: 1"=20' | SHEET 5 OF 6 SHEETS | STA. 221+00 TO STA. 227+00

F.A.I. RTE.	SECTION	COUNTY	TOTAL SHEETS	SHEET NO.
70	(25-1)R-BR	EFFINGHAM	747	262
		CONTRACT NO. 74893		
	ILLINOIS	FED. AID PROJECT		

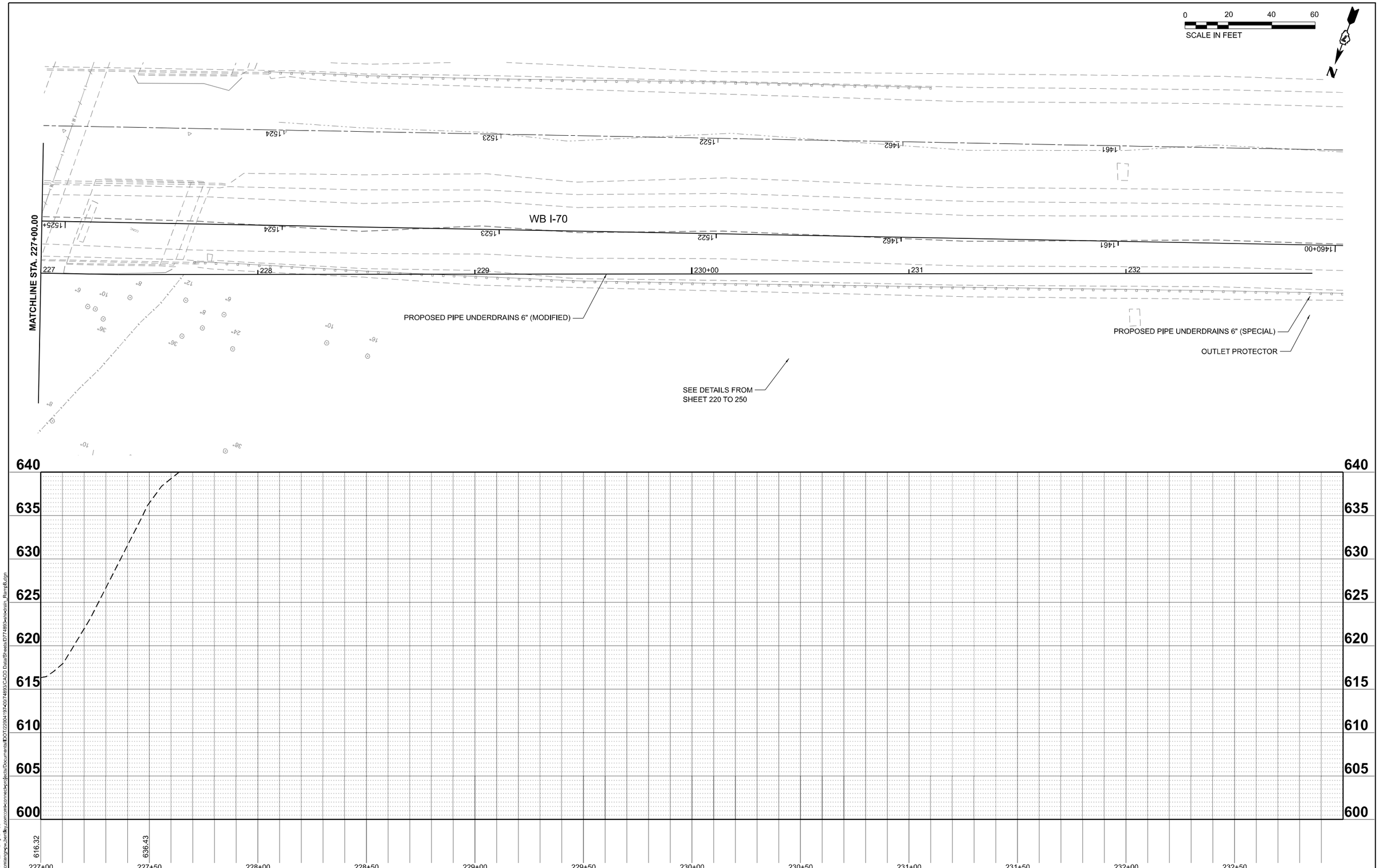

MODEL: SHT - DRN Plan Ramp B - 06
FILE NAME: pw:\\centerpw.bentley.com:centerprojects\Documents\IDOT\22004197-00\74893\CADD Data\Sheets\D774893-sht-drain_RampB.dgn

CMT
License No. 184-000613
© Copyright CMT, Inc.

USER NAME = moverbey	DESIGNED - AJ	REVISED -	
	DRAWN - AJ	REVISED -	
PLOT SCALE = 0.16660000 ' / in.	CHECKED - MJO	REVISED -	
PLOT DATE = 10/13/2025	DATE - 10/16/2025	REVISED -	

STATE OF ILLINOIS
DEPARTMENT OF TRANSPORTATION

FAI ROUTE 70 - INTERSTATE 70
DRAINAGE PLAN & PROFILE - RAMP B

SCALE: 1"=20' | SHEET 6 OF 6 SHEETS | STA. 227+00 TO STA. 232+85.84

F.A.I. RTE.	SECTION	COUNTY	TOTAL SHEETS	SHEET NO.
70	(25-1)R-BR	EFFINGHAM	747	263
		CONTRACT NO. 74893		
	ILLINOIS	FED. AID PROJECT		

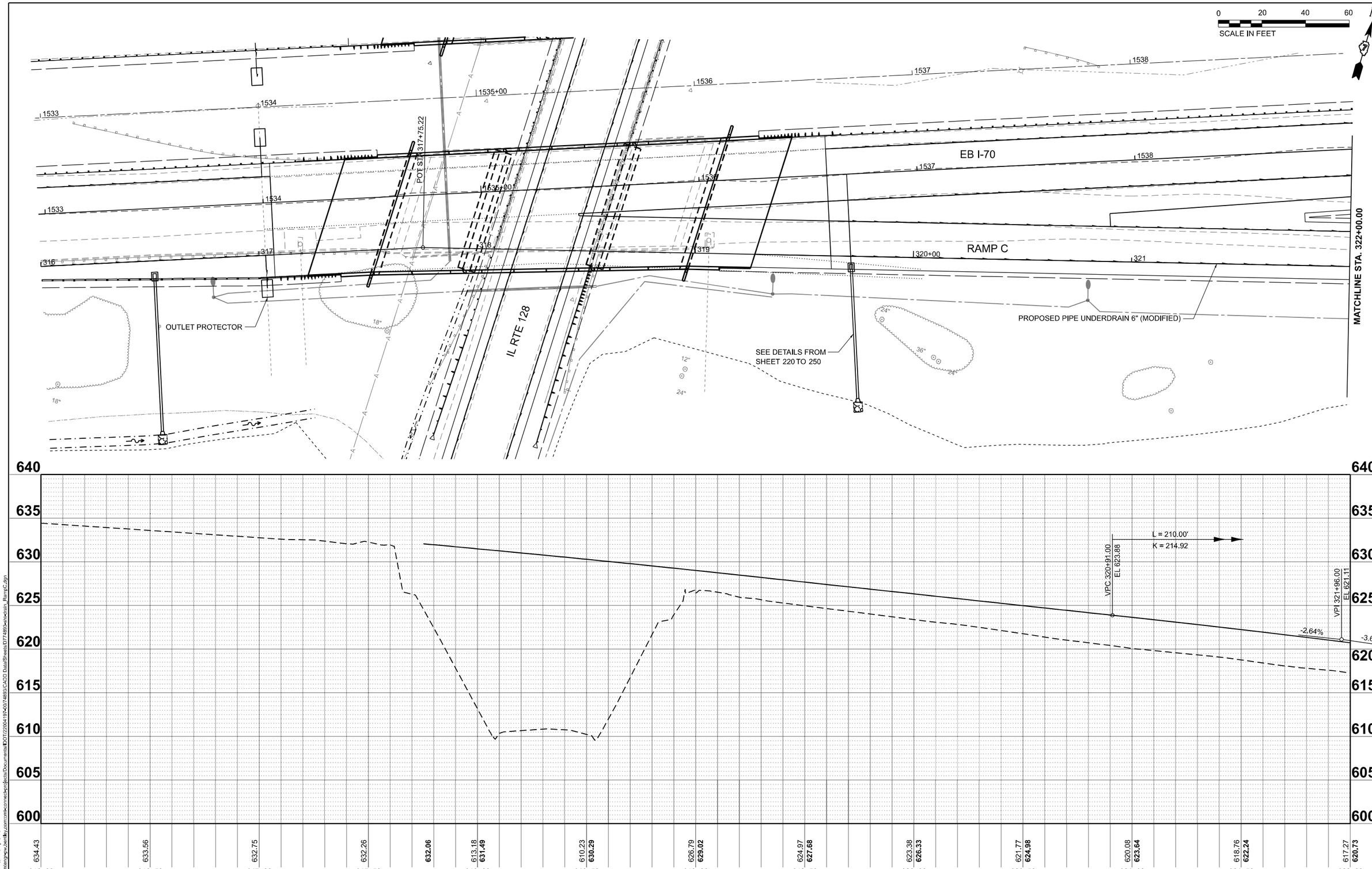

MODEL: SHT - DRN Plan Ramp C-01
FILE NAME: pw://centerpoint.bentley.com:centerpoint-projects/Documents/IDOT/22004197-00/74893/CADD Data/Sheets/D774893-sht-drain_RampC.dgn

CMT
License No. 184-000613
© Copyright CMT, Inc.

USER NAME = moverbey	DESIGNED - AJ	REVISED -	
	DRAWN - AJ	REVISED -	
PLOT SCALE = 0.16660000 ' / in.	CHECKED - MJO	REVISED -	
PLOT DATE = 10/14/2025	DATE - 10/16/2025	REVISED -	

STATE OF ILLINOIS
DEPARTMENT OF TRANSPORTATION

FAI ROUTE 70 - INTERSTATE 70
DRAINAGE PLAN & PROFILE - RAMP C

SCALE: 1"=20' | SHEET 1 OF 4 SHEETS | STA. 316+00 TO STA. 322+00

F.A.I. RTE.	SECTION	COUNTY	TOTAL SHEETS	SHEET NO.
70	(25-1)R-BR	EFFINGHAM	747	264
		CONTRACT NO. 74893		
		ILLINOIS	FED. AID PROJECT	

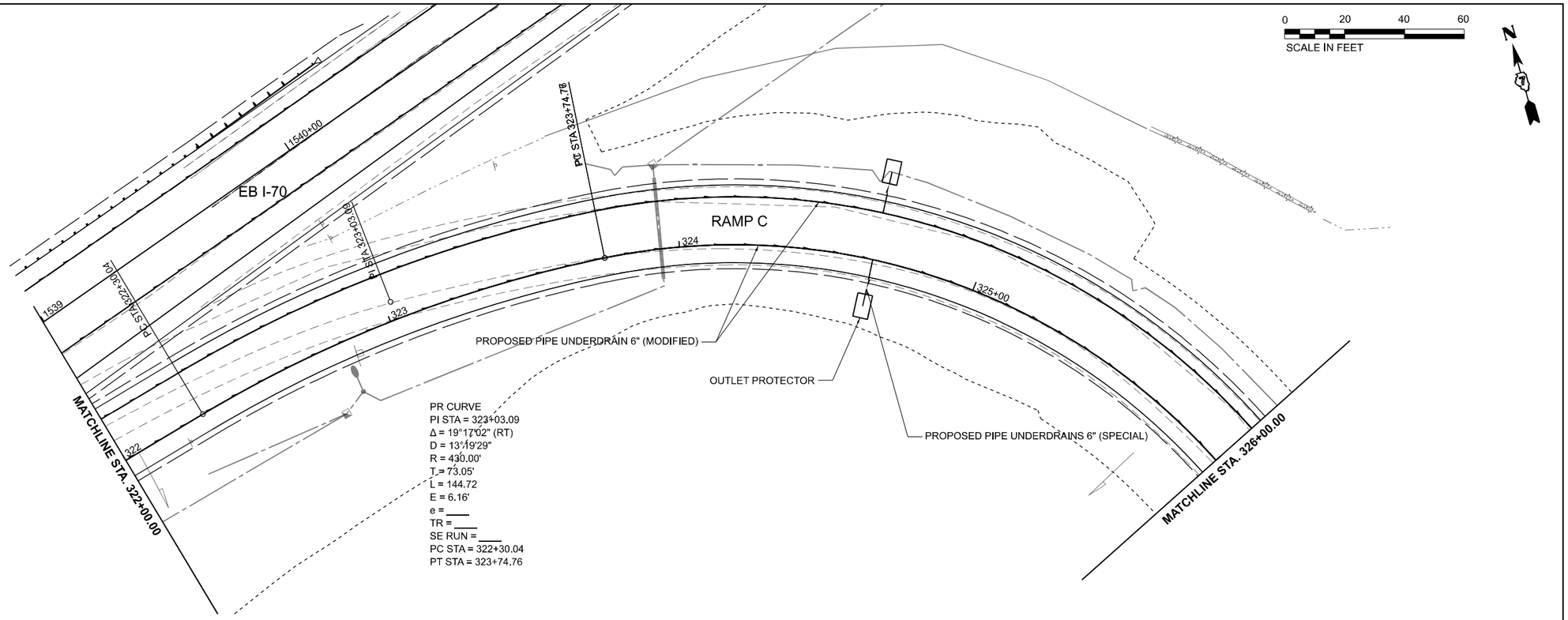

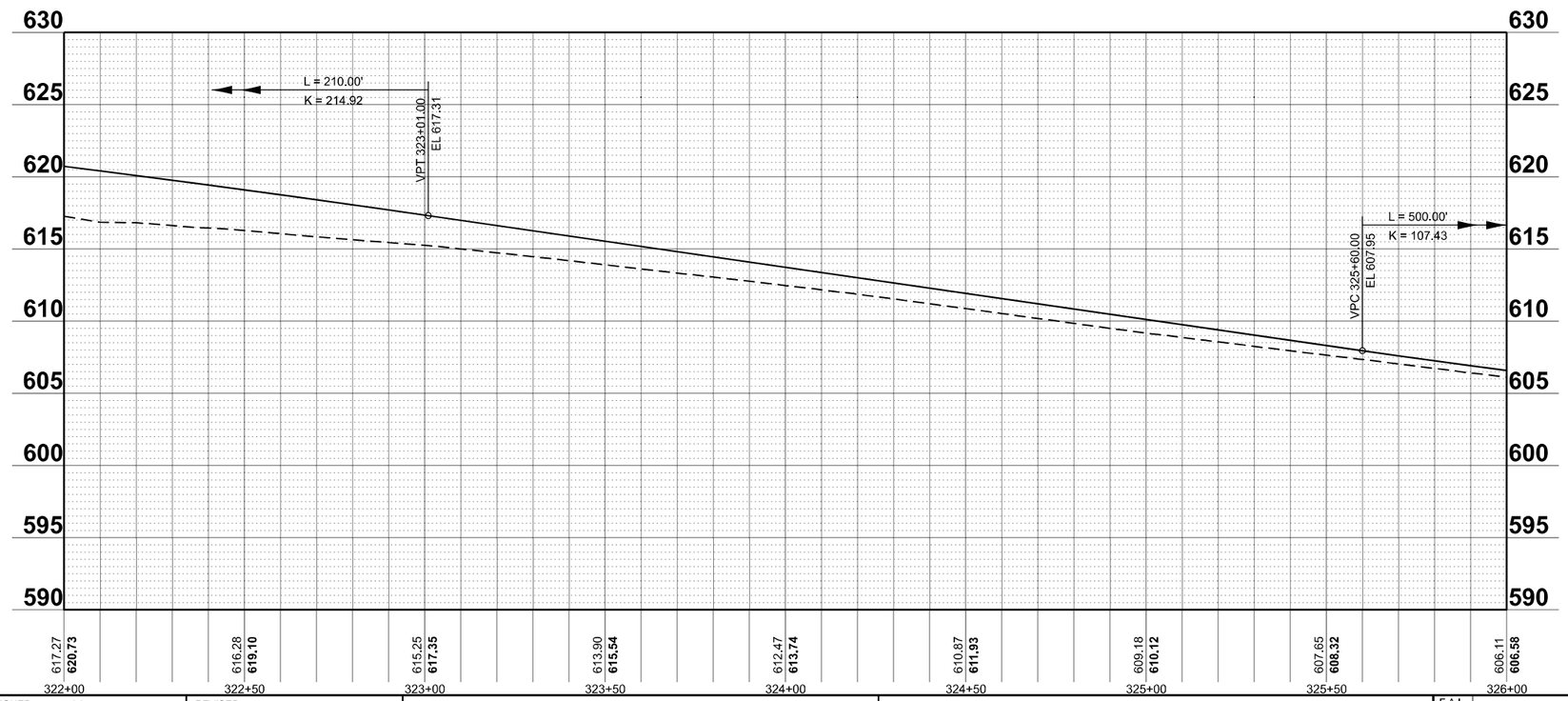

MODEL: SHT - DRN Plan Ramp C - 02
FILE NAME: pw://centerpw.bentley.com:centerpw-projects/Documents/IDOT/220041974/074893/CADD Data/Sheets/0774893-sht-drain_RampC.dgn

CMT
License No. 184-000613
© Copyright CMT, Inc.

USER NAME = moverbey	DESIGNED - AJ	REVISED -	
	DRAWN - AJ	REVISED -	
PLOT SCALE = 0.16660000 ' / in.	CHECKED - MJO	REVISED -	
PLOT DATE = 10/14/2025	DATE - 10/16/2025	REVISED -	

STATE OF ILLINOIS
DEPARTMENT OF TRANSPORTATION

FAI ROUTE 70 - INTERSTATE 70
DRAINAGE PLAN & PROFILE - RAMP C

SCALE: 1"=20' | SHEET 2 OF 4 SHEETS | STA. 322+00 TO STA. 326+00

F.A.I. RTE.	SECTION	COUNTY	TOTAL SHEETS	SHEET NO.
70	(25-1)R-BR	EFFINGHAM	747	265
		CONTRACT NO. 74893		
	ILLINOIS	FED. AID PROJECT		

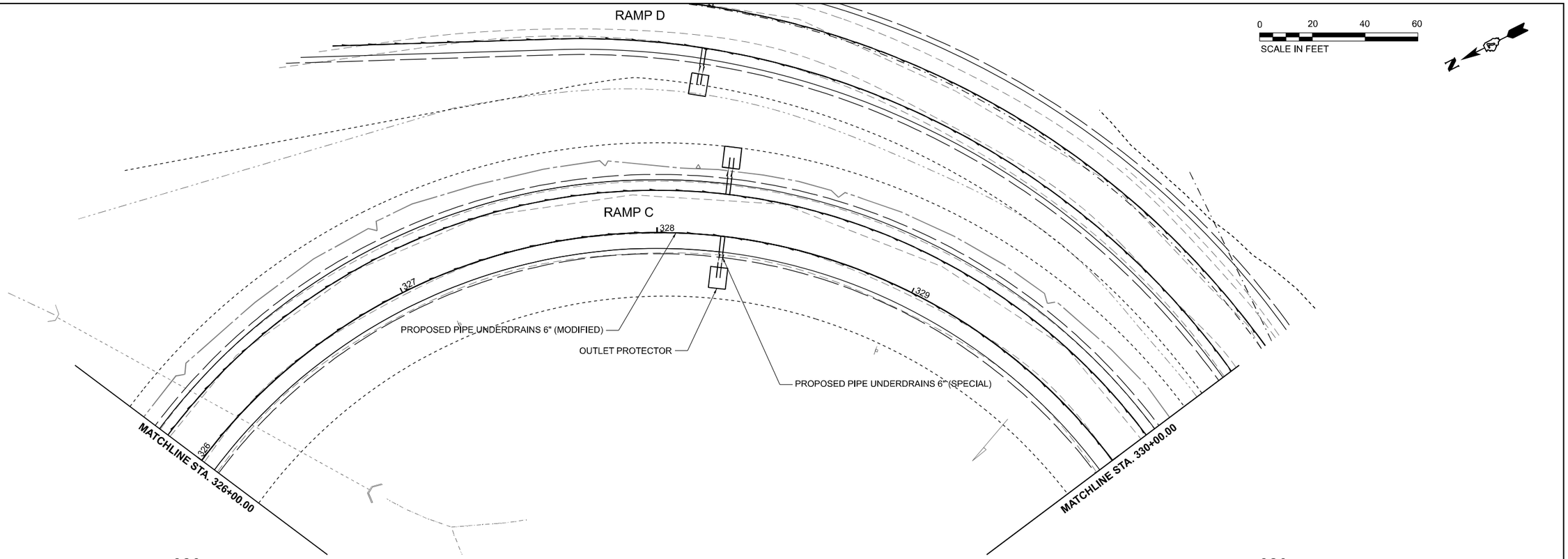

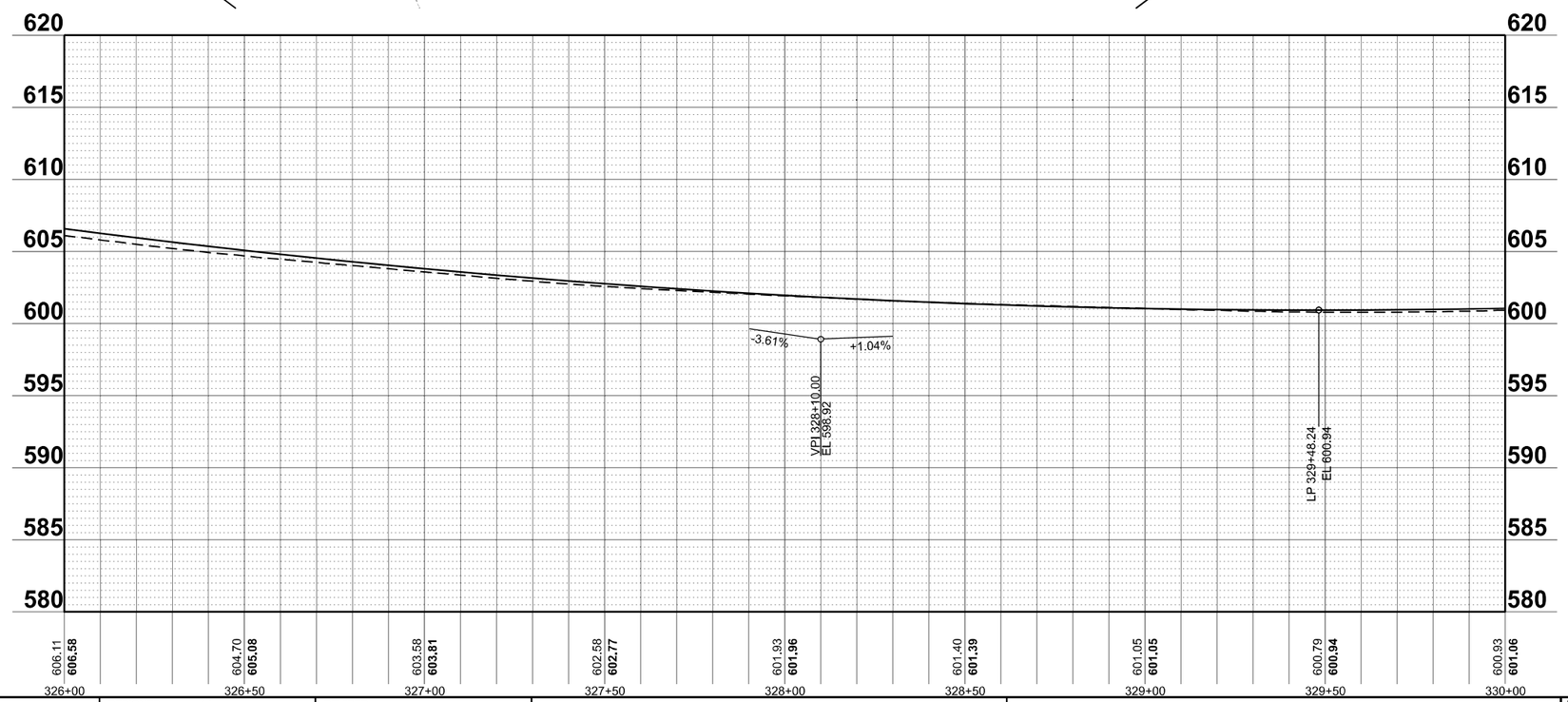

MODEL: SHT - DRN Plan Ramp C - 03
FILE NAME: pw://contengpw.bentley.com:contengpw-connect-eu-pw1/projects/Documents/DOT/22004197-00/74893/CADD Data/Sheets/D774893-sht-drain_RampC.dgn

CMT
License No. 184-000613
© Copyright CMT, Inc.

USER NAME = moverbey	DESIGNED - AJ	REVISED -	
	DRAWN - AJ	REVISED -	
PLOT SCALE = 0.16660000 ' / in.	CHECKED - MJO	REVISED -	
PLOT DATE = 10/14/2025	DATE - 10/16/2025	REVISED -	

STATE OF ILLINOIS
DEPARTMENT OF TRANSPORTATION

FAI ROUTE 70 - INTERSTATE 70
DRAINAGE PLAN & PROFILE - RAMP C

SCALE: 1"=20' | SHEET 3 OF 4 SHEETS | STA. 326+00 TO STA. 330+00

F.A.I. RTE.	SECTION	COUNTY	TOTAL SHEETS	SHEET NO.
70	(25-1)R-BR	EFFINGHAM	747	266
		CONTRACT NO. 74893		
	ILLINOIS	FED. AID PROJECT		

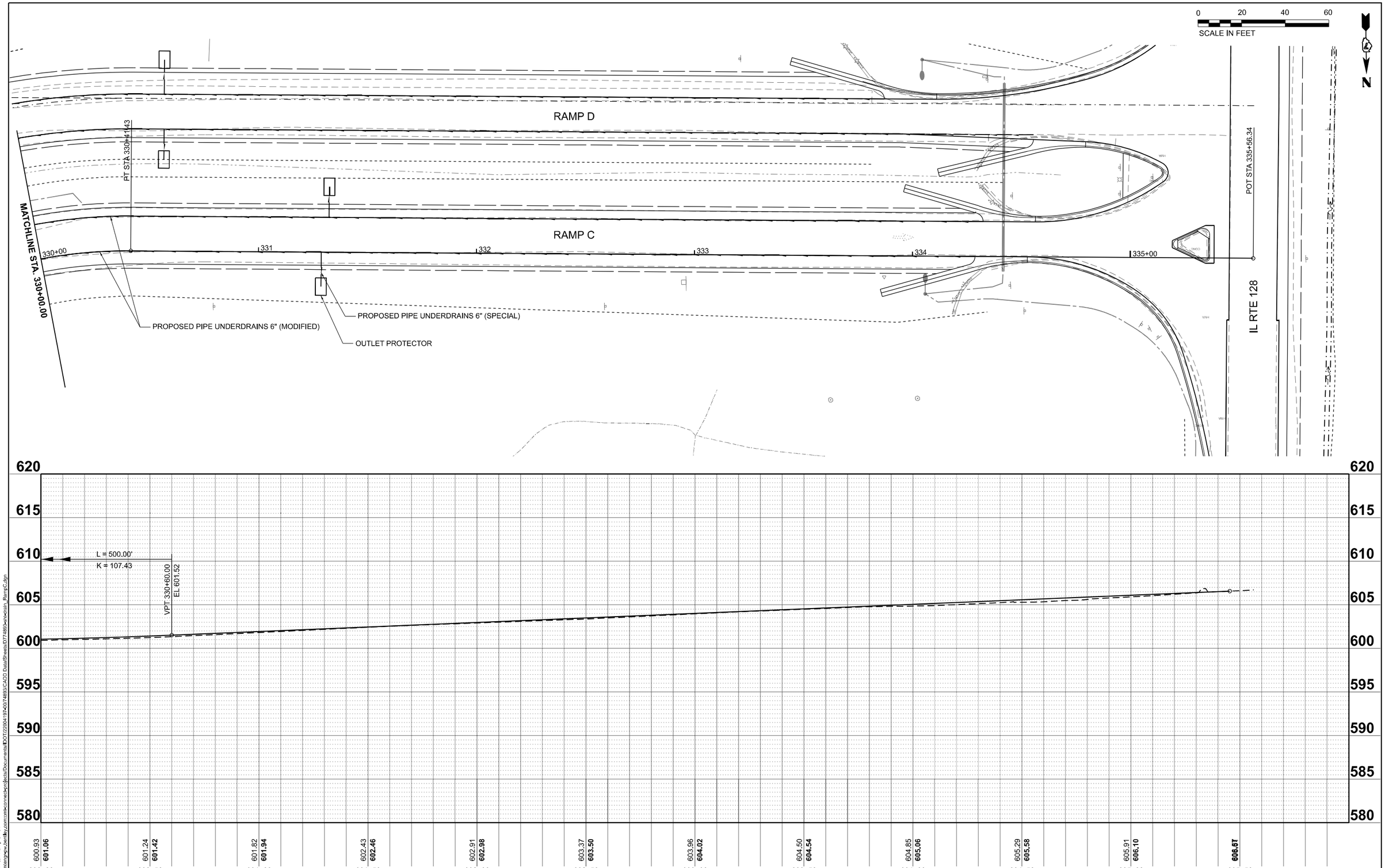

MODEL: SHT - DRN Plan Ramp C - 04
FILE NAME: pw://centerpoint-pw.bentley.com:centerpoint-eprojects/Documents/DOT/22004197-00/74893/CADD Data/Sheets/D774893-sht-rdrain_RampC.dgn

CMT
License No. 184-000613
© Copyright CMT, Inc.

USER NAME = moverbey	DESIGNED - AJ	REVISED -	
	DRAWN - AJ	REVISED -	
PLOT SCALE = 0.16660000 ' / in.	CHECKED - MJO	REVISED -	
PLOT DATE = 10/14/2025	DATE - 10/16/2025	REVISED -	

STATE OF ILLINOIS
DEPARTMENT OF TRANSPORTATION

FAI ROUTE 70 - INTERSTATE 70
DRAINAGE PLAN & PROFILE - RAMP C

SCALE: 1"=20' | SHEET 4 OF 4 SHEETS | STA. 330+00 TO STA. 335+56.34

F.A.I. RTE.	SECTION	COUNTY	TOTAL SHEETS	SHEET NO.
70	(25-1)R-BR	EFFINGHAM	747	267
		CONTRACT NO. 74893		
	ILLINOIS	FED. AID PROJECT		

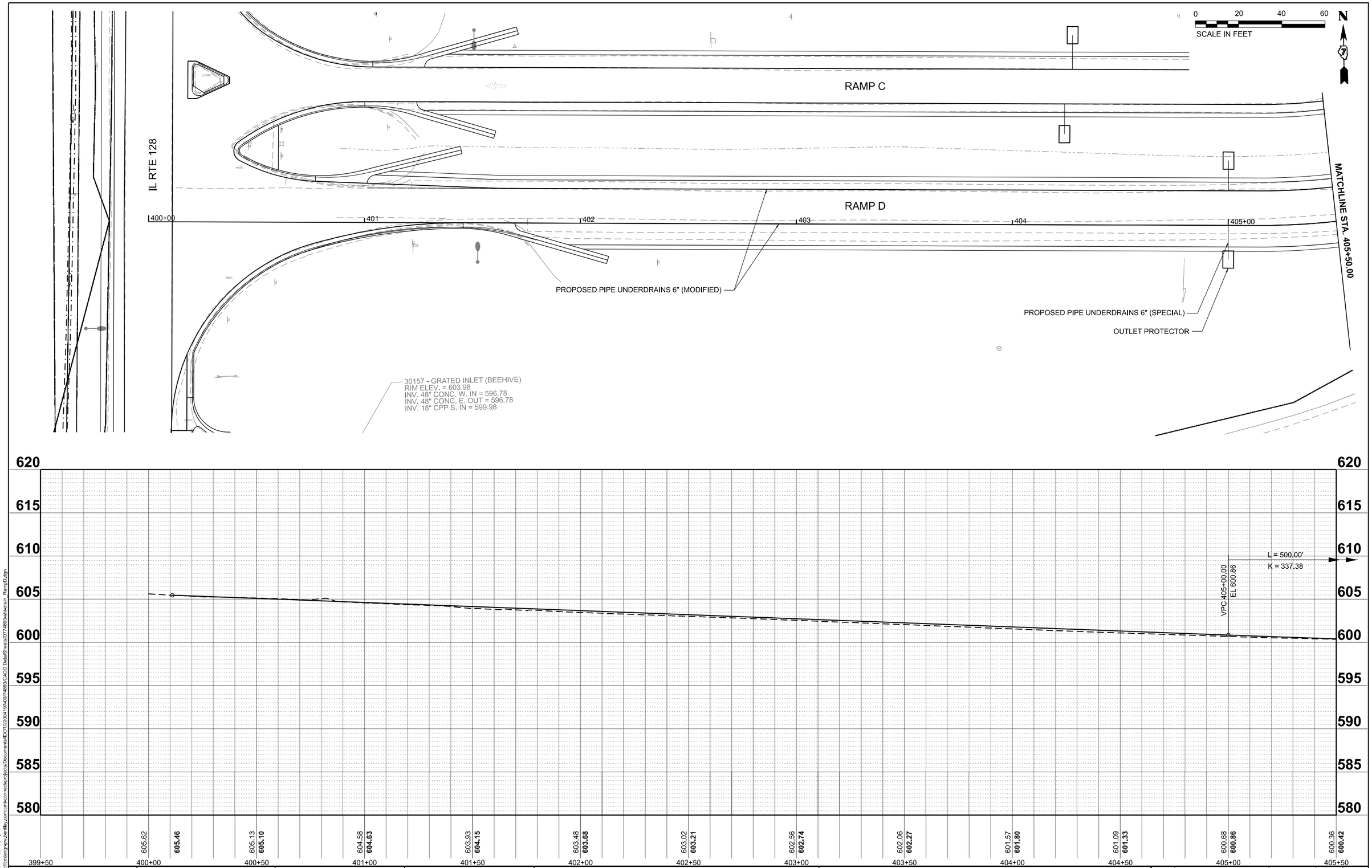

MODEL: SHT - DRN Plan Ramp D - 01
FILE NAME: pw://contenge-pw.bentley.com:contengdms-connect-eu-projects/Documents/DOT/22004197-00/74893/CADD Data/Sheets/D774893-sht-drain_RampD.dgn

CMT
License No. 184-000613 © Copyright CMT, Inc.

USER NAME = moverbey	DESIGNED - AJ	REVISED -	
	DRAWN - AJ	REVISED -	
PLOT SCALE = 0.16660000 ' / in.	CHECKED - MJO	REVISED -	
PLOT DATE = 10/16/2025	DATE - 10/16/2025	REVISED -	

STATE OF ILLINOIS
DEPARTMENT OF TRANSPORTATION

FAI ROUTE 70 - INTERSTATE 70
DRAINAGE PLAN & PROFILE - RAMP D

SCALE: 1"=20' | SHEET 1 OF 5 SHEETS | STA. 400+00 TO STA. 405+50

F.A.I. RTE.	SECTION	COUNTY	TOTAL SHEETS	SHEET NO.
70	(25-1)R-BR	EFFINGHAM	747	268
		CONTRACT NO. 74893		
	ILLINOIS	FED. AID PROJECT		

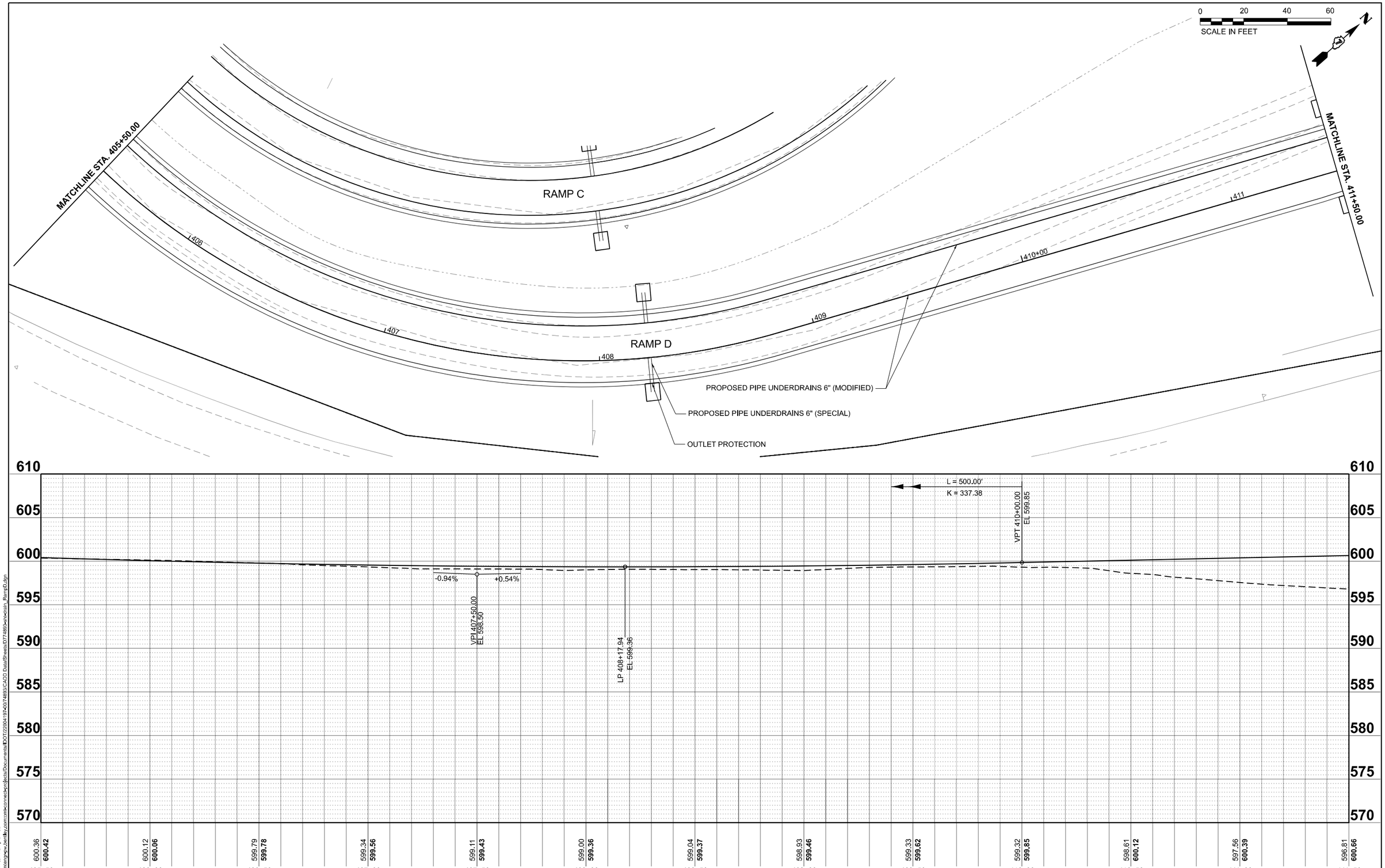

MODEL: SHT - DRN Plan Ramp D - 02
FILE NAME: pw://centerpoint.bentley.com:centerpoint-projects/Documents/IDOT/22004197-00/74893/CADD Data/Sheets/D774893-sht-drain_RampD.dgn

CMT
License No. 184-000613
© Copyright CMT, Inc.

USER NAME = moverbey	DESIGNED - AJ	REVISED -	
	DRAWN - AJ	REVISED -	
PLOT SCALE = 0.16660000 ' / in.	CHECKED - MJO	REVISED -	
PLOT DATE = 10/16/2025	DATE - 10/16/2025	REVISED -	

STATE OF ILLINOIS
DEPARTMENT OF TRANSPORTATION

FAI ROUTE 70 - INTERSTATE 70
DRAINAGE PLAN & PROFILE - RAMP D

SCALE: 1"=20' | SHEET 2 OF 5 SHEETS | STA. 405+50 TO STA. 411+50

F.A.I. RTE.	SECTION	COUNTY	TOTAL SHEETS	SHEET NO.
70	(25-1)R-BR	EFFINGHAM	747	269
		CONTRACT NO. 74893		
	ILLINOIS	FED. AID PROJECT		

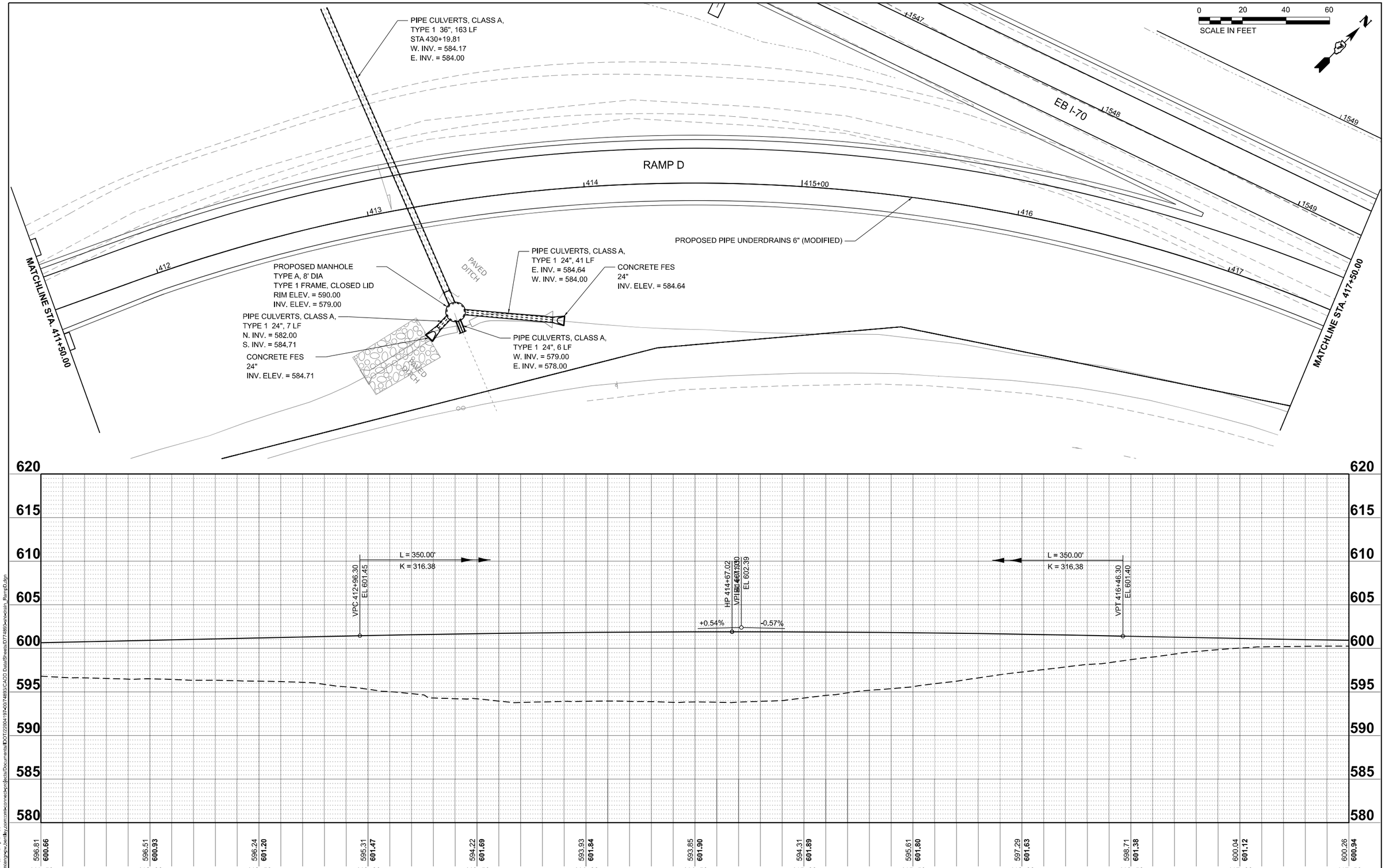

MODEL: SHT - DRN Plan Ramp D - 03
FILE NAME: pw://centerpoint.bentley.com:centerpoint-eg-pw1/contents/projects/Documents/IDOT/22004197-00/74893/CADD Data/Sheets/D774893-sht-drain_RampD.dgn

CMT
License No. 184-000613
© Copyright CMT, Inc.

USER NAME = moverbey	DESIGNED - AJ	REVISED -	
	DRAWN - AJ	REVISED -	
PLOT SCALE = 0.16660000 ' / in.	CHECKED - MJO	REVISED -	
PLOT DATE = 10/16/2025	DATE - 10/16/2025	REVISED -	

STATE OF ILLINOIS
DEPARTMENT OF TRANSPORTATION

FAI ROUTE 70 - INTERSTATE 70
DRAINAGE PLAN & PROFILE - RAMP D

SCALE: 1"=20' | SHEET 3 OF 5 SHEETS | STA. 411+50 TO STA. 417+50

F.A.I. RTE.	SECTION	COUNTY	TOTAL SHEETS	SHEET NO.
70	(25-1)R-BR	EFFINGHAM	747	270

CONTRACT NO. 74893

ILLINOIS | FED. AID PROJECT

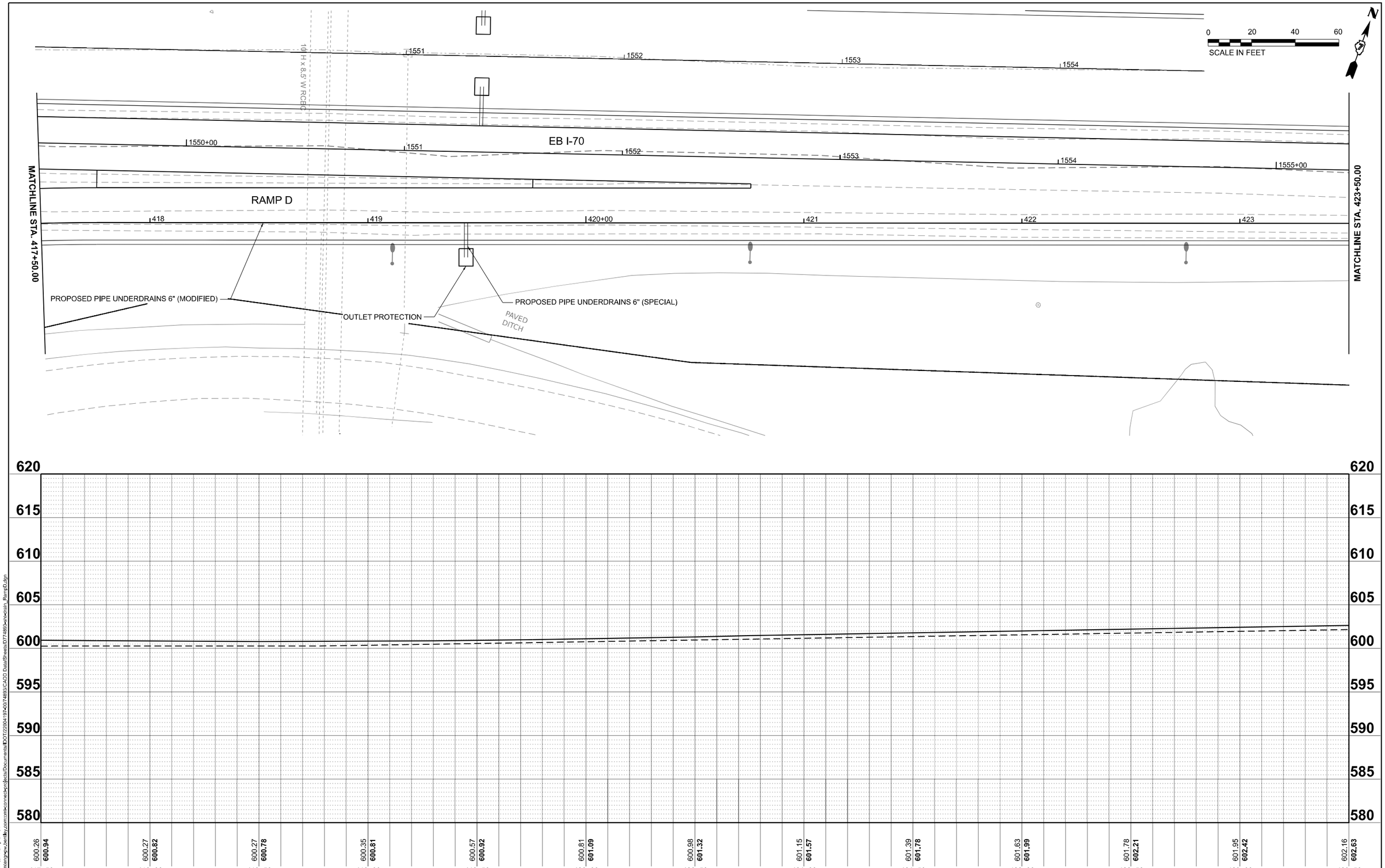

MODEL: SHT - DRN Plan Ramp D - 04
FILE NAME: pw://centerpoint-pw.bentley.com:centerpoint-connect-eprojects/Documents/IDOT/220041974/0/74893/CADD Data/Sheets/0774893-sht-drain_RampD.dgn

CMT
License No. 184-000613
© Copyright CMT, Inc.

USER NAME = moverbey	DESIGNED - AJ	REVISED -	
	DRAWN - AJ	REVISED -	
PLOT SCALE = 0.16660000 ' / in.	CHECKED - MJO	REVISED -	
PLOT DATE = 10/16/2025	DATE - 10/16/2025	REVISED -	

STATE OF ILLINOIS
DEPARTMENT OF TRANSPORTATION

FAI ROUTE 70 - INTERSTATE 70
DRAINAGE PLAN & PROFILE - RAMP D

SCALE: 1"=20' | SHEET 4 OF 5 SHEETS | STA. 417+50 TO STA. 423+50

F.A.I. RTE.	SECTION	COUNTY	TOTAL SHEETS	SHEET NO.
70	(25-1)R-BR	EFFINGHAM	747	271
		CONTRACT NO. 74893		
	ILLINOIS	FED. AID PROJECT		

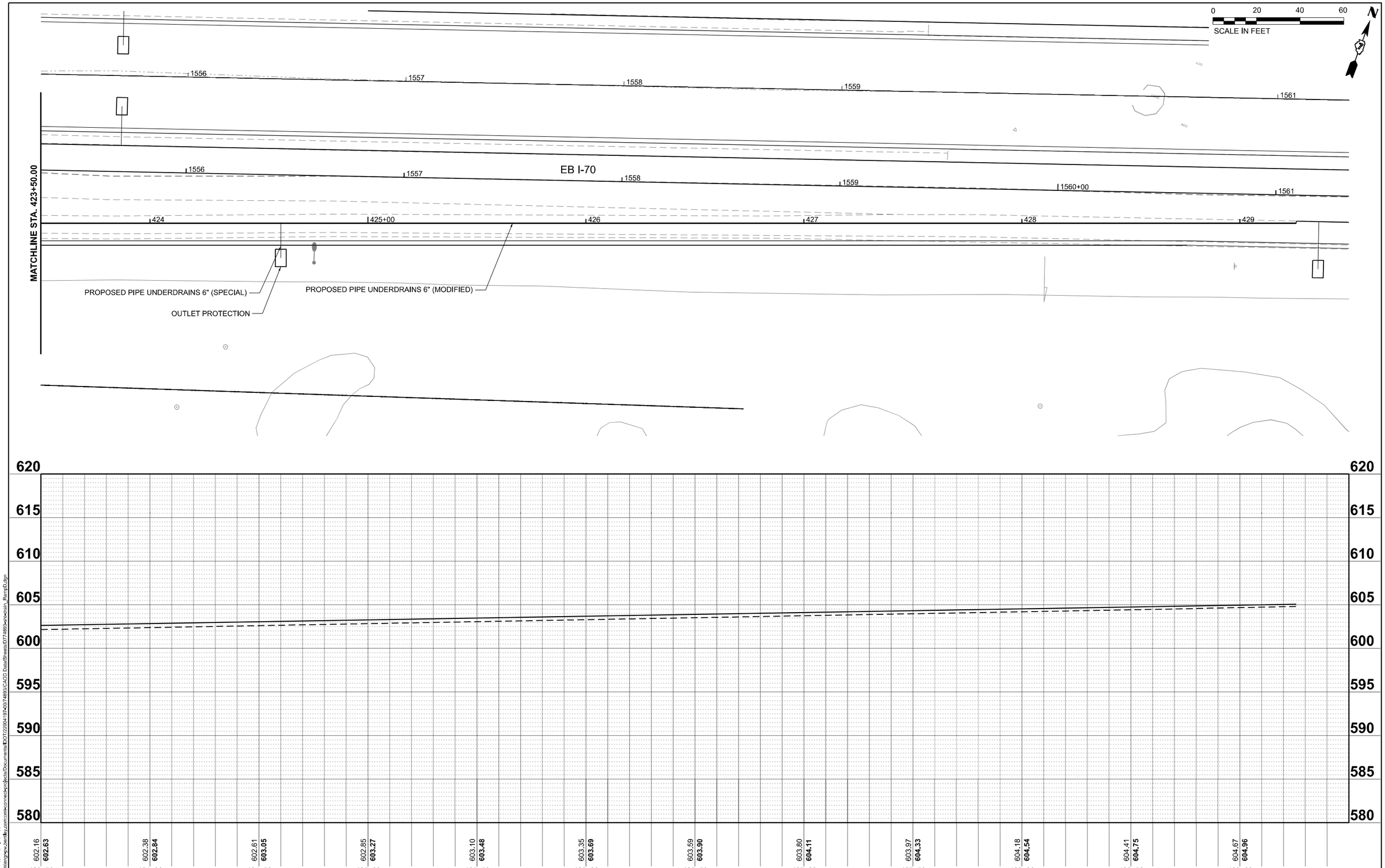

MODEL: SHT - DRN Plan Ramp D - 05
FILE NAME: pw://centerpoint.bentley.com:centerpoint-projects/Documents/IDOT/22004197-00/74893/CADD Data/Sheets/D774893-sht-rdwy-Ramp D.dgn

CMT
License No. 184-000613
© Copyright CMT, Inc.

USER NAME = moverbey	DESIGNED - AJ	REVISED -	
	DRAWN - AJ	REVISED -	
PLOT SCALE = 0.16660000 ' / in.	CHECKED - MJO	REVISED -	
PLOT DATE = 10/16/2025	DATE - 10/16/2025	REVISED -	

STATE OF ILLINOIS
DEPARTMENT OF TRANSPORTATION

FAI ROUTE 70 - INTERSTATE 70
DRAINAGE PLAN & PROFILE - RAMP D

SCALE: 1"=20' | SHEET 5 OF 5 SHEETS | STA. 423+50 TO STA. 429+25.78

F.A.I. RTE.	SECTION	COUNTY	TOTAL SHEETS	SHEET NO.
70	(25-1)R-BR	EFFINGHAM	747	272
		CONTRACT NO. 74893		
	ILLINOIS	FED. AID PROJECT		

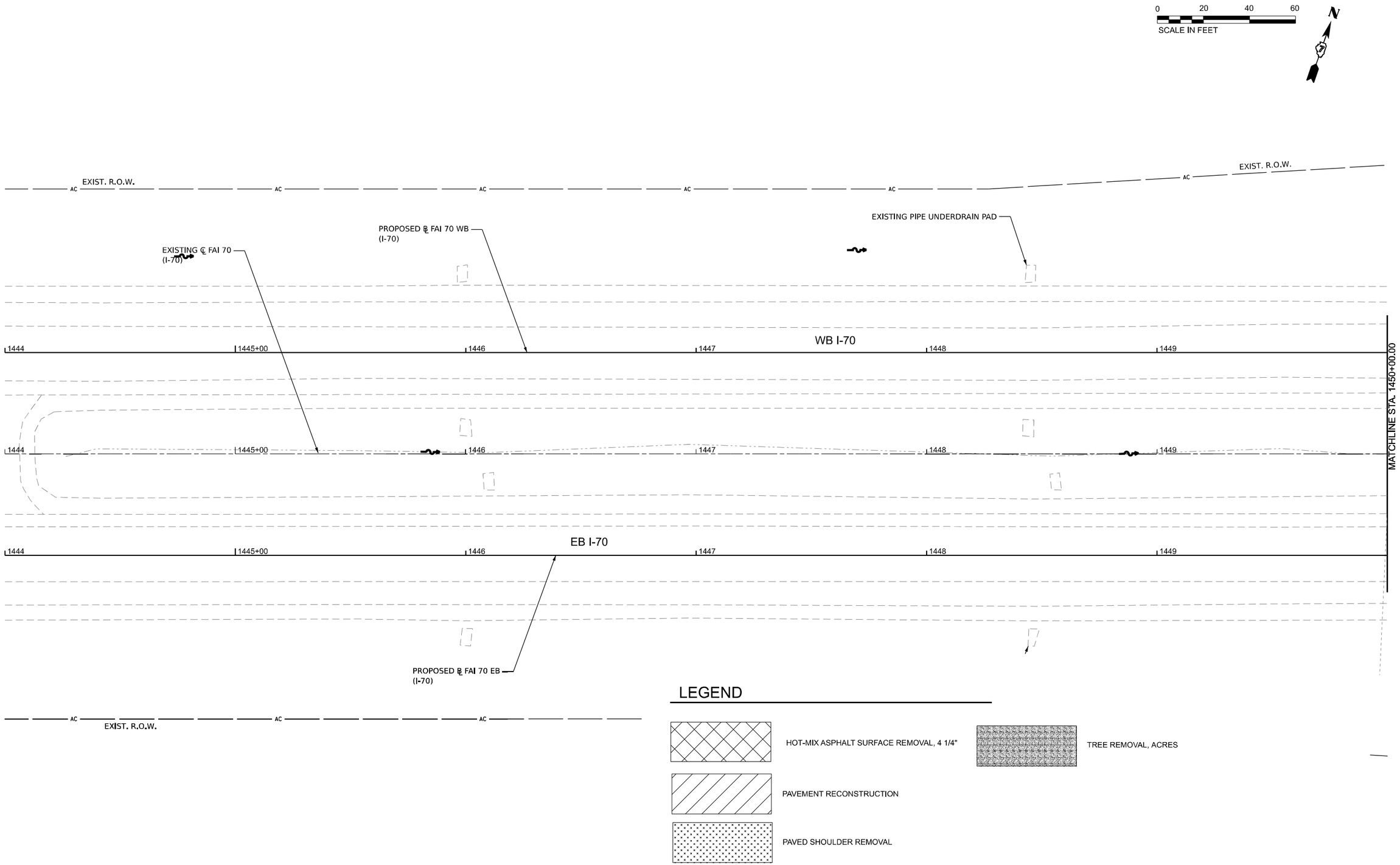

MODEL: ExCLFA70 - 74083-sh01 Removal [Sheet]
FILE NAME: pw://mesingrow.bentley.com:connect-connect-projects/Documents/IDOT/220041/74083/CADD Data/Sheets/0774893-sh1-Removal_I70.dgn

Kaskaskia Engineering Group, LLC
PROFESSIONAL REGISTRATIONS
Illinois Professional Design Firm 184.001936
Professional Engineering Group 20-1001586

USER NAME = moverbey	DESIGNED - SS	REVISED -	
	DRAWN - RJO	REVISED -	
PLOT SCALE = 0.16666667 ' / In.	CHECKED - MJO	REVISED -	
PLOT DATE = 10/16/2025	DATE - 10/16/2025	REVISED -	

STATE OF ILLINOIS
DEPARTMENT OF TRANSPORTATION

FAI ROUTE 70 - INTERSTATE 70
REMOVAL PLANS - FAI ROUTE 70

SCALE: 1" = 20' | SHEET 1 OF 14 SHEETS | STA. 1444+00 TO STA. 1450+00

F.A.I. RTE.	SECTION	COUNTY	TOTAL SHEETS	SHEET NO.
70	(25-1)R-BR	EFFINGHAM	747	273
		CONTRACT NO. 74893		
	ILLINOIS	FED. AID PROJECT		

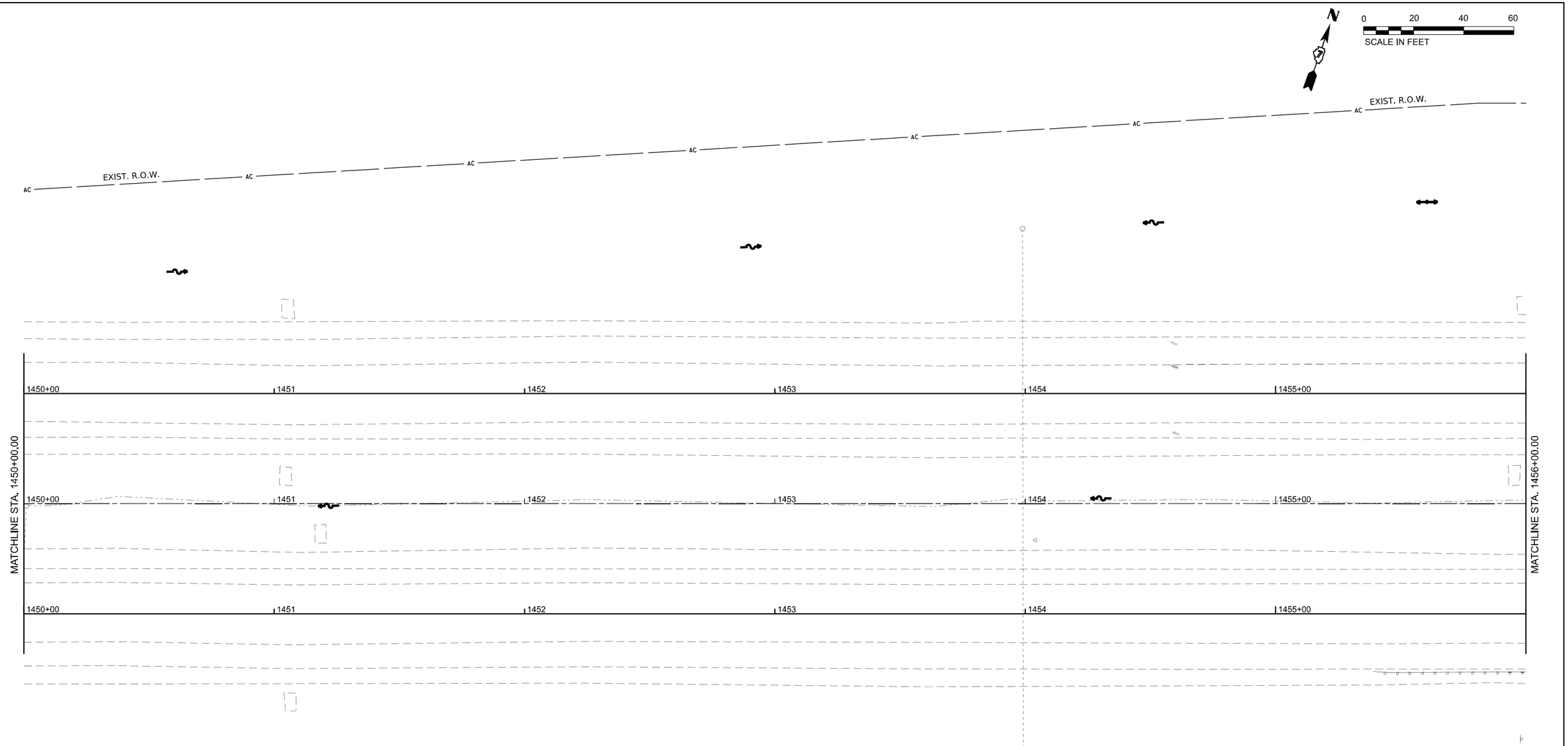

LEGEND

- HOT-MIX ASPHALT SURFACE REMOVAL, 4 1/4"
- TREE REMOVAL, ACRES
- PAVEMENT RECONSTRUCTION
- PAVED SHOULDER REMOVAL

MODEL: Ex:G1FAI70 - 74983-sht10 Removal [Sheet]
FILE NAME: pw://contengpw.bentley.com:connect-projects/Documents/BDOT/22004197-40/774893/CADD Data/Sheets/0774893-sht-Removal_I70.dgn

Kaskaskia Engineering Group, LLC
Professional Design Firm
Illinois Professional Design Firm
Professional Engineering Group
214 E. Main St., Suite 100
Belleville, Illinois 62220
618.233.5675 phone
618.233.5677 fax
www.kaskaskiaeng.com
PROFESSIONAL ENGINEER
JASON O. OSBORN
184.006713
20-006106-

USER NAME = moverbey	DESIGNED - SS	REVISED -	
	DRAWN - RJO	REVISED -	
PLOT SCALE = 0.16666667 ' / in.	CHECKED - MJO	REVISED -	
PLOT DATE = 10/16/2025	DATE - 10/16/2025	REVISED -	

STATE OF ILLINOIS
DEPARTMENT OF TRANSPORTATION

FAI ROUTE 70 - INTERSTATE 70
REMOVAL PLANS - FAI ROUTE 70

SCALE: 1" =20' | SHEET 2 OF 14 SHEETS | STA. 1450+00 TO STA. 1456+00

F.A.I. RTE.	SECTION	COUNTY	TOTAL SHEETS	SHEET NO.
70	(25-1)R-BR	EFFINGHAM	747	274
		CONTRACT NO. 74893		
	ILLINOIS	FED. AID PROJECT		

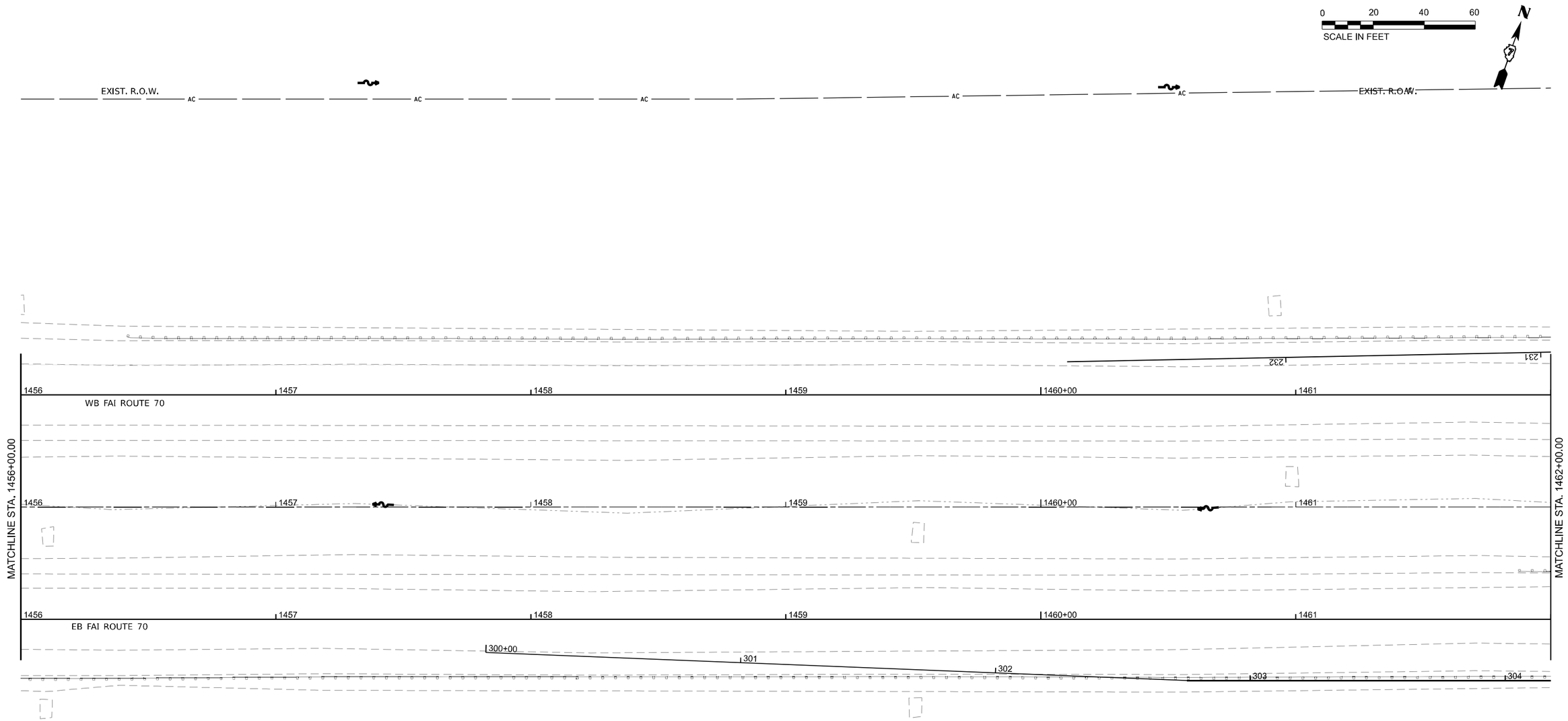

LEGEND

HOT-MIX ASPHALT SURFACE REMOVAL, 4 1/4"

TREE REMOVAL, ACRES

PAVEMENT RECONSTRUCTION

PAVED SHOULDER REMOVAL

AC

EXIST. R.O.W.

MODEL: ExCLFA70 - 74893-sht03 Removal [Sheet]
FILE NAME: pw://cmengp-pw.bentley.com:cmec-projects/Documents/IDOT/20043197-00/74893/CADD Data/Sheets/D774893-sht-Removal_I70.dgn

Kaskaskia Engineering Group, LLC
Professional Engineering Firm 184-001513
Design Firm Professional Engineering Group 29-3001586

USER NAME = moverbey	DESIGNED - SS	REVISED -	
	DRAWN - RJO	REVISED -	
PLOT SCALE = 0.16666667 ' / in.	CHECKED - MJO	REVISED -	
PLOT DATE = 10/16/2025	DATE - 10/16/2025	REVISED -	

STATE OF ILLINOIS
DEPARTMENT OF TRANSPORTATION

FAI ROUTE 70 - INTERSTATE 70
REMOVAL PLANS - FAI ROUTE 70

SCALE: 1" = 20' | SHEET 3 OF 14 SHEETS | STA. 1456+00 TO STA. 1462+00

F.A.I. RTE.	SECTION	COUNTY	TOTAL SHEETS	SHEET NO.
70	(25-1)R-BR	EFFINGHAM	747	275

CONTRACT NO. 74893

ILLINOIS | FED. AID PROJECT

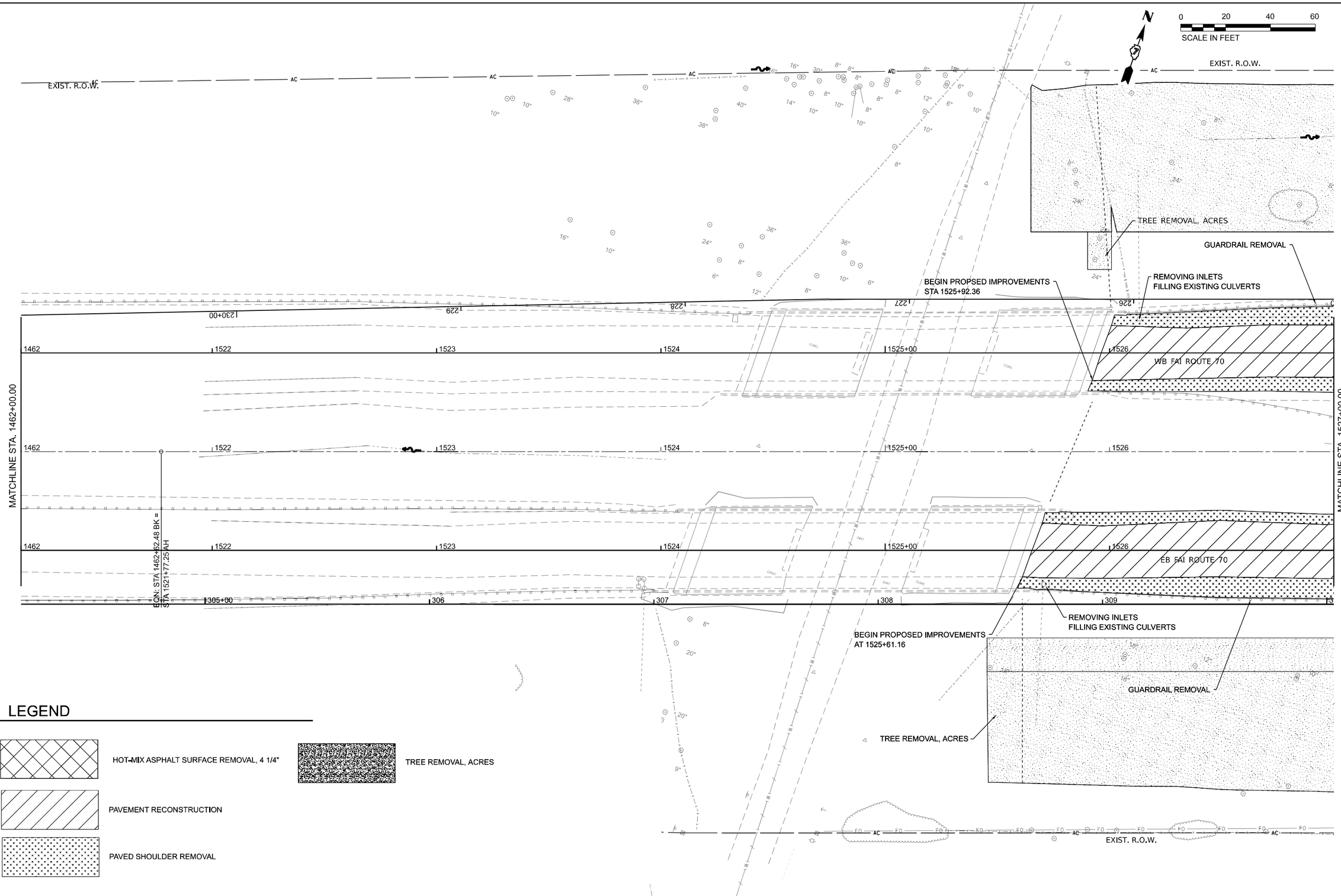

MODEL: Ex-Cl-FA70 - 74983-alt4 Removal [Sheet]
FILE NAME: pw://centerpw.bentley.com:centerprojects/Documents/IDOT/20041974/07/74893/CADD Data/Sheets/0774893-sht-removal_f70.dgn

Kaskaskia Engineering Group, LLC
Professional Design Firm 184-001570
Professional Engineering Group 20-300-0586

USER NAME = moverbey	DESIGNED - SS	REVISED -	
	DRAWN - RJO	REVISED -	
PLOT SCALE = 0.16666667 ' / in.	CHECKED - MJO	REVISED -	
PLOT DATE = 10/16/2025	DATE - 10/16/2025	REVISED -	

STATE OF ILLINOIS
DEPARTMENT OF TRANSPORTATION

FAI ROUTE 70 - INTERSTATE 70
REMOVAL PLANS - FAI ROUTE 70

SCALE: 1" = 20' | SHEET 4 OF 14 SHEETS | STA. 1462+00 TO STA. 1527+00

F.A.I. RTE.	SECTION	COUNTY	TOTAL SHEETS	SHEET NO.
70	(25-1)R-BR	EFFINGHAM	747	276
		CONTRACT NO. 74893		
	ILLINOIS	FED. AID PROJECT		

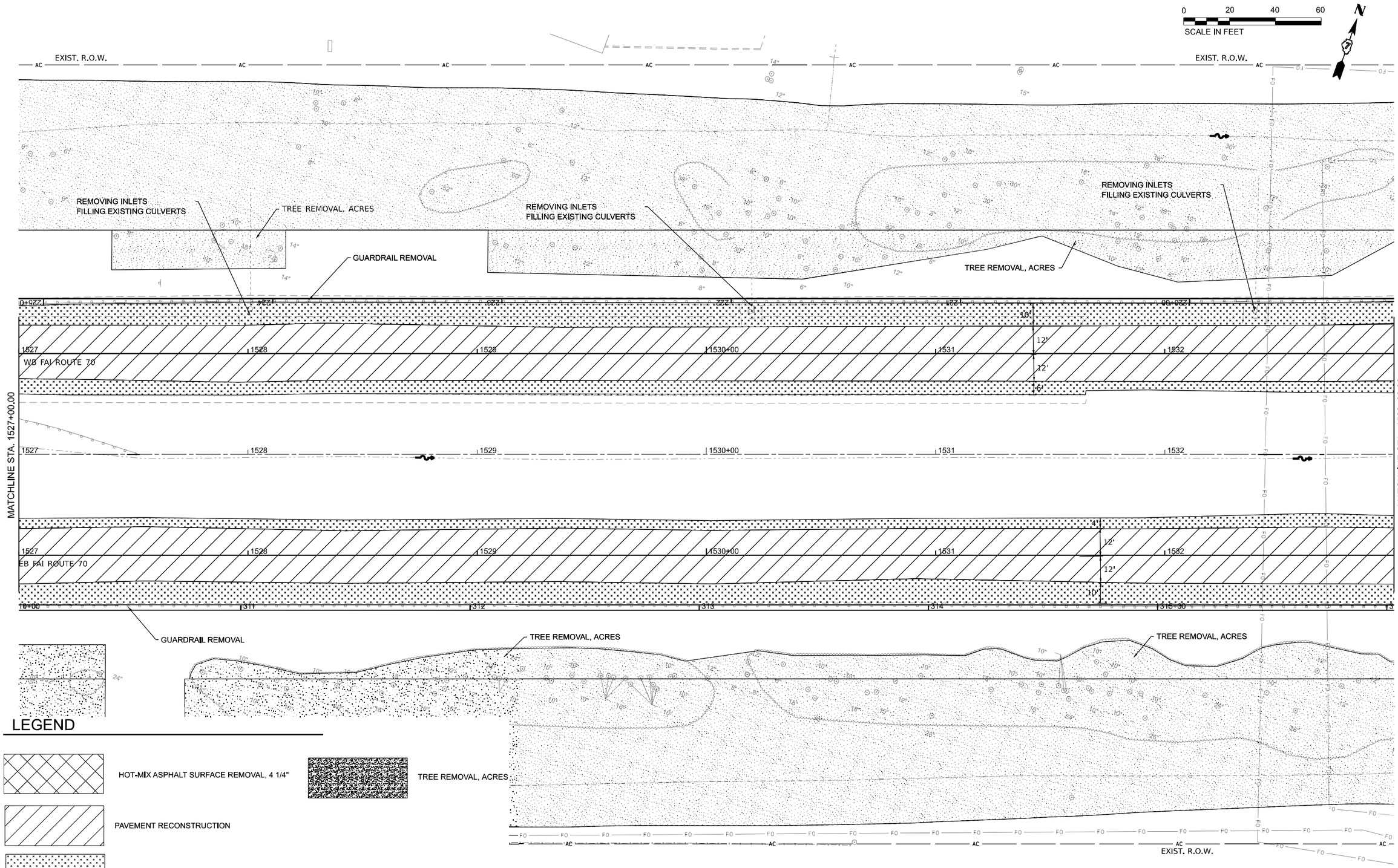

LEGEND

HOT-MIX ASPHALT SURFACE REMOVAL, 4 1/4"

TREE REMOVAL, ACRES

PAVEMENT RECONSTRUCTION

PAVED SHOULDER REMOVAL

MODEL: ExCLFA70 - 74983-sht05 Removal [Sheet]
FILE NAME: pw://cmtengr-pw.bentley.com:cmt-connect-projects/Documents/IDOT/220041970-0/74893/CADD Data/Sheets/0774893-sht-Removal_I70.dgn

Kaskaskia Engineering Group, LLC
Illinois Design Firm 184-001277
Illinois Professional Design Firm
Professional Engineering Group
2001 E. Main St., Suite 100
Richville, Illinois 62561
618.251.9877 phone
618.251.9878 fax
www.kaskaskiieng.com
Michael A. Bergkamp
License No. 62-33333
Expiration Date: 11/30/2027
Kevin Mc Cullough
License No. 184-001277
Expiration Date: 11/30/2026
Zac Mc Cullough
Expiration Date: 11/30/2026
Zac Mc Cullough
Expiration Date: 11/30/2026

USER NAME = moverbey	DESIGNED - SS	REVISED -	
	DRAWN - RJO	REVISED -	
PLOT SCALE = 0.16666667 ' / in.	CHECKED - MJO	REVISED -	
PLOT DATE = 10/16/2025	DATE - 10/16/2025	REVISED -	

STATE OF ILLINOIS
DEPARTMENT OF TRANSPORTATION

FAI ROUTE 70 - INTERSTATE 70
REMOVAL PLANS - FAI ROUTE 70

SCALE: 1" = 20' | SHEET 5 OF 14 SHEETS | STA. 1527+00 TO STA. 1533+00

F.A.I. RTE.	SECTION	COUNTY	TOTAL SHEETS	SHEET NO.
70	(25-1)R-BR	EFFINGHAM	747	277
		CONTRACT NO. 74893		
	ILLINOIS	FED. AID PROJECT		

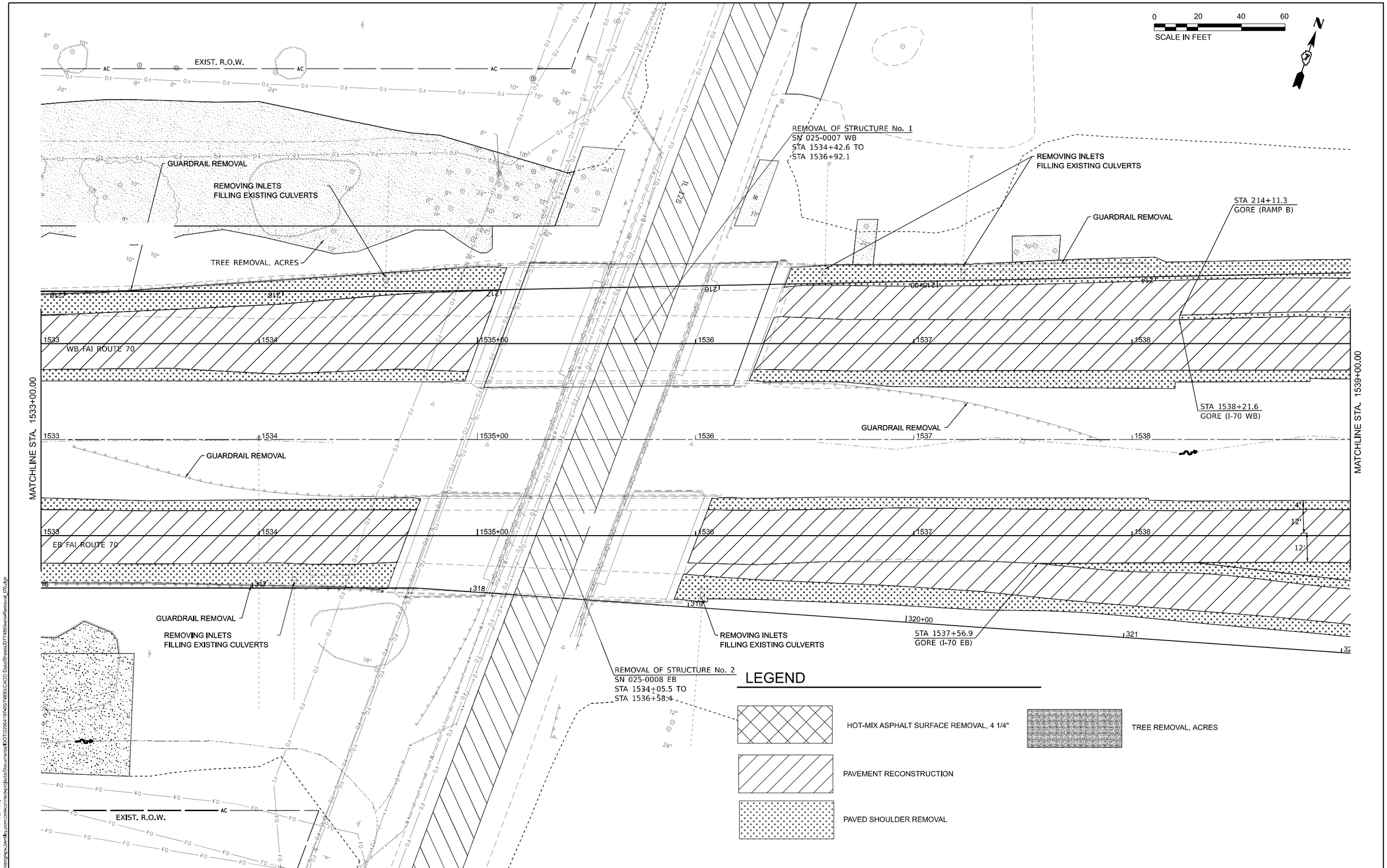

MODEL: ExCLFAI70 - 74893-sjh06 Removal [Sheet]
FILE NAME: pw://cmsdgnpw.bentley.com:cmsdgnpw-connect-projects/Documents/EDOT/22004197400/74893/CADD Data/Sheets/0774893-sjh-Removal_170.dgn

Kaskaskia Engineering Group, LLC
PROFESSIONAL ENGINEERS
Illinois Professional Design Firm
Professional Engineering Group
204 E. Main St., Suite 100
Richmond, Illinois 60071
815.315.8675 phone
815.315.8677 fax
www.kaskaskiaeng.com
LICENSED
TIM PORTER
20-006706
LICENSED
JON MOORE
20-006586

USER NAME = moverbey	DESIGNED - SS	REVISED -	
	DRAWN - RJO	REVISED -	
PLOT SCALE = 0.16666667 ' / in.	CHECKED - MJO	REVISED -	
PLOT DATE = 10/16/2025	DATE - 10/16/2025	REVISED -	

STATE OF ILLINOIS
DEPARTMENT OF TRANSPORTATION

FAI ROUTE 70 - INTERSTATE 70
REMOVAL PLANS - FAI ROUTE 70

SCALE: 1" = 20' | SHEET 6 OF 14 SHEETS | STA. 1533+00 TO STA. 1539+00

F.A.I. RTE.	SECTION	COUNTY	TOTAL SHEETS	SHEET NO.
70	(25-1)R-BR	EFFINGHAM	747	278
		CONTRACT NO. 74893		
		ILLINOIS	FED. AID PROJECT	

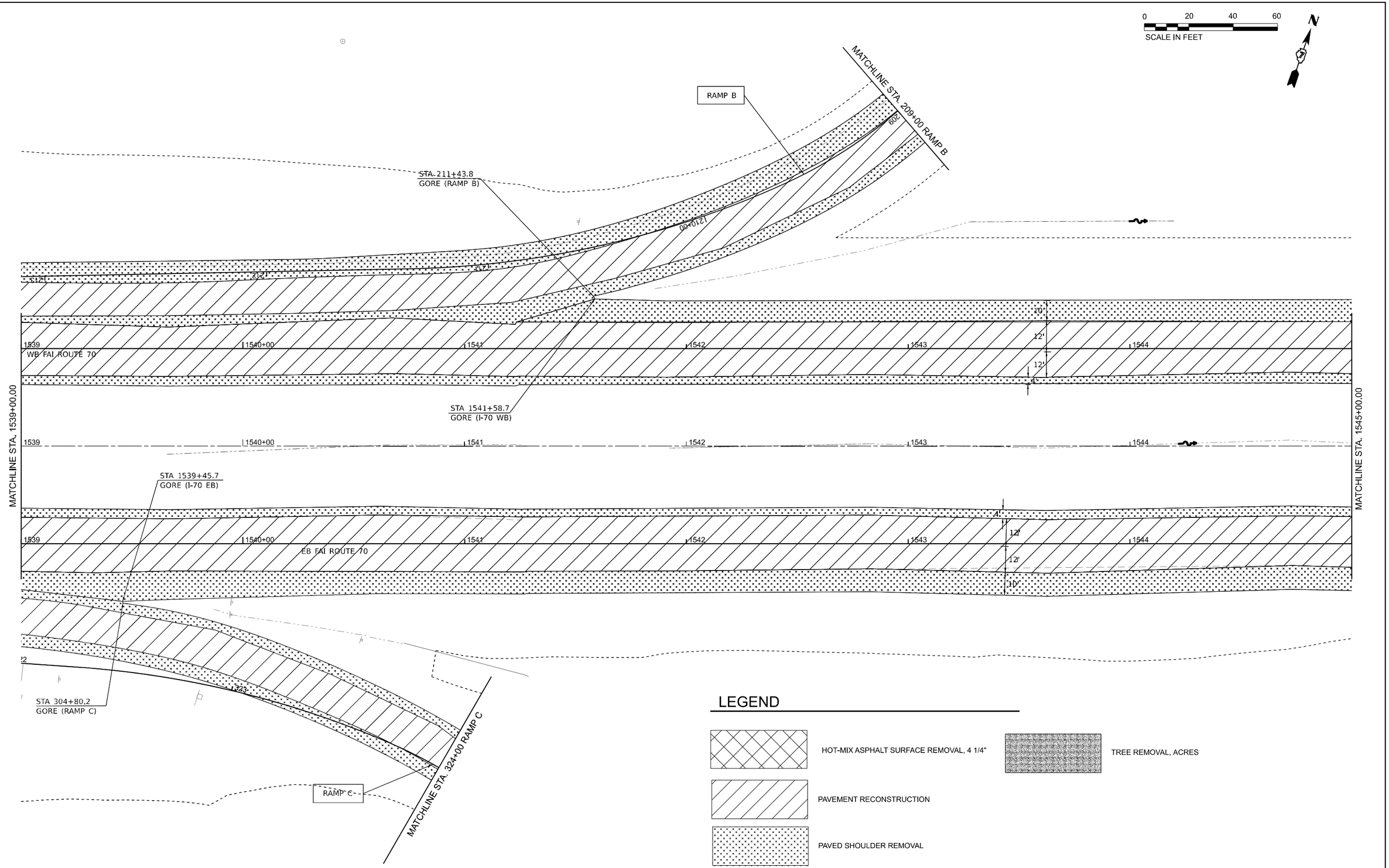

LEGEND

- HOT-MIX ASPHALT SURFACE REMOVAL, 4 1/4"
- TREE REMOVAL, ACRES
- PAVEMENT RECONSTRUCTION
- PAVED SHOULDER REMOVAL

MODEL: ExCLFAI70 - 74983-sh07 Removal [Sheet]
FILE NAME: pw://mwdgw-pw.bentley.com:mwdgw-connect-eu-cp/Beta/Documents/EOT/22004197400/74893/CADD Data/Sheets/0774893-sh-Removal_I70.dgn

Kaskaskia Engineering Group, LLC
Illinois Professional Design Firm
Professional Engineering Group
2W E. Main St., Suite 2W
Belleville, Illinois 62220
ph.618.277.7211 fax
618.233.8077 fax
www.kaskaskiaeng.com
LICENSED NO. 184-001776
EXPIRES 04/30/27

USER NAME = moverbey	DESIGNED - SS	REVISED -	
	DRAWN - RJO	REVISED -	
PLOT SCALE = 0.16666667 ' / in.	CHECKED - MJO	REVISED -	
PLOT DATE = 10/16/2025	DATE - 10/16/2025	REVISED -	

STATE OF ILLINOIS
DEPARTMENT OF TRANSPORTATION

FAI ROUTE 70 - INTERSTATE 70
REMOVAL PLANS - FAI ROUTE 70

SCALE: 1" = 20' | SHEET 7 OF 14 SHEETS | STA. 1539+00 TO STA. 1545+00

F.A.I. RTE.	SECTION	COUNTY	TOTAL SHEETS	SHEET NO.
70	(25-1)R-BR	EFFINGHAM	747	279
		CONTRACT NO. 74893		
		ILLINOIS	FED. AID PROJECT	

LEGEND

- HOT-MIX ASPHALT SURFACE REMOVAL, 4 1/4"
- TREE REMOVAL, ACRES
- PAVEMENT RECONSTRUCTION
- PAVED SHOULDER REMOVAL

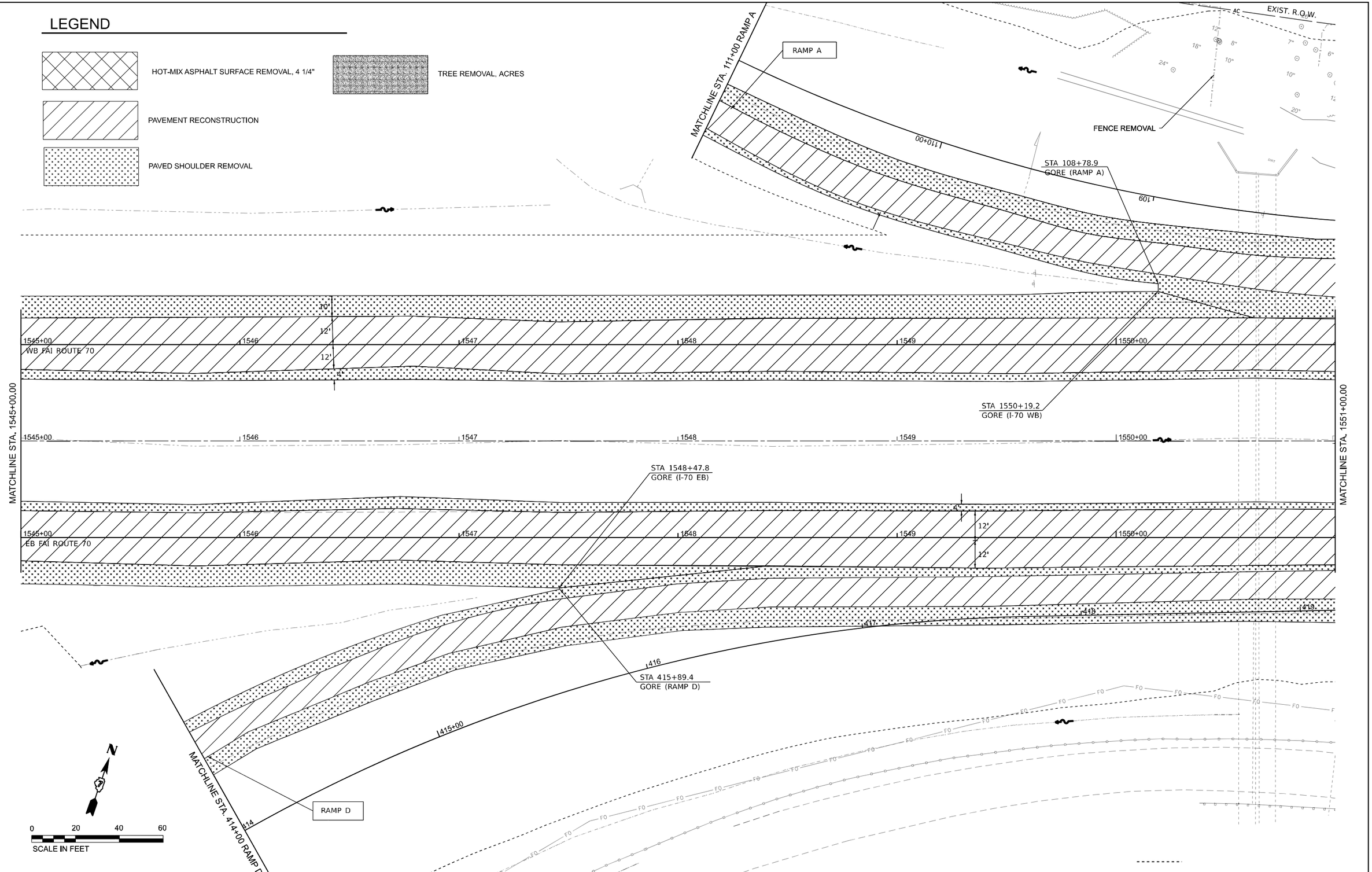

MODEL: Ex-Lt FAI70 - 74983-alt08 Removal [Sheet]
FILE NAME: pw://mwbengineering.com:mwbconnect-eprojects/Data/Documents/EOT/22004197400/74893/CADD Data/Sheets/0774893-sht-Removal_I70.dgn

Kaskaskia Engineering Group, LLC
Illinois Professional Design Firm
Professional Engineering Group
LICENSE NO. 184-001570
EXPIRES 04/30/27
2W E. Main St., Suite 100
Belleville, Illinois 62220
ph.618.277.7211 fax
618.233.8077 fax
www.kaskaskiaeng.com

USER NAME = moverbey	DESIGNED - SS	REVISED -	
	DRAWN - RJO	REVISED -	
PLOT SCALE = 0.16666667 ' / in.	CHECKED - MJO	REVISED -	
PLOT DATE = 10/16/2025	DATE - 10/16/2025	REVISED -	

STATE OF ILLINOIS
DEPARTMENT OF TRANSPORTATION

FAI ROUTE 70 - INTERSTATE 70
REMOVAL PLANS - FAI ROUTE 70

SCALE: 1" = 20' | SHEET 8 OF 14 SHEETS | STA. 1545+00 TO STA. 1551+00

F.A.I. RTE.	SECTION	COUNTY	TOTAL SHEETS	SHEET NO.
70	(25-1)R-8R	EFFINGHAM	747	280
		CONTRACT NO. 74893		
		ILLINOIS	FED. AID PROJECT	

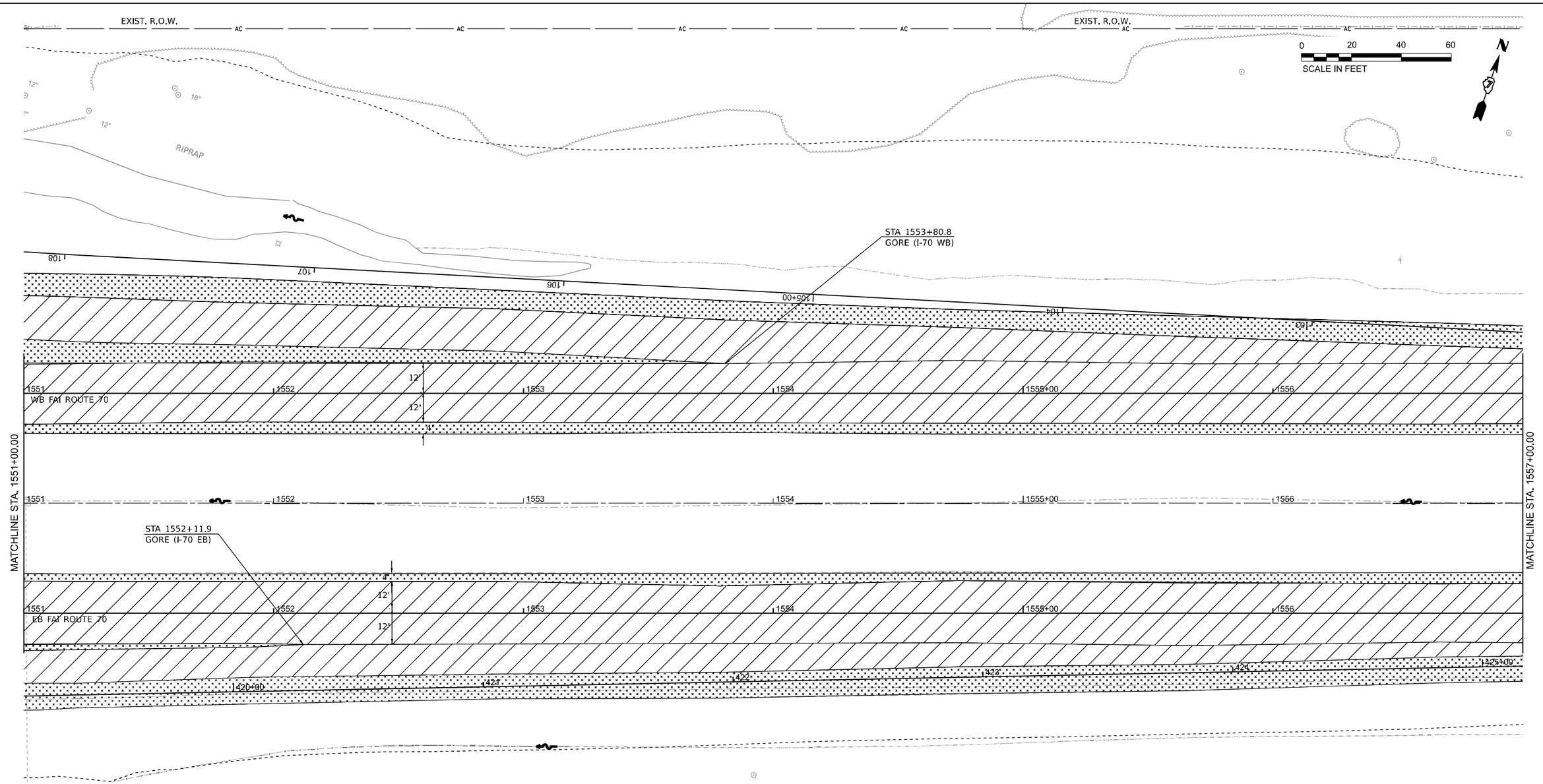

LEGEND

HOT-MIX ASPHALT SURFACE REMOVAL, 4 1/4"

TREE REMOVAL, ACRES

PAVEMENT RECONSTRUCTION

PAVED SHOULDER REMOVAL

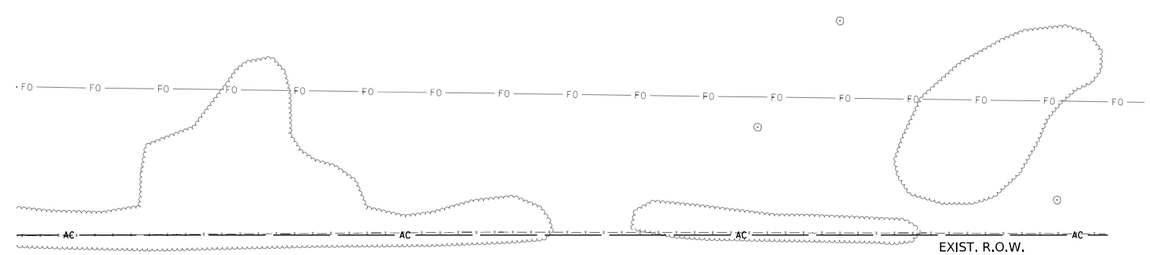

MODEL: ExCLFAI70 - 74893-sh09 Removal [Sheet]
FILE NAME: pw://consulting-pw.bentley.com:consulting-connect-projects/Documents/EDOT/22004197400/74893/CADD Data/Sheets/0774893-sh-Removal_170.dgn

Kaskaskia Engineering Group, LLC
Illinois Professional Design Firm
Professional Engineering Group
PROFESSIONAL ENGINEERS
Illinois Professional Design Firm
Professional Engineering Group
LICENSED
184-006710
25-006586

USER NAME = moverbey	DESIGNED - SS	REVISED -	
	DRAWN - RJO	REVISED -	
PLOT SCALE = 0.16666667 ' / in.	CHECKED - MJO	REVISED -	
PLOT DATE = 10/16/2025	DATE - 10/16/2025	REVISED -	

STATE OF ILLINOIS
DEPARTMENT OF TRANSPORTATION

FAI ROUTE 70 - INTERSTATE 70
REMOVAL PLANS - FAI ROUTE 70

SCALE: 1" = 20' | SHEET 9 OF 14 SHEETS | STA. TO STA.

F.A.I. RTE.	SECTION	COUNTY	TOTAL SHEETS	SHEET NO.
70	(25-1)R-BR	EFFINGHAM	747	281
		CONTRACT NO. 74893		
	ILLINOIS	FED. AID PROJECT		

EXIST. R.O.W.

EXIST. R.O.W.

0 20 40 60
SCALE IN FEET

N

STA. 100+00.00

PROP. ℄ RAMP A

PROPOSED ℄ FAI 70 WB
(I-70)

EXISTING ℄ FAI 70
(I-70)

20'

10'

10'

12'

12'

4'

WB I-70

1557 1558 1559 1560+00 1561 1562

WB FAI ROUTE 70

MATCHLINE STA. 1557+00.00

MATCHLINE STA. 1563+00.00

1557 1558 1559 1560+00 1561 1562

4'

12'

12'

10'

EB I-70

1557 1558 1559 1560+00 1561 1562

EB FAI ROUTE 70

1426 1427 1428 1429

PROP. ℄ RAMP D

OUTFALL LOCATION FOR EXIST.
PIPE UNDERDRAINS

PROPOSED ℄ FAI 70 EB
(I-70)

LEGEND

HOT-MIX ASPHALT SURFACE REMOVAL, 4 1/4"

TREE REMOVAL, ACRES

PAVEMENT RECONSTRUCTION

PAVED SHOULDER REMOVAL

EXIST. R.O.W.

EXIST. R.O.W.

LEGEND

LIMITS OF CONSTRUCTION

MODEL: ExCLFAI70 - 74893-sh10 Removal [Sheet]
FILE NAME: pw://centerpoint-inc.bentley.com:centerpoint-projects/Documents/IDOT/22004197-00/74893/CADD Data/Sheets/0774893-sht-Removal_I70.dgn

Kaskaskia Engineering Group LLC
Illinois Professional Design Firm
Professional Engineering Group
184-001203
Expires 4/30/2027
2W E. Main St., Suite 100
St. Elmo, Illinois 62458
618.233.8675 phone
618.233.8676 fax
www.kaskaskiaeng.com
184-001203
Expires 4/30/2027
Illinois Professional Design Firm
Professional Engineering Group
184-001203
Expires 4/30/2027
29-3061586

USER NAME = moverbey	DESIGNED - SS	REVISED -	
	DRAWN - RJO	REVISED -	
PLOT SCALE = 0.16666667 ' / in.	CHECKED - MJO	REVISED -	
PLOT DATE = 10/16/2025	DATE - 10/16/2025	REVISED -	

STATE OF ILLINOIS
DEPARTMENT OF TRANSPORTATION

FAI ROUTE 70 - INTERSTATE 70
REMOVAL PLANS - FAI ROUTE 70

SCALE: 1" = 20' | SHEET 10 OF 14 SHEETS | STA. 1557+00 TO STA. 1563+00

F.A.I. RTE.	SECTION	COUNTY	TOTAL SHEETS	SHEET NO.
70	(25-1)R-BR	EFFINGHAM	747	282
		CONTRACT NO. 74893		
	ILLINOIS	FED. AID PROJECT		

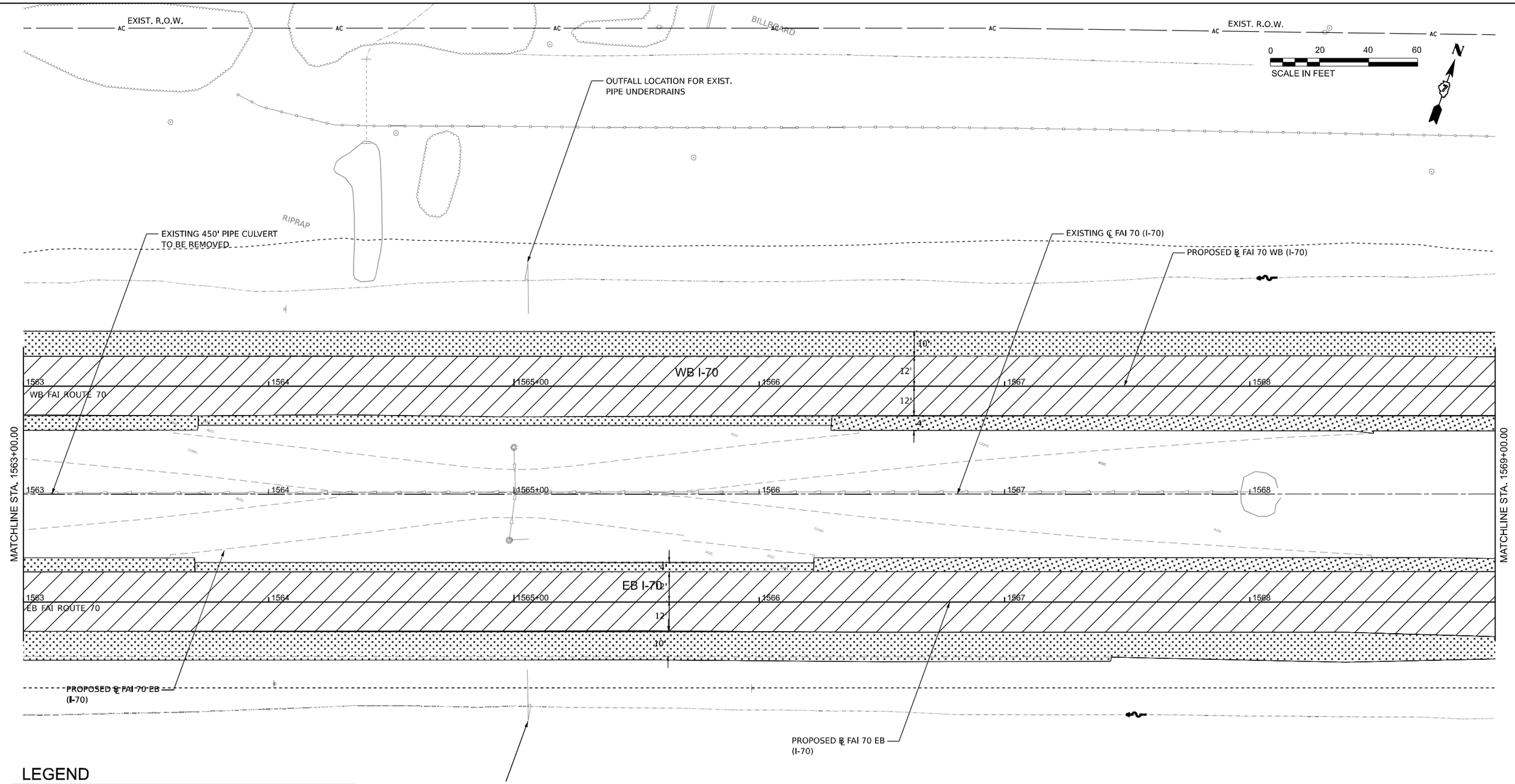

LEGEND

HOT-MIX ASPHALT SURFACE REMOVAL, 4 1/4"

TREE REMOVAL, ACRES

PAVEMENT RECONSTRUCTION

PAVED SHOULDER REMOVAL

EXIST. R.O.W.

MODEL: ExCl.FAI70 - 74893-sht11 Removal1 [Sheet]
FILE NAME: pw://centerpoint-connect-eng-projects/Documents/IDOT/22004197-00/74893/CADD Data/Sheets/0774893-sht-Removal_I70.dgn

Kaskaskia Engineering Group LLC
Illinois Professional Design Firm Professional Engineering Group 184-001203
Illinois Professional Design Firm Professional Engineering Group 184-001203 29-3061586

USER NAME = moverbey	DESIGNED - SS	REVISED -	
	DRAWN - RJO	REVISED -	
PLOT SCALE = 0.16666667 ' / in.	CHECKED - MJO	REVISED -	
PLOT DATE = 10/16/2025	DATE - 10/16/2025	REVISED -	

STATE OF ILLINOIS
DEPARTMENT OF TRANSPORTATION

FAI ROUTE 70 - INTERSTATE 70
REMOVAL PLANS - FAI ROUTE 70

SCALE: 1" = 20' | SHEET 11 OF 14 SHEETS | STA. 1563+00 TO STA. 1569+00

F.A.I. RTE.	SECTION	COUNTY	TOTAL SHEETS	SHEET NO.
70	(25-1)R-BR	EFFINGHAM	747	283
		CONTRACT NO. 74893		
	ILLINOIS	FED. AID PROJECT		

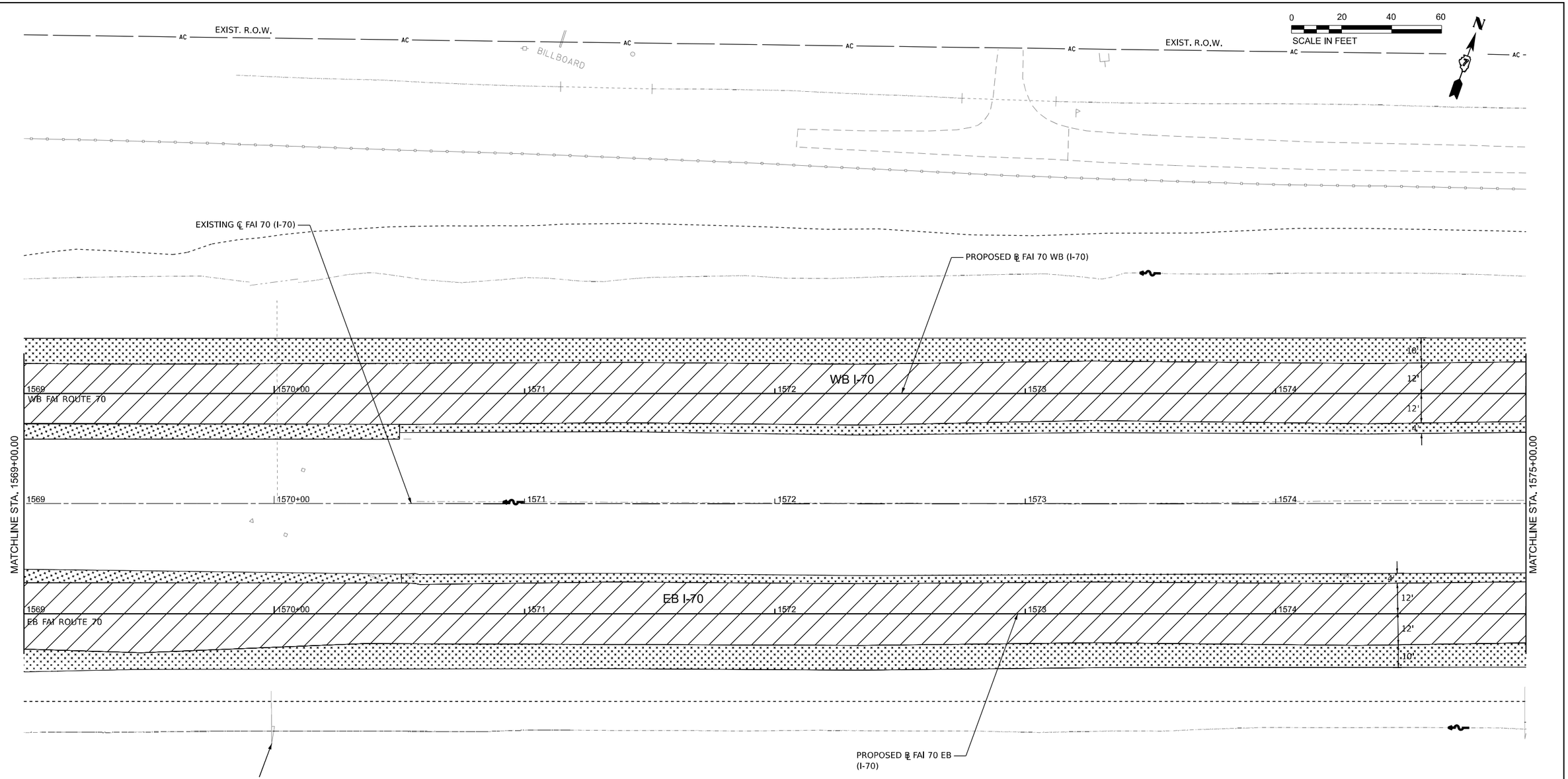

LEGEND

HOT-MIX ASPHALT SURFACE REMOVAL, 4 1/4"

TREE REMOVAL, ACRES

PAVEMENT RECONSTRUCTION

PAVED SHOULDER REMOVAL

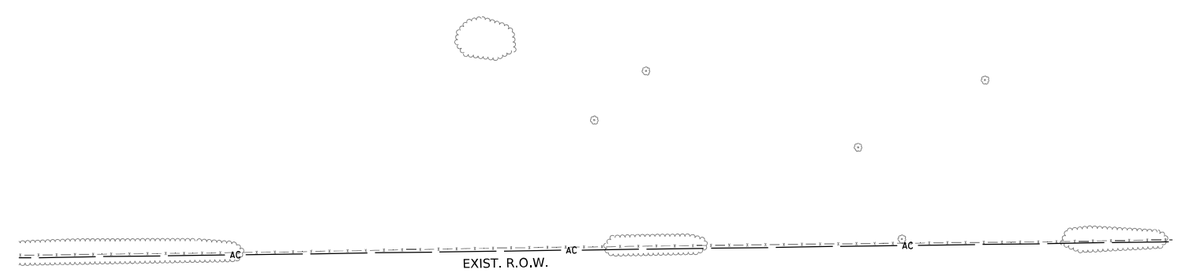

MODEL: Ex01_FAI70 - 74983-sh12 Removal [Sheet]
FILE NAME: pw://mwdgroup.bentley.com:mwdcorp@eda/Documents/EDOT22004197400/74893/CADD Data/Sheets/0774893-sh12Removal_I70.dgn

Kaskaskia Engineering Group, LLC
Illinois Professional Design Firm
Professional Engineering Group
DESIGN FIRM NO. 184-001798
DE-0017-0
20-300196

USER NAME = moverbey	DESIGNED - SS	REVISED -	
	DRAWN - RJO	REVISED -	
PLOT SCALE = 0.16666667 ' / in.	CHECKED - MJO	REVISED -	
PLOT DATE = 10/16/2025	DATE - 10/16/2025	REVISED -	

STATE OF ILLINOIS
DEPARTMENT OF TRANSPORTATION

FAI ROUTE 70 - INTERSTATE 70
REMOVAL PLANS - FAI ROUTE 70

SCALE: 1" = 20' | SHEET 12 OF 14 SHEETS | STA. 1569+00 TO STA. 1575+00

F.A.I. RTE.	SECTION	COUNTY	TOTAL SHEETS	SHEET NO.
70	(25-1)R-BR	EFFINGHAM	747	284
		CONTRACT NO. 74893		
		ILLINOIS	FED. AID PROJECT	

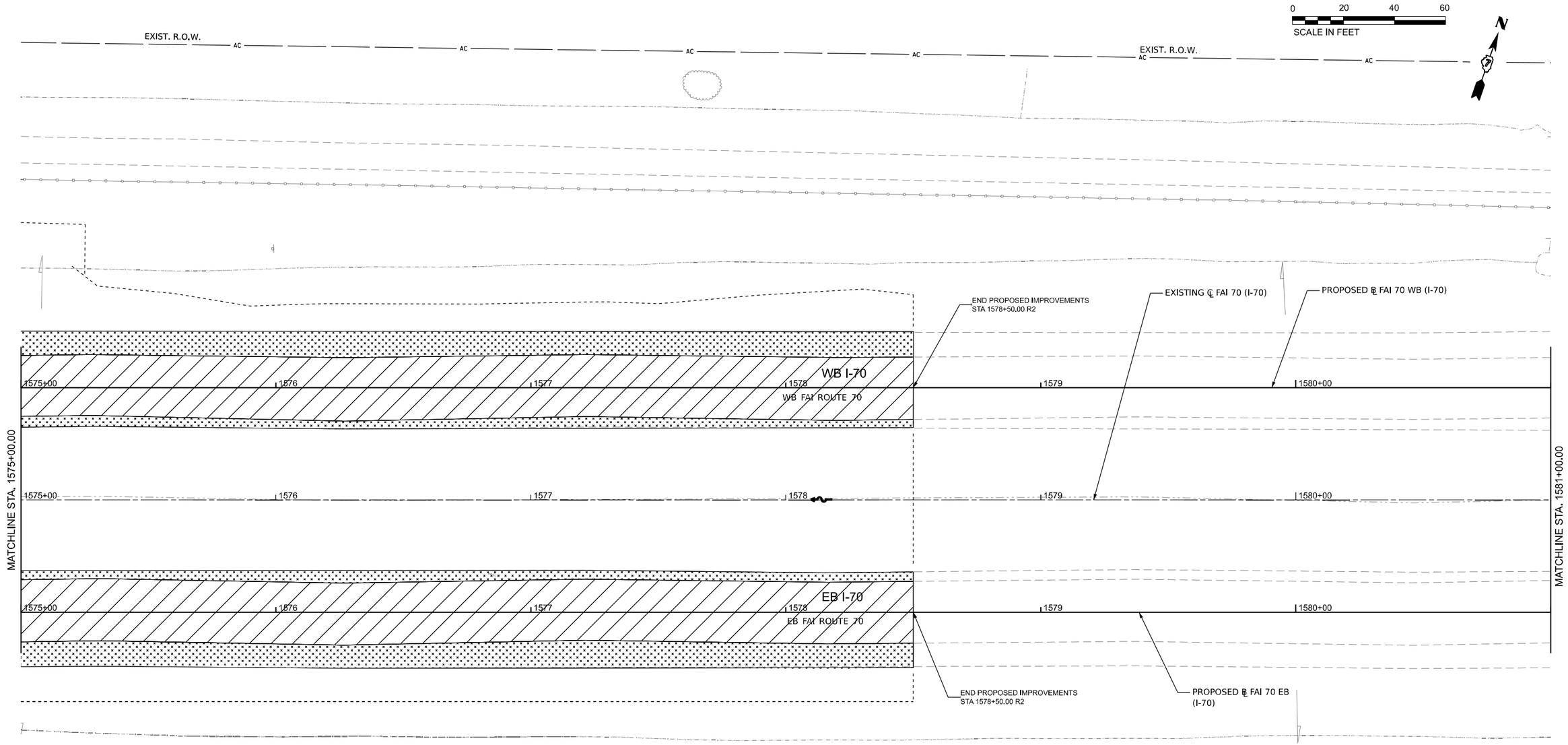

LEGEND

HOT-MIX ASPHALT SURFACE REMOVAL, 4 1/4"

TREE REMOVAL, ACRES

PAVEMENT RECONSTRUCTION

PAVED SHOULDER REMOVAL

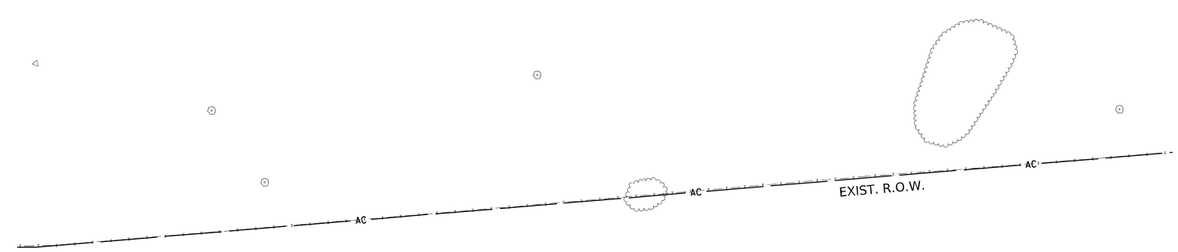

MODEL: ExCLPAI70 - 74893-sh13 Removal [Sheet]
FILE NAME: pw://onesingaw.bentley.com:ionesingaw-connect-eco-projects/Documents/IDOT22004197-00074893-CA70 Data/Sheets/0774893-sht-Removal_I70.dgn

Kaskaskia Engineering Group, LLC
Illinois Professional Design Firm
Professional Engineering Group
1504 E. Main St., Suite 100
Richville, Illinois 62561
618.251.9877 phone
618.251.9878 fax
www.kaskaskiaeng.com
info@kaskaskiaeng.com
Illinois Professional Design Firm
184-000713
EW-0000596

USER NAME = moverbey	DESIGNED - SS	REVISED -	
	DRAWN - RJO	REVISED -	
PLOT SCALE = 0.16666667 ' / in.	CHECKED - MJO	REVISED -	
PLOT DATE = 10/16/2025	DATE - 10/16/2025	REVISED -	

STATE OF ILLINOIS
DEPARTMENT OF TRANSPORTATION

FAI ROUTE 70 - INTERSTATE 70
REMOVAL PLANS - FAI ROUTE 70

SCALE: 1" = 20' | SHEET 13 OF 14 SHEETS | STA. 1575+00 TO STA. 1581+00

F.A.I. RTE.	SECTION	COUNTY	TOTAL SHEETS	SHEET NO.
70	(25-1)R-BR	EFFINGHAM	747	285
		CONTRACT NO. 74893		
	ILLINOIS	FED. AID PROJECT		

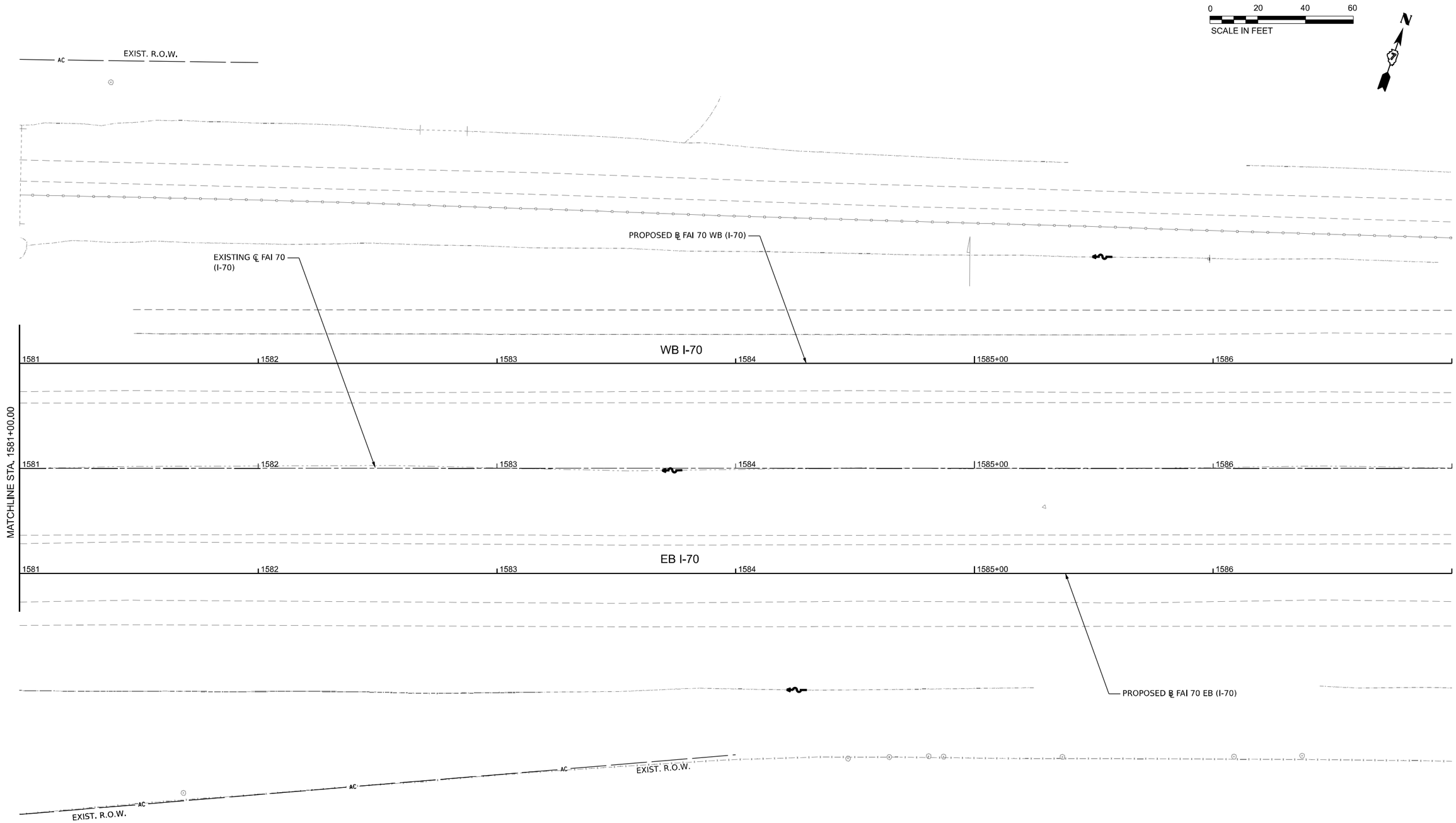

MODEL: ExCLFA70 - 74983-sht14 Removal [Sheet]
FILE NAME: pw://contengo-pw.bentley.com:contengo-connect-projects/Documents/IDOT/22004197-20174893/CADD Data/Sheets/D774893-sht-Removal_170.dgn

Kaskaskia Engineering Group, LLC
214 E. Main St., Suite 100
Carbondale, Illinois 62901
618.457.3617 phone
618.457.3977 fax
www.kaskaskiaeg.com
PROFESSIONAL ENGINEERING
Illinois Professional Design Firm
Professional Engineering Group
184-001570
184-000774
29-3000586

USER NAME = moverbey	DESIGNED - SS	REVISED -	
	DRAWN - RJO	REVISED -	
PLOT SCALE = 0.16666667 ' / in.	CHECKED - MJO	REVISED -	
PLOT DATE = 10/16/2025	DATE - 10/16/2025	REVISED -	

STATE OF ILLINOIS
DEPARTMENT OF TRANSPORTATION

FAI ROUTE 70 - INTERSTATE 70
REMOVAL PLANS - FAI ROUTE 70

SCALE: 1" = 20' | SHEET 14 OF SHEETS | STA. 1581+00 TO STA. 1587+00

F.A.I. RTE.	SECTION	COUNTY	TOTAL SHEETS	SHEET NO.
70	(25-1)R-BR	EFFINGHAM	747	286
		CONTRACT NO. 74893		
	ILLINOIS	FED. AID PROJECT		

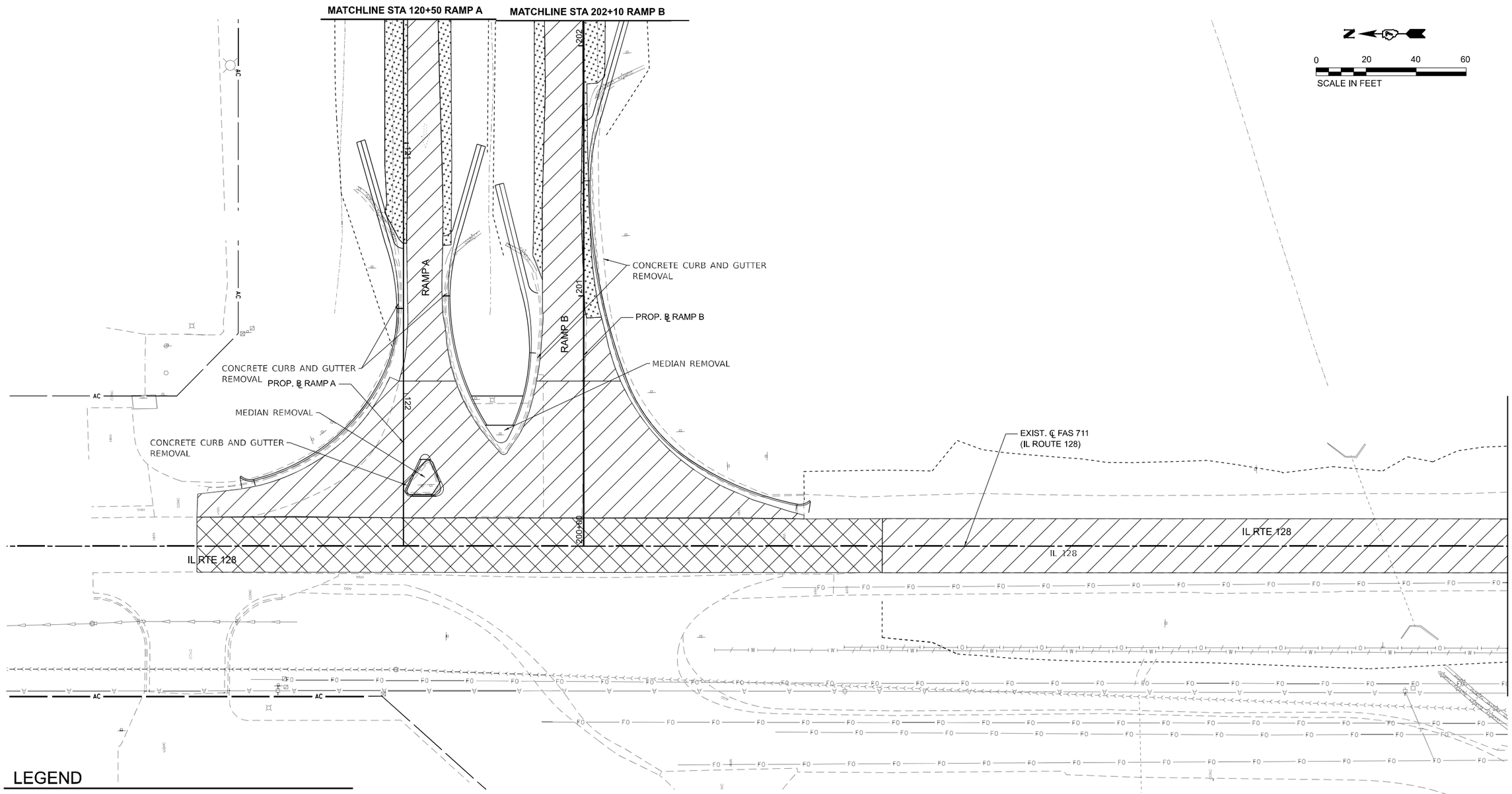

LEGEND

HOT-MIX ASPHALT SURFACE REMOVAL, 4 1/4"

TREE REMOVAL, ACRES

PAVEMENT RECONSTRUCTION

PAVED SHOULDER REMOVAL

MODEL: ExCL - IL128-Plan15 [Sheet]
FILE NAME: pw://mwinginew.bentley.com:ceie-connect-projects/Documents/IDOT/220041/20174893/CADD Data/Sheets/0774893-sht-Removal_Sidewalk-Ramps.dgn

Kaskaskia Engineering Group, LLC
Professional Design Firm
Professional Engineering Group
Illinois Professional Design Firm License No. 184-001112
Expires 4/30
2019 E. Main St., Suite 100
Belleville, Illinois 62220
618.233.8671 phone
618.233.8675 fax
www.kaskaskiieng.com

USER NAME = moverbey	DESIGNED - SS	REVISED -	
	DRAWN - RJO	REVISED -	
PLOT SCALE = 0.16666667 ' / in.	CHECKED - MJO	REVISED -	
PLOT DATE = 10/16/2025	DATE - 10/16/2025	REVISED -	

STATE OF ILLINOIS
DEPARTMENT OF TRANSPORTATION

FAI ROUTE 70 - INTERSTATE 70
REMOVAL PLANS - IL ROUTE 128

SCALE: 1" = 20' | SHEET 15 OF SHEETS | STA. 40+50 TO STA. 46+50

F.A.I. RTE.	SECTION	COUNTY	TOTAL SHEETS	SHEET NO.
70	(25-1)R-BR	EFFINGHAM	747	287
		CONTRACT NO. 74893		
		ILLINOIS	FED. AID PROJECT	

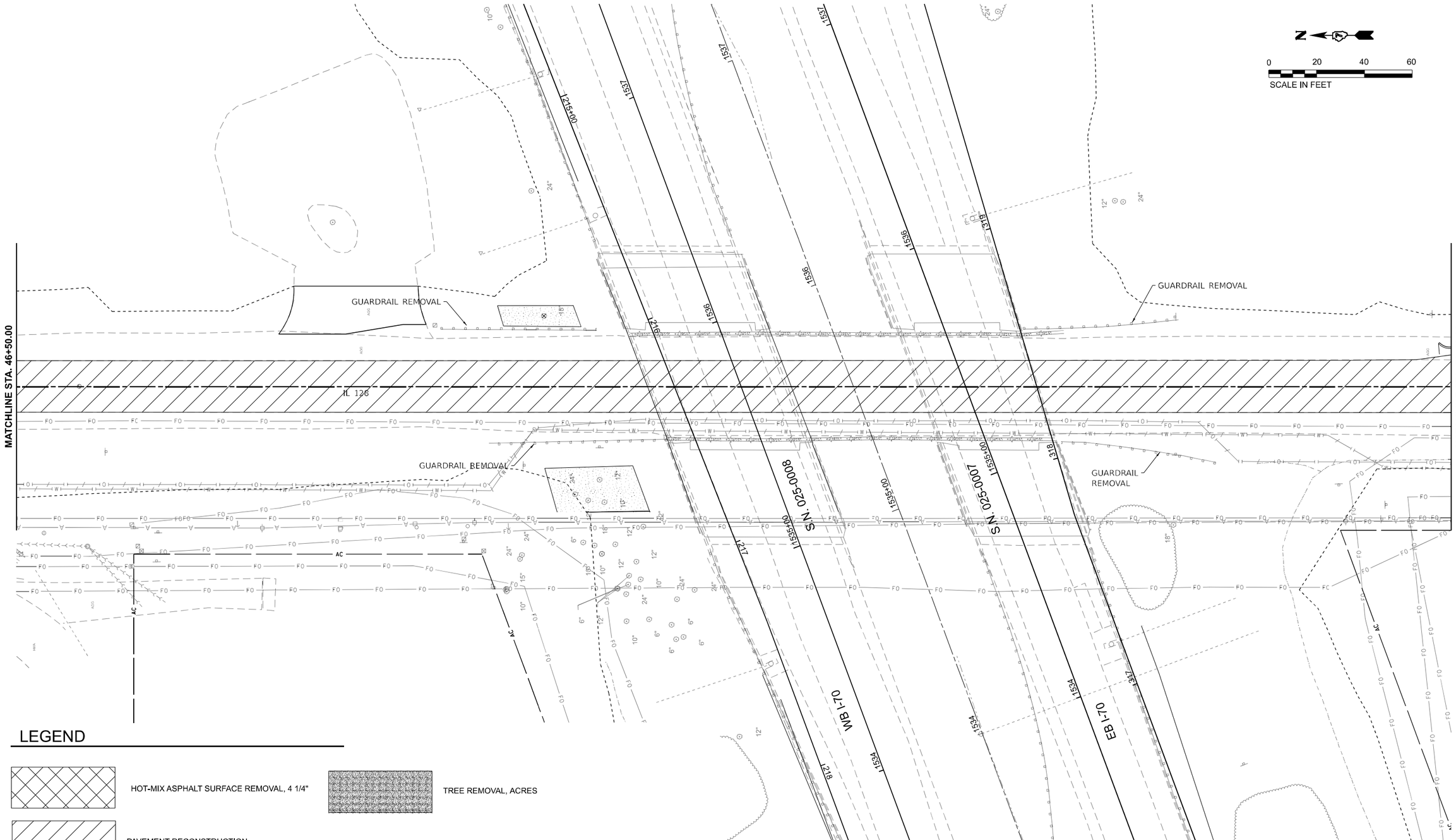
N
0 20 40 60
SCALE IN FEET
MATCHLINE STA. 46+50.00
MATCHLINE STA. 52+50.00
GUARDRAIL REMOVAL
GUARDRAIL REMOVAL
GUARDRAIL REMOVAL
GUARDRAIL REMOVAL
IL 128
1215+00
1216
1537
1537
1537
1536
1536
1536
1535+00
1535+00
1535+00
1535+00
1534
1534
1534

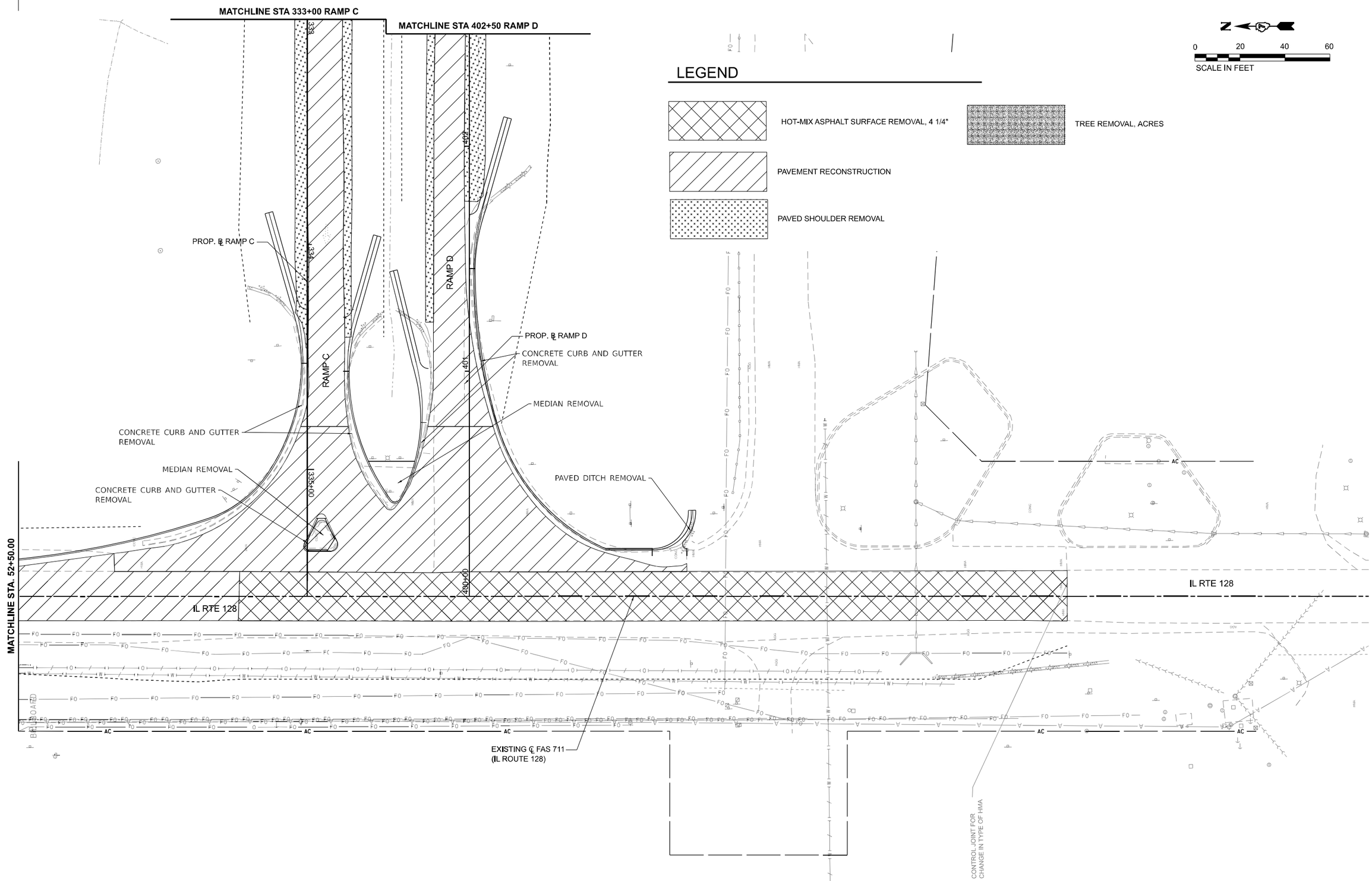

MODEL: ExCL - IL128-Plan17 [Sheet]
FILE NAME: pw://contengpw.bentley.com:connect-projects/Documents/DOT/22004197-0074893/CADD Data/Sheets/0774893-sht-Removal_Sidewalk-Ramps.dgn

Kaskaskia Engineering Group, LLC
214 E. Main St., Suite 100
Belleville, Illinois 62220
618.233.2677 phone
618.233.2677 fax
www.kaskaskiaeg.com
Illinois Professional Design Firm
Professional Engineering Group
184.006293
Expiration Date: 30-Nov-26

USER NAME = moverbey	DESIGNED - SS	REVISED -	
	DRAWN - RJO	REVISED -	
PLOT SCALE = 0.16666667 ' / in.	CHECKED - MJO	REVISED -	
PLOT DATE = 10/16/2025	DATE - 10/16/2025	REVISED -	

STATE OF ILLINOIS
DEPARTMENT OF TRANSPORTATION

FAI ROUTE 70 - INTERSTATE 70
REMOVAL PLANS - IL ROUTE 128

SCALE: 1" = 20' | SHEET 17 OF SHEETS | STA. 52+50 TO STA. 58+50

F.A.I. RTE.	SECTION	COUNTY	TOTAL SHEETS	SHEET NO.
70	(25-1)R-BR	EFFINGHAM	747	289
		CONTRACT NO. 74893		
	ILLINOIS	FED. AID PROJECT		

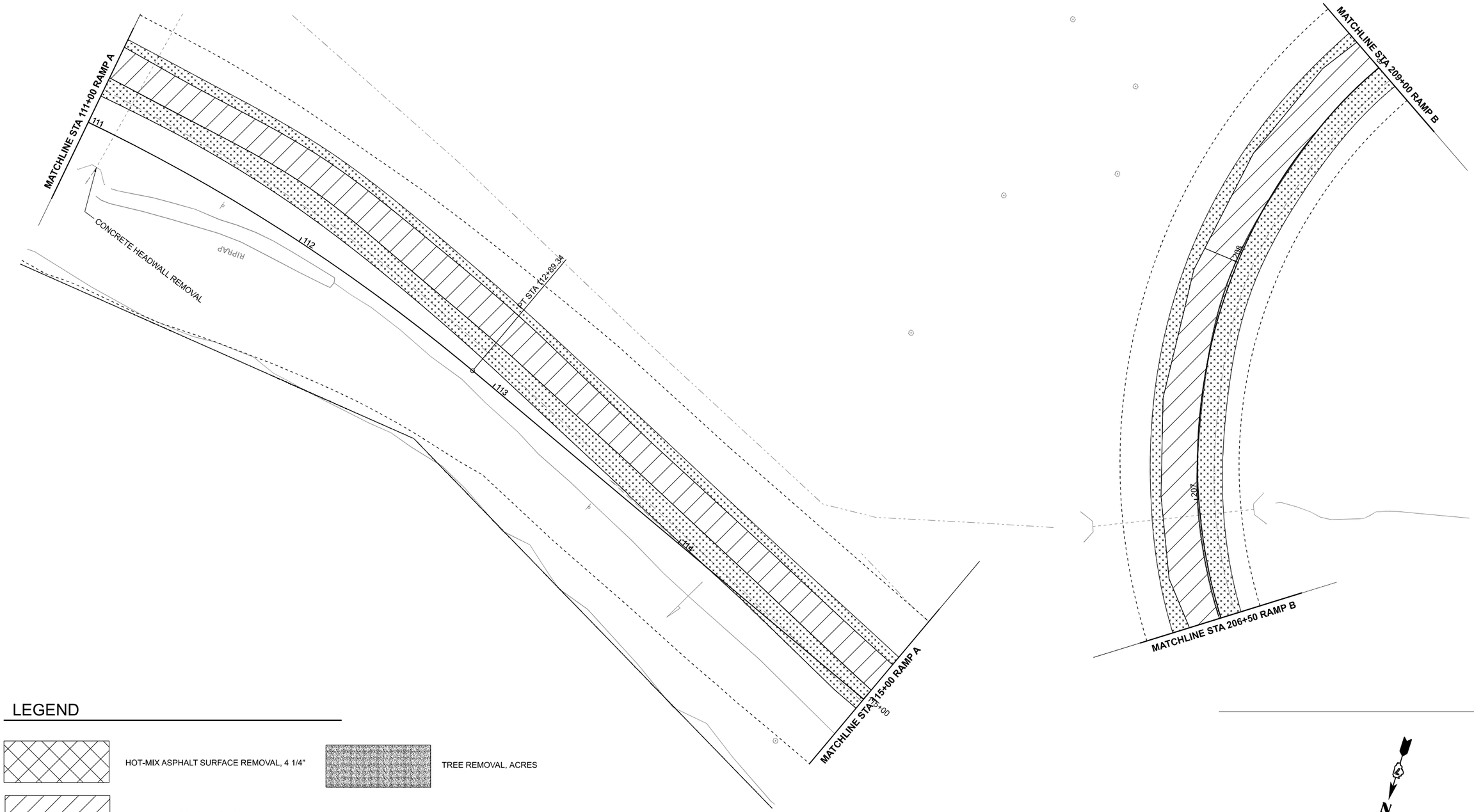

LEGEND

- HOT-MIX ASPHALT SURFACE REMOVAL, 4 1/4"
- TREE REMOVAL, ACRES
- PAVEMENT RECONSTRUCTION
- PAVED SHOULDER REMOVAL

MODEL: RAMPAWBOFF - Ramp\A-Plan18 [Sheet]
FILE NAME: pw:\\cmaingroup.bentley.com:cmcnet\projects\Documents\D0T72\20041974\0\74893\CADD Data\Sheets\0774893-sht-Removal_Sidewalk-Ramps.dgn

Kaskaskia Engineering Group, LLC
Professional Engineering Group
Professional Engineering Firm
Professional Engineering Group
Illinois Professional Design Firm
Professional Engineering Group
LICENSED
184-006715
20-006106

USER NAME = moverbey	DESIGNED - SS	REVISED -	STATE OF ILLINOIS DEPARTMENT OF TRANSPORTATION	FAI ROUTE 70 - INTERSTATE 70 REMOVAL PLAN - RAMPS A & B	
	DRAWN - RJO	REVISED -			
PLOT SCALE = 0.16666667 ' / in.	CHECKED - MJO	REVISED -			
PLOT DATE = 10/16/2025	DATE - 10/16/2025	REVISED -		SCALE: 1" = 20'	SHEET 18 OF 22 SHEETS STA. TO STA.

F.A.I. RTE.	SECTION	COUNTY	TOTAL SHEETS	SHEET NO.
70	(25-1)R-BR	EFFINGHAM	747	290
		CONTRACT NO. 74893		
	ILLINOIS	FED. AID PROJECT		

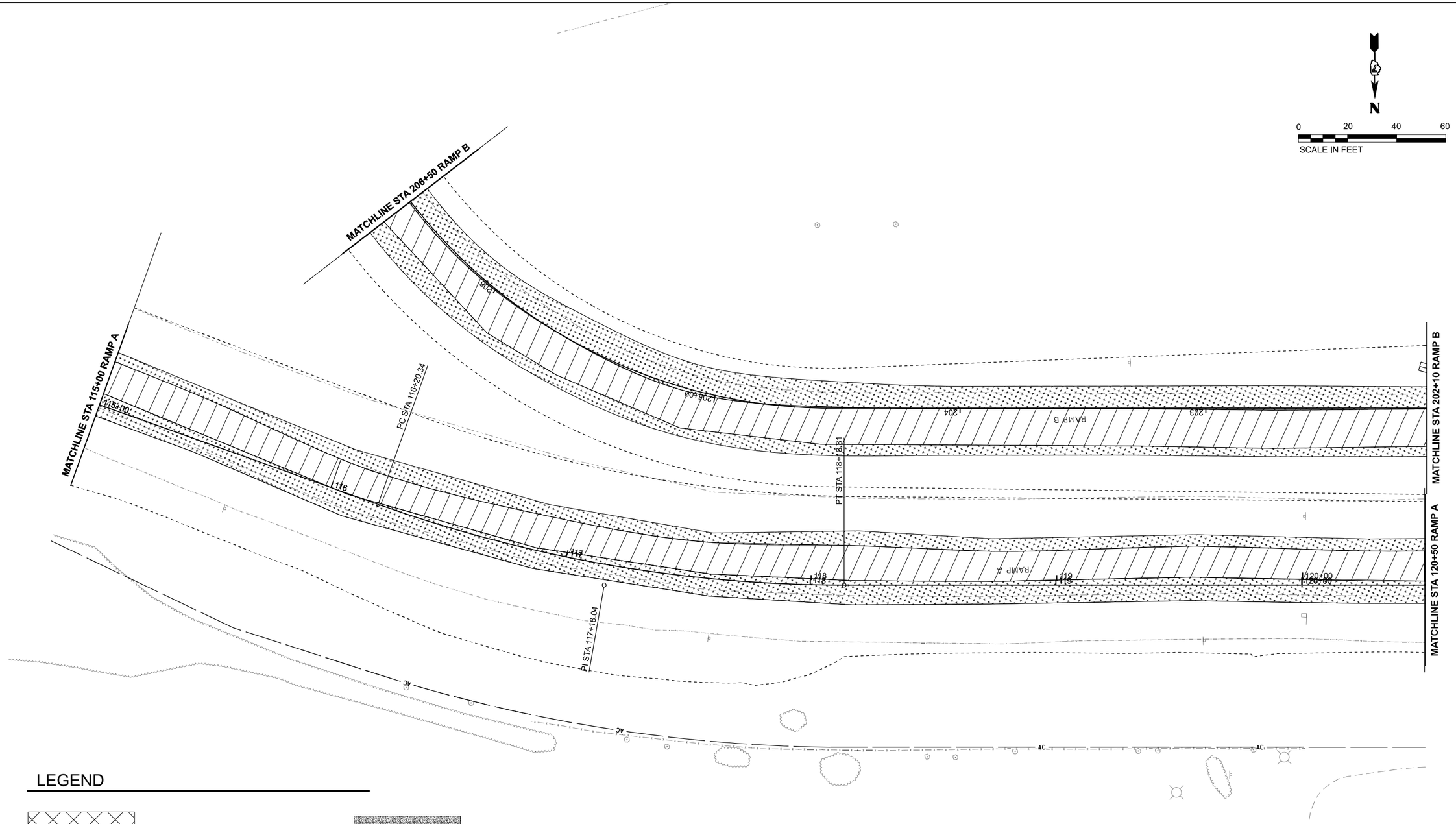

LEGEND

HOT-MIX ASPHALT SURFACE REMOVAL, 4 1/4"

TREE REMOVAL, ACRES

PAVEMENT RECONSTRUCTION

PAVED SHOULDER REMOVAL

MODEL: RAMPAWBOFF - Ramp(A-Plan19 [Sheet]
FILE NAME: pw://contengpw.bentley.com:connect-projects/Documents/DOT/22004197-A0/774893/CADD Data/Sheets/0774893-sht-xRemoval_Sidewalk-Ramps.dgn

Kaskaskia Engineering Group, LLC
Professional Design Firm
Illinois Professional Design Firm
Professional Engineering Group
104 E. Main St., Suite 100
Belleville, Illinois 62220
618.233.8675 phone
618.233.8677 fax
www.kaskaskiaeng.com
EXPIRATION DATE
LICENSE NO.
184.006973
29-3001006

USER NAME = moverbey	DESIGNED - SS	REVISED -	
	DRAWN - RJO	REVISED -	
PLOT SCALE = 0.16666667 ' / in.	CHECKED - MJO	REVISED -	
PLOT DATE = 10/16/2025	DATE - 10/16/2025	REVISED -	

STATE OF ILLINOIS
DEPARTMENT OF TRANSPORTATION

FAI ROUTE 70 - INTERSTATE 70
REMOVAL PLANS - RAMP A & B

SCALE: 1" = 20' | SHEET 19 OF 22 SHEETS | STA. TO STA.

F.A.I. RTE.	SECTION	COUNTY	TOTAL SHEETS	SHEET NO.
70	(25-1)R-BR	EFFINGHAM	747	291
		CONTRACT NO. 74893		
	ILLINOIS	FED. AID PROJECT		

LEGEND

HOT-MIX ASPHALT SURFACE REMOVAL, 4 1/4"

TREE REMOVAL, ACRES

PAVEMENT RECONSTRUCTION

PAVED SHOULDER REMOVAL

0 20 40 60
SCALE IN FEET

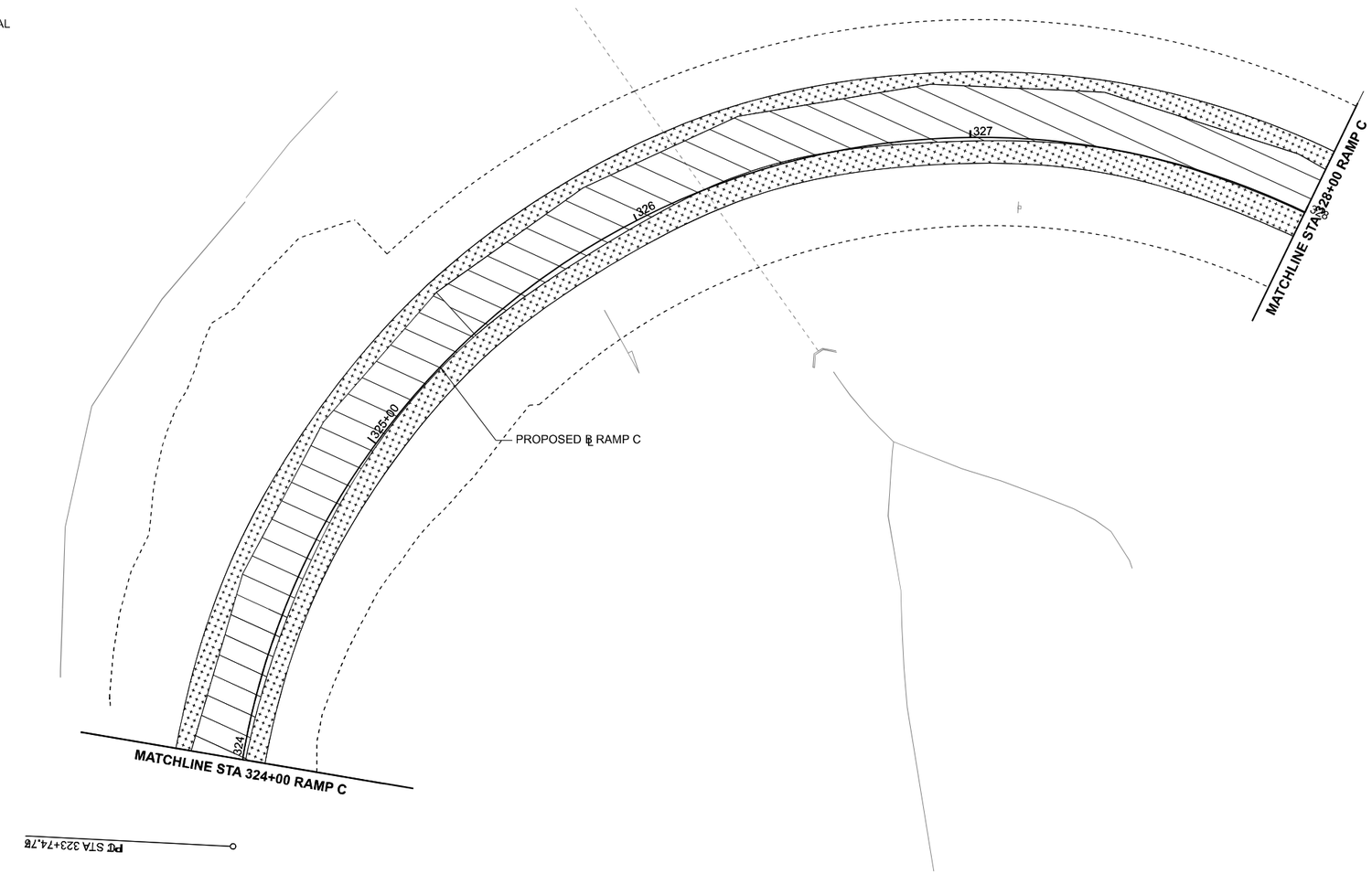

MODEL: RAMPCEBOFF - RampC-Plan20 [Sheet]
FILE NAME: pw://centerpoint.bentley.com:centerpoint-projects/Documents/IDOT/20041974/07/74893/CADD Data/Sheets/0774893-Active-Removal_Sidewalk-Ramps.dgn

Kaskaskia Engineering Group, LLC PROFESSIONAL ENGINEERS Prairie Professional Design Firm Professional Engineering Group	214 E. Main St., Suite 100 Richmond, Illinois 60071 630.251.9877 phone 630.251.9879 fax www.kaskaskiaeng.com Lance Mobley LICENSED EXPIRES 20-300386	USER NAME = moverbey	DESIGNED - SS	REVISED -	STATE OF ILLINOIS DEPARTMENT OF TRANSPORTATION	FAI ROUTE 70 - INTERSTATE 70 REMOVAL PLANS - RAMP C	F.A.I. RTE.	SECTION	COUNTY	TOTAL SHEETS	SHEET NO.
			DRAWN - RJO	REVISED -			70	(25-1)R-BR	EFFINGHAM	747	292
		PLOT SCALE = 0.16666667 ' / in.	CHECKED - MJO	REVISED -					CONTRACT NO. 74893		
		PLOT DATE = 10/16/2025	DATE - 10/16/2025	REVISED -		SCALE: 1" = 20' SHEET 20 OF 22 SHEETS STA. 324+00 TO STA. 328+00			ILLINOIS	FED. AID PROJECT	

N

0 20 40 60
SCALE IN FEET

MATCHLINE STA 328+00 RAMP C

MATCHLINE STA 408+50 RAMP D

MATCHLINE STA 333+00 RAMP C

MATCHLINE STA 402+50 RAMP D

PROPOSED ℄ RAMP C

PROPOSED ℄ RAMP D

RAMP C

RAMP D

1328

1329

1330+00

1331

1332

1333

1402

1403

1404

1405+00

1406

1407

1408

PC STA 405+12.01

PI STA 407+21.51

EAST MILL DRIVE

LEGEND

HOT-MIX ASPHALT SURFACE REMOVAL, 4 1/4"

TREE REMOVAL, ACRES

PAVEMENT RECONSTRUCTION

PAVED SHOULDER REMOVAL

MODEL: RAMPDERON - Ramp(D-Plan)21 [Sheet]
FILE NAME: pw://oneengrpw.bentley.com:connect-connect-projects/Documents/IDOT22004197-00/74893-CA70 Data/Sheets/0774893-sht-Removal_Sidewalk-Ramps.dgn

Kaskaskia Engineering Group, LLC
Illinois Professional Design Firm
Professional Engineering Group
2W E. Main St., Suite 100
Belleville, Illinois 62220
618.233.8617 phone
618.233.8627 fax
www.kaskaskiaeng.com
Illinois Professional Design Firm
184-000713
29-3000396

USER NAME = moverbey	DESIGNED - SS	REVISED -	
	DRAWN - RJO	REVISED -	
PLOT SCALE = 0.16666667 ' / in.	CHECKED - MJO	REVISED -	
PLOT DATE = 10/16/2025	DATE - 10/16/2025	REVISED -	

STATE OF ILLINOIS
DEPARTMENT OF TRANSPORTATION

FAI ROUTE 70 - INTERSTATE 70
REMOVAL PLANS - RAMP A & B

SCALE: 1"=20' | SHEET 21 OF 22 SHEETS | STA. TO STA.

F.A.I. RTE.	SECTION	COUNTY	TOTAL SHEETS	SHEET NO.
70	(25-1)R-BR	EFFINGHAM	747	293
		CONTRACT NO. 74893		
		ILLINOIS	FED. AID PROJECT	

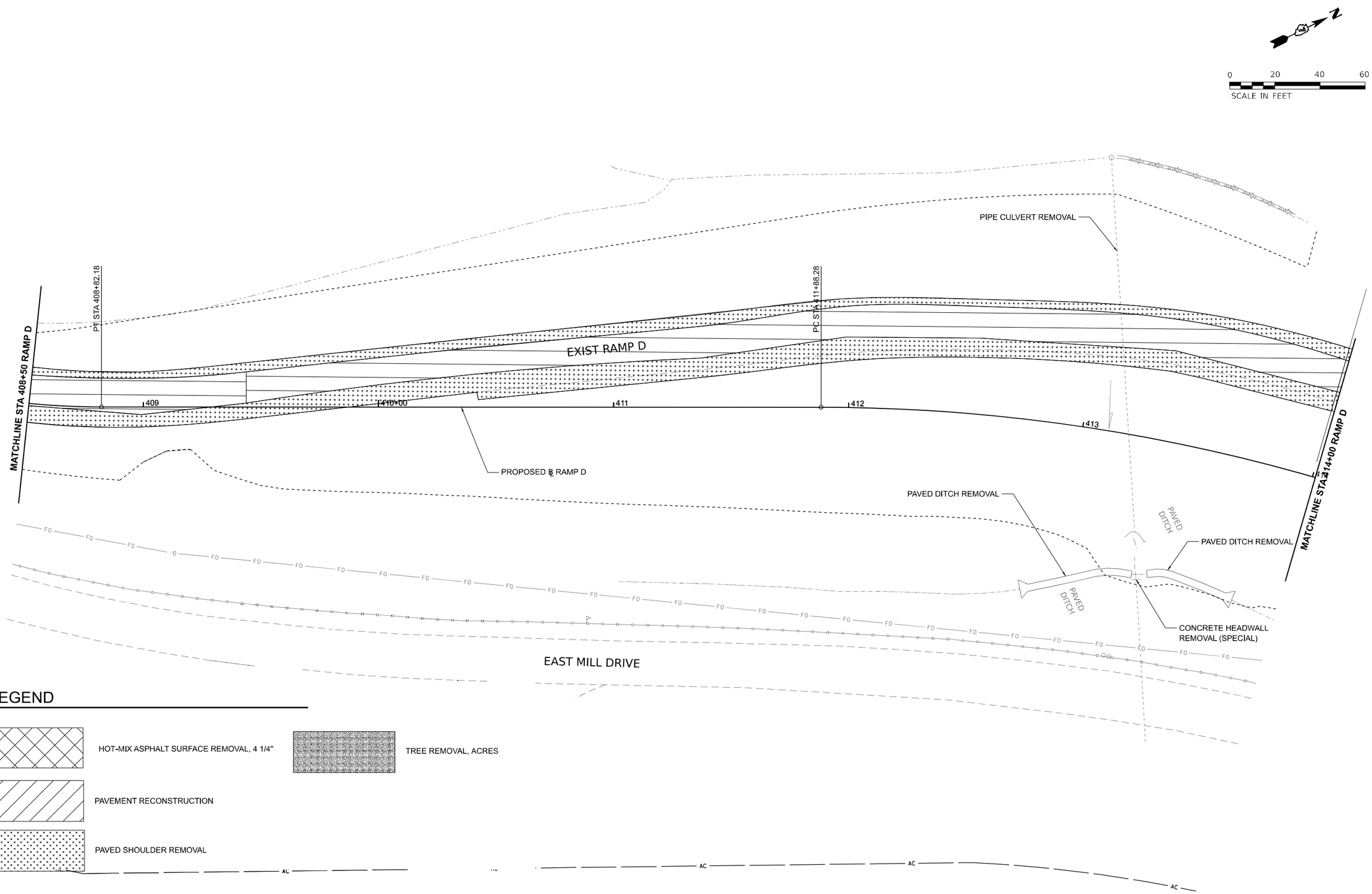

MODEL: RAMPDEBON • Ramp D-2 filet22 [Sheet]
FILE NAME: pw://centegra-pw.bentley.com:centegra-connect-projects/Documents/IDOT/22004197-4/074893/CADD Data/Sheets/0774893-sht-pt-removal_Sitemap-Ramps.dgn

Kaskaskia Engineering Group, LLC Professional Design Firm Professional Engineering Group Illinois Corporation License No. 184-001012 Illinois Professional Design Firm License No. 184-001012 Professional Engineering Group 20-300/086 204 E. Main St., Suite 300 Belleville, Illinois 62220 618.233.8675 phone 618.233.8699 fax www.kaskaskiaeng.com	USER NAME = moverbey	DESIGNED - SS	REVISED -	STATE OF ILLINOIS DEPARTMENT OF TRANSPORTATION	FAI ROUTE 70 - INTERSTATE 70 REMOVAL PLANS - RAMP D			F.A.I. RTE.	SECTION	COUNTY	TOTAL SHEETS	SHEET NO.
		DRAWN - RJO	REVISED -					70	(25-1)R-BR	EFFINGHAM	747	294
	PLOT SCALE = 0.16666667 ' / in.	CHECKED - MJO	REVISED -							CONTRACT NO. 74893		
	PLOT DATE = 10/16/2025	DATE - 10/16/2025	REVISED -		SCALE: 1" = 20'	SHEET 22 OF 22 SHEETS	STA. 408+50 TO STA. 414+00			ILLINOIS	FED. AID PROJECT	

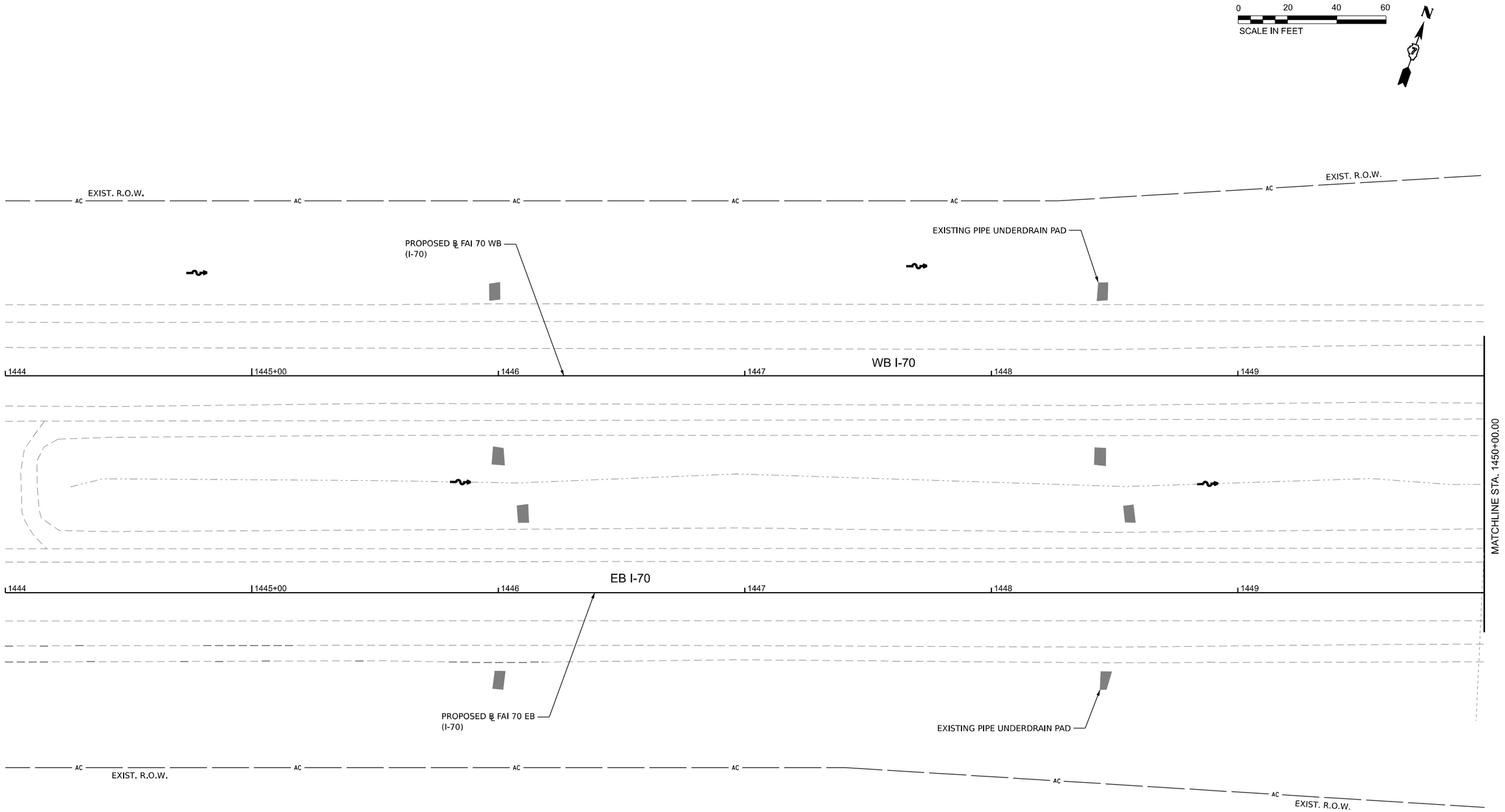

LEGEND

	SEEDING CLASS 2A WITH MULCH METHOD 2		PERIMETER EROSION BARRIER		INLET AND PIPE PROTECTION
	SEEDING CLASS 2A WITH EROSION CONTROL BLANKET		PROPOSED DITCH FLOW ARROW		TEMPORARY DITCH CHECK
	RIPRAP		EXISTING DITCH FLOW ARROW		AGGREGATE DITCH CHECK

MODEL: ExCLFA70 - 74983=dl01 Erosion [Sheet]
FILE NAME: pw:\\ontang-pw.bentley.com:ontc-connect-pw01\projects\Documents\IDOT\220041\7-00\74893\CADD Data\Sheets\D774893=sht=Eros_I70.dgn

Kaskaskia Engineering Group, LLC
200 E. Main St., Suite 310
Belleville, Illinois 62220
618.233.5857 phone
618.233.8317 fax
www.kaskaskiaeng.com
LICENSED PROFESSIONAL DESIGN FIRM
Illinois Professional Design Firm 184.004777
Professional Engineering Group 20-5050586

USER NAME = moverbey	DESIGNED - SS	REVISED -	
	DRAWN - RJO	REVISED -	
PLOT SCALE = 0.16666667 ' / in.	CHECKED - MJO	REVISED -	
PLOT DATE = 10/14/2025	DATE - 10/16/2025	REVISED -	

STATE OF ILLINOIS
DEPARTMENT OF TRANSPORTATION

FAI ROUTE 70 - INTERSTATE 70
EROSION CONTROL PLANS - FAI ROUTE 70

SCALE: 1" = 20' | SHEET 295 OF 747 SHEETS | STA. 1444+00 TO STA. 1450+00

F.A.I. RTE.	SECTION	COUNTY	TOTAL SHEETS	SHEET NO.
70	(25-1)R-BR	EFFINGHAM	747	295
		CONTRACT NO. 74893		
	ILLINOIS	FED. AID PROJECT		

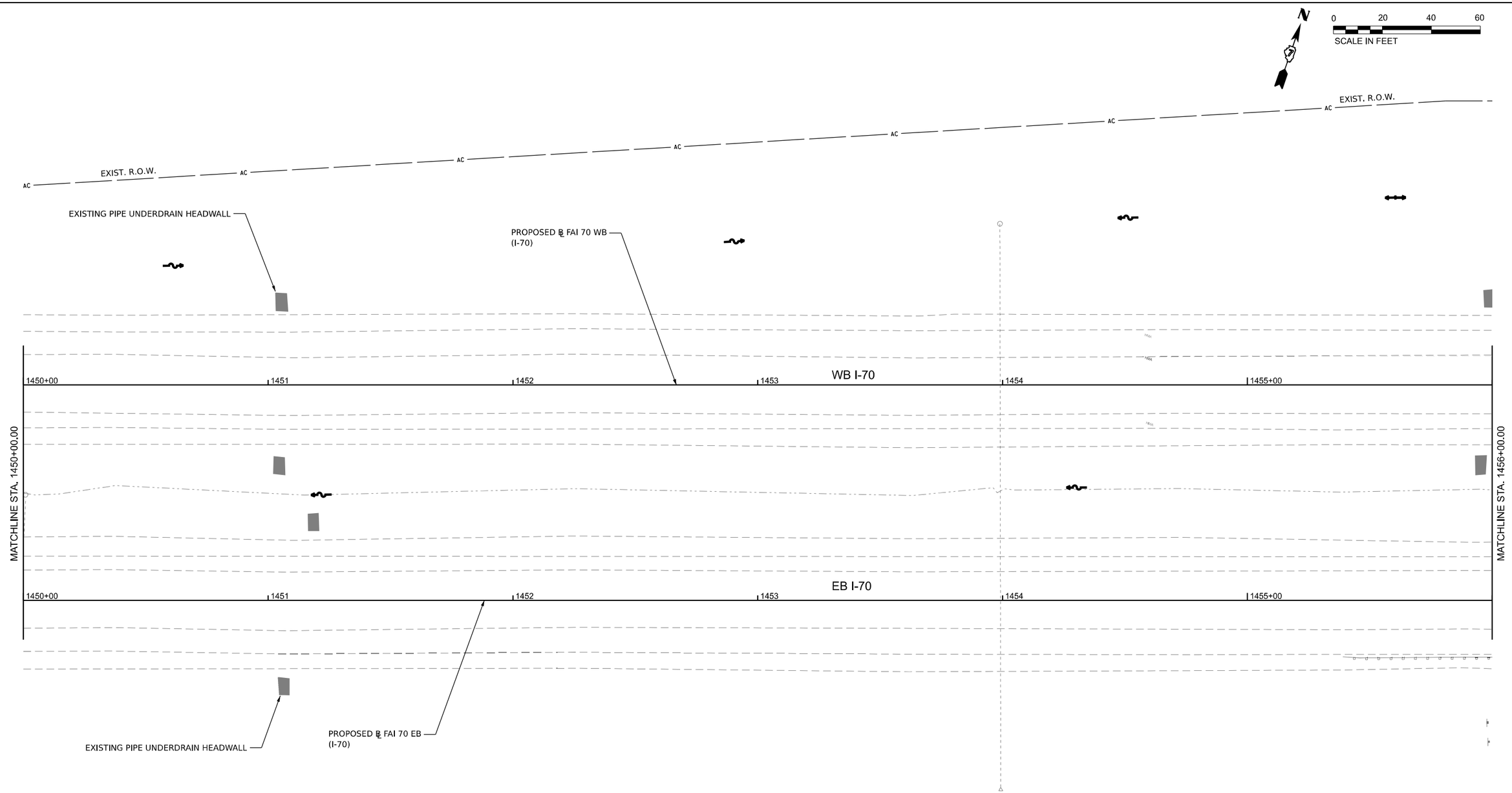

LEGEND

SEEDING CLASS 2A WITH MULCH METHOD 2	PERIMETER EROSION BARRIER	INLET AND PIPE PROTECTION
SEEDING CLASS 2A WITH EROSION CONTROL BLANKET	PROPOSED DITCH FLOW ARROW	TEMPORARY DITCH CHECK
RIPRAP	EXISTING DITCH FLOW ARROW	AGGREGATE DITCH CHECK

MODEL: Ex.G.FAI70 - 74983-sht100 Erosion [Sheet]
FILE NAME: pw://contengpw.bentley.com:connect-projects/Documents/IDOT/20041197-40/774893/CADD Data/Sheets/0774893-sht-Eros_170.dgn

Kaskaskia Engineering Group, LLC
2019 N. Main St., Suite 200
Bloomington, Illinois 61705
309.213.3675 office
309.213.3677 fax
www.kaskaskiaeng.com
Illinois Professional Design Firm
Professional Engineering Group
LICENSE NO. 184-001943
EXP. 04/30/2026
TIN: 37-1563713
ID: 0000356

USER NAME = moverbey	DESIGNED - SS	REVISED -	
	DRAWN - RJO	REVISED -	
PLOT SCALE = 0.16666667 ' / in.	CHECKED - MJO	REVISED -	
PLOT DATE = 10/14/2025	DATE - 10/16/2025	REVISED -	

STATE OF ILLINOIS
DEPARTMENT OF TRANSPORTATION

FAI ROUTE 70 - INTERSTATE 70
EROSION CONTROL PLANS - FAI ROUTE 70

SCALE: 1" =20' | SHEET 296 OF 747 SHEETS | STA. 1450+00 TO STA. 1456+00

F.A.I. RTE.	SECTION	COUNTY	TOTAL SHEETS	SHEET NO.
70	(25-1)R-BR	EFFINGHAM	747	296
		CONTRACT NO. 74893		
	ILLINOIS	FED. AID PROJECT		

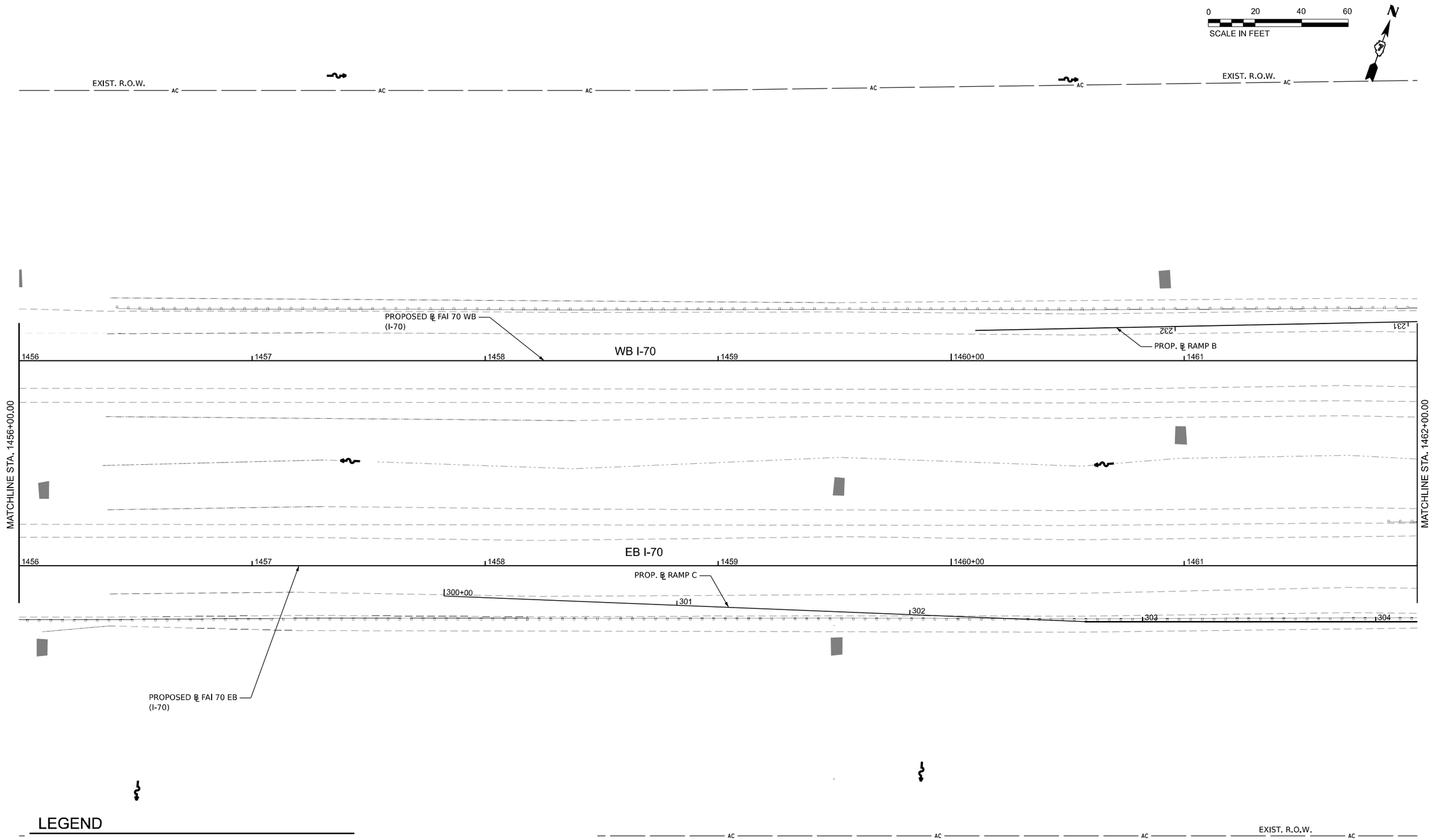

LEGEND

- SEEDING CLASS 2A WITH MULCH METHOD 2
- SEEDING CLASS 2A WITH EROSION CONTROL BLANKET
- RIPRAP
- PERIMETER EROSION BARRIER
- PROPOSED DITCH FLOW ARROW
- EXISTING DITCH FLOW ARROW
- INLET AND PIPE PROTECTION
- TEMPORARY DITCH CHECK
- AGGREGATE DITCH CHECK

MODEL: ExCLFAI70 - 74585=dl103 Erosion [Sheet]
FILE NAME: /pw:\\centeng=pw.bentley.com:ccmetc=projects/Documents/IDOT/20043197-00/74585\CADD Data/Sheets/D774585=dl103-Eros_I70.dgn

Kaskaskia Engineering Group, LLC
209 S. Main St., Suite 300
Belleville, Illinois 62220
618.233.5875 phone
618.233.5877 fax
www.kaskaskiaeng.com
PROFESSIONAL DESIGN FIRM
Illinois Professional Design Firm
Professional Engineering Group
LICENSE NO.
184.006793
20.000056

USER NAME = moverbey	DESIGNED - SS	REVISED -	
	DRAWN - RJO	REVISED -	
PLOT SCALE = 0.16666667 ' / in.	CHECKED - MJO	REVISED -	
PLOT DATE = 10/14/2025	DATE - 10/16/2025	REVISED -	

STATE OF ILLINOIS
DEPARTMENT OF TRANSPORTATION

FAI ROUTE 70 - INTERSTATE 70
EROSION CONTROL PLANS - FAI ROUTE 70

SCALE: 1" = 20' | SHEET 297 OF 747 SHEETS | STA. 1456+00 TO STA. 1462+00

F.A.I. RTE.	SECTION	COUNTY	TOTAL SHEETS	SHEET NO.
70	(25-1)R-BR	EFFINGHAM	747	297
		CONTRACT NO. 74893		
	ILLINOIS	FED. AID PROJECT		

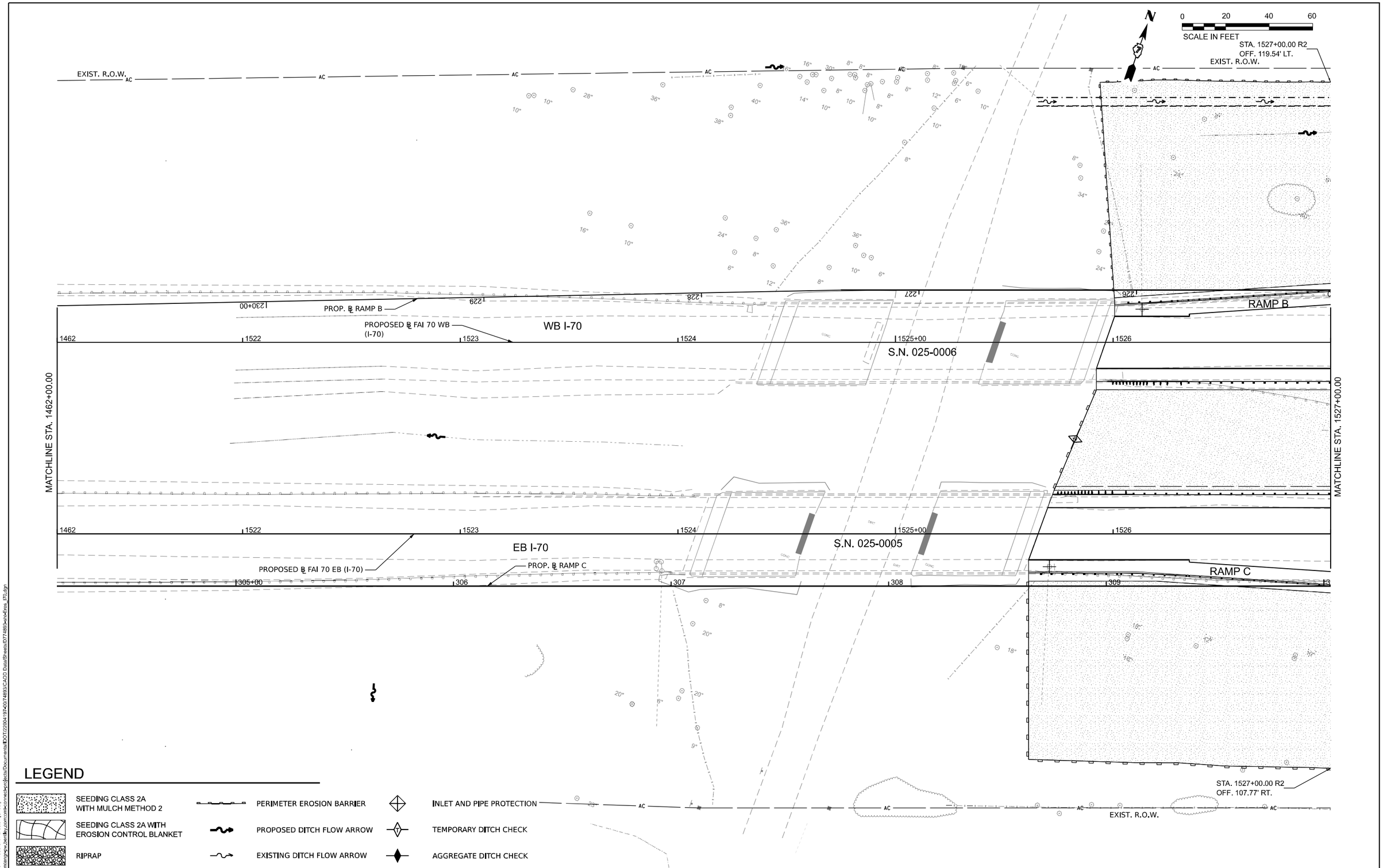

LEGEND

- SEEDING CLASS 2A WITH MULCH METHOD 2
- SEEDING CLASS 2A WITH EROSION CONTROL BLANKET
- RIPRAP
- PERIMETER EROSION BARRIER
- PROPOSED DITCH FLOW ARROW
- EXISTING DITCH FLOW ARROW
- INLET AND PIPE PROTECTION
- TEMPORARY DITCH CHECK
- AGGREGATE DITCH CHECK

MODEL: ExCLFAI70 - 74893-sh14 Erosion [Sheet]
FILE NAME: pw://conangroup.bentley.com:conaccelerator-projects/Documents/EDOT/22004119740/74893/CADD Data/Sheets/0774893-sh14-Eros_I70.dgn

Kaskaskia Engineering Group, LLC
201 E. Main St., Suite 300
Belleville, Illinois 62220
618.233.8075 phone
618.233.1077 fax
www.kaskaskiaeng.com
PROFESSIONAL DESIGN FIRM
Illinois Professional Design Firm: 184-000712
Professional Engineering Group
LICENSE NO.
Expiration Date:
20-30/0/61

USER NAME = moverbey	DESIGNED - SS	REVISED -	
	DRAWN - RJO	REVISED -	
PLOT SCALE = 0.16666667 ' / in.	CHECKED - MJO	REVISED -	
PLOT DATE = 10/14/2025	DATE - 10/16/2025	REVISED -	

STATE OF ILLINOIS
DEPARTMENT OF TRANSPORTATION

FAI ROUTE 70 - INTERSTATE 70
EROSION CONTROL PLANS - FAI ROUTE 70

SCALE: 1" = 20' | SHEET 298 OF 747 SHEETS | STA. 1462+00 TO STA. 1527+00

F.A.I. RTE.	SECTION	COUNTY	TOTAL SHEETS	SHEET NO.
70	(25-1)R-BR	EFFINGHAM	747	298
		CONTRACT NO. 74893		
	ILLINOIS	FED. AID PROJECT		

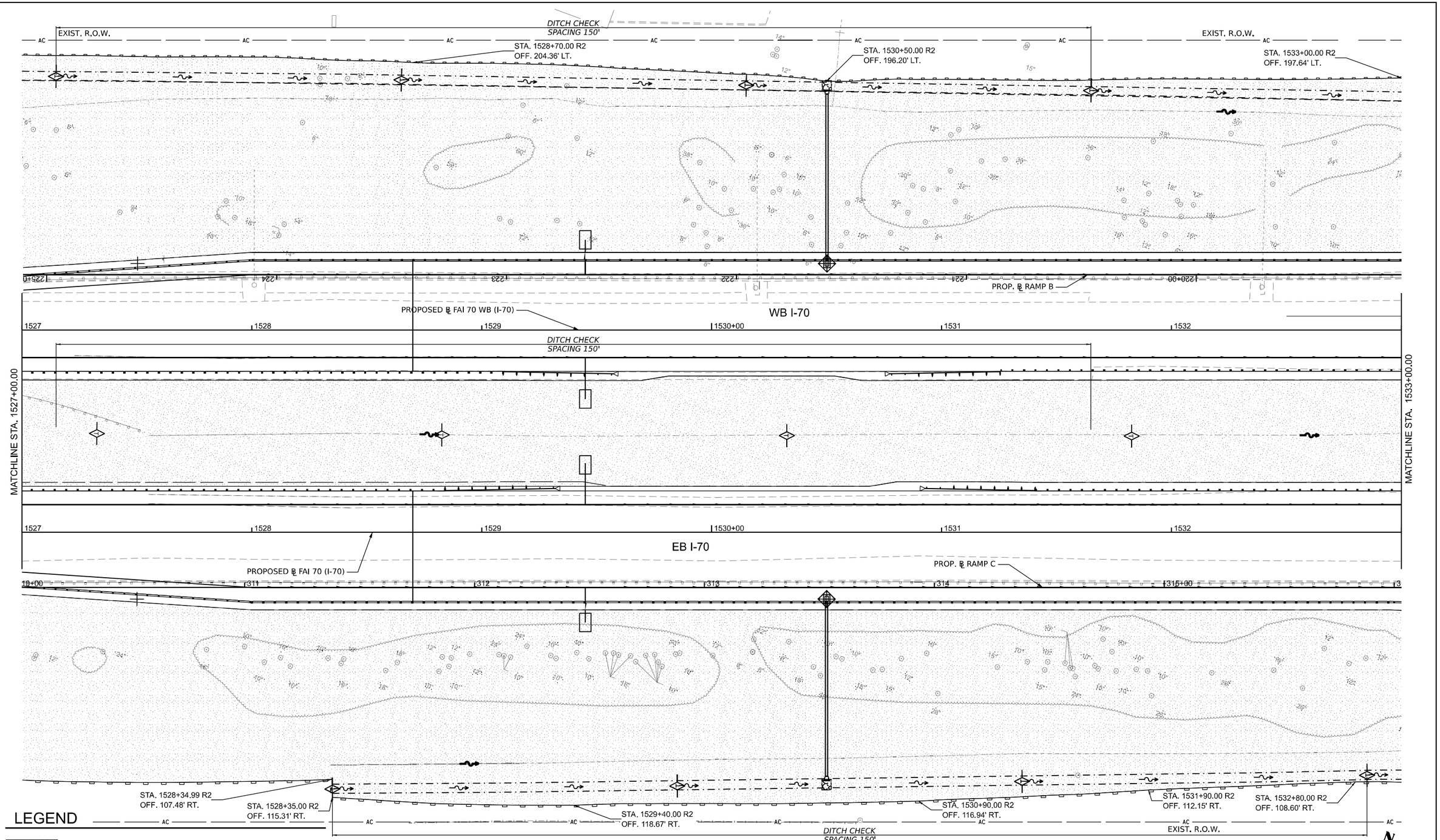

LEGEND

- SEEDING CLASS 2A WITH MULCH METHOD 2
- SEEDING CLASS 2A WITH EROSION CONTROL BLANKET
- RIPRAP
- PERIMETER EROSION BARRIER
- PROPOSED DITCH FLOW ARROW
- EXISTING DITCH FLOW ARROW
- INLET AND PIPE PROTECTION
- TEMPORARY DITCH CHECK
- AGGREGATE DITCH CHECK

MODEL: ExCLFA70 - 74983-all05 Erosion [Sheet]
FILE NAME: pw://contengo-pw.bentley.com:contengo-connect-projects/Documents/IDOT(22004197-20)74893/CADD Data/Sheets/D774893-sht-Eros_170.dgn

Kaskaskia Engineering Group, LLC
249 E. Main St., Suite 100
Belleville, Illinois 62220
(618) 233-8976 phone
(618) 233-8987 fax
www.kaskaskiaengineering.com
PROFESSIONAL DESIGN FIRM
Illinois Professional Design Firm
Professional Engineering Group
LICENSE NO.
184-001715
EXPIRATION DATE
30 Sep 2026

USER NAME = moverbey	DESIGNED - SS	REVISED -	
	DRAWN - RJO	REVISED -	
PLOT SCALE = 0.16666667 ' / in.	CHECKED - MJO	REVISED -	
PLOT DATE = 10/14/2025	DATE - 10/16/2025	REVISED -	

STATE OF ILLINOIS
DEPARTMENT OF TRANSPORTATION

FAI ROUTE 70 - INTERSTATE 70
EROSION CONTROL PLANS - FAI ROUTE 70

SCALE: 1" = 20' | SHEET 299 OF 747 SHEETS | STA. 1527+00 TO STA. 1533+00

F.A.I. RTE.	SECTION	COUNTY	TOTAL SHEETS	SHEET NO.
70	(25-1)R-BR	EFFINGHAM	747	299
		CONTRACT NO. 74893		
	ILLINOIS	FED. AID PROJECT		

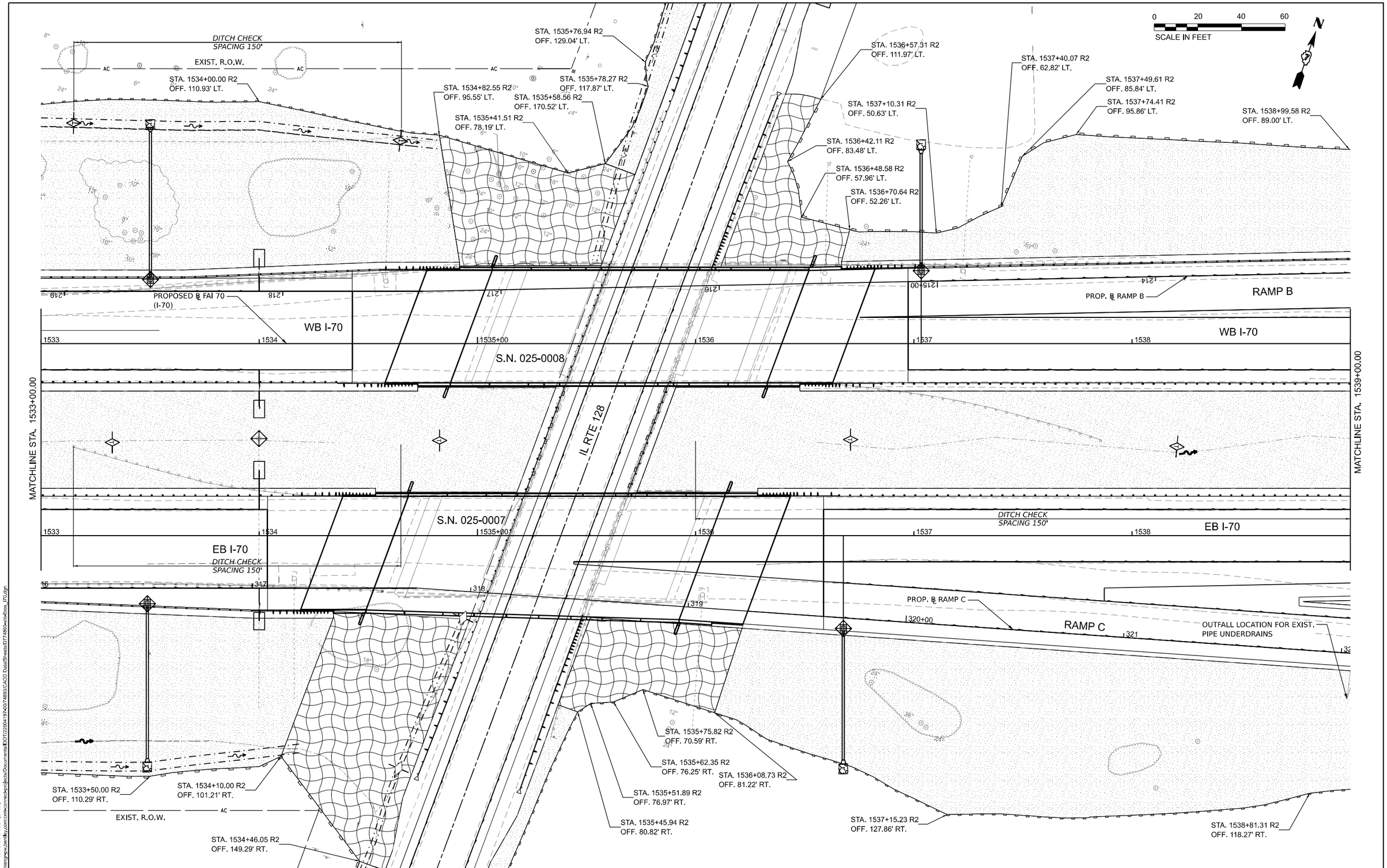

MODEL: E-Cl FAI70 - 74983-sdr06 Erosion [Sheet]
FILE NAME: pw://contengpw.bentley.com:pw-connect-eu-projects/Documents/IDOT/20041197-40/74893/CADD Data/Sheets/0774893-sht-Eros_170.dgn

Kaskaskia Engineering Group, LLC
209 E. Main St., Suite 300
Belleville, Illinois 62220
Tel 618.236.5000 Fax 618.233.8577 fax
www.kaskaskieng.com
Illinois Professional Design Firm 184-001977
Professional Engineering Group 28-500101

USER NAME = moverbey	DESIGNED - SS	REVISED -	
	DRAWN - RJO	REVISED -	
PLOT SCALE = 0.16666667 ' / in.	CHECKED - MJO	REVISED -	
PLOT DATE = 10/14/2025	DATE - 10/16/2025	REVISED -	

STATE OF ILLINOIS
DEPARTMENT OF TRANSPORTATION

FAI ROUTE 70 - INTERSTATE 70
EROSION CONTROL PLANS - FAI ROUTE 70

SCALE: 1" = 20' | SHEET 300 OF 747 SHEETS | STA. 1533+00 TO STA. 1539+00

F.A.I. RTE.	SECTION	COUNTY	TOTAL SHEETS	SHEET NO.
70	(25-1)R-BR	EFFINGHAM	747	300
		CONTRACT NO. 74893		
	ILLINOIS	FED. AID PROJECT		