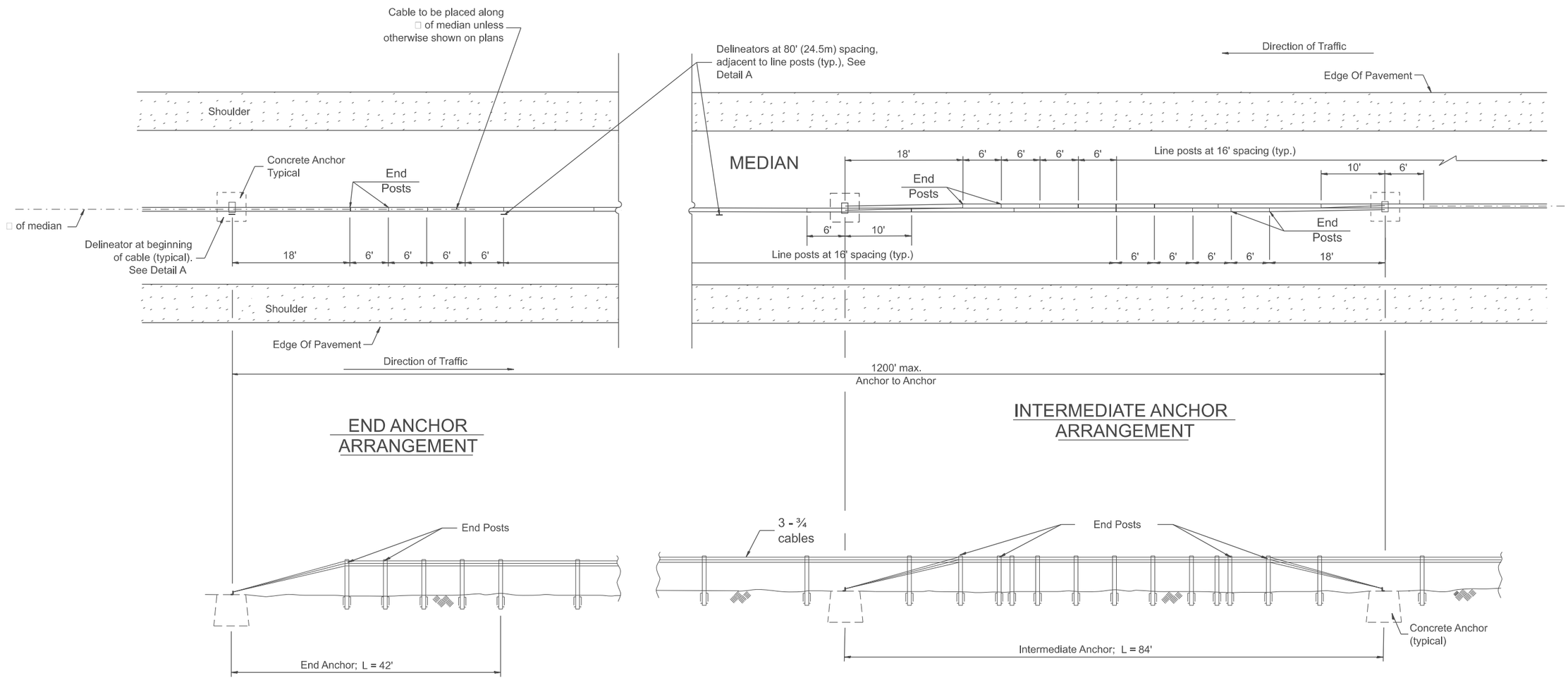

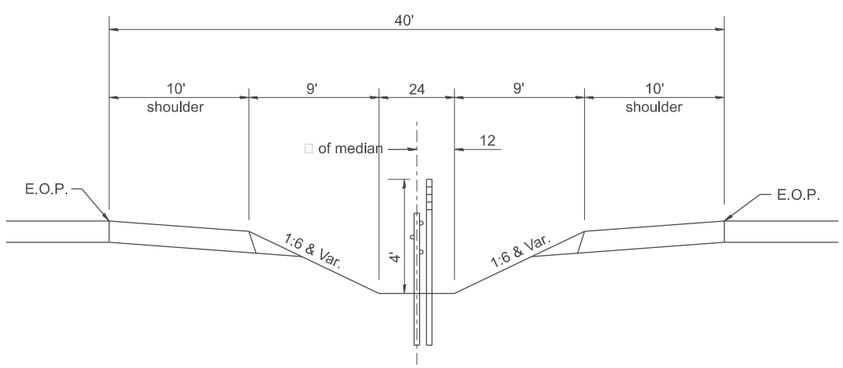

40' OPEN DITCH MEDIAN

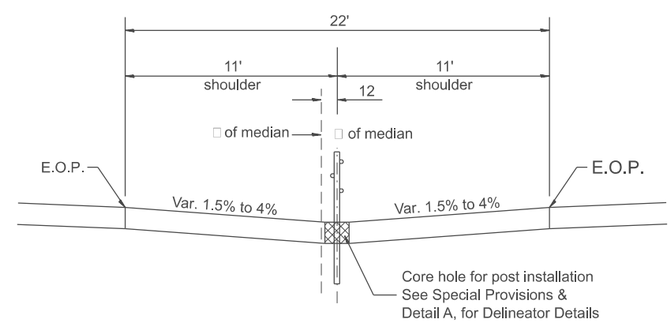

22' PAVED MEDIAN

GENERAL NOTES

All posts are line posts unless otherwise specified.

SYMBOLS

⊢⊣ Two single amber reflector units placed back to back, one on each side of post.

All slope units are expressed as units of vertical displacement to units of horizontal displacement (V:H).

All dimensions are in inches unless otherwise noted.

DESIGNER NOTES:
1. Include District Special Provision.
2. For application on median widths ≥ 22' [System deflection = 11°]
3. Include State Standard 720001.

MODEL: SHT_PLAN3
FILE NAME: C:\Bentley\CONNECT10.11\Organization-Civil\IDOT_Standards\Cell\IDOT_Sheets.cel

USER NAME = Eric.Thomas	DESIGNED -	REVISED -	STATE OF ILLINOIS DEPARTMENT OF TRANSPORTATION
	DRAWN -	REVISED -	
	CHECKED -	REVISED -	
PLOT DATE = 12/7/2022	DATE -	REVISED -	

(MEDIAN BARRIER) CABLE ROAD GUARD, THREE STRANDS

SCALE: NOT TO SCALE | SHEET 1 OF 3 SHEETS | STA. | TO STA.

F.A. RTE.	SECTION	COUNTY	TOTAL SHEETS	SHEET NO.
DISTRICT 4 DETAIL NO. 636001		CONTRACT NO.		
ILLINOIS	FED. AID PROJECT			