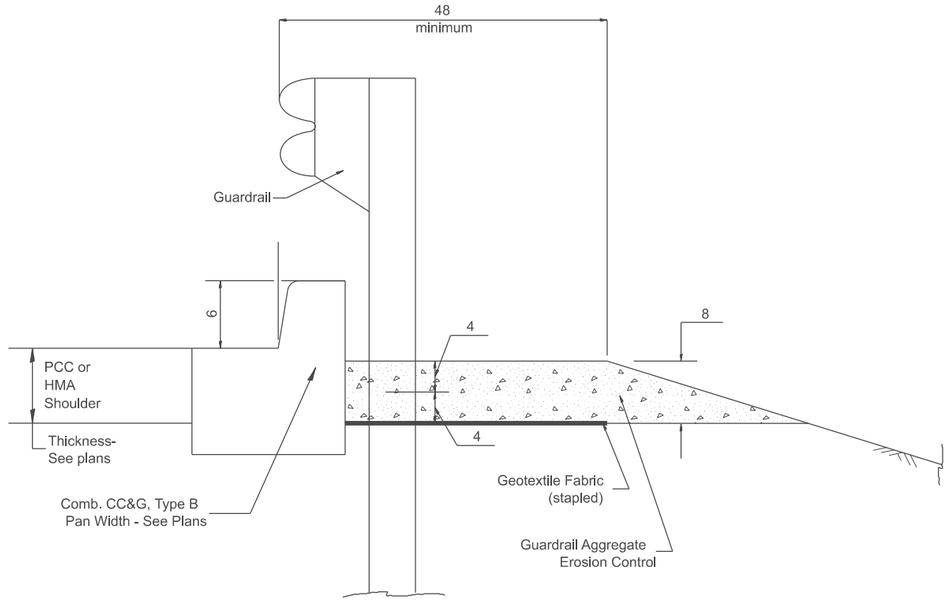

TYPICAL SECTION WITH COMBINATION CONCRETE CURB & GUTTER

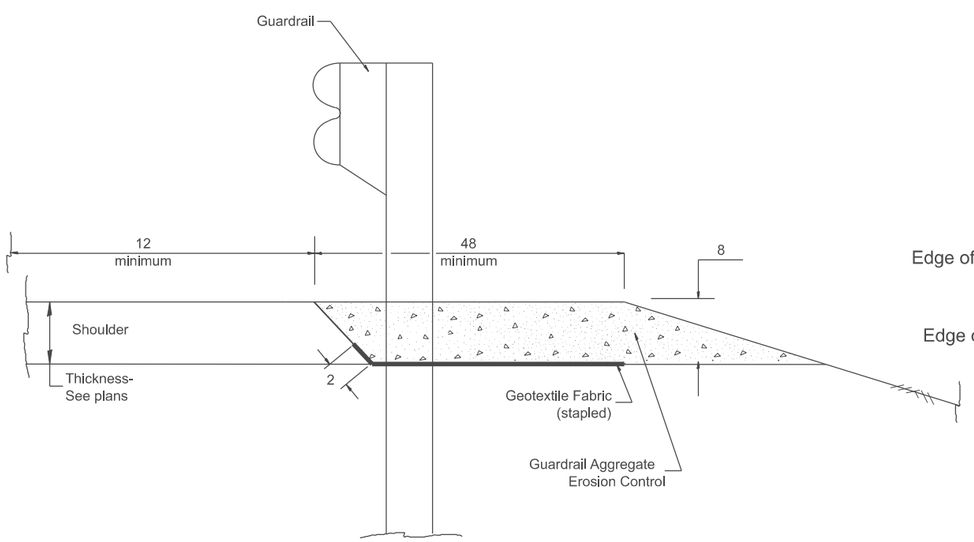

TYPICAL SECTION WITHOUT EROSION CONTROL CURB

GENERAL NOTES: GUARDRAIL AGGREGATE EROSION CONTROL

1. This work shall consist of grading as needed, furnishing and installing geotextile fabric and staples, and furnishing, placing and shaping crushed aggregate around and behind Steel Plate Beam Guardrail posts in accordance with Plan Details.

2. Before placing the aggregate and the Geotextile Fabric, weeds and grass shall be removed from the area to be covered.

3. After the area has been prepared, and in a dry condition, the Geotextile fabric shall be placed with a 12 minimum overlap. A knife cut for guardrail post installation is necessary.

4. The aggregate shall be deposited, compacted and shaped by either mechanical or hand methods, in a manner reasonably true to line and grade.

5. The Contractor shall have the option of placing the guardrail before or after the Geotextile Fabric and Aggregate are in place. If the guardrail is placed after the Geotextile Fabric and Aggregate, then any voids must be filled and the aggregate returned to line and grade.

6. Materials shall meet the following requirements:

A. The crushed aggregate shall be CA1 gradation in accordance with Article 1004.01(c) of the Standard Specifications.

B. The Geotextile Fabric shall be nonwoven fabric in accordance with Article 1080.02 of the Standard Specifications.

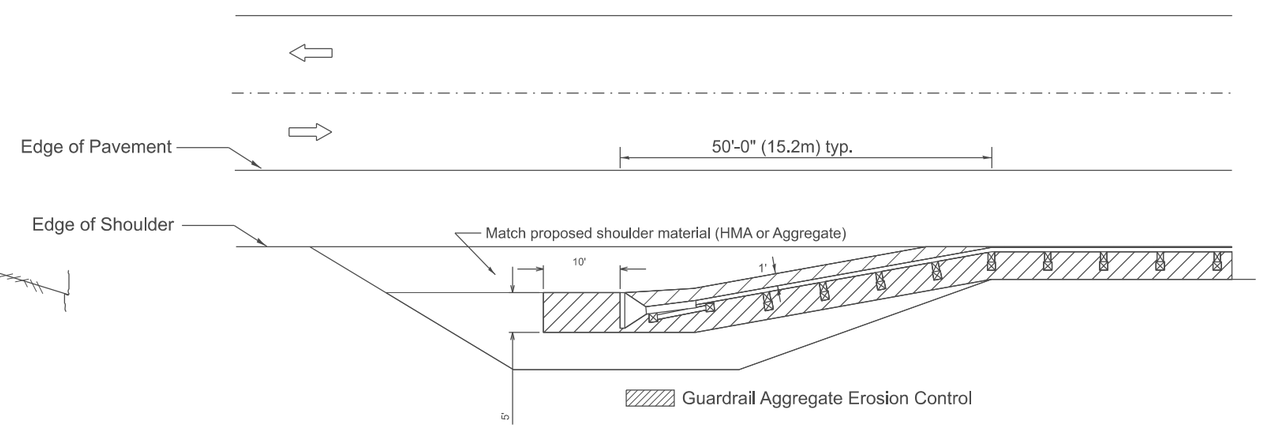

All dimensions are in inches
unless otherwise noted.

DESIGNER NOTES:
1. CONSIDER USING A "B" CURB PAY ITEM AT GUARDRAIL INSTALLATIONS WHERE GRADES ARE EQUAL TO OR GREATER THAN 1% AND AT INLETS. (INCLUDE DISTRICT SPECIAL PROVISION)
2. USE "GUARDRAIL AGGREGATE EROSION CONTROL" AT GUARDRAIL INSTALLATIONS WHERE GRADES ARE LESS THAN 1% (INCLUDE DISTRICT SPECIAL PROVISION).
3. INCLUDE STATE STANDARD 610001, IF APPLICABLE.
4. INCLUDE THE FOLLOWING DISTRICT CADD STANDARDS AS NEEDED: SLOPE DRAINS FOR EXPOSED PIPES; SLOPE DRAINS FOR BURIED PIPES; SEEPAGE COLLARS FOR BURIED PIPES
SEEPAGE COLLARS FOR EXPOSED PIPES; CONCRETE THRUST BLOCKS AND PIPE ELBOW.
5. INCLUDE DISTRICT SPECIAL PROVISION - "AGGREGATE QUALITY" FOR PROJECTS LOCATED IN THE WESTERN AREA OF THE DISTRICT - APPROX. DIVIDING LINE IS IL 97.
6. DELETE DESIGNER NOTES WHEN INSERTING INTO PLAN FILES.
7. OPERATIONS PREFERS USE OF PIPE OUTLETTING ONTO FORESLOPE WITH RIPRAP. USE NON-METALLIC PIPE WHEN POSSIBLE BECAUSE OF FUTURE CORROSION ISSUES.
8. IF NO OTHER SEEDING IS PAID FOR ON THE CONTRACT, USE DISTRICT SPECIAL PROVISION FOR SEEDING, MINOR AREAS

MODEL: SHT_PLAN
FILE NAME: C:\Bentley\CONNECT\To Filr\Standards\Curb\GR_Shields.dgn

USER NAME = Eric.Thomas	DESIGNED -	REVISED -
	DRAWN -	REVISED -
	CHECKED -	REVISED -
PLOT DATE = 12/7/2022	DATE -	REVISED -

STATE OF ILLINOIS
DEPARTMENT OF TRANSPORTATION

GUARDRAIL EROSION CONTROL TREATMENTS

SCALE: NOT TO SCALE | SHEET 1 OF 2 SHEETS | STA. TO STA.

F.A. RTE.	SECTION	COUNTY	TOTAL SHEETS	SHEET NO.
DISTRICT 4 DETAIL NO. 630101		CONTRACT NO.		
	ILLINOIS	FED. AID PROJECT		