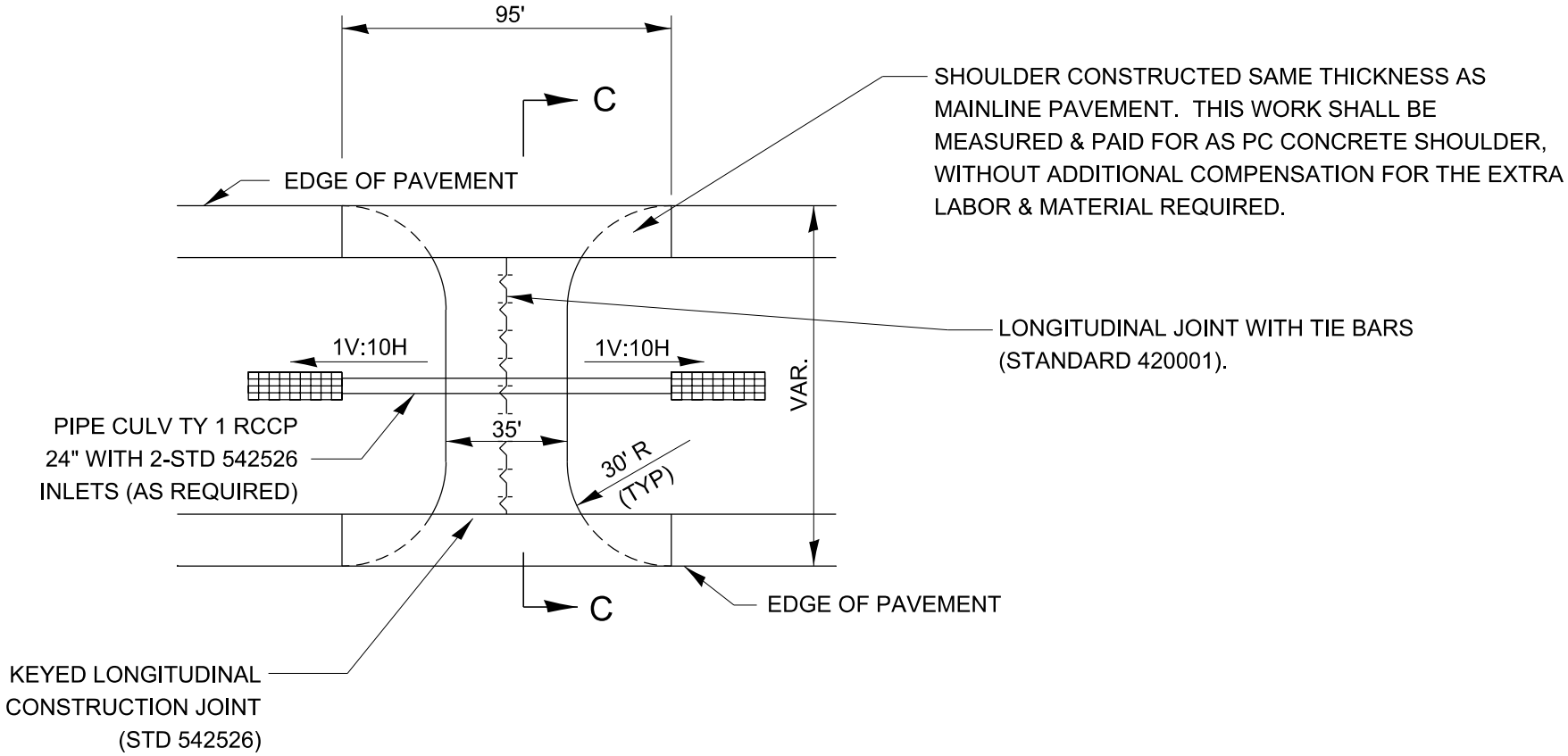

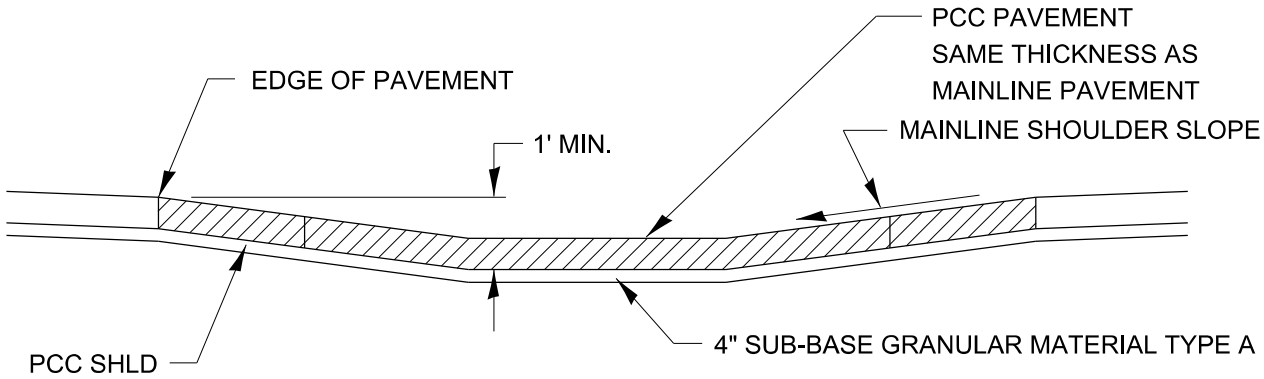

SECTION C-C

420-1

CONCRETE MAINTENANCE CROSSOVER