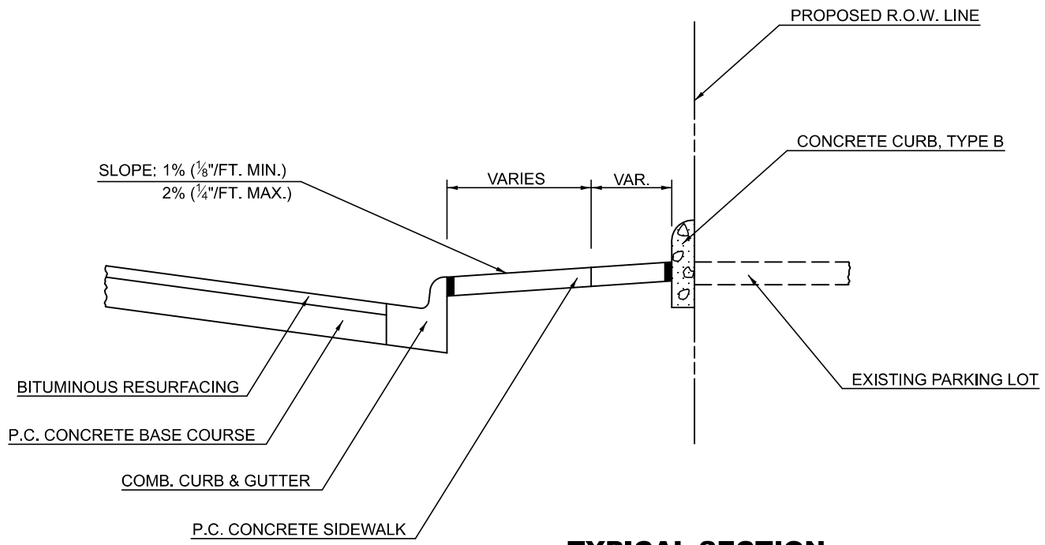

TYPICAL SECTION

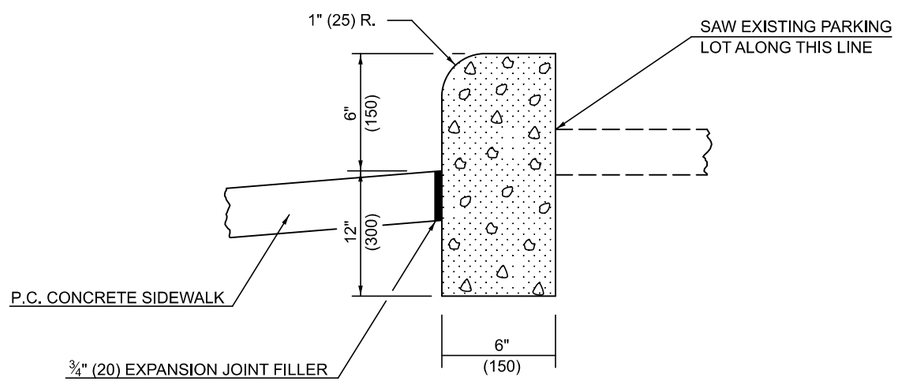

SECTION THROUGH CONCRETE CURB, TYPE B

NOTE:
THE CONCRETE CURB, TYPE B, SHALL BE CONSTRUCTED FROM CLASS SI CONCRETE THROUGHOUT. THIS WORK WILL BE PAID FOR AT THE CONTRACT UNIT PRICE PER LINEAL FOOT (METER), FOR CONCRETE CURB, TYPE B, WHICH PRICE SHALL INCLUDE ALL MATERIALS AND LABOR NECESSARY TO COMPLETE THE WORK.

Note: All dimensions are in INCHES (millimeters) unless otherwise shown.

DISTRICT 5 DETAIL NO. 60600605

USER NAME = Bridgette.Pierson	DESIGNED -	REVISED - 11/06	STATE OF ILLINOIS DEPARTMENT OF TRANSPORTATION	CONCRETE CURB, TYPE B (ADJACENT TO PCC SIDEWALK)	F.A. RTE.	SECTION	COUNTY / TOTAL SHEETS / SHEET NO.
	DRAWN -	REVISED -					
PLOT SCALE = 0.16666633 ' / In.	CHECKED -	REVISED -			CONTRACT NO.		
PLOT DATE = 4/25/2024	DATE -	REVISED -		SCALE: SHEET 1 OF 1 SHEETS STA. TO STA.	ILLINOIS	FED. AID PROJECT	

MODEL: 60600605
FILE NAME: c:\pw_work\pwidot\ceatlock\jdud87237\D5#####-Sht-Detail_60600605.dgn