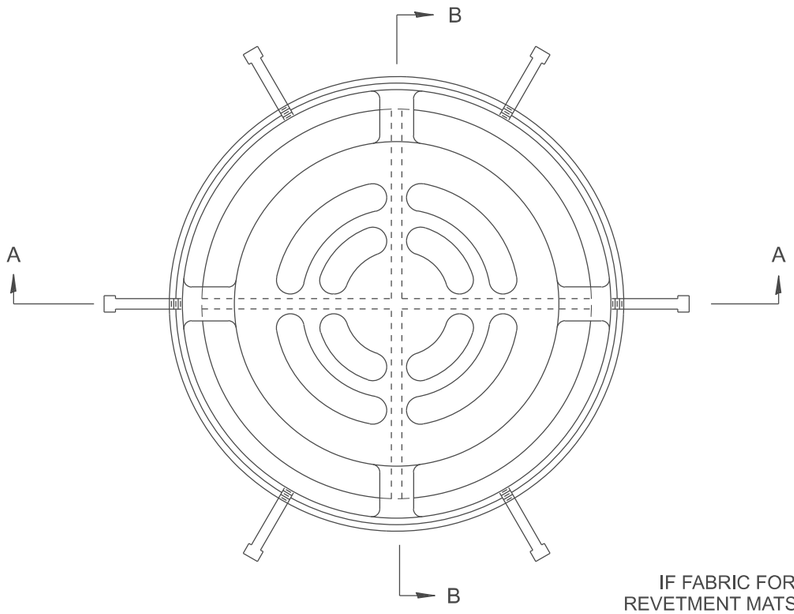

PLAN
(STD# 604101 & 604106)

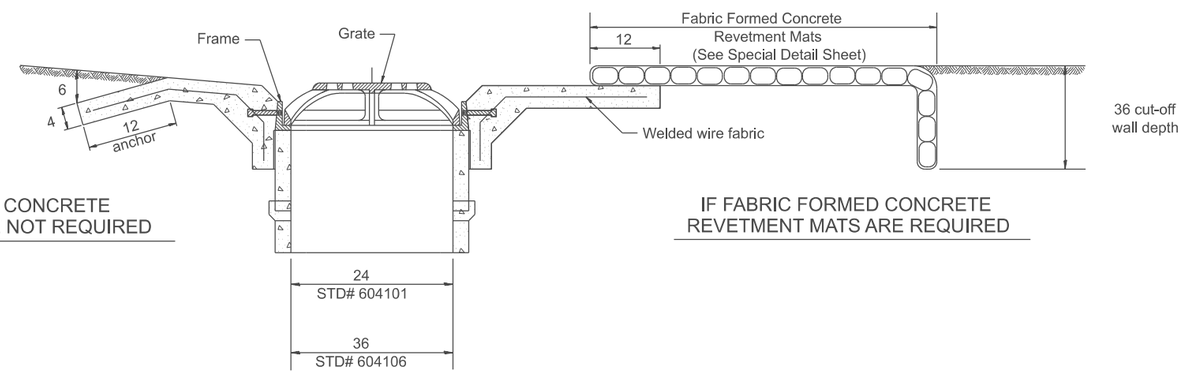

SECTION B-B
(STD# 604101 & 604106)

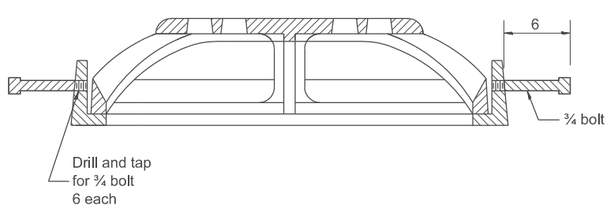

SECTION A-A
(STD# 604101 & 604106)

GENERAL NOTES

1. The applicable portions of Highway Standards 604101 and/or 604106 shall apply, except as noted herein.

Designer Notes:

1. This is to be used to supplement Standard 604101 and/or 604106
2. If fabric formed concrete revetment mats are used, include District CADD drawing.
3. Include District Special Provision

MODEL: SHT_PLAN
FILE NAME: C:\Bentley\CONNECT10\1\Organization-Cfall\DOT_Standards\Cfall\DOT_Sheets.cel

All dimensions are in inches
unless otherwise noted.

USER NAME = Eric.Thomas	DESIGNED -	REVISED -	
	DRAWN -	REVISED -	
	CHECKED -	REVISED -	
PLOT DATE = 12/7/2022	DATE -	REVISED -	

STATE OF ILLINOIS
DEPARTMENT OF TRANSPORTATION

MEDIA INLET (604101), SPECIAL AND MEDIA INLET (604106), SPECIAL

SCALE: NOT TO SCALE | SHEET OF SHEETS | STA. TO STA.

F.A. RTE.	SECTION	COUNTY	TOTAL SHEETS	SHEET NO.
DISTRICT 4 DETAIL NO. 604101		CONTRACT NO.		
	ILLINOIS	FED. AID PROJECT		