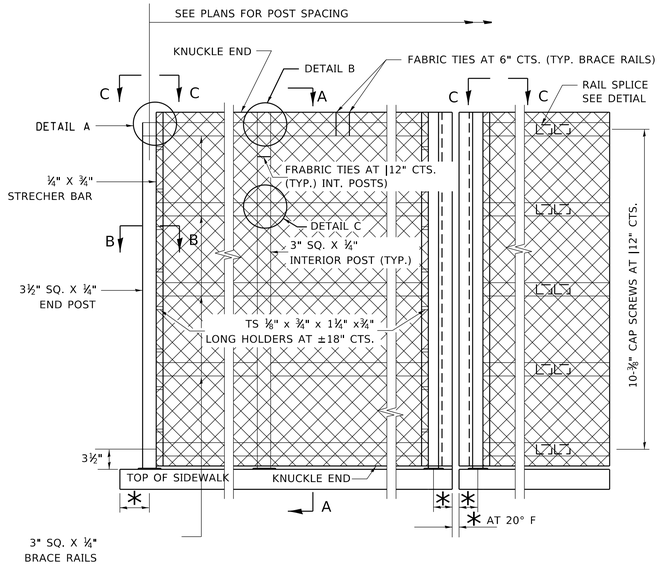

ELEVATION

(INSIDE FACE)

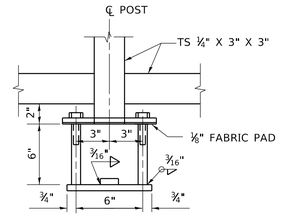

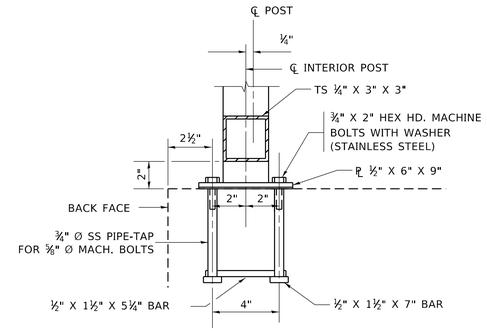

ANCHOR BOLT DETAILS

DETAILS SHOWN ARE FOR FENCE RAILING
DEATAILS FOR PARAPET RAILING ARE SIMALAR

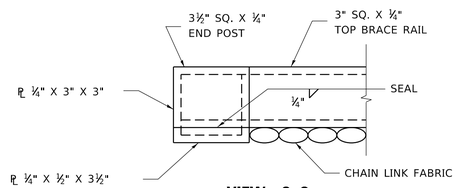

VIEW C–C

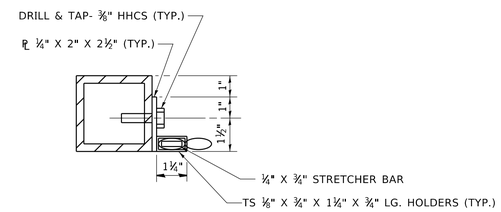

SECTION B–B

NOTES:

RAILING SHALL BE IN ACCORDANCE WITH SECTION 508 OF THE STANDARD SPECIFICATIONS. EXCEPT AS NOTED, AND WILL BE PAID FOR AT THE CONTRACT UNIT PRICE LINEAL FOOT FOR BRIDGE FENCE RAILING AND PARAPET RAILING.
THE 9 GAUGE FABRIC TIES SHALL BE IN ACCORDANCE WITH ARTICLE 710.33(f) OF THE STANDARD SPECIFICATIONS.
INSTALLATION OF THE CHAIN LINK FABRIC SHALL BE IN ACCORDANCE WITH SECTION 629 OF THE STANDARD SPECIFICATIONS.
HOLLOW STRUCTURAL STEEL TUBING SHALL CONFORM TO THE REQUIREMENTS OF ASTM DESIGNATION A 500, GRADE B, STRUCTURAL STEEL TUBING.
ALL OTHER STEEL SHAPES AND PLATES SHALL CONFORM TO THE REQUIREMENTS OF AASHTO M183.
THE CHAIN LINK FABRIC SHALL BE PLACED ALONG PEDESTRAIN SIDE AS SHOWN ON SECTION A-A
STRETCHER BARS SHALL BE USED AT EACH END OF FABRIC.
A MINIMUM OF ONE COMPLETE TURN IS REQUIRED AT ENDS OF ALL FABRIC TIES.
COATING:

A. WHEN RAILING IS GALVANIZED:
ALL POSTS, RAILING, SPLICES, ANCHOR DEVICES, AND PLATES SHALL BE GALVANIZED AFTER SHOP FABRICATION IN ACCORDANCE WITH AASHTO M-111 AND ASTM A-385. ALL BOLTS, NUTS, AND WASHERS SHALL BE GALVANIZED IN ACCORDANCE WITH AASHTO M-232.
VENT HOLES FOR GALVANIZING SHALL BE PLACED IN THE POSTS AND RAILS AT LOCATIONS THAT WILL NOT ALLOW THE ACCUMULATION OF MOISTURE IN THE MEMBERS.
THE CHAIN LINK FABRIC SHALL CONFORM TO THE REQUIREMENTS OF ARTICLE 710.33 (a) (1) (2) OR (3) OF THE STANDARD SPECIFICATIONS.

B. WHEN RAILINIG IS PAINTED:
ALL POST, RAILLING, SPLICES, ANCHOR DEVICES, AND PLATES SHALL BE PAINTED USING THE ZINC-SILLICATE AND VINYL PAINT SYSTEM.
THE CHAIN LINK FABRIC SHALL CONFORM TO THE REQUIREMENTS OF ARTICLE 710.33 (a) (4) OF THE STANDARD SPEC'S.

NOTES:

THE 9 GAUGE FABRIC TIES SHALL BE IN ACCORDANCE WITH ARTICLE 710.33(f) OF THE STANDARD SPECIFICATIONS.
INSTALLATION OF THE CHAIN LINK FABRIC SHALL BE IN ACCORDANCE WITH SECTION 629 OF THE STANDARD SPECIFICATIONS.
HOLLOW STRUCTURAL STEEL TUBING SHALL CONFORM TO THE REQUIREMENTS OF ASTM DESIGNATION A 500. GRADE B. STRUCTURAL STEEL TUBING.
ALL OTHER STEEL SHAPES AND PLATES SHALL COMFORM TO THE REQUIREMENTS OF ASSHTO M183.
THE CHAIN LINK FABRIC SHALL BE PLACED ALONG PDESTRIAN SIDE AS SHOWN ON SECTION A-A.
STRECHER BARS SHALL BE USED AT EACH END OF FABRIC.
A MINIMUM OF ONE COMPLETE TURN IS REQUIRED AT ENDS OF ALL FABRIC TIES.

COATING:

ALL POSTS, RAILING, SPLICES, ANCHOR DEVICES. AND PLATES SHALL BE GALVANIZED AFTER SHOP FABRICATION IN ACCORDANCE WITH AASHTO M-111 AND ASTM A-385. ALL BOLTS, NUTS, AND WASHERS SHALL BE GALVANIZED IN ACCORDANCE WITH AASHTO M-232.
VENT HOLES FOR GALVANIZING SHALL BE PLACED IN THE POSTS AND RAILS AT LOCATIONS THAT WILL NOT ALLOW THE ACCUMULATION OF MOISTURE IN THE MEMBERS.
THE CHAIN LINK FABRIC SHALL COMFORM TO THE REQUIREMENTS OF ARTICLE 710.33 (a)(1)(2) OR (3) OF THE STANDARD SPECIFICATIONS.

NOTES:

PLAN DIMENSIONS AND DETAILS RELATIVE TO EXISTING STRUCTURE HAVE BEEN TAKEN FROM EXISTING PLANS AND ARE SUBJECT TO NOMINAL CONSTUCTION VARIATIONS. IT SHALL BE THE CONTRACTOR'S RESPONSIBILITY TO VERIFY SUCH DIMENSIONS AND DETAILS IN THE FIELD AND MAKE NECESSARY APPROVED ADJUSTMENTS PRIOR TO CONSTRUCTION OR ORDERING OF MATERIALS. SUCH VARIATIONS SHALL NOT BE CAUSE FOR ADDITIONAL COMPENSATION FOR A CHANGE IN THE SCOPE OF THE WORK, HOWEVER THE CONTRACTOR WILL BE PAID FOR THE QUANTITY ACTUALLY FURNISHED AT THE UNIT PRICE BID FOR THE WORK.

FIRST AND LAST FENCE POST TO BE PLACED INSIDE OF THE FIRST AND LAST EXISTING RAIL POST ON THE BRIDGE DECK.

DEMSIONS GIVEN ALONG CENTERLINE PROPOSED FENCE POST.

NOTE:

THE CONTRACTOR SHOULD ALWAYS MAINTAIN A MINIMUM HORIZONTAL CLEARANCE OF 8'-6" FROM THE CENTERLINE OF THE CLOSEST RAILROAD TRACK.

THE CONTRACTOR SHOULD HAVE THE SERVICES OF A RAILROAD FLAGMAN ALL THE TIME WORKING ON THE BRIDGE.

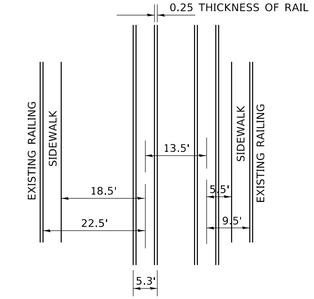

LOCATION OF IMPROVEMENT

MODEL: Default
FILE NAME: pw:\\planroom.dot.illinois.gov:PWIDOT\Documents\IDOT Offices\District 1\Projects\DistSU\22-33\CADData\CADsheets\bm17.dgn

USER NAME = footemj	DESIGNED -	REVISED - A. HOUSEH 10-29-92	STATE OF ILLINOIS DEPARTMENT OF TRANSPORTATION	PEDESTRIAN BARRIER			F.A. RTE.	SECTION	COUNTY	TOTAL SHEETS	SHEET NO.
	DRAWN -	REVISED - R. RITCHIE 05-10-00									
PLOT SCALE = 50.0000 ' / in.	CHECKED -	REVISED -						BM-17	CONTRACT NO.		
PLOT DATE = 3/11/2019	DATE -	REVISED -		SCALE: NONE	SHEET 1 OF 1 SHEETS	STA. TO STA.		ILLINOIS	FED. AID PROJECT		

bm17.dgn 3/11/2019 2:16:41 PM User=footemj