F.A.I. RTE.	SECTION	COUNTY	TOTAL SHEETS	SHEET NO.
80/94	•	COOK	870	708
STA.		TO STA.		
FED. ROAD DIST. NO.		ILLINOIS	FED. AID PROJECT	

TANGENT CONDITION

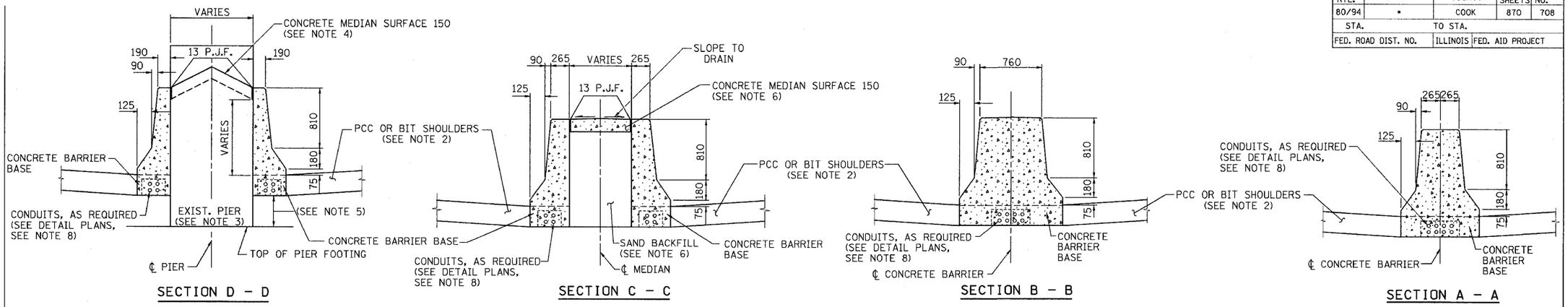

PLAN VIEW OF CONCRETE BARRIER TRANSITION

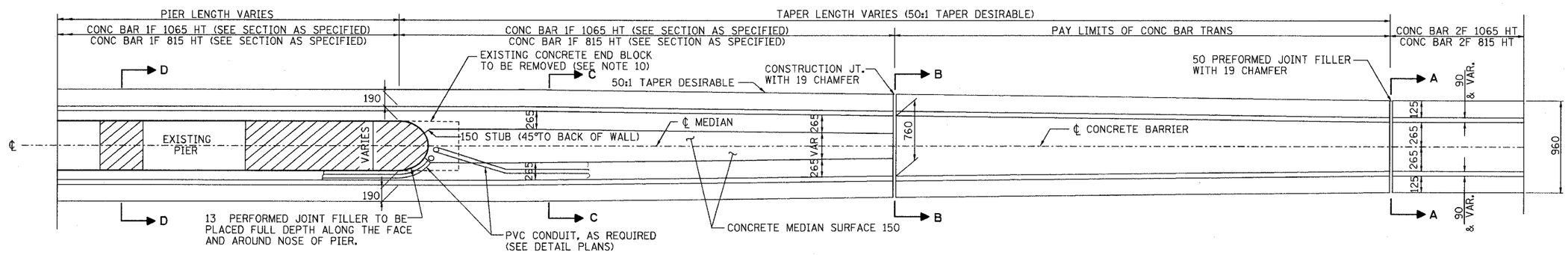

(SUPER ELEVATION CONDITION)

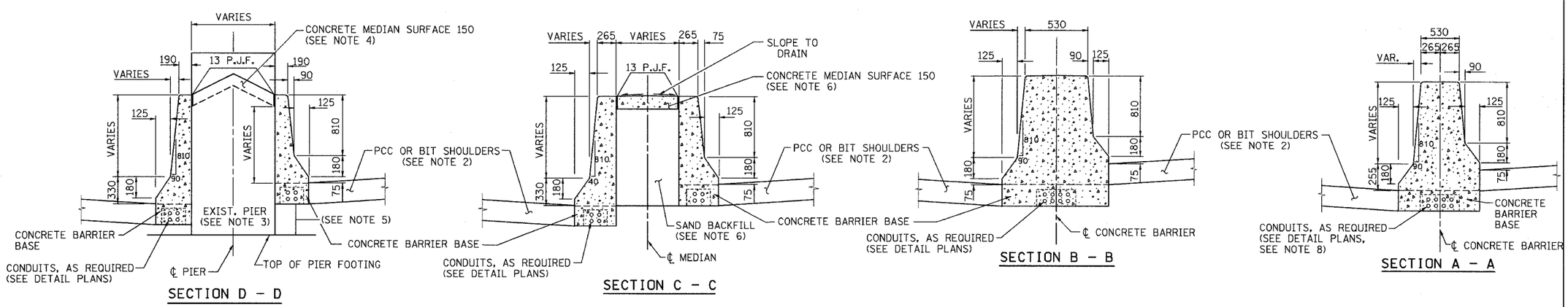

NOTES:

1) FOR ADDITIONAL CONCRETE BARRIER DETAILS, INCLUDING TIE BAR PLACEMENT, SEE THE TYPICAL SECTION SHEETS AND CONCRETE BARRIER DETAILS, OF THE HEIGHT SPECIFIED.

2) FOR ADDITIONAL SHOULDER DETAILS SEE TYPICAL SECTIONS, PIPE UNDERDRAIN & SHOULDER DETAILS SHEETS AND STANDARDS 601001, 482006, 483001 & 482001.

3) IF THE PIER IS NEW CONSTRUCTION, THE CONCRETE BARRIER MAY BE POURED MONOLITHICALLY.

4) PIER FILLER MATERIAL SHALL BE CONCRETE IF A MINIMUM 150 THICKNESS CAN BE MAINTAINED. IF THE 150 THICKNESS CANNOT BE MAINTAINED, USE ASPHALT FILLER MATERIAL AS DIRECTED BY THE ENGINEER.

5) EXTEND THE BOTTOM OF THE CONCRETE BARRIER TO THE PIER FOOTING WHEN THE DEPTH IS LESS THAN 150.

6) SAND BACKFILL AND CONCRETE MEDIAN SURFACE 150 WILL BE REQUIRED. FILLING WITH CONCRETE WILL NOT BE ALLOWED. THIS WORK SHALL BE PAID FOR SEPARATELY.

7) TAPERS INTO AND AWAY FROM SIGN FOUNDATIONS SHALL BE THE SAME AS SHOWN ABOVE.

8) INSTALL DUCT BETWEEN THE SIGN FOUNDATION AND THE NEAREST LIGHT POLE FOUNDATION WHERE SHOWN ON THE PLANS. THIS WORK SHALL BE PAID FOR SEPARATELY.

9) PREFORMED JOINT FILLER OF THE SIZE SPECIFIED SHALL BE INCIDENTAL TO THE CONCRETE BARRIER OF THE TYPE INVOLVED.

10) THE REMOVAL OF THE EXISTING CONCRETE END BLOCKS IF APPLICABLE SHALL BE INCLUDED IN THE COST OF THE CONCRETE BARRIER OF THE TYPE INVOLVED.

11) THE CONDUIT LOCATIONS SHOWN ARE TYPICAL, ADDITIONAL CONDUITS MAY BE REQUIRED. FOR THE SIZE, LOCATION AND DETAILS, SEE THE ELECTRICAL AND/OR SURVEILLANCE PLANS. THE FURNISHING AND PLACING OF CONDUITS OF THE SIZE SPECIFIED SHALL BE PAID FOR SEPARATELY.

REVISIONS	
NAME	DATE
MDV	01/30/04
MRN	3/29/04
MRN	8/04/05
NLP	8/04/05

ILLINOIS DEPARTMENT OF TRANSPORTATION
F.A.I. ROUTE 80/94 (KINGERY EXPRESSWAY)

CONCRETE BARRIER DETAILS SHEET 1 OF 2

SCALE NONE DRAWN BY ACE/CAD
DATE 10/03 CHECKED BY

AMERICAN CONSULTING ENGINEERS