• (0203.1 & 0312-708W) R-3 CONTRACT NO. 62108

FAI RTE	SECTION	COUNTY	TOTAL SHEETS	SHEET NO.
80/94	•	COOK	870	606
STA.		TO STA.		
FED ROAD DIST. NO.		ILLINOIS	FED. AID PROJECT	

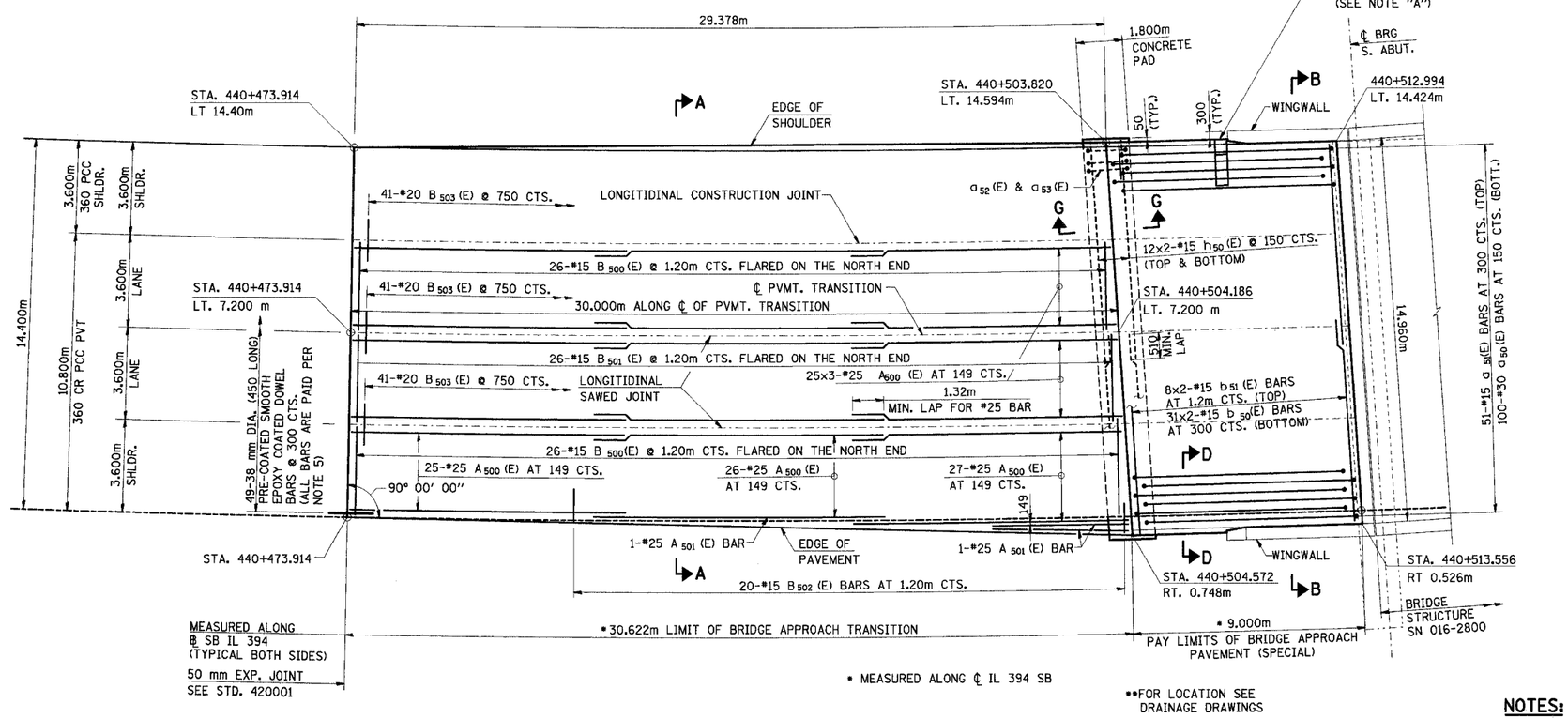

PLAN

NOTE "A": CUT a_{50} (E), a_{51} (E) AND b_{50} (E), b_{51} (E) BARS TO CLEAR DRAIN INLET BOX.

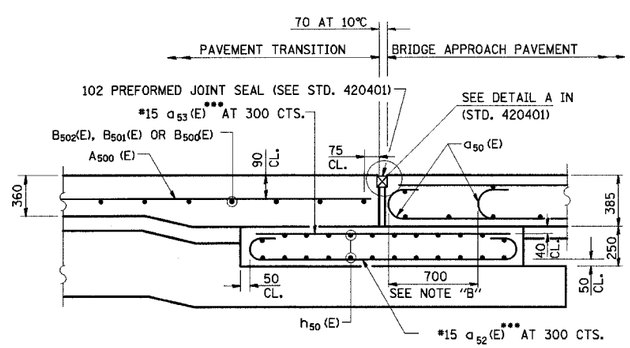

••• AT RIGHT ANGLES TO CONCRETE PAD; FLARE AT EAST AND WEST END

SECTION G-G
(SHOWING REINFORCEMENT)

NOTE "B"
STAGGER a_{50} (E) BARS AS SHOWN ON PLAN-FULL WIDTH

FOR DETAILS NOT SHOWN, SEE "SECTION C-C AND G-G- RIGID PAVEMENT", STANDARD 420401

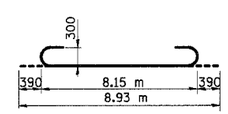

BAR a_{50} (E)

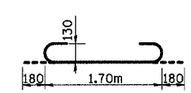

BAR a_{52} (E)

BILL OF MATERIAL BRIDGE APPROACH PAVEMENT (SPECIAL)

BAR	NO.	SIZE	LENGTH (M)	SHAPE
a_{50} (E)	100	#30	8.93	
a_{51} (E)	51	#15	8.90	
a_{52} (E)	52	#15	2.06	
a_{53} (E)	52	#15	1.70	
b_{50} (E)	62	#15	7.69	
b_{51} (E)	16	#15	7.69	
h_{50} (E)	48	#15	7.94	

ITEM	UNIT	QUANTITY
BRIDGE APPROACH PAVEMENT (SPECIAL)	M^2	136
REINFORCEMENT BARS, EPOXY COATED (1)	KG	7467

(1) INCLUDED FOR PAYMENT UNDER "BRIDGE APPROACH PAVEMENT (SPECIAL)"

BILL OF MATERIAL PAVEMENT TRANSITION

BAR	NO.	SIZE	LENGTH (M)	SHAPE
A_{500}(E)	228	#25	11.24	
A_{501}(E)	3	#25	6.12	
B_{500}(E)	52	#15	3.53	
B_{501}(E)	26	#15	3.55	
B_{502}(E)	20	#15	1.30	
B_{503}(E)	123	#20	0.75	

ITEM	UNIT	QUANTITY
REINFORCEMENT BARS, EPOXY COATED (2)	KG	10822

(2) INCLUDED FOR PAYMENT UNDER THE CORRESPONDING PAY ITEM (SEE NOTE 5)

NOTES:

1. WORK THIS SHEET WITH BRIDGE APPROACH PAVEMENT STANDARD 420401 AND PAVEMENT JOINTS STD. 420001.
2. BARS INDICATED THUS "12x2-#15 ETC. INDICATE 12 LINES OF BARS WITH 2 LENGTHS PER LINE.
3. REINFORCEMENT BARS DESIGNATED "(E)" SHALL BE EPOXY COATED.
4. FOR THE 9 m. APPROACH PAVEMENT AND SUPPORTING PAD, ALL WORK AND MATERIALS ARE INCLUDED FOR PAYMENT UNDER "BRIDGE APPROACH PAVEMENT (SPECIAL)".
5. FOR THE BRIDGE APPROACH PAVEMENT TRANSITION, ALL WORK AND MATERIALS ARE INCLUDED FOR PAYMENT UNDER "CONTINUOUSLY REINFORCED PORTLAND CEMENT CONCRETE PAVEMENT-360MM" AND "PCC SHOULDERS-360MM"
6. ALL DIMENSIONS ARE IN MILLIMETERS (mm) EXCEPT AS NOTED.
7. TRANSVERSE BARS SHALL BE SET WITH 50 mm CLEARANCE TO EDGE OF PAVEMENT AND 25 mm FROM ℄ SAWED LONGITUDINAL JOINT.
8. PLACE B_{503}(E) AT MID-DEPTH OF SLAB.
9. FOR SECTIONS A-A AND D-D SEE SHEET NO. 607 OF 870.

REVISIONS	
NAME	DATE

ILLINOIS DEPARTMENT OF TRANSPORTATION
I-94 EAST BOUND / IL 394 SOUTH BOUND

BRIDGE APPROACH PAVEMENT (SPECIAL) & PAVEMENT TRANSITION
SB IL RTE 394 OVER THORN CREEK
STRUCTURE NO. 2800
SOUTH APPROACH - 1 OF 2

HORIZ SCALE:
VERT SCALE:
DATE: JUL 18, 2005
DRAWN BY: LK
CHECKED BY: PY

HNTB

J:\345628\CADD\BI\App_Slabs\CDS\ba190704a_2800.dgn
LKalfta 11-JUL-2005 13:06