STATE OF ILLINOIS
DEPARTMENT OF TRANSPORTATION

ROUTE NO.	SECTION	COUNTY	TOTAL SHEETS	SHEET NO.
F. A. I. 80/94	*	COOK	870	568
FED. ROAD DIST. NO. 1		ILLINOIS	FED. AID PROJECT-	

SHEET NO. 54
91 SHEETS

(0203.1 & 0312-708W) R-3 CONTRACT NO. 62108

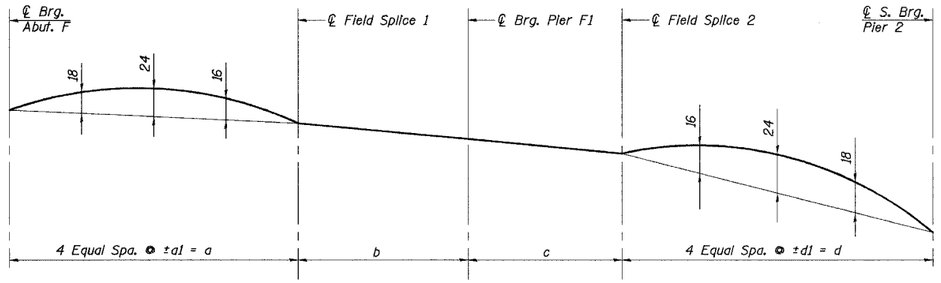

CAMBER DIAGRAM

(For dimensions a, b, c, and d, see Sheet No. 52 of 91).

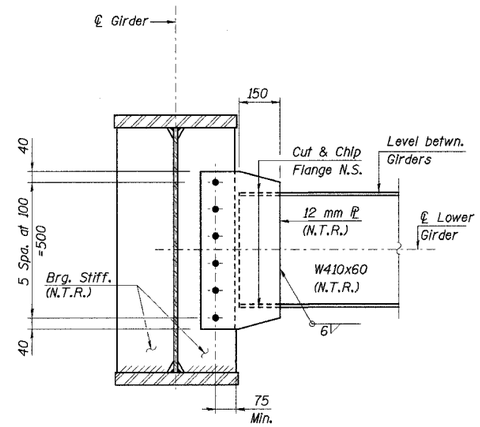

AT BEARING STIFFENER

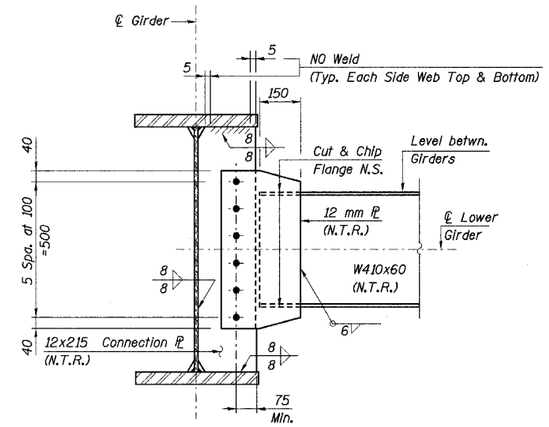

AT CONNECTION PLATE

INTERIOR DIAPHRAGM

(At Pier F1 and within Span F1 & F2)
(AASHTO M270M Grade 345, N.T.R.)

TOP OF WEB ELEVATIONS FOR FABRICATION (Meters)

(Elevations are before any deflections and are to be used for fabrication only)

Girder	℄ Brg. Abut. F	℄ F.S. 1	℄ Pier F1	℄ F.S. 2	℄ S. Brg. Pier 2
1	186.307	186.454	186.500	186.548	186.862
2	186.415	186.555	186.591	186.629	186.886
3	186.522	186.656	186.683	186.710	186.913
4	186.629	186.757	186.774	186.792	186.941
5	186.737	186.856	186.864	186.873	186.972
6	186.759	186.868	186.875	186.882	186.969

CAMBER SPACING (Meters)

Girder	a1	d1
1	5.608	5.986
2	5.648	5.869
3	5.687	5.752
4	5.727	5.635
5	5.767	5.517
6	5.807	5.400

BEARING SEAT ELEVATIONS (Meters)

Girder	℄ Brg. Abut. F	℄ Pier F1	℄ S. Brg. Pier 2
1	185.235	185.457	185.790
2	185.343	185.548	185.814
3	185.450	185.640	185.841
4	185.557	185.731	185.869
5	185.665	185.821	185.897
6	185.687	185.821	185.897

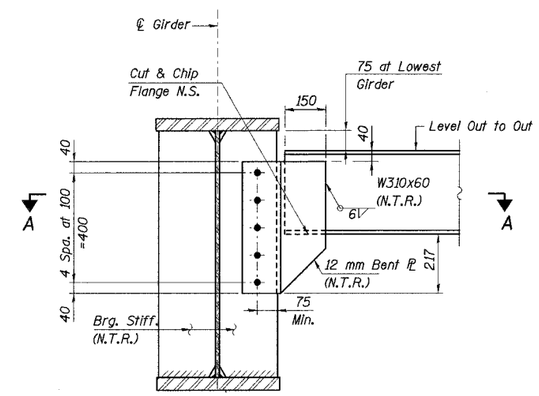

END DIAPHRAGM

(At Pier 2 and Abut. F)
(AASHTO M270M Grade 345, N.T.R.)

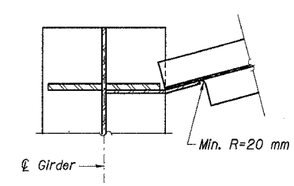

SECTION A-A

(At Pier 2)

Notes:

1. All dimensions are in millimeters (mm) except as noted.
2. See Sheet No. 53 of 91 for bearing stiffener details and weld requirements.
3. N.T.R. denotes members to which notch toughness requirements are applicable.
4. All diaphragm connections to have 28 mm ϕ oversized holes for all M22 H.S. bolts.
5. Two hardened washers shall be required over all oversized holes.

DESIGNED	ML/PJE
CHECKED	MAS
DRAWN	LK
CHECKED	MAS

ILLINOIS DEPARTMENT OF TRANSPORTATION
I-94 EAST BOUND / IL 394 SOUTH BOUND
CAMBER, TOP OF WEB ELEVATIONS, & DIAPHRAGM DETAILS - UNIT 3
RAMP F OVER THORN CREEK
F.A.P. 332 SECTION (0203.1 & 0312-708W) R-3
COOK COUNTY
STA. 440+704.350 STRUCTURE NO. 016-2845
DATE JUL 18, 2005
SCALE ---
HNTB

JBeauchamp
E:\34562\CADD\bl\SN_2800\cda\CTR_19_2800\st190314e_2800.dgn
08-JUL-2005 13:48