STATE OF ILLINOIS
DEPARTMENT OF TRANSPORTATION

ROUTE NO.	SECTION	COUNTY	TOTAL SHEETS	SHEET NO.
F. A. I. 80/94	*	COOK	870	454
FED. ROAD DIST. NO. 1	ILLINOIS	FED. AID PROJECT-		

SHEET NO. 12
29 SHEETS

* (0203.1 & 0312-708W) R-3 CONTRACT NO. 62108

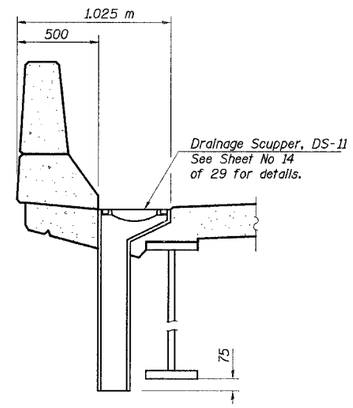

SECTION A-A

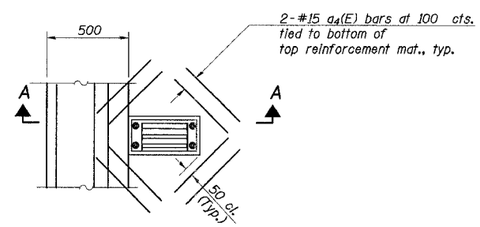

PLAN

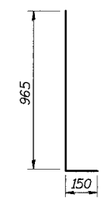

BAR d(E)

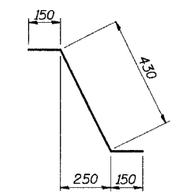

BAR d1(E)

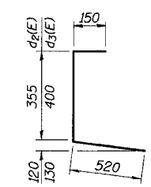

BAR d2(E) & d3(E)

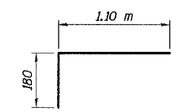

BAR x(E)

BILL OF MATERIAL

Bar	No.	Size	Length (m)	Shape
a_1(E)	1168	#15	9.000	
a_3(E)	661	#20	1.400	
a_4(E)	8	#15	0.450	
a_5(E)	1157	#15	7.200	
b(E)	1100	#15	9.000	
b_1(E)	156	#20	11.000	
d(E)	1172	#15	1.115	
d_1(E)	584	#15	0.730	
d_2(E)	292	#15	1.025	
d_3(E)	292	#15	1.070	
e(E)	192	#15	5.270	
e_1(E)	40	#15	7.870	
e_2(E)	32	#25	9.050	
e_3(E)	8	#25	7.870	
e_4(E)	1	#15	1.200	
x(E)	106	#15	1.280	

ITEM	UNIT	QUANTITY
Reinforcment Bars, Epoxy Coated	kg	58,720
Concrete Superstructure	m^3	318.3
Bridge Deck Grooving	m^2	1,153
Protective Coat *	m^2	1,398

* Includes both substructure and superstructure

Notes:

1. Work this sheet with Sheet Numbers 9-11 of 29 Sheets.
2. Drains shall be located clear of all cross frames.
3. All dimensions are in millimeters (mm) except as noted.

DESIGNED	MEA
CHECKED	PY
DRAWN	LK
CHECKED	PY

ILLINOIS DEPARTMENT OF TRANSPORTATION
I-94 EAST BOUND / IL 394 SOUTH BOUND

DECK DETAILS

SB ILLINOIS ROUTE 394 OVER INTERSTATE 80
F.A.P. 332 SECTION (0203.1 & 0312-708W) R-3
COOK COUNTY
STA. 440+193.335 STRUCTURE NO. 016-2796

DATE 07/18/05
SCALE ---

HNTB

JBeauchamp
E:\34562\CADD\b1\SN_2796\CDS\CTR_19_2796\sul90044e_2796.dgn
08-JUL-2005 13:55