F.A.I. RTE.	SECTION	COUNTY	TOTAL SHEETS	SHEET NO.
80/94	*	COOK	870	339
STA.		TO STA.		
FED. ROAD DIST. NO. 1		ILLINOIS	FED. AID PROJECT	

* (0203.1 & 0312-708W) R-3 CONTRACT # 62108

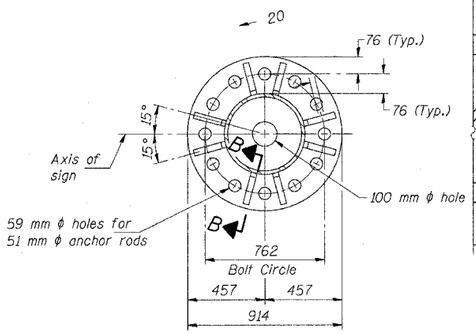

SECTION A-A

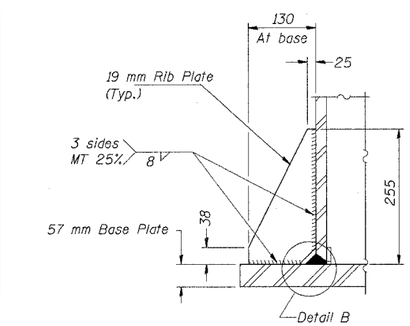

SECTION B-B

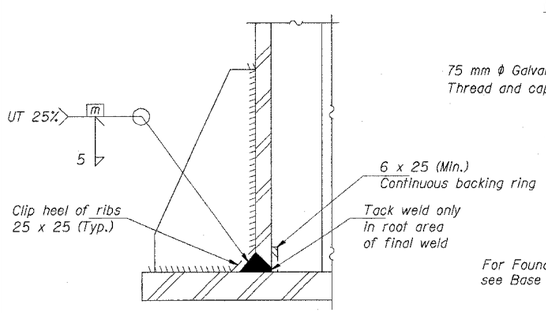

DETAIL B

(Typical rib)

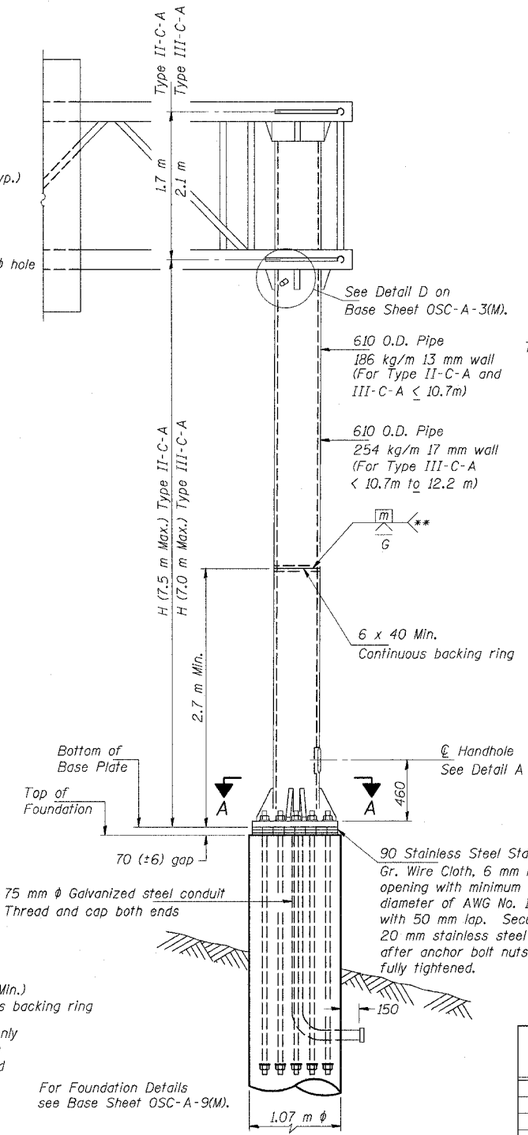

FRONT ELEVATION

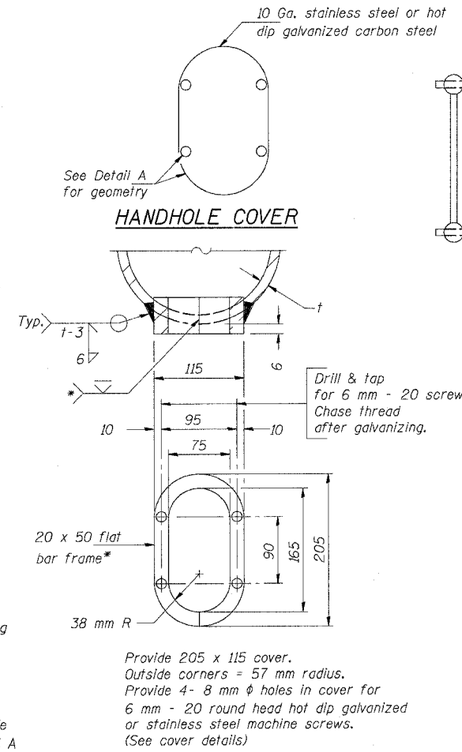

HANDHOLE COVER

DETAIL A

*Bent bars may be butt welded top and bottom or bottom only. In lieu of fabricated handhole frame as shown, may cut from 50 mm plate (rolling direction vertical). All cut faces to be ground to ANSI Roughness of 12.7 µm or less.

**Butt welded joint in post is only allowed for post heights (H) over 6.10 m in length. If used, weld procedure must be preapproved by Engineer and joint shall receive 100% RT or UT (tension criteria) at Contractor's expense.

Structure Number	Station	H
IC0161094L074.2	30+786	5.602
IC0161094R074.3	20+935	6.588

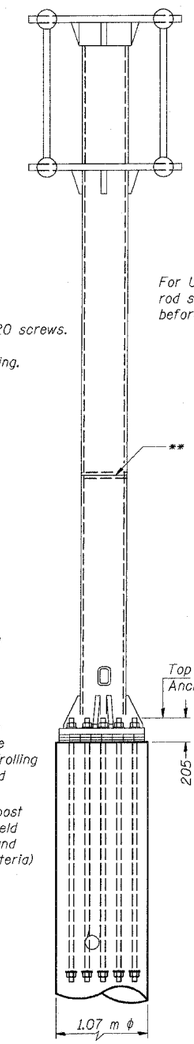

SIDE ELEVATION

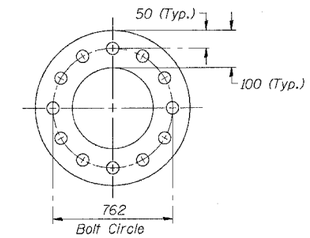

SUGGESTED POSITIONING PLATE

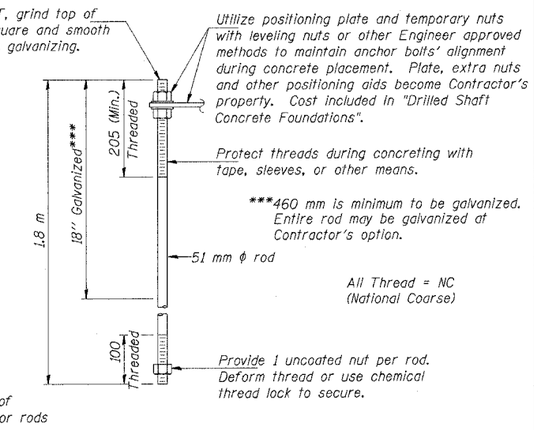

ANCHOR ROD DETAIL

Anchor rods shall conform to AASHTO M314 Grade 380 (55) and meet Charpy V-Notch (CVN) energy of 20 J at - 12 ° C. before galvanizing. Galvanize the upper 460 mm (minimum***) and associated M291, Grade A, C or DH heavy hex nuts and hardened washers per AASHTO M232. No welding shall be permitted on rods. Provide an unfinished nut at bottom, a hexagon locknut and washer above base plate and a leveling nut and washer below base plate. Nuts shall each be tightened with 270 N-m minimum torque against base plate. Before or after threading, but before galvanizing, each anchor rod shall be ultrasonically tested (UT) by a Level II or III inspector, qualified in accord with ANSI guidelines, using a straight beam, 13 mm ϕ 3.5 mhz. transducer, to insure no rejectable flaws exist in the upper 460 mm (tension criteria). Cost of testing included in "Drilled Shaft Concrete Foundations".

CSS-5

NUMBER	REVISION	DATE

OSC-A-5(M) 11/1/2002

CANTILEVER SIGN STRUCTURES
TYPE II-C-A & III-C-A TRUSS SUPPORT POST
ALUMINUM TRUSS & STEEL POST

REVISIONS	
NAME	DATE

ILLINOIS DEPARTMENT OF TRANSPORTATION
F.A.I. ROUTE 80/94 (INTERSTATE 80/294)
OVERHEAD SIGN STRUCTURES
I-94 WB & I-94 EB
COOK COUNTY SECTION (0203.1 & 0312.708W) R-3

DESIGNED BY DRAWN BY
DATE: March 1, 2005 CHECKED BY CHECKED BY

McDonough Associates Inc.
Engineers / Architects