STATE OF ILLINOIS
DEPARTMENT OF TRANSPORTATION

ROUTE NO.	SECTION	COUNTY	TOTAL SHEETS	SHEET NO.
F. A. I. 80/94	*	COOK	870	327
FED. ROAD DIST. NO. 1		ILLINOIS	FED. AID PROJECT-	

* (0203.1 & 0312-708W) R3 CONTRACT NO. 62108

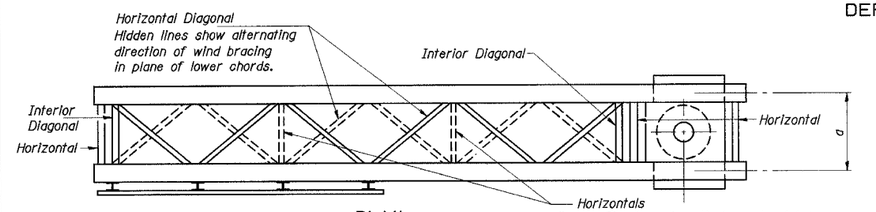

PLAN
(Walkway not shown)

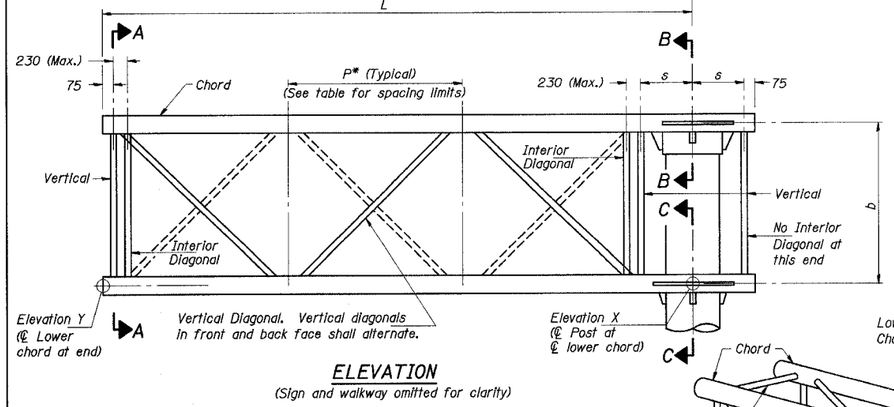

ELEVATION
(Sign and walkway omitted for clarity)

TYPICAL TRUSS UNIT
For Section B-B and Section C-C, see Base Sheet OSC-A-3.

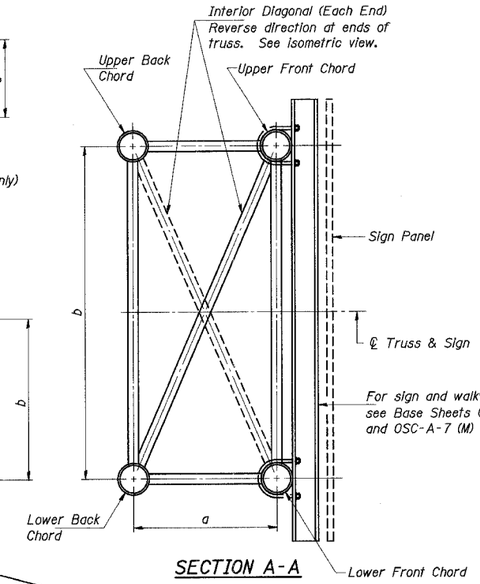

SECTION A-A

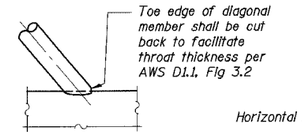

DETAIL A

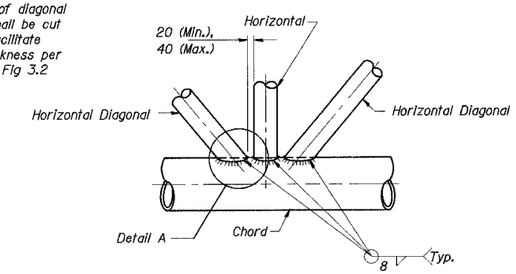

TRUSS INTERIOR JOINT DETAILS

All diagonals shall be detailed for minimum offset from the panel point based on the following: Offset shall be such as to provide a 20 mm minimum to 40 mm maximum clearance between any diagonal and any horizontal or vertical member, and to provide clearance for U-bolt connections of signs or walkway brackets.

Structure Number	Station	Truss Type	Design Length (L) (m)	Number of Panels Per Unit	Panel Length (P)* (m)
1C016I094R073.4	19+072 (I-94)	III-C-A	12.05	8	1.430
1C016I094R074.3	20+423 (I-94 EB)	III-C-A	11.84	8	1.403

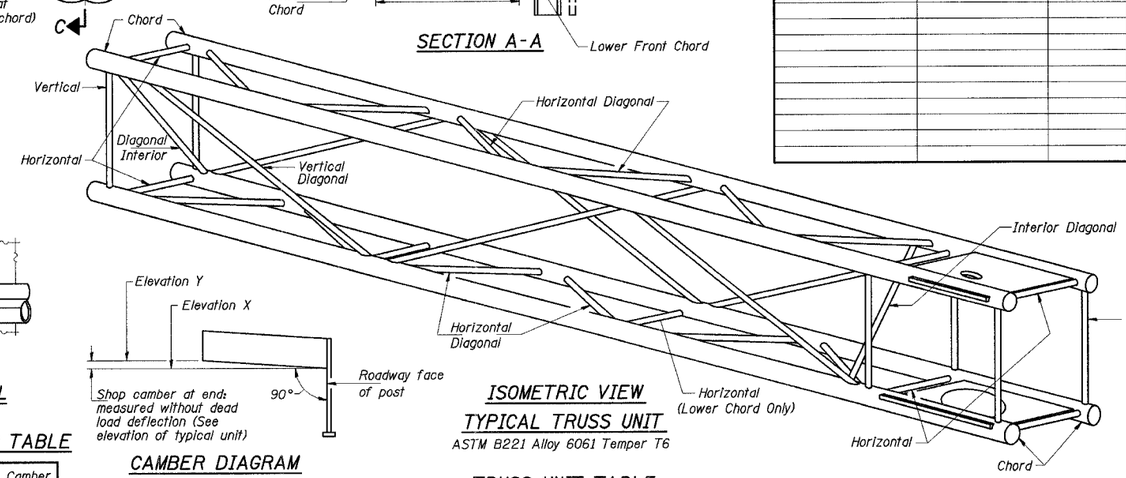

ISOMETRIC VIEW
TYPICAL TRUSS UNIT
ASTM B221 Alloy 6061 Temper T6

Note: There are twice as many horizontal diagonals as ther are vertical diagonals.

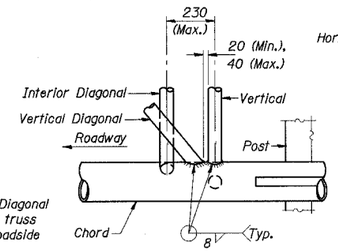

POST END JOINT DETAIL

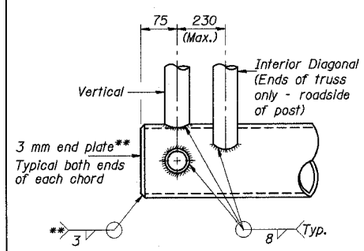

CANTILEVER END JOINT DETAIL

**Contractor may alternatively use standard aluminum drive-fit cap to close ends.

SHOP CAMBER TABLE

Unit Length (L)	Shop Camber at End
~~4.6~~	~~40~~
~~4.9-5.2~~	~~45~~
~~5.5-6.1~~	~~50~~
~~6.4-6.7~~	~~60~~
~~7.0-7.6~~	~~65~~
~~7.9-8.2~~	~~70~~
~~8.5-9.1~~	~~76~~
~~9.5-9.8~~	~~83~~
~~10.1-10.7~~	~~90~~
~~10.8-11.5~~	~~102~~
11.6-12.2	114

CAMBER DIAGRAM
(For Fabrication Only)

TRUSS UNIT TABLE

Truss Type	Dimension "a"	Dimension "b" (m)	Dimension "s"	Limits for Panel Spacing (P)* (m)	Up. & Low. Chord O.D.	Up. & Low. Chord Wall	Verticals; Horizontals; Vertical, Horizontal, and Interior Diagonals O.D.	Verticals; Horizontals; Vertical, Horizontal, and Interior Diagonals Wall
~~I-C-A~~	~~610~~	~~1.37~~	~~405~~	~~0.915 Min. to 1.22 Max.~~	~~127~~	~~8~~	~~64~~	~~8~~
~~II-C-A~~	~~915~~	~~1.68~~	~~535~~	~~1.07 Min. to 1.37 Max.~~	~~165~~	~~8~~	~~83~~	~~8~~
~~III-C-A (10.7 Max.)~~	~~915~~	~~2.13~~	~~535~~	~~1.22 Min. to 1.68 Max.~~	~~178~~	~~10~~	~~89~~	~~10~~
III-C-A (>10.7 to 12.2)	915	2.13	535	1.22 Min. to 1.68 Max.	203	10	89	10

$$*P = \frac{L - s - 75}{\#\ \text{Panels}}$$

NUMBER	REVISION	DATE

DESIGNED	PY
CHECKED	DD
DRAWN	LK
CHECKED	DD

OSC-A-2(M) 11/1/2002

ILLINOIS DEPARTMENT OF TRANSPORTATION
I-80/94/US 6 (KINGERY EXPRESSWAY)

CANTILEVER SIGN STRUCTURES
TRUSS DETAILS
ALUMINUM TRUSS & STEEL POST

DATE: JUL 18, 2005
SCALE ---

HNTB

IBeauchamp
E:\SHSC\2001\bll\Signs\Contract19\cds\ss192234a.dgn
08-JUL-2005 15:32