097-0038/0039

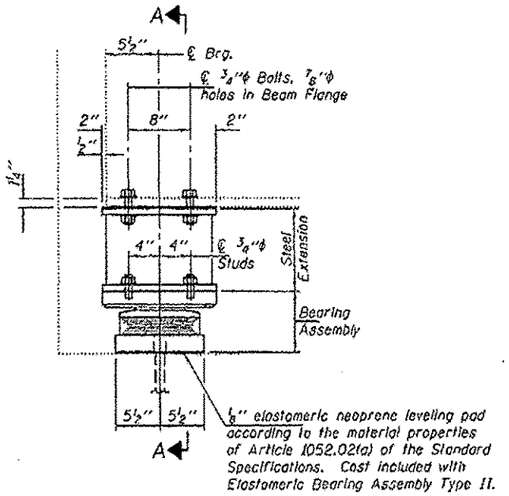

ELEVATION AT ABUTMENTS

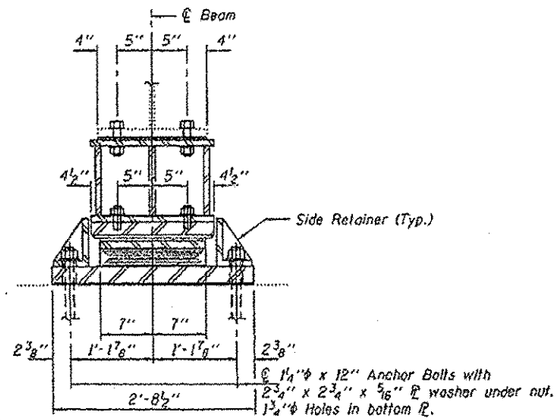

SECTION A-A

TYPE II TFE ELASTOMERIC EXP. BRG.

BEAM REACTIONS

R℄	(K)	51.7
R℄	(K)	42.4
Imp.	(K)	9.5
R (Total)	(K)	103.6

Notes:

Diaphragm removal and reinstallation may be required to facilitate drilling holes. Cost included with Furnishing and Erecting Structural Steel.

New steel extensions, shim plates and connection bolts are included with Furnishing and Erecting Structural Steel.

Prior to ordering any material, the Contractor shall verify in the field all bearing height and shim thickness dimensions.

Min. jack capacity = 60 Tons.

Anchor bolts shall be ASTM F1554 all-thread (or an Engineer-approved alternate material) of the grade(s) and diameter(s) specified. ASTM A307 Grade C anchor bolts may be used in lieu of ASTM F1554 Grade 36 (Fy=36ksi). The corresponding specified grade of AASHTO M314 anchor bolts may be used in lieu of ASTM F1554.

Anchor bolts for Type II bearings shall be placed in holes drilled through the bottom bearing plate after members are in place. Side retainers shall be placed after bolts are installed.

Drilled and set anchor bolts shall be installed according to Article 521.06 of the Standard Specifications.

Side retainers shall be included in the cost of Elastomeric Bearing Assembly, Type II.

The ⅛" PTFE sheet shall be bonded directly to the top steel plate with a two-component, medium viscosity epoxy resin, conforming to the requirements of the Federal Specification MMM-A-134, Type I. The bond agent shall be applied on the full area of the contact surfaces.

Bonding of ⅛" PTFE sheet during vulcanizing process will be permitted provided the process and method of adjusting assembly height is approved by the Engineer.

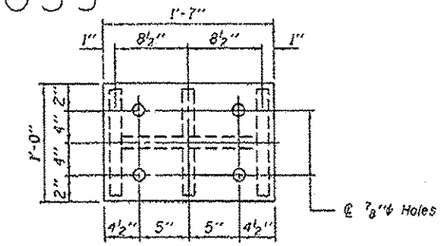

PLAN TOP AND BOTTOM PLATE

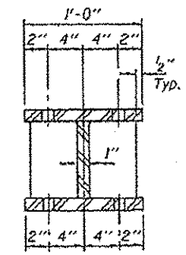

SECTION B-B

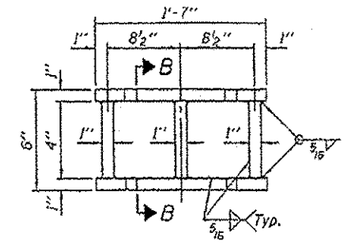

STEEL EXTENSION DETAIL

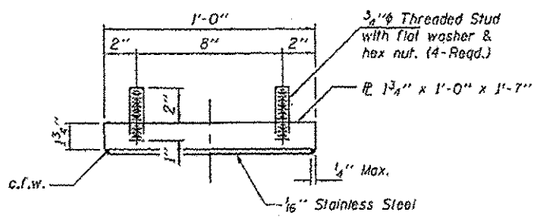

TOP BEARING ASSEMBLY

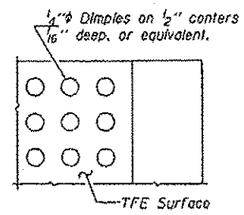

PLAN-PTFE SURFACE

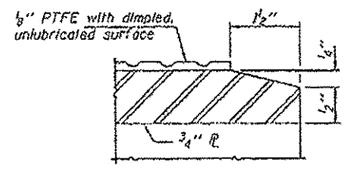

SECTION THRU PTFE

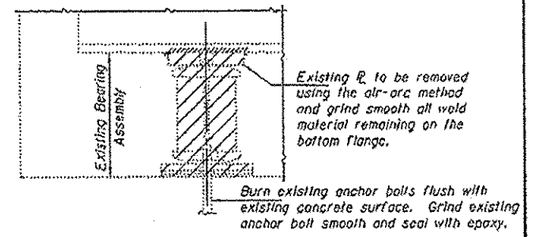

EXISTING BEARING REMOVAL DETAIL

Cost Included with Jack and Remove Existing Bearings.

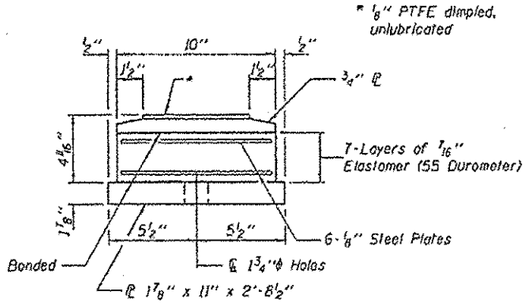

BOTTOM BEARING ASSEMBLY

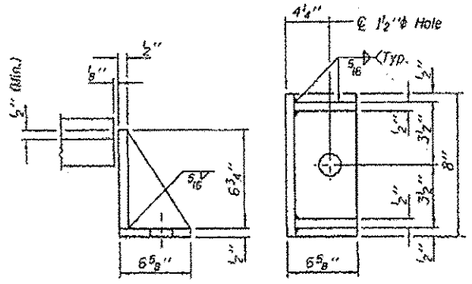

SIDE RETAINER

Equivalent rolled angle with stiffeners will be allowed in lieu of welded plates.

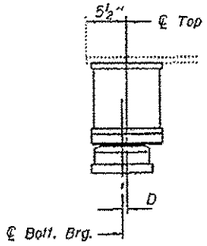

BELOW 50° F.

(Move bott. brg. away from fixed brg.)

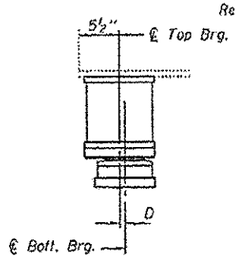

ABOVE 50° F.

(Move bott. brg. toward fixed brg.)

SETTING ANCHOR BOLTS AT EXP. BRG.

* ⅛" per each 100' of expansion for every 15° temp. change from the normal temp. of 50° F.

BILL OF MATERIAL

Item	Unit	Total
Elastomeric Bearing Assembly, Type II	Each	24
Jack and Remove Existing Bearings	Each	24
Furnishing and Erecting Structural Steel	Pound	4490
Anchor Bolts 1¼"ϕ	Each	48

FOR INFORMATION ONLY

TYII/REPS 12-03-2008

FILE NAME = c:\pw_work\pwidot\dohmarja\d0392003\78428-sht-plan.dgn	USER NAME = Dohmarja	DESIGNED -	REVISED -
		DRAWN -	REVISED -
	PLOT SCALE = 100.0000 ' / in.	CHECKED -	REVISED -
Default	PLOT DATE = 8/15/2014	DATE -	REVISED -

STATE OF ILLINOIS
DEPARTMENT OF TRANSPORTATION

SN 097-0038 & SN 097-0039

SCALE: | SHEET OF SHEETS | STA. TO STA.

F.A. RTE.	SECTION	COUNTY	TOTAL SHEETS	SHEET NO.
VAR.	D9 BRIDGE PAINT 2015-1	VARIOUS	23	16
		CONTRACT NO. 78428		
		ILLINOIS FED. AID PROJECT		