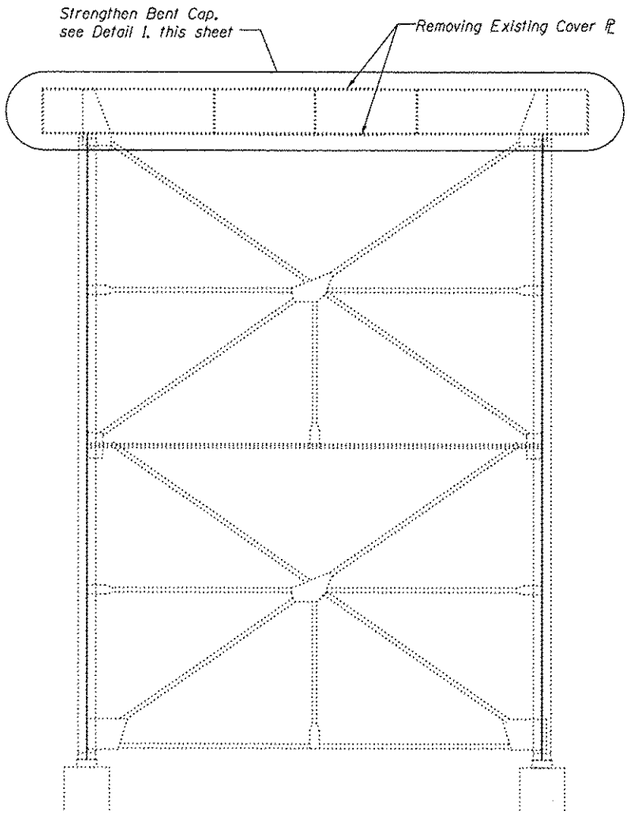

BENT 23
(Looking East)

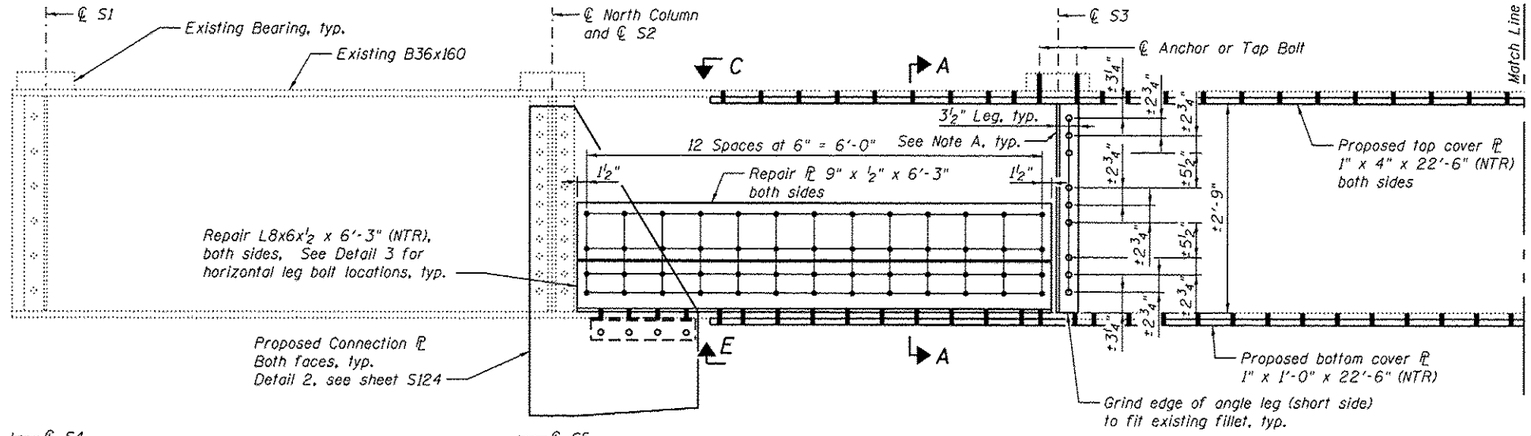

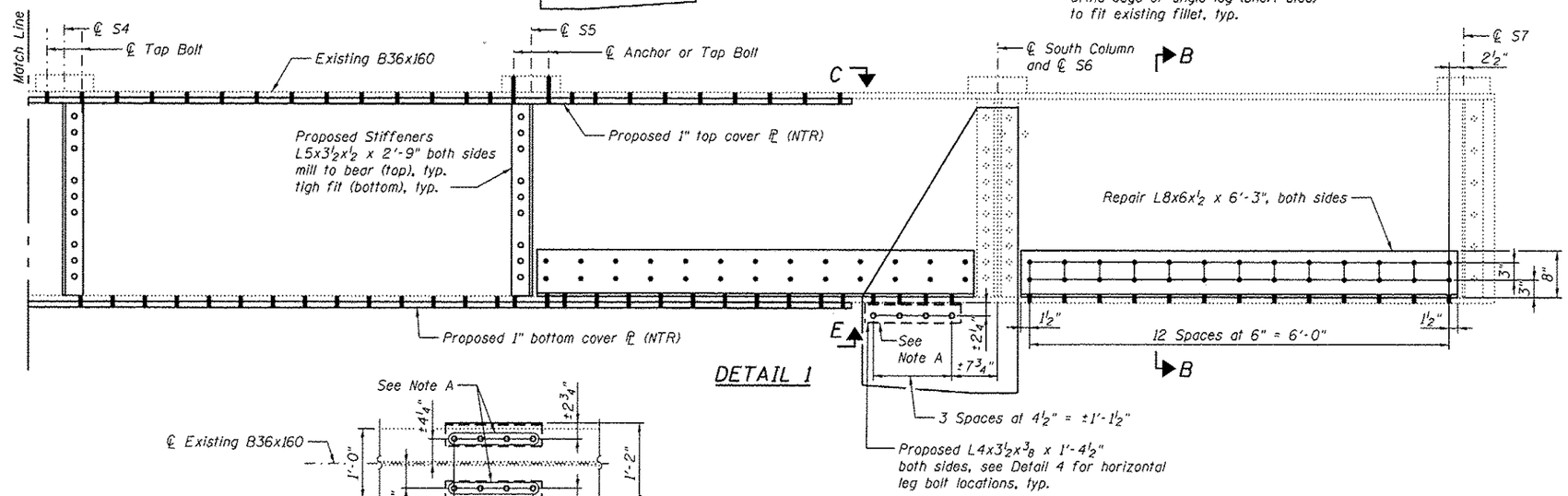

DETAIL 1

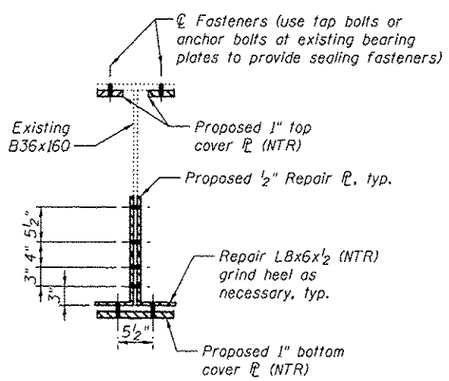

SECTION A-A

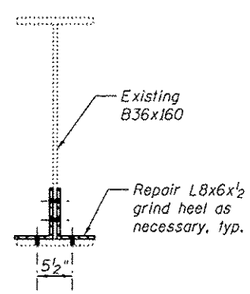

SECTION B-B

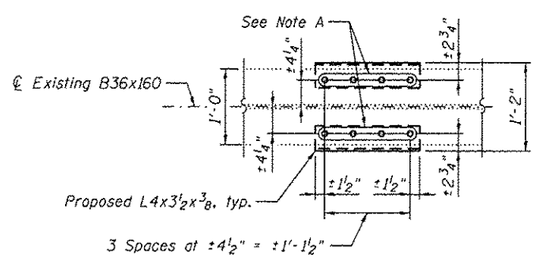

DETAIL 4
(Connection plates not shown for clarity)

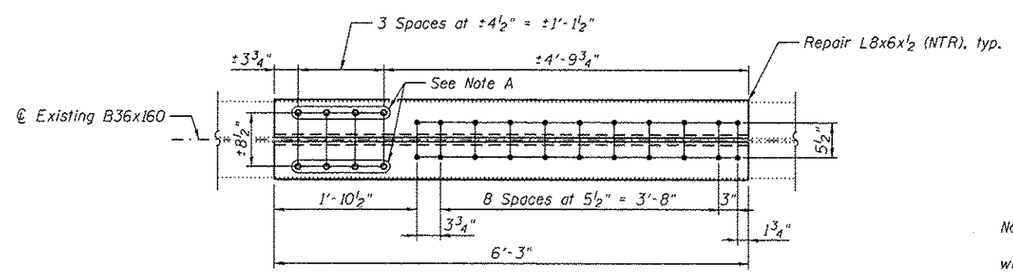

DETAIL 3
(North end shown, South end similar)

BILL OF MATERIAL

Item	Unit	Total
Structural Steel Repair	Pound	3,630

Notes:
All bolted connections shown on this sheet shall be made with ¾" dia. H.S. bolts.
Load carrying components designated "NTR" shall conform to the Impact Testing Requirement, Zone 2.
For View C-C and View E-E details, see sheet S124.

Note A:
Field drill holes using existing holes as template. Remainder of holes may be shop or field drilled.

MODJESKI and MASTERS Experience great bridges.	USER NAME =	DESIGNED - YSS	REVISED
		CHECKED - ZJB	REVISED
	PLOT SCALE =	DRAWN - AEC	REVISED
	PLOT DATE = 05/02/2014	CHECKED - YSS	REVISED

STATE OF ILLINOIS
DEPARTMENT OF TRANSPORTATION

ILLINOIS APPROACH BENT 23 REPAIRS
S.N. 082-6001 MLK BRIDGE OVER MISSISSIPPI RIVER

SHEET NO. S118 OF S138 SHEETS

F.A.P. RTE.	SECTION	COUNTY	TOTAL SHEETS	SHEET NO.
799	1BR, DRS-2	ST. CLAIR	156	136

CONTRACT NO. 76B03
ILLINOIS FED. AID PROJECT