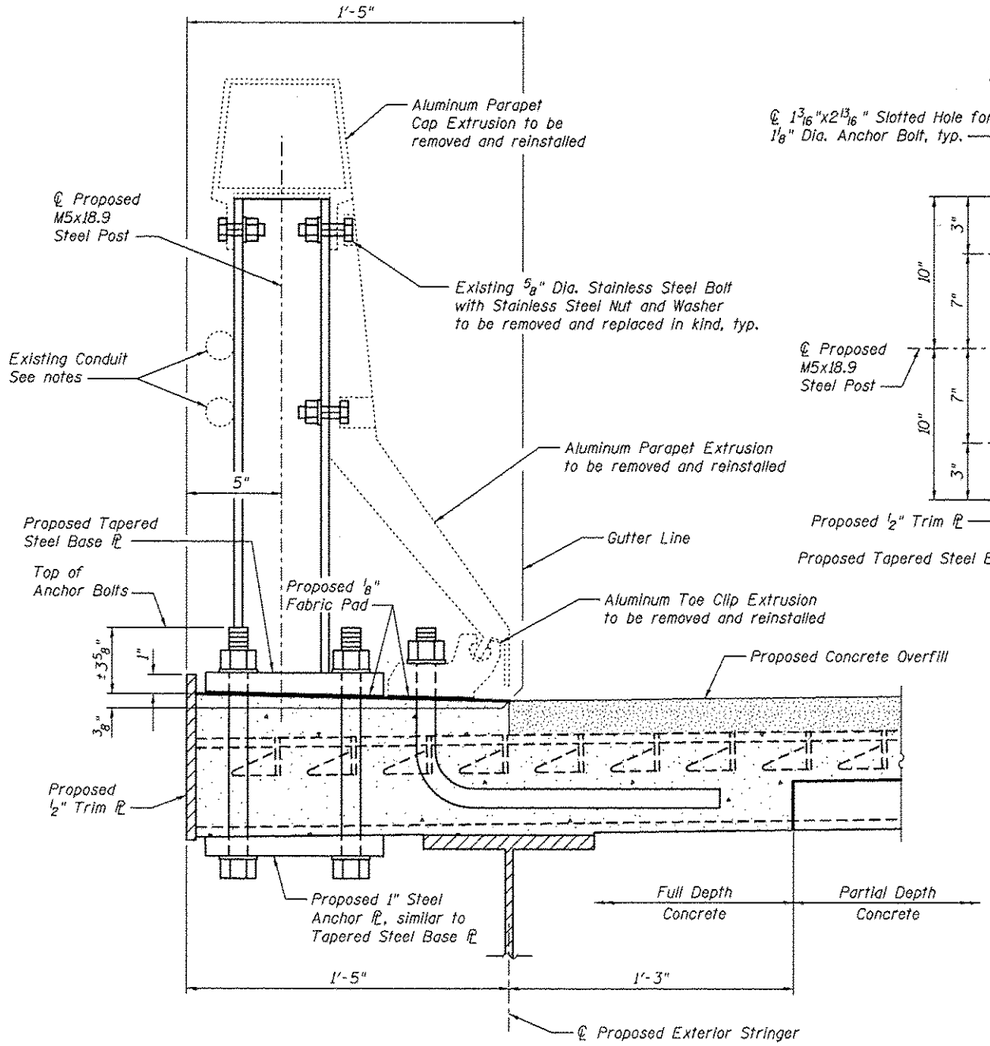

SECTION THRU PARAPET AT GRID DECK FLOOR SYSTEM SPAN 10

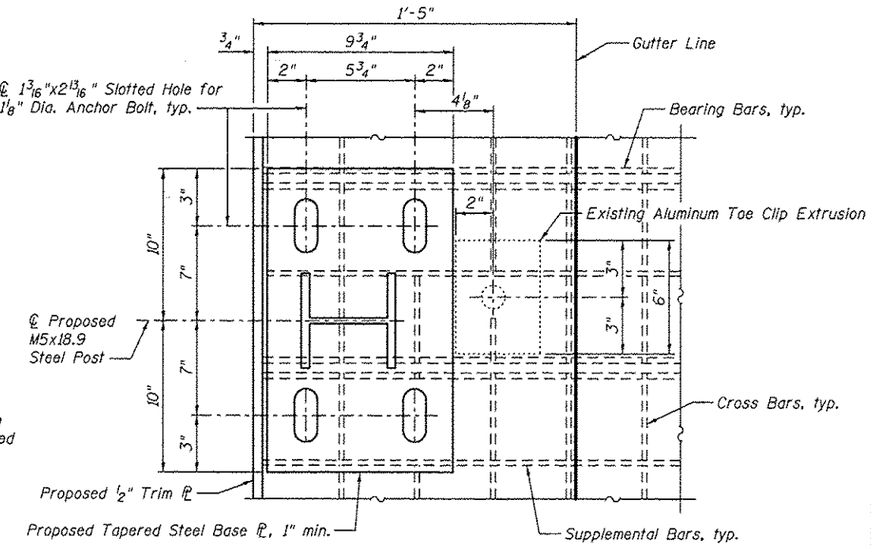

Note:
Cut grid deck cross and supplemental bars as required for placing anchor bolts. Do not cut bearing bars.

PARAPET ANCHORAGE PLAN

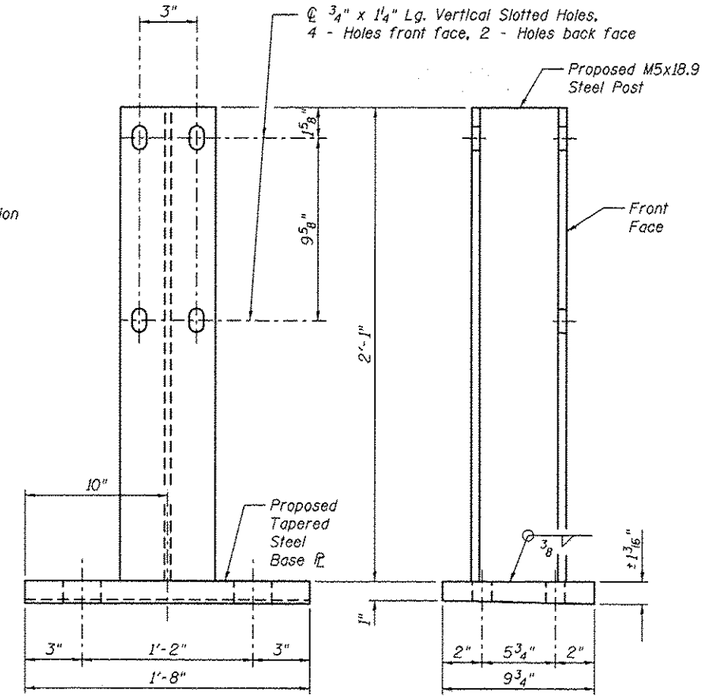

PROPOSED STEEL POST

Parapet Post Replacement Procedure at Grid Deck

1. Remove fasteners from existing aluminum parapet extrusion and completely remove during grid deck replacement. Match mark parts for re-installation.

2. Toe clip anchor bolts shall be placed with grid deck. After grid deck concrete has been placed and cured layout posts with the following constraints:

   a. maximum post spacing = 6'-0"
   b. four posts spaced no more than 2'-11" from centerline shall be placed at each end panel
   c. posts shall be placed so as to not interfere with floorbeams
   d. posts shall be placed with the existing aluminum extrusion attachments in mind and so that the need for additional holes being drilled in the aluminum extrusion is kept to a minimum.

3. Install new parapet post with new anchor bolts. Drill new holes in aluminum extrusion using new post as a template when required.

4. Re-install existing toe clip and existing aluminum parapet extrusion. Fasten aluminum parapet extrusion to new post with new fasteners.

Notes:

The contractor shall exercise extreme care during removal of existing parapet.

See existing parapet erection plans for additional details.

Field drill additional holes in the aluminum parapet extrusion as required. An estimated 388 additional holes are required.

Abandoned holes in aluminum extrusion shall be filled with a 5/8" dia. Stainless Steel bolt. An estimated 102 bolts are required.

All steel shapes and plates shall conform to the requirements of AASHTO M 270 Gr. 36.

Post and parapet shall be in accordance with Section 509 of the Standard Specifications, except as noted and shall be paid for at the contract unit price Each for Steel Post, Attached to Structures.

All stainless steel hardware for railings shall conform to Section 1006.31 of the Standard Specifications.

All post and anchor devices shall be galvanized after shop fabrication in accordance with AASHTO M 111.

Anchor bolt material shall conform to the requirements of ASTM F 1554 Gr. 36 and Section 1006.09 of the Standard Specifications.

Structural plate washers or a continuous bar with Standard holes, not less than 0.3125 in. in thickness, shall be required to completely cover long slotted holes. Hardened washers shall be placed over the outer surface of the plate washer or bar.

Nut and washer material for anchor bolts shall conform to Section 1006.09 of the Standard Specifications, except as noted.

Anchor bolts, washers and nuts shall be galvanized in accordance with AASHTO M232, Class C.

Existing conduit shall be temporarily supported while posts are being replaced and reattached when posts are in place.

The cost of posts, base plates, anchor plates, bolts, nuts, washers, fabric pads, and anchor bolts along with complete installation shall be included in the cost of Steel Post, Attached to Structure.

The cost of drilling new holes in the aluminum parapet extrusion and the cost to temporarily support and reattach existing conduit shall be included in the cost of Remove and Reinstall Existing Aluminum Parapet.

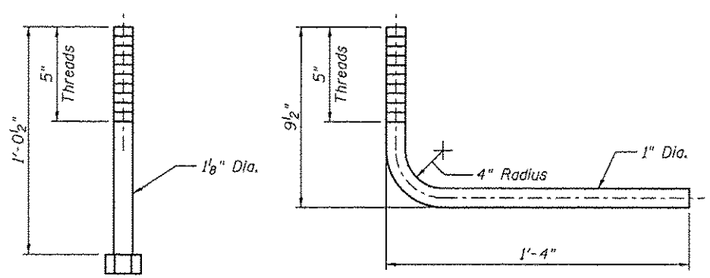

PROPOSED ANCHOR BOLT DETAILS

BILL OF MATERIAL

Item	Unit	Total
Steel Post, Attached to Structures	Each	308
Remove and Reinstall Existing Aluminum Parapet	Foot	725

MODJESKI and MASTERS — Experience great bridges.	USER NAME =	DESIGNED - ZJB	REVISED
		CHECKED - YSS	REVISED
	PLOT SCALE =	DRAWN - PRC	REVISED
	PLOT DATE = 03/20/2014	CHECKED - ZJB	REVISED

STATE OF ILLINOIS
DEPARTMENT OF TRANSPORTATION

MAIN SPANS ALUMINUM PARAPET DETAILS – GRID DECK
S.N. 082-6001 MLK BRIDGE OVER MISSISSIPPI RIVER

SHEET NO. 533 OF 5138 SHEETS

F.A.P. RTE.	SECTION	COUNTY	TOTAL SHEETS	SHEET NO.
799	1BR, DRS-2	ST. CLAIR	156	51

CONTRACT NO. 76B03

ILLINOIS FED. AID PROJECT