Existing Structure: The existing structure, SN 042-2470, is a ±48'-5" long reinforced cast-in-place concrete box culvert with a 10'-0" x 10'-0" opening. The original structure was constructed as S.B.I. Route 109 Construction Section 101-A at the original station of 174+95.

Salvage: None

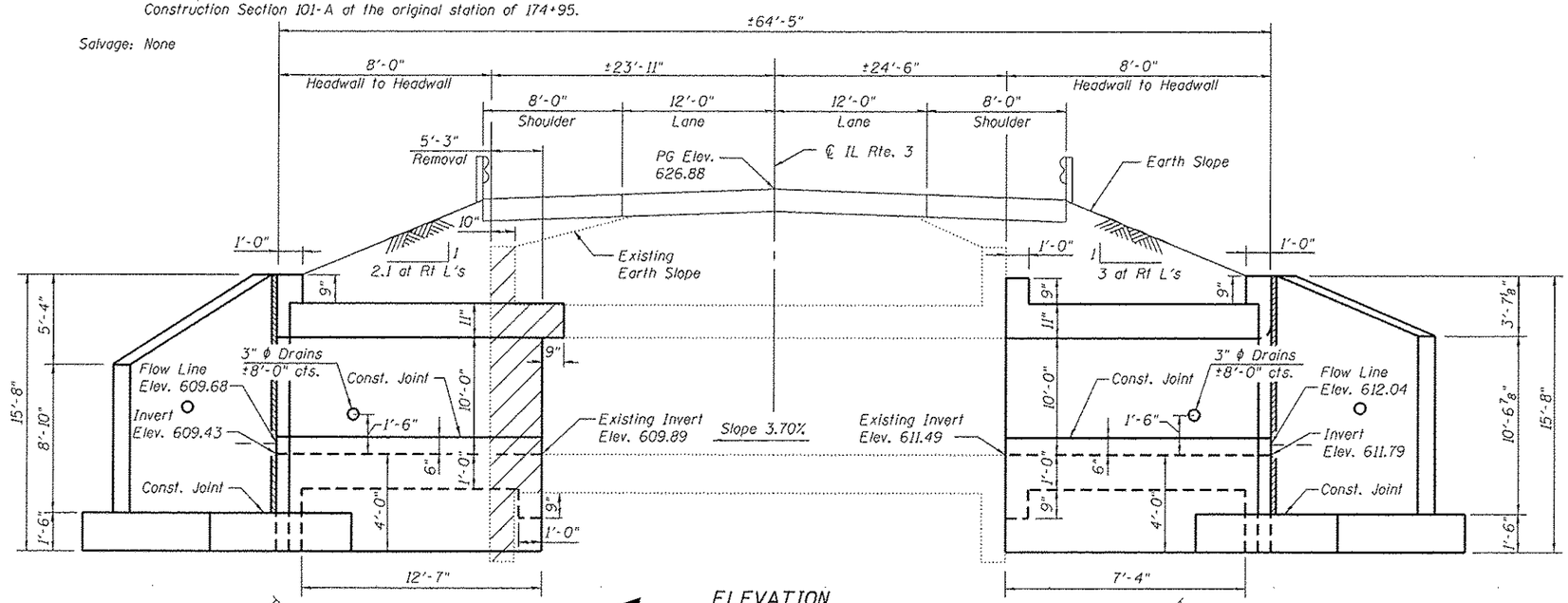

ELEVATION

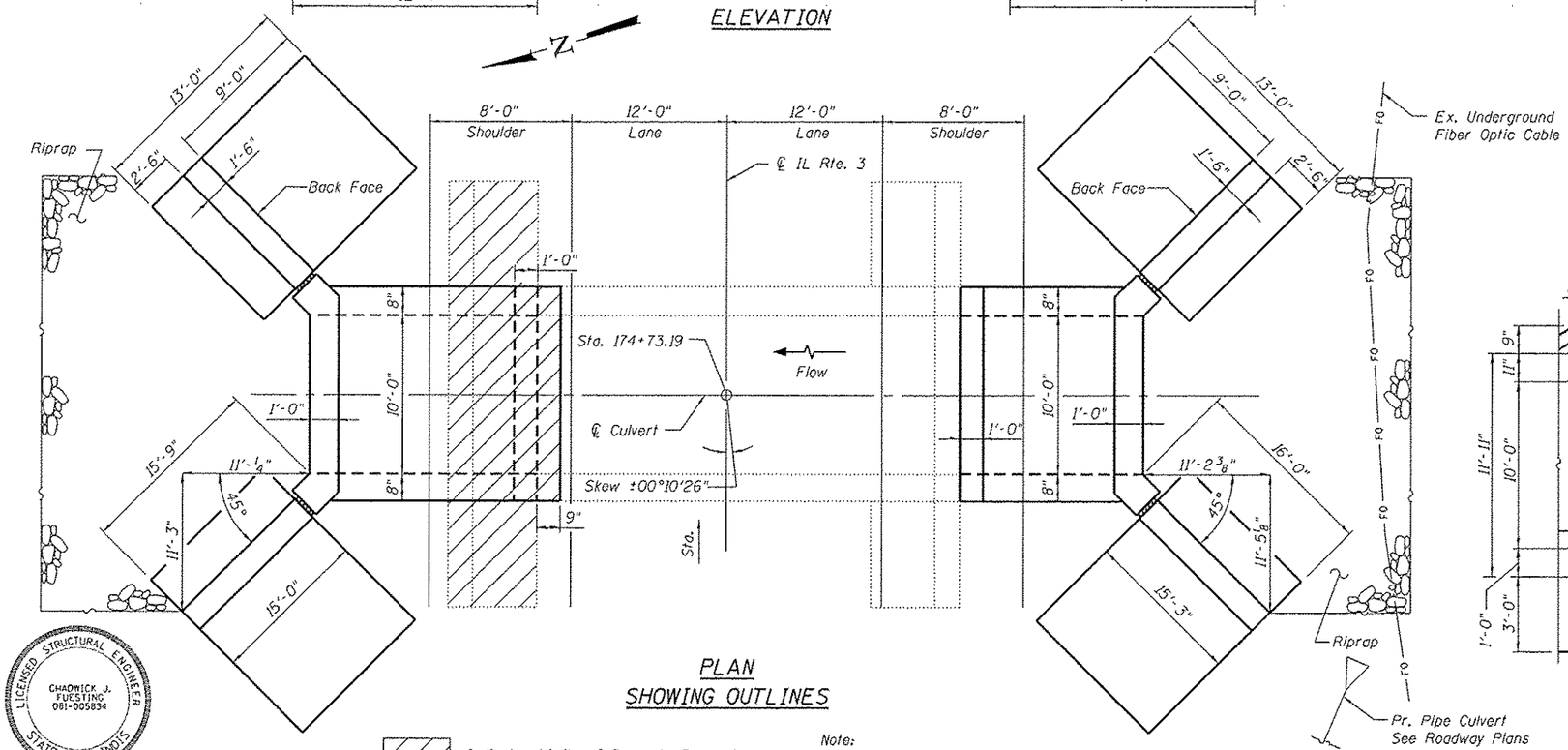

PLAN
SHOWING OUTLINES

Indicates Limits of Concrete Removal

Note:
Limits of Rock Excavation for Structures includes limits of culvert extension below the assumed rock elevation.

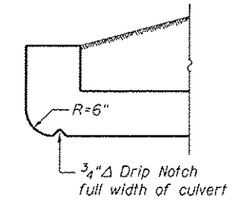

HEADWALL DETAILS AT UPSTREAM END

GENERAL NOTES

Reinforcement bars designated (E) shall be epoxy coated.

Plan dimensions and details relative to the existing structure have been taken from existing plans and are subject to nominal construction variations. It shall be the Contractor's responsibility to verify such dimensions and details in the field and make necessary approved adjustments prior to construction or ordering of materials. Such variations shall not be cause for additional compensation for a change in the scope of work, however, the Contractor will be paid for the quantity furnished at the unit price for the work.

The verification of allowable soil bearing pressure underlying the proposed box culvert shall be verified by a dynamic cone penetration (DCP) test or other acceptable measures as provided by the District Geotechnical and Field Engineers. The results of the test must exceed the calculated bearing pressures shown on the plans prior to placement of the Concrete Box Culvert. Tests failing to exceed the calculated bearing pressures as shown on the plans will require subsurface modification that must be coordinated with the District Geotechnical and Field Engineers.

Expansion bolts shall be according to Standard Specification Article 1006.09.

Precast alternative not allowed at this site.

A distance half the length of the wingwall but not less than 6'-0" of the barrel shall be poured monolithically with the wingwalls.

Calculated max. soil pressure under barrel = 2.211 psf.

For Riprap details and quantities see Roadway Plans.

For Total Bill of Material see sheet 3 of 4.

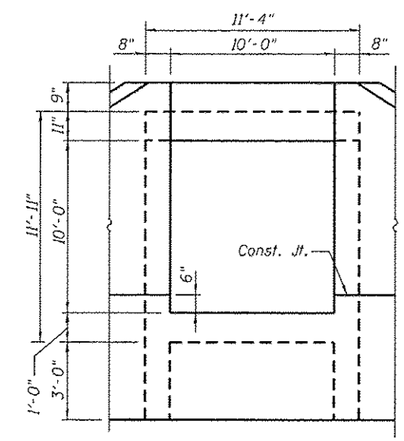

BOX CULVERT
END ELEVATION
(Dimensions Shown at Rt L's)

DESIGN SPECIFICATIONS

2002 AASHTO Standard Specifications for Highway Bridges

LOADING HS 20-44

Allow 50#/sq. ft. for future wearing surface on extension.

DESIGN STRESSES

EXISTING CONSTRUCTION	NEW CONSTRUCTION
fy = 40,000 psi	fy = 60,000 psi
f'c = 3,000 psi	f'c = 3,500 psi

GENERAL PLAN & ELEVATION
ILLINOIS ROUTE 3
F.A.S. RTE. 752 - SEC. 101-2RS-1
JERSEY COUNTY
STATION 174+73.19
STRUCTURE NUMBER 042-2470

LICENSED STRUCTURAL ENGINEER CHADWICK J. FUESTING 081-005834 STATE OF ILLINOIS
EXP. 11-30-2014 Chad Fuesting 8/8/14

FILE NAME = 174+73.19-76789-021.dgn

LOCHMUELLER GROUP 1928 G.A. BRADLEY P. SMITH DRIVE TROY, ILLINOIS 62294 PHONE (618) 667-1400	USER NAME = jdinkelmann	DESIGNED - JD	REVISED -
	Illinois Design Firm Number 184.001670	CHECKED - BB	REVISED -
	PLOT SCALE =	DRAWN - WS	REVISED -
	PLOT DATE = 8/8/2014	CHECKED - CJF	REVISED -

STATE OF ILLINOIS
DEPARTMENT OF TRANSPORTATION

SHEET NO. 1 OF 4 SHEETS

F.A.S. RTE.	SECTION	COUNTY	TOTAL SHEETS	SHEET NO.
752	101-2RS-1	JERSEY	438	207
		CONTRACT NO. 76789		
		ILLINOIS FED. AID PROJECT		