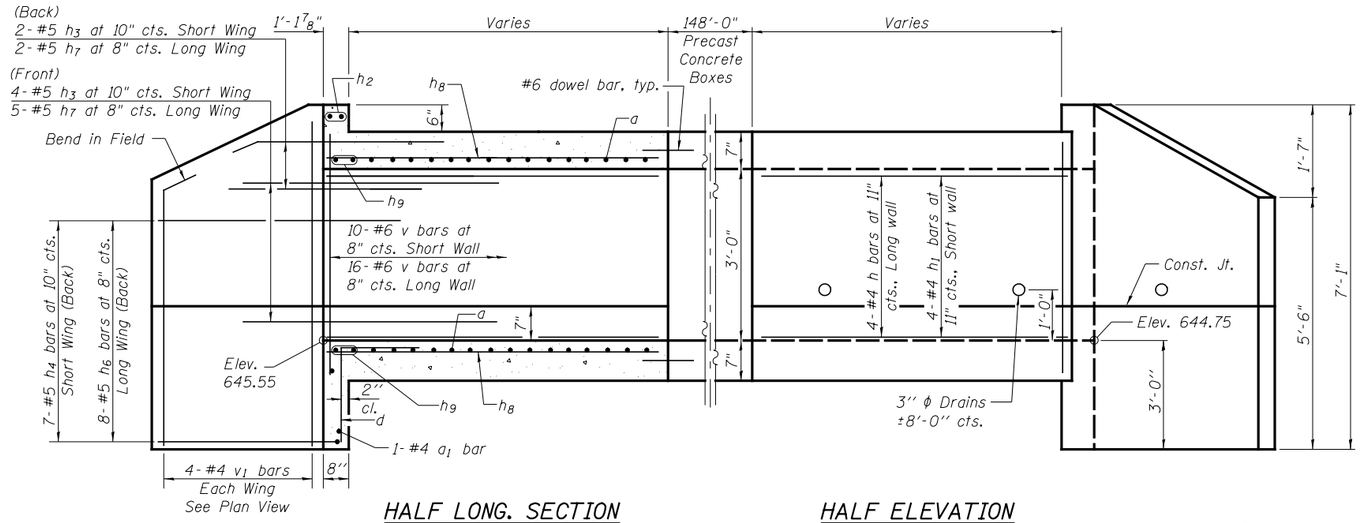

HALF LONG. SECTION

HALF ELEVATION

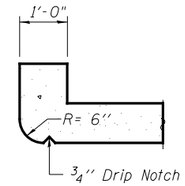

SECTION THRU HEADWALL

(Up Stream End Only)

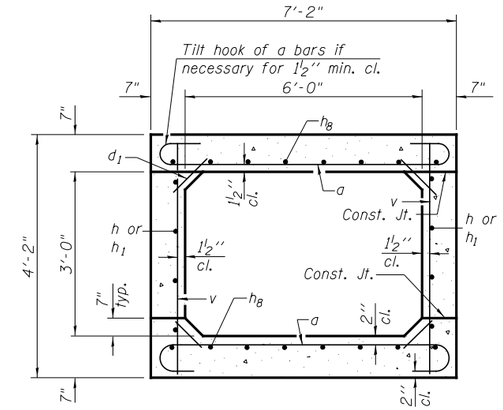

SECTION THRU BARREL

* Nonwoven geotextile fabric shall conform to the requirements of Article 1080.01 of the Standard Specifications. The minimum weight of the fabric shall be 6 ounces per square yard.

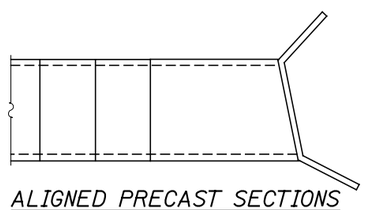

ALIGNED PRECAST SECTIONS PLAN

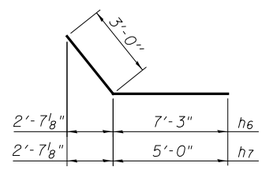

BARS h6 & h7

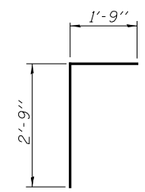

BAR d

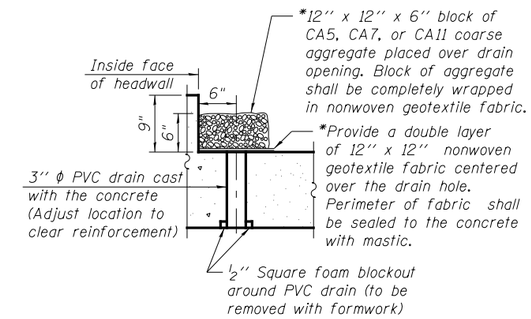

DRAIN DETAIL

(All costs associated with furnishing and constructing the above drain detail will not be measured for payment but shall be included in the contract unit price for the associated work.)

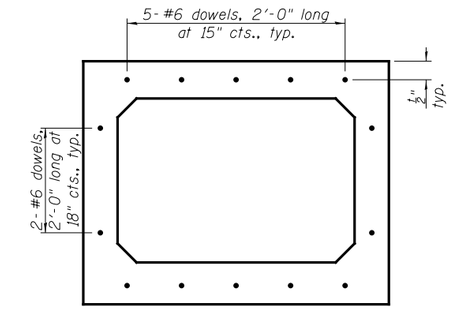

PRECAST CONCRETE CULVERT END ELEVATION

(Section is symmetrical about ℄ culvert)

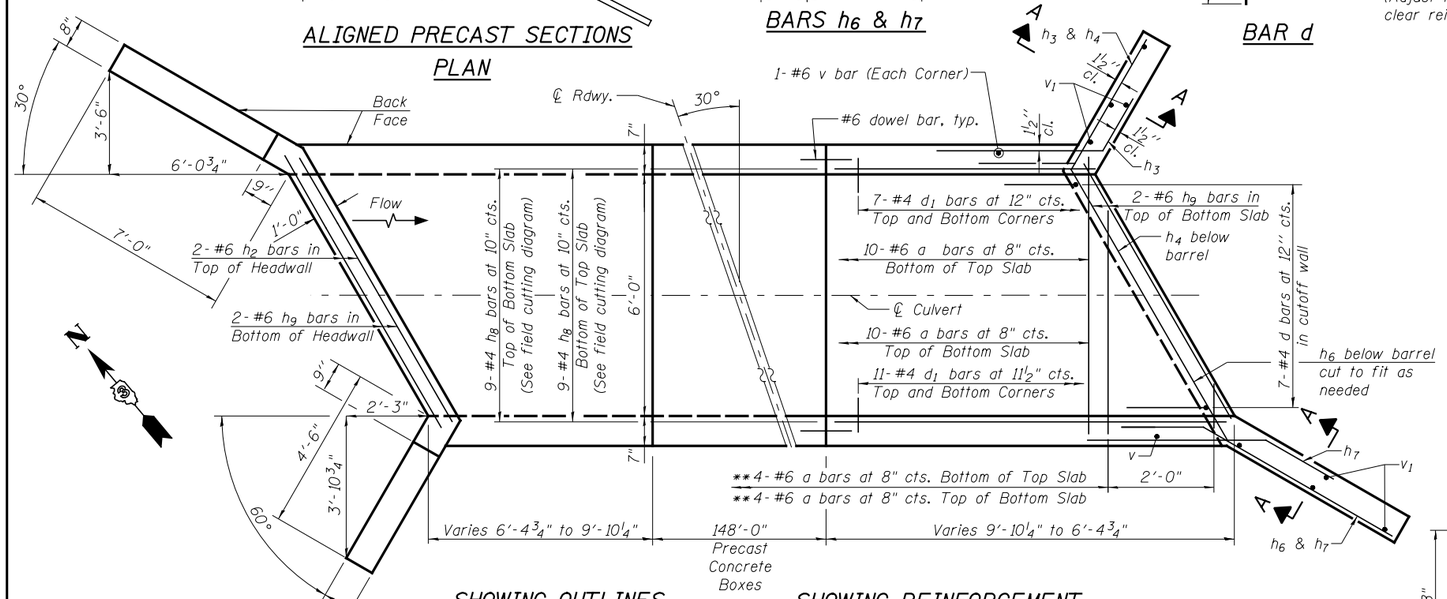

SHOWING OUTLINES

PLAN

SHOWING REINFORCEMENT

Notes:

A distance of half the length of the wingwall but not less than six feet of the barrel shall be poured monolithically with the wingwalls.

Drain holes shall conform to the requirements of Article 503.11 of the Standard Specifications. Cost shall be included in the cost of Concrete Box Culverts.

**a bars in skew portion of slab shall be ordered full length & cut to fit. Balance of bar to be used in opposite end of culvert. Alternate location of hook between sidewall and headwall.

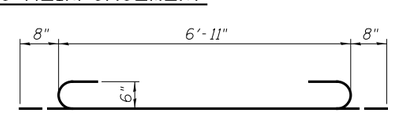

BAR a

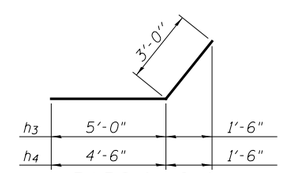

BARS h3 & h4

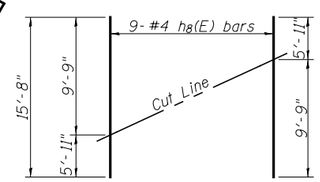

BAR h8(E) FIELD CUTTING DIAGRAM

Order h8(E) bars full length. Cut as shown and use remainder of bars in opposite end.

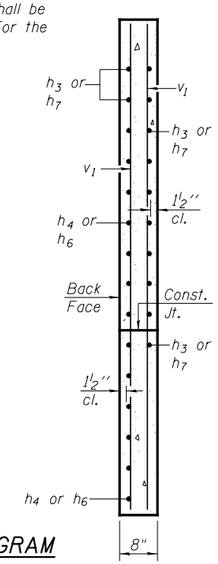

SECTION A-A

BILL OF MATERIAL

Bar	No.	Size	Length	Shape
a	48	#6	8'-3"	
a1	2	#4	6'-8"	
d	14	#4	4'-6"	
d1	72	#4	1'-2"	
h	8	#4	9'-8"	
h1	8	#4	6'-0"	
h2	4	#6	6'-9"	
h3	12	#5	8'-0"	
h4	14	#5	7'-6"	
h6	16	#5	10'-3"	
h7	14	#5	8'-0"	
h8	18	#4	15'-8"	
h9	8	#6	7'-11"	
v	56	#6	3'-10"	
v1	16	#4	6'-9"	
Concrete Box Culverts			Cu. Yd.	12.5
Reinforcement Bars			Pound	2010

REVISED -	USER NAME =	DESIGNED -	PSS
REVISED -	FILE NAME =	CHECKED -	VPT
REVISED -	PLOT SCALE =	DRAWN -	AJF
REVISED -	PLOT DATE =	CHECKED -	VPT

LIN ENGINEERING, LTD.
Consulting Engineers
Springfield, Illinois

STATE OF ILLINOIS
DEPARTMENT OF TRANSPORTATION

CULVERT DETAILS
STRUCTURE NO. 047-2566

SHEET NO. 3 OF 5 SHEETS

F.A.P. RTE.	SECTION	COUNTY	TOTAL SHEETS	SHEET NO.
326	(109, 110)R-1	KENDALL	619	391

CONTRACT NO. 66B84

ILLINOIS FED. AID PROJECT