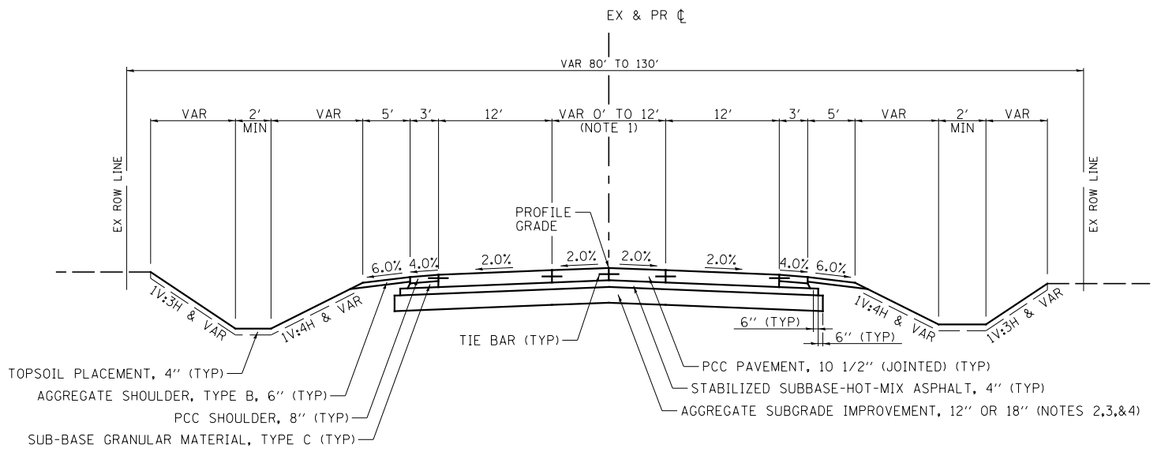

PROPOSED TYPICAL SECTION

US. RTE. 52

STA 1000+00 TO STA 1007+95.81
STA 1010+04.19 TO STA 1018+00

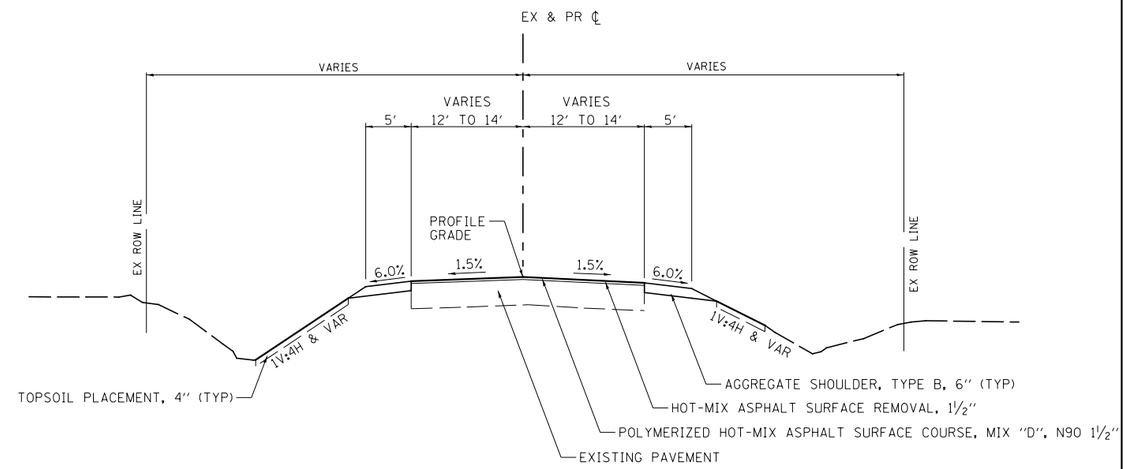

PROPOSED TYPICAL SECTION

US. RTE. 52

STA 995+00 TO STA 1000+00
STA 1018+00 TO STA 1023+00

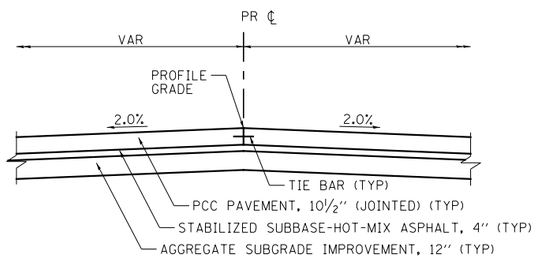

PCC PAVEMENT DETAIL

US. RTE. 52: STA 1007+95.81 TO STA 1008+59.95
US. RTE. 52: STA 1009+40.05 TO STA 1010+04.19
CHICAGO RD.: STA 1108+76.71 TO STA 1109+55.59
CHICAGO RD.: STA 1110+44.41 TO STA 1111+22.16

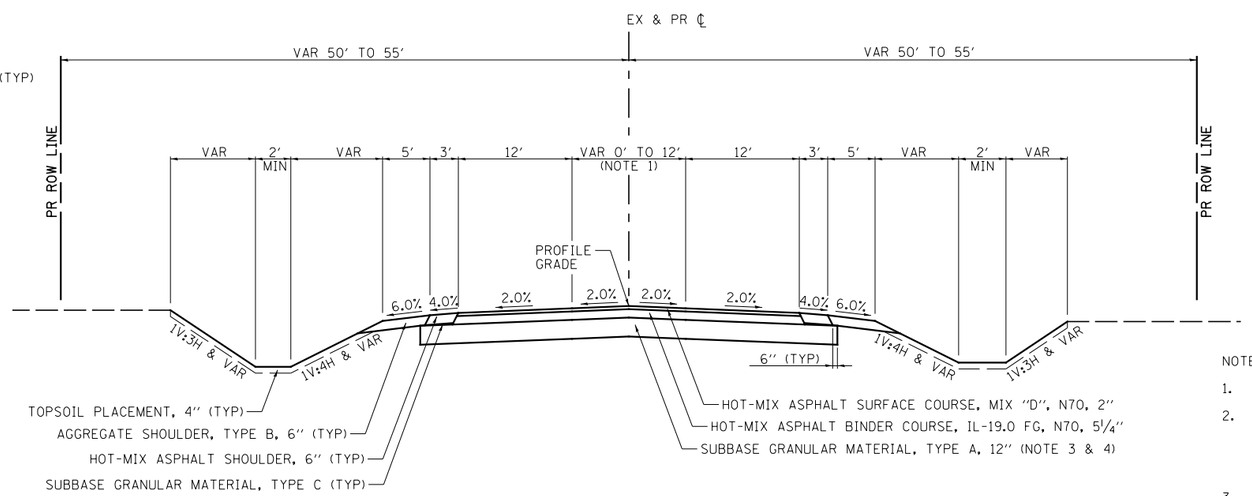

PROPOSED TYPICAL SECTION

CHICAGO RD.

STA 1102+50 TO STA 1108+76.71
STA 1111+22.16 TO STA 1117+34.49

NOTES:

1. SEE PLAN AND PROFILE SHEETS FOR WIDTHS.
2. AGGREGATE SUBGRADE IMPROVEMENT, 18", LOCATIONS:
   STA 1000+00 TO STA 1008+00
   STA 1011+50 TO STA 1018+00
   GEOTECHNICAL FABRIC FOR GROUND STABILIZATION REQUIRED AT THIS LOCATION.
3. SUBGRADE TREATMENT LOCATIONS:
   STA 1106+50 TO STA 1109+00
   GEOTECHNICAL FABRIC FOR GROUND STABLILIZATION REQUIRED AT THESE LOCATIONS.
4. TRANSVERSE UNDERDRAIN SHALL BE INSTALLED AT LOW POINTS OF SUBBASE GRANULAR MATERIAL, TYPE A, 12" AND AGGREGATE SUBGRADE IMPROVEMENT, 18" LOCATIONS. THE TOP SHALL BE 6" BELOW THE BOTTOM OF THE SUBBASE GRANULAR MATERIAL, TYPE A, 12" OR THE AGGREGATE SUBGRADE IMPROVEMENT, 18". SEE SCHEDULE FOR LOCATIONS.