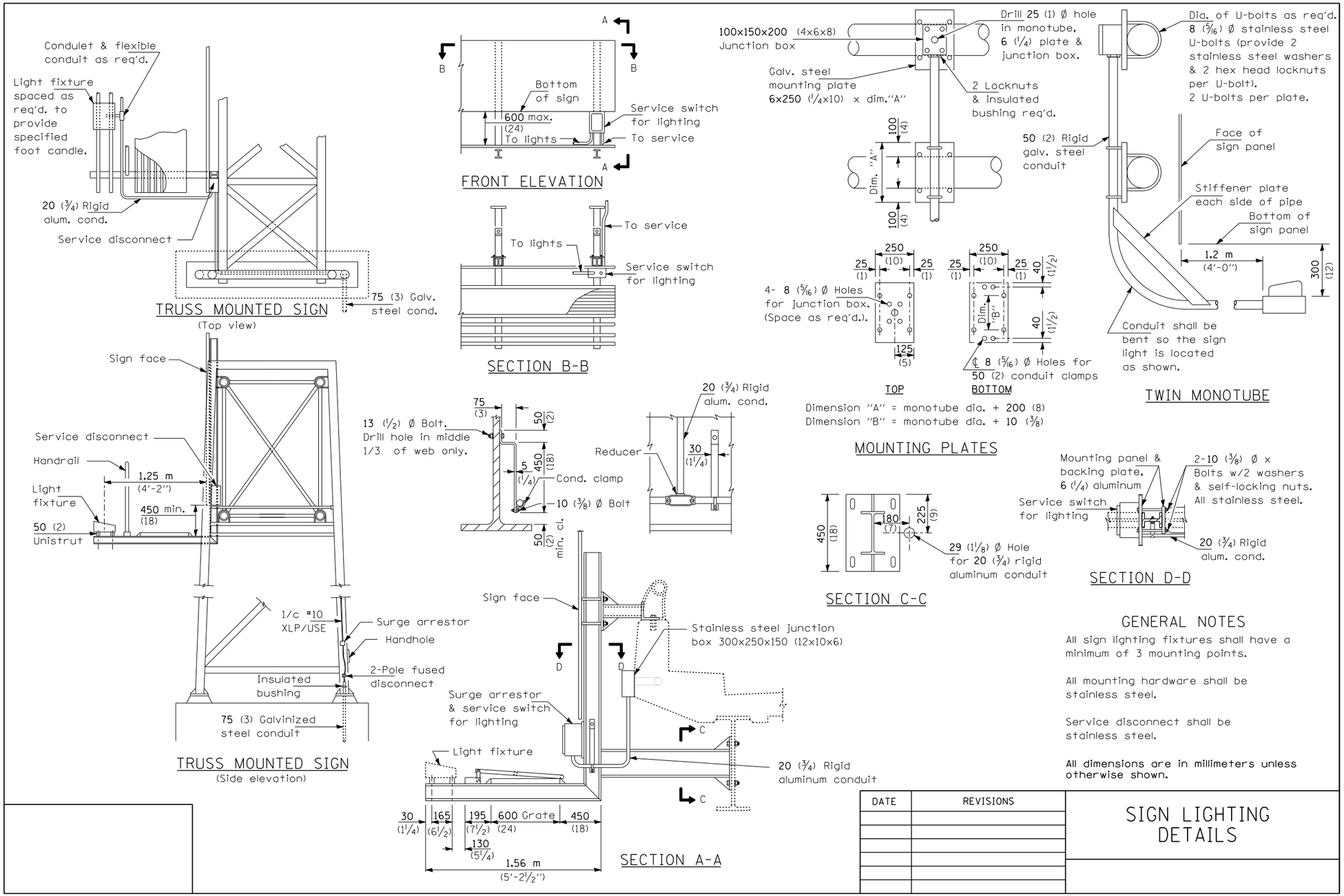

GENERAL NOTES

All sign lighting fixtures shall have a minimum of 3 mounting points.

All mounting hardware shall be stainless steel.

Service disconnect shall be stainless steel.

All dimensions are in millimeters unless otherwise shown.

DATE	REVISIONS

SIGN LIGHTING DETAILS

LGT013.M32

FILE NAME = c:\pw_work\pwidot\jauche\d0249654\D366B27-sht-plnprf.dgn	USER NAME = jauche	DESIGNED -	REVISED -
		DRAWN -	REVISED -
	PLOT SCALE = 40.0000 ' / in.	CHECKED -	REVISED -
Default	PLOT DATE = 8/13/2014	DATE -	REVISED -

STATE OF ILLINOIS
DEPARTMENT OF TRANSPORTATION

SIGN LIGHTING DETAILS

SCALE: | SHEET NO. 28 OF 98 SHEETS | STA. | TO STA.

F.A.I RTE.	SECTION	COUNTY	TOTAL SHEETS	SHEET NO.
80	(32-2) HBR-6	GRUNDY	98	28

CONTRACT NO. 66B27

ILLINOIS FED. AID PROJECT