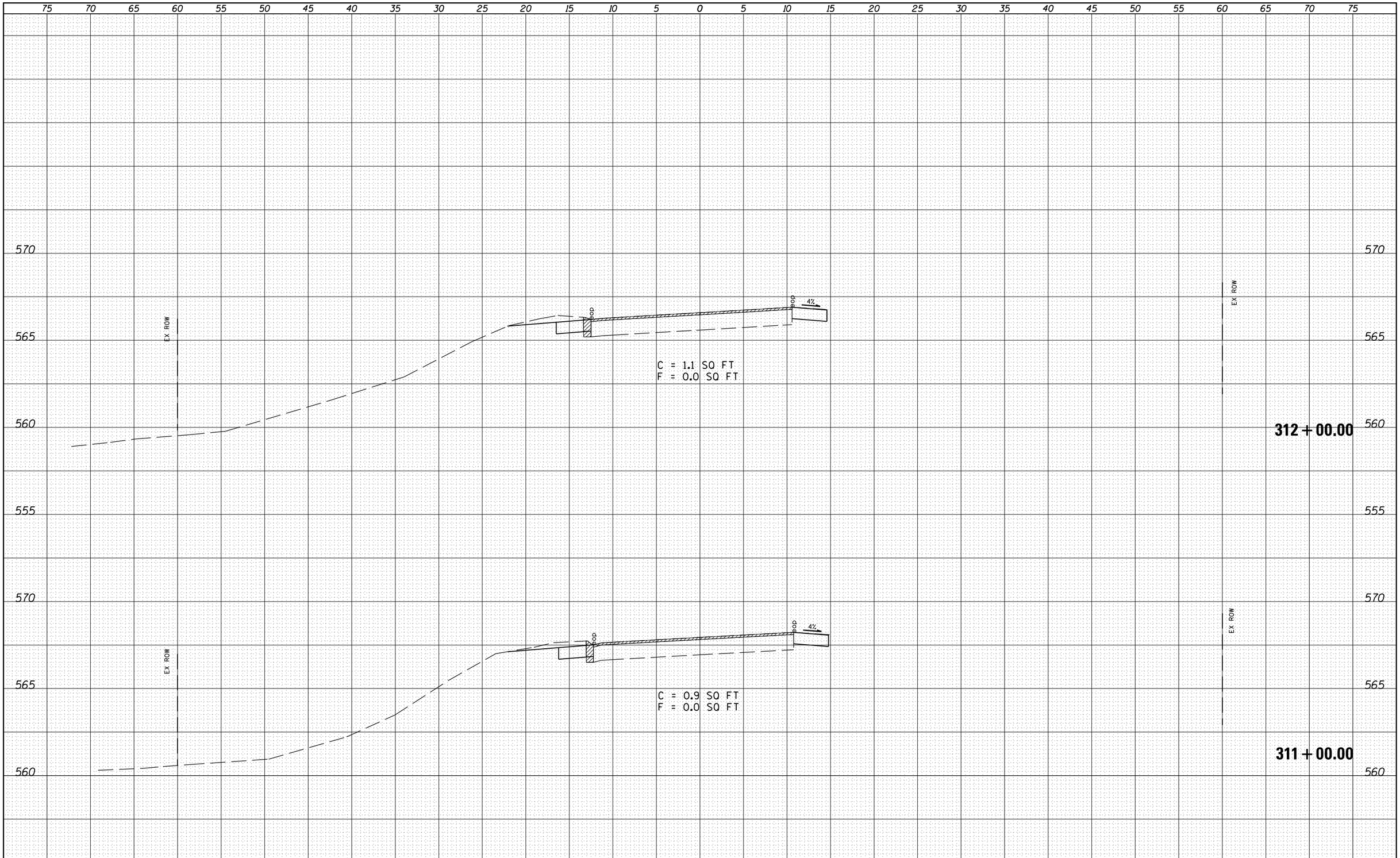

FINAL SURVEY		BY	DATE
NOTE BOOK	SURVEYED		
	PLOTTED		
	TEMPLATE		
	AREAS		
NO.	AREAS CHECKED		

ORIGINAL SURVEY		BY	DATE
NOTE BOOK	SURVEYED		
	PLOTTED		
	TEMPLATE		
	AREAS		
NO.	AREAS CHECKED		

FILE NAME = c:\pw_work\pwidot\sparksgw\d0222050\D672D84-sht-xssht-e004.dgn	USER NAME = sparksgw	DESIGNED -	REVISED -
		DRAWN -	REVISED -
	PLOT SCALE = 10.0000 ' / in.	CHECKED -	REVISED -
	PLOT DATE = Aug-26-2011 02:47:10PM	DATE -	REVISED -

STATE OF ILLINOIS
DEPARTMENT OF TRANSPORTATION

CROSS SECTIONS

SCALE: | SHEET NO. OF SHEETS | STA. 311+00.00 TO STA. 312+00.00

F.A.S. RTE.	SECTION	COUNTY	TOTAL SHEETS	SHEET NO.
1610	22RS-10	SCOTT	42	31

CONTRACT NO. 72D84

ILLINOIS FED. AID PROJECT