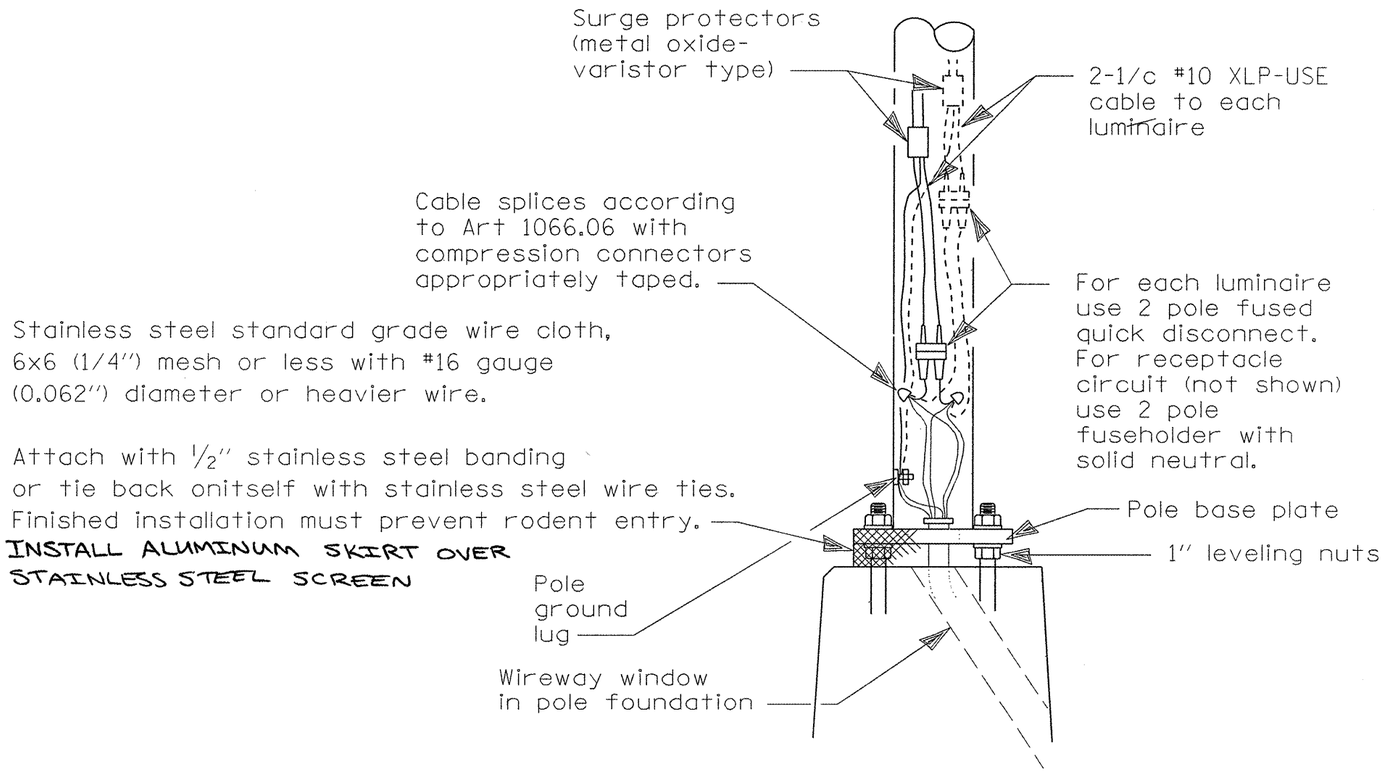

WIRING DETAIL

NO SCALE

GENERAL NOTES

All taped splices shall use 2 layers of electrical tape over 3 layers of rubber tape as required by the Standard Specifications. Coat the finished taped splice with bonding compound.

All cable splices shall be taped unless another method has been specifically approved by the Engineer.

For example purposes the pole is shown on an anchor base. If the pole is required to be set on a breakaway base, consult the Standard Specifications.

All dimensions are in millimeters (inches) unless otherwise shown.

LGT008A.DGN

FILE NAME = c:\pw_work\pwidot\sparksgw\d0221228\D672C87_sht_Pole_HandholeWiring.dgn	USER NAME = sparksgw	DESIGNED -	REVISED -	STATE OF ILLINOIS DEPARTMENT OF TRANSPORTATION	POLE HANDHOLE WIRING	F.A.U. RTE.	SECTION	COUNTY	TOTAL SHEETS	SHEET NO.
	PLOT SCALE = 0:40.000 ms / in.	DRAWN -	REVISED -			7998	110TS,N,L	SANGAMON	95	49
	PLOT DATE = Sep-01-2011 12:36:13PM	CHECKED -	REVISED -					CONTRACT NO. 72C87		
		DATE -	REVISED -		SCALE: SHEET NO. OF SHEETS STA. TO STA.			ILLINOIS FED. AID PROJECT		