S.N. 057–0131 MEDIAN PIER CRASHWALL EXTENSION

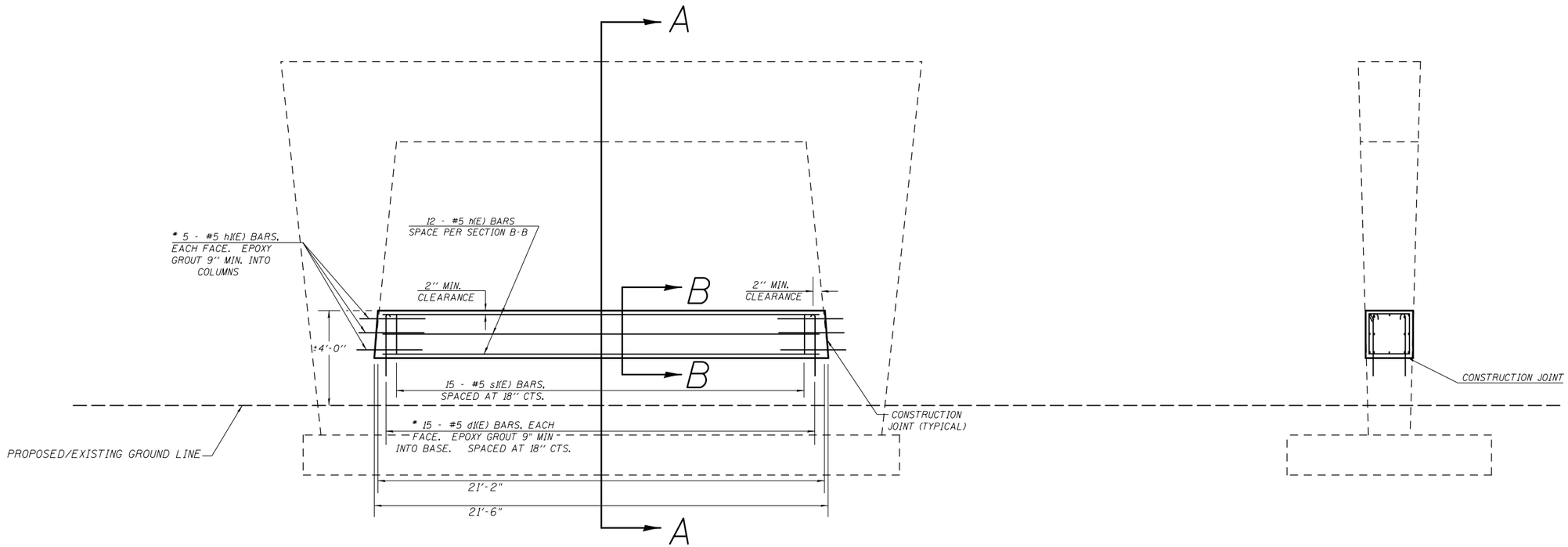

SECTION A-A

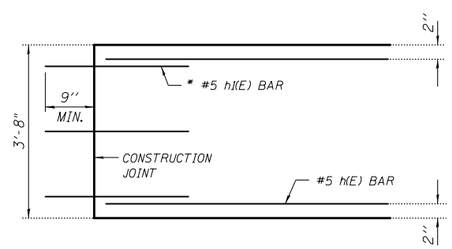

ELEVATION AT COLUMN

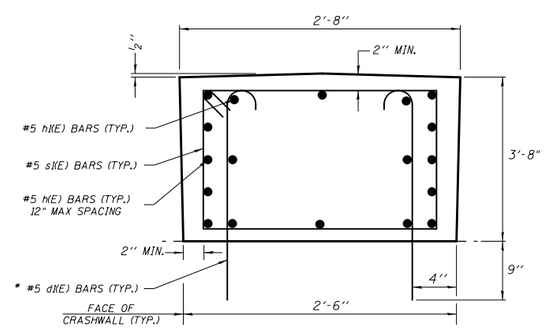

SECTION B-B

* EPOXY GROUT BARS IN 9'' MIN. HOLES ACCORDING TO ARTICLE 584 OF THE STANDARD SPECIFICATIONS.

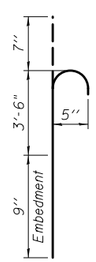

BAR d1(E)

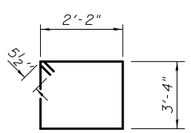

BAR s1(E)

GENERAL NOTES

PLAN DIMENSIONS AND DETAILS RELATIVE TO EXISTING PLANS ARE SUBJECT TO ROUTINE VARIATIONS. THE CONTRACTOR SHALL FIELD VERIFY EXISTING DIMENSIONS AND DETAILS AFFECTING NEW CONSTRUCTION AND MAKE NECESSARY APPROVED ADJUSTMENTS PRIOR TO CONSTRUCTION OR ORDERING OF MATERIALS. SUCH VARIATIONS SHALL NOT BE CAUSE FOR ADDITIONAL COMPENSATION FOR A CHANGE IN SCOPE OF THE WORK, HOWEVER, THE CONTRACTOR WILL BE PAID FOR THE QUANTITY ACTUALLY FURNISHED BASED UPON THE UNIT PRICE BID FOR THE WORK.

THE COST OF EPOXY GROUTING BARS SHALL BE INCLUDED WITH REINFORCEMENT BARS (EPOXY COATED).

REINFORCEMENT BARS SHALL CONFORM TO THE REQUIREMENTS OF ASTM A706 OR GR 60. SEE SPECIAL PROVISIONS.

REINFORCEMENT BARS DESIGNATED (E) SHALL BE EPOXY COATED.

BILL OF MATERIALS

BAR	SHAPE	NO.	SIZE	LENGTH
d1(E)		30	#5	4'-10''
h(E)		12	#5	20'-10''
h1(E)		20	#5	2'-9''
s1(E)		15	#5	11'-11''
CONCRETE STRUCTURES		CU. YDS.	7.5	
REINFORCEMENT BARS, EPOXY COATED		LBS.	656	

FILE NAME = c:\pw_work\pwidot\piersonbr\d0184863\D570648-sht-details.dgn	USER NAME = piersonbr	DESIGNED - GAE	REVISED -
		DRAWN - BBP	REVISED -
	PLOT SCALE = 40.0000 ' / in.	CHECKED -	REVISED -
	PLOT DATE = 8/26/2011	DATE - 07/30/11	REVISED -

STATE OF ILLINOIS
DEPARTMENT OF TRANSPORTATION

S.N. 057–0131 MEDIAN PIER CRASHWALL EXTENSION

SCALE: NONE | SHEET NO. 1 OF 1 SHEETS | STA. TO STA.

F.A.I. RTE.	SECTION	COUNTY	TOTAL SHEETS	SHEET NO.
74	(57-23,57-24)RS-1	MCLEAN	175	140
		CONTRACT NO. 70648		
FED. ROAD DIST. NO.	ILLINOIS	FED. AID PROJECT		