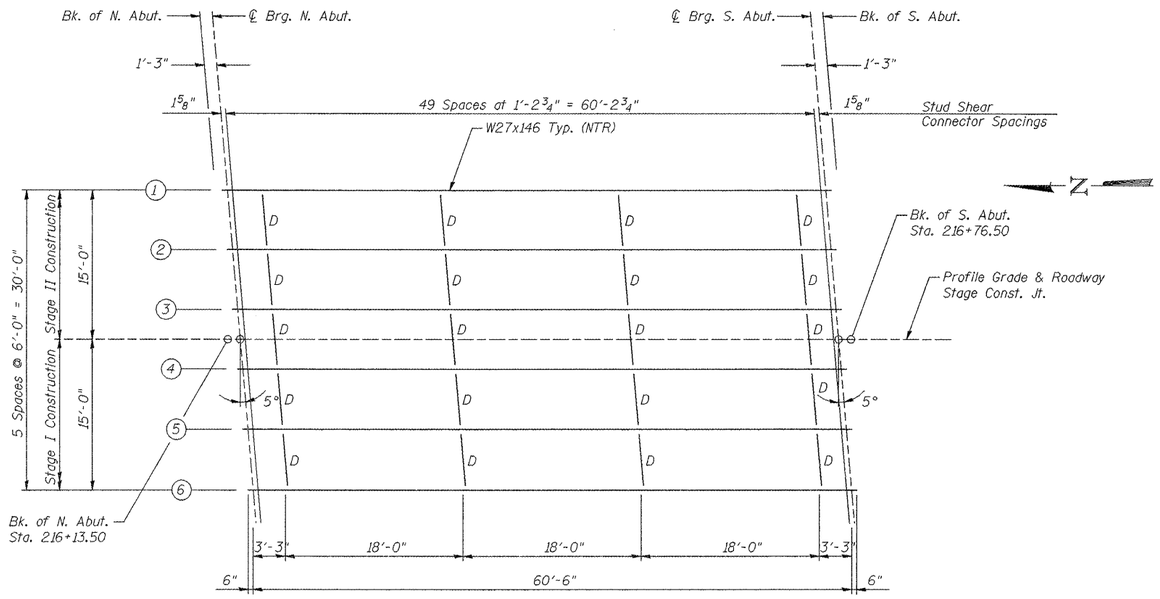

FRAMING PLAN

INTERIOR GIRDER MOMENT TABLE		
		0.5 Sp. 1
Is	(in4)	5630
Ic (n)	(in4)	14.188
Ic (3n)	(in4)	10.237
Ss	(in3)	411
Sc (n)	(in3)	1252
Sc (3n)	(in3)	634
Z	(in3)	461
wℓ	(k/ft.)	0.76
Mℓ	('k)	345
sℓ	(k/ft.)	0.45
Msℓ	('k)	200
Mℓ	('k)	423
M (Imp)	('k)	127
5/3[Mℓ+M(Imp)]	('k)	917
Ma	('k)	1901
Mu	('k)	2643
fsℓ non-comp	(k.s.i.)	7.9
fsℓ (comp)	(k.s.i.)	4.6
fs 5/3(ℓ+Imp)	(k.s.i.)	20.9
fs (Overload)	(k.s.i.)	33.4
fs (Total)	(k.s.i.)	43.4
VR	(k)	42.8

INTERIOR GIRDER REACTION TABLE		
		Abuts.
Rℓ	(k)	60.8
Rℓ	(k)	33.5
Imp.	(k)	14.4
R (Total)	(k)	108.7

Is and Ss are the moment of inertia and section modulus of the steel section used in computing fs (Total & Overload).

$Ic_{(n)}$ and $Sc_{(n)}$ are the moment of inertia and section modulus of the composite section used in computing stresses due to Live Load.

$Ic_{(3n)}$ and $Sc_{(3n)}$ are the moment of inertia and section modulus of the composite section used in computing stresses due to superimposed dead loads. (see AASHTO 10.38)

VR is the maximum Live Load + Impact shear range in span.

Z is the plastic section modulus used to determine the fully plastic moments in the non-composite areas.

Ma (Applied Moment)=1.3[Mℓ + Msℓ + 5/3(Mℓ + M(Imp))].

The Plastic Moment capacity (Mu) is computed according to AASHTO 10.48.1 and 10.50.1.1.

fs (Overload) is the sum of the stresses due to Mℓ + Msℓ + 5/3(Mℓ + M(Imp)).

fs (Total) (Non-compact section) is the sum of the stresses due to 1.3[Mℓ + Msℓ + 5/3(Mℓ + M(Imp))].

Dead Load Reactions at Abutments include 24.5 k for Concrete Diaphragm plus Approach Pavement.

All cross frames or diaphragms shall be installed as steel is erected and secured with erection pins and bolts except as otherwise noted. Individual cross frames or diaphragms at supports may be temporarily disconnected to install bearing anchor rods.

Load carrying components designated "NTR" shall conform to the Supplemental Requirements for Notch Toughness. Zone 2.

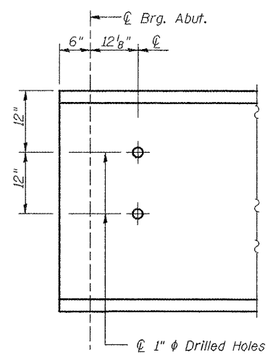

END OF BEAM DETAIL

(12 Required)

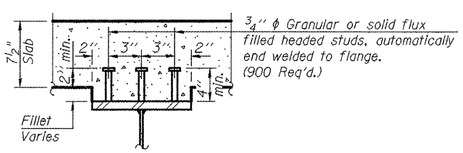

SECTION A-A

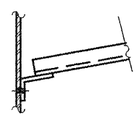

ALONG SKEW

(Skew 10° or less)

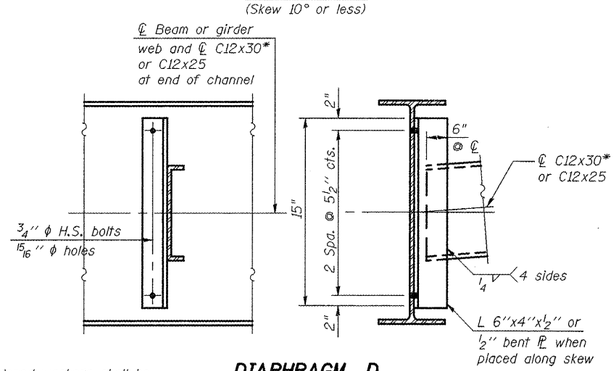

DIAPHRAGM D

20 Required

Note:

Two hardened washers shall be required over all oversize holes for diaphragms.

* Alternate channels are permitted to facilitate material acquisition. Calculated weight of structural steel is based on the lighter section.

TOP OF BEAM ELEVATIONS

Beam	℄ Brg. N. Abut.	℄ Brg. S. Abut.
Bm 1	616.115	616.533
Bm 2	616.228	616.647
Bm 3	616.323	616.745
Bm 4	616.328	616.749
Bm 5	616.237	616.659
Bm 6	616.131	616.553

For fabrication only.

HDR Engineering, Inc.

FILE NAME = D468083-sht-plan.dgn	USER NAME = johnsontv	DESIGNED -	REVISED -	STATE OF ILLINOIS DEPARTMENT OF TRANSPORTATION
		DRAWN -	REVISED -	
	PLOT SCALE = 100.4566 ' / in.	CHECKED -	REVISED -	
	PLOT DATE = 8/26/2011	DATE -	REVISED -	

STRUCTURAL STEEL
IL 94 OVER WOLF CREEK S.N. 036-0055

SCALE: | SHEET NO. 9 OF 15 SHEETS | STA. 216+45

F.A.P. RTE.	SECTION	COUNTY	TOTAL SHEETS	SHEET NO.
534	109B (BR3)	HENDERSON	88	34
		CONTRACT NO. 68083		
		ILLINOIS FED. AID PROJECT		