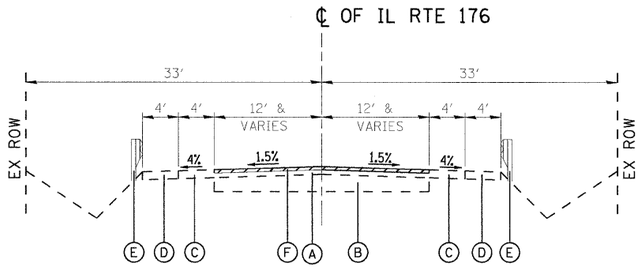

EXISTING TYPICAL SECTION

FACING EAST
N.T.S.

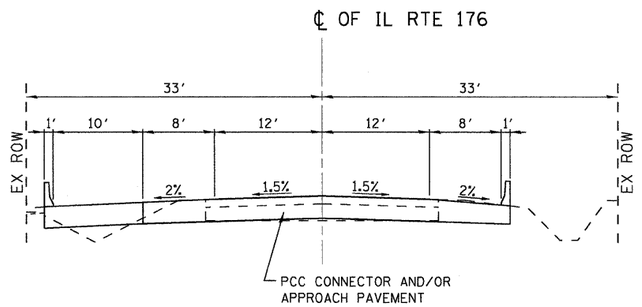

PROPOSED TYPICAL SECTION

FACING EAST
CULVERT OMISSION AREA
STA. 88+92.8 TO STA. 89+94.2
N.T.S.

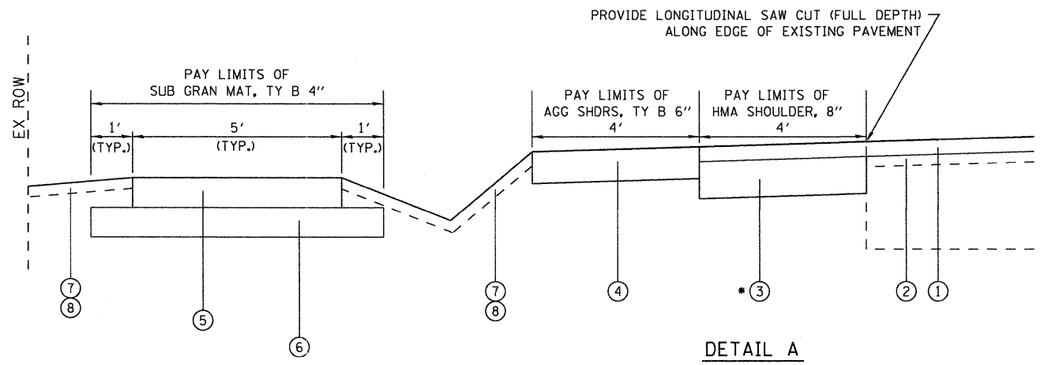

DETAIL A

EXISTING LEGEND

- Ⓐ EXIST. HMA PAVEMENT, ± 5"
- Ⓑ EXIST. PCC PAVEMENT, ± 7½"
- Ⓒ EXIST. HMA SHOULDER
- Ⓓ EXIST. AGGREGATE SHOULDER, VARIABLE DEPTH
- Ⓔ EXIST. GUARDRAIL
- Ⓕ HMA SURFACE REMOVAL, 2¼"

PROPOSED LEGEND

- ① HOT-MIX ASPHALT SURFACE COURSE, MIX "D", N70, 1½"
- ② LEVELING BINDER (MACHINE METHOD), N70, ¾"
- * ③ HOT-MIX ASPHALT SHOULDERS, 8"
- ④ AGGREGATE SHOULDERS, TYPE B 6"
- ⑤ PORTLAND CEMENT CONCRETE SIDEWALK 5"
- ⑥ SUBBASE GRANULAR MATERIAL, TYPE B 4"
- ⑦ TOPSOIL FURNISH AND PLACE, 4"
- ⑧ SEEDING, CLASS 2A

* THE TOP 1½" OF THE HMA SHOULDER SHALL BE HMA SURFACE COURSE.

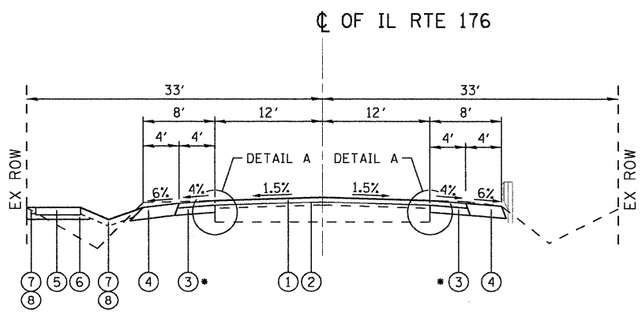

PROPOSED TYPICAL SECTION

FACING EAST
RESURFACING
STA. 89+94.2 TO STA. 91+75.0
N.T.S.

HOT-MIX ASPHALT MIXTURE REQUIREMENTS	
MIXTURE TYPE	AIR VOIDS
PAVEMENT RESURFACING	
HOT-MIX ASPHALT SURFACE COURSE, MIX "D", N70 (IL-9.5mm); 1 1/2 "	4% @ 70 GYR.
LEVELING BINDER (MACHINE METHOD), N70, ¾"	4% @ 70 GYR.
HOT-MIX ASPHALT SHOULDERS, 8"	2% @ 30 GYR.
ENTRANCES AND DRIVEWAYS	
HOT-MIX ASPHALT SURFACE COURSE, MIX "D", N50, (IL-9.5mm); 2"	4% @ 50 GYR.
HOT-MIX ASPHALT BASE COURSE, (HMA BINDER IL-19.0mm); 6"	4% @ 50 GYR.
PAVEMENT PATCHING	
CLASS D PATCHES, TYPE II, III, AND IV, 10 INCH (BINDER IL-19.0mm)	4% @ 70 GYR.

NOTE: THE UNIT WEIGHT USED TO CALCULATE ALL HOT-MIX ASPHALT MIXTURES IS 112 LBS/SY/IN.

THE "AC TYPE" FOR POLYMERIZED HMA MIXES SHALL BE "SBS/SBR PG 70 -22" AND FOR NON-POLYMERIZED HMA THE "AC TYPE" SHALL BE "PG 64 -22" UNLESS MODIFIED BY DISTRICT ONE SPECIAL PROVISIONS. FOR "PERCENT OF RAP" SEE DISTRICT ONE SPECIAL PROVISIONS.

FILE NAME = G:\projects\2102155.202\CADD\Civil\Sht\0102M54-84sht-typical.dgn

ENTRAN

USER NAME = 2psend	DESIGNED - DLP	REVISED -	
	DRAWN - ENTRAN	REVISED -	
PLOT SCALE = 50.00 ' / IN.	CHECKED - TMH	REVISED -	
PLOT DATE = 9/8/2011	DATE - 04/07/11	REVISED -	

STATE OF ILLINOIS
DEPARTMENT OF TRANSPORTATION

FAP ROUTE 533 (IL RTE 176) OVER DRAINAGE DITCH (EAST OF IL RTE 23)
TYPICAL SECTIONS

SCALE: | SHEET NO. OF SHEETS | STA. TO STA.

F.A.P. RTE.	SECTION	COUNTY	TOTAL SHEETS	SHEET NO.
533	119-T-1	McHENRY	40	5
IL ROUTE 176		CONTRACT NO. 60M54		
FED. ROAD DIST. NO.	ILLINOIS	FED. AID PROJECT		