F.A.P. RTE.	SECTION	COUNTY	TOTAL SHEETS	SHEET NO.
750	(112,113) Y, WRS	FAYETTE	178	13
STA.		TO STA.		
FED. ROAD DIST. NO. 7	ILLINOIS	FED. AID PROJECT		

CONTRACT NO. 94927

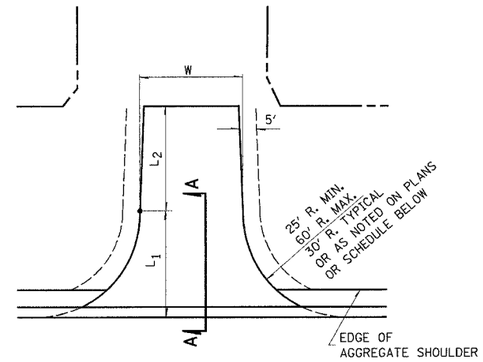

PUBLIC ROAD

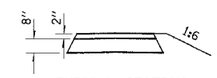

TYPICAL SECTION

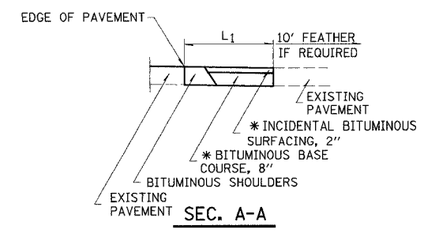

SEC. A-A

PUBLIC ROAD SCHEDULE

SIDE	STATION	TYPE	WIDTH	LENGTH L_1	LENGTH L_2	RADII	BITUMINOUS BASE COURSE, SUPERPAVE * TON	INCIDENTAL BITUMINOUS SURFACING, 2"* TON
LT.	122+91.76	PRA.	20	30	0	30	62.3	15.6
RT.	137+50.01	PRA.	21.5	30	0	30	73.7	18.4
LT.	151+03.57	PRA.	18	30	0	30	55.1	13.8
RT.	177+41.18	PRA.	19	34	4	30	54.9	13.7
LT.	203+44.38	PRA.	26	30	0	30	58.5	14.6
LT.	252+24.83	PRA.	18	19	35	20, 30	112.7	28.2
RT.	292+07.24	PRA.	16	30	0	30	51.4	12.8
LT.	338+65.30	PRA.	34	25	5	25, 30	65.6	16.4
LT.	355+46.12	PRA.	20.5	19	30	30, 25	83.7	20.9
TOTALS							618	154

FE - FIELD ENTRANCE
PE - PRIVATE ENTRANCE
CE - COMMERCIAL ENTRANCE
PRA - PUBLIC ROAD APPROACH
MBT - MAILBOX TURNOUT

NOTES

L_1 = DISTANCE FROM EDGE OF PAVEMENT TO RADIUS POINT OR MAXIMUM DISTANCE OF 30'.
L_2 = DISTANCE FROM RADIUS POINT OR MAXIMUM DISTANCE OF 30' FROM EDGE OF PAVEMENT TO R.O.W. LINE
MATERIAL USED TO CONSTRUCT L_2 LENGTH SHALL BE THE SAME TYPE OF MATERIAL AS THE EXISTING ENTRANCE

THE THICKNESS OF THE BITUMINOUS SHOULDERS THROUGH COMMERCIAL ENTRANCES (BITUMINOUS) AND PUBLIC ROADS SHALL BE 10". THE COST OF THE EXTRA THICKNESS SHALL BE INCLUDED WITH THE BITUMINOUS SHOULDERS PAY ITEM.

THE COST OF THE BITUMINOUS MATERIALS AND AGGREGATE (PRIME COAT) FOR ENTRANCES AND PUBLIC ROAD APPROACHES SHALL BE INCLUDED IN THE PAY ITEM INCIDENTAL BITUMINOUS SURFACING.

BITUMINOUS MATERIALS AND AGGREGATE (PRIME COAT) FOR ENTRANCES AND PUBLIC ROAD APPROACHES SHALL BE CONSIDERED INCIDENTAL TO INCIDENTAL BITUMINOUS SURFACING AS NOTED IN THE SPECIAL PROVISIONS.

* BITUMINOUS BASE COURSE AND INCIDENTAL BITUMINOUS SURFACING SHALL BE SUPERPAVE MIXTURES.

REVISIONS NAME	DATE

ILLINOIS DEPARTMENT OF TRANSPORTATION

ENTRANCE DETAILS
SHEET 2 OF 2

F.A.P. 750 (IL. RTE. 185)
SECTION 112,113 - FAYETTE CO.

SCALE: DRAWN BY CRO
DATE JULY 22, 2005 CHECKED BY RCY

PLAN	BY	DATE
SURVEYED		
PLOTTED		
ALIGNMENT CHECKED		
STA. OF P.I.'S CHECKED		
NOTE BOOK NO.		
CADD FILE NAME		

PLAN	BY	DATE
SURVEYED		
PLOTTED		
ALIGNMENT CHECKED		
STA. OF P.I.'S CHECKED		
NOTE BOOK NO.		
CADD FILE NAME		

9:05:36 AM 8/2/2005 J:\2003\030045\0002\civil\phase 2 kdg\dgn\p2_750_detail_sheets.dgn