F.A.U. RTE.	SECTION	COUNTY	TOTAL SHEETS	SHEET NO.
	02-00091-00-T	DUPAGE	13	7
STA.		TO STA.		
FED. ROAD DIST. NO. 1	ILLINOIS	FED. AID PROJECT		

CONTRACT NO. 83759

SCALE: 1"=20'

TEMPORARY TRAFFIC SIGNAL LEGEND

- TEMPORARY TRAFFIC SIGNAL HEAD SPAN WIRE MOUNTED ORIGINAL POSITION
- TEMPORARY TRAFFIC SIGNAL HEAD SPAN WIRE MOUNTED SECONDARY POSITION
- TEMPORARY WOOD POLE (CLASS 5 OR BETTER) 45 FOOT (13.7m.) MIN.
- TEMPORARY CONTROLLER CABINET
- TEMPORARY SPAN WIRE, TETHER WIRE, AND CABLE.
- TEMPORARY SERVICE INSTALLATION
- TEMPORARY PEDESTRIAN SIGNAL HEAD, BRACKET MOUNTED
- VIDEO VEHICLE DETECTOR UNIT
- PEDESTRIAN PUSHBUTTON DETECTOR
- EMERGENCY VEHICLE LIGHT DETECTOR
- CONFIRMATION BEACON
- VEHICLE DETECTOR, INDUCTION LOOP
- UD — UNIT DUCT
- G.S. CONDUIT IN TRENCH OR PUSHED
- HANDHOLE
- HEAVY DUTY HANDHOLE
- CT — COMMON TRENCH
- DOWN GUY
- VEHICLE VIDEO DETECTION ZONE

THE FOLLOWING ITEMS SHALL BE REMOVED BY THE CONTRACTOR AND SHALL BE DISPOSED OF BY THEM OUTSIDE THE RIGHT-OF-WAY AT THEIR EXPENSE. THE SALVAGE VALUE OF THE REMOVED EQUIPMENT SHALL BE REFLECTED IN THE CONTRACT BID PRICE.

2 EACH MAST ARM ASSEBLEY & POLE
5 EACH SIGNAL POST
2 EACH SIGNAL HEAD, 1-FACE, 3-SECTION, MAST ARM MOUNTED
2 EACH SIGNAL HEAD, 1-FACE, 5-SECTION, MAST ARM MOUNTED
4 EACH SIGNAL HEAD, 1-FACE, 3-SECTION, BRACKET MOUNTED
2 EACH SIGNAL HEAD, 2-FACE, 3-SECTION, BRACKET MOUNTED
1 EACH CONTROLLER CABINET AND RELATED ASSERORIES
2 EACH EMERGENCY VEHICLE DETECTOR UNIT

THE FOLLOWING EXISTING TRAFFIC SIGNAL EQUIPMENT SHALL BE REMOVED BY THE CONTRACTOR AND SHALL REMAIN THE PROPERTY OF THE AGENCY LISTED BELOW. THE CONTRACTOR SHALL SAFELY STORE AND ARRANGE FOR PICK UP OF ALL EQUIPMENT TO BE RETURNED TO THE LISTED AGENCY AS PER THE TRAFFIC SIGNAL SPECIFICATIONS.

AGENCY: VILLAGE OF DOWNER GROVE

1 EACH CONTROLLER

CONSTRUCTION NOTES:

(A) REMOVE EXISTING SIGNAL HEAD CABLE BACK TO CONTROLLER
(B) REMOVE EXISTING HANDHOLE
(C) REMOVE EXISTING FOUNDATION
(D) REMOVE EXISTING CONTROLLER
(E) ABANDON EXISTING CONDUIT OR LOOPS

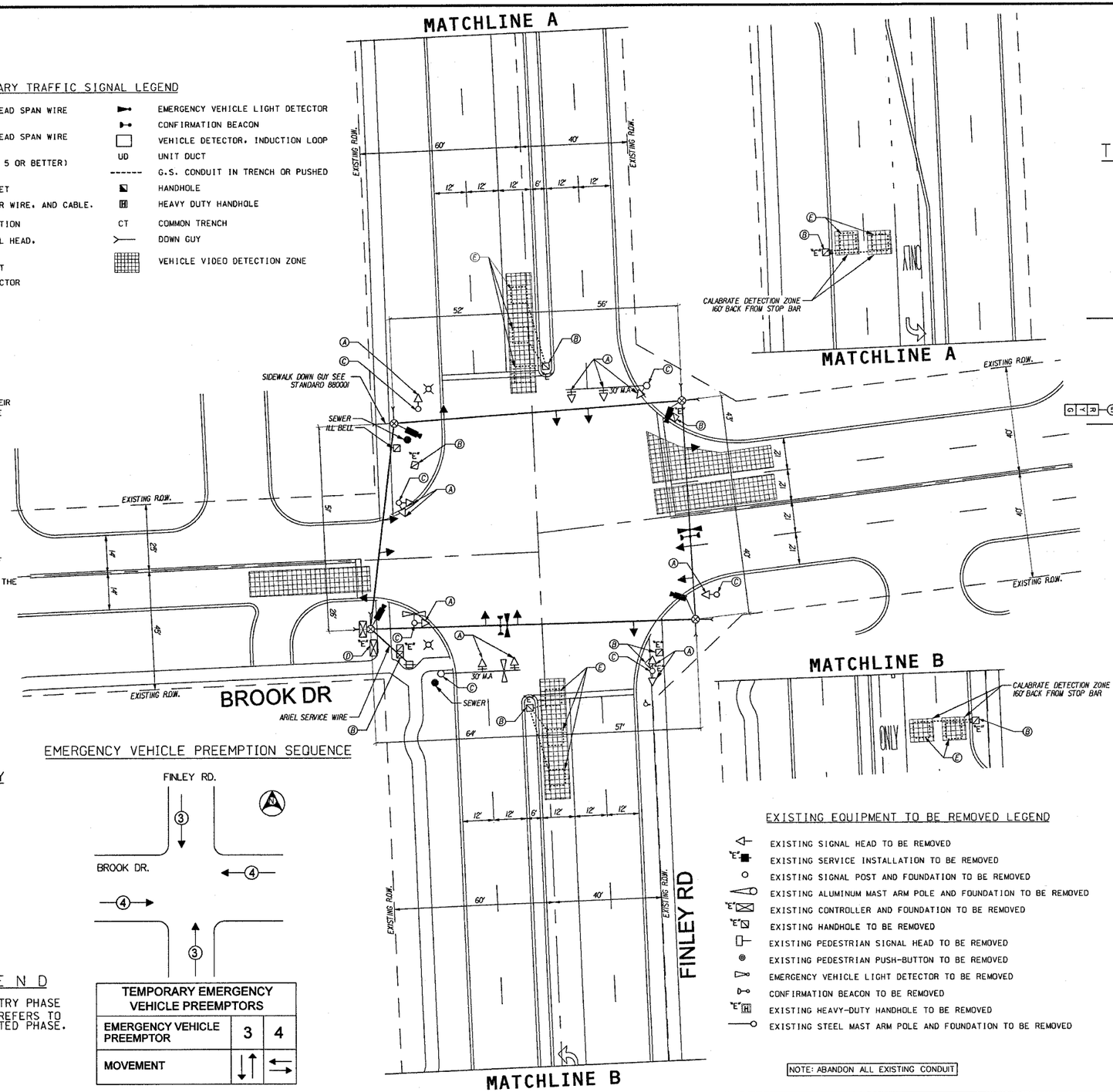

TEMPORARY CABLE PLAN DIAGRAM

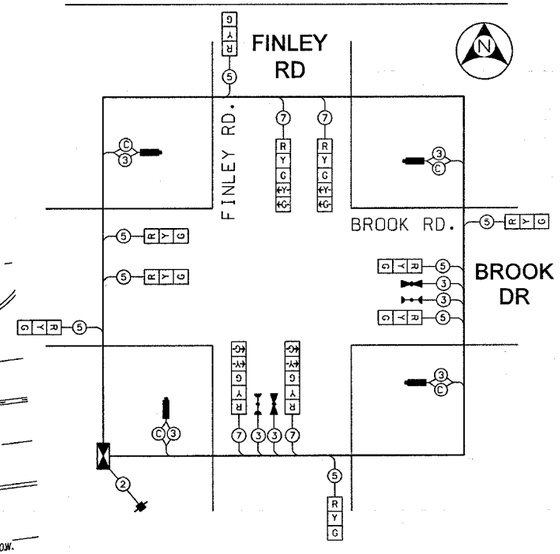

CONTROLLER SEQUENCE - TEMPORARY

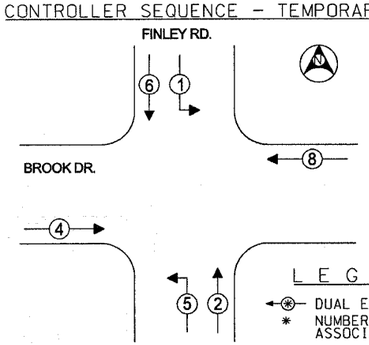

PHASE DESIGNATION DIAGRAM

LEGEND

- DUAL ENTRY PHASE
- * NUMBER REFERS TO ASSOCIATED PHASE.

EMERGENCY VEHICLE PREEMPTION SEQUENCE

TEMPORARY EMERGENCY VEHICLE PREEMPTORS		
EMERGENCY VEHICLE PREEMPTOR	3	4
MOVEMENT	↓↑	⇄

EXISTING EQUIPMENT TO BE REMOVED LEGEND

- EXISTING SIGNAL HEAD TO BE REMOVED
- "E" EXISTING SERVICE INSTALLATION TO BE REMOVED
- EXISTING SIGNAL POST AND FOUNDATION TO BE REMOVED
- EXISTING ALUMINUM MAST ARM POLE AND FOUNDATION TO BE REMOVED
- "E" EXISTING CONTROLLER AND FOUNDATION TO BE REMOVED
- "E" EXISTING HANDHOLE TO BE REMOVED
- EXISTING PEDESTRIAN SIGNAL HEAD TO BE REMOVED
- EXISTING PEDESTRIAN PUSH-BUTTON TO BE REMOVED
- EMERGENCY VEHICLE LIGHT DETECTOR TO BE REMOVED
- CONFIRMATION BEACON TO BE REMOVED
- "E" EXISTING HEAVY-DUTY HANDHOLE TO BE REMOVED
- EXISTING STEEL MAST ARM POLE AND FOUNDATION TO BE REMOVED

NOTE: ABANDON ALL EXISTING CONDUIT

NOTES FOR TEMPORARY TRAFFIC SIGNALS

1. ALL CONTROL EQUIPMENT INCLUDING EMERGENCY PRE-EMPTION AND COMMUNICATION DEVICES FOR THE TEMPORARY TRAFFIC SIGNAL(S) SHALL BE FURNISHED BY THE CONTRACTOR.
2. ONLY CONTROLLERS SUPPLIED BY ONE OF THE DISTRICT APPROVED CLOSED LOOP EQUIPMENT MANUFACTURERS WILL BE APPROVED FOR USE AT TEMPORARY SIGNAL LOCATIONS. ALL CONTROLLERS USED FOR TEMPORARY TRAFFIC SIGNALS SHALL BE FULLY ACTUATED NEMA MICROPROCESSOR BASED WITH RS232 DATA ENTRY PORTS COMPATIBLE WITH EXISTING MONITORING SOFTWARE APPROVED BY IDOT DISTRICT 1, INSTALLED IN A NEMA TS1 OR TS2 CABINET. ONLY ONE BRAND OF CONTROLLER WILL BE ACCEPTED FOR ANY ONE CONTRACT.
3. ALL TRAFFIC SIGNAL SECTIONS AND PEDESTRIAN SIGNAL SECTIONS SHALL BE 12". HEADS SHALL BE PLACED AS INDICATED ON THE TEMPORARY TRAFFIC SIGNAL PLAN OR AS DIRECTED BY THE ENGINEER. THE CONTRACTOR SHALL FURNISH ENOUGH CABLE SLACK TO RELOCATE HEADS TO ANY POSITION ON THE SPAN WIRE OR AT LOCATIONS ILLUSTRATED ON THE PLANS FOR CONSTRUCTION STAGING. THE TEMPORARY TRAFFIC SIGNAL SHALL REMAIN IN OPERATION DURING ALL SIGNAL HEAD RELOCATIONS. EACH TEMPORARY TRAFFIC SIGNAL HEAD SHALL HAVE ITS OWN CABLE FROM THE CONTROLLER CABINET TO THE SIGNAL HEAD.
4. ALL EXISTING STREET NAME AND INTERSECTION REGULATORY SIGNS SHALL BE REMOVED FROM EXISTING POLES, RELOCATED AND SECURELY FASTENED TO THE SIGNAL SPAN WIRE OR WOOD POLE AS DIRECTED BY THE ENGINEER.
5. ANY TEMPORARY SIGNAL WITHIN AN EXISTING CLOSED LOOP TRAFFIC SIGNAL SYSTEM SHALL BE INTERCONNECTED TO THAT SYSTEM USING SIMILAR BRAND CONTROL EQUIPMENT.
6. THE TEMPORARY TRAFFIC SIGNAL SHALL HAVE THE SIGNAL HEAD DISPLAYS, SIGNAL HEAD PLACEMENTS AND CONTROLLER PHASING MATCH THE EXISTING TRAFFIC SIGNAL, AT THE TIME OF THE TURN ON, IF NO TRAFFIC STAGING IS IN PLACE OR WILL NOT BE STAGED ON THE DAY OF THE TURN ON.

METRO TRANSPORTATION GROUP, INC.
TRAFFIC ENGINEERING, TRANSPORTATION PLANNING AND SIGNAL SYSTEMS/DESIGN
3100 W. HIGGINS ROAD, HOFFMAN ESTATES, IL 60195 PH# 630 213-1000

REVISIONS		
NO.	DATE	DESCRIPTION

TEMPORARY TRAFFIC SIGNAL PLAN

FINLEY ROAD @ BROOK ROAD
DOWNERS GROVE, ILLINOIS

FILE NAME: 07_tmp.dgn
DATE: SEPT 7, 2004
PROJECT NO.: H0312-18
SHEET NO.: 7 OF 13